DATE	DATE FILMED	DATE REVISED	DATE FILMED	FED.RD. DIST.NO.	STATE	FED.AID PROJ.NO.	SHEET NO.	TOTAL SHEETS
				6	ARK.			
				JOB NO.		CA0902	001	581

(2) HWY. 62/102 - HWY. 72 WIDENING & INTCHNG. IMPVTS. (S)

"THIS PROJECT IS A FULLY CONTROLLED ACCESS FACILITY"
ARKANSAS STATE HIGHWAY AND TRANSPORTATION DEPARTMENT
CONSTRUCTION PLANS FOR STATE HIGHWAY

HWY. 62/102 - HWY. 72 WIDENING & INTCHNG. IMPVTS. (S)

BENTON COUNTY
ROUTE I-49 SECTION 29

JOB CA0902
FED. AID PROJECT BIM-B49-0(216) & ACNHPP-49-1(18)85

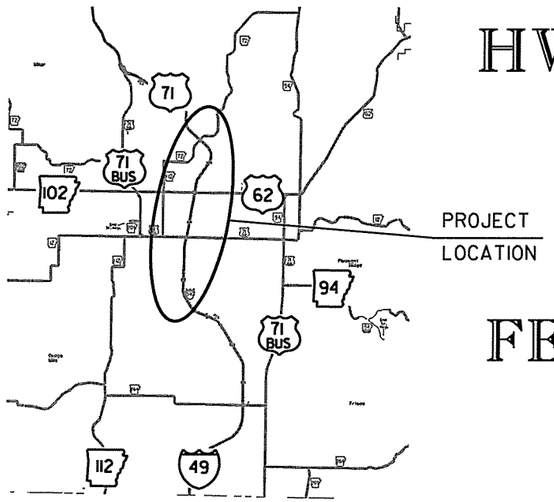

VICINITY MAP

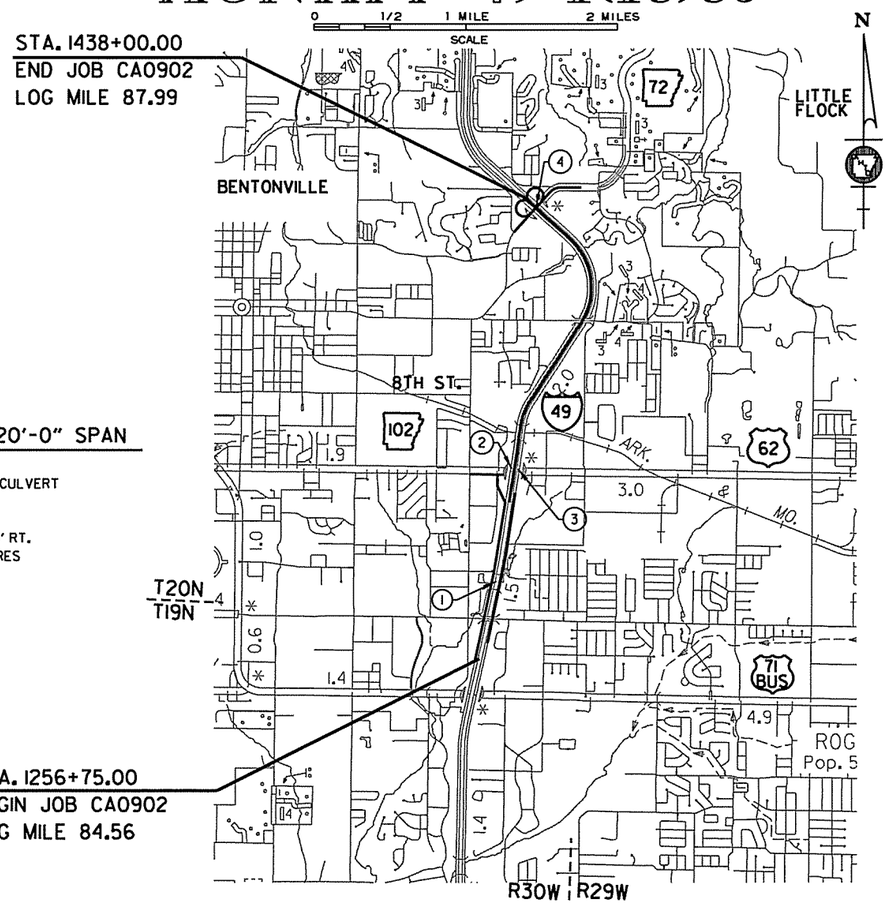

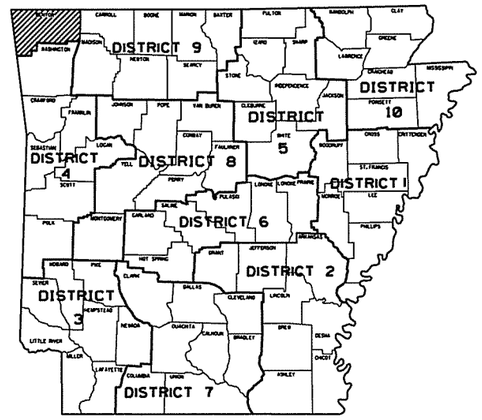

ARK. HWY. DIST. NO. 9

· DESIGN TRAFFIC DATA ·

DESIGN YEAR	2036
2016 ADT	49,000
2036 ADT	77,000
2036 DHV	8,500
DIRECTIONAL DISTRIBUTION	0.60
TRUCKS	11%
DESIGN SPEED	70 MPH

BRIDGE CONSTRUCTION DATA

(2) STA. 1323+33.71 - ℄ MEDIAN I-49 BR. END
BRIDGE NO. A5979 HWY. 62/102 OVERPASS
176'-0" CONT. COMP. W-BEAM UNIT (45',79',52')
62'-0" CLEAR ROADWAY
7°27'30" RT. FORWARD SKEW
178'-2 1/16" BRIDGE LENGTH
STA. 1325+11.88 BR. END

(3) STA. 1323+45.23 - ℄ MEDIAN I-49 BR. END
BRIDGE NO. B5979 HWY. 62/102 OVERPASS
176'-0" CONT. COMP. W-BEAM UNIT (45',79',52')
62'-0" CLEAR ROADWAY
7°27'30" RT. FORWARD SKEW
178'-2 1/16" BRIDGE LENGTH
STA. 1325+23.40 BR. END

(4) STA. 193+02.98 ℄ HWY. 72 BR. END
BRIDGE NO. 05982 I-49 OVERPASS
264'-0" CONT. COMP. W-BEAM UNIT (46',86',86',46')
75'-0" CLEAR ROADWAY
266'-3 1/2" BRIDGE LENGTH
STA. 195+69.27 BR. END

STRUCTURES OVER 20'-0" SPAN

(1) STA. 1285+56 - IN PLACE
QUINT. 8' X 4' X 241' R.C. BOX CULVERT
WITH 45° RT. FWD. SKEW
WITH 3:1 WINGS LT. & RT.
RETAIN & EXTEND 21' LT. & 14' RT.
Q50= 1200 CFS D.A.= 700 ACRES
SPAN= 60.00'

	BEGIN	MID-POINT	END
LATITUDE	36°20'14"	36°21'58"	36°22'58"
LONGITUDE	94°10'60"	94°10'27"	94°10'38"
STATION	1256+75.00	1347+37.50	1438+00.00

LENGTH COMPUTED ALONG CENTERLINE OF I-49

GROSS LENGTH OF PROJECT	18125.00	FEET	OR	3.433 MILES
NET LENGTH OF ROADWAY	17886.83	FEET	OR	3.388 MILES
NET LENGTH OF BRIDGES	238.17	FEET	OR	0.045 MILES
NET LENGTH OF PROJECT	18125.00	FEET	OR	3.433 MILES

STATE OF ARKANSAS
REGISTERED PROFESSIONAL ENGINEER
No. 8760
ANDREW E. FRIES
5/20/16

CERTIFICATE OF AUTHORIZATION
BURNS & McDONNELL ENGINEERING CO. INC.
No. 17
ARKANSAS

P.E. JOB CA0902
NON-PART.

5/20/2016
1:46:03 PM
MS - CA0902 TL HWY540_01

DATE	DATE FILMED	DATE REVISED	DATE FILMED	FED.RD. DIST.NO.	STATE	FED.AID PROJ.NO.	SHEET NO.	TOTAL SHEETS
5-25-16				6	ARK.			
				JOB NO.		CA0902	002	581

(2) INDEX OF SHEETS

INDEX OF SHEETS (BOX 1 OF 2)

SHEET NO.	TITLE	BRIDGE NO.	DRWG.NO.	DATE
1	TITLE SHEET			
2	INDEX OF SHEETS			
3	GOVERNING SPECIFICATIONS AND GENERAL NOTES			
4 - 11	TYPICAL SECTIONS OF IMPROVEMENT			
12 - 36	SPECIAL DETAILS			
37 - 61	TEMPORARY EROSION CONTROL DETAILS			
62 - 100	MAINTENANCE OF TRAFFIC DETAILS			
101 - 112	PERMANENT PAVEMENT MARKING DETAILS			
113 - 130	SIGN PLACEMENT SHEETS			
131 - 162	SIGN LAYOUT SHEETS			
163 - 164	SIGNING QUANTITIES			
165 - 172	QUANTITIES			
173	SCHEDULE OF BRIDGE QUANTITIES (SHEET 1 OF 2)	A5979, B5979, 059887151		
174	SCHEDULE OF BRIDGE QUANTITIES (SHEET 2 OF 2)	A5979, B5979, 059887152		
175 - 176	SUMMARY OF QUANTITIES AND REVISIONS			
177 - 190	SURVEY CONTROL DETAILS			
191 - 204	PLAN AND PROFILE - I-49			
205	INTERCHANGE LAYOUT - I-49 @ HWY. 102			
206	INTERCHANGE LAYOUT - I-49 @ HWY. 72			
207	PROFILE - HWY. 72 RAMP 5 & RAMP 6			
208	PLAN AND PROFILE - STAGE 1 - TEMPORARY RAMP 2			
209 - 211	PLAN AND PROFILE - HWY. 102			
212 - 214	PLAN AND PROFILE - HWY. 72			
215	TRAFFIC SIGNAL NOTES AND SUMM. OF QUANT.			
216 - 217	TRAFFIC SIGNAL QUANTITIES			
218 - 220	NOT USED			
221 - 223	SIGNALIZATION PLANS (HWY. 62 AT NB RAMP)			
224 - 229	NOT USED			
230	SIGNALIZATION PLANS (HWY. 62 AT NB RAMP)			
231 - 233	NOT USED			
234 - 236	SIGNALIZATION PLANS (HWY. 102 AT SB RAMP)			
237 - 239	NOT USED			
240 - 246	SIGNALIZATION PLANS (HWY. 102 AT SB RAMP)			
247 - 249	SIGNALIZATION PLANS (HWY. 72 AT SB RAMP)			
250 - 252	NOT USED			
253 - 259	SIGNALIZATION PLANS (HWY. 72 AT SB RAMP)			
260 - 272	SIGNALIZATION PLANS (HWY. 72 AT NB RAMP)			
273 - 274	LIGHTING PLAN SHEETS			
275	LIGHTING WIRING DIAGRAM			
276 - 277	CULVERT DIAGRAMS			
278	LAYOUT OF RETAINING WALL A & A1			
279	LAYOUT OF RETAINING WALL B1 & B2			
280	LAYOUT OF RETAINING WALL C1 & C2			
281	LAYOUT OF BRIDGE A OVER HWY. 62/102 (SHEET 1 OF 4)	A5979	57153	
282	LAYOUT OF BRIDGE B OVER HWY. 62/102 (SHEET 2 OF 4)	B5979	57154	
283	LAYOUT OF BRIDGE A & B OVER HWY. 62/102 (SHEET 3 OF 4)	A&B5979	57155	
284	LAYOUT OF BRIDGE A & B OVER HWY. 62/102 (SHEET 4 OF 4)	A&B5979	57156	
285	DETAILS OF STAGE CONSTRUCTION BRIDGES OVER HWY. 62/102 (SHEET 1 OF 2)	A&B5979	57157	
286	DETAILS OF STAGE CONSTRUCTION BRIDGES OVER HWY. 62/102 (SHEET 2 OF 2)	A&B5979	57158	
287	DETAILS OF BENT 1- BRIDGE A (SHEET 1 OF 3)	A5979	57159	
288	DETAILS OF BENT 1- BRIDGE A (SHEET 2 OF 3)	A5979	57160	
289	DETAILS OF BENT 1- BRIDGE A (SHEET 3 OF 3)	A5979	57161	
290	DETAILS OF BENT 4 - BRIDGE A (SHEET 1 OF 3)	A5979	57162	
291	DETAILS OF BENT 4 - BRIDGE A (SHEET 2 OF 3)	A5979	57163	
292	DETAILS OF BENT 4 - BRIDGE A (SHEET 3 OF 3)	A5979	57164	
293	DETAILS OF INTERMEDIATE BENTS - BRIDGE A (SHEET 1 OF 4)	A5979	57165	
294	DETAILS OF INTERMEDIATE BENTS - BRIDGE A (SHEET 2 OF 4)	A5979	57166	
295	DETAILS OF INTERMEDIATE BENTS - BRIDGE A (SHEET 3 OF 4)	A5979	57167	
296	DETAILS OF INTERMEDIATE BENTS - BRIDGE A (SHEET 4 OF 4)	A5979	57168	
297	DETAILS OF 176'-0" CONTINUOUS COMPOSITE W-BEAM UNIT - BRIDGE A (SHEET 1 OF 8)	A5979	57169	
298	DETAILS OF 176'-0" CONTINUOUS COMPOSITE W-BEAM UNIT - BRIDGE A (SHEET 2 OF 8)	A5979	57170	
299	DETAILS OF 176'-0" CONTINUOUS COMPOSITE W-BEAM UNIT - BRIDGE A (SHEET 3 OF 8)	A5979	57171	
300	DETAILS OF 176'-0" CONTINUOUS COMPOSITE W-BEAM UNIT - BRIDGE A (SHEET 4 OF 8)	A5979	57172	
301	DETAILS OF 176'-0" CONTINUOUS COMPOSITE W-BEAM UNIT - BRIDGE A (SHEET 5 OF 8)	A5979	57173	
302	DETAILS OF 176'-0" CONTINUOUS COMPOSITE W-BEAM UNIT - BRIDGE A (SHEET 6 OF 8)	A5979	57174	
303	DETAILS OF 176'-0" CONTINUOUS COMPOSITE W-BEAM UNIT - BRIDGE A (SHEET 7 OF 8)	A5979	57175	
304	DETAILS OF 176'-0" CONTINUOUS COMPOSITE W-BEAM UNIT - BRIDGE A (SHEET 8 OF 8)	A5979	57176	
305	DETAILS OF ELASTOMERIC BEARINGS - BRIDGE A	A5979	57177	
306	DETAILS OF BENT 1- BRIDGE B (SHEET 1 OF 3)	B5979	57178	
307	DETAILS OF BENT 1- BRIDGE B (SHEET 2 OF 3)	B5979	57179	
308	DETAILS OF BENT 1- BRIDGE B (SHEET 3 OF 3)	B5979	57180	
309	DETAILS OF BENT 4 - BRIDGE B (SHEET 1 OF 3)	B5979	57181	
310	DETAILS OF BENT 4 - BRIDGE B (SHEET 2 OF 3)	B5979	57182	
311	DETAILS OF BENT 4 - BRIDGE B (SHEET 3 OF 3)	B5979	57183	
312	DETAILS OF INTERMEDIATE BENTS - BRIDGE B (SHEET 1 OF 4)	B5979	57184	
313	DETAILS OF INTERMEDIATE BENTS - BRIDGE B (SHEET 2 OF 4)	B5979	57185	
314	DETAILS OF INTERMEDIATE BENTS - BRIDGE B (SHEET 3 OF 4)	B5979	57186	
315	DETAILS OF INTERMEDIATE BENTS - BRIDGE B (SHEET 4 OF 4)	B5979	57187	
316	DETAILS OF 176'-0" CONTINUOUS COMPOSITE W-BEAM UNIT - BRIDGE B (SHEET 1 OF 8)	B5979	57188	
317	DETAILS OF 176'-0" CONTINUOUS COMPOSITE W-BEAM UNIT - BRIDGE B (SHEET 2 OF 8)	B5979	57189	
318	DETAILS OF 176'-0" CONTINUOUS COMPOSITE W-BEAM UNIT - BRIDGE B (SHEET 3 OF 8)	B5979	57190	
319	DETAILS OF 176'-0" CONTINUOUS COMPOSITE W-BEAM UNIT - BRIDGE B (SHEET 4 OF 8)	B5979	57191	
320	DETAILS OF 176'-0" CONTINUOUS COMPOSITE W-BEAM UNIT - BRIDGE B (SHEET 5 OF 8)	B5979	57192	
321	DETAILS OF 176'-0" CONTINUOUS COMPOSITE W-BEAM UNIT - BRIDGE B (SHEET 6 OF 8)	B5979	57193	
322	DETAILS OF 176'-0" CONTINUOUS COMPOSITE W-BEAM UNIT - BRIDGE B (SHEET 7 OF 8)	B5979	57194	
323	DETAILS OF 176'-0" CONTINUOUS COMPOSITE W-BEAM UNIT - BRIDGE B (SHEET 8 OF 8)	B5979	57195	
324	DETAILS OF ELASTOMERIC BEARINGS - BRIDGE B	B5979	57196	
325	DETAILS OF TYPE SPECIAL APPROACH SLABS (SHEET 1 OF 3)	A5979	57197	
326	DETAILS OF TYPE SPECIAL APPROACH SLABS (SHEET 2 OF 3)	B5979	57198	
327	DETAILS OF TYPE SPECIAL APPROACH SLABS (SHEET 3 OF 3)	A&B5979	57199	
328	DETAILS OF TYPE SPECIAL APPROACH GUTTERS (SHEET 1 OF 2)	A5979	57200	
329	DETAILS OF TYPE SPECIAL APPROACH GUTTERS (SHEET 2 OF 2)	B5979	57201	
330	LAYOUT OF BRIDGE OVER I-49 (SHEET 1 OF 3)	05982	57202	
331	LAYOUT OF BRIDGE OVER I-49 (SHEET 2 OF 3)	05982	57203	
332	LAYOUT OF BRIDGE OVER I-49 (SHEET 3 OF 3)	05982	57204	
333	DETAILS OF STAGE CONSTRUCTION BRIDGE OVER I-49 (SHEET 1 OF 5)	05982	57205	
334	DETAILS OF STAGE CONSTRUCTION BRIDGE OVER I-49 (SHEET 2 OF 5)	05982	57206	
335	DETAILS OF STAGE CONSTRUCTION BRIDGE OVER I-49 (SHEET 3 OF 5)	05982	57207	
336	DETAILS OF STAGE CONSTRUCTION BRIDGE OVER I-49 (SHEET 4 OF 5)	05982	57208	
337	DETAILS OF STAGE CONSTRUCTION BRIDGE OVER I-49 (SHEET 5 OF 5)	05982	57209	
338	DETAILS OF BENT I(SHEET 1 OF 5)	05982	57210	
339	DETAILS OF BENT I(SHEET 2 OF 5)	05982	57211	
340	DETAILS OF BENT I(SHEET 3 OF 5)	05982	57212	
341	DETAILS OF BENT I(SHEET 4 OF 5)	05982	57213	
342	DETAILS OF BENT I(SHEET 5 OF 5)	05982	57214	
343	DETAILS OF BENT 5 (SHEET 1 OF 5)	05982	57215	
344	DETAILS OF BENT 5 (SHEET 2 OF 5)	05982	57216	
345	DETAILS OF BENT 5 (SHEET 3 OF 5)	05982	57217	
346	DETAILS OF BENT 5 (SHEET 4 OF 5)	05982	57218	
347	DETAILS OF BENT 5 (SHEET 5 OF 5)	05982	57219	
348	DETAILS OF INTERMEDIATE BENTS (SHEET 1 OF 4)	05982	57220	
349	DETAILS OF INTERMEDIATE BENTS (SHEET 2 OF 4)	05982	57221	
350	DETAILS OF INTERMEDIATE BENTS (SHEET 3 OF 4)	05982	57222	
351	DETAILS OF INTERMEDIATE BENTS (SHEET 4 OF 4)	05982	57223	
352	DETAILS OF 264-0" CONTINUOUS COMPOSITE W-BEAM UNIT (SHEET 1 OF 11)	05982	57224	
353	DETAILS OF 264-0" CONTINUOUS COMPOSITE W-BEAM UNIT (SHEET 2 OF 11)	05982	57225	
354	DETAILS OF 264-0" CONTINUOUS COMPOSITE W-BEAM UNIT (SHEET 3 OF 11)	05982	57226	

INDEX OF SHEETS (BOX 2 OF 2)

SHEET NO.	TITLE	BRIDGE NO.	DRWG.NO.	
355	DETAILS OF 264-0" CONTINUOUS COMPOSITE W-BEAM UNIT (SHEET 4 OF 11)	05982	57227	
356	DETAILS OF 264-0" CONTINUOUS COMPOSITE W-BEAM UNIT (SHEET 5 OF 11)	05982	57228	
357	DETAILS OF 264-0" CONTINUOUS COMPOSITE W-BEAM UNIT (SHEET 6 OF 11)	05982	57229	
358	DETAILS OF 264-0" CONTINUOUS COMPOSITE W-BEAM UNIT (SHEET 7 OF 11)	05982	57230	
359	DETAILS OF 264-0" CONTINUOUS COMPOSITE W-BEAM UNIT (SHEET 8 OF 11)	05982	57231	
360	DETAILS OF 264-0" CONTINUOUS COMPOSITE W-BEAM UNIT (SHEET 9 OF 11)	05982	57232	
361	DETAILS OF 264-0" CONTINUOUS COMPOSITE W-BEAM UNIT (SHEET 10 OF 11)	05982	57233	
362	DETAILS OF 264-0" CONTINUOUS COMPOSITE W-BEAM UNIT (SHEET 11 OF 11)	05982	57234	
363	DETAILS OF ELASTOMERIC BEARINGS	05982	57235	
364	DETAILS OF TRANSITIONAL APPROACH RAILING (SHEET 1 OF 2)	05982	57236	
365	DETAILS OF TRANSITIONAL APPROACH RAILING (SHEET 2 OF 2)	05982	57237	
366	DETAILS OF TYPE H METAL BRIDGE RAILING	05982	57238	
367	ELECTRICAL LIGHTING DETAILS	05982	57239	
368	DETAILS FOR 60' TO 85' STEEL OVERHEAD SIGN STRUCTURES WITH MEDIAN FOUNDATION (SHEET 1 OF 5)		57240	
369	DETAILS FOR 60' TO 85' STEEL OVERHEAD SIGN STRUCTURES WITH MEDIAN FOUNDATION (SHEET 2 OF 5)		57241	
370	DETAILS FOR 60' TO 85' STEEL OVERHEAD SIGN STRUCTURES WITH MEDIAN FOUNDATION (SHEET 3 OF 5)		57242	
371	DETAILS FOR 60' TO 85' STEEL OVERHEAD SIGN STRUCTURES WITH MEDIAN FOUNDATION (SHEET 4 OF 5)		57243	
372	DETAILS FOR 60' TO 85' STEEL OVERHEAD SIGN STRUCTURES WITH MEDIAN FOUNDATION (SHEET 5 OF 5)		57244	
373	DETAILS OF 35' STEEL CANTILEVER SIGN STRUCTURE (SHEET 1 OF 5)		57245	
374	DETAILS OF 35' STEEL CANTILEVER SIGN STRUCTURE (SHEET 2 OF 5)		57246	
375	DETAILS OF 35' STEEL CANTILEVER SIGN STRUCTURE (SHEET 3 OF 5)		57247	
376	DETAILS OF 35' STEEL CANTILEVER SIGN STRUCTURE (SHEET 4 OF 5)		57248	
377	DETAILS OF 35' STEEL CANTILEVER SIGN STRUCTURE (SHEET 5 OF 5)		57249	
378	STANDARD DETAILS FOR EMBANKMENT CONSTRUCTION AND BACKFILL AT BRIDGE ENDS		55000	2-27-14
379	STANDARD DETAILS FOR CONCRETE RIPRAP		55002	2-27-14
380	STANDARD DETAILS FOR PERMANENT STEEL BRIDGE DECK FORMS FOR STEEL & CONCRETE GIRDER SPANS		55005	3-24-16
381	STANDARD DETAILS FOR TYPE D BRIDGE NAME PLATE		55010	1-14-15
382	STANDARD DETAILS FOR STEEL H-PILES AND PILE ENCASEMENTS		55020	3-24-16
383	STANDARD DETAILS FOR TYPE B APPROACH GUTTERS		55030B	9-02-15
384	CONCRETE DITCH PAVING		CDP-1	11-17-10
385	CURBING DETAILS		CG-1	11-29-07
386	DETAILS OF DRIVEWAYS & ISLANDS		DR-1	2-27-14
387	FLARED END SECTION		FES-1	10-18-96
388	FLARED END SECTION		FES-2	10-18-96
389	DETAILS OF DROP INLETS & JUNCTION BOXES		FPC-9	11-16-01
390	DETAILS OF DROP INLETS (TYPE C)		FPC-9E	8-22-02
391	DETAILS OF DROP INLET (TYPE MO)		FPC-9M	8-22-02
392	DETAILS OF DROP INLETS AND SPILLWAY OUTLET		FPC-9N	7-02-98
393	DETAILS OF DROP INLET & JUNCTION BOX (TYPE ST)		FPC-9S	7-26-12
394	GUARD RAIL DETAILS		GR-8	7-14-10
395	GUARD RAIL DETAILS		GR-8A	7-14-10
396	GUARD RAIL DETAILS		GR-9	4-17-08
397	GUARD RAIL DETAILS		GR-9A	4-17-08
398	GUARD RAIL DETAILS		GR-10	7-14-10
399	GUARD RAIL DETAILS		GR-10A	7-14-10
400	GUARD RAIL DETAILS		GRT-1	7-14-10
401	IMPACT ATTENUATION BARRIERS		IB-1	10-15-09
402	MAILBOX DETAILS		MB-1	11-18-04
403	PRECAST CONCRETE BOX CULVERTS		PBC-1	1-28-15
404	CONCRETE PIPE CULVERT FILL HEIGHTS & BEDDING		PCC-1	2-27-14
405	PLASTIC PIPE CULVERT (HIGH DENSITY POLYETHYLENE)		PCP-1	2-27-14
406	PLASTIC PIPE CULVERT (PVC F949)		PCP-2	2-27-14
407	PAVEMENT MARKING DETAILS		PM-1	5-12-16
408	PERMANENT PAVEMENT MARKING ON ACCESS CONTROLLED ROADWAYS		PM-2	9-12-13
409	DETAILS OF PIPE UNDERDRAIN		PU-1	4-10-03
410	REINFORCED CONCRETE BOX CULVERT DETAILS		RCB-1	7-26-12
411	EXCAVATION PAY LIMITS, BACKFILL, & SOLID SODDING FOR BOX CULVERTS		RCB-2	11-20-03
412	METHOD OF EXTENDING EXISTING R.C. BOX CULVERTS		RCB-3	10-12-95
413	LOOP DETECTOR INSTALLATION		SD-4	9-12-13
414	CONTROLLER CABINET UTILITY DRAWER		SD-5	9-12-13
415	HEAVY DUTY PULL BOX		SD-6	9-02-15
416	SPAN WIRE ASSEMBLY WOOD POLE		SD-7	2-27-14
417	SIGNAL HEAD PLACEMENT		SD-8	9-12-13
418	SERVICE POINT		SD-9	9-12-13
419	STEEL POLE WITH MAST ARM		SD-11	2-27-14
420	NOT USED			
421	TABLES AND METHOD OF SUPERELEVATION FOR ONE-WAY TRAFFIC		SE-1	1-09-87
422	TABLES AND METHOD OF SUPERELEVATION FOR TWO-WAY TRAFFIC		SE-2	10-18-96
423	SAFETY END SECTION FOR CIRCULAR AND ARCH PIPES		SES-1	10-18-96
424	STANDARD HIGHWAY SIGNS AND SUPPORT ASSEMBLIES		SHS-1	9-12-13
425	U-CHANNEL POST ASSEMBLIES		SHS-2	2-27-14
426	DETAIL OF BREAKAWAY SIGN SUPPORTS FOR GUIDE SIGNS		SHS-3	9-12-13
427	DETAIL OF BREAKAWAY SIGN SUPPORTS FOR STANDARD SIGNS		SHS-4	9-12-13
428	DETAILS OF GUIDE SIGN PANELS		SHS-5	9-12-13
429	DETAIL OF OMNI-DIRECTIONAL BREAKWAY SIGN SUPPORTS		SHS-7	9-12-13
430	REINFORCED CONCRETE RETAINING WALL (WITHOUT LIVE LOAD SURCHARGE)		SI-2	5-12-16
431	STANDARD TRAFFIC CONTROLS FOR HIGHWAY CONSTRUCTION		TC-1	9-02-15
432	STANDARD TRAFFIC CONTROLS FOR HIGHWAY CONSTRUCTION		TC-2	9-02-15
433	STANDARD TRAFFIC CONTROLS FOR HIGHWAY CONSTRUCTION		TC-3	9-02-15
434	STANDARD TRAFFIC CONTROLS FOR HIGHWAY CONSTRUCTION-TEMPORARY PRECAST BARRIER		TC-4	2-27-14
435	STANDARD TRAFFIC CONTROLS FOR HIGHWAY CONSTRUCTION-TEMPORARY PRECAST BARRIER		TC-5	10-15-09
436	TEMPORARY EROSION CONTROL DEVICES		TEC-1	12-15-11
437	TEMPORARY EROSION CONTROL DEVICES		TEC-2	6-02-94
438	TEMPORARY EROSION CONTROL DEVICES		TEC-3	11-03-94
439	DETAILS OF STANDARD TURNOUT FOR ENTRANCE & EXIT RAMPS (NON-REINFORCED)		TR-1A	8-22-02
440	WIRE FENCE TYPE A AND B		WF-1	8-22-02
441	CHAIN LINK FENCE		WF-3	11-17-10
442	WHEELCHAIR RAMPS NEW CONSTRUCTION AND ALTERATIONS		WR-1	11-10-05
443	DETAILS OF STANDARD BARREL SECTIONS FOR REINFORCED CONCRETE BOX CULVERTS		R-215X-0	8-23-63
444	DETAILS OF STANDARD BARREL SECTIONS FOR REINFORCED CONCRETE BOX CULVERTS		W-X454-2	6-11-64
445 - 581	CROSS SECTIONS			

NOTE: CROSS SECTIONS NOT NORMALLY INCLUDED IN PLANS SOLD TO PROSPECTIVE BIDDERS, BUT MAY BE HAD UPON REQUEST.

STATE OF ARKANSAS
REGISTERED PROFESSIONAL ENGINEER
No. 8760
ANDREW E. FRIES
5/26/16

INDEX OF SHEETS

5/26/2016
2:52:36 PM
M:\MS\CA0902 IND HWY540 01

DATE	DATE FILMED	DATE REVISED	DATE FILMED	FED.RD. DIST.NO.	STATE	FED.AID PROJ.NO.	SHEET NO.	TOTAL SHEETS
6/9/16				6	ARK.			
				JOB NO.		CA0902	003	581

(2) GOVERNING SPECIFICATIONS & GENERAL NOTES

GENERAL NOTES

1. GRADE LINE DENOTES FINISHED GRADE WHERE SHOWN ON PLANS.
2. ALL PIPE LINES, POWER, TELEPHONE AND TELEGRAPH LINES TO BE MOVED OR LOWERED BY THE RESPECTIVE OWNERS AS PER AGREEMENT WITH SUCH OWNERS.
3. ANY EQUIPMENT OR APPURTENANCE THAT INTERFERES WITH THE PROPOSED CONSTRUCTION AND WHICH MAY BE THE PROPERTY OF UTILITY SERVICE ORGANIZATIONS SHALL BE MOVED BY THE OWNERS UNLESS OTHERWISE PROVIDED.
4. THE CONTRACTOR SHALL BE RESPONSIBLE FOR MAINTAINING U. S. MAILBOXES WITHIN THE PROJECT LIMITS IN SUCH A MANNER THAT THE PUBLIC MAY RECEIVE CONTINUED MAIL SERVICE. PAYMENT WILL BE CONSIDERED INCLUDED IN THE PRICE BID FOR THE VARIOUS BID ITEMS.
5. ALL LAND MONUMENTS LOCATED WITHIN THE CONSTRUCTION AREA SHALL BE PROTECTED IN ACCORDANCE WITH SECTION 107.12 OF THE STANDARD SPECIFICATIONS.
6. ALL TREES THAT DO NOT DIRECTLY INTERFERE WITH THE PROPOSED CONSTRUCTION SHALL BE SPARED AS DIRECTED BY THE ENGINEER. CARE AND DISCRETION SHALL BE USED TO INSURE THAT ALL TREES NOT TO BE REMOVED SHALL BE HARMED AS LITTLE AS POSSIBLE DURING THE CONSTRUCTION OPERATIONS.
7. THE CONTRACTOR SHALL BE RESPONSIBLE FOR PROVIDING A FENCE TO CONTROL LIVESTOCK IN AREAS WHERE PASTURES ARE SEVERED. WIRE FENCE MAY BE CONSTRUCTED INITIALLY, OR IN LIEU THEREOF, THE CONTRACTOR AT HIS OWN EXPENSE, MAY ELECT TO PROVIDE TEMPORARY FENCING SUITABLE TO CONTAIN LIVESTOCK.
8. THIS PROJECT IS COVERED UNDER A SECTION 404 NATIONWIDE 14 PERMIT. REFER TO SECTION 110 OF THE STANDARD SPECIFICATIONS, EDITION OF 2014, FOR PERMIT REQUIREMENTS.
9. ALL FLEXIBLE BASE AND ASPHALTIC PAVEMENTS REMOVED SHALL BE PAID FOR UNDER THE ITEM NO. 210 - UNCLASSIFIED EXCAVATION.
10. THE EXISTING ASPHALT PAVEMENT TO BE REMOVED FROM THE REMAINING PAVEMENT SHALL BE SEPARATED BY SAWING ALONG A NEAT LINE. AFTER SAWING, THE PAVEMENT TO BE REMOVED SHALL BE CAREFULLY REMOVED IN A MANNER THAT WILL NOT DAMAGE THE PAVEMENT THAT IS TO REMAIN. ANY DAMAGE OF THE ASPHALT PAVEMENT THAT IS TO REMAIN IN PLACE SHALL BE REPAIRED AT THE CONTRACTOR'S EXPENSE.

GOVERNING SPECIFICATIONS

ARKANSAS STATE HIGHWAY COMMISSION STANDARD SPECIFICATIONS FOR HIGHWAY CONSTRUCTION, EDITION OF 2014, AND THE FOLLOWING SPECIAL PROVISIONS AND SUPPLEMENTAL SPECIFICATIONS:

NUMBER	TITLE
ERRATA	ERRATA FOR THE BOOK OF STANDARD SPECIFICATIONS
FHWA-1273	REQUIRED CONTRACT PROVISIONS FEDERAL-AID CONSTRUCTION CONTRACTS
FHWA-1273	SUPPLEMENT - EQUAL EMPLOYMENT OPPORTUNITY - NOTICE TO CONTRACTORS
FHWA-1273	SUPPLEMENT - SPECIFIC EQUAL EMPLOYMENT OPPORTUNITY RESPONSIBILITIES (23 U.S.C. 140)
FHWA-1273	SUPPLEMENT - EQUAL EMPLOYMENT OPPORTUNITY - GOALS AND TIMETABLES
FHWA-1273	SUPPLEMENT - EQUAL EMPLOYMENT OPPORTUNITY - FEDERAL STANDARDS
FHWA-1273	SUPPLEMENT - TRAINING PROGRAM - JOB CA0902
FHWA-1273	SUPPLEMENT - POSTERS AND NOTICES REQUIRED FOR FEDERAL-AID PROJECTS
FHWA-1273	SUPPLEMENT - WAGE RATE DETERMINATION
100-3	CONTRACTOR'S LICENSE
108-1	LIQUIDATED DAMAGES
108-2	WORK ALLOWED PRIOR TO ISSUANCE OF WORK ORDER
303-1	AGGREGATE BASE COURSE
400-1	TACK COATS
410-1	CONSTRUCTION REQUIREMENTS AND ACCEPTANCE OF ASPHALT CONCRETE PLANT MIX COURSES
604-1	RETROREFLECTIVE SHEETING FOR TRAFFIC CONTROL DEVICES IN CONSTRUCTION ZONES
620-1	MULCH COVER
JOB CA0902	ARCHITECTURAL FINISH
JOB CA0902	BIDDING REQUIREMENTS AND CONDITIONS
JOB CA0902	BROADBAND INTERNET SERVICE FOR ASPHALT CONCRETE PLANT
JOB CA0902	BROADBAND INTERNET SERVICE FOR FIELD OFFICE
JOB CA0902	CABINET DRAWER ASSEMBLY
JOB CA0902	CARGO PREFERENCE ACT REQUIREMENTS
JOB CA0902	CHANNEL POST SIGN SUPPORT
JOB CA0902	COMMUNICATION CABLE-FIBER
JOB CA0902	CONSTRUCTION IN SPECIAL FLOOD HAZARD AREAS
JOB CA0902	CONTAINMENT SYSTEM
JOB CA0902	CONTRACTOR CERTIFICATION
JOB CA0902	COORDINATION OF WORK
JOB CA0902	CULVERT CLEAN OUT
JOB CA0902	DELAY IN RIGHT OF WAY OCCUPANCY
JOB CA0902	DIRECT TENSION INDICATORS FOR HIGH STRENGTH BOLT ASSEMBLIES
JOB CA0902	DISADVANTAGED BUSINESS ENTERPRISE BIDDER'S RESPONSIBILITIES
JOB CA0902	ELECTRICAL CONDUCTORS FOR LUMINAIRES
JOB CA0902	ELECTRICAL CONDUCTORS-IN-CONDUIT
JOB CA0902	EMERGENCY BATTERY BACKUP SYSTEM INSTALLATION
JOB CA0902	EMPLOYMENT REPORTING
JOB CA0902	EXTENSION FOR PIPE CULVERTS
JOB CA0902	FURNISHING, INSTALLING AND LEAVING IN PLACE PRECAST CONCRETE BARRIER WALL
JOB CA0902	GOALS FOR DISADVANTAGED BUSINESS ENTERPRISE PARTICIPATION
JOB CA0902	HIGH PERFORMANCE PAVEMENT MARKING
JOB CA0902	IP VIDEO DETECTION SYSTEM
JOB CA0902	ISSUANCE OF PROPOSALS
JOB CA0902	LED COUNTDOWN PEDESTRIAN SIGNAL HEAD
JOB CA0902	LED LUMINAIRE ASSEMBLY (BUG UO TYPE)
JOB CA0902	LED TRAFFIC SIGNAL HEAD
JOB CA0902	MAINTENANCE OF TRAFFIC
JOB CA0902	MANDATORY ELECTRONIC CONTRACT
JOB CA0902	NESTING SITES OF MIGRATORY BIRDS
JOB CA0902	OFF-SITE RESTRAINING CONDITIONS FOR BATS
JOB CA0902	OMNI-DIRECTIONAL BREAKAWAY SIGN SUPPORT
JOB CA0902	OVERHEAD SIGN STRUCTURAL FOUNDATION
JOB CA0902	PAINT CONTRACTOR LABEL
JOB CA0902	PARTNERING REQUIREMENTS
JOB CA0902	PERCENT WITHIN LIMITS/PAVEMENT SMOOTHNESS
JOB CA0902	PIPE CULVERTS
JOB CA0902	PROSECUTION AND PROGRESS - CONNECTING ARKANSAS PROGRAM
JOB CA0902	RELOCATION OF TRAFFIC SIGNAL HEAD
JOB CA0902	REMOVAL AND DISPOSAL OF GUARDRAIL
JOB CA0902	REMOVAL AND DISPOSAL OF WIRE ROPE SAFETY FENCE
JOB CA0902	REMOVAL OF TRAFFIC SIGNAL EQUIPMENT
JOB CA0902	ROCK FILL
JOB CA0902	SERVICE POINT ASSEMBLY (TRAFFIC CONTROL DEVICES)
JOB CA0902	SHORING
JOB CA0902	SHORING FOR CULVERTS
JOB CA0902	SIGN PANEL MATERIALS AND FABRICATION
JOB CA0902	SITE USE (A+C METHOD) - CALENDAR DAY CONTRACT - CONNECTING ARKANSAS PROGRAM
JOB CA0902	SPECIAL SAFETY REQUIREMENTS FOR BRIDGES
JOB CA0902	SPECIAL SAFETY REQUIREMENTS FOR OVERHEAD SIGNS
JOB CA0902	STEEL SIGN STRUCTURES
JOB CA0902	STORM WATER POLLUTION PREVENTION PLAN
JOB CA0902	STREET NAME SIGN (MAST ARM MOUNTED)
JOB CA0902	SUBMISSION OF ASPHALT CONCRETE HOT MIX ACCEPTANCE TEST RESULTS
JOB CA0902	SYSTEM LOCAL CONTROLLER (FIBER)
JOB CA0902	TEXTURED COATING FINISH
JOB CA0902	TRAFFIC CABINET COMMUNICATIONS
JOB CA0902	TRAFFIC CONTROL DEVICES IN CONSTRUCTION ZONES
JOB CA0902	TRAFFIC SIGNAL MODIFICATION
JOB CA0902	UTILITY ADJUSTMENTS
JOB CA0902	VALUE ENGINEERING
JOB CA0902	VIDEO DETECTOR ROTATION
JOB CA0902	WARM MIX ASPHALT
JOB CA0902	WIC FIBER ENCLOSURE

STATE OF ARKANSAS REGISTERED PROFESSIONAL ENGINEER No. 8760 ANDREW E. FRIES 6/9/16

6/9/2016 3:43:54 PM M:\MS\ca0902.IND_HWY540_02.dgn

DATE	DATE FILMED	DATE REVISED	DATE FILMED	FED.RD. DIST.NO.	STATE	FED.AID PROJ.NO.	SHEET NO.	TOTAL SHEETS
				6	ARK.			
				JOB NO.		CA0902	004	581

(2) TYPICAL SECTIONS OF IMPROVEMENT

STATE OF ARKANSAS
REGISTERED PROFESSIONAL ENGINEER
No. 8760
ANDREW E. FRIES
5/5/16

NOTES:

REFER TO CROSS SECTIONS FOR DEVIATION FROM THE NORMAL SLOPES. NO CHANGES SHALL BE MADE FROM THE PLANNED SLOPES WITHOUT THE APPROVAL OF THE ENGINEER.

THE THICKNESS OF AGGREGATE BASE COURSE SHALL BE WITHIN PLUS OR MINUS ONE INCH OF THE PLAN THICKNESS SHOWN. THE CONTRACTOR WILL CORRECT ANY DEFICIENT THICKNESS THAT DOES NOT MEET TOLERANCE INDICATED. PAYMENT WILL NOT BE MADE FOR MATERIAL PLACED IN EXCESS OF THE TOLERANCE INDICATED.

THE FINAL 2" OF SURFACE COURSE IS TO BE PLACED AFTER ALL OTHER COURSES HAVE BEEN LAID. LONGITUDINAL JOINTS SHALL BE AT LANE LINES.

THE EXISTING ASPHALT PAVEMENT TO BE REMOVED FROM THE REMAINING PAVEMENT SHALL BE SEPARATED BY SAWING ALONG A NEAT LINE. AFTER SAWING, THE PAVEMENT TO BE REMOVED SHALL BE CAREFULLY REMOVED IN A MANNER THAT WILL NOT DAMAGE THE PAVEMENT THAT IS TO REMAIN. ANY DAMAGE OF THE ASPHALT PAVEMENT THAT IS TO REMAIN IN PLACE SHALL BE REPAIRED AT THE CONTRACTOR'S EXPENSE.

PRIOR TO AND DURING PLACEMENT OF PAVEMENT, THE CONTRACTOR SHALL PROVIDE POSITIVE DRAINAGE AT ALL TIMES. THE METHOD(S) USED SHALL BE APPROVED BE THE ENGINEER. PAYMENT FOR THIS WORK SHALL BE CONSIDERED INCLUDED IN THE PRICE BID FOR THE VARIOUS CONTRACT ITEMS.

UNDERDRAINS TO BE CONNECTED TO DROP INLETS.

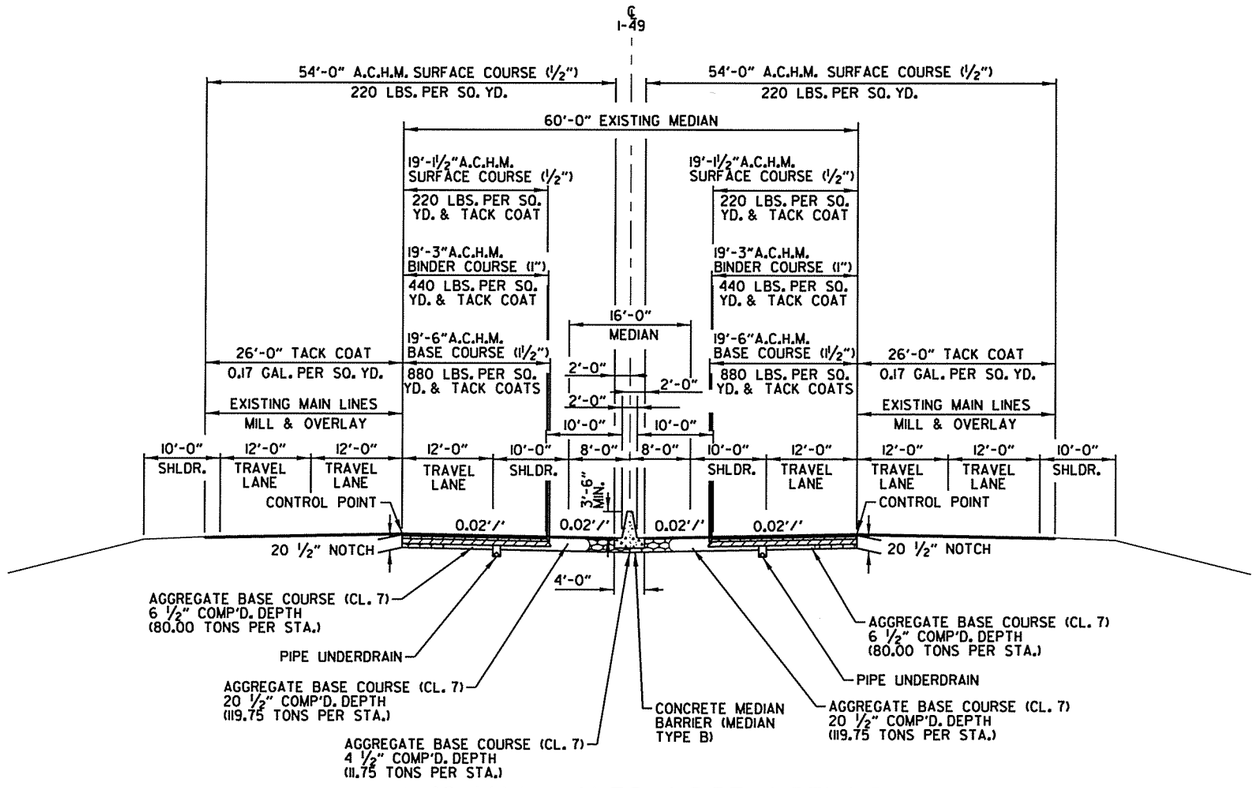

I-49 MAIN LANES INSIDE WIDENING

I-49 STA. 1314+25.00 - 1323+04.67
I-49 STA. 1325+52.84 - 1329+28.00
I-49 STA. 1347+11.00 - 1424+11.34 LT. / 1424+11.65 RT.

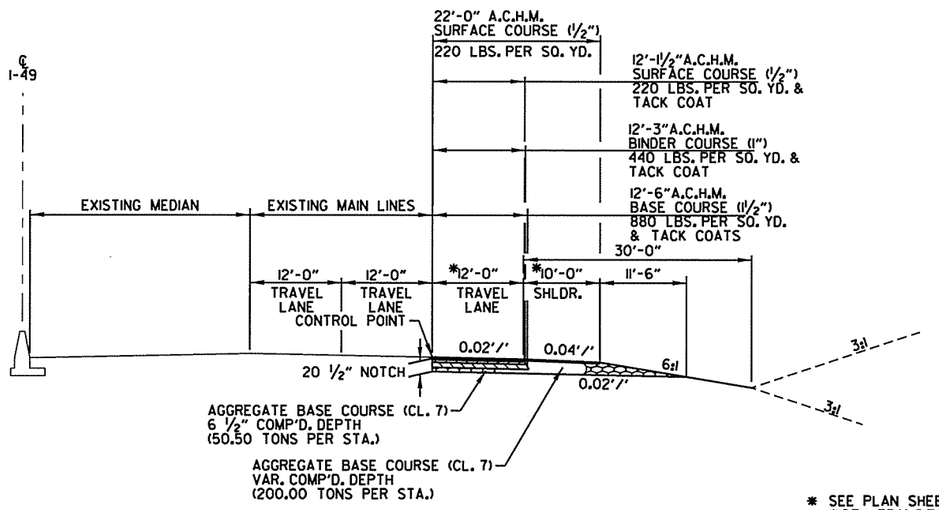

* SEE PLAN SHEETS FOR WIDTH TRANSITIONS

I-49 RIGHT AUXILIARY LANE OUTSIDE WIDENING (REVERSE FOR LEFT AUXILIARY LANE)

I-49 STA. 1256+74.80 - 1307+74.00 LT.
I-49 STA. 1264+00.00 - 1312+72.88 RT.

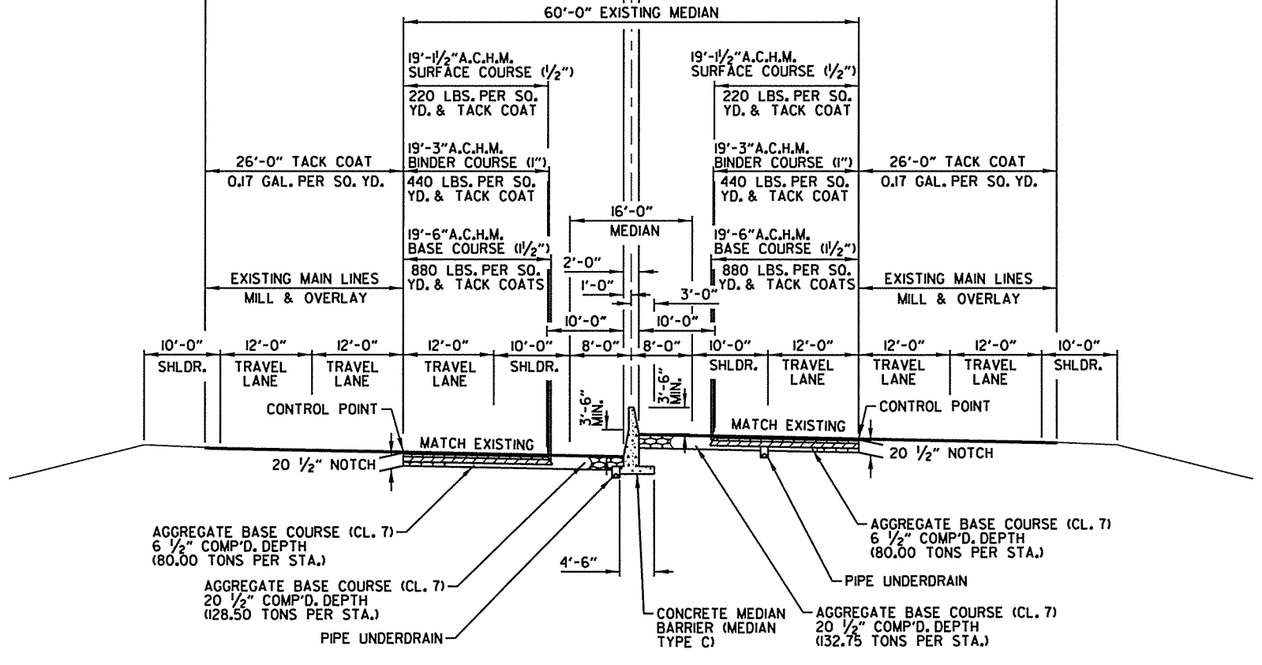

I-49 MAIN LANES INSIDE WIDENING - SUPERELEVATION

TYPICAL SECTIONS OF IMPROVEMENT

5/5/2016 10:01:50 AM \\TSS-FCA0902_TS_HWY540_01.dgn

DATE	DATE FILMED	DATE REVISED	DATE FILMED	FED.RD. DST.NO.	STATE	FED.AID PROJ.NO.	SHEET NO.	TOTAL SHEETS
				6	ARK.			
				JOB NO.		CA0902	005	581

(2) TYPICAL SECTIONS OF IMPROVEMENT

STATE OF ARKANSAS
REGISTERED PROFESSIONAL ENGINEER
No. 8760
ANDREW E. FRIES
5/5/16

NOTES:

REFER TO CROSS SECTIONS FOR DEVIATION FROM THE NORMAL SLOPES. NO CHANGES SHALL BE MADE FROM THE PLANNED SLOPES WITHOUT THE APPROVAL OF THE ENGINEER.

THE THICKNESS OF AGGREGATE BASE COURSE SHALL BE WITHIN PLUS OR MINUS ONE INCH OF THE PLAN THICKNESS SHOWN. THE CONTRACTOR WILL CORRECT ANY DEFICIENT THICKNESS THAT DOES NOT MEET TOLERANCE INDICATED. PAYMENT WILL NOT BE MADE FOR MATERIAL PLACED IN EXCESS OF THE TOLERANCE INDICATED.

THE FINAL 2" OF SURFACE COURSE IS TO BE PLACED AFTER ALL OTHER COURSES HAVE BEEN LAID. LONGITUDINAL JOINTS SHALL BE AT LANE LINES.

UNDERDRAINS TO BE CONNECTED TO DROP INLETS.

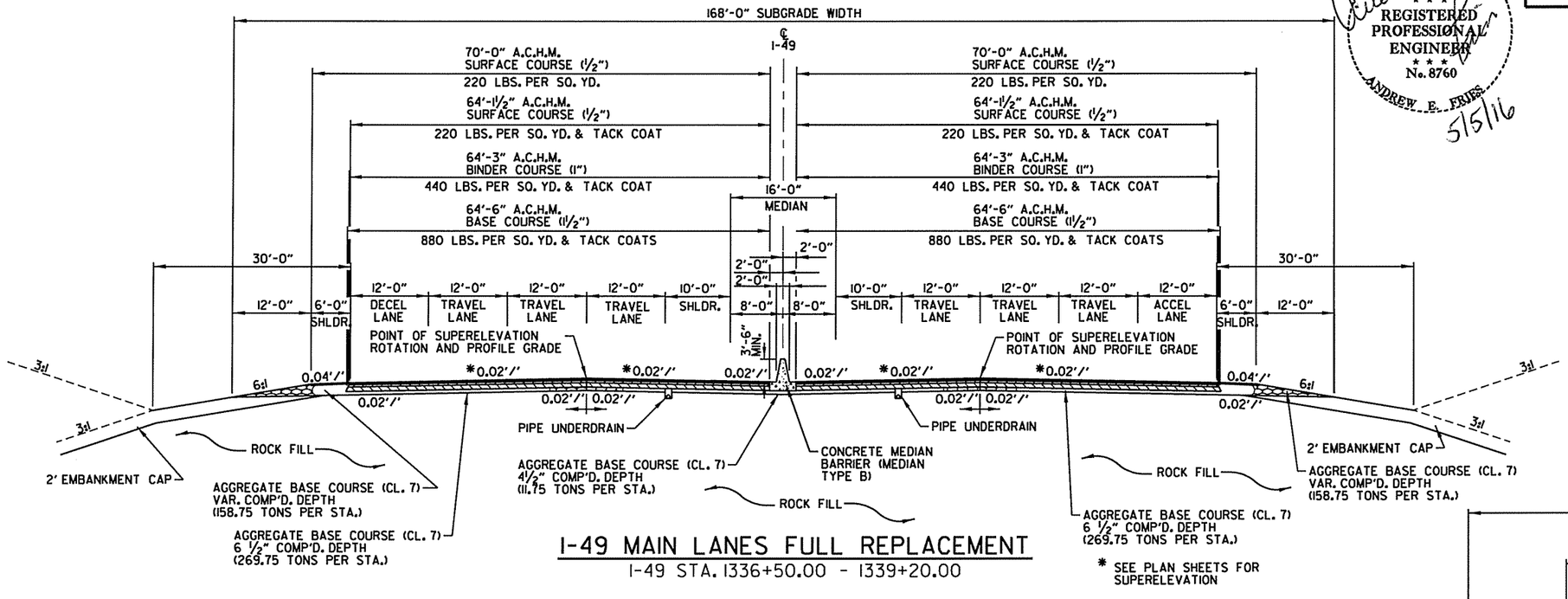

* SEE PLAN SHEETS FOR SUPERELEVATION

I-49 MAIN LANES FULL REPLACEMENT

I-49 STA. 1336+50.00 - 1339+20.00

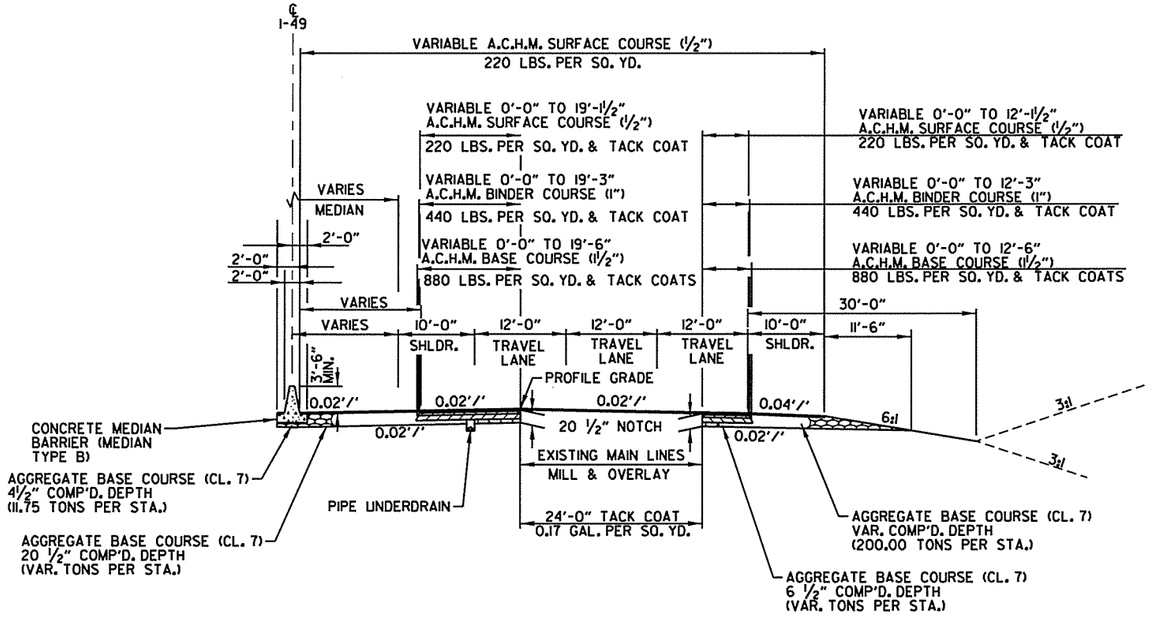

I-49 MAIN LANES INSIDE & OUTSIDE WIDENING

I-49 STA. 1424+11.34 - 1433+42.90 LT.
I-49 STA. 1424+11.65 - 1434+28.66 RT.

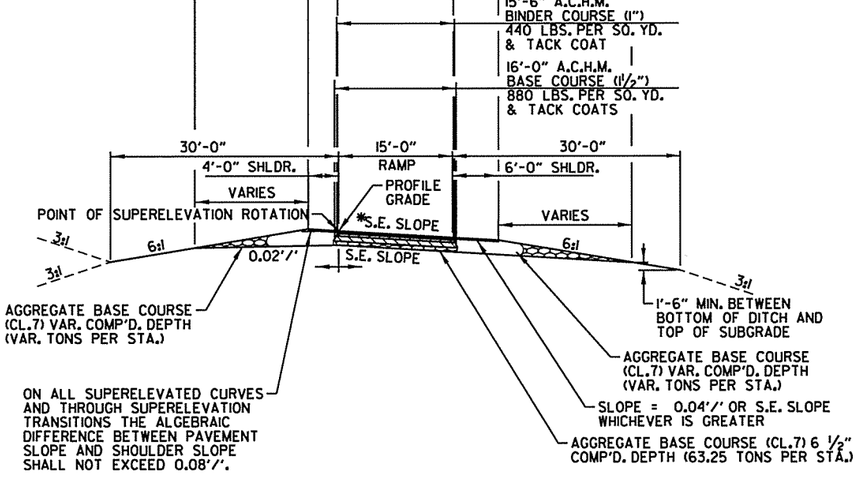

I-49 / HWY-72 LOOP RAMPS 5 & 6

RAMP 5 STA. 1433+32.29 - 1440+88.31
RAMP 6 STA. 192+70.31 - 200+26.14

* SEE PLAN SHEETS FOR SUPERELEVATION

TYPICAL SECTIONS OF IMPROVEMENT

5/5/2016
10:02:15 AM
\\TSSV-CA0902_TS_HWY540_02.dgn

DATE	DATE FILMED	DATE REVISED	DATE FILMED	FED.RD. DIST.NO.	STATE	FED.AID PROJ.NO.	SHEET NO.	TOTAL SHEETS
				6	ARK.			
				JOB NO.		CA0902	006	581

(2) TYPICAL SECTIONS OF IMPROVEMENT

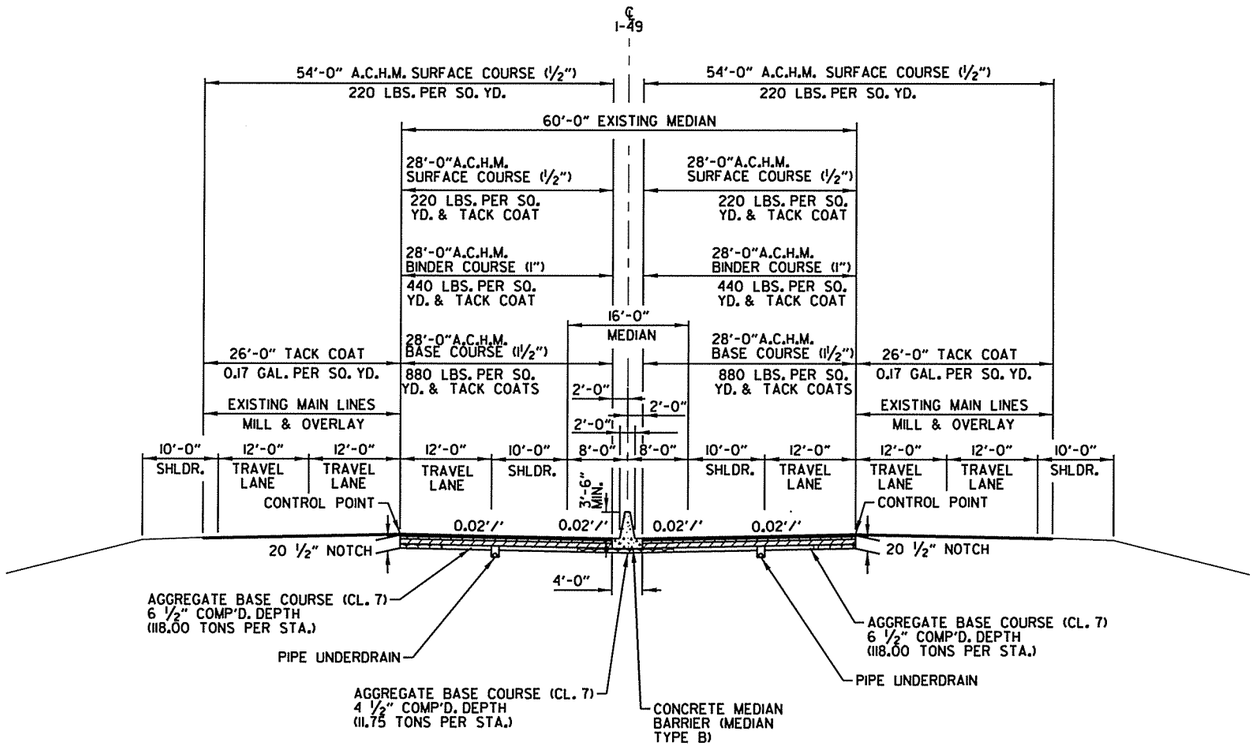

I-49 MAIN LANES INSIDE WIDENING

I-49 STA. 1329+28.00 - 1336+50.00
I-49 STA. 1339+20.00 - 1347+11.00

NOTES:

REFER TO CROSS SECTIONS FOR DEVIATION FROM THE NORMAL SLOPES. NO CHANGES SHALL BE MADE FROM THE PLANNED SLOPES WITHOUT THE APPROVAL OF THE ENGINEER.

THE THICKNESS OF AGGREGATE BASE COURSE SHALL BE WITHIN PLUS OR MINUS ONE INCH OF THE PLAN THICKNESS SHOWN. THE CONTRACTOR WILL CORRECT ANY DEFICIENT THICKNESS THAT DOES NOT MEET TOLERANCE INDICATED. PAYMENT WILL NOT BE MADE FOR MATERIAL PLACED IN EXCESS OF THE TOLERANCE INDICATED.

THE FINAL 2" OF SURFACE COURSE IS TO BE PLACED AFTER ALL OTHER COURSES HAVE BEEN LAID. LONGITUDINAL JOINTS SHALL BE AT LANE LINES.

THE EXISTING ASPHALT PAVEMENT TO BE REMOVED FROM THE REMAINING PAVEMENT SHALL BE SEPARATED BY SAWING ALONG A NEAT LINE. AFTER SAWING, THE PAVEMENT TO BE REMOVED SHALL BE CAREFULLY REMOVED IN A MANNER THAT WILL NOT DAMAGE THE PAVEMENT THAT IS TO REMAIN. ANY DAMAGE OF THE ASPHALT PAVEMENT THAT IS TO REMAIN IN PLACE SHALL BE REPAIRED AT THE CONTRACTOR'S EXPENSE.

PRIOR TO AND DURING PLACEMENT OF PAVEMENT, THE CONTRACTOR SHALL PROVIDE POSITIVE DRAINAGE AT ALL TIMES. THE METHOD(S) USED SHALL BE APPROVED BE THE ENGINEER. PAYMENT FOR THIS WORK SHALL BE CONSIDERED INCLUDED IN THE PRICE BID FOR THE VARIOUS CONTRACT ITEMS.

UNDERDRAINS TO BE CONNECTED TO DROP INLETS.

STATE OF ARKANSAS
REGISTERED PROFESSIONAL ENGINEER
No. 8760
ANDREW E. FRIES
5/5/16

5/5/2016
10:02:22 AM
...\TS\TCA0902_TS_HWY540_03.dgn

DATE	DATE FILMED	DATE REVISED	DATE FILMED	FED.RD. DIST.NO.	STATE	FED.AID PROJ.NO.	SHEET NO.	TOTAL SHEETS
				6	ARK.			
				JOB NO.		CA0902	007	581
				(2)	TYPICAL SECTIONS OF IMPROVEMENT			

STATE OF ARKANSAS
* * *
REGISTERED PROFESSIONAL ENGINEER
* * *
No. 8760
ANDREW E. FRIES
5/5/16

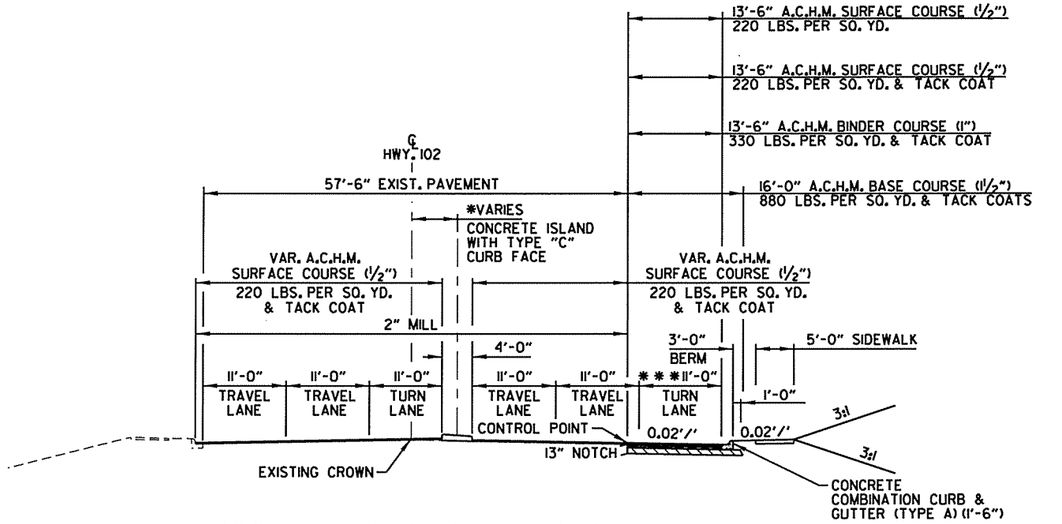

HWY. 102 TYPICAL SECTION

HWY. 102 STA. 6+21.02 - 9+75.00

* SEE SPECIAL DETAIL SHEETS FOR ISLAND WIDTH TRANSITIONS

** START MILL AND OVERLAY AT STA 5+00

*** VARIES FROM 0' AT STA. 6+21.02 TO 11' AT STA. 7+50.00

NOTES:

REFER TO CROSS SECTIONS FOR DEVIATION FROM THE NORMAL SLOPES. NO CHANGES SHALL BE MADE FROM THE PLANNED SLOPES WITHOUT THE APPROVAL OF THE ENGINEER.

THE FINAL 2" OF SURFACE COURSE IS TO BE PLACED AFTER ALL OTHER COURSES HAVE BEEN LAID. LONGITUDINAL JOINTS SHALL BE AT LANE LINES.

THE EXISTING ASPHALT PAVEMENT TO BE REMOVED FROM THE REMAINING PAVEMENT SHALL BE SEPARATED BY SAWING ALONG A NEAT LINE. AFTER SAWING, THE PAVEMENT TO BE REMOVED SHALL BE CAREFULLY REMOVED IN A MANNER THAT WILL NOT DAMAGE THE PAVEMENT THAT IS TO REMAIN. ANY DAMAGE OF THE ASPHALT PAVEMENT THAT IS TO REMAIN IN PLACE SHALL BE REPAIRED AT THE CONTRACTOR'S EXPENSE.

PRIOR TO AND DURING PLACEMENT OF PAVEMENT IN FRONT OF CURB AND GUTTER, THE CONTRACTOR SHALL PROVIDE POSITIVE DRAINAGE AT ALL TIMES. THE METHOD(S) USED SHALL BE APPROVED BY THE ENGINEER. PAYMENT FOR THE WORK SHALL BE CONSIDERED INCLUDED IN THE PRICE BID FOR THE VARIOUS CONTRACT ITEMS.

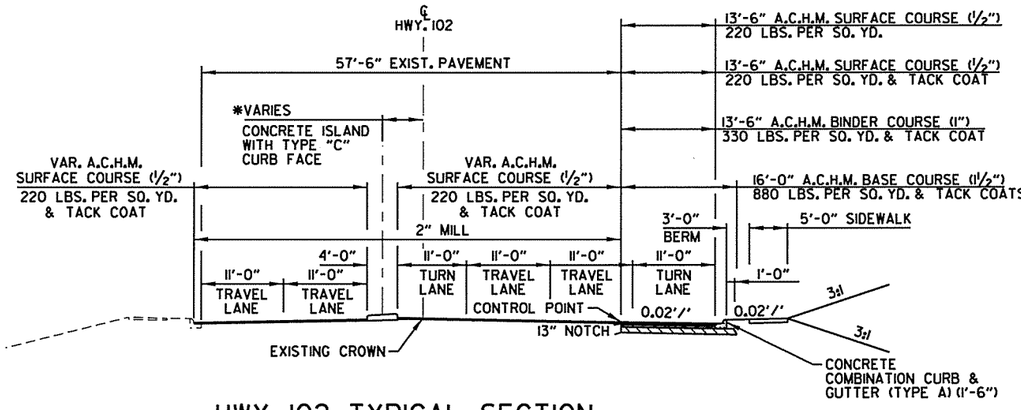

HWY. 102 TYPICAL SECTION

HWY. 102 STA. 9+75.00 - 14+59.17

* SEE SPECIAL DETAIL SHEETS FOR ISLAND WIDTH TRANSITIONS

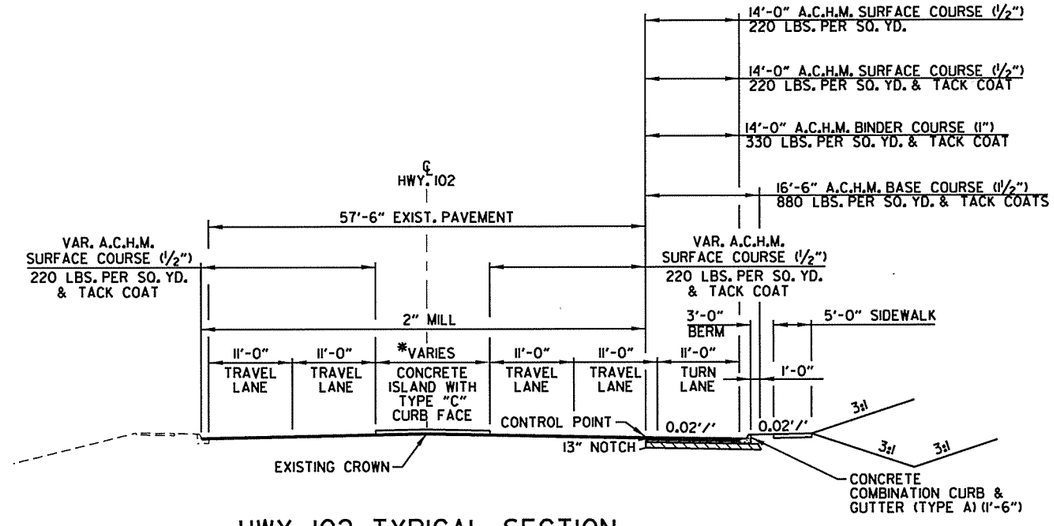

HWY. 102 TYPICAL SECTION

HWY. 102 STA. 14+59.17 - 16+67.07

* SEE SPECIAL DETAIL SHEETS FOR ISLAND WIDTH TRANSITIONS

** END MILL AND OVERLAY AT STA 18+00

TYPICAL SECTIONS OF IMPROVEMENT

5/5/2016
10:02:27 AM
\\ESTC\CA0902_TS_14TH_ST_01.dgn

DATE	DATE FILMED	DATE REVISED	DATE FILMED	FED.RD. DIST.NO.	STATE	FED.AID PROJ.NO.	SHEET NO.	TOTAL SHEETS
				6	ARK.			
				JOB NO.		CA0902	008	581

(2) TYPICAL SECTIONS OF IMPROVEMENT

STATE OF ARKANSAS
REGISTERED PROFESSIONAL ENGINEER
No. 8760
ANDREW E. FRIES
5/5/16

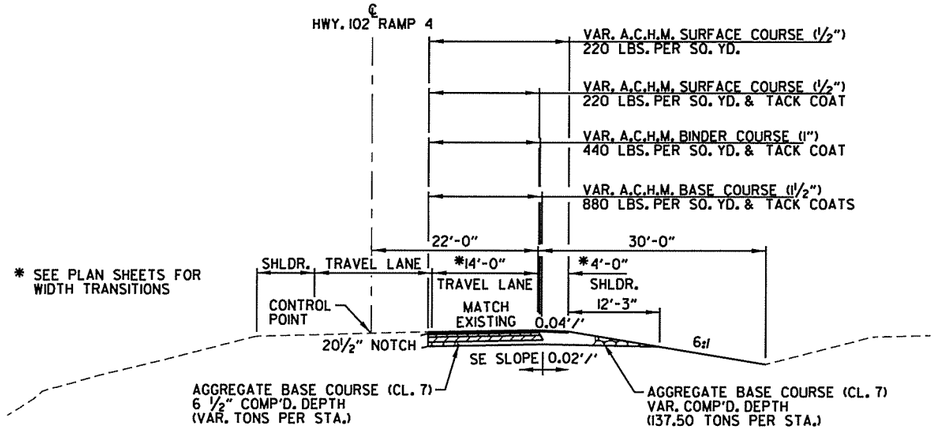

I-49 / HWY. 102 RAMP 4 TYPICAL SECTION

RAMP 4 STA. 1021+95.92 - 1024+95.92

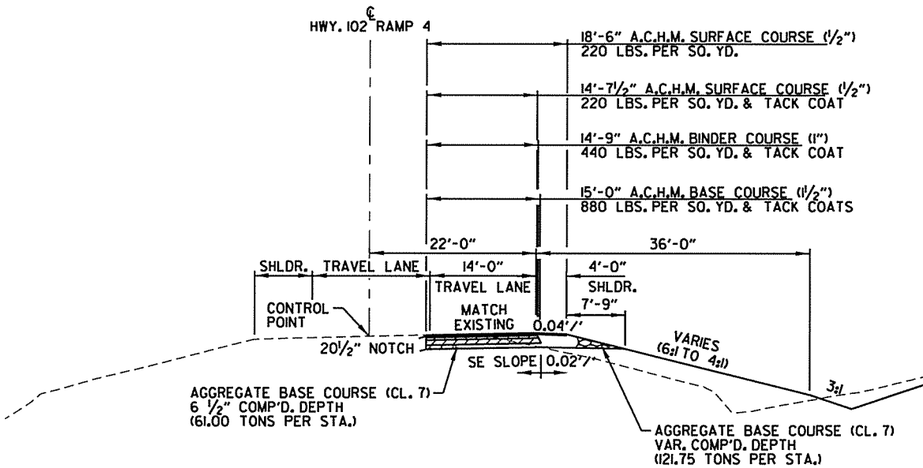

I-49 / HWY. 102 RAMP 4 TYPICAL SECTION

RAMP 4 STA. 1024+95.92 - 1025+91.05

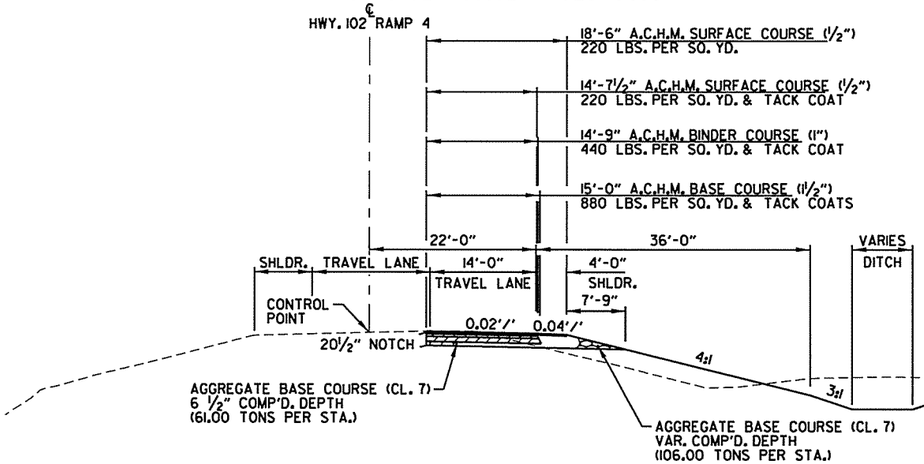

I-49 / HWY. 102 RAMP 4 TYPICAL SECTION

RAMP 4 STA. 1025+91.05 - 1027+00.00

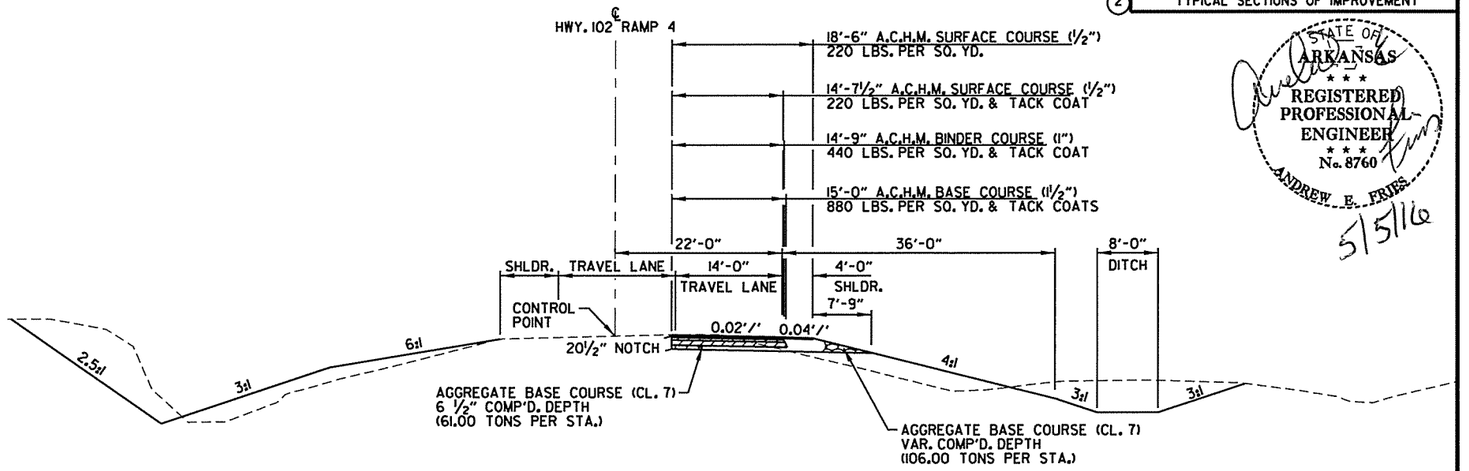

I-49 / HWY. 102 RAMP 4 TYPICAL SECTION

RAMP 4 STA. 1027+00.00 - 1029+43.40

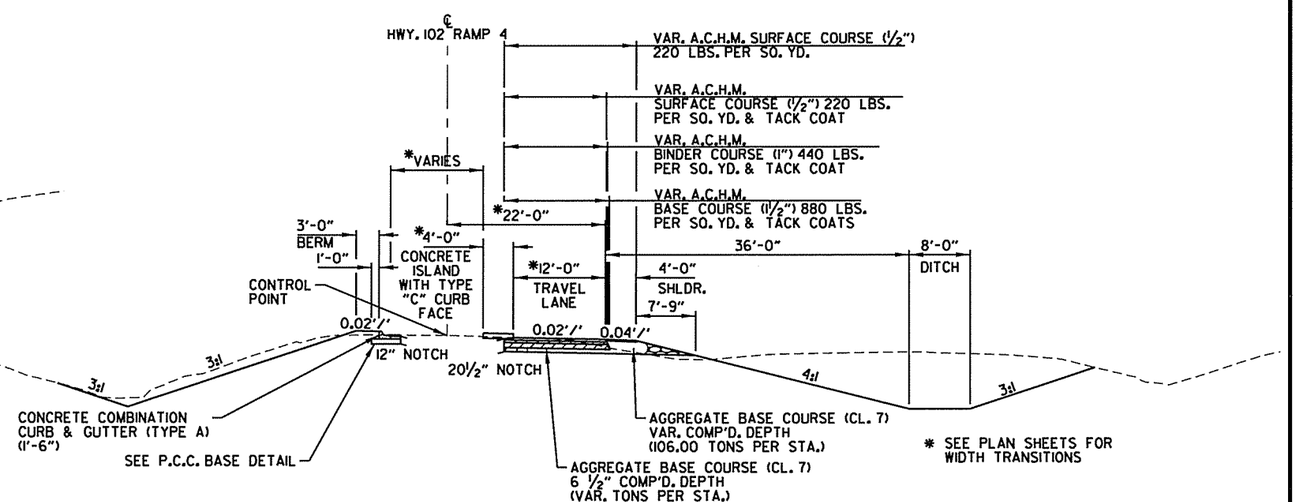

I-49 / HWY. 102 RAMP 4 TYPICAL SECTION

RAMP 4 STA. 1029+43.40 - 1030+86.34

NOTES:

REFER TO CROSS SECTIONS FOR DEVIATION FROM THE NORMAL SLOPES. NO CHANGES SHALL BE MADE FROM THE PLANNED SLOPES WITHOUT THE APPROVAL OF THE ENGINEER.

THE THICKNESS OF AGGREGATE BASE COURSE SHALL BE WITHIN PLUS OR MINUS ONE INCH OF THE PLAN THICKNESS SHOWN. THE CONTRACTOR WILL CORRECT ANY DEFICIENT THICKNESS THAT DOES NOT MEET TOLERANCE INDICATED. PAYMENT WILL NOT BE MADE FOR MATERIAL PLACED IN EXCESS OF THE TOLERANCE INDICATED.

THE FINAL 2" OF SURFACE COURSE IS TO BE PLACED AFTER ALL OTHER COURSES HAVE BEEN LAID. LONGITUDINAL JOINTS SHALL BE AT LANE LINES.

THE EXISTING ASPHALT PAVEMENT TO BE REMOVED FROM THE REMAINING PAVEMENT SHALL BE SEPARATED BY SAWING ALONG A NEAT LINE. AFTER SAWING, THE PAVEMENT TO BE REMOVED SHALL BE CAREFULLY REMOVED IN A MANNER THAT WILL NOT DAMAGE THE PAVEMENT THAT IS TO REMAIN. ANY DAMAGE OF THE ASPHALT PAVEMENT THAT IS TO REMAIN IN PLACE SHALL BE REPAIRED AT THE CONTRACTOR'S EXPENSE.

PRIOR TO AND DURING PLACEMENT OF PAVEMENT IN FRONT OF CURB AND GUTTER, THE CONTRACTOR SHALL PROVIDE POSITIVE DRAINAGE AT ALL TIMES. THE METHOD(S) USED SHALL BE APPROVED BY THE ENGINEER. PAYMENT FOR THE WORK SHALL BE CONSIDERED INCLUDED IN THE PRICE BID FOR THE VARIOUS CONTRACT ITEMS.

TYPICAL SECTIONS OF IMPROVEMENT

5/5/2016
10:02:33 AM
\\TS\FCA0902_TS_14TH_ST_02.dgn

DATE	DATE FILMED	DATE REVISED	DATE FILMED	FED.RD. DIST.NO.	STATE	FED.AID PROJ.NO.	SHEET NO.	TOTAL SHEETS
				6	ARK.			
				JOB NO.		CA0902	009	581
				(2)	TYPICAL SECTIONS OF IMPROVEMENT			

STATE OF ARKANSAS
REGISTERED PROFESSIONAL ENGINEER
No. 8760
ANDREW E. FRIES
5/5/16

NOTES:

REFER TO CROSS SECTIONS FOR DEVIATION FROM THE NORMAL SLOPES. NO CHANGES SHALL BE MADE FROM THE PLANNED SLOPES WITHOUT THE APPROVAL OF THE ENGINEER.

THE FINAL 2" OF SURFACE COURSE IS TO BE PLACED AFTER ALL OTHER COURSES HAVE BEEN LAID. LONGITUDINAL JOINTS SHALL BE AT LANE LINES.

THE EXISTING ASPHALT PAVEMENT TO BE REMOVED FROM THE REMAINING PAVEMENT SHALL BE SEPARATED BY SAWING ALONG A NEAT LINE. AFTER SAWING, THE PAVEMENT TO BE REMOVED SHALL BE CAREFULLY REMOVED IN A MANNER THAT WILL NOT DAMAGE THE PAVEMENT THAT IS TO REMAIN. ANY DAMAGE OF THE ASPHALT PAVEMENT THAT IS TO REMAIN IN PLACE SHALL BE REPAIRED AT THE CONTRACTOR'S EXPENSE.

PRIOR TO AND DURING PLACEMENT OF PAVEMENT IN FRONT OF CURB AND GUTTER, THE CONTRACTOR SHALL PROVIDE POSITIVE DRAINAGE AT ALL TIMES. THE METHOD(S) USED SHALL BE APPROVED BY THE ENGINEER. PAYMENT FOR THE WORK SHALL BE CONSIDERED INCLUDED IN THE PRICE BID FOR THE VARIOUS CONTRACT ITEMS.

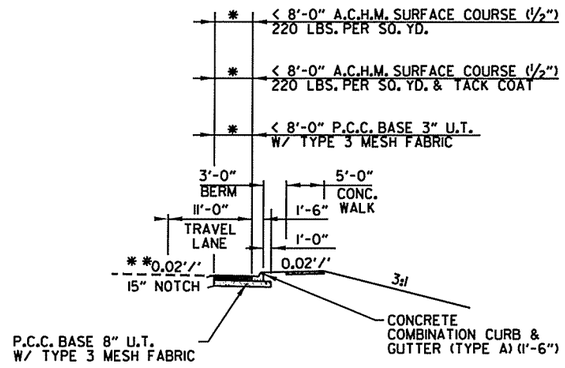

P.C.C. BASE DETAIL RT. W/ CONC. WALK

HWY. 102 STA. 6+21.02 - 6+69.99 RT.
HWY. 72 STA. 183+69.37 - 184+41.05 RT.
HWY. 72 STA. 188+05.25 - 188+85.65 RT.
HWY. 72 STA. 199+90.77 - 200+54.56 RT.
HWY. 72 STA. 204+07.25 - 204+23.66 RT.

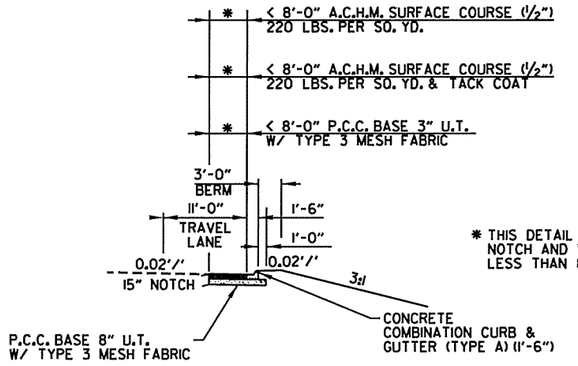

* THIS DETAIL IS TO BE USED IN NOTCH AND WIDEN SECTIONS OF LESS THAN 8'-0"

P.C.C. BASE DETAIL RT.

HWY. 72 STA. 204+51.94 - 204+68.74 RT.
HWY. 72 STA. 212+59.39 - 212+67.49 RT.

* THIS DETAIL IS TO BE USED IN NOTCH AND WIDEN SECTIONS OF LESS THAN 8'-0"

** USE 0.02'/' OR SEE CROSS SECTIONS FOR ROADWAY SLOPE

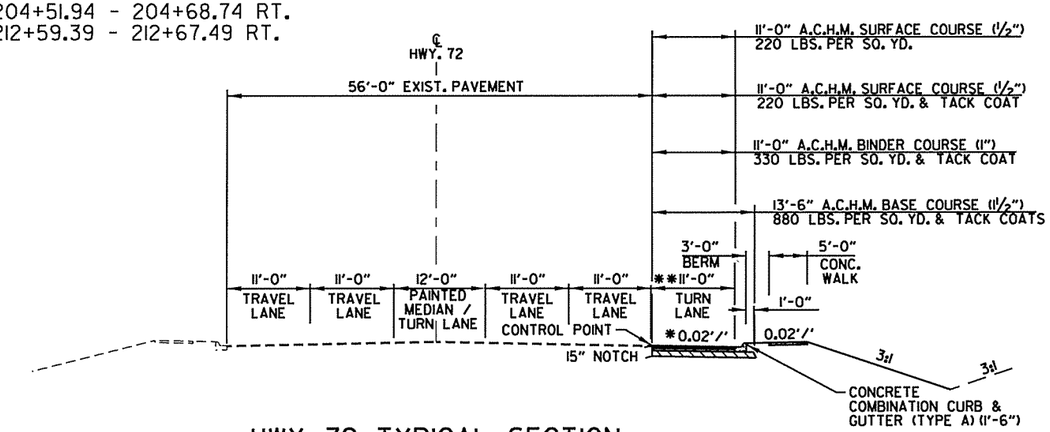

HWY. 72 TYPICAL SECTION

HWY. 72 STA. 183+69.37 - 188+84.00

* SLOPE = .02'/' OR MATCH EXISTING WHICHEVER IS GREATER

** 0' RT. STA. 183+69.37
11' RT. STA. 184+69.22

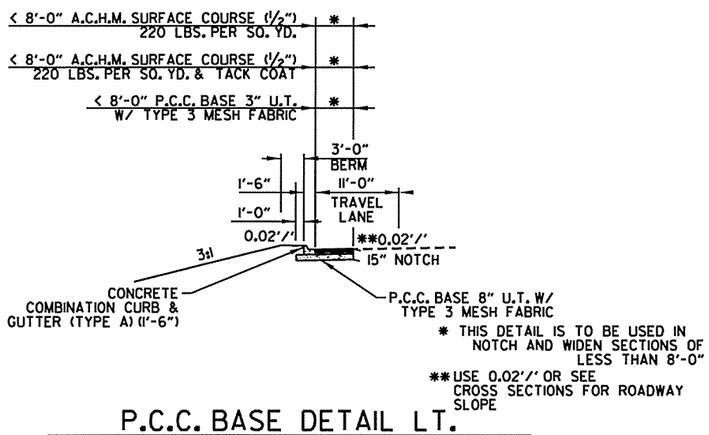

* THIS DETAIL IS TO BE USED IN NOTCH AND WIDEN SECTIONS OF LESS THAN 8'-0"

** USE 0.02'/' OR SEE CROSS SECTIONS FOR ROADWAY SLOPE

P.C.C. BASE DETAIL LT.

HWY. 102 RAMP 4 STA. 1029+43.40 - 1030+47.82 LT.
HWY. 72 STA. 200+16.35 - 200+79.06 LT.
HWY. 72 STA. 202+88.85 - 203+19.71 LT.
HWY. 72 STA. 203+46.40 - 203+93.15 LT.
HWY. 72 STA. 204+30.63 - 204+59.70 LT.
HWY. 72 STA. 205+45.13 - 205+71.12 LT.
HWY. 72 STA. 206+18.00 - 206+33.00 LT.
HWY. 72 STA. 212+06.02 - 212+78.72 LT.

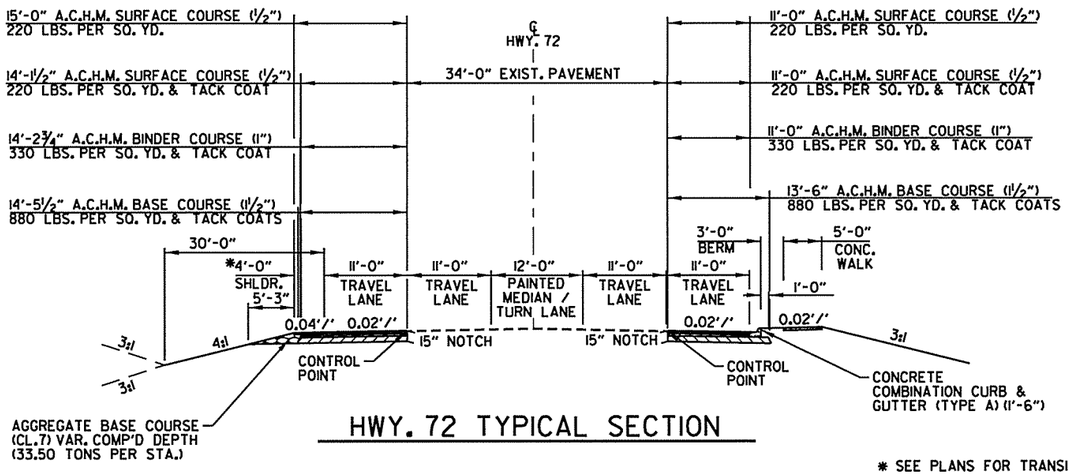

HWY. 72 TYPICAL SECTION

HWY. 72 STA. 188+84.00 - 191+56.17
HWY. 72 STA. 197+32.61 - 200+38.66**

* SEE PLANS FOR TRANSITION

* STA. 200+00.24 TO STA. 200+38.66 RT. ONLY

TYPICAL SECTIONS OF IMPROVEMENT

5/5/2016
10:02:39 AM
\\TSYS\CA0902_TS_HWY72_01.dgn

DATE	DATE FILMED	DATE REVISED	DATE FILMED	FED.RD. DIST.NO.	STATE	FED.AID PROJ.NO.	SHEET NO.	TOTAL SHEETS
				6	ARK.			
				JOB NO.		CA0902	010	581

(2) TYPICAL SECTIONS OF IMPROVEMENT

STATE OF ARKANSAS
REGISTERED PROFESSIONAL ENGINEER
No. 8760
ANDREW E. FRISBIE
5/5/16

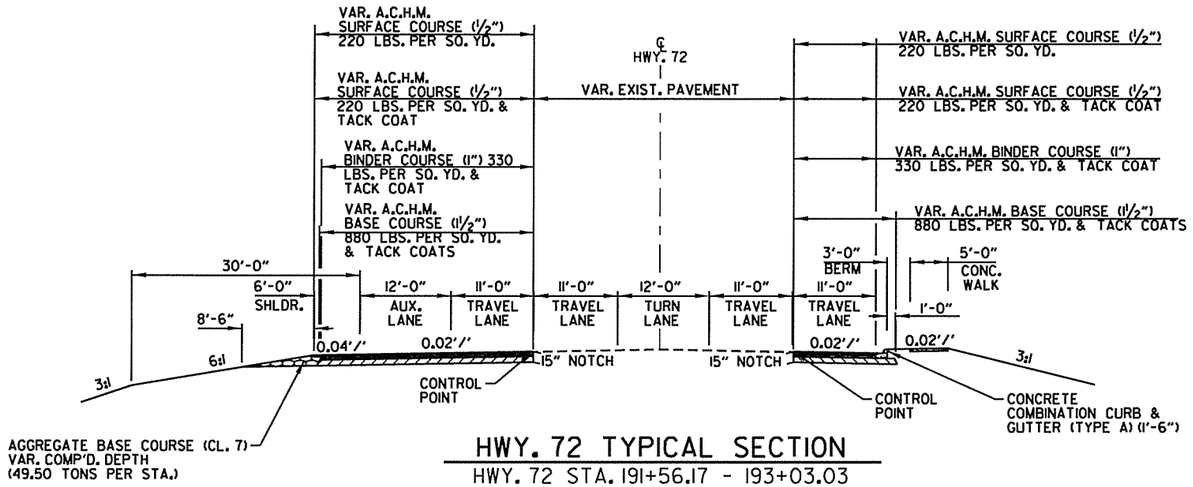

HWY. 72 TYPICAL SECTION

HWY. 72 STA. 191+56.17 - 193+03.03
HWY. 72 STA. 195+69.21 - 197+32.61

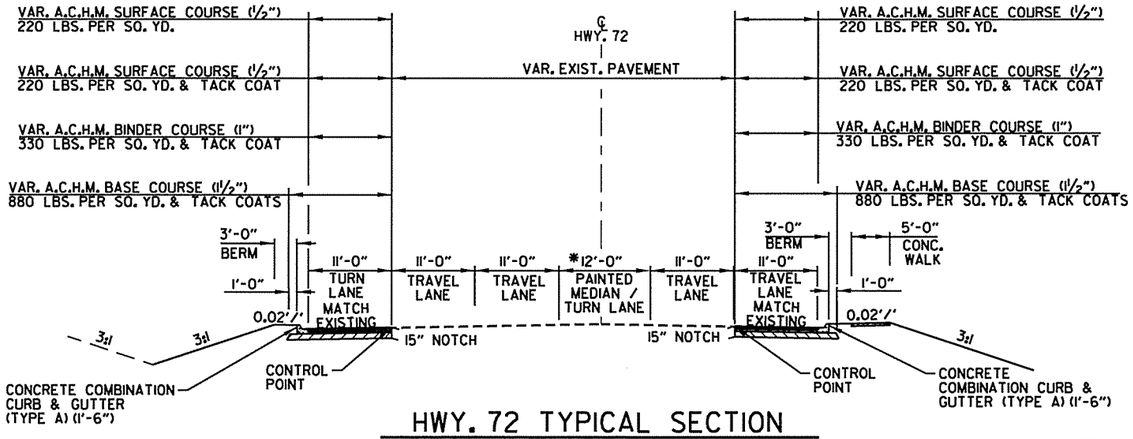

HWY. 72 TYPICAL SECTION

HWY. 72 STA. 200+38.66 - 203+46.40

* SEE PLAN SHEETS FOR WIDTH AND MARKING TRANSITIONS

NOTES:

REFER TO CROSS SECTIONS FOR DEVIATION FROM THE NORMAL SLOPES. NO CHANGES SHALL BE MADE FROM THE PLANNED SLOPES WITHOUT THE APPROVAL OF THE ENGINEER.

THE THICKNESS OF AGGREGATE BASE COURSE SHALL BE WITHIN PLUS OR MINUS ONE INCH OF THE PLAN THICKNESS SHOWN. THE CONTRACTOR WILL CORRECT ANY DEFICIENT THICKNESS THAT DOES NOT MEET TOLERANCE INDICATED. PAYMENT WILL NOT BE MADE FOR MATERIAL PLACED IN EXCESS OF THE TOLERANCE INDICATED.

THE FINAL 2" OF SURFACE COURSE IS TO BE PLACED AFTER ALL OTHER COURSES HAVE BEEN LAID. LONGITUDINAL JOINTS SHALL BE AT LANE LINES.

THE EXISTING ASPHALT PAVEMENT TO BE REMOVED FROM THE REMAINING PAVEMENT SHALL BE SEPARATED BY SAWING ALONG A NEAT LINE. AFTER SAWING, THE PAVEMENT TO BE REMOVED SHALL BE CAREFULLY REMOVED IN A MANNER THAT WILL NOT DAMAGE THE PAVEMENT THAT IS TO REMAIN. ANY DAMAGE OF THE ASPHALT PAVEMENT THAT IS TO REMAIN IN PLACE SHALL BE REPAIRED AT THE CONTRACTOR'S EXPENSE.

PRIOR TO AND DURING PLACEMENT OF PAVEMENT IN FRONT OF CURB AND GUTTER, THE CONTRACTOR SHALL PROVIDE POSITIVE DRAINAGE AT ALL TIMES. THE METHOD(S) USED SHALL BE APPROVED BY THE ENGINEER. PAYMENT FOR THE WORK SHALL BE CONSIDERED INCLUDED IN THE PRICE BID FOR THE VARIOUS CONTRACT ITEMS.

5/5/2016
10:02:45 AM
\\TSY\CA0902_TS_HWY72_02.dgn

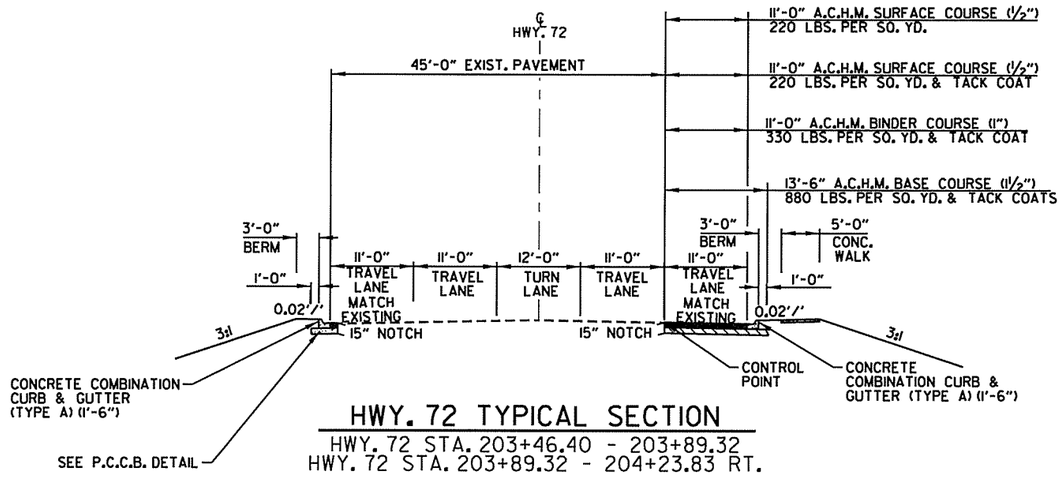

HWY. 72 TYPICAL SECTION

HWY. 72 STA. 203+46.40 - 203+89.32
HWY. 72 STA. 203+89.32 - 204+23.83 RT.

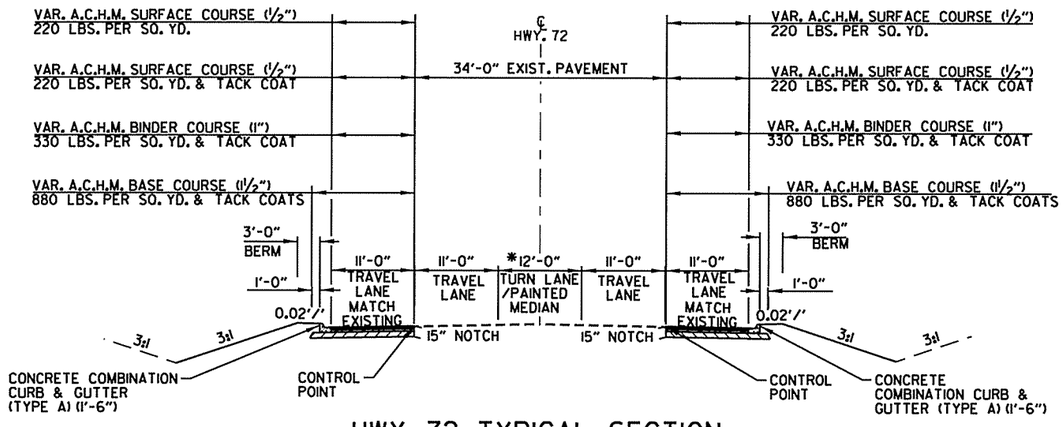

HWY. 72 TYPICAL SECTION

HWY. 72 STA. 204+23.83 - 207+81.42

*SEE PLAN SHEETS FOR WIDTH AND MARKING TRANSITIONS

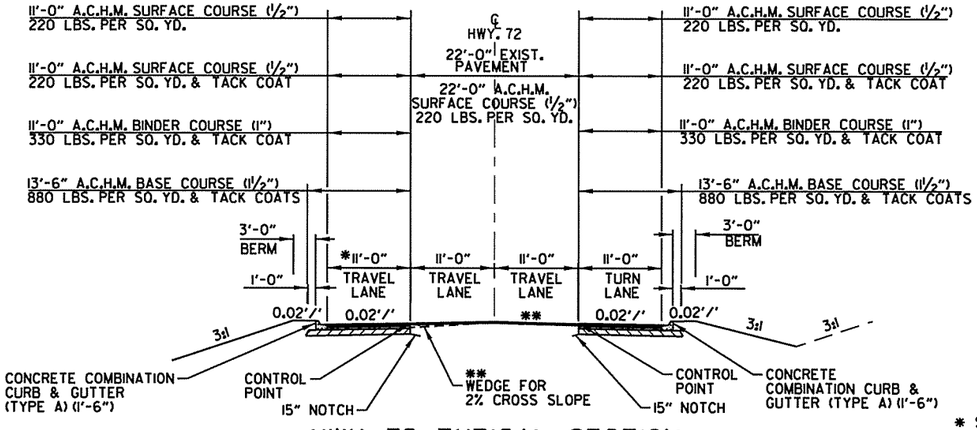

HWY. 72 TYPICAL SECTION

HWY. 72 STA. 207+81.42 - 211+78.72 LT.
HWY. 72 STA. 211+78.72 - 212+78.72

* SEE PLAN SHEETS FOR WIDTH TRANSITIONS

** 206+75.00 TO 212+78.72
MILL RT - FOR 2% SLOPE AND OVERLAY
WEDGE LEFT - FOR 2% SLOPE AND OVERLAY

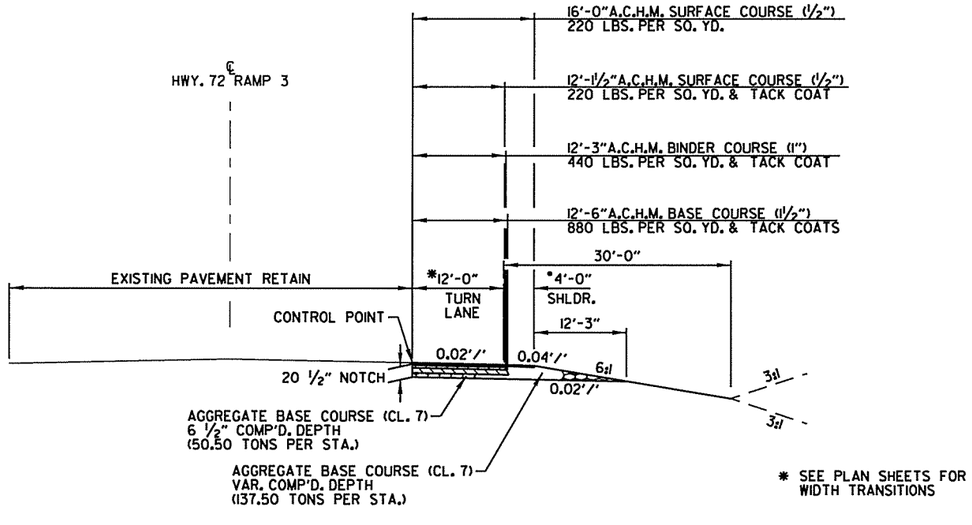

HWY. 72 / I-49 RAMP 3 TYPICAL SECTION

HWY. 72 RAMP 3 STA. 300+31.07 - 300+88.52
HWY. 72 RAMP 3 STA. 300+88.52 - 303+51.14
HWY. 72 RAMP 3 STA. 303+51.14 - 304+53.26

STATE OF ARKANSAS
REGISTERED PROFESSIONAL ENGINEER
No. 8760
ANDREW E. FRIES
5/5/16

DATE	DATE FILMED	DATE REVISED	DATE FILMED	FED.RD. DIST.NO.	STATE	FED.AID PROJ.NO.	SHEET NO.	TOTAL SHEETS
				6	ARK.			
				JOB NO.		CA0902	011	581

(2) TYPICAL SECTIONS OF IMPROVEMENT

NOTES:

REFER TO CROSS SECTIONS FOR DEVIATION FROM THE NORMAL SLOPES. NO CHANGES SHALL BE MADE FROM THE PLANNED SLOPES WITHOUT THE APPROVAL OF THE ENGINEER.

THE THICKNESS OF AGGREGATE BASE COURSE SHALL BE WITHIN PLUS OR MINUS ONE INCH OF THE PLAN THICKNESS SHOWN. THE CONTRACTOR WILL CORRECT ANY DEFICIENT THICKNESS THAT DOES NOT MEET TOLERANCE INDICATED. PAYMENT WILL NOT BE MADE FOR MATERIAL PLACED IN EXCESS OF THE TOLERANCE INDICATED.

THE FINAL 2" OF SURFACE COURSE IS TO BE PLACED AFTER ALL OTHER COURSES HAVE BEEN LAID. LONGITUDINAL JOINTS SHALL BE AT LANE LINES.

THE EXISTING ASPHALT PAVEMENT TO BE REMOVED FROM THE REMAINING PAVEMENT SHALL BE SEPARATED BY SAWING ALONG A NEAT LINE. AFTER SAWING, THE PAVEMENT TO BE REMOVED SHALL BE CAREFULLY REMOVED IN A MANNER THAT WILL NOT DAMAGE THE PAVEMENT THAT IS TO REMAIN. ANY DAMAGE OF THE ASPHALT PAVEMENT THAT IS TO REMAIN IN PLACE SHALL BE REPAIRED AT THE CONTRACTOR'S EXPENSE.

PRIOR TO AND DURING PLACEMENT OF PAVEMENT IN FRONT OF CURB AND GUTTER, THE CONTRACTOR SHALL PROVIDE POSITIVE DRAINAGE AT ALL TIMES. THE METHOD(S) USED SHALL BE APPROVED BY THE ENGINEER. PAYMENT FOR THE WORK SHALL BE CONSIDERED INCLUDED IN THE PRICE BID FOR THE VARIOUS CONTRACT ITEMS.

5/5/2016 10:02:49 AM
\\TSY\FCA0902_TS_HWY72_03.dgn

DATE	DATE FILMED	DATE REVISED	DATE FILMED	FED.RD. DIST.NO.	STATE	FED.AID PROJ.NO.	SHEET NO.	TOTAL SHEETS
				6	ARK.			
				JOB NO.		CA0902	012	581

(2) SPECIAL DETAILS

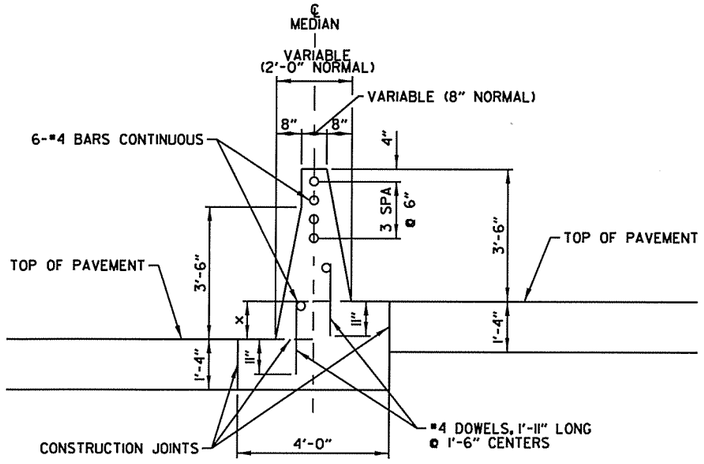

CONCRETE BARRIER WALL (MEDIAN TYPE B)
X= 0'-0" TO 1'-0" MAX.

GENERAL NOTES FOR CONCRETE BARRIER WALLS

1. ALL BARRIER WALLS SHALL BE CONSTRUCTED IN ACCORDANCE WITH SECTION 631 OF THE STANDARD SPECIFICATIONS, 2014 EDITION.
2. CONTRACTION JOINTS REQUIRED @ 30'-0" MAXIMUM SPACING IS REQUIRED FOR MEDIAN TYPE C.
3. ALL CONTRACTION JOINTS TO BE FORMED IN FRESH CONCRETE ON TOP AND IN SIDES OF BARRIER WALL.
4. ALL EXPOSED EDGES OF CONCRETE BARRIER WALL SHALL HAVE 3/4" CHAMFER.
5. THE DESIGN OF BARRIER WALL MEDIAN TYPE C IS BASED ON A MINIMUM FOUNDATION BEARING CAPACITY OF ONE TON PER SQUARE FOOT. UNSTABLE FOUNDATION MATERIAL SHALL BE REMOVED AND REPLACED TO PROVIDE A FIRM FOUNDATION.
6. SPACING BETWEEN EXPANSION JOINTS SHALL NOT EXCEED 120 FT FOR BARRIER TYPE C MEDIAN. EXPANSION JOINTS SHALL BE FORMED USING 1" PREFORMED JOINT FILLER. CONTINUOS REINFORCEMENT SHALL BE CUT 2" CLEAR OF EXPANSION JOINTS.
7. DRAINAGE OPENING TO BE CONSTRUCTED AS DIRECTED BY THE ENGINEER.

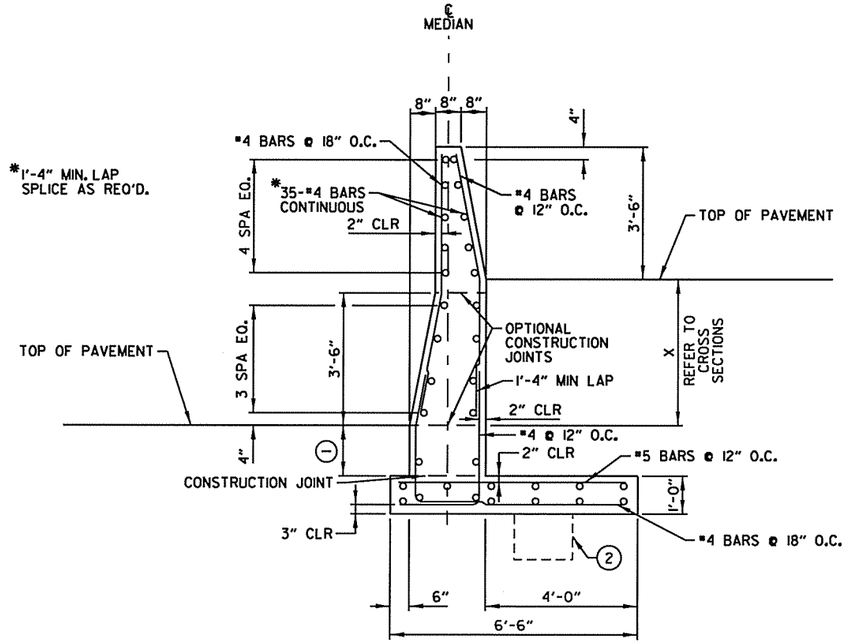

CONCRETE BARRIER WALL (MEDIAN TYPE C)
X= 1'-0" TO 5'-0" MAX.

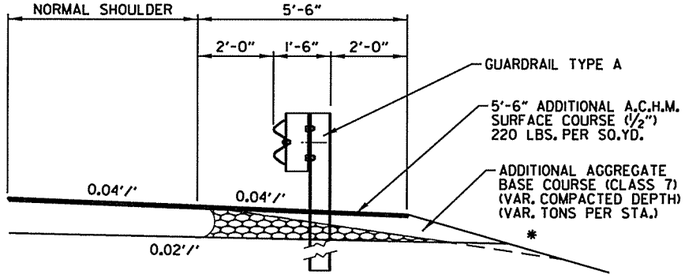

* NOTE: REFER TO STD. DWG. GR-9A AND CROSS SECTIONS FOR SLOPE REQUIREMENTS BEHIND GUARDRAIL.

WIDENING FOR GUARDRAIL

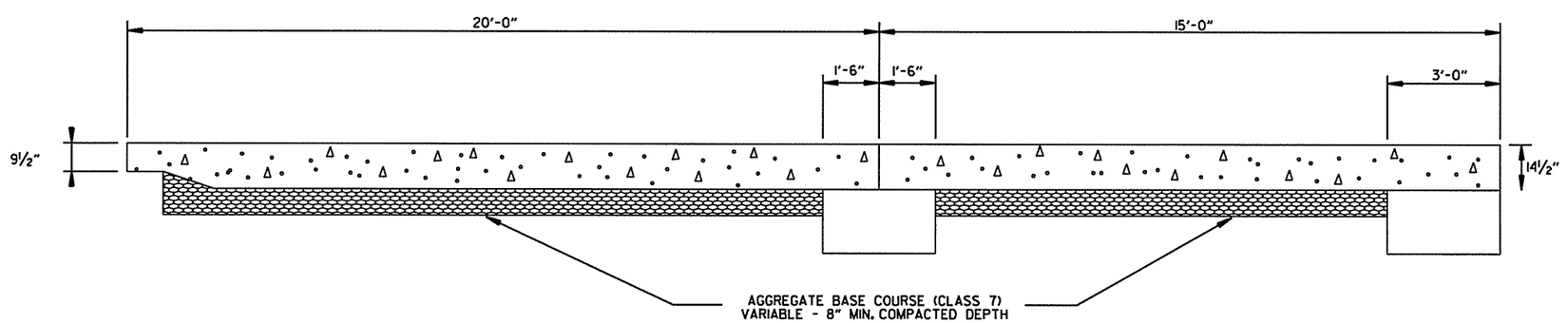

NOTE: REFER TO BRIDGE DRAWINGS FOR ADDITIONAL INFORMATION.

DETAIL OF APPROACH SLAB

NOTE:
FOOTING REINFORCEMENT OMITTED FOR CLARITY.

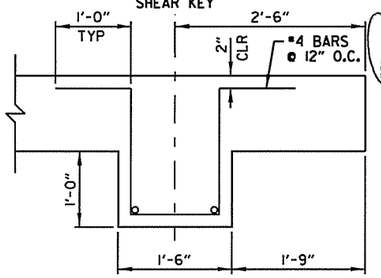

SHEAR KEY DETAIL

(1) MATCH DEPTH OF PAVEMENT

(2) SHEAR KEY REQUIRED WHEN "X" EXCEEDS 3'-6"

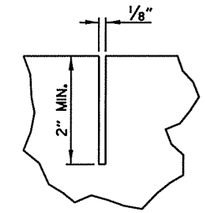

CONTRACTION JOINT DETAIL

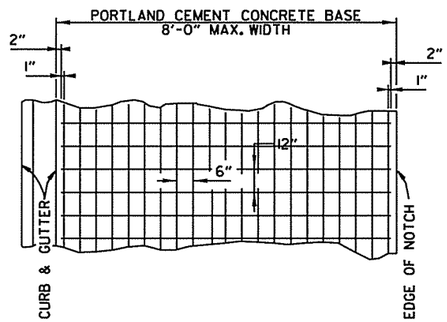

6" X 12" MESH FABRIC (TYPE 3) (W5.5 X W2.9) = 4.26 LBS./SQ.YD.

NOTES:

1. LAP MESH FABRIC MIN. 12" LONGITUDINALLY AND MIN. 6" TRANSVERSELY.
2. MESH FABRIC IS NOT REQUIRED WHEN WIDTH OF PORTLAND CEMENT CONCRETE BASE IS LESS THAN 12".
3. MESH FABRIC (TYPE 3) WILL NOT BE PAID FOR DIRECTLY, BUT FULL COMPENSATION THEREFORE WILL BE CONSIDERED INCLUDED IN THE CONTRACT PRICE BID PER SQ. YD. FOR PORTLAND CEMENT CONCRETE BASE (8" U.T.)

DETAIL OF REINFORCING STEEL FOR PAVEMENT (MESH FABRIC TYPE 3)

STATE OF ARKANSAS
REGISTERED PROFESSIONAL ENGINEER
No. 8760
ANDREW E. FRIES
5/15/16

5/5/2016
10:02:54 AM
\\MSV_CA0902_SD_HWY540_Old.dgn

DATE	DATE FILMED	DATE REVISED	DATE FILMED	FED.RD. DIST.NO.	STATE	FED.AID PROJ.NO.	SHEET NO.	TOTAL SHEETS
				6	ARK.			
				JOB NO.		CA0902	013	581

(2) SPECIAL DETAILS

STATE OF ARKANSAS
* * *
REGISTERED PROFESSIONAL ENGINEER
* * *
No. 8760
ANDREW E. FRIES
5/5/16

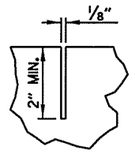

CONTRACTION JOINT DETAIL

GENERAL NOTES FOR CONCRETE BARRIER WALLS

1. ALL BARRIER WALLS SHALL BE CONSTRUCTED IN ACCORDANCE WITH SECTION 631 OF THE STANDARD SPECIFICATIONS, 2014 EDITION.
2. CONTRACTION JOINTS REQUIRED @ 15'-0" MAXIMUM SPACING FOR BARRIER SECTION AA & BB. A 30'-0" MAXIMUM SPACING IS REQUIRED FOR BARRIER SECTION CC. CONTRACTION JOINTS ARE NOT PERMITTED AT THE DOWEL BAR LOCATIONS.
3. ALL CONTRACTION JOINTS TO BE FORMED IN FRESH CONCRETE ON TOP AND IN SIDES OF BARRIER WALL.
4. DOWEL BARS FOR BARRIER SECTION AA & BB WILL NOT BE REQUIRED IF BARRIER AND MINIMUM 8' WIDE BASE ARE CAST AS A COMPLETE UNIT.
5. ALL EXPOSED EDGES OF CONCRETE BARRIER WALL SHALL HAVE A ¾" CHAMFER.
6. SPACING BETWEEN EXPANSION JOINTS SHALL NOT EXCEED 400 FT. FOR BARRIER. EXPANSION JOINTS SHALL BE FORMED USING 1" PREFORMED JOINT FILLER. CONTINUOUS REINFORCEMENT SHALL BE CUT 2" CLEAR OF EXPANSION JOINTS.
7. MAINTAIN 3" CLEARANCE ON ALL FOOTING REINFORCEMENT AND 2" CLEARANCE ON ALL OTHER REINFORCEMENT.
8. DRAINAGE OPENINGS TO BE CONSTRUCTED AS DIRECTED BY THE ENGINEER.

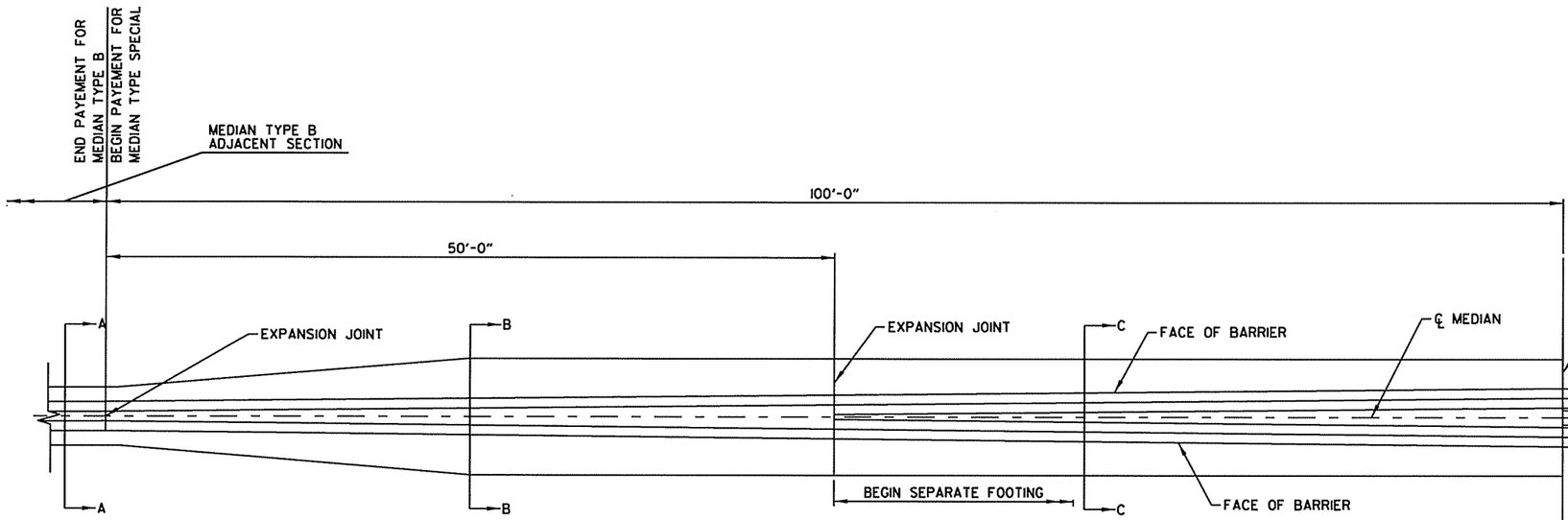

NOTE: TRANSITION FOR SOUTH SIDE SHOWN
NORTH SIDE TRANSITION IS IDENTICAL.

CONCRETE BARRIER WALL

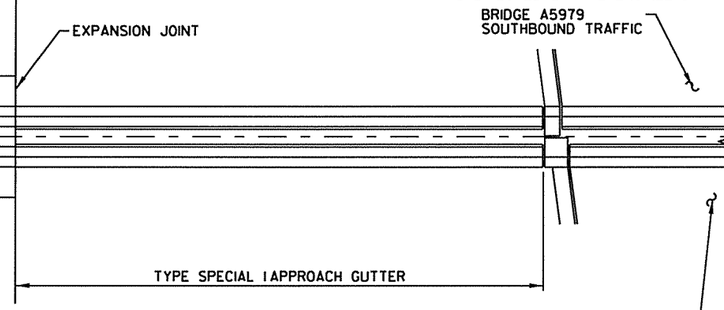

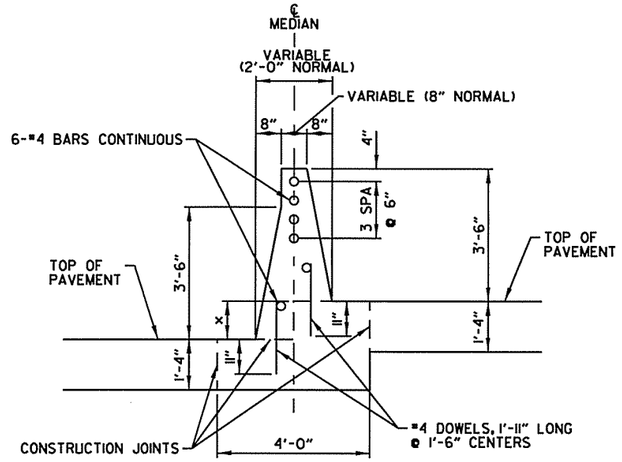

CONCRETE BARRIER WALL
(MEDIAN TYPE B)
X= 0'-0" TO 1'-0" MAX.

SECTION A-A

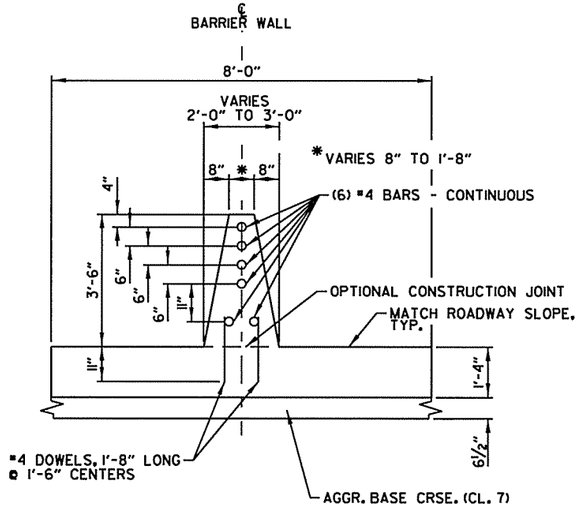

SECTION B-B

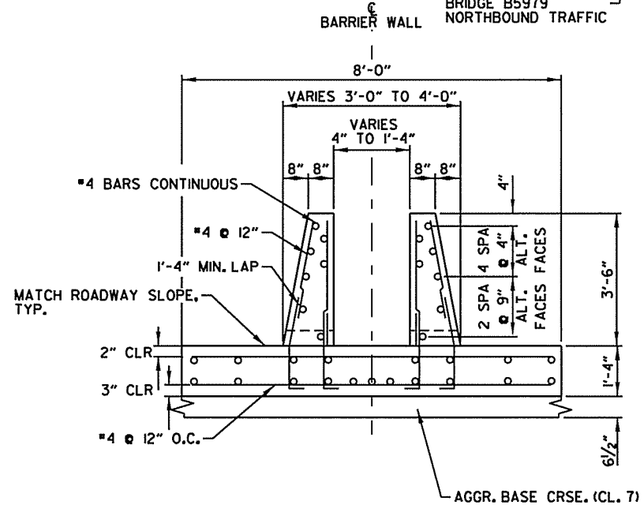

SECTION C-C

SECTION A-A

CONCRETE BARRIER WALL (MEDIAN TYPE B) TRANSITION FOR
BRIDGE WIDENING A5979 & B5979

SPECIAL DETAILS

5/5/2016
10:02:57 AM
M:\ST\CA0902_SD_HWY540_02.dgn

DATE	DATE FILMED	DATE REVISED	DATE FILMED	FED.RD. DIST.NO.	STATE	FED.AID PROJ.NO.	SHEET NO.	TOTAL SHEETS
				6	ARK.			
				JOB NO.		CA0902	014	581

(2) SPECIAL DETAILS

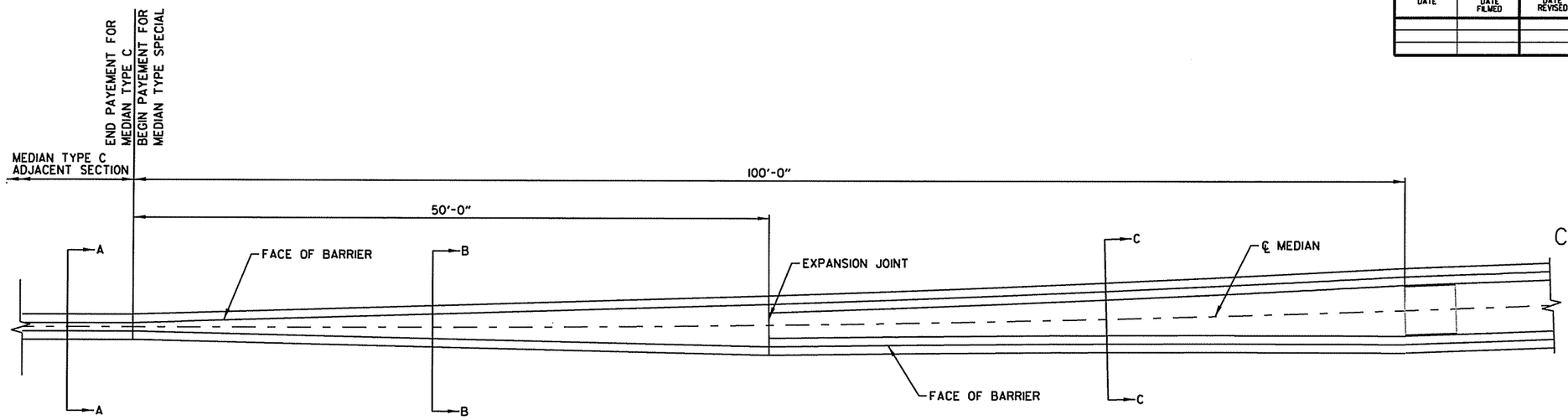

CONCRETE BARRIER WALL

NOTE: TRANSITION FOR SOUTH SIDE SHOWN
NORTH SIDE TRANSITION IS IDENTICAL.

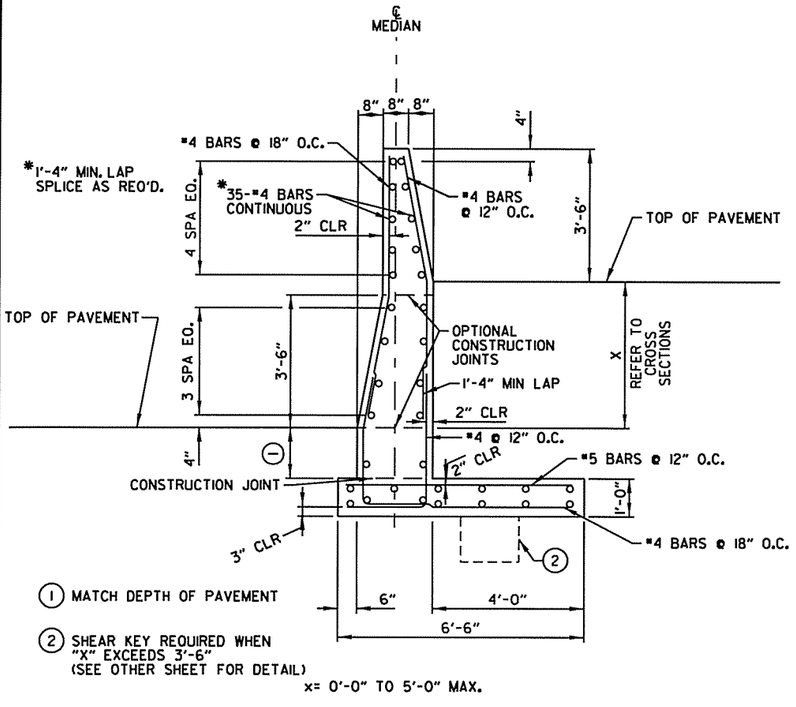

SECTION A-A

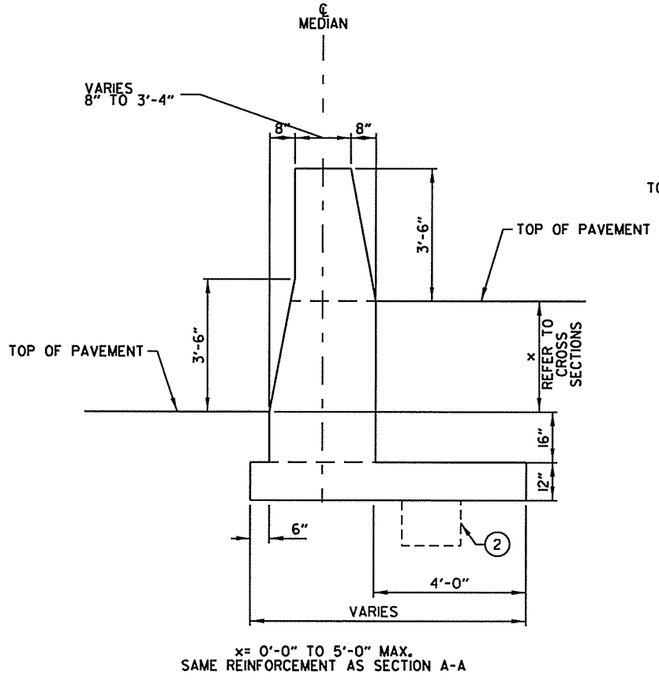

SECTION B-B

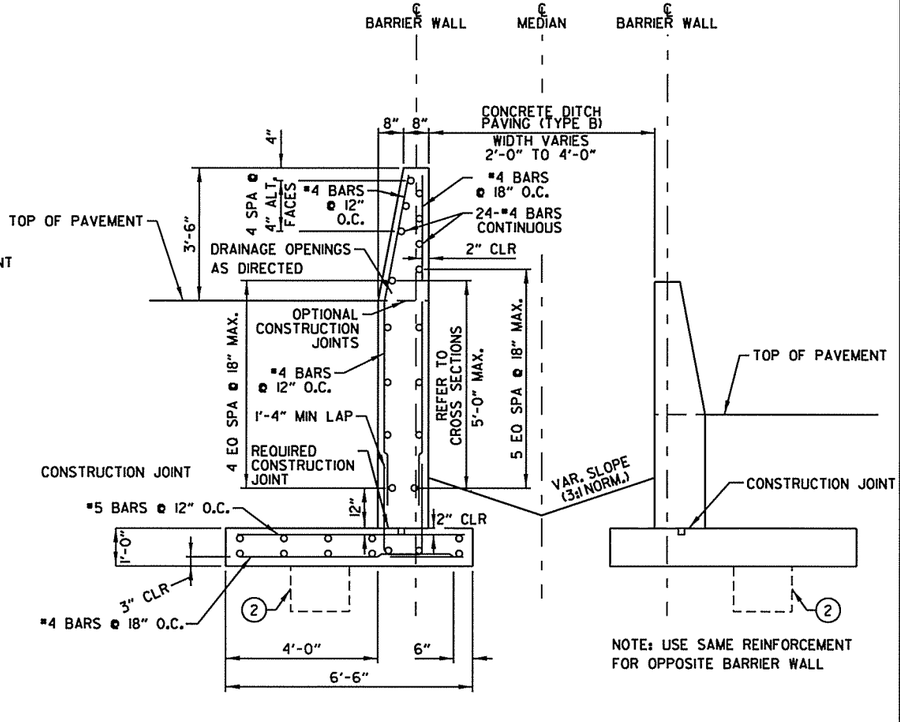

SECTION C-C

GENERAL NOTES FOR CONCRETE BARRIER WALLS

1. ALL BARRIER WALLS SHALL BE CONSTRUCTED IN ACCORDANCE WITH SECTION 631 OF THE STANDARD SPECIFICATIONS, 2014 EDITION.
2. CONTRACTION JOINTS REQUIRED @ 30'-0" MAXIMUM SPACING FOR MEDIAN TYPE C.
3. ALL CONTRACTION JOINTS TO BE FORMED IN FRESH CONCRETE ON TOP AND IN SIDES OF BARRIER WALL.
4. ALL EXPOSED EDGES OF CONCRETE BARRIER WALL SHALL HAVE A ¾" CHAMFER.
5. THE DESIGN OF BARRIER WALL MEDIAN TYPE C IS BASED ON A MINIMUM FOUNDATION BEARING CAPACITY OF ONE TON PER SQUARE FOOT. UNSTABLE FOUNDATION MATERIAL SHALL BE REMOVED AND REPLACED TO PROVIDE A FIRM FOUNDATION.
6. SPACING BETWEEN EXPANSION JOINTS SHALL NOT EXCEED 120 FT. FOR BARRIER MEDIAN TYPE C. EXPANSION JOINTS SHALL BE FORMED USING 1" PREFORMED JOINT FILLER. CONTINUOUS REINFORCEMENT SHALL BE CUT 2" CLEAR OF EXPANSION JOINTS.
7. DRAINAGE OPENINGS TO BE CONSTRUCTED AS DIRECTED BY THE ENGINEER.

CONCRETE BARRIER WALL (MEDIAN TYPE C) TRANSITION

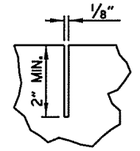

CONTRACTION JOINT DETAIL

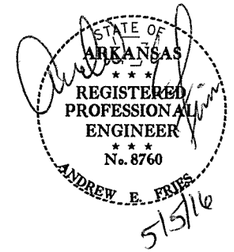

5/5/2016
10:03:02 AM
\\MSV_CA0902_SD_HWY540_03.dgn

SPECIAL DETAILS

DATE	DATE FILMED	DATE REVISED	DATE FILMED	FED.RD. DIST.NO.	STATE	FED.AID PROJ.NO.	SHEET NO.	TOTAL SHEETS
				6	ARK.			
				JOB NO.		CA0902	015	581

(2) SPECIAL DETAILS

STATE OF ARKANSAS
REGISTERED PROFESSIONAL ENGINEER
No. 8760
ANDREW E. FRIES
5/16/16

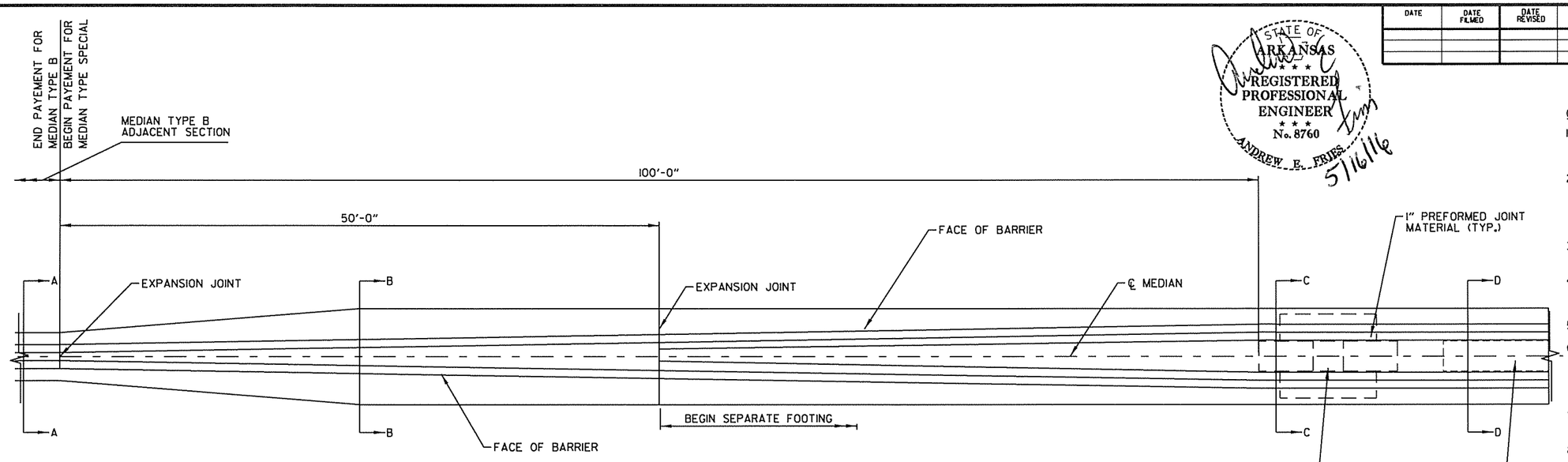

CONCRETE BARRIER WALL

NOTE: TRANSITION FOR SOUTH SIDE SHOWN NORTH SIDE TRANSITION IS IDENTICAL.

GENERAL NOTES FOR CONCRETE BARRIER WALLS

1. ALL BARRIER WALLS SHALL BE CONSTRUCTED IN ACCORDANCE WITH SECTION 631 OF THE STANDARD SPECIFICATIONS, 2014 EDITION.
2. CONTRACTION JOINTS REQUIRED @ 15'-0" MAXIMUM SPACING FOR BARRIER SECTION AA & BB. A 30'-0" MAXIMUM SPACING IS REQUIRED FOR BARRIER SECTION CC. CONTRACTION JOINTS ARE NOT PERMITTED AT THE DOWEL BAR LOCATIONS.
3. ALL CONTRACTION JOINTS TO BE FORMED IN FRESH CONCRETE ON TOP AND IN SIDES OF BARRIER WALL.
4. DOWEL BARS FOR BARRIER SECTION AA & BB WILL NOT BE REQUIRED IF BARRIER AND MINIMUM 8' WIDE BASE ARE CAST AS A COMPLETE UNIT.
5. ALL EXPOSED EDGES OF CONCRETE BARRIER WALL SHALL HAVE A ¾" CHAMFER.
6. SPACING BETWEEN EXPANSION JOINTS SHALL NOT EXCEED 400 FT. FOR BARRIER. EXPANSION JOINTS SHALL BE FORMED USING 1" PREFORMED JOINT FILLER. CONTINUOUS REINFORCEMENT SHALL BE CUT 2" CLEAR OF EXPANSION JOINTS.
7. MAINTAIN 3" CLEARANCE ON ALL FOOTING REINFORCEMENT AND 2" CLEARANCE ON ALL OTHER REINFORCEMENT.
8. DRAINAGE OPENINGS TO BE CONSTRUCTED AS DIRECTED BY THE ENGINEER.

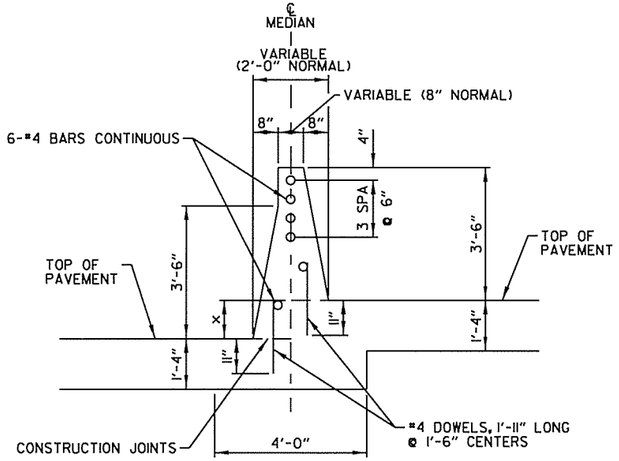

CONCRETE BARRIER WALL (MEDIAN TYPE B)

X= 0'-0" TO 1'-0" MAX.

SECTION A-A

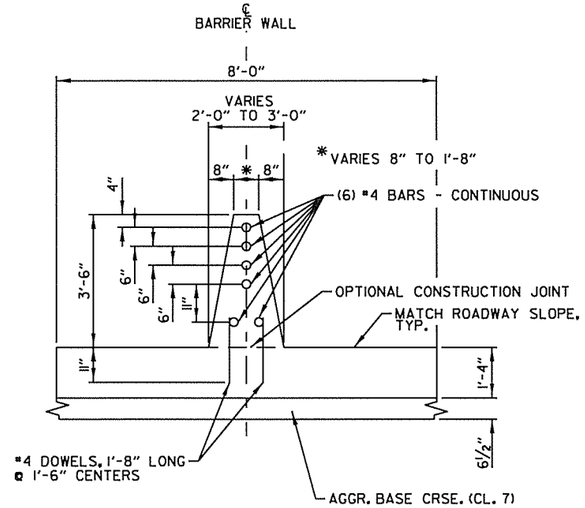

SECTION B-B

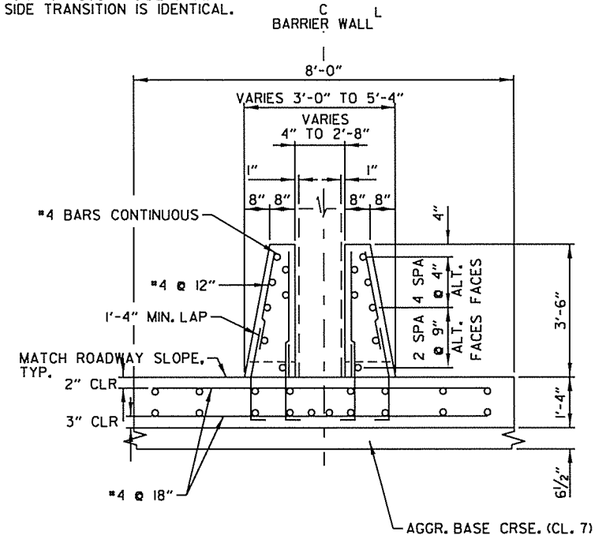

SECTION C-C

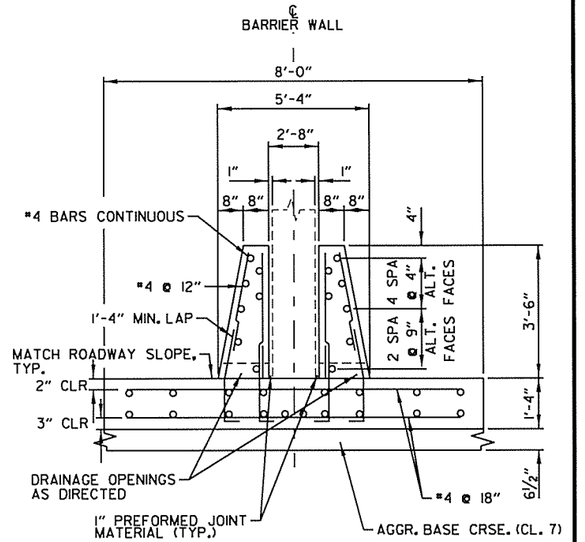

SECTION D-D

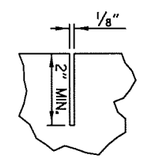

CONTRACTION JOINT DETAIL

CONCRETE BARRIER WALL (MEDIAN TYPE B) TRANSITION UNDER BRIDGE 05982

SPECIAL DETAILS

5/16/2016
9:15:52 AM
\MES\CA0902_SD_HWY540_04.dgn

DATE	DATE FILMED	DATE REVISED	DATE FILMED	FED.RD. DIST.NO.	STATE	FED.AID PROJ.NO.	SHEET NO.	TOTAL SHEETS
				6	ARK.			
				JOB NO.		CA0902	016	581
				(2)	SPECIAL DETAILS			

STATE OF ARKANSAS
REGISTERED PROFESSIONAL ENGINEER
No. 8760
ANDREW E. FRIES
5/16/16

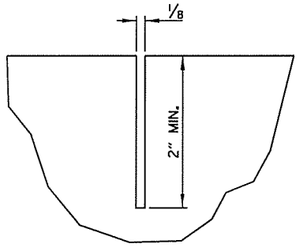

CONTRACTION JOINT DETAIL

NOTES FOR MEDIAN BARRIER:
1. ALL EXPOSED EDGES SHALL HAVE 3/4 CHAMFERS.
2. CONTRACTION JOINTS SHALL BE CONSTRUCTED AT 15'-0" MAXIMUM SPACING IN TOP AND SIDES OF MEDIAN BARRIER AND SHALL BE FORMED IN FRESH CONCRETE.
3. CONTRACTION JOINTS ARE NOT PERMITTED AT THE DOWEL BAR LOCATIONS.
4. ALL REINFORCING BARS SHALL HAVE 2" MINIMUM COVER.
5. DOWEL BARS WILL NOT BE REQUIRED IF BARRIER AND BASE ARE CAST AS A COMPLETE UNIT.
6. DRAINAGE OPENINGS TO BE CONSTRUCTED ADJACENT TO DROP INLETS. DOWEL BARS SHALL NOT BE PLACED WITHIN 3" OF DRAINAGE OPENINGS.

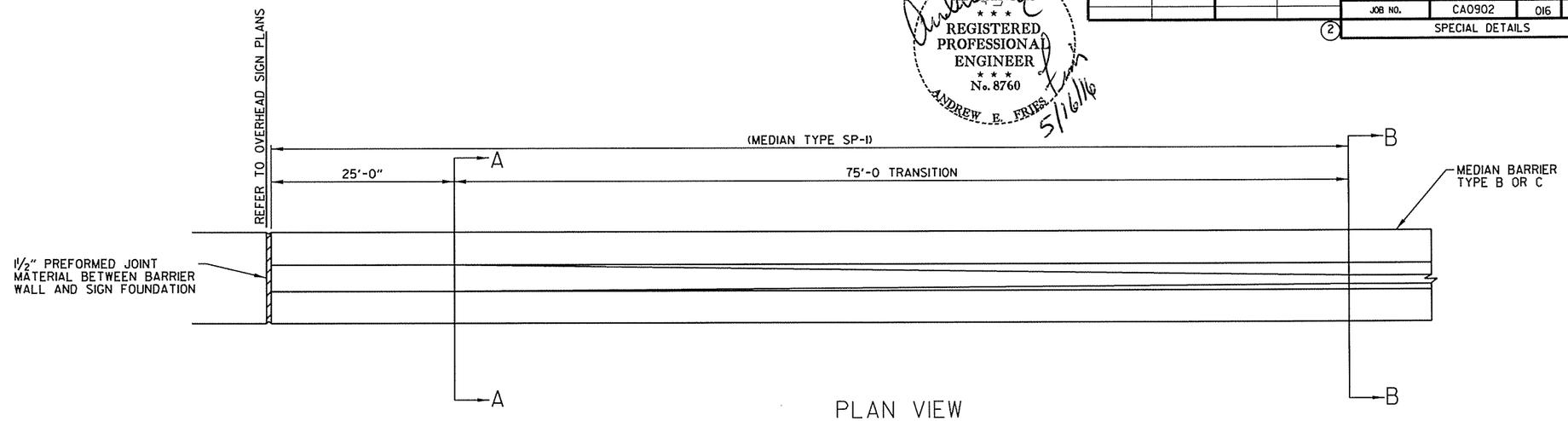

PLAN VIEW
CONCRETE BARRIER WALL (MEDIAN TYPE B AND MEDIAN TYPE C) TRANSITION

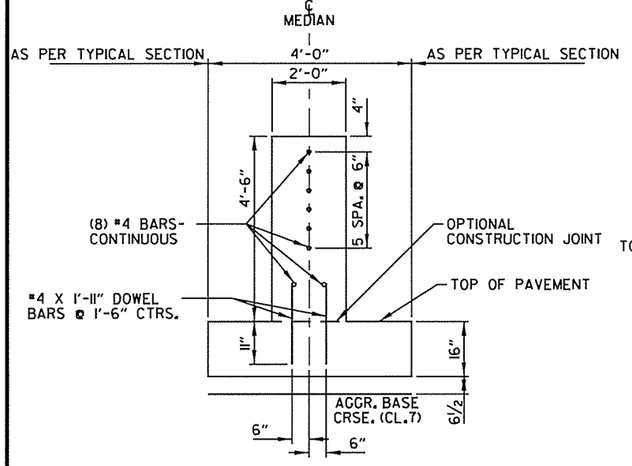

CONCRETE BARRIER WALL
(MEDIAN TYPE SP-I)
X = 0'-0"
SECTION A-A

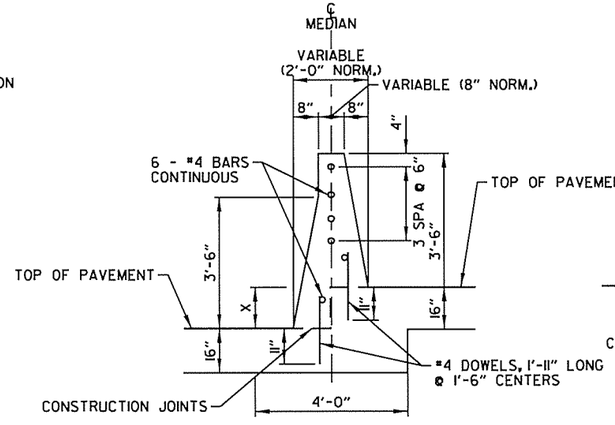

CONCRETE BARRIER WALL
(MEDIAN TYPE B)
X = 0'-0" TO 1'-0" MAX
SECTION B-B

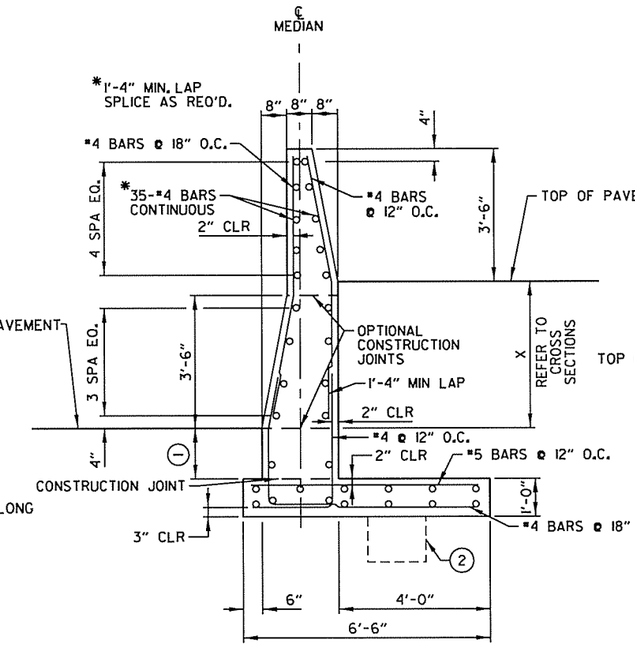

CONCRETE BARRIER WALL
(MEDIAN TYPE C)
X = 1'-0" TO 5'-0" MAX
SECTION B-B

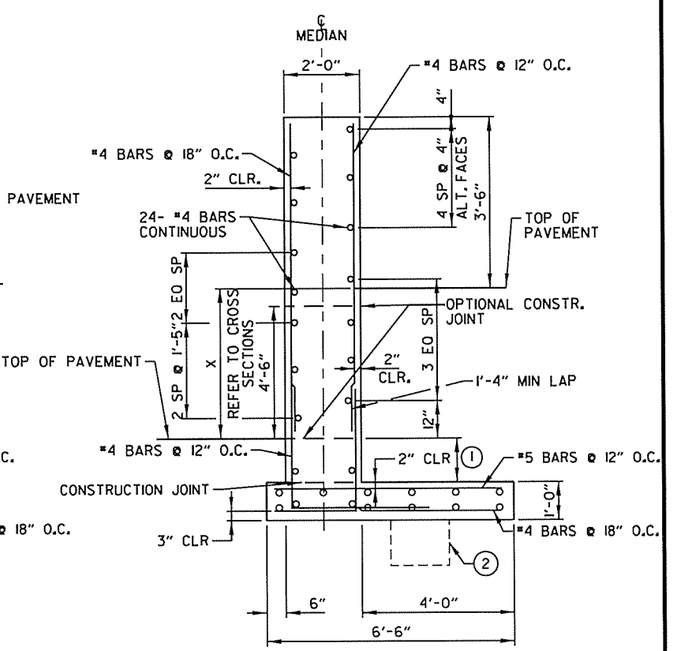

CONCRETE BARRIER WALL
(MEDIAN TYPE SP-I)
X = 1'-0" TO 5'-0" MAX
SECTION A-A

① MATCH DEPTH OF PAVEMENT

② SHEAR KEY REQUIRED WHEN "X" EXCEEDS 3'-6" (SEE OTHER SHEET FOR DETAIL)

CONCRETE BARRIER WALL (MEDIAN TYPE B) AND (MEDIAN TYPE C) TRANSITION
FOR OVERHEAD SIGN STRUCTURE

5/16/2016
15:56:55 PM
M:\PLANS\CA0902_SD_HWY540_14.dgn

DATE	DATE FILMED	DATE REVISED	DATE FILMED	FED.RD. DST.NO.	STATE	FED.AID PROJ.NO.	SHEET NO.	TOTAL SHEETS
				6	ARK.			
				JOB NO.		CA0902	017	581

(2) SPECIAL DETAILS

GENERAL NOTES FOR CONCRETE BARRIER WALLS

1. ALL BARRIER WALLS SHALL BE CONSTRUCTED IN ACCORDANCE WITH SECTION 631 OF THE STANDARD SPECIFICATIONS, 2003 EDITION.
2. CONTRACTION JOINTS REQUIRED @ 30'-0" MAXIMUM SPACING IS REQUIRED FOR TYPE C MEDIAN.
3. ALL CONTRACTION JOINTS TO BE FORMED IN FRESH CONCRETE ON TOP AND IN SIDES OF BARRIER WALL.
4. ALL EXPOSED EDGES OF CONCRETE BARRIER WALL SHALL HAVE 3/4" CHAMFER.
5. THE DESIGN OF BARRIER WALL TYPE C MEDIAN IS BASED ON A MINIMUM FOUNDATION BEARING CAPACITY OF ONE TON PER SQUARE FOOT. UNSTABLE FOUNDATION MATERIAL SHALL BE REMOVED AND REPLACED TO PROVIDE A FIRM FOUNDATION.
6. SPACING BETWEEN EXPANSION JOINTS SHALL NOT EXCEED 120 FT FOR BARRIER TYPE C MEDIAN. EXPANSION JOINTS SHALL BE FORMED USING 1" PREFORMED JOINT FILLER. CONTINUOS REINFORCEMENT SHALL BE CUT 2" CLEAR OF EXPANSION JOINTS.
7. DRAINAGE OPENING TO BE CONSTRUCTED AS DIRECTED BY THE ENGINEER.

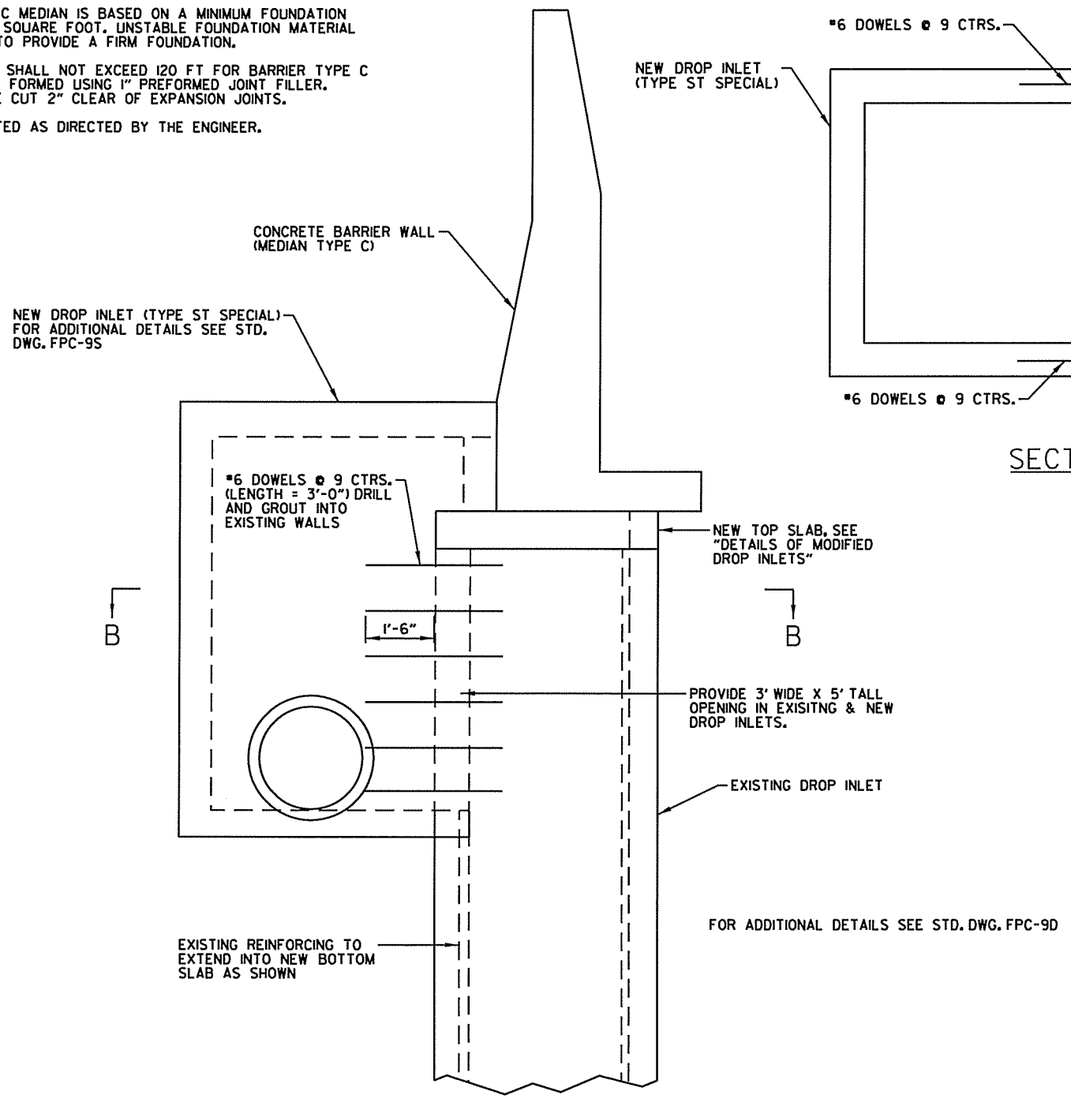

TYPICAL SECTION
(LOOKING AHEAD)

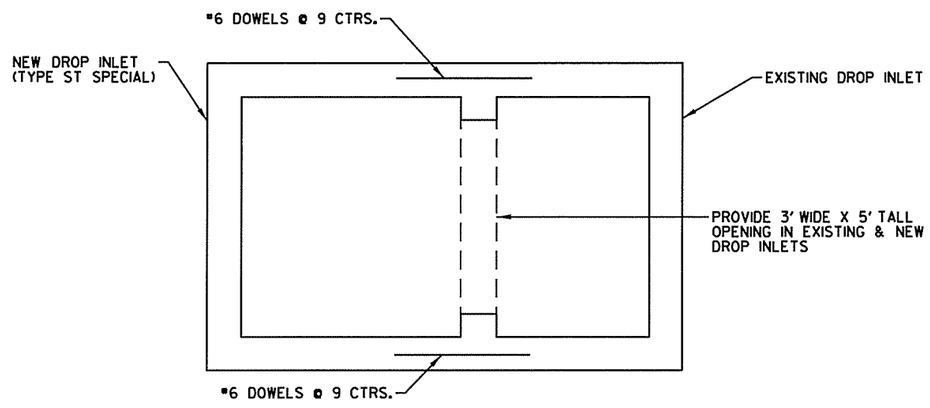

SECTION B-B

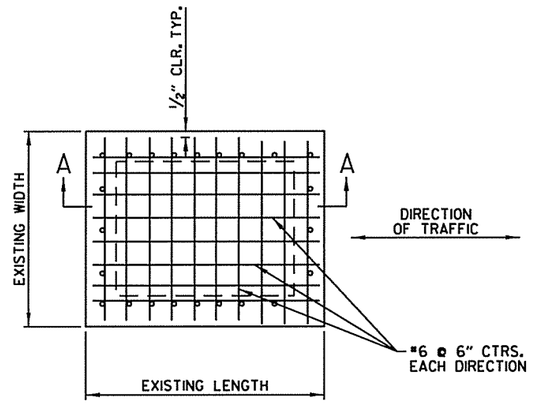

TOP VIEW

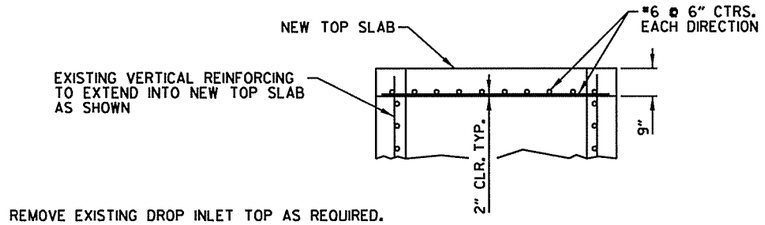

SECTION A-A

DETAILS OF MODIFIED DROP INLETS

DETAILS OF DROP INLETS (TYPE ST SPECIAL)

STATE OF ARKANSAS
REGISTERED PROFESSIONAL ENGINEER
No. 8760
ANDREW E. FRIES
5/5/16

5/5/2016
10:03:14 AM
\\MS1-CA0902 SD HWY540 05.dgn

DATE	DATE FILMED	DATE REVISED	DATE FILMED	FED.RD. DIST.NO.	STATE	FED.AID PROJ.NO.	SHEET NO.	TOTAL SHEETS
				6	ARK.			
				JOB NO.		CA0902	018	581
				(2)	SPECIAL DETAILS			

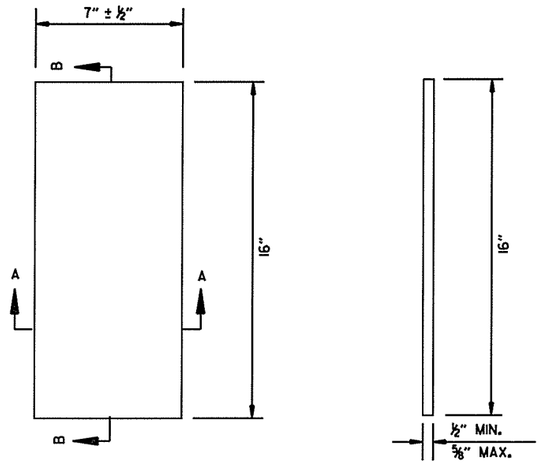

PLAN

SECTION B-B

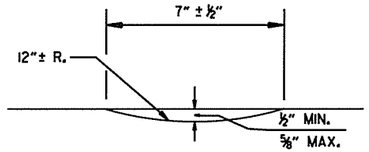

SECTION A-A

DETAILS OF RUMBLE STRIPS

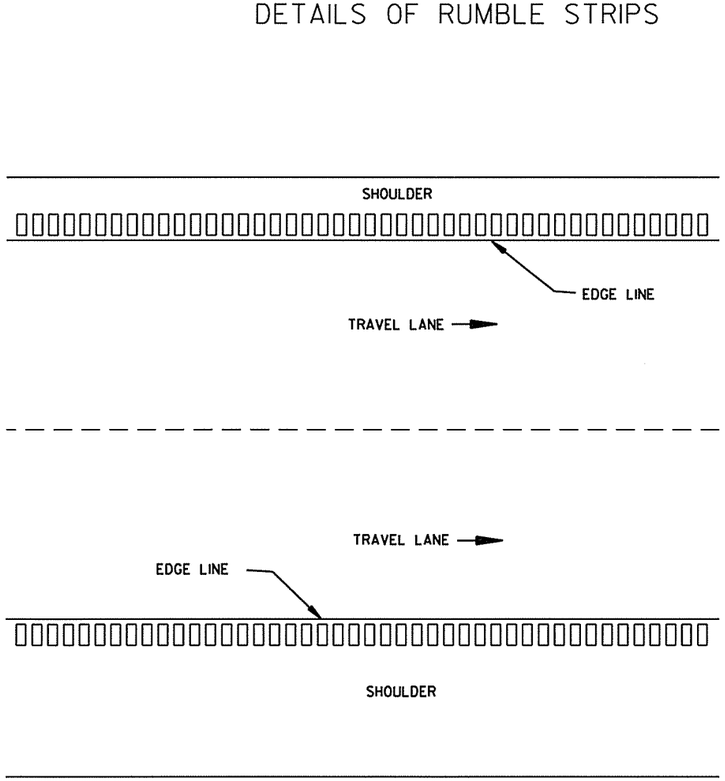

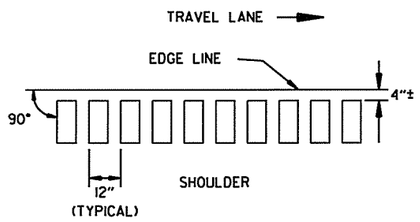

LOCATION PLAN OF RUMBLE STRIPS
LEFT OR RIGHT SHOULDER

NOTES:

1. ALIGNMENT OF RUMBLE STRIPS SHALL GENERALLY BE STRAIGHT AND OFFSET APPROXIMATELY 4" FROM THE OUTER EDGE OF THE EDGE LINE. THIS OFFSET MAY BE ADJUSTED TO ACCOMMODATE VARIATIONS IN THE EDGE LINE.
2. THE ½" DEPTH SHALL GENERALLY APPLY FOR THE ENTIRE 16" LENGTH. SOME VARIATION TO SUIT SHOULDER SLOPE BREAKS MAY BE NECESSARY.
3. RUMBLE STRIPS SHALL NOT BE INSTALLED ON BRIDGE DECKS, APPROACH SLABS, OR ACROSS TRANSVERSE JOINTS OF CONCRETE SHOULDERS.

PLAN VIEW

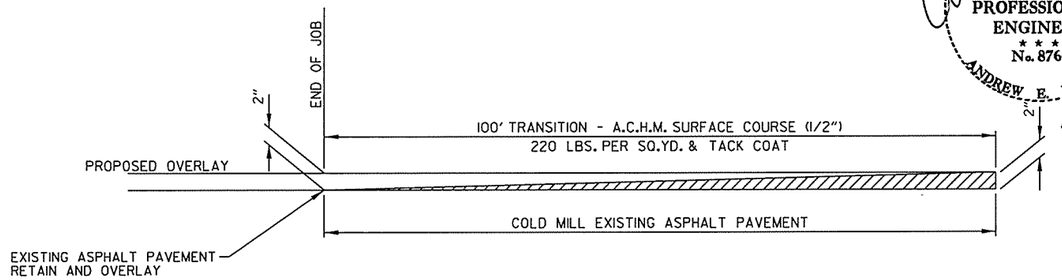

DETAILS FOR PAVING TRANSITIONS

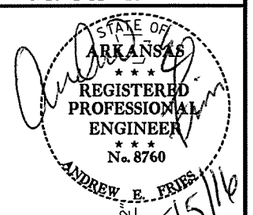

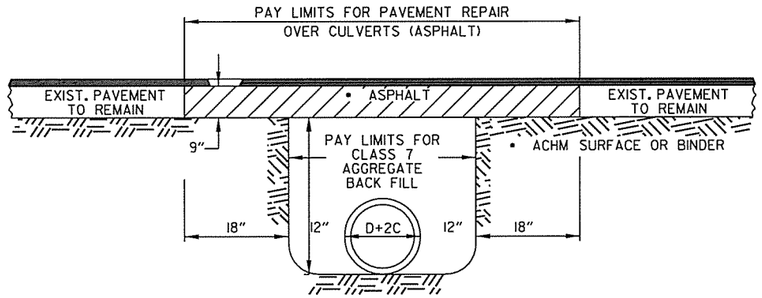

PAVEMENT REPAIR OVER CULVERTS (ASPHALT)

SPECIAL DETAILS

5/5/2016
10:03:18 AM
\\WS\c-CA0902_SD_HWY540_06.dgn

DATE	DATE FILMED	DATE REVISED	DATE FILMED	FED.RD. DIST.NO.	STATE	FED.AND PROJ.NO.	SHEET NO.	TOTAL SHEETS
				6	ARK.			
				JOB NO.		CA0902	019	581
				(2)	SPECIAL DETAILS			

STATE OF ARKANSAS
REGISTERED PROFESSIONAL ENGINEER
No. 8760
ANDREW E. FRIES
5/5/16

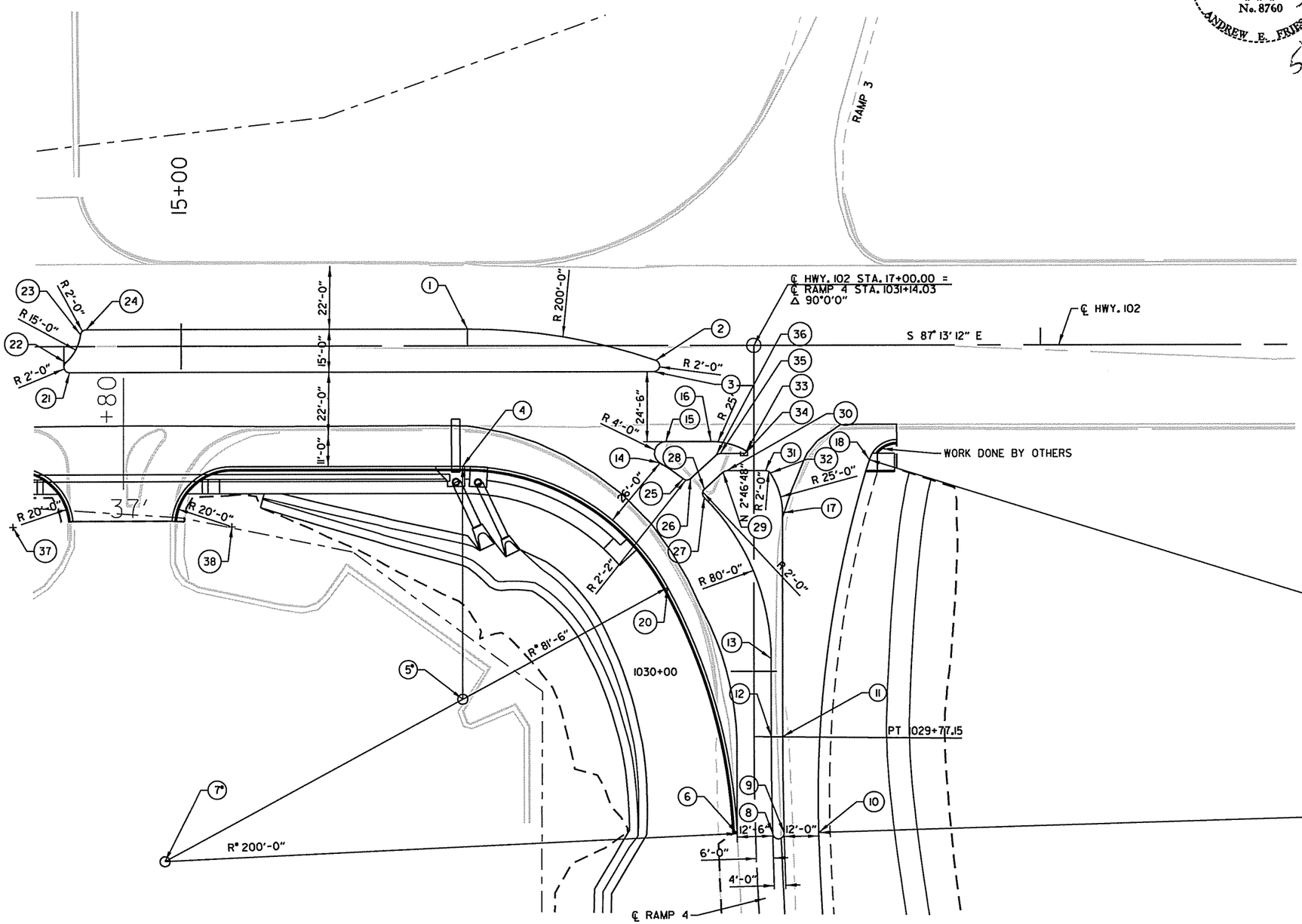

COORDINATE TABLE			
PT.	STA.	OFFSET	℄
1	16+00.00	LT. 5.90'	HWY. 102
2	16+65.73	RT. 5.21'	HWY. 102
3	16+65.08	RT. 9.10'	HWY. 102
4	1030+71.93	LT. 101.68'	RAMP 4
5	1029+90.43	LT. 101.68'	RAMP 4
6	1029+43.41	LT. 6.45'	RAMP 4
7	1029+40.33	LT. 206.42'	RAMP 4
8	1029+43.08	RT. 6.00'	RAMP 4
9	1029+43.06	RT. 10.00'	RAMP 4
10	1029+42.79	RT. 22.00'	RAMP 4
11	1029+77.16	RT. 10.00'	RAMP 4
12	1029+77.16	RT. 6.00'	RAMP 4
13	1030+04.45	RT. 6.00'	RAMP 4
14	1030+73.00	LT. 32.77'	RAMP 4
15	1030+80.43	LT. 30.71'	RAMP 4
16	1030+80.43	LT. 15.00'	RAMP 4
17	1030+55.43	RT. 10.00'	RAMP 4
18	1030+73.97	RT. 40.29'	RAMP 4
19	1029+42.79	RT. 422.00'	RAMP 4
20	1030+29.44	LT. 30.12'	RAMP 4
21	14+61.17	RT. 9.10'	HWY. 102
22	14+59.87	RT. 5.58'	HWY. 102
23	14+65.01	LT. 4.12'	HWY. 102
24	14+67.00	LT. 5.90'	HWY. 102
25	1030+67.40	LT. 24.64'	RAMP 4
26	1030+67.50	LT. 21.24'	RAMP 4
27	1030+60.89	LT. 17.30'	RAMP 4
28	1030+63.77	LT. 17.24'	RAMP 4
29	1030+69.72	LT. 10.75'	RAMP 4
30	1030+70.24	LT. 9.40'	RAMP 4
31	1030+70.24	RT. 4.10'	RAMP 4
32	1030+69.35	RT. 5.76'	RAMP 4
33	1030+77.11	LT. 2.55'	RAMP 4
34	1030+76.24	LT. 3.04'	RAMP 4
35	1030+76.24	LT. 11.74'	HWY. 102
36	1030+75.72	LT. 13.09'	HWY. 102
37	14+41.00	RT. 63.10'	HWY. 102
38	15+17.75	RT. 63.10'	HWY. 102

HWY. 102 INTERCHANGE RAMP TERMINAL

NOTE: RADII LABELED WITH • DIMENSIONED TO THE EDGE OF PAVEMENT, ALL OTHERS DIMENSIONED TO THE FACE OF CURB.

SPECIAL DETAILS

5/5/2016
10:03:29 AM
\\MSS1-CA0902_SD_HWY540_07.dgn

DATE	DATE FILMED	DATE REVISED	DATE FILMED	FED.RD. DIST.NO.	STATE	FED.AID PROJ.NO.	SHEET NO.	TOTAL SHEETS
				6	ARK.			
				JOB NO.		CA0902	020	581

(2) SPECIAL DETAILS

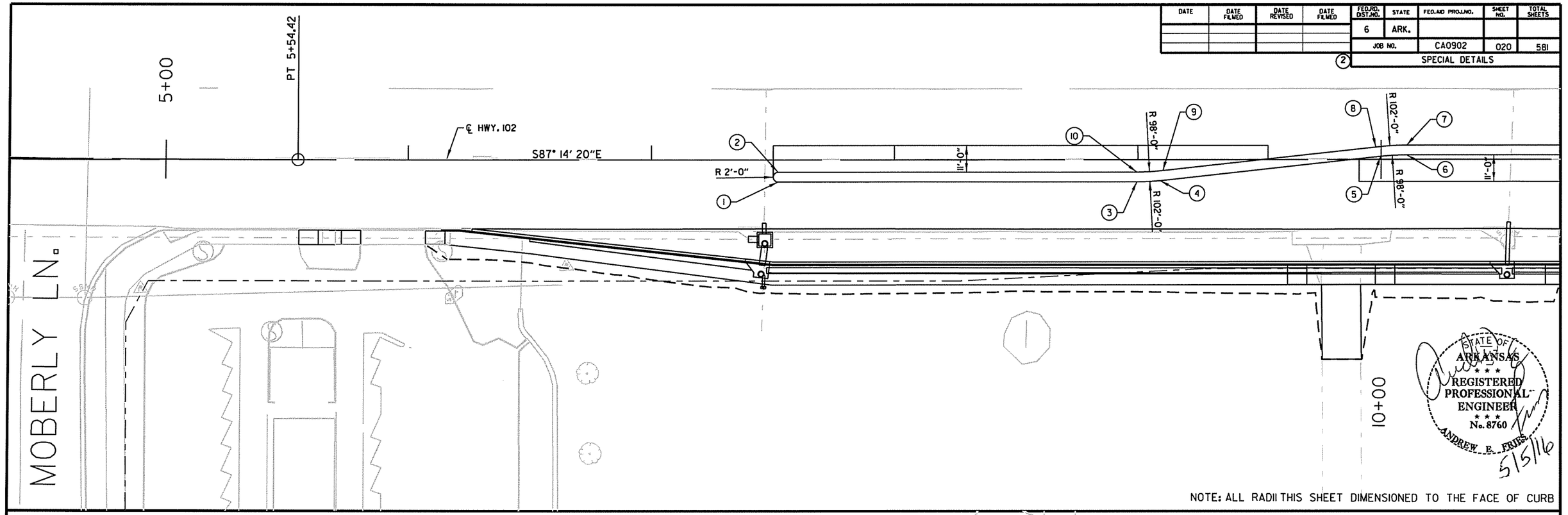

NOTE: ALL RADII THIS SHEET DIMENSIONED TO THE FACE OF CURB

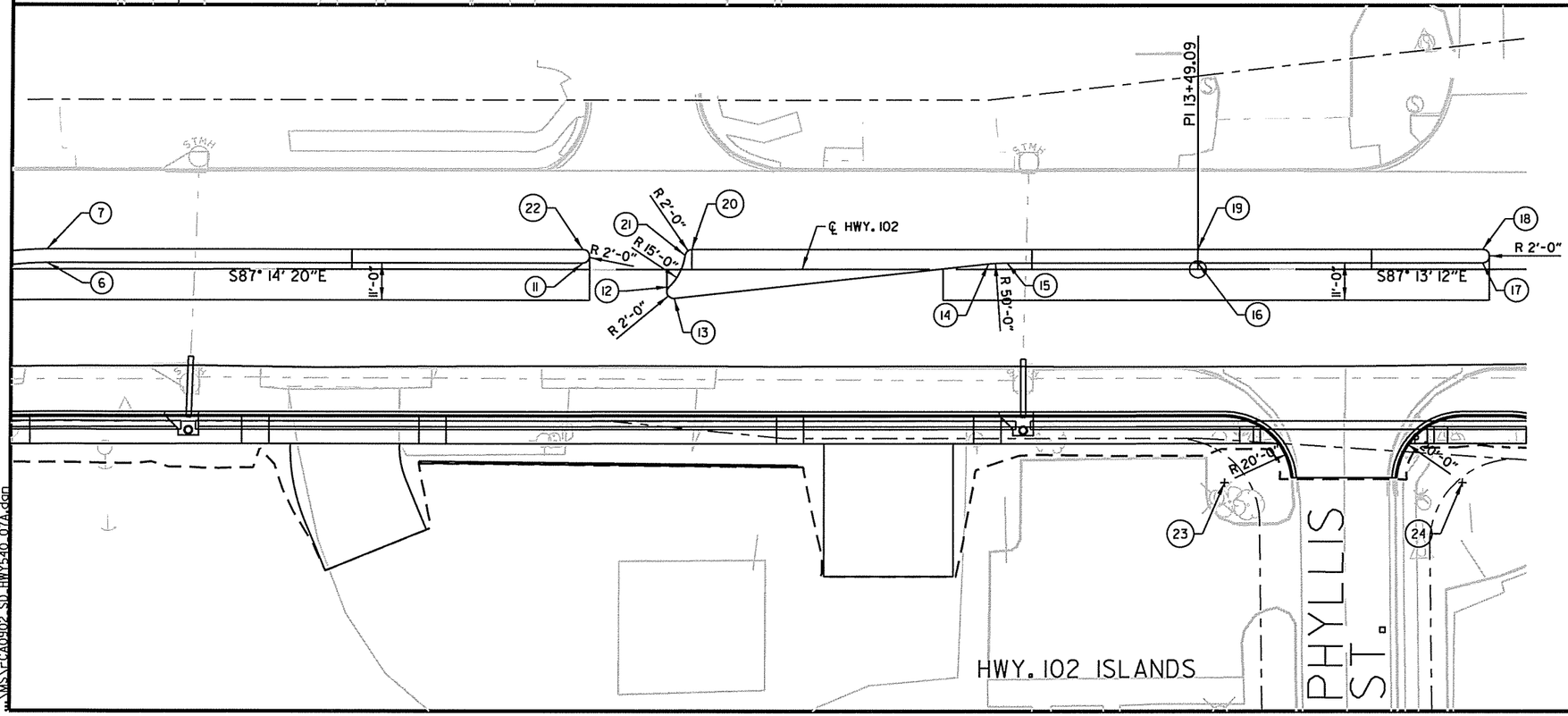

COORDINATE TABLE			
PT.	STA.	OFFSET	℄
1	7+52.00	RT. 9.10'	HWY. 102
2	7+52.00	RT. 5.10'	HWY. 102
3	8+99.52	RT. 9.10'	HWY. 102
4	9+09.11	RT. 8.65'	HWY. 102
5	9+99.77	LT. 1.31'	HWY. 102
6	10+10.48	LT. 1.90'	HWY. 102
7	10+10.48	LT. 5.90'	HWY. 102
8	9+97.78	LT.5.11'	HWY. 102
9	9+10.23	RT. 4.51'	HWY. 102
10	8+99.52	RT. 5.10'	HWY. 102
11	11+68.00	LT. 1.90'	HWY. 102
12	11+93.31	RT. 5.11'	HWY. 102
13	11+94.89	RT. 8.56'	HWY. 102
14	12+87.27	LT. 1.60'	HWY. 102
15	12+92.74	LT. 1.90'	HWY. 102
16	13+49.08	LT. 1.90'	HWY. 102
17	14+33.00	LT. 1.90'	HWY. 102
18	14+33.00	LT. 5.90'	HWY. 102
19	13+49.08	LT. 5.90'	HWY. 102
20	12+00.00	LT. 5.90'	HWY. 102
21	11+98.01	LT. 4.14'	HWY. 102
22	11+68.00	LT. 5.90'	HWY. 102
23	13+57.00	RT. 63.10'	HWY. 102
24	14+27.00	RT. 63.10'	HWY. 102

NOTE: ALL RADII THIS SHEET DIMENSIONED TO THE FACE OF CURB

SPECIAL DETAILS

5/5/2016
10:03:27 AM
...\MS\CA0902_SD_HWY540_07A.dgn

DATE	DATE FILMED	DATE REVISED	DATE FILMED	FED.RD. DIST.NO.	STATE	FED.AID PROJ.NO.	SHEET NO.	TOTAL SHEETS
				6	ARK.			
				JOB NO.		CA0902	021	581

2 SPECIAL DETAILS

STATE OF ARKANSAS
REGISTERED PROFESSIONAL ENGINEER
No. 8760
ANDREW E. FRIES
5/5/16

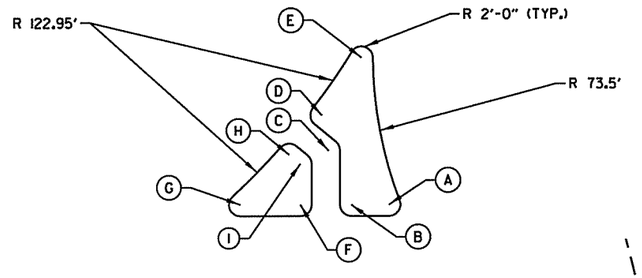

ISLAND DETAIL

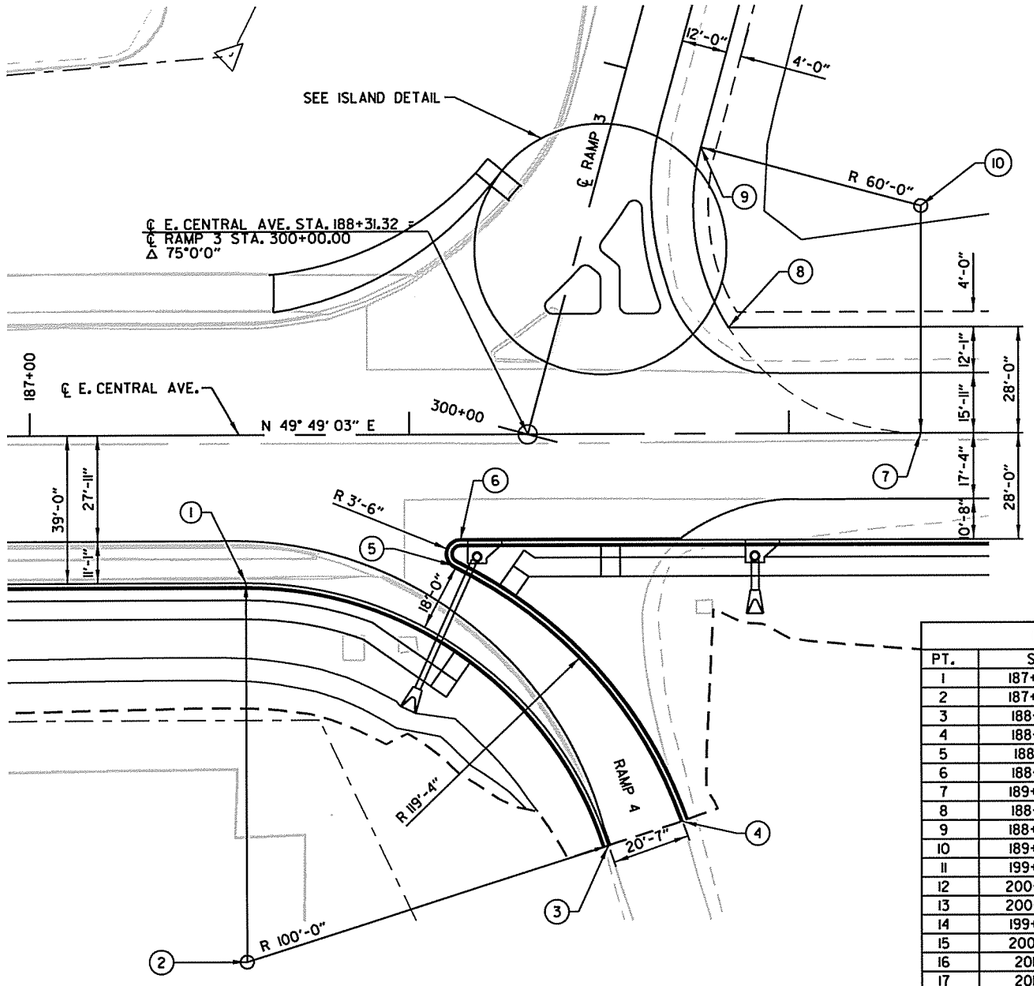

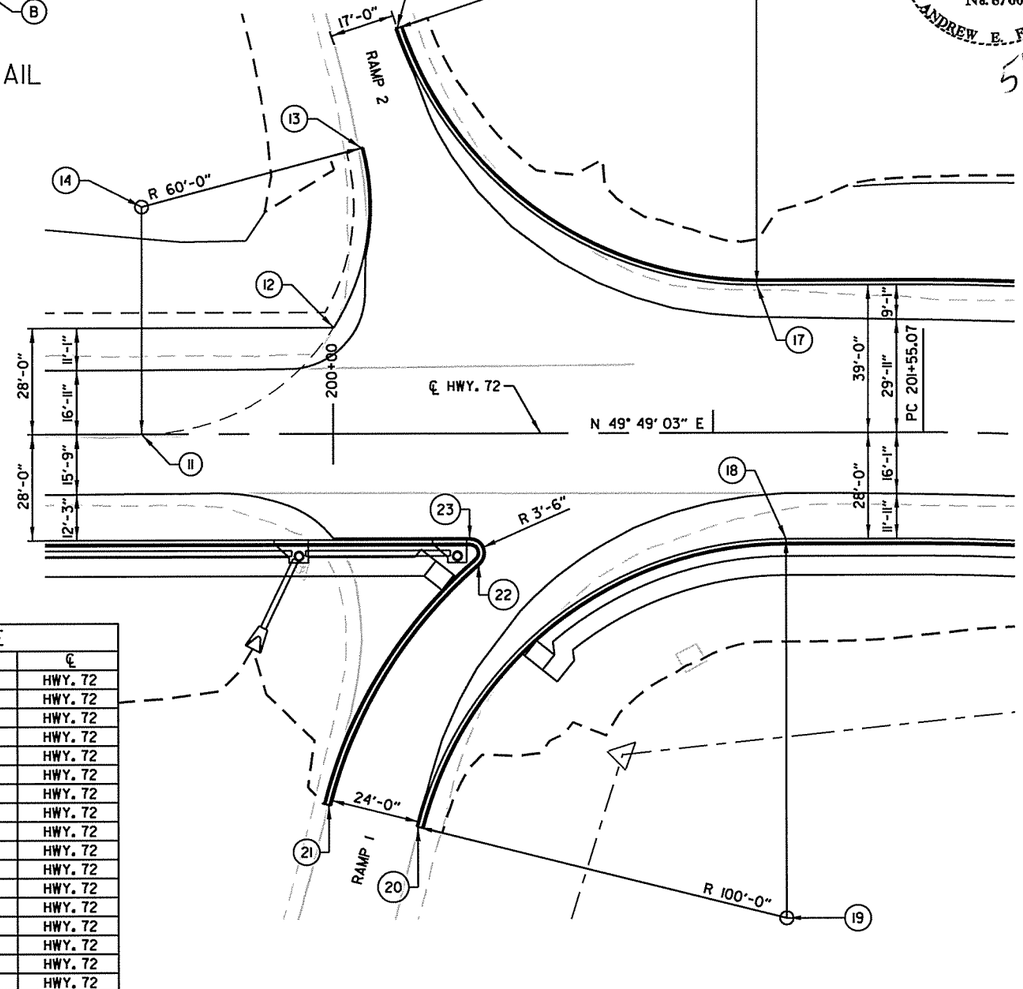

COORDINATE TABLE			
PT.	STA.	OFFSET	℄
1	187+56.92	RT 39.00'	HWY. 72
2	187+56.92	RT 139.00'	HWY. 72
3	188+52.17	RT 108.56'	HWY. 72
4	188+71.77	RT 102.30'	HWY. 72
5	188+11.99	RT 34.64'	HWY. 72
6	188+13.54	RT 28.00'	HWY. 72
7	189+34.77	0.00'	HWY. 72
8	188+84.01	LT 28.00'	HWY. 72
9	188+76.84	LT 75.64'	HWY. 72
10	189+34.77	LT 60.00'	HWY. 72
11	199+49.48	0.00'	HWY. 72
12	200+00.24	LT 28.00'	HWY. 72
13	200+07.47	LT 75.42'	HWY. 72
14	199+49.48	LT 60.00'	HWY. 72
15	200+16.82	LT 107.07'	HWY. 72
16	201+11.59	LT 139.00'	HWY. 72
17	201+11.59	LT 39.00'	HWY. 72
18	201+19.19	RT 28.00'	HWY. 72
19	201+19.19	RT 128.00'	HWY. 72
20	200+22.17	RT 103.75'	HWY. 72
21	199+99.21	RT 97.93'	HWY. 72
22	200+38.14	RT 34.15'	HWY. 72
23	200+35.86	RT 28.00'	HWY. 72
A *	188+64.06	LT 33.76'	HWY. 72
B *	188+57.46	LT 33.76'	HWY. 72
C *	188+53.46	LT 43.30'	HWY. 72
D *	188+52.24	LT 49.51'	HWY. 72
E *	188+59.26	LT 59.64'	HWY. 72
F *	188+48.46	LT 33.76'	HWY. 72
G *	188+37.87	LT 33.76'	HWY. 72
H *	188+46.51	LT 42.57'	HWY. 72
I *	188+48.47	LT 40.95'	HWY. 72

NOTE: ALL RADII DIMENSIONED TO THE NEW EDGE OF PAVEMENT
* DIMENSIONS TO CENTER OF RADII

HWY. 72 INTERCHANGE RAMP TERMINALS

SPECIAL DETAILS

5/5/2016
10:05:32 AM
\\MSLT-CA0902_SD_HWY540_08.dgn

DATE	DATE FILMED	DATE REVISED	DATE FILMED	FED.RD. DIST.NO.	STATE	FED.AND PROJ.NO.	SHEET NO.	TOTAL SHEETS
				6	ARK.			
				JOB NO.		CA0902	022	581

(2) SPECIAL DETAILS

STATE OF ARKANSAS
REGISTERED PROFESSIONAL ENGINEER
No. 8760
ANDREW E. FRIES
5/5/16

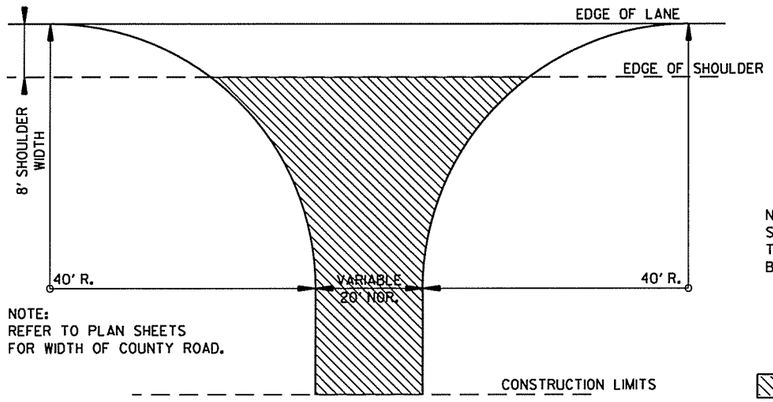

NOTE:
REFER TO PLAN SHEETS
FOR WIDTH OF COUNTY ROAD.

NOTE: TURNOUTS AND PRIVATE DRIVES SHALL BE MODIFIED WHERE NECESSARY TO MEET LOCAL CONDITIONS AS DIRECTED BY THE ENGINEER.

A.C.H.M SURFACE COURSE (1/2") (220 LBS. PER SQ. YD.) AND AGGREGATE BASE COURSE (CLASS 7) 7" COMP. DEPTH IF ASPHALT OR GRAVEL DRIVE EXISTING; OR 6" CONCRETE IF CONCRETE DRIVE EXISTING.

DETAIL FOR COUNTY ROAD TURNOUTS OPEN SHOULDER SECTION

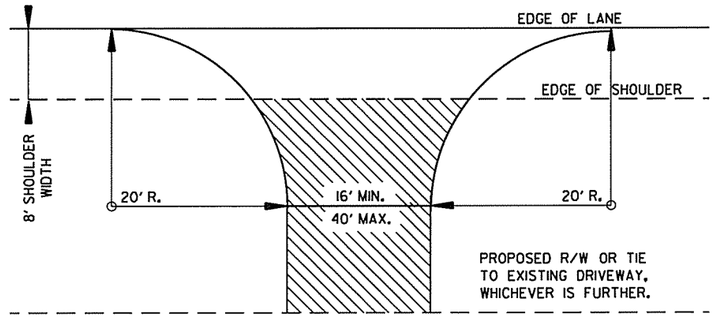

DETAIL FOR DRIVEWAY TURNOUTS OPEN SHOULDER SECTION (ARTERIALS)

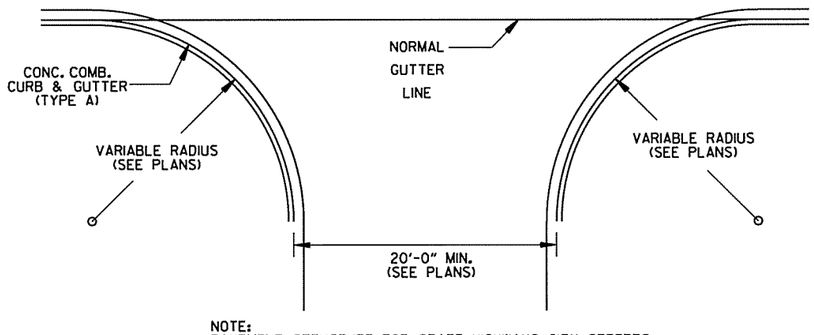

NOTE:
PAVEMENT STRUCTURE FOR STATE HIGHWAYS, CITY STREETS, & COUNTY ROADS TO BE SAME AS MAIN LANES.

DETAIL OF TURNOUTS, ASPHALT STREETS, COUNTY ROADS & STATE HIGHWAYS CURB & GUTTER SECTION

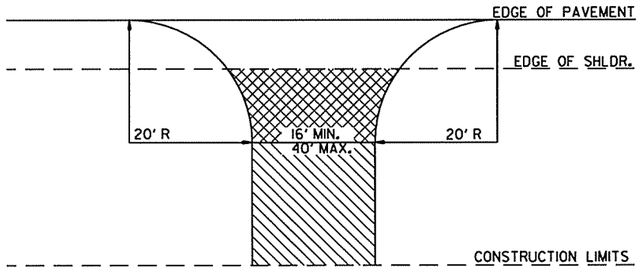

ASPHALT CONCRETE HOT MIX SURFACE COURSE (220 LBS. PER SQ. YD.) AGGREGATE BASE COURSE (CLASS 7) 7" COMP. DEPTH IF ASPHALT DRIVE EXIST OR 6" CONCRETE IF CONCRETE DRIVE EXIST.

AGGREGATE BASE COURSE (CLASS 7) 9" COMP. DEPTH OR CONFORM TO EXISTING DRIVEWAY

DETAIL FOR DRIVEWAY TURNOUTS (COLLECTORS)

5/5/2016
10:03:36 AM
\\MSYT\CA0902_SD_HWY540_09.dgn

DATE	DATE FILMED	DATE REVISED	DATE FILMED	FED.RD. DIST.NO.	STATE	FED.AID PROJ.NO.	SHEET NO.	TOTAL SHEETS
				6	ARK.			
				JOB NO.		CA0902	023	581

(2) SPECIAL DETAILS

STATE OF ARKANSAS
REGISTERED PROFESSIONAL ENGINEER
No. 8760
ANDREW E. FRIES
5/16/16

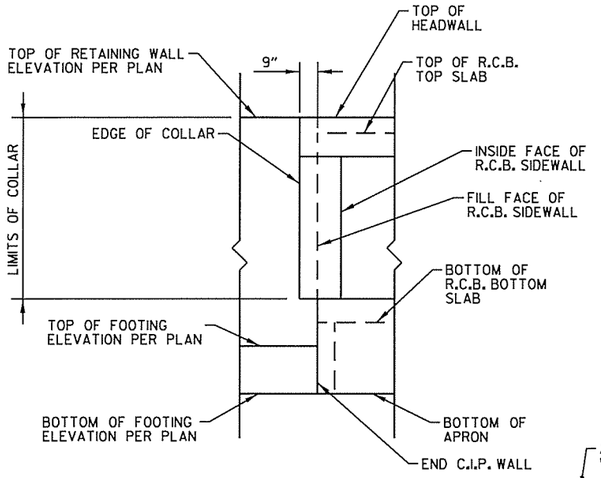

ELEVATION - COLLAR SPECIAL DETAIL

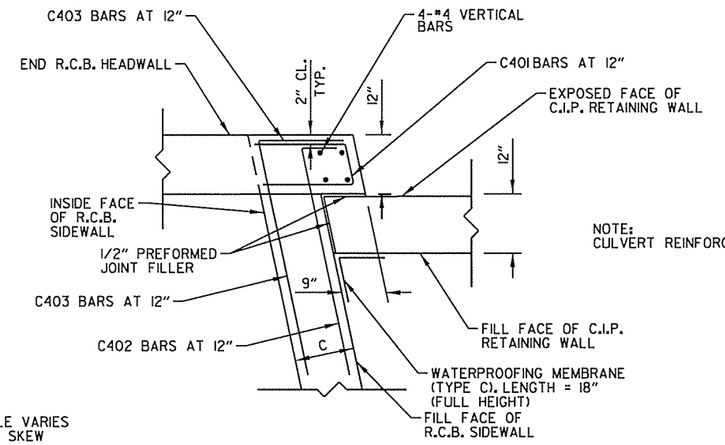

NOTE:
CULVERT REINFORCING NOT SHOWN.

SECTION - COLLAR SPECIAL DETAIL

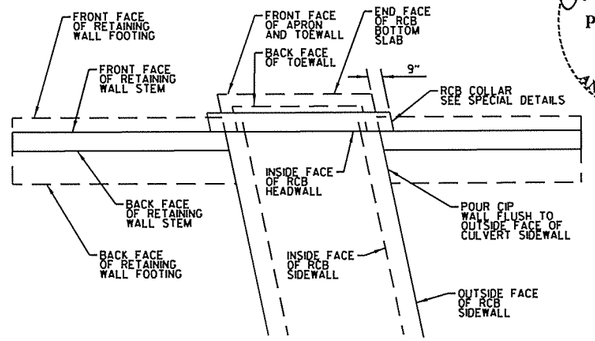

PLAN - COLLAR SPECIAL DETAIL

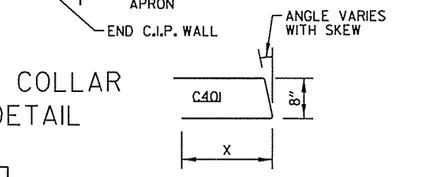

BAR DIAGRAM DIMENSIONS			
CULVERT	C	X	Y
Double 4'x3'	6"	11"	6"
Quintuple 8'x4'	6"	12"	6"

BAR DIAGRAMS - COLLAR SPECIAL DETAIL

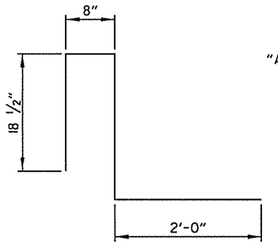

"U" BARS

ADDITIONAL CONCRETE AND REINFORCEMENT FOR HEADWALL SPECIAL DETAIL INCIDENTAL TO THE COST OF CULVERT EXTENSIONS.

NOTE:
ADDITIONAL CONCRETE AND REINFORCEMENT FOR COLLAR INCIDENTAL TO THE COST OF CULVERT EXTENSIONS.

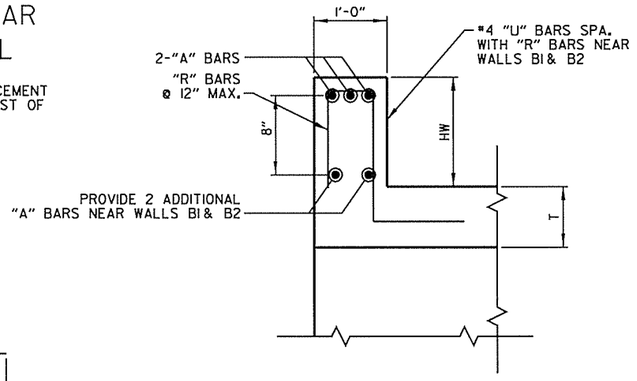

HEADWALL SPECIAL DETAIL

NEAR WALLS A1& A2: HW = 3½"
NEAR WALLS B1& B2: HW = 1'-5"
NEAR WALLS C1& C2: HW = 3½"

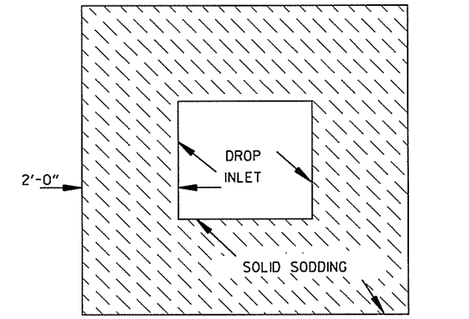

DETAIL FOR SOLID SODDING AROUND DROP INLETS

NOTE:
1) PIPE COLLARS TO BE UTILIZED AS APPROVED BY THE ENGINEER.
2) PIPE COLLAR INSTALLATION SHALL BE SUBSIDIARY TO PIPE AND RCB INSTALLATION.

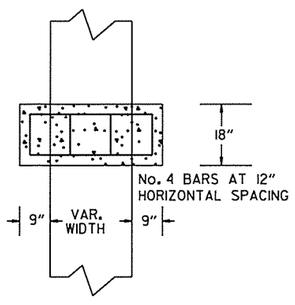

TOP VIEW

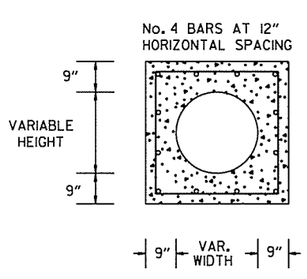

FRONT VIEW

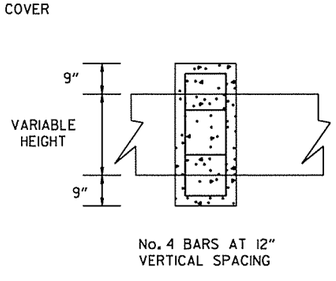

SIDE VIEW

PIPE EXTENSION
REINFORCED CONCRETE COLLAR DETAIL

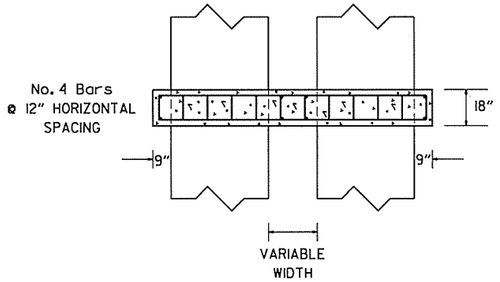

TOP VIEW

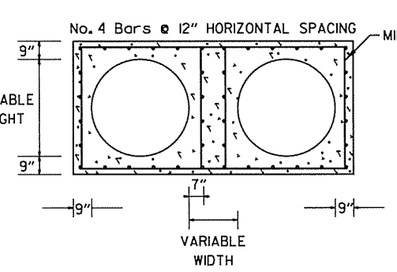

FRONT VIEW

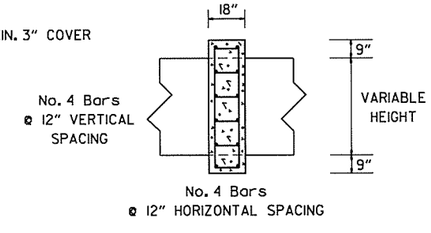

SIDE VIEW

PIPE EXTENSION
REINFORCED CONCRETE COLLAR DETAIL

SPECIAL DETAILS

5/16/2016
2:05:43 PM
M:\...\CA0902_SD_HWY540_10.dgn

DATE	DATE FILMED	DATE REVISED	DATE FILMED	FED.RD. DIST.NO.	STATE	FED.AID PROJ.NO.	SHEET NO.	TOTAL SHEETS
				6	ARK.			
				JOB NO.		CA0902	024	581

(2) SPECIAL DETAILS

STATE OF ARKANSAS
REGISTERED PROFESSIONAL ENGINEER
No. 8760
ANDREW E. FRIES
5/5/16

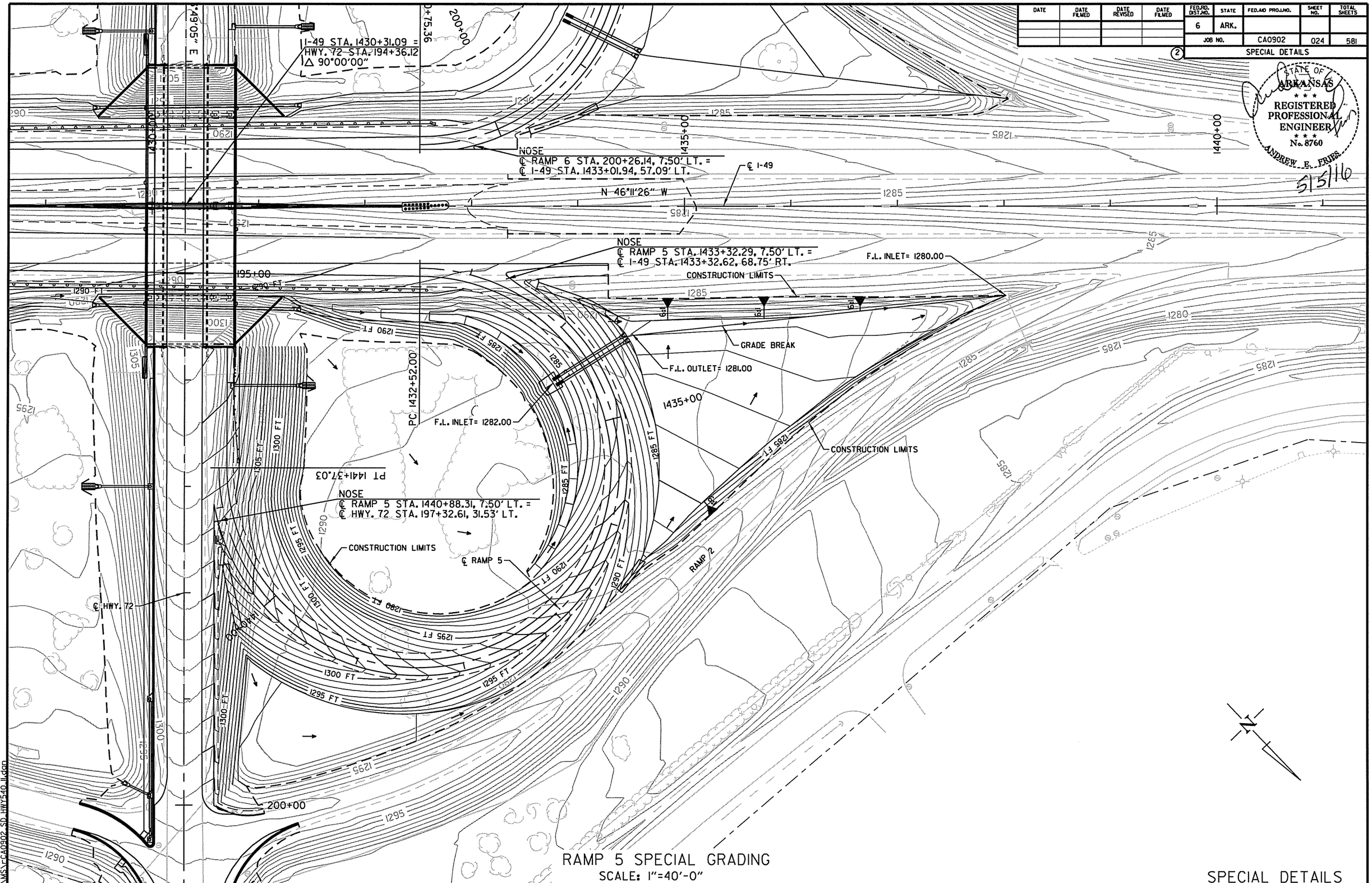

RAMP 5 SPECIAL GRADING
SCALE: 1"=40'-0"

SPECIAL DETAILS

5/5/2016
10:03:47 AM
...\MS\CA0902_SD_HWY540_11.dgn

DATE	DATE FILMED	DATE REVISED	DATE FILMED	FED.RD. DIST.NO.	STATE	FED.AID PROJ.NO.	SHEET NO.	TOTAL SHEETS
				6	ARK.			
				JOB NO.		CA0902	025	581

(2) SPECIAL DETAILS

STATE OF ARKANSAS
REGISTERED PROFESSIONAL ENGINEER
No. 8760
ANDREW E. FRIES
5/5/16

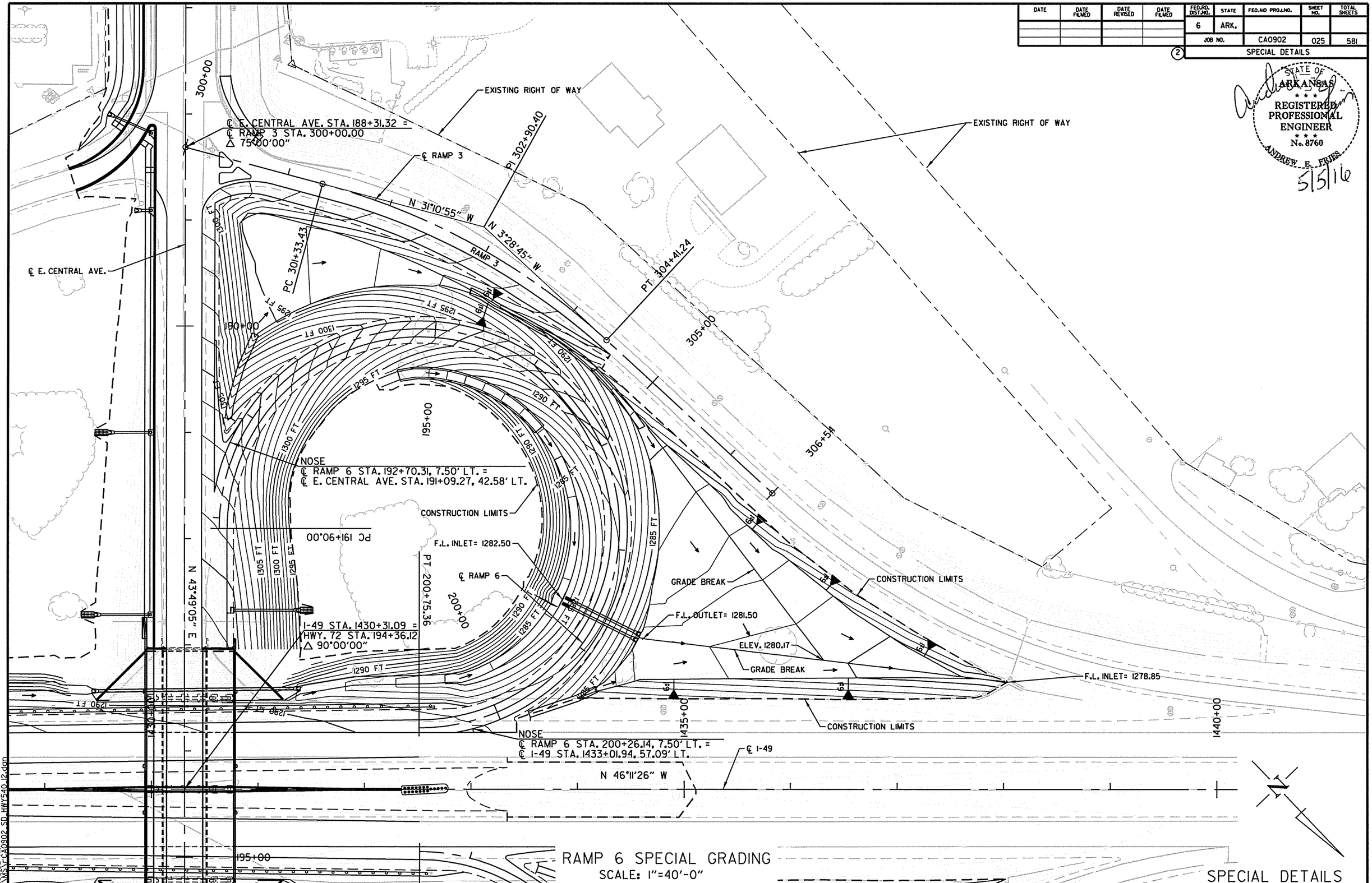

RAMP 6 SPECIAL GRADING
SCALE: 1"=40'-0"

SPECIAL DETAILS

5/5/2016
10:03:52 AM
MS\FCA0902_SD_HWY540_12.dgn

DATE	DATE FILMED	DATE REVISED	DATE FILMED	FED.RD. DIST.NO.	STATE	FED.AID PROJ.NO.	SHEET NO.	TOTAL SHEETS
				6	ARK.			
				JOB NO.		CA0902	026	581

(2) SPECIAL DETAILS

STATE OF ARKANSAS
REGISTERED PROFESSIONAL ENGINEER
No. 8760
ANDREW E. FRIES
5/5/16

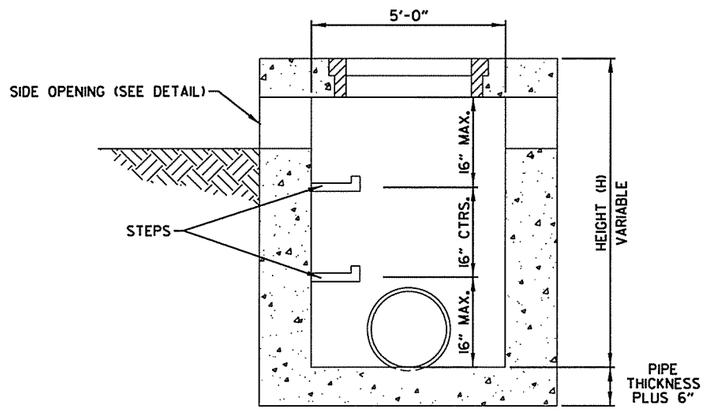

SECTION A-A

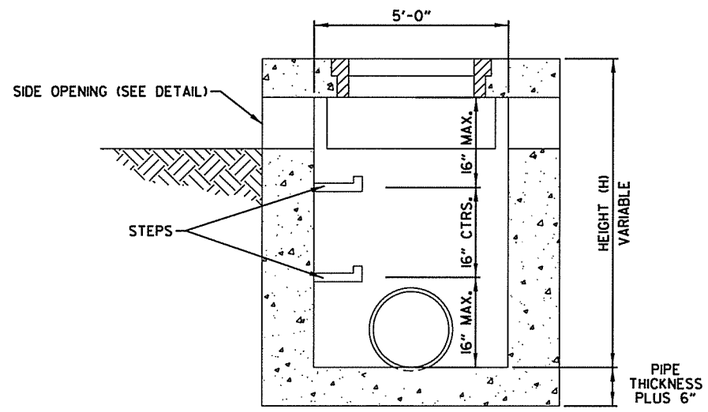

SECTION A-A
SECTION B-B

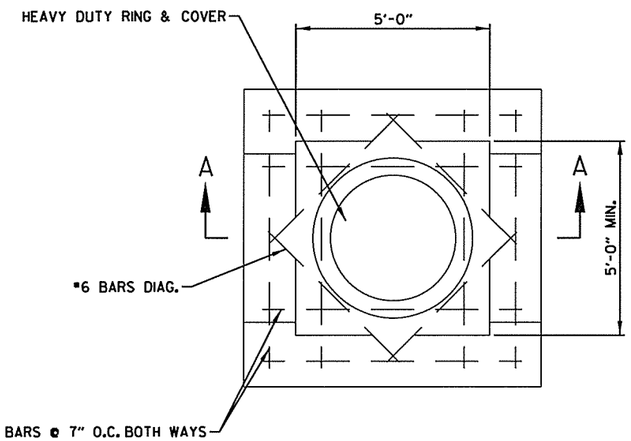

PLAN VIEW

SPECIAL AREA INLET
HWY. 72 STA. 186+36.00 RT.

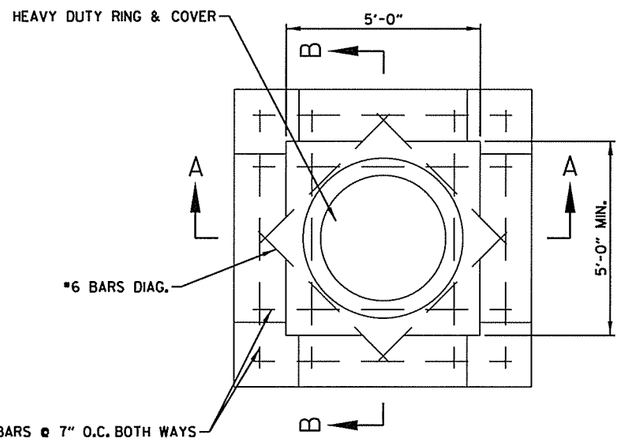

PLAN VIEW

SPECIAL AREA INLET
HWY. 72 STA. 207+67.00 RT.

GENERAL NOTES:

1. ALL EXPOSED CORNERS TO HAVE 3/4" CHAMFER.
2. STEPS SHALL BE INSTALLED IN ALL INLETS 4'-0" HIGH AND OVER OR AS DIRECTED BY THE ENGINEER.
3. ALL REINFORCING BARS SHALL BE GRADE 60 AND . HAVE MIN. 11/2" COVER.
4. DROP INLETS AND EXTENSION ON CURVED SECTIONS SHALL CONFORM TO THE CURVATURE OF THE CURB.
5. 4" DIA. COLUMNS SPACED AT MAX. 4'-0" INTERVALS SHALL BE INSTALLED ALONG INLET AND EXTENSION TO SUPPORT TOP.
6. BASE AND INLET WALLS SHALL BE CAST MONOLITHICALLY.
7. THE THROAT SHALL BE CAST INTEGRALLY WITH THE GUTTER.
8. PAYMENT FOR CURB AND/OR CURB AND GUTTER WITHIN THE LIMITS OF DROP INLETS AND DROP INLET EXTENSIONS SHALL BE CONSIDERED INCLUDED IN PAYMENT MADE FOR DROP INLETS AND/OR DROP INLET EXTENSIONS.
9. PIPES MAY ENTER DROP INLET FROM ANY ANGLE OR ELEVATION AS MAY BE APPROVED BY THE ENGINEER.
10. APPROPRIATE SIZE TYPE C DROP INLETS MAY BE SUBSTITUTED FOR TYPE MO DROP INLETS AS APPROVED BY THE ENGINEER. PAYMENT TO BE AS DROP INLET (TYPE MO).
11. DURING CONSTRUCTION OF THE ROADWAY THE CONTRACTOR SHALL MAINTAIN DRAINAGE INTO AND AROUND THE DROP INLET AS APPROVED BY THE ENGINEER.
12. 4"X2" NOTCH SHALL BE FORMED IN ALL DROP INLETS TO SUPPORT SIDEWALK CONSTRUCTION. REFER TO DETAIL OF NOTCH FOR SIDEWALKS.
13. DIMENSIONS SHOWN FOR RING AND COVER ARE TYPICAL. THE CONTRACTOR MAY SUBSTITUTE SIMILAR CASTINGS WITH THE APPROVAL OD THE ENGINEER. REQUESTING APPROVAL FOR CASTING DESIGNS MAY BE MADE BY REFERRING TO PREVIOUSLY APPROVED DRAWINGS.

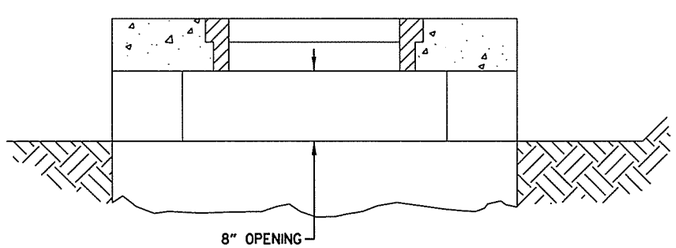

SIDE OPENING DETAIL

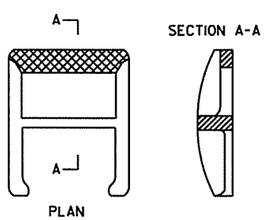

NOTE: THIS DETAIL IS TYPICAL. OTHERS MAY BE USED WITH PRIOR APPROVAL OF THE ENGINEER.

DETAIL OF
STEP FOR DROP INLET

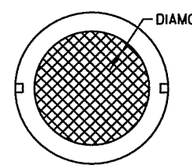

COVER FACE

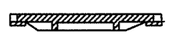

COVER FACE

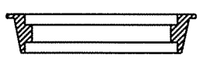

COVER SECTION

APPROX. TOTAL WEIGHT = 333 LBS.

HEAVY DUTY RING & COVER

1. HEAVY DUTY RING AND COVER SHALL BE CONSTRUCTED OF CAST IRON AND SHALL CONFORM TO THE REQUIREMENTS OF THE STANDARD SPECIFICATIONS FOR GRAY IRON CASTINGS AASHTO M105 CLASS 35B & AASHTO M306.
2. HEAVY DUTY RING AND COVER SHALL BE PAINTED.
3. HEAVY DUTY RING SHALL ALWAYS BE INSTALLED WITH FLANGE ON TOP.

SPECIAL DETAILS

5/5/2016
10:03:56 AM
\\MSS\CA0902_SD_HWY540_13.dgn

DATE	DATE FILMED	DATE REVISED	DATE FILMED	FED.RD. DIST.NO.	STATE	FED.AID PROJ.NO.	SHEET NO.	TOTAL SHEETS
				6	ARK.			
				JOB NO.		CA0902	027	581

(2) SPECIAL DETAILS

STATE OF ARKANSAS
REGISTERED PROFESSIONAL ENGINEER
No. 8760
ANDREW E. FRIES
5/5/16

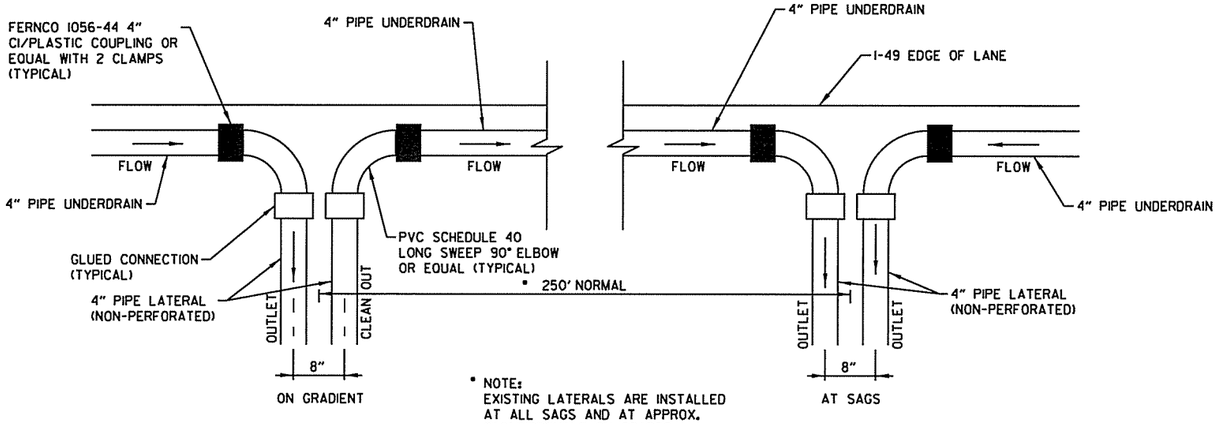

* NOTE:
EXISTING LATERALS ARE INSTALLED AT ALL SAGS AND AT APPROX. 250' INTERVALS ON GRADES.

NOTE:
PVC PIPE FOR LATERALS SHALL MEET THE REQUIREMENTS OF ASTM D 1785 (LATEST REVISION) FOR SCHEDULE 40 PIPE.

PLAN DETAIL OF EXISTING PIPE UNDERDRAIN LATERAL TO BE RETAINED AND EXTENDED

NOTES:

EXISTING 4" PIPE UNDERDRAIN LATERALS SHALL BE EXTENDED WHERE SHOWN ON THE PLANS OR WHERE DIRECTED BY THE ENGINEER. EXISTING OUTLET PROTECTORS SHOULD BE REMOVED AND RECONSTRUCTED. PAYMENT SHALL BE CONSIDERED INCLUDED IN THE PRICE BID FOR 4" PIPE UNDERDRAINS.

ANY PIPE UNDERDRAIN OR LATERAL TO REMAIN IN PLACE THAT IS DAMAGED BY THE CONTRACTOR SHALL BE REPAIRED AS DIRECTED BY THE ENGINEER AT THE CONTRACTOR'S EXPENSE.

THE LOCATION OF ALL LATERALS SHALL BE MARKED WITH 4" X 12" PERMANENT PAVEMENT MARKING TAPE (TYPE III WHITE) AT THE OUTSIDE EDGE OF THE SHOULDER, PLACED TRANSVERSE TO TRAFFIC. PAYMENT FOR THIS WORK SHALL BE INCLUDED IN THE PRICE BID FOR THE VARIOUS CONTRACT ITEMS.

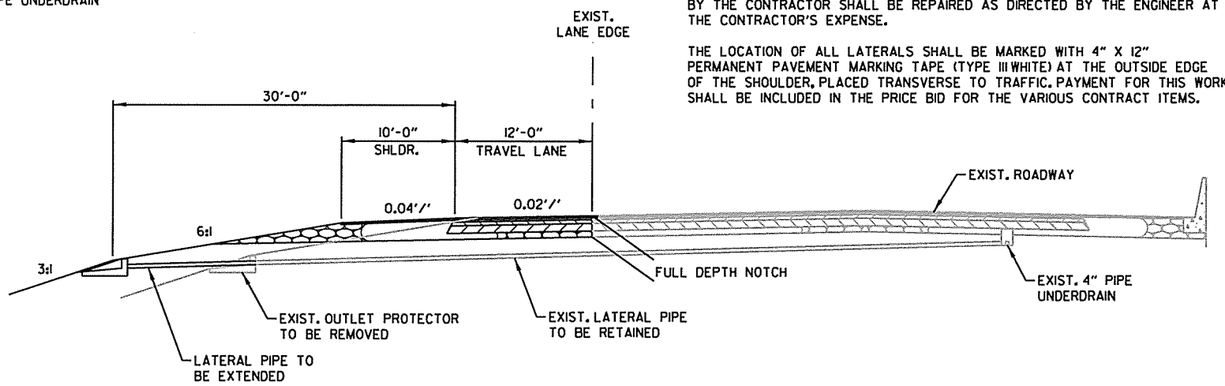

TYPICAL SECTION OF EXISTING PIPE UNDERDRAINS TO BE RETAINED AND EXTENDED

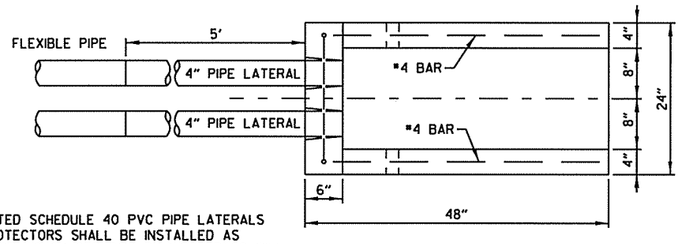

PLAN VIEW

4" NON-PERFORATED SCHEDULE 40 PVC PIPE LATERALS WITH OUTLET PROTECTORS SHALL BE INSTALLED AS SHOWN HERE ON OR AS ON STD. DWG. PU-1. LATERALS WILL BE MEASURED AND PAID FOR AS "4" PIPE UNDERDRAINS." UNDERDRAIN OUTLET PROTECTORS WILL BE MEASURED AND PAID FOR BY THE UNIT IN ACCORDANCE WITH SECTION 611 OF THE STANDARD SPECIFICATIONS

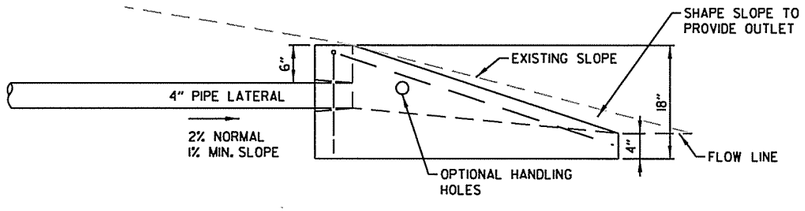

SIDE VIEW

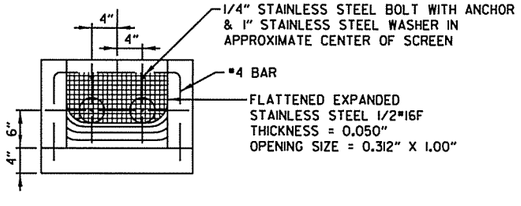

FRONT VIEW

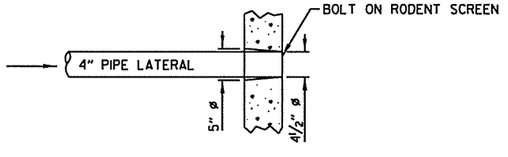

DETAIL OF HOLE FOR 4" PIPE

UNDERDRAIN OUTLET PROTECTORS

5/5/2016
10:04:00 AM
\\MS1\CA0902_SD_HWY540_17.dgn

DATE	DATE FILMED	DATE REVISED	DATE FILMED	FED.RD. DIST.NO.	STATE	FED.AID PROJ.NO.	SHEET NO.	TOTAL SHEETS
				6	ARK.			
				JOB NO.		CA0902	028	581

SPECIAL DETAILS

P.I. = 10+35.69
Δ = 22°40'26.21" RT.
D = 57°17'44.81"
T = 20.05'
L = 39.57'
P.C. = 10+15.64
P.T. = 10+55.21
e = MATCH EXISTING

P.I. = 11+26.14
Δ = 27°26'57.28" LT.
D = 57°17'44.81"
T = 24.42'
L = 47.91'
P.C. = 11+01.72
P.T. = 11+49.62
e = MATCH EXISTING

P.I. = 13+72.16
Δ = 35°52'46.85" LT.
D = 57°17'44.81"
T = 32.38'
L = 62.62'
P.C. = 13+39.78
P.T. = 14+02.41
e = MATCH EXISTING

P.I. = 14+40.94
Δ = 35°40'40.23" LT.
D = 114°35'29.61"
T = 16.09'
L = 31.13'
P.C. = 14+24.85
P.T. = 14+55.98
e = MATCH EXISTING

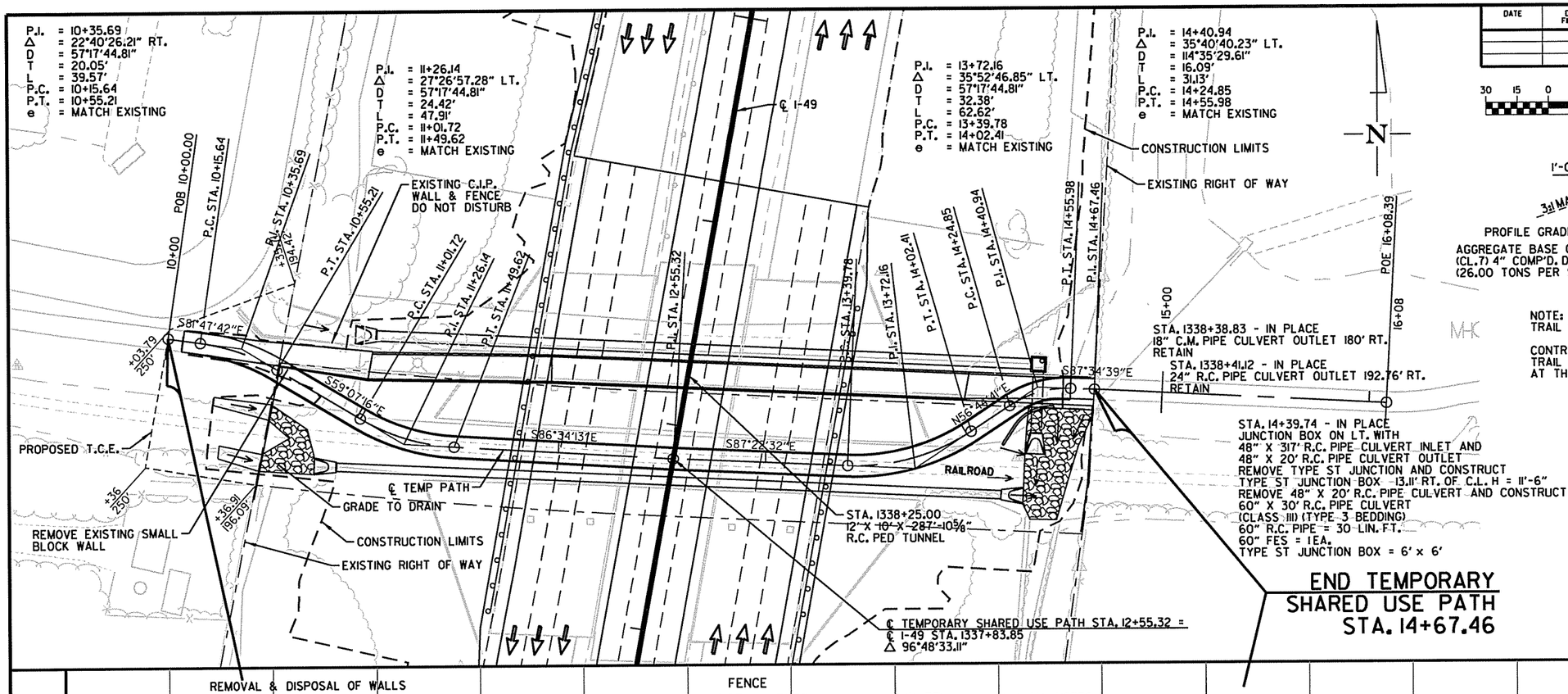

30 15 0 15 30 60

℄ TEMP. PATH

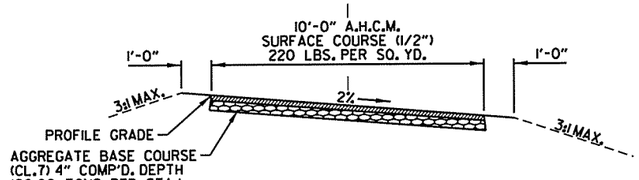

TEMPORARY TRAIL
STA. 10+56.00 - 14+25.00

NOTE:
TRAIL SHALL REMAIN OPEN AND ADA COMPLIANT AT ALL TIMES.

CONTRACTOR SHALL TAKE ALL NECESSARY STEPS TO ENSURE TRAIL REMAINS OPEN DURING DAY LIGHT HOURS. NIGHT WORK AT THE TRAIL ENDS WILL BE NECESSARY.

REMOVAL & DISPOSAL OF WALLS

STA.	LOC.	STA.	LOC.	LIN. FT.
1337+94.30	195.8' LT.	1337+98.60	143.7' LT.	52
1338+34.60	133.6' RT.	1338+40.50	176.8' RT.	44

FENCE

STA.	STA.	SIDE	TYPE	LIN. FT.
10+15.64	14+55.98	LT	CHAIN LINK	440
10+15.64	14+55.98	RT.	CHAIN LINK	441

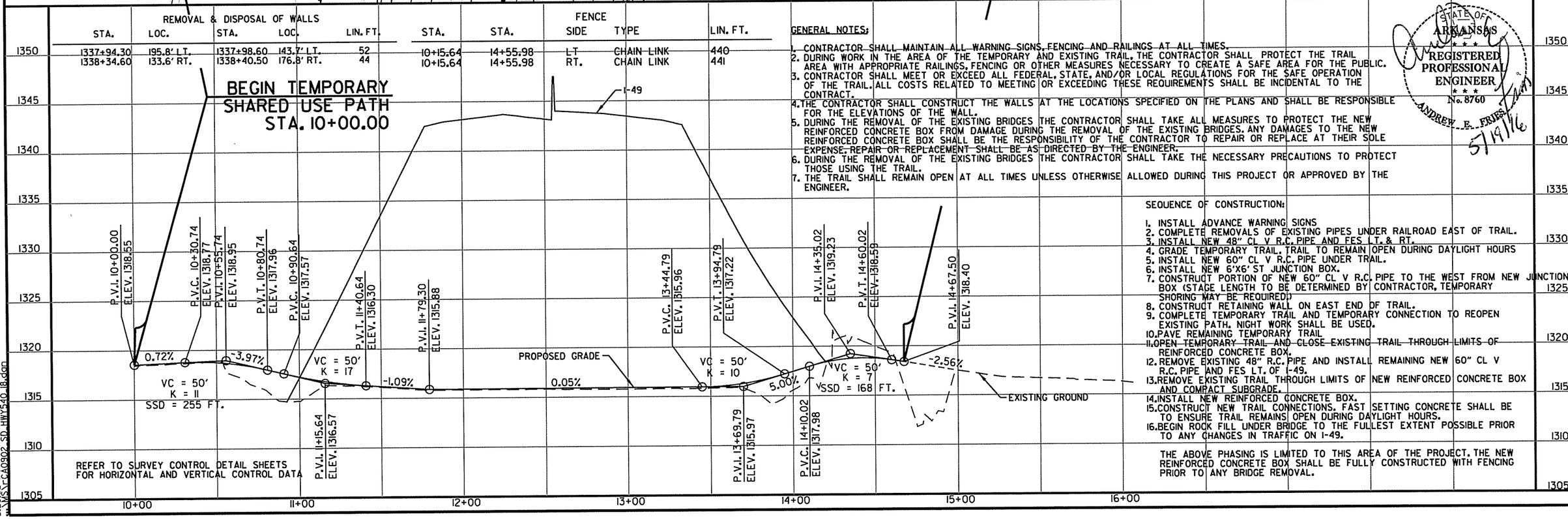

REFER TO SURVEY CONTROL DETAIL SHEETS FOR HORIZONTAL AND VERTICAL CONTROL DATA

GENERAL NOTES:

1. CONTRACTOR SHALL MAINTAIN ALL WARNING SIGNS, FENCING AND RAILINGS AT ALL TIMES.
2. DURING WORK IN THE AREA OF THE TEMPORARY AND EXISTING TRAIL, THE CONTRACTOR SHALL PROTECT THE TRAIL AREA WITH APPROPRIATE RAILINGS, FENCING OR OTHER MEASURES NECESSARY TO CREATE A SAFE AREA FOR THE PUBLIC.
3. CONTRACTOR SHALL MEET OR EXCEED ALL FEDERAL, STATE, AND/OR LOCAL REGULATIONS FOR THE SAFE OPERATION OF THE TRAIL. ALL COSTS RELATED TO MEETING OR EXCEEDING THESE REQUIREMENTS SHALL BE INCIDENTAL TO THE CONTRACT.
4. THE CONTRACTOR SHALL CONSTRUCT THE WALLS AT THE LOCATIONS SPECIFIED ON THE PLANS AND SHALL BE RESPONSIBLE FOR THE ELEVATIONS OF THE WALL.
5. DURING THE REMOVAL OF THE EXISTING BRIDGES THE CONTRACTOR SHALL TAKE ALL MEASURES TO PROTECT THE NEW REINFORCED CONCRETE BOX FROM DAMAGE DURING THE REMOVAL OF THE EXISTING BRIDGES. ANY DAMAGES TO THE NEW REINFORCED CONCRETE BOX SHALL BE THE RESPONSIBILITY OF THE CONTRACTOR TO REPAIR OR REPLACE AT THEIR SOLE EXPENSE. REPAIR OR REPLACEMENT SHALL BE AS DIRECTED BY THE ENGINEER.
6. DURING THE REMOVAL OF THE EXISTING BRIDGES THE CONTRACTOR SHALL TAKE THE NECESSARY PRECAUTIONS TO PROTECT THOSE USING THE TRAIL.
7. THE TRAIL SHALL REMAIN OPEN AT ALL TIMES UNLESS OTHERWISE ALLOWED DURING THIS PROJECT OR APPROVED BY THE ENGINEER.

SEQUENCE OF CONSTRUCTION:

1. INSTALL ADVANCE WARNING SIGNS
2. COMPLETE REMOVALS OF EXISTING PIPES UNDER RAILROAD EAST OF TRAIL.
3. INSTALL NEW 48" CL V R.C. PIPE AND FES LT. & RT.
4. GRADE TEMPORARY TRAIL. TRAIL TO REMAIN OPEN DURING DAYLIGHT HOURS
5. INSTALL NEW 60" CL V R.C. PIPE UNDER TRAIL.
6. INSTALL NEW 6'X6' ST JUNCTION BOX.
7. CONSTRUCT PORTION OF NEW 60" CL V R.C. PIPE TO THE WEST FROM NEW JUNCTION BOX (STAGE LENGTH TO BE DETERMINED BY CONTRACTOR, TEMPORARY SHORING MAY BE REQUIRED)
8. CONSTRUCT RETAINING WALL ON EAST END OF TRAIL.
9. COMPLETE TEMPORARY TRAIL AND TEMPORARY CONNECTION TO REOPEN EXISTING PATH. NIGHT WORK SHALL BE USED.
10. PAVE REMAINING TEMPORARY TRAIL
11. OPEN TEMPORARY TRAIL AND CLOSE EXISTING TRAIL THROUGH LIMITS OF REINFORCED CONCRETE BOX.
12. REMOVE EXISTING 48" R.C. PIPE AND INSTALL REMAINING NEW 60" CL V R.C. PIPE AND FES LT. OF I-49.
13. REMOVE EXISTING TRAIL THROUGH LIMITS OF NEW REINFORCED CONCRETE BOX AND COMPACT SUBGRADE.
14. INSTALL NEW REINFORCED CONCRETE BOX.
15. CONSTRUCT NEW TRAIL CONNECTIONS. FAST SETTING CONCRETE SHALL BE TO ENSURE TRAIL REMAINS OPEN DURING DAYLIGHT HOURS.
16. BEGIN ROCK FILL UNDER BRIDGE TO THE FULLEST EXTENT POSSIBLE PRIOR TO ANY CHANGES IN TRAFFIC ON I-49.

THE ABOVE PHASING IS LIMITED TO THIS AREA OF THE PROJECT. THE NEW REINFORCED CONCRETE BOX SHALL BE FULLY CONSTRUCTED WITH FENCING PRIOR TO ANY BRIDGE REMOVAL.

STATE OF ARKANSAS
REGISTERED PROFESSIONAL ENGINEER
No. 8760
ANDREW E. FRIES
5/19/16

5/19/2016
5:29:52 PM
\\WSY\prCA0902_SD_HWY540_18.dgn

DATE	DATE FILMED	DATE REVISED	DATE FILMED	FED.RD. DIST.NO.	STATE	FED.AID PROJ.NO.	SHEET NO.	TOTAL SHEETS
				6	ARK.			
				JOB NO.		CA0902	029	581

(2) SPECIAL DETAILS

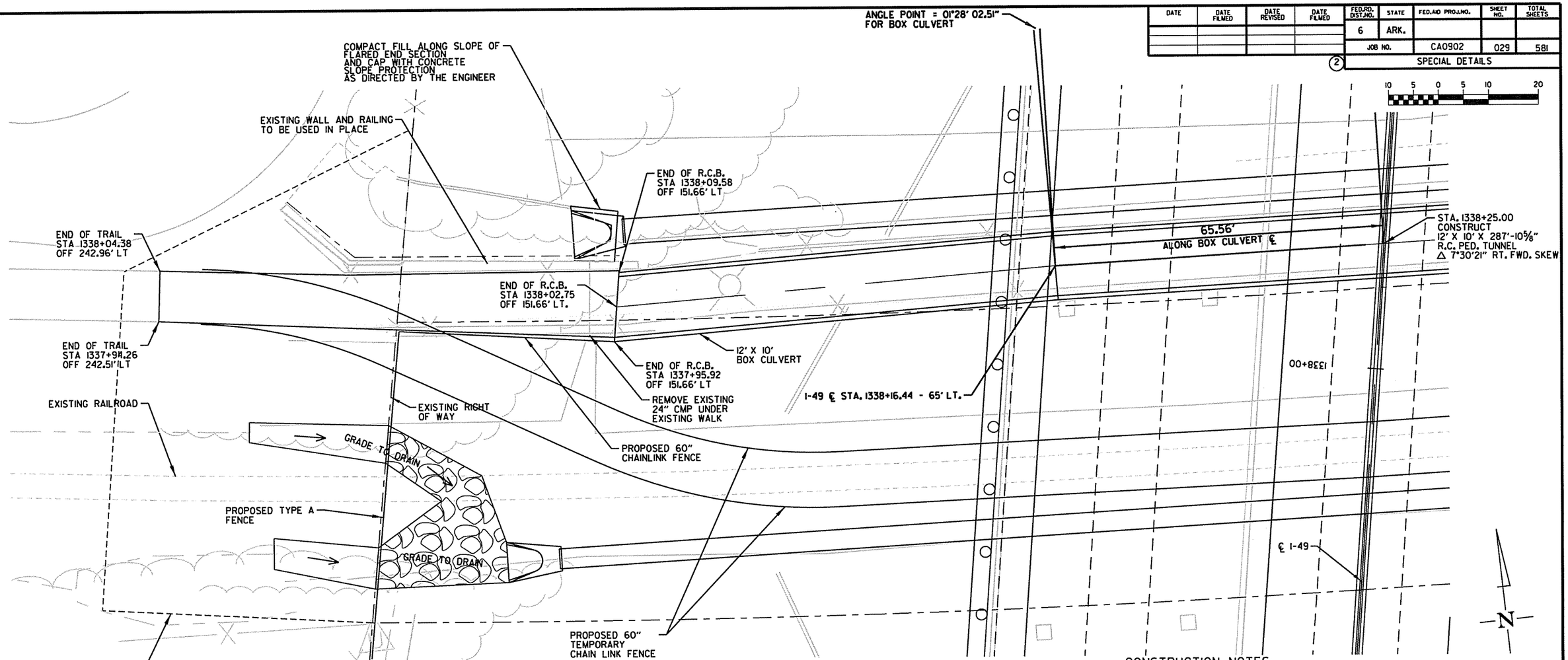

PLAN

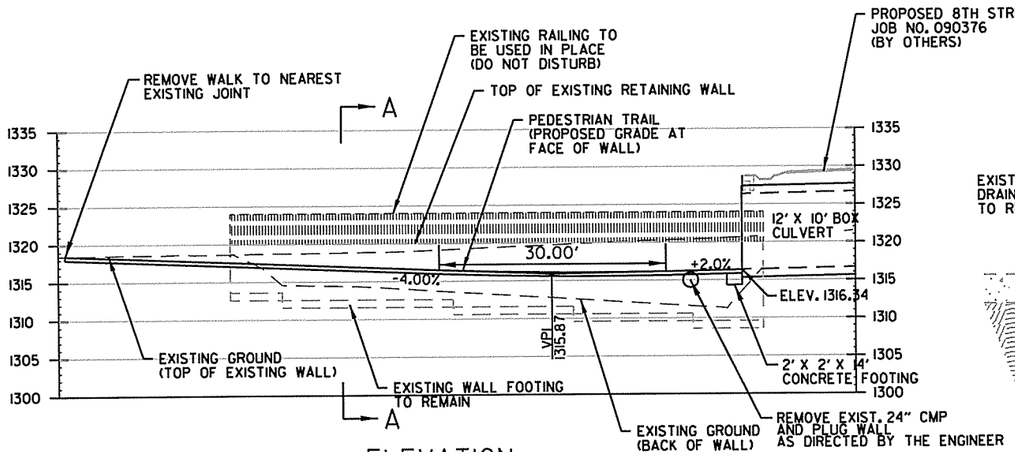

ELEVATION

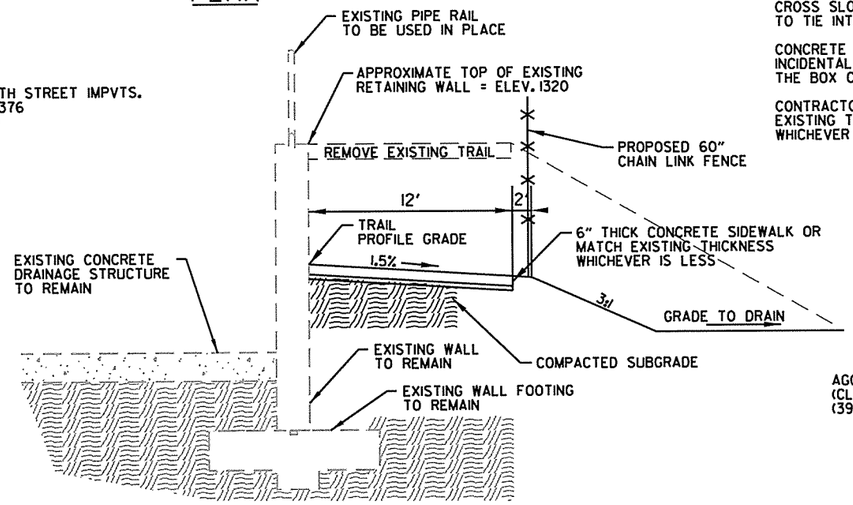

SECTION A-A

CONSTRUCTION NOTES:

CROSS SLOPE OF THE TRAIL SHALL BE WARPED OVER 12' TO TIE INTO THE BOX CULVERT ENTRY.

CONCRETE FOOTING AT EACH END OF THE BOX SHALL BE INCIDENTAL TO THE INSTALLATION AND CONSTRUCTION OF THE BOX CULVERT.

CONTRACTOR SHALL SAW CUT LATERAL JOINTS TO MATCH EXISTING TRAIL JOINT SPACING, OR NO GREATER THAN 12', WHICHEVER IS LESS. SAW CUT DEPTH SHALL BE D/4

STATE OF ARKANSAS REGISTERED PROFESSIONAL ENGINEER No. 8760 ANDREW E. FRIES 5/19/16

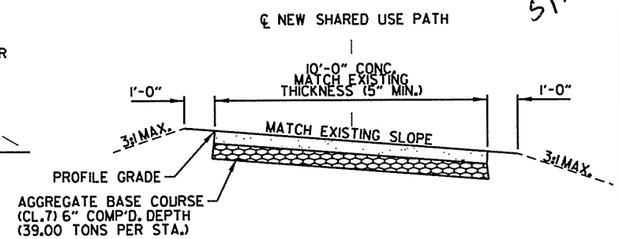

TRAIL CONNECTION

(SEE STATION AND OFFSETS FOR SPECIFIC LIMITS)

SPECIAL DETAILS

5/19/2016
5:29:58 PM
\\WST-CA0902_SD_HWY540_19.dgn

DATE	DATE FILMED	DATE REVISED	DATE FILMED

FED.RD. DIST.NO.	STATE	FED.AID PROJ.NO.	SHEET NO.	TOTAL SHEETS
6	ARK.			
JOB NO.		CA0902	030	581

(2) SPECIAL DETAILS

10 5 0 5 10 20

STA. 14+39.74 - IN PLACE
JUNCTION BOX ON L.T. WITH
48" X 317' R.C. PIPE CULVERT INLET AND
48" X 20' R.C. PIPE CULVERT OUTLET
REMOVE TYPE ST JUNCTION AND CONSTRUCT
TYPE ST JUNCTION BOX 13.11' RT. OF C.L. H = 11'-6"
REMOVE 48" X 20' R.C. PIPE CULVERT AND CONSTRUCT
60" X 30' R.C. PIPE CULVERT
(CLASS III) (TYPE 3 BEDDING)
60" R.C. PIPE = 30 LIN. FT.
60" FES = 1EA.
TYPE ST JUNCTION BOX = 6' x 6'

PROPOSED 60" CHAINLINK FENCE

STA. 1338+38.83 - IN PLACE
18" C.M. PIPE CULVERT OUTLET 180' RT.
RETAIN

STA 1338+59.14
OFF 165.77' RT

* PROPOSED
60" CL V
R.C. PIPE

* PROPOSED
60" CL V
R.C. PIPE

END OF TRAIL
STA 1338+55.77
OFF 182.44' RT

STA. 1338+41.12 - IN PLACE
24" R.C. PIPE CULVERT OUTLET 192.76' RT.
RETAIN

EXISTING TRAIL

END OF R.C.B.
STA 1338+49.39
OFF 135.41' RT

PROPOSED WALL
STA 1338+40.50
OFF 176.69' RT
TOP ELEV. 1319.5
MATCH BOTTOM

END OF R.C.B.
STA 1338+42.58
OFF 133.41' RT

REMOVE EXIST
BLOCK WALL

20' R

EXISTING WALL AND
RAILING TO REMAIN
IN PLACE

STA. 1338+25.00
CONSTRUCT
12' X ~~10'~~ X ~~287'-10⅝"~~
R.C. PED. TUNNEL
Δ 7°30'21" RT. FWD. SKEW

EXISTING RAILING
TO BE REMOVED

12' X 10'
BOX CULVERT

END OF R.C.B.
STA 1338+35.77
OFF 133.41' RT

PROPOSED WALL
STA. 1338+27.82
OFF 159.21' RT
TOP ELEV. 1316.8
BOTTOM ELEV. 1312.0

END OF TRAIL
STA 1338+44.87
OFF 183.94' RT

PROPOSED 60"
CHAINLINK FENCE

EXISTING RIGHT
OF WAY

GRADE TO DRAIN

PROPOSED TYPE A
FENCE

PROPOSED WALL
STA 1338+18.09
OFF 155.05' RT
TOP ELEV. 1313.0
BOTTOM ELEV. 1312.0

RAILROAD

STA 1338+16.16
OFF 171.75' RT

1338+00

℄ I-49

* PROPOSED
48" CL V
R.C. PIPE

PROPOSED 60"
TEMPORARY
CHAIN LINK FENCE

N

PLAN

CONSTRUCTION NOTES:

CROSS SLOPE OF THE TRAIL SHALL BE WARPED OVER 12' TO TIE INTO THE BOX CULVERT ENTRY.

CONCRETE FOOTING AT EACH END OF THE BOX SHALL BE INCIDENTAL TO THE INSTALLATION AND CONSTRUCTION OF THE BOX CULVERT.

CONTRACTOR SHALL SAW CUT LATERAL JOINTS TO MATCH EXISTING TRAIL JOINT SPACING, OR NO GREATER THAN 12', WHICHEVER IS LESS. SAW CUT DEPTH SHALL BE D/4

STATE OF ARKANSAS
No. 8760
REGISTERED PROFESSIONAL ENGINEER
ANDREW E. FRIES
5/19/16

CONSTRUCTION PHASING:

1. COMPLETE REMOVALS OF EXISTING PIPES UNDER RAILROAD EAST OF TRAIL.
2. INSTALL NEW 48" CL V R.C. PIPE AND FES LT. & RT.
3. GRADE TEMPORARY TRAIL.
   CLOSE EXISTING TRAIL FOR NO MORE THAN (5) WORKING DAYS TO CONSTRUCT:
4. NEW 60" CL V R.C. PIPE UNDER TRAIL.
5. NEW 6'X6' ST JUNCTION BOX.
6. PORTION OF NEW 60" CL V R.C. PIPE TO THE WEST FROM NEW JUNCTION BOX (STAGE LENGTH TO BE DETERMINED BY CONTRACTOR, TEMPORARY SHORING MAY BE REQUIRED.)
7. RECONSTRUCT WALL F
8. COMPLETE TEMPORARY TRAIL AND TEMPORARY CONNECTION TO REOPEN EXISTING PATH.
9. PAVE REMAINING TEMPORARY TRAIL
10. OPEN TEMPORARY TRAIL AND CLOSE EXISTING TRAIL THROUGH LIMITS OF REINFORCED CONCRETE BOX.
11. REMOVE EXISTING 48" R.C. PIPE AND INSTALL REMAINING NEW 60" CL V R.C. PIPE AND FES LT. OF I-49.
12. REMOVE EXISTING TRAIL THROUGH LIMITS OF NEW REINFORCED CONCRETE BOX AND COMPACT SUBGRADE.
13. INSTALL NEW REINFORCED CONCRETE BOX.
14. CONSTRUCT NEW TRAIL CONNECTIONS.
15. BEGIN ROCK FILL UNDER BRIDGE TO THE FULLEST EXTENT POSSIBLE PRIOR TO ANY CHANGES IN TRAFFIC ON I-49.

THE ABOVE PHASING IS LIMITED TO THIS AREA OF THE PROJECT. THE NEW REINFORCED CONCRETE BOX SHALL BE FULLY CONSTRUCTED WITH FENCING PRIOR TO ANY BRIDGE REMOVAL.

GENERAL NOTES:

1. CONTRACTOR SHALL MAINTAIN ALL WARNING SIGNS, FENCING AND RAILINGS AT ALL TIMES.
2. DURING WORK IN THE AREA OF THE TEMPORARY AND EXISTING TRAIL, THE CONTRACTOR SHALL PROTECT THE TRAIL AREA WITH APPROPRIATE RAILINGS, FENCING OR OTHER MEASURES NECESSARY TO CREATE A SAFE AREA FOR THE PUBLIC.
3. CONTRACTOR SHALL MEET OR EXCEED ALL FEDERAL, STATE, AND/OR LOCAL REGULATIONS FOR THE SAFE OPERATION OF THE TRAIL ALL COSTS RELATED TO MEETING OR EXCEEDING THESE REQUIREMENTS SHALL BE INCIDENTAL TO THE CONSTRUCTION OF THE REINFORCED BOX CULVERT.
4. THE CONTRACTOR SHALL CONSTRUCT THE WALLS AT THE LOCATIONS AS SPECIFIED ON THE PLANS AND SHALL BE RESPONSIBLE FOR THE FINAL ELEVATIONS OF THE WALL.
5. DURING THE REMOVAL OF THE EXISTING BRIDGE THE CONTRACTOR SHALL TAKE ALL MEASURES TO PROTECT THE NEW REINFORCED CONCRETE BOX FROM DAMAGE DURING THE REMOVAL OF THE EXISTING BRIDGES. ANY DAMAGES TO THE NEW REINFORCED CONCRETE BOX SHALL BE THE RESPONSIBILITY OF THE CONTRACTOR TO REPAIR OR REPLACE AT THEIR SOLE EXPENSE. REPAIR OR REPLACEMENT SHALL BE AS DIRECTED BY THE ENGINEER.
6. DURING THE REMOVAL OF THE EXISTING BRIDGES THE CONTRACTOR SHALL TAKE THE NECESSARY PRECAUTIONS TO PROTECT THOSE USING THE TRAIL.
7. THE TRAIL SHALL REMAIN OPEN AT ALL TIMES UNLESS OTHERWISE ALLOWED DURING THIS PROJECT OR APPROVED BY THE ENGINEER.

℄ NEW SHARED USE PATH

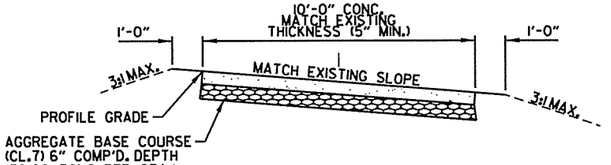

TRAIL CONNECTION
(SEE STATION AND OFFSETS FOR SPECIFIC LIMITS)

* - SEE CULVERT DIAGRAM FOR ADDITIONAL INFORMATION

SPECIAL DETAILS

5/19/2016
5:30:04 PM
...\MSTR\CA0902_SD_HWY540_20.dgn

DATE REVISED	DATE FILMED	DATE REVISED	DATE FILMED	FED. ROAD DIST. NO.	STATE	FED. AID PROJ. NO.	SHEET NO.	TOTAL SHEETS
				6	ARK.			
				JOB NO.		CA0902	031	581

① SPECIAL DETAILS

STATE OF ARKANSAS
REGISTERED PROFESSIONAL ENGINEER
No. 8760
ANDREW E. FRIES
5/16/16

TABULAR DATA BY: LAR DATE: 11/05/2014
CHECKED BY: JDS DATE: 4/25/2016

④ See Sheet 276 for Headwall Special Detail.

This drawing to be used in conjunction with
SHEET 1 OF 4, "GENERAL DETAILS OF R.C. BOX CULVERT", 'GENERAL NOTES & LONGITUDINAL SECTION LENGTH SCHEDULE',
SHEET 2 OF 4, "GENERAL DETAILS OF R.C. BOX CULVERT", 'DETAILS OF SINGLE-BARREL R.C. BOX CULVERT',
SHEET 4 OF 4, "GENERAL DETAILS OF R.C. BOX CULVERT", 'DETAILS OF WINGWALLS', and
STANDARD DRAWING RCB-2.
For additional information and outlet sections, see Sheet 2 of 2.

INLET SKEWED END SECTION

SKEW (DEGREE)	SLOPE	DESIGN FILL DEPTH (FT.)	CLEAR SPAN (FT.)	CLEAR HEIGHT (FT.)	SECTION LENGTH	TOP SLAB THICKNESS	BOTTOM SLAB THK.	SIDE WALL THICKNESS	④ HEADWALL HEIGHT	OVERALL WIDTH	OVERALL HEIGHT	TOP SLAB REINFORCING STEEL 'a'				BOTTOM SLAB REINFORCING STEEL 'b'				SIDE WALL REINFORCING STEEL 'f'				TOP SLAB DISTRIBUTION REINFORCING STEEL 'd'				BOTTOM SLAB DISTRIBUTION REINFORCING STEEL 'e'				SIDE WALL DISTRIBUTION REINFORCING STEEL 'd1'				HDWL 'k1', 'k2' & 'h'			
SK	SL	D	S	H	LL	T	B	C	HW	OW	OH	SIZE	SPACING	LENGTHS VARY	NO. REQ'D	SIZE	SPACEING	LENGTHS VARY	NO. REQ'D	SIZE	SPACING	NO. REQ'D	LENGTH	SIZE	SPACING	NO. REQ'D	LENGTHS VARY	SIZE	SPACING	NO. REQ'D	LENGTHS VARY	SIZE	SPACING	NO. REQ'D	LENGTH	BAR	SIZE	NO. REQ'D	LENGTH
7.5	3:1	2	12	10	1'-11"	11	11	9	3	13'-6"	11'-10"	8	7.5	Max		8	8.5	Max		6	5.5	10	11'-6"	4	10	16	Max	4	10	16	Max	4	12	10	LONG	k1	4	6	13'-3"
														13'-2"				13'-2"																k2	4	6	13'-3"
														Min	1			Min	1								2'-7"				2'-7"		10	SHORT				1'-10"
														11'-11"				11'-11"									Min				Min			0'-10"	h	4	15	Y
														13'-2"	2			13'-2"	2								0'-10"				0'-10"							0'-10"

CLASS "S" CONCRETE (Includes HDWL)	① REINFORCING STEEL (GR. 60) (Includes HDWL)
CU. YDS.	LBS.
3.05	564

① Any Bar Lap Required for the Skewed End Section shall be considered subsidiary to the item "Reinforcing Steel - Roadway (Gr. 60)."

INLET SLOPE SECTION(S)

R.C. BOX SECTION	DESIGN FILL DEPTH (FT.)	CLEAR SPAN (FT.)	CLEAR HEIGHT (FT.)	TOP SLAB THICKNESS	BOTTOM SLAB THK.	SIDE WALL THICKNESS	OVER ALL WIDTH	OVER ALL HEIGHT	SECTION LENGTH (FT.)	TOP SLAB REINFORCING STEEL 'a' LENGTH = OW - 4"				BOTTOM SLAB REINFORCING STEEL 'b' LENGTH = OW - 4"				SIDE WALL REINFORCING STEEL 'f' LENGTH = OH - 4"				TOP SLAB DISTRIBUTION REINF. STEEL 'd' LENGTH = SL			BOTTOM SLAB DISTRIBUTION REINF. STEEL 'e' LENGTH = SL			SIDE WALL DISTRIBUTION REINF.STEEL 'd1' LENGTH = SL		
	D	S	H	T	B	C	OW	OH	SL	SIZE	SPACING	NO. REQ'D	LENGTH	SIZE	SPACING	NO. REQ'D	LENGTH	SIZE	SPACING	NO. REQ'D	LENGTH	SIZE	SPACING	NO. REQ'D	SIZE	SPACING	NO. REQ'D	SIZE	SPACING	NO. REQ'D
A	2	12	10	12.5	12.5	8.5	13'-5"	12'-1"	36.17	8	9	48	13'-1"	6	6	72	13'-1"	6	6	144	11'-9"	4	8.5	18	4	8.5	18	4	12	20
A1	10	12	10	10.5	11	9.5	13'-7"	11'-9 1/2"	6.46	6	4	19	13'-3"	6	4	19	13'-3"	8	9	16	11'-6"	4	10	16	4	10	16	4	11	22

HDWL THK.	ADDITIONAL REINF. FOR HDWL			"h" bars			
HW	LBS			SIZE	Y	LENGTH	NO. REQ'D

CLASS "S" CONCRETE	REINFORCING STEEL (GR. 60)	② ADTL. REINF. PER LONG. LAP LOCATION	ADDITIONAL CONCRETE FOR HDWL	TOTAL ADDITIONAL REINF FOR HDWL
CU. YDS. PER LIN. FT.	LBS. PER LIN. FT.	LBS.	CU. YDS.	LBS.
1.56	194	65		
1.49	237	63		

② Bar Lap - Add one long. lap for each Slope Section, and one additional long. lap for Slope Sections greater than 40'-0" in length.

Min. Bar Lap Length	
#4	1'-9"
#5	2'-2"
#6	2'-7"
#7	3'-6"
#8	4'-7"

Bar Pin Dia. Table	
#4	3"
#5	3 3/4"
#6	4 1/2"
#7	5 1/4"
#8	6"

Design Fill Depth	Range of Actual Fill Depth
2	0.0 ft - 2.0 ft
5	>2.0 ft - 5.0 ft
10	>5.0 ft - 10.0 ft
15	>10.0 ft - 15.0 ft
20	>15.0 ft - 20.0 ft
25	>20.0 ft - 25.0 ft
30	>25.0 ft - 30.0 ft
35	>30.0 ft - 35.0 ft
40	>35.0 ft - 40.0 ft

Data shown for Mid-Section, Slope Section(s), and Skewed End Section is based on the design fill depth shown in the table, see PLAN AND PROFILE SHEETS for actual fill depth.

MID-SECTION

R.C. BOX SECTION	DESIGN FILL DEPTH (FT.)	CLEAR SPAN (FT.)	CLEAR HEIGHT (FT.)	TOP SLAB THK.	BOTTOM SLAB THK.	SIDE WALL THK	OVER ALL WIDTH	OVER ALL HEIGHT	SECTION LENGTH (FT.)	TOP SLAB REINFORCING STEEL 'a' LENGTH = OW - 4"				BOTTOM SLAB REINFORCING STEEL 'b' LENGTH = OW - 4"				SIDE WALL REINFORCING STEEL 'f' LENGTH = OH - 4"				TOP SLAB DISTRIBUTION REINF. STEEL 'd' LENGTH = SL			BOTTOM SLAB DISTRIBUTION REINF. STEEL 'e' LENGTH = SL			SIDE WALL DISTRIBUTION REINF. STEEL 'd1' LENGTH = SL		
	D	S	H	T	B	C	OW	OH	SL	SIZE	SPACING	NO. REQ'D	LENGTH	SIZE	SPACING	NO. REQ'D	LENGTH	SIZE	SPACING	NO. REQ'D	LENGTH	SIZE	SPACING	NO. REQ'D	SIZE	SPACING	NO. REQ'D	SIZE	SPACING	NO. REQ'D
B	15	12	10	12.5	13	11	13'-10"	12'-1 1/2"	190.13	4	12	190	13'-6"	8	6	380	13'-6"	6	4.5	1014	11'-10"	4	8.5	18	4	8.5	18	4	10	24

CLASS "S" CONCRETE	REINFORCING STEEL (Gr. 60)	③ ADTL. REINF. PER LONG. LAP LOCATION(S)
CU. YDS. PER LIN. FT.	LBS. PER LIN. FT.	LBS.
1.77	216	70

③ MID-SECTION
BAR LAP TABLE

# of Long. Laps Req'd.	SL = Section Length
0	< 40.0 ft
1	>40.0 ft - 78.0 ft
2	>78.0 ft - 116.0 ft
3	>116.0 ft - 154.0 ft
4	>154.0 ft - 192.0 ft
5	>192.0 ft - 230.0 ft
6	>230.0 ft - 268.0 ft
7	>268.0 ft - 306.0 ft
8	>306.0 ft -344.0 ft

SHEET 1 OF 2
DETAILS OF R.C. BOX CULVERT
SINGLE BARREL BOX CULVERT
STA. 1338+25

SPECIAL DETAILS

Ver. 1.1.4 FILENAME

DATE REVISED	DATE FILMED	DATE REVISED	DATE FILMED	FED. ROAD DIST. NO.	STATE	FED. AID PROJ. NO.	SHEET NO.	TOTAL SHEETS
				6	ARK.			
				JOB NO.		CA0902	032	581

(1) SPECIAL DETAILS

STATE OF ARKANSAS
REGISTERED PROFESSIONAL ENGINEER
No. 8760
ANDREW E. FRIES
5/16/16

TABULAR DATA BY: LAR DATE: 11/05/2014
CHECKED BY: JDS DATE: 4/25/2016

(3) See Sheet 276 for Headwall Special Detail.

OUTLET SKEWED END SECTION

SKEW (DEGREE)	SLOPE	DESIGN FILL DEPTH (FT.)	CLEAR SPAN (FT.)	CLEAR HEIGHT (FT.)	SECTION LENGTH	TOP SLAB THICKNESS	BOTTOM SLAB THK.	SIDE WALL THICKNESS	HEADWALL HEIGHT (3)	OVERALL WIDTH	OVERALL HEIGHT	TOP SLAB REINFORCING STEEL 'a'				BOTTOM SLAB REINFORCING STEEL 'b'				SIDE WALL REINFORCING STEEL 'f'				TOP SLAB DISTRIBUTION REINFORCING STEEL 'd'				BOTTOM SLAB DISTRIBUTION REINFORCING STEEL 'e'				SIDE WALL DISTRIBUTION REINFORCING STEEL 'd1'				HDWL 'k1', 'k2' & 'h'			
SK	SL	D	S	H	LL	T	B	C	HW	OW	OH	SIZE	SPACING	LENGTHS VARY	NO. REQ'D	SIZE	SPACEING	LENGTHS VARY	NO. REQ'D	SIZE	SPACING	NO. REQ'D	LENGTH	SIZE	SPACING	NO. REQ'D	LENGTHS VARY	SIZE	SPACING	NO. REQ'D	LENGTHS VARY	SIZE	SPACING	NO. REQ'D	LENGTH	BAR	SIZE	NO. REQ'D	LENGTH
9	3:1	2	12	10	2'-1"	11	11	9	3	13'-6"	11'-10"	8	7.5	Max 13'-2"	1	8	8.5	Max 13'-2"	1	6	5.5	10	11'-6"	4	10	16	Max 3'-0"	4	10	16	Max 3'-0"	4	12	10	LONG 3'-0"	k1	4	6	13'-4"
														Min 10'-0"				Min 10'-0"									Min 0'-10"				Min 0'-10"			10	SHORT 0'-10"	k2	4	6	13'-4"
														13'-2"	2			13'-2"	2																h	4	15	1'-10"
																																						Y 0'-10"

CLASS "S" CONCRETE (includes HDWL)	(1) REINFORCING STEEL (GR 60) (includes HDWL)
CU. YDS.	LBS.
3.32	567

(1) Any Bar Lap Required for the Skewed End Section shall be considered subsidiary to the item "Reinforcing Steel - Roadway (Gr. 60)."

OUTLET SLOPE SECTION(S)

R.C. BOX SECTION	DESIGN FILL DEPTH (FT.)	CLEAR SPAN (FT.)	CLEAR HEIGHT (FT.)	TOP SLAB THICKNESS	BOTTOM SLAB THK.	SIDE WALL THICKNESS	OVERALL WIDTH	OVERALL HEIGHT	SECTION LENGTH (FT.)	TOP SLAB REINFORCING STEEL 'a' LENGTH = OW - 4"				BOTTOM SLAB REINFORCING STEEL 'b' LENGTH = OW - 4"				SIDE WALL REINFORCING STEEL 'f' LENGTH = OH - 4"				TOP SLAB DISTRIBUTION REINF. STEEL 'd' LENGTH = SL			BOTTOM SLAB DISTRIBUTION REINF. STEEL 'e' LENGTH = SL			SIDE WALL DISTRIBUTION REINF. STEEL 'd1' LENGTH = SL		
	D	S	H	T	B	C	OW	OH	SL	SIZE	SPACING	NO. REQ'D	LENGTH	SIZE	SPACING	NO. REQ'D	LENGTH	SIZE	SPACING	NO. REQ'D	LENGTH	SIZE	SPACING	NO. REQ'D	SIZE	SPACING	NO. REQ'D	SIZE	SPACING	NO. REQ'D
A	2	12	10	12.5	12.5	8.5	13'-5"	12'-1"	36.12	8	9	48	13'-1"	6	6	72	13'-1"	6	6	144	11'-9"	4	8.5	17	4	8.5	17	4	12	20
A1	10	12	10	10.5	11	9.5	13'-7"	11'-9 1/2"	15.00	6	4	45	13'-3"	6	4	45	13'-3"	8	9	40	11'-6"	4	10	15	4	10	15	4	11	20

HDWL THK.	ADDITIONAL REINF. FOR HDWL	"h" bars			
-W	LBS	SIZE	Y	LENGTH	NO. REQ'D

CLASS "S" CONCRETE	REINFORCING STEEL (GR. 60)	(2) ADTL. REINF. PER LONG. LAP LOCATION	ADDITIONAL CONCRETE FOR HDWL	TOTAL ADDITIONAL REINF. FOR HDWL
CU. YDS. PER LIN. FT.	LBS. PER LIN. FT.	LBS.	CU. YDS.	LBS.
1.56	193	63		
1.49	235	58		

(2) Bar Lap - Add one long. lap for each Slope Section, and one additional long. lap for Slope Sections greater than 40'-0" in length.

Min. Bar Lap Length	
#4	1'-9"
#5	2'-2"
#6	2'-7"
#7	3'-6"
#8	4'-7"

Bar Pin Dia. Table	
#4	3"
#5	3 3/4"
#6	4 1/2"
#7	5 1/4"
#8	6"

The required number of bars and lengths shown are for estimating purpose only. The actual number and length required shall be determined in field.

Unless otherwise noted, all dimensions are in inches.

SHEET 2 OF 2
DETAILS OF R.C. BOX CULVERT
SINGLE BARREL BOX CULVERT
STA. 1338+25

SPECIAL DETAILS

Ver. 1.14 FILENAME

DATE REVISED	DATE FILMED	DATE REVISED	DATE FILMED	FED. ROAD DIST. NO.	STATE	FED. AID PROJ. NO.	SHEET NO.	TOTAL SHEETS
				6	ARK.			
				JOB NO.		CA0902	033	581
				①		SPECIAL DETAILS		

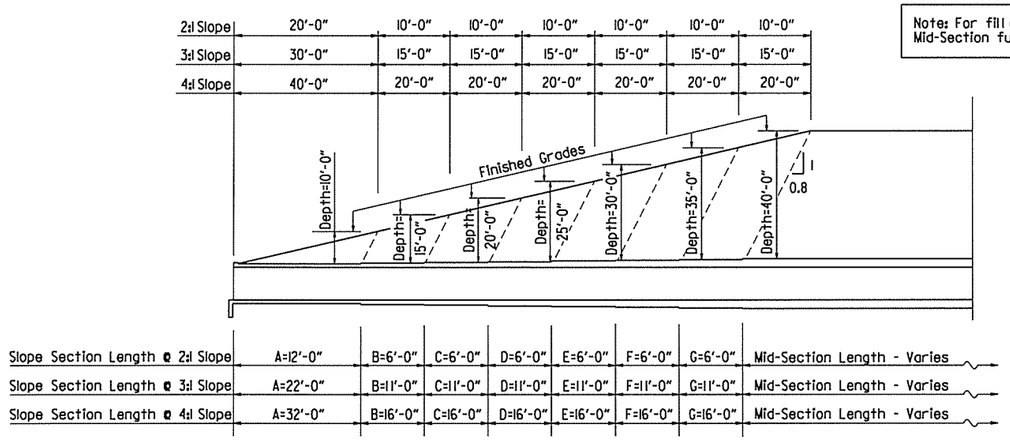

Note: For fill depths 10' and under, use Mid-Section full length of box culvert.

*LL = Skewed End Section Length - See "Skewed End Section Details" Length LL varies with skew angle, overall box width and fill depth and may eliminate the need for some slope section lengths as shown.

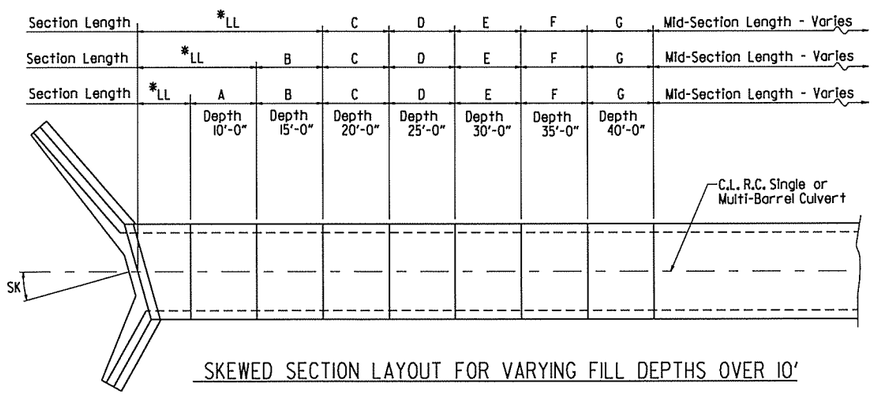

LONGITUDINAL SECTION LENGTH SCHEDULE FOR VARYING FILL DEPTHS OVER 10'

Lengths for Non-Skewed Boxes

SKEWED SECTION LAYOUT FOR VARYING FILL DEPTHS OVER 10'

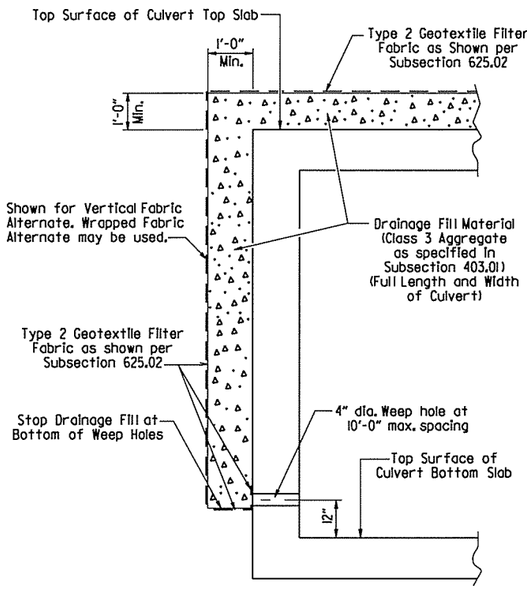

CULVERT DRAINAGE DETAIL FOR ROCK FILL

This detail shall be used when rock fill is specified for embankment construction.

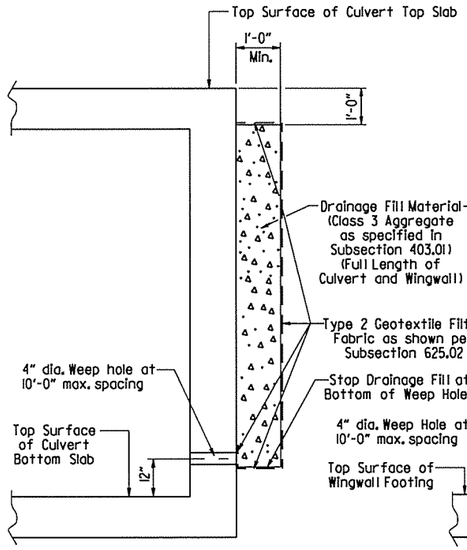

VERTICAL FABRIC ALTERNATE

(Shown for Culvert, Similar for Wingwall)

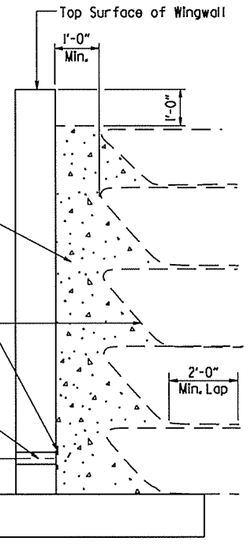

WRAPPED FABRIC ALTERNATE

(Shown for Wingwall, Similar for Culvert)

For Details of Excavation and Pay Limits, see Standard Drawing RCB-2.

WINGWALL & CULVERT DRAINAGE DETAIL

GENERAL NOTES:

CONSTRUCTION SPECIFICATIONS: Arkansas State Highway and Transportation Department Standard Specifications for Highway Construction (2014 edition) with applicable Supplemental Specifications and Special Provisions. Section and Subsection refer to the Standard Construction Specifications unless otherwise noted in the Plans.

DESIGN SPECIFICATIONS: AASHTO LRFD Bridge Design Specifications, Fifth Edition (2010) with 2010 interim revisions.

LIVE LOADING: HL-93

All concrete shall be Class S with a minimum 28-day compressive strength of 3,500 psi and shall be poured in the dry. All exposed corners to have ¾" chamfers.

Reinforcing Steel shall be Grade 60 (yield strength = 60,000 psi) conforming to AASHTO M31 or M322, Type A, with mill test reports.

Reinforcing Steel Tolerances: The tolerances for reinforcing steel shall meet those listed in 'Manual of Standard Practice' published by Concrete Reinforcing Steel Institute (CRSI) except that the tolerance for truss bars such as Figure 3 on page 7-4 of the CRSI Manual shall be minus zero to plus 1/2 inch.

Excavation and backfilling shall be in accordance with the requirements of Section 801.

Membrane Waterproofing shall conform to the requirements of Section 815. Membrane Waterproofing shall be Type C and as directed by the Engineer applied to all construction joints in the top slab and the sidewalls of R.C. Box culverts and to the construction joint between wingwalls and R.C. Box culvert walls.

Weep Holes in box culvert walls shall have a maximum horizontal spacing of 10'-0" and shall be spaced to clear all reinforcing steel. The drain opening shall be 4" diameter and shall be placed 12" above the top of the bottom slab.

Weep Holes in wingwalls shall have a maximum horizontal spacing of 10'-0" and shall be spaced to clear all reinforcing steel. There shall be a minimum of two (2) weep holes in each wingwall. The drain opening shall be 4" diameter and shall be placed 12" above the top of the wingwall footing.

The barrel components of the culvert may be constructed using continuous pours. For longer culvert construction, the Contractor may use multiple pours with transverse construction joints spaced a minimum of 50 feet apart unless superseded by stage construction or site constraints as approved by the Engineer. Construction joints between footings and walls shall be made only where shown in the Plans. Joints shall be normal to the centerline of barrel and shall be keyed. Longitudinal reinforcing shall be continuous through joints unless shown otherwise. All longitudinal construction joints shall be submitted to the Engineer for approval.

Membrane Waterproofing, Weep Holes, Geotextile Filter Fabric, and Drainage Fill Material will not be paid for directly but shall be considered subsidiary to Class S Concrete.

When the top slab of the box culvert serves as finished roadway surface, curing and finishing shall be in accordance with subsections 802.17 and 802.20 for bridge roadway surface and a tine finish shall be applied in accordance with subsection 802.19 for Class S Tined Bridge Roadway Surface Finish. Curing and finishing shall not be paid for directly, but shall be considered incidental to the item "Class S Concrete-Roadway". Class 1 Protective Surface Treatment shall be applied to the roadway surface and this work shall be paid for under the unit price bid for "Class 1 Protective Surface Treatment".

When precast reinforced concrete box culverts are substituted for cast in place box culverts, they shall be manufactured according to ASTM C 1577 and meet the requirements of Section 607. When the top slab of the box culvert serves as the finished roadway surface, a precast reinforced concrete box culvert substitution is not allowed.

STATE OF ARKANSAS
REGISTERED PROFESSIONAL ENGINEER
No. 8760
ANDREW E. FRIES
5/16/16

SHEET 1 OF 4

GENERAL DETAILS OF R.C. BOX CULVERT

GENERAL NOTES &
LONGITUDINAL SECTION LENGTH SCHEDULE

SPECIAL DETAILS

V 1.14 FILENAME

DATE REVISED	DATE FILMED	DATE REVISED	DATE FILMED	FED. ROAD DIST. NO.	STATE	FED. AID PROJ. NO.	SHEET NO.	TOTAL SHEETS
				6	ARK.			
				JOB NO.		CA0902	034	581

1 SPECIAL DETAILS

STATE OF ARKANSAS
REGISTERED PROFESSIONAL ENGINEER
No. 8760
ANDREW E. FRIES
5/16/16

Note: When top slab of culvert serves as finished roadway surface, see General Notes on Sheet 1 of 4.

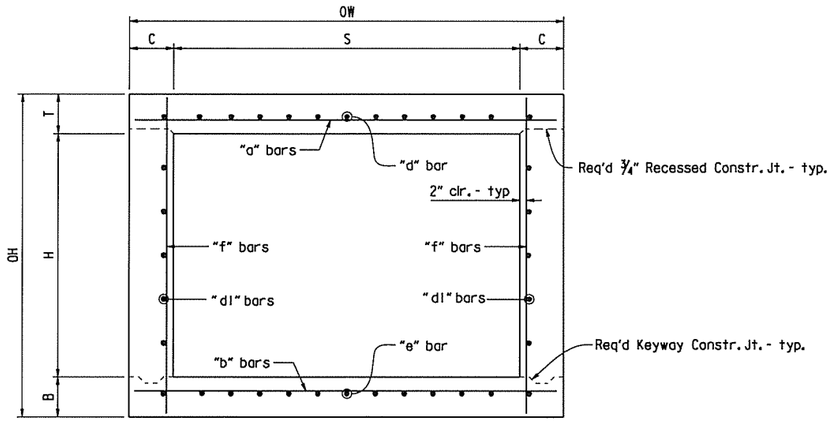

TYPICAL SECTION M-M

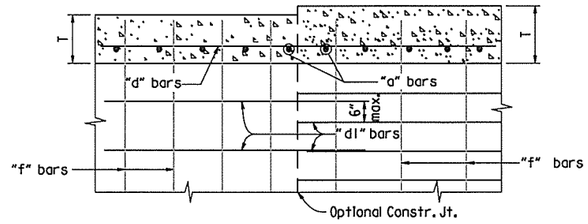

Longitudinal Bar Spacing at individual sections shall be maintained, which may result in noncontact bar laps.

LONGITUDINAL LAP DETAIL AT CHANGE IN SECTIONS

TOP SLAB SHOWN, BOTTOM SLAB SIMILAR

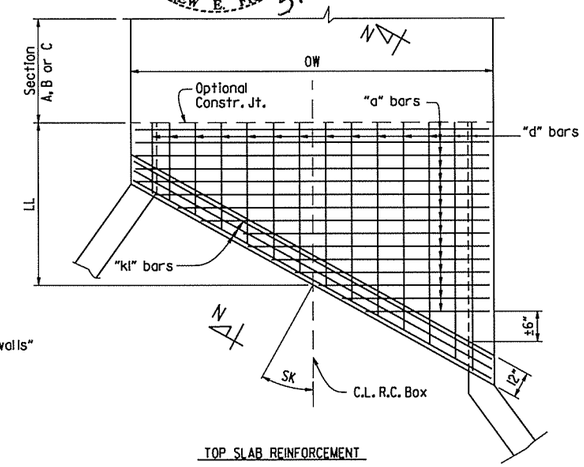

TOP SLAB REINFORCEMENT

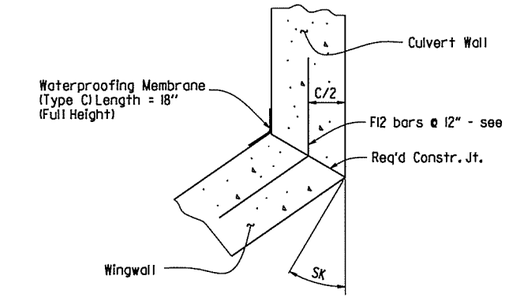

WINGWALL ATTACHMENT

See "Details of Wingwalls" for additional information and wingwall details.

BOTTOM SLAB REINFORCEMENT

SKEWED END SECTION DETAILS

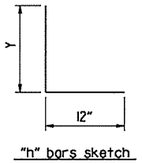

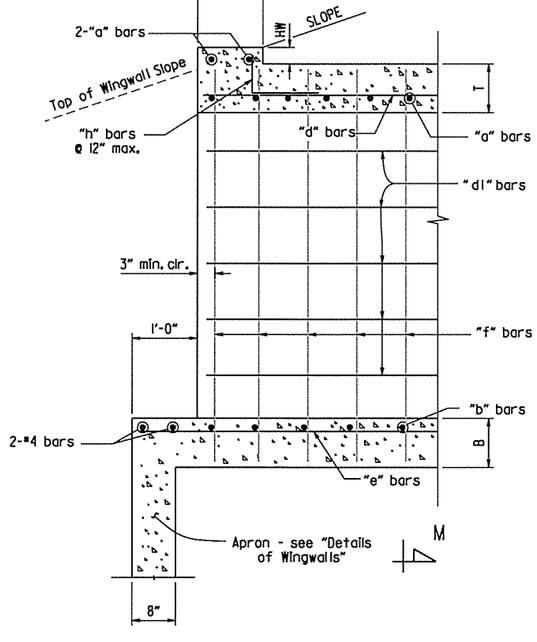

PART LONGITUDINAL SECTION

(Non-Skewed Ends)

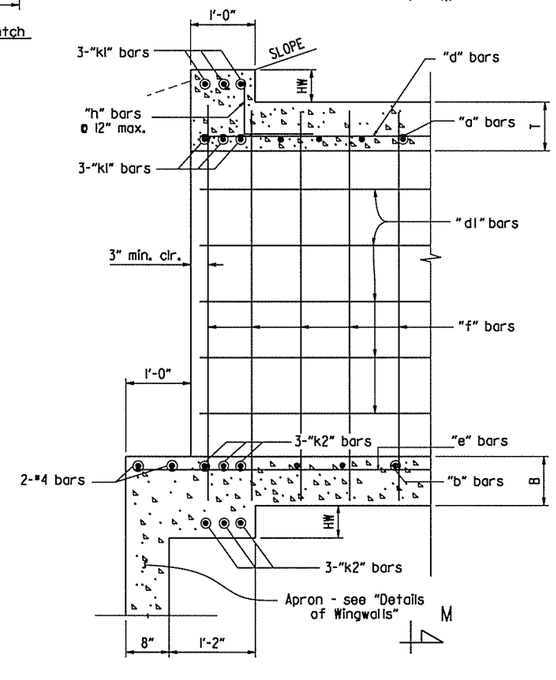

PART LONGITUDINAL SECTION N-N

(Skewed Ends)

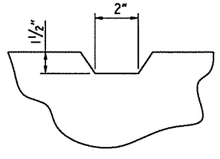

TYPICAL KEYWAY DETAIL

(All Construction Joints)

SHEET 2 OF 4

GENERAL DETAILS OF R.C. BOX CULVERT

DETAILS OF SINGLE BARREL R.C. BOX CULVERT

SPECIAL DETAILS

FILENAME

DATE REVISED	DATE FILMED	DATE REVISED	DATE FILMED	FED. ROAD DIST. NO.	STATE	FED. AID PROJ. NO.	SHEET NO.	TOTAL SHEETS
				6	ARK.			
				JOB NO.		CA0902	035	581

(1) SPECIAL DETAILS

*2" clr. for fill depth (D) greater than 2 ft.
2½" clr. for fill depth (D) equal to or less than 2 ft.

Note: When top slab of culvert serves as finished roadway surface, see General Notes on Sheet 1 of 4.

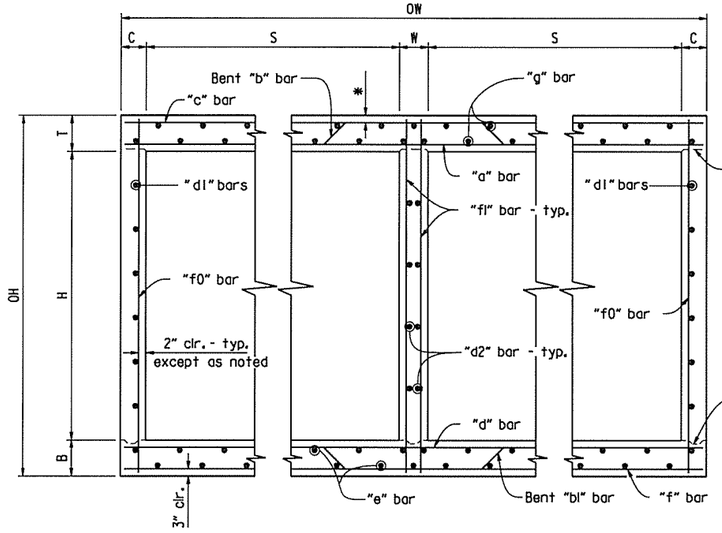

TYPICAL SECTION M-M

Top Slab
Straight "c" bars shall alternate with Bent "b" bars in top.
Straight "a" bars shall alternate with Bent "b" bars in bottom.

Bottom Slab
Straight "d" bars shall alternate with Bent "bl" bars in top.
Straight "f" bars shall alternate with Bent "bl" bars in bottom.

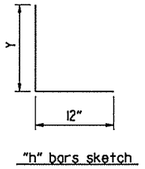

"h" bars sketch

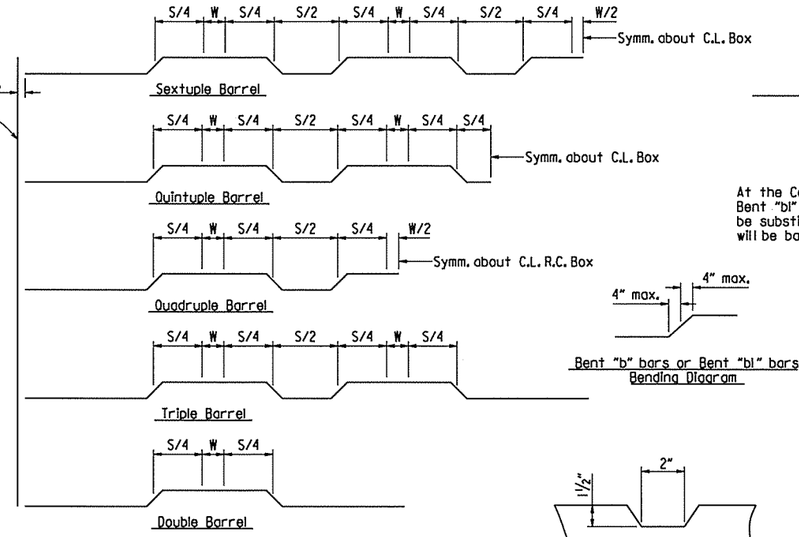

Bent "b" bars or Bent "bl" bars sketch

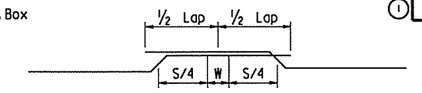

Lap Detail
For Bent "b" bars and Bent "bl" bars

At the Contractor's option in lieu of providing Bent "b" or Bent "bl" bars, one bar top and bottom of equivalent size may be substituted for each bent bar. Payment for the reinforcing will be based on the weight of the "b" or "bl" bar.

Bent "b" bars or Bent "bl" bars Bending Diagram

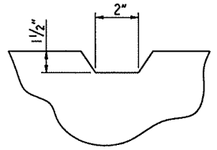

TYPICAL KEYWAY DETAIL

(All Construction Joints)

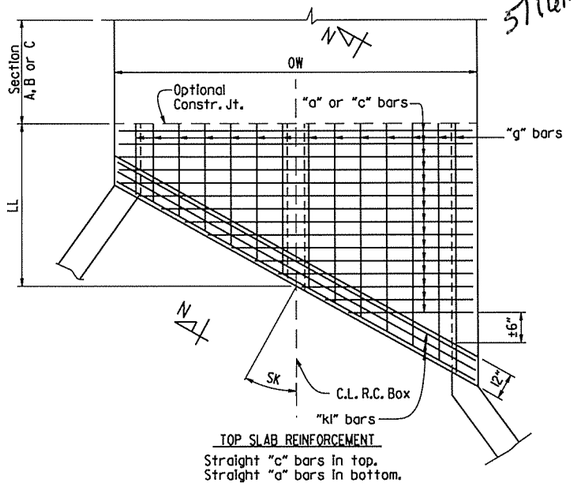

TOP SLAB REINFORCEMENT
Straight "c" bars in top.
Straight "a" bars in bottom.

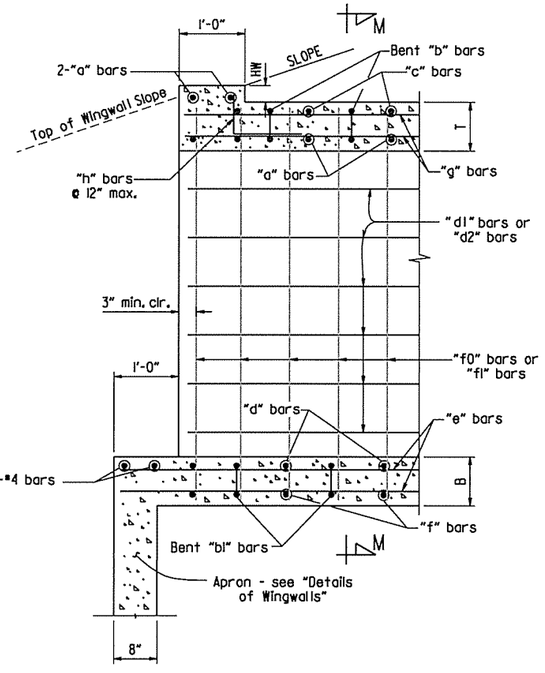

PART LONGITUDINAL SECTION

(Non-Skewed Ends)

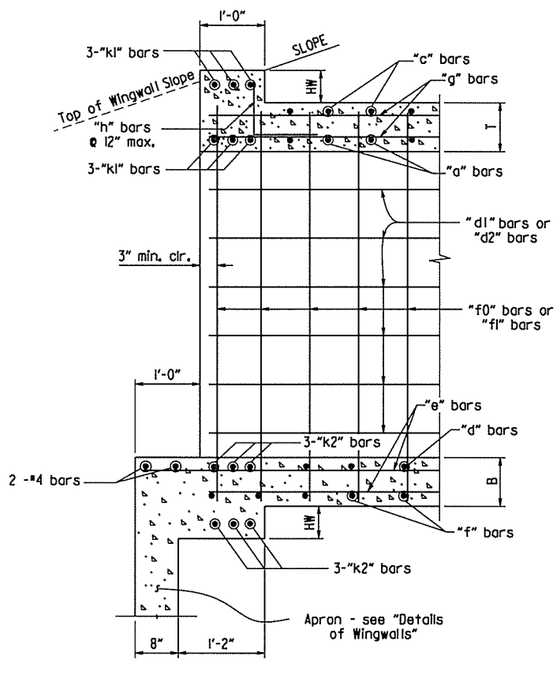

PART LONGITUDINAL SECTION N-N

(Skewed Ends)

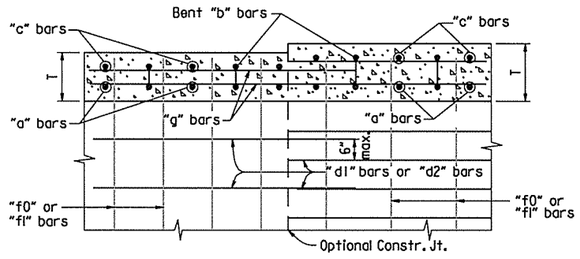

Longitudinal Bar Spacing at individual sections shall be maintained, which may result in noncontact bar laps.

LONGITUDINAL LAP DETAIL AT CHANGE IN SECTIONS

TOP SLAB SHOWN, BOTTOM SLAB SIMILAR

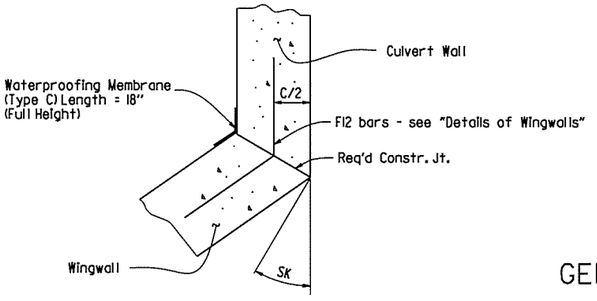

WINGWALL ATTACHMENT

See "Details of Wingwalls" for additional information and wingwall details.

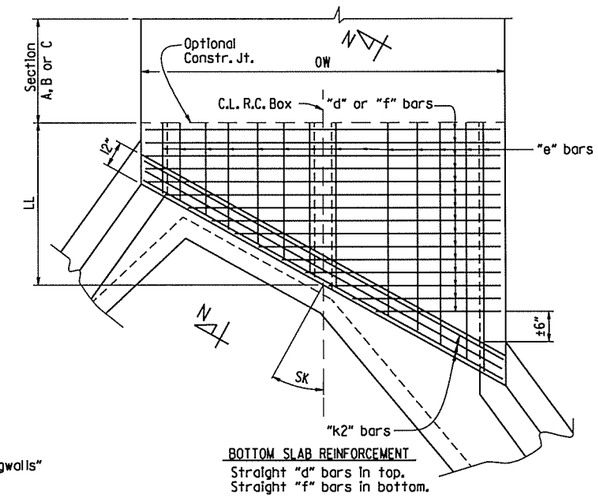

BOTTOM SLAB REINFORCEMENT
Straight "d" bars in top.
Straight "f" bars in bottom.

SKEWED END SECTION DETAILS

SHEET 3 OF 4
GENERAL DETAILS OF R.C. BOX CULVERT

DETAILS OF MULTI-BARREL
R.C. BOX CULVERT

SPECIAL DETAILS

STATE OF ARKANSAS
REGISTERED PROFESSIONAL ENGINEER
No. 8760
ANDREW E. FRIES
5/16/16

FILENAME

DATE REVISED	DATE FILMED	DATE REVISED	DATE FILMED	FED. ROAD DIST. NO.	STATE	FED. AID PROJ. NO.	SHEET NO.	TOTAL SHEETS
				6	ARK.			
				JOB NO.		CA0902	036	581

1 SPECIAL DETAILS

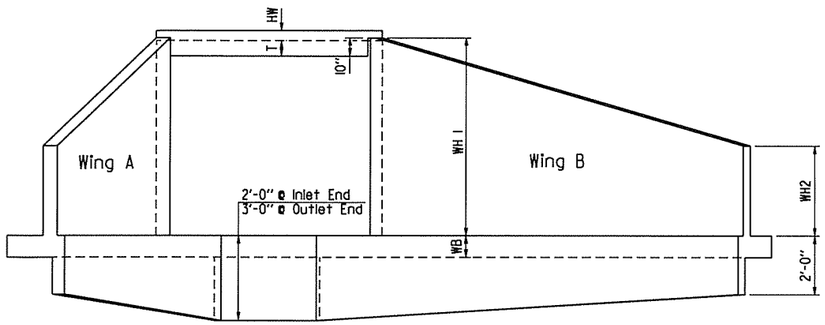

END ELEVATION

Flared Wingwalls Shown

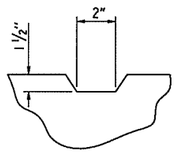

TYPICAL KEYWAY DETAIL

All Construction Joints

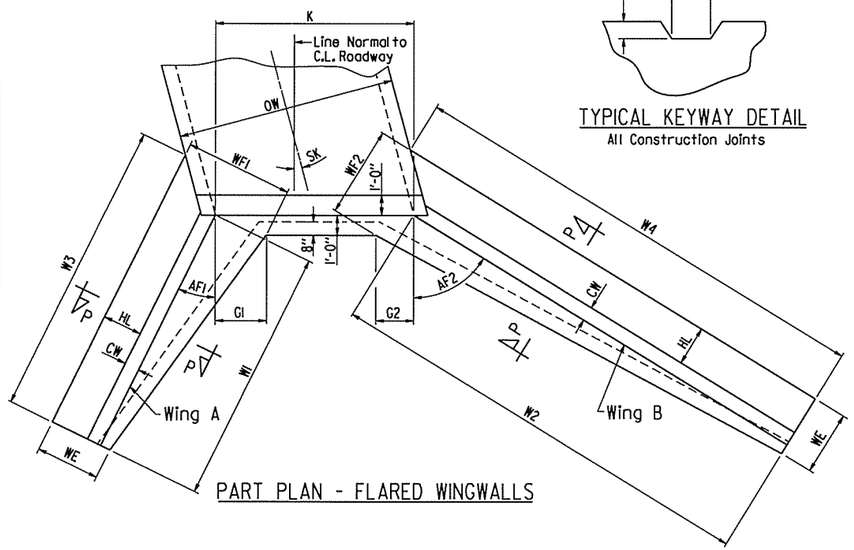

PART PLAN - FLARED WINGWALLS

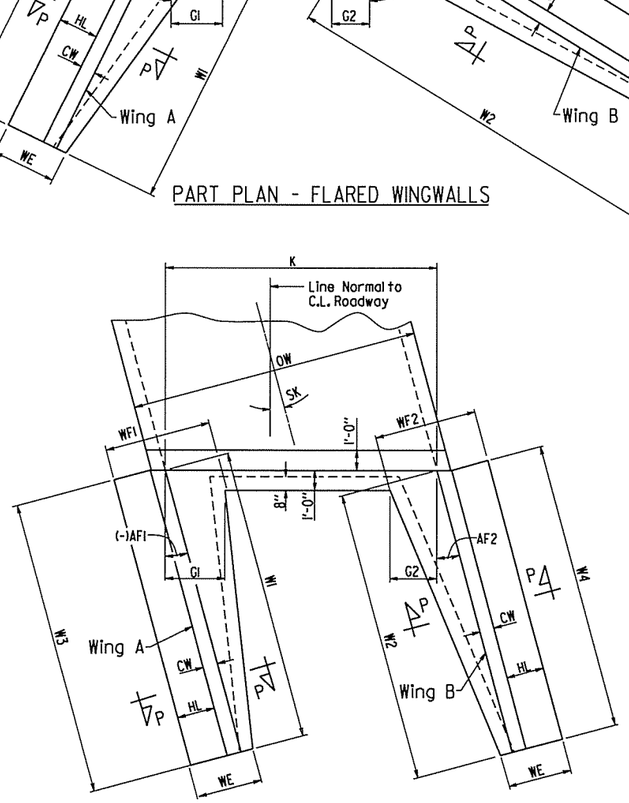

PART PLAN - PARALLEL WINGWALLS

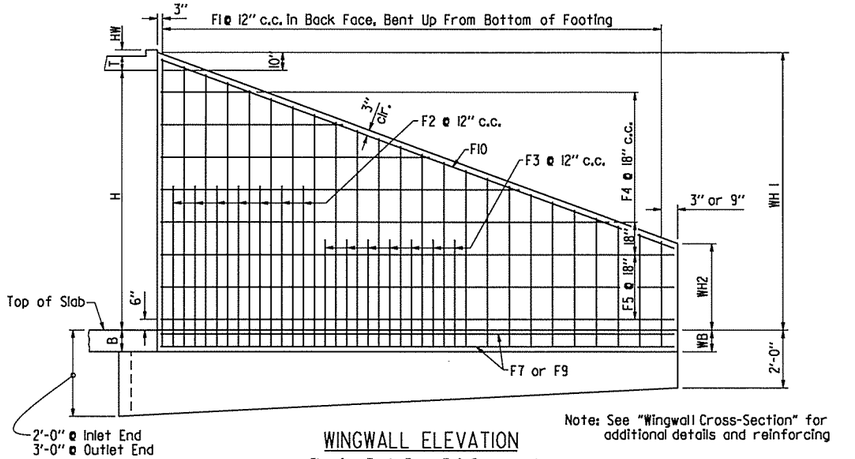

Note: See "Wingwall Cross-Section" for additional details and reinforcing

WINGWALL ELEVATION

Showing Back Face Reinforcement

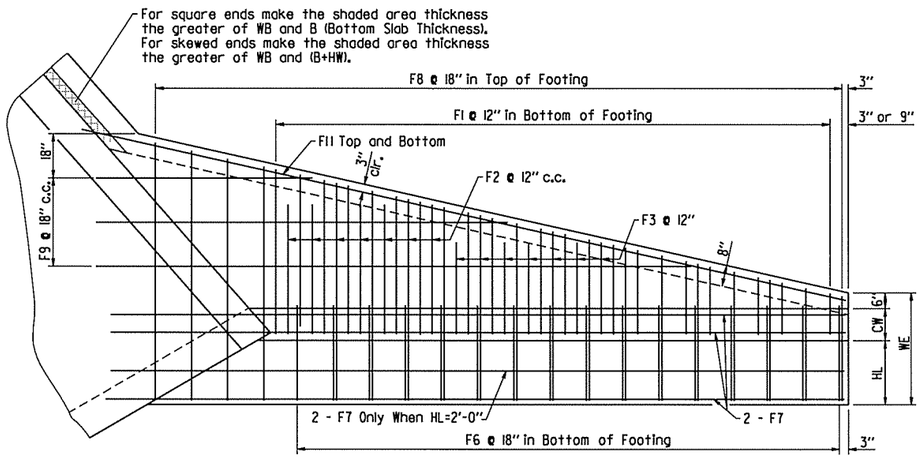

PLAN - FLARED WINGWALLS

Showing Footing Reinforcement

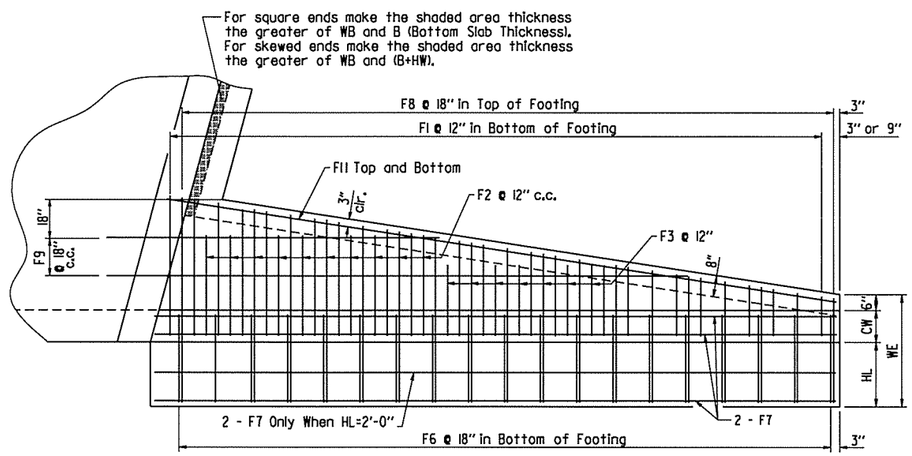

PLAN - PARALLEL WINGWALLS

Showing Footing Reinforcement

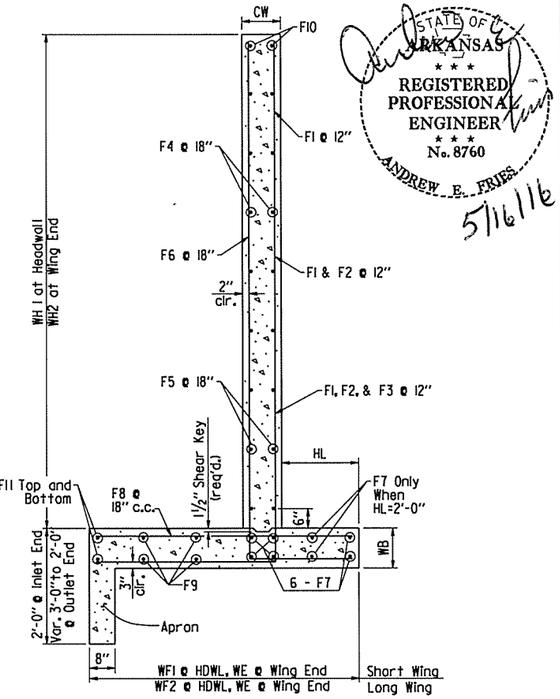

WINGWALL SECTION P-P

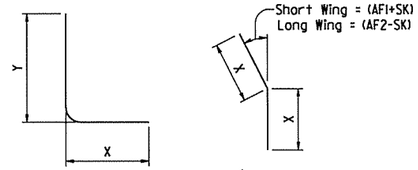

F1, F2, F3, & F6 BARS

*F12 BAR

*F12 is a straight bar for parallel wingwalls

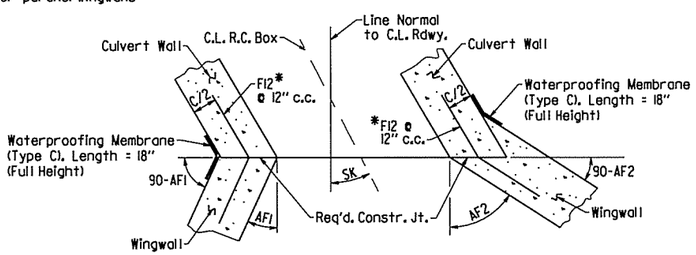

CONSTRUCTION JOINTS

Flared Wingwalls Shown

STATE OF ARKANSAS
REGISTERED PROFESSIONAL ENGINEER
No. 8760
ANDREW E. FRIES
5/16/16

SHEET 4 OF 4

GENERAL DETAILS OF R.C. BOX CULVERT

DETAILS OF WINGWALLS

SPECIAL DETAILS

FILENAME

DATE	DATE FILMED	DATE REVISED	DATE FILMED	FED.RD. DIST.NO.	STATE	FED.AID PROJ.NO.	SHEET NO.	TOTAL SHEETS
				6	ARK.			
				JOB NO.		CA0902	037	581

(2) TEMPORARY EROSION CONTROL DETAILS

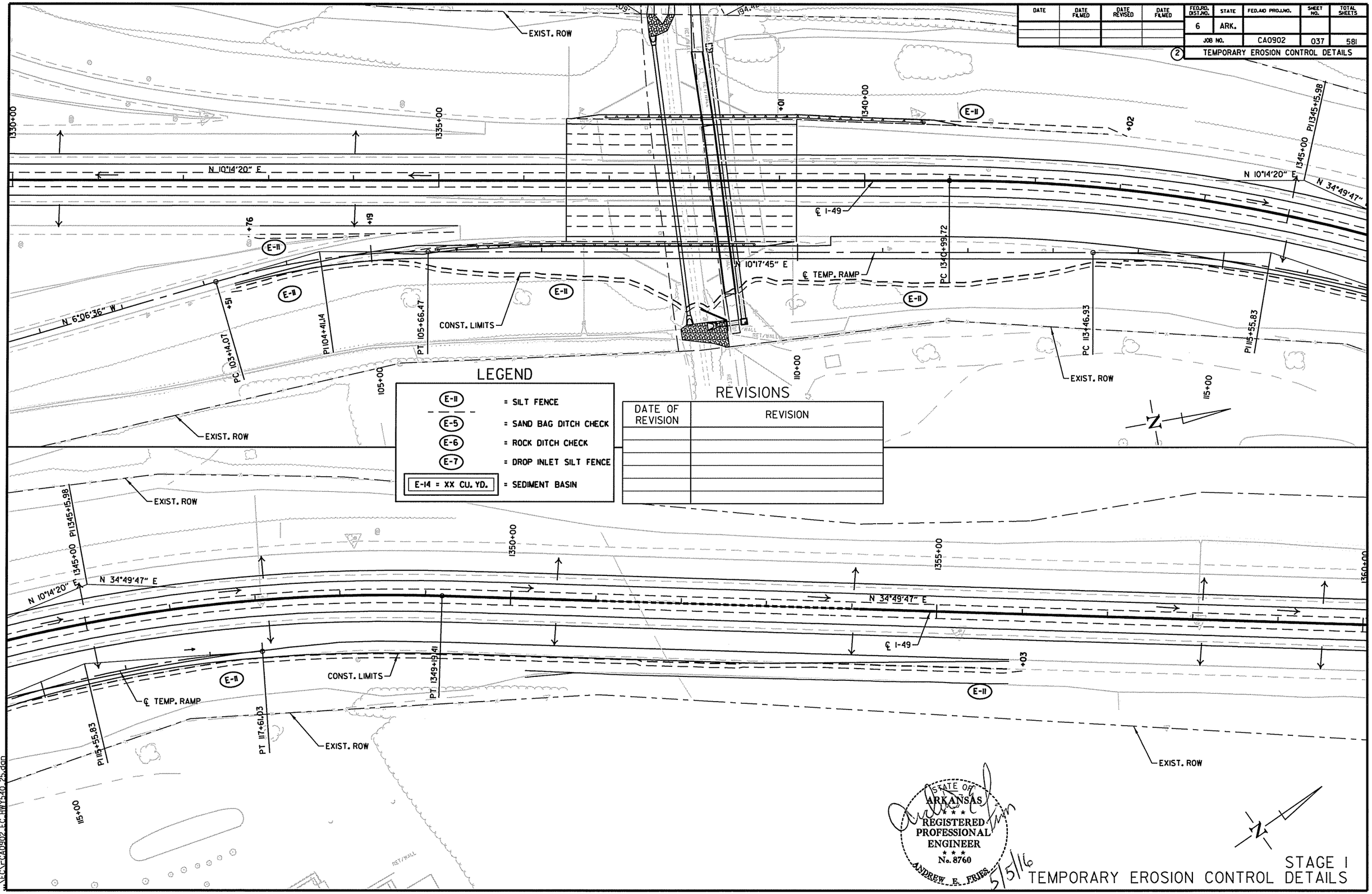

LEGEND

E-11	= SILT FENCE
E-5	= SAND BAG DITCH CHECK
E-6	= ROCK DITCH CHECK
E-7	= DROP INLET SILT FENCE
E-14 = XX CU. YD.	= SEDIMENT BASIN

REVISIONS

DATE OF REVISION	REVISION

STATE OF ARKANSAS
REGISTERED PROFESSIONAL ENGINEER
No. 8760
ANDREW E. FRIES
5/5/16

STAGE I
TEMPORARY EROSION CONTROL DETAILS

5/5/2016
10:06:56 AM
\EC\FCA0902 EC HWY540 25.dgn

DATE	DATE FILMED	DATE REVISED	DATE FILMED	FED.RD. DIST.NO.	STATE	FED.AID PROJ.NO.	SHEET NO.	TOTAL SHEETS
				6	ARK.			
				JOB NO.		CA0902	038	581

(2) TEMPORARY EROSION CONTROL DETAILS

PAVED PARKING

EXIST. ROW

POB 1256+00.00

PC 1256+72.13

PI 1257+71.38

PT 1258+70.44

1260+00

RAMP POE 1260+50.00 = I-49 STA. 1260+50.00

POB 1245+00.00

PI 1245+06.47

Δ = 00°00'11"

N 14°14'04" E

1250+00

℄ I-49

1255+00

N 20°10'51" E

N 14°13'53" E

℄ WALTON BLVD. RAMP 3

WALTON BLVD.

BEGIN JOB CA0902
STA. 1256+75.00
LOG MILE 84.56

EXIST. ROW

LEGEND

- (E-11) = SILT FENCE
- (E-5) = SAND BAG DITCH CHECK
- (E-6) = ROCK DITCH CHECK
- (E-7) = DROP INLET SILT FENCE
- E-14 = XX CU. YD. = SEDIMENT BASIN

REVISIONS

DATE OF REVISION	REVISION

1260+00

RAMP POE 1260+50.00 = I-49 STA. 1260+50.00

EXIST. ROW

1265+00

1270+00

PI 18+31.83
Δ = 00°24'17"
S 85°28'27" E

1275+00

℄ I-49 STA. 1271+95.05 = ℄ OLIVE ST. STA. 20+00.00
Δ 100°42'36"

℄ I-49

N 14°13'53" E

20+00

PI 21+68.38
Δ= 00°38'40"

OLIVE ST.

EXIST. ROW

STATE OF ARKANSAS
REGISTERED PROFESSIONAL ENGINEER
No. 8760
ANDREW E. FRIES
5/5/16

STAGE 2
TEMPORARY EROSION CONTROL DETAILS

5/5/2016
10:07:00 AM
M:\ECK\CA0902_EC_HWY540_01.dgn

DATE	DATE FILMED	DATE REVISED	DATE FILMED	FED.RD. DIST.NO.	STATE	FED.AID PROJ.NO.	SHEET NO.	TOTAL SHEETS
				6	ARK.			
				JOB NO.		CA0902	039	581

(2) TEMPORARY EROSION CONTROL DETAILS

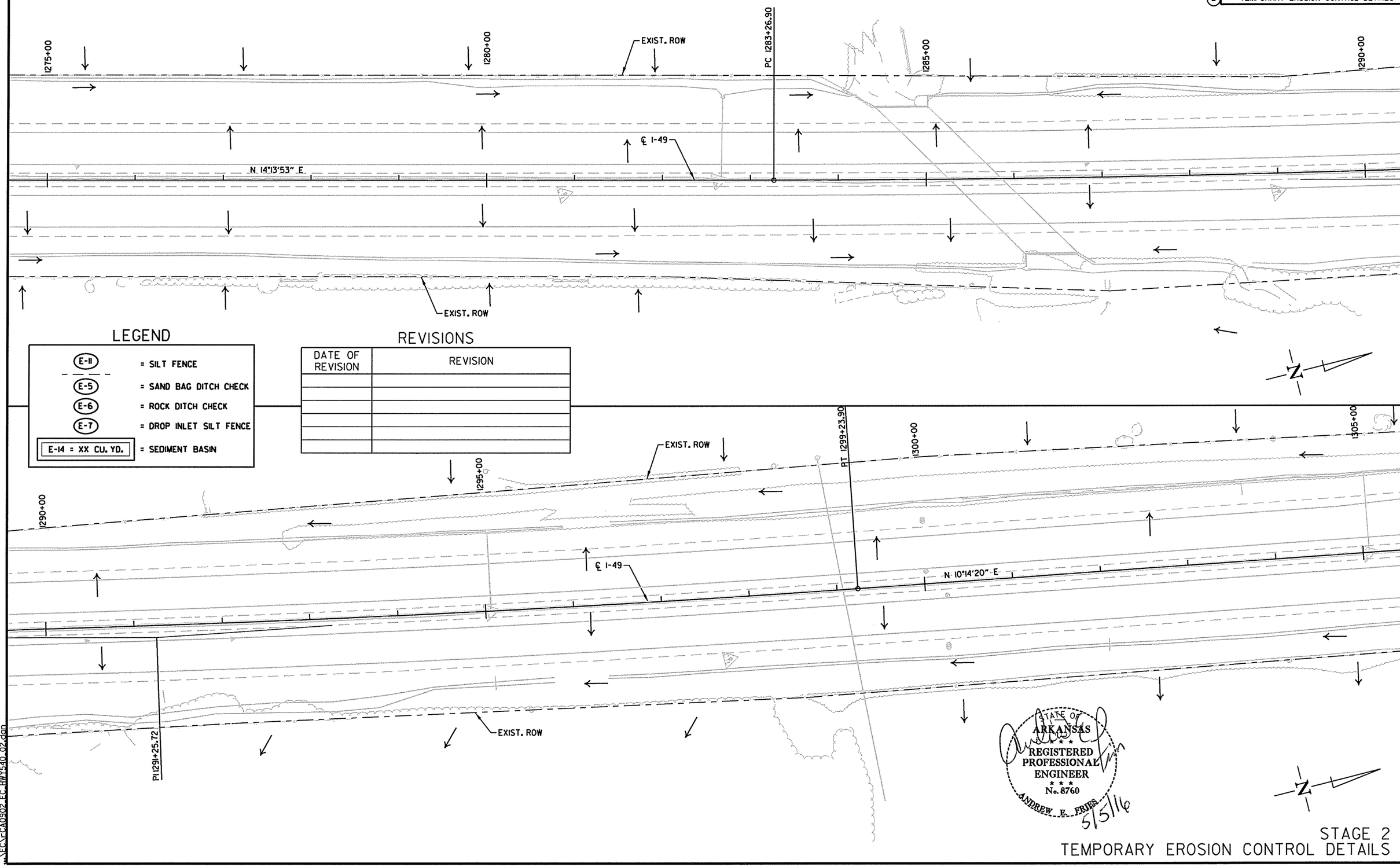

LEGEND

E-11	= SILT FENCE
E-5	= SAND BAG DITCH CHECK
E-6	= ROCK DITCH CHECK
E-7	= DROP INLET SILT FENCE
E-14 = XX CU. YD.	= SEDIMENT BASIN

REVISIONS

DATE OF REVISION	REVISION

STATE OF ARKANSAS
REGISTERED PROFESSIONAL ENGINEER
No. 8760
ANDREW E. FRIES
5/5/16

STAGE 2
TEMPORARY EROSION CONTROL DETAILS

5/5/2016
10:07:04 AM
\\EC\FCA0902_EC_HWY540_02.dgn

DATE	DATE FILMED	DATE REVISED	DATE FILMED	FED.RD. DIST.NO.	STATE	FED.AID PROJ.NO.	SHEET NO.	TOTAL SHEETS
				6	ARK.			
				JOB NO.		CA0902	040	581

TEMPORARY EROSION CONTROL DETAILS

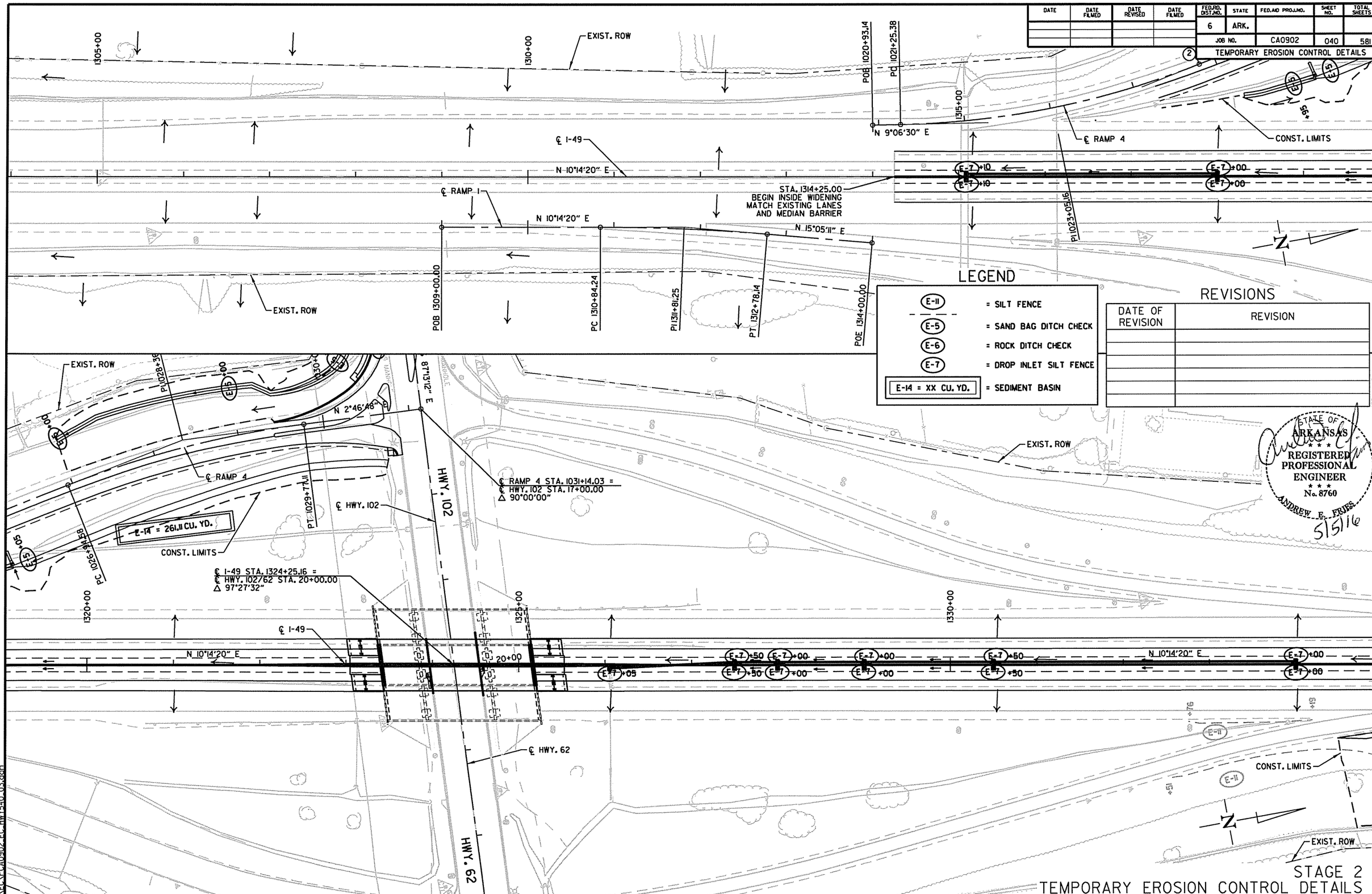

LEGEND

E-11	= SILT FENCE
E-5	= SAND BAG DITCH CHECK
E-6	= ROCK DITCH CHECK
E-7	= DROP INLET SILT FENCE
E-14 = XX CU. YD.	= SEDIMENT BASIN

REVISIONS

DATE OF REVISION	REVISION

STATE OF ARKANSAS
REGISTERED PROFESSIONAL ENGINEER
No. 8760
ANDREW E. FRIES
5/5/16

STAGE 2
TEMPORARY EROSION CONTROL DETAILS

5/5/2016
10:07:09 AM
\\EC\FCA0902_EC_HWY540_03.dgn

DATE	DATE FILMED	DATE REVISED	DATE FILMED	FED.RD. DST.NO.	STATE	FED.AID PROJ.NO.	SHEET NO.	TOTAL SHEETS
				6	ARK.			
				JOB NO.		CA0902	041	581

(2) TEMPORARY EROSION CONTROL DETAILS

STATE OF ARKANSAS
REGISTERED PROFESSIONAL ENGINEER
No. 8760
ANDREW E. FRIES
5/5/16

EXIST. ROW
+36.91
196.09'
+35.71
194.42'
1335+00
1340+00
1345+00
PI 1345+15.98
N 10°14'20" E
N 34°49'47" E
℄ I-49
PC 1340+99.72
E-7 +00
E-7 +01
E-7 +02
E-7 +03
E-11
EXIST. ROW
EXIST. ROW
1349+19.41

LEGEND

E-11	= SILT FENCE
E-5	= SAND BAG DITCH CHECK
E-6	= ROCK DITCH CHECK
E-7	= DROP INLET SILT FENCE
E-14 = XX CU. YD.	= SEDIMENT BASIN

REVISIONS

DATE OF REVISION	REVISION

EXIST. ROW
1350+00
1355+00
1360+00
PT 1349+19.41
℄ I-49
E-7 +50
E-7 +00
E-7 +06
N 34°49'47" E
EXIST. ROW
EXIST. ROW

STAGE 2
TEMPORARY EROSION CONTROL DETAILS

5/5/2016
10:07:13 AM
\\ECY\CA0902_EC_HWY540_04.dgn

DATE	DATE FILMED	DATE REVISED	DATE FILMED	FED.RD. DIST.NO.	STATE	FED.AID PROJ.NO.	SHEET NO.	TOTAL SHEETS
				6	ARK.			
				JOB NO.		CA0902	042	581

(2) TEMPORARY EROSION CONTROL DETAILS

EXIST. ROW

1365+00

1370+00

℄ I-49

1375+00

N 34°49'47" E

E-7 +50 E-7 +00 E-7 +00 E-7 +15 E-7 +50 E-7 +00 E-7 +50 E-7 +25

EXIST. ROW

LEGEND

E-11	= SILT FENCE
E-5	= SAND BAG DITCH CHECK
E-6	= ROCK DITCH CHECK
E-7	= DROP INLET SILT FENCE
E-14 = XX CU. YD.	= SEDIMENT BASIN

REVISIONS

DATE OF REVISION	REVISION

BATTLEFIELD BLVD.

EXIST. ROW

1380+00

PC 1381+91.69

1385+00

1390+00

℄ I-49

N 34°49'47" E

E-7 +25 E-7 +07 E-7 +00 E-7 +07 E-7 +50

+12 +30

E-11 E-11

CONST. LIMITS

EXIST. ROW

EXIST. ROW

STATE OF ARKANSAS
REGISTERED PROFESSIONAL ENGINEER
No. 8760
ANDREW E. FRIES
5/5/16

STAGE 2
TEMPORARY EROSION CONTROL DETAILS

5/5/2016 10:07:17 AM
\\ECV\CA0902_EC_HWY540_05.dgn

DATE	DATE FILMED	DATE REVISED	DATE FILMED	FED.RD. DIST.NO.	STATE	FED.AID PROJ.NO.	SHEET NO.	TOTAL SHEETS
				6	ARK.			
				JOB NO.		CA0902	043	581

(2) TEMPORARY EROSION CONTROL DETAILS

EXIST. ROW

1395+00

1400+00

1405+00

℄ I-49

E-7 +50

E-7 +00

E-7 +65

E-7 +00

E-7 +00

EXIST. ROW

EXIST. ROW

LEGEND

E-11	= SILT FENCE
E-5	= SAND BAG DITCH CHECK
E-6	= ROCK DITCH CHECK
E-7	= DROP INLET SILT FENCE
E-14 = XX CU. YD.	= SEDIMENT BASIN

REVISIONS

DATE OF REVISION	REVISION

STATE OF ARKANSAS
REGISTERED PROFESSIONAL ENGINEER
No. 8760
ANDREW E. FRIES
5/5/16

1405+00

EXIST. ROW

E-7 +00

E-7 +00

E-7 +93

E-7 +50

E-7 +00

1410+00b

℄ I-49

P.T. 1414+32.51

1415+00

1420+00

E-7 +05

E-7 +05

+93

+08

E-11

E-11

CONST. LIMITS

EXIST. ROW

EXIST. ROW

STAGE 2
TEMPORARY EROSION CONTROL DETAILS

5/5/2016
10:07:22 AM
\\ECV\C-CA0902_EC_HW7540_06.dgn

DATE	DATE FILMED	DATE REVISED	DATE FILMED	FED.RD. DIST.NO.	STATE	FED.AID PROJ.NO.	SHEET NO.	TOTAL SHEETS
				6	ARK.			
				JOB NO.		CA0902	044	581

② TEMPORARY EROSION CONTROL DETAILS

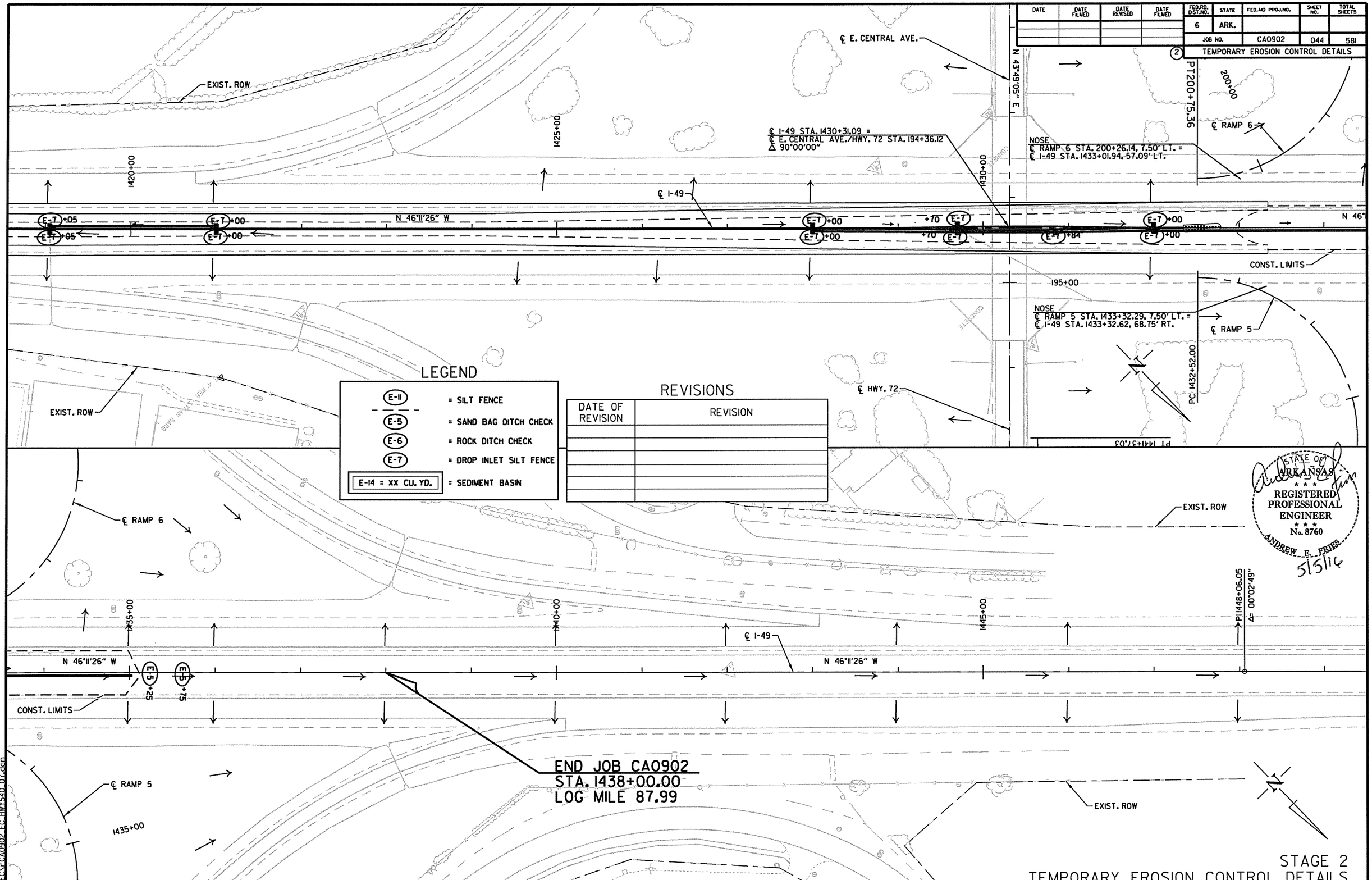

LEGEND

E-11	= SILT FENCE
E-5	= SAND BAG DITCH CHECK
E-6	= ROCK DITCH CHECK
E-7	= DROP INLET SILT FENCE
E-14 = XX CU. YD.	= SEDIMENT BASIN

REVISIONS

DATE OF REVISION	REVISION

STATE OF ARKANSAS
REGISTERED PROFESSIONAL ENGINEER
No. 8760
ANDREW E. FRIES
5/5/16

STAGE 2
TEMPORARY EROSION CONTROL DETAILS

5/5/2016
10:07:27 AM
\\EC\FCA0902_EC_HWY540_07.dgn

DATE	DATE FILMED	DATE REVISED	DATE FILMED	FED.RD. DIST.NO.	STATE	FED.AID PROJ.NO.	SHEET NO.	TOTAL SHEETS
				6	ARK.			
				JOB NO.		CA0902	045	581

(2) TEMPORARY EROSION CONTROL DETAILS

STATE OF ARKANSAS
REGISTERED PROFESSIONAL ENGINEER
No. 8760
ANDREW E. FRIES
5/5/16

LEGEND

E-11	= SILT FENCE
E-5	= SAND BAG DITCH CHECK
E-6	= ROCK DITCH CHECK
E-7	= DROP INLET SILT FENCE
E-14 = XX CU. YD.	= SEDIMENT BASIN

REVISIONS

DATE OF REVISION	REVISION

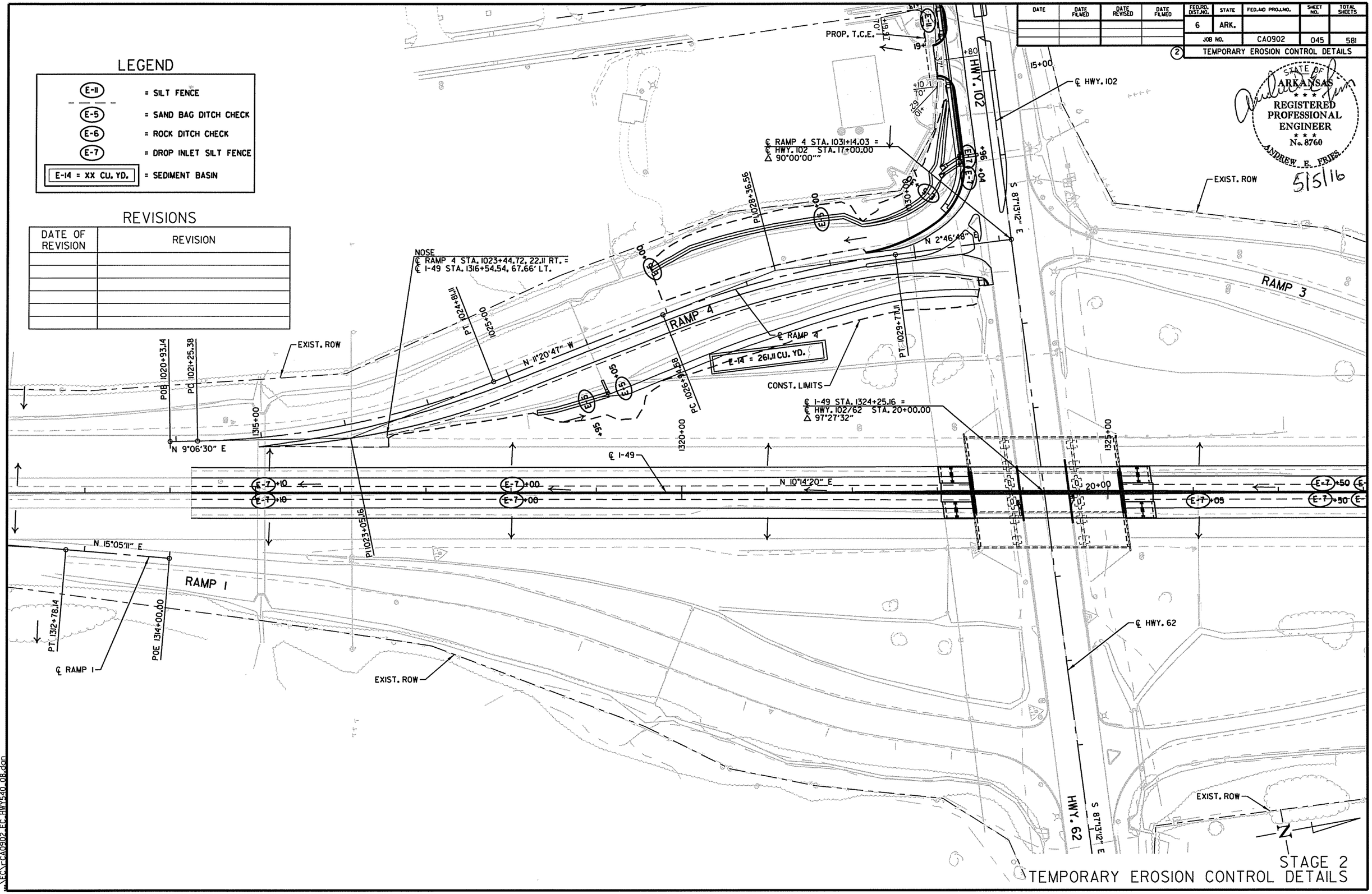

STAGE 2
TEMPORARY EROSION CONTROL DETAILS

5/5/2016
10:07:32 AM
\\EC\FCA0902 EC HWY540 08.dgn

DATE	DATE FILMED	DATE REVISED	DATE FILMED	FED.RD. DIST.NO.	STATE	FED.AID PROJ.NO.	SHEET NO.	TOTAL SHEETS
				6	ARK.			
				JOB NO.		CA0902	046	581

(2) TEMPORARY EROSION CONTROL DETAILS

STATE OF ARKANSAS
REGISTERED PROFESSIONAL ENGINEER
No. 8760
ANDREW E. FRIES
5/5/16

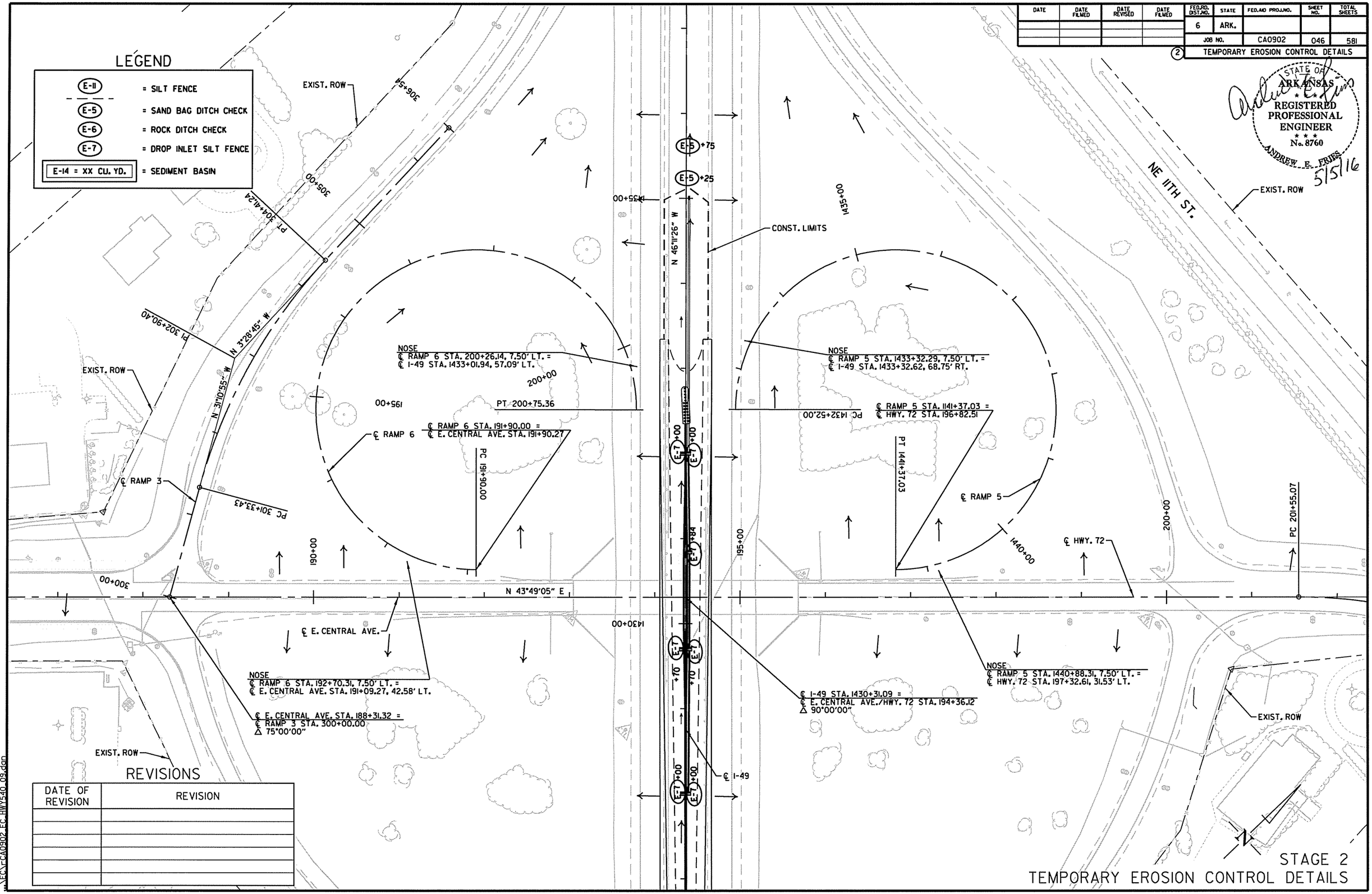

REVISIONS

DATE OF REVISION	REVISION

STAGE 2
TEMPORARY EROSION CONTROL DETAILS

5/5/2016
10:07:38 AM
...\EC\CA0902_EC_HWY540_09.dgn

DATE	DATE FILMED	DATE REVISED	DATE FILMED	FED.RD. DIST.NO.	STATE	FED.AID PROJ.NO.	SHEET NO.	TOTAL SHEETS
				6	ARK.			
				JOB NO.		CA0902	047	581

(2) TEMPORARY EROSION CONTROL DETAILS

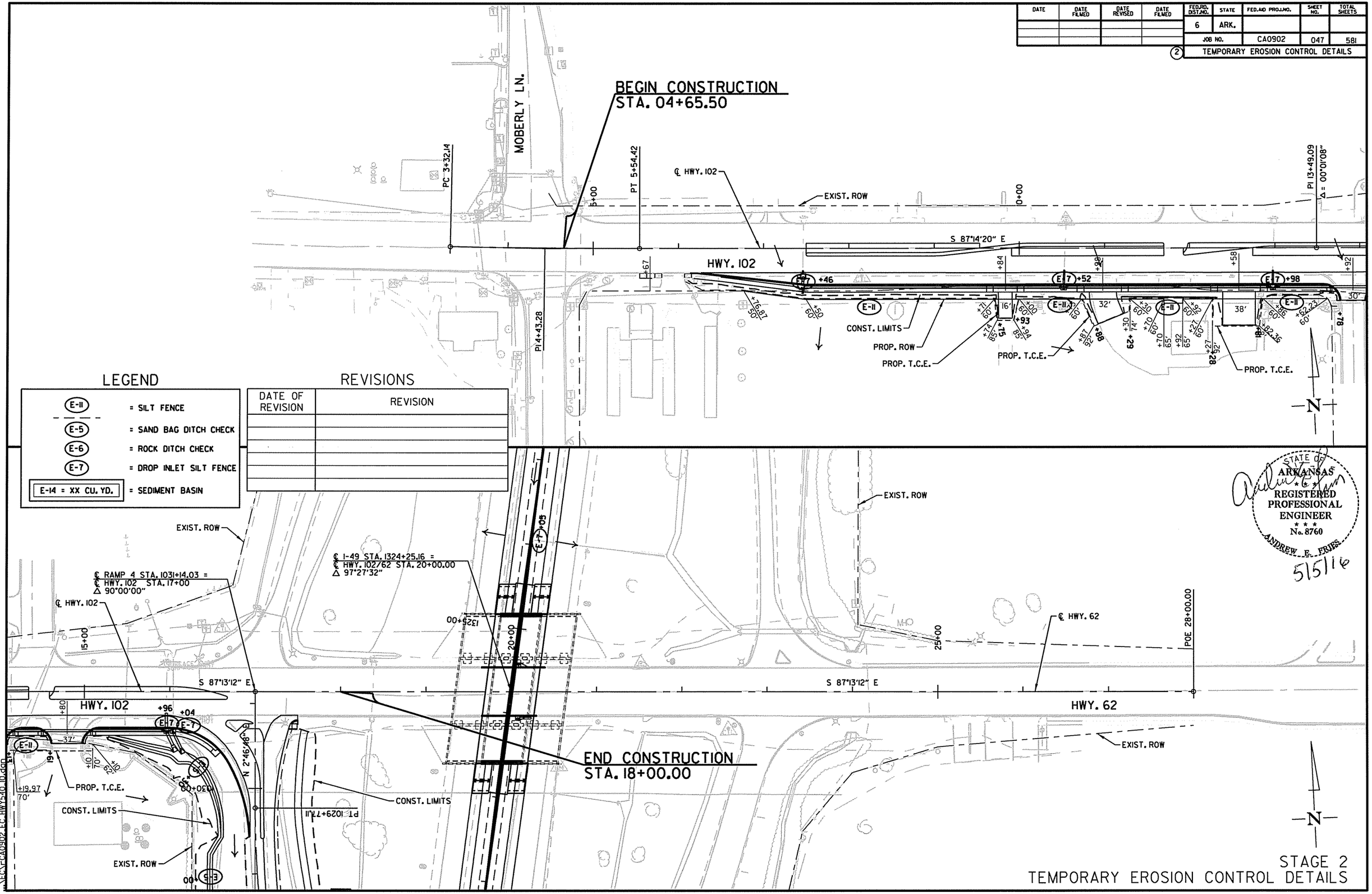

STAGE 2
TEMPORARY EROSION CONTROL DETAILS

5/5/2016 10:07:43 AM \\EC\ECA0902 EC HWY540 10.dgn

DATE	DATE FILMED	DATE REVISED	DATE FILMED	FED.RD. DIST.NO.	STATE	FED.AID PROJ.NO.	SHEET NO.	TOTAL SHEETS
				6	ARK.			
				JOB NO.		CA0902	048	581

(2) TEMPORARY EROSION CONTROL DETAILS

STATE OF ARKANSAS
REGISTERED PROFESSIONAL ENGINEER
No. 8760
ANDREW E. FRIES
5/5/16

LEGEND

- (E-11) = SILT FENCE
- (E-5) = SAND BAG DITCH CHECK
- (E-6) = ROCK DITCH CHECK
- (E-7) = DROP INLET SILT FENCE
- E-14 = XX CU. YD. = SEDIMENT BASIN

REVISIONS

DATE OF REVISION	REVISION

POB 165+23.89
℄ E. CENTRAL AVE.
170+00
EXIST. ROW
175+00
N 1°40'39" E
EXIST. ROW
PC 174+01.08
N. WALKER ST.
PI 179+20.48
180+00
CONCRETE PAVED

BEGIN CONSTRUCTION
STA. 183+59.00
McCOLLUM DR.
PT 183+92.62
℄ E. CENTRAL AVE. STA. 188+31.32 =
℄ RAMP 3 STA. 300+00.00
△ 75°00'00"
℄ E. CENTRAL AVE.
185+00
180+00
EXIST. ROW
EXIST. ROW
EXIST. ROW
N 31°10'55" W
℄ RAMP 3
PC 301+33.43
300+00
195+00
PT 200+75.36
200+00
℄ I-49 STA. 1430+31.09 =
℄ E. CENTRAL AVE./HWY. 72 STA. 194+36.12
△ 90°00'00"
℄ RAMP 6
PC 191+90.00
190+00
N 43°49'05" E
1430+00
NOSE
℄ RAMP 6 STA. 192+70.31, 7.50' LT. =
℄ E. CENTRAL AVE. STA. 191+09.27, 42.58' LT.
℄ RAMP 6 STA. 191+90.00 =
℄ E. CENTRAL AVE. STA. 191+90.27
(E-7) +00
(E-7) +84
(E-7) +70
(E-7)
℄ I-49

STAGE 2
TEMPORARY EROSION CONTROL DETAILS

5/5/2016
10:07:49 AM
\\EXT\CA0902_EC_HWY540_II.dgn

DATE	DATE FILMED	DATE REVISED	DATE FILMED	FED.RD. DIST.NO.	STATE	FED.AID PROJ.NO.	SHEET NO.	TOTAL SHEETS
				6	ARK.			
				JOB NO.		CA0902	049	581

(2) TEMPORARY EROSION CONTROL DETAILS

STATE OF ARKANSAS
REGISTERED PROFESSIONAL ENGINEER
No. 8760
ANDREW E. FRIES
5/5/16

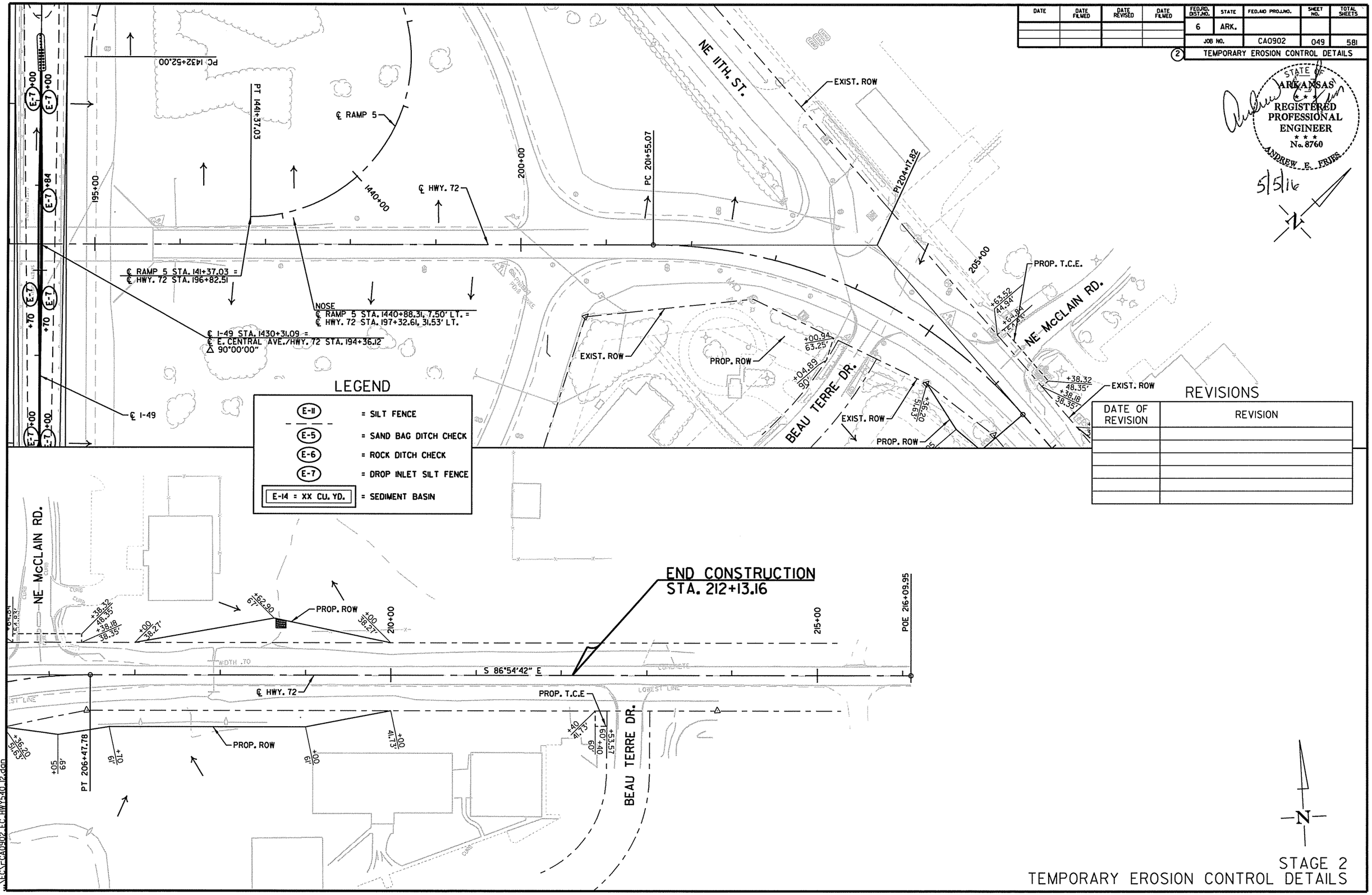

REVISIONS

DATE OF REVISION	REVISION

STAGE 2
TEMPORARY EROSION CONTROL DETAILS

5/5/2016
10:07:54 AM
\\EC\FCA0902 EC HWY540 12.dgn

DATE	DATE FILMED	DATE REVISED	DATE FILMED	FED.RD. DIST.NO.	STATE	FED.AID PROJ.NO.	SHEET NO.	TOTAL SHEETS
				6	ARK.			
				JOB NO.		CA0902	050	581

(2) TEMPORARY EROSION CONTROL DETAILS

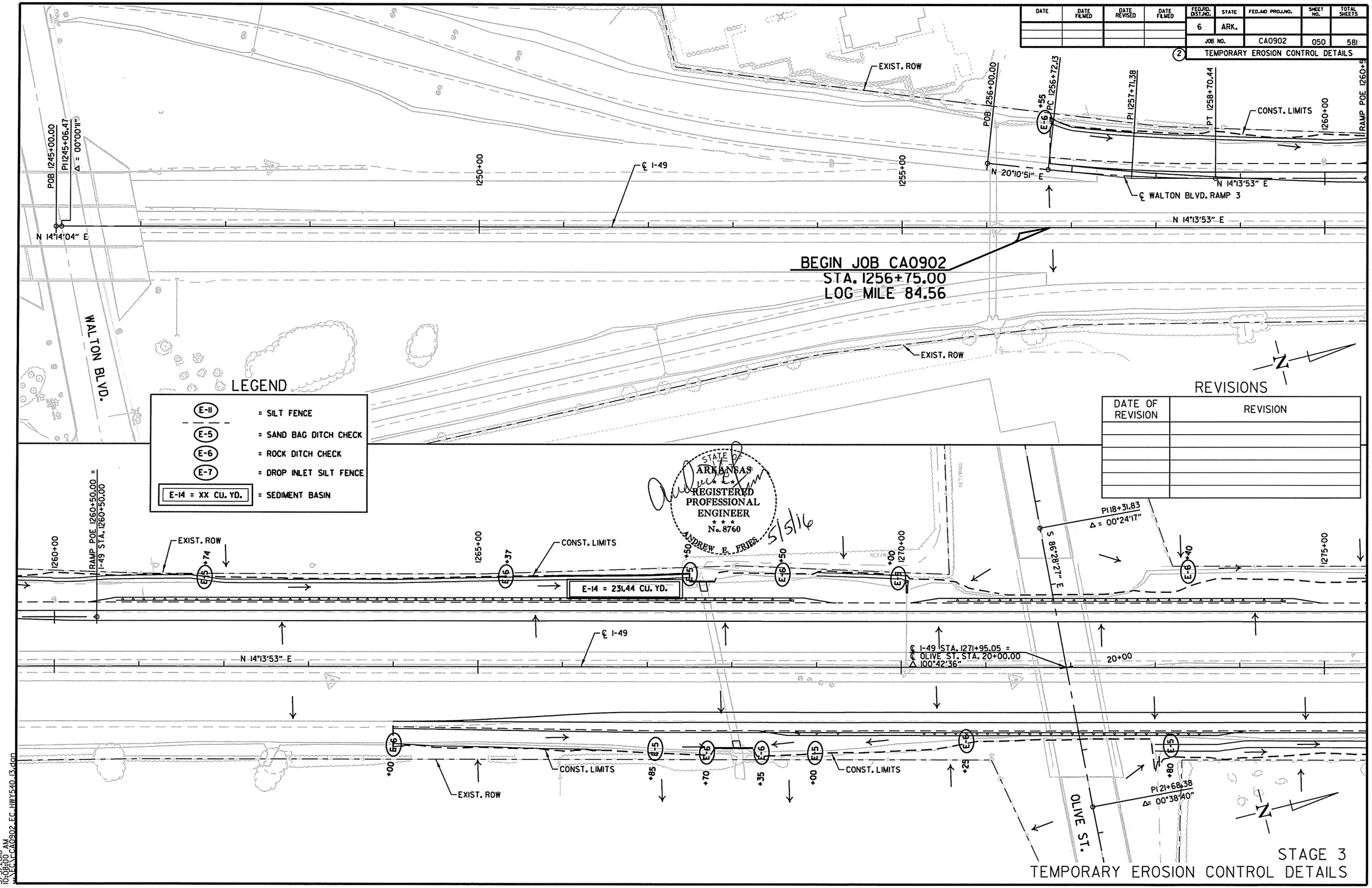

STAGE 3
TEMPORARY EROSION CONTROL DETAILS

5/5/2016
10:08:00 AM
\\EC\CA0902_EC_HWY540_13.dgn

DATE	DATE FILMED	DATE REVISED	DATE FILMED	FED.RD. DIST.NO.	STATE	FED.AID PROJ.NO.	SHEET NO.	TOTAL SHEETS
				6	ARK.			
				JOB NO.		CA0902	051	581

(2) TEMPORARY EROSION CONTROL DETAILS

STATE OF ARKANSAS
REGISTERED PROFESSIONAL ENGINEER
No. 8760
ANDREW E. FRIES
5/5/16

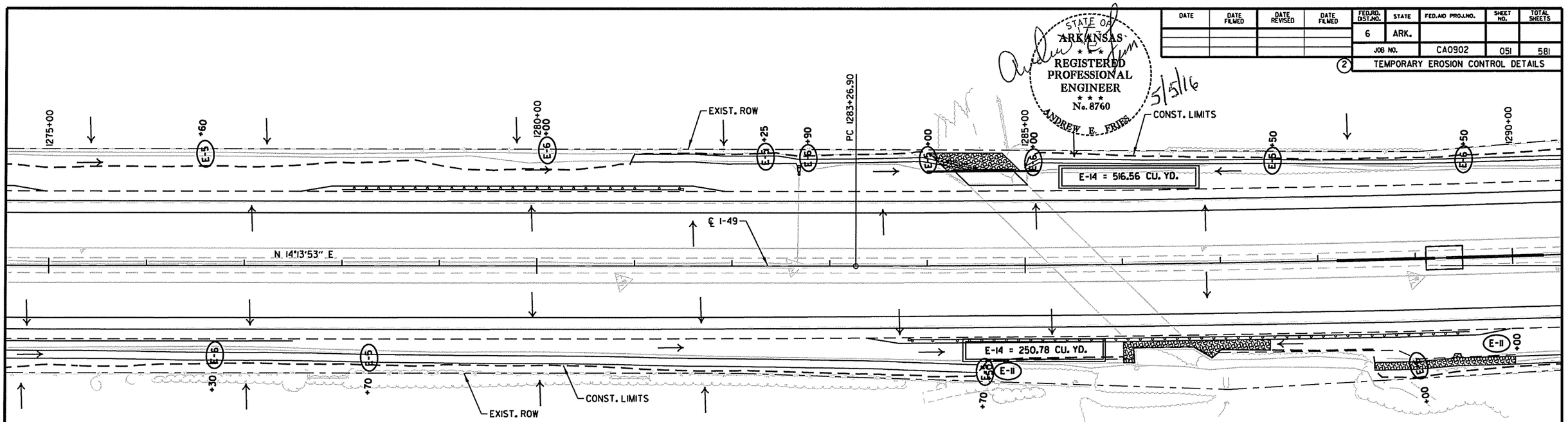

LEGEND

E-11	= SILT FENCE
E-5	= SAND BAG DITCH CHECK
E-6	= ROCK DITCH CHECK
E-7	= DROP INLET SILT FENCE
E-14 = XX CU. YD.	= SEDIMENT BASIN

REVISIONS

DATE OF REVISION	REVISION

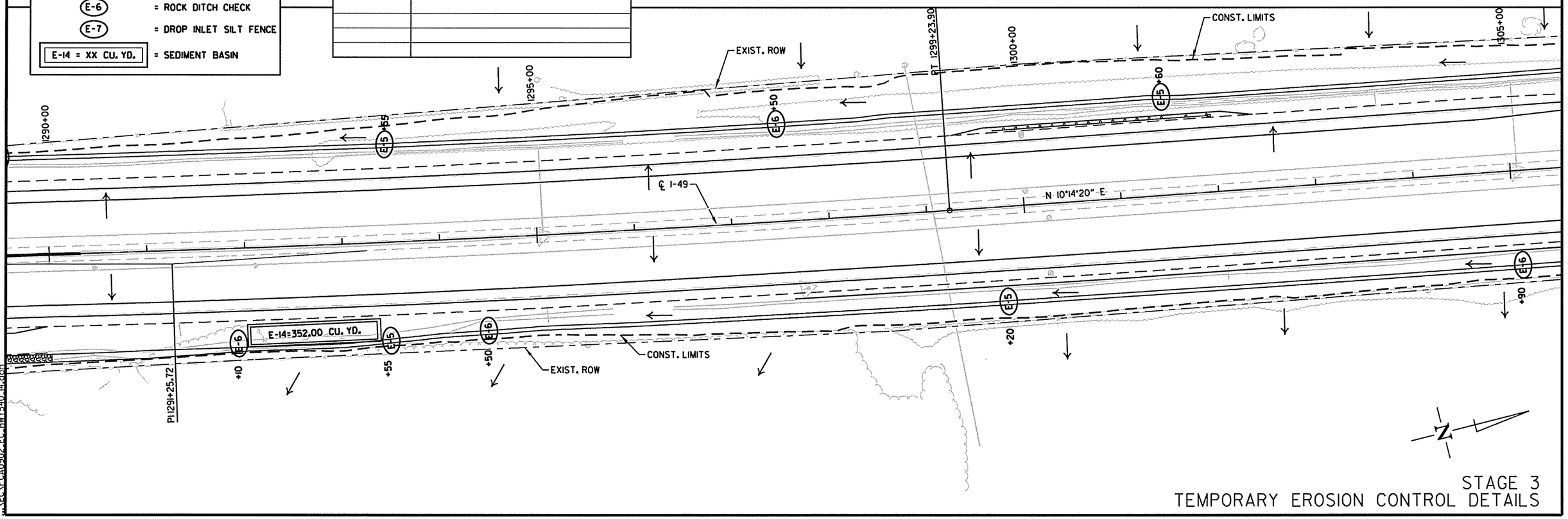

STAGE 3
TEMPORARY EROSION CONTROL DETAILS

5/5/2016
10:08:06 AM
\\ECV-CA0902-EC-HWY540_14.dgn

DATE	DATE FILMED	DATE REVISED	DATE FILMED	FED.RD. DIST.NO.	STATE	FED.AID PROJ.NO.	SHEET NO.	TOTAL SHEETS
				6	ARK.			
				JOB NO.		CA0902	052	581

TEMPORARY EROSION CONTROL DETAILS

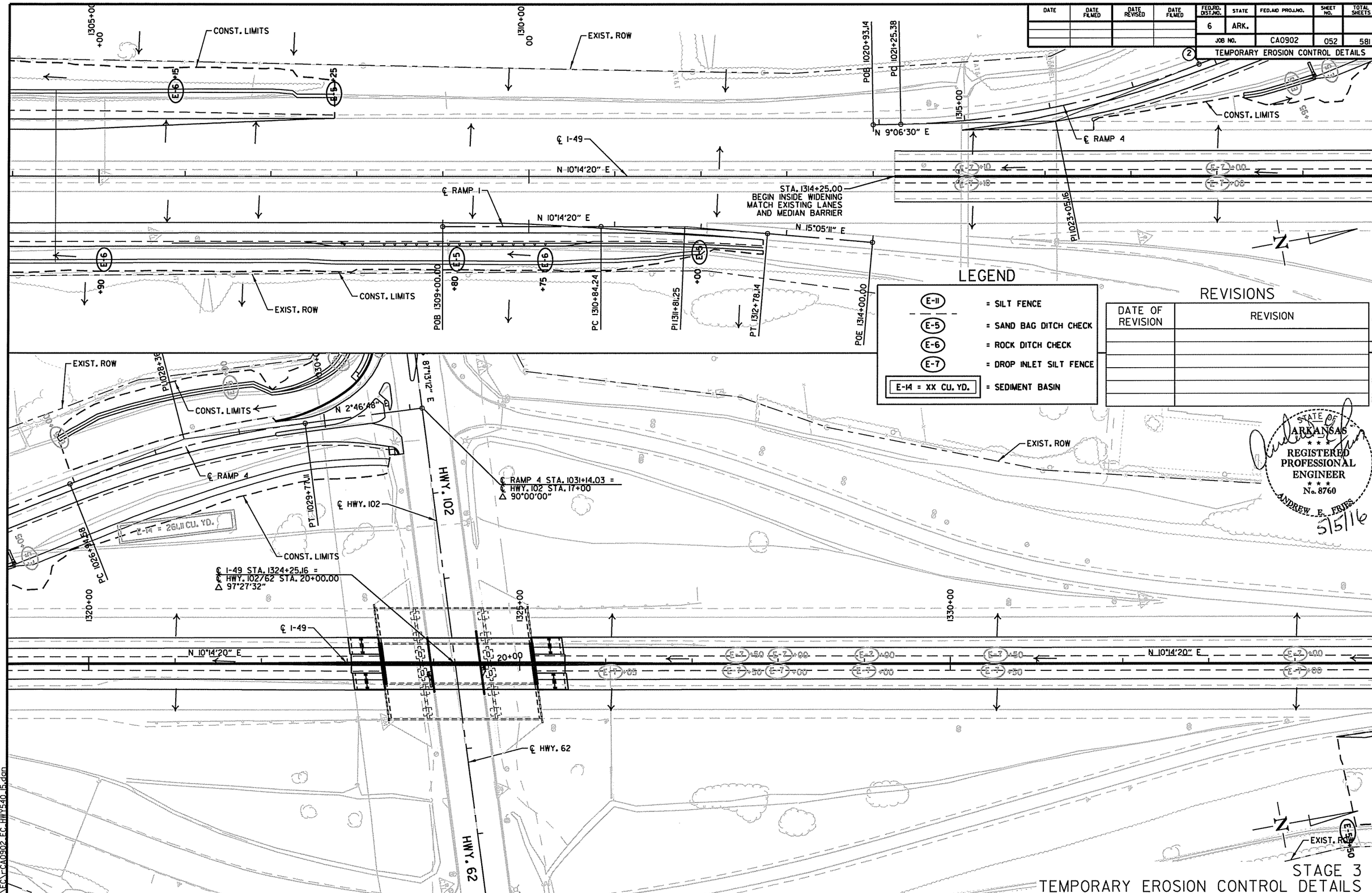

LEGEND

E-11	= SILT FENCE
E-5	= SAND BAG DITCH CHECK
E-6	= ROCK DITCH CHECK
E-7	= DROP INLET SILT FENCE
E-14 = XX CU. YD.	= SEDIMENT BASIN

REVISIONS

DATE OF REVISION	REVISION

STATE OF ARKANSAS
REGISTERED PROFESSIONAL ENGINEER
No. 8760
ANDREW E. FRIES
5/5/16

STAGE 3
TEMPORARY EROSION CONTROL DETAILS

5/5/2016
10:08:15 AM
\\EC\CA0902 EC HWY540 15.dgn

DATE	DATE FILMED	DATE REVISED	DATE FILMED	FED.RD. DIST.NO.	STATE	FED.AID PROJ.NO.	SHEET NO.	TOTAL SHEETS
				6	ARK.			
				JOB NO.		CA0902	053	581

(2) TEMPORARY EROSION CONTROL DETAILS

STATE OF ARKANSAS
REGISTERED PROFESSIONAL ENGINEER
No. 8760
ANDREW E. FRIES
5/5/16

EXIST. ROW
CONST. LIMITS
1335+00
1340+00
1345+00
PI 1345+15.98
PC 1340+99.72
N 10°14'20" E
N 34°49'47" E
℄ I-49
+36.91
196.09'
+35.71
194.42'
+14
+99
E-11
E-5 +50
E-5 +00
E-6 +50
E-6 +00
E-7 +00
E-7 +50
E-7 +06
PT 1349+19.41

LEGEND

E-11	= SILT FENCE
E-5	= SAND BAG DITCH CHECK
E-6	= ROCK DITCH CHECK
E-7	= DROP INLET SILT FENCE
E-14 = XX CU. YD.	= SEDIMENT BASIN

REVISIONS

DATE OF REVISION	REVISION

1350+00
1355+00
1360+00
℄ I-49
N 34°49'47" E
EXIST. ROW
CONST. LIMITS

5/5/2016
10:08:22 AM
\\FSC1-CA0902-EG-HWY540_16.dgn

STAGE 3
TEMPORARY EROSION CONTROL DETAILS

DATE	DATE FILMED	DATE REVISED	DATE FILMED	FED.RD. DIST.NO.	STATE	FED.AID PROJ.NO.	SHEET NO.	TOTAL SHEETS
				6	ARK.			
				JOB NO.		CA0902	054	581

(2) TEMPORARY EROSION CONTROL DETAILS

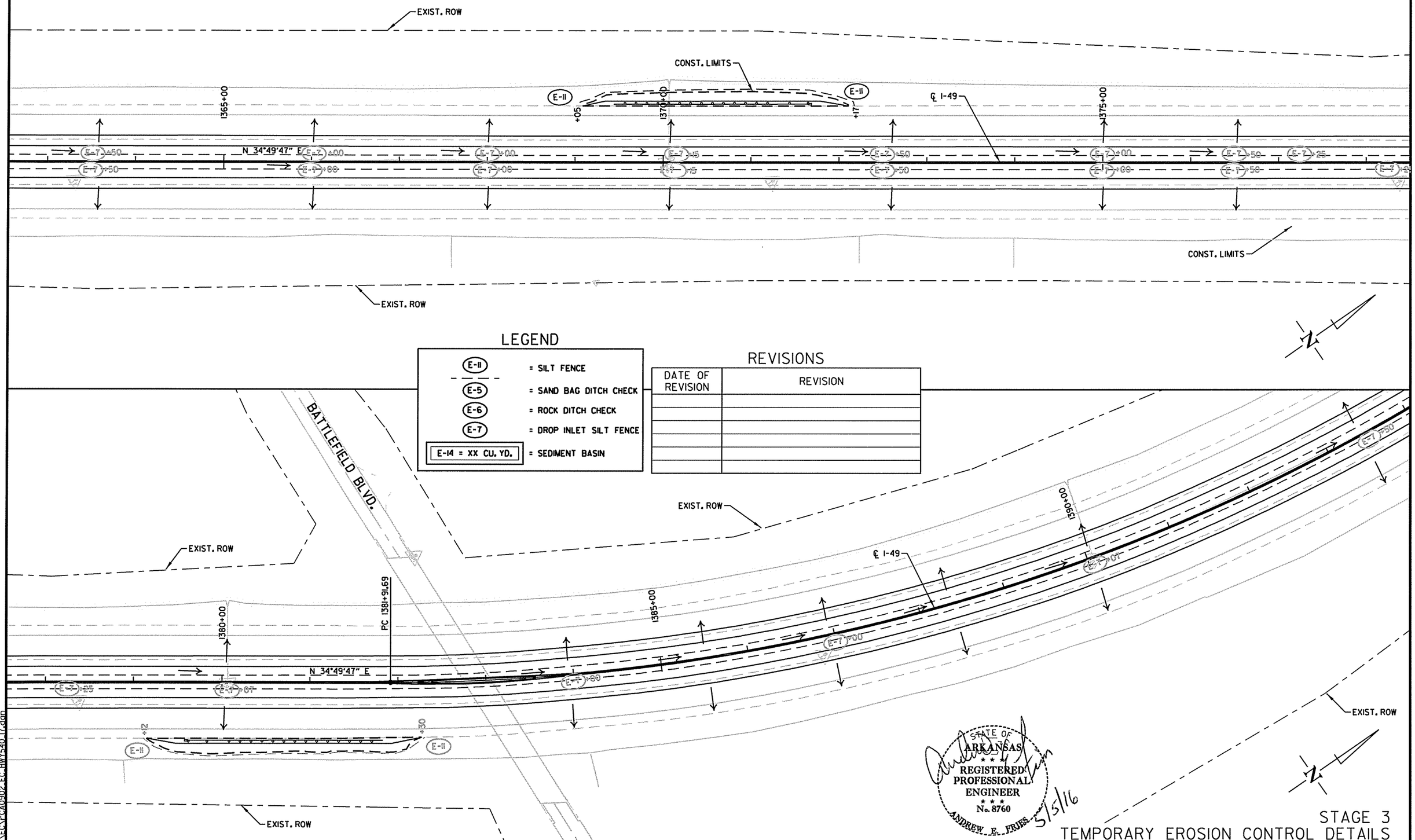

LEGEND

E-11	= SILT FENCE
E-5	= SAND BAG DITCH CHECK
E-6	= ROCK DITCH CHECK
E-7	= DROP INLET SILT FENCE
E-14 = XX CU. YD.	= SEDIMENT BASIN

REVISIONS

DATE OF REVISION	REVISION

STATE OF ARKANSAS
REGISTERED PROFESSIONAL ENGINEER
No. 8760
ANDREW E. FRIES
5/5/16

STAGE 3
TEMPORARY EROSION CONTROL DETAILS

5/5/2016
10:08:29 AM
\\EC\FCA0902_EC_HWY540_17.dgn

DATE	DATE FILMED	DATE REVISED	DATE FILMED	FED.RD. DIST.NO.	STATE	FED.AID PROJ.NO.	SHEET NO.	TOTAL SHEETS
				6	ARK.			
				JOB NO.		CA0902	055	581

(2) TEMPORARY EROSION CONTROL DETAILS

STATE OF ARKANSAS
REGISTERED PROFESSIONAL ENGINEER
No. 8760
ANDREW E. FRIES
5/5/16

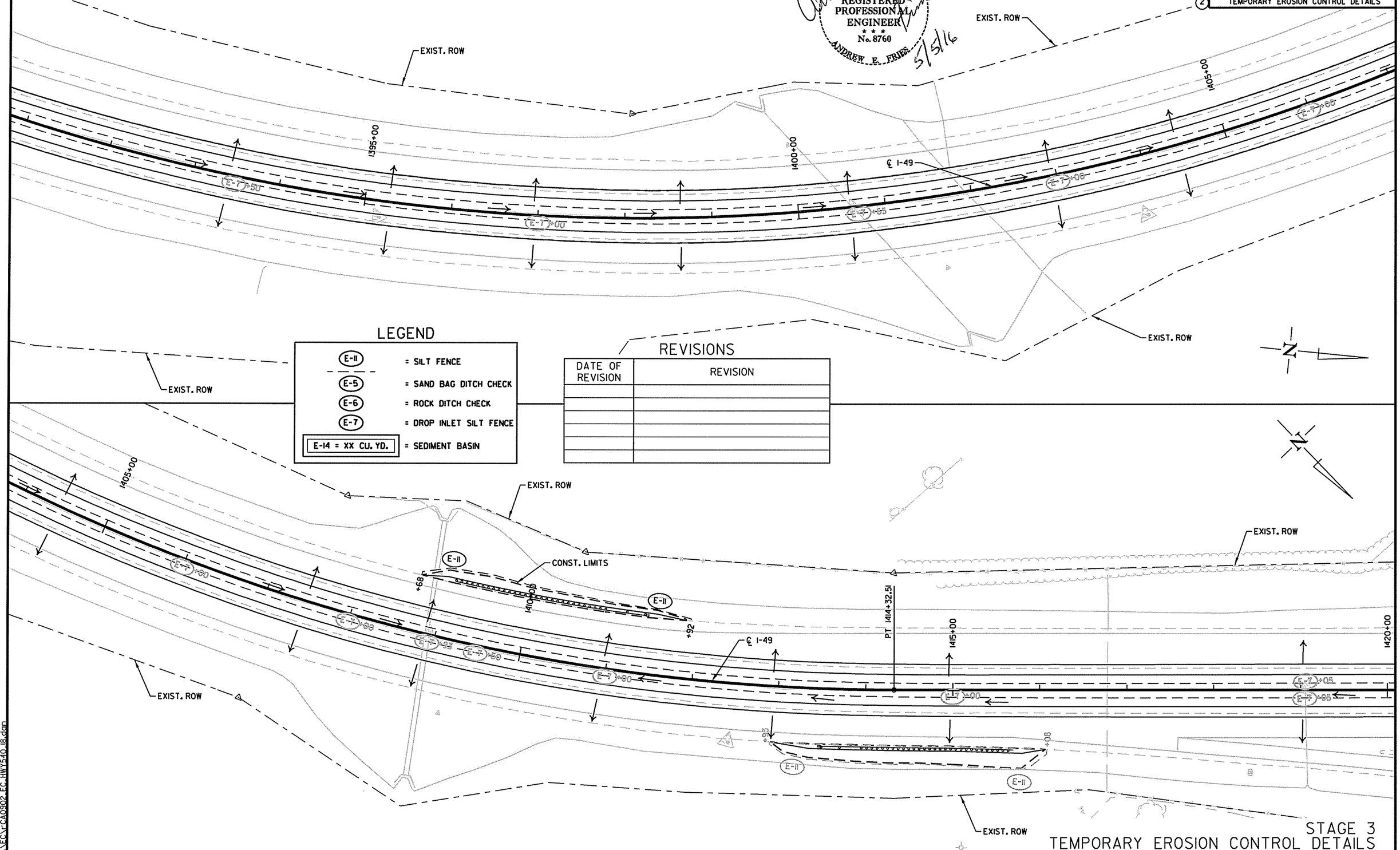

LEGEND

E-11	= SILT FENCE
E-5	= SAND BAG DITCH CHECK
E-6	= ROCK DITCH CHECK
E-7	= DROP INLET SILT FENCE
E-14 = XX CU. YD.	= SEDIMENT BASIN

REVISIONS

DATE OF REVISION	REVISION

STAGE 3
TEMPORARY EROSION CONTROL DETAILS

5/5/2016
10:08:35 AM
\\EC\EC_CA0902_EC_HWY540_18.dgn

DATE	DATE FILMED	DATE REVISED	DATE FILMED	FED.RD. DIST.NO.	STATE	FED.AID PROJ.NO.	SHEET NO.	TOTAL SHEETS
				6	ARK.			
				JOB NO.		CA0902	056	581

(2) TEMPORARY EROSION CONTROL DETAILS

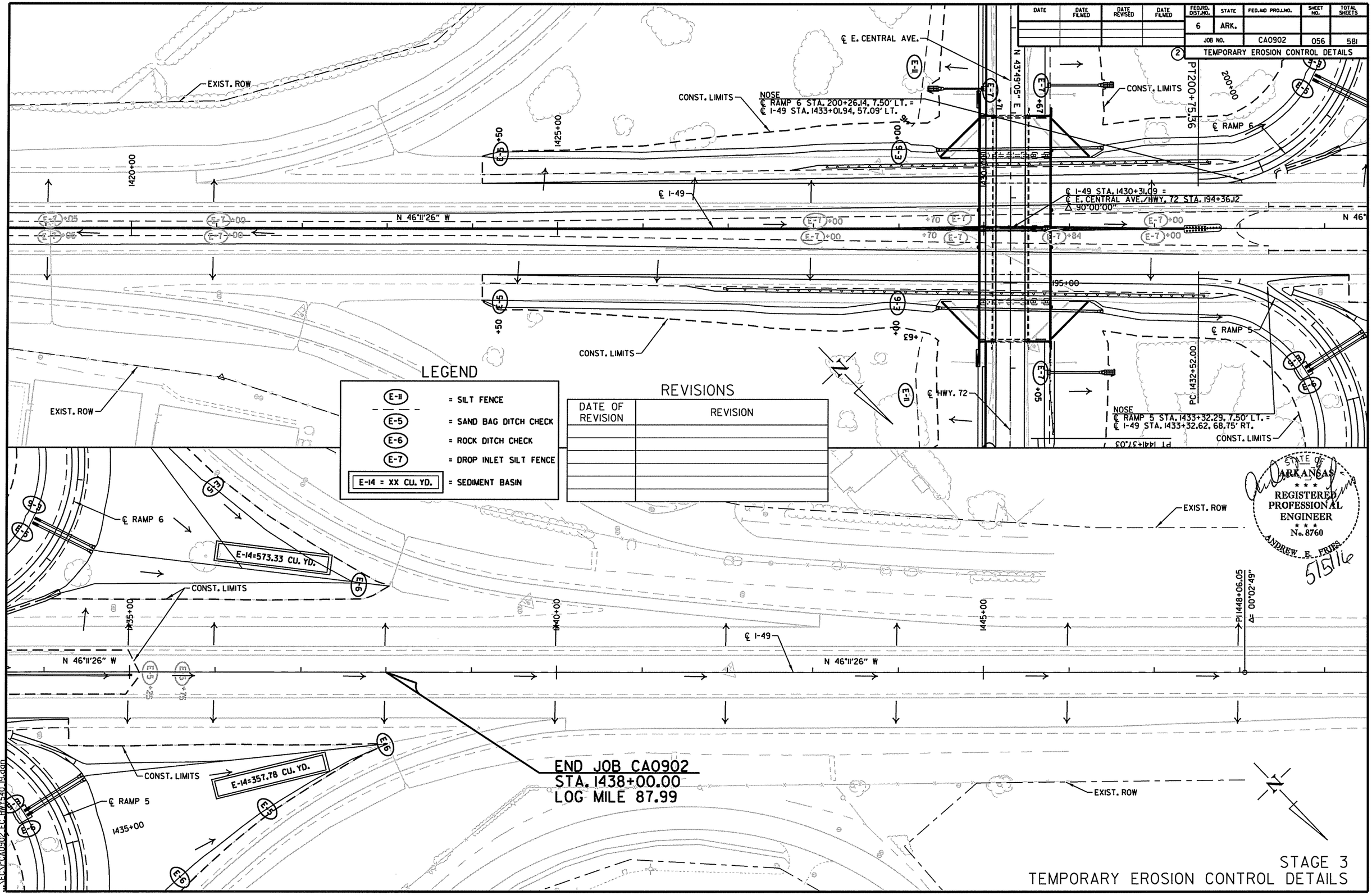

LEGEND

E-11	= SILT FENCE
E-5	= SAND BAG DITCH CHECK
E-6	= ROCK DITCH CHECK
E-7	= DROP INLET SILT FENCE
E-14 = XX CU. YD.	= SEDIMENT BASIN

REVISIONS

DATE OF REVISION	REVISION

STATE OF ARKANSAS
REGISTERED PROFESSIONAL ENGINEER
No. 8760
ANDREW E. FRIES
5/5/16

STAGE 3
TEMPORARY EROSION CONTROL DETAILS

5/5/2016
10:08:40 AM
\\EC\T-CA0902_EC_HWY540_19.dgn

DATE	DATE FILMED	DATE REVISED	DATE FILMED	FED.RD. DIST.NO.	STATE	FED.AID PROJ.NO.	SHEET NO.	TOTAL SHEETS
				6	ARK.			
				JOB NO.		CA0902	057	581

(2) TEMPORARY EROSION CONTROL DETAILS

STATE OF ARKANSAS
REGISTERED PROFESSIONAL ENGINEER
No. 8760
ANDREW E. FRIES
5/5/16

LEGEND

E-11	= SILT FENCE
E-5	= SAND BAG DITCH CHECK
E-6	= ROCK DITCH CHECK
E-7	= DROP INLET SILT FENCE
E-14 = XX CU. YD.	= SEDIMENT BASIN

REVISIONS

DATE OF REVISION	REVISION

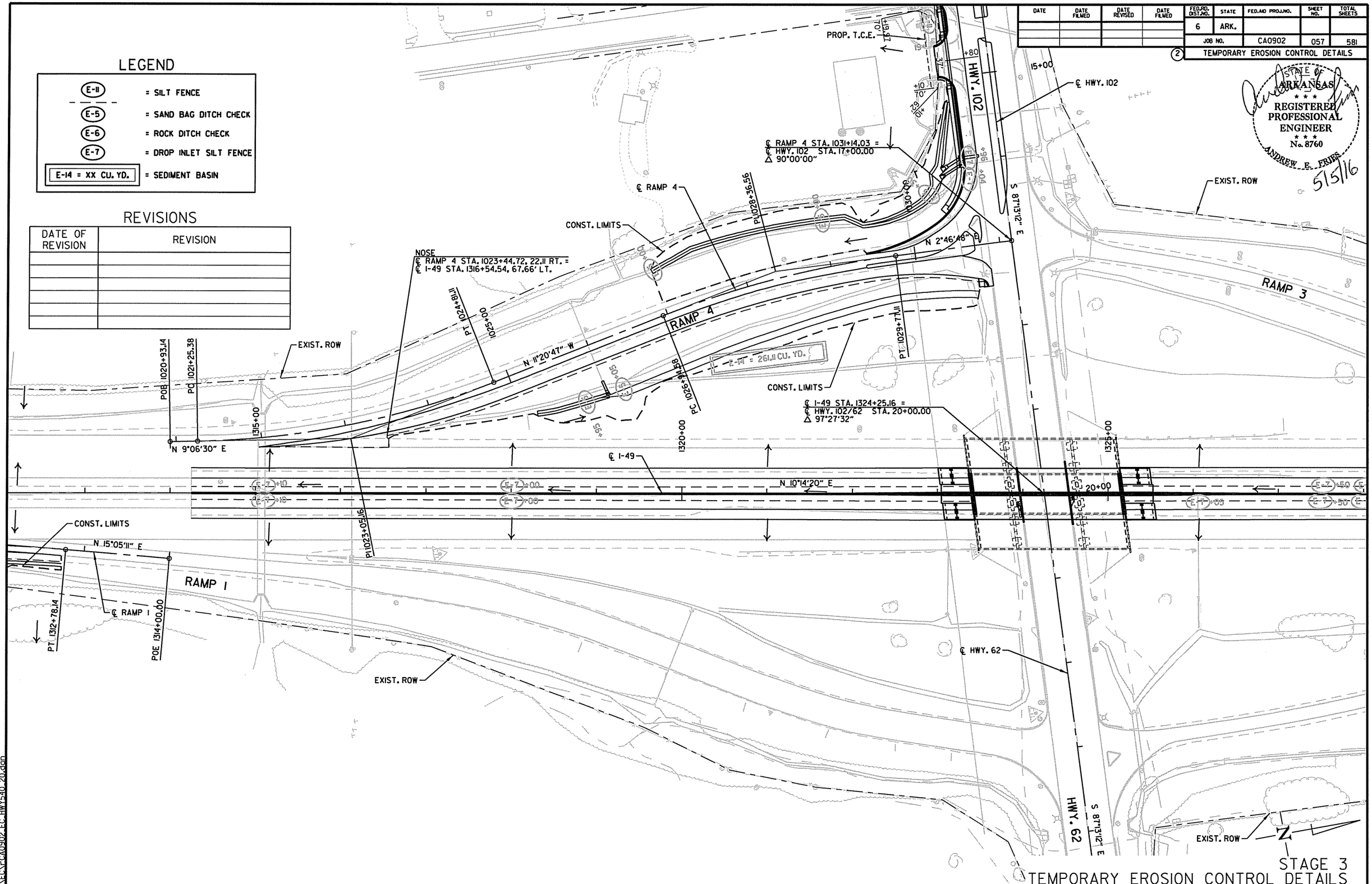

STAGE 3
TEMPORARY EROSION CONTROL DETAILS

5/5/2016
10:08:45 AM
\\EC\CA0902_EC_HWY540_20.dgn

DATE	DATE FILMED	DATE REVISED	DATE FILMED	FED.RD. DIST.NO.	STATE	FED.AID PROJ.NO.	SHEET NO.	TOTAL SHEETS
				6	ARK.			
				JOB NO.		CA0902	058	581

(2) TEMPORARY EROSION CONTROL DETAILS

STATE OF ARKANSAS
REGISTERED PROFESSIONAL ENGINEER
No. 8760
ANDREW E. FRIES
5/5/16

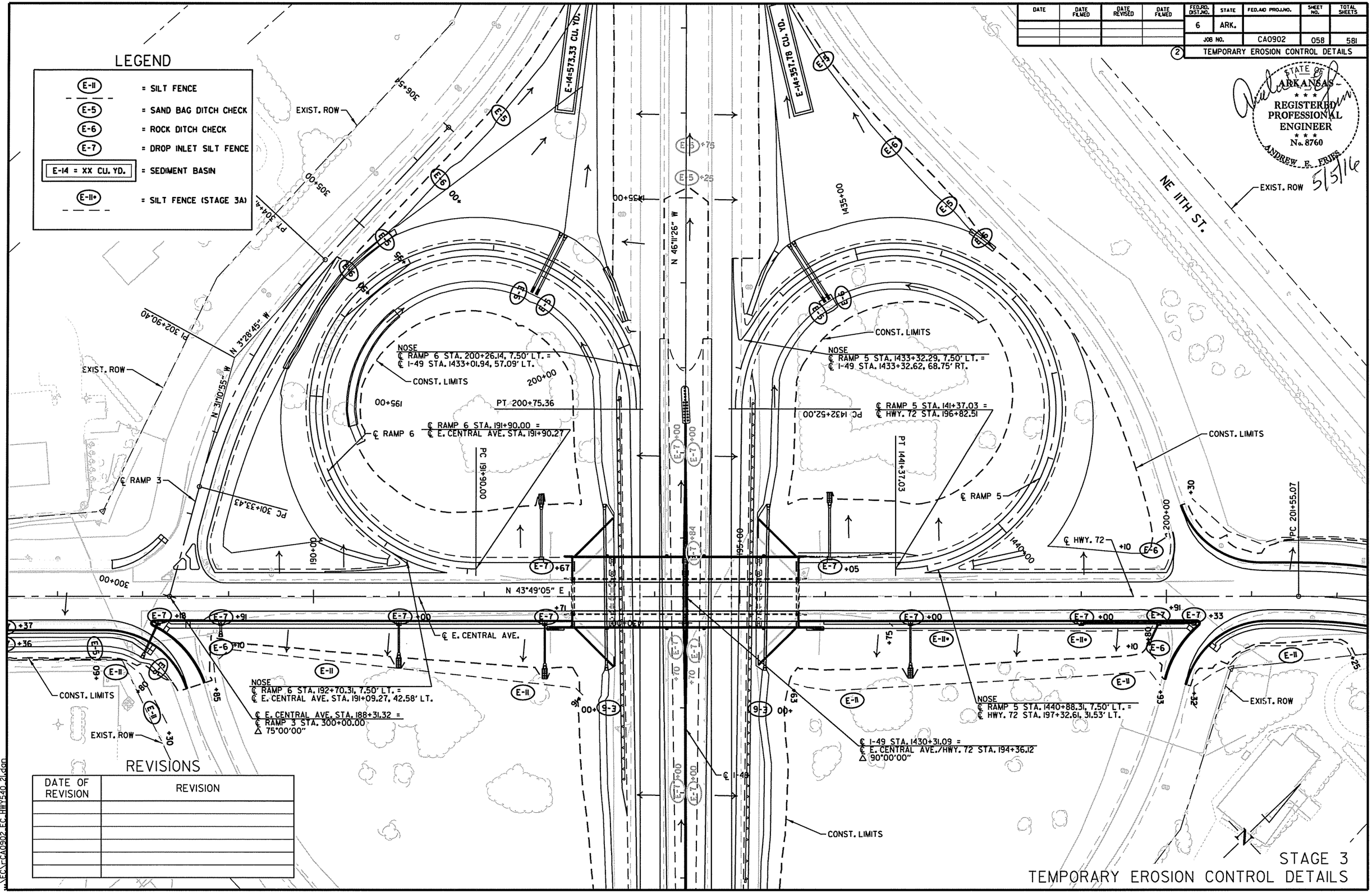

REVISIONS

DATE OF REVISION	REVISION

STAGE 3
TEMPORARY EROSION CONTROL DETAILS

5/5/2016
10:08:50 AM
\\EC\T\CA0902_EC_HWY540_21.dgn

DATE	DATE FILMED	DATE REVISED	DATE FILMED	FED.RD. DIST.NO.	STATE	FED.AID PROJ.NO.	SHEET NO.	TOTAL SHEETS
				6	ARK.			
				JOB NO.		CA0902	059	581

(2) TEMPORARY EROSION CONTROL DETAILS

STATE OF ARKANSAS
REGISTERED PROFESSIONAL ENGINEER
No. 8760
ANDREW E. FRIES
5/5/16

BEGIN CONSTRUCTION
STA. 04+65.50

MOBERLY LN.

PC 3+32.14

PT 5+54.42

℄ HWY. 102

EXIST. ROW

S 87°14'20" E

HWY. 102

PI 13+49.09
Δ = 00°01'08"

PI 14+43.28

PROP. ROW

CONST. LIMITS

PROP. T.C.E.

PROP. T.C.E.

PROP. T.C.E.

N

LEGEND

- E-11 = SILT FENCE
- E-5 = SAND BAG DITCH CHECK
- E-6 = ROCK DITCH CHECK
- E-7 = DROP INLET SILT FENCE
- E-14 = XX CU. YD. = SEDIMENT BASIN

REVISIONS

DATE OF REVISION	REVISION

EXIST. ROW

℄ RAMP 4 STA. 1031+14.03 =
℄ HWY. 102 STA. 17+00.00
Δ 90°00'00"

℄ I-49 STA. 1324+25.16 =
℄ HWY. 102/62 STA. 20+00.00
Δ 97°27'32"

℄ HWY. 102

℄ HWY. 62

POE 28+00.00

S 87°13'12" E

S 87°13'12" E

HWY. 102

HWY. 62

EXIST. ROW

EXIST. ROW

PROP. T.C.E.

CONST. LIMITS

END CONSTRUCTION
STA. 18+00.00

CONST. LIMITS

EXIST. ROW

N

STAGE 3
TEMPORARY EROSION CONTROL DETAILS

5/5/2016
10:08:56 AM
E:\CV\CA0902 EC HWY540 22.dgn

DATE	DATE FILMED	DATE REVISED	DATE FILMED	FED.RD. DIST.NO.	STATE	FED.AID PROJ.NO.	SHEET NO.	TOTAL SHEETS
				6	ARK.			
				JOB NO.		CA0902	060	581

(2) TEMPORARY EROSION CONTROL DETAILS

STATE OF ARKANSAS
REGISTERED PROFESSIONAL ENGINEER
No. 8760
ANDREW E. FRIES
5/5/16

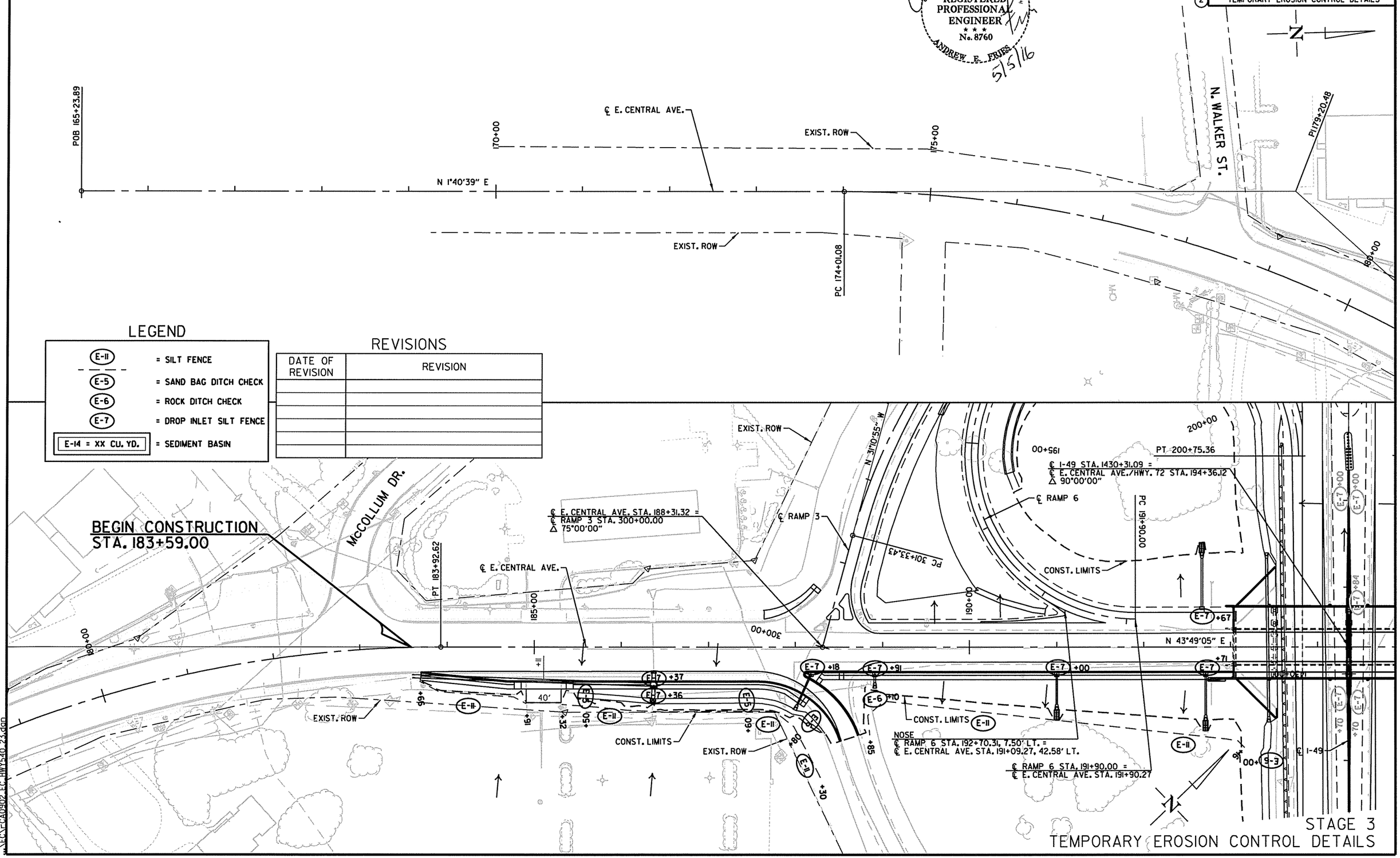

LEGEND

E-11	= SILT FENCE
E-5	= SAND BAG DITCH CHECK
E-6	= ROCK DITCH CHECK
E-7	= DROP INLET SILT FENCE
E-14 = XX CU. YD.	= SEDIMENT BASIN

REVISIONS

DATE OF REVISION	REVISION

STAGE 3
TEMPORARY EROSION CONTROL DETAILS

5/5/2016
10:09:01 AM
\\EC\I-CA0902_EC_HWY540_23.dgn

DATE	DATE FILMED	DATE REVISED	DATE FILMED

FED.RD. DIST.NO.	STATE	FED.AID PROJ.NO.	SHEET NO.	TOTAL SHEETS
6	ARK.			
JOB NO.		CA0902	061	581

(2) TEMPORARY EROSION CONTROL DETAILS

STATE OF ARKANSAS
REGISTERED PROFESSIONAL ENGINEER
No. 8760
ANDREW E. FRIES
5/5/16

LEGEND

E-11	= SILT FENCE
E-5	= SAND BAG DITCH CHECK
E-6	= ROCK DITCH CHECK
E-7	= DROP INLET SILT FENCE
E-14 = XX CU. YD.	= SEDIMENT BASIN

REVISIONS

DATE OF REVISION	REVISION

PC 1432+52.00
℄ RAMP 5 STA. 141+37.03 =
℄ HWY. 72 STA. 196+82.51
PT 1441+37.03
℄ RAMP 5
CONST. LIMITS
℄ HWY. 72
1440+00
1435+00
200+00
+30
PC 201+55.07
NE 11TH ST.
EXIST. ROW
PI 204+17.82
+05
205+00
+35
+63.52
44.94
+64.84
+55
NE McCLAIN RD.
PROP. T.C.E.
+44
+28
+38.32
48.35'
+38.18
38.35'
EXIST. ROW
+86
+00.94
63.25'
+04.89
90°
PROP. ROW
EXIST. ROW
+25
+32
+63
+30
+60
+35.20
51.63'
+48
NOSE
℄ RAMP 5 STA. 1440+88.31, 7.50' LT. =
℄ HWY. 72 STA. 197+32.61, 31.53' LT.
℄ I-49 STA. 1430+31.09 =
℄ E. CENTRAL AVE./HWY. 72 STA. 194+36.12
Δ 90°00'00"
℄ I-49
CONST. LIMITS
+10
+91
+33
+70
+84
+00
+63
+53
+32
+10
+05
69'
PT 206+47.78
+10
+19
+00
CONST. LIMITS
PROP. ROW
+67
+78
+62.90
67'
+00
38.27'
210+00
CONST. LIMITS
END CONSTRUCTION
STA. 212+13.16
215+00
POE 216+09.95
+82
+10
+71
+00
S 86°54'42" E
+49
+67
+71
+09
+66
+40
41.73'
+00
41.73'
+60
+56.57
60'
PROP. T.C.E
BEAU TERRE DR.
RET. WALL
RET. WALL
RET. WALL
NE McCLAIN RD.
+38.32
48.35'
+38.18
38.35'
+28
+44
+64.84
+63.3'
+30
+25.63
51.63'

N

STAGE 3
TEMPORARY EROSION CONTROL DETAILS

5/5/2016
10:09:07 AM
\\FSYS\CA0902_FC_HWY540_24.dgn

DATE	DATE FILMED	DATE REVISED	DATE FILMED	FED.RD. DIST.NO.	STATE	FED.AID PROJ.NO.	SHEET NO.	TOTAL SHEETS
				6	ARK.			
				JOB NO.		CA0902	062	581

(2) MAINTENANCE OF TRAFFIC DETAILS

MAINLINE I-49 SEQUENCE OF CONSTRUCTION:

STAGE I:

SET TEMPORARY PRECAST CONCRETE BARRIER AND TEMPORARY TRAFFIC CONTROL DEVICES
INSTALL BOX CULVERT FOR TRAIL AND RELATED PIPE CULVERTS AT BRIDGE REMOVAL,
SEE SPECIAL TRAIL DETAIL SHEETS FOR SEQUENCE OF CONSTRUCTION AND ADDITIONAL INFORMATION,
TRAIL IS TO REMAIN OPEN UNLESS OTHERWISE SPECIFIED ELSEWHERE IN THE PLANS OR AS DIRECTED BY THE ENGINEER.
CONSTRUCT TEMPORARY RAMP 2 AT HWY. 102

STAGE IA:

RELOCATE TEMPORARY PRECAST CONCRETE BARRIER AND TEMPORARY TRAFFIC CONTROL DEVICES
SHIFT TRAFFIC TO TEMPORARY RAMP 2 AT HWY. 102
CONSTRUCT OUTSIDE FULL DEPTH SHOULDERS ALONG I-49

STAGE 2:

RELOCATE TEMPORARY PRECAST CONCRETE BARRIER AND TEMPORARY TRAFFIC CONTROL DEVICES
SHIFT TRAFFIC TO THE OUTSIDE
CONSTRUCT MEDIAN DRAINAGE STRUCTURES
CONSTRUCT INSIDE WIDENING AND MEDIAN CONCRETE BARRIER
SEE HWY. 102 SEQUENCE OF CONSTRUCTION FOR ADDITIONAL INFORMATION

STAGE 3:

RELOCATE TEMPORARY PRECAST CONCRETE BARRIER AND TEMPORARY TRAFFIC CONTROL DEVICES
SHIFT TRAFFIC TO THE INSIDE
CONSTRUCT OUTSIDE WIDENING AND DRAINAGE STRUCTURE EXTENSIONS
SEE HWY. 72 SEQUENCE OF CONSTRUCTION FOR ADDITIONAL INFORMATION
REMOVE TEMPORARY RAMP 2 AT HWY. 102
MILL AND OVERLAY EXISTING PAVEMENT
INSTALL PERMANENT PAVEMENT MARKINGS AND SIGNS

NOTE:

ALL GUARDRAIL SHALL BE IN PLACE AS SOON AS POSSIBLE TO PROTECT SLOPE OR OBJECT HAZARDS.

STATE OF ARKANSAS
REGISTERED PROFESSIONAL ENGINEER
No. 8760
ANDREW E. FRIES
5/5/16

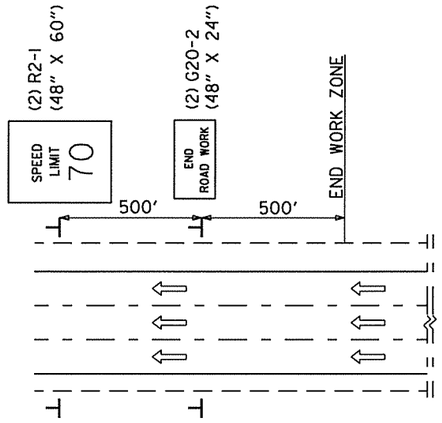

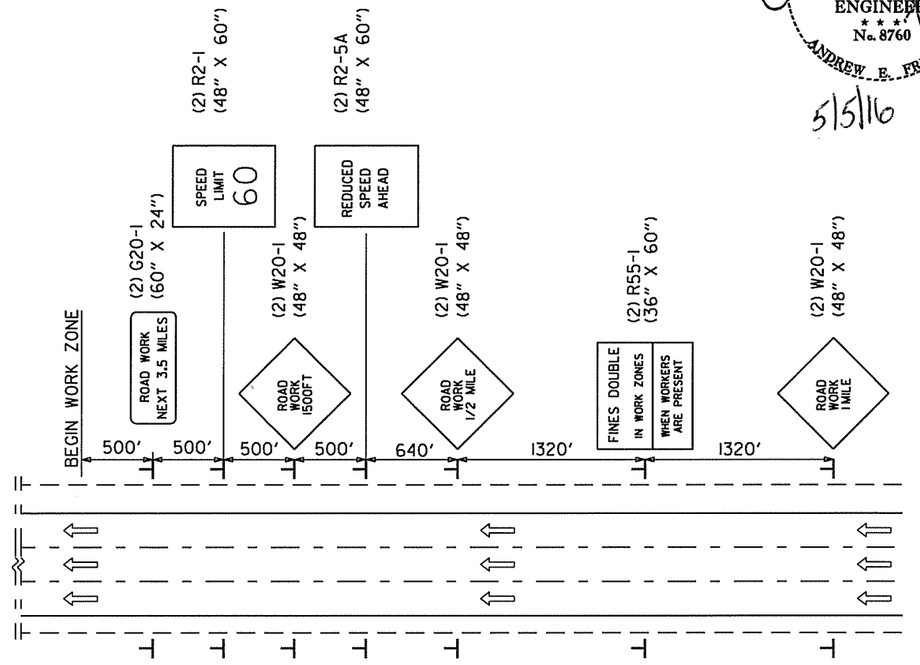

PORTABLE CHANGEABLE MESSAGE SIGN PLACED AS DIRECTED BY THE ENGINEER.

PORTABLE CHANGEABLE MESSAGE SIGN PLACED AS DIRECTED BY THE ENGINEER.

MAINLINE PHASING AND ADVANCE WARNING
MAINTENANCE OF TRAFFIC DETAILS

5/5/2016 10:26:29 AM
C:\Projects\CA0902\Plans\HWY 102 MOT.dgn

DATE	DATE FILMED	DATE REVISED	DATE FILMED	FED.RD. DIST.NO.	STATE	FED.AID PROJ.NO.	SHEET NO.	TOTAL SHEETS
				6	ARK.			
				JOB NO.		CA0902	063	581
				(2)	MAINTENANCE OF TRAFFIC DETAILS			

STATE OF ARKANSAS
* * *
REGISTERED PROFESSIONAL ENGINEER
* * *
No. 8760
ANDREW E. FRIES
5/5/16

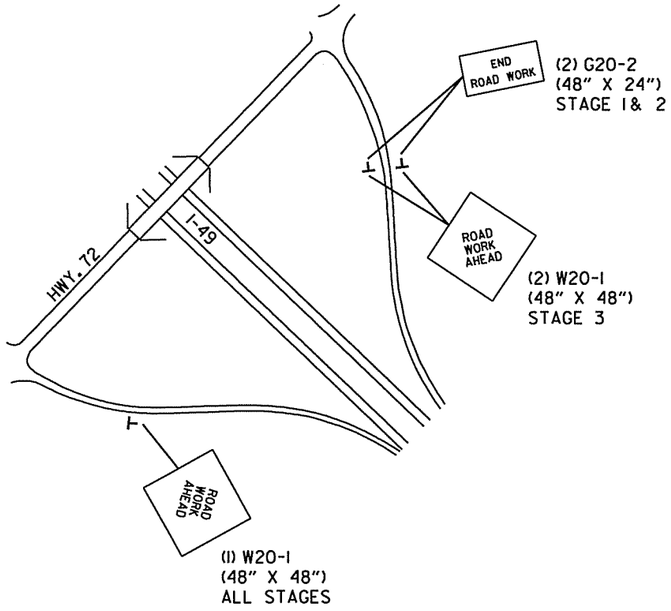

DETAIL OF ENTRANCE AND EXIT RAMPS
(HWY. 72 - EXIT 88)

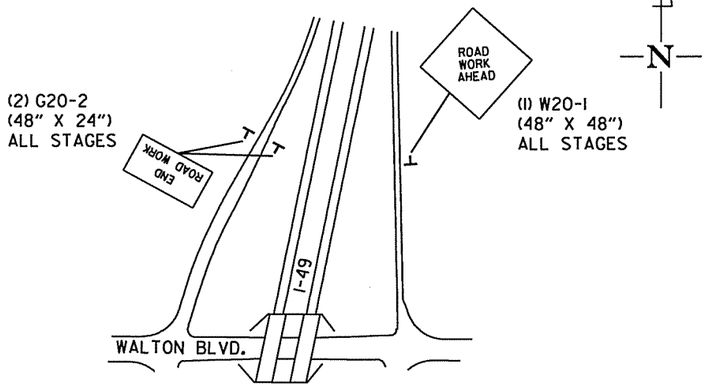

DETAIL OF ENTRANCE AND EXIT RAMPS
(WALTON BLVD. - EXIT 85)

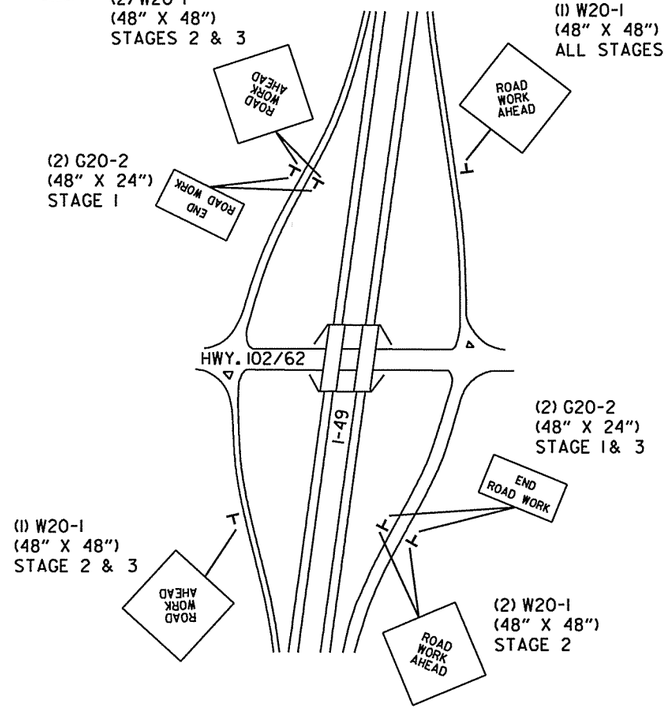

DETAIL OF ENTRANCE AND EXIT RAMPS
(HWY. 102/62 - EXIT 86)

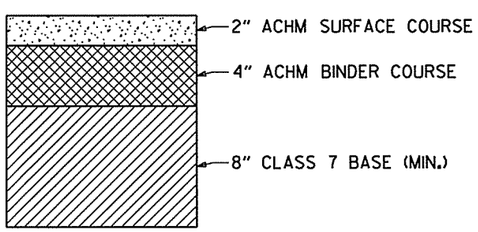

SHOULDER, RAMP, TEMPORARY PAVEMENT & MAINLINE
PAVEMENT RECONSTRUCTION SECTION

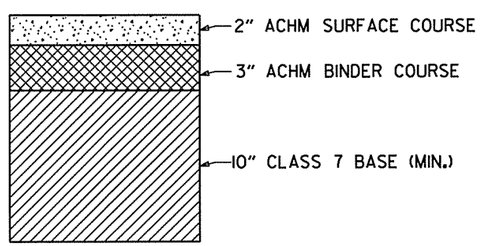

HWY. 72 TEMPORARY PAVEMENT SECTION

MISCELLANEOUS DETAILS
MAINTENANCE OF TRAFFIC DETAILS

5/5/2016
10:26:23 AM
\\FCA0902 MOT HWY540 DT02.dgn

DATE	DATE FILMED	DATE REVISED	DATE FILMED	FED.RD. DIST.NO.	STATE	FED.AID PROJ.NO.	SHEET NO.	TOTAL SHEETS
				6	ARK.			
				JOB NO.		CA0902	064	581

(2) MAINTENANCE OF TRAFFIC DETAILS

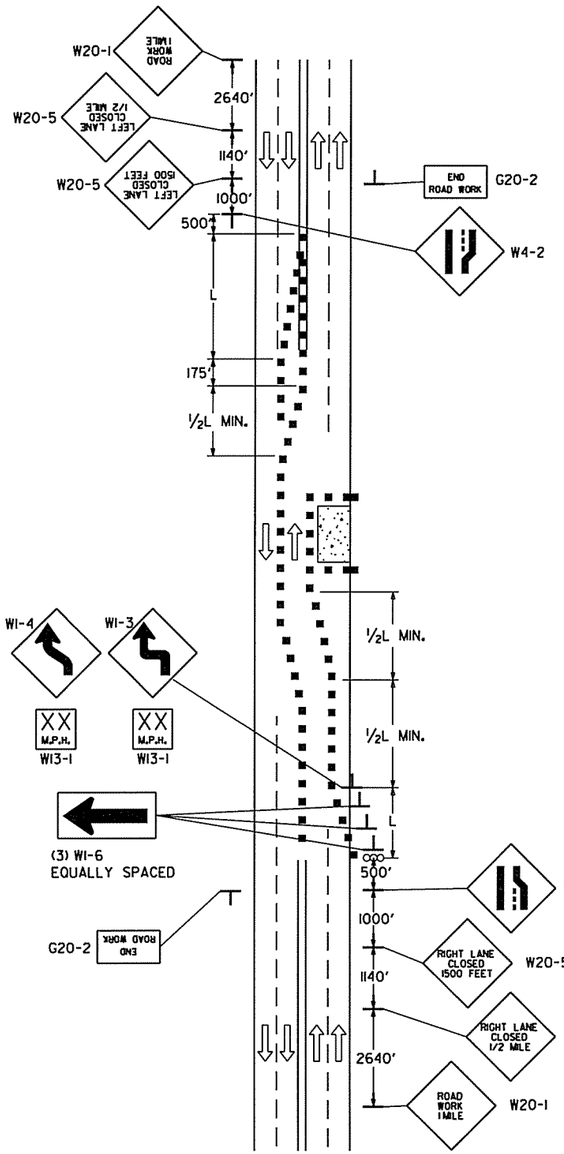

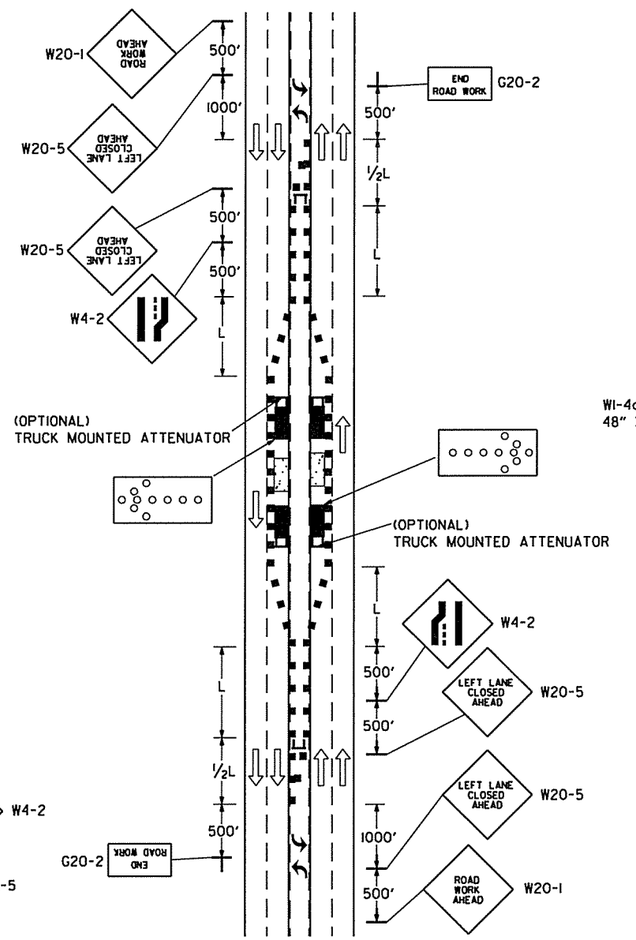

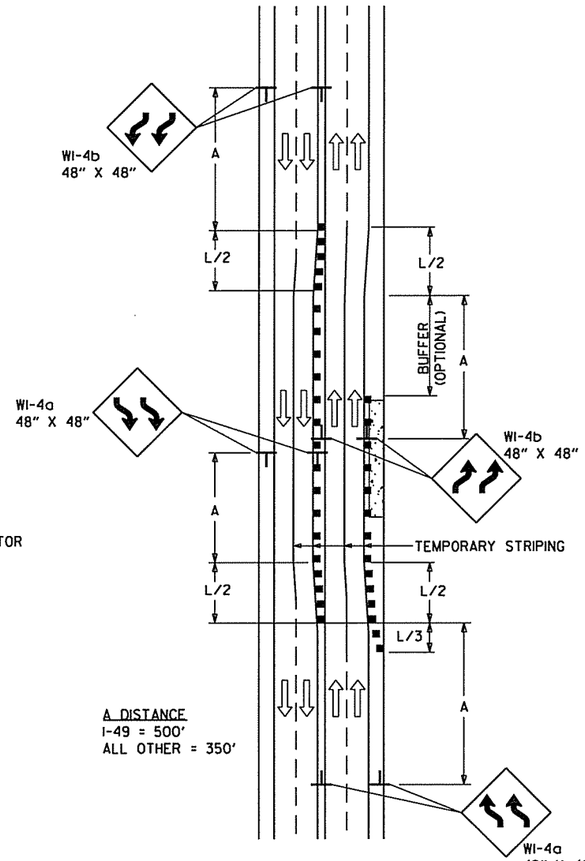

A DISTANCE
I-49 = 500'
ALL OTHER = 350'

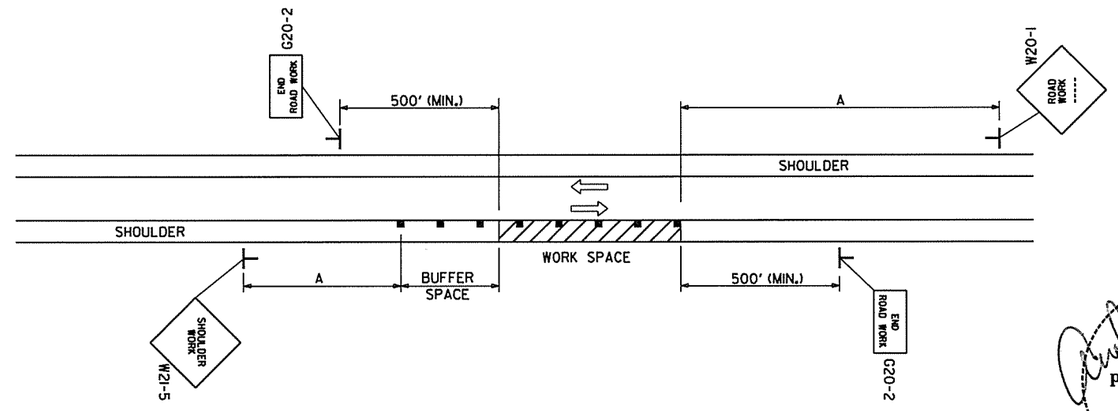

EDGE DROP OFF TREATMENT

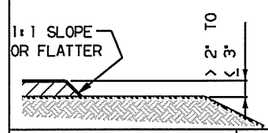

TIME	TREATMENT
NON-WORKING HOURS	WEDGE SLOPE TO 1V:1H OR FLATTER
WORKING HOURS	NO EDGE TREATMENT REQUIRED

W08-17 (3)(4)
W08-17p (6)

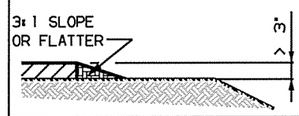

TIME	TREATMENT
NON-WORKING HOURS	WEDGE SLOPE TO 1V:3H OR FLATTER
WORKING HOURS	DELINEATE DIFFERENTIAL WITH CHANNELIZERS

W08-17 (3)(4)
W08-17p (6)

EDGE DROP OFF TREATMENT SHALL BE USED WHEN AN EDGE DIFFERENTIAL CONDITION EXISTS FOR THOSE DIMENSIONS AS LABELED ABOVE, UNLESS PROTECTED BY BARRIER OR HAVING AN ADJACENT CLOSED LANE. THE ABOVE IS APPLICABLE FOR SPEEDS OF 45 MPH OR LESS. DROP OFF MATERIAL SHALL BE CLASS 7 AGGR. OR EQUIVALENT, OR MATERIAL AS DIRECTED BY THE ENGINEER. EDGE DROP OFF SHALL BE USED IN ADDITION TO OTHER TEMPORARY TRAFFIC CONTROL DEVICES AS SHOWN ELSEWHERE ON THE PLANS. EDGE DROP OFF SHALL BE INCIDENTAL TO ADVANCE WARNING SIGNS AND DEVICES USED FOR THIS PROJECT.

LEGEND

▨ - FLEXIBLE PAVEMENT

STATE OF ARKANSAS
REGISTERED PROFESSIONAL ENGINEER
No. 8760
ANDREW E. FRIES
5/5/16

WORK ZONE DETAILS
MAINTENANCE OF TRAFFIC DETAILS

5/5/2016
10:26:28 AM
\\...\CA0902_MOT_HWY540_DT03.dgn

DATE	DATE FILMED	DATE REVISED	DATE FILMED	FED.RD. DIST.NO.	STATE	FED.AID PROJ.NO.	SHEET NO.	TOTAL SHEETS
				6	ARK.			
				JOB NO.		CA0902	065	581

(2) MAINTENANCE OF TRAFFIC TYPICAL SECTIONS

STATE OF ARKANSAS
REGISTERED PROFESSIONAL ENGINEER
No. 8760
ANDREW E. FRIES
5/5/16

SEE TYPICAL SECTIONS FOR PAVEMENT STRUCTURAL SECTIONS
SEE SPECIAL DETAILS FOR CONCRETE BARRIER WALL DETAILS
SEE BRIDGE PLANS FOR ADDITIONAL INFORMATION
SEE MOT PLANS FOR LOCATIONS OF TEMPORARY PAVEMENT SECTIONS

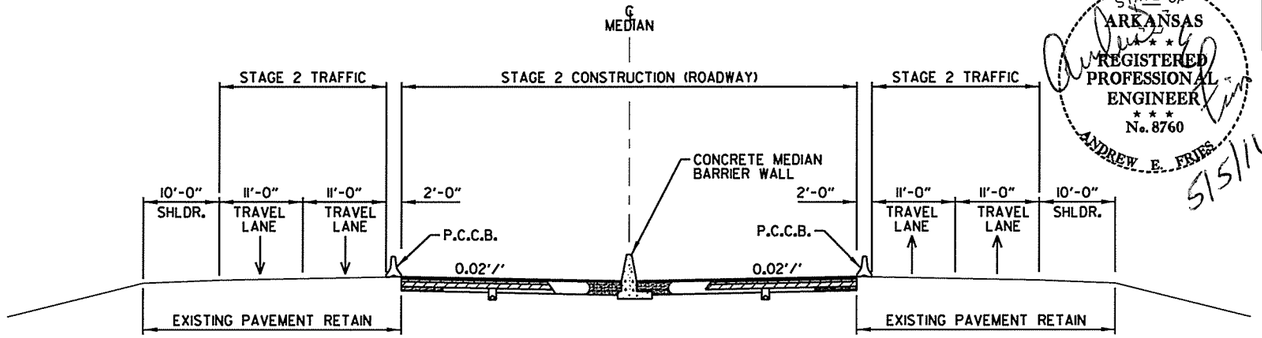

STAGE 2 CONSTRUCTION

STA. 1314+25.00 TO 1329+28.00
STA. 1347+11.00 TO 1433+34.07

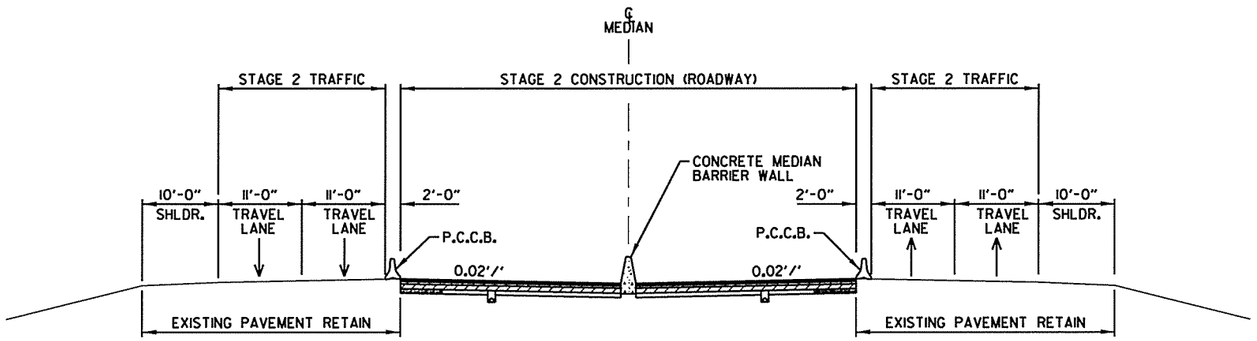

STAGE 2 CONSTRUCTION
FULL DEPTH MEDIAN

STA. 1329+28.00 TO 1336+50.00
STA. 1339+20.00 TO 1347+11.00

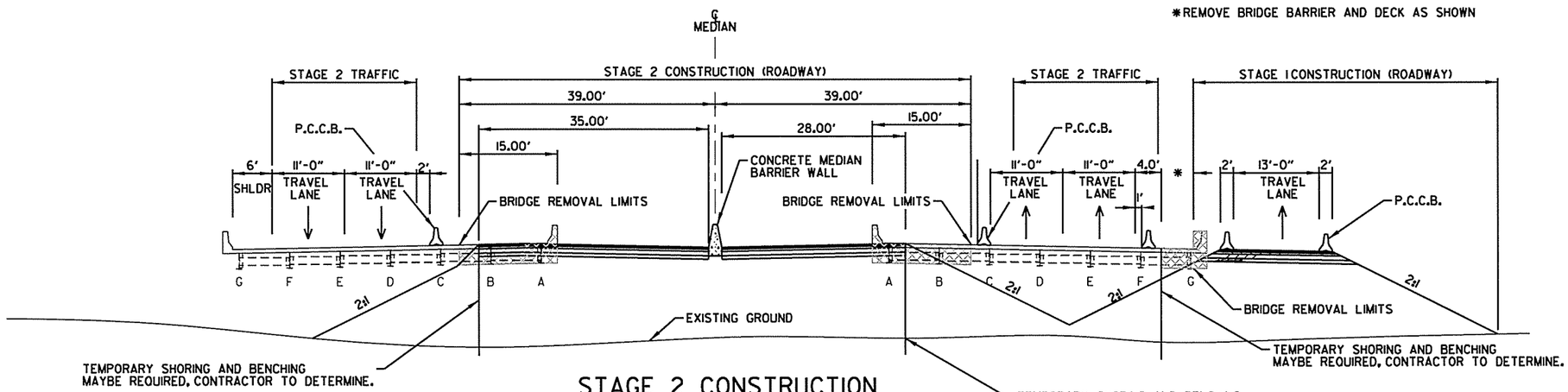

STAGE 2 CONSTRUCTION

STA. 1336+50.00 TO 1339+20.00

MAINLINE STAGES 1& 2
MAINTENANCE OF TRAFFIC TYPICAL SECTIONS

5/5/2016
10:26:39 AM
\\...\CA0902_TS_MOT_HWY540_01.dgn

DATE	DATE FILMED	DATE REVISED	DATE FILMED	FED.RD. DIST.NO.	STATE	FED.AID PROJ.NO.	SHEET NO.	TOTAL SHEETS
				6	ARK.			
				JOB NO.		CA0902	066	581

(2) MAINTENANCE OF TRAFFIC TYPICAL SECTIONS

STATE OF ARKANSAS
REGISTERED PROFESSIONAL ENGINEER
No. 8760
ANDREW E. FRIES
5/5/16

SEE TYPICAL SECTIONS FOR PAVEMENT STRUCTURAL SECTIONS
SEE SPECIAL DETAILS FOR CONCRETE BARRIER WALL DETAILS
SEE BRIDGE PLANS FOR ADDITIONAL INFORMATION
SEE MOT PLANS FOR LOCATIONS OF TEMPORARY PAVEMENT SECTIONS

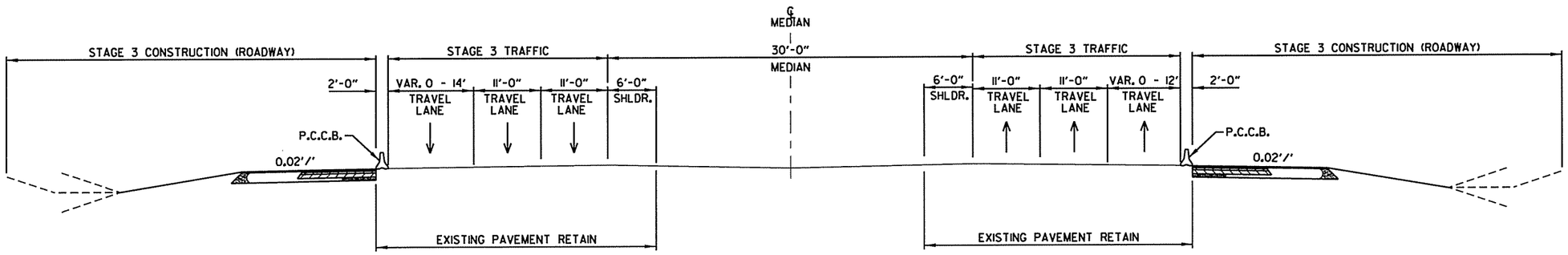

STAGE 3 CONSTRUCTION
STA. 1256+75.00 TO 1312+73.00

NOTE:

POSITIVE BARRIER (PRECAST CONCRETE BARRIER) SHALL BE IN PLACE BEFORE CONSTRUCTION OF THE OUTSIDE FOUNDATIONS FOR OVERHEAD SIGN STRUCTURES.

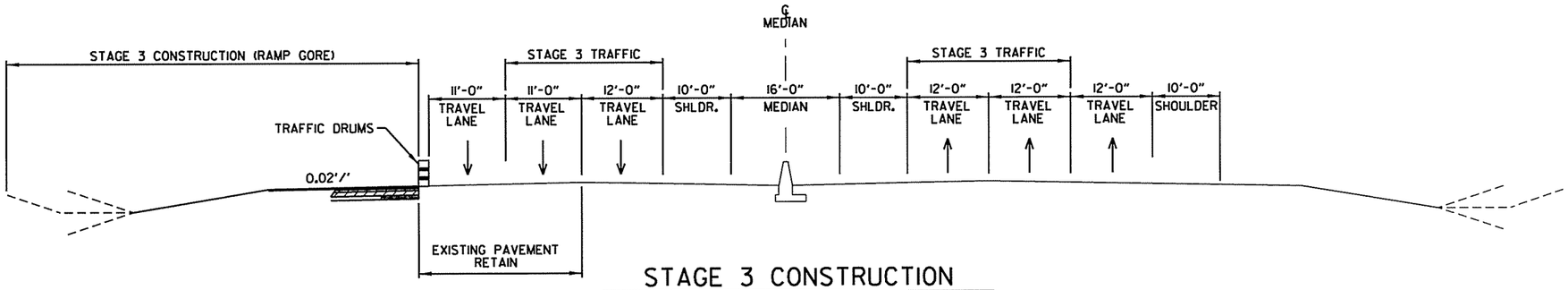

STAGE 3 CONSTRUCTION
STA. 1315+03.00 TO 1316+56.00

MAINLINE STAGE 3
MAINTENANCE OF TRAFFIC TYPICAL SECTIONS

5/5/2016
10:26:44 AM
\\FCA0902_TS_MOT_HWY540_02.dgn

DATE	DATE FILMED	DATE REVISED	DATE FILMED	FED.RD. DIST.NO.	STATE	FED.AID PROJ.NO.	SHEET NO.	TOTAL SHEETS
				6	ARK.			
				JOB NO.		CA0902	067	581

(2) MAINTENANCE OF TRAFFIC TYPICAL SECTIONS

STATE OF ARKANSAS
REGISTERED PROFESSIONAL ENGINEER
No. 8760
ANDREW E. FRIES
5/5/16

SEE TYPICAL SECTIONS FOR PAVEMENT STRUCTURAL SECTIONS
SEE SPECIAL DETAILS FOR CONCRETE BARRIER WALL DETAILS
SEE BRIDGE PLANS FOR ADDITIONAL INFORMATION
SEE MOT PLANS FOR LOCATIONS OF TEMPORARY PAVEMENT SECTIONS

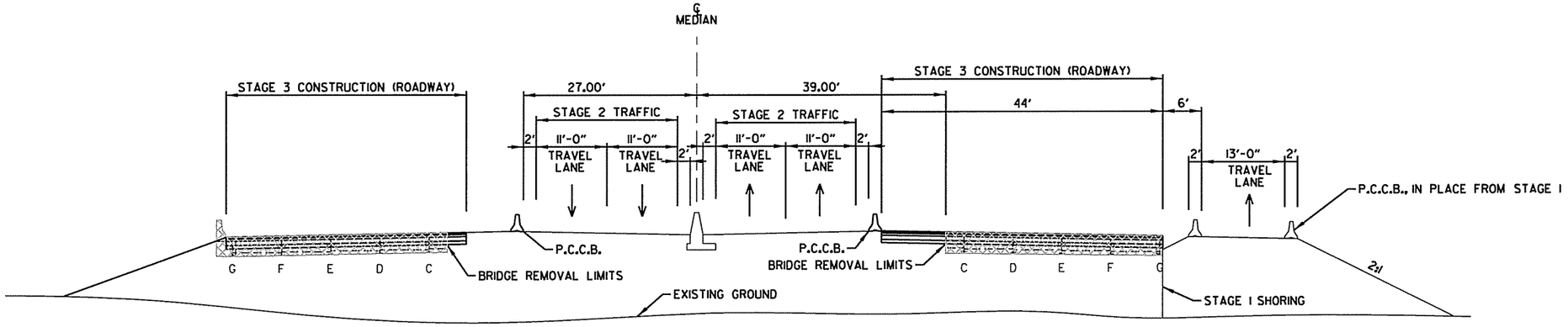

STAGE 3 CONSTRUCTION
STA. 1336+50.00 TO 1339+20.00

NOTE:

POSITIVE BARRIER (PRECAST CONCRETE BARRIER) SHALL BE IN PLACE BEFORE CONSTRUCTION OF THE OUTSIDE FOUNDATIONS FOR OVERHEAD SIGN STRUCTURES.

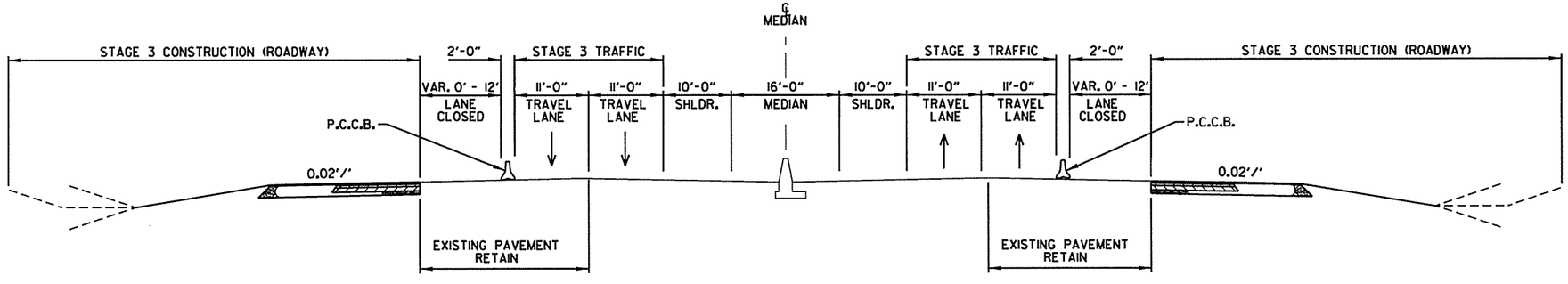

STAGE 3 CONSTRUCTION
STA. 1424+11.00 TO 1434+29.00

MAINLINE STAGE 3
MAINTENANCE OF TRAFFIC TYPICAL SECTIONS

5/5/2016
10:26:47 AM
\\...\CA0902_TS_MOT_HWY540_03.dgn

DATE	DATE FILMED	DATE REVISED	DATE FILMED	FED.RD. DIST.NO.	STATE	FED.AID PROJ.NO.	SHEET NO.	TOTAL SHEETS
				6	ARK.			
				JOB NO.		CA0902	068	581
				(2)	TYPICAL SECTIONS OF IMPROVEMENT			

STATE OF ARKANSAS
REGISTERED PROFESSIONAL ENGINEER
No. 8760
ANDREW E. FRIES
5/5/16

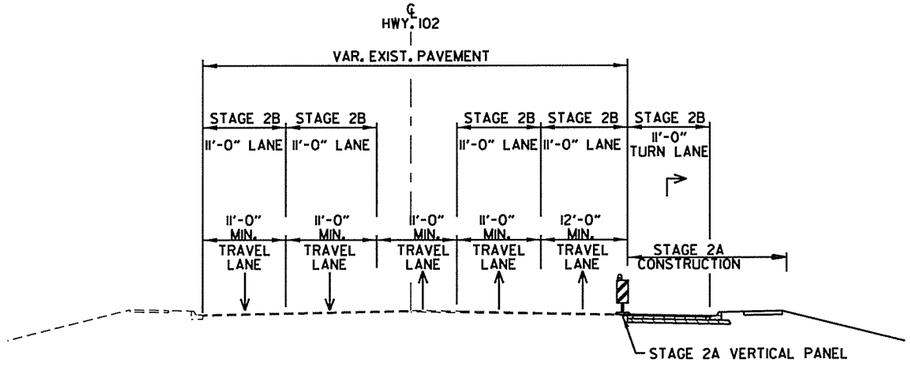

HWY. 102 TYPICAL SECTION
HWY. 102 WEST OF RAMP TERMINALS

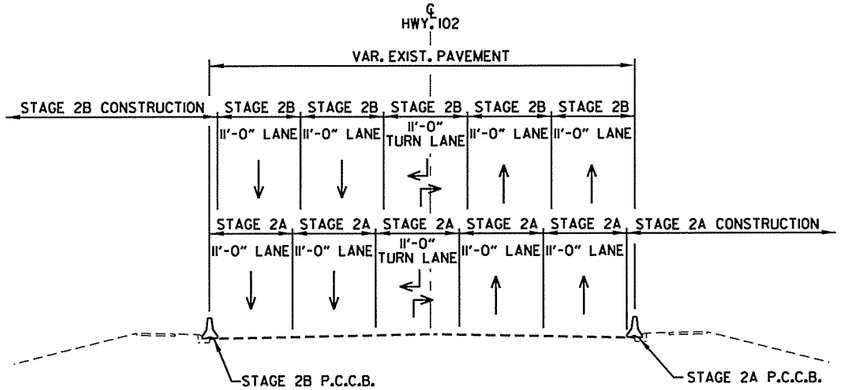

HWY. 102 TYPICAL SECTION
HWY. 102 BETWEEN RAMP TERMINALS

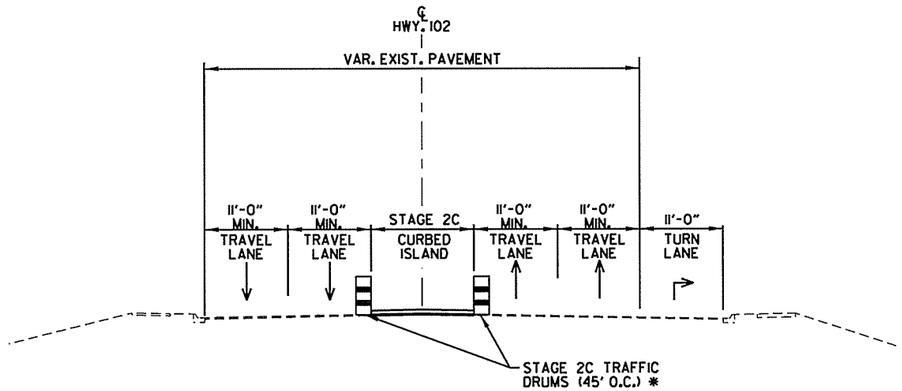

HWY. 102 TYPICAL SECTION
HWY. 102 STA. 5+04.24 - 16+68.00

* WORK TO BE COMPLETED DURING NON-PEAK HOURS

SEQUENCE OF CONSTRUCTION:

STAGE 2A

PLACE ADVANCED WARNING SIGNS AND DEVICES AS SHOWN IN THE PLANS. CONSTRUCT NEW TURN LANE ON THE SOUTH SIDE OF HWY. 102 WEST OF I-49 AND PORTIONS OF RAMP 4. REMOVE PORTIONS OF EXISTING BRIDGE AS SHOWN ON THE BRIDGE DRAWINGS AND CONSTRUCT BENTS 1 AND 2. SEE SP JOB NO. CA0902 "SPECIAL SAFETY REQUIREMENTS FOR BRIDGES" FOR LIMITATIONS ON LANE CLOSURES DURING BRIDGE REMOVAL.

STAGE 2B

RELOCATE TEMPORARY PRECAST CONCRETE BARRIER TO NORTH SIDE OF HWY. 102 AND RE-STRIPE LANES AS SHOWN IN THE PLANS. CONSTRUCT BENTS 3 AND 4 AND COMPLETE BRIDGE. PLACEMENT OF GIRDERS AND OTHER BRIDGE WORK SHALL BE IN ACCORDANCE WITH SP JOB NO. CA0902 "SPECIAL SAFETY REQUIREMENTS FOR BRIDGES".

STAGE 2C

MILL EXISTING LANES OF HWY. 102 TO THE LIMITS SHOWN ON THE PLANS. CONSTRUCT CONCRETE ISLANDS ON HWY. 102 AND RAMP 4. ANY LANE CLOSURES NEEDED TO CONSTRUCT THE MEDIAN ISLAND ON HWY. 102 SHALL BE DURING OFF-PEAK HOURS AND APPROVED BY THE ENGINEER. ALL WORK SHALL NOT OVERLAP WITH ANY WORK AT ADJACENT INTERCHANGES, RAMPS, OR LOCAL STREETS CROSSING I-49.

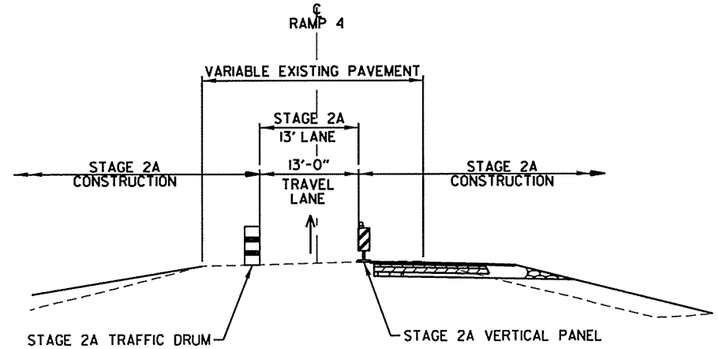

RAMP 4 TYPICAL SECTION
RAMP 4 STA. 1024+42.38 - 1030+53.83

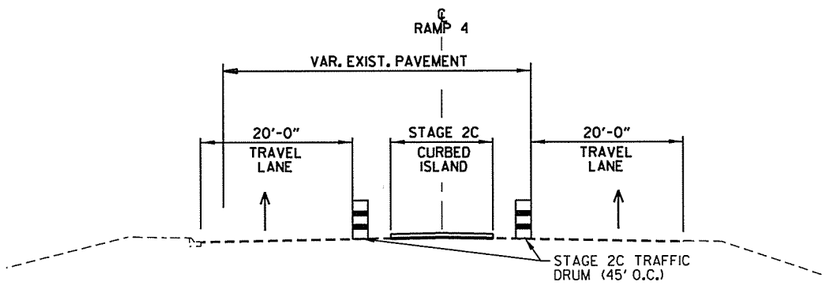

RAMP 4 TYPICAL SECTION
RAMP 4 STA. 1029+39.40 - 1030+86.40

MAINTENANCE OF TRAFFIC DETAIL SIDE ROAD TYPICAL SECTIONS

5/5/2016
10:26:51 AM
\\FCA0902_TS_MOT_HWY102.dgn

DATE	DATE FILMED	DATE REVISED	DATE FILMED	FED.RD. DIST.NO.	STATE	FED.AID PROJ.NO.	SHEET NO.	TOTAL SHEETS
				6	ARK.			
				JOB NO.		CA0902	069	581
				(2)	TYPICAL SECTIONS OF IMPROVEMENT			

STATE OF ARKANSAS
REGISTERED PROFESSIONAL ENGINEER
No. 8760
ANDREW E. FRIES
5/5/16

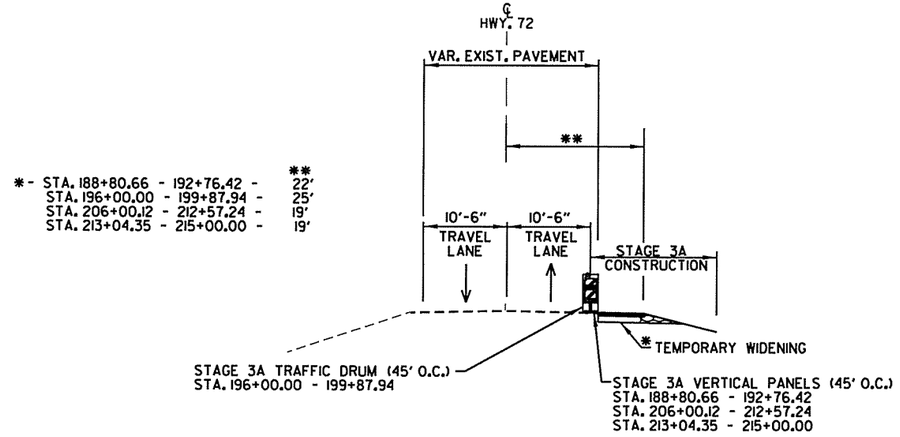

* - STA. 188+80.66 - 192+76.42 - 22'
STA. 196+00.00 - 199+87.94 - 25'
STA. 206+00.12 - 212+57.24 - 19'
STA. 213+04.35 - 215+00.00 - 19'

HWY. 72 TYPICAL SECTION STAGE 3A

HWY. 72 STA. 188+80.66 - 215+00.00

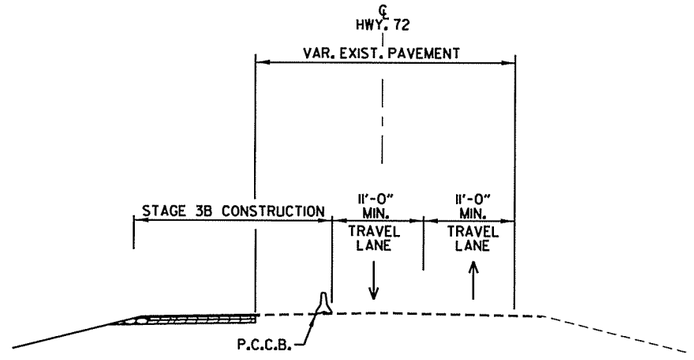

HWY. 72 TYPICAL SECTION STAGE 3B

HWY. 72 STA. 189+00.00 - 200+00.00

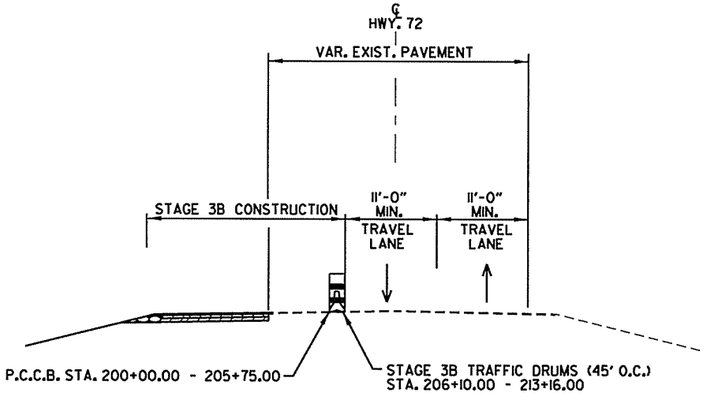

SEQUENCE OF CONSTRUCTION:

STAGE 3A

PLACE ADVANCED WARNING SIGNS AND DEVICES AS SHOWN IN THE PLANS. CONSTRUCT TEMPORARY PAVEMENT ALONG THE SOUTH SIDE OF HWY. 72 AS SHOWN.

STAGE 3B

PLACE TEMPORARY PRECAST CONCRETE BARRIER AND ADDITIONAL ADVANCED WARNING SIGNS AND DEVICES AS SHOWN IN THE PLANS. REMOVE NORTH PORTION OF THE EXISTING HWY. 72 BRIDGE TO THE DIMENSIONS SHOWN ON THE BRIDGE DRAWINGS. CONSTRUCT NORTH PORTION OF BRIDGE WIDENING. ALL BRIDGE WORK SHALL BE IN ACCORDANCE WITH SP JOB NO. CA0902 "SPECIAL SAFETY REQUIREMENTS FOR BRIDGES." CONSTRUCT WIDENING ON NORTH SIDE OF HWY. 72. CONSTRUCT LOOP RAMPS AND AUXILIARY LANES ON I-49. SEE I-49 MAINTENANCE OF TRAFFIC DETAILS FOR MORE INFORMATION.

STAGE 3C

RELOCATE TEMPORARY PRECAST CONCRETE BARRIER AND SHIFT TRAFFIC TO THE LOCATIONS SHOWN ON THE PLANS. REMOVE SOUTH PORTION OF THE EXISTING HWY. 72 BRIDGE TO THE DIMENSIONS SHOWN ON THE BRIDGE DRAWINGS. CONSTRUCT SOUTH PORTION OF BRIDGE WIDENING. ALL BRIDGE WORK SHALL BE IN ACCORDANCE WITH SP JOB NO. CA0902 "SPECIAL SAFETY REQUIREMENTS FOR BRIDGES." CONSTRUCT WIDENING ON SOUTH SIDE OF HWY. 72. PLACE PERMANENT PAVEMENT MARKINGS.

5/5/2016
10:26:55 AM
\\FCCA0902_TS_MOT_HWY72_02.dgn

MAINTENANCE OF TRAFFIC DETAIL SIDE ROAD TYPICAL SECTIONS

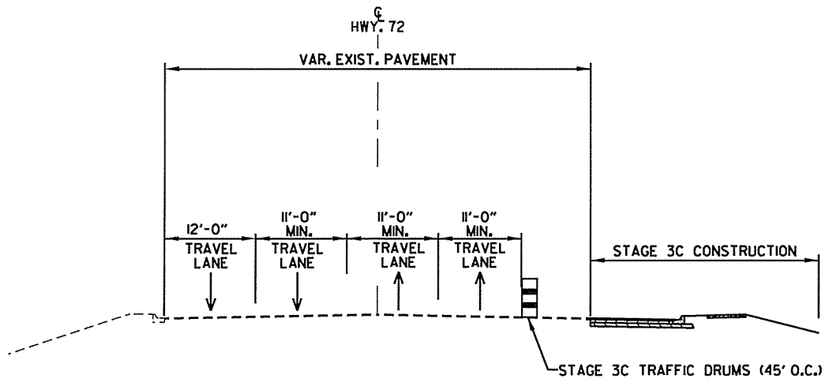

HWY. 72 TYPICAL SECTION STAGE 3C

HWY. 72 STA. 183+92.62 - 188+00.00

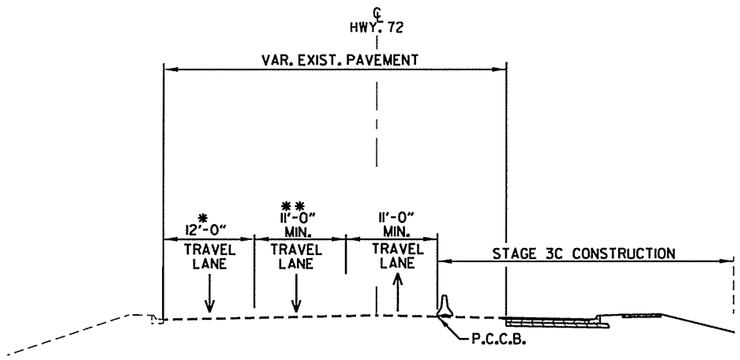

HWY. 72 TYPICAL SECTION STAGE 3C

HWY. 72 STA. 188+00.00 -196+16.60

*- 2-12' LANES
STA. 191+56 TO STATION 196+16.6

**- STA. 196+06 TO STATION 197+56
TAPER FROM 11' TO 0'

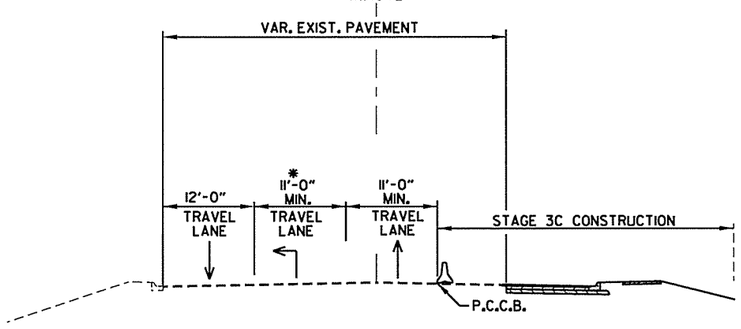

HWY. 72 TYPICAL SECTION STAGE 3C

HWY. 72 STA. 196+16.60 -200+25.00

*- STA. 196+82.85 TO STATION 197+56
TAPER FROM 0' TO 11'

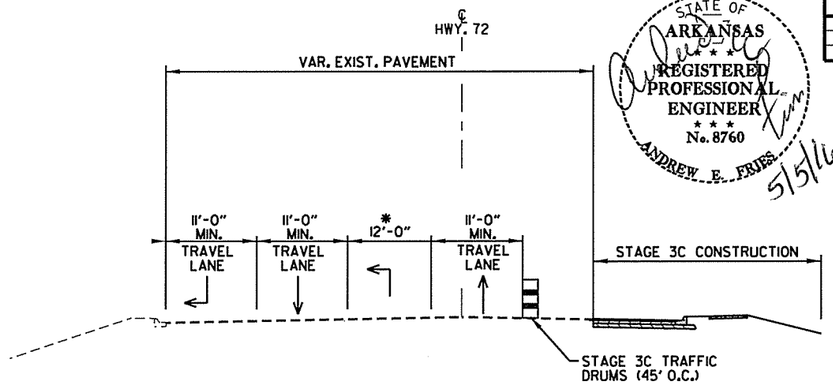

HWY. 72 TYPICAL SECTION STAGE 3C

HWY. 72 STA. 200+25.00 -203+00.00

*- LEFT TURN LANE ONLY
STA. 200+55.07 TO STATION 203+00

*- CONTINUOUS LEFT TURN LANE
STA. 203+00 TO STATION 206+00

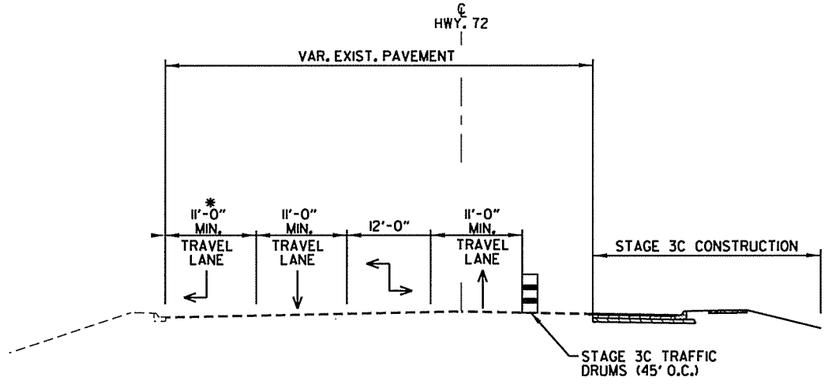

HWY. 72 TYPICAL SECTION STAGE 3C

HWY. 72 STA. 203+00.00 -206+00.00

*- STA. 203+00 TO STATION 204+23
LANE TAPER 11' TO 0'

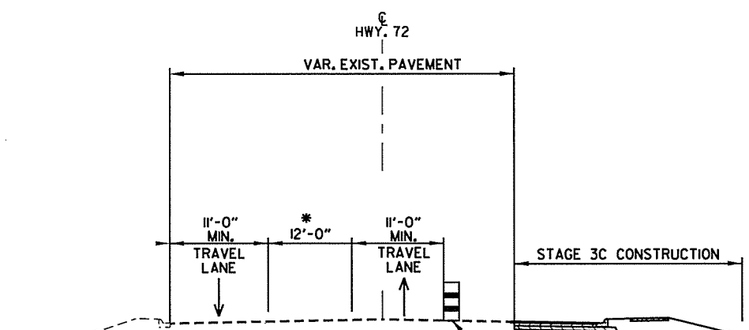

HWY. 72 TYPICAL SECTION STAGE 3C

HWY. 72 STA. 206+00.00 -213+50.00

*- STA. 206+00 TO STATION 207+78.69
LANE TAPER 12' TO 0'

DATE	DATE FILMED	DATE REVISED	DATE FILMED	FED.RD. DST.NO.	STATE	FED.AID PROJ.NO.	SHEET NO.	TOTAL SHEETS
				6	ARK.			
				JOB NO.		CA0902	070	581

(2) TYPICAL SECTIONS OF IMPROVEMENT

STATE OF ARKANSAS
REGISTERED PROFESSIONAL ENGINEER
No. 8760
ANDREW E. FRIES
5/5/16

SEQUENCE OF CONSTRUCTION:

STAGE 3A

PLACE ADVANCED WARNING SIGNS AND DEVICES AS SHOWN IN THE PLANS. CONSTRUCT TEMPORARY PAVEMENT ALONG THE SOUTH SIDE OF HWY. 72 AS SHOWN.

STAGE 3B

PLACE TEMPORARY PRECAST CONCRETE BARRIER AND ADDITIONAL ADVANCED WARNING SIGNS AND DEVICES AS SHOWN IN THE PLANS. REMOVE NORTH PORTION OF THE EXISTING HWY. 72 BRIDGE TO THE DIMENSIONS SHOWN ON THE BRIDGE DRAWINGS. CONSTRUCT NORTH PORTION OF BRIDGE WIDENING. ALL BRIDGE WORK SHALL BE IN ACCORDANCE WITH SP JOB NO. CA0902 "SPECIAL SAFETY REQUIREMENTS FOR BRIDGES." CONSTRUCT WIDENING ON NORTH SIDE OF HWY. 72. CONSTRUCT LOOP RAMPS AND AUXILIARY LANES ON I-49. SEE I-49 MAINTENANCE OF TRAFFIC DETAILS FOR MORE INFORMATION.

STAGE 3C

RELOCATE TEMPORARY PRECAST CONCRETE BARRIER AND SHIFT TRAFFIC TO THE LOCATIONS SHOWN ON THE PLANS. REMOVE SOUTH PORTION OF THE EXISTING HWY. 72 BRIDGE TO THE DIMENSIONS SHOWN ON THE BRIDGE DRAWINGS. CONSTRUCT SOUTH PORTION OF BRIDGE WIDENING. ALL BRIDGE WORK SHALL BE IN ACCORDANCE WITH SP JOB NO. CA0902 "SPECIAL SAFETY REQUIREMENTS FOR BRIDGES." CONSTRUCT WIDENING ON SOUTH SIDE OF HWY. 72. PLACE PERMANENT PAVEMENT MARKINGS.

MAINTENANCE OF TRAFFIC DETAIL SIDE ROAD TYPICAL SECTIONS

5/5/2016
10:26:59 AM
\\CA0902_TS_MOT_HWY72_01.dgn

DATE	DATE FILMED	DATE REVISED	DATE FILMED	FED.RD. DIST.NO.	STATE	FED.AID PROJ.NO.	SHEET NO.	TOTAL SHEETS
				6	ARK.			
				JOB NO.		CA0902	071	581

(2) MAINTENANCE OF TRAFFIC DETAILS

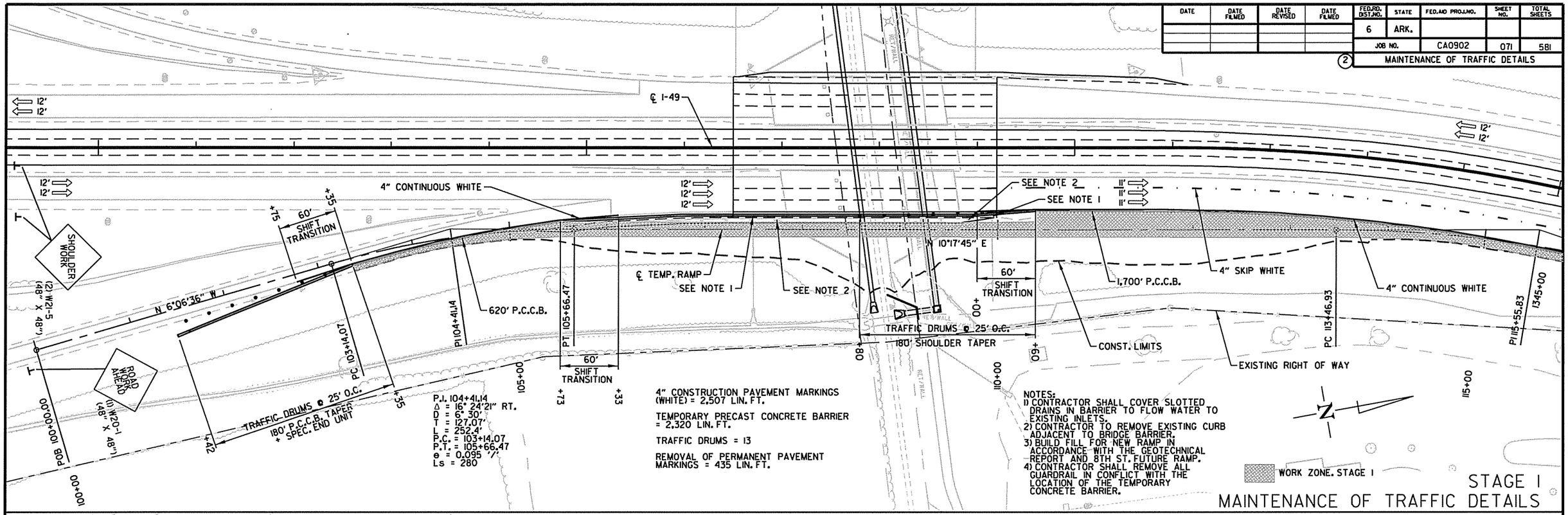

P.I. 104+41.14
Δ = 16° 24'21" RT.
D = 6° 30'
T = 127.07'
L = 252.4'
P.C. = 103+14.07
P.T. = 105+66.47
e = 0.095 '/'
Ls = 280

4" CONSTRUCTION PAVEMENT MARKINGS (WHITE) = 2,507 LIN. FT.

TEMPORARY PRECAST CONCRETE BARRIER = 2,320 LIN. FT.

TRAFFIC DRUMS = 13

REMOVAL OF PERMANENT PAVEMENT MARKINGS = 435 LIN. FT.

NOTES:
1) CONTRACTOR SHALL COVER SLOTTED DRAINS IN BARRIER TO FLOW WATER TO EXISTING INLETS.
2) CONTRACTOR TO REMOVE EXISTING CURB ADJACENT TO BRIDGE BARRIER.
3) BUILD FILL FOR NEW RAMP IN ACCORDANCE WITH THE GEOTECHNICAL REPORT AND 8TH ST. FUTURE RAMP.
4) CONTRACTOR SHALL REMOVE ALL GUARDRAIL IN CONFLICT WITH THE LOCATION OF THE TEMPORARY CONCRETE BARRIER.

WORK ZONE. STAGE I

STAGE I
MAINTENANCE OF TRAFFIC DETAILS

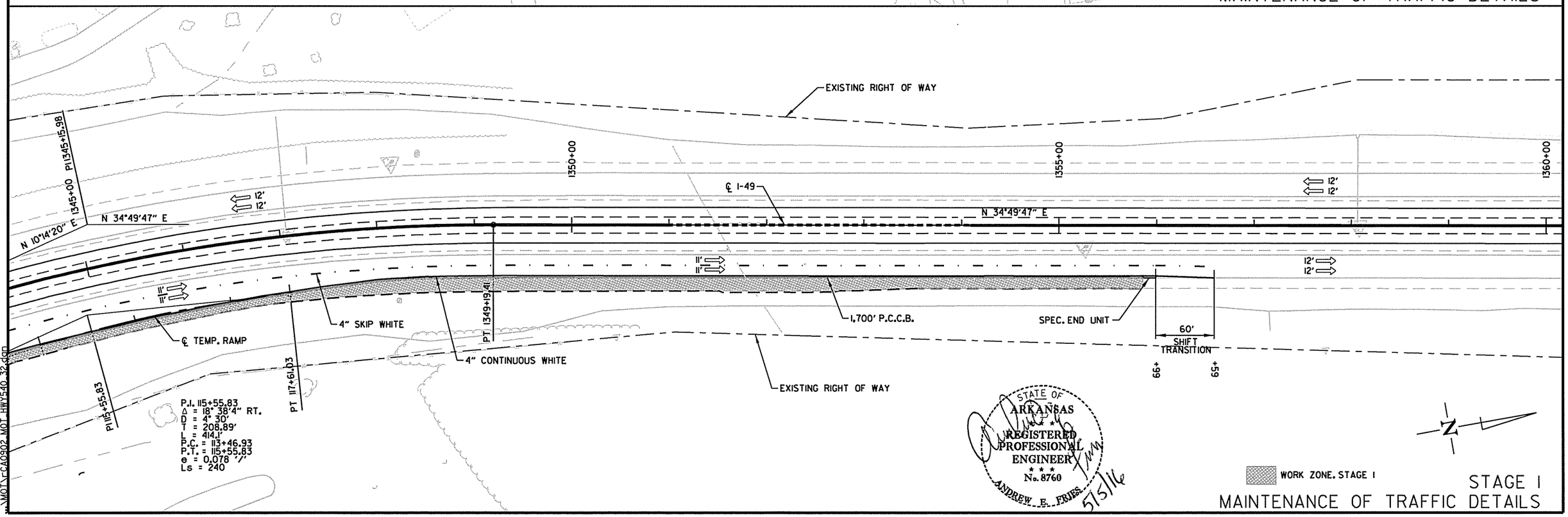

P.I. 115+55.83
Δ = 18° 38'4" RT.
D = 4° 30'
T = 208.89'
L = 414.1'
P.C. = 113+46.93
P.T. = 115+55.83
e = 0.078 '/'
Ls = 240

STATE OF ARKANSAS
REGISTERED PROFESSIONAL ENGINEER
No. 8760
ANDREW E. FRIES
5/5/16

WORK ZONE. STAGE I

STAGE I
MAINTENANCE OF TRAFFIC DETAILS

5/5/2016
10:27:07 AM
\\MOT\CA0902_MOT_HWY540_32.dgn

DATE	DATE FILMED	DATE REVISED	DATE FILMED

FED.RD. DIST.NO.	STATE	FED.AID PROJ.NO.	SHEET NO.	TOTAL SHEETS
6	ARK.			
JOB NO.		CA0902	072	581

(2) MAINTENANCE OF TRAFFIC DETAILS

200' SHOULDER TAPER
TRAFFIC DRUMS @ 25' O.C.
180' P.C.C.B. TAPER + SPEC. END UNIT
60' SHIFT TRANSITION
460' P.C.C.B.
880' P.C.C.B.
2,300' P.C.C.B.
580' P.C.C.B.
SPEC. END UNIT
4" SKIP WHITE
4" CONTINUOUS YELLOW
4" CONTINUOUS WHITE
4" DOTTED WHITE
TRAFFIC DRUMS (11) 55' O.C. (TYP.)
TRAFFIC DRUMS (18) 55' O.C. (TYP.)
℄ TEMP. RAMP
EXISTING RIGHT OF WAY
300' SHIFT TRANSITION
700' ACCELERATION LANE
SHOULDER WORK (2) W21-5 (48" X 48")
ROAD WORK AHEAD (1) W20-1 (48" X 48")
(6) W1-8R 36" X 48" (45' O.C.)
(1) W1-4 (48" X 48")
N 10°14'20" E
N 6°06'36" W
N 10°17'45" E
N 34°49'47" E

P.I. 104+41.14
Δ = 16° 24'21" RT.
D = 6° 30'
T = 127.07'
L = 252.4'
P.C. = 103+14.07
P.T. = 105+66.47
e = 0.095 '/'
Ls = 280

P.I. 115+55.83
Δ = 18° 38'4" RT.
D = 4° 30'
T = 208.89'
L = 414.1'
P.C. = 113+46.93
P.T. = 115+55.83
e = 0.078 '/'
Ls = 240

4" CONSTRUCTION PAVEMENT MARKINGS (WHITE) = 4,943 LIN. FT.

4" CONSTRUCTION PAVEMENT MARKINGS (YELLOW) = 1,316 LIN. FT.

TEMPORARY PRECAST CONCRETE BARRIER = 4,220 LIN. FT.

TRAFFIC DRUMS = 57

REMOVAL OF CONSTRUCTION PAVEMENT MARKINGS = 2,293 LIN. FT.

REMOVAL OF PERMANENT PAVEMENT MARKINGS = 1,960 LIN. FT.

WORK ZONE. STAGE IA

STAGE IA
MAINTENANCE OF TRAFFIC DETAILS

STATE OF ARKANSAS
REGISTERED PROFESSIONAL ENGINEER
No. 8760
ANDREW E. FRIES
5/19/16

STAGE IA
MAINTENANCE OF TRAFFIC DETAILS

5/19/2016
5:50:01 PM
\\MOT_CA0902_MOT_HWY540_33.dgn

DATE	DATE FILMED	DATE REVISED	DATE FILMED	FED.RD. DIST.NO.	STATE	FED.AND PROJ.NO.	SHEET NO.	TOTAL SHEETS
				6	ARK.			
				JOB NO.		CA0902	073	581

(2) MAINTENANCE OF TRAFFIC DETAILS

EXISITING RIGHT OF WAY

POB 1245+00.00
PI 1245+06.47
Δ = 00°00'11"

POB 1256+00.00
PC 1256+72.13
PI 1257+71.38
PT 1258+70.44

1250+00
1255+00
1260+00
RAMP POE 1260+50.00 = I-49 STA. 1260+50.00

℄ I-49

N 20°10'51" E
N 14°13'53" E
℄ WALTON BLVD. RAMP 3

N 14°14'04" E

12'
12'

WALTON BLVD.

BEGIN JOB CA0902
STA. 1256+75.00
LOG MILE 84.56

EXISITING RIGHT OF WAY

STATE OF ARKANSAS
REGISTERED PROFESSIONAL ENGINEER
No. 8760
ANDREW E. FRIES
5/3/16

N

1265+00
1270+00
1275+00
20+00

RET/WALL

℄ I-49 STA. 1271+95.05 =
OLIVE ST. STA. 20+00.00
Δ 100°42'20"

PI 18+31.83
Δ = 00°24'17"
S 86°28'27" E

PI 21+68.38
Δ= 00°38'40"

OLIVE ST.

EXISITING RIGHT OF WAY

STAGE 2
MAINTENANCE OF TRAFFIC DETAILS

5/5/2016
10:21:19 AM
\\MOT\...\CA0902_MOT_HWY540_OL.dgn

DATE	DATE FILMED	DATE REVISED	DATE FILMED	FED.RD. DIST.NO.	STATE	FED.AID PROJ.NO.	SHEET NO.	TOTAL SHEETS
				6	ARK.			
				JOB NO.		CA0902	074	581

(2) MAINTENANCE OF TRAFFIC DETAILS

STAGE 2

4" CONSTRUCTION PAVEMENT MARKINGS (YELLOW) = 24,405 LIN. FT.

4" CONSTRUCTION PAVEMENT MARKINGS (WHITE) = 8,875 LIN. FT.

4" REMOVABLE CONSTRUCTION PAVEMENT MARKINGS (YELLOW) = 867 LIN. FT.

4" REMOVABLE CONSTRUCTION PAVEMENT MARKINGS (WHITE) = 252 LIN. FT.

TEMPORARY PRECAST CONCRETE BARRIER = 29,440 LIN. FT.

TRAFFIC DRUMS = 224

REMOVAL OF CONSTRUCTION PAVEMENT MARKINGS = 2,875 LIN. FT.

REMOVAL OF PERMANENT PAVEMENT MARKINGS = 6,835 LIN. FT.

NOTE: PIN P.C.C.B. WHERE LESS THAN 4' CLEAR CAN BE MAINTAINED TO THE BACK OF THE BARRIER.

WORK ZONE. STAGE 2

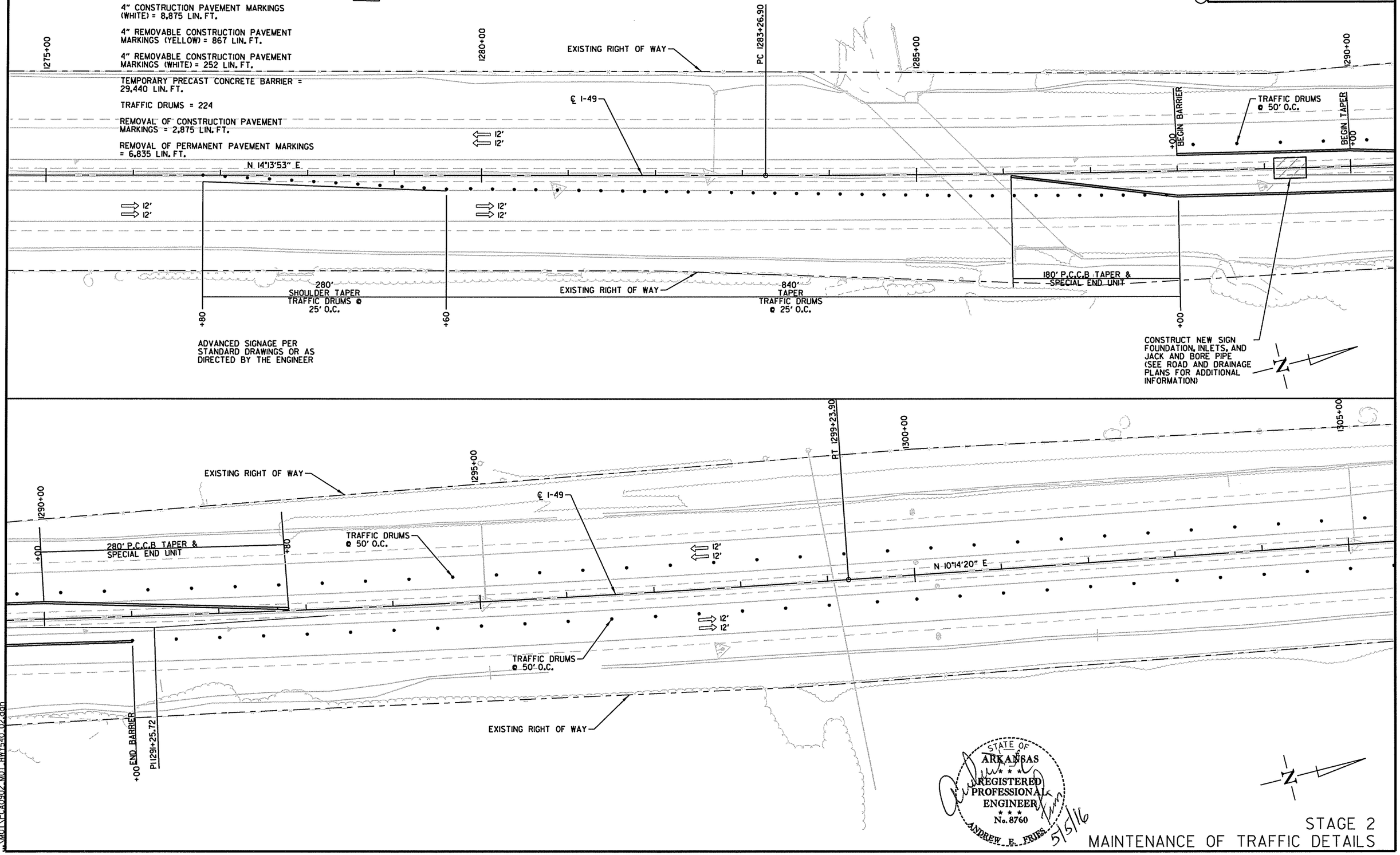

STATE OF ARKANSAS
REGISTERED PROFESSIONAL ENGINEER
No. 8760
ANDREW E. FRIES
5/5/16

STAGE 2
MAINTENANCE OF TRAFFIC DETAILS

5/5/2016 10:27:24 AM
\\MOT\...\CA0902 MOT HWY540 02.dgn

DATE	DATE FILMED	DATE REVISED	DATE FILMED

FED.RD. DIST.NO.	STATE	FED.AID PROJ.NO.	SHEET NO.	TOTAL SHEETS
6	ARK.			
JOB NO.		CA0902	075	581

(2) MAINTENANCE OF TRAFFIC DETAILS

EXISTING RIGHT OF WAY

1305+00

1310+00

TRAFFIC DRUMS @ 50' O.C.

℄ I-49

N 10°14'20" E

12'

12'

70' SHIFT TRANSITION

+00

+70

END P.C.C.B. & SPEC. END UNIT

1315+00

℄ RAMP 4

NOSE
℄ RAMP 4 STA. 1023+44.72, 22.11 RT. =
℄ I-49 STA. 1316+54.54, 67.66' LT.

N 9°06'30" E

11'

12,240' P.C.C.B.

18'

℄ RAMP 1

70' SHIFT TRANSITION

+35

180' P.C.C.B. TAPER & SPECIAL END UNIT

+25

N 5°05'11" E

12,360' P.C.C.B.

RAMP 1

WORK ZONE. STAGE 2

STATE OF ARKANSAS
REGISTERED PROFESSIONAL ENGINEER
No. 8760
ANDREW E. FRIES
5/5/16

4" CONTINUOUS YELLOW

4" SKIP WHITE

EXISTING RIGHT OF WAY

N

WORK ZONE. STAGE 2

EXISTING RIGHT OF WAY

EXISTING RIGHT OF WAY

P.I. 1028+36.56

1030+00

N 2°46'48" E

8°13'12" E

℄ RAMP 4

PT 1029+77.11

℄ HWY. 102

HWY. 102

℄ RAMP 4 STA. 1031+14.03 =
℄ HWY. 102/62 STA. 17+00.00
Δ 90°00'00"

RAMP 3

PC 1026+94.58

℄ I-49 STA. 1324+25.16 =
℄ HWY. 102/62 STA. 20+00.00
Δ 97°27'32"

1320+00

1325+00

1330+00

12,240' P.C.C.B.

+10

+90

180' P.C.C.B. TAPER & SPECIAL END UNIT

+90

+65

360' SHIFT TRANSITION

TRAFFIC DRUMS @ 25' O.C.

4" CONTINUOUS WHITE

N 10°14'20" E

20+00

12,360' P.C.C.B.

860' P.C.C.B.

COVER EXISTING MERGE SIGN IN GORE AREA

4" SKIP WHITE

℄ HWY. 62

4" CONTINUOUS YELLOW

DEVELOP FULL DEPTH MEDIAN SHOULDER IN ACCORDANCE WITH TYPICAL SECTIONS

N 6°06'36" W

P.I. 104+41.14
Δ = 16° 24'21" RT.
D = 6° 30'
T = 127.07'
L = 252.4'
P.C. = 103+14.07
P.T. = 105+66.47
e = 0.095 '/'
Ls = 280

PC 103+14.07

PI 104+41.14

105+00

PT 105+66.47

HWY. 62

RAMP 1

EXISTING RIGHT OF WAY

RAMP 2

N

STAGE 2
MAINTENANCE OF TRAFFIC DETAILS

5/5/2016
10:27:30 AM
\\DOT\...\CA0902_MOT_HWY540_03.dgn

DATE	DATE FILMED	DATE REVISED	DATE FILMED	FED.RD. DIST.NO.	STATE	FED.AID PROJ.NO.	SHEET NO.	TOTAL SHEETS
				6	ARK.			
				JOB NO.		CA0902	076	581

(2) MAINTENANCE OF TRAFFIC DETAILS

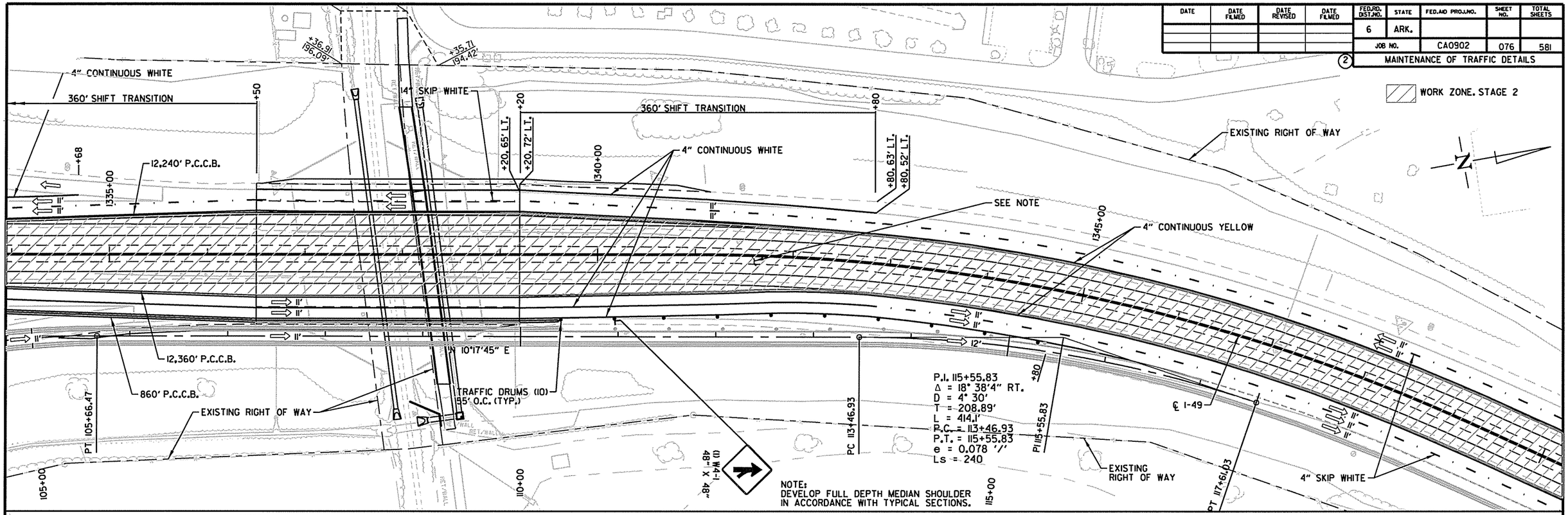

STAGE 2
MAINTENANCE OF TRAFFIC DETAILS

5/5/2016
10:27:40 AM
\MOT\CA0902_MOT_HWY540_04.dgn

DATE	DATE FILMED	DATE REVISED	DATE FILMED	FED.RD. DIST.NO.	STATE	FED.AID PROJ.NO.	SHEET NO.	TOTAL SHEETS
				6	ARK.			
				JOB NO.		CA0902	077	581

(2) MAINTENANCE OF TRAFFIC DETAILS

WORK ZONE. STAGE 2

EXISTING RIGHT OF WAY

1365+00

12,240' P.C.C.B.

1370+00

℄ I-49

1375+00

N 34°49'47" E

12,360' P.C.C.B.

4" SKIP WHITE

+20

280' TAPER
TRAFFIC DRUMS
@ 25' SPACING

4" CONTINUOUS YELLOW

+80

EXISTING RIGHT OF WAY

WORK ZONE. STAGE 2

BATTLEFIELD BLVD.

EXISTING RIGHT OF WAY

EXISTING RIGHT OF WAY

TRAFFIC DRUMS
@ 50' SPACING

1380+00

PC 138+91.69

1385+00

1390+00

12,240' P.C.C.B.

℄ I-49

4" SKIP WHITE

N 34°49'47" E

12,360' P.C.C.B.

+80

BEGIN 70' TAPER

CONST. LIMITS

4" CONTINUOUS YELLOW

440' P.C.C.B WITH
SPECIAL END UNIT

EXISTING RIGHT OF WAY

EXISTING RIGHT OF WAY

STATE OF ARKANSAS
REGISTERED PROFESSIONAL ENGINEER
No. 8760
ANDREW E. FRIES
5/5/16

STAGE 2
MAINTENANCE OF TRAFFIC DETAILS

5/5/2016
10:27:46 AM
\\MOT\CA0902_MOT_HWY540_05.dgn

DATE	DATE FILMED	DATE REVISED	DATE FILMED

FED.RD. DIST.NO.	STATE	FED.AID PROJ.NO.	SHEET NO.	TOTAL SHEETS
6	ARK.			
JOB NO.		CA0902	078	581

(2) MAINTENANCE OF TRAFFIC DETAILS

STATE OF ARKANSAS
REGISTERED PROFESSIONAL ENGINEER
No. 8760
ANDREW E. FRIES
5/5/16

WORK ZONE. STAGE 2

EXISTING RIGHT OF WAY

12,240' P.C.C.B.

1395+00

1400+00

℄ I-49

1405+00

4" SKIP WHITE

12,360' P.C.C.B.

4" CONTINUOUS YELLOW

CONST. LIMITS

EXISTING RIGHT OF WAY

EXISTING RIGHT OF WAY

N

WORK ZONE. STAGE 2

1405+00

EXISTING RIGHT OF WAY

CONST. LIMITS

1410+00

℄ I-49

12,240' P.C.C.B.

PT 1414+32.51

1415+00

1420+00

12'

4" CONTINUOUS YELLOW

+20

BEGIN 280' TAPER WITH TRAFFIC DRUMS @ 25' O.C.

+80

540' P.C.C.B WITH SPECIAL END UNIT

BEGIN 70' P.C.C.B. TAPER

4" SKIP WHITE

12,360' P.C.C.B.

CONST. LIMITS

EXISTING RIGHT OF WAY

600' TRAFFIC DRUMS @ 50' O.C.

N

STAGE 2
MAINTENANCE OF TRAFFIC DETAILS

5/5/2016
10:27:51 AM
\\MOT\CA0902 MOT HWY540 06.dgn

DATE	DATE FILMED	DATE REVISED	DATE FILMED	FED.RD. DIST.NO.	STATE	FED.AID PROJ.NO.	SHEET NO.	TOTAL SHEETS
				6	ARK.			
				JOB NO.		CA0902	079	581

(2) MAINTENANCE OF TRAFFIC DETAILS

WORK ZONE. STAGE 2

EXISTING RIGHT OF WAY

RAMP 4

1425+00

1420+00

CONST. LIMITS

℄ E. CENTRAL AVE.

N 43°49'05" E

PT200+75.36

℄ I-49 STA. 1430+31.09 = ℄ E. CENTRAL AVE./HWY. 72 STA. 194+36.12
Δ 90°00'00"

℄ I-49

12,240' P.C.C.B.

II' II' II'

N 46°11'26" W

II' II'

12,360' P.C.C.B.

4" SKIP WHITE

4" CONTINUOUS YELLOW

CONST. LIMITS

RAMP 1

EXISTING RIGHT OF WAY

℄ HWY. 72

PC1432+52.00

EXISTING RIGHT OF WAY

EXISTING RIGHT OF WAY

L

NOTE:
CONTRACTOR SHALL REMOVE EXISTING GUARDRAIL AND CABLE BARRIER IN ACCORDANCE WITH THE ROADWAY PLANS.

STATE OF ARKANSAS
REGISTERED PROFESSIONAL ENGINEER
No. 8760
ANDREW E. FRIES
5/31/16

12,240' P.C.C.B.

4" SKIP WHITE

+74

TRAFFIC DRUMS @ 55' O.C.

180' P.C.C.B. TAPER & SPECIAL END UNIT

+36

70' SHIFT TRANSITION

+66

TRAFFIC DRUMS @ 25' O.C.

+36

RAMP 3

1435+00

1440+00

1445+00

PI1448+06.05
Δ 00°02'49"

II' II'

N 46°11'26" W

SEE NOTE

CONST. LIMITS

EXISTING CABLE BARRIER

N 46°11'26" W

12' 12'

12' 12'

℄ I-49

12,360' P.C.C.B.

70' SHIFT TRANSITION

+87

+57

END P.C.C.B. & SPECIAL END UNIT

4" CONTINUOUS YELLOW

TERMINATE CABLE BARRIER AT STA. 1436+50 IN ACCORDANCE WITH STANDARD DETAIL GC-1

END JOB CA0902
STA. 1438+00.00
LOG MILE 87.99

RAMP 2

EXISTING RIGHT OF WAY

EXISTING RIGHT OF WAY

STAGE 2
MAINTENANCE OF TRAFFIC DETAILS

5/5/2016 12:27:57 AM
\MOT\CA0902 MOT HWY540 07.dgn

STATE OF ARKANSAS
REGISTERED PROFESSIONAL ENGINEER
No. 8760
ANDREW E. FRIES
5/5/16

DATE	DATE FILMED	DATE REVISED	DATE FILMED

FED.RD. DIST.NO.	STATE	FED.AID PROJ.NO.	SHEET NO.	TOTAL SHEETS
6	ARK.			
JOB NO.		CA0902	080	581

(2) MAINTENANCE OF TRAFFIC DETAILS

WORK ZONE. STAGE 2A

EXISTING RIGHT OF WAY
EXISTING ROADWAY
POB 1020+93.14
PC 1021+25.38
TRAFFIC DRUMS (6) 45' O.C. (TYP.)
1315+00
N 9°06'30" E
II'
II'
VERTICAL PANELS (5) 45' O.C. (TYP.)
4" CONTINUOUS YELLOW
PT 1024+81.11
1325+00
TRAFFIC DRUMS (5) 25' O.C. (TYP.)
TRAFFIC DRUMS (3) 90' O.C. (TYP.)
PI 1028+36.56
SEE HWY. 102 SHEETS FOR MOT DETAIL
1330+00
II'
II'
S 87°13'12" E
EXISTING RIGHT OF WAY
℄ RAMP 4 STA. 1031+14.03 =
℄ HWY. 102 STA. 17+00.00
△ 90°00'00"
N 2°46'48" E
RAMP 3
HWY. 102
N 11°20'47" W
RAMP 4
℄ RAMP 4
PT 1029+77.11
℄ HWY. 102
SEE HWY. 102 SHEETS FOR MOT DETAIL
PC 1026+94.58
VERTICAL PANELS (4) 90' O.C. (TYP.)
1320+00
℄ I-49
℄ I-49 STA. 1324+25.16 =
℄ HWY. 102/62 STA. 20+00.00
△ 97°27'32"
1325+00
II'
II'
N 10°14'20" E
20+00
NOSE
℄ RAMP 4 STA. 1023+44.72, 22.11 RT. =
℄ I-49 STA. 1316+54.54, 67.66' LT.

STAGE 2A
MAINTENANCE OF TRAFFIC DETAILS

N 10°14'20" E
20+00
℄ I-49
PI 1023+05.16
II'
II'
N 15°05'11" E
℄ I-49 STA. 1324+25.16 =
℄ HWY. 102/62 STA. 20+00.00
△ 97°27'32"
℄ HWY. 62
PC 1310+84.24
PI 1311+81.25
PT 1312+78.14
POE 1314+00.00
RAMP 1
SEE HWY. 102 SHEETS FOR MOT DETAIL
RAMP 2
EXISTING RIGHT OF WAY
HWY. 62
S 87°13'12" E
EXISTING RIGHT OF WAY
4" CONTINUOUS WHITE
SEE HWY. 102 SHEETS FOR MOT DETAIL

WORK ZONE. STAGE 2B

STAGE 2B
MAINTENANCE OF TRAFFIC DETAILS

5/5/2016
5:28:03 AM
MOT_CA0902 MOT HWY540_08.dgn

DATE	DATE FILMED	DATE REVISED	DATE FILMED

FED.RD. DIST.NO.	STATE	FED.AID PROJ.NO.	SHEET NO.	TOTAL SHEETS
6	ARK.			
JOB NO.		CA0902	081	581

(2) MAINTENANCE OF TRAFFIC DETAILS

STATE OF ARKANSAS
REGISTERED PROFESSIONAL ENGINEER
No. 8760
ANDREW E. FRIES
5/19/16

WORK ZONE. STAGE 2A

4" CONSTRUCTION PAVEMENT MARKINGS (YELLOW) = 6,082 LIN. FT.

4" CONSTRUCTION PAVEMENT MARKINGS (WHITE) = 1,665 LIN. FT.

12" CONSTRUCTION PAVEMENT MARKINGS (WHITE) = 107 LIN. FT.

4" REMOVABLE CONSTRUCTION PAVEMENT MARKINGS (YELLOW) = 72 LIN. FT.

4" REMOVABLE CONSTRUCTION PAVEMENT MARKINGS (WHITE) = 1,285 LIN. FT.

CONSTURCTION PAVMENT MARKINGS (WHITE) ARROWS = 4

TEMPORARY PRECAST CONCRETE BARRIER = 260 LIN. FT.

TRAFFIC DRUMS = 90

VERTICAL PANELS = 29

REMOVAL OF PERMANENT PAVEMENT MARKINGS = 6,2363 LIN. FT.

BEGIN CONSTRUCTION
STA. 04+65.50

END CONSTRUCTION
STA. 18+00.00

MOBERLY LN.

PHYLLIS ST.

HWY. 102

HWY. 62

℄ HWY. 102

℄ RAMP 4 STA. 1031+14.03 =
℄ HWY. 102 STA. 17+00
△ 90°00'00"

℄ I-49 STA. 1324+25.16 =
℄ HWY. 102762 STA. 20+00.00
△ 97°27'32"

PC 3+32.14

PT 5+54.42

STA. 6+27.65 BEGIN TAPER

STA. 8+00 END TAPER

PI 13+49.09
△ = 00°01'08"

PI 4+43.28

PI 1029+77.11

POE 28+00.00

S 87°14'20" E

S 87°13'12" E

N 2°46'48" E

500'

4" CONTINUOUS DOUBLE YELLOW

4" CONTINUOUS WHITE

4" SKIP WHITE

4" DOTTED YELLOW

4" DOTTED WHITE

4" CONTINUOUS YELLOW

12" WHITE STOP BAR

LEFT TURN ARROW

EXISTING RIGHT OF WAY

PROPOSED RIGHT OF WAY

TRAFFIC DRUMS (4) 25' O.C. TYP.)

TRAFFIC DRUMS (6) 12' O.C. (TYP.)

TRAFFIC DRUMS (9) 10' O.C. (TYP.)

TRAFFIC DRUMS (8) 10' O.C. (TYP.)

TRAFFIC DRUMS (4) 15' O.C. (TYP.)

TRAFFIC DRUMS (9) 20' O.C. (TYP.)

TRAFFIC DRUMS (5) 40' O.C. (TYP.)

VERTICAL PANELS (25) 45' O.C. (TYP.)

VERTICAL PANELS (9) 95' O.C. (TYP.)

260' P.C.C.B. AND (2) SPEC. END UNITS

ROAD WORK AHEAD (48" X 48") (1) W20-1

ROAD WORK 1500 FT (48" X 48") (1) W20-1

ROAD WORK 1000 FT (48" X 48") (1) W20-1

ROAD WORK 500 FT (48" X 48") (1) W20-1

(2) W20-1 (48" X 48")

END ROAD WORK (48" X 24") (1) G20-2

END ROAD WORK (48" X 24") (1) G20-2

END ROAD WORK (48" X 24") (1) G20-2

END ROAD WORK (48" X 24") (1) G20-2

5/19/2016
5:50:06 PM
M:\MOT\CA0902_MOT_HWY540_09.dgn

STAGE 2A
MAINTENANCE OF TRAFFIC DETAILS

DATE	DATE FILMED	DATE REVISED	DATE FILMED

FED.RD. DIST.NO.	STATE	FED.AID PROJ.NO.	SHEET NO.	TOTAL SHEETS
6	ARK.			
JOB NO.		CA0902	082	581

(2) MAINTENANCE OF TRAFFIC DETAILS

STATE OF ARKANSAS
REGISTERED PROFESSIONAL ENGINEER
No. 8760
ANDREW E. FRIES
5/19/16

WORK ZONE. STAGE 2B

4" CONSTRUCTION PAVEMENT MARKINGS (YELLOW) = 5,114 LIN. FT.

4" CONSTRUCTION PAVEMENT MARKINGS (WHITE) = 1,388 LIN. FT.

12" CONSTRUCTION PAVEMENT MARKINGS (WHITE) = 120 LIN. FT.

4" REMOVABLE CONSTRUCTION PAVEMENT MARKINGS (YELLOW) = 90 LIN. FT.

4" REMOVABLE CONSTRUCTION PAVEMENT MARKINGS (WHITE) = 955 LIN. FT.

CONSTRUCTION PAVEMENT MARKINGS (WHITE) ARROWS = 5

TEMPORARY PRECAST CONCRETE BARRIER = 260 LIN. FT.

TRAFFIC DRUMS = 27

REMOVAL OF CONSTRUCTION PAVEMENT MARKINGS = 8,340 LIN. FT.

REMOVAL OF PERMANENT PAVEMENT MARKINGS = 546 LIN. FT.

ROAD WORK AHEAD (1) W20-1 (48" X 48")

END ROAD WORK (1) G20-2 (48" X 24")

MOBERLY LN.

BEGIN CONSTRUCTION
STA. 04+65.50

PC 3+32.14

PT 5+54.42

5+00

10+00

℄ HWY. 102

HWY. 102

LEFT TURN ARROW

4" SKIP WHITE

PI 13+49.09
Δ = 00°01'08"

4" DOUBLE YELLOW

500' 500' 500'

ROAD WORK 1500 FT (1) W20-1 (48" X 48")

ROAD WORK 1000 FT (1) W20-1 (48" X 48")

ROAD WORK 500 FT (1) W20-1 (48" X 48")

PI 4+43.28

END ROAD WORK (1) G20-2 (48" X 24")

ROAD WORK AHEAD (1) W20-1 (48" X 48")

END ROAD WORK (1) G20-2 (48" X 24")

PHYLLIS ST.

N

℄ I-49 STA. 1324+25.16 =
℄ HWY. 102/62 STA. 20+00.00
Δ 97°27'32"

ROAD WORK AHEAD (1) W20-1 (48" X 48")

ROAD WORK 500 FT (1) W20-1 (48" X 48")

ROAD WORK 1000 FT (1) W20-1 (48" X 48")

ROAD WORK 1500 FT (1) W20-1 (48" X 48")

PHYLLIS ST.

END ROAD WORK (1) G20-2 (48" X 24")

TRAFFIC DRUMS (8) 10' O.C. (TYP.)

4" CONTINUOUS WHITE

12" WHITE STOP BAR

RIGHT TURN ARROW

15+00

260' P.C.C.B. AND (2) SPECIAL END UNITS

1325+00

20+00

12" WHITE STOP BAR

LEFT TURN ARROW

4" DOUBLE YELLOW

4" DOTTED WHITE

MHO

25+00

HWY. 102

S 87°13'12" E

S 87°13'12" E ℄ HWY. 62

HWY. 62

175'

4" CONTINUOUS WHITE

4" SKIP WHITE

4" DOUBLE YELLOW

TRAFFIC DRUMS (10) 25' O.C. (TYP.)

(1) R3-7 RT. (30" X 30")

RIGHT LANE MUST TURN RIGHT

00+30.01

4" DOTTED YELLOW

℄ RAMP 4 STA. 1031+14.03 =
℄ HWY. 102 STA. 17+00
Δ 90°00'00"

4" CONTINUOUS YELLOW

PI 1029+77.11

4" CONTINUOUS WHITE

4" SKIP WHITE

4" DOUBLE YELLOW

4" CONTINUOUS WHITE

LEFT TURN ARROW

12" WHITE STOP BAR

12" WHITE STOP BAR

4" CONTINUOUS WHITE

END CONSTRUCTION
STA. 18+00.00

N 2°46'48" E

℄ I-49

ROAD WORK AHEAD (1) W20-1 (48" X 48")

ROAD WORK AHEAD (2) W20-1 (48" X 48")

END ROAD WORK (1) G20-2 (48" X 24")

N

STAGE 2B
MAINTENANCE OF TRAFFIC DETAILS

5/19/2016
5:50:09 PM
M:\MOT\CA0902_MOT_HWY540_10.dgn

DATE	DATE FILMED	DATE REVISED	DATE FILMED

FED.RD. DIST.NO.	STATE	FED.AID PROJ.NO.	SHEET NO.	TOTAL SHEETS
6	ARK.			
JOB NO.		CA0902	083	581

(2) MAINTENANCE OF TRAFFIC DETAILS

STATE OF ARKANSAS
REGISTERED PROFESSIONAL ENGINEER
No. 8760
ANDREW E. FRIES
5/19/16

WORK ZONE, STAGE 2C

4" CONSTRUCTION PAVEMENT MARKINGS (YELLOW) = 6,053 LIN. FT.

4" CONSTRUCTION PAVEMENT MARKINGS (WHITE) = 1,775 LIN. FT.

12" CONSTRUCTION PAVEMENT MARKINGS (WHITE) = 113 LIN. FT.

4" REMOVABLE CONSTRUCTION PAVEMENT MARKINGS (YELLOW) = 488 LIN. FT.

4" REMOVABLE CONSTRUCTION PAVEMENT MARKINGS (WHITE) = 1,868 LIN. FT.

CONSTRUCTION PAVEMENT MARKINGS (WHITE) ARROWS = 3

TRAFFIC DRUMS = 105

REMOVAL OF CONSTRUCTION PAVEMENT MARKINGS = 8,107 LIN. FT.

REMOVAL OF PERMANENT PAVEMENT MARKINGS = 2,635 LIN. FT.

ROAD WORK AHEAD (1) W20-1 (48" X 48")

END ROAD WORK (1) G20-2 (48" X 24")

MOBERLY LN.

BEGIN CONSTRUCTION
STA. 04+65.50

4" DOTTED YELLOW
4" DOTTED WHITE
℄ HWY. 102
4" CONTINUOUS WHITE
4" CONTINUOUS YELLOW
TRAFFIC DRUMS (8) 20' O.C. (TYP.)
TRAFFIC DRUMS (30) 45' O.C. (TYP.)

5+00 PT 5+54.42 0+00

PI 13+49.09
Δ = 00°01'08"

S 87°14'20" E

HWY. 102

500' 500' 500'

ROAD WORK 1500 FT
ROAD WORK 1000 FT
ROAD WORK 500 FT
(1) W20-1 (48" X 48")

PI 4+43.28

PROPOSED RIGHT OF WAY
PROPOSED TCE
CONST. LIMITS

PHYLLIS ST.

N

℄ RAMP 4 STA. 1031+14.03 =
℄ HWY. 102 STA. 17+00
Δ 90°00'00"

END CONSTRUCTION
STA. 18+00.00

PHYLLIS ST.

TRAFFIC DRUMS (4) SPACED EVENLY
TRAFFIC DRUMS (13) 45' O.C. (TYP.)
12" WHITE STOP BAR
4" CONTINUOUS YELLOW
4" DOTTED YELLOW
4" DOTTED WHITE
12" WHITE STOP BAR
LEFT TURN ARROW
4" CONTINUOUS YELLOW
4" CONTINUOUS WHITE

15+00
1325+00
20+00

S 87°13'12" E

HWY. 102

℄ HWY. 102

HWY. 62

℄ HWY. 62

12" WHITE STOP BAR

RIGHT TURN ARROW
(1) R3-7 RT. (30" X 30")
RIGHT LANE MUST TURN RIGHT

10+30.01

N 2°46'48" E

TRAFFIC DRUMS (5) 20' O.C. (TYP.)

PI 1029+77.11

12" WHITE STOP BAR
4" CONTINUOUS WHITE

TRAFFIC DRUMS (22) 20' O.C. (TYP.)

℄ I-49 STA. 1324+25.16 =
℄ HWY. 102/62 STA. 20+00.00
Δ 97°27'32"

ROAD WORK AHEAD (1) W20-1 (48" X 48")
ROAD WORK AHEAD (2) W20-1 (48" X 48")

500' 500' 500'
ROAD WORK 500 FT
ROAD WORK 1000 FT
ROAD WORK 1500 FT
(1) W20-1 (48" X 48")

25+00

END ROAD WORK (1) G20-2 (48" X 24")

N

STAGE 2C
MAINTENANCE OF TRAFFIC DETAILS

5/19/2016
5:50:13 PM
\\MOT\CA0902_MOT_HWY540_13.dgn

DATE	DATE FILMED	DATE REVISED	DATE FILMED	FED.RD. DIST.NO.	STATE	FED.AID PROJ.NO.	SHEET NO.	TOTAL SHEETS
				6	ARK.			
				JOB NO.		CA0902	084	581

2 MAINTENANCE OF TRAFFIC DETAILS

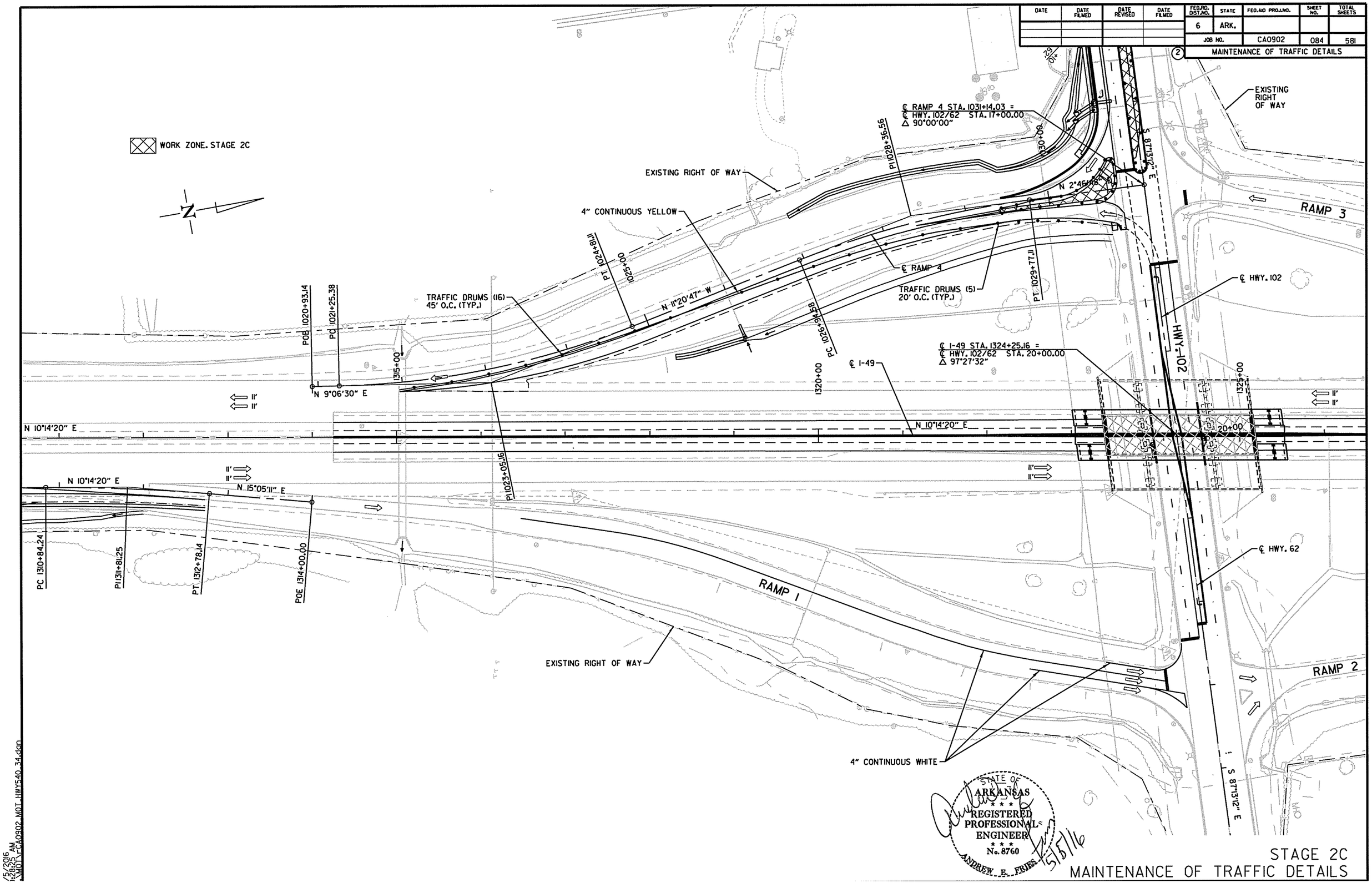

STATE OF ARKANSAS
REGISTERED PROFESSIONAL ENGINEER
No. 8760
ANDREW E. FRIES
5/5/16

STAGE 2C
MAINTENANCE OF TRAFFIC DETAILS

/5/2016
:28:25 AM
\MOT\CA0902_MOT_HWY540_34.dgn

DATE	DATE FILMED	DATE REVISED	DATE FILMED	FED.RD. DIST.NO.	STATE	FED.AID PROJ.NO.	SHEET NO.	TOTAL SHEETS
				6	ARK.			
				JOB NO.		CA0902	085	581

(2) MAINTENANCE OF TRAFFIC DETAILS

WORK ZONE. STAGE 3

EXISTING RIGHT OF WAY

END P.C.C.B. + SPEC. END UNIT +62

+60 70' SHIFT TRANSITION +30

4" CONTINUOUS WHITE

CONST. LIMITS

5,480' P.C.C.B.

℄ I-49

12' 12'

11' 11'

℄ WALTON BLVD. RAMP 3

4" SKIP WHITE

WALTON BLVD.

STAGE 3

4" CONSTRUCTION PAVEMENT MARKINGS (WHITE) = 21,975 LIN. FT.

4" CONSTRUCTION PAVEMENT MARKINGS (YELLOW) = 20,923 LIN. FT.

4" REMOVABLE CONSTRUCTION PAVEMENT MARKINGS (WHITE) = 14,428 LIN. FT.

4" CONSTRUCTION PAVEMENT MARKINGS (YELLOW) = 522 LIN. FT.

TEMPORARY PRECAST CONCRETE BARRIER = 15,420 LIN. FT.

TRAFFIC DRUMS = 305

REMOVAL OF CONSTRUCTION PAVEMENT MARKINGS = 34,966 LIN. FT.

REMOVAL OF PERMANENT PAVEMENT MARKINGS = 23,417 LIN. FT.

BEGIN JOB CA0902
STA. 1256+75.00
LOG MILE 84.56

EXISTING RIGHT OF WAY

N

EXISTING RIGHT OF WAY

STATE OF ARKANSAS
REGISTERED PROFESSIONAL ENGINEER
No. 8760
ANDREW E. FRIES
5/19/16

WORK ZONE. STAGE 3

℄ I-49 STA. 1271+95.05 = ℄ OLIVE ST. STA. 20+00.00
△ 100°42'20"

RETAINING WALL

CONST. LIMITS

EXISTING RIGHT OF WAY

4" CONTINUOUS WHITE

℄ I-49

5,480' P.C.C.B.

11' 11'

12' 12' 12'

11' 11' 12'

18'

5,260' P.C.C.B.

4" SKIP WHITE

EXISTING RIGHT OF WAY

EXISTING RIGHT OF WAY

CONST. LIMITS

OLIVE ST.

163' SHOULDER TAPER

+37

70' SHIFT TRANSITION

TRAFFIC DRUMS @ 25' O.C.

100' SHOULDER TAPER

TRAFFIC DRUMS @ 55' O.C.

180' P.C.C.B. TAPER + SPEC. END UNIT

+04 +07 +00

N

STAGE 3
MAINTENANCE OF TRAFFIC DETAILS

5/19/2016 3:50:17 PM
MOT\CA0902 MOT HWY540 14.dgn

DATE	DATE FILMED	DATE REVISED	DATE FILMED	FED.RD. DIST.NO.	STATE	FED.AID PROJ.NO.	SHEET NO.	TOTAL SHEETS
				6	ARK.			
				JOB NO.		CA0902	086	581

(2) MAINTENANCE OF TRAFFIC DETAILS

WORK ZONE. STAGE 3

4" CONTINUOUS WHITE
CONST. LIMITS
1275+00
1280+00
5,480' P.C.C.B.
PC 1283+26.90
EXISTING RIGHT OF WAY
1285+00
4" SKIP WHITE
1290+00
℄ I-49
N 14°13'53" E
5,260' P.C.C.B.
CONST. LIMITS
EXISTING RIGHT OF WAY

WORK ZONE. STAGE 3

EXISTING RIGHT OF WAY
1290+00
4" SKIP WHITE
1295+00
℄ I-49
CONST. LIMITS
PT 1299+23.90
1300+00
5,480' P.C.C.B.
1305+00
N 10°14'20" E
P1291+25.72
EXISTING RIGHT OF WAY
5,260' P.C.C.B.
CONST. LIMITS
4" CONTINUOUS WHITE

STATE OF ARKANSAS
REGISTERED PROFESSIONAL ENGINEER
No. 8760
ANDREW E. FRIES
5/5/16

STAGE 3
MAINTENANCE OF TRAFFIC DETAILS

5/5/2016 12:29:35 AM
\MOT_FCA0902_MOT_HWY540_I5.dgn

DATE	DATE FILMED	DATE REVISED	DATE FILMED	FED.RD. DIST.NO.	STATE	FED.AID PROJ.NO.	SHEET NO.	TOTAL SHEETS
				6	ARK.			
				JOB NO.		CA0902	087	581

MAINTENANCE OF TRAFFIC DETAILS

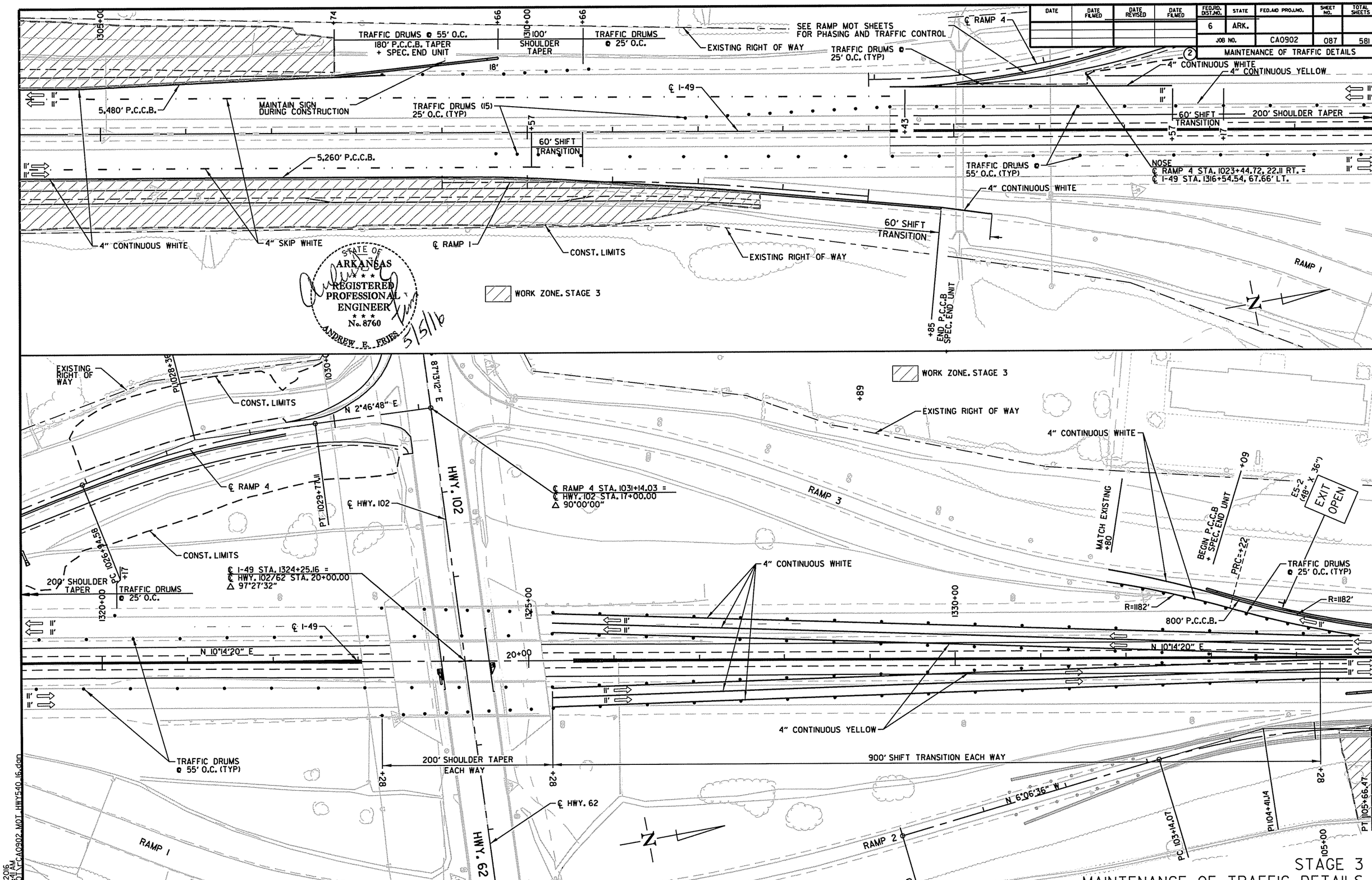

STAGE 3
MAINTENANCE OF TRAFFIC DETAILS

/5/2016
:28:41 AM
\MOT\FCA0902_MOT_HWY540_16.dgn

DATE	DATE FILMED	DATE REVISED	DATE FILMED	FED.RD. DIST.NO.	STATE	FED.AID PROJ.NO.	SHEET NO.	TOTAL SHEETS
				6	ARK.			
				JOB NO.		CA0902	088	581

(2) MAINTENANCE OF TRAFFIC DETAILS

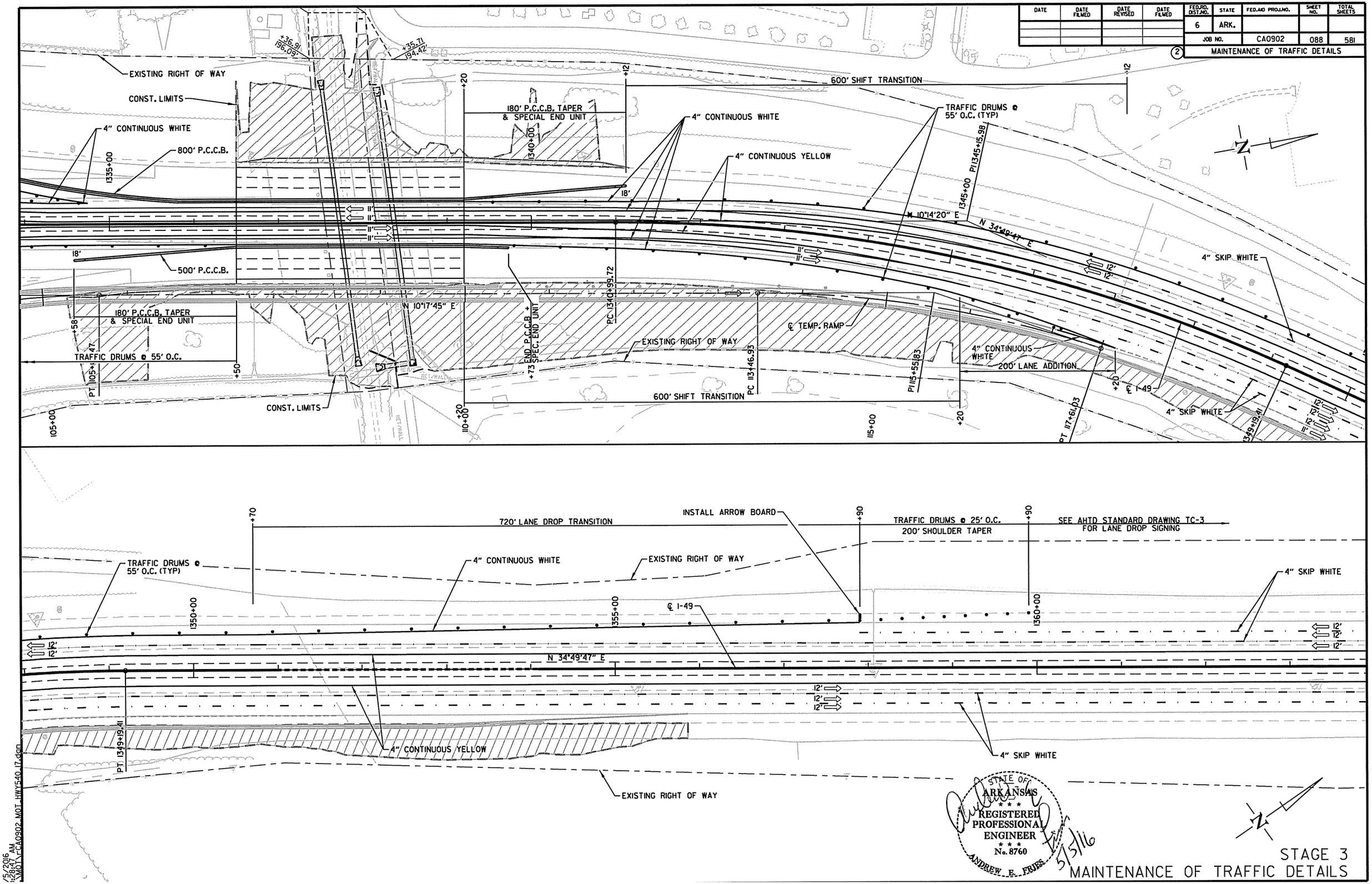

STATE OF ARKANSAS
REGISTERED PROFESSIONAL ENGINEER
No. 8760
ANDREW E. FRIES
5/5/16

STAGE 3
MAINTENANCE OF TRAFFIC DETAILS

/5/2016
1:28:47 AM
\MOT\CA0902_MOT_HWY540_17.dgn

DATE	DATE FILMED	DATE REVISED	DATE FILMED	FED.RD. DIST.NO.	STATE	FED.AID PROJ.NO.	SHEET NO.	TOTAL SHEETS
				6	ARK.			
				JOB NO.		CA0902	089	581

(2) MAINTENANCE OF TRAFFIC DETAILS

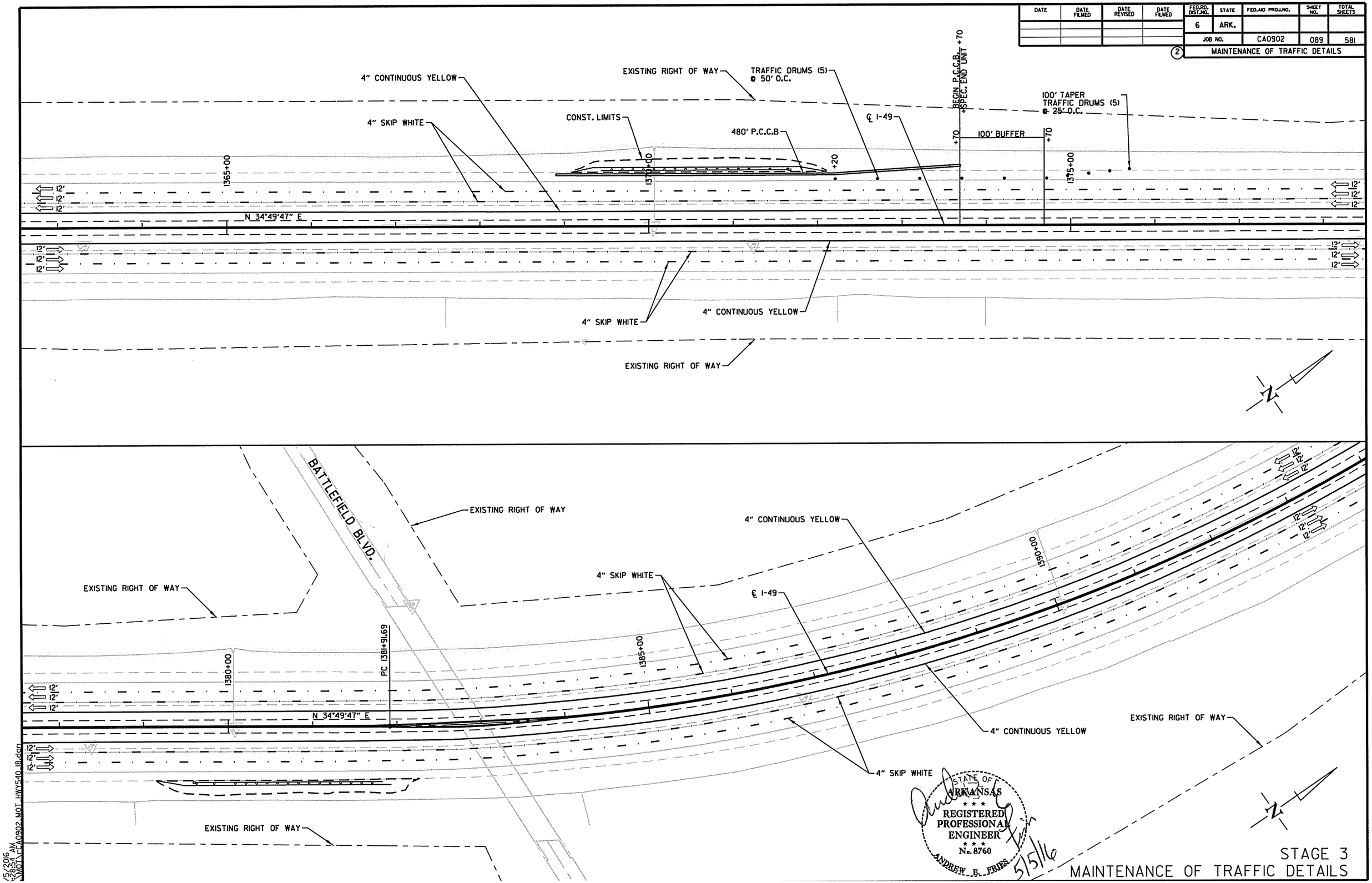

STAGE 3
MAINTENANCE OF TRAFFIC DETAILS

/5/2016
:28:54 AM
\MOT\CA0902_MOT_HWY540_18.dgn

DATE	DATE FILMED	DATE REVISED	DATE FILMED	FED.RD. DIST.NO.	STATE	FED.AID PROJ.NO.	SHEET NO.	TOTAL SHEETS
				6	ARK.			
				JOB NO.		CA0902	090	581

(2) MAINTENANCE OF TRAFFIC DETAILS

STATE OF ARKANSAS
REGISTERED PROFESSIONAL ENGINEER
No. 8760
ANDREW E. FRIES
5/5/16

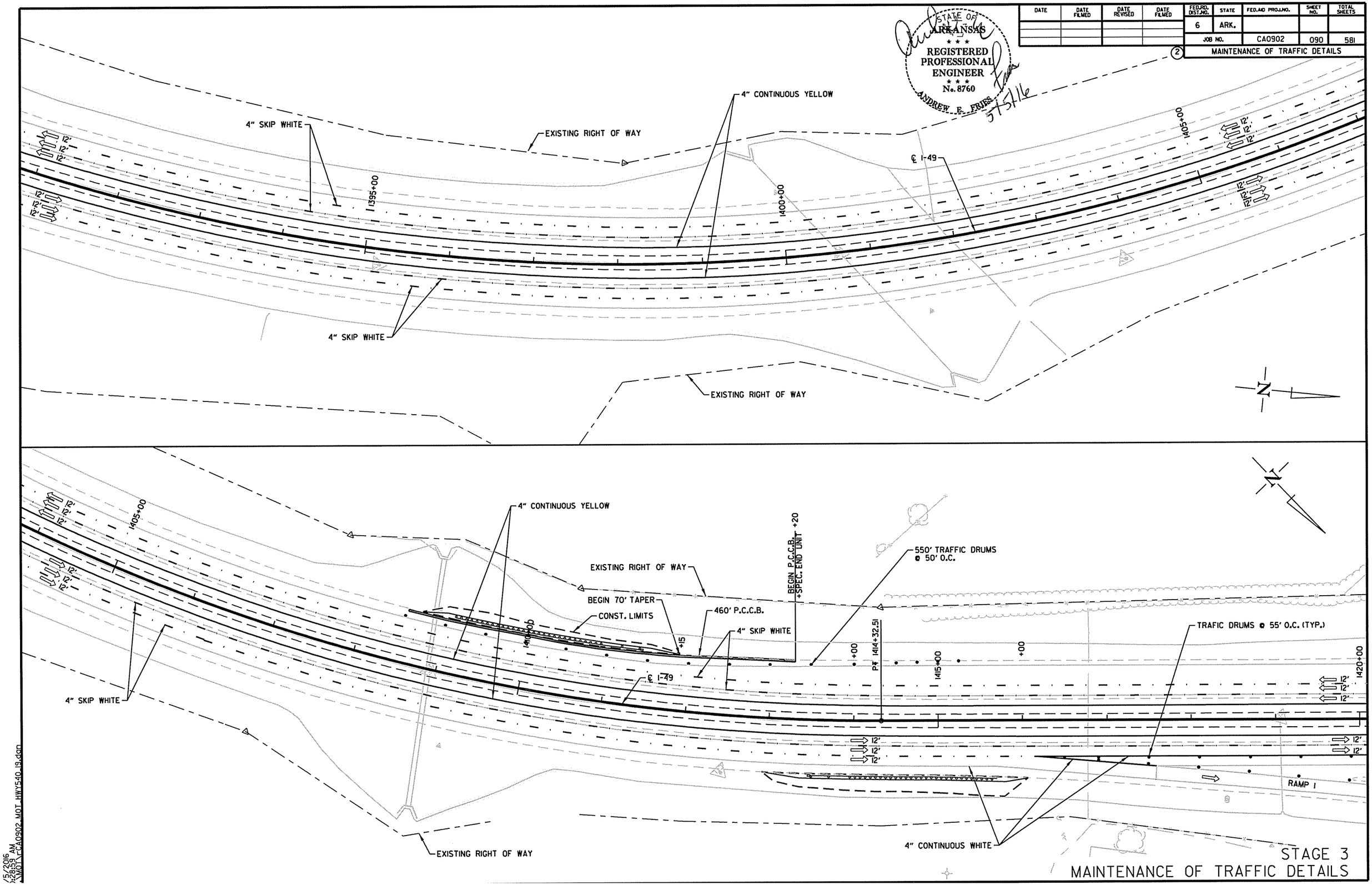

STAGE 3
MAINTENANCE OF TRAFFIC DETAILS

/5/2016
:28:59 AM
\MOT\CA0902_MOT_HWY540_19.dgn

DATE	DATE FILMED	DATE REVISED	DATE FILMED	FED.RD. DIST.NO.	STATE	FED.AID PROJ.NO.	SHEET NO.	TOTAL SHEETS
				6	ARK.			
				JOB NO.		CA0902	091	581

MAINTENANCE OF TRAFFIC DETAILS

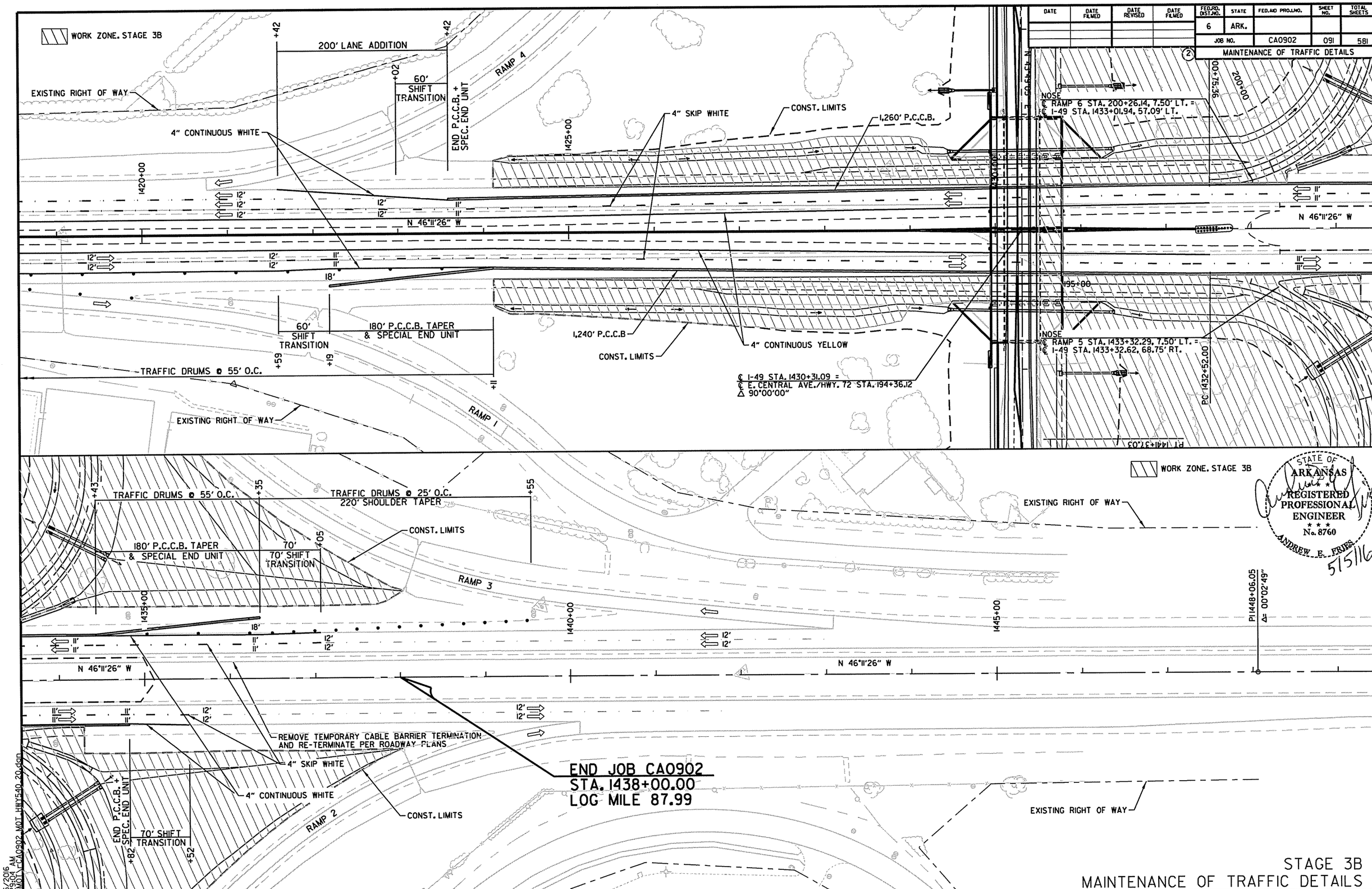

STAGE 3B
MAINTENANCE OF TRAFFIC DETAILS

DATE	DATE FILMED	DATE REVISED	DATE FILMED	FED.RD. DIST.NO.	STATE	FED.AID PROJ.NO.	SHEET NO.	TOTAL SHEETS
				6	ARK.			
				JOB NO.		CA0902	092	581

MAINTENANCE OF TRAFFIC DETAILS

STATE OF ARKANSAS
REGISTERED PROFESSIONAL ENGINEER
No. 8760
ANDREW E. FRIES
5/19/16

WORK ZONE. STAGE 3A

NOTE: SEE MAINTENANCE OF TRAFFIC DETAIL SHEETS FOR ADVANCED WARNING SIGNS AND SPACING.

STAGE 3A

4" CONSTRUCTION PAVEMENT MARKINGS (YELLOW) = 851 LIN. FT.

4" CONSTRUCTION PAVEMENT MARKINGS (WHITE) = 875 LIN. FT.

REMOVAL OF CONSTRUCTION PAVEMENT MARKINGS = 1,738 LIN. FT.

TRAFFIC DRUMS = 42

VERTICAL PANELS = 39

P.C.C.B. = 520 LIN. FT.

EXISTING RIGHT OF WAY
4" SKIP WHITE
4" CONTINUOUS YELLOW
520' P.C.C.B WITH SPECIAL END UNIT
NOSE
℄ RAMP 4 STA. 1023+44.72, 22.11 RT. =
℄ I-49 STA. 1316+54.54, 67.66' LT.
TRAFFIC DRUMS (16) 45' O.C. (TYP.)
POB 1020+93.14
PC 1021+25.38
PT 1021+78.11
1025+00
N 11°20'47" W
N 9°06'30" E
1315+00
CONST. LIMITS
N 15°05'11" E
P.I. 1311+81.25
PT 1312+78.14
POE 1314+00.00
P.I. 1023+05.16
EXISTING RIGHT OF WAY
℄ RAMP 4 STA. 1031+14.03 =
℄ HWY. 102 STA. 17+00.00
Δ 90°00'00"
SEE HWY. 102 SHEETS
CONST. LIMITS
P.I. 1028+35.56
1030+00
N 2°46'48" E
℄ RAMP 4
TRAFFIC DRUMS (5) 20' O.C. (TYP.)
P.T. 1029+77.11
SEE HWY. 102 SHEETS
CPC 1026+94.58
CONST. LIMITS
TRAFFIC DRUMS (4) @ 50' O.C.
BEGIN 100' LANE SHIFT
℄ I-49
TRAFFIC DRUMS (4) @ 25' O.C.
℄ I-49 STA. 1324+25.16 =
℄ HWY. 102/62 STA. 20+00.00
Δ 97°27'32"
N 10°14'20" E
1325+00
20+00
S 87°13'12" E
EXISTING RIGHT OF WAY
RAMP 3
HWY. 102
℄ HWY. 102
+92
+80
15+00
+62.23
+19.67
+10.62
+25
+25
+25

5/19/2016
5:50:21 PM
\\DOT\CA0902_MOT_HWY540_2L.dgn

STAGE 3A
MAINTENANCE OF TRAFFIC DETAILS

DATE	DATE FILMED	DATE REVISED	DATE FILMED	FED.RD. DIST.NO.	STATE	FED.AID PROJ.NO.	SHEET NO.	TOTAL SHEETS
				6	ARK.			
				JOB NO.		CA0902	093	581

(2) MAINTENANCE OF TRAFFIC DETAILS

STATE OF ARKANSAS
REGISTERED PROFESSIONAL ENGINEER
No. 8760
ANDREW E. FRIES
5/5/16

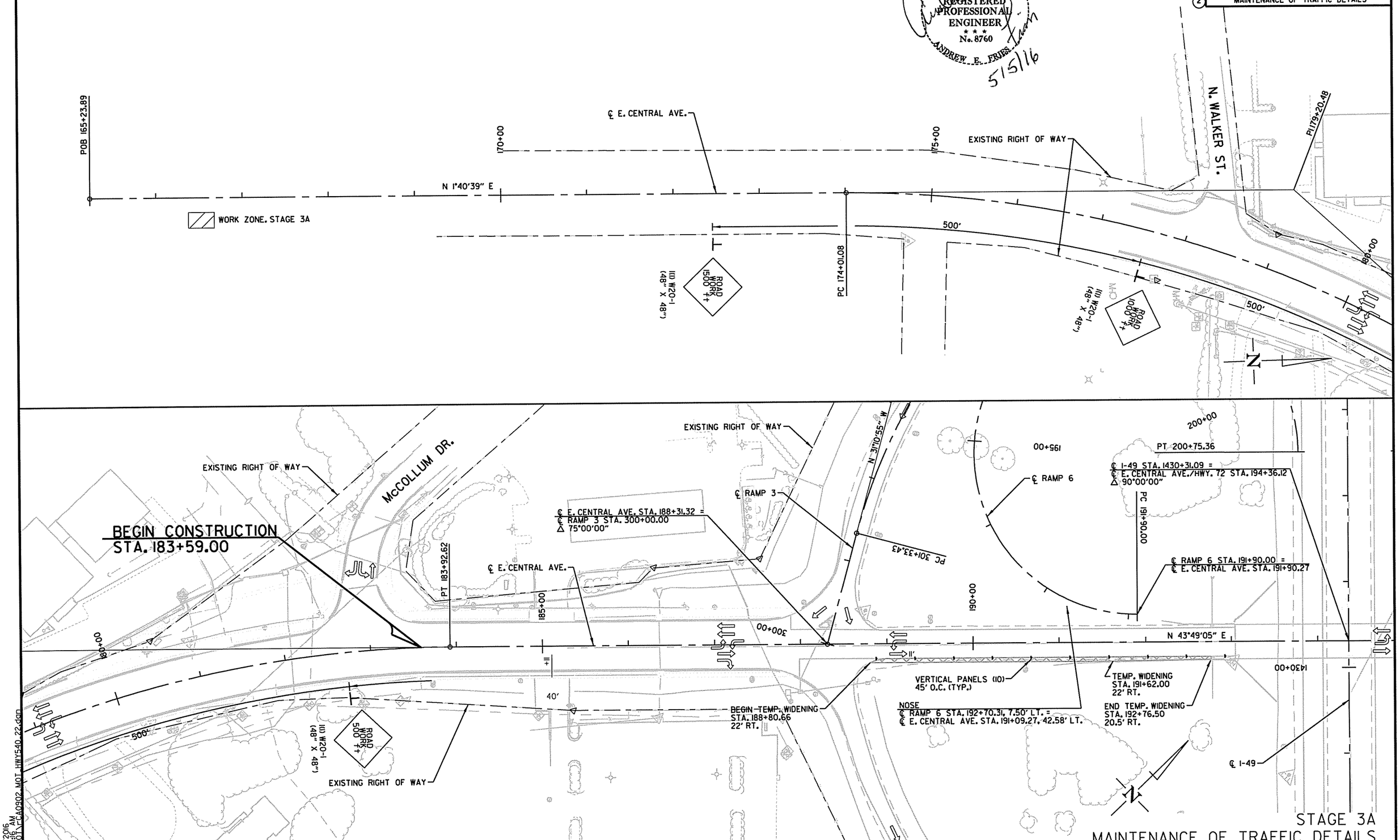

STAGE 3A
MAINTENANCE OF TRAFFIC DETAILS

/5/2016
1:29:16 AM
\MOT\CA0902_MOT_HWY540_22.dgn

DATE	DATE FILMED	DATE REVISED	DATE FILMED	FED.RD. DIST.NO.	STATE	FED.AID PROJ.NO.	SHEET NO.	TOTAL SHEETS
				6	ARK.			
				JOB NO.		CA0902	094	581

(2) MAINTENANCE OF TRAFFIC DETAILS

STATE OF ARKANSAS
REGISTERED PROFESSIONAL ENGINEER
No. 8760
ANDREW E. FRIES
5/5/16

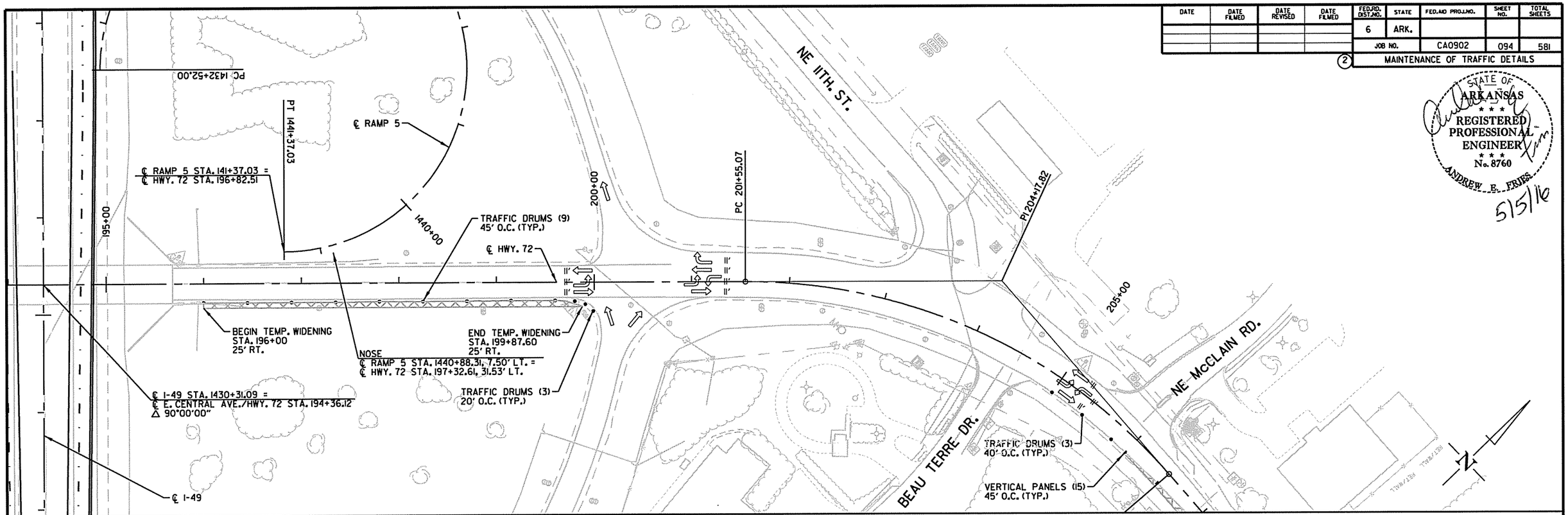

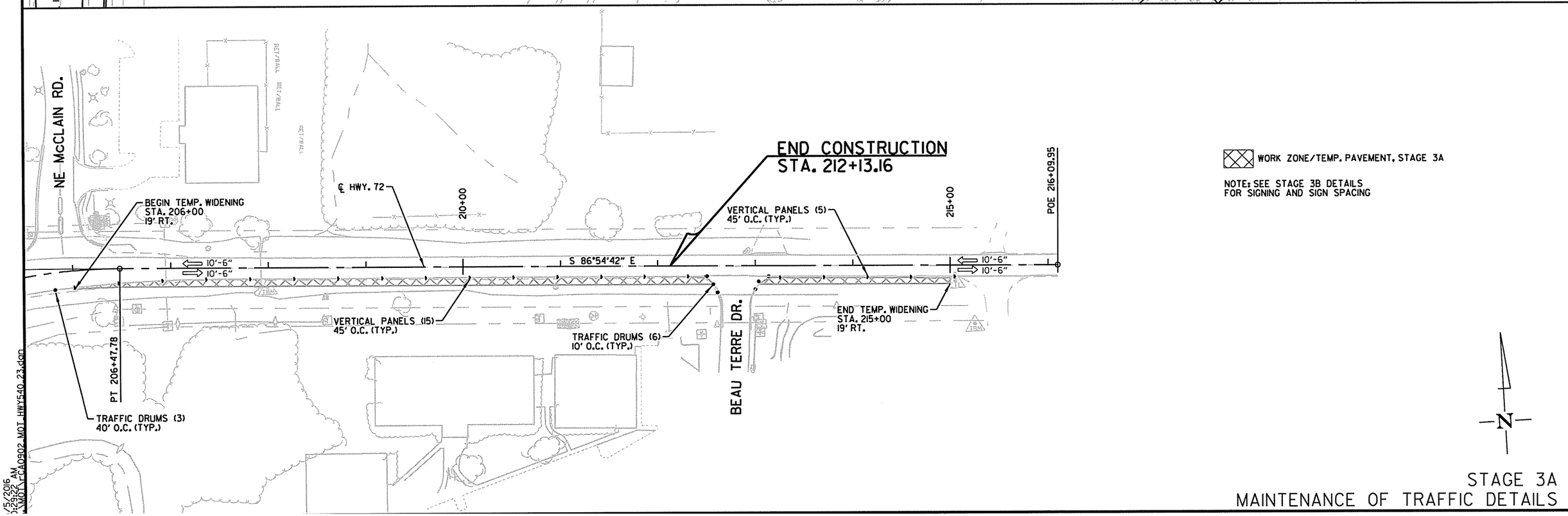

WORK ZONE/TEMP. PAVEMENT, STAGE 3A

NOTE: SEE STAGE 3B DETAILS FOR SIGNING AND SIGN SPACING

STAGE 3A
MAINTENANCE OF TRAFFIC DETAILS

/5/2016
:29:22 AM
\MOT\CA0902_MOT_HWY540_23.dgn

DATE	DATE FILMED	DATE REVISED	DATE FILMED	FED.RD. DIST.NO.	STATE	FED.AID PROJ.NO.	SHEET NO.	TOTAL SHEETS
				6	ARK.			
				JOB NO.		CA0902	095	581

(2) MAINTENANCE OF TRAFFIC DETAILS

STATE OF ARKANSAS
REGISTERED PROFESSIONAL ENGINEER
No. 8760
ANDREW E. FRIES
5/19/16

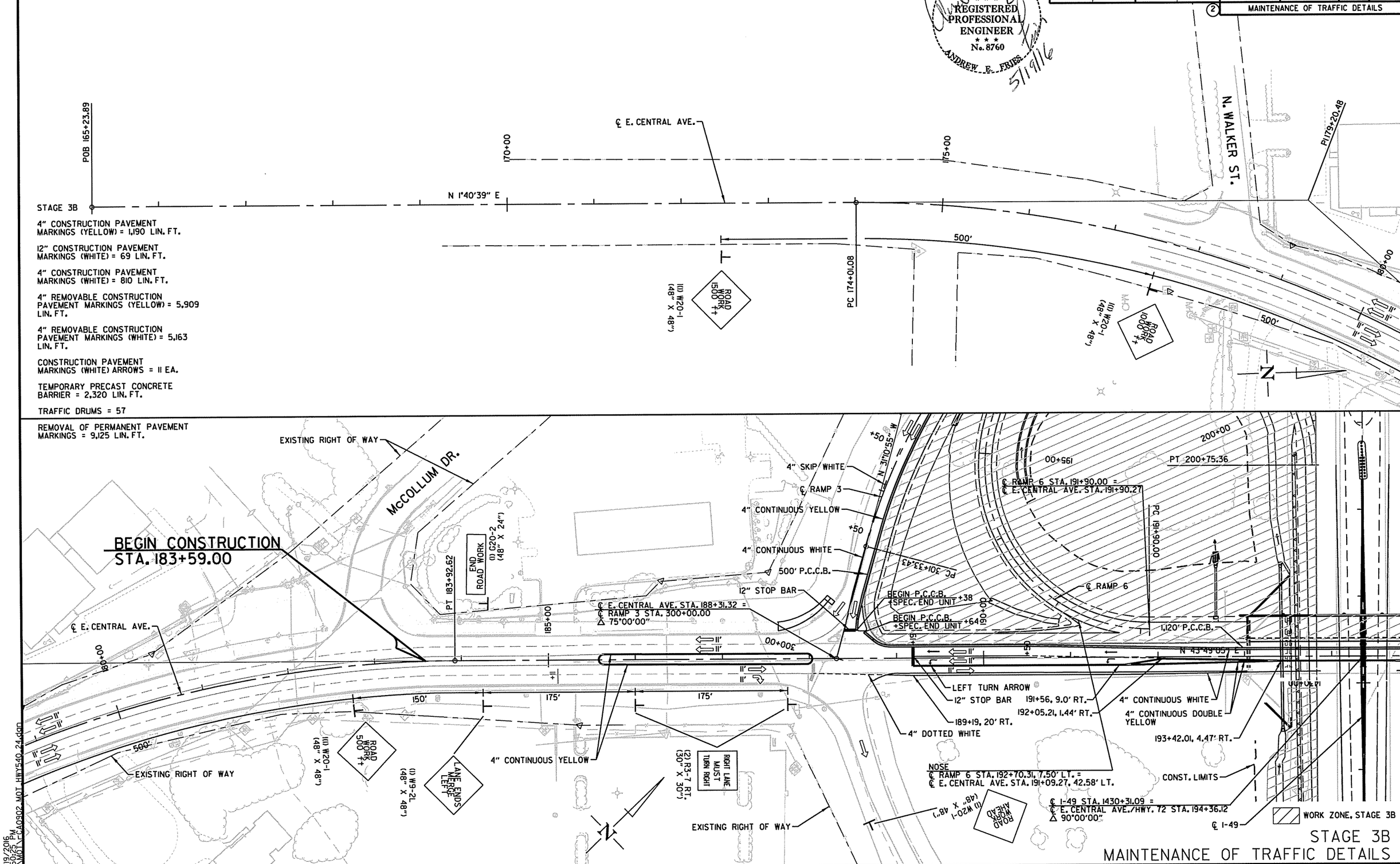

STAGE 3B

4" CONSTRUCTION PAVEMENT MARKINGS (YELLOW) = 1,190 LIN. FT.

12" CONSTRUCTION PAVEMENT MARKINGS (WHITE) = 69 LIN. FT.

4" CONSTRUCTION PAVEMENT MARKINGS (WHITE) = 810 LIN. FT.

4" REMOVABLE CONSTRUCTION PAVEMENT MARKINGS (YELLOW) = 5,909 LIN. FT.

4" REMOVABLE CONSTRUCTION PAVEMENT MARKINGS (WHITE) = 5,163 LIN. FT.

CONSTRUCTION PAVEMENT MARKINGS (WHITE) ARROWS = 11 EA.

TEMPORARY PRECAST CONCRETE BARRIER = 2,320 LIN. FT.

TRAFFIC DRUMS = 57

REMOVAL OF PERMANENT PAVEMENT MARKINGS = 9,125 LIN. FT.

STAGE 3B
MAINTENANCE OF TRAFFIC DETAILS

5/19/2016
5:50:25 PM
\\MOT\CA0902_MOT_HWY540_24.dgn

DATE	DATE FILMED	DATE REVISED	DATE FILMED	FED.RD. DIST.NO.	STATE	FED.AID PROJ.NO.	SHEET NO.	TOTAL SHEETS
				6	ARK.			
				JOB NO.		CA0902	096	581

(2) MAINTENANCE OF TRAFFIC DETAILS

STATE OF ARKANSAS
REGISTERED PROFESSIONAL ENGINEER
No. 8760
ANDREW E. FRIES
5/5/16

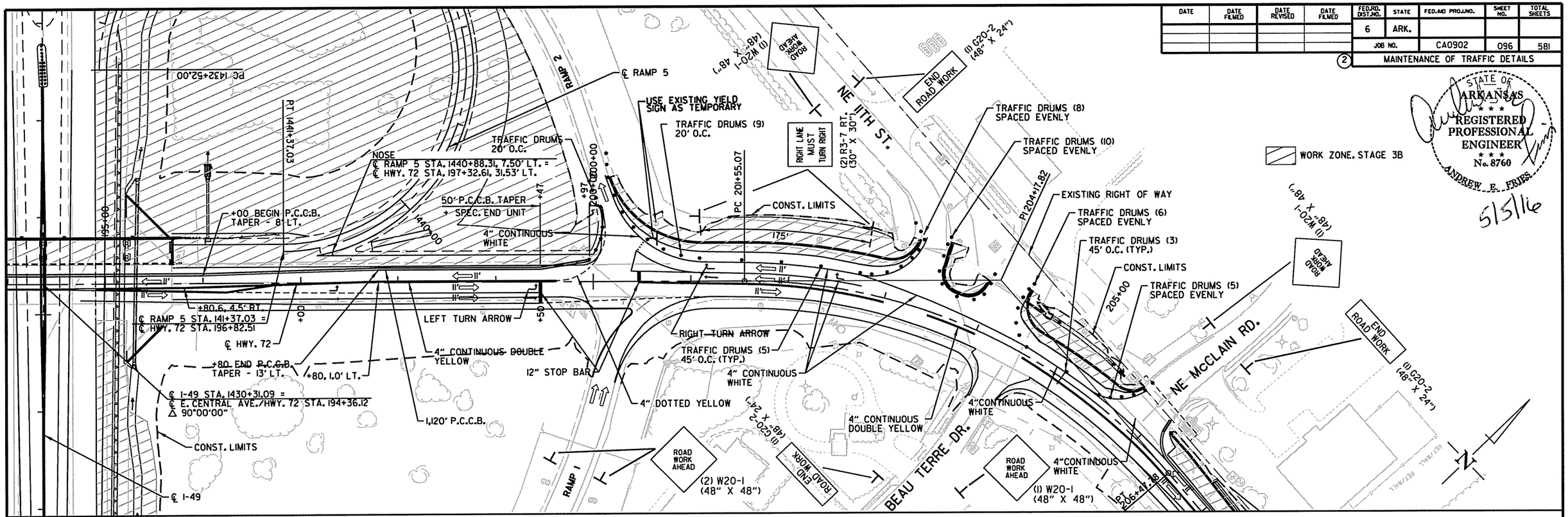

STAGE 3B
MAINTENANCE OF TRAFFIC DETAILS

5/5/2016
0:29:38 AM
\\MOT\CA0902_MOT_HWY540_25.dgn

DATE	DATE FILMED	DATE REVISED	DATE FILMED	FED.RD. DIST.NO.	STATE	FED.AID PROJ.NO.	SHEET NO.	TOTAL SHEETS
				6	ARK.			
				JOB NO.		CA0902	097	581

(2) MAINTENANCE OF TRAFFIC DETAILS

STATE OF ARKANSAS
REGISTERED PROFESSIONAL ENGINEER
No. 8760
ANDREW E. FRIES
5/5/16

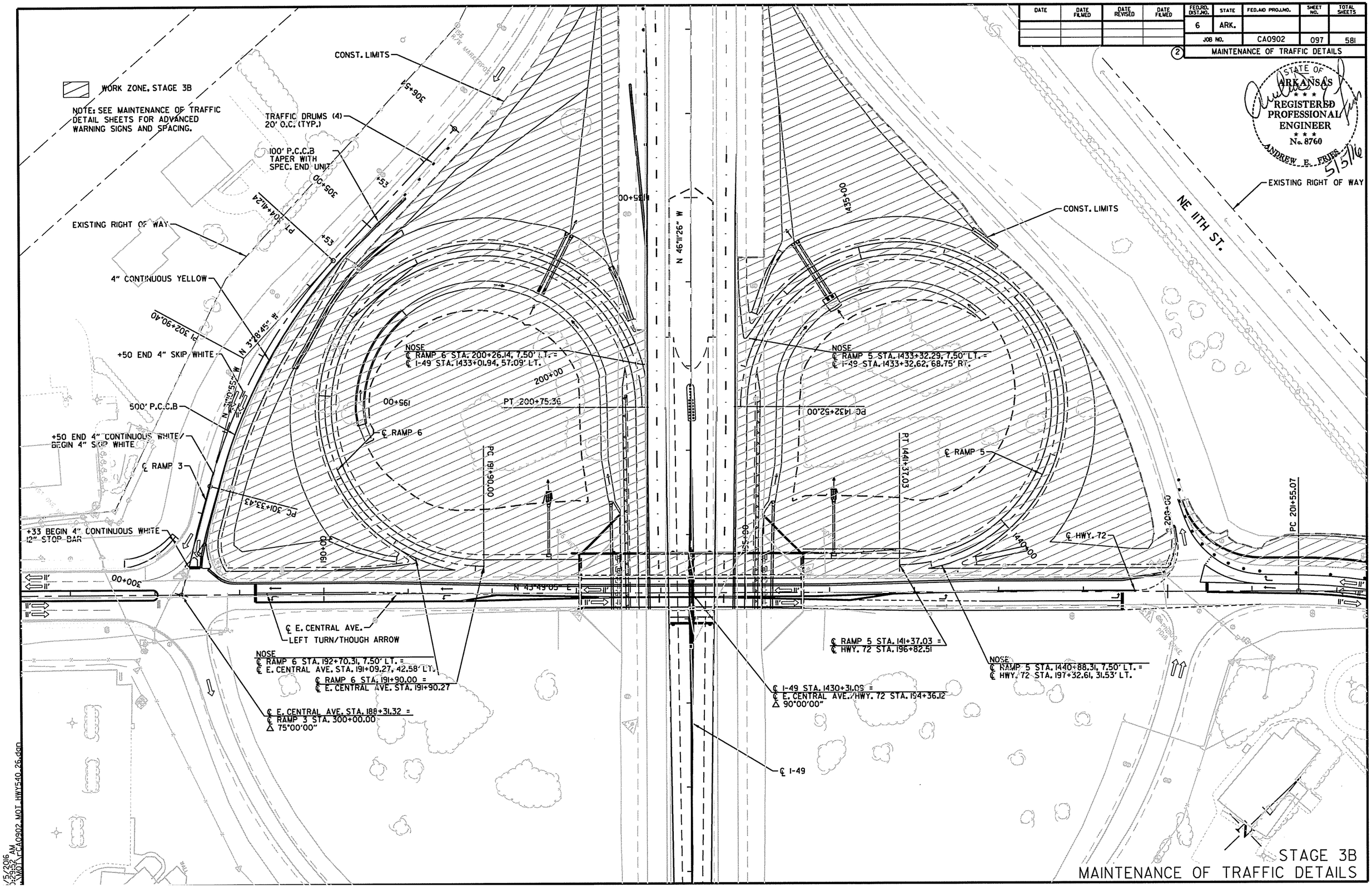

STAGE 3B
MAINTENANCE OF TRAFFIC DETAILS

5/5/2016
0:29:52 AM
\MOT\CA0902_MOT_HWY540_26.dgn

DATE	DATE FILMED	DATE REVISED	DATE FILMED	FED.RD. DIST.NO.	STATE	FED.AID PROJ.NO.	SHEET NO.	TOTAL SHEETS
				6	ARK.			
				JOB NO.		CA0902	098	581

(2) MAINTENANCE OF TRAFFIC DETAILS

STATE OF ARKANSAS
REGISTERED PROFESSIONAL ENGINEER
No. 8760
ANDREW E. FRIES
5/19/16

4" CONSTRUCTION PAVEMENT MARKINGS (WHITE) = 5,308 LIN. FT.

12" CONSTRUCTION PAVEMENT MARKINGS (WHITE) = 145 LIN. FT.

4" CONSTRUCTION PAVEMENT MARKINGS (YELLOW) = 1,208 LIN. FT.

4" REMOVABLE CONSTRUCTION PAVEMENT MARKINGS (WHITE) = 5,048 LIN. FT.

4" REMOVABLE CONSTRUCTION PAVEMENT MARKINGS (YELLOW) = 8,341 LIN. FT.

CONSTRUCTION PAVEMENT MARKINGS (WHITE) ARROWS = 9 EA.

TEMPORARY PRECAST CONCRETE BARRIER = 1,140 LIN. FT.

TRAFFIC DRUMS = 72

REMOVAL OF CONSTRUCTION PAVEMENT MARKINGS = 24,461 LIN. FT.

REMOVAL OF PERMANENT PAVEMENT MARKINGS = 6,909 LIN. FT.

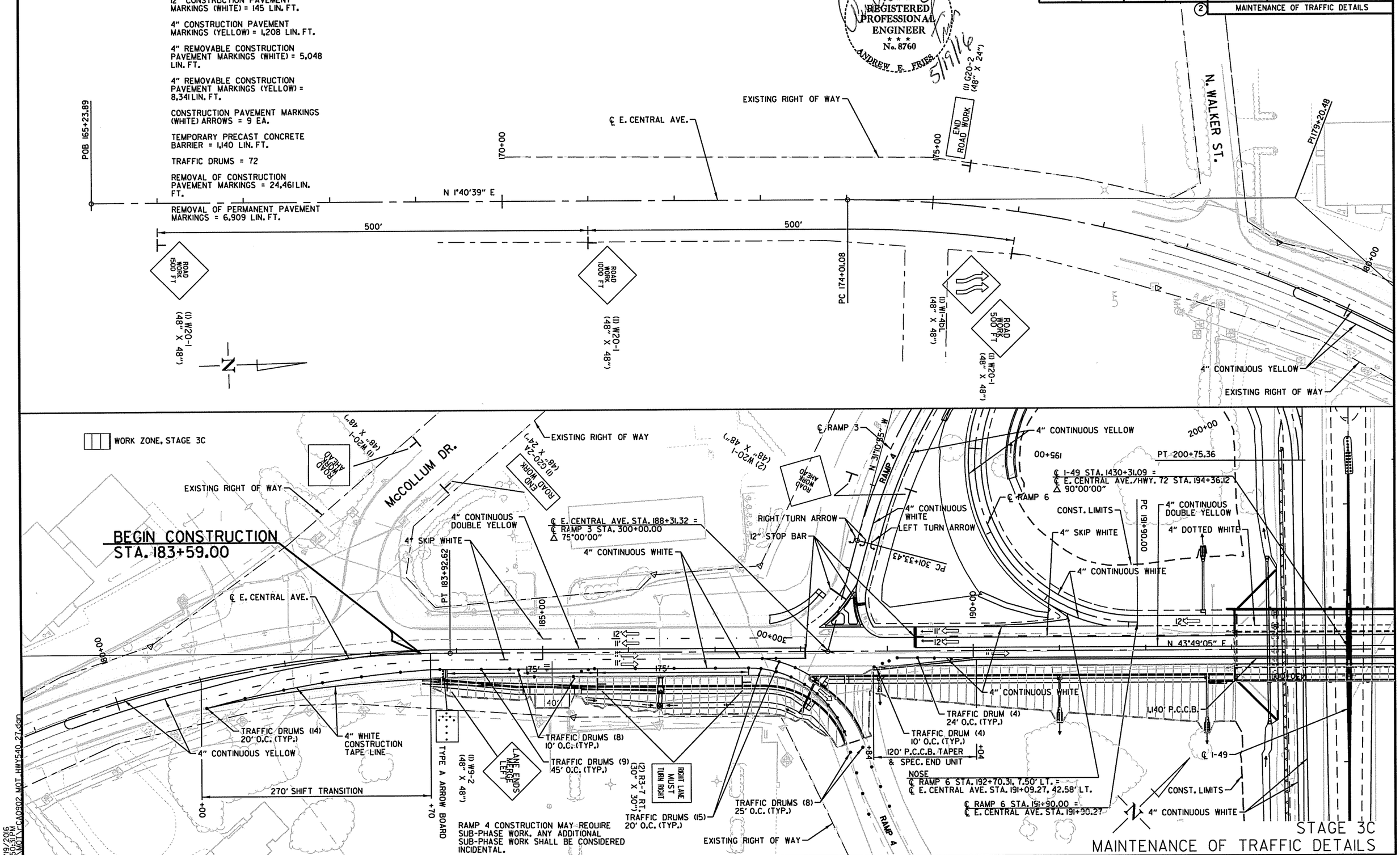

RAMP 4 CONSTRUCTION MAY REQUIRE SUB-PHASE WORK. ANY ADDITIONAL SUB-PHASE WORK SHALL BE CONSIDERED INCIDENTAL.

STAGE 3C
MAINTENANCE OF TRAFFIC DETAILS

5/19/2016
5:50:31 PM
\\MOT\CA0902_MOT_HWY540_27.dgn

DATE	DATE FILMED	DATE REVISED	DATE FILMED	FED.RD. DIST.NO.	STATE	FED.AID PROJ.NO.	SHEET NO.	TOTAL SHEETS
				6	ARK.			
				JOB NO.		CA0902	099	581

(2) MAINTENANCE OF TRAFFIC DETAILS

STATE OF ARKANSAS REGISTERED PROFESSIONAL ENGINEER No. 8760 ANDREW E. FRIES

5/5/16

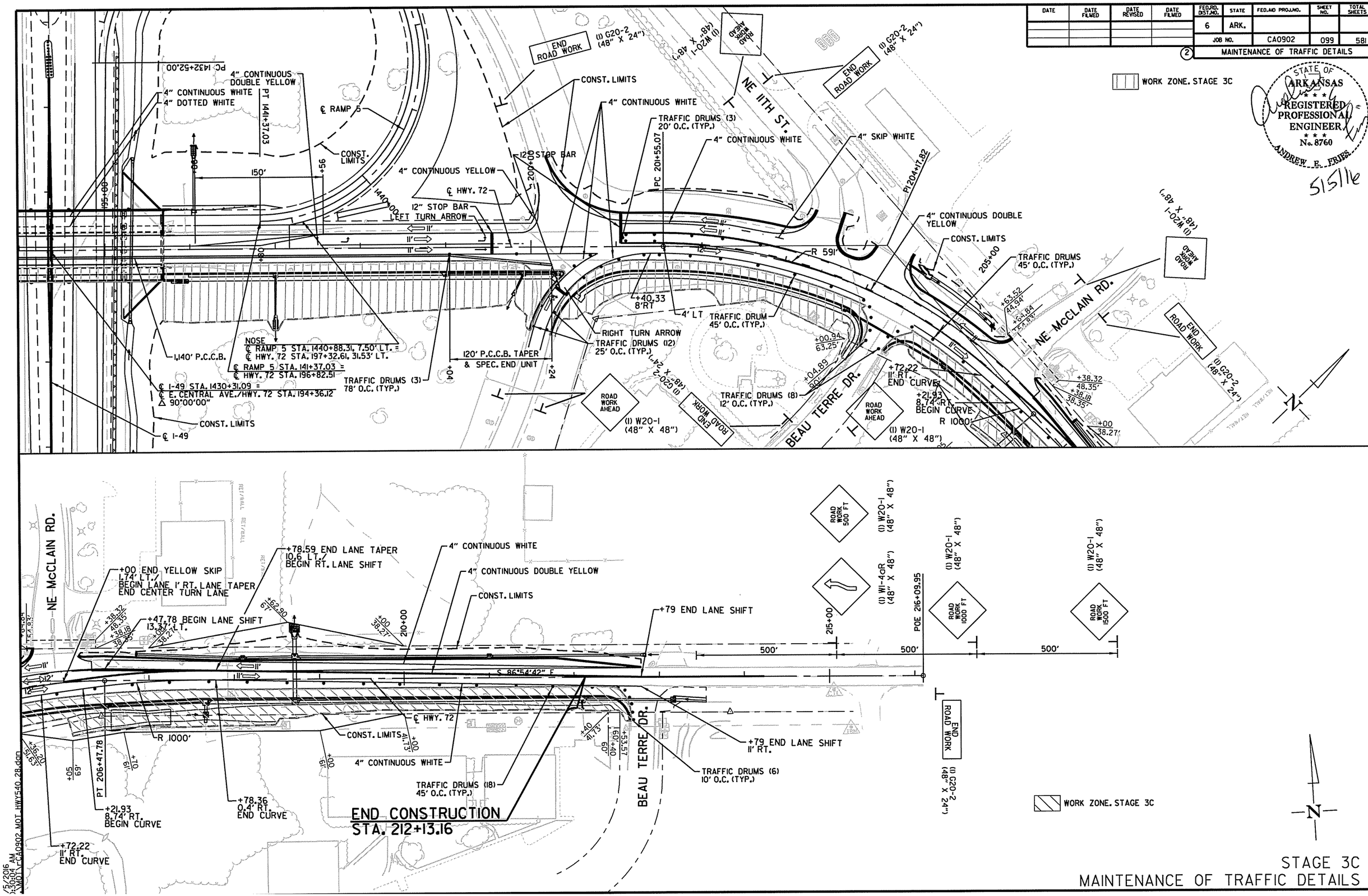

STAGE 3C
MAINTENANCE OF TRAFFIC DETAILS

DATE	DATE FILMED	DATE REVISED	DATE FILMED	FED.RD. DIST.NO.	STATE	FED.AID PROJ.NO.	SHEET NO.	TOTAL SHEETS
				6	ARK.			
				JOB NO.		CA0902	100	581

(2) MAINTENANCE OF TRAFFIC DETAILS

STATE OF ARKANSAS
REGISTERED PROFESSIONAL ENGINEER
No. 8760
ANDREW E. FRIES
5/5/16

WORK ZONE, STAGE 3C

CONTRACTOR SHALL FURTHER SUB- PHASE HWY. 72 WIDENING AT RAMP 4 TO PROPERLY MAINTAIN TRAFFIC. THIS WORK SHALL BE CONSIDERED INCIDENTAL TO CONSTRUCTION.

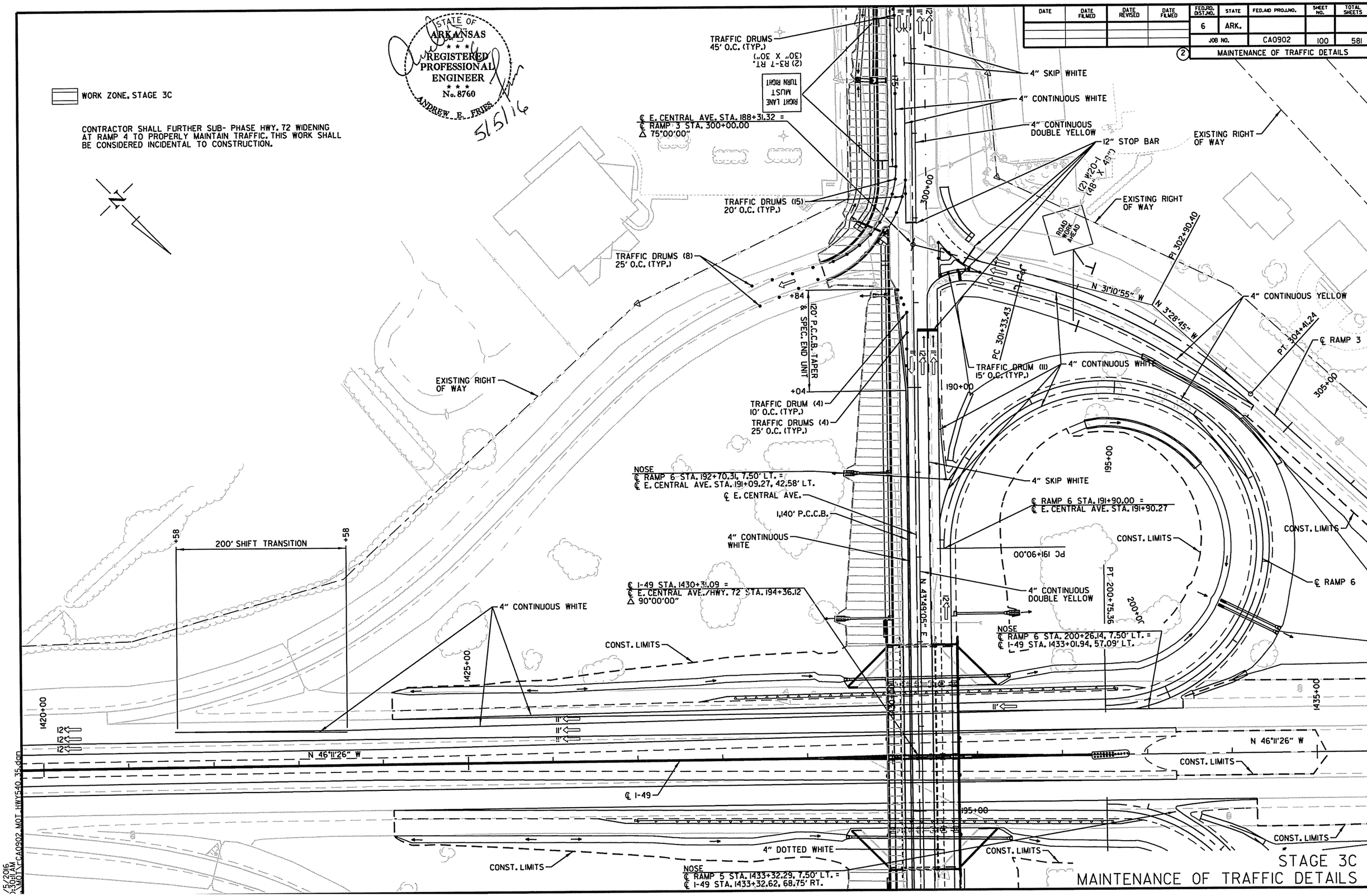

STAGE 3C
MAINTENANCE OF TRAFFIC DETAILS

/5/2016
:30:11 AM
\MOT\CA0902 MOT HWY540 35.dgn

DATE	DATE FILMED	DATE REVISED	DATE FILMED	FED.RD. DIST.NO.	STATE	FED.AID PROJ.NO.	SHEET NO.	TOTAL SHEETS
				6	ARK.			
				JOB NO.		CA0902	101	581

(2) PERMANENT PAVEMENT MARKING DETAILS

LEFT MAIN LANES
HIGH PERFORMANCE PAVEMENT MARKINGS
4" YELLOW = 17895 LIN. FT.
4" WHITE = 17783 LIN. FT.
4" SKIP WHITE = 6785 LIN. FT.
8" WHITE = 4742 LIN. FT.

HIGH PERFORMANCE CONTRAST PAVEMENT MARKINGS
4" SKIP WHITE = 125 LIN. FT.

RAISED PAVEMENT MARKERS
TYPE II (WHITE/RED) = 854

RIGHT MAIN LANES
HIGH PERFORMANCE PAVEMENT MARKINGS
4" YELLOW = 18349 LIN. FT.
4" WHITE = 17836 LIN. FT.
4" SKIP WHITE = 6565 LIN. FT.
8" WHITE = 5506 LIN. FT.

HIGH PERFORMANCE CONTRAST PAVEMENT MARKINGS
4" SKIP WHITE = 125 LIN. FT.

RAISED PAVEMENT MARKERS
TYPE II (WHITE/RED) = 945

BEGIN JOB CA0902
STA. 1256+75.00
LOG MILE 84.56

DIRECTIONAL ARROW (19) TYPE II RED / WHITE RAISED PAVEMENT MARKERS

8" CONTINUOUS WHITE HIGH PERFORMANCE PAVEMENT MARKING W/ TYPE II RED / WHITE RAISED PAVEMENT MARKERS @ 36' O.C.

840' MERGING TAPER

℄ RAMP 3

STA. 1253+55 MATCH EXISTING MARKINGS

℄ I-49

8" CONTINUOUS WHITE HIGH PERFORMANCE PAVEMENT MARKING W/ TYPE II RED / WHITE RAISED PAVEMENT MARKERS @ 10' O.C.

4" CONTINUOUS WHITE HIGH PERFORMANCE PAVEMENT MARKING

4" CONTINUOUS YELLOW HIGH PERFORMANCE PAVEMENT MARKING

200' LANE ADDITION

STATE OF ARKANSAS
REGISTERED PROFESSIONAL ENGINEER
No. 8760
ANDREW E. FRIES
5/3/16

WALTON BLVD.

4" CONTINUOUS WHITE HIGH PERFORMANCE PAVEMENT MARKING

840' MERGING TAPER

8" CONTINUOUS WHITE HIGH PERFORMANCE MARKING W/ TYPE II RED / WHITE RAISED PAVEMENT MARKERS @ 36' O.C.

8" DOTTED WHITE HIGH PERFORMANCE PAVEMENT MARKING W/ TYPE II RED / WHITE RAISED PAVEMENT MARKERS @ 36' O.C.

℄ I-49 STA. 1271+95.05 = ℄ OLIVE ST. STA. 20+00.00
△ 100°42'20"

4" CONTINUOUS YELLOW HIGH PERFORMANCE PAVEMENT MARKING

4" SKIP WHITE HIGH PERFORMANCE PAVEMENT MARKING W/ TYPE II RED / WHITE RAISED PAVEMENT MARKERS @ 80' O.C.

OLIVE ST.

NOTE:

TRAFFIC CONTROL REQUIRED DURING INSTALLATION OF THE PERMANENT PAVEMENT MARKINGS SHALL BE DONE IN ACCORDANCE WITH AHTD TRAFFIC CONTROL STANDARD DETAILS TC-1 THROUGH TC-5.

PERMANENT PAVEMENT MARKING DETAILS

5/5/2016
1:33:46 AM
\PMKT\CA0902 PM HWY540 01.dgn

DATE	DATE FILMED	DATE REVISED	DATE FILMED	FED.RD. DIST.NO.	STATE	FED.AND PROJ.NO.	SHEET NO.	TOTAL SHEETS
				6	ARK.			
				JOB NO.		CA0902	102	581

(2) PERMANENT PAVEMENT MARKING DETAILS

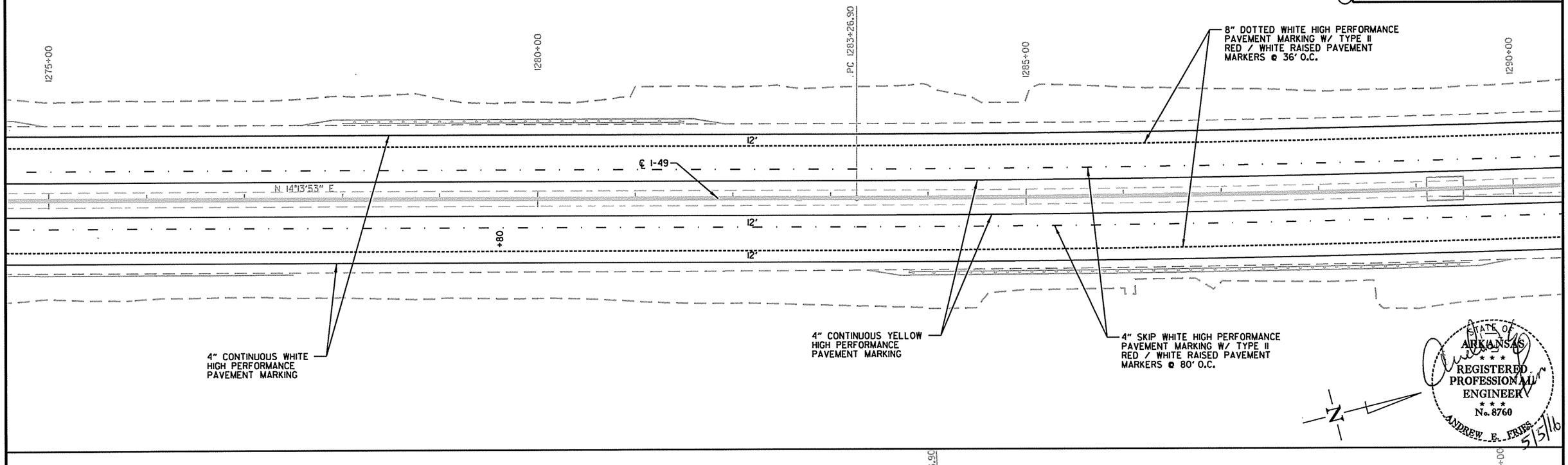

STATE OF ARKANSAS
REGISTERED PROFESSIONAL ENGINEER
No. 8760
ANDREW E. FRIES
5/5/16

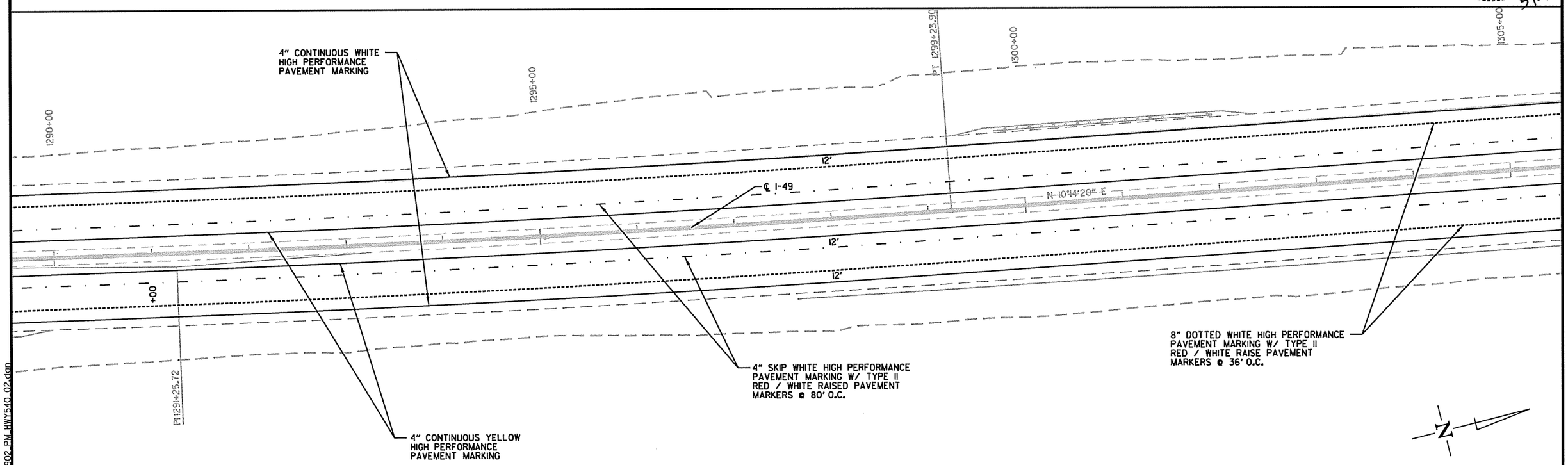

PERMANENT PAVEMENT MARKING DETAILS

5/5/2016
04:33:52 AM
\\PMT-CA0902_PM_HWY540_02.dgn

DATE	DATE FILMED	DATE REVISED	DATE FILMED	FED.RD. DIST.NO.	STATE	FED.AID PROJ.NO.	SHEET NO.	TOTAL SHEETS
				6	ARK.			
				JOB NO.		CA0902	103	581

(2) PERMANENT PAVEMENT MARKING DETAILS

1305+00 1310+00

4" CONTINUOUS WHITE HIGH PERFORMANCE PAVEMENT MARKING

8" CONTINUOUS WHITE HIGH PERFORMANCE PAVEMENT MARKING W/ TYPE II RED / WHITE RAISED PAVEMENT MARKERS @ 36' O.C.

+73.5 POB 102 PC 10 +25 1315+00 ℄ RAMP 4 RAMP 4

12' 12' 12' 12'

℄ I-49 N 10°14'20" E

℄ RAMP 1 N 10°14'20" E N 15°08'11" E

+32 +61 +82 +86

POB 1309+00.00 PC 1310+84.24 P1 1311+81.25 PT 1312+78.14 POE 1314+00.00 P1 1313+105.16

8" DOTTED WHITE HIGH PERFORMANCE PAVEMENT MARKING W/ TYPE II RED / WHITE RAISED PAVEMENT MARKERS @ 36' O.C.

8" CONTINUOUS WHITE HIGH PERFORMANCE PAVEMENT MARKING W/ TYPE II RED / WHITE RAISED PAVEMENT MARKERS @ 36' O.C.

8" CONTIUOUS WHITE HIGH PERFORMANCE PAVEMENT MARKING W/ TYPE II RED / WHITE RAISED PAVEMENT MARKERS @ 10' O.C.

DIRECTIONAL ARROW (19) TYPE II RED / WHITE RAISED PAVEMENT MARKERS

4" CONTINUOUS WHITE HIGH PERFORMANCE PAVEMENT MARKING

4" SKIP WHITE HIGH PERFORMANCE PAVEMENT MARKING W/ TYPE II RED / WHITE RAISED PAVEMENT MARKERS @ 80' O.C.

4" CONTINUOUS YELLOW HIGH PERFORMANCE PAVEMENT MARKING

STATE OF ARKANSAS REGISTERED PROFESSIONAL ENGINEER No. 8760 ANDREW E. FRIES 5/5/16

P1 1028+36 1030+00 ℄ RAMP 4 N 2°46'16" E 8°51'12" E 215.78 HWY. 102

RAMP 4 PT 1029+71.41 PC 1026+91.58 ℄ HWY. 102

PROVIDE HIGH PERFORMANCE CONTRAST PAVEMENT MARKING FOR ALL SKIPS ON BRIDGES & APPROACH SLABS

DIRECTIONAL ARROW (19) TYPE II RED / WHITE RAISED PAVEMENT MARKERS

8" CONTIUOUS WHITE HIGH PERFORMANCE PAVEMENT MARKING W/ TYPE II RED / WHITE RAISED PAVEMENT MARKERS @ 10' O.C.

+68.5 +79.5 RAMP 3

1120+00 1125+00 1130+00

℄ I-49 N 10°14'20" E 20+00 N 10°14'20" E

12' 12' 12' 12' 12' 12'

4" CONTINUOUS WHITE HIGH PERFORMANCE PAVEMENT MARKING

℄ I-49 STA. 1324+25.16 = ℄ HWY. 102/62 STA. 20+00.00 Δ 97°27'32"

4" SKIP WHITE HIGH PERFORMANCE PAVEMENT MARKING W/ TYPE II RED / WHITE RAISED PAVEMENT MARKERS @ 80' O.C.

4" CONTINUOUS YELLOW HIGH PERFORMANCE PAVEMENT MARKING

+28.5

℄ HWY. 62 HWY. 62

RAMP 1 RAMP 2

PERMANENT PAVEMENT MARKING DETAILS

5/5/2016 8:34:37 AM
\\ARKLT\CA0902_PM_HWY540_03.dgn

DATE	DATE FILMED	DATE REVISED	DATE FILMED	FED.RD. DIST.NO.	STATE	FED.AID PROJ.NO.	SHEET NO.	TOTAL SHEETS
				6	ARK.			
				JOB NO.		CA0902	104	581

(2) PERMANENT PAVEMENT MARKING DETAILS

STATE OF ARKANSAS
REGISTERED PROFESSIONAL ENGINEER
No. 8760
ANDREW E. FRIES
5/5/16

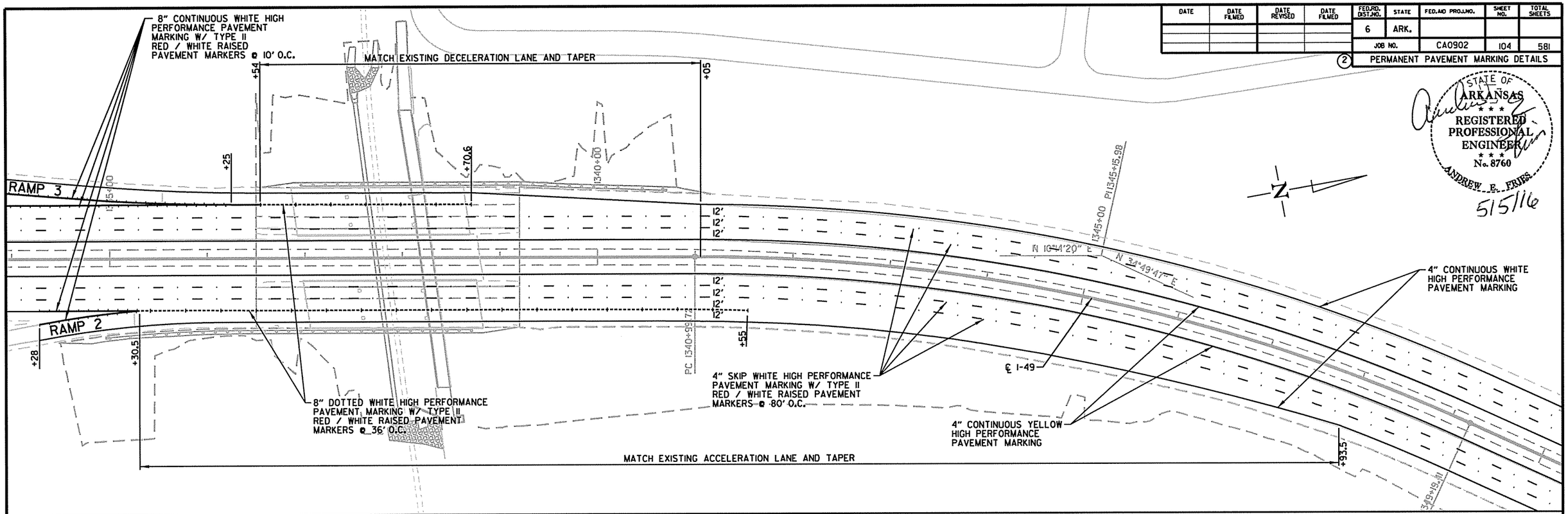

PERMANENT PAVEMENT MARKING DETAILS

5/5/2016
0:34:04 AM
\\PM\rCA0902_PM_HWY540_04.dgn

DATE	DATE FILMED	DATE REVISED	DATE FILMED	FED.RD. DIST.NO.	STATE	FED.AID PROJ.NO.	SHEET NO.	TOTAL SHEETS
				6	ARK.			
				JOB NO.		CA0902	105	581
				(2)	PERMANENT PAVEMENT MARKING DETAILS			

STATE OF ARKANSAS
REGISTERED PROFESSIONAL ENGINEER
No. 8760
ANDREW E. FRIES
5/5/16

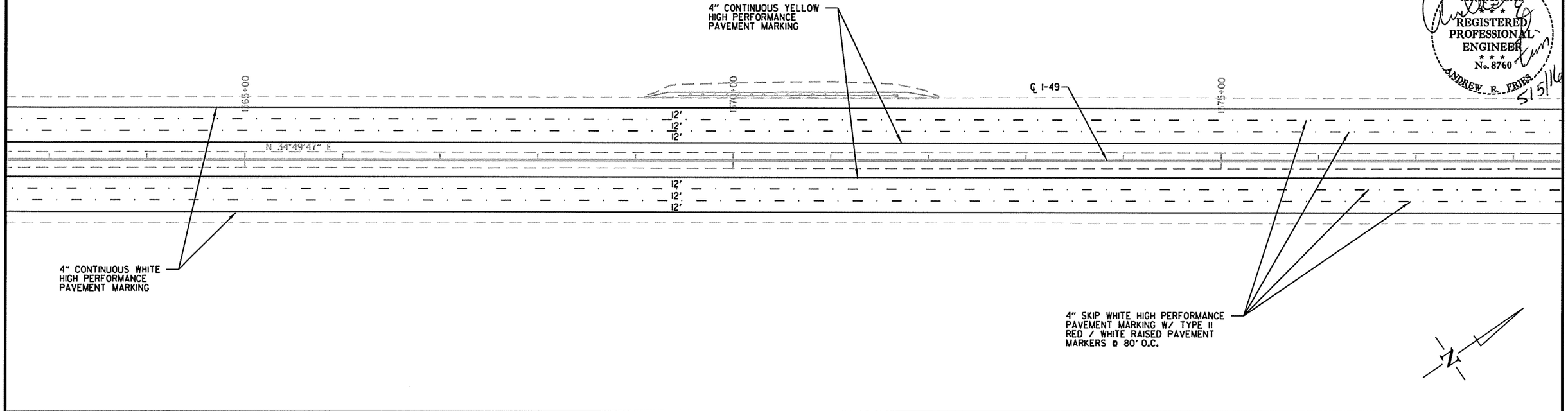

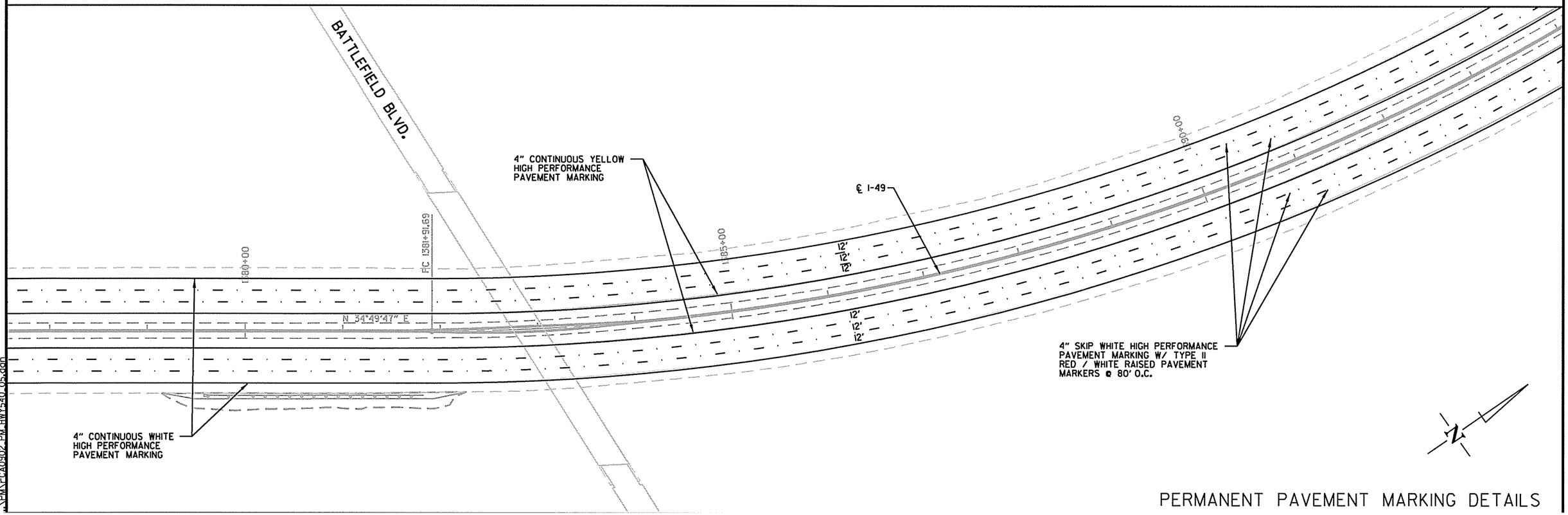

PERMANENT PAVEMENT MARKING DETAILS

5/5/2016
04:34:10 AM
\\PW\...CA0902_PM_HWY540_05.dgn

DATE	DATE FILMED	DATE REVISED	DATE FILMED	FED.RD. DIST.NO.	STATE	FED.AID PROJ.NO.	SHEET NO.	TOTAL SHEETS
				6	ARK.			
				JOB NO.		CA0902	106	581

(2) PERMANENT PAVEMENT MARKING DETAILS

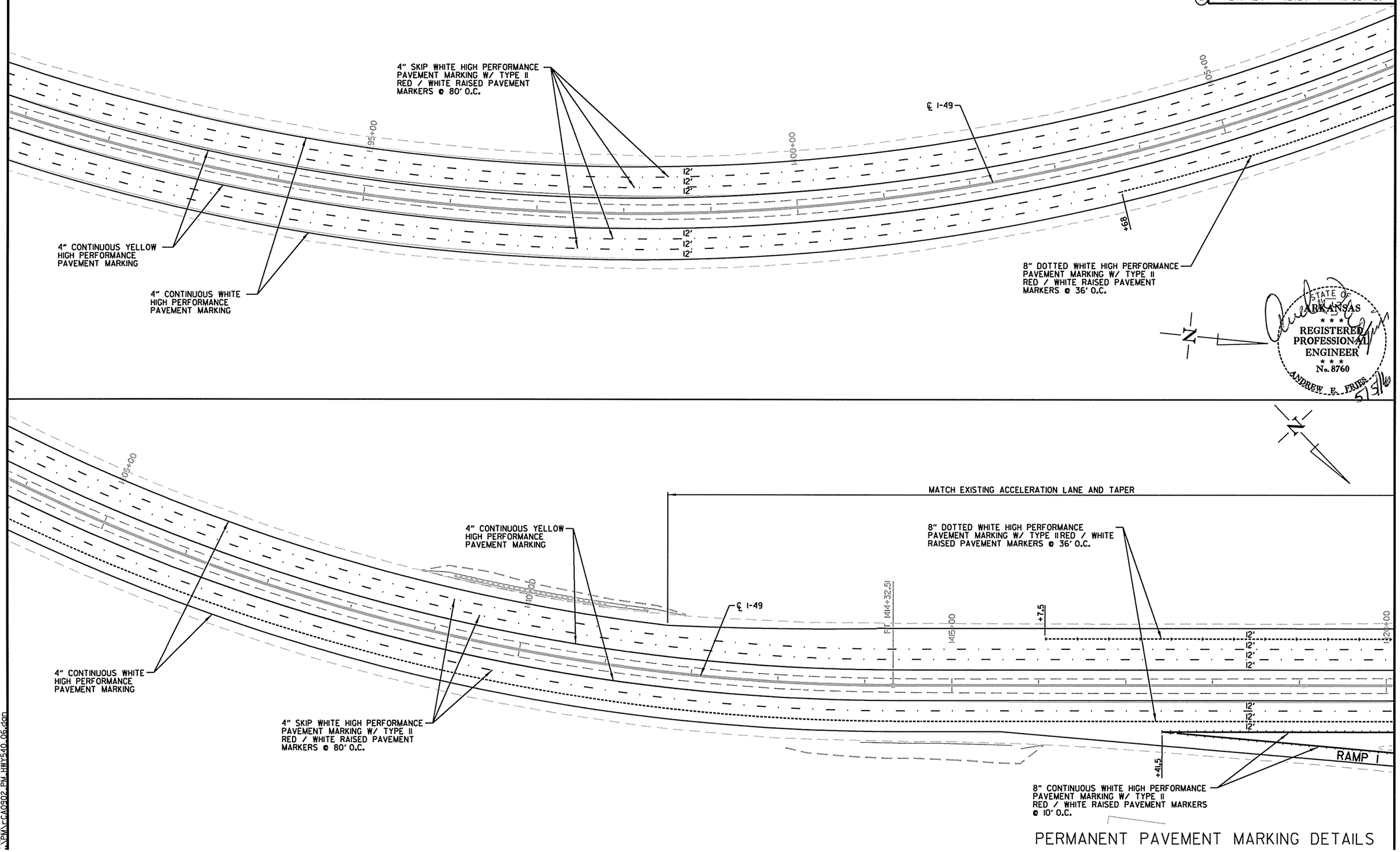

PERMANENT PAVEMENT MARKING DETAILS

5/5/2016
0:34:34 AM
\PM\CA0902_PM_HWY540_06.dgn

DATE	DATE FILMED	DATE REVISED	DATE FILMED	FED.RD. DST.NO.	STATE	FED.AID PROJ.NO.	SHEET NO.	TOTAL SHEETS
				6	ARK.			
				JOB NO.		CA0902	107	581

(2) PERMANENT PAVEMENT MARKING DETAILS

8" CONTINUOUS WHITE HIGH PERFORMANCE PAVEMENT MARKING W/ TYPE II RED / WHITE RAISED PAVEMENT MARKERS @ 10' O.C.

4" SKIP WHITE HIGH PERFORMANCE PAVEMENT MARKING W/ TYPE II RED / WHITE RAISED PAVEMENT MARKERS @ 80' O.C.

8" CONTINUOUS WHITE HIGH PERFORMANCE PAVEMENT MARKING W/ TYPE II RED / WHITE RAISED PAVEMENT MARKERS @ 36' O.C.

℄ E. CENTRAL AVE.

℄ I-49 STA. 1430+31.09 =
℄ E. CENTRAL AVE./HWY. 72 STA. 194+36.12
Δ 90°00'00"

NOSE
℄ RAMP 6 STA. 200+26.14, 7.50' LT. =
℄ I-49 STA. 1433+01.94, 57.09' LT.

8" CONTINUOUS WHITE HIGH PERFORMANCE PAVEMENT MARKING W/ TYPE II RED / WHITE RAISED PAVEMENT MARKERS @ 10' O.C.

℄ RAMP 6

RAMP 4

RAMP 6

RAMP 5

RAMP 1

RAMP 3

RAMP 2

℄ I-49

℄ HWY. 72

HWY-72

1420+00

1425+00

1430+00

1435+00

1440+00

1445+00

00+75.36

200+00

PC 1432+52.00

PI 1448+06.05
Δ= 00°02'49"

+41.4

+83.5

+17

+21

+27

+53

+85.8

+43

+88.3

+67

N 46°11'26" W

8" DOTTED WHITE HIGH PERFORMANCE MARKING W/ TYPE II RED / WHITE RAISED PAVEMENT MARKERS @ 36' O.C.

4" CONTINUOUS YELLOW HIGH PERFORMANCE PAVEMENT MARKING

4" CONTINUOUS WHITE HIGH PERFORMANCE PAVEMENT MARKING

DIRECTIONAL ARROW (19) TYPE II RED / WHITE RAISED PAVEMENT MARKERS

8" CONTINUOUS WHITE HIGH PERFORMANCE PAVEMENT MARKING W/ TYPE II RED / WHITE RAISED PAVEMENT MARKERS @ 10' O.C.

DIRECTIONAL ARROW (19) TYPE II RED / WHITE RAISED PAVEMENT MARKERS

NOSE
℄ RAMP 5 STA. 1433+32.29, 7.50' LT. =
℄ I-49 STA. 1433+32.62, 68.75' RT.

℄ RAMP 5

8" CONTINUOUS WHITE HIGH PERFORMANCE PAVEMENT MARKING W/ TYPE II RED / WHITE RAISED PAVEMENT MARKERS @ 10' O.C.

4" SKIP WHITE HIGH PERFORMANCE PAVEMENT MARKING W/ TYPE II RED / WHITE RAISED PAVEMENT MARKERS @ 80' O.C.

4" CONTINUOUS WHITE HIGH PERFORMANCE PAVEMENT MARKING

4" CONTINUOUS YELLOW HIGH PERFORMANCE PAVEMENT MARKING

8" CONTINUOUS WHITE HIGH PERFORMANCE PAVEMENT MARKING W/ TYPE II RED / WHITE RAISED PAVEMENT MARKERS @ 10' O.C.

END JOB CA0902
STA. 1438+00.00
LOG MILE 87.99

STA. 1436+64 MATCH EXISTING MARKINGS

STATE OF ARKANSAS
REGISTERED PROFESSIONAL ENGINEER
No. 8760
ANDREW E. FRIES
5/5/16

PERMANENT PAVEMENT MARKING DETAILS

5/5/2016 04:34:37 AM
\\PW\...\CA0902_PM_HWY540_07.dgn

DATE	DATE FILMED	DATE REVISED	DATE FILMED	FED.RD. DIST.NO.	STATE	FED.AID PROJ.NO.	SHEET NO.	TOTAL SHEETS
				6	ARK.			
				JOB NO.		CA0902	108	581

(2) PERMANENT PAVEMENT MARKING DETAILS

STATE OF ARKANSAS
REGISTERED PROFESSIONAL ENGINEER
No. 8760
ANDREW E. FRIES
5/5/16

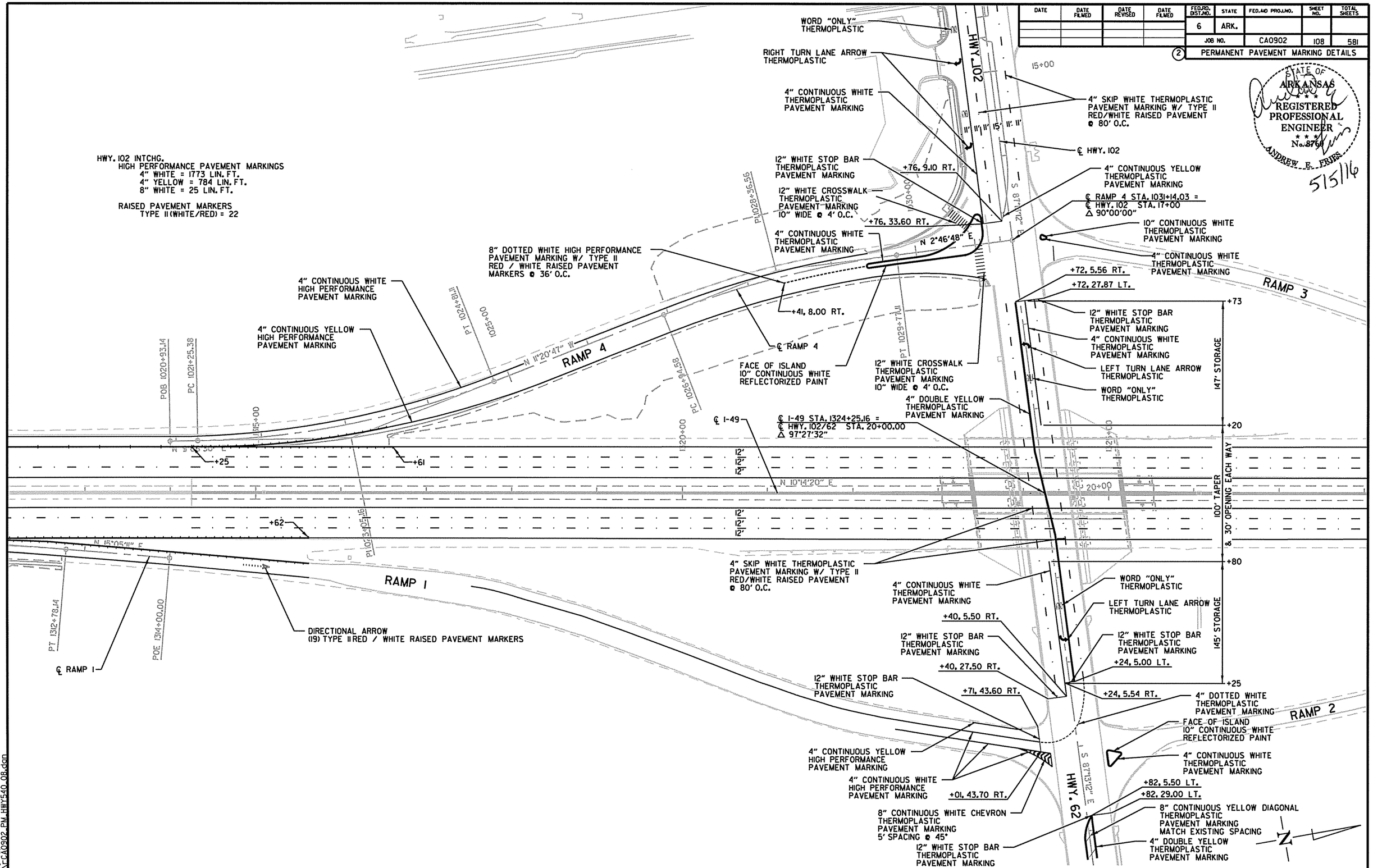

PERMANENT PAVEMENT MARKING DETAILS

5/5/2016
0:34:50 AM
PM\CA0902_PM_HWY540_08.dgn

DATE	DATE FILMED	DATE REVISED	DATE FILMED	FED.RD. DIST.NO.	STATE	FED.AID PROJ.NO.	SHEET NO.	TOTAL SHEETS
				6	ARK.			
				JOB NO.		CA0902	109	581

(2) PERMANENT PAVEMENT MARKING DETAILS

STATE OF ARKANSAS
REGISTERED PROFESSIONAL ENGINEER
No. 8760
ANDREW E. FRIES
5/5/16

HWY. 72 INTCHG.
HIGH PERFORMANCE PAVEMENT MARKINGS
4" WHITE = 3480 LIN. FT.
8" WHITE = 292 LIN. FT.
4" YELLOW = 2082 LIN. FT.

REFLECTORIZED PAINT
10" WHITE = 87 LIN. FT.

RAISED PAVEMENT MARKERS
TYPE II (RED/WHITE) = 42 EA.

RAMP 3
℄ RAMP 3
PT 304+41.24
305+00
306+54
4" CONTINUOUS YELLOW HIGH PERFORMANCE PAVEMENT MARKING
4" CONTINUOUS WHITE HIGH PERFORMANCE PAVEMENT MARKING
PT 302+90.40
N 3°28'45" W
+51
RIGHT TURN LANE ARROW THERMOPLASTIC ℄ 100' O.C.
8" CONTINUOUS WHITE CHEVRON THERMOPLASTIC PAVEMENT MARKING 5' SPACING ℄ 45°
+54.59, 58.83 LT.
+35.19, 73.05 LT.
4" DOTTED WHITE THERMOPLASTIC PAVEMENT MARKING
FACE OF ISLAND 10" CONTINUOUS WHITE REFLECTORIZED PAINT
+28.39, 30.25' LT.
8" CONTINUOUS YELLOW DIAGONAL THERMOPLASTIC PAVEMENT MARKING 10' SPACING ℄ 45°
+18
12' 11' 11' 11'
40' 50'
+72.6, 6.06 RT.
+72.6, 27.32 RT.
12" WHITE STOP BAR THERMOPLASTIC PAVEMENT MARKING
12" WHITE CROSSWALK THERMOPLASTIC PAVEMENT MARKING 10' WIDE ℄ 4' O.C.
RAMP 4
RAMP 6
4" CONTINUOUS YELLOW HIGH PERFORMANCE PAVEMENT MARKING
4" CONTINUOUS WHITE HIGH PERFORMANCE PAVEMENT MARKING
WORD "ONLY" THERMOPLASTIC ℄ 100' O.C.
LEFT TURN LANE ARROW THERMOPLASTIC ℄ 100' O.C.
NOSE
℄ RAMP 6 STA. 200+26.14, 7.50' LT. =
℄ I-49 STA. 1433+01.94, 57.09' LT.
195+00
200+00
PT 200+75.36
8" CONTINUOUS WHITE HIGH PERFORMANCE PAVEMENT MARKING W/ TYPE II RED/WHITE RAISED PAVEMENT MARKERS ℄ 10' O.C.
℄ RAMP 6
PC 191+90.00
190+00
℄ RAMP 6 STA. 191+90.00 =
℄ E. CENTRAL AVE. STA. 191+90.27
WORD "ONLY" THERMOPLASTIC ℄ 100' O.C.
RIGHT TURN LANE ARROWS THERMOPLASTIC ℄ 100' O.C.
+67, 34.71 LT.
PC 301+33.43
+79, 38.82 LT.
4" CONTINUOUS WHITE THERMOPLASTIC PAVEMENT MARKING
+17, 28.00 LT.
+17, 6.25 LT.
+99
+55
50' 40'
E. CENTRAL AVE.
+40
℄ E. CENTRAL AVE.
4" CONTINUOUS WHITE THERMOPLASTIC PAVEMENT MARKING
8" CONTINUOUS YELLOW DIAGONAL THERMOPLASTIC PAVEMENT MARKING 10' SPACING ℄ 45°
100' TAPER & 30' OPENING
+15
+45
NOSE
℄ RAMP 6 STA. 192+70.31, 7.50' LT. =
℄ E. CENTRAL AVE. STA. 191+09.27, 42.58' LT.
PROVIDE HIGH PERFORMANCE CONTRAST PAVEMENT MARKING FOR ALL STRIPING ON BRIDGES & APPROACH SLABS EXCEPT EDGE LINES
℄ I-49
N 46°11'26" W
1435+00
RAMP 5
4" CONTINUOUS YELLOW HIGH PERFORMANCE PAVEMENT MARKING
4" CONTINUOUS WHITE HIGH PERFORMANCE PAVEMENT MARKING
NOSE
℄ RAMP 5 STA. 1433+32.29, 7.50' LT. =
℄ I-49 STA. 1433+32.62, 68.75' RT.
℄ RAMP 5
PC 1432+52.00
℄ I-49 STA. 1430+31.09 =
℄ E. CENTRAL AVE./HWY. 72 STA. 194+36.12
Δ 90°00'00"
℄ RAMP 5 STA. 141+37.03 =
℄ HWY. 72 STA. 196+82.51
PT 141+37.03
WORD "ONLY" THERMOPLASTIC ℄ 100' O.C.
LEFT TURN LANE ARROWS THERMOPLASTIC ℄ 100' O.C.
1440+00
+18
+59
+68
℄ HWY. 72
HWY. 72
40' 50'
836' STORAGE
8" DOTTED WHITE HIGH PERFORMANCE PAVEMENT MARKING W/ TYPE II RED/WHITE RAISED PAVEMENT MARKERS ℄ 36' O.C.
NOSE
℄ RAMP 5 STA. 1440+88.31, 7.50' LT. =
℄ HWY. 72 STA. 197+32.61, 31.53' LT.
4" SKIP WHITE THERMOPLASTIC PAVEMENT MARKING W/ TYPE II RED/WHITE RAISED PAVEMENT MARKERS ℄ 80' O.C.
8" CONTINUOUS WHITE HIGH PERFORMANCE PAVEMENT MARKING W/ TYPE II RED/WHITE RAISED PAVEMENT MARKERS ℄ 10' O.C.
4" CONTINUOUS WHITE THERMOPLASTIC PAVEMENT MARKING
+82, 6.25' LT.
+82, 28.00' RT.
4" DOUBLE YELLOW THERMOPLASTIC PAVEMENT MARKING
12" WHITE STOP BAR THERMOPLASTIC PAVEMENT MARKING
+19
+82, 54.58' RT.
RIGHT TURN LANE ARROW THERMOPLASTIC ℄ 100' O.C.
4" CONTINUOUS YELLOW HIGH PERFORMANCE PAVEMENT MARKING
WORD "ONLY" THERMOPLASTIC ℄ 100' O.C.
RAMP 1
11.5' 11.5'
+38.51, 68.91' RT.
8" CONTINUOUS YELLOW DIAGONAL THERMOPLASTIC PAVEMENT MARKING 10' SPACING ℄ 45°
12" WHITE STOP BAR THERMOPLASTIC PAVEMENT MARKING
RAMP 2
RIGHT TURN LANE ARROW THERMOPLASTIC
WORD "ONLY" THERMO-PLASTIC
PC 201+55.07
+82, 43.49' LT.
+82, 6.75' LT.
+75
100' TAPER
+17
12" WHITE CROSSWALK THERMOPLASTIC PAVEMENT MARKING 10' WIDE ℄ 4' O.C.
4" DOUBLE YELLOW THERMOPLASTIC PAVEMENT MARKING
4" CONTINUOUS WHITE HIGH PERFORMANCE PAVEMENT MARKING
N

PERMANENT PAVEMENT MARKING DETAILS

5/5/2016
8:34:55 AM
\PW\CA0902_PM_HWY540_09.dgn

DATE	DATE FILMED	DATE REVISED	DATE FILMED	FED.RD. DIST.NO.	STATE	FED.AID PROJ.NO.	SHEET NO.	TOTAL SHEETS
				6	ARK.			
				JOB NO.		CA0902	110	581

(2) PERMANENT PAVEMENT MARKING DETAILS

HWY. 102
THERMOPLASTIC PAVEMENT MARKINGS
4" WHITE = 2,031 LIN. FT.
8" WHITE = 58 LIN. FT.
12" WHITE = 4,044 LIN. FT.
4" DOTTED WHITE = 143 LIN. FT.
4" SKIP WHITE = 806 LIN. FT.
4" YELLOW = 22 LIN. FT.
4" DBL. YELLOW = 940 LIN. FT.
8" YELLOW = 46 LIN. FT.

REFLECTORIZED PAINT PAVEMENT MARKINGS
10" WHITE = 400 LIN. FT.

HWY. 102

RT. TURN ARROW = 8 EA.
LT. TURN ARROW = 8 EA.
WORD "ONLY" = 10 EA.

RAISED PAVEMENT MARKERS
TYPE II (RED/WHITE) = 56 EA.

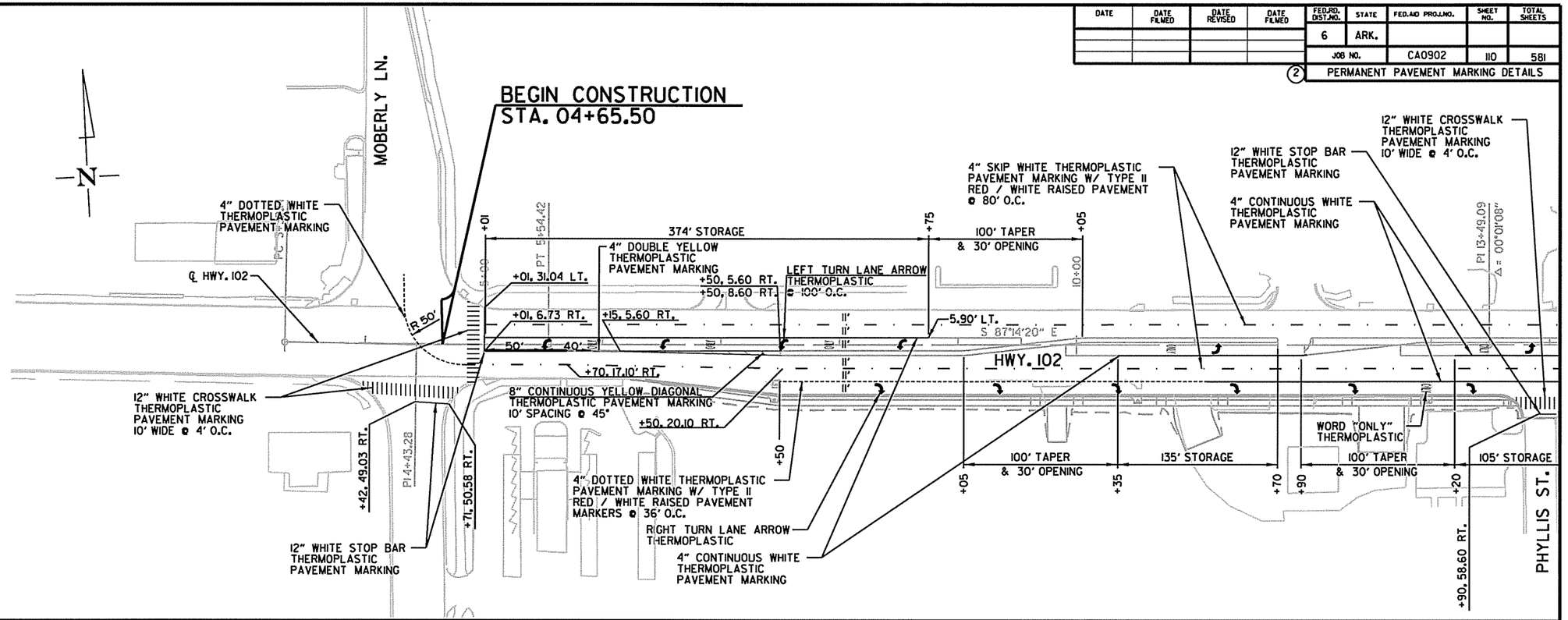

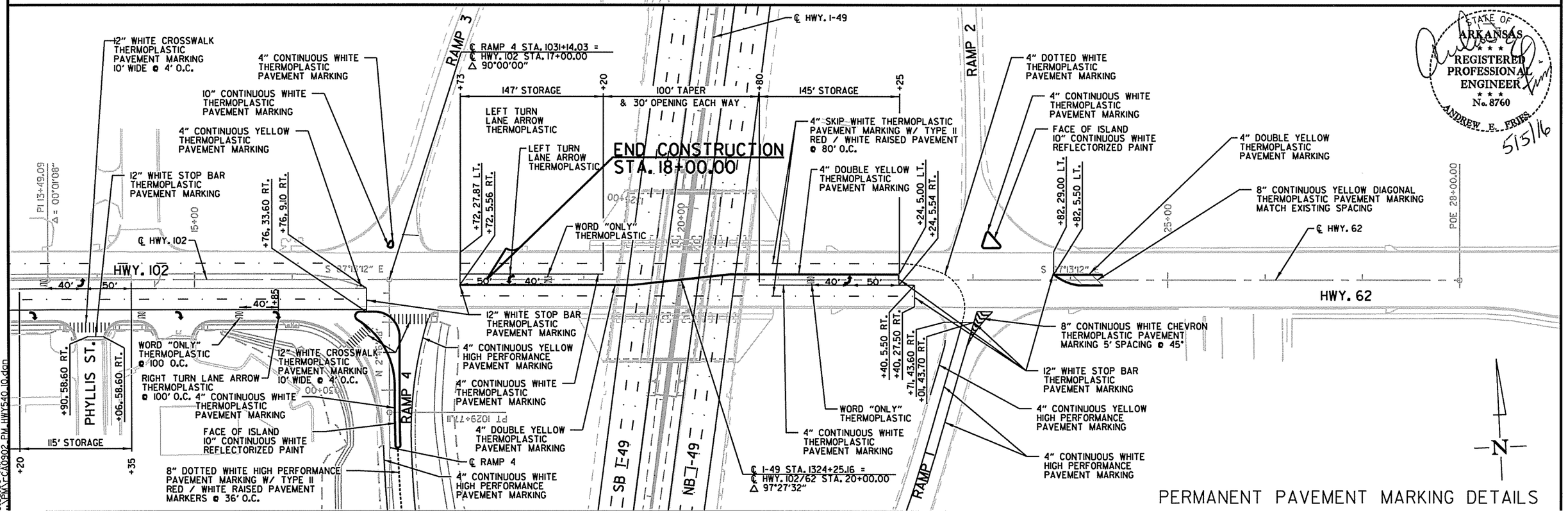

PERMANENT PAVEMENT MARKING DETAILS

5/5/2016 10:35:00 AM
\\PW1\CA0902 PW HWY540 10.dgn

HWY. 72
THERMOPLASTIC PAVEMENT MARKINGS
4" WHITE = 2209 LIN. FT.
4" SKIP WHITE = 1040 LIN. FT.
4" DOTTED WHITE = 60 LIN. FT.
8" WHITE = 380 LIN. FT.
12" WHITE = 496 LIN. FT.
4" YELLOW = 1275 LIN. FT.
4" DBL. YELLOW = 2632 LIN. FT.
4" SKIP YELLOW = 319 LIN. FT.
8" YELLOW = 458 LIN. FT.

REFLECTORIZED PAINT PAVEMENT MARKINGS
10" WHITE = 99 LIN. FT.

HIGH PERFORMANCE CONTRAST PAVEMENT MARKINGS
4" WHITE = 401 LIN. FT.
8" WHITE = 67 LIN. FT.
4" YELLOW = 534 LIN. FT.

RIGHT TURN ARROW = 19 EA.
LEFT TURN ARROW = 12 EA.
WORD "ONLY" = 26 EA.

RAISED PAVEMENT MARKERS
TYPE II (RED/WHITE) = 70 EA.
TYPE II (YELLOW/YELLOW) = 16 EA.

DATE	DATE FILMED	DATE REVISED	DATE FILMED	FED.RD. DIST.NO.	STATE	FED.AID PROJ.NO.	SHEET NO.	TOTAL SHEETS
				6	ARK.			
				JOB NO.		CA0902	III	581

2 PERMANENT PAVEMENT MARKING DETAILS

STATE OF ARKANSAS
REGISTERED PROFESSIONAL ENGINEER
No. 8760
ANDREW E. FRIES
5/5/16

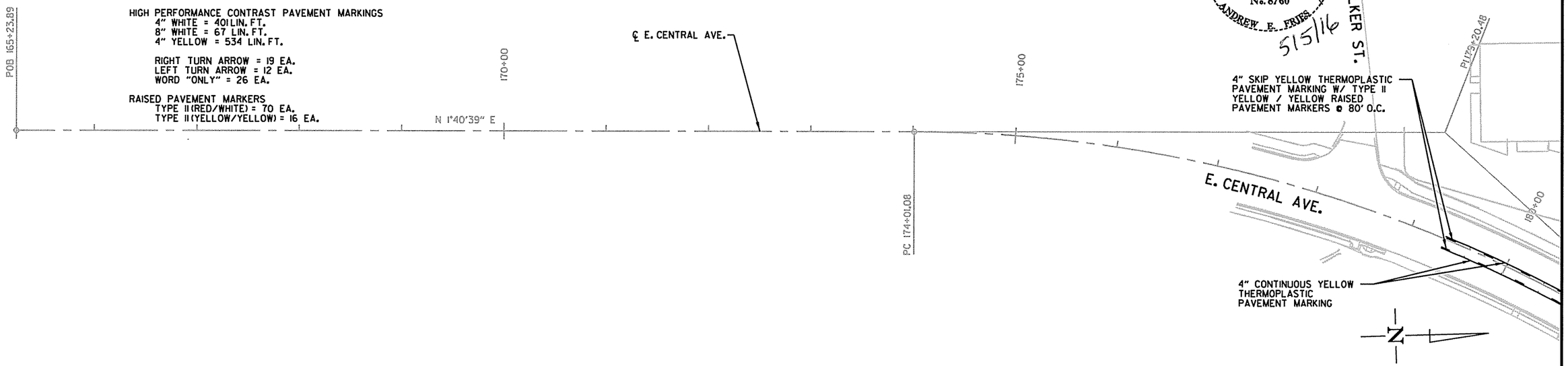

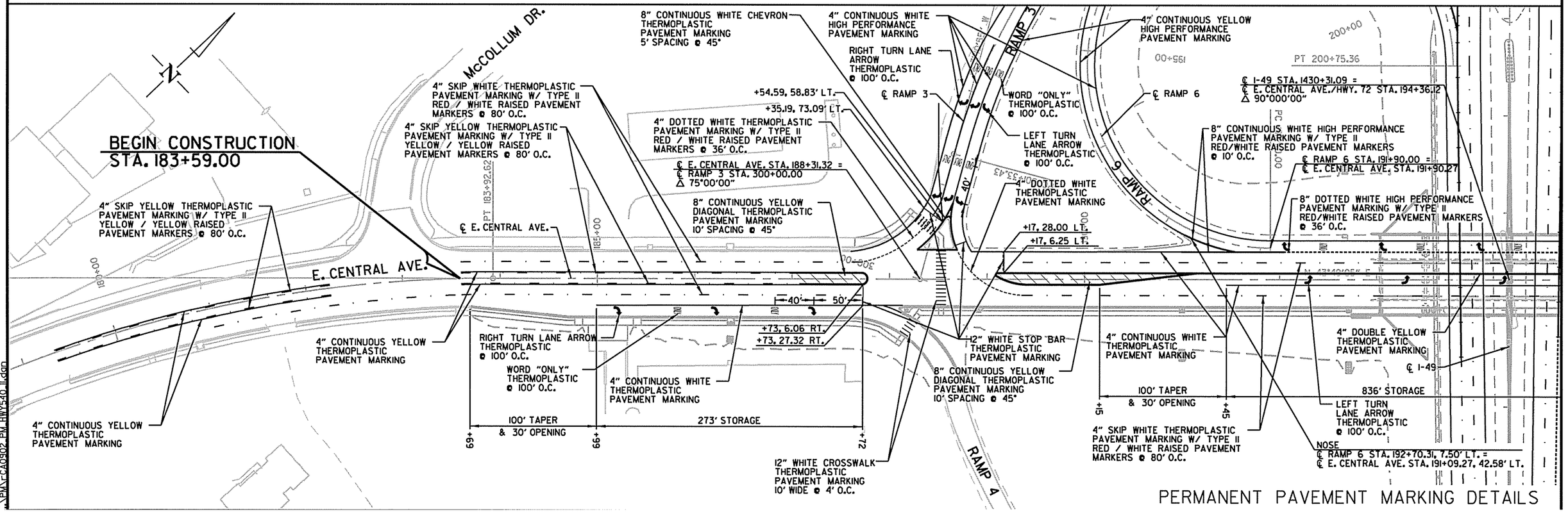

PERMANENT PAVEMENT MARKING DETAILS

5/5/2016
01:35:15 AM
\\PW\...CA0902_PM_HWY540_II.dgn

DATE	DATE FILMED	DATE REVISED	DATE FILMED	FED.RD. DST.NO.	STATE	FED.AID PROJ.NO.	SHEET NO.	TOTAL SHEETS
				6	ARK.			
				JOB NO.		CA0902	112	581

(2) PERMANENT PAVEMENT MARKING DETAILS

STATE OF ARKANSAS
REGISTERED PROFESSIONAL ENGINEER
No. 8760
ANDREW E. FRIES
5/5/16

4" CONTINUOUS WHITE HIGH PERFORMANCE PAVEMENT MARKING
℄ I-49 STA. 1430+31.09 = ℄ E. CENTRAL AVE./HWY. 72 STA. 194+36.12
△ 90°00'00"
PC 1432+52.00
PT 1429+37.03
℄ RAMP 5
RAMP 5
WORD "ONLY" THERMOPLASTIC @ 100' O.C.
8" CONTINUOUS WHITE HIGH PERFORMANCE PAVEMENT MARKING W/ TYPE II RED/WHITE RAISED PAVEMENT MARKERS @ 10' O.C.
℄ RAMP 5 STA. 141+37.03 = ℄ HWY. 72 STA. 196+82.51
1410+00
℄ HWY. 72
+59
+68
+18
40'
50'
HWY. 72
4" CONTINUOUS WHITE THERMOPLASTIC PAVEMENT MARKING
NOSE
℄ RAMP 5 STA. 1440+88.31, 7.50' LT. =
℄ HWY. 72 STA. 197+32.61, 31.53' LT.
4" SKIP WHITE THERMOPLASTIC PAVEMENT MARKING W/ TYPE II RED / WHITE RAISED PAVEMENT MARKERS @ 80' O.C.
LEFT TURN LANE ARROW THERMOPLASTIC @ 100' O.C.
836' STORAGE
8" DOTTED WHITE HIGH PERFORMANCE PAVEMENT MARKING W/ TYPE II RED/WHITE RAISED PAVEMENT MARKERS @ 36' O.C.
℄ I-49
4" CONTINUOUS YELLOW HIGH PERFORMANCE PAVEMENT MARKING
RIGHT TURN LANE ARROW THERMOPLASTIC @ 100' O.C.
WORD "ONLY" THERMOPLASTIC 100' O.C.
RAMP 2
200+00
4" CONTINUOUS YELLOW HIGH PERFORMANCE PAVEMENT MARKING
12" WHITE STOP BAR THERMOPLASTIC PAVEMENT MARKING
RIGHT TURN LANE ARROW THERMOPLASTIC @ 100' O.C.
+82.28.00' RT.
+82.6.25' LT.
+82.43.49' LT.
+82.6.75' LT.
PC 201+55.07
8" CONTINUOUS YELLOW DIAGONAL THERMOPLASTIC PAVEMENT MARKING 10' SPACING @ 45°
4" CONTINUOUS WHITE THERMOPLASTIC PAVEMENT MARKING
50'
40'
+92
+19.2, 54.58' RT.
100' TAPER & 30' OPENING
4" DOTTED WHITE THERMOPLASTIC PAVEMENT MARKING W/ TYPE II RED / WHITE RAISED PAVEMENT MARKERS @ 36' O.C.
+38.51, 68.91' RT.
12" WHITE CROSSWALK THERMOPLASTIC PAVEMENT MARKING 10' WIDE @ 4' O.C.
RAMP 4
4" CONTINUOUS WHITE HIGH PERFORMANCE PAVEMENT MARKING
NE 11TH ST.
4" SKIP WHITE THERMOPLASTIC PAVEMENT MARKING W/ TYPE II RED / WHITE RAISED PAVEMENT MARKERS @ 80' O.C.
PI 204+71.82
4" DOUBLE YELLOW THERMOPLASTIC PAVEMENT MARKING
205+00
4" CONTINUOUS WHITE THERMOPLASTIC PAVEMENT MARKING
NE McCLAIN RD.
LEFT TURN LANE ARROW THERMOPLASTIC @ 100' O.C.
WORD "ONLY" THERMOPLASTIC @ 100' O.C.
BEAU TERRE DR.
303' STORAGE
+47
+50
+45
N

8" DOTTED WHITE THERMOPLASTIC PAVEMENT MARKING W/ TYPE II RED / WHITE RAISED PAVEMENT MARKERS @ 36' O.C.
8" CONTINUOUS WHITE THERMOPLASTIC PAVEMENT MARKING
NE McCLAIN RD.
+45
8" CONTINUOUS YELLOW DIAGONAL THERMOPLASTIC PAVEMENT MARKING 10' SPACING @45°
℄ HWY. 72
210+00
4" SKIP WHITE THERMOPLASTIC PAVEMENT MARKING W/ TYPE II RED / WHITE RAISED PAVEMENT MARKERS @ 80' O.C.
4" CONTINUOUS WHITE THERMOPLASTIC PAVEMENT MARKING
215+00
POE 216+09.95
+78
+78
+23
HWY. 72
+80.6
S 86°54'42" E
+41
+36
WORD "ONLY" THERMOPLASTIC @ 100' O.C.
RIGHT TURN LANE ARROW THERMOPLASTIC @ 100' O.C.
PT 206+47.78
4" DOUBLE YELLOW THERMOPLASTIC PAVEMENT MARKING
4" SKIP WHITE THERMOPLASTIC PAVEMENT MARKING W/ TYPE II RED / WHITE RAISED PAVEMENT MARKERS @ 80' O.C.
BEAU TERRE DR.
END CONSTRUCTION
STA. 212+13.16
N

PERMANENT PAVEMENT MARKING DETAILS

5/5/2016 10:35:58 AM
\PMKT\CA0902_PM_HWY540_12.dgn

DATE	DATE FILMED	DATE REVISED	DATE FILMED	FED.RD. DIST.NO.	STATE	FED.AID PROJ.NO.	SHEET NO.	TOTAL SHEETS
				6	ARK.			
				JOB NO.		CA0902	113	581

(2) SIGN PLACEMENT SHEET

NOTES

THE CONTRACTOR SHALL VERIFY SIGN PLACEMENT AND MAKE ANY ADJUSTMENTS NECESSARY TO ALIGN SIGNS OVER INTENDED LANES.

ALL EXISTING GUIDE SIGNS SHALL BE MAINTAINED IN SUCH A MANNER THAT THE SIGNS ARE FULLY VISIBLE, INTACT, AND ERECT FOR THE DURATION OF THE PROJECT, AND SHALL BE REMOVED WHEN THEIR USE IS NO LONGER REQUIRED. REMOVAL AND DISPOSAL OF SIGNS, SUPPORTS AND FOUNDATIONS SHALL NOT BE PAID FOR SEPARATELY BUT SHALL BE CONSIDERED SUBSIDIARY TO OTHER ITEMS IN THE CONTRACT.

THE EXISTING SIGNS AND SUPPORTS SHALL BECOME THE PROPERTY OF THE CONTRACTOR. THE EXISTING FOOTINGS SHALL BE REMOVED AND THE HOLES FILLED WITH A SUITABLE MATERIAL AND COMPACTED.

THE EXISTING SIGN STRUCTURES SHALL BE REMOVED 2.5 FEET BELOW NORMAL GRADE AND THE HOLES FILLED WITH A SUITABLE MATERIAL AND COMPACTED TO NORMAL GRADE.

THE EXISTING LOGOS WILL BE RELOCATED TO THE NEW LOGO SIGN BY THE CONTRACTOR. THE LOGO INSTALLATION SHALL NOT BE PAID FOR SEPARATELY BUT SHALL BE CONSIDERED SUBSIDIARY TO OTHER ITEMS IN THE CONTRACT.

ALL CONVENTIONAL ROAD SIGNAGE SHALL USE SERIES C-2000 STANDARD ALPHABET. ALL FREEWAY GUIDE SIGNAGE SHALL USE SERIES E- MODIFIED STANDARD ALPHABET. REFER TO MUTCD AND THE STANDARD HIGHWAY SIGNS MANUAL FOR ADDITIONAL GUIDANCE.

CONTRACTOR IS REQUIRED TO INSTALL ALL MAINLINE I-49 PERMANENT SIGNAGE IN LOCATIONS OF OUTSIDE WIDENING IN ULTIMATE LOCATION WITHIN 72 HOURS OF REMOVAL OF EXISTING SIGNS. THIS WORK SHALL BE COORDINATED WITH THE ENGINEER.

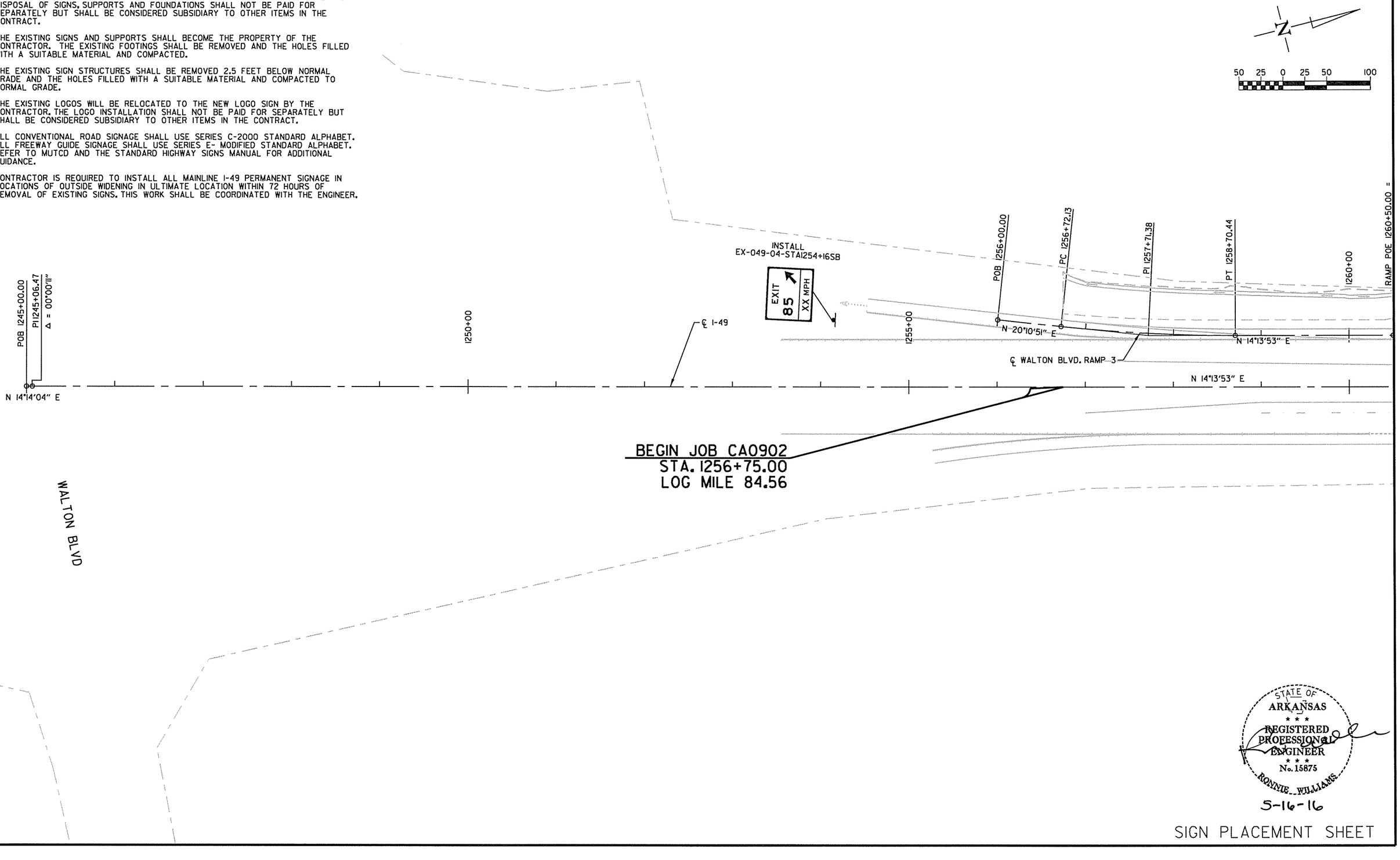

STATE OF ARKANSAS
REGISTERED PROFESSIONAL ENGINEER
No. 15875
RONNIE WILLIAMS

5-16-16

SIGN PLACEMENT SHEET

5/16/2016
9:59:58 AM
\\PS\CA0902_PS_HWY540_01.dgn

DATE	DATE FILMED	DATE REVISED	DATE FILMED

FED.RD. DIST.NO.	STATE	FED.AID PROJ.NO.	SHEET NO.	TOTAL SHEETS
6	ARK.			
JOB NO.		CA0902	114	581

2 SIGN PLACEMENT SHEET

INSTALL
OH-049-04-STAI261+00SB-A

INSTALL
OH-049-04-STAI261+00SB-B

EXIT 85
71 12
Walnut St
SE Walton Blvd
EXIT ONLY

EXIT 83
Pinnacle Hills Pkwy
New Hope Rd
1 ¼ MILES

10' SHLDR. | 12' TRAVEL LANE | 12' TRAVEL LANE | 12' TRAVEL LANE | 12' TRAVEL LANE | 10' SHLDR. | 8'-3"

EXISTING OH MEDIAN FOUNDATION
INSTALLED WITH JOB 090305

INSTALL
SS-049-04-STAI261+00SB

INSTALL
GM-049-04-STAI268+50SB

OVERHEAD AT STAI261+00SB
INSTALL OH-049-04-05

Northwest Medical Center EXIT 85

℄ I-49 STA. 1271+95.05 =
℄ OLIVE ST. STA. 20+00.00
△ 100°42'20"

PI 18+31.83
△ = 00°24'17"

S 86°04'10" E

S 86°28'27" E

RAMP POE 1260+50.00 =
I-49 STA. 1260+50.00

1260+00 | 1265+00 | 1270+00 | 1275+00

℄ I-49

N 14°13'53" E

20+00

50 25 0 25 50 100

49 NORTH INTERSTATE

INSTALL
SS-049-04-STAI260+81NB

Eureka Springs EXIT 86

INSTALL
GM-049-04-STAI265+41NB

PI 21+68.38
△= 00°38'40"

OLIVE ST.

INSTALL
CL-049-04-STAI271+00NB

EXIT 86
EAST EAST WEST
62 12 102
SE 14th St
Hudson Rd
¾ MILE
EXIT ONLY

10' SHLDR. | 12' TRAVEL LANE | 12' TRAVEL LANE | 12' TRAVEL LANE | 12' TRAVEL LANE | 10' SHLDR. | 9'-9"

CANTILEVER AT STAI271+00NB
INSTALL CL-049-04-06

S 87°07'06" E

25+00

STATE OF ARKANSAS
REGISTERED PROFESSIONAL ENGINEER
No. 15875
RONNIE WILLIAMS
5-16-16

SIGN PLACEMENT SHEET

5/16/2016
10:06:07 AM
J:\PSL\CA0902_PS_HWY540_02.dgn

DATE	DATE FILMED	DATE REVISED	DATE FILMED	FED.RD. DIST.NO.	STATE	FED.AID PROJ.NO.	SHEET NO.	TOTAL SHEETS
				6	ARK.			
				JOB NO.		CA0902	115	581

(2) SIGN PLACEMENT SHEET

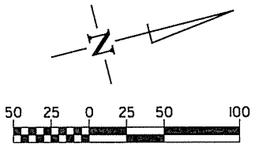

INSTALL
CL-049-04-STAI279+50SB

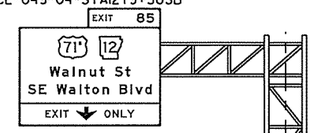

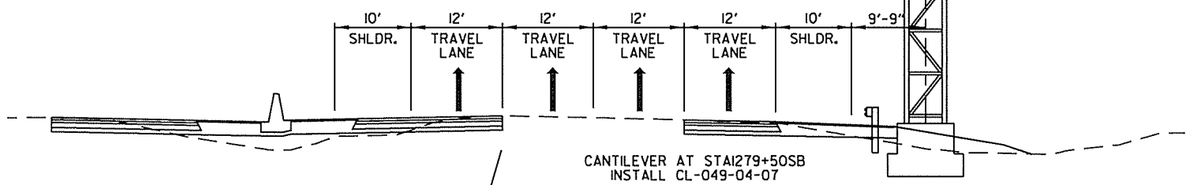

CANTILEVER AT STAI279+50SB
INSTALL CL-049-04-07

INSTALL
LG-049-04-STAI276+00SB

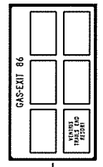

INSTALL
SS-049-04-STAI277+90SB

TO BE INSTALLED BY OTHERS

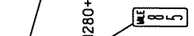

℄ I-49

INSTALL
SS-049-04-STAI282+90SB

INSTALL
LF-049-04-STAI287+55SB

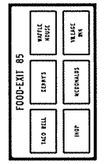

1275+00
1280+00
PC 1283+26.90
1285+00
1290+00

N 14°13'53" E

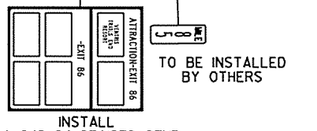

TO BE INSTALLED BY OTHERS

INSTALL
LA-049-04-STAI278+97NB

INSTALL
LF-049-04-STAI287+07NB

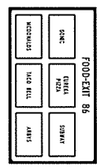

INSTALL
OH-049-04-STAI289+26NB-A

BY OTHERS
OH-049-04-STAI289+26NB-B

INSTALL
OH-049-04-STAI289+26NB-C

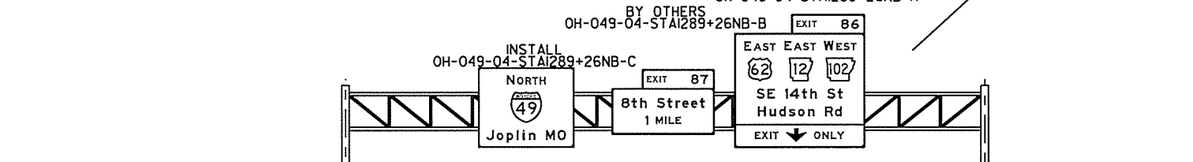

EXISTING OH MEDIAN FOUNDATION INSTALLED WITH JOB 090305

INSTALL
SS-049-04-STAI289+26NB

OVERHEAD AT STAI289+26NB
INSTALL OH-049-04-08

STATE OF ARKANSAS
REGISTERED PROFESSIONAL ENGINEER
No. 15875
RONNIE WILLIAMS
5-16-16

SIGN PLACEMENT SHEET

5/16/2016
10:00:02 AM
\\PSV\P_CA0902_PS_HWY540_03.dgn

DATE	DATE FILMED	DATE REVISED	DATE FILMED	FED.RD. DIST.NO.	STATE	FED.AID PROJ.NO.	SHEET NO.	TOTAL SHEETS
				6	ARK.			
				JOB NO.		CA0902	116	581

(2) SIGN PLACEMENT SHEET

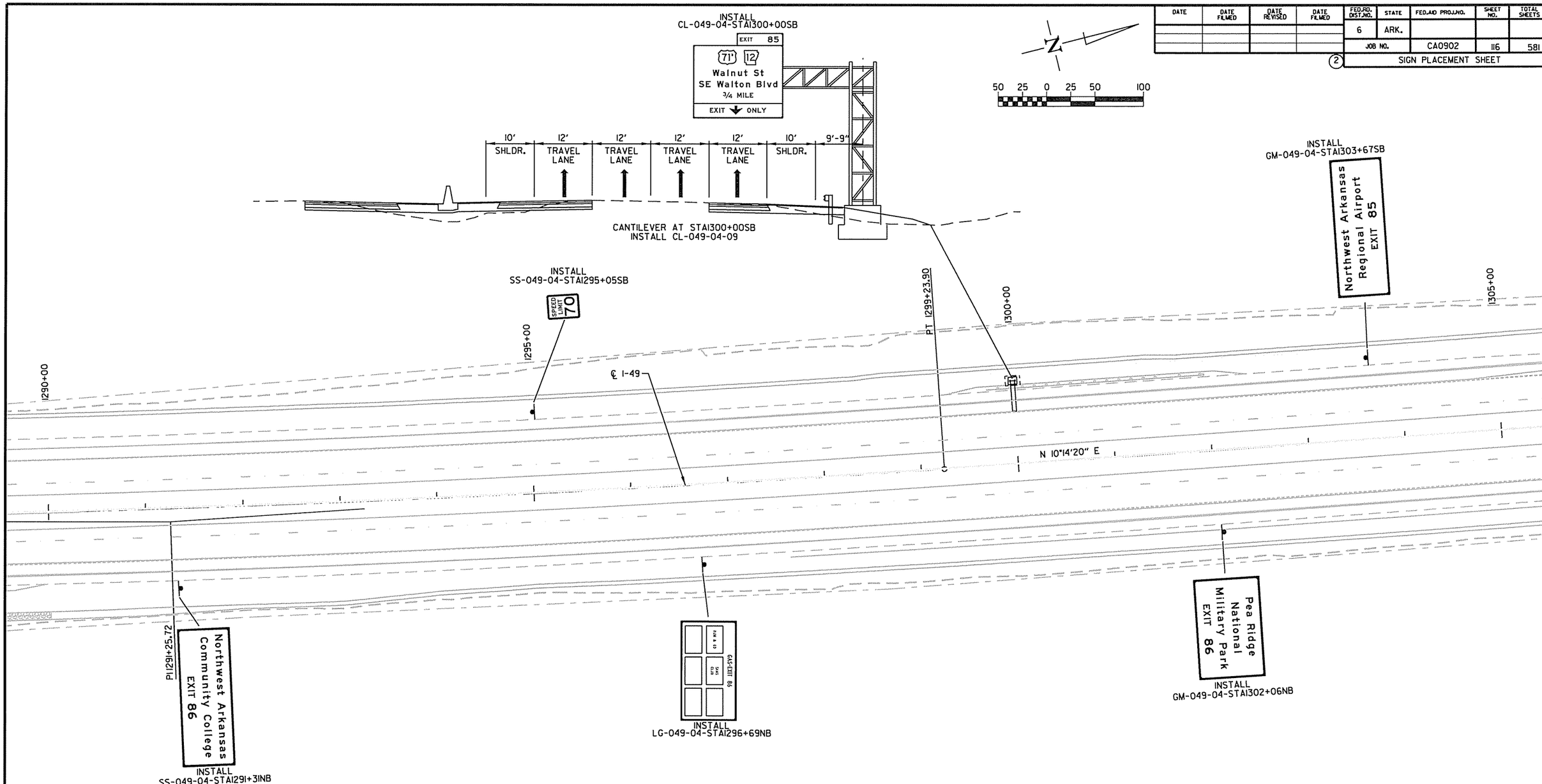

STATE OF ARKANSAS
REGISTERED PROFESSIONAL ENGINEER
No. 15875
RONNIE WILLIAMS

5-16-16

SIGN PLACEMENT SHEET

5/16/2016
10:00:05 AM
\PS\CA0902_PS_HWY540_04.dgn

DATE	DATE FILMED	DATE REVISED	DATE FILMED	FED.RD. DIST.NO.	STATE	FED.AID PROJ.NO.	SHEET NO.	TOTAL SHEETS
				6	ARK.			
				JOB NO.		CA0902	117	581

(2) SIGN PLACEMENT SHEET

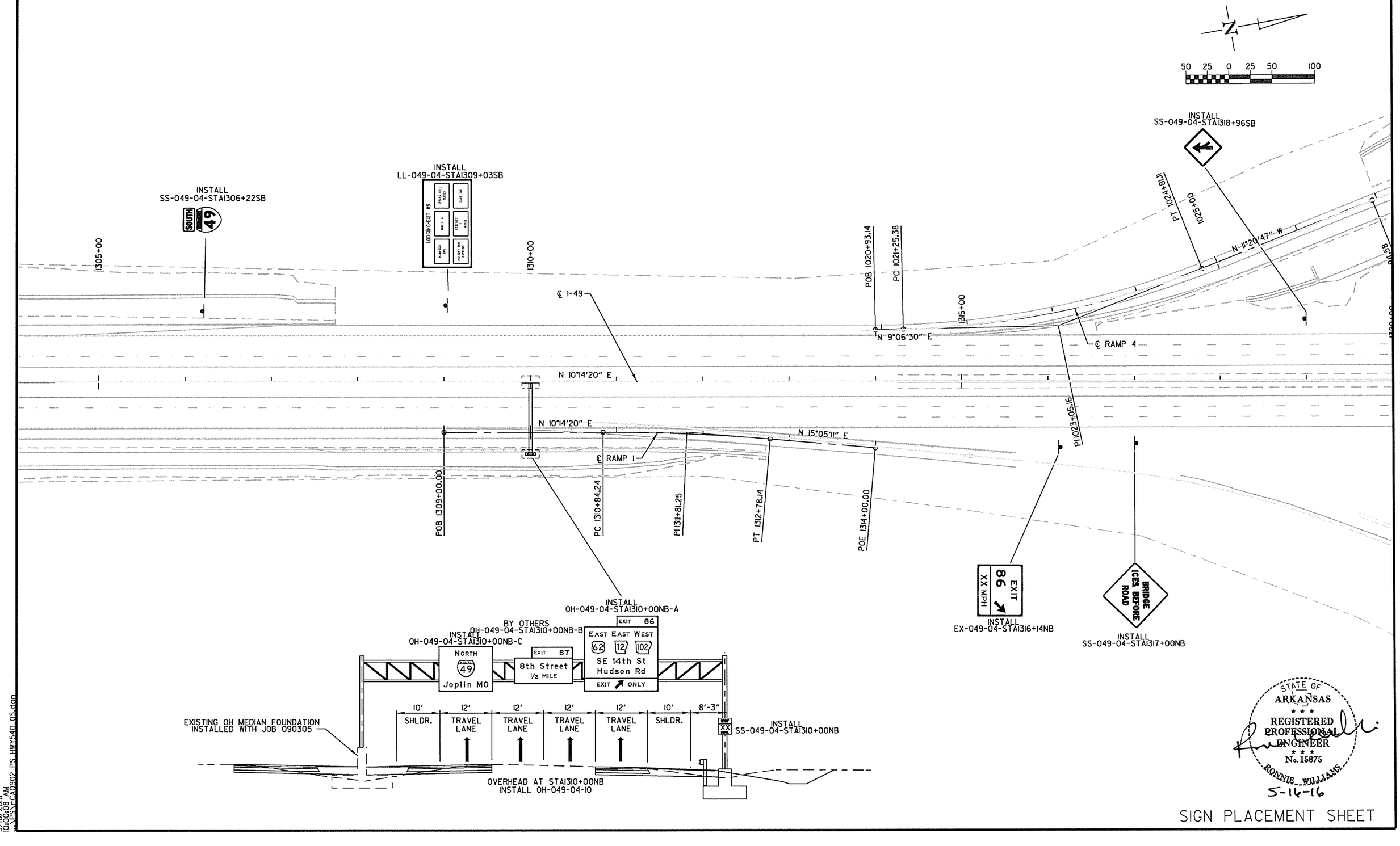

STATE OF ARKANSAS
REGISTERED PROFESSIONAL ENGINEER
No. 15875
RONNIE WILLIAMS
5-16-16

SIGN PLACEMENT SHEET

5/16/2016
10:40:09 AM
M:\PS\CA0902_PS_HWY540_05.dgn

DATE	DATE FILMED	DATE REVISED	DATE FILMED	FED.RD. DIST.NO.	STATE	FED.AID PROJ.NO.	SHEET NO.	TOTAL SHEETS
				6	ARK.			
				JOB NO.		CA0902	118	581

(2) SIGN PLACEMENT SHEET

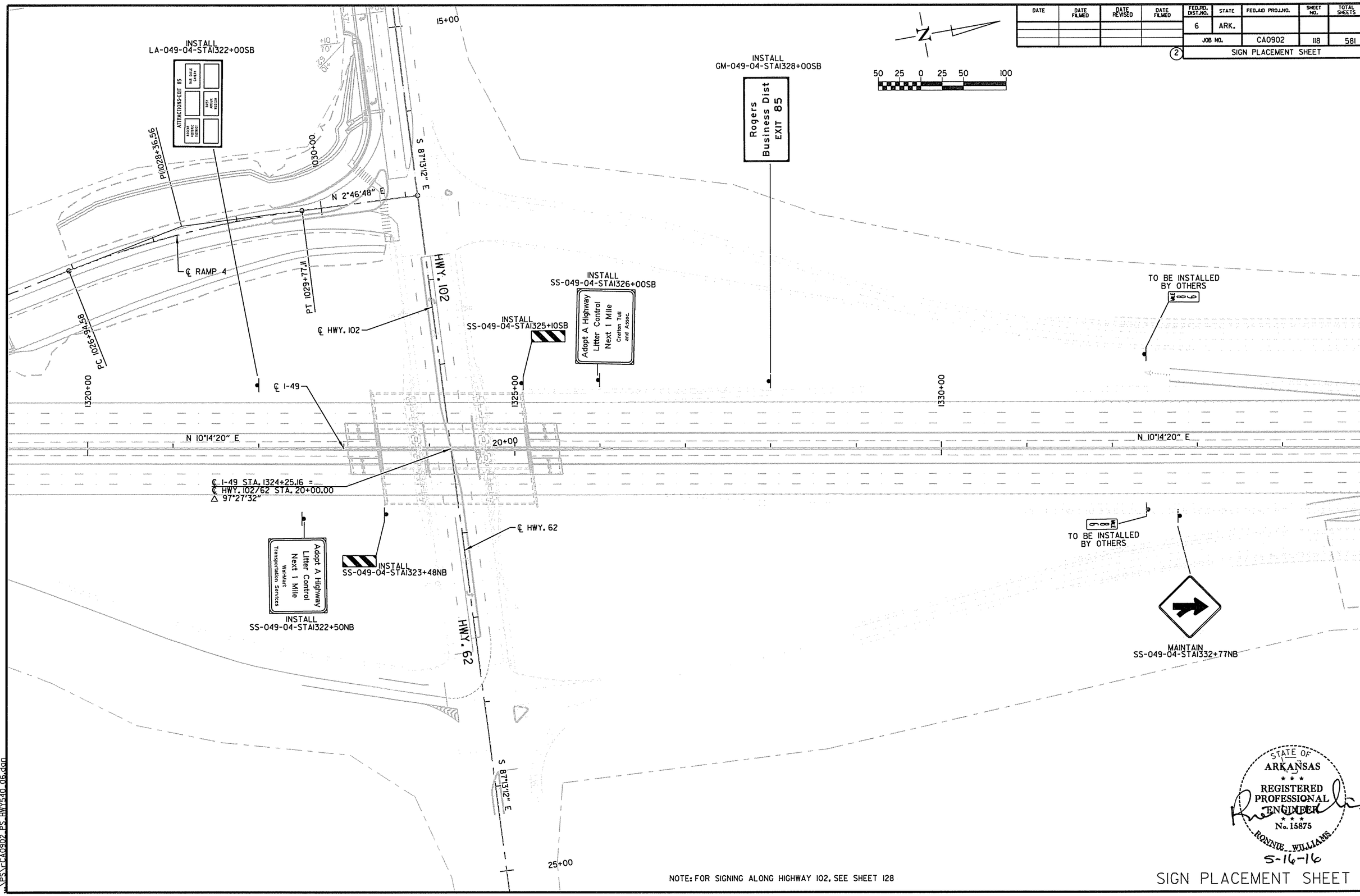

NOTE: FOR SIGNING ALONG HIGHWAY 102, SEE SHEET 128

STATE OF ARKANSAS
REGISTERED PROFESSIONAL ENGINEER
No. 15875
RONNIE WILLIAMS
5-16-16

SIGN PLACEMENT SHEET

5/16/2016
10:00:09 AM
\\PS\rCA0902_PS_HWY540_06.dgn

DATE	DATE FILMED	DATE REVISED	DATE FILMED	FED.RD. DIST.NO.	STATE	FED.AID PROJ.NO.	SHEET NO.	TOTAL SHEETS
				6	ARK.			
				JOB NO.		CA0902	119	581

(2) SIGN PLACEMENT SHEET

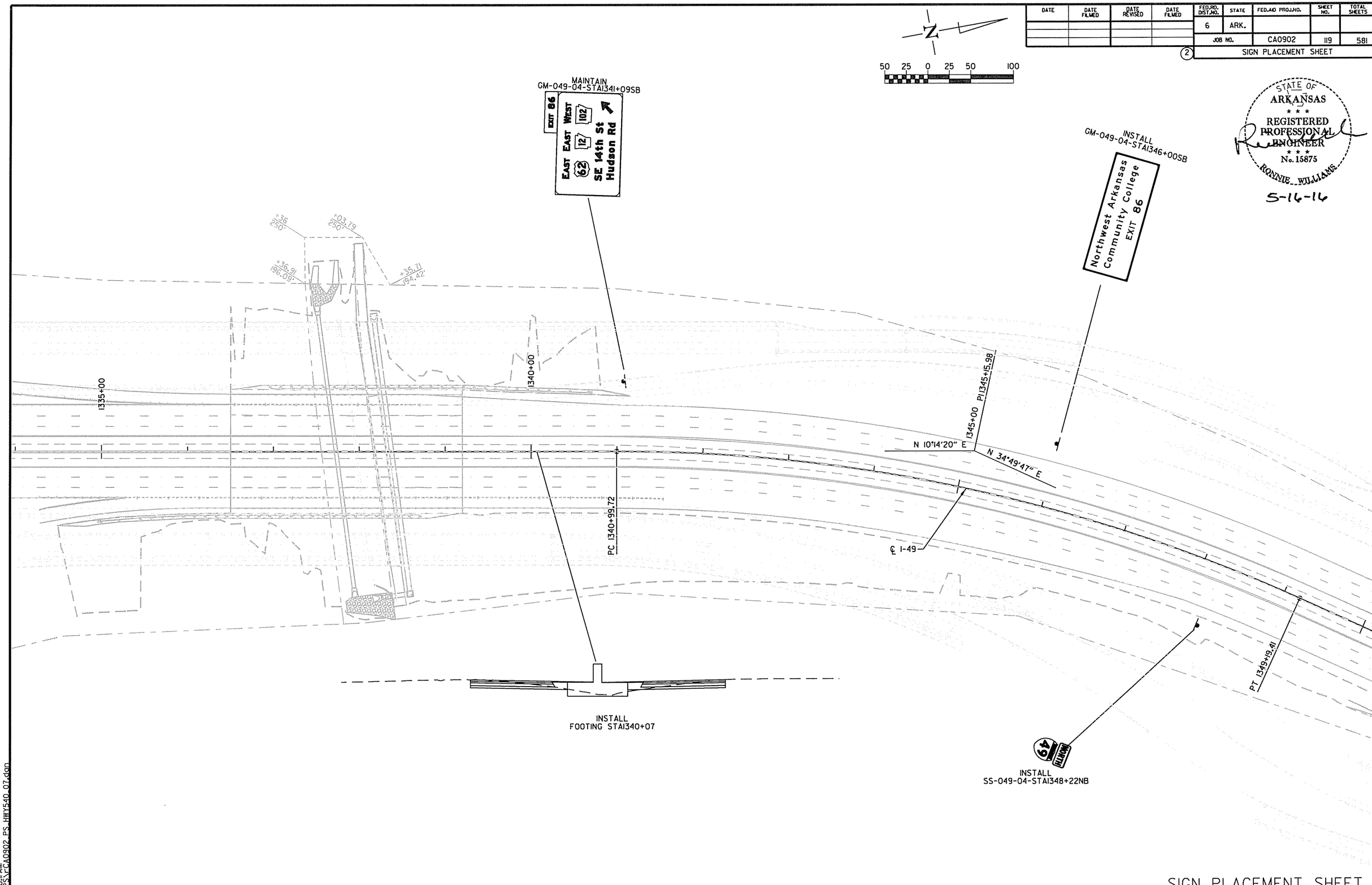

SIGN PLACEMENT SHEET

5/16/2016
10:00:11 AM
...\PS\rCA0902_PS_HWY540_07.dgn

DATE	DATE FILMED	DATE REVISED	DATE FILMED	FED.RD. DIST.NO.	STATE	FED.AID PROJ.NO.	SHEET NO.	TOTAL SHEETS
				6	ARK.			
				JOB NO.		CA0902	120	581

(2) SIGN PLACEMENT SHEET

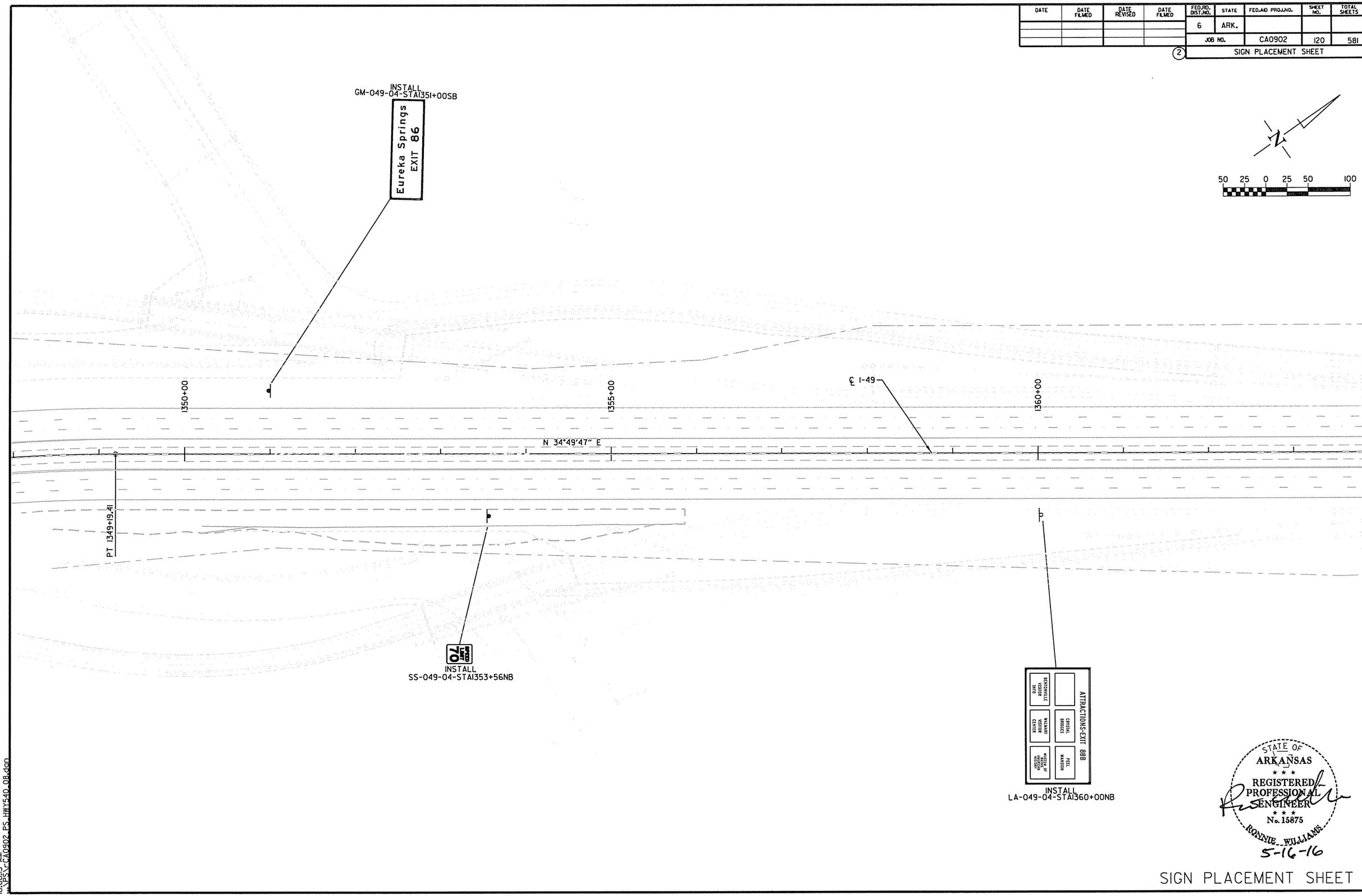

SIGN PLACEMENT SHEET

5/16/2016
10:00:13 AM
\\PS\CA0902_PS_HWY540_08.dgn

DATE	DATE FILMED	DATE REVISED	DATE FILMED	FED.RD. DIST.NO.	STATE	FED.AID PROJ.NO.	SHEET NO.	TOTAL SHEETS
				6	ARK.			
				JOB NO.		CA0902	121	581

(2) SIGN PLACEMENT SHEET

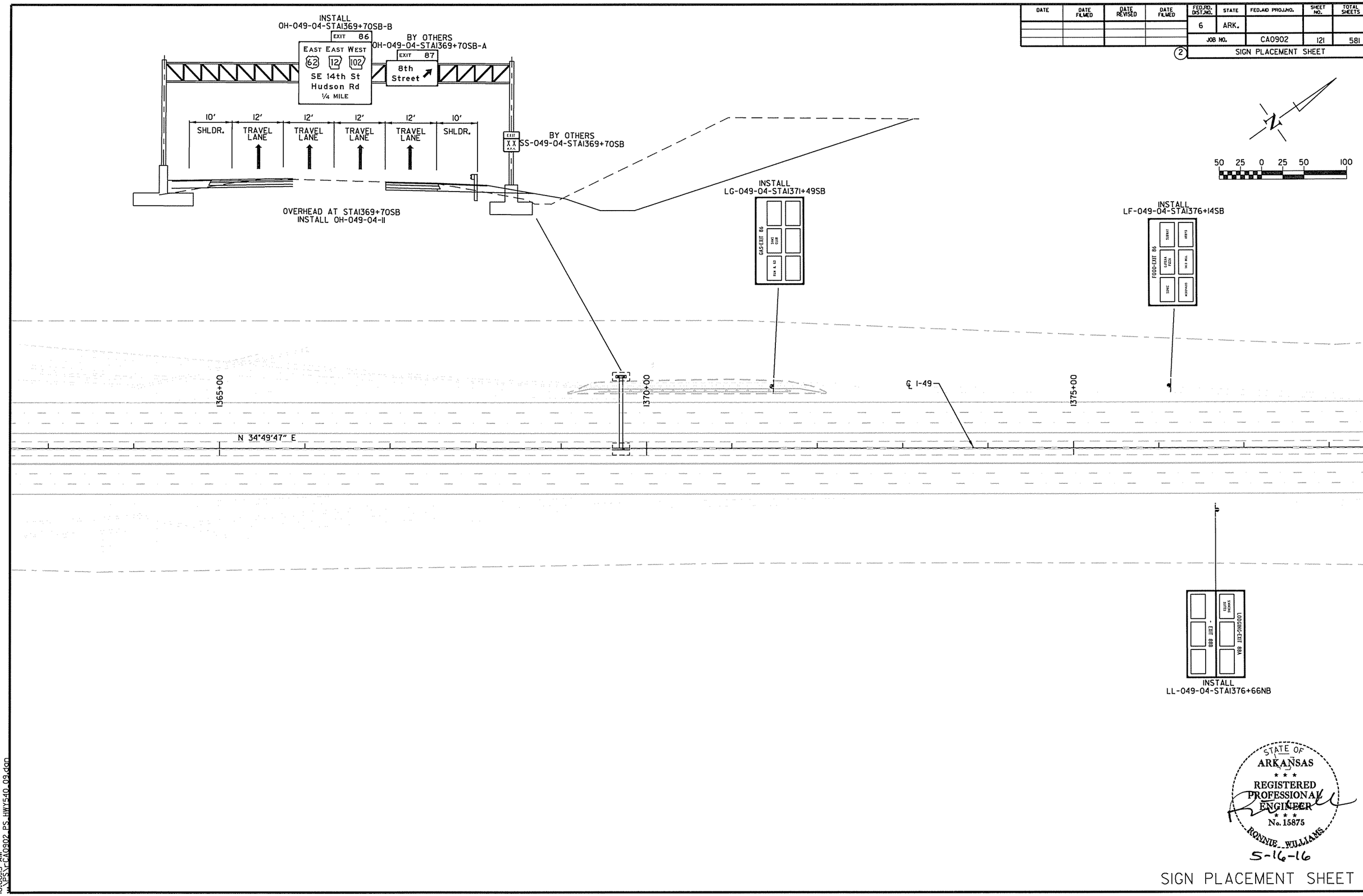

STATE OF ARKANSAS
REGISTERED PROFESSIONAL ENGINEER
No. 15875
RONNIE WILLIAMS
5-16-16

SIGN PLACEMENT SHEET

5/16/2016
10:00:15 AM
...\PS\CA0902_PS_HWY540_09.dgn

DATE	DATE FILMED	DATE REVISED	DATE FILMED	FED.RD. DIST.NO.	STATE	FED.AID PROJ.NO.	SHEET NO.	TOTAL SHEETS
				6	ARK.			
				JOB NO.		CA0902	122	581

(2) SIGN PLACEMENT SHEET

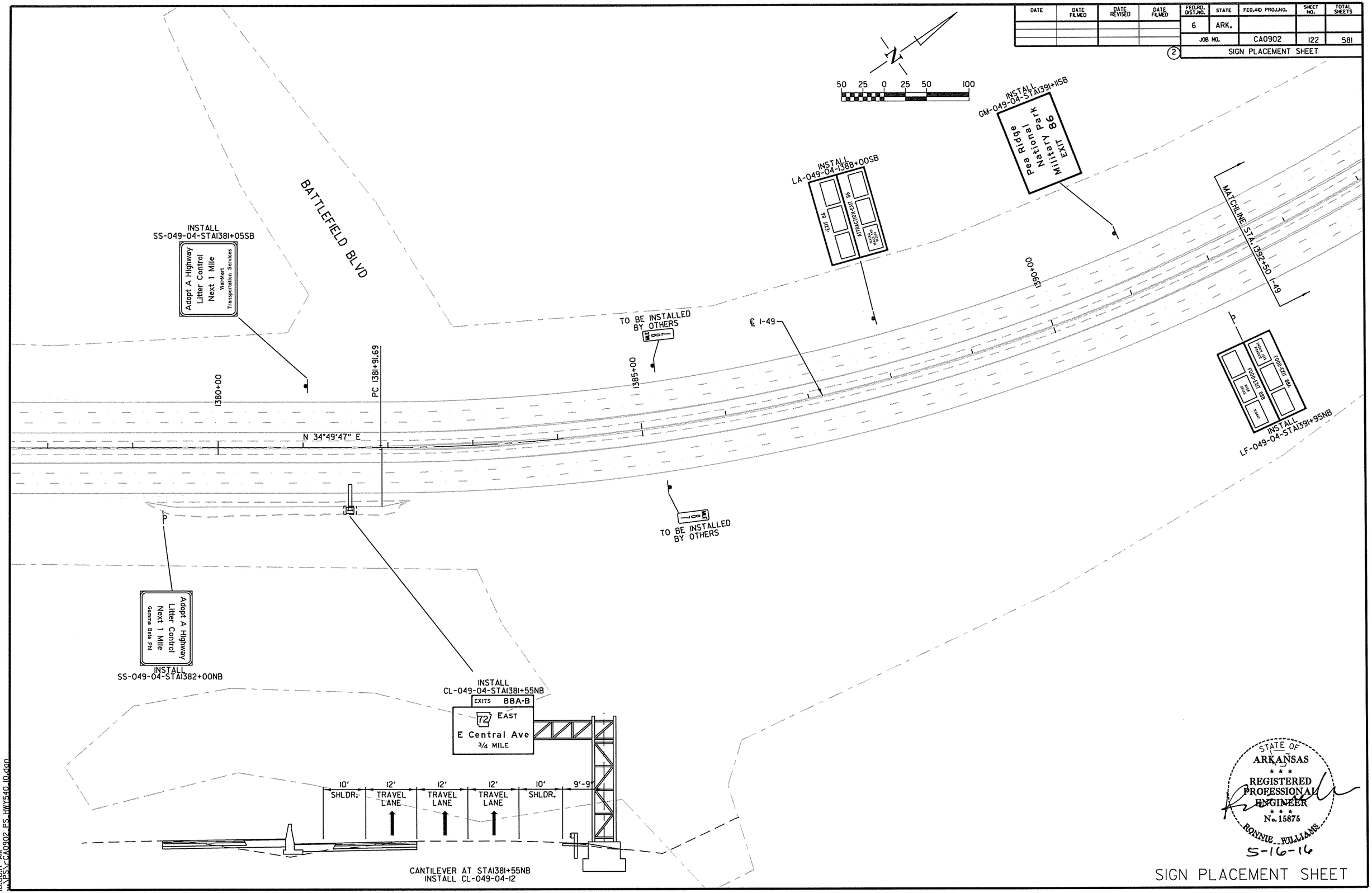

STATE OF ARKANSAS
REGISTERED PROFESSIONAL ENGINEER
No. 15875
RONNIE WILLIAMS
5-16-16

SIGN PLACEMENT SHEET

5/16/2016
10:00:17 AM
...\PS\CA0902_PS_HWY540_10.dgn

DATE	DATE FILMED	DATE REVISED	DATE FILMED	FED.RD. DIST.NO.	STATE	FED.AID PROJ.NO.	SHEET NO.	TOTAL SHEETS
				6	ARK.			
				JOB NO.		CA0902	123	581

(2) SIGN PLACEMENT SHEET

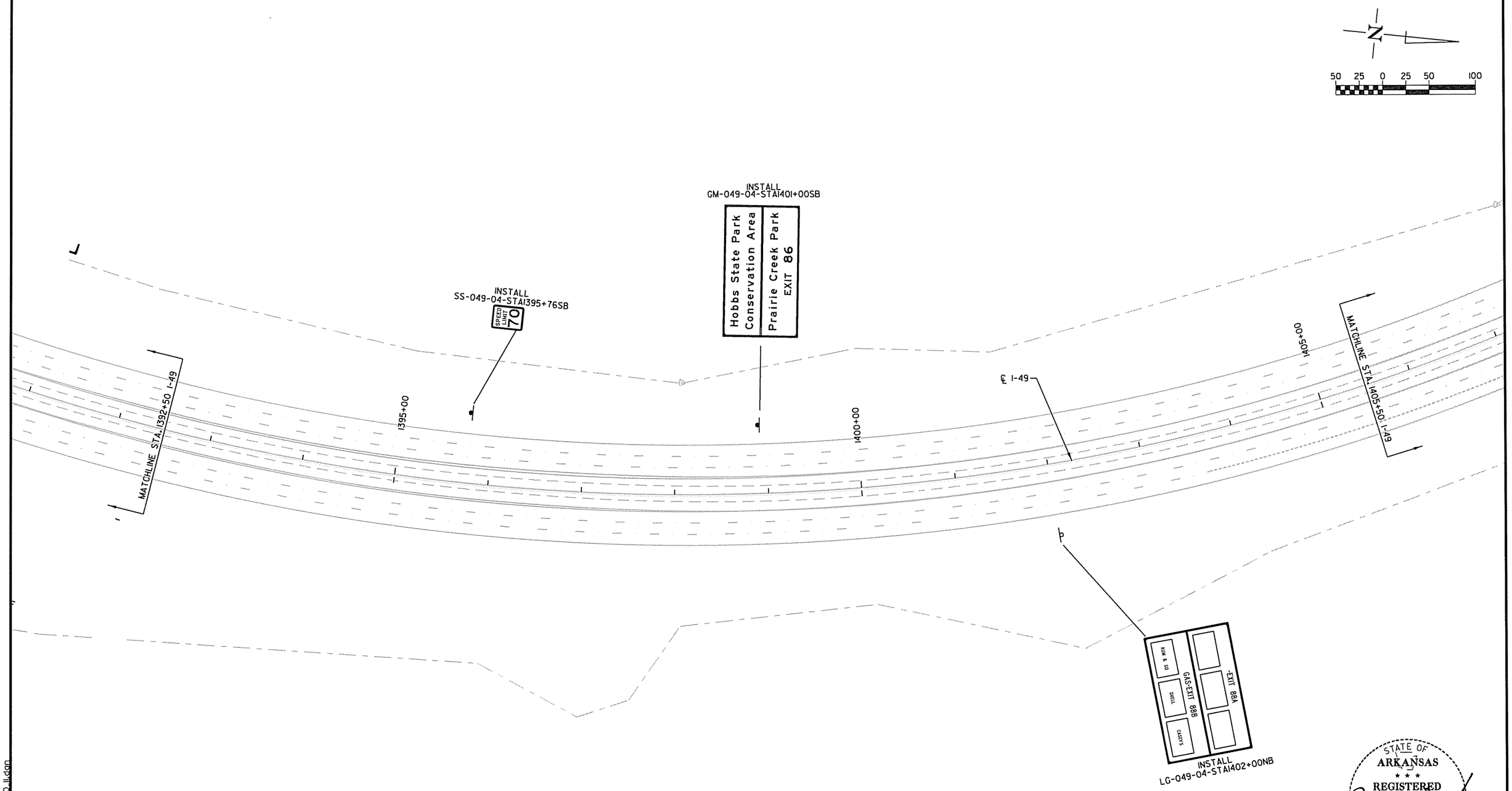

STATE OF ARKANSAS
REGISTERED PROFESSIONAL ENGINEER
No. 15875
RONNIE WILLIAMS
5-16-16

SIGN PLACEMENT SHEET

5/16/2016
10:00:19 AM
\\PS\CA0902_PS_HWY540_II.dgn

DATE	DATE FILMED	DATE REVISED	DATE FILMED	FED.RD. DIST.NO.	STATE	FED.AID PROJ.NO.	SHEET NO.	TOTAL SHEETS
				6	ARK.			
				JOB NO.		CA0902	124	581

2 SIGN PLACEMENT SHEET

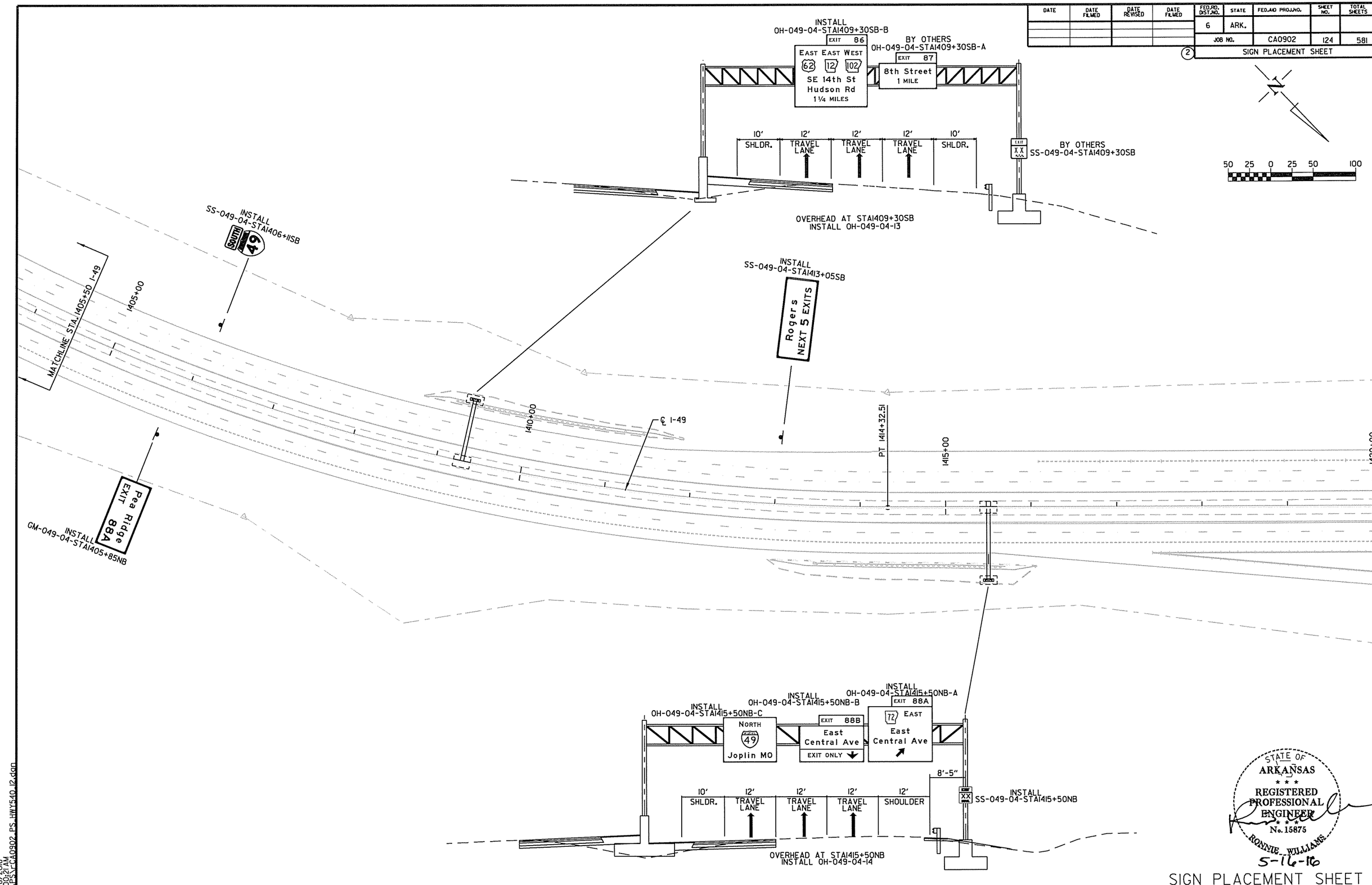

SIGN PLACEMENT SHEET

5/16/2016
10:00:21 AM
...\PS\rCA0902_PS_HWY540_12.dgn

DATE	DATE FILMED	DATE REVISED	DATE FILMED	FED.RD. DIST.NO.	STATE	FED.AID PROJ.NO.	SHEET NO.	TOTAL SHEETS
				6	ARK.			
				JOB NO.		CA0902	125	581

2 SIGN PLACEMENT SHEET

STATE OF ARKANSAS
REGISTERED PROFESSIONAL ENGINEER
No. 15875
RONNIE WILLIAMS
5-16-16

EXIT 88B
WEST
E Central Ave
EXIT XX MPH
EXIT ONLY

10' SHLDR. | 12' TRAVEL LANE | 12' TRAVEL LANE | 12' RAMP | 10' SHLDR. | 11'-3"

INSTALL
SS-049-04-STAI429+00NB

CANTILEVER AT STAI429+00NB
INSTALL CL-049-04-15

℄ E. CENTRAL AVE.

N 43°49'05" E

℄ I-49

1425+00

1420+00

1430+00

N 46°11'26" W

190+00

195+00

PC 191+90.00

PT 200+75.36

200+00

℄ RAMP 6

MATCHLINE STA. 200+00
RAMP 6

N 46°

INSTALL
SS-049-04-STAI424+23NB

INSTALL
SS-049-04-STAI427+52NB

℄ I-49 STA. 1430+31.09 =
℄ E. CENTRAL AVE./HWY. 72 STA. 194+36.12
△ 90°0'0"

℄ HWY. 72

℄ RAMP 5

PC 1432+52.00

MATCHLINE STA. 1433+75
RAMP 5

INSTALL
SS-049-04-STAI432+25NB

PT 1441+37.03

INSTALL
EX-049-04-STAI433+56NB

1440+00

EXIT 88 A
XX MPH

INSTALL
EX-049-04-STAI421+03NB

INSTALL
SS-049-04-STAI423+97NB

MATCHLINE STA. 1427+50
HWY. 72

50 25 0 25 50 100

NOTE: FOR SIGNING ALONG HIGHWAY 72, SEE SHEETS 127, 129, AND 130.

5/16/2016
10:02:25 AM
\PSS\CA0902_PS_HWY540_I3.dgn

SIGN PLACEMENT SHEET

DATE	DATE FILED	DATE REVISED	DATE FILED	FED.RD. DIST.NO.	STATE	FED.AID PROJ.NO.	SHEET NO.	TOTAL SHEETS
				6	ARK.			
				JOB NO.		CA0902	126	581

(2) SIGN PLACEMENT SHEET

PT 304+41.24

305+00

306+54

INSTALL
SS-049-04-STAI434+50SB
℄ RAMP 6

MATCHLINE STA. 1437+10
RAMP 3

TO BE INSTALLED
BY OTHERS

INSTALL
EX-049-04-STAI439+59SB

EXIT 88 XX MPH

INSTALL
SS-049-04-STAI442+16SB

EXIT XX MPH

INSTALL
GM-049-04-STAI446+08SB

EXIT 88 EAST 72 E Central Ave

50 25 0 25 50 100

1435+00

1440+00

1445+00

℄ I-49

PI 1448+06.05
Δ= 00°02'49"

N 46°11'26" W

N 46°11'26" W

INSTALL
SS-049-04-STAI434+83NB

℄ RAMP 5

1435+00

Adopt A Highway
Litter Control
Next 1 Mile
Wells Fargo
Advisors

TO BE INSTALLED
BY OTHERS

END JOB CA0902
STA. 1438+00.00
LOG MILE 87.99

INSTALL
SS-049-04-STAI436+09NB

STATE OF ARKANSAS
REGISTERED PROFESSIONAL ENGINEER
No. 15875
RONNIE WILLIAMS
5-16-16

SIGN PLACEMENT SHEET

5/16/2016 10:07:27 AM
\PSS\CA0902_PS_HWY540_14.dgn

DATE	DATE FILMED	DATE REVISED	DATE FILMED	FED.RD. DIST.NO.	STATE	FED.AID PROJ.NO.	SHEET NO.	TOTAL SHEETS
				6	ARK.			
				JOB NO.		CA0902	127	581

(2) SIGN PLACEMENT SHEET

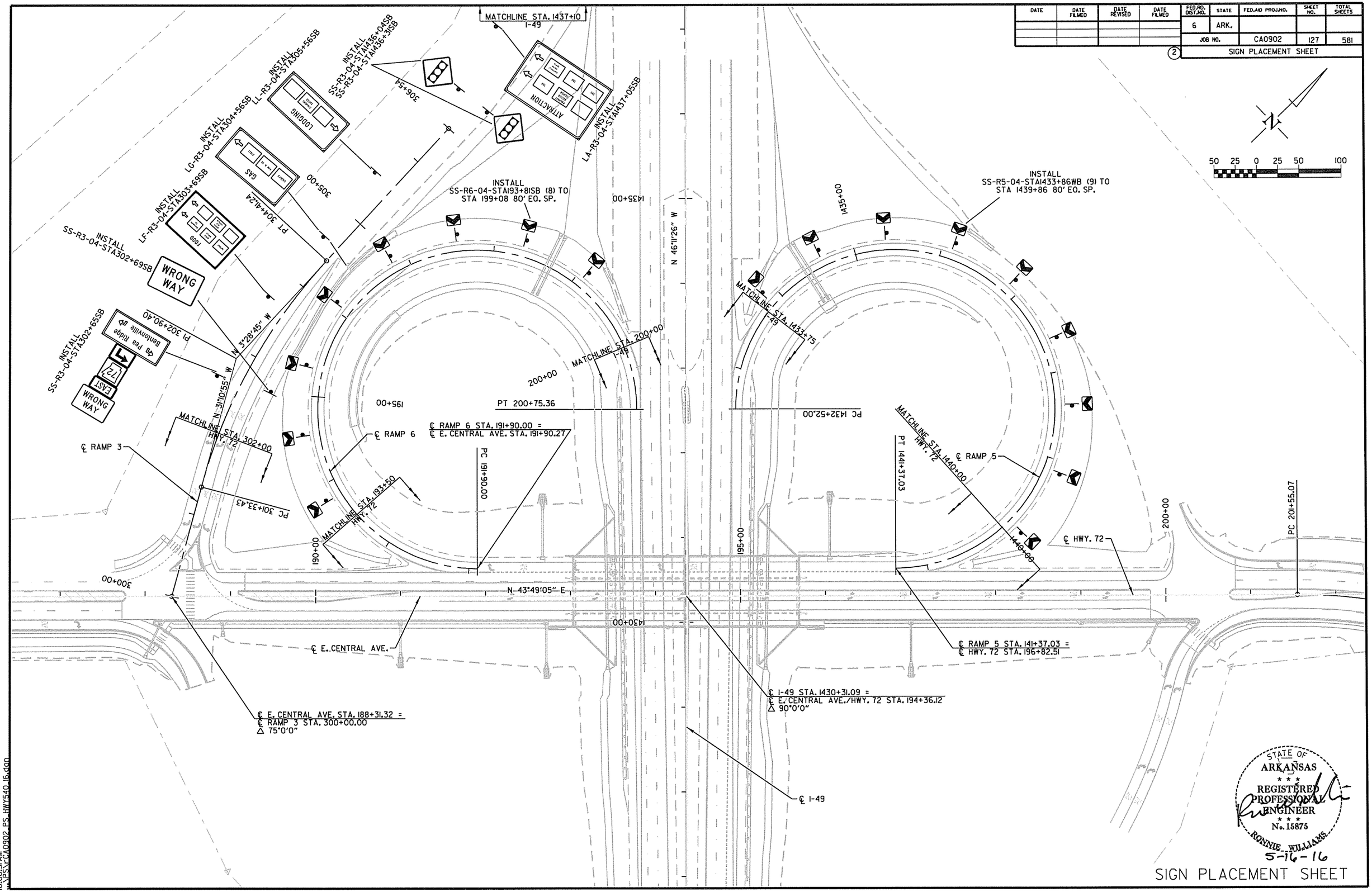

STATE OF ARKANSAS
REGISTERED PROFESSIONAL ENGINEER
No. 15875
RONNIE WILLIAMS
5-16-16

SIGN PLACEMENT SHEET

5/16/2016
10:00:31 AM
\PS\FCA0902_PS_HWY540_16.dgn

DATE	DATE FILMED	DATE REVISED	DATE FILMED	FED.RD. DIST.NO.	STATE	FED.AID PROJ.NO.	SHEET NO.	TOTAL SHEETS
				6	ARK.			
				JOB NO.		CA0902	128	581

(2) SIGN PLACEMENT SHEET

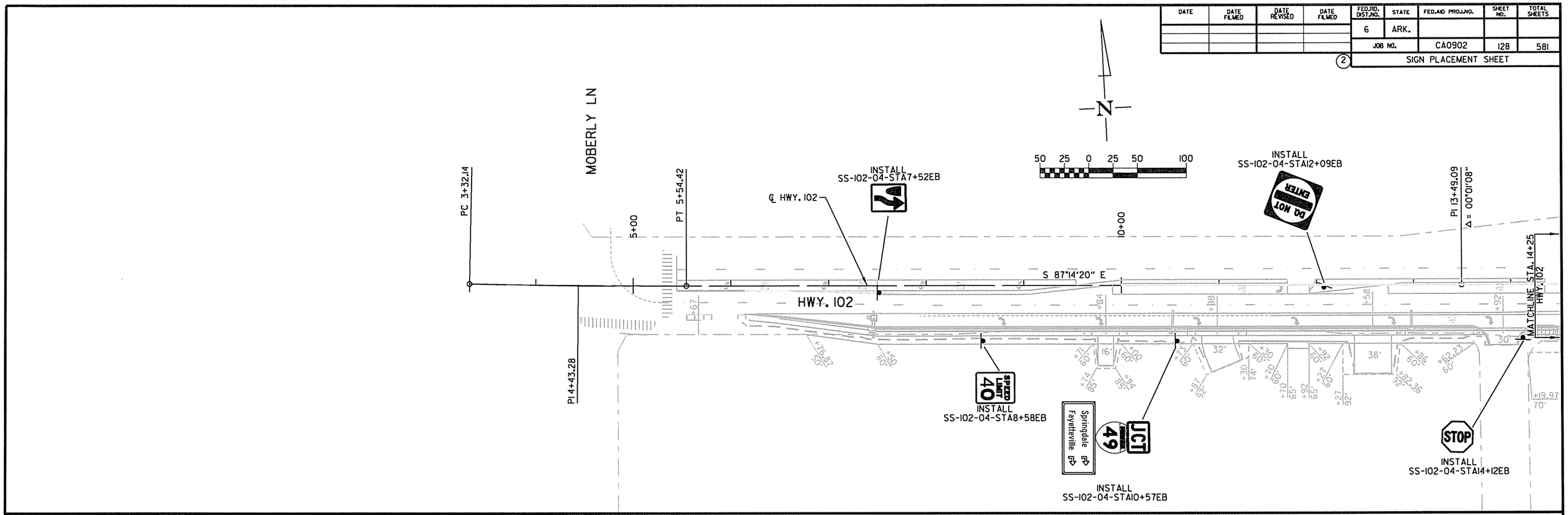

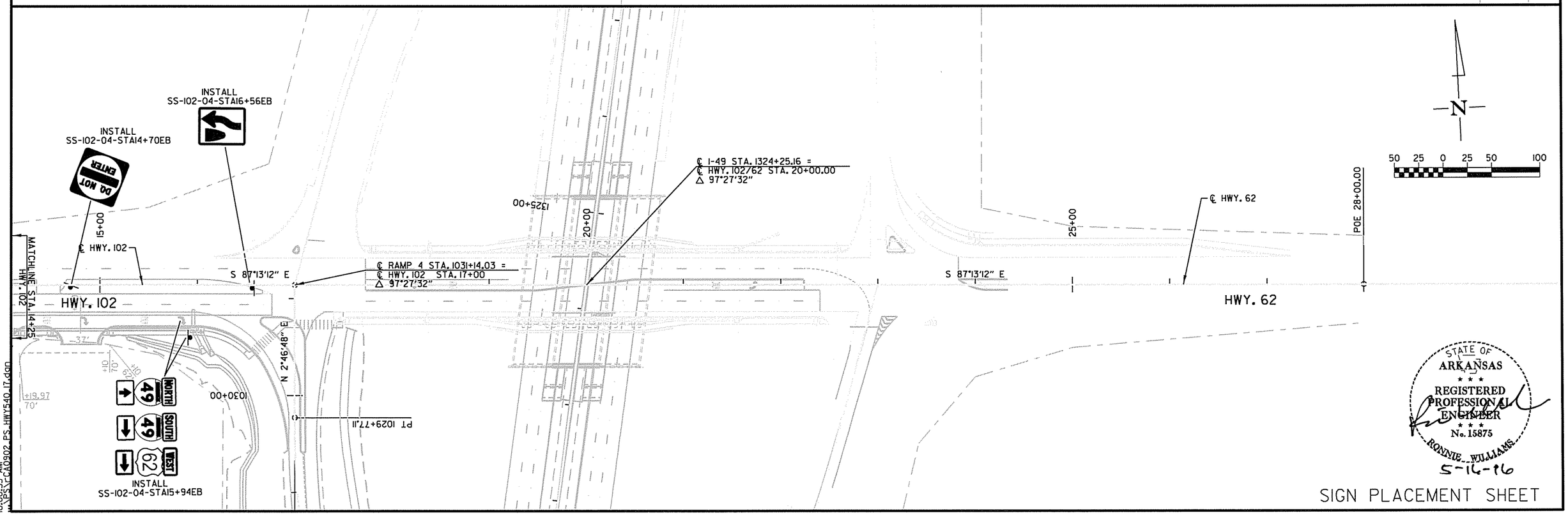

STATE OF ARKANSAS
REGISTERED PROFESSIONAL ENGINEER
No. 15875
RONNIE WILLIAMS
5-16-16

SIGN PLACEMENT SHEET

5/16/2016
10:00:33 AM
...\PS\CA0902_PS_HWY540_17.dgn

DATE	DATE FILMED	DATE REVISED	DATE FILMED	FED.RD. DIST.NO.	STATE	FED.AID PROJ.NO.	SHEET NO.	TOTAL SHEETS
				6	ARK.			
				JOB NO.		CA0902	129	581

(2) SIGN PLACEMENT SHEET

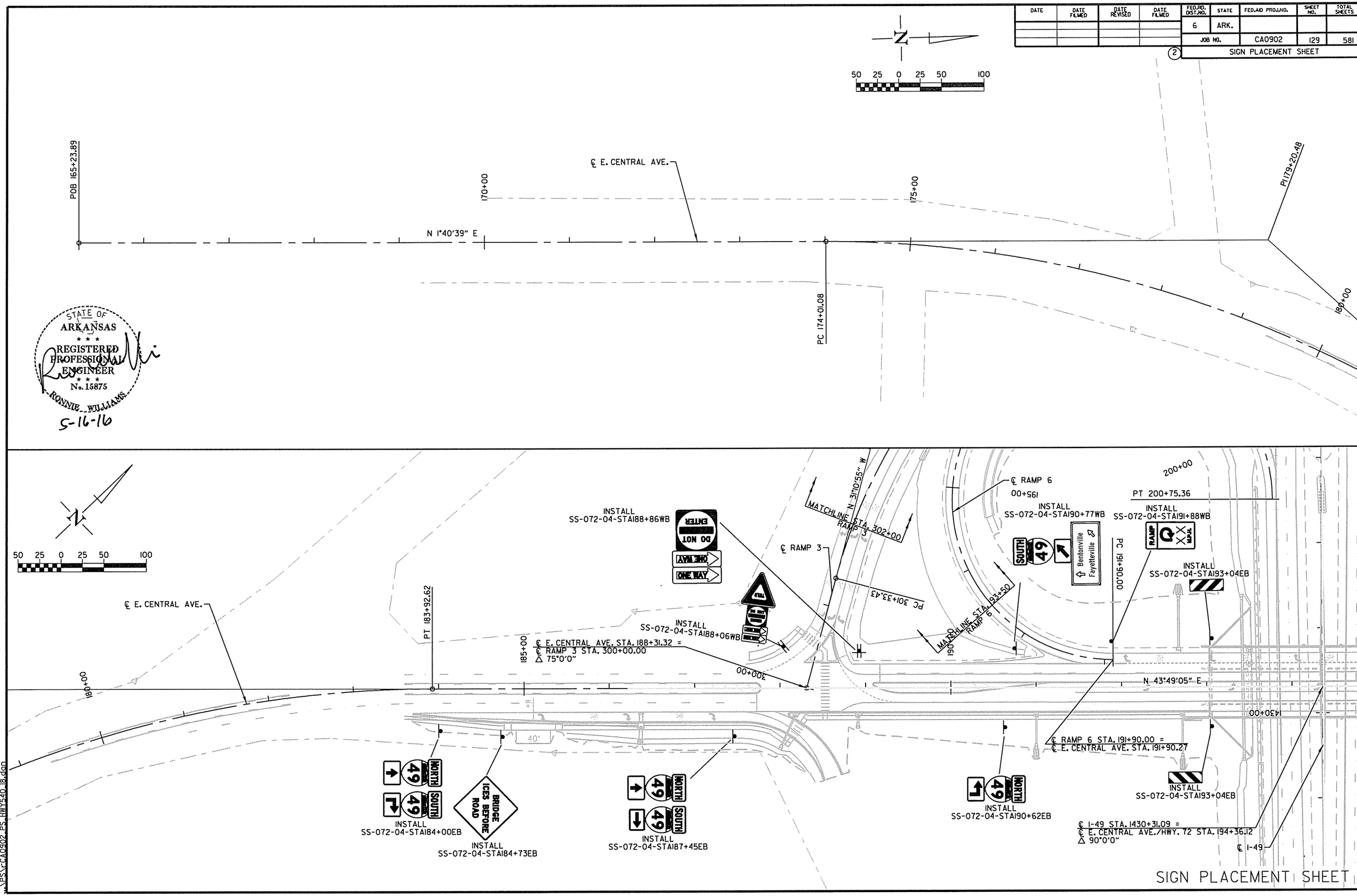

SIGN PLACEMENT SHEET

5/16/2016
10:00:36 AM
...\PS\CA0902_PS_HWY540_18.dgn

DATE	DATE FILMED	DATE REVISED	DATE FILMED	FED.RD. DIST.NO.	STATE	FED.AID PROJ.NO.	SHEET NO.	TOTAL SHEETS
				6	ARK.			
				JOB NO.		CA0902	130	581

2 SIGN PLACEMENT SHEET

℄ I-49 STA. 1430+31.09 =
℄ E. CENTRAL AVE./HWY. 72 STA. 94+36.12
△ 90°0'0"

PC 1432+52.00

PT 1411+37.03

℄ RAMP 5

℄ RAMP 5 STA. 1411+37.03 =
℄ HWY. 72 STA. 196+82.51

195+00

INSTALL
SS-072-04-STA195+68WB

MATCHLINE STA. 1440+00
RAMP 5

℄ HWY. 72

200+00

PC 201+55.07

INSTALL
SS-072-04-STA200+80WB

INSTALL
SS-072-04-STA202+75WB

Bentonville
Bella Vista
Joplin MO

INSTALL
SS-072-04-STA203+06WB

PI 204+17.82

INSTALL
SS-072-04-STA205+44WB

205+00

INSTALL
SS-072-04-STA205+63EB

INSTALL
SS-072-04-STA195+68WB

INSTALL
SS-072-04-STA196+18EB

Pea Ridge
Bella Vista
Joplin MO

INSTALL
SS-072-04-STA197+52EB

INSTALL
SS-072-04-STA199+84EB

INSTALL
SS-072-04-STA200+58EB

INSTALL
SS-072-04-STA200+36EB

Adopt A Highway
Litter Control
Next 1 Mile
Walnut Farm
Maintenance Steward

INSTALL
SS-072-04-STA201+73EB

INSTALL
SS-072-04-STA202+66EB

INSTALL
SS-072-04-STA203+54EB

INSTALL
SS-072-04-STA204+59EB

MATCHLINE STA. 206+50
HWY. 72

PT 206+47.78

WRONG WAY

INSTALL
SS-049-04-STA1428+07NB

INSTALL
SS-049-04-STA1428+26NB

MATCHLINE STA. 1427+50
I-49

℄ I-49

3EB

INSTALL
SS-072-04-STA209+60WB

INSTALL
SS-072-04-STA206+60WB

BRIDGE ICES BEFORE ROAD

℄ HWY. 72

210+00

215+00

POE 216+09.95

S 86°54'42" E

MATCHLINE STA. 206+50
HWY. 72

PT 206+47.78

INSTALL
SS-072-04-STA204+59EB

INSTALL
SS-072-04-STA206+67EB

INSTALL
SS-072-04-STA209+43EB

INSTALL
SS-072-04-STA210+75EB

INSTALL
SS-072-04-STA212+07EB

STATE OF ARKANSAS
REGISTERED PROFESSIONAL ENGINEER
No. 15875
RONNIE WILLIAMS
5-16-16

SIGN PLACEMENT SHEET

5/16/2016
10:00:39 AM
I:\PS\rCA0902_PS_HWY540_I9.dgn

DATE	DATE FILMED	DATE REVISED	DATE FILMED	FED.RD. DIST.NO.	STATE	FED.AID PROJ.NO.	SHEET NO.	TOTAL SHEETS
				6	ARK.			
				JOB NO.		CA0902	131	581

(2) SIGN LAYOUT SHEET

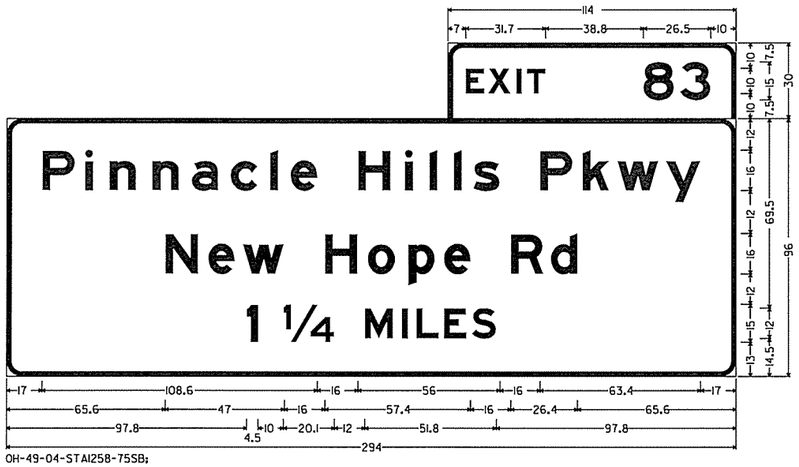

OH-49-04-STA1258-75SB;
6.0" Radius, 2.0" Border, White on Green;
[EXIT] E Mod 2K specified length; [83] E Mod 2K;
6.0" Radius, 2.0" Border, White on Green;
[Pinnacle Hills Pkwy] E Mod 2K; [New Hope Rd] E Mod 2K; [1] E Mod 2K; [1/4] E Mod 2K; [MILES] E Mod 2K;

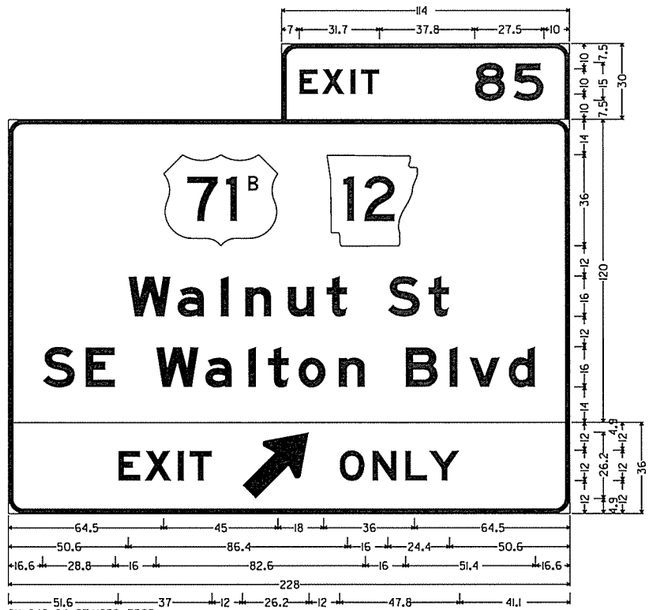

OH-049-04-STA1258+75SB;
6.0" Radius, 2.0" Border, White on Green;
[EXIT] E Mod 2K specified length; [85] E Mod 2K;
6.0" Radius, 2.0" Border, White on Green;
[Walnut St] E Mod 2K; [SE Walton Blvd] E Mod 2K;
6.0" Radius, 2.0" Border, Black on Yellow;
[EXIT] E Mod 2K; Standard Arrow Custom 33.4" X 20.3" 45l; [ONLY] E Mod 2K;

NOTES:

THE CONTRACTOR SHALL FIELD VERIFY SIGN PLACEMENT AND MAKE ANY ADJUSTMENTS NECESSARY TO ALIGN SIGNS OVER INTENDED LANES.

SINCE THE CONTRACTOR WILL BE REQUIRED TO INSTALL OVERHEAD SIGNS ON STRUCTURES WHICH ARE LOCATED OVER THE ROADWAYS WHICH ARE CURRENTLY OPEN TO TRAFFIC, IT WILL BE THE RESPONSIBILITY OF THE CONTRACTOR TO PROVIDE LANE CLOSURED AS A PART OF TRAFFIC CONTROL. PAYMENT FOR PROVIDING LANE CLOSURES WILL BE PAID SUBSIDIARY TO THE PAY ITEM "MAINTENANCE OF TRAFFIC". ALL MAINTENANCE OF TRAFFIC WORK MUST CONFORM WITH THE MUTCD.

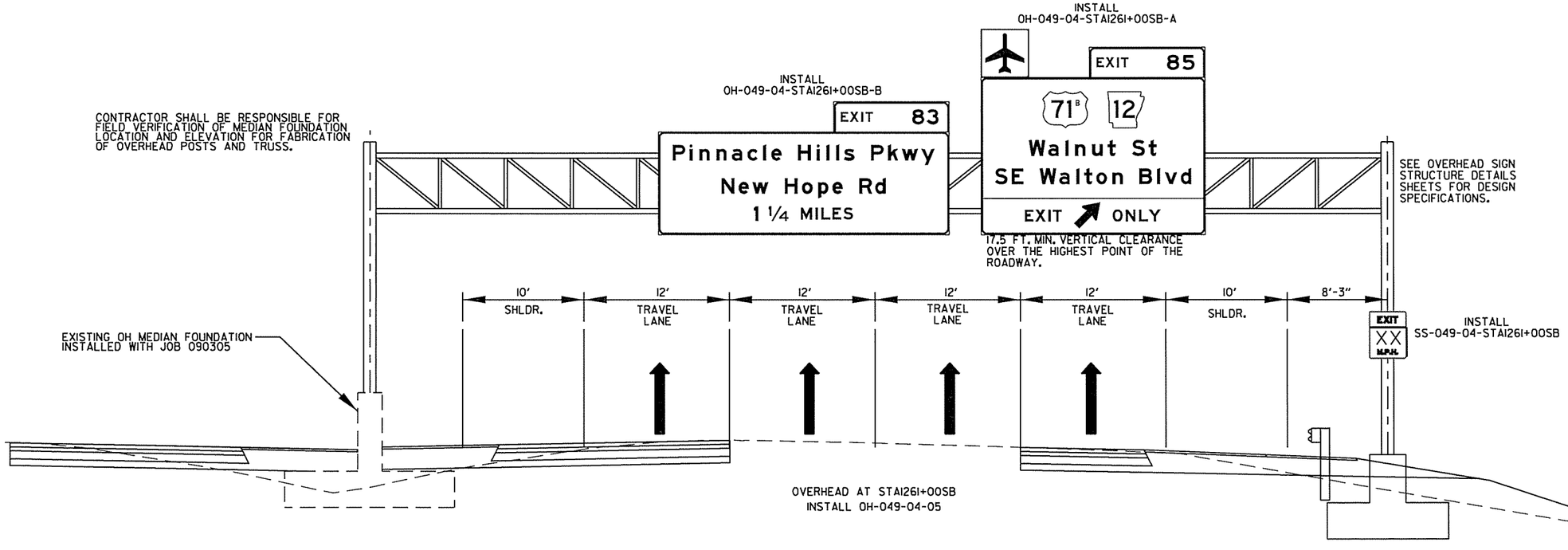

STATE OF ARKANSAS
REGISTERED PROFESSIONAL ENGINEER
No. 15875
RONNIE WILLIAMS

5-16-16

SIGN LAYOUT SHEET

5/16/2016
10:00:41 AM
...\PS\CA0902_PS_HWY540_20.dgn

DATE	DATE FILMED	DATE REVISED	DATE FILMED	FED.RD. DIST.NO.	STATE	FED.AID PROJ.NO.	SHEET NO.	TOTAL SHEETS
				6	ARK.			
				JOB NO.		CA0902	132	581

(2) SIGN LAYOUT SHEET

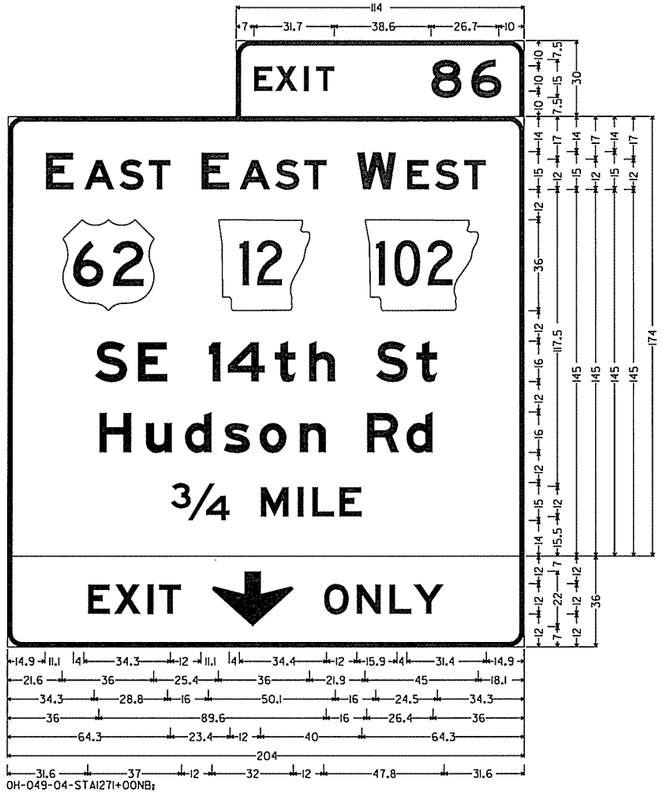

OH-049-04-STA1271+00NB;
6.0" Radius, 2.0" Border, White on Green;
[EXIT] ClearviewHwy-5-W specified length; [86] ClearviewHwy-5-W;
6.0" Radius, 2.0" Border, White on Green;
[E] E Mod 2K; [AST] E Mod 2K; [E] E Mod 2K; [AST] E Mod 2K; [W] E Mod 2K;
[EST] E Mod 2K; [SE 14th St] E Mod 2K; [Hudson Rd] E Mod 2K; [$^{6}/_{M}$] E Mod 2K;
[MILE] E Mod 2K;
6.0" Radius, 2.0" Border, Black on Yellow;
[EXIT] E Mod 2K; Down Arrow 22.0" 2701; [ONLY] E Mod 2K;

NOTES:

THE CONTRACTOR SHALL FIELD VERIFY SIGN PLACEMENT AND MAKE ANY ADJUSTMENTS NECESSARY TO ALIGN SIGNS OVER INTENDED LANES.

SINCE THE CONTRACTOR WILL BE REQUIRED TO INSTALL OVERHEAD SIGNS ON STRUCTURES WHICH ARE LOCATED OVER THE ROADWAYS WHICH ARE CURRENTLY OPEN TO TRAFFIC, IT WILL BE THE RESPONSIBILITY OF THE CONTRACTOR TO PROVIDE LANE CLOSURED AS A PART OF TRAFFIC CONTROL. PAYMENT FOR PROVIDING LANE CLOSURES WILL BE PAID SUBSIDIARY TO THE PAY ITEM "MAINTENANCE OF TRAFFIC". ALL MAINTENANCE OF TRAFFIC WORK MUST CONFORM WITH THE MUTCD.

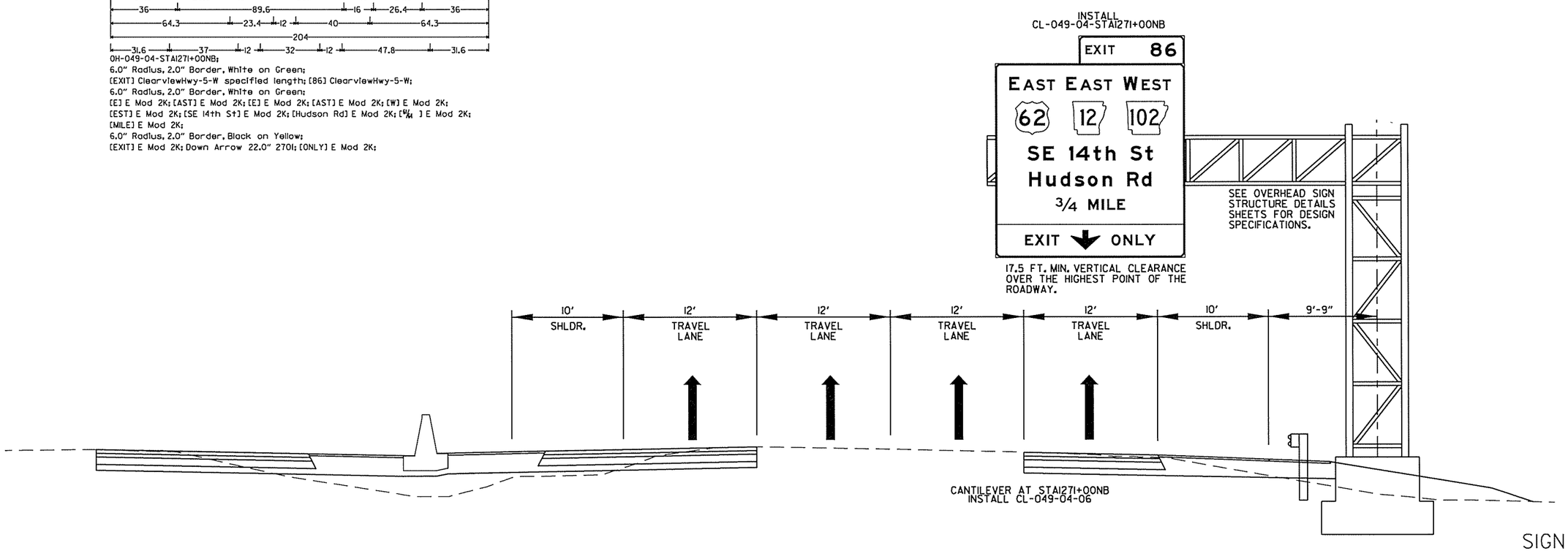

STATE OF ARKANSAS
REGISTERED PROFESSIONAL ENGINEER
No. 15875
RONNIE WILLIAMS
5-16-16

SIGN LAYOUT SHEET

5/16/2016
10:00:42 AM
...\PS\FCA0902_PS_HWY540_20A.dgn

DATE	DATE FILMED	DATE REVISED	DATE FILMED	FED.RD. DIST.NO.	STATE	FED.AID PROJ.NO.	SHEET NO.	TOTAL SHEETS
				6	ARK.			
				JOB NO.		CA0902	133	581

(2) SIGN LAYOUT SHEET

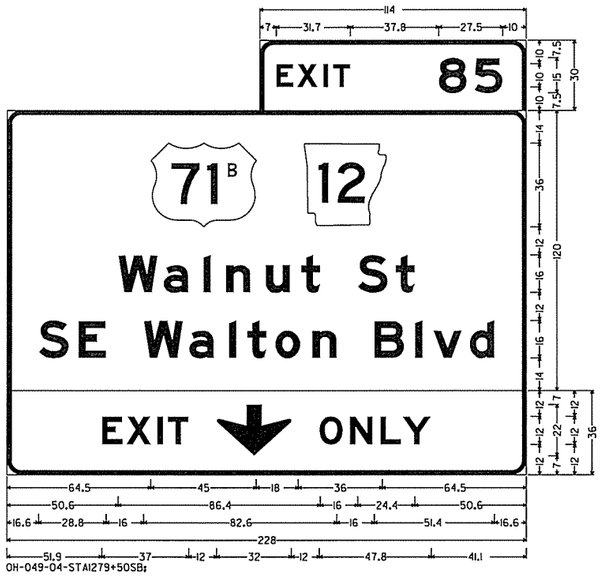

OH-049-04-STA1279+50SB;
6.0" Radius, 2.0" Border, White on Green;
[EXIT] E Mod 2K specified length; [85] E Mod 2K;
6.0" Radius, 2.0" Border, White on Green;
[Walnut St] E Mod 2K; [SE Walton Blvd] E Mod 2K;
6.0" Radius, 2.0" Border, Black on Yellow;
[EXIT] E Mod 2K; Down Arrow 22.0" 2701; [ONLY] E Mod 2K;

NOTES:

THE CONTRACTOR SHALL FIELD VERIFY SIGN PLACEMENT AND MAKE ANY ADJUSTMENTS NECESSARY TO ALIGN SIGNS OVER INTENDED LANES.

SINCE THE CONTRACTOR WILL BE REQUIRED TO INSTALL OVERHEAD SIGNS ON STRUCTURES WHICH ARE LOCATED OVER THE ROADWAYS WHICH ARE CURRENTLY OPEN TO TRAFFIC, IT WILL BE THE RESPONSIBILITY OF THE CONTRACTOR TO PROVIDE LANE CLOSURED AS A PART OF TRAFFIC CONTROL. PAYMENT FOR PROVIDING LANE CLOSURES WILL BE PAID SUBSIDIARY TO THE PAY ITEM "MAINTENANCE OF TRAFFIC". ALL MAINTENANCE OF TRAFFIC WORK MUST CONFORM WITH THE MUTCD.

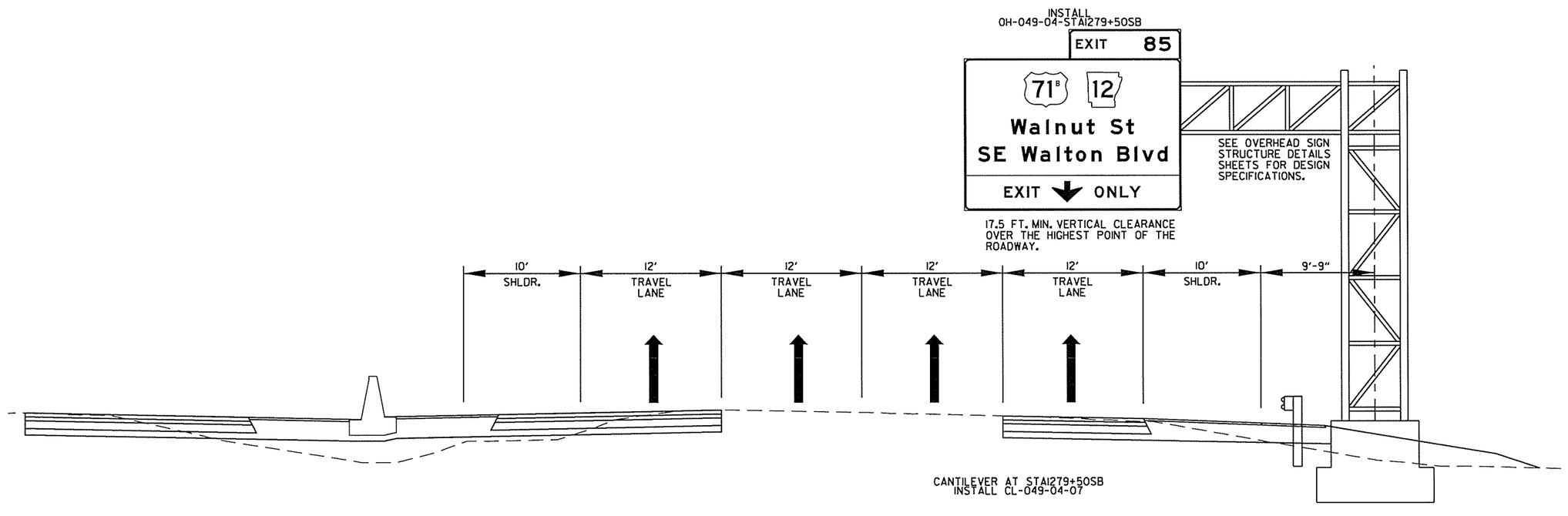

STATE OF ARKANSAS
REGISTERED PROFESSIONAL ENGINEER
No. 15875
RONNIE WILLIAMS
5-16-16

SIGN LAYOUT SHEET

5/16/2016
10:00:44 AM
...\PS\rCA0902_PS_HWY540_21.dgn

DATE	DATE FILMED	DATE REVISED	DATE FILMED	FED.RD. DIST.NO.	STATE	FED.AID PROJ.NO.	SHEET NO.	TOTAL SHEETS
				6	ARK.			
				JOB NO.		CA0902	134	581

(2) SIGN LAYOUT SHEET

NOTES:

THE CONTRACTOR SHALL FIELD VERIFY SIGN PLACEMENT AND MAKE ANY ADJUSTMENTS NECESSARY TO ALIGN SIGNS OVER INTENDED LANES.

SINCE THE CONTRACTOR WILL BE REQUIRED TO INSTALL OVERHEAD SIGNS ON STRUCTURES WHICH ARE LOCATED OVER THE ROADWAYS WHICH ARE CURRENTLY OPEN TO TRAFFIC, IT WILL BE THE RESPONSIBILITY OF THE CONTRACTOR TO PROVIDE LANE CLOSURED AS A PART OF TRAFFIC CONTROL. PAYMENT FOR PROVIDING LANE CLOSURES WILL BE PAID SUBSIDIARY TO THE PAY ITEM "MAINTENANCE OF TRAFFIC". ALL MAINTENANCE OF TRAFFIC WORK MUST CONFORM WITH THE MUTCD.

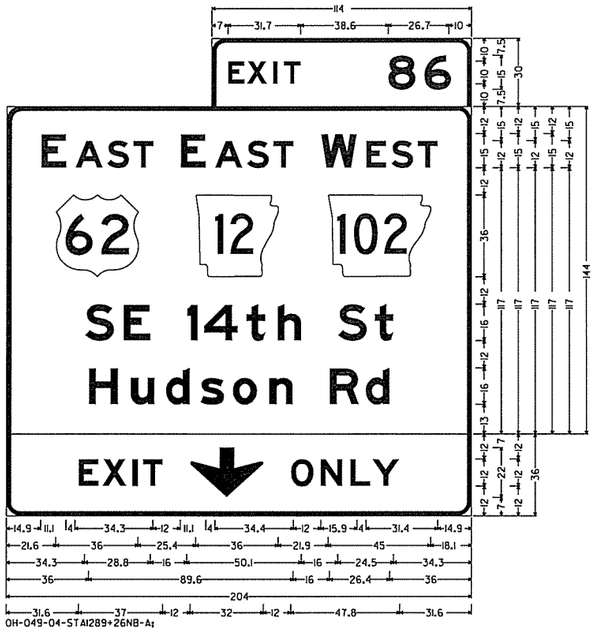

OH-049-04-STA1289+26NB-A;
6.0" Radius, 2.0" Border, White on Green;
[EXIT] ClearviewHwy-5-W specified length; [86] ClearviewHwy-5-W;
6.0" Radius, 2.0" Border, White on Green;
[E] E Mod 2K; [AST] E Mod 2K; [E] E Mod 2K; [AST] E Mod 2K; [W] E Mod 2K;
[EST] E Mod 2K; [SE 14th St] E Mod 2K; [Hudson Rd] E Mod 2K;
6.0" Radius, 2.0" Border, Black on Yellow;
[EXIT] E Mod 2K; Down Arrow 22.0" 270; [ONLY] E Mod 2K;

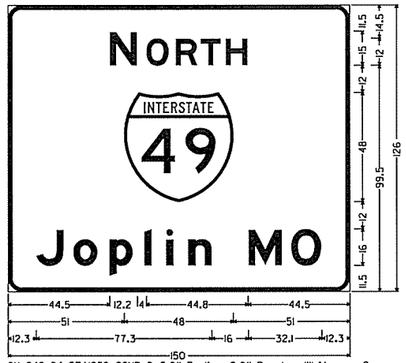

OH-049-04-STA1289+26NB-C; 6.0" Radius, 2.0" Border, White on Green;
[N] E Mod 2K; [ORTH] E Mod 2K; [Joplin MO] E Mod 2K;

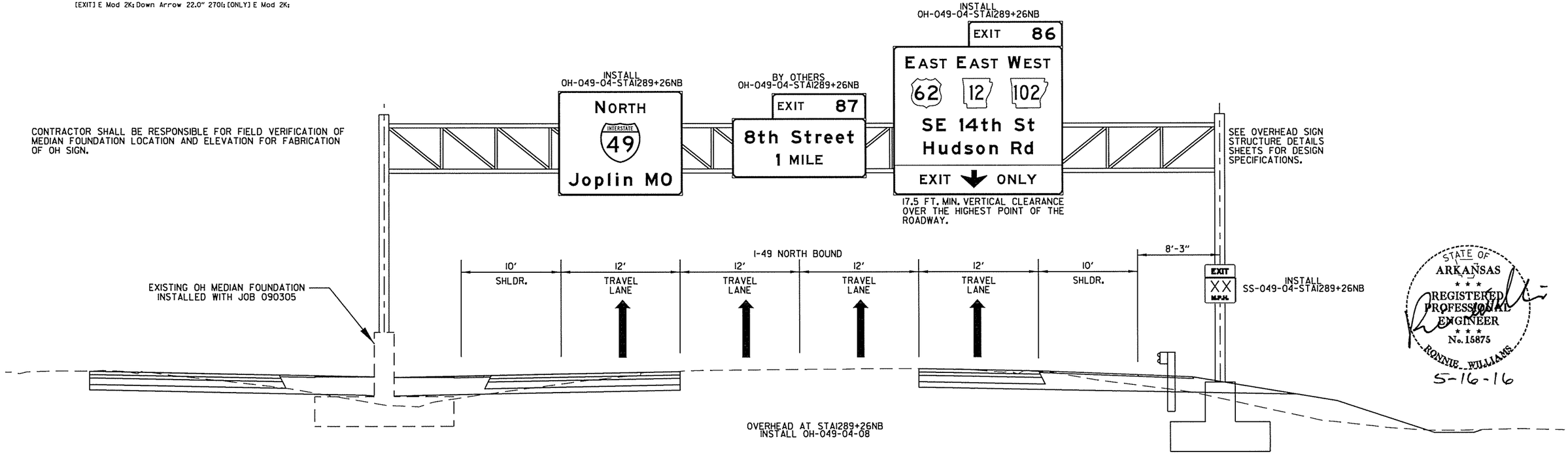

STATE OF ARKANSAS
REGISTERED PROFESSIONAL ENGINEER
No. 15875
RONNIE WILLIAMS
5-16-16

SIGN LAYOUT SHEET

5/16/2016
10:00:46 AM
...\PS\CA0902_PS_HWY540_21A.dgn

DATE	DATE FILMED	DATE REVISED	DATE FILMED	FED.RD. DIST.NO.	STATE	FED.AID PROJ.NO.	SHEET NO.	TOTAL SHEETS
				6	ARK.			
				JOB NO.		CA0902	135	581
				(2)	SIGN LAYOUT SHEET			

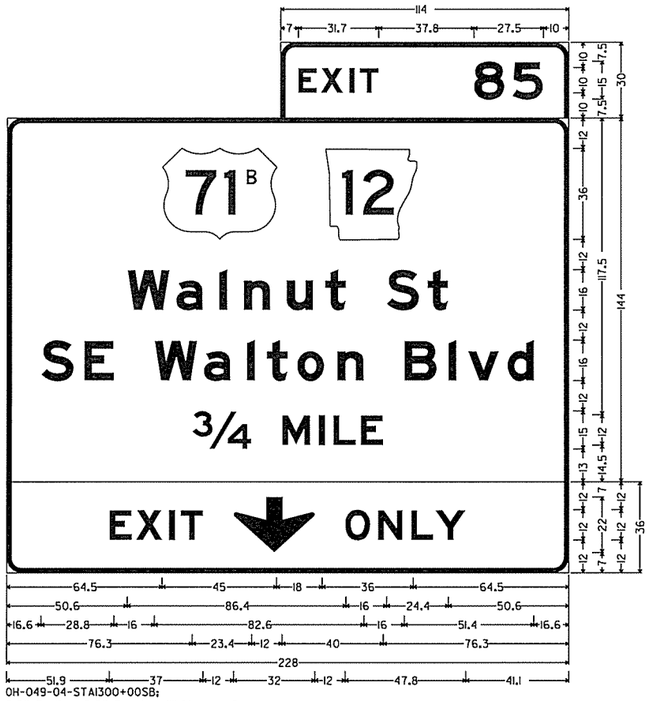

0H-049-04-STAI300+00SB;
6.0" Radius, 2.0" Border, White on Green;
[EXIT] E Mod 2K specified length; [85] E Mod 2K;
6.0" Radius, 2.0" Border, White on Green;
[Walnut St] E Mod 2K; [SE Walton Blvd] E Mod 2K; [3/4] E Mod 2K; [MILE] E Mod 2K;
6.0" Radius, 2.0" Border, Black on Yellow;
[EXIT] E Mod 2K; Down Arrow 22.0" 270[; [ONLY] E Mod 2K;

NOTES:

THE CONTRACTOR SHALL FIELD VERIFY SIGN PLACEMENT AND MAKE ANY ADJUSTMENTS NECESSARY TO ALIGN SIGNS OVER INTENDED LANES.

SINCE THE CONTRACTOR WILL BE REQUIRED TO INSTALL OVERHEAD SIGNS ON STRUCTURES WHICH ARE LOCATED OVER THE ROADWAYS WHICH ARE CURRENTLY OPEN TO TRAFFIC, IT WILL BE THE RESPONSIBILITY OF THE CONTRACTOR TO PROVIDE LANE CLOSURED AS A PART OF TRAFFIC CONTROL. PAYMENT FOR PROVIDING LANE CLOSURES WILL BE PAID SUBSIDIARY TO THE PAY ITEM "MAINTENANCE OF TRAFFIC". ALL MAINTENANCE OF TRAFFIC WORK MUST CONFORM WITH THE MUTCD.

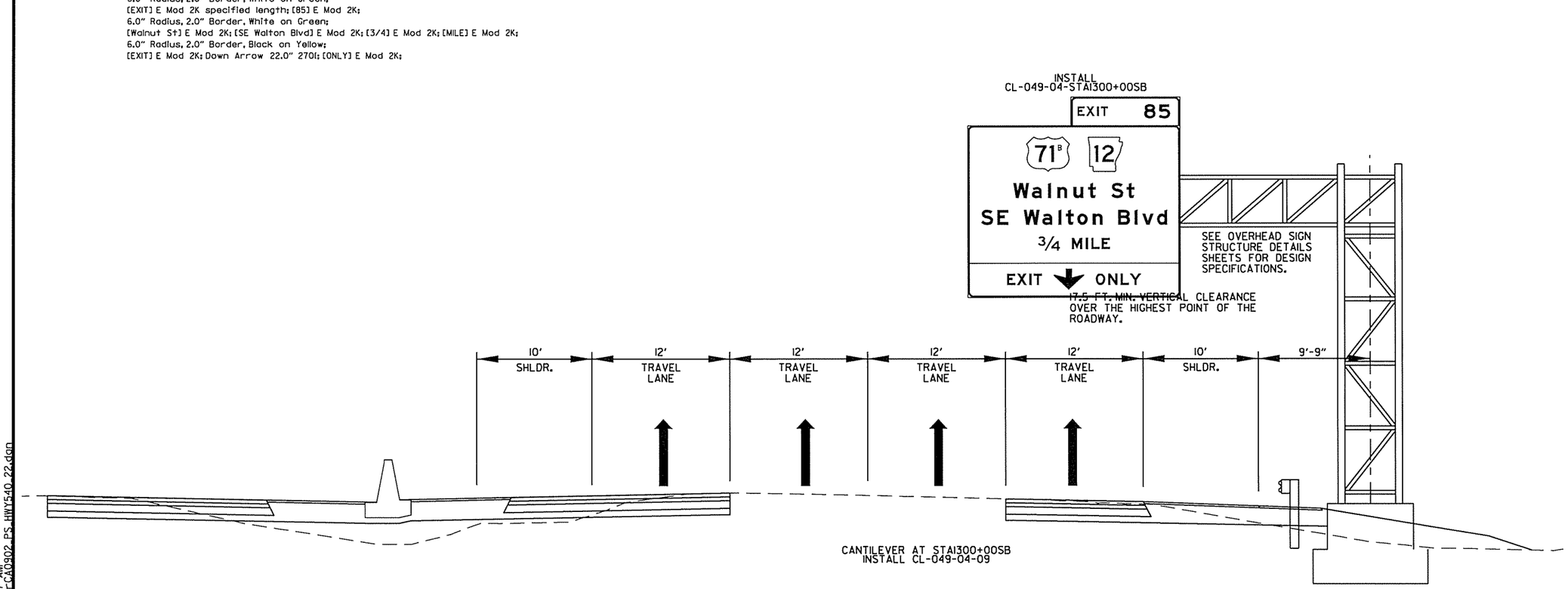

STATE OF ARKANSAS
REGISTERED PROFESSIONAL ENGINEER
No. 15875
RONNIE WILLIAMS
5-16-16

SIGN LAYOUT SHEET

5/16/2016
10:02:47 AM
\\PSS\CA0902_PS_HWY540_22.dgn

DATE	DATE FILED	DATE REVISED	DATE FILED	FED.RD. DIST.NO.	STATE	FED.AID PROJ.NO.	SHEET NO.	TOTAL SHEETS
				6	ARK.			
				JOB NO.		CA0902	136	581
				(2)	SIGN LAYOUT SHEET			

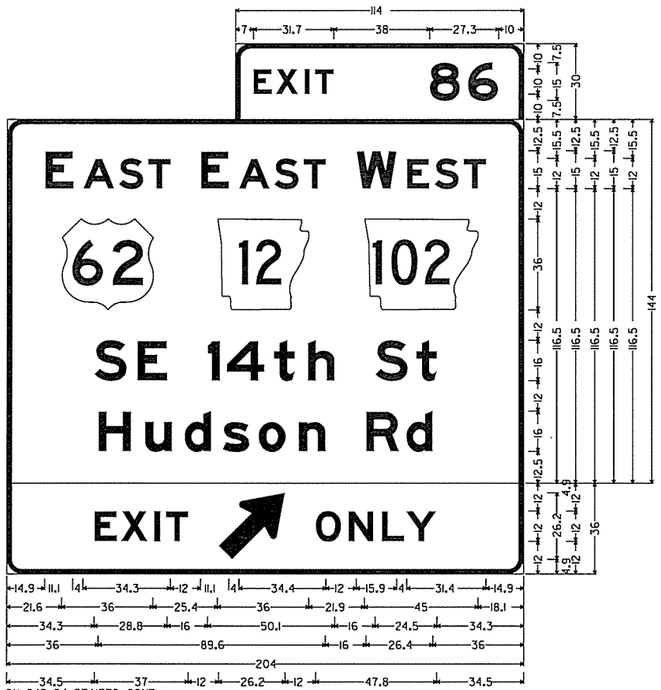

OH-049-04-STAI270+00NB:
6.0" Radius, 2.0" Border, White on Green;
[EXIT] E Mod 2K specified length; [86] E Mod 2K;
6.0" Radius, 2.0" Border, White on Green;
[E] E Mod 2K; [AST] E Mod 2K; [E] E Mod 2K; [AST] E Mod 2K; [W] E Mod 2K;
[EST] E Mod 2K; [SE 14th St] E Mod 2K; [Hudson Rd] E Mod 2K;
6.0" Radius, 2.0" Border, Black on Yellow;
[EXIT] E Mod 2K; Standard Arrow Custom 33.4" X 20.3" 45i; [ONLY] E Mod 2K;

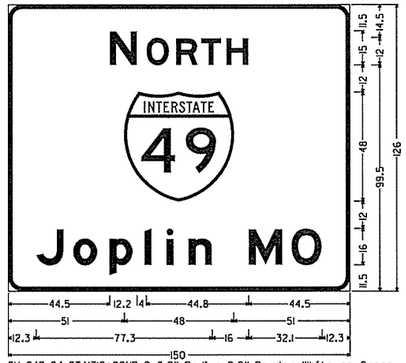

OH-049-04-STAI310+00NB-C; 6.0" Radius, 2.0" Border, White on Green;
[N] E Mod 2K; [ORTH] E Mod 2K; [Joplin MO] E Mod 2K;

NOTES:

THE CONTRACTOR SHALL FIELD VERIFY SIGN PLACEMENT AND MAKE ANY ADJUSTMENTS NECESSARY TO ALIGN SIGNS OVER INTENDED LANES.

SINCE THE CONTRACTOR WILL BE REQUIRED TO INSTALL OVERHEAD SIGNS ON STRUCTURES WHICH ARE LOCATED OVER THE ROADWAYS WHICH ARE CURRENTLY OPEN TO TRAFFIC, IT WILL BE THE RESPONSIBILITY OF THE CONTRACTOR TO PROVIDE LANE CLOSURED AS A PART OF TRAFFIC CONTROL. PAYMENT FOR PROVIDING LANE CLOSURES WILL BE PAID SUBSIDIARY TO THE PAY ITEM "MAINTENANCE OF TRAFFIC". ALL MAINTENANCE OF TRAFFIC WORK MUST CONFORM WITH THE MUTCD.

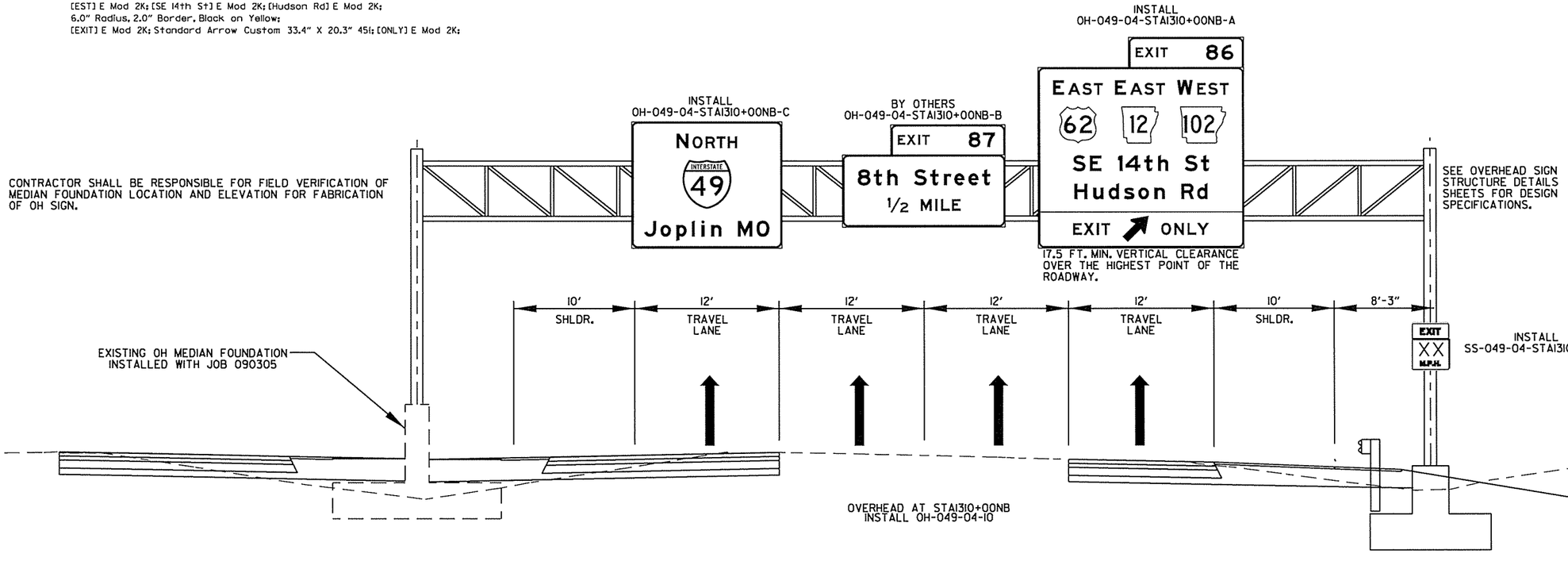

STATE OF ARKANSAS
REGISTERED PROFESSIONAL ENGINEER
No. 15875
RONNIE WILLIAMS
5-16-16

SIGN LAYOUT SHEET

5/16/2016
10:06:49 AM
\PS\CA0902_PS_HWY540_22A.dgn

DATE	DATE FILMED	DATE REVISED	DATE FILMED	FED.RD. DIST.NO.	STATE	FED.AID PROJ.NO.	SHEET NO.	TOTAL SHEETS
				6	ARK.			
				JOB NO.		CA0902	137	581
				(2)	SIGN LAYOUT SHEET			

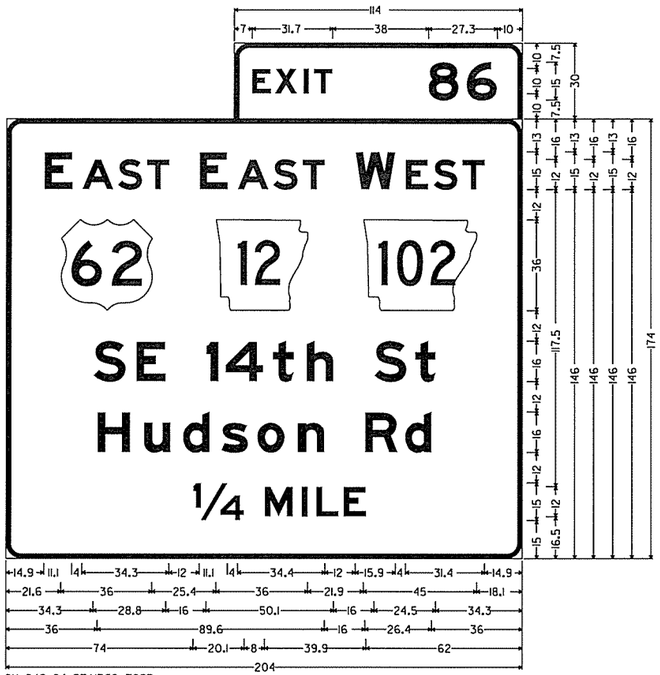

OH-049-04-STAI369+70SB;
6.0" Radius, 2.0" Border, White on Green;
[EXIT] E Mod 2K specified length; [86] E Mod 2K;
6.0" Radius, 2.0" Border, White on Green;
[E] E Mod 2K; [AST] E Mod 2K; [E] E Mod 2K; [AST] E Mod 2K; [W] E Mod 2K;
[EST] E Mod 2K; [SE 14th St] E Mod 2K; [Hudson Rd] E Mod 2K; [1/4] E Mod 2K;
[MILE] E Mod 2K;

NOTES:

THE CONTRACTOR SHALL FIELD VERIFY SIGN PLACEMENT AND MAKE ANY ADJUSTMENTS NECESSARY TO ALIGN SIGNS OVER INTENDED LANES.

SINCE THE CONTRACTOR WILL BE REQUIRED TO INSTALL OVERHEAD SIGNS ON STRUCTURES WHICH ARE LOCATED OVER THE ROADWAYS WHICH ARE CURRENTLY OPEN TO TRAFFIC, IT WILL BE THE RESPONSIBILITY OF THE CONTRACTOR TO PROVIDE LANE CLOSURED AS A PART OF TRAFFIC CONTROL. PAYMENT FOR PROVIDING LANE CLOSURES WILL BE PAID SUBSIDIARY TO THE PAY ITEM "MAINTENANCE OF TRAFFIC". ALL MAINTENANCE OF TRAFFIC WORK MUST CONFORM WITH THE MUTCD.

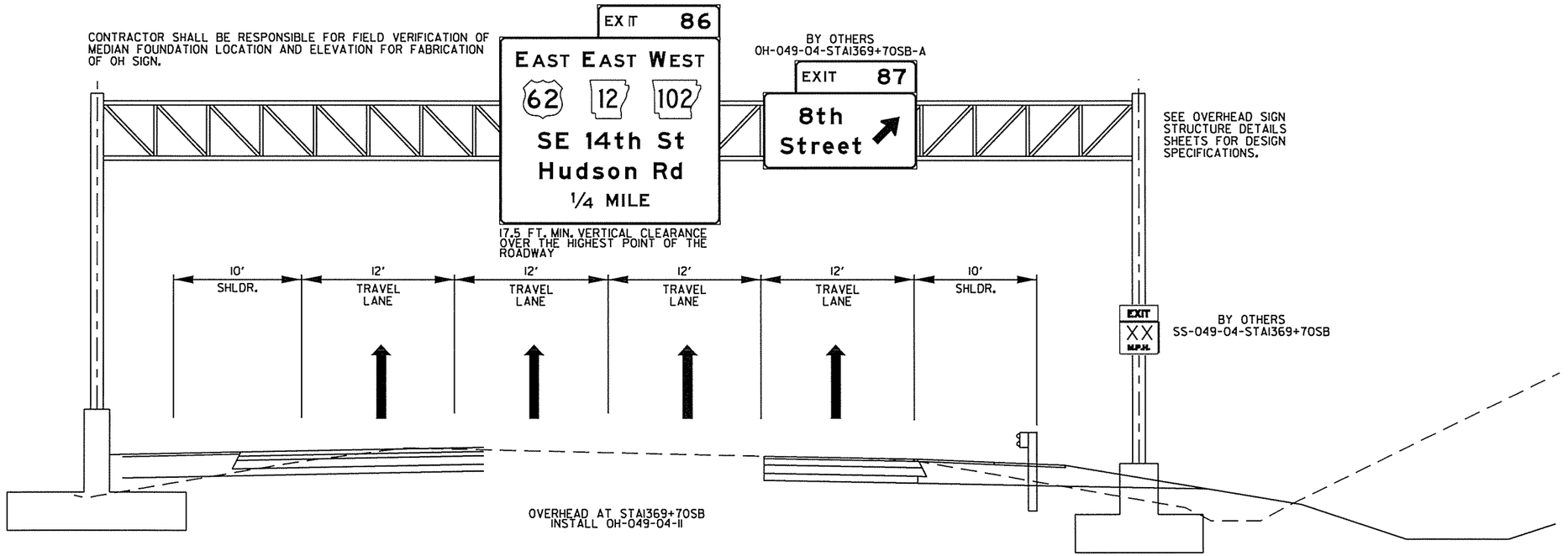

STATE OF ARKANSAS
REGISTERED PROFESSIONAL ENGINEER
No. 15875
RONNIE WILLIAMS
5-16-16

SIGN LAYOUT SHEET

5/16/2016
10:02:25 AM
I:\PS_CA0902_PS_HWY540_22B.dgn

DATE	DATE FILMED	DATE REVISED	DATE FILMED	FED.RD. DIST.NO.	STATE	FED.AID PROJ.NO.	SHEET NO.	TOTAL SHEETS
				6	ARK.			
				JOB NO.		CA0902	138	581

(2) SIGN LAYOUT SHEET

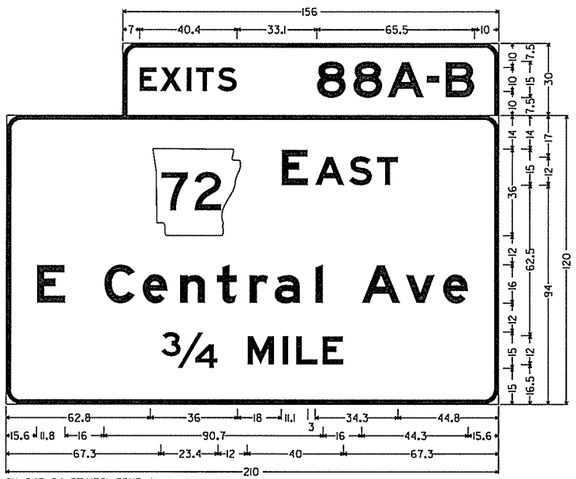

OH-049-04-STA1381+55NB-A;
6.0" Radius, 2.0" Border, White on Green;
[EXITS] E Mod 2K; [88A-B] E Mod 2K;
6.0" Radius, 2.0" Border, White on Green;
[E] E Mod 2K; [AST] E Mod 2K; [E Central Ave] E Mod 2K; [3/4] E Mod 2K; [MILE] E Mod 2K;

NOTES:

THE CONTRACTOR SHALL FIELD VERIFY SIGN PLACEMENT AND MAKE ANY ADJUSTMENTS NECESSARY TO ALIGN SIGNS OVER INTENDED LANES.

SINCE THE CONTRACTOR WILL BE REQUIRED TO INSTALL OVERHEAD SIGNS ON STRUCTURES WHICH ARE LOCATED OVER THE ROADWAYS WHICH ARE CURRENTLY OPEN TO TRAFFIC, IT WILL BE THE RESPONSIBILITY OF THE CONTRACTOR TO PROVIDE LANE CLOSURED AS A PART OF TRAFFIC CONTROL. PAYMENT FOR PROVIDING LANE CLOSURES WILL BE PAID SUBSIDIARY TO THE PAY ITEM "MAINTENANCE OF TRAFFIC". ALL MAINTENANCE OF TRAFFIC WORK MUST CONFORM WITH THE MUTCD.

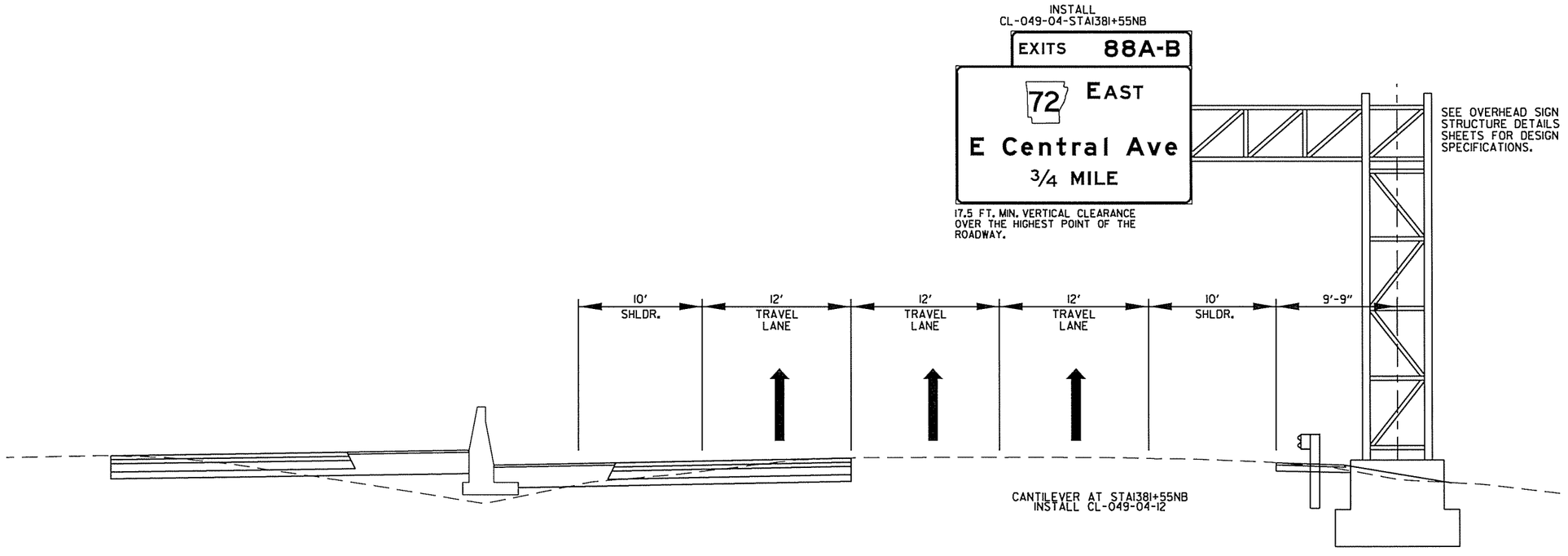

STATE OF ARKANSAS
REGISTERED PROFESSIONAL ENGINEER
No. 15875
RONNIE WILLIAMS
5-16-16

SIGN LAYOUT SHEET

5/16/2016
10:01:29 AM
...\PS\CA0902_PS_HWY540_23.dgn

DATE	DATE FILMED	DATE REVISED	DATE FILMED	FED.RD. DIST.NO.	STATE	FED.AID PROJ.NO.	SHEET NO.	TOTAL SHEETS
				6	ARK.			
				JOB NO.		CA0902	139	581

(2) SIGN LAYOUT SHEET

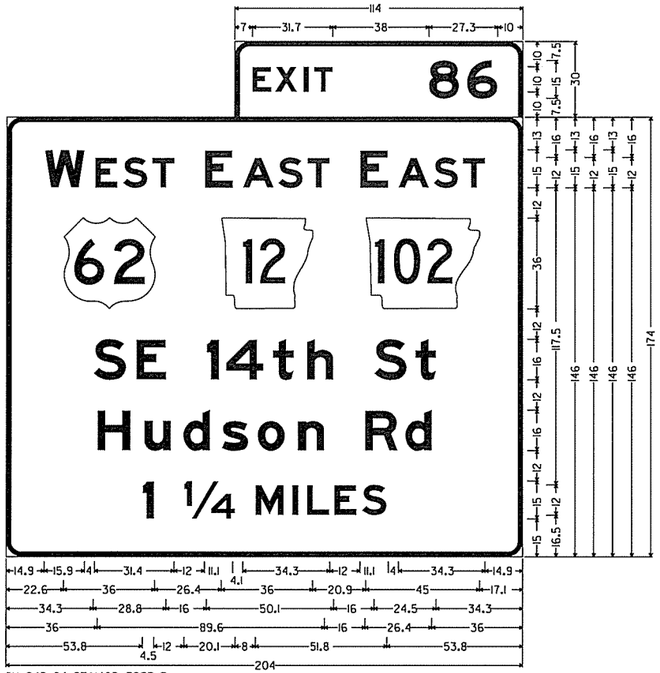

OH-049-04-STA1409+30SB-B;
6.0" Radius, 2.0" Border, White on Green;
[EXIT] E Mod 2K specified length; [86] E Mod 2K;
6.0" Radius, 2.0" Border, White on Green;
[W] E Mod 2K; [EST] E Mod 2K; [E] E Mod 2K; [AST] E Mod 2K; [E] E Mod 2K;
[AST] E Mod 2K; [SE 14th St] E Mod 2K; [Hudson Rd] E Mod 2K; [1] E Mod 2K; [5/4] E Mod 2K;
[MILES] E Mod 2K;

NOTES:

THE CONTRACTOR SHALL FIELD VERIFY SIGN PLACEMENT AND MAKE ANY ADJUSTMENTS NECESSARY TO ALIGN SIGNS OVER INTENDED LANES.

SINCE THE CONTRACTOR WILL BE REQUIRED TO INSTALL OVERHEAD SIGNS ON STRUCTURES WHICH ARE LOCATED OVER THE ROADWAYS WHICH ARE CURRENTLY OPEN TO TRAFFIC, IT WILL BE THE RESPONSIBILITY OF THE CONTRACTOR TO PROVIDE LANE CLOSURED AS A PART OF TRAFFIC CONTROL. PAYMENT FOR PROVIDING LANE CLOSURES WILL BE PAID SUBSIDIARY TO THE PAY ITEM "MAINTENANCE OF TRAFFIC". ALL MAINTENANCE OF TRAFFIC WORK MUST CONFORM WITH THE MUTCD.

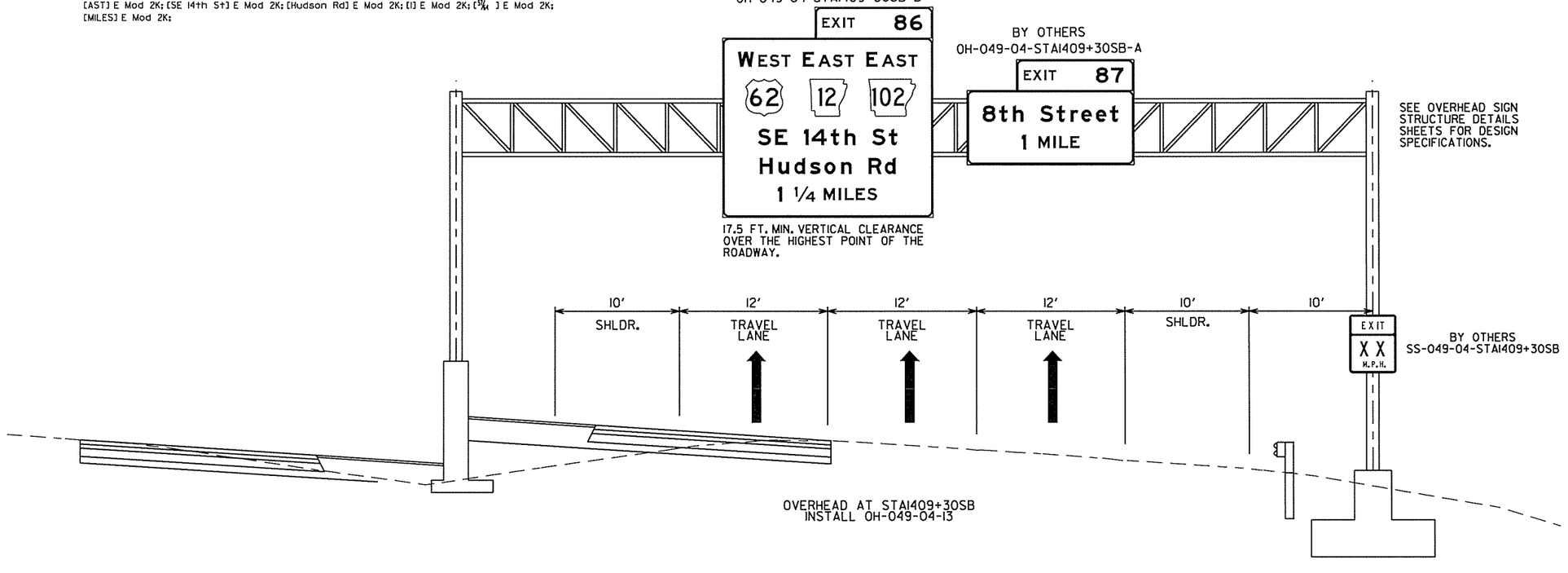

STATE OF ARKANSAS
REGISTERED PROFESSIONAL ENGINEER
No. 15875
RONNIE WILLIAMS
5-16-16

SIGN LAYOUT SHEET

5/16/2016
10:01:31 AM
...\PS\CA0902_PS_HWY540_26.dgn

DATE	DATE FILMED	DATE REVISED	DATE FILMED	FED.RD. DIST.NO.	STATE	FED.AID PROJ.NO.	SHEET NO.	TOTAL SHEETS
				6	ARK.			
				JOB NO.		CA0902	140	581

(2) SIGN LAYOUT SHEET

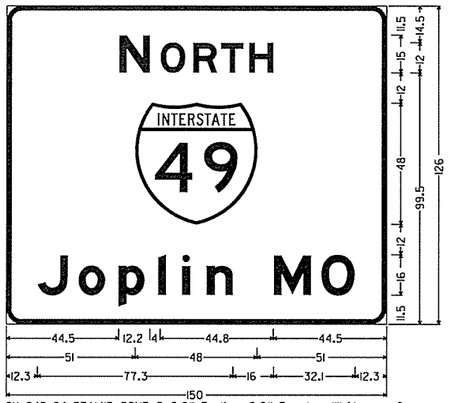

OH-049-04-STA1415+50NB-C; 6.0" Radius, 2.0" Border, White on Green;
[N] E Mod 2K; [ORTH] E Mod 2K; [Joplin MO] E Mod 2K;

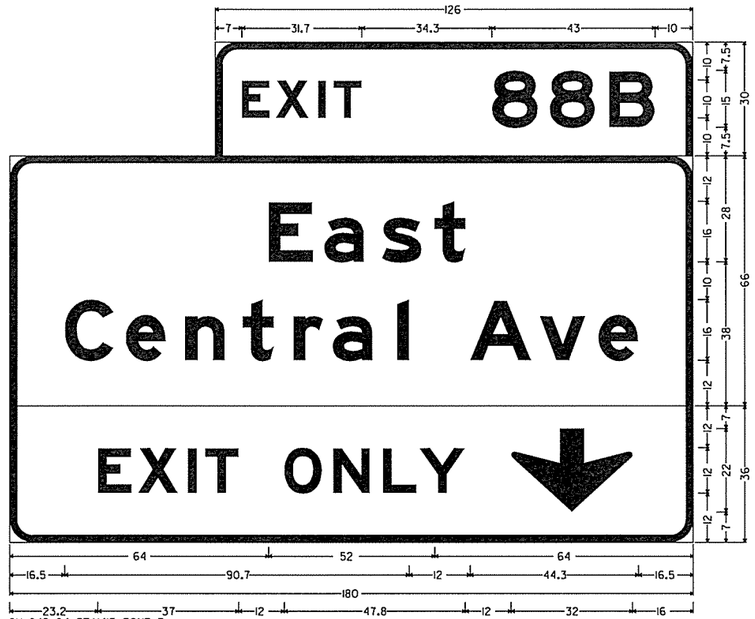

OH-049-04-STA1415+50NB-B;
6.0" Radius, 2.0" Border, White on Green;
[EXIT] E Mod 2K specified length; [88B] E Mod 2K;
6.0" Radius, 2.0" Border, White on Green;
[E] E Mod 2K; [ast] E Mod 2K; [Central Ave] E Mod 2K;
6.0" Radius, 2.0" Border, Black on Yellow;
[EXIT] E Mod 2K; [ONLY] E Mod 2K; Down Arrow 22.0" 270l;

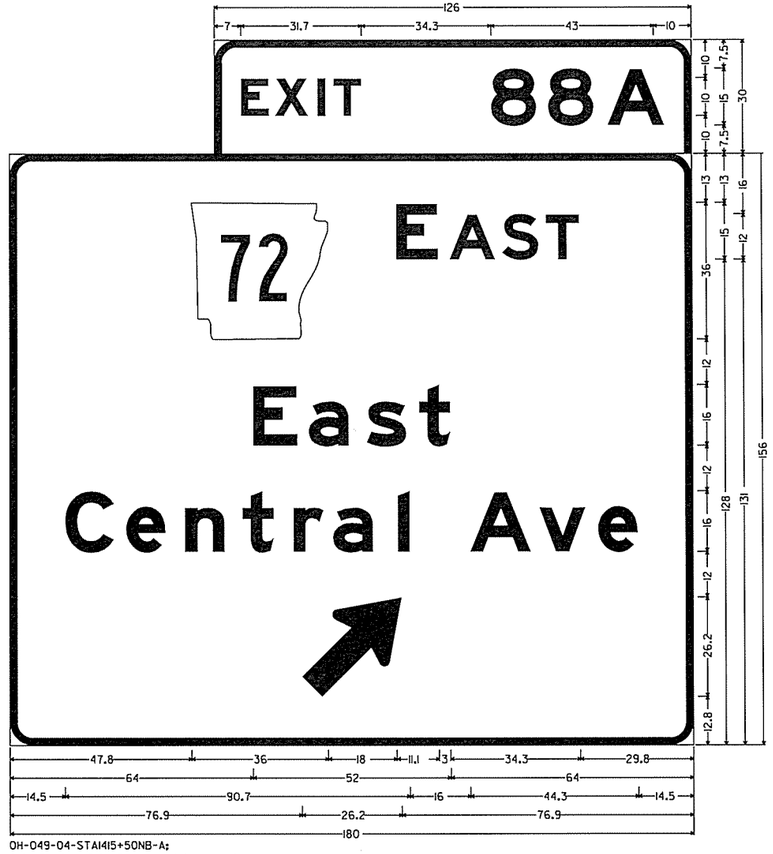

OH-049-04-STA1415+50NB-A;
6.0" Radius, 2.0" Border, White on Green;
[EXIT] E Mod 2K specified length; [88A] E Mod 2K;
6.0" Radius, 2.0" Border, White on Green;
[E] E Mod 2K; [AST] E Mod 2K; [East] E Mod 2K; [Central Ave] E Mod 2K; Standard Arrow Custom 33.4" X 20.3" 45l;

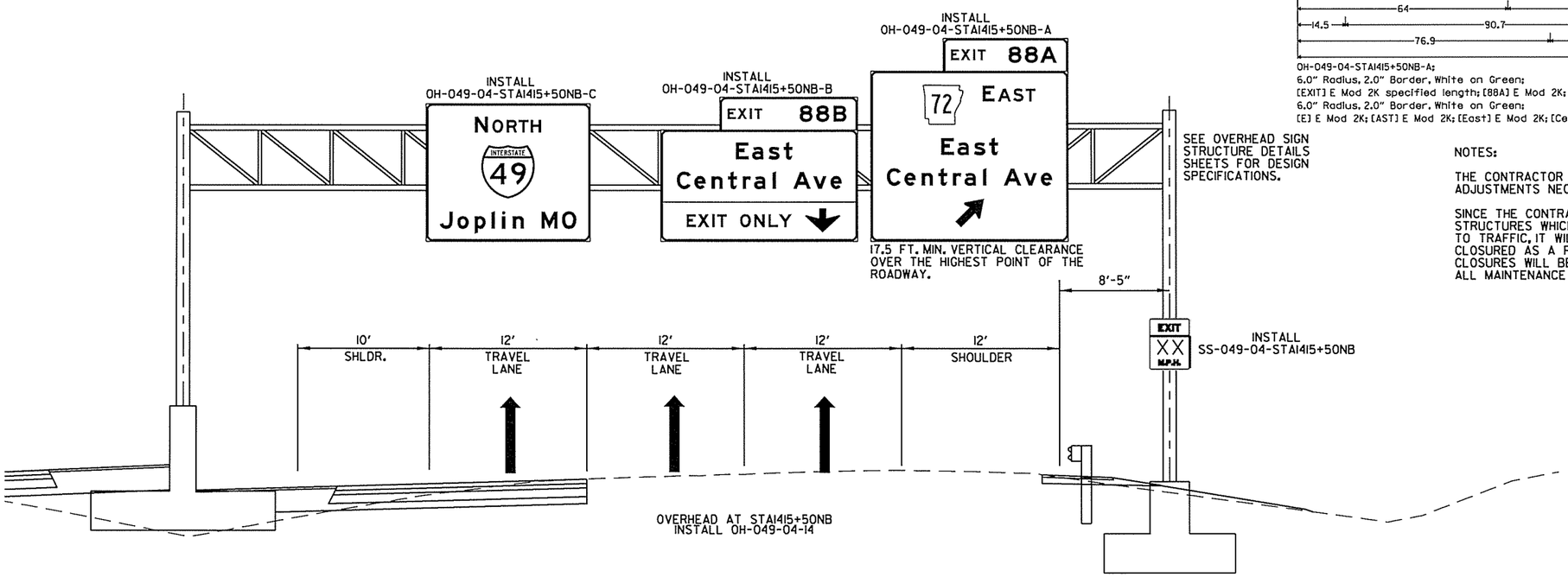

NOTES:

THE CONTRACTOR SHALL FIELD VERIFY SIGN PLACEMENT AND MAKE ANY ADJUSTMENTS NECESSARY TO ALIGN SIGNS OVER INTENDED LANES.

SINCE THE CONTRACTOR WILL BE REQUIRED TO INSTALL OVERHEAD SIGNS ON STRUCTURES WHICH ARE LOCATED OVER THE ROADWAYS WHICH ARE CURRENTLY OPEN TO TRAFFIC, IT WILL BE THE RESPONSIBILITY OF THE CONTRACTOR TO PROVIDE LANE CLOSURED AS A PART OF TRAFFIC CONTROL. PAYMENT FOR PROVIDING LANE CLOSURES WILL BE PAID SUBSIDIARY TO THE PAY ITEM "MAINTENANCE OF TRAFFIC". ALL MAINTENANCE OF TRAFFIC WORK MUST CONFORM WITH THE MUTCD.

STATE OF ARKANSAS
REGISTERED PROFESSIONAL ENGINEER
No. 15875
RONNIE WILLIAMS
5-16-16

SIGN LAYOUT SHEET

5/16/2016
10:01:32 AM
...\PS\rCA0902_PS_HWY540_24.dgn

DATE	DATE FILMED	DATE REVISED	DATE FILMED	FED.RD. DIST.NO.	STATE	FED.AID PROJ.NO.	SHEET NO.	TOTAL SHEETS
				6	ARK.			
				JOB NO.		CA0902	141	581

(2) SIGN LAYOUT SHEET

NOTES:

THE CONTRACTOR SHALL FIELD VERIFY SIGN PLACEMENT AND MAKE ANY ADJUSTMENTS NECESSARY TO ALIGN SIGNS OVER INTENDED LANES.

SINCE THE CONTRACTOR WILL BE REQUIRED TO INSTALL OVERHEAD SIGNS ON STRUCTURES WHICH ARE LOCATED OVER THE ROADWAYS WHICH ARE CURRENTLY OPEN TO TRAFFIC, IT WILL BE THE RESPONSIBILITY OF THE CONTRACTOR TO PROVIDE LANE CLOSURED AS A PART OF TRAFFIC CONTROL. PAYMENT FOR PROVIDING LANE CLOSURES WILL BE PAID SUBSIDIARY TO THE PAY ITEM "MAINTENANCE OF TRAFFIC". ALL MAINTENANCE OF TRAFFIC WORK MUST CONFORM WITH THE MUTCD.

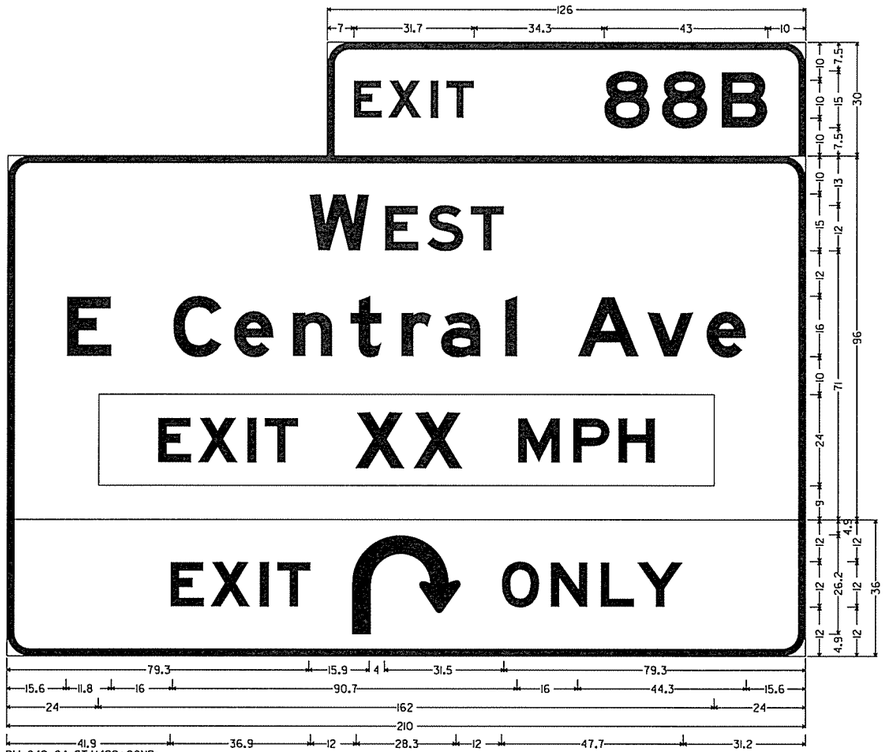

BM-049-04-STAI429+00NB;
6.0" Radius, 2.0" Border, White on Green;
[EXIT] E Mod 2K specified length; [88B] E Mod 2K;
6.0" Radius, 2.0" Border, White on Green;
[W] E Mod 2K; [EST] E Mod 2K; [E Central Ave] E Mod 2K; Rectangle Yellow;
6.0" Radius, 2.0" Border, Black on Yellow;
[EXIT] E Mod 2K; Arrow Custom; [ONLY] E Mod 2K;

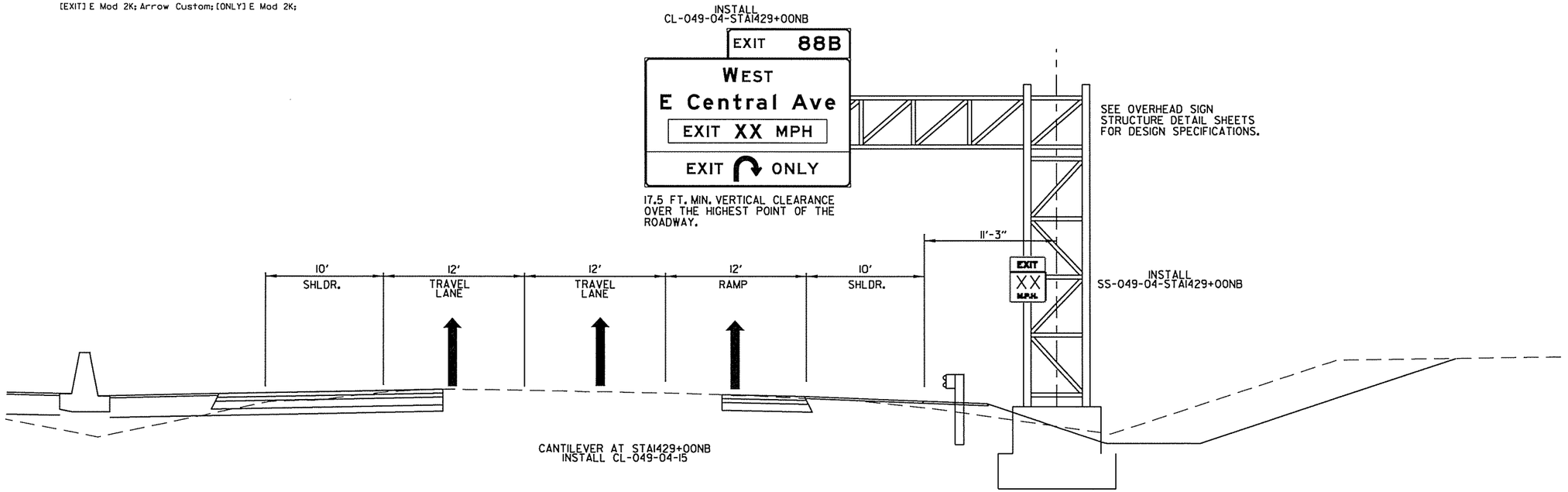

STATE OF ARKANSAS
REGISTERED PROFESSIONAL ENGINEER
No. 15875
RONNIE WILLIAMS
5-16-14

SIGN LAYOUT SHEET

5/16/2016
10:01:24 AM
\\PSV\...CA0902_PS_HWY540_24A.dgn

DATE	DATE FILMED	DATE REVISED	DATE FILMED	FED.RD. DIST.NO.	STATE	FED.AID PROJ.NO.	SHEET NO.	TOTAL SHEETS
				6	ARK.			
				JOB NO.		CA0902	142	581

(2) SIGN LAYOUT SHEET

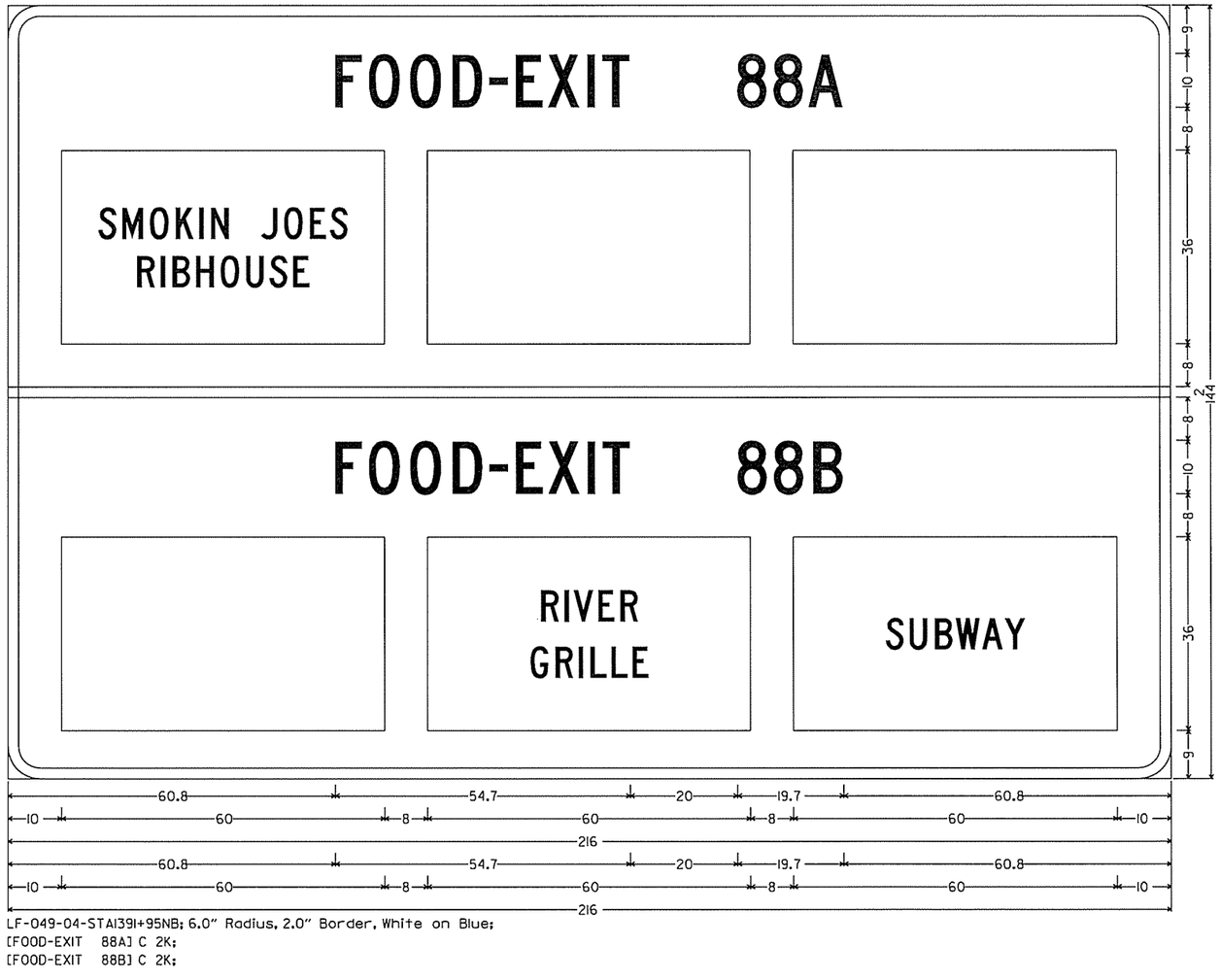

LF-049-04-STA1391+95NB; 6.0" Radius, 2.0" Border, White on Blue;
[FOOD-EXIT 88A] C 2K;
[FOOD-EXIT 88B] C 2K;

STATE OF ARKANSAS
REGISTERED PROFESSIONAL ENGINEER
No. 15875
RONNIE WILLIAMS
5-16-16

SIGN LAYOUT SHEET

5/16/2016
10:01:35 AM
...\PS\rCA0902_PS_HWY540_25.dgn

DATE	DATE FILMED	DATE REVISED	DATE FILMED	FED.RD. DIST.NO.	STATE	FED.AID PROJ.NO.	SHEET NO.	TOTAL SHEETS
				6	ARK.			
				JOB NO.		CA0902	143	581

(2) SIGN LAYOUT SHEET

GM-049-04-STA1346+00SB; 6.0" Radius, 2.0" Border, White on Green;
[Northwest Arkansas] E Mod 2K; [Community College] E Mod 2K; [EXIT] E Mod 2K; [86] E Mod 2K;

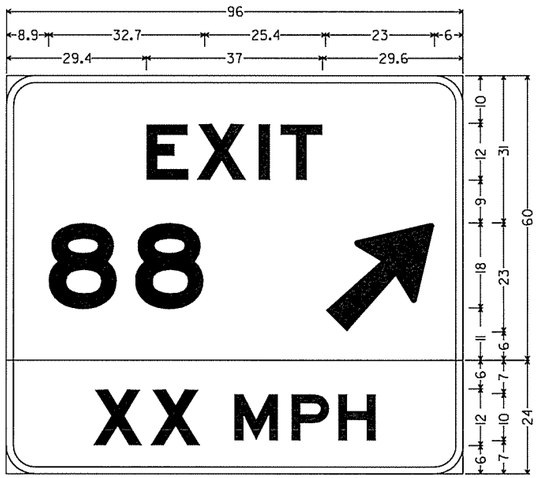

EX-049-04-STA1439+59SB; 6.0" Radius, 1.5" Border, White on Green;
[EXIT] E Mod 2K; [88] E Mod 2K; Arrow Custom - 29.0" 451;
6.0" Radius, 1.5" Border, Black on Yellow;
[XX] E 2K; [MPH] E 2K;

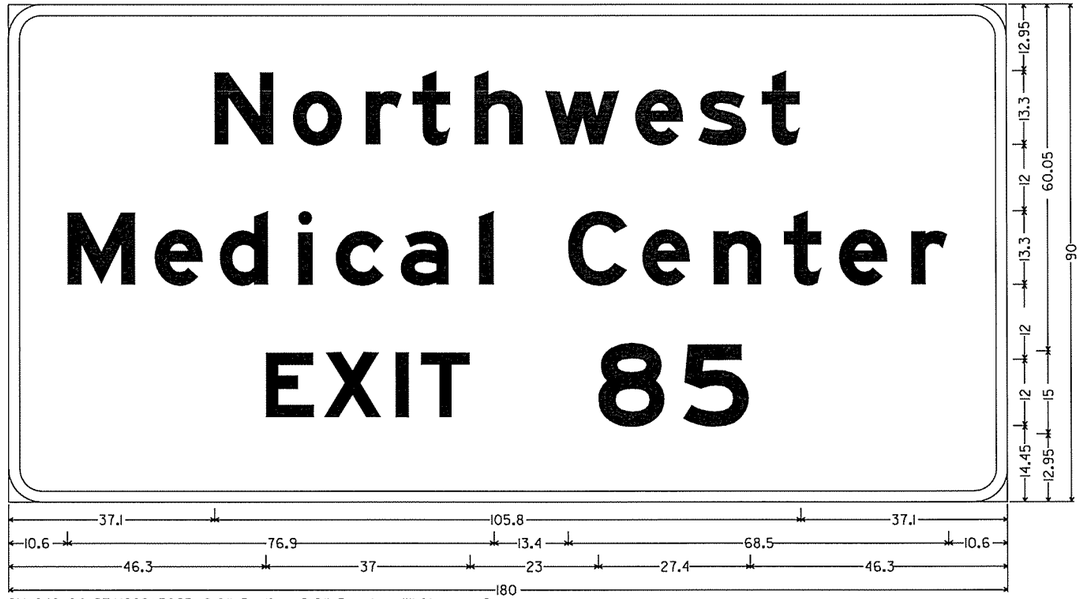

GM-049-04-STA1268+50SB; 6.0" Radius, 2.0" Border, White on Green;
[Northwest] E Mod 2K; [Medical Center] E Mod 2K; [EXIT] E Mod 2K; [85] E Mod 2K;

STATE OF ARKANSAS
REGISTERED PROFESSIONAL ENGINEER
No. 15875
RONNIE WILLIAMS
5-16-16

SIGN LAYOUT SHEET

5/16/2016
10:01:35 AM
\\PS\rCA0902_PS_HWY540_25.dgn

DATE	DATE FILMED	DATE REVISED	DATE FILMED	FED.RD. DIST.NO.	STATE	FED.AID PROJ.NO.	SHEET NO.	TOTAL SHEETS
				6	ARK.			
				JOB NO.		CA0902	144	581

(2) SIGN LAYOUT SHEET

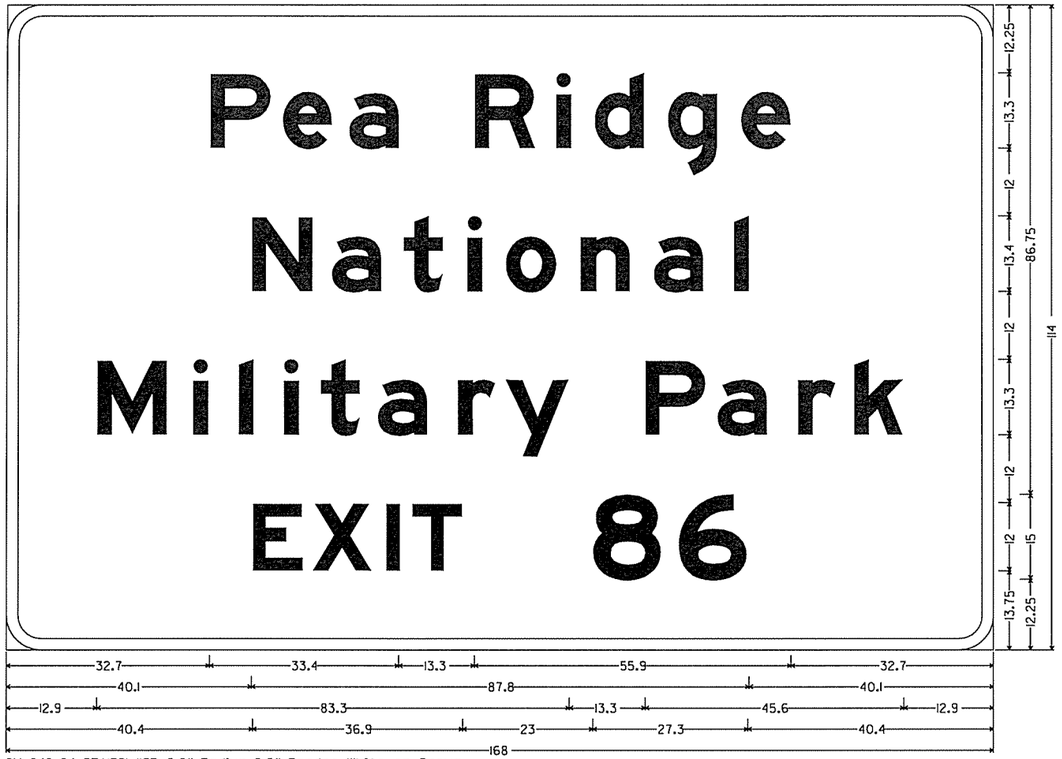

GM-049-04-STA1391+11SB; 6.0" Radius, 2.0" Border, White on Brown;
[Pea Ridge] E Mod 2K; [National] E Mod 2K; [Military Park] E Mod 2K; [EXIT] E Mod 2K; [86] E Mod 2K;

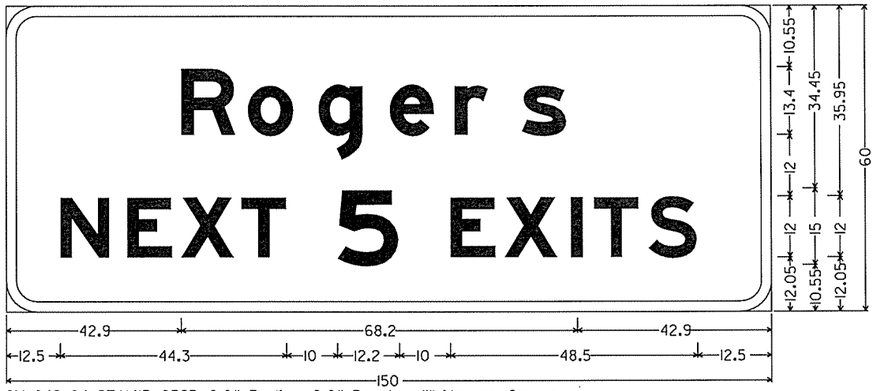

GM-049-04-STA1413+05SB; 6.0" Radius, 2.0" Border, White on Green;
[ROGERS] E Mod 2K; [NEXT] E Mod 2K; [5] E Mod 2K; [EXITS] E Mod 2K;

GM-049-04-STA1303+67SB; 6.0" Radius, 2.0" Border, White on Green;
[Northwest Arkansas] E Mod 2K; [Regional Airport] E Mod 2K; [EXIT] E Mod 2K; [85] E Mod 2K;

STATE OF ARKANSAS
REGISTERED PROFESSIONAL ENGINEER
No. 15875
RONNIE WILLIAMS
5-16-16

SIGN LAYOUT SHEET

5/16/2016
10:01:36 AM
...\PS\rCA0902_PS_HWY540_25.dgn

DATE	DATE FILMED	DATE REVISED	DATE FILMED	FED.RD. DIST.NO.	STATE	FED.AID PROJ.NO.	SHEET NO.	TOTAL SHEETS
				6	ARK.			
				JOB NO.		CA0902	145	581

(2) SIGN LAYOUT SHEET

GM-049-04-STA1291+31NB; 6.0" Radius, 2.0" Border, White on Green;
[Northwest Arkansas] E Mod 2K; [Community College] E Mod 2K; [EXIT] E Mod 2K; [86] E Mod 2K;

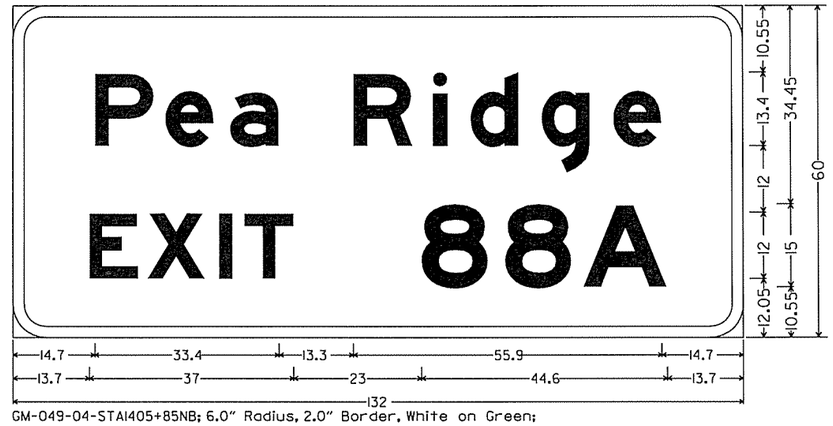

GM-049-04-STA1405+85NB; 6.0" Radius, 2.0" Border, White on Green;
[Pea Ridge] E Mod 2K; [EXIT] E Mod 2K; [88A] E Mod 2K;

STATE OF ARKANSAS
REGISTERED PROFESSIONAL ENGINEER
No. 15875
RONNIE WILLIAMS

5-16-16

SIGN LAYOUT SHEET

5/16/2016
10:01:36 AM
\\PS\rCA0902_PS_HWY540_25.dgn

DATE	DATE FILMED	DATE REVISED	DATE FILMED	FED.RD. DIST.NO.	STATE	FED.AID PROJ.NO.	SHEET NO.	TOTAL SHEETS
				6	ARK.			
				JOB NO.		CA0902	146	581
				(2)	SIGN LAYOUT SHEET			

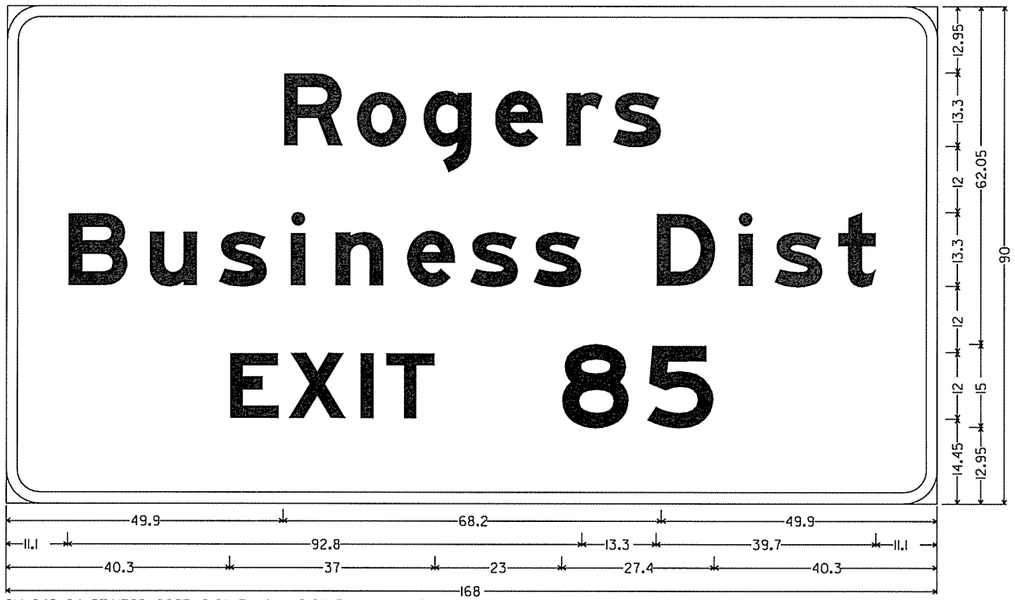

GM-049-04-STAI328+00SB; 6.0" Radius, 2.0" Border, White on Green;
[Rogers] E Mod 2K; [Business Dist] E Mod 2K; [EXIT] E Mod 2K; [85] E Mod 2K;

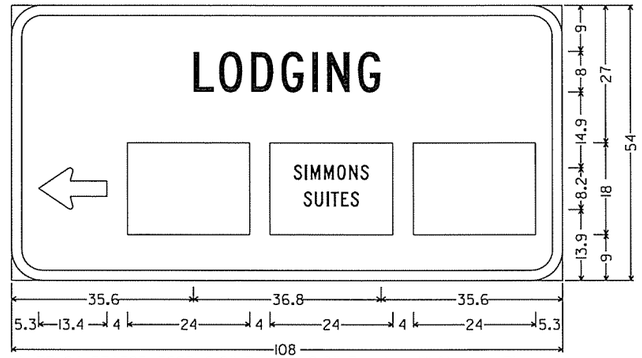

LL-R3-04-STA305+56SB; 6.0" Radius, 2.0" Border, White on Blue;
[LODGING] C 2K; Standard Arrow Custom 13.4" X 8.1" 180[;

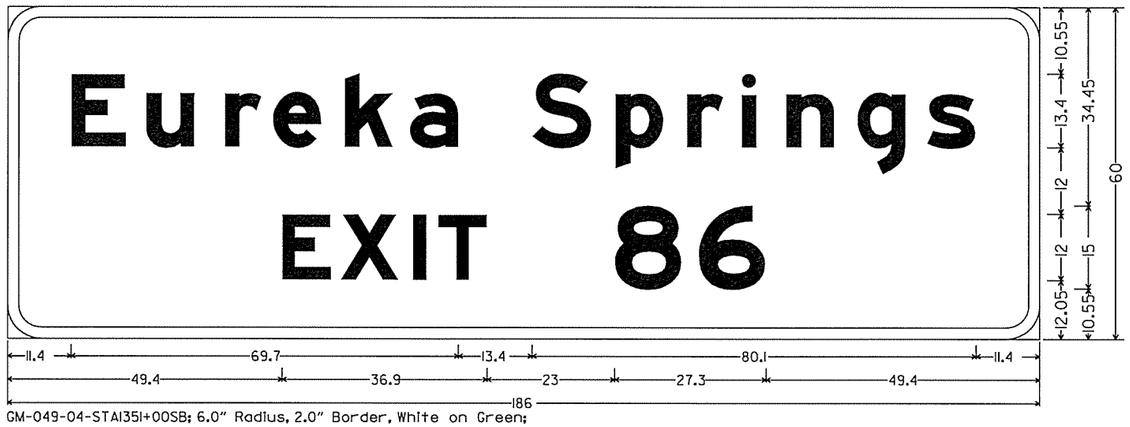

GM-049-04-STAI351+00SB; 6.0" Radius, 2.0" Border, White on Green;
[Eureka Springs] E Mod 2K; [EXIT] E Mod 2K; [86] E Mod 2K;

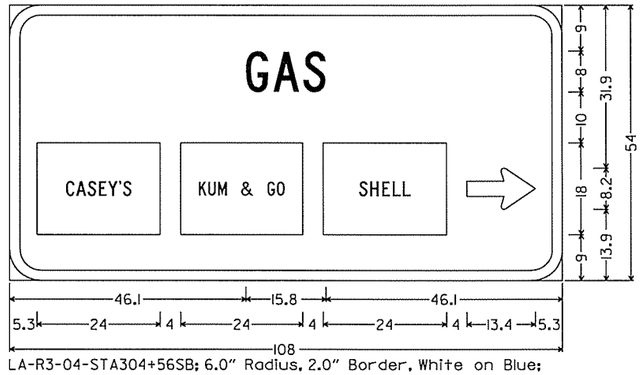

LA-R3-04-STA304+56SB; 6.0" Radius, 2.0" Border, White on Blue;
[GAS] C 2K;
Standard Arrow Custom 13.4" X 8.1" 01;

STATE OF ARKANSAS
REGISTERED PROFESSIONAL ENGINEER
No. 15875
RONNIE WILLIAMS
5-16-14

SIGN LAYOUT SHEET

5/16/2016
10:01:36 AM
\PS\rCA0902_PS_HWY540_25.dgn

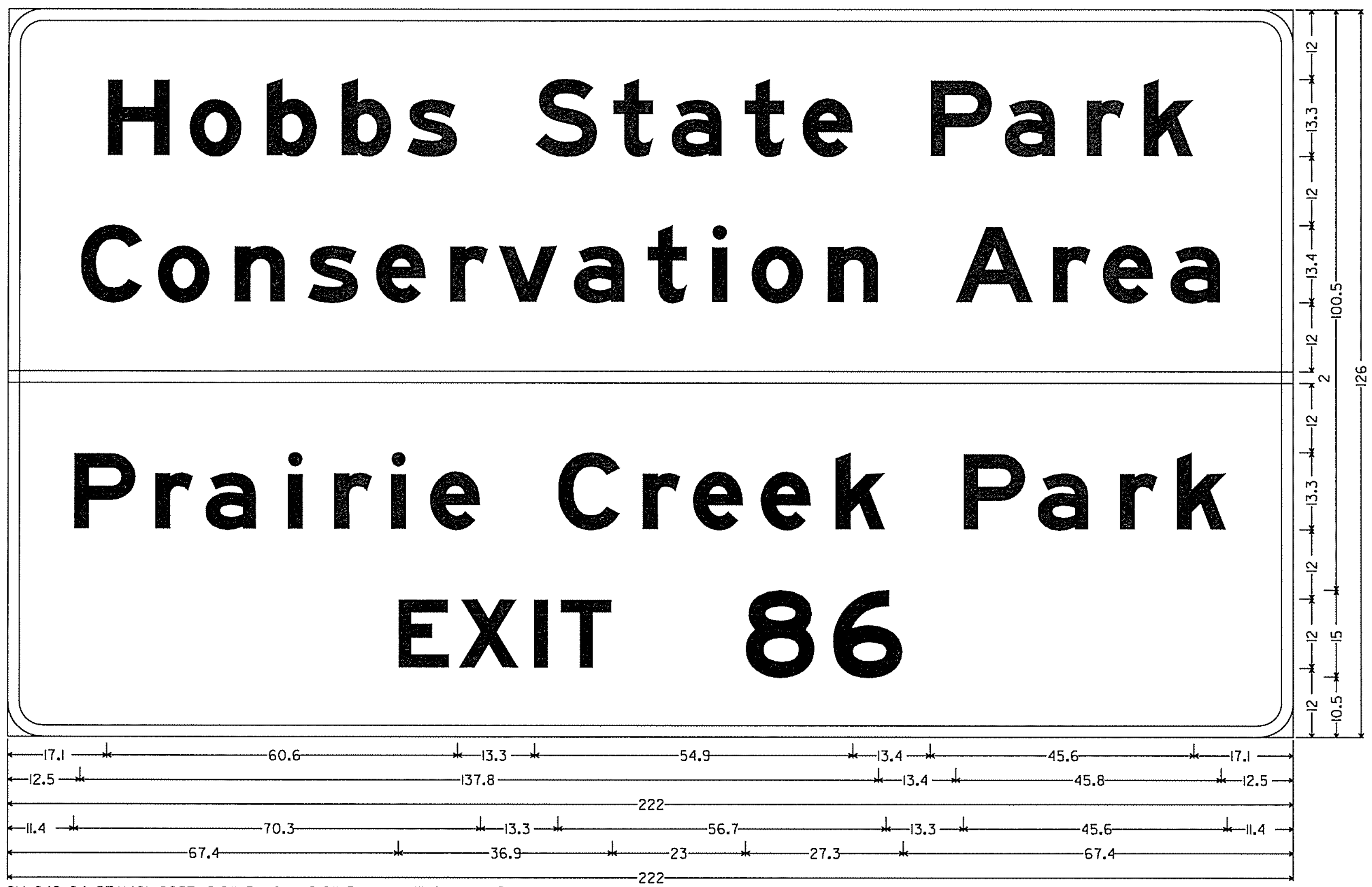

GM-049-04-STA1401+00SB; 6.0" Radius, 2.0" Border, White on Brown;
[Hobbs State Park] E Mod 2K; [Conservation Area] E Mod 2K; [Prairie Creek Park] E Mod 2K; [EXIT] E Mod 2K; [86] E Mod 2K;

SS-049-04-STA1381+05SB;
6.0" Radius, 2.0" Border, White on Blue;
[Adopt A Highway] E 2K specified length;
[Litter Control] E 2K specified length; [Next 1Mile] E 2K;
[Wal-Mart] E 2K; [Transportation Services] E 2K;

STATE OF ARKANSAS
REGISTERED PROFESSIONAL ENGINEER
No. 15875
RONNIE WILLIAMS
5-16-16

SIGN LAYOUT SHEET

DATE	DATE FILMED	DATE REVISED	DATE FILMED	FED.RD. DIST.NO.	STATE	FED.AID PROJ.NO.	SHEET NO.	TOTAL SHEETS
				6	ARK.			
				JOB NO.		CA0902	148	581
				(2)	SIGN LAYOUT SHEET			

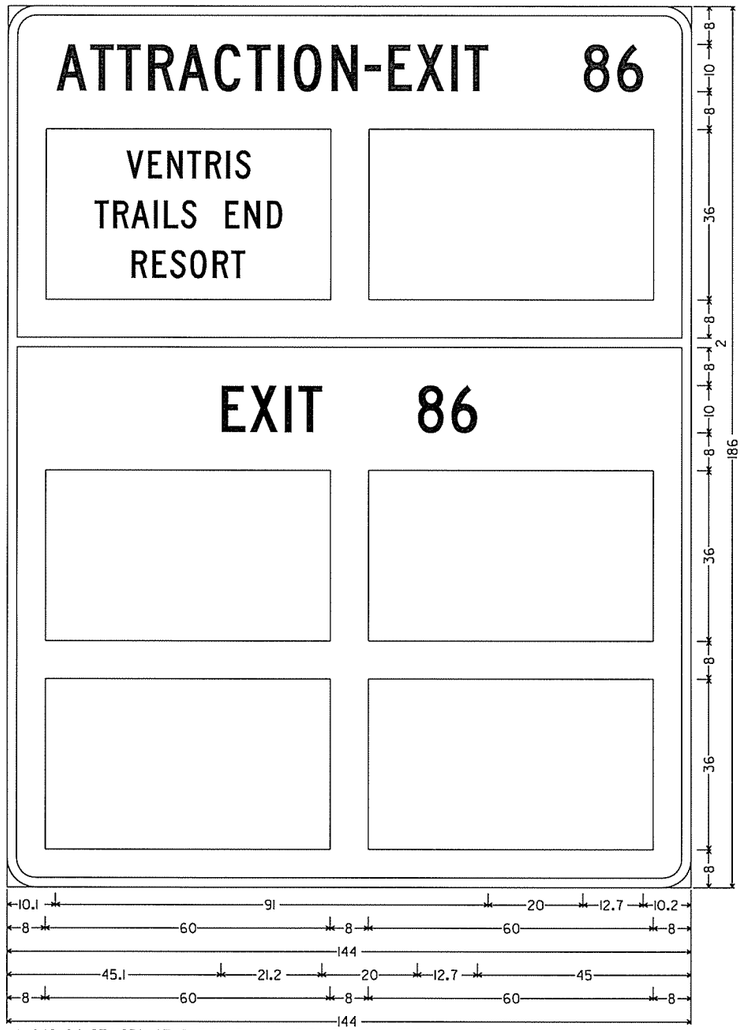

LA-049-04-STAI278+97NB; 6.0" Radius, 2.0" Border, White on Blue;
[ATTRACTION-EXIT 86] C 2K;
[EXIT 86] C 2K;

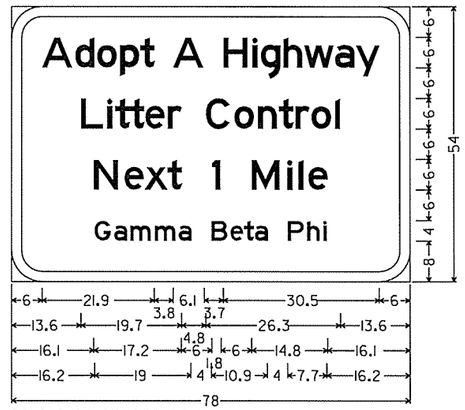

SS-049-04-STAI382+00NB;
6.0" Radius, 2.0" Border, White on Blue;
[Adopt A Highway] E 2K specified length;
[Litter Control] E 2K specified length; [Next 1 Mile] E 2K;
[Gamma Beta Phi] E 2K;

STATE OF ARKANSAS
REGISTERED PROFESSIONAL ENGINEER
No. 15875
RONNIE WILLIAMS
5-16-16

SIGN LAYOUT SHEET

5/16/2016
10:45:50 AM
I:\PS\CA0902_PS_HWY540_25.dgn

DATE	DATE FILMED	DATE REVISED	DATE FILMED	FED.RD. DIST.NO.	STATE	FED.AID PROJ.NO.	SHEET NO.	TOTAL SHEETS
				6	ARK.			
				JOB NO.		CA0902	149	581

(2) SIGN LAYOUT SHEET

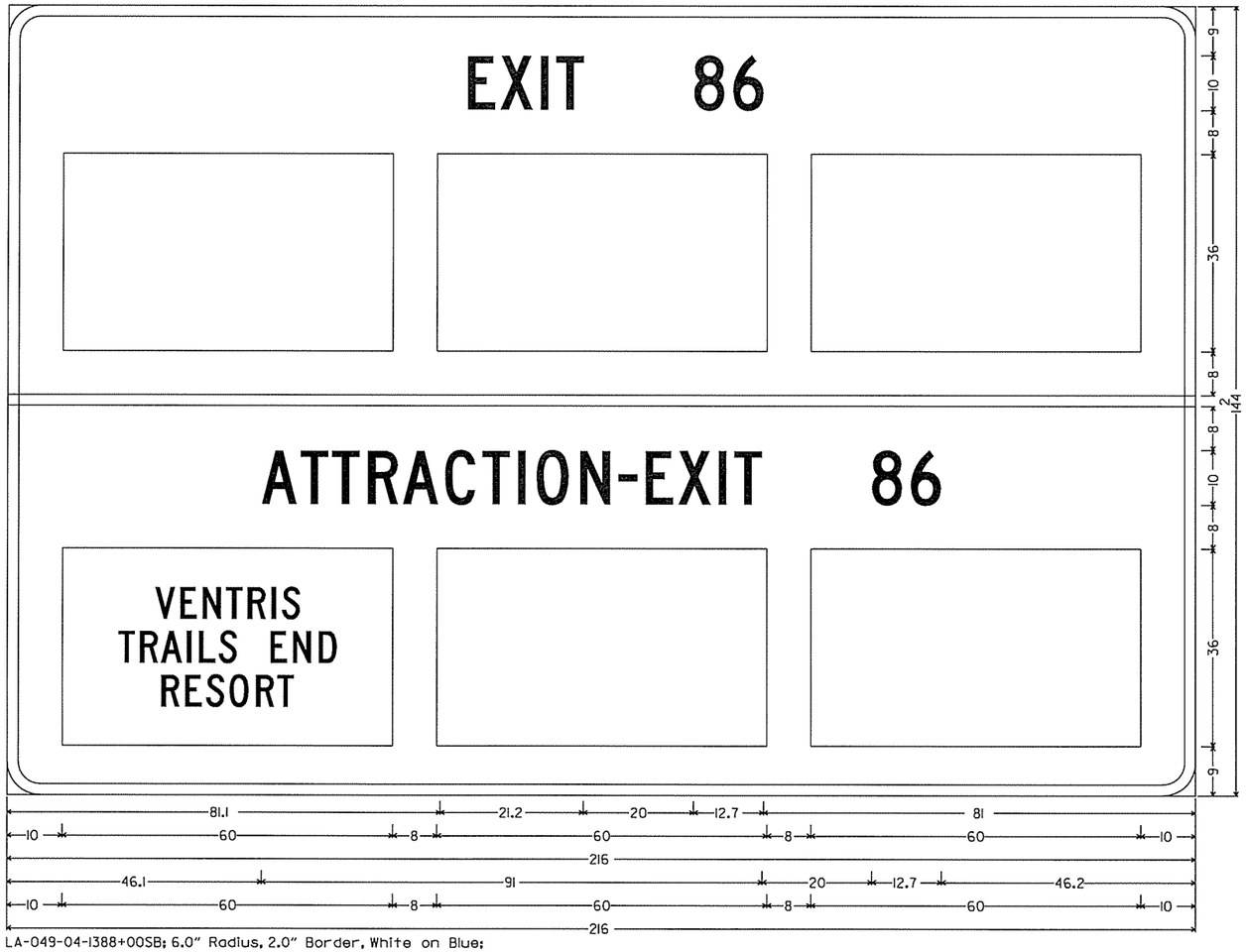

LA-049-04-1388+00SB; 6.0" Radius, 2.0" Border, White on Blue;
[-EXIT 86] C 2K; [ATTRACTION-EXIT 86] C 2K;

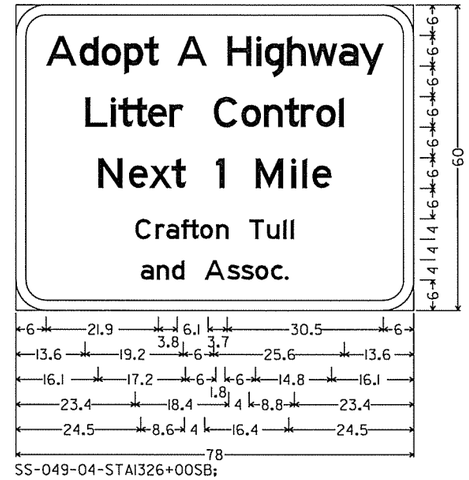

SS-049-04-STAI326+00SB;
6.0" Radius, 2.0" Border, White on Blue;
[Adopt A Highway] E 2K specified length;
[Litter Control] E 2K specified length; [Next 1 Mile] E 2K;
[Crafton Tull] E 2K; [and Assoc.] E 2K;

STATE OF ARKANSAS
REGISTERED PROFESSIONAL ENGINEER
No. 15875
RONNIE WILLIAMS
5-16-16

SIGN LAYOUT SHEET

5/16/2016
10:01:27 AM
\\PSV\rCA0902_PS_HWY540_25.dgn

DATE	DATE FILMED	DATE REVISED	DATE FILMED	FED.RD. DIST.NO.	STATE	FED.AID PROJ.NO.	SHEET NO.	TOTAL SHEETS
				6	ARK.			
				JOB NO.		CA0902	150	581

(2) SIGN LAYOUT SHEET

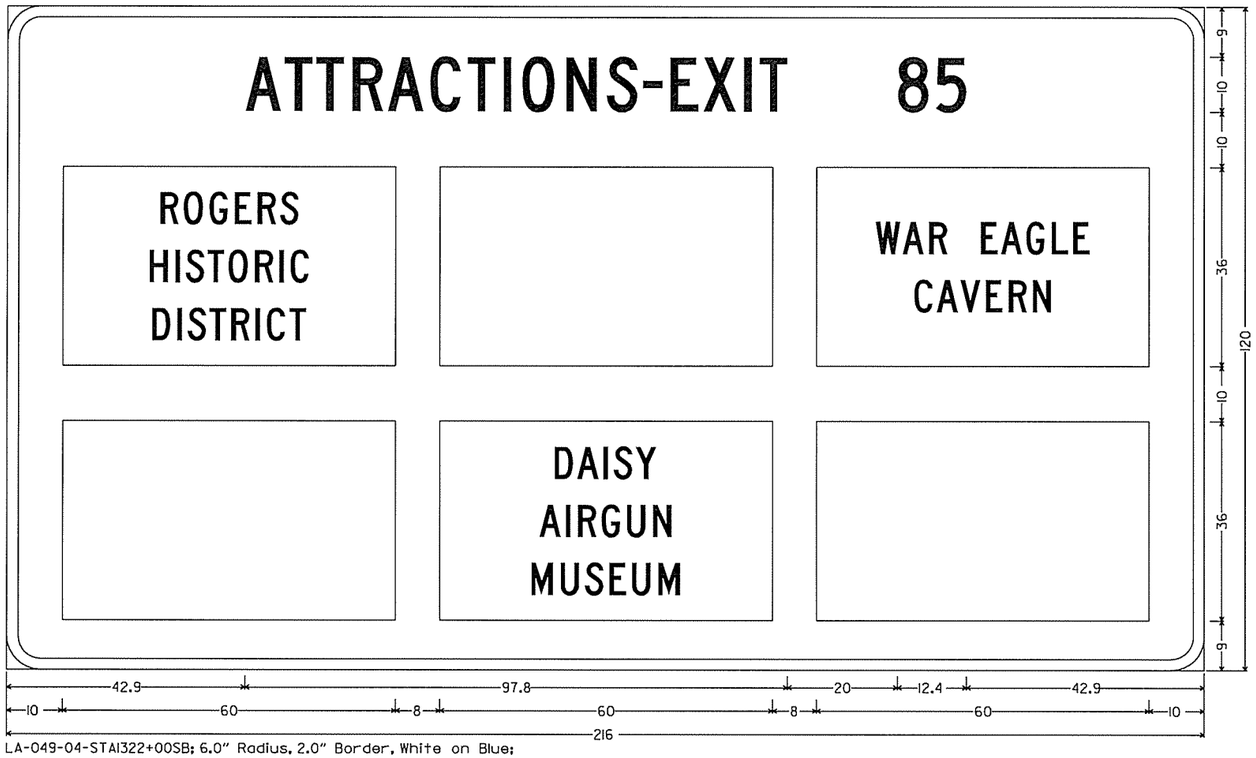

LA-049-04-STAI322+00SB; 6.0" Radius, 2.0" Border, White on Blue;
[ATTRACTIONS-EXIT 85] C 2K;

SS-049-04-STAI434+83NB;
6.0" Radius, 2.0" Border, White on Blue;
[Adopt A Highway] E 2K specified length;
[Litter Control] E 2K specified length; [Next 1 Mile] E 2K;
[Wells Fargo] E 2K; [Advisors] E 2K;

STATE OF ARKANSAS
REGISTERED PROFESSIONAL ENGINEER
No. 15875
RONNIE WILLIAMS
5-16-16

SIGN LAYOUT SHEET

5/16/2016
10:08:47 AM
\\PSV\r-CA0902_PS_HWY540_25.dgn

DATE	DATE FILMED	DATE REVISED	DATE FILMED	FED.RD. DIST.NO.	STATE	FED.AID PROJ.NO.	SHEET NO.	TOTAL SHEETS
				6	ARK.			
				JOB NO.		CA0902	151	581

(2) SIGN LAYOUT SHEET

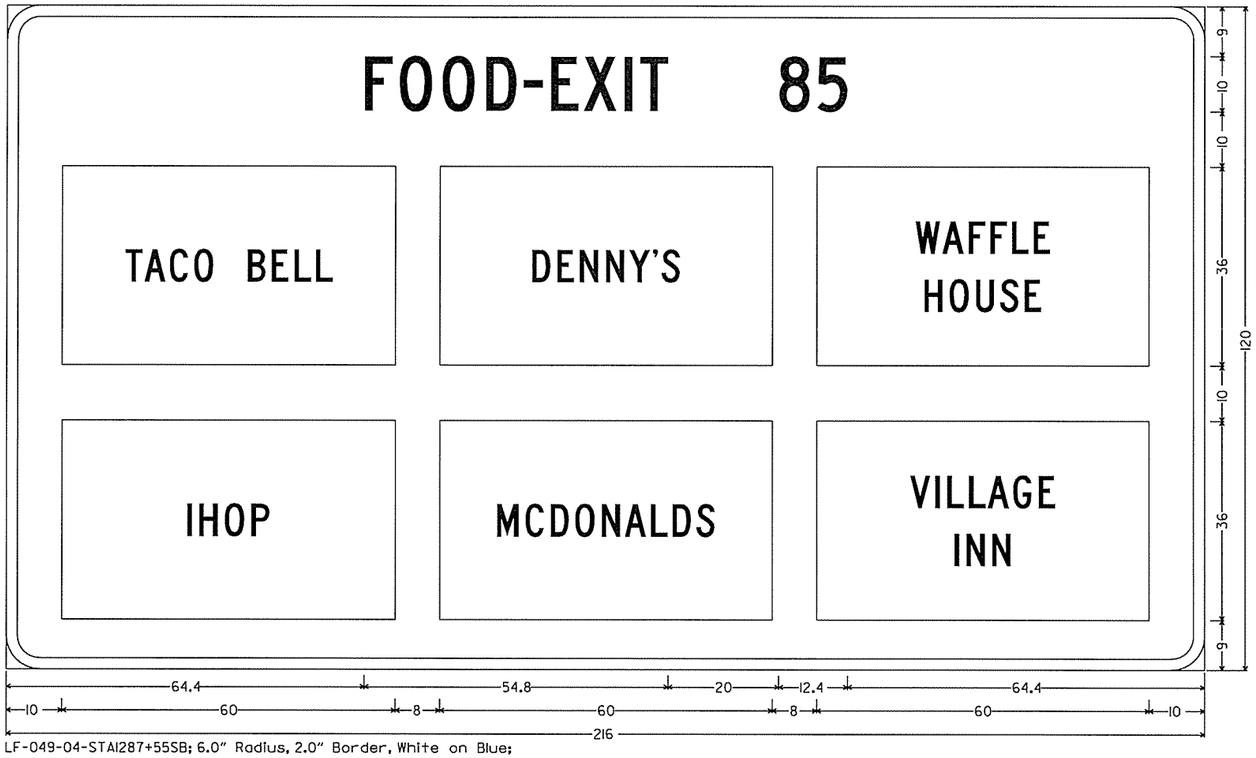

LF-049-04-STAI287+55SB; 6.0" Radius, 2.0" Border, White on Blue;
[FOOD-EXIT 85] C 2K;

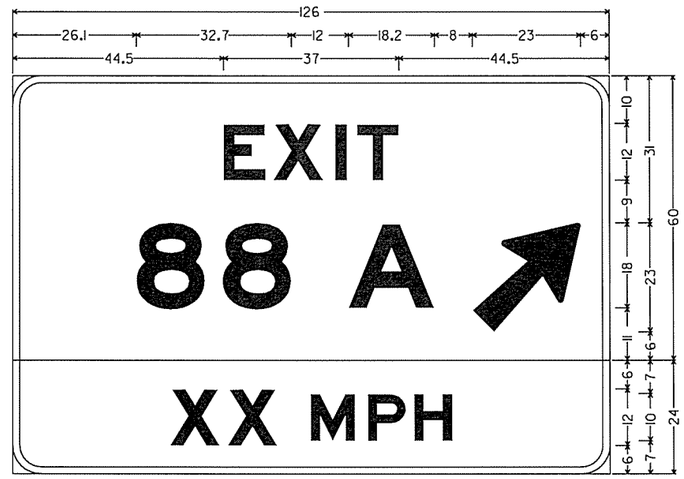

EX-049-04-STAI421+03NB; 6.0" Radius, 1.5" Border, White on Green;
[EXIT] E Mod 2K; [88] E Mod 2K; [A] E Mod 2K; Arrow Custom - 29.0" 45l;
6.0" Radius, 1.5" Border, Black on Yellow;
[XX] E 2K; [MPH] E 2K;

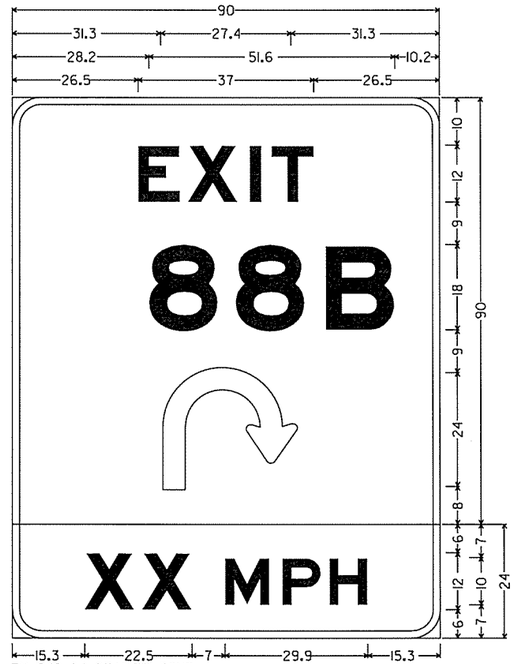

EX-049-04-STAI433+56NB;
6.0" Radius, 1.5" Border, White on Green;
[EXIT] E Mod 2K; [88B] E Mod 2K;
6.0" Radius, 1.5" Border, Black on Yellow;
[XX] E 2K; [MPH] E 2K;

STATE OF ARKANSAS
REGISTERED PROFESSIONAL ENGINEER
No. 15875
RONNIE WILLIAMS
5-16-16

SIGN LAYOUT SHEET

5/16/2016
10:01:27 AM
\\PS\rCA0902_PS_HWY540_25.dgn

DATE	DATE FILMED	DATE REVISED	DATE FILMED	FED.RD. DIST.NO.	STATE	FED.AID PROJ.NO.	SHEET NO.	TOTAL SHEETS
				6	ARK.			
				JOB NO.		CA0902	152	581

(2) SIGN LAYOUT SHEET

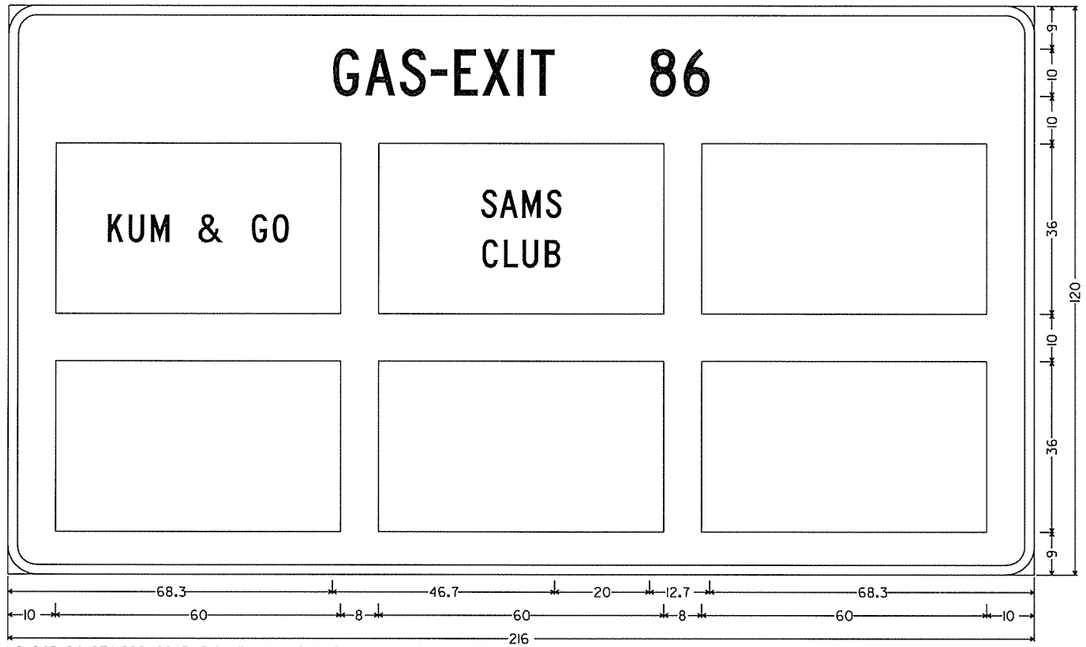

LG-049-04-STA1296+69NB; 6.0" Radius, 2.0" Border, White on Blue;
[GAS-EXIT 86] C 2K;

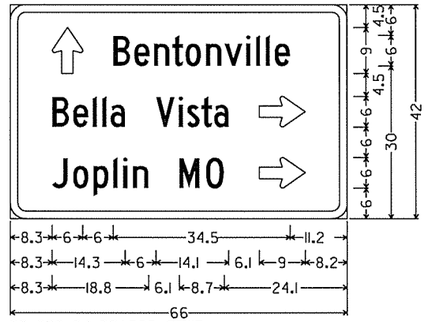

SS-072-04-STA202+28WB;
2.25" Radius, 0.75" Border, White on Green;
Standard Arrow Custom 0.0" X 6.0" 90;
[Bentonville] C 2K; [Bella Vista] C 2K;
Standard Arrow Custom 0.0" X 6.0" 0;
[Joplin MO] C 2K;
Standard Arrow Custom 0.0" X 6.0" 0;

STATE OF ARKANSAS
REGISTERED PROFESSIONAL ENGINEER
No. 15875
RONNIE WILLIAMS
5-16-16

SIGN LAYOUT SHEET

5/16/2016
10:43:37 AM
\\PS\rc\CA0902_PS_HWY540_25.dgn

DATE	DATE FILMED	DATE REVISED	DATE FILMED	FED.RD. DIST.NO.	STATE	FED.AID PROJ.NO.	SHEET NO.	TOTAL SHEETS
				6	ARK.			
				JOB NO.		CA0902	153	581

(2) SIGN LAYOUT SHEET

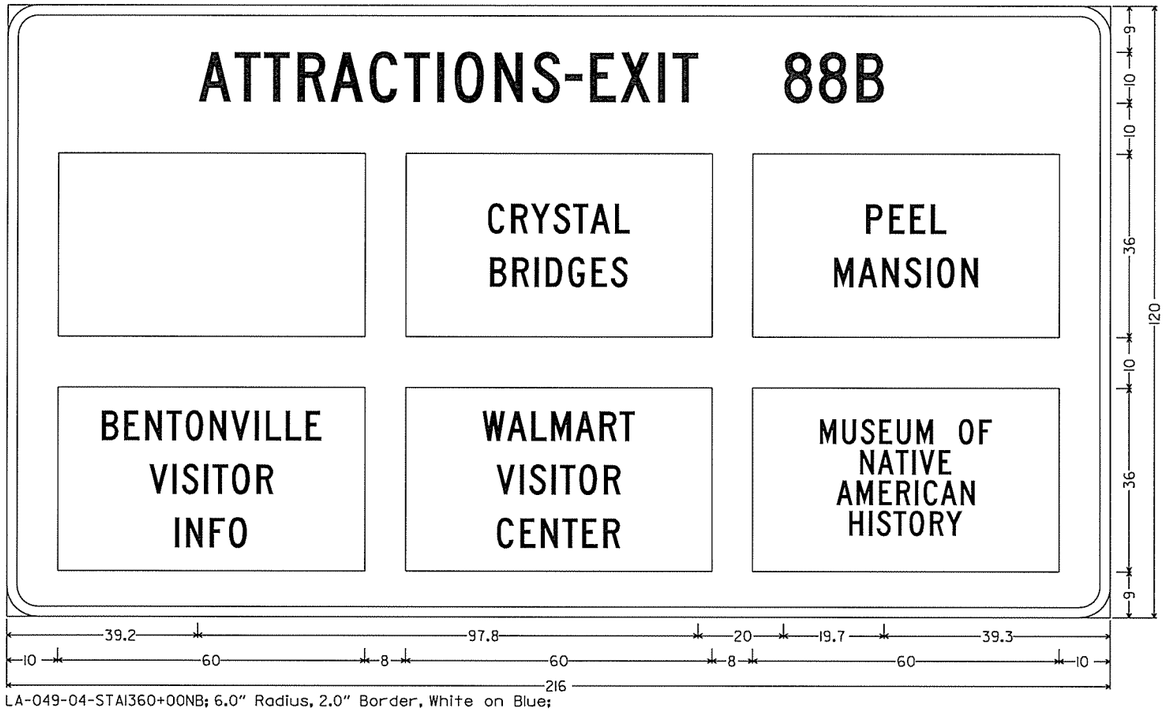

LA-049-04-STA1360+00NB; 6.0" Radius, 2.0" Border, White on Blue;
[ATTRACTIONS-EXIT 88B] C 2K;

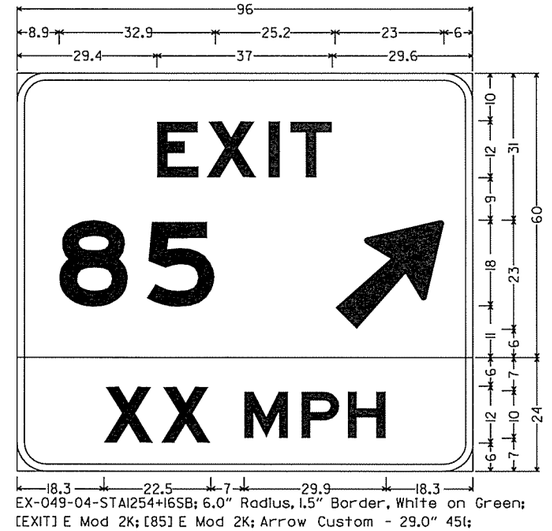

EX-049-04-STA1254+16SB; 6.0" Radius, 1.5" Border, White on Green;
[EXIT] E Mod 2K; [85] E Mod 2K; Arrow Custom - 29.0" 45(;
6.0" Radius, 1.5" Border, Black on Yellow;
[XX] E 2K; [MPH] E 2K;

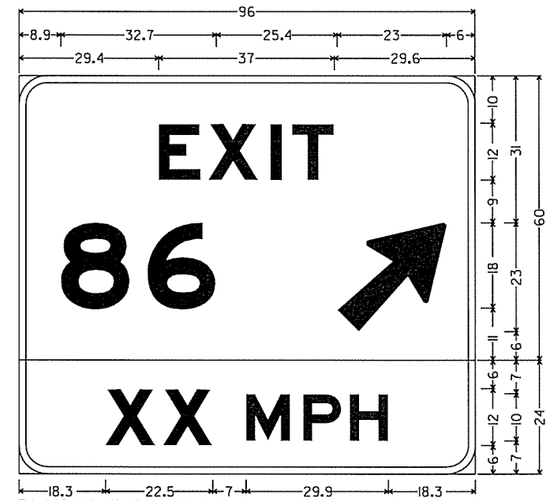

EX-049-04-STA1316+14NB; 6.0" Radius, 1.5" Border, White on Green;
[EXIT] E Mod 2K; [86] E Mod 2K; Arrow Custom - 29.0" 45(;
6.0" Radius, 1.5" Border, Black on Yellow;
[XX] E 2K; [MPH] E 2K;

STATE OF ARKANSAS
REGISTERED PROFESSIONAL ENGINEER
No. 15875
RONNIE WILLIAMS
5-16-16

SIGN LAYOUT SHEET

5/16/2016
10:01:37 AM
\\PS\rCA0902_PS_HWY540_25.dgn

DATE	DATE FILMED	DATE REVISED	DATE FILMED	FED.RD. DIST.NO.	STATE	FED.AID PROJ.NO.	SHEET NO.	TOTAL SHEETS
				6	ARK.			
				JOB NO.		CA0902	154	581
				(2)	SIGN LAYOUT SHEET			

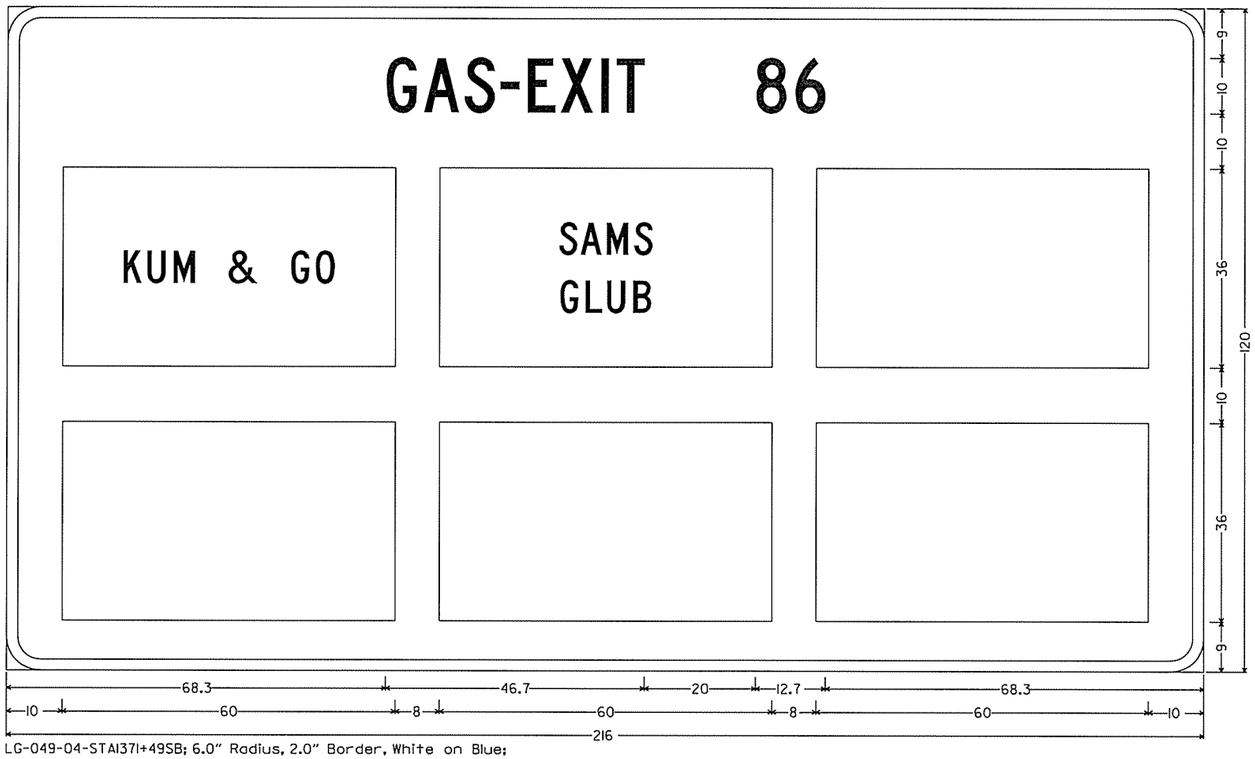

LG-049-04-STA137+49SB; 6.0" Radius, 2.0" Border, White on Blue;
[GAS-EXIT 86] C 2K;

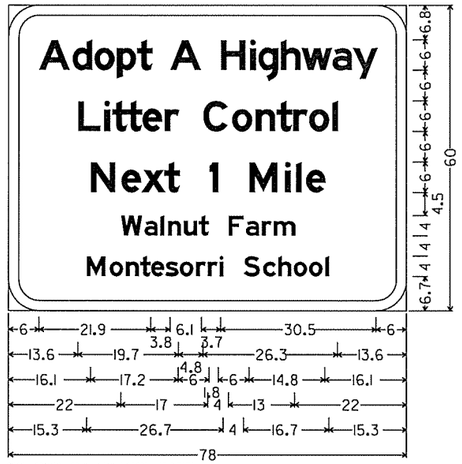

SS-072-04-STA201+73EB;
6.0" Radius, 2.0" Border, White on Blue;
[Adopt A Highway] E 2K specified length;
[Litter Control] E 2K specified length; [Next 1 Mile] E 2K;
[Walnut Farm] E 2K; [Montesorri School] E 2K;

STATE OF ARKANSAS
REGISTERED PROFESSIONAL ENGINEER
No. 15875
RONNIE WILLIAMS
5-16-14

SIGN LAYOUT SHEET

5/16/2016
10:01:38 AM
\PS\rCA0902 PS HWY540 25.dgn

DATE	DATE FILMED	DATE REVISED	DATE FILMED	FED.RD. DIST.NO.	STATE	FED.AID PROJ.NO.	SHEET NO.	TOTAL SHEETS
				6	ARK.			
				JOB NO.		CA0902	155	581

(2) SIGN LAYOUT SHEET

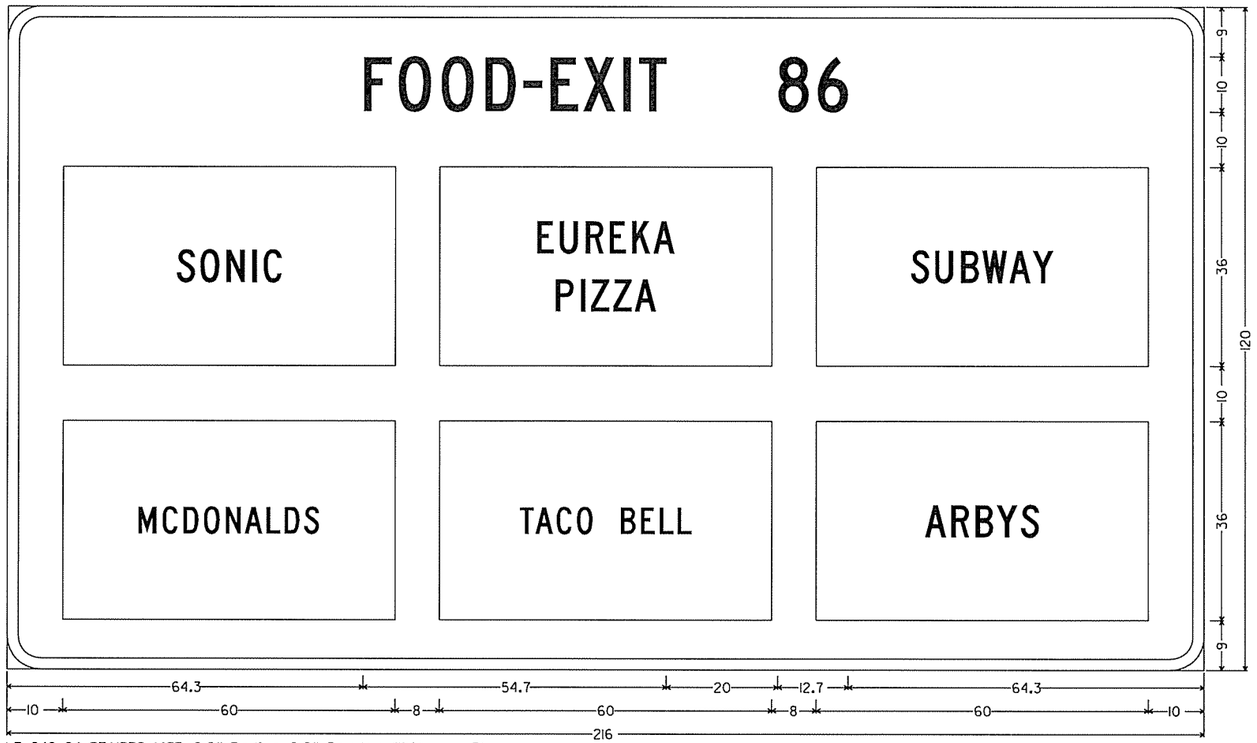

LF-049-04-STAI376+I4SB; 6.0" Radius, 2.0" Border, White on Blue;
[FOOD-EXIT 86] C 2K;

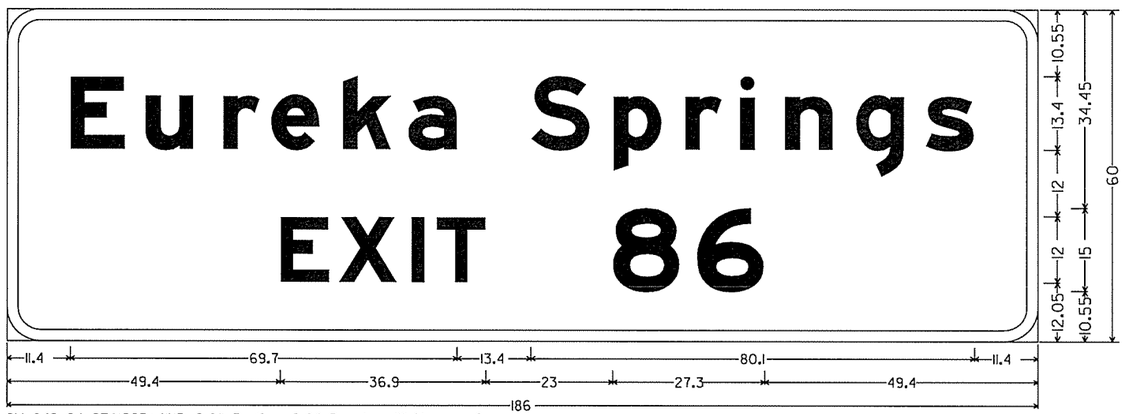

GM-049-04-STAI265+4INB; 6.0" Radius, 2.0" Border, White on Green;
[Eureka Springs] E Mod 2K; [EXIT] E Mod 2K; [86] E Mod 2K;

STATE OF ARKANSAS
REGISTERED PROFESSIONAL ENGINEER
No. 15875
RONNIE WILLIAMS
5-16-16

SIGN LAYOUT SHEET

5/16/2016
10:01:28 AM
\\PSS\r-CA0902_PS_HWY540_25.dgn

DATE	DATE FILMED	DATE REVISED	DATE FILMED	FED.RD. DIST.NO.	STATE	FED.AID PROJ.NO.	SHEET NO.	TOTAL SHEETS
				6	ARK.			
				JOB NO.		CA0902	156	581

(2) SIGN LAYOUT SHEET

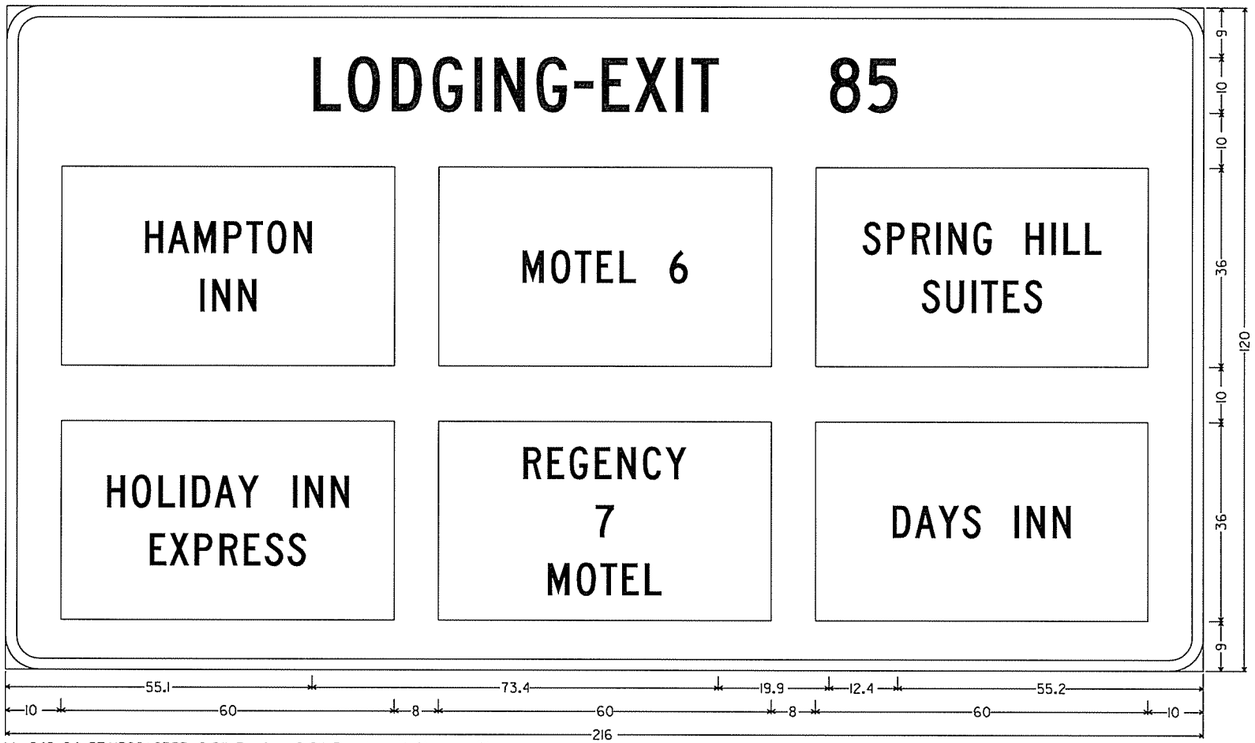

LL-049-04-STA1309+03SB; 6.0" Radius, 2.0" Border, White on Blue;
[LODGING-EXIT 85] C 2K;

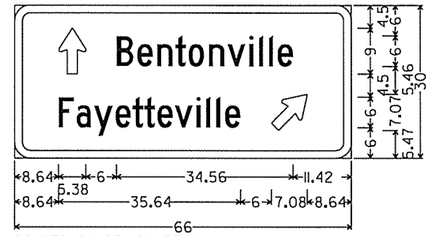

SS-072-04-STA190+77WB;
2.25" Radius, 0.75" Border, White on Green;
Standard Arrow Custom 9.00" X 5.38" 90!;
[Bentonville] C 2K; [Fayetteville] C 2K;
Standard Arrow Custom 9.00" X 5.38" 45!;

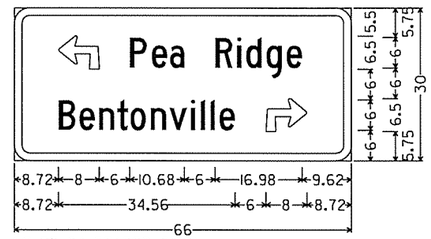

SS-R3-04-STA302+65SB;
2.25" Radius, 0.75" Border, White on Green;
90 Deg Advanced Turn Arrow 8.00" X 6.50";
[Pea Ridge] C 2K; [Bentonville] C 2K;
90 Deg Advanced Turn Arrow 8.00" X 6.50";

STATE OF ARKANSAS
REGISTERED PROFESSIONAL ENGINEER
No. 15875
RONNIE WILLIAMS
5-16-16

SIGN LAYOUT SHEET

5/16/2016
10:01:48 AM
\\PSS\rCA0902_PS_HWY540_25.dgn

DATE	DATE FILMED	DATE REVISED	DATE FILMED	FED.RD. DIST.NO.	STATE	FED.AID PROJ.NO.	SHEET NO.	TOTAL SHEETS
				6	ARK.			
				JOB NO.		CA0902	157	581

(2) SIGN LAYOUT SHEET

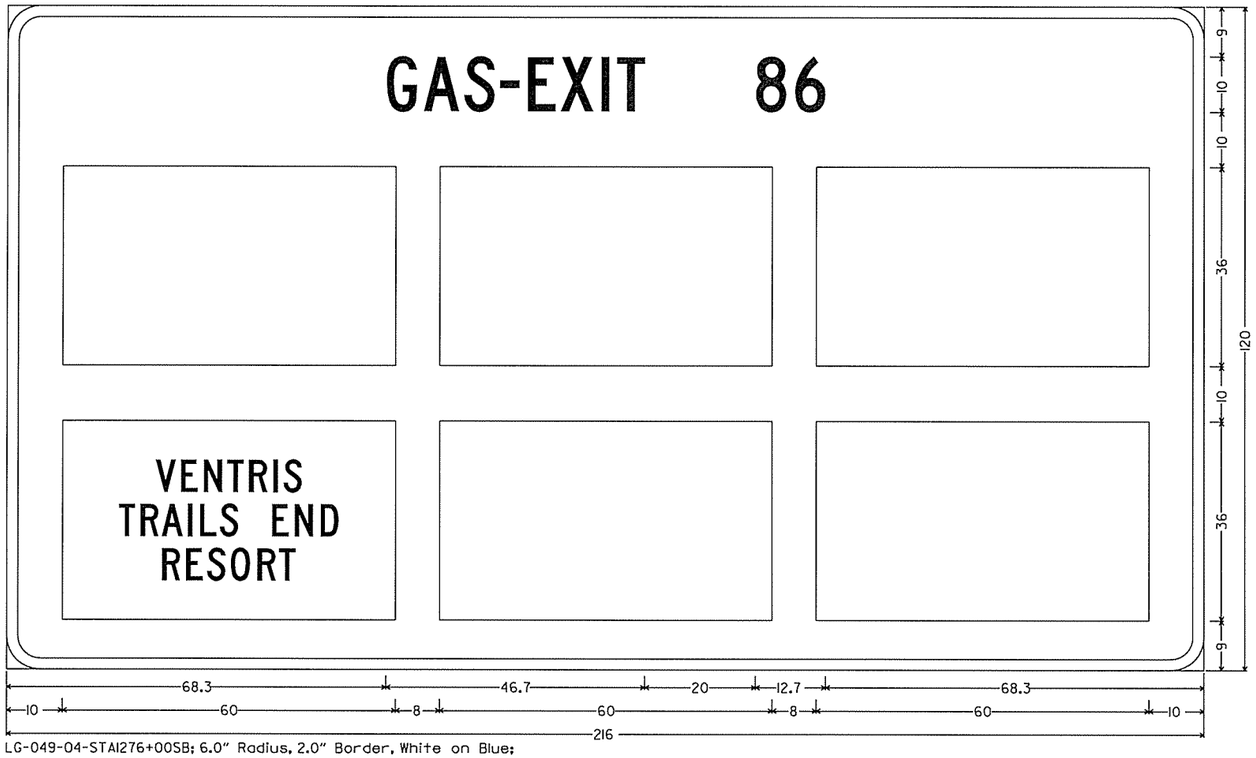

LG-049-04-STA1276+00SB; 6.0" Radius, 2.0" Border, White on Blue;
[GAS-EXIT 86] C 2K;

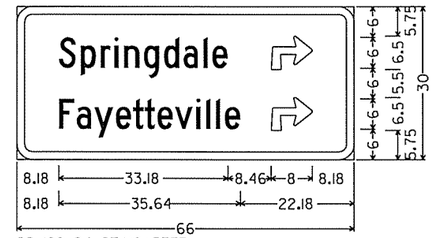

SS-102-04-STA10+57EB;
2.25" Radius, 0.75" Border, White on Green;
[Springdale] C 2K;
90 Deg Advanced Turn Arrow 8.00" X 6.50";
[Fayetteville] C 2K;
90 Deg Advanced Turn Arrow 8.00" X 6.50";

STATE OF ARKANSAS
REGISTERED PROFESSIONAL ENGINEER
No. 15875
RONNIE WILLIAMS
5-16-16

SIGN LAYOUT SHEET

5/16/2016
10:01:48 AM
\\PS\rCA0902_PS_HWY540_25.dgn

DATE	DATE FILMED	DATE REVISED	DATE FILMED	FED.RD. DIST.NO.	STATE	FED.AID PROJ.NO.	SHEET NO.	TOTAL SHEETS
				6	ARK.			
				JOB NO.		CA0902	158	581

(2) SIGN LAYOUT SHEET

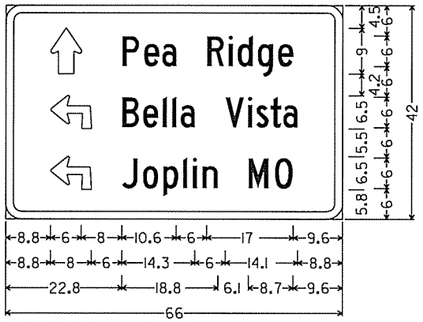

SS-072-04-STA198+52EB;
2.25" Radius, 0.75" Border, White on Green;
Standard Arrow Custom 9.0" X 6.0" 90[;
[Pea Ridge] C 2K;
90 Deg Advanced Turn Arrow 8.0" X 6.5";
[Bella Vista] C 2K;
90 Deg Advanced Turn Arrow 8.0" X 6.5";
[Joplin MO] C 2K;

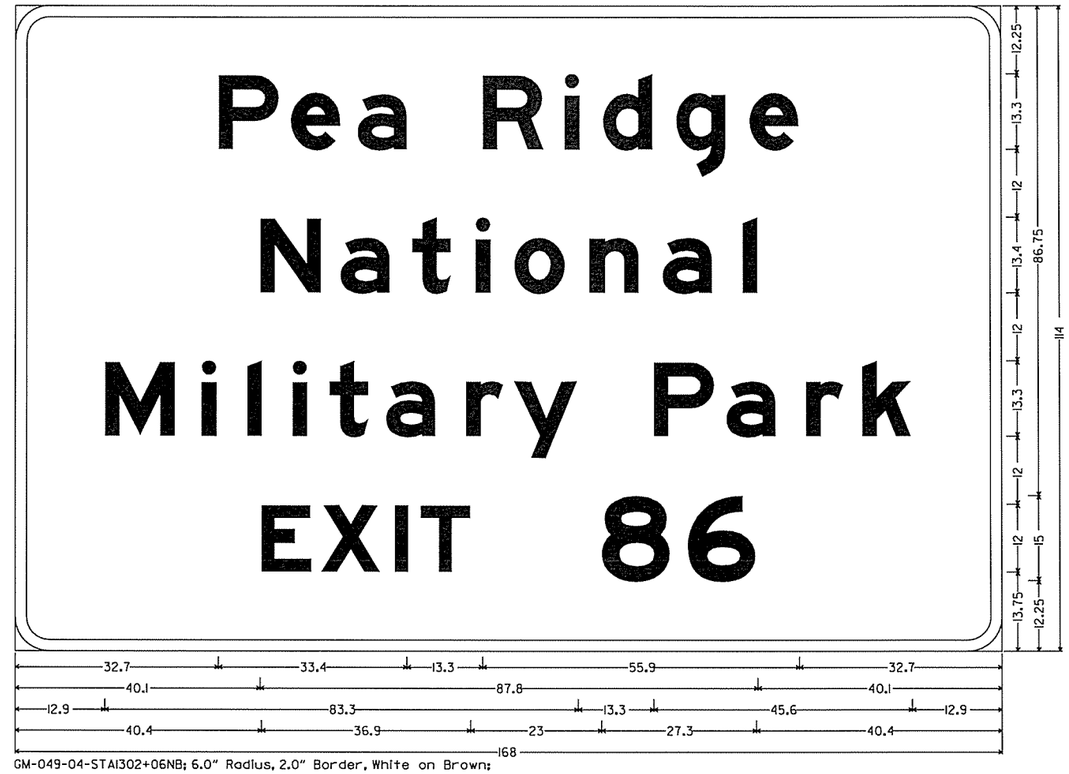

GM-049-04-STA1302+06NB; 6.0" Radius, 2.0" Border, White on Brown;
[Pea Ridge] E Mod 2K; [National] E Mod 2K; [Military Park] E Mod 2K; [EXIT] E Mod 2K; [86] E Mod 2K;

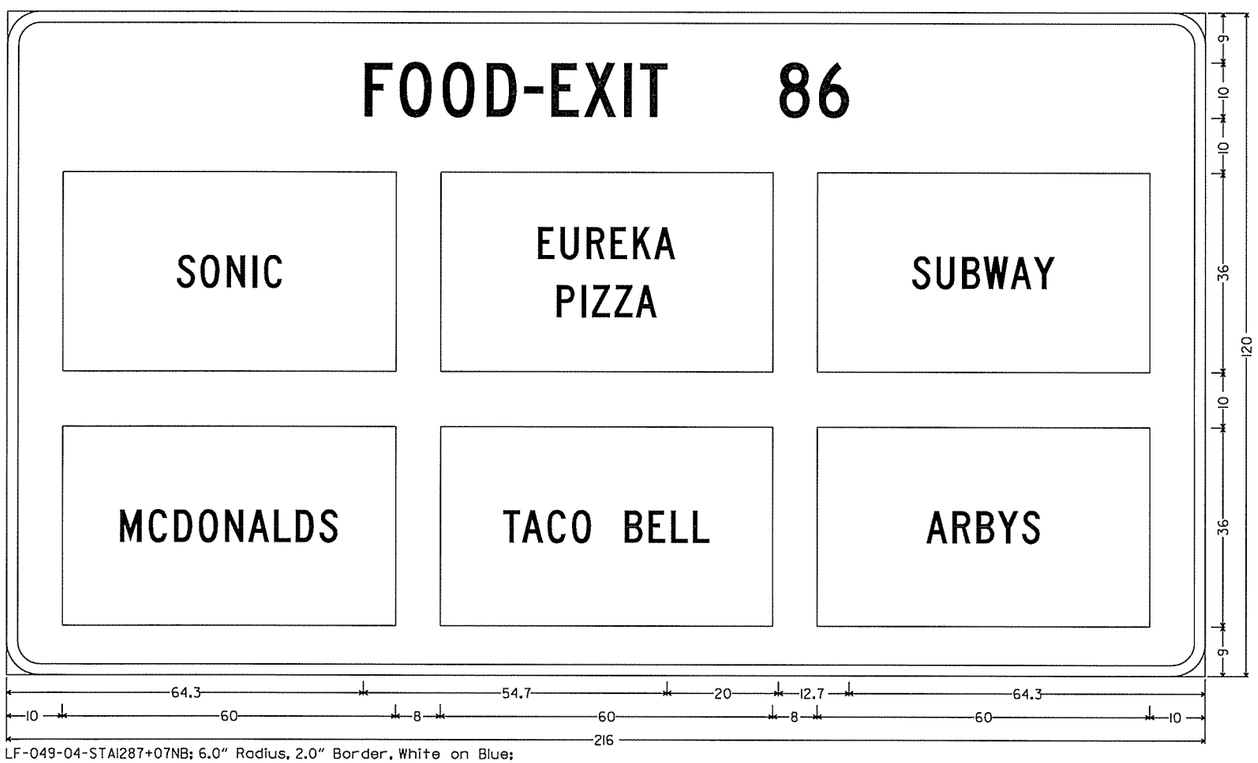

LF-049-04-STA1287+07NB; 6.0" Radius, 2.0" Border, White on Blue;
[FOOD-EXIT 86] C 2K;

STATE OF ARKANSAS
REGISTERED PROFESSIONAL ENGINEER
No. 15875
RONNIE WILLIAMS

5-16-16

SIGN LAYOUT SHEET

5/16/2016
10:01:38 AM
\\PS\rCA0902_PS_HWY540_25.dgn

DATE	DATE FILMED	DATE REVISED	DATE FILMED	FED.RD. DIST.NO.	STATE	FED.AID PROJ.NO.	SHEET NO.	TOTAL SHEETS
				6	ARK.			
				JOB NO.		CA0902	159	581

(2) SIGN LAYOUT SHEET

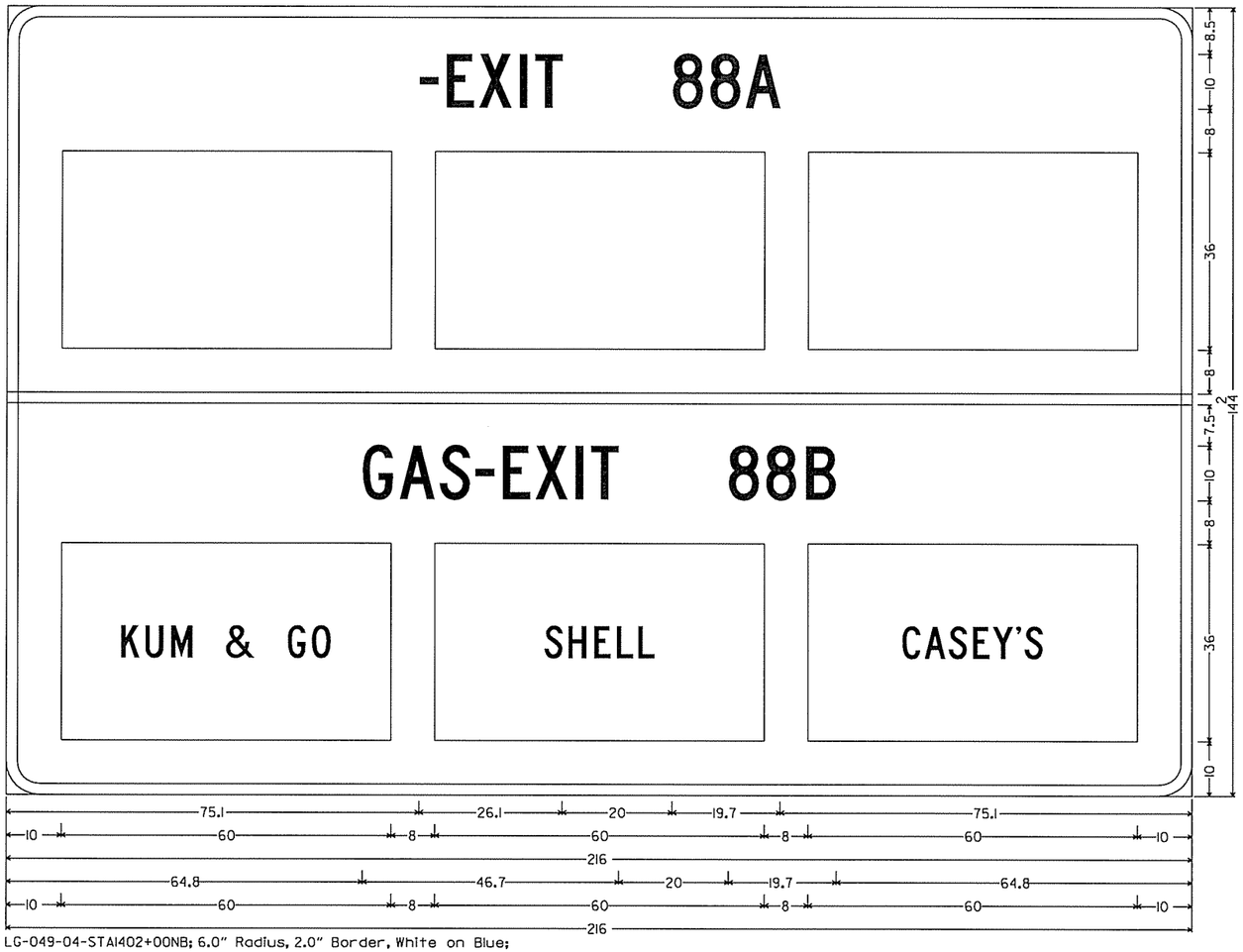

LG-049-04-STA1402+00NB; 6.0" Radius, 2.0" Border, White on Blue;
[-EXIT 88A] C 2K; [GAS-EXIT 88B] C 2K;

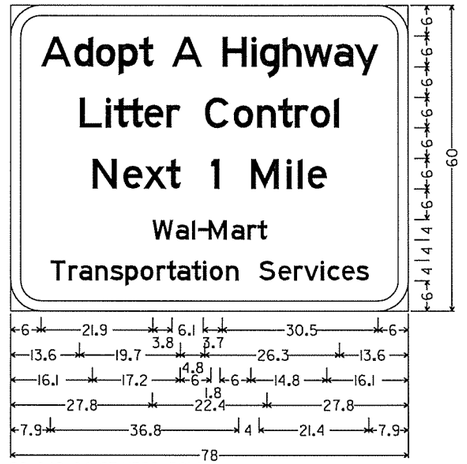

SS-049-04-STA1322+50NB;
6.0" Radius, 2.0" Border, White on Blue;
[Adopt A Highway] E 2K specified length;
[Litter Control] E 2K specified length; [Next 1Mile] E 2K;
[Wal-Mart] E 2K; [Transportation Services] E 2K;

STATE OF ARKANSAS
REGISTERED PROFESSIONAL ENGINEER
No. 15875
RONNIE WILLIAMS

5-16-16

SIGN LAYOUT SHEET

5/16/2016
10:01:39 AM
\\PS\rCA0902_PS_HWY540_25.dgn

DATE	DATE FILMED	DATE REVISED	DATE FILMED	FED.RD. DIST.NO.	STATE	FED.AID PROJ.NO.	SHEET NO.	TOTAL SHEETS
				6	ARK.			
				JOB NO.		CA0902	160	581

(2) SIGN LAYOUT SHEET

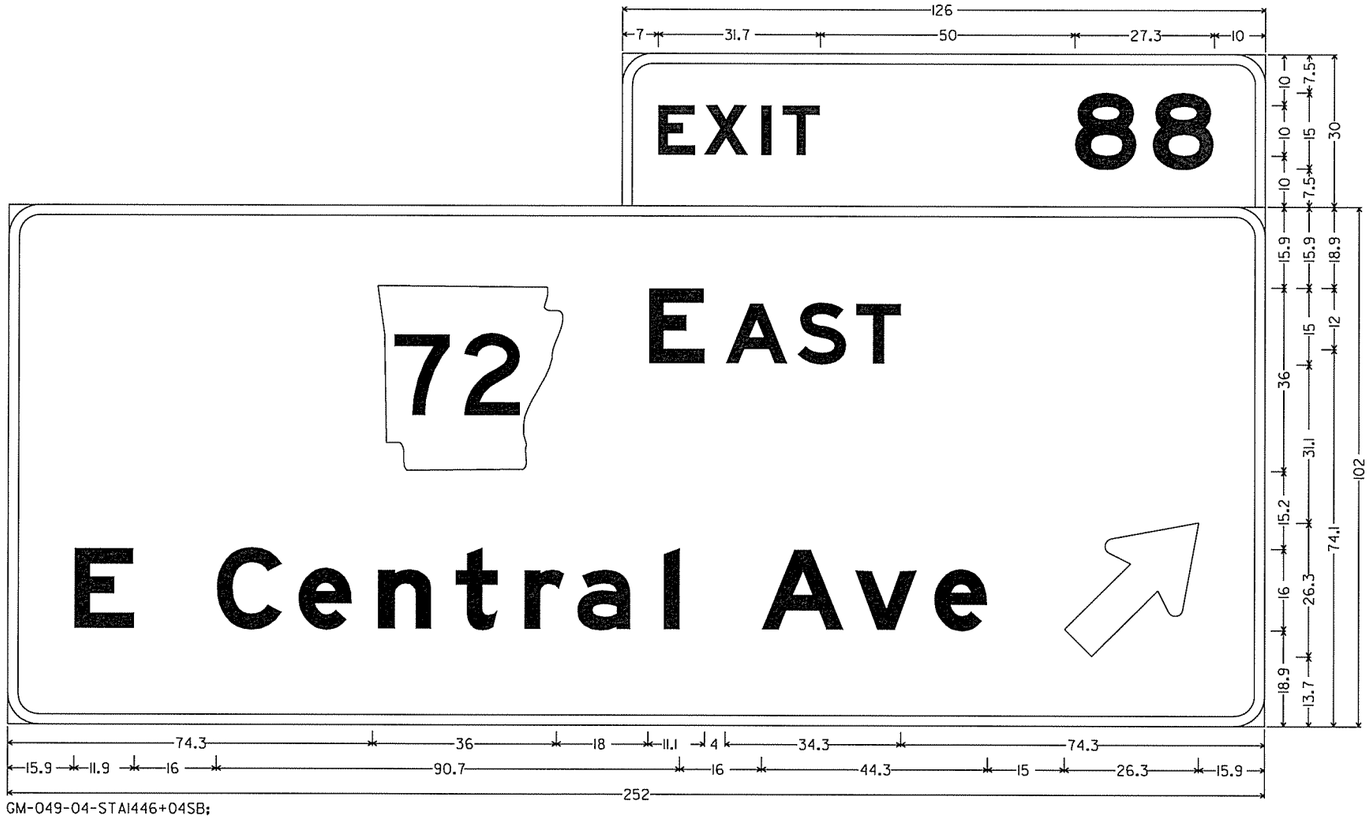

GM-049-04-STAI446+04SB;
6.0" Radius, 2.0" Border, White on Green;
[EXIT] E Mod 2K specified length; [88] E Mod 2K;
6.0" Radius, 2.0" Border, White on Green;
[E] E Mod 2K; [AST] E Mod 2K; [E Central Ave] E Mod 2K; Standard Arrow Custom 33.4" X 20.3" 45[;

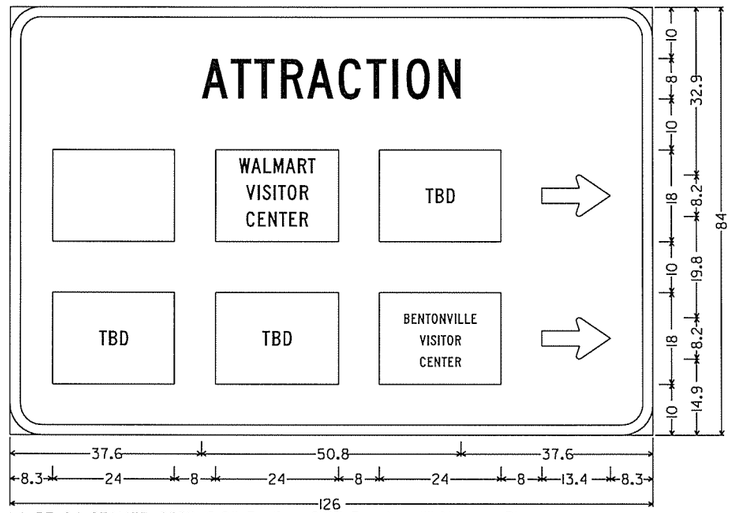

LA-R3-04-STAI437+05SB; 6.0" Radius, 2.0" Border, White on Blue;
[ATTRACTION] C 2K;
Standard Arrow Custom 13.4" X 8.1" 0[;
Standard Arrow Custom 13.4" X 8.1" 0[;

STATE OF ARKANSAS
REGISTERED PROFESSIONAL ENGINEER
No. 15875
RONNIE WILLIAMS
5-16-16

SIGN LAYOUT SHEET

5/16/2016
10:01:39 AM
\\PSV\rCA0902_PS_HWY540_25.dgn

DATE	DATE FILMED	DATE REVISED	DATE FILMED	FED.RD. DIST.NO.	STATE	FED.AID PROJ.NO.	SHEET NO.	TOTAL SHEETS
				6	ARK.			
				JOB NO.		CA0902	161	581

(2) SIGN LAYOUT SHEET

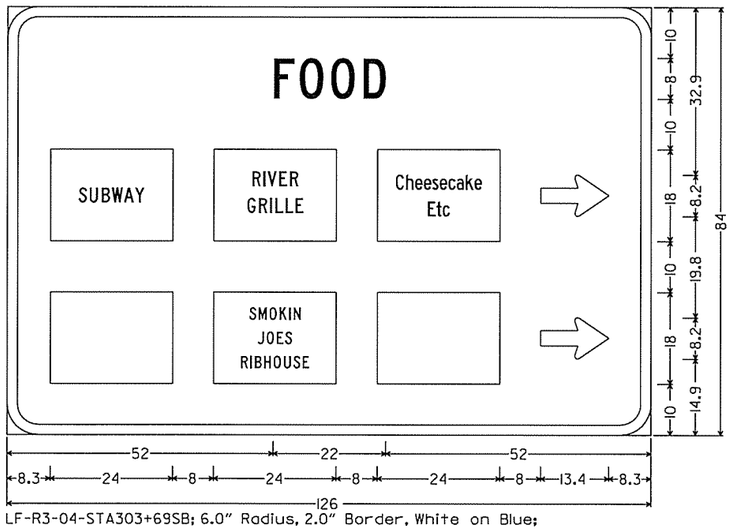

LF-R3-04-STA303+69SB; 6.0" Radius, 2.0" Border, White on Blue;
[FOOD] C 2K;
Standard Arrow Custom 13.4" X 8.1" 01;
Standard Arrow Custom 13.4" X 8.1" 01;

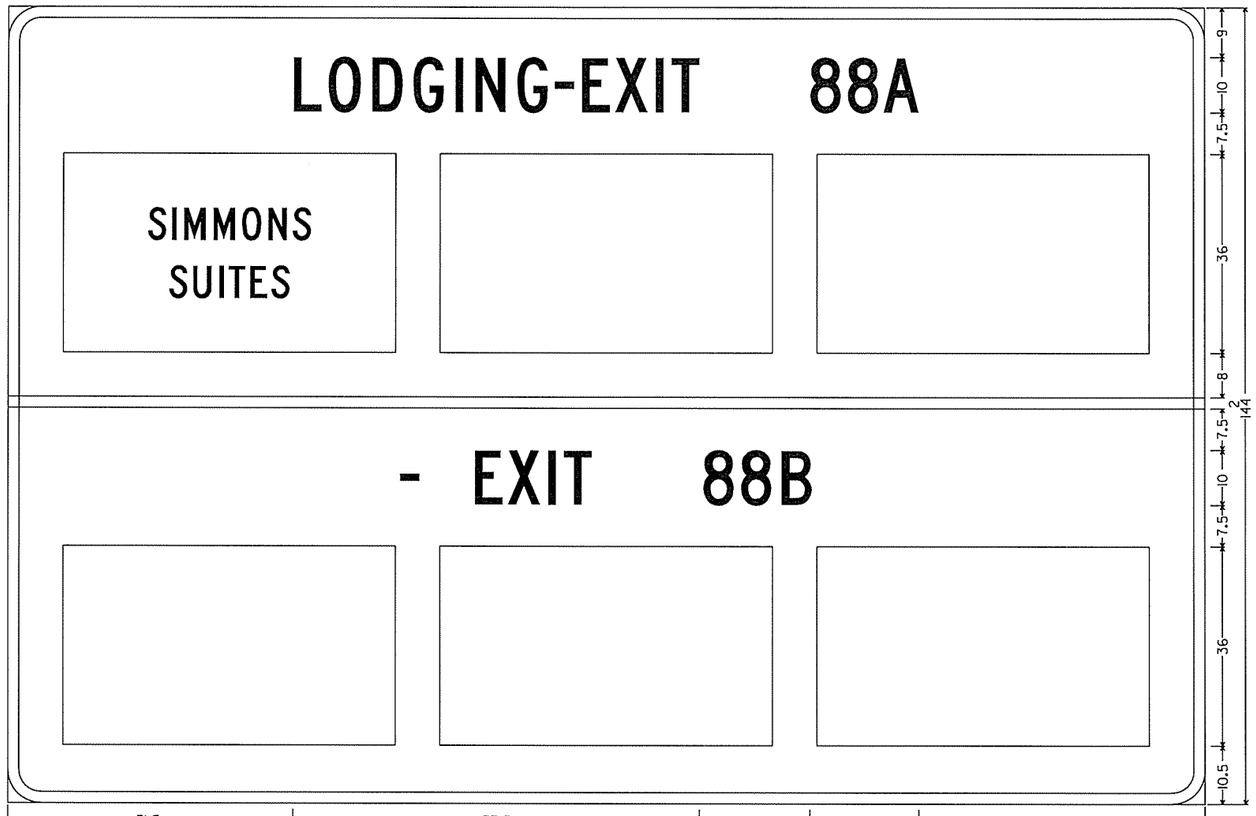

LL-049-04-STA1376+66NB; 6.0" Radius, 2.0" Border, White on Blue;
[LODGING-EXIT 88A] C 2K;
[- EXIT 88B] C 2K;

STATE OF ARKANSAS
REGISTERED PROFESSIONAL ENGINEER
No. 15875
RONNIE WILLIAMS
5-16-16

SIGN LAYOUT SHEET

5/16/2016
10:05:58 AM
D:\PS\rCA0902_PS_HWY540_25.dgn

DATE	DATE FILMED	DATE REVISED	DATE FILMED	FED.RD. DIST.NO.	STATE	FED.AID PROJ.NO.	SHEET NO.	TOTAL SHEETS
				6	ARK.			
				JOB NO.		CA0902	162	581

(2) SIGN LAYOUT SHEET

EXIT XX M.P.H.
WI3-2 (36"X48")
SS-049-04-STAI258+75SB
SS-049-04-STAI289+26NB
SS-049-04-STAI310+00NB
SS-049-04-STAI415+50NB
SS-049-04-STAI429+00NB
SS-049-04-STAI442+16SB

WRONG WAY
R5-1a (42"X30")

EAST
M3-2 (24"X12")
72
MI-5 (24"X24")
M5-IL (21"X15")
Pea Ridge
Bentonville
DI-2 (66"X30")
SS-R3-04-STA302+65SB

SPEED LIMIT 40
R2-1 (30"X36")
SS-102-04-STA8+58EB

WRONG WAY
R5-1a (42"X30")
SS-049-04-STAI428+07NB
SS-049-04-STAI428+26NB
SS-R3-04-STA302+69SB

RIGHT LANE MUST TURN RIGHT
R3-7R (36"X36")
SS-072-04-STA209+43EB
SS-072-04-STA212+07EB

EAST
M3-2 (24"X12")
72
MI-5 (24"X24")
SS-072-04-STA202+66EB

WI-8R (36"X48")
SS-R6-04-STAI93+81SB (8) TO
STA 199+08 80' EQ. SP.
SS-R5-04-STAI433+86WB (9) TO
STA 1439+86 80' EQ. SP.

RAMP XX M.P.H.
WI3-7 (36"X60")
SS-072-04-STAI91+88WB
SS-049-04-STAI432+25NB

NORTH
M3-1 (36"X18")
INTERSTATE 49
MI-1 (36"X36")
SS-049-04-STAI260+81NB
SS-049-04-STAI348+22NB

JCT
M2-1 (21"X15")
INTERSTATE 49
MI-1 (24"X24")
SS-072-04-STA205+44WB

NORTH M3-1 (24"X12") | SOUTH M3-3 (24"X12") | WEST M3-4 (24"X12")
INTERSTATE 49 | INTERSTATE 49 | 62
MI-1 (24"X24") | MI-1 (24"X24") | MI-4 (24"X24")
M6-3 (21"X15") | M6-1R (21"X15") | M6-1R (21"X15")
SS-102-04-STAI5+94EB

STOP
RI-1 (36"X36")
SS-072-04-STA204+59EB
SS-072-04-STA205+63EB
SS-072-04-STA203+06WB
SS-102-04-STAI4+12EB

BRIDGE ICES BEFORE ROAD
W8-13 (48"X48")
SS-049-04-STAI317+00NB

W8-13 (36"X36")
SS-072-04-STAI84+73EB
SS-072-04-STA209+60WB

ONE WAY
R6-1R (54"X18")
ONE WAY
R6-1L (54"X18")

FULL
RI-2 (48"X48"X48")
DO NOT ENTER
R5-1 (36"X36")
SS-072-04-STAI88+06WB

SPEED LIMIT 70
R2-1 (48"X60")
SS-049-04-STAI295+05SB
SS-049-04-STAI353+56NB
SS-049-04-STAI395+76SB

W3-3 (48"X48")
SS-049-04-STAI423+97NB
SS-049-04-STAI424+23NB
SS-R3-04-STAI436+04SB
SS-R3-04-STAI436+31SB

WI-2R (36"X36")
40 M.P.H.
WI3-1P (30"X30")
SS-072-04-STAI96+18EB

SOUTH M3-1 (24"X12") | NORTH M3-3 (24"X12")
INTERSTATE 49 | INTERSTATE 49
MI-1 (24"X24") | MI-1 (24"X24")
M6-3 (21"X15") | M5-1R (21"X15")
Bentonville
Bella Vista
Joplin MO
DI-3 (66"X42")
SS-072-04-STA202+75WB

OM-3R
SS-049-04-STAI323+48NB
SS-049-04-STAI325+10SB
SS-072-04-STAI93+04EB
SS-072-04-STAI95+68WB

OM-3L
SS-072-04-STAI93+04EB
SS-072-04-STAI95+68WB

NORTH
M3-1 (24"X12")
INTERSTATE 49
MI-1 (24"X24")
M5-IL (21"X15")
SS-072-04-STAI90+62EB

SOUTH
M3-3 (36"X18")
INTERSTATE 49
MI-1 (36"X36")
SS-049-04-STAI306+22SB
SS-049-04-STAI406+11SB

W4-1R (48"X48")
SS-049-04-STAI318+96SB
SS-049-04-STAI332+77NB
SS-049-04-STAI436+09NB

EXIT XX M.P.H.
WI3-6 (36"X60")
SS-049-04-STAI427+52NB

R4-7 (24"X30")
SS-102-04-STAI6+56EB
SS-102-04-STA7+52EB

NORTH M3-1 (24"X12") | SOUTH M3-3 (24"X12")
INTERSTATE 49 | INTERSTATE 49
MI-1 (24"X24") | MI-1 (24"X24")
M6-3 (21"X15") | M5-1R (21"X15")
SS-072-04-STAI84+00EB

ONE WAY
R6-1R (54"X18")
ONE WAY
R6-1L (54"X18")
DO NOT ENTER
R5-1 (36"X36")
SS-072-04-STAI88+86WB
SS-072-04-STA200+58EB
SS-072-04-STA200+36EB

NORTH M3-1 (24"X12") | SOUTH M3-3 (24"X12")
INTERSTATE 49 | INTERSTATE 49
MI-1 (24"X24") | MI-1 (24"X24")
M6-3 (21"X15") | M6-1R (21"X15")
SS-072-04-STAI87+45EB

SOUTH
M3-3 (24"X12")
INTERSTATE 49
MI-1 (24"X24")
M6-2 (21"X15")
Bentonville
Fayetteville
DI-2 (66"X30")
SS-072-04-STAI90+77WB

WI-2L (36"X36")
SS-072-04-STA210+75EB

SPEED LIMIT 45
R2-1 (30"X36")
SS-072-04-STA206+67EB
SS-072-04-STA206+60WB

DO NOT ENTER
R5-1 (36"X36")
SS-102-04-STAI4+70EB
SS-102-04-STAI2+09EB

RIVER GRILLE RELOCATE
M6-1R (21"X15")

SAMONS SUITES RELOCATE
M6-1L (21"X15")
SS-072-04-STA203+54EB

JCT
M2-1 (21"X15")
INTERSTATE 49
MI-1 (24"X24")
Springdale
Fayetteville
DI-2 (66"X30")
SS-102-04-STAI0+57EB

I-5 (30"X30")
OH-049-04-STAI258+75SB

NORTH
M3-1 (24"X12")
INTERSTATE 49
MI-1 (24"X24")
M6-IL (21"X15")
SS-72-04-STAI99+84EB

M6-IL (21"X15")
49
MI-1 (24"X24")
NORTH
M3-3 (24"X12")

SOUTH M3-1 (24"X12") | NORTH M3-3 (24"X12")
INTERSTATE 49 | INTERSTATE 49
MI-1 (24"X24") | MI-1 (24"X24")
M6-3 (21"X15") | M6-1R (21"X15")
SS-072-04-STA200+80WB

W4-3R (48"X48")
SS-049-04-STAI434+50SB

LANE ENDS MERGE RIGHT
W9-2L (48"X48")
SS-049-04-STAI282+90SB

W4-2L (48"X48")
SS-049-04-STAI277+90SB

STATE OF ARKANSAS
REGISTERED PROFESSIONAL ENGINEER
No. 15875
RONNIE WILLIAMS
5-16-16

SIGN LAYOUT SHEET

5/16/2016
10:01:40 AM
\PS\rCA0902_PS_HWY540_25.dgn

DATE	DATE FILMED	DATE REVISED	DATE FILMED	FED.RD. DIST.NO.	STATE	FED.AID PROJ.NO.	SHEET NO.	TOTAL SHEETS
				6	ARK.			
				JOB NO.		CA0902	163	581

(2) SIGNING QUANTITIES

STANDARD ROADSIDE SIGNS
SHEET ALUMINUM 0.100" THICKNESS
(5 SQ. FT. OR LESS)

SIGN NO.	SIZE OF SIGN IN.	UNIT AREA SQ. FT.	QUANTITY REQUIRED EA.	TOTAL SIGN AREA SQ. FT.	LEGEND/BACKGROUND
I-49					
M3-1	36 X 18	4.50	2	9	WHITE/BLUE
OM-3R	12 X 36	3.00	2	6	BLACK/YELLOW
M3-3	36 X 18	4.50	2	9	WHITE/BLUE
HWY. 102					
M1-1	24 X 24	4.00	3	12	WHITE/BLUE
M1-4	24 X 24	4.00	1	4	BLACK/WHITE
M2-1	21 X 15	2.19	1	2	WHITE/BLUE
M3-1	24 X 12	2.00	2	4	WHITE/BLUE
M3-3	24 X 12	2.00	1	2	WHITE/BLUE
M3-4	24 X 12	2.00	1	2	BLACK/WHITE
M6-1R	21 X 15	2.19	1	2	BLACK/WHITE
M6-1R	21 X 15	2.19	1	2	WHITE/BLUE
M6-3	21 X 15	2.19	1	2	WHITE/BLUE
R4-7	24 X 30	5.00	2	10	BLACK/WHITE
HWY. 72					
M1-1	24 X 24	4.00	14	56	WHITE/BLUE
M1-5	24 X 24	4.00	2	8	BLACK/WHITE
M2-1	21 X 15	2.19	1	2	WHITE/BLUE
M3-1	24 X 12	2.00	5	10	WHITE/BLUE
M3-2	24 X 12	2.00	2	4	BLACK/WHITE
M3-3	24 X 12	2.00	8	16	WHITE/BLUE
M5-1R	21 X 15	2.19	2	4	WHITE/BLUE
M5-1L	21 X 15	2.19	2	4	WHITE/BLUE
M5-1L	21 X 15	2.19	1	2	BLACK/WHITE
M6-1R	21 X 15	2.19	3	7	WHITE/BLUE
M6-1L	21 X 15	2.19	3	7	WHITE/BLUE
M6-2	21 X 15	2.19	1	2	WHITE/BLUE
M6-3	21 X 15	2.19	4	9	WHITE/BLUE
OM-3R	12 X 36	3.00	2	6	BLACK/YELLOW
OM-3L	12 X 36	3.00	2	6	BLACK/YELLOW
Subtotals ACNHPP-49-1(18)85 - 149 WIDENING:			6	24	
Subtotals ACNHPP-49-1(18)85 - HWY. 102:			14	42	
Subtotals BIM-B49-0(216) - HWY. 72:			52	143	
			TOTAL:	209	

NOTE: THESE QUANTITIES INCLUDE ALL STANDARD SIGNS FOR ALL MOUNTING STRUCTURE TYPES

STANDARD ROADSIDE SIGNS
SHEET ALUMINUM 0.125" THICKNESS
(GREATER THAN 5 SQ. FT.)

SIGN NO.	SIZE OF SIGN IN.	UNIT AREA SQ. FT.	QUANTITY REQUIRED EA.	TOTAL SIGN AREA SQ. FT.	LEGEND/BACKGROUND
I-49					
I-5	30 X 30	6.25	1	6	WHITE/GREEN
M1-1	36 X 36	9.00	4	36	WHITE/BLUE
R2-1	48 X 60	20.00	3	60	BLACK/WHITE
R5-1A	42 X 30	8.75	2	18	WHITE/RED
W3-3	48 X 48	16.00	2	32	BLACK/YELLOW
W4-1R	48 X 48	16.00	3	48	BLACK/YELLOW
W4-2L	48 X 48	16.00	1	16	BLACK/YELLOW
W4-3R	48 X 48	16.00	1	16	BLACK/YELLOW
W8-13	48 X 48	16.00	1	16	BLACK/YELLOW
W9-2L	48 X 48	16.00	1	16	BLACK/YELLOW
W13-2	36 X 48	12.00	6	72	BLACK/YELLOW
W13-6	36 X 60	15.00	1	15	BLACK/YELLOW
W13-7	36 X 60	15.00	1	15	BLACK/YELLOW
ADOPT A HIGHWAY	78 X 60	32.50	5	163	WHITE/BLUE
HWY. 102					
D1-2	66 X 30	13.75	1	14	WHITE/GREEN
R1-1	36 X 36	9.00	1	9	WHITE/RED
R2-1	30 X 36	7.50	1	8	BLACK/WHITE
R5-1	36 X 36	9.00	2	18	RED/WHITE
HWY. 72					
D1-2	66 X 30	13.75	2	28	WHITE/GREEN
D1-3	66 X 42	19.25	2	39	WHITE/GREEN
R1-1	36 X 36	9.00	3	27	WHITE/RED
R1-2	48 x 48	6.93	1	7	WHITE/RED
R2-1	30 X 36	7.50	2	15	BLACK/WHITE
R3-7R	36 X 36	9.00	2	18	BLACK/WHITE
R5-1	36 X 36	9.00	4	36	RED/WHITE
R5-1A	42 X 30	8.75	2	18	WHITE/RED
R6-1L	54 X 18	6.75	4	27	BLACK/WHITE
R6-1R	54 X 18	6.75	4	27	BLACK/WHITE
W1-2R	36 X 36	9.00	1	9	BLACK/YELLOW
W1-2L	36 X 36	9.00	1	9	BLACK/YELLOW
W1-8R	36 X 48	12.00	17	204	BLACK/YELLOW
W3-3	48 X 48	16.00	2	32	BLACK/YELLOW
W8-13	36 X 36	9.00	2	18	BLACK/YELLOW
W13-1P	30 X 30	6.25	1	6	BLACK/YELLOW
W13-7	36 X 60	15.00	1	15	BLACK/YELLOW
ADOPT A HIGHWAY	78 X 60	32.50	1	33	WHITE/BLUE
Subtotals ACNHPP-49-1(18)85 - 149 WIDENING:			32	529	
Subtotals ACNHPP-49-1(18)85 - HWY. 102:			5	49	
Subtotals BIM-B49-0(216) - HWY. 72:			52	568	
			TOTAL:	1146	

NOTE: THESE QUANTITIES INCLUDE ALL STANDARD SIGNS FOR ALL MOUNTING STRUCTURE TYPES

SIGNING QUANTITIES
SQUARE TUBE POSTS

SIGN NO./ LOCATION	STANDARD ROADSIDE SIGNS TO BE MOUNTED	SQUARE TUBE POST ASSEMBLIES G-1 EA.	G-2 EA.	G2-1 EA.	G2-4 EA.
I-49					
SS-049-04-STA1277+90SB	W4-2L			1	
SS-049-04-STA1282+90SB	W9-2L			1	
SS-049-04-STA1326+00SB	ADOPT A HIGHWAY		1		
SS-049-04-STA1322+50NB	ADOPT A HIGHWAY		1		
SS-049-04-STA1382+00NB	ADOPT A HIGHWAY		1		
SS-049-04-STA1434+83NB	ADOPT A HIGHWAY		1		
SS-049-04-STA1381+05SB	ADOPT A HIGHWAY		1		
SS-049-04-STA1260+81NB	M3-1, M1-1	1			
SS-049-04-STA1295+05SB	R2-1		1		
SS-049-04-STA1306+22SB	M3-3, M1-1	1			
SS-049-04-STA1317+00NB	W8-13			1	
SS-049-04-STA1318+96SB	W4-1R			1	
SS-049-04-STA1332+77NB	W4-1R			1	
SS-049-04-STA1348+22NB	M3-1, M1-1	1			
SS-049-04-STA1353+56NB	R2-1		1		
SS-049-04-STA1395+76SB	R2-1		1		
SS-049-04-STA1406+11SB	M3-3, M1-1	1			
SS-049-04-STA1423+97NB	W3-3			1	
SS-049-04-STA1424+23NB	W3-3			1	
SS-049-04-STA1427+52NB	W13-6	1			
SS-049-04-STA1428+26NB	R5-1A	1			
SS-049-04-STA1434+50SB	W4-1R			1	
SS-049-04-STA1436+09NB	W4-1R			1	
SS-049-04-STA1442+16SB	W13-2	1			
SS-049-04-STA1428+07NB	R5-1A	1			
SS-049-04-STA1432+25NB	W13-7	1			
HWY. 72					
SS-R3-04-STA302+65SB	D1-2, M5-1L, M1-5, M3-2, R5-1A				1
SS-R3-04-STA1436+04SB	W3-3			1	
SS-R3-04-STA1436+31SB	W3-3			1	
SS-R3-04-STA302+69SB	R5-1A	1			
SS-R5-04-STA1433+86WB	(9)W1-8R	9			
SS-R6-04-STA1193+81SB	(8)W1-8R	8			
Subtotals ACNHPP-49-1(18)85 - 149 WIDENING:		9	8	9	0
Subtotals BIM-B49-0(216) - HWY. 72:		18	0	2	1
TOTALS:		27	8	11	1

SIGNING QUANTITIES
U-CHANNEL POSTS

SIGN NO./ LOCATION	STANDARD ROADSIDE SIGNS TO BE MOUNTED	U-CHANNEL POST ASSEMBLIES U-1 EA.	U-2 EA.	U-2 (A) EA.	U-2 (B) EA.	U-2 (1) EA.	U-2 (2) EA.	U-2 (4) EA.	U-2 (6) EA.	U-2 (7) EA.
I-49										
SS-049-04-STA1323+48NB	OM-3R	1								
SS-049-04-STA1325+10SB	OM-3R	1								
HWY. 102										
SS-102-04-STA7+52EB	R4-7	1								
SS-102-04-STA8+58EB	R2-1	1								
SS-102-04-STA10+57EB	M2-1, M1-1, D1-2								1	
SS-102-04-STA12+09EB	R5-1	1								
SS-102-04-STA14+12EB	R1-1	1								
SS-102-04-STA14+70EB	R5-1	1								
SS-102-04-STA15+94EB	M3-1, M3-3, M3-4, M6-3, (2)M6-1, (2)M1-1, M1-4						1			
SS-102-04-STA16+56EB	R4-7	1								
HWY. 72										
SS-072-04-STA202+75WB	D1-3, M3-1, M3-3, (2)M1-1, M6-3, M5-1R									1
SS-072-04-STA190+77WB	D1-2, M3-3, M1-1, M6-2								1	
SS-072-04-STA197+52EB	D1-3, M3-1, M1-1, M5-1L								1	
SS-072-04-STA184+73EB	W8-13	1								
SS-072-04-STA184+00EB	M3-1, M3-3, (2)M1-1, M6-3, M5-1R					1				
SS-072-04-STA187+45EB	M3-1, M3-3, (2)M1-1, M6-3, M6-1R					1				
SS-072-04-STA188+06WB	R5-1, R1-2, R6-1L, R6-1R				1					
SS-072-04-STA188+86WB	R5-1, R6-1L, R6-1R	1								
SS-072-04-STA190+62EB	M3-1, M1-1, M5-1L	1								
SS-072-04-STA191+88WB	W13-7	1								
SS-072-04-STA196+18EB	W1-2R, W13-1P			1						
SS-072-04-STA199+84EB	M3-1, M1-1, M6-1L	1								
SS-072-04-STA200+36EB	R5-1, R6-1L, R6-1R	1								
SS-072-04-STA200+58EB	R5-1, R6-1L, R6-1R	1								
SS-072-04-STA200+80WB	M3-1, (2)M3-3, (3)M1-1, M6-3, M6-1R, M6-1L							1		
SS-072-04-STA201+73EB	ADOPT A HIGHWAY		1							
SS-072-04-STA202+66EB	M3-2, M1-5	1								
SS-072-04-STA203+06WB	R1-1	1								
SS-072-04-STA203+54EB	M6-1L, M6-1R, (2)BUSINESS PLAQUE	1								
SS-072-04-STA204+59EB	R1-1	1								
SS-072-04-STA205+44WB	M2-1, M1-1	1								
SS-072-04-STA205+63EB	R1-1	1								
SS-072-04-STA206+60WB	R2-1	1								
SS-072-04-STA206+67EB	R2-1	1								
SS-072-04-STA209+43EB	R3-7	1								
SS-072-04-STA209+60WB	W8-13	1								
SS-072-04-STA210+75EB	W1-2L	1								
SS-072-04-STA212+07EB	R3-7	1								
SS-072-04-STA193+04EB	OM-3L	1								
SS-072-04-STA193+04EB	OM-3R	1								
SS-072-04-STA195+68WB	OM-3L	1								
SS-072-04-STA195+68WB	OM-3R	1								
Subtotals ACNHPP-49-1(18)85 - 149 WIDENING:		2	0	0	0	0	0	0	0	0
Subtotals ACNHPP-49-1(18)85 - HWY. 102:		6	0	0	0	0	1	0	1	0
Subtotals BIM-B49-0(216) - HWY. 72:		23	1	1	1	2	0	1	2	1
TOTALS:		31	1	1	1	2	1	1	3	1

STATE OF ARKANSAS
REGISTERED PROFESSIONAL ENGINEER
No. 8760
ANDREW E. FRIES
5/19/14

SIGNING QUANTITIES

5/19/2014 5:47:42 PM C:\Projects\2006\CA0902\Plans\Signing\Signing Quantities.dgn

DATE	DATE FILMED	DATE REVISED	DATE FILMED	FED.RD. DIST.NO.	STATE	FED.AID PROJ.NO.	SHEET NO.	TOTAL SHEETS
				6	ARK.			
				JOB NO.		CA0902	164	581

(2) SIGNING QUANTITIES

SIGN QUANTITIES
OVERHEAD MOUNTED

SIGN NO./ LOCATION	STRUCTURE TYPE		SIGN				EXIT NUMBER PANEL			
			STANDARD SIGN	GUIDE SIGN				TYPE		
				LENGTH	HEIGHT			A	B	C
	OH	CL	SQ. FT.	LIN. FT.		SQ. FT.	LEGEND	SQ. FT.		
OH-049-04-05	1									
OH-049-04-STAI258+75SB				24.5	8	196	83	24		
OH-049-04-STAI258+75SB			18	19	13	247	85	24		
CL-049-04-06		1								
OH-049-04-STAI271+00NB				17	17.5	298	86	24		
CL-049-04-07		1								
OH-049-04-STAI279+50SB				19	13	247	85	24		
OH-049-04-08	1									
OH-049-04-STAI289+26NB				13	10.5	137				
OH-049-04-STAI289+26NB			12	17	15	255	86	24		
CL-049-04-09		1								
OH-049-04-STAI300+00SB				19	15	285	85	24		
OH-049-04-10	1									
OH-049-04-STAI310+00NB				13	10.5	137				
OH-049-04-STAI310+00NB			12	17	15	255	86	24		
OH-049-04-11	1									
OH-049-04-STAI369+70SB				17	14.5	247	86	24		
CL-049-04-12		1								
OH-049-04-STAI381+55NB				17.5	10	175	88A-B			33
OH-049-04-13	1									
OH-049-04-STAI409+30SB				17	14.5	247	86	24		
OH-049-04-14	1									
OH-049-04-STAI415+50NB				15	13	195	88A		26	
OH-049-04-STAI415+50NB				15	8.5	128	88B		26	
OH-049-04-STAI415+50NB			12	13	10.5	137				
CL-049-04-15		1								
OH-049-04-STAI429+00NB			12	17.5	11	193	88B		26	
Subtotals ACNHPP-49-1(18)85 - 149 WIDENING:	6	5				3379		216	78	33
TOTALS:	6	5				3379		216	78	33

SIGNING QUANTITIES
ROADSIDE MOUNTED I-BEAM SIGN SUPPORTS

SIGN NO./ LOCATION	STUCTURE TYPE	GUIDE SIGN			STEEL SECT. A-572		SIGN POST LENGTH		STUB POST		FOOTINGS			SIGN POST AND STUB	LEGEND	TYPE
		LENGTH	HEIGHT				H-1	H-2	H-1	H-2	DIA.	DEPTH	EMBED.			A
	G-2	LIN. FT.		SQ. FT.	BEAM	LBS.	LIN. FT.		LIN. FT.		LIN. FT.			LBS.		SQ. FT.
EX-049-04-STAI254+16SB	1	8.00	7.00	56	W8 x 18	18	15.93	16.73	4.33	4.33	2	6	4.00	744		
GM-049-04-STAI265+41NB	1	16.00	5.00	80	W8 x 18	18	14.20	15.80	5.00	5.00	2.5	7	4.67	720		
GM-049-04-STAI268+50SB	1	15.00	7.50	113	W8 x 18	18	16.67	18.17	6.00	6.00	3	8.5	5.67	843		
LG-049-04-STAI276+00SB	1	18.00	10.00	180	W8 x 21	21	19.27	21.07	6.66	6.66	3	9.5	6.33	1127		
LA-049-04-STAI278+97NB	1	12.00	15.50	186	W10 x 22	22	24.57	25.77	6.66	6.66	3	9.5	6.33	1401		
LF-049-04-STAI287+07NB	1	18.00	10.00	180	W8 x 21	21	19.27	21.07	6.66	6.66	3	9.5	6.33	1127		
LF-049-04-STAI287+55SB	1	18.00	10.00	180	W8 x 21	21	19.27	21.07	6.66	6.66	3	9.5	6.33	1127		
GM-049-04-STAI291+31NB	1	20.00	7.50	150	W8 x 18	18	16.83	18.83	6.33	6.33	3	9	6.00	870		
LG-049-04-STAI296+69NB	1	18.00	10.00	180	W8 x 21	21	19.27	21.07	6.66	6.66	3	9.5	6.33	1127		
GM-049-04-STAI302+06NB	1	14.00	9.50	133	W8 x 18	18	18.65	20.10	6.33	6.33	3	9	6.00	925		
GM-049-04-STAI303+67SB	1	20.00	7.50	150	W8 x 18	18	16.83	18.83	6.33	6.33	3	9	6.00	870		
LL-049-04-STAI309+03SB	1	18.00	10.00	180	W8 x 21	21	19.27	21.07	6.66	6.66	3	9.5	6.33	1127		
EX-049-04-STAI316+14NB	1	8.00	7.00	56	W8 x 18	18	15.93	16.73	4.33	4.33	2	6	4.00	744		
LA-049-04-STAI322+00SB	1	18.00	10.00	180	W8 x 21	21	19.27	21.07	6.66	6.66	3	9.5	6.33	1127		
GM-049-04-STAI328+00SB	1	14.00	7.50	105	W8 x 18	18	16.63	18.03	5.66	5.66	3	8	5.33	828		
GM-049-04-STAI346+00SB	1	20.00	7.50	150	W8 x 18	18	16.83	18.83	6.33	6.33	3	9	6.00	870		
GM-049-04-STAI351+00SB	1	15.50	5.00	78	W8 x 18	18	14.18	15.73	5.00	5.00	2.5	7	4.67	718		
LA-049-04-STAI360+00NB	1	18.00	10.00	180	W8 x 21	21	19.27	21.07	6.66	6.66	3	9.5	6.33	1127		
LG-049-04-STAI371+49SB	1	18.00	10.00	180	W8 x 21	21	19.27	21.07	6.66	6.66	3	9.5	6.33	1127		
LF-049-04-STAI376+14SB	1	18.00	10.00	180	W8 x 21	21	19.27	21.07	6.66	6.66	3	9.5	6.33	1127		
LL-049-04-STAI376+66NB	1	18.00	12.00	216	W10 x 22	22	21.27	23.07	7.00	7.00	3	10	6.67	1283		
LA-049-04-STAI388+00SB	1	18.00	12.00	216	W10 x 22	22	21.27	23.07	7.00	7.00	3	10	6.67	1283		
GM-049-04-STAI391+11SB	1	14.00	9.50	133	W8 x 18	18	18.65	20.10	6.33	6.33	3	9	6.00	925		
LF-049-04-STAI391+95NB	1	18.00	12.00	216	W10 x 22	22	21.27	23.07	7.00	7.00	3	10	6.67	1283		
GM-049-04-STAI401+00SB	1	18.50	10.50	194	W8 x 21	21	19.78	21.63	7.00	7.00	3	10	6.67	1164		
LG-049-04-STAI402+00NB	1	18.00	12.00	216	W10 x 22	22	21.27	23.07	7.00	7.00	3	10	6.67	1283		
GM-049-04-STAI405+85NB	1	11.00	5.00	55	W8 x 18	18	14.03	15.13	4.33	4.33	2	6	4.00	681		
GM-049-04-STAI413+05SB	1	12.50	5.00	63	W8 x 18	18	14.08	15.33	4.33	4.33	2	6	4.00	685		
EX-049-04-STAI421+03NB	1	10.50	7.00	74	W8 x 18	18	15.97	16.87	4.66	4.66	2.5	6.5	4.33	759		
EX-049-04-STAI433+56NB	1	7.50	9.50	71	W8 x 18	18	18.37	18.97	4.33	4.33	2	6	4.00	828		
EX-049-04-STAI439+59SB	1	8.00	7.00	56	W8 x 18	18	15.93	16.73	4.33	4.33	2	6	4.00	744		
GM-049-04-STAI446+08SB	1	21.00	8.50	179	W8 x 21	21	17.85	19.90	7.00	7.00	3	10	6.67	1087	88	26
LA-R3-04-STAI437+05SB	1	10.50	7.00	74	W8 x 18	18	16.02	17.07	5.00	5.00	2.5	7	4.67	776		
LA-R3-04-STA304+56SB	1	9.00	4.50	41	W6 x 15	15	13.47	14.37	3.66	3.66	1.5	5	3.33	527		
LL-R3-04-STA305+56SB	1	9.00	4.50	41	W6 x 15	15	13.47	14.37	3.66	3.66	1.5	5	3.33	527		
LF-R3-04-STA303+69SB	1	10.50	7.00	74	W8 x 18	18	16.02	17.07	5.00	5.00	2.5	7	4.67	776		
Subtotals ACNHPP-49-1(18)85 - 149 WIDENING:	32			4566										31681		26
Subtotals BIM-B49-0(216) - HWY. 72:	4			230										2606		
TOTALS:	36			4796										34287		26

SIGNING SUMMARY OF QUANTITIES

ITEM NUMBER	ITEM	ACNHPP-49-1(18)85 - 149 WIDENING	ACNHPP-49-1(18)85 - HWY. 102	BIM-B49-0(216) - HWY. 72	TOTAL	UNIT
SP	OMNI-DIRECTIONAL BREAKAWAY SIGN SUPPORTS (TYPE G-1)	9		18	27	EACH
SP	OMNI-DIRECTIONAL BREAKAWAY SIGN SUPPORTS (TYPE G-2)	8		0	8	EACH
SP	OMNI-DIRECTIONAL BREAKAWAY SIGN SUPPORTS (TYPE G2-1)	9		2	11	EACH
SP	OMNI-DIRECTIONAL BREAKAWAY SIGN SUPPORTS (TYPE G2-4)	0		1	1	EACH
SP	STEEL OVERHEAD SIGN STRUCTURE (OH-049-04-05)	1			1	EACH
SP	STEEL OVERHEAD SIGN STRUCTURE (OH-049-04-08)	1			1	EACH
SP	STEEL OVERHEAD SIGN STRUCTURE (OH-049-04-10)	1			1	EACH
SP	STEEL OVERHEAD SIGN STRUCTURE (OH-049-04-11)	1			1	EACH
SP	STEEL OVERHEAD SIGN STRUCTURE (OH-049-04-13)	1			1	EACH
SP	STEEL OVERHEAD SIGN STRUCTURE (OH-049-04-14)	1			1	EACH
SP	STEEL CANTILEVER SIGN STRUCTURE (CL-049-04-06)	1			1	EACH
SP	STEEL CANTILEVER SIGN STRUCTURE (CL-049-04-07)	1			1	EACH
SP	STEEL CANTILEVER SIGN STRUCTURE (CL-049-04-09)	1			1	EACH
SP	STEEL CANTILEVER SIGN STRUCTURE (CL-049-04-12)	1			1	EACH
SP	STEEL CANTILEVER SIGN STRUCTURE (CL-049-04-15)	1			1	EACH
SP & 725	GUIDE SIGN-ROADSIDE MOUNTED (DEMOUNTABLE LEGEND)	4566		230	4796	SQ. FT.
SP & 725	GUIDE SIGN-OVERHEAD MOUNTED (DEMOUNTABLE LEGEND)	3379			3379	SQ. FT.
SP & 726	STANDARD SIGN	553	91	711	1355	SQ. FT.
SP & 727	EXIT NUMBER PANEL (TYPE A)	242			242	SQ. FT.
SP & 727	EXIT NUMBER PANEL (TYPE B)	78			78	SQ. FT.
SP & 728	EXIT NUMBER PANEL (TYPE C)	33			33	SQ. FT.
SP & 729	CHANNEL POST SIGN SUPPORT (TYPE U-1)	2	6	23	31	EACH
SP & 729	CHANNEL POST SIGN SUPPORT (TYPE U-2)			1	1	EACH
SP & 729	CHANNEL POST SIGN SUPPORT (TYPE U-2(A))			1	1	EACH
SP & 729	CHANNEL POST SIGN SUPPORT (TYPE U-2(B))			1	1	EACH
SP & 729	CHANNEL POST SIGN SUPPORT (TYPE U-2(11))	0	0	2	2	EACH
SP & 729	CHANNEL POST SIGN SUPPORT (TYPE U-2(2))	0	1	0	1	EACH
SP & 729	CHANNEL POST SIGN SUPPORT (TYPE U-2(4))			1	1	EACH
SP & 729	CHANNEL POST SIGN SUPPORT (TYPE U-2(6))		1	2	3	EACH
SP & 729	CHANNEL POST SIGN SUPPORT (TYPE U-2(7))			1	1	EACH
730	BREAKAWAY SIGN SUPPORT (TYPE G-2)	31681		2606	34287	POUND

STATE OF ARKANSAS
REGISTERED PROFESSIONAL ENGINEER
No. 8760
ANDREW E. FRIES
5/19/16

SIGNING QUANTITIES

5/19/2016
5:40:47 PM
\\DITY\CA0902 DTY HWY540 II.dgn

DATE	DATE FILMED	DATE REVISED	DATE FILMED	FED.RD. DIST.NO.	STATE	FED.AID PROJ.NO.	SHEET NO.	TOTAL SHEETS
				6	ARK.			
				JOB NO.		CA0902	165	581

(2) QUANTITIES

STATE OF ARKANSAS ★ ★ ★ REGISTERED PROFESSIONAL ENGINEER ★ ★ ★ No. 8760 ANDREW E. FRIES

5/19/16

ADVANCE WARNING SIGNS AND DEVICES

SIGN NUMBER	DESCRIPTION	SIGN SIZE	STAGE 1 (149 WIDENING)	STAGE 1A (149 WIDENING)	STAGE 2 (149 WIDENING)	STAGE 2A (HWY. 102)	STAGE 2B (HWY. 102)	STAGE 2C (HWY. 102)	STAGE 3 (149 WIDENING)	STAGE 3A (HWY. 72)	STAGE 3B (HWY. 72)	STAGE 3C (HWY. 72)	MAXIMUM NUMBER REQUIRED	TOTAL SIGNS REQUIRED NO.	TOTAL SIGNS REQUIRED SQ. FT.	VERTICAL PANELS (EACH)	TRAFFIC DRUMS (EACH)	PORTABLE CHANGEABLE MESSAGE SIGN (WEEK)	FURNISHING, INSTALLING & LEAVING IN PLACE PRECAST CONCRETE BARRIER (LIN. FT.)	FURNISHING & INSTALLING PRECAST CONC. BARRIER (LIN. FT.)	RELOCATING PRECAST CONCRETE BARRIER (LIN. FT.)	TEMPORARY IMPACT ATTENUATION BARRIER (EACH)	TEMP. IMPACT ATTEN. BARR. (REPAIR) (EACH)
			LIN. FT. - EACH																				
W20-1	ROAD WORK 1 MILE	48"x48"	4		4				4				4	4	64								
W20-1	ROAD WORK 1/2 MILE	48"x48"	4		4				4				4	4	64								
W20-1	ROAD WORK 1500 FT.	48"x48"	4		4	2	2	2	4	2	2	2	6	6	96								
W20-1	ROAD WORK 1000 FT.	48"x48"				2	2	2		2	2	2	2	2	32								
W20-1	ROAD WORK 500 FT.	48"x48"				2	2	2		2	2	2	2	2	32								
W20-1	ROAD WORK AHEAD	48"x48"	2	1	8	8	8	8	8	6	6	8	16	16	256								
W20-5	RIGHT LANE CLOSED 1/2 MILE	48"x48"							4				4	4	64								
W20-5	RIGHT LANE CLOSED 1500 FT	48"x48"							4				4	4	64								
W4-2	LANE ENDS	48"x48"							4				4	4	64								
G20-1	ROAD WORK NEXT xx MILES	60"x24"	4		4				4				4	4	40								
G20-2	END ROAD WORK	48"x24"	12		8	6	6	6	8	4	5	7	15	15	120								
W1-4R	REVERSE CURVE RT. (SINGLE ARROW)	48"x48"										1	1	1	16								
W1-4L	REVERSE CURVE LT. (SINGLE ARROW)	48"x48"									2		2	2	32								
W1-4bR	REVERSE CURVE RT. (DOUBLE ARROW)	48"x48"			4				4				4	4	64								
W1-4bL	REVERSE CURVE LT. (DOUBLE ARROW)	48"x48"			4				4			1	5	5	80								
W1-6	ONE DIRECTION LARGE ARROW	48"X24"				4	4	7					7	7	56								
R2-1	SPEED LIMIT xx	48"x60"	8		8				8				8	8	160								
W1-8R	CHEVRONS	18"x24"		6	6				6				6	6	18								
R2-5a	REDUCE SPEED AHEAD	48"x60"	4		4				4				4	4	80								
R3-7	RIGHT LANE MUST TURN RIGHT	30"x30"					4	4			4	2	4	4	25								
R3-7	LEFT LANE MUST TURN LEFT	30"x30"						2					2	2	13								
W4-1	ARROW (TEMPORARY RAMP MERGE)	48"x48"		1	1				1				1	1	16								
R55-1	FINES DOUBLE IN WORK ZONES WHEN WORKERS ARE PRESENT	36"x60"	4		4				4				4	4	60								
W21-5	SHOULDER WORK	48"x48"	2	2						1			2	2	32								
E5-2	EXIT OPEN	48"x36"							1				1	1	12								
W9-2	LANE ENDS MERGE RIGHT	48"x48"						1					1	1	16								
W9-2	LANE ENDS MERGE LEFT	48"x48"					1	2			1	1	2	2	32								
R11-2	ROAD CLOSED	48"x30"				4	4	7					7	7	70								
	ARROW BOARD (TYPE A)	48"x24"							1			1	2	2	16								
	ARROW BOARD (TYPE B)	60"x30"																					
	VERTICAL PANELS					29				39			39			39							
	TRAFFIC DRUMS		13	57	224	90	27	105	310	42	57	120	430				430						
	PORTABLE CHANGEABLE MESSAGE SIGN		300		300				300				300					300					
	FURNISHING, INSTALLING AND LEAVING IN PLACE PRECAST CONCRETE BARRIER				308								308						308				
	FURNISHING AND INSTALLING PRECAST CONCRETE BARRIER		2480	1740	28400	260							32880							32880			
	RELOCATING PRECAST CONCRETE BARRIER			2480	1040		260		15420	520	2320	1140	23180								23180		
	TEMPORARY IMPACT ATTENUATION BARRIER		1										1									1	
	TEMPORARY IMPACT ATTENUATION BARRIER (REPAIR)		1										1										1
	Subtotals ACNHPP-49-1(8)185 - 149 WIDENING:														1130		310	300	308	32620	18940	1	1
	Subtotals ACNHPP-49-1(8)185 - HWY. 102:														212	29	141			260	260		
	Subtotals BIM-B49-0(216) - HWY. 72:														336	39					3980		
	TOTALS:														1694	39	430	300	308	32880	23180	1	1

NOTE: THIS IS A HIGH TRAFFIC VOLUME ROAD AS DEFINED IN SECTION 604.03, STANDARD SPECIFICATIONS FOR HIGHWAY CONSTRUCTION.

CONSTRUCTION PAVEMENT MARKINGS AND PERMANENT PAVEMENT MARKINGS

DESCRIPTION	STAGE 1	STAGE 1A	STAGE 2	STAGE 2A	STAGE 2B	STAGE 2C	STAGE 3	STAGE 3A	STAGE 3B	STAGE 3C	END OF JOB
	LIN. FT. - EACH										
I-49 WIDENING											
REMOVAL OF PERMANENT PAVEMENT MARKINGS	435	1960	6835				23417				
CONSTRUCTION PAVEMENT MARKINGS	2507	6259	33281				42898	1726			
CONSTRUCTION PAVEMENT MARKINGS (ARROWS)											
REMOVAL OF CONSTRUCTION PAVEMENT MARKINGS		2293	2875				34966	1738			
REMOVABLE CONSTRUCTION PAVEMENT MARKINGS			1119				14950				
RAISED PAVEMENT MARKERS TYPE II (RED/WHITE)											1005
HIGH PERFORMANCE CONTRAST PAVEMENT MARKING WHITE (4")											250
HIGH PERFORMANCE PAVEMENT MARKING WHITE (4")											14946
HIGH PERFORMANCE PAVEMENT MARKING WHITE (SKIP LINE) (4")											8010
HIGH PERFORMANCE PAVEMENT MARKING YELLOW (4")											36244
HIGH PERFORMANCE PAVEMENT MARKING WHITE (8")											3195
HIGH PERFORMANCE PAVEMENT MARKING WHITE (DOTTED) (8")											2620
Subtotals ACNHPP-49-1(8)185 - 149 WIDENING:											
HWY. 102											
REMOVAL OF PERMANENT PAVEMENT MARKINGS				6263	546	2635					
CONSTRUCTION PAVEMENT MARKINGS				7854	6622	7941					
CONSTRUCTION PAVEMENT MARKINGS (ARROWS)				4	5	3					
REMOVAL OF CONSTRUCTION PAVEMENT MARKINGS					8340	8107					
REMOVABLE CONSTRUCTION PAVEMENT MARKINGS				1357	1045	2356					
RAISED PAVEMENT MARKERS TYPE II (RED/WHITE)											56
THERMOPLASTIC PAVEMENT MARKINGS WHITE (4")											2031
THERMOPLASTIC PAVEMENT MARKINGS WHITE (SKIP LINE) (4")											806
THERMOPLASTIC PAVEMENT MARKINGS WHITE (DOTTED LINE) (4")											143
THERMOPLASTIC PAVEMENT MARKINGS YELLOW (4")											1902
THERMOPLASTIC PAVEMENT MARKINGS WHITE (8")											58
THERMOPLASTIC PAVEMENT MARKINGS YELLOW (8")											46
THERMOPLASTIC PAVEMENT MARKINGS WHITE (12")											4044
THERMOPLASTIC PAVEMENT MARKINGS WORDS											10
THERMOPLASTIC PAVEMENT MARKINGS ARROWS											16
REFLECOTRIZED PAINT PAVEMENT MARKINGS WHITE (10")											400
HIGH PERFORMANCE PAVEMENT MARKING WHITE (4")											1766
HIGH PERFORMANCE PAVEMENT MARKING YELLOW (4")											785
HIGH PERFORMANCE PAVEMENT MARKING WHITE (DOTTED) (8")											25
Subtotals ACNHPP-49-1(8)185 - HWY. 102:											
I-49 MILL & INLAY											
RAISED PAVEMENT MARKERS TYPE II (RED/WHITE)											794
HIGH PERFORMANCE PAVEMENT MARKING WHITE (4")											20673
HIGH PERFORMANCE PAVEMENT MARKING WHITE (SKIP LINE) (4")											5340
HIGH PERFORMANCE PAVEMENT MARKING WHITE (8")											3613
HIGH PERFORMANCE PAVEMENT MARKING WHITE (DOTTED) (8")											856
Subtotals BIM-B49-0(216) - I49 MILL & INLAY:											
HWY. 72											
REMOVAL OF PERMANENT PAVEMENT MARKINGS									9125	6909	
CONSTRUCTION PAVEMENT MARKINGS									2069	6661	
CONSTRUCTION PAVEMENT MARKINGS (ARROWS)									11	9	
REMOVAL OF CONSTRUCTION PAVEMENT MARKINGS										24461	
REMOVABLE CONSTRUCTION PAVEMENT MARKINGS									11072	13389	
RAISED PAVEMENT MARKERS TYPE II (RED/WHITE)											112
RAISED PAVEMENT MARKERS TYPE II (YEL/YEL)											16
THERMOPLASTIC PAVEMENT MARKINGS WHITE (4")											2209
THERMOPLASTIC PAVEMENT MARKINGS WHITE (SKIP LINE) (4")											1040
THERMOPLASTIC PAVEMENT MARKINGS YELLOW (SKIP LINE) (4")											319
THERMOPLASTIC PAVEMENT MARKINGS WHITE (DOTTED LINE) (4")											60
THERMOPLASTIC PAVEMENT MARKINGS YELLOW (4")											6539
THERMOPLASTIC PAVEMENT MARKINGS WHITE (8")											380
THERMOPLASTIC PAVEMENT MARKINGS YELLOW (8")											458
THERMOPLASTIC PAVEMENT MARKINGS WHITE (12")											496
THERMOPLASTIC PAVEMENT MARKINGS WORDS											26
THERMOPLASTIC PAVEMENT MARKINGS ARROWS											31
REFLECOTRIZED PAINT PAVEMENT MARKINGS WHITE (10")											99
HIGH PERFORMANCE CONTRAST PAVEMENT MARKING WHITE (4")											401
HIGH PERFORMANCE CONTRAST PAVEMENT MARKING YELLOW (4")											534
HIGH PERFORMANCE CONTRAST PAVEMENT MARKING WHITE (8")											67
HIGH PERFORMANCE PAVEMENT MARKING WHITE (4")											3480
HIGH PERFORMANCE PAVEMENT MARKING YELLOW (4")											2081
HIGH PERFORMANCE PAVEMENT MARKING WHITE (8")											410
HIGH PERFORMANCE PAVEMENT MARKING WHITE (DOTTED) (8")											49
Subtotals BIM-B49-0(216) - HWY. 72:											
TOTALS:											

DESCRIPTION	REMOVAL OF PERMANENT PAVEMENT MARKINGS (LIN. FT.)	CONSTRUCTION PAVEMENT MARKINGS (LIN. FT.)	CONSTRUCTION PAVEMENT MARKINGS ARROWS (EACH)	REMOVAL OF CONSTRUCTION PAVEMENT MARKINGS (LIN. FT.)	REMOVABLE CONSTRUCTION PAVEMENT MARKINGS (LIN. FT.)	RAISED PAVEMENT MARKERS TYPE II (RED/WHITE) (EACH)	RAISED PAVEMENT MARKERS TYPE II (YEL/YEL) (EACH)	THERMOPLASTIC 4" WHITE	THERMOPLASTIC 4" WHITE (SKIP LINE)	THERMOPLASTIC 4" YELLOW (SKIP LINE)	THERMOPLASTIC 4" WHITE (DOTTED LINE)	THERMOPLASTIC 4" YELLOW	THERMOPLASTIC 8" WHITE	THERMOPLASTIC 8" YELLOW	THERMOPLASTIC 12" WHITE (LIN. FT.)	THERMOPLASTIC WORDS (EACH)	THERMOPLASTIC ARROWS (EACH)	REFLECTORIZED PAINT PAVEMENT MARKINGS 10" WHITE (LIN. FT.)	HIGH PERFORMANCE CONTRAST 4" WHITE	HIGH PERFORMANCE CONTRAST 4" YELLOW	HIGH PERFORMANCE CONTRAST 8" WHITE (LIN. FT.)	HIGH PERFORMANCE 4" WHITE	HIGH PERFORMANCE 4" WHITE (SKIP LINE)	HIGH PERFORMANCE 4" YELLOW	HIGH PERFORMANCE 8" WHITE	HIGH PERFORMANCE 8" WHITE (DOTTED) (LIN. FT.)
I-49 WIDENING																										
REMOVAL OF PERMANENT PAVEMENT MARKINGS	32647																									
CONSTRUCTION PAVEMENT MARKINGS		86671																								
CONSTRUCTION PAVEMENT MARKINGS (ARROWS)																										
REMOVAL OF CONSTRUCTION PAVEMENT MARKINGS				41872																						
REMOVABLE CONSTRUCTION PAVEMENT MARKINGS					16069																					
RAISED PAVEMENT MARKERS TYPE II (RED/WHITE)						1005																				
HIGH PERFORMANCE CONTRAST PAVEMENT MARKING WHITE (4")																			250							
HIGH PERFORMANCE PAVEMENT MARKING WHITE (4")																						14946				
HIGH PERFORMANCE PAVEMENT MARKING WHITE (SKIP LINE) (4")																							8010			
HIGH PERFORMANCE PAVEMENT MARKING YELLOW (4")																								36244		
HIGH PERFORMANCE PAVEMENT MARKING WHITE (8")																									3195	
HIGH PERFORMANCE PAVEMENT MARKING WHITE (DOTTED) (8")																										2620
Subtotals ACNHPP-49-1(8)185 - 149 WIDENING:	32647	86671		41872	16069	1005													250			14946	8010	36244	3195	2620
HWY. 102																										
REMOVAL OF PERMANENT PAVEMENT MARKINGS	9444																									
CONSTRUCTION PAVEMENT MARKINGS		22417																								
CONSTRUCTION PAVEMENT MARKINGS (ARROWS)			12																							
REMOVAL OF CONSTRUCTION PAVEMENT MARKINGS				16447																						
REMOVABLE CONSTRUCTION PAVEMENT MARKINGS					4758																					
RAISED PAVEMENT MARKERS TYPE II (RED/WHITE)						56																				
THERMOPLASTIC PAVEMENT MARKINGS WHITE (4")								2031																		
THERMOPLASTIC PAVEMENT MARKINGS WHITE (SKIP LINE) (4")									806																	
THERMOPLASTIC PAVEMENT MARKINGS WHITE (DOTTED LINE) (4")											143															
THERMOPLASTIC PAVEMENT MARKINGS YELLOW (4")												1902														
THERMOPLASTIC PAVEMENT MARKINGS WHITE (8")													58													
THERMOPLASTIC PAVEMENT MARKINGS YELLOW (8")														46												
THERMOPLASTIC PAVEMENT MARKINGS WHITE (12")															4044											
THERMOPLASTIC PAVEMENT MARKINGS WORDS																10										
THERMOPLASTIC PAVEMENT MARKINGS ARROWS																	16									
REFLECOTRIZED PAINT PAVEMENT MARKINGS WHITE (10")																		400								
HIGH PERFORMANCE PAVEMENT MARKING WHITE (4")																						1766				
HIGH PERFORMANCE PAVEMENT MARKING YELLOW (4")																								785		
HIGH PERFORMANCE PAVEMENT MARKING WHITE (DOTTED) (8")																										25
Subtotals ACNHPP-49-1(8)185 - HWY. 102:	9444	22417	12	16447	4758	56		2031	806		143	1902	58	46	4044	10	16	400				1766		785		25
I-49 MILL & INLAY																										
RAISED PAVEMENT MARKERS TYPE II (RED/WHITE)						794																				
HIGH PERFORMANCE PAVEMENT MARKING WHITE (4")																						20673				
HIGH PERFORMANCE PAVEMENT MARKING WHITE (SKIP LINE) (4")																							5340			
HIGH PERFORMANCE PAVEMENT MARKING WHITE (8")																									3613	
HIGH PERFORMANCE PAVEMENT MARKING WHITE (DOTTED) (8")																										856
Subtotals BIM-B49-0(216) - I49 MILL & INLAY:						794																20673	5340		3613	856
HWY. 72																										
REMOVAL OF PERMANENT PAVEMENT MARKINGS	16034																									
CONSTRUCTION PAVEMENT MARKINGS		8730																								
CONSTRUCTION PAVEMENT MARKINGS (ARROWS)			20																							
REMOVAL OF CONSTRUCTION PAVEMENT MARKINGS				24461																						
REMOVABLE CONSTRUCTION PAVEMENT MARKINGS					24461																					
RAISED PAVEMENT MARKERS TYPE II (RED/WHITE)						112																				
RAISED PAVEMENT MARKERS TYPE II (YEL/YEL)							16																			
THERMOPLASTIC PAVEMENT MARKINGS WHITE (4")								2209																		
THERMOPLASTIC PAVEMENT MARKINGS WHITE (SKIP LINE) (4")									1040																	
THERMOPLASTIC PAVEMENT MARKINGS YELLOW (SKIP LINE) (4")										319																
THERMOPLASTIC PAVEMENT MARKINGS WHITE (DOTTED LINE) (4")											60															
THERMOPLASTIC PAVEMENT MARKINGS YELLOW (4")												6539														
THERMOPLASTIC PAVEMENT MARKINGS WHITE (8")													380													
THERMOPLASTIC PAVEMENT MARKINGS YELLOW (8")														458												
THERMOPLASTIC PAVEMENT MARKINGS WHITE (12")															496											
THERMOPLASTIC PAVEMENT MARKINGS WORDS																26										
THERMOPLASTIC PAVEMENT MARKINGS ARROWS																	31									
REFLECOTRIZED PAINT PAVEMENT MARKINGS WHITE (10")																		99								
HIGH PERFORMANCE CONTRAST PAVEMENT MARKING WHITE (4")																			401							
HIGH PERFORMANCE CONTRAST PAVEMENT MARKING YELLOW (4")																				534						
HIGH PERFORMANCE CONTRAST PAVEMENT MARKING WHITE (8")																					67					
HIGH PERFORMANCE PAVEMENT MARKING WHITE (4")																						3480				
HIGH PERFORMANCE PAVEMENT MARKING YELLOW (4")																								2081		
HIGH PERFORMANCE PAVEMENT MARKING WHITE (8")																									410	
HIGH PERFORMANCE PAVEMENT MARKING WHITE (DOTTED) (8")																										49
Subtotals BIM-B49-0(216) - HWY. 72:	16034	8730	20	24461	24461	112	16	2209	1040	319	60	6539	380	458	496	26	31	99	401	534	67	3480		2081	410	49
TOTALS:	58125	117818	32	82780	45288	1967	16	4240	1846	319	203	8441	438	504	4540	36	47	499	651	534	67	40865	13350	39110	7218	3550

NOTE: THIS IS A HIGH TRAFFIC VOLUME ROAD AS DEFINED IN SECTION 604.03, STANDARD SPECIFICATIONS FOR HIGHWAY CONSTRUCTION.

NOTE: THERMOPLASTIC PAVEMENT MARKINGS MAY BE SUBSTITUTED FOR INVERTED PROFILE PAVEMENT MARKINGS AT INTERSECTIONS, ISLANDS, TURNOUTS, AND OTHER SIMILAR LOCATIONS AS DIRECTED BY THE ENGINEER.

5/19/2016
5:30:19 PM
...\QTY\rCA0902_QTY_HWY540_01.dgn

QUANTITIES

DATE	DATE FILMED	DATE REVISED	DATE FILMED	FED.RD. DIST.NO.	STATE	FED.AID PROJ.NO.	SHEET NO.	TOTAL SHEETS
				6	ARK.			
				JOB NO.		CA0902	166	581
				(2)	QUANTITIES			

CLEARING AND GRUBBING

STATION	STATION	LOCATION	CLEARING	GRUBBING
			STATION	
1256+50	1324+00	I-49	68	68
1334+50	1344+00	I-49	10	10
1424+00	1438+00	I-49	14	14
6+35	15+50	HWY. 102	10	10
184+50	187+50	HWY. 72	3	3
202+80	213+00	HWY. 72	11	11
Subtotals ACNHPP-49-1(18)85 - 149 WIDENING:			92	92
Subtotals ACNHPP-49-1(18)85 - HWY. 102:			10	10
Subtotals BIM-B49-0(216) - HWY. 72:			14	14
TOTALS:			116	116

REMOVAL AND DISPOSAL OF FENCE

STATION	STATION	LOCATION	FENCE
			LIN. FT.
1283+79	1284+26	I-49 LT.	54
1337+95	1338+53	I-49 LT. to RT.	738
1338+50	1339+05	I-49 RT.	80
10+20	14+51	TEMPORARY SHARED USE PATH	433
10+60	14+56	TEMPORARY SHARED USE PATH	393
Subtotal ACNHPP-49-1(18)85 - 149 WIDENING:			1698
TOTAL:			1698

REMOVAL AND DISPOSAL OF ITEMS

STATION	STATION	LOCATION	CURB AND GUTTER	WIRE ROPE SAFETY FENCE	CONCRETE DITCH PAVING	CONCRETE ISLANDS	CONCRETE DRIVEWAYS	WALKS	HEADWALLS	GUARDRAIL	CONCRETE MEDIAN BARRIER	WALLS
			LIN. FT.	LIN. FT.	SQ. YD.	SQ. YD.	SQ. YD.	SQ. YD.	EACH	LIN. FT.	LIN. FT.	LIN. FT.
183+69	188+49	HWY. 72 RT.	494									
188+30		HWY. 72 LT.				20						
204+13	204+22	HWY. 72 RT.	34									
204+54	204+64	HWY. 72 RT.	28									
205+50	205+69	HWY. 72 LT.	30									
206+19	206+33	HWY. 72 LT.	16									
5+67		HWY. 102 RT.						21				
6+11		HWY. 102 RT.						7				
6+07	17+50	HWY. 102 RT.	1211									
14+85		HWY. 102 RT.				21						
16+82		HWY. 102 RT.				30						
9+84		HWY. 102 RT.					32					
10+98		HWY. 102 RT.					32					
11+82		HWY. 102 RT.					35					
14+80		HWY. 102 RT.					155					
19+65	20+30	HWY. 102 RT.	65									
19+65	20+40	HWY. 102 LT.	75									
185+11		HWY. 72 RT.					48					
183+69	184+85	HWY. 72 RT.						66				
185+37	187+92	HWY. 72 RT.						135				
187+64	188+02	HWY. 72 LT.						32				
204+10	204+21	HWY. 72 RT.						21				
192+78		HWY. 72 LT. & RT.							2			
195+95		HWY. 72 LT. & RT.							2			
207+93		HWY. 72 LT. & RT.							2			
1320+63	1323+31	I-49 RT.								268		
1325+15	1327+16	I-49 LT.								201		
1334+85	1337+06	I-49 RT.								414		
1338+75	1340+82	I-49 LT.								402		
1426+27	1431+37	I-49 RT.								510		
1429+24	1434+35	I-49 LT.								510		
190+93	193+04	HWY. 72 RT.								212		
192+19	193+04	HWY. 72 LT.								86		
195+69	196+54	HWY. 72 RT.								86		
195+69	197+79	HWY. 72 LT.								213		
1285+01	1286+02	I-49 LT.			29							
1314+25	1321+53	I-49 MEDIAN			324							
1325+23	1336+87	I-49 MEDIAN			517							
1338+83	1429+24	I-49 MEDIAN			4018							
1314+25	1321+53	I-49 MEDIAN		728								
1325+23	1336+87	I-49 MEDIAN		1164								
1337+94	1337+98.6	I-49 LT. ALONG SOUTH SIDE OF TRAIL										52
1338+00	1338+25	I-49 LT.						842				
1338+34.6	1338+40.5	I-49 RT. ALONG SOUTH SIDE OF TRAIL										44
1338+36	1338+55	I-49 RT.						515				
1338+83	1429+75	I-49 MEDIAN		9092								
1430+75	1435+11	I-49 MEDIAN		436								
1288+20	1290+32	I-49 MEDIAN									212	
Subtotals ACNHPP-49-1(18)85 - 149 WIDENING:				11420	4888			1357		2305	212	96
Subtotals ACNHPP-49-1(18)85 - HWY. 102:			1351			51	254	28				
Subtotals BIM-B49-0(216) - HWY. 72:			602			20	48	254	6	597		
TOTALS:			1953	11420	4888	71	302	1639	6	2902	212	96

REMOVAL AND DISPOSAL OF CULVERTS AND DROP INLETS

STATION	DESCRIPTION	PIPE CULVERTS	DROP INLETS
		EACH	EACH
1289+41	30" X 26'	1	
1315+10	MEDIAN DROP INLET		1
1326+05	MEDIAN DROP INLET		1
1336+53	DROP INLET LT. & 12" x 89'	1	1
1336+71	DROP INLET RT. & 12" x 98'	1	1
1338+00	DBL. 36" X 33'	2	
1338+04	24" X 16'	1	
1338+37	48" X 322'	1	
1338+59	5' X 5' JUNCTION BOX & 48" X 20'	1	1
1338+98	DROP INLET LT. & 12" x 88'	1	1
1339+15	DROP INLET RT. & 12" x 90'	1	1
1347+07	MEDIAN DROP INLET		1
1358+06	MEDIAN DROP INLET		1
1370+07	MEDIAN DROP INLET		1
1380+07	MEDIAN DROP INLET		1
1390+07	MEDIAN DROP INLET		1
1400+65	MEDIAN DROP INLET		1
1419+05	MEDIAN DROP INLET		1
1429+70	MEDIAN DROP INLET		1
7+46	HWY. 102 DROP INLET RT.		1
10+55	HWY. 102 DROP INLET RT.		1
12+98	HWY. 102 DROP INLET RT.		1
15+96	HWY. 102 DROP INLET & 36" X 9'	1	1
20+08	HWY. 102 DROP INLET RT. & 24"X14'	1	1
20+08	HWY. 102 DROP INLET LT. & 24"X14'	1	1
183+59	HWY. 72 36" X 273'	1	
186+37	HWY. 72 DROP INLET RT. & 30" X 16'	1	1
192+78	HWY. 72 DROP INLET LT. & RT.		2
195+95	HWY. 72 DROP INLET LT. & RT.		2
207+93	HWY. 72 48" X 37'	1	
Subtotals ACNHPP-49-1(18)85 - 149 WIDENING:		10	15
Subtotals ACNHPP-49-1(18)85 - HWY. 102:		3	6
Subtotals BIM-B49-0(216) - HWY. 72:		3	5
TOTALS:		16	26

NOTE: QUANTITIES SHOWN ABOVE SHALL INCLUDE REMOVAL & DISPOSAL OF ALL HEADWALLS AND FLARED END SECTIONS IF APPLICABLE.

STATE OF ARKANSAS
REGISTERED PROFESSIONAL ENGINEER
No. 8760
ANDREW E. FRIES
5/19/16

5/19/2016
5:30:23 PM
\\DOTNAS\Proj\CA0902_QTY_HWY540_02.dgn

QUANTITIES

DATE	DATE FILMED	DATE REVISED	DATE FILMED	FED.RD. DIST.NO.	STATE	FED.AID PROJ.NO.	SHEET NO.	TOTAL SHEETS
				6	ARK.			
				JOB NO.		CA0902	167	581

(2) QUANTITIES

EARTHWORK

STATION	STATION	LOCATION / DESCRIPTION	UNCLASSIFIED EXCAVATION	COMPACTED EMBANKMENT	ROCK FILL
			CU. YD.		
ENTIRE	PROJECT	I-49 STAGE 3 OUTSIDE WIDENING	21207	6235	
ENTIRE	PROJECT	I-49 STAGE 1 TEMP RAMP	664	990	6434
ENTIRE	PROJECT	I-49 STAGE 1A WIDENING	332		
ENTIRE	PROJECT	I-49 STAGE 2 WIDENING	20899	9559	9913
ENTIRE	PROJECT	I-49 STAGE 3 WIDENING	21567	1829	6914
ENTIRE	PROJECT	RAMP 5 STAGE 3B	7764	11428	
ENTIRE	PROJECT	RAMP 6 STAGE 3B	17054	5078	
ENTIRE	PROJECT	HWY. 102 RAMP 4	2584	1295	
ENTIRE	PROJECT	HWY. 102 STAGE 2A	1049	866	
ENTIRE	PROJECT	HWY. 102 STAGE 2C	99		
ENTIRE	PROJECT	HWY. 72 STAGE 3A	298	225	
ENTIRE	PROJECT	HWY. 72 STAGE 3B	720	6590	
ENTIRE	PROJECT	HWY. 72 STAGE 3C	1479	6681	
Subtotals ACNHPP-49-1(18)85 - I49 WIDENING:			64669	18613	23261
Subtotals ACNHPP-49-1(18)85 - HWY. 102:			3732	2161	
Subtotals BIM-B49-0(216) - HWY. 72:			27315	30002	
TOTALS:			95716	50776	23261

CONCRETE COMBINATION CURB AND GUTTER

STATION	STATION	LOCATION	TYPE A (1' 6")
			LIN. FT.
5+13	13+77	HWY. 102 RT.	945
11+20	12+31	HWY. 102 RT.	
14+06	14+62	HWY. 102 RT.	76
14+97	16+93	HWY. 102 RT.	287
17+41	17+50	HWY. 102 RT.	11
19+65	20+30	HWY. 102 RT.	65
19+65	20+40	HWY. 102 LT.	75
183+69	188+51	HWY. 72 RT.	512
187+72	188+05	HWY. 72 LT.	35
188+11	193+03	HWY. 72 RT.	590
195+69	200+38	HWY. 72 RT.	549
200+18	203+18	HWY. 72 LT.	357
200+23	204+21	HWY. 72 RT.	440
203+48	203+91	HWY. 72 LT.	97
204+32	205+69	HWY. 72 LT.	173
204+55	212+65	HWY. 72 RT.	832
206+19	212+79	HWY. 72 LT.	662
Subtotals ACNHPP-49-1(18)85 - HWY. 102:			1459
Subtotals BIM-B49-0(216) - HWY. 72:			4247
TOTALS:			5706

CONCRETE CURB

STATION	STATION	LOCATION	TYPE D (0' 7")
			LIN. FT.
11+20	12+31	HWY. 102 RT.	111
Subtotal ACNHPP-49-1(18)85 - HWY. 102:			111
TOTAL:			111

STATE OF ARKANSAS
REGISTERED PROFESSIONAL ENGINEER
No. 8760
ANDREW E. FRIES
5/19/16

GUARDRAIL

STATION	STATION	LOCATION	GUARDRAIL (TYPE A)	THRIE BEAM GUARDRAIL TERMINAL	GUARDRAIL TERMINAL (TYPE 2)	TERMINAL ANCHOR POST (TYPE 1)
			LIN. FT.	EACH		
1260+73.00	1268+73.00	I-49 LT.	750		1	1
1269+64.00	1273+64.00	I-49 RT.	350		1	1
1270+54.00	1274+54.00	I-49 LT.	350		1	1
1278+00.00	1281+50.00	I-49 LT.	300		1	1
1284+29.73	1289+54.73	I-49 RT.	525		1	1
1299+72.37	1301+97.00	I-49 LT.	175		1	1
1307+82.00	1310+32.00	I-49 RT.	200		1	1
1334+95.97	1338+70.71	I-49 RT.	325		1	1
1336+96.12	1340+71.03	I-49 LT.	325		1	1
1369+43.00	1371+68.00	I-49 LT.	175		1	1
1379+58.00	1381+83.00	I-49 RT.	175		1	1
1409+10.00	1411+41.40	I-49 LT.	175		1	1
1413+47.50	1415+70.00	I-49 RT.	175		1	1
1427+58.15	1432+58.09	I-49 RT.	450		1	1
1428+16.00	1432+66.00	I-49 LT.	400		1	1
195+77.67	196+77.67	HWY. 72 LT.	25	1	1	
Subtotals ACNHPP-49-1(18)85 - I49 WIDENING:			4850		15	15
Subtotals BIM-B49-0(216) - HWY. 72:			25	1	1	
TOTALS:			4875	1	16	15

CONCRETE WALKS

STATION	STATION	LOCATION	LENGTH	CONCRETE WALKS	SOLID SODDING	WATER
			LIN. FT.	SQ.YD.	SQ.YD.	M. GAL.
5+55	5+81	HWY. 102 RT.	VARIES	17	15	0.2
6+07	16+14	HWY. 102 RT.	713	417	275	3.5
183+69	187+83	HWY. 72 RT.	346	192	119	1.5
187+64	188+28	HWY. 72 LT.	VARIES	60	41	0.5
187+83	188+13	HWY. 72 RT.	VARIES	21	13	0.2
188+27	188+33	HWY. 72 RT.	VARIES	2	13	0.2
188+33	192+74	HWY. 72 RT.	441	245	148	1.9
195+98	200+21	HWY. 72 RT.	423	235	142	1.8
200+21	200+32	HWY. 72 RT.	VARIES	2	8	0.1
200+50	200+63	HWY. 72 RT.	VARIES	5	1	
200+63	204+18	HWY. 72 RT.	VARIES	213	131	1.7
1337+95	1338+11	I-49 LT.	VARIES	93		
1338+37	1338+53	I-49 RT.	VARIES	57		
Subtotals ACNHPP-49-1(18)85 - I49 WIDENING:				150		
Subtotals ACNHPP-49-1(18)85 - HWY. 102:				434	290	3.7
Subtotals BIM-B49-0(216) - HWY. 72:				975	616	7.9
TOTALS:				1559	906	11.6

BASIS OF ESTIMATE
WATER..............................12.6 GAL./SQ. YD. OF SOLID SODDING

DUMPED RIPRAP

STATION	LOCATION	DUMPED RIPRAP	FILTER BLANKET
		CU. YDS.	SQ. YDS.
1284+68	I-49 LT. OUTLET OF BOX CULVERT LT.	150	150
1286+00	I-49 RT. OUTLET OF BOX CULVERT RT.	168	168
1289+41	I-49 RT. OUTLET OF PIPE CULVERT	66	132
1338+00	I-49 RT. OUTLET OF PIPE CULVERTS	88	190
197+00	HWY. 72 OUTLET OF PIPE CULVERT RT.	4	8
196+05	HWY. 72 OUTLET OF PIPE CULVERT LT.	4	8
191+00	HWY. 72 OUTLET OF PIPE CULVERT RT.	4	8
192+71	HWY. 72 OUTLET OF PIPE CULVERT RT.	4	8
192+67	HWY. 72 OUTLET OF PIPE CULVERT LT.	4	8
*ENTIRE PROJECT	AS DIRECTED BY THE ENGINEER	34	53
Subtotals ACNHPP-49-1(18)85 - I49 WIDENING:		506	693
Subtotals BIM-B49-0(216) - HWY. 72:		20	40
TOTAL:		526	733

*NOTE: QUANTITIES ESTIMATED.
SEE SECTION 104.03 OF THE STD. SPECS.

NOTE: FILTER BLANKET SHALL BE GEOTEXTILE FABRIC (TYPE 5).

WHEELCHAIR RAMPS

STATION	LOCATION	TYPE 3
		SQ.YD.
5+59	HWY. 102 RT.	3
5+76	HWY. 102 RT.	3
6+11	HWY. 102 RT.	3
13+65	HWY. 102 RT.	5
14+18	HWY. 102 RT.	5
14+50	HWY. 102 RT.	5
15+09	HWY. 102 RT.	5
16+17	HWY. 102 RT.	8
187+94	HWY. 72 RT.	5
188+10	HWY. 72 RT.	4
188+29	HWY. 72 RT.	4
200+25	HWY. 72 RT.	4
200+57	HWY. 72 RT.	4
Subtotal ACNHPP-49-1(18)85 - HWY. 102:		37
Subtotal BIM-B49-0(216) - HWY. 72:		21
TOTAL:		58

CONCRETE ISLAND

STATION	STATION	LOCATION	CURB FACE TYPE	CONCRETE ISLAND
				SQ.YD.
7+50	11+68	HWY. 102	C	186
11+93	14+33	HWY. 102	C	160
14+60	16+66	HWY. 102	C	312
1030+67	1030+80	HWY. 102 RAMP 4	C	27
1030+70	1029+43	HWY. 102 RAMP 4	C	122
300+33	300+33	HWY. 72 RAMP 3	C	15
300+60	300+60	HWY. 72 RAMP 3	C	29
Subtotal ACNHPP-49-1(18)85 - HWY. 102:				807
Sub-Total BIM-B49-0(216) - HWY. 72:				44
TOTAL:				851

CONCRETE DITCH PAVING

STATION	STATION	LOCATION	LENGTH	"W" AVG.	"B" AVG.	CONC. DITCH PAVING (TYPE A)	CONC. DITCH PAVING (TYPE B)	SOLID SODDING	WATER
			LIN. FT.	FEET	FEET	SQ. YD.	SQ. YD.	SQ. YD.	M. GAL.
1025+16	1026+01	HWY. 102 RAMP 4 RT.	85.00	6			57	38	0.5
1027+00	1029+45	HWY. 102 RAMP 4 LT.	245.00	6			163	109	1.4
1029+45	1030+65	HWY. 102 RAMP 4 LT.	120.00	15	5	198		53	0.7
213+16	213+55	HWY. 72 RT.	39.00	6			24	17	0.2
204+40	204+60	HWY. 72 LT.	20.00	5	3	12		9	0.1
206+55	207+25	HWY. 72 RT.	70.00	20	13	153		31	0.4
1434+30	1434+50	HWY. 72 RAMP 5 RT.	20.00	14	6	30		9	0.1
195+00	197+00	HWY. 72 RAMP 6 LT.	200.00	6	2	140		89	1.1
194+50	196+50	HWY. 72 RAMP 6 RT.	200.00	11	8	244		89	1.1
199+18	199+87	HWY. 72 RAMP 6 LT.	69.00	6	1	55		31	0.4
194+50	196+55	HWY. 72 RAMP 6 RT.	205.00	11	8	251		91	1.1
190+00	191+07	HWY. 72 RAMP 6 LT.	107.00	6	1	68		48	0.6
197+58	198+34	HWY. 72 RAMP 6 LT.	76.00	6	2	53		34	0.4
			0.00						
			0.00						
Subtotals ACNHPP-49-1(18)85 - HWY. 102:						198	220	200	2.6
Subtotals BIM-B49-0(216) - HWY. 72:						1006	24	448	5.5
TOTALS:						1204	244	648	8.1

BASIS OF ESTIMATE:
WATER.................................12.6 GAL. / SQ. YD. OF SOLID SODDING.

FOR INFORMATION ONLY
AUTOMATED WORK ZONE INFORMATION SYSTEM

	AWIS MOBILIZATION	AWIS OPERATION	SIGN: VEHICLE DETECTION SYSTEM	SIGN: CLOSED CIRCUIT TELEVISION SYSTEM	SIGN: VARIABLE MESSAGE SIGN	SIGN: PUBLIC NOTIFICATION SYSTEM	DEVICE RELOCATION
	LUMP SUM	MONTH	EACH				
	1.00	17	40	4	6	2	10
TOTALS:	1.00	17	40	4	6	2	10

NOTE: QUANTITIES ESTIMATED. BASES OF ESTIMATE:
VDS.... 1/2 MILE SPACING FOR 5 MILES SOUTH OF CA0901 AND 3.5 MILES NORTH OF CA0902. 1 MILE SPACING WITHIN BOTH WORK ZONES, BETWEEN LOG MILES 77.5 TO 84.5.
VMS.... ONE IN ADVANCE OF EACH OF THE FOLLOWING:
SOUTHBOUND - N. WALTON BLVD. (EXIT 93), LOG MILE 90, CENTRAL AVE. (EXIT 88)
NORTHBOUND - ELM SPRINGS RD. (EXIT 73, WAGON WHEEL RD. (EXIT 76), W. MONROE AVE. (EXIT 78)
PNS.... ONE AT EXIT 76 AND ONE AT EXIT 93.
CCTV.... ONE AT THE BEGINNING AND END OF EACH PROJECT.

THE QUANTITIES FOR THE AUTOMATED WORK ZONE INFORMATION SYSTEM ARE SHOWN IN THIS PROJECT FOR INFORMATION ONLY. THESE QUANTITIES ARE INCLUDED IN THE BID ITEMS FOR JOB

CULVERT CLEAN OUT

STATION	LOCATION	EACH
1267+87	I-49	1
1270+07	I-49	1
1282+68	I-49	1
1285+56	I-49	1
1326+05	I-49 RT.	1
1347+07	I-49 LT.	1
1358+06	I-49 LT.	1
1380+07	I-49 LT.	1
1390+07	I-49 LT.	1
1419+05	I-49 RT.	1
1026+01	HWY. 102 RAMP 4	1
Subtotal ACNHPP-49-1(18)85 - I49 WIDENING:		10
Subtotal ACNHPP-49-1(18)85 - HWY. 102:		1
TOTAL:		11

MAILBOXES

STATION	LOCATION	MAILBOXES	MAILBOX SUPPORTS (SINGLE)
		EACH	
11+63	HWY. 102 RT.	1	1
Subtotals ACNHPP-49-1(18)85 - HWY. 102:		1	1
TOTALS:		1	1

QUANTITIES

5/19/2016
5:30:27 PM
...\QTY\rCA0902_QTY_HWY540_03.dgn

DATE	DATE FILMED	DATE REVISED	DATE FILMED	FED.RD. DIST.NO.	STATE	FED.AID PROJ.NO.	SHEET NO.	TOTAL SHEETS
				6	ARK.			
				JOB NO.		CA0902	168	581

(2) QUANTITIES

EROSION CONTROL

STATION	STATION	LOCATION	PERMANENT EROSION CONTROL					TEMPORARY EROSION CONTROL									
			LIME	SEEDING	MULCH COVER	WATER	SECOND SEEDING APPLICATION	TEMPORARY SEEDING	MULCH COVER	WATER	SAND BAG DITCH CHECKS (E-5)	ROCK DITCH CHECKS (E-6)	DROP INLET SILT FENCE (E-7)	SILT FENCE (E-11)	SEDIMENT BASIN (E-14)	OBLITERATION OF SEDIMENT BASIN	•SEDIMENT REMOVAL & DISPOSAL
			TON	ACRE	ACRE	M.GAL.	ACRE	ACRE	ACRE	M.GAL.	BAG	CU.YD.	LIN. FT.	LIN. FT.	CU.YD.	CU.YD.	CU. YD.
ENTIRE	PROJECT	STAGE 1						0.47	0.47	9.6				2907			108
ENTIRE	PROJECT	STAGE 2 (I-49)						0.24	0.24	4.9			1072	1003		261	77
ENTIRE	PROJECT	STAGE 2 (HWY. 102 & HWY. 102 INTCHNG.)						1.57	1.57	32.0	154		120	999	261		
ENTIRE	PROJECT	STAGE 3 (I-49)						10.28	10.28	209.7	572	99		1660	2050	2050	2111
ENTIRE	PROJECT	STAGE 3 (HWY. 72 & HWY. 72 INTCHNG.)						9.50	9.50	193.8	220	45	500	4650	931	931	1122
ENTIRE	PROJECT	I-49	22	10.99	10.99	1121.0	10.99										
ENTIRE	PROJECT	HWY. 102	3	1.57	1.57	160.1	1.57										
ENTIRE	PROJECT	HWY. 72	19	9.50	9.50	969.0	9.50										
•149 WIDENING TO BE USED IF AND WHERE DIRECTED BY THE ENGINEER.			2	1.10	1.10	112.1	1.10	1.10	1.10	22.4	57	10	107	557	205	231	230
•HWY. 102 TO BE USED IF AND WHERE DIRECTED BY THE ENGINEER.				0.16	0.16	16.0	0.16	0.16	0.16	3.2	15		12	100	26		
•HWY. 72 TO BE USED IF AND WHERE DIRECTED BY THE ENGINEER.			2	0.95	0.95	96.9	0.95	0.95	0.95	19.4	22	5	50	465	93	93	112
Subtotals ACNHPP-49-1(18)85 - 149 WIDENING:			24	12.09	12.09	1233.1	12.09	12.09	12.09	246.6	629	109	1179	6127	2255	2542	2526
Subtotals ACNHPP-49-1(18)85 - HWY. 102:			3	1.73	1.73	176.1	1.73	1.73	1.73	35.2	169		132	1099	287		
Subtotals BIM-B49-0(216) - HWY. 72:			21	10.45	10.45	1065.9	10.45	10.45	10.45	213.2	242	50	550	5115	1024	1024	1234
TOTALS:			48	24.27	24.27	2475.1	24.27	24.27	24.27	495.0	1040	159	1861	12341	3566	3566	3760

BASIS OF ESTIMATE:
LIME .....2 TONS / ACRE OF SEEDING
WATER.....102.0 M.G. / ACRE OF SEEDING.
WATER.....20.4 M.G. / ACRE OF TEMPORARY SEEDING.
WATER.....12.6 GAL. / SQ. YD. OF SOLID SODDING.
WATTLE DITCH CHECKS.....9 LIN. FT. / LOCATION
SAND BAG DITCH CHECKS.....22 BAGS / LOCATION
ROCK DITCH CHECKS.....3 CU.YD./LOCATION

NOTE: THE TEMPORARY EROSION CONTROL DEVICES SHOWN ABOVE AND ON THE PLANS SHALL BE INSTALLED IN SUCH A SEQUENCE AS TO DETER EROSION AND SEDIMENTATION ON U.S. WATERWAYS AS EXPLAINED BY THE NATIONAL POLLUTANT DISCHARGE ELIMINATION SYSTEM PERMIT.

•QUANTITIES ESTIMATED.
SEE SECTION 104.03 OF THE STD. SPECS.

CRASH CUSHION

STATION	DESCRIPTION	EACH
1432+50	I-49	1
Subtotal ACNHPP-49-1(18)85 - 149 WIDENING:		1
TOTAL:		1

NOTE: THE CRASH CUSHION SHALL BE NON-GATING AND REDIRECTIVE AND COMPATIBLE WITH THE SITE GEOMETRY SHOWN ON THE PLANS.

LIGHTING SUMMARY OF QUANTITIES

ITEM NUMBER	ITEM	BIM-B49-0(216) - HWY. 72	TOTAL	UNIT
710	NON-METALLIC CONDUIT (2")	769	769	LIN. FT.
711	CONCRETE PULL BOX (TYPE 2 HD)	9	9	EACH

OVERHEAD SIGN STRUCTURE FOUNDATION

STATION	LOCATION	EACH
1340+07	I-49 RT.	1
Subtotal ACNHPP-49-1(18)85 - 149 WIDENING:		1
TOTAL:		1

CONCRETE BARRIER WALL

STATION	STATION	LOCATION	MEDIAN TYPE B	MEDIAN TYPE C	MEDIAN TYPE SPECIAL	MEDIAN TYPE SP-1
			LIN. FT.	LIN. FT.	LIN. FT.	LIN. FT.
1288+20.00	1289+20.00	I-49 MEDIAN				100
1289+32.00	1290+32.00	I-49 MEDIAN				100
1314+25.00	1322+05.00	I-49 MEDIAN	780			
1322+05.00	1323+05.00	I-49 MEDIAN			100	
1325+53.00	1326+53.00	I-49 MEDIAN			100	
1326+53.00	1338+15.00	I-49 MEDIAN	1162			
1338+15.00	1339+01.00	I-49 MEDIAN		86		
1339+01.00	1340+01.00	I-49 MEDIAN				100
1340+13.00	1341+13.00	I-49 MEDIAN				100
1341+13.00	1351+01.00	I-49 MEDIAN		988		
1354+09.00	1379+05.00	I-49 MEDIAN	2496			
1379+05.00	1381+73.00	I-49 MEDIAN		268		
1381+73.00	1384+07.00	I-49 MEDIAN			234	
1384+07.00	1416+36.00	I-49 MEDIAN		3229		
1416+36.00	1417+36.00	I-49 MEDIAN				100
1417+48.00	1418+48.00	I-49 MEDIAN				100
1418+48.00	1428+95.00	I-49 MEDIAN	1047			
1428+95.00	1431+78.00	I-49 MEDIAN			283	
1431+78.00	1432+35.00	I-49 MEDIAN	57			
Subtotals ACNHPP-49-1(18)85 - 149 WIDENING:			5542	4571	717	600
TOTALS:			5542	4571	717	600

RUMBLE STRIPS IN ASPHALT SHOULDERS

STATION	STATION	LOCATION	RUMBLE STRIPS IN ASPHALT SHOULDERS
			LIN. FT.
I-49 WIDENING			
1264+00	1312+78	I-49 RT. OUTSIDE SHOULDER	4878
1314+25	1323+05	I-49 RT. INSIDE SHOULDER	880
1325+58	1433+34	I-49 RT. INSIDE SHOULDER	10776
1433+00	1434+29	I-49 RT. OUTSIDE SHOULDER	129
1256+72	1307+74	I-49 LT. OUTSIDE SHOULDER	5102
1314+25	1323+00	I-49 LT. INSIDE SHOULDER	875
1325+53	1433+34	I-49 LT. INSIDE SHOULDER	10781
1433+00	1433+43	I-49 LT. OUTSIDE SHOULDER	43
Subtotal ACNHPP-49-1(18)85 - 149 WIDENING:			33464
I-49 MILL & INLAY			
1314+25	1323+10	I-49 RT. OUTSIDE SHOULDER	885
1325+62	1334+30	I-49 RT. OUTSIDE SHOULDER	868
1348+00	1415+50	I-49 RT. OUTSIDE SHOULDER	6750
1417+80	1424+11	I-49 RT. OUTSIDE SHOULDER	631
1315+80	1322+95	I-49 LT. OUTSIDE SHOULDER	715
1325+48	1335+00	I-49 LT. OUTSIDE SHOULDER	952
1341+06	1411+66	I-49 LT. OUTSIDE SHOULDER	7060
1421+60	1424+11	I-49 LT. OUTSIDE SHOULDER	251
Subtotal BIM-B49-0(216) - I49 MILL & INLAY:			18112
TOTAL:			51576

• SEE SECTION 104.03 OF THE STD. SPECS.
TO BE USED IF AND WHERE DIRECTED BY THE ENGINEER.

FENCING

STATION	STATION	LOCATION	WIRE FENCE (TYPE A)	• 5' CHAIN LINK FENCE
			LIN. FT.	
1283+79	1284+00	I-49 LT.	30	
1337+30	1337+95	I-49 LT.	66	
1337+83	1338+44	I-49 RT.	61	
1337+95	1337+96	I-49 LT.		43
1338+36	1338+44	I-49 RT.		62
1338+50	1338+57	I-49 RT.		61
1338+57	1339+05	I-49 RT.	48	
10+16	14+56	TEMP. SHARE USE PATH LT.		440
10+16	14+56	TEMP. SHARE USE PATH RT.		441
Subtotals ACNHPP-49-1(18)85 - 149 WIDENING:			205	1047
TOTALS:			205	1047

• DENOTES ALTERNATE BID ITEM.

APPROACH GUTTERS AND SLABS

STATION	STATION	LOCATION	APPROACH GUTTER (TYPE SPECIAL I)	APPROACH GUTTER (TYPE B)	APPROACH SLABS (TYPE SPECIAL I)	REINFORCING STEEL-RDWY. (GR. 60)
			CU.YD.	CU.YD.	CU.YD.	POUND
1323+02.00	1323+37.00	I-49 LT.	20.40		37.00	10456
1323+07.00	1323+42.00	I-49 RT.	21.10		37.00	10604
1325+15.00	1325+50.00	I-49 LT.	21.10		37.00	10604
1325+21.00	1325+56.00	I-49 RT.	20.40		37.00	10456
192+70.00	193+03.00	HWY. 72 LT.		6.35		560
195+69.00	196+02.00	HWY. 72 LT.		6.35		560
Subtotals ACNHPP-49-1(18)85 - 149 WIDENING:			83.00		148.00	42120
Subtotals BIM-B49-0(216) - HWY. 72:				12.70		1120
TOTALS:			83.00	12.70	148.00	43240

NOTE: USE T =22.5" FOR 10' SHOULDER.

RETAINING WALLS

STATION	STATION	LOCATION	CLASS S CONCRETE-ROADWAY	REINF. STEEL-ROADWAY (GRADE 60)	UNCL. EXC. FOR STR.-ROADWAY
			CU.YDS.	POUNDS	CU. YDS.
1263+75	1267+50	I-49 LT.	118.20	9131	310
1267+50	1267+80	I-49 LT.	10.60	669	18
1267+80	1268+25	I-49 RT.	19.90	1478	48
1284+00	1285+15	I-49 LT.	46.50	3239	75
1338+18	1338+41	I-49 RT.	12.75	898	209
Subtotals ACNHPP-49-1(18)85 - 149 WIDENING:			207.95	15415	660
TOTALS:			207.95	15415	660

STATE OF ARKANSAS
REGISTERED PROFESSIONAL ENGINEER
No. 8760
ANDREW E. FRIES
5/19/16

QUANTITIES

5/19/2016
5:30:57 PM
\\DOT\CA0902 QTY HWY540_04.dgn

DATE	DATE FILMED	DATE REVISED	DATE FILMED	FED.RD. DIST.NO.	STATE	FED.AID PROJ.NO.	SHEET NO.	TOTAL SHEETS
				6	ARK.			
				JOB NO.		CA0902	169	581

(2) QUANTITIES

STATE OF ARKANSAS
★ ★ ★
REGISTERED PROFESSIONAL ENGINEER
★ ★ ★
No. 8760
ANDREW E. FRIES
5/19/16

STRUCTURES (BOX 1 OF 2)

STATION	DESCRIPTION	REINFORCED CONCRETE PIPE CULVERT												PIPE CULVERT STORM DRAIN ALTERNATES 1 & 2						FLARED END SECTIONS FOR R.C. PIPE CULVERTS						SAFETY END SECTIONS FOR R.C. PIPE CULVERTS (CLASS 2)		DROP INLETS								JUNCT. BOX (TYPE ST)	SPAN	HEIGHT	LENGTH	CLASS S CONCRETE-ROADWAY	REINF. STEEL-ROADWAY (GRADE 60)	UNCL. EXC. FOR STR.-ROADWAY	SOLID SODDING	WATER	STD. DWG. NOS.
								(CLASS III)	(CLASS IV)	(CLASS V)																		TYPE						EXT.											
		18"	24"	30"	36"	42"	48"	60"	18"	30"	36"	48"	60"	12"	18"	24"	30"	36"	48"	18"	24"	30"	36"	48"	60"	18"	24"	TYPE SPECIAL	N-3	E	MO	ST	TM	4'	8'										
		LIN. FT.																		EACH								EACH									LIN. FT.			CU.YD.	POUND	CU.YD.	SQ.YD.	M.GAL	
1267+87	I-49 EXTEND DBL. 4'X3' R.C. BOX CULVERT LT. & RT.																																				4	3	21	15.54	2000	24	7	0.1	PBC-1, RCB-1, RCB-2, RCB-3
1270+07	I-49 REMOVE FES AND EXTEND R.C. PIPE CULVERT W/ FES LT.	15																		1																							5	0.1	FES-1, FES-2, PCC-1
1282+68	I-49 REMOVE FES AND EXTEND R.C. PIPE CULVERT W/ FES LT.	8																		1																							5	0.1	FES-1, FES-2, PCC-1
1289+41	I-49 CONST. D.I. LT. OF C.L. W/ PIPE CULVERT			2																												1													FPC-9S, PCC-1
1289+41	I-49 CONST. D.I. RT. OF C.L. W/ PIPE CULVERT W/ FES. RT.										86												1									1													FPC-9S, FES-1, FES-2, PCC-1
1290+50	I-49 REMOVE AND EXTEND R.C. PIPE CULVERT TO DROP INLET LT. OF C.L.			3																																									PCC-1
1315+10	I-49 CONST. D.I. RT. OF C.L. W/ PIPE CULVERT	2																														1													FPC-9S, PCC-1
1315+10	I-49 CONST. D.I. LT. OF C.L. ON R.C. BOX CULVERT																																1												FPC-9S, FPC-9
1318+00	I-49 CONST. D.I. RT. OF C.L. W/ PIPE CULVERT	2																														1													FPC-9S, PCC-1
1318+00	I-49 CONST. D.I. LT. OF C.L. W/ PIPE CULVERT	287																														1													FPC-9S, PCC-1
1326+05	I-49 CONST. D.I. RT. OF C.L. W/ PIPE CULVERT								1																							1													FPC-9S, PCC-1
1327+50	I-49 CONST. D.I. RT. OF C.L. W/ PIPE CULVERT	2																														1													FPC-9S, PCC-1
1327+50	I-49 CONST. D.I. LT. OF C.L. W/ PIPE CULVERT	141																														1													FPC-9S, PCC-1
1328+00	I-49 CONST. D.I. RT. OF C.L. W/ PIPE CULVERT	2																														1													FPC-9S, PCC-1
1328+00	I-49 CONST. D.I. LT. OF C.L. W/ PIPE CULVERT	47																														1													FPC-9S, PCC-1
1329+00	I-49 CONST. D.I. RT. OF C.L. W/ PIPE CULVERT	2																														1													FPC-9S, PCC-1
1329+00	I-49 CONST. D.I. LT. OF C.L. W/ PIPE CULVERT	97																														1													FPC-9S, PCC-1
1330+50	I-49 CONST. D.I. RT. OF C.L. W/ PIPE CULVERT	2																														1													FPC-9S, PCC-1
1330+50	I-49 CONST. D.I. LT. OF C.L. W/ PIPE CULVERT	147																														1													FPC-9S, PCC-1
1334+00	I-49 CONST. D.I. RT. OF C.L. W/ PIPE CULVERT	2																														1													FPC-9S, PCC-1
1334+00	I-49 CONST. D.I. LT. OF C.L. W/ PIPE CULVERT	347																														1													FPC-9S, PCC-1
1337+73	I-49 CONST. R.C. PIPE CULVERT W/ FES LT. & RT.											322											2																				34	0.4	FES-1, FES-2, PCC-1
1338+25	I-49 CONST. R.C. BOX CULVERT (TRAIL)																																				12	10	288	487.65	61939	3065			PBC-1, RCB-1, RCB-2, RCB-3, R-215X-0, R-454X-02
1338+37	I-49 REMOVE 48" AND INSTALL 60"X321' R.C. PIPE CULVERT W/ FES LT.												317											1	1																		29	0.4	FES-1, FES-2, PCC-1
1338+59	I-49 CONST. ST JUNC. BOX AND R.C. PIPE CULVERT W/ FES RT..							20																	1											1									FPC-9S, FES-1, FES-2, PCC-1
1345+00	I-49 CONST. D.I. LT. OF C.L. W/ PIPE CULVERT	204																														1													FPC-9S, PCC-1
1347+07	I-49 CONST. D.I. LT. OF C.L. W/ PIPE CULVERT	4																														1													FPC-9S, PCC-1
1350+50	I-49 CONST. D.I. LT. OF C.L. W/ PIPE CULVERT	347																														1													FPC-9S, PCC-1
1354+00	I-49 CONST. D.I. RT. OF C.L. W/ PIPE CULVERT	2																														1													FPC-9S, PCC-1
1354+00	I-49 CONST. D.I. LT. OF C.L. W/ PIPE CULVERT	403																														1													FPC-9S, PCC-1
1358+06	I-49 CONST. D.I. RT. OF C.L. W/ PIPE CULVERT	2																														1													FPC-9S, PCC-1
1358+06	I-49 CONST. D.I. LT. OF C.L. W/ PIPE CULVERT	5																														1													FPC-9S, PCC-1
1359+50	I-49 CONST. D.I. RT. OF C.L. W/ PIPE CULVERT	2																														1													FPC-9S, PCC-1
1359+50	I-49 CONST. D.I. LT. OF C.L. W/ PIPE CULVERT	197																														1													FPC-9S, PCC-1
1361+50	I-49 CONST. D.I. RT. OF C.L. W/ PIPE CULVERT	2																														1													FPC-9S, PCC-1
1361+50	I-49 CONST. D.I. LT. OF C.L. W/ PIPE CULVERT	197																														1													FPC-9S, PCC-1
1363+50	I-49 CONST. D.I. RT. OF C.L. W/ PIPE CULVERT	2																														1													FPC-9S, PCC-1
1363+50	I-49 CONST. D.I. LT. OF C.L. W/ PIPE CULVERT	247																														1													FPC-9S, PCC-1
1366+00	I-49 CONST. D.I. RT. OF C.L. W/ PIPE CULVERT	2																														1													FPC-9S, PCC-1
1366+00	I-49 CONST. D.I. LT. OF C.L. W/ PIPE CULVERT		197																													1													FPC-9S, PCC-1
1368+00	I-49 CONST. D.I. RT. OF C.L. W/ PIPE CULVERT	2																														1													FPC-9S, PCC-1
1368+00	I-49 CONST. D.I. LT. OF C.L. W/ PIPE CULVERT		212																													1													FPC-9S, PCC-1
1370+15	I-49 CONST. D.I. RT. OF C.L. W/ PIPE CULVERT	2																														1													FPC-9S, PCC-1
1370+15	I-49 CONST. D.I. LT. OF C.L. W/ PIPE CULVERT W/ FES LT.									80												1										1											13	0.2	FPC-9S, PCC-1, FES-1, FES-2
1372+50	I-49 CONST. D.I. RT. OF C.L. W/ PIPE CULVERT	2																														1													FPC-9S, PCC-1
1372+50	I-49 CONST. D.I. LT. OF C.L. W/ PIPE CULVERT	247																														1													FPC-9S, PCC-1
1375+00	I-49 CONST. D.I. RT. OF C.L. W/ PIPE CULVERT	2																														1													FPC-9S, PCC-1
1375+00	I-49 CONST. D.I. LT. OF C.L. W/ PIPE CULVERT	147																														1													FPC-9S, PCC-1
1376+50	I-49 CONST. D.I. RT. OF C.L. W/ PIPE CULVERT	2																														1													FPC-9S, PCC-1
1376+50	I-49 CONST. D.I. LT. OF C.L. W/ PIPE CULVERT	72																														1													FPC-9S, PCC-1
1377+25	I-49 CONST. D.I. LT. OF C.L. W/ PIPE CULVERT	97																														1													FPC-9S, PCC-1
1378+25	I-49 CONST. D.I. RT. OF C.L. W/ PIPE CULVERT	179																														1													FPC-9S, PCC-1
1380+07	I-49 CONST. D.I. RT. OF C.L. W/ PIPE CULVERT	6																														1													FPC-9S, PCC-1
1384+00	I-49 CONST. D.I. RT. OF C.L. W/ PIPE CULVERT	297																														1													FPC-9S, PCC-1
1387+00	I-49 CONST. D.I. RT. OF C.L. W/ PIPE CULVERT	304																														1													FPC-9S, PCC-1
1390+07	I-49 CONST. D.I. RT. OF C.L. W/ PIPE CULVERT	5																														1													FPC-9S, PCC-1
1393+50	I-49 CONST. D.I. RT. OF C.L. W/ PIPE CULVERT	347																														1													FPC-9S, PCC-1
1397+00	I-49 CONST. D.I. RT. OF C.L. W/ PIPE CULVERT	362																														1													FPC-9S, PCC-1
1400+65	I-49 CONST. D.I. RT. OF C.L. ON EXIST. D.I.																															1													FPC-9S, FPC-9
1403+00	I-49 CONST. D.I. RT. OF C.L. W/ PIPE CULVERT	297																														1													FPC-9S, PCC-1
1406+00	I-49 CONST. D.I. RT. OF C.L. W/ PIPE CULVERT	197																														1													FPC-9S, PCC-1
1408+00	I-49 CONST. D.I. RT. OF C.L. W/ PIPE CULVERT	90																														1													FPC-9S, PCC-1
1408+93	I-49 CONST. D.I. RT. OF C.L. ON EXIST. D.I.																															1													FPC-9S, PCC-1
1409+50	I-49 CONST. D.I. RT. OF C.L. W/ PIPE CULVERT	54																														1													FPC-9S, PCC-1
1411+00	I-49 CONST. D.I. RT. OF C.L. W/ PIPE CULVERT	147																														1													FPC-9S, PCC-1
1415+00	I-49 CONST. D.I. RT. OF C.L. W/ PIPE CULVERT	397																														1													FPC-9S, PCC-1
1419+05	I-49 CONST. D.I. RT. OF C.L. W/ PIPE CULVERT	2																														1													FPC-9S, PCC-1
1419+05	I-49 CONST. D.I. LT. OF C.L. W/ PIPE CULVERT	2																														1													FPC-9S, PCC-1
1421+00	I-49 CONST. D.I. RT. OF C.L. W/ PIPE CULVERT	2																														1													FPC-9S, PCC-1
1421+00	I-49 CONST. D.I. LT. OF C.L. W/ PIPE CULVERT	192																														1													FPC-9S, PCC-1
1428+00	I-49 CONST. D.I. RT. OF C.L. W/ PIPE CULVERT	167																														1													FPC-9S, PCC-1
1428+00	I-49 CONST. D.I. LT. OF C.L. W/ PIPE CULVERT	2																														1													FPC-9S, PCC-1
1429+70	I-49 CONST. D.I. RT. OF C.L. W/ PIPE CULVERT	111																														1													FPC-9S, PCC-1
1429+70	I-49 CONST. D.I. LT. OF C.L. W/ PIPE CULVERT	5																														1													FPC-9S, PCC-1
1430+84	I-49 CONST. D.I. RT. OF C.L. W/ PIPE CULVERT	113																														1													FPC-9S, PCC-1
1432+00	I-49 CONST. D.I. RT. OF C.L. W/ PIPE CULVERT W/ S.E.S. RT.	297																								1						1											12	0.2	FPC-9S, PCC-1, FES-1, FES-2
1432+00	I-49 CONST. D.I. LT. OF C.L. W/ PIPE CULVERT	2																														1													FPC-9S, PCC-1
1026+01	HWY. 102 RAMP 4 EXTEND R.C. PIPE CULVERT W/ FES RT.		10																		1																						8	0.1	FES-1, FES-2, PCC-1
3+66	HWY. 102 EXTEND R.C. PIPE CULVERT RT.			5																																									PCC-1
7+46	HWY. 102 CONST. JUNCTION BOX ON RT. W/ PIPE CULVERT			9																																1									FPC-9S, PCC-1
7+46	HWY. 102 CONST. D.I. ON RT. W/ PIPE CULVERT																301														1			1											FPC-9E, FPC-9M, PCC-1, PCM-1, PCP-1, PCP-2
7+47	HWY. 102 EXTEND R.C. PIPE CULVERT RT.	5																																											PCC-1
10+52	HWY. 102 CONST. D.I. ON RT. W/ PIPE CULVERT																	241													1			1											FPC-9E, FPC-9M, PCC-1, PCM-1, PCP-1, PCP-2
10+55	HWY. 102 EXTEND R.C. PIPE CULVERT RT.	18																																											PCC-1
12+98	HWY. 102 CONST. D.I. ON RT. W/ PIPE CULVERT																	293													1			1											FPC-9E, FPC-9M, PCC-1, PCM-1, PCP-1, PCP-2
12+99	HWY. 102 EXTEND R.C. PIPE CULVERT RT.	18																																											PCC-1
15+96	HWY. 102 EXTEND R.C. PIPE CULVERT RT.				19																																								PCC-1
15+96	HWY. 102 CONST. D.I. ON RT. W/ PIPE CULVERT W/ FES RT.																		18					1							1			1									17	0.2	FPC-9E, FPC-9M, PCC-1, PCM-1, PCP-1, PCP-2, FES-1, FES-2
16+04	HWY. 102 CONST. D.I. ON RT. W/ PIPE CULVERT W/ FES RT.																		22					1							1												13	0.2	FPC-9S, PCC-1, PCM-1, PCP-1, PCP-2, FES-1, FES-2
20+08	HWY. 102 CONST. D.I. ON RT. W/ PIPE CULVERT RT.		14																												1			1											FPC-9E, FPC-9M, PCC-1
20+09	HWY. 102 CONST. D.I. ON LT. W/ PIPE CULVERT LT.		14																												1			1											FPC-9E, FPC-9M, PCC-1
	Subtotals ACNHPP-49-1(18)85 - I49 WIDENING (BOX 1 OF 2):	6869	409	5				20	1	80	86	322	317							2		1	3	1	2	1						68	1			1				503.19	63939	3089	105	1.5	
	Subtotals ACNHPP-49-1(18)85 - HWY. 102 (BOX 1 OF 2):	41	38	14	19												301	534	40		1			2							7			6		1							38	0.5	

BASIS OF ESTIMATE:
WATER..............................12.6 GAL. / SQ. YD. OF SOLID SODDING.

NOTE: FOR R.C. PIPE CULVERT INSTALLATIONS USE TYPE 3 BEDDING UNLESS OTHERWISE SPECIFIED.
NOTE: FOR C.M. PIPE CULVERT INSTALLATIONS USE TYPE 2 BEDDING UNLESS OTHERWISE SPECIFIED.

/19/2016
:30:35 PM
\QTY\rCA0902_QTY_HWY540_05.dgn

QUANTITIES

DATE	DATE FILMED	DATE REVISED	DATE FILMED	FED.RD. DIST.NO.	STATE	FED.AID PROJ.NO.	SHEET NO.	TOTAL SHEETS
				6	ARK.			
				JOB NO.		CA0902	170	581

(2) QUANTITIES

STRUCTURES (BOX 2 OF 2)

STATION	DESCRIPTION	RCP CULVERT (CLASS III) 18"	(CLASS III) 24"	(CLASS III) 30"	(CLASS III) 36"	(CLASS III) 42"	(CLASS III) 48"	(CLASS III) 60"	(CLASS IV) 18"	(CLASS V) 30"	(CLASS V) 36"	(CLASS V) 48"	(CLASS V) 60"	PIPE CULVERT STORM DRAIN ALTERNATES 1 & 2 12"	18"	24"	30"	36"	48"
		LIN. FT.																	
198+67	HWY. 72 RAMP 6 CONST. DBL. R.C. PIPE CULVERT W/ FES LT. & S.E.S. RT.		120																
1434+41	HWY. 72 RAMP 5 CONST. DBL. R.C. PIPE CULVERT W/ FES LT. & S.E.S. RT.		140																
183+59	HWY. 72 REMOVE AND INSTALL R.C. PIPE CULVERT RT.																	275	
186+36	HWY. 72 REMOVE FES AND EXTEND R.C. PIPE CULVERT		1																
186+36	HWY. 72 CONST. D.I. ON RT. W/ PIPE CULVERT																	14	
186+37	HWY. 72 INSTALL PIPE COLLAR																		
186+37	HWY. 72 CONST. D.I. ON RT. W/ PIPE CULVERT					12													
188+18	HWY. 72 CONST. D.I. ON RT. W/ PIPE CULVERT W/ FES RT.	37																	
188+91	HWY. 72 CONST. D.I. ON RT. W/ PIPE CULVERT W/ FES RT.	8																	
191+00	HWY. 72 CONST. D.I. ON RT. W/ PIPE CULVERT W/ FES RT.	33																	
192+67	HWY. 72 CONST. D.I. ON LT. W/ PIPE CULVERT W/ FES LT.	58																	
192+71	HWY. 72 CONST. D.I. ON RT. W/ PIPE CULVERT W/ FES RT.	46																	
193+43	HWY. 72 CONST. R.C. PIPE CULVERT W/ FES LT. & RT.		184																
195+30	HWY. 72 CONST. R.C. PIPE CULVERT W/ FES LT. & RT.		184																
196+05	HWY. 72 CONST. D.I. ON LT. W/ PIPE CULVERT W/ FES LT.	60																	
197+00	HWY. 72 CONST. D.I. ON RT. W/ PIPE CULVERT W/ FES RT.	46																	
199+00	HWY. 72 CONST. D.I. ON RT. W/ PIPE CULVERT														87				
199+91	HWY. 72 CONST. D.I. ON RT. W/ PIPE CULVERT W/ FES RT.	20																	
200+33	HWY. 72 CONST. D.I. ON RT. W/ PIPE CULVERT														38				
203+86	HWY. 72 CONST. D.I. ON RT. W/ PIPE CULVERT	132																	
204+35	HWY. 72 REMOVE FES AND EXTEND R.C. PIPE CULVERT W/ FES LT.	21																	
205+30	HWY. 72 CONST. D.I. ON RT. W/ PIPE CULVERT														109				
205+45	HWY. 72 REMOVE FES & CONST. D.I. ON LT. W/ PIPE CULVERT	4																	
206+49	HWY. 72 CONST. D.I. ON RT. W/ PIPE CULVERT														113				
206+85	HWY. 72 REMOVE FES AND EXTEND R.C. PIPE CULVERT ON LT.															123			
207+67	HWY. 72 REMOVE FES AND EXTEND R.C. PIPE CULVERT ON LT.				7														
207+67	HWY. 72 CONST. D.I. ON RT. W/ PIPE CULVERT				10														
207+67	HWY. 72 CONST. D.I. ON RT. W/ PIPE CULVERT																		98
208+10	HWY. 72 CONST. D.I. ON LT. W/ PIPE CULVERT															56			
208+71	HWY. 72 CONST. D.I. ON RT. W/ PIPE CULVERT						49												
208+71	HWY. 72 CONST. D.I. ON LT. W/ PIPE CULVERT W/ FES LT.						19												
211+00	HWY. 72 CONST. D.I. ON LT. W/ PIPE CULVERT															224			
212+09	HWY. 72 CONST. D.I. ON RT. W/ PIPE CULVERT																	333	
212+10	HWY. 72 INSTALL PIPE COLLAR AND EXTEND R.C. PIPE CULVERT													9					
212+80	HWY. 72 CONST. R.C. PIPE CULVERT LT. W/ FES															177			
213+16	HWY. 72 CONST. D.I. ON RT. W/ PIPE CULVERT		99																
	Subtotals BIM-B49-0(216) - HWY. 72:	465	728		17	12	68							9	347	580		622	98
	Subtotals ACNHPP-49-1(18)85 - 149 WIDENING (BOX 1 OF 2):	6869	409	5				20	1	80	86	322	317						
	Subtotals ACNHPP-49-1(18)85 - HWY. 102 (BOX 1 OF 2):	41	38	14	19												301	534	40
	Subtotals BIM-B49-0(216) - HWY. 72 (BOX 2 OF 2):	465	728		17	12	68							9	347	580		622	98
	STRUCTURES OVER 20'-0" SPAN																		
1285+56	I-49 EXTEND QUINT. 8'X4' R.C. BOX CULVERT LT.																		
	Subtotals ACNHPP-49-1(18)85 - 149 WIDENING:																		
	TOTALS:	7375	1175	19	36	12	68	20	1	80	86	322	317	9	347	580	301	1156	138

STATION	FLARED END SECTIONS FOR R.C. PIPE CULVERTS 18"	24"	30"	36"	48"	60"	SAFETY END SECTIONS FOR R.C. PIPE CULVERTS (CLASS 2) 18"	24"	DROP INLETS TYPE SPECIAL	N-3	E	MO	ST	TM	EXT. 4'	EXT. 8'	JUNCT. BOX (TYPE ST)	SPAN	HEIGHT	LENGTH	CLASS S CONCRETE-ROADWAY	REINF. STEEL-ROADWAY (GRADE 60)	UNCL. EXC. FOR STR.-ROADWAY	SOLID SODDING	WATER	STD. DWG. NOS.
	EACH								EACH									LIN. FT.			CU.YD.	POUND	CU.YD.	SQ.YD.	M.GAL	
198+67		2						2																35	0.4	SES-2, PCC-2
1434+41		2						2																35	0.4	SES-2, PCC-3
183+59																										PCC-1, PCM-1, PCP-1, PCP-2
186+36																										PCC-1
186+36									1																	PCC-1, PCM-1, PCP-1, PCP-2
186+37																										
186+37												1														FPC-9E, FPC-9M, PCC-1
188+18	1											1			1									5	0.1	FPC-9E, FPC-9M, PCC-1, FES-1, FES-2
188+91	1											1			1									5	0.1	FPC-9E, FPC-9M, PCC-1, FES-1, FES-2
191+00	1											1												5	0.1	FPC-9E, FPC-9M, PCC-1, FES-1, FES-2
192+67	1									1														5	0.1	FPC-9N, PCC-1, FES-1, FES-2
192+71	1											1												5	0.1	FPC-9E, FPC-9M, PCC-1, FES-1, FES-2
193+43		2																						16	0.2	PCC-1, FES-1, FES-2
195+30		2																						16	0.2	PCC-1, FES-1, FES-2
196+05	1									1														5	0.1	FPC-9N, PCC-1, FES-1, FES-2
197+00	1											1												5	0.1	FPC-9E, FPC-9M, PCC-1, FES-1, FES-2
199+00												1			1											FPC-9E, FPC-9M, PCC-1, PCM-1, PCP-1, PCP-2
199+91	1											1												5	0.1	FPC-9E, FPC-9M, PCC-1, FES-1, FES-2
200+33												1			1											FPC-9E, FPC-9M, PCC-1, PCM-1, PCP-1, PCP-2
203+86												1			1											FPC-9E, FPC-9M, PCC-1
204+35	1																							5	0.1	PCC-1, FES-1, FES-2
205+30												1			1											FPC-9E, FPC-9M, PCC-1, PCM-1, PCP-1, PCP-2
205+45											1															PCC-1
206+49												1			1											FPC-9E, FPC-9M, PCC-1, PCM-1, PCP-1, PCP-2
206+85																										PCC-1, PCM-1, PCP-1, PCP-2
207+67																										PCC-1
207+67									1																	PCC-1
207+67												1				1										FPC-9E, FPC-9M, PCC-1, PCM-1, PCP-1, PCP-2
208+10												1				1										FPC-9E, FPC-9M, PCC-1, PCM-1, PCP-1, PCP-2
208+71												1			1											FPC-9E, FPC-9M, PCC-1
208+71					1							1			1									29	0.4	FPC-9E, FPC-9M, PCC-1, FES-1, FES-2
211+00												1			1											FPC-9E, FPC-9M, PCC-1, PCM-1, PCP-1, PCP-2
212+09												1			1											FPC-9E, FPC-9M, PCC-1, PCM-1, PCP-1, PCP-2
212+10																										PCC-1, PCM-1, PCP-1, PCP-2
212+80		1																						8	0.1	PCC-1, PCM-1, PCP-1, PCP-2, FES-1, FES-2
213+16									1																	PCC-1
Subtotals BIM-B49-0(216) - HWY. 72:	9	9			1			4	3	2	1	27			19	2								184	2.6	
Subtotals ACNHPP-49-1(18)85 - 149 WIDENING (BOX 1 OF 2):	2		1	3	1	2	1						68	1			1				503.19	63939	3089	105	1.5	
Subtotals ACNHPP-49-1(18)85 - HWY. 102 (BOX 1 OF 2):		1			2							7			6		1							38	0.5	
Subtotals BIM-B49-0(216) - HWY. 72 (BOX 2 OF 2):	9	9			1			4	3	2	1	27			19	2								184	2.6	
STRUCTURES OVER 20'-0" SPAN																										
1285+56																		8	4	21	59.51	12211	61			PCB-1, RCB-1, RCB-2, RCB-3
Subtotals ACNHPP-49-1(18)85 - 149 WIDENING:																					59.51	12211	61			
TOTALS:	11	10	1	3	4	2	1	4	3	2	1	34	68	1	25	2	2				562.70	76150	3150	327	4.6	

BASIS OF ESTIMATE:
WATER..................................12.6 GAL. / SQ. YD. OF SOLID SODDING.

NOTE: FOR R.C. PIPE CULVERT INSTALLATIONS USE TYPE 3 BEDDING UNLESS OTHERWISE SPECIFIED.
NOTE: FOR C.M. PIPE CULVERT INSTALLATIONS USE TYPE 2 BEDDING UNLESS OTHERWISE SPECIFIED.

4" PIPE UNDERDRAIN

STATION	STATION	LOCATIONS	4" PIPE UNDERDRAINS	UNDERDRAIN OUTLET PROTECTORS
			LIN. FT.	EACH
		I-49		
1314+25	1315+10	I-49	226	
1315+10	1318+00	I-49	636	
1318+00	1323+05	I-49	1066	
1326+05	1327+50	I-49	356	
1327+50	1329+00	I-49	342	
1329+00	1330+50	I-49	356	
1330+50	1334+00	I-49	756	
1334+00	1345+00	I-49	2256	
1345+00	1347+07	I-49	452	
1347+07	1350+50	I-49	724	
1350+50	1354+00	I-49	738	
1354+00	1358+06	I-49	868	
1358+06	1359+50	I-49	344	
1359+50	1361+50	I-49	456	
1361+50	1363+50	I-49	456	
1363+50	1366+00	I-49	556	
1366+00	1368+00	I-49	456	
1368+00	1370+15	I-49	486	
1370+15	1372+50	I-49	524	
1372+50	1375+00	I-49	556	
1375+00	1376+50	I-49	356	
1376+50	1378+25	I-49	392	
1378+25	1380+07	I-49	430	
1380+07	1384+00	I-49	824	
1384+00	1387+00	I-49	638	
1387+00	1390+07	I-49	652	
1390+07	1393+50	I-49	724	
1393+50	1397+00	I-49	738	
1397+00	1400+65	I-49	768	
1400+65	1403+00	I-49	508	
1403+00	1406+00	I-49	638	
1406+00	1408+00	I-49	438	
1408+00	1408+93	I-49	224	
1408+93	1411+00	I-49	433	
1411+00	1415+00	I-49	838	
1415+00	1419+05	I-49	848	
1419+05	1421+00	I-49	446	
1421+00	1428+00	I-49	1456	
1428+00	1429+70	I-49	420	
1429+70	1430+84	I-49	312	
1430+84	1432+00	I-49	442	
•ENTIRE	PROJECT	TO BE USED IF AND WHERE DIRECTED BY THE ENGINEER	1000	43
Subtotals ACNHPP-49-1(18)85 - 149 WIDENING:			26135	43
		TOTALS:	26135	43

NOTE: QUANTITIES ARE ESTIMATED.
•SEE SECTION 104.03 OF THE STD. SPECS.

UNDERDRAINS SHALL BE STUBBED INTO THE PROPOSED DROP INLET IF AND WHERE DIRECTED BY THE ENGINEER. PAYMENT FOR THIS TO BE INCLUDED IN THE UNIT PRICE BID FOR 4" PIPE UNDERDRAIN.

DRIVEWAYS & TURNOUTS

STATION	SIDE	LOCATION	WIDTH	• MODIFIED CURB		PORTLAND CEMENT CONCRETE DRIVEWAY	ACHM SURFACE COURSE (1/2") 220 LBS. PER SQ. YD. (PG 64-22)		AGGREGATE BASE COURSE (CLASS 7)	STANDARD DRAWINGS
			FEET	STATION	STATION	SQ. YD.	SQ. YD.	TON	TON	
9+84	RT.	HWY. 102	16	9+62	10+06	24.90	55.1	6	22	DR-1
10+98	RT.	HWY. 102	32	10+68	11+28	39.10	117.3	13	48	DR-1
12+58	RT.	HWY. 102	38	12+25	12+91	44.40	139.3	15	57	DR-1
13+92	RT.	HWY. 102	30			61.90				DR-1
14+80	RT.	HWY. 102	37			74.30				DR-1
185+11	RT.	HWY. 72	40	184+77	185+45	46.20	71.1	8	29	DR-1
0+00										
0+00										
0+00										
Subtotals ACNHPP-49-1(18)85 - HWY. 102:						244.60		34	127	
Subtotals BIM-B49-0(216) - HWY. 72:						46.20		8	29	
TOTALS:						290.80		42	156	

BASIS OF ESTIMATE:
ACHM SURFACE COURSE (1/2").......94.4% MIN. AGGR......5.6% ASPHALT BINDER
MAXIMUM NUMBER OF GYRATIONS = 115 FOR PG 64-22
•FOR INFORMATION ONLY

THE CONTRACTOR, WITH THE APPROVAL OF THE ENGINEER, WILL BE ALLOWED TO SUBSTITUTE A HIGHER PERFORMANCE GRADE ASPHALT SURFACE COURSE FOR DRIVEWAYS AND MINOR SIDE STREET CONSTRUCTION AT NO ADDITIONAL COST TO THE DEPARTMENT.

••NOTE: FOR R.C. PIPE CULVERT INSTALLATIONS USE TYPE 3 BEDDING UNLESS OTHERWISE SPECIFIED.
NOTE: FOR C.M. PIPE CULVERT INSTALLATIONS USE TYPE 2 BEDDING UNLESS OTHERWISE SPECIFIED.

SELECTED PIPE BEDDING

LOCATION	SELECTED PIPE BEDDING
	CU.YD.
•ENTIRE PROJECT TO BE USED IF AND WHERE DIRECTED BY THE ENGINEER	1030
Subtotal ACNHPP-49-1(18)85 - 149 WIDENING:	630
Subtotal ACNHPP-49-1(18)85 - HWY. 102:	100
Subtotal BIM-B49-0(216) - HWY. 72:	300
TOTAL:	1030

•NOTE: QUANTITY ESTIMATED.
SEE SECTION 104.03 OF THE STD. SPECS.

PAVEMENT REPAIR OVER CULVERTS (ASPHALT)

STATION	LOCATION	WIDTH	LENGTH	ASPHALT	AGGREGATE BASE COURSE (CLASS 7)
		FEET		TON	TON
7+47	HWY. 102 RT.	7.92	4	2	5
10+55	HWY. 102 RT.	7.92	4	2	5
12+99	HWY. 102 RT.	7.92	4	2	5
15+96	HWY. 102 RT.	9.67	4	2	10
188+18	HWY. 72 RT.	7.92	10.25	4	7
203+86	HWY. 72 RT.	7.92	36	16	31
208+71	HWY. 72	10.83	21.5	13	97
213+16	HWY. 72 RT.	8.50	35.5	17	65
Subtotals ACNHPP-49-1(18)85 - HWY. 102:				8	25
Subtotals BIM-B49-0(216) - HWY. 72:				50	200
TOTALS:				58	225

AVG. DEPTH = 9"

COLD MILLING ASPHALT PAVEMENT

STATION	STATION	LOCATION	AVG. WIDTH	COLD MILLING ASPHALT PAVEMENT
			FEET	SQ. YD.
I-49 MILL & INLAY				
1314+25.00	1323+04.67	I-49 EXISTING LANES AND 2' OUTSIDE SHOULDER	52.00	5083
1325+52.84	1336+50.00	I-49 EXISTING LANES AND 2' OUTSIDE SHOULDER	52.00	6339
1339+20.00	1424+11.50	I-49 EXISTING LANES AND 2' OUTSIDE SHOULDER	52.00	49062
1424+11.50	1433+34.06	I-49 EXISTING LANES	48.00	4920
1433+34.06	1433+42.90	I-49 EXISTING LANES AND 2' INSIDE SHOULDER LT	26.00	26
1433+34.06	1434+28.67	I-49 EXISTING LANES AND 2' INSIDE SHOULDER RT	26.00	273
1312+06.92	1315+59.93	HWY. 102 RAMP 1 TO GORE	VARIES	744
1314+24.92	1316+50.68	HWY. 102 RAMP 4 TO GORE	VARIES	435
1332+52.00	1336+50.00	HWY. 102 RAMP 3 TO GORE	VARIES	751
1334+19.51	1336+50.00	HWY. 102 RAMP 2 TO GORE	VARIES	416
1339+20.00	1347+95.26	HWY. 102 RAMP 2 ACCELERATION LANE	VARIES	931
1339+20.00	1341+29.57	HWY. 102 RAMP 3 DECCELERATION LANE	VARIES	118
Subtotal BIM-B49-0(216) - 149 MILL & INLAY:				69098
HWY. 102				
4+65.63	16+67.07	HWY. 102 LEFT TURN LANE	VARIES	955
5+00.00	18+00.00	HWY. 102 EXISTING 2- WB LANES	VARIES	4181
4+21.50	18+00.00	HWY. 102 EXISTING 2- EB LANES	VARIES	4249
Subtotal ACNHPP-49-1(18)85 - HWY. 102:				9385
HWY. 72				
1411+72.96	1421+79.03	HWY. 72 RAMP 4 TO GORE	VARIES	1225
1415+70.73	1419+91.17	HWY. 72 RAMP 1 TO GORE	VARIES	664
206+75.00	212+78.72	HWY. 72 RT.	12.00	805
Subtotal BIM-B49-0(216) - HWY. 72:				2694
TOTAL:				81177

NOTE: AVERAGE MILLING DEPTH 2".

ASPHALT CONCRETE PATCHING FOR MAINTENANCE OF TRAFFIC

LOCATION	TON	TACK COAT
		GALLON
•I-49	86	172
•HWY 72	14	27
•HWY 102	6	13
Subtotals ACNHPP-49-1(18)85 - 149 WIDENING:	86	172
Subtotals BIM-B49-0(216) - HWY. 72:	14	27
Subtotals ACNHPP-49-1(18)85 - HWY. 102:	6	13
TOTALS:	106	212

BASIS OF ESTIMATE:
ASPHALT CONCRETE PATCHING FOR MAINTENANCE OF TRAFFIC 25 TON/MILE
TACK COAT FOR MAINTENANCE OF TRAFFIC................50 GAL./MILE
• TO BE USED IF AND WHERE DIRECTED BY THE ENGINER

STATE OF ARKANSAS
REGISTERED PROFESSIONAL ENGINEER
No. 8760
ANDREW E. FRIES
5/19/16

QUANTITIES

5/19/2016
5:30:39 PM
...\QTY\rCA0902_QTY_HWY540_06.dgn

DATE	DATE FILMED	DATE REVISED	DATE FILMED	FED.RD. DIST.NO.	STATE	FED.AID PROJ.NO.	SHEET NO.	TOTAL SHEETS
				6	ARK.			
				JOB NO.		CA0902	171	581

(2) QUANTITIES

STATE OF ARKANSAS
REGISTERED PROFESSIONAL ENGINEER
No. 8760
ANDREW E. FRIES
5/16/19

BASE AND SURFACING (BOX 1 OF 2)

STATION	STATION	LOCATION	LENGTH	AGGREGATE BASE COURSE (CLASS 7)		TACK COAT				ACHM BASE COURSE (1 1/2")						ACHM BINDER COURSE (1")						ACHM SURFACE COURSE (1/2")													
			FEET	TON / STATION	TON	AVG. WID. FEET	SQ.YD.	GALLONS / SQ.YD.	GALLON	AVG. WID. FEET	SQ.YD.	POUND / SQ.YD.	PG 64-22 TON	PG 70-22 TON	PG 76-22 TON	AVG. WID. FEET	SQ.YD.	POUND / SQ.YD.	PG 64-22 TON	PG 70-22 TON	PG 76-22 TON	AVG. WID. FEET	SQ.YD.	POUND / SQ.YD.	PG 70-22 TON	PG 76-22 TON	AVG. WID. FEET	SQ.YD.	POUND / SQ.YD.	PG 64-22 TON	PG 70-22 TON	PG 76-22 TON	TOTAL PG 64-22 TON	TOTAL PG 70-22 TON	TOTAL PG 76-22 TON
MAIN LANES																																			
1256+74.80	1307+74.00	AUXILIARY LANE OUTSIDE WIDENING LT.	5099.20	250.50	12773	49.38	27977.61	0.05	1399	12.50	7082.22	880			3116	12.25	6940.58	440			1527	12.13	6872.59	220		756	24.00	13597.87	220			1496			2252
1264+00.00	1312+72.88	AUXILIARY LANE OUTSIDE WIDENING RT.	4872.88	250.50	12207	49.38	26735.87	0.05	1337	12.50	6767.89	880			2978	12.25	6632.53	440			1459	12.13	6567.56	220		722	24.00	12994.35	220			1429			2151
1314+25.00	1323+04.67	INSIDE WIDENING	879.67	41.25	3618	154.75	15125.44	0.05	756	39.00	3811.90	880			1677	38.50	3763.03	440			828	38.25	3738.60	220		411	56.00	5473.50	220			602			1013
1325+52.84	1329+28.00	INSIDE WIDENING	375.16	41.25	1543	154.75	6450.67	0.05	323	39.00	1625.69	880			715	38.50	1604.85	440			353	38.25	1594.43	220		175	56.00	2334.33	220			257			432
1329+28.00	1336+50.00	INSIDE WIDENING (FULL DEPTH SHLDR.)	722.00	247.75	1789	224.00	17969.78	0.05	898	56.00	4492.44	880			1977	56.00	4492.44	440			988	56.00	4492.44	220		494	56.00	4492.44	220			494			988
1336+50.00	1339+20.00	FULL REPLACEMENT	270.00	868.75	2346	514.75	15442.50	0.05	772	129.00	3870.00	880			1703	128.50	3855.00	440			848	128.25	3847.50	220		423	140.00	4200.00	220			462			885
1339+20.00	1347+11.00	INSIDE WIDENING (FULL DEPTH SHLDR.)	791.00	247.75	1960	224.00	19687.11	0.05	984	56.00	4921.78	880			2166	56.00	4921.78	440			1083	56.00	4921.78	220		541	56.00	4921.78	220			541			1082
1347+11.00	1424+11.50	INSIDE WIDENING	7700.50	41.25	31668	154.75	132405.82	0.05	6620	39.00	33368.83	880			14682	38.50	32941.03	440			7247	38.25	32727.13	220		3600	56.00	47914.22	220			5271			8871
1424+11.34	1433+42.90	INSIDE & OUTSIDE WIDENING LT.	VARIES	VARIES	4451	VARIES	7847.68	0.05	392	VARIES	1993.33	880			877	VARIES	1943.07	440			427	VARIES	1917.95	220		211	VARIES	4451.74	220			490			701
1424+11.65	1434+28.66	INSIDE & OUTSIDE WIDENING RT.	VARIES	VARIES	4644	VARIES	8302.56	0.05	415	VARIES	2108.17	880			928	VARIES	2056.58	440			452	VARIES	2029.64	220		223	VARIES	4650.57	220			512			735
ADDITIONAL FOR SUPERELEVATION																																			
1338+66.71	1341+66.71	SUPER TRANSITION LT. (N.C. - 7.7%) (FULL DEPTH SHLDR.)	300.00	1.94	6																														
1341+66.71	1347+11.00	MAX SUPER LT. (7.7%) (FULL DEPTH SHLDR.)	544.29	3.88	21																														
1347+11.00	1348+36.22	MAX SUPER LT. (7.7%)	125.22	2.88	4																														
1348+36.22	1351+00.65	SUPER TRANSITION LT. (7.7% - N.C.)	264.43	1.44	4																														
1335+66.71	1341+66.71	SUPER TRANSITION RT. (N.C. - 7.7%) (FULL DEPTH SHLDR.)	600.00	0.81	5																														
1341+66.71	1347+11.00	MAX SUPER RT. (7.7%) (FULL DEPTH SHLDR.)	544.29	1.63	9																														
1347+11.00	1348+36.22	MAX SUPER RT. (7.7%)	125.22	7.13	9																														
1348+36.22	1354+36.22	SUPER TRANSITION RT. (7.7% - N.C.)	600.00	3.56	21																														
1376+60.33	1382+60.33	SUPER TRANSITION LT. (N.C. - 6.6%)	600.00	1.44	9																														
1382+60.33	1413+51.16	MAX SUPER LT. (6.6%)	3090.83	2.88	89																														
1413+51.16	1419+51.16	SUPER TRANSITION LT. (6.6% - N.C.)	600.00	1.44	9																														
1380+57.13	1382+97.83	SUPER TRANSITION RT. (N.C. - 6.6%)	240.70	3.56	9																														
1382+97.83	1413+13.66	MAX SUPER RT. (6.6%)	3015.83	7.13	215																														
1413+13.66	1415+54.36	SUPER TRANSITION RT. (6.6% - N.C.)	240.70	3.56	9																														
ADDITIONAL FOR GUARDRAIL WIDENING																																			
1260+40.00	1260+73.00	TAPER FOR GUARDRAIL WIDENING ON LT.	33.00	26.38	9																						2.75	10.08	220			1			1
1260+73.00	1261+58.00	GUARDRAIL WIDENING ON LT. (NORMAL SLOPE)	85.00	52.75	45																						5.50	51.94	220			6			6
1261+58.00	1262+08.00	GUARDRAIL WIDENING ON LT. (SLOPE TRANS.)	50.00	35.25	18																						5.50	30.56	220			3			3
1262+08.00	1267+50.00	GUARDRAIL WIDENING ON LT. (3:1)	542.00	17.75	96																						5.50	331.22	220			36			36
1267+50.00	1268+00.00	GUARDRAIL WIDENING ON LT. (SLOPE TRANS.)	50.00	35.25	18																						5.50	30.56	220			3			3
1268+00.00	1268+85.00	GUARDRAIL WIDENING ON LT. (NORMAL SLOPE)	85.00	52.75	45																						5.50	51.94	220			6			6
1268+85.00	1269+19.32	TAPER FOR GUARDRAIL WIDENING ON LT.	34.32	26.38	9																						2.75	10.49	220			1			1
1270+11.12	1270+44.00	TAPER FOR GUARDRAIL WIDENING ON LT.	32.88	26.38	9																						2.75	10.05	220			1			1
1270+44.00	1270+94.00	GUARDRAIL WIDENING ON LT. (NORMAL SLOPE)	50.00	52.75	26																						5.50	30.56	220			3			3
1270+94.00	1271+25.00	GUARDRAIL WIDENING ON LT. (SLOPE TRANS.)	31.00	32.13	10																						5.50	18.94	220			2			2
1271+25.00	1273+23.50	GUARDRAIL WIDENING ON LT. (2.5:1)	198.50	11.50	23																						5.50	121.31	220			13			13
1273+23.50	1273+73.50	GUARDRAIL WIDENING ON LT. (SLOPE TRANS.)	50.00	32.13	16																						5.50	30.56	220			3			3
1273+73.50	1274+64.00	GUARDRAIL WIDENING ON LT. (NORMAL SLOPE)	90.50	52.75	48																						5.50	55.31	220			6			6
1274+64.00	1274+97.02	TAPER FOR GUARDRAIL WIDENING ON LT.	33.02	26.38	9																						2.75	10.09	220			1			1
1277+55.81	1277+90.00	TAPER FOR GUARDRAIL WIDENING ON LT.	34.19	26.38	9																						2.75	10.45	220			1			1
1277+90.00	1278+75.00	GUARDRAIL WIDENING ON LT. (NORMAL SLOPE)	85.00	52.75	45																						5.50	51.94	220			6			6
1278+75.00	1279+25.00	GUARDRAIL WIDENING ON LT. (SLOPE TRANS.)	50.00	35.25	18																						5.50	30.56	220			3			3
1279+25.00	1280+35.00	GUARDRAIL WIDENING ON LT. (3:1)	110.00	17.75	20																						5.50	67.22	220			7			7
1280+35.00	1280+85.00	GUARDRAIL WIDENING ON LT. (SLOPE TRANS.)	50.00	35.25	18																						5.50	30.56	220			3			3
1280+85.00	1281+60.00	GUARDRAIL WIDENING ON LT. (NORMAL SLOPE)	75.00	52.75	40																						5.50	45.83	220			5			5
1281+60.00	1281+92.94	TAPER FOR GUARDRAIL WIDENING ON LT.	32.94	26.38	9																						2.75	10.07	220			1			1
1299+29.37	1299+62.37	TAPER FOR GUARDRAIL WIDENING ON LT.	33.00	26.38	9																						2.75	10.08	220			1			1
1299+62.37	1302+07.00	GUARDRAIL WIDENING ON LT. (NORMAL SLOPE)	244.63	52.75	129																						5.50	149.50	220			16			16
1302+07.00	1302+40.00	TAPER FOR GUARDRAIL WIDENING ON LT.	33.00	26.38	9																						2.75	10.08	220			1			1
1269+21.51	1269+54.00	TAPER FOR GUARDRAIL WIDENING ON RT.	32.49	26.38	9																						2.75	9.93	220			1			1
1269+54.00	1270+39.72	GUARDRAIL WIDENING ON RT. (NORMAL SLOPE)	85.72	52.75	45																						5.50	52.38	220			6			6
1270+39.72	1270+89.66	GUARDRAIL WIDENING ON RT. (SLOPE TRANS.)	49.94	32.13	16																						5.50	30.52	220			3			3
1270+89.66	1273+00.00	GUARDRAIL WIDENING ON RT. (2.5:1)	210.34	11.50	24																						5.50	128.54	220			14			14
1273+00.00	1273+74.00	GUARDRAIL WIDENING ON RT. (NORMAL SLOPE)	74.00	52.75	39																						5.50	45.22	220			5			5
1273+74.00	1274+07.21	TAPER FOR GUARDRAIL WIDENING ON RT.	33.21	26.38	9																						2.75	10.15	220			1			1
1286+89.73	1287+17.79	TAPER FOR GUARDRAIL WIDENING ON RT.	28.06	26.38	7																						2.75	8.57	220			1			1
1287+17.79	1289+88.85	GUARDRAIL WIDENING ON RT. (NORMAL SLOPE)	271.06	52.75	143																						5.50	165.65	220			18			18
1289+88.85	1290+21.75	TAPER FOR GUARDRAIL WIDENING ON RT.	32.90	26.38	9																						2.75	10.05	220			1			1
1307+39.08	1307+73.02	TAPER FOR GUARDRAIL WIDENING ON RT.	33.94	26.38	9																						2.75	10.37	220			1			1
1307+73.02	1310+40.80	GUARDRAIL WIDENING ON RT. (NORMAL SLOPE)	267.78	52.75	141																						5.50	163.64	220			18			18
1310+40.80	1310+75.07	TAPER FOR GUARDRAIL WIDENING ON RT.	34.27	26.38	9																						2.75	10.47	220			1			1
1336+55.65	1336+87.50	TAPER FOR GUARDRAIL WIDENING ON LT.	31.85	27.88	9																						2.75	9.73	220			1			1
1336+87.50	1336+96.12	GUARDRAIL WIDENING ON LT. (NORMAL SLOPE)	8.62	55.75	5																						5.50	5.27	220			1			1
1336+96.12	1337+45.00	GUARDRAIL WIDENING ON LT. (SLOPE TRANS.)	48.88	36.50	18																						5.50	29.87	220			3			3
1337+45.00	1339+50.00	GUARDRAIL WIDENING ON LT. (3:1)	205.00	17.25	35																						5.50	125.28	220			14			14
1339+50.00	1339+65.00	GUARDRAIL WIDENING ON LT. (SLOPE TRANS.)	15.00	36.50	5																						5.50	9.17	220			1			1
1339+65.00	1340+81.14	GUARDRAIL WIDENING ON LT. (NORMAL SLOPE)	116.14	55.75	65																						5.50	70.97	220			8			8
1340+81.14	1341+15.27	TAPER FOR GUARDRAIL WIDENING ON LT.	34.13	27.88	10																						2.75	10.43	220			1			1
1334+48.68	1334+82.11	TAPER FOR GUARDRAIL WIDENING ON RT.	33.43	27.88	9																						2.75	10.21	220			1			1
1334+82.11	1335+65.00	GUARDRAIL WIDENING ON RT. (NORMAL SLOPE)	82.89	55.75	46																						5.50	50.66	220			6			6
1335+65.00	1336+17.00	GUARDRAIL WIDENING ON RT. (SLOPE TRANS.)	52.00	36.50	19																						5.50	31.78	220			3			3
1336+17.00	1338+20.71	GUARDRAIL WIDENING ON RT. (3:1)	203.71	17.25	35																						5.50	124.49	220			14			14
1338+20.71	1338+70.71	GUARDRAIL WIDENING ON RT. (SLOPE TRANS.)	50.00	36.50	18																						5.50	30.56	220			3			3
1338+70.71	1338+82.50	GUARDRAIL WIDENING ON RT. (NORMAL SLOPE)	11.79	55.75	7																						5.50	7.21	220			1			1
1338+82.50	1339+17.50	TAPER FOR GUARDRAIL WIDENING ON RT.	35.00	27.88	10																						2.75	10.69	220			1			1
1377+00.28	1377+33.00	TAPER FOR GUARDRAIL WIDENING ON RT.	32.72	46.38	15																						2.75	10.00	220			1			1
1377+33.00	1379+78.00	GUARDRAIL WIDENING ON RT. (NORMAL SLOPE)	245.00	92.75	227																						5.50	149.72	220			16			16
1379+78.00	1380+11.07	TAPER FOR GUARDRAIL WIDENING ON RT.	33.07	46.38	15																						2.75	10.10	220			1			1
1414+65.85	1415+01.00	TAPER FOR GUARDRAIL WIDENING ON RT.	35.15	46.38	16																						2.75	10.74	220			1			1
1415+01.00	1417+95.26	GUARDRAIL WIDENING ON RT. (NORMAL SLOPE)	294.26	92.75	273																						5.50	179.83	220			20			20
1417+95.26	1418+17.42	TAPER FOR GUARDRAIL WIDENING ON RT.	22.16	46.38	10																						2.75	6.77	220			1			1
1427+73.03	1428+05.95	TAPER FOR GUARDRAIL WIDENING ON LT.	32.92	26.38	9																						2.75	10.06	220			1			1
1428+05.95	1429+10.00	GUARDRAIL WIDENING ON LT. (NORMAL SLOPE)	104.05	52.75	55																						5.50	63.59	220			7			7
1429+10.00	1429+25.00	GUARDRAIL WIDENING ON LT. (SLOPE TRANS.)	15.00	35.25	5																						5.50	9.17	220			1			1
1429+25.00	1431+40.00	GUARDRAIL WIDENING ON LT. (3:1)	215.00	17.75	38																						5.50	131.39	220			14			14
1431+40.00	1431+90.75	GUARDRAIL WIDENING ON LT. (SLOPE TRANS.)	50.75	35.25	18																						5.50	31.01	220			3			3
1431+90.75	1432+75.95	GUARDRAIL WIDENING ON LT. (NORMAL SLOPE)	85.20	52.75	45																						5.50	52.07	220			6			6
1432+75.95	1433+01.94	TAPER FOR GUARDRAIL WIDENING ON LT.	25.99	26.38	7																						2.75	7.94	220			1			1
1427+17.76	1427+50.68	TAPER FOR GUARDRAIL WIDENING ON RT.	32.92	26.38	9																						2.75	10.06	220			1			1
1427+50.68	1428+35.46	GUARDRAIL WIDENING ON RT. (NORMAL SLOPE)	84.78	52.75	45																						5.50	51.81	220			6			6
1428+35.46	1428+85.67	GUARDRAIL WIDENING ON RT. (SLOPE TRANS.)	50.21	35.25	18																						5.50	30.68	220			3			3
1428+85.67	1431+33.17	GUARDRAIL WIDENING ON RT. (3:1)	247.50	17.75	44																						5.50	151.25	220			17			17
1431+33.17	1431+82.96	GUARDRAIL WIDENING ON RT. (SLOPE TRANS.)	49.79	35.25	18																						5.50	30.43	220			3			3
1431+82.96	1432+68.09	GUARDRAIL WIDENING ON RT. (NORMAL SLOPE)	85.13	52.75	45																						5.50	52.02	220			6			6
1432+68.09	1433+32.62	TAPER FOR GUARDRAIL WIDENING ON RT.	64.53	26.38	17																						2.75	19.72	220			2			2
SUBTOTALS (BOX 1 OF 2):					79785				13896						30819						15212					7556						11922			19478

BASIS OF ESTIMATE:
ACHM SURFACE COURSE (1/2")..................94.4% MIN.AGGR...............5.6% ASPHALT BINDER
ACHM BINDER COURSE (1")..........................95.3% MIN.AGGR...............4.7% ASPHALT BINDER
ACHM BASE COURSE (1 1/2").......................95.7% MIN.AGGR...............4.3% ASPHALT BINDER
MAXIMUM NUMBER OF GYRATIONS = 115 FOR PG 64-22
MAXIMUM NUMBER OF GYRATIONS = 160 FOR PG 70-22
MAXIMUM NUMBER OF GYRATIONS = 205 FOR PG 76-22

5/19/2016
5:30:43 PM
...\QTY\r_CA0902_QTY_HWY540_07.dgn

QUANTITIES

BASE AND SURFACING (BOX 2 OF 2)

STATION	STATION	LOCATION	LENGTH	AGGREGATE BASE COURSE (CLASS 7)		TACK COAT				ACHM BASE COURSE (1 1/2")						ACHM BINDER COURSE (1")						ACHM SURFACE COURSE (1/2")													
			FEET	TON / STATION	TON	AVG. WID. FEET	SQ.YD.	GALLONS / SQ.YD.	GALLON	AVG. WID. FEET	SQ.YD.	POUND / SQ.YD.	PG 64-22 TON	PG 70-22 TON	PG 76-22 TON	AVG. WID. FEET	SQ.YD.	POUND / SQ.YD.	PG 64-22 TON	PG 70-22 TON	PG 76-22 TON	AVG. WID. FEET	SQ.YD.	POUND / SQ.YD.	PG 70-22 TON	PG 76-22 TON	AVG. WID. FEET	SQ.YD.	POUND / SQ.YD.	PG 64-22 TON	PG 70-22 TON	PG 76-22 TON	TOTAL PG 64-22 TON	TOTAL PG 70-22 TON	TOTAL PG 76-22 TON
ADDITIONAL FOR STAGE CONSTRUCTION																																			
103+58.98	105+51.95	TEMPORARY RAMP TIE IN	192.97	VARIES	95	VARIES	191.82	0.05	10							VARIES	191.82	440			42						VARIES	187.85	220			21			21
107+70.00	107+83.20	TEMPORARY RAMP LT. WEDGE	13.20	28.25	4																														
107+83.20	109+60.96	TEMPORARY RAMP LT. WEDGE	177.76	11.25	20																														
109+60.96	109+80.00	TEMPORARY RAMP LT. WEDGE	19.04	28.25	5																														
109+80.00	113+84.34	TEMPORARY RAMP LT. WEDGE	404.34	14.75	60																														
105+51.95	113+50.00	TEMPORARY RAMP MAIN LANE & RT. WEDGE	798.05	89.00	710	15.33	1359.35	0.05	68							15.33	1359.35	440			299						15.00	1330.08	220			146			146
113+50.00	113+84.38	TEMPORARY RAMP MAIN LANE & RT. WEDGE	34.38	89.00	31	15.33	58.56	0.05	3							15.33	58.56	440			13						15.00	57.30	220			6			6
1343+13.62	1355+86.00	TEMPORARY RAMP ACCEL. LANE	1272.38	VARIES	770	VARIES	1584.41	0.05	79							VARIES	1584.41	440			349						VARIES	1561.31	220			172			172
1332+90.00	1335+22.53	MOT OUTSIDE SHOULDER WIDENING RT.	232.53	VARIES	98	VARIES	1003.96	0.05	50	VARIES	255.03	880			112	VARIES	248.57	440			55	VARIES	245.33	220			VARIES	242.10	220			27			27
1339+20.00	1342+80.26	MOT OUTSIDE SHOULDER WIDENING LT.	360.26	VARIES	161	VARIES	1648.18	0.05	82	VARIES	418.40	880			184	VARIES	408.23	440			90	VARIES	403.15	220			VARIES	398.06	220			44			44
10+00.00	14+67.50	TEMPORARY SHARED USE PATH	467.50	26.00	122																						10.00	519.44	220	57			57		
HWY. 102 & HWY. 102 RAMP 4																																			
5+00.00	18+00.00	HWY. 102 MILL AND OVERLAY LT.	1300.00			VARIES	3892.11	0.17	662			880						330				VARIES	3892.11	220		428			220						428
5+00.00	18+00.00	HWY. 102 MILL AND OVERLAY RT.	1300.00			VARIES	3811.50	0.17	648			880						330				VARIES	3811.50	220		419			220						419
6+21.02	7+50.00	HWY. 102 OUTSIDE WIDENING RT.	128.98			34.75	498.01	0.05	25	13.25	189.89	880		84		10.75	154.06	330		25		10.75	154.06	220		17	10.75	154.06	220			17			34
7+50.00	14+59.17	HWY. 102 OUTSIDE WIDENING RT.	709.17			43.00	3388.26	0.05	169	16.00	1260.75	880		555		13.50	1063.76	330		176		13.50	1063.76	220		117	13.50	1063.76	220			117			234
14+59.17	16+67.07	HWY. 102 OUTSIDE WIDENING RT.	207.90			44.50	1027.95	0.05	51	16.50	381.15	880		168		14.00	323.40	330		53		14.00	323.40	220		36	14.00	323.40	220			36			72
1021+95.92	1025+11.04	HWY. 102 RAMP 4 OUTSIDE WIDENING RT. (TRANSITION)	315.12	VARIES	506	VARIES	1445.62	0.05	72	VARIES	367.33	880			162	VARIES	358.43	440			79	VARIES	352.53	220		39	VARIES	537.92	220			59			98
1025+11.04	1025+91.05	HWY. 102 RAMP 4 OUTSIDE WIDENING RT.	80.01	VARIES	146	59.38	527.89	0.05	26	15.00	133.35	880			59	14.75	131.13	440			29	14.63	130.06	220		14	18.50	164.47	220			18			32
1025+91.05	1029+43.40	HWY. 102 RAMP 4 OUTSIDE WIDENING RT.	352.35	167.00	588	59.38	2324.73	0.05	116	15.00	587.25	880			258	14.75	577.46	440			127	14.63	572.76	220		63	18.50	724.28	220			80			143
1029+44.89	1030+86.34	HWY. 102 RAMP 4 OUTSIDE WIDENING LT. & RT.	141.45	VARIES	240	VARIES	1404.37	0.05	70	VARIES	398.86	880			175	VARIES	372.62	440			82	VARIES	256.62	220		28	VARIES	426.64	220			47			75
HWY. 72, LOOP RAMPS, & HWY. 72 RAMP 3																																			
184+41.05	184+69.22	HWY. 72 OUTSIDE WIDENING RT.	28.17			40.50	126.77	0.05	6	12.00	37.56	880	17			9.50	29.74	330	5			9.50	29.74	220	3		9.50	29.74	220		3			6	
184+69.22	187+48.69	HWY. 72 OUTSIDE WIDENING RT.	279.47			46.50	1443.93	0.05	72	13.50	419.21	880	184			11.00	341.57	330	56			11.00	341.57	220	38		11.00	341.57	220		38			76	
187+48.69	188+05.25	HWY. 72 OUTSIDE WIDENING RT.	56.56			40.50	254.52	0.05	13	12.00	75.41	880	33			9.50	59.70	330	10			9.50	295.00	220	32		9.50	59.70	220		7			39	
188+85.65	188+98.75	HWY. 72 OUTSIDE WIDENING LT. & RT.	13.1	33.50	4	VARIES	146.03	0.05	7	VARIES	39.44	880	17			VARIES	35.47	330	6			VARIES	35.32	220	4		VARIES	36.71	220		4			8	
188+98.75	190+13.28	HWY. 72 OUTSIDE WIDENING LT. & RT.	114.53	33.50	38	103.77	1320.53	0.05	66	27.96	355.81	880	157			25.23	321.07	330	53			25.13	319.79	220	35		26.00	330.86	220		36			71	
190+13.28	191+56.17	HWY. 72 OUTSIDE WIDENING LT. & RT.	142.89	33.50	48	VARIES	2236.65	0.05	112	VARIES	591.05	880	260			VARIES	547.90	330	90			VARIES	546.33	220	60		VARIES	559.53	220		62			122	
191+56.17	193+03.03	HWY. 72 OUTSIDE WIDENING LT. & RT.	146.86	49.50	73	VARIES	2680.25	0.05	134	VARIES	702.96	880	309			VARIES	658.42	330	109			VARIES	656.71	220	72		VARIES	671.01	220		74			146	
195+69.21	197+32.61	HWY. 72 OUTSIDE WIDENING LT. & RT.	163.40	49.50	81	VARIES	2999.70	0.05	150	VARIES	786.44	880	346			VARIES	737.02	330	122			VARIES	735.19	220	81		VARIES	750.58	220		83			164	
197+32.61	199+69.89	HWY. 72 OUTSIDE WIDENING LT. & RT.	237.28	33.50	79	103.77	2735.84	0.05	137	27.96	737.15	880	324			25.23	665.17	330	110			25.13	662.54	220	73		26.00	685.48	220		75			148	
199+69.89	200+38.66	HWY. 72 OUTSIDE WIDENING LT. & RT.	68.77	33.50	23	VARIES	405.58	0.05	20	VARIES	106.89	880	47			VARIES	99.23	330	16			VARIES	98.38	220	11		VARIES	105.44	220		12			23	
200+38.66	203+46.40	HWY. 72 OUTSIDE WIDENING LT. & RT.	307.74			VARIES	1887.18	0.05	94	VARIES	721.22	880	317			VARIES	582.98	330	96			VARIES	582.98	220	64		VARIES	582.98	220		64			128	
203+46.40	203+89.32	HWY. 72 OUTSIDE WIDENING LT. & RT.	42.92			46.50	221.75	0.05	11	13.50	64.38	880	28			11.00	52.46	330	9			11.00	52.46	220	6		11.00	52.46	220		6			12	
203+89.32	204+07.25	HWY. 72 OUTSIDE WIDENING LT. & RT.	17.93			VARIES	65.67	0.05	3	VARIES	24.39	880	11			VARIES	20.64	330	3			VARIES	20.64	220	2		VARIES	20.64	220		2			4	
204+23.83	207+81.42	HWY. 72 OUTSIDE WIDENING LT. & RT.	357.59			VARIES	2258.85	0.05	113	VARIES	852.87	880	375			VARIES	702.99	330	116			VARIES	702.99	220	77		VARIES	702.99	220		77			154	
207+81.42	211+78.72	HWY. 72 OUTSIDE WIDENING LT. & RT.	397.30			186.00	8210.87	0.05	411	27.00	1191.90	880	524			22.00	971.18	330	160			22.00	971.18	220	107		22.00	971.18	220		107			214	
211+78.72	212+78.72	HWY. 72 OUTSIDE WIDENING LT. & RT.	100.00			VARIES	41.18	0.05	21	VARIES	156.34	880	69			VARIES	127.42	330	21			VARIES	127.42	220	14		VARIES	127.42	220		14			28	
300+31.07	300+88.52	HWY. 72 RAMP 3 OUTSIDE WIDENING RT.	57.45	VARIES	113	VARIES	328.55	0.05	16	VARIES	83.17	880			37	VARIES	81.52	440			18	VARIES	80.69	220		9	VARIES	104.94	220			12			21
300+88.52	303+51.14	HWY. 72 RAMP 3 OUTSIDE WIDENING RT.	262.62	188.00	494	49.38	1440.91	0.05	72	12.50	364.75	880			160	12.25	357.46	440			79	12.13	353.95	220		39	16.00	466.88	220			51			90
303+51.14	304+53.26	HWY. 72 RAMP 3 OUTSIDE WIDENING RT.	102.12	162.75	166	24.69	280.15	0.05	14	6.25	70.92	880			31	6.13	69.56	440			15	6.06	68.76	220		8	10.00	113.47	220			12			20
192+70.31	200+26.14	HWY. 72 LOOP RAMP 6	755.83	VARIES	3254	62.75	5269.81	0.05	263	16.00	1343.70	880			591	15.50	1301.71	440			286	15.25	1280.71	220		141	25.00	2099.53	220			231			372
1433+32.29	1440+88.31	HWY. 72 LOOP RAMP 5	756.02	VARIES	3257	62.75	5271.14	0.05	264	16.00	1344.04	880			591	15.50	1302.03	440			286	15.25	1281.03	220		141	25.00	2100.06	220			231			372
195+68.29	196+87.66	HWY. 72 GUARDRAIL WIDENING ON RT. (NORMAL SLOPE)	119.37	33.25	40																						5.50	72.95	220			8			8
196+87.66	197+09.96	HWY. 72 TAPER FOR GUARDRAIL WIDENING ON RT.	22.30	16.63	4																						2.75	6.81	220			1			1
205+75.00	206+75.00	HWY. 72 MILL & INLAY LT. & RT.	100.00			29.00	322.22	0.17	55																		29.00	322.22	220		35			35	
206+75.00	212+78.72	HWY. 72 MILL & INLAY RT.	603.72			12.00	804.96	0.17	137																		12.00	804.96	220		89			89	
212+78.72	213+78.72	HWY. 72 MILL & INLAY LT. & RT.	100.00			22.00	244.44	0.17	42																		22.00	244.44	220		27			27	
206+75.00	212+78.72	HWY. 72 WEDGE LT.	603.72			10.00	670.80	0.17	114																		10.00	670.80	VARIES		62			62	
206+75.00	212+78.72	HWY. 72 OVERLAY LT.	603.72			10.00	670.80	0.05	34																		10.00	670.80	220		74			74	
188+80.66	192+76.42	HWY. 72 MOT OUTSIDE SHOULDER WIDENING RT.	395.76	VARIES	13	VARIES	202.51	0.05	10							VARIES	202.51	330	33								VAREIS	196.10	220		22			22	
196+00.00	199+87.94	HWY. 72 MOT OUTSIDE SHOULDER WIDENING RT.	387.94	VARIES	16	VARIES	245.60	0.05	12							VARIES	245.60	330	41								VARIES	239.31	220		26			26	
206+00.12	212+57.24	HWY. 72 MOT OUTSIDE SHOULDER WIDENING RT.	657.12	VARIES	209	VARIES	529.59	0.05	26							VARIES	529.59	330	87								VARIES	518.97	220		57			57	
213+04.35	215+00.00	HWY. 72 MOT OUTSIDE SHOULDER WIDENING RT.	195.65	VARIES	61	VARIES	136.71	0.05	7							VARIES	136.71	330	23								VARIES	133.54	220		15			15	
I-49 MILL & INLAY																																			
1314+25.00	1323+04.67	I-49 EXISTING LANES AND 2' OUTSIDE SHOULDER	879.67			52.00	5082.54	0.17	864																		52.00	5082.54	220			559			559
1325+52.84	1336+50.00	I-49 EXISTING LANES AND 2' OUTSIDE SHOULDER	1097.16			52.00	6339.15	0.17	1078																		52.00	6339.15	220			697			697
1339+20.00	1424+11.50	I-49 EXISTING LANES AND 2' OUTSIDE SHOULDER	8491.50			52.00	49062.00	0.17	8341																		52.00	49062.00	220			5397			5397
1424+11.50	1433+34.06	I-49 EXISTING LANES	922.56			48.00	4920.32	0.17	836																		48.00	4920.32	220			541			541
1433+34.06	1433+42.90	I-49 EXISTING LANES AND 2' INSIDE SHOULDER LT.	8.84			26.00	25.54	0.17	4																		26.00	25.54	220			3			3
1433+34.06	1434+28.67	I-49 EXISTING LANES AND 2' INSIDE SHOULDER RT.	94.61			26.00	273.32	0.17	46																		26.00	273.32	220			30			30
4+65.63	16+67.07	HWY. 102 LEFT TURN LANE	1201.44			VARIES	954.96	0.17	162																		VARIES	954.96	220			105			105
1312+06.92	1315+59.93	HWY. 102 RAMP 1 TO GORE	353.01			VARIES	744.44	0.17	127																		VARIES	744.44	220			82			82
1314+24.92	1316+50.68	HWY. 102 RAMP 4 TO GORE	225.76			VARIES	435.40	0.17	74																		VARIES	435.40	220			48			48
1332+52.00	1336+50.00	HWY. 102 RAMP 3 TO GORE	398.00			VARIES	750.82	0.17	128																		VARIES	750.82	220			83			83
1334+19.51	1336+50.00	HWY. 102 RAMP 2 TO GORE	230.49			VARIES	415.72	0.17	71																		VARIES	415.72	220			46			46
1339+20.00	1347+95.26	HWY. 102 RAMP 2 ACCELERATION LANE	875.26			VARIES	930.89	0.17	158																		VARIES	930.89	220			102			102
1339+20.00	1341+29.57	HWY. 102 RAMP 3 DECCELERATION LANE	209.57			VARIES	117.64	0.17	20																		VARIES	117.64	220			13			13
1411+72.96	1421+79.03	HWY. 72 RAMP 4 TO GORE	1006.07			VARIES	1224.65	0.17	208																		VARIES	1224.65	220			135			135
1415+70.73	1419+91.17	HWY. 72 RAMP 1 TO GORE	420.44			VARIES	664.04	0.17	113																		VARIES	664	220			73			73
		Subtotals ACNHPP-49-K18185 - I49 WIDENING:			81861				14188						3115						16060					7556				57		12338	57		19894
		Subtotals ACNHPP-49-K18185 - HWY. 102:			1480				1839					807	654					254	317					1161						374			1535
		Subtotals BIM-B49-0(216) - I49 MILL & INLAY:							12230																							7914			7914
		Subtotals BIM-B49-0(216) - HWY. 72:			7974				2436				3018		1410				1166		684				679	338					1071	546		1750	884
		SUBTOTALS (BOX 1 OF 2):			79785				13896						30819						15212					7556						11922			19478
		SUBTOTALS (BOX 2 OF 2):			11530				16797				3018	807	2360				1166	254	1849				679	1499				57	1071	9250	57	1750	10749
		TOTALS:			91315				30693				3018	807	33179				1166	254	17061				679	9055				57	1071	21172	57	1750	30227

BASIS OF ESTIMATE:
ACHM SURFACE COURSE (1/2")..................94.4% MIN. AGGR...............5.6% ASPHALT BINDER
ACHM BINDER COURSE (1")..........................95.3% MIN. AGGR...............4.7% ASPHALT BINDER
ACHM BASE COURSE (1 1/2")........................95.7% MIN. AGGR...............4.3% ASPHALT BINDER
MAXIMUM NUMBER OF GYRATIONS = 115 FOR PG 64-22
MAXIMUM NUMBER OF GYRATIONS = 160 FOR PG 70-22
MAXIMUM NUMBER OF GYRATIONS = 205 FOR PG 76-22

CONCRETE BASE

STATION	STATION	LOCATION	LENGTH	TACK COAT 0.05 GAL. PER SQ. YD.			ACHM SURFACE COURSE (1/2")					ACHM SURFACE COURSE (1/2")					PORTLAND CEMENT CONCRETE BASE		PORTLAND CEMENT CONCRETE BASE	
			FEET	AVG. WID. FEET	SQ. YD.	GAL.	AVG. WID. FEET	SQ. YD.	POUND/ SQ.YD.	PG 70-22 TON	PG 76-22 TON	AVG. WID. FEET	SQ. YD.	POUND/ SQ.YD.	PG 70-22 TON	PG 76-22 TON	AVG. WID. FEET	4" U.T. SQ. YD.	AVG. WID. FEET	8" U.T. SQ. YD.
6+26	7+00	HWY. 102 RT.	74.0	4.0	16.4	1	4.0	16.4	220		2	4.0	16.44	220		2	1.9	16	6.8	56
1029+43	1030+48	HWY. 102 RAMP 4 LT.	105.0	11.1	64.5	3	5.5	64.5	220		7	5.5	64.5	220		7	5.6	65	8.0	94
183+69	184+41	HWY. 72 RT.	71.0	8.3	32.7	2	4.1	32.7	220	4		4.1	32.7	220	4		4.2	33	6.6	52
188+05	188+86	HWY. 72 RT.	247.0	3.9	54.0	3	2.0	54.0	220	6		2.0	54.0	220	6		2.0	54	4.5	124
199+91	200+55	HWY. 72 RT.	192.0	3.8	40.3	2	1.9	40.3	220	4		1.9	40.3	220	4		1.9	40	4.4	94
200+16	200+79	HWY. 72 LT.	92.0	9.5	48.6	2	4.8	48.6	220	5		4.8	48.6	220	5		4.8	49	7.2	74
202+89	203+20	HWY. 72 LT.	45.0	6.8	16.9	1	3.4	16.9	220	2		3.4	16.9	220	2		3.4	17	6.0	30
203+46	203+93	HWY. 72 LT.	93.0	2.2	11.2	1	1.1	11.2	220	1		1.1	11.2	220	1		1.1	11	3.7	38
204+07	204+27	HWY. 72 RT.	35.0	10.0	19.5	1	5.0	19.5	220	2		5.0	19.5	220	2		5.1	20	7.7	30
204+31	204+60	HWY. 72 LT.	47.0	10.0	26.2	1	5.0	26.2	220	3		5.0	26.2	220	3		5.0	26	7.7	40
204+52	204+69	HWY. 72 RT.	30.0	8.2	13.7	1	4.1	13.7	220	2		4.1	13.7	220	2		4.2	14	6.6	22
205+45	205+71	HWY. 72 LT.	32.0	5.5	9.8	1	2.8	9.8	220	1		2.8	9.8	220	1		2.8	10	5.3	19
206+18	206+33	HWY. 72 LT.	15.0	6.6	5.5	1	3.3	5.5	220	1		3.3	5.5	220	1		3.6	6	6.0	10
212+06	212+79	HWY. 72 LT.	73.0	7.9	32.2	2	4.0	32.2	220	4		4.0	32.2	220	4		3.9	32	6.4	52
212+59	212+67	HWY. 72 RT.	25.0	8.4	11.6	1	4.2	11.6	220	1		4.2	11.6	220	1		4.3	12	6.8	19
		Subtotals ACNHPP-49-1(18)85 - HWY. 102:				4					9					9		81		150
		Subtotals BIM-B49-0(216) - HWY. 72:				19				36					36			324		604
		TOTALS:				23				36	9				36	9		405		754

BASIS OF ESTIMATE:
ACHM SURFACE COURSE (1/2")..................94.4% MIN. AGGR...............5.6% ASPHALT BINDER
HWY. 72 - MAXIMUM NUMBER OF GYRATIONS = 160 FOR PG 70-22
HWY. 102 - MAXIMUM NUMBER OF GYRATIONS = 205 FOR PG 76-22

STATE OF ARKANSAS
★ ★ ★
REGISTERED PROFESSIONAL ENGINEER
★ ★ ★
No. 8760
ANDREW E. FRIES
5/20/16

5/20/2016
12:34:19 PM
...\QTY\rCA0902_QTY_HWY540_08.dgn

DATE REVISED	DATE FILMED	DATE REVISED	DATE FILMED	FED. ROAD DIST. NO.	STATE	FED. AID PROJ. NO.	SHEET NO.	TOTAL SHEETS
				6	ARK.			
				JOB NO.		CA0902	173	581
				(1) A&B5979, 05982 QUANTITIES				57151

SCHEDULE OF BRIDGE QUANTITIES - JOB NO. CA0902

BRIDGE NO.	F.A.P. NO.	NAME PLATE TITLE	UNIT OF STRUCTURE	ITEM NO.	205	801	802	802	803	804	804	805	805	805	806	806
				ITEM	REMOVAL OF EXISTING BRIDGE STRUCTURE (SITE NO.)	UNCLASSIFIED EXCAVATION FOR STRUCTURES - BRIDGE	CLASS S CONCRETE - BRIDGE	CLASS S(AE) CONCRETE - BRIDGE	CLASS 2 PROTECTIVE SURFACE TREATMENT	REINFORCING STEEL - BRIDGE (GRADE 60)	EPOXY COATED REINFORCING STEEL (GRADE 60)	STEEL PILING (HP10X42) (1) (2)	STEEL PILING (HP12X53) (1) (2)	PREBORING (2)	METAL BRIDGE RAILING (TYPE H)	TRANSITIONAL APPROACH RAILING
				UNIT	LUMP SUM	CU. YD.	CU. YD.	CU. YD.	SQ. YD.	LB.	LB.	LIN. FT.	LIN. FT.	LIN. FT.	LIN. FT.	EACH
A5979	ACNHPP-49-1(18)85	HWY. 62	BENT 1			19	12.05		0.6	1,365		144				
			BENT 2			67	39.90			6,825			225	216		
			BENT 3			67	40.80			7,000			198	189		
			BENT 4			19	12.35		0.8	1,410		156				
			176'-0" CONTINUOUS COMPOSITE W-BEAM UNIT					148.00	630.7		39,850					
			EXIST. BR. NO. A5979													
			TOTALS FOR BRIDGE NO. A5979			172	105.10	148.00	632.1	16,600	39,850	300	423	405		
B5979	ACNHPP-49-1(18)85	HWY. 62	BENT 1			19	12.15		0.8	1,410		144				
			BENT 2			67	39.90			6,825			225	216		
			BENT 3			67	40.80			7,000			198	189		
			BENT 4			19	12.25		0.6	1,365		156				
			176'-0" CONTINUOUS COMPOSITE W-BEAM UNIT					148.00	630.7		39,850					
			EXIST. BR. NO. B5979													
			TOTALS FOR BRIDGE NO. B5979			172	105.10	148.00	632.1	16,600	39,850	300	423	405		
05982	BIM-B49-0(216)	I-49	BENT 1			52	27.40			3,400		252				1
			BENT 2			70	42.90			7,620			192			
			BENT 3			84	47.90			8,300			234			
			BENT 4			70	42.90			7,620			192			
			BENT 5			52	27.40			3,400		266				1
			264'-0" CONTINUOUS COMPOSITE W-BEAM UNIT					426.00	1,410.4		107,130				258	
			EXIST. BR. NO. 05982 (SITE NO. 4)													
			TOTALS FOR BRIDGE NO. 05982			328	188.50	426.00	1,410.4	30,340	107,130	518	618		258	2
		(3)	EXIST. BR. NO. A5980 (SITE NO. 5)		1											
			EXIST. BR. NO. B5980 (SITE NO. 6)		1											
			TOTALS FOR JOB NO. CA0902			672	398.70	722.00	2,674.6	63,540	186,830	1,118	1,464	810	258	2

(1) These steel piles shall be Grade 50 and are required to have special driving points which will not be paid for directly but shall be considered subsidiary to the items "Steel Piling (HP10x42 or HP12x53)".

(2) The quantities shown for steel piling and preboring are for estimating and bidding purposes only. Actual quantities will be determined in the field.

(3) Existing Br. Nos. A&B5980 are 50'-10" wide and 179'-2⅛" long and consists of a 177'-0" Cont. Comp. W-Beam unit supported by two column concrete intermediate bents with spread footings and steel H-Pile trestle end bents. Plans of the existing structures may be obtained upon request to the Construction Contract Procurement Section of the Program Management Division.

These bridges shall be removed in accordance with Section 205. All material from the existing bridges shall become property of the Contractor.

STATE OF ARKANSAS
REGISTERED PROFESSIONAL ENGINEER
No. 16185
JERRY D. STEVENSON
5.19.2016
BRIDGE ENGINEER

SHEET 1 OF 2
SCHEDULE OF BRIDGE QUANTITIES
HWY. 62/102 - HWY. 72 WIDENING
& INTCHNG. IMPVTS. (S)
BENTON COUNTY
ROUTE I-49 SEC. 29
ARKANSAS STATE HIGHWAY COMMISSION
LITTLE ROCK, ARK.

DRAWN BY: TLW DATE: 05/01/15 FILENAME: bCA0902_ql.dgn
CHECKED BY: JDS DATE: 05/01/15 SCALE: NO SCALE
DESIGNED BY: TG DATE: 05/01/15
BRIDGE NO. A&B5979, 05982 DRAWING NO. 57151

DATE REVISED	DATE FILMED	DATE REVISED	DATE FILMED	FED. ROAD DIST. NO.	STATE	FED. AID PROJ. NO.	SHEET NO.	TOTAL SHEETS
				6	ARK.			
				JOB NO.		CA0902	174	581
				(1)	A&B5979, 05982 QUANTITIES			57152

SCHEDULE OF BRIDGE QUANTITIES (CONTINUED) - JOB NO. CA0902

BRIDGE NO.	F.A.P. NO.	NAME PLATE TITLE	UNIT OF STRUCTURE	ITEM NO.	SP & 807	807	808	809	812	816	SP & 820	820	821	SP JOB CA0902	SP JOB CA0902
				ITEM	STRUCTURAL STEEL IN BEAM SPANS (M 270, GRADE 50)	PAINTING STRUCTURAL STEEL	ELASTOMERIC BEARINGS	SILICONE JOINT SEALANT	BRIDGE NAME PLATE (TYPE D)	CONCRETE RIPRAP	CLEANING AND PAINTING EXISTING STRUCTURAL STEEL (TYPE II)	DISPOSAL OF HAZARDOUS WASTE (SITE NO.)	MODIFICATION OF EXISTING BRIDGE STRUCTURE (BRIDGE NO.)	ARCHITECTURAL FINISH	TEXTURED COATING FINISH
				UNIT	LB.	TON	CU. IN.	LIN. FT.	EACH	CU. YD.	TON	LUMP SUM	LUMP SUM	SQ. FT.	SQ. YD.
A5979	ACNHPP-49-1(18)85	HWY. 62	BENT 1		380	0.2	1,134								
			BENT 2				1,827								
			BENT 3				1,827								
			BENT 4		380	0.2	1,134								
			176'-0" CONTINUOUS COMPOSITE W-BEAM UNIT		88,960	44.5		131							
			EXIST. BR. NO. A5979										1		
			TOTALS FOR BRIDGE NO. A5979		89,720	44.9	5,922	131					1		
B5979	ACNHPP-49-1(18)85	HWY. 62	BENT 1		380	0.2	1,134								
			BENT 2				1,827								
			BENT 3				1,827								
			BENT 4		380	0.2	1,134								
			176'-0" CONTINUOUS COMPOSITE W-BEAM UNIT		88,960	44.5		131							
			EXIST. BR. NO. B5979										1		
			TOTALS FOR BRIDGE NO. B5979		89,720	44.9	5,922	131					1		
05982	BIM-B49-0(216)	I-49	BENT 1		760	0.4	2,232			28				66	61
			BENT 2				3,708								195
			BENT 3				3,708								176
			BENT 4				3,708								190
			BENT 5		760	0.4	2,232			28				59	61
			264'-0" CONTINUOUS COMPOSITE W-BEAM UNIT		299,540	149.8		170	1					1230	597
			EXIST. BR. NO. 05982 (SITE NO. 4)								130.0	1	1		
			TOTALS FOR BRIDGE NO. 05982		301,060	150.6	15,588	170	1	56	130.0	1	1	1,355	1,280
			(3) EXIST. BR. NO. A5980 (SITE NO. 5)												
			EXIST. BR. NO. B5980 (SITE NO. 6)												
			TOTALS FOR JOB NO. CA0902		480,500	240.4	27,432	432	1	56	130.0			1,355	1,280

STATE OF ARKANSAS
REGISTERED PROFESSIONAL ENGINEER
No. 16183
JERRY L. TEMPERSON
5.19.2016
BRIDGE ENGINEER

SHEET 2 OF 2
SCHEDULE OF BRIDGE QUANTITIES
HWY. 62/102 - HWY. 72 WIDENING
& INTCHNG. IMPVTS. (S)
BENTON COUNTY
ROUTE I-49 SEC. 29
ARKANSAS STATE HIGHWAY COMMISSION
LITTLE ROCK, ARK.

DRAWN BY: TLW DATE: 05/01/15 FILENAME: bCA0902_q2.dgn
CHECKED BY: JDS DATE: 05/01/15 SCALE: NO SCALE
DESIGNED BY: TG DATE: 05/01/15
BRIDGE NO. A&B5979, 05982 DRAWING NO. 57152

SUMMARY OF QUANTITIES (BOX 1 OF 3)

ITEM NUMBER	ITEM	QUANTITIES ACNHPP-49-1(18)85	QUANTITIES BIM-B49-0(216)	QUANTITIES TOTAL	QUANTITIES UNIT
201	CLEARING	102	14	116	STATION
201	GRUBBING	102	14	116	STATION
202	REMOVAL AND DISPOSAL OF CURB AND GUTTER	1351	602	1953	LIN. FT.
202	REMOVAL AND DISPOSAL OF FENCE	1698		1698	LIN. FT.
202	REMOVAL AND DISPOSAL OF CONCRETE ISLANDS	51	20	71	SQ. YD.
202	REMOVAL AND DISPOSAL OF CONCRETE DRIVEWAYS	254	48	302	SQ. YD.
202	REMOVAL AND DISPOSAL OF WALKS	1385	254	1639	SQ. YD.
202	REMOVAL AND DISPOSAL OF WALLS	96		96	LIN. FT.
202	REMOVAL AND DISPOSAL OF DROP INLETS	21	5	26	EACH
202	REMOVAL AND DISPOSAL OF PIPE CULVERTS	13	3	16	EACH
202	REMOVAL AND DISPOSAL OF HEADWALLS		6	6	EACH
SP & 202	REMOVAL AND DISPOSAL OF WIRE ROPE SAFETY FENCE	11420		11420	LIN. FT.
SP & 202	REMOVAL AND DISPOSAL OF GUARDRAIL	2305	597	2902	LIN. FT.
202	REMOVAL AND DISPOSAL OF CONCRETE DITCH PAVING	4888		4888	SQ. YD.
202	REMOVAL AND DISPOSAL OF CONCRETE MEDIAN BARRIER	212		212	LIN. FT.
210	UNCLASSIFIED EXCAVATION	68401	27315	95716	CU. YD.
210	COMPACTED EMBANKMENT	20774	30002	50776	CU. YD.
SP & 210	ROCK FILL	23261		23261	CU. YD.
SS & 303	AGGREGATE BASE COURSE (CLASS 7)	83493	8203	91696	TON
309	PORTLAND CEMENT CONCRETE BASE (4" UNIFORM THICKNESS)	81	324	405	SQ. YD.
309	PORTLAND CEMENT CONCRETE BASE (8" UNIFORM THICKNESS)	150	604	754	SQ. YD.
SS & 401	TACK COAT	16216	14712	30928	GAL.
SP & 405	MINERAL AGGREGATE IN ACHM BASE COURSE (1 1/2")	31175	4237	35412	TON
SP & 405	ASPHALT BINDER (PG 64-22) IN ACHM BASE COURSE (1 1/2")		130	130	TON
SP & 405	ASPHALT BINDER (PG 70-22) IN ACHM BASE COURSE (1 1/2")	35		35	TON
SP & 405	ASPHALT BINDER (PG 76-22) IN ACHM BASE COURSE (1 1/2")	1366	61	1427	TON
SP, SS, & 406	MINERAL AGGREGATE IN ACHM BINDER COURSE (1")	15849	1763	17612	TON
SP, SS, & 406	ASPHALT BINDER (PG 64-22) IN ACHM BINDER COURSE (1")		55	55	TON
SP, SS, & 406	ASPHALT BINDER (PG 70-22) IN ACHM BINDER COURSE (1")	12		12	TON
SP, SS, & 406	ASPHALT BINDER (PG 76-22) IN ACHM BINDER COURSE (1")	770	32	802	TON
SP, SS, & 407	MINERAL AGGREGATE IN ACHM SURFACE COURSE (1/2")	20332	10033	30365	TON
SP, SS, & 407	ASPHALT BINDER (PG 64-22) IN ACHM SURFACE COURSE (1/2")	5		5	TON
SP, SS, & 407	ASPHALT BINDER (PG 70-22) IN ACHM SURFACE COURSE (1/2")		102	102	TON
SP, SS, & 407	ASPHALT BINDER (PG 76-22) IN ACHM SURFACE COURSE (1/2")	1201	493	1694	TON
412	COLD MILLING ASPHALT PAVEMENT	9385	71792	81177	SQ. YD.
SP & 414	ASPHALT CONCRETE PATCHING FOR MAINTENANCE OF TRAFFIC	92	14	106	TON
504	APPROACH SLABS	148.00		148.00	CU. YD.
504	APPROACH GUTTERS	83.00	12.70	95.70	CU. YD.
505	PORTLAND CEMENT CONCRETE DRIVEWAY	244.60	46.20	290.80	SQ. YD.
601	MOBILIZATION	0.50	0.50	1.00	LUMP SUM
SP & 602	FURNISHING FIELD OFFICE	1		1	EACH
SP & 603	MAINTENANCE OF TRAFFIC	0.50	0.50	1.00	LUMP SUM
603	TRAFFIC CONTROL SUPERVISOR	0.50	0.50	1.00	LUMP SUM
SS & 604	SIGNS	1342	336	1678	SQ. FT.
SS & 604	TRAFFIC DRUMS	451		451	EACH
604	FURNISHING AND INSTALLING PRECAST CONCRETE BARRIER	32880		32880	LIN. FT.
SP & 604	FURNISHING, INSTALLING AND LEAVING IN PLACE PRECAST CONCRETE BARRIER	308		308	LIN. FT.
604	RELOCATING PRECAST CONCRETE BARRIER	19200	3980	23180	LIN. FT.
604	CONSTRUCTION PAVEMENT MARKINGS	109088	8730	117818	LIN. FT.
604	CONSTRUCTION PAVEMENT MARKINGS (ARROWS)	12	20	32	EACH
604	REMOVABLE CONSTRUCTION PAVEMENT MARKINGS	20827	24461	45288	LIN. FT.
604	REMOVAL OF CONSTRUCTION PAVEMENT MARKINGS	58319	24461	82780	LIN. FT.
604	REMOVAL OF PERMANENT PAVEMENT MARKINGS	42091	16034	58125	LIN. FT.
SP & 604	PORTABLE CHANGEABLE MESSAGE SIGN	300		300	WEEK
SS & 604	VERTICAL PANELS	29	39	68	EACH
605	CONCRETE DITCH PAVING (TYPE A)	198	1006	1204	SQ. YD.
605	CONCRETE DITCH PAVING (TYPE B)	220	24	244	SQ. YD.
* 606	12" REINFORCED CONCRETE PIPE CULVERTS (CLASS III) (ALTERNATE NO. 1)		9	9	LIN. FT.
* 606	12" SMOOTH LINED POLYMER PRECOATED METALLIC COATED CORRUGATED STEEL PIPE (ALTERNATE NO. 2)		9	9	LIN. FT.
606	18" REINFORCED CONCRETE PIPE CULVERTS (CLASS III)	6910	465	7375	LIN. FT.
* 606	18" REINFORCED CONCRETE PIPE CULVERTS (CLASS III) (ALTERNATE NO. 1)		347	347	LIN. FT.
* 606	18" SMOOTH LINED POLYMER PRECOATED METALLIC COATED CORRUGATED STEEL PIPE (ALTERNATE NO. 2)		347	347	LIN. FT.
606	18" REINFORCED CONCRETE PIPE CULVERTS (CLASS IV)	1		1	LIN. FT.
606	24" REINFORCED CONCRETE PIPE CULVERTS (CLASS III)	447	728	1175	LIN. FT.
* 606	24" REINFORCED CONCRETE PIPE CULVERTS (CLASS III) (ALTERNATE NO. 1)		580	580	LIN. FT.
* 606	24" SMOOTH LINED POLYMER PRECOATED METALLIC COATED CORRUGATED STEEL PIPE (ALTERNATE NO. 2)		580	580	LIN. FT.
606	30" REINFORCED CONCRETE PIPE CULVERTS (CLASS III)	19		19	LIN. FT.
* 606	30" REINFORCED CONCRETE PIPE CULVERTS (CLASS III) (ALTERNATE NO. 1)	301		301	LIN. FT.
* 606	30" SMOOTH LINED POLYMER PRECOATED METALLIC COATED CORRUGATED STEEL PIPE (ALTERNATE NO. 2)	301		301	LIN. FT.
SP & 606	30" REINFORCED CONCRETE PIPE CULVERTS (CLASS V)	80		80	LIN. FT.
606	36" REINFORCED CONCRETE PIPE CULVERTS (CLASS III)	19	17	36	LIN. FT.
* 606	36" REINFORCED CONCRETE PIPE CULVERTS (CLASS III) (ALTERNATE NO. 1)	534	622	1156	LIN. FT.
* 606	36" SMOOTH LINED POLYMER PRECOATED METALLIC COATED CORRUGATED STEEL PIPE (ALTERNATE NO. 2)	534	622	1156	LIN. FT.
SP & 606	36" REINFORCED CONCRETE PIPE CULVERTS (CLASS V)	86		86	LIN. FT.
606	42" REINFORCED CONCRETE PIPE CULVERTS (CLASS III)		12	12	LIN. FT.
606	48" REINFORCED CONCRETE PIPE CULVERTS (CLASS III)		68	68	LIN. FT.
* 606	48" REINFORCED CONCRETE PIPE CULVERTS (CLASS III) (ALTERNATE NO. 1)	40	98	138	LIN. FT.
* 606	48" SMOOTH LINED POLYMER PRECOATED METALLIC COATED CORRUGATED STEEL PIPE (ALTERNATE NO. 2)	40	98	138	LIN. FT.
606	48" REINFORCED CONCRETE PIPE CULVERTS (CLASS V)	322		322	LIN. FT.
606	60" REINFORCED CONCRETE PIPE CULVERTS (CLASS III)	20		20	LIN. FT.
606	60" REINFORCED CONCRETE PIPE CULVERTS (CLASS V)	317		317	LIN. FT.
606	18" SAFETY END SECTIONS FOR CROSS DRAIN PIPE CULVERTS (CLASS 2)	1		1	EACH
606	24" SAFETY END SECTIONS FOR CROSS DRAIN PIPE CULVERTS (CLASS 2)		4	4	EACH
606	18" FLARED END SECTIONS FOR REINFORCED CONCRETE PIPE CULVERTS	2	9	11	EACH
606	24" FLARED END SECTIONS FOR REINFORCED CONCRETE PIPE CULVERTS	1	9	10	EACH
606	30" FLARED END SECTIONS FOR REINFORCED CONCRETE PIPE CULVERTS	1		1	EACH
606	36" FLARED END SECTIONS FOR REINFORCED CONCRETE PIPE CULVERTS	3		3	EACH
606	48" FLARED END SECTIONS FOR REINFORCED CONCRETE PIPE CULVERTS	3	1	4	EACH
606	60" FLARED END SECTIONS FOR REINFORCED CONCRETE PIPE CULVERTS	2		2	EACH
606	SELECTED PIPE BEDDING	730	300	1030	CU. YD.
609	DROP INLETS (TYPE E)		1	1	EACH
609	DROP INLETS (TYPE N3)		2	2	EACH
609	DROP INLETS (TYPE MO)	7	27	34	EACH
609	DROP INLETS (TYPE ST)	68		68	EACH
609	DROP INLETS (TYPE TM)	1		1	EACH
609	DROP INLETS (TYPE SPECIAL)		3	3	EACH
609	JUNCTION BOXES (TYPE ST)	2		2	EACH
609	DROP INLET EXTENSIONS (4')	6	19	25	EACH
609	DROP INLET EXTENSIONS (8')		2	2	EACH
611	UNDERDRAIN OUTLET PROTECTORS	43		43	EACH
611	4" PIPE UNDERDRAINS	26135		26135	LIN. FT.
615	PAVEMENT REPAIR OVER CULVERTS (ASPHALT)	8	50	58	TON
617	GUARDRAIL (TYPE A)	4850	25	4875	LIN. FT.
617	TERMINAL ANCHOR POSTS (TYPE 1)	15		15	EACH
617	GUARDRAIL TERMINAL (TYPE 2)	15	1	16	EACH
617	THRIE BEAM GUARDRAIL TERMINAL		1	1	EACH
619	WIRE FENCE (TYPE A)	205		205	LIN. FT.
* 619	5' STEEL CHAIN LINK FENCE (ALTERNATE NO. 1)	1047		1047	LIN. FT.
* 619	5' ALUMINUM CHAIN LINK FENCE (ALTERNATE NO. 2)	1047		1047	LIN. FT.
620	LIME	27	21	48	TON
620	SEEDING	13.82	10.45	24.27	ACRE
SS & 620	MULCH COVER	27.64	20.90	48.54	ACRE
620	WATER	1699.3	1295.1	2994.4	M.GAL.
621	TEMPORARY SEEDING	13.82	10.45	24.27	ACRE

* DENOTES ALTERNATE BID ITEM

SUMMARY OF QUANTITIES (BOX 2 OF 3)

ITEM NUMBER	ITEM	QUANTITIES ACNHPP-49-1(18)85	QUANTITIES BIM-B49-0(216)	QUANTITIES TOTAL	QUANTITIES UNIT
621	SILT FENCE	7226	5115	12341	LIN. FT.
621	SAND BAG DITCH CHECKS	798	242	1040	BAG
621	DROP INLET SILT FENCE	1311	550	1861	LIN. FT.
621	SEDIMENT BASIN	2542	1024	3566	CU. YD.
621	OBLITERATION OF SEDIMENT BASIN	2542	1024	3566	CU. YD.
621	SEDIMENT REMOVAL AND DISPOSAL	2526	1234	3760	CU. YD.
621	ROCK DITCH CHECKS	109	50	159	CU. YD.
623	SECOND SEEDING APPLICATION	13.82	10.45	24.27	ACRE
624	SOLID SODDING	633	1248	1881	SQ. YD.
631	CONCRETE BARRIER WALL (MEDIAN TYPE B)	5542		5542	LIN. FT.
631	CONCRETE BARRIER WALL (MEDIAN TYPE C)	4571		4571	LIN. FT.
631	CONCRETE BARRIER WALL (MEDIAN TYPE SP-1)	600		600	LIN. FT.
631	CONCRETE BARRIER WALL (MEDIAN TYPE SPECIAL)	717		717	LIN. FT.
632	CONCRETE ISLAND	807	44	851	SQ. YD.
633	CONCRETE WALKS	584	975	1559	SQ. YD.
634	CONCRETE CURB (TYPE D)	111		111	LIN. FT.
634	CONCRETE COMBINATION CURB AND GUTTER (TYPE A) (1' 6")	1459	4247	5706	LIN. FT.
635	ROADWAY CONSTRUCTION CONTROL	0.50	0.50	1.00	LUMP SUM
637	MAILBOXES	1		1	EACH
637	MAILBOX SUPPORTS (SINGLE)	1		1	EACH
641	WHEELCHAIR RAMPS (TYPE 3)	37	21	58	SQ. YD.
642	RUMBLE STRIPS IN ASPHALT SHOULDERS	33464	18112	51576	LIN. FT.
SP & 701	SYSTEM LOCAL CONTROLLER - FIBER (8 PHASES)	2	2	4	EACH
SP & 701	TRAFFIC CABINET COMMUNICATIONS	2	2	4	EACH
SP & 706	TRAFFIC SIGNAL HEAD, LED, (3 SECTION, 1 WAY)	4	21	25	EACH
SP & 706	TRAFFIC SIGNAL HEAD, LED, (4 SECTION, 1 WAY)	2	1	3	EACH
SP & 707	COUNTDOWN PEDESTRIAN SIGNAL HEAD, LED	2	6	8	EACH
708	TRAFFIC SIGNAL CABLE (5C/14 A.W.G.)	2180	2293	4473	LIN. FT.
708	TRAFFIC SIGNAL CABLE (7C/14 A.W.G.)		62	62	LIN. FT.
708	TRAFFIC SIGNAL CABLE (12C/14 A.W.G.)	271	174	445	LIN. FT.
708	TRAFFIC SIGNAL CABLE (20C/14 A.W.G.)	723	664	1387	LIN. FT.
709	GALVANIZED STEEL CONDUIT (1.25")	56	56	112	LIN. FT.
710	NON-METALLIC CONDUIT (2")	895	2170	3065	LIN. FT.
710	NON-METALLIC CONDUIT (3")	1189	784	1973	LIN. FT.
711	CONCRETE PULL BOX (TYPE 1 HD)		1	1	EACH
711	CONCRETE PULL BOX (TYPE 2 HD)	13	22	35	EACH
711	CONCRETE PULL BOX (TYPE 2)	2	2	4	EACH
713	SPAN WIRE ASSEMBLY (TEMPORARY)	1		1	EACH
714	TRAFFIC SIGNAL MAST ARM AND POLE WITH FOUNDATION (26')		1	1	EACH
714	TRAFFIC SIGNAL MAST ARM AND POLE WITH FOUNDATION (34')		1	1	EACH
714	TRAFFIC SIGNAL MAST ARM AND POLE WITH FOUNDATION (36')	1		1	EACH
714	TRAFFIC SIGNAL MAST ARM AND POLE WITH FOUNDATION (38')		1	1	EACH
714	TRAFFIC SIGNAL MAST ARM AND POLE WITH FOUNDATION (40')		1	1	EACH
714	TRAFFIC SIGNAL MAST ARM AND POLE WITH FOUNDATION (42')		1	1	EACH
714	TRAFFIC SIGNAL MAST ARM AND POLE WITH FOUNDATION (46')	1		1	EACH
714	TRAFFIC SIGNAL MAST ARM AND POLE WITH FOUNDATION (24'-38')		1	1	EACH
715	TRAFFIC SIGNAL PEDESTAL POLE WITH FOUNDATION	2	4	6	EACH
716	TREATED WOOD POLE (CLASS 3, 36')	1		1	EACH
718	REFLECTORIZED PAINT PAVEMENT MARKING WHITE (10")	400	99	499	LIN. FT.
719	THERMOPLASTIC PAVEMENT MARKING WHITE (4")	2980	3309	6289	LIN. FT.
719	THERMOPLASTIC PAVEMENT MARKING WHITE (8")	58	380	438	LIN. FT.
719	THERMOPLASTIC PAVEMENT MARKING WHITE (12")	4044	496	4540	LIN. FT.
719	THERMOPLASTIC PAVEMENT MARKING YELLOW (4")	1902	6858	8760	LIN. FT.
719	THERMOPLASTIC PAVEMENT MARKING YELLOW (8")	46	458	504	LIN. FT.
719	THERMOPLASTIC PAVEMENT MARKING (WORDS)	10	26	36	EACH
719	THERMOPLASTIC PAVEMENT MARKING (ARROWS)	16	31	47	EACH
* SP & 719	INVERTED PROFILE THERMOPLASTIC PAVEMENT MARKING WHITE (4") (ALTERNATE NO. 1)	16712	24153	40865	LIN. FT.
* SP	HIGH PERFORMANCE MARKING TAPE WHITE (4") (ALTERNATE NO. 2)	16712	24153	40865	LIN. FT.
* SP & 719	INVERTED PROFILE THERMOPLASTIC PAVEMENT MARKING (SKIP LINE) WHITE (4") (ALTERNATE NO. 1)	8010	5340	13350	LIN. FT.
* SP	HIGH PERFORMANCE MARKING TAPE (SKIP LINE) WHITE (4") (ALTERNATE NO. 2)	8010	5340	13350	LIN. FT.
* SP & 719	INVERTED PROFILE THERMOPLASTIC PAVEMENT MARKING YELLOW (4") (ALTERNATE NO. 1)	37029	2081	39110	LIN. FT.
* SP	HIGH PERFORMANCE MARKING TAPE YELLOW (4") (ALTERNATE NO. 2)	37029	2081	39110	LIN. FT.
* SP & 719	INVERTED PROFILE THERMOPLASTIC PAVEMENT MARKING WHITE (8") (ALTERNATE NO. 1)	5840	4928	10768	LIN. FT.
* SP	HIGH PERFORMANCE MARKING TAPE WHITE (8") (ALTERNATE NO. 2)	5840	4928	10768	LIN. FT.
* SP & 719	INVERTED PROFILE THERMOPLASTIC CONTRAST PAVEMENT MARKING WHITE (4") (ALTERNATE NO. 1)	250	401	651	LIN. FT.
* SP	HIGH PERFORMANCE CONTRAST MARKING TAPE WHITE (4") (ALTERNATE NO. 2)	250	401	651	LIN. FT.
* SP & 719	INVERTED PROFILE THERMOPLASTIC CONTRAST PAVEMENT MARKING YELLOW (4") (ALTERNATE NO. 1)		534	534	LIN. FT.
* SP	HIGH PERFORMANCE CONTRAST MARKING TAPE YELLOW (4") (ALTERNATE NO. 2)		534	534	LIN. FT.
* SP & 719	INVERTED PROFILE THERMOPLASTIC CONTRAST PAVEMENT MARKING WHITE (8") (ALTERNATE NO. 1)		67	67	LIN. FT.
* SP	HIGH PERFORMANCE CONTRAST MARKING TAPE WHITE (8") (ALTERNATE NO. 2)		67	67	LIN. FT.
721	RAISED PAVEMENT MARKERS (TYPE II)	1061	922	1983	EACH
SP	OMNI-DIRECTIONAL BREAKAWAY SIGN SUPPORTS (TYPE G-1)	9	18	27	EACH
SP	OMNI-DIRECTIONAL BREAKAWAY SIGN SUPPORTS (TYPE G-2)	8		8	EACH
SP	OMNI-DIRECTIONAL BREAKAWAY SIGN SUPPORTS (TYPE G2-1)	9	2	11	EACH
SP	OMNI-DIRECTIONAL BREAKAWAY SIGN SUPPORTS (TYPE G2-4)		1	1	EACH
SP	STEEL OVERHEAD SIGN STRUCTURE (OH-049-04-05)	1		1	EACH
SP	STEEL OVERHEAD SIGN STRUCTURE (OH-049-04-08)	1		1	EACH
SP	STEEL OVERHEAD SIGN STRUCTURE (OH-049-04-10)	1		1	EACH
SP	STEEL OVERHEAD SIGN STRUCTURE (OH-049-04-11)	1		1	EACH
SP	STEEL OVERHEAD SIGN STRUCTURE (OH-049-04-13)	1		1	EACH
SP	STEEL OVERHEAD SIGN STRUCTURE (OH-049-04-14)	1		1	EACH
SP	STEEL CANTILEVER SIGN STRUCTURE (CL-049-04-06)	1		1	EACH
SP	STEEL CANTILEVER SIGN STRUCTURE (CL-049-04-07)	1		1	EACH
SP	STEEL CANTILEVER SIGN STRUCTURE (CL-049-04-09)	1		1	EACH
SP	STEEL CANTILEVER SIGN STRUCTURE (CL-049-04-12)	1		1	EACH
SP	STEEL CANTILEVER SIGN STRUCTURE (CL-049-04-15)	1		1	EACH
SP & 724	OVERHEAD SIGN STRUCTURE FOUNDATION	1		1	EACH
SP & 725	GUIDE SIGN-ROADSIDE MOUNTED (DEMOUNTABLE LEGEND)	4566	230	4796	SQ. FT.
SP & 725	GUIDE SIGN-OVERHEAD MOUNTED (DEMOUNTABLE LEGEND)	3379		3379	SQ. FT.
SP & 726	STANDARD SIGN	644	711	1355	SQ. FT.
SP & 727	EXIT NUMBER PANEL (TYPE A)	242		242	SQ. FT.
SP & 727	EXIT NUMBER PANEL (TYPE B)	78		78	SQ. FT.
SP & 727	EXIT NUMBER PANEL (TYPE C)	33		33	SQ. FT.
SP & 729	CHANNEL POST SIGN SUPPORT (TYPE U-1)	8	23	31	EACH
SP & 729	CHANNEL POST SIGN SUPPORT (TYPE U-2)		1	1	EACH
SP & 729	CHANNEL POST SIGN SUPPORT (TYPE U-2(A))		1	1	EACH
SP & 729	CHANNEL POST SIGN SUPPORT (TYPE U-2(B))		1	1	EACH
SP & 729	CHANNEL POST SIGN SUPPORT (TYPE U-2(1))		2	2	EACH
SP & 729	CHANNEL POST SIGN SUPPORT (TYPE U-2(2))	1		1	EACH
SP & 729	CHANNEL POST SIGN SUPPORT (TYPE U-2(4))		1	1	EACH
SP & 729	CHANNEL POST SIGN SUPPORT (TYPE U-2(6))	1	2	3	EACH
SP & 729	CHANNEL POST SIGN SUPPORT (TYPE U-2(7))		1	1	EACH
730	BREAKAWAY SIGN SUPPORT (TYPE G-2)	31681	2606	34287	POUND

* DENOTES ALTERNATE BID ITEM

STATE OF ARKANSAS
REGISTERED PROFESSIONAL ENGINEER
No. 8760
ANDREW E. FRIES
5/19/16

5/19/2016
5:30:51 PM
...\QTY_CA0902_QTY_HWY540_09.dgn

DATE	DATE FILMED	DATE REVISED	DATE FILMED	FED.RD. DST.NO.	STATE	FED.AID PROJ.NO.	SHEET NO.	TOTAL SHEETS
5-25-16				6	ARK.			
6-09-16				JOB NO.		CA0902	176	581

(2) SUMMARY OF QUANTITIES & REVISIONS

SUMMARY OF QUANTITIES (BOX 3 OF 3)

ITEM NUMBER	ITEM	QUANTITIES			
		ACNHPP-49-1(18)85	BIM-849-0(216)	TOTAL	UNIT
731	TEMPORARY IMPACT ATTENUATION BARRIER	1		1	EACH
731	TEMPORARY IMPACT ATTENUATION BARRIER (REPAIR)	1		1	EACH
732	CRASH CUSHION	1		1	EACH
733	VIDEO DETECTOR RELOCATION	1	4	5	EACH
733	VIDEO MONITOR (CLR)	2	2	4	EACH
SP & 733	CENTRAL CONTROL UNIT (8 CHANNEL)	2	2	4	EACH
SP & 733	VEHICLE DETECTOR RACK (16 CHANNEL)	2	2	4	EACH
SP & 733	VIDEO DETECTOR (IP)	11	12	23	EACH
SP & 733	VIDEO PROCESSOR, EDGE CARD IP (2 CAMERA)	7	6	13	EACH
SP	BATTERY BACKUP SYSTEM	2	2	4	EACH
SP	COMMUNICATION CABLE, FIBER (6 CHANNEL)	884	1345	2229	LIN. FT.
SP	E-NET CABLE (EXTERIOR CAT 5)	2721	2463	5184	LIN. FT.
SP	ELECTRICAL CONDUCTORS FOR LUMINAIRES	806	883	1689	LIN. FT.
SP	ELECTRICAL CONDUCTORS-IN-CONDUIT (1C/8 A.W.G., E.G.C.)	1044	1004	2048	LIN. FT.
SP	ELECTRICAL CONDUCTORS-IN-CONDUIT (1C/12 A.W.G., E.G.C.)	108	220	328	LIN. FT.
SP	ELECTRICAL CONDUCTORS-IN-CONDUIT (2C/6 A.W.G.)	82	82	164	LIN. FT.
SP	INSTALLATION AND TESTING OF COMMUNICATION CABLE-FIBER	0.50	0.50	1.00	LUMP SUM
SP	LED LUMINAIRE ASSEMBLY	2	4	6	EACH
SP	RELOCATION OF TRAFFIC SIGNAL HEAD		7	7	EACH
SP	REMOVAL OF TRAFFIC SIGNAL EQUIPMENT	0.50	0.50	1.00	LUMP SUM
SP	SERVICE POINT ASSEMBLY (2 CIRCUITS)	2	2	4	EACH
SP	TEMPORARY TRAFFIC SIGNAL HEAD	2		2	EACH
SP	TRAFFIC SIGNAL MODIFICATION	1.00		1.00	LUMP SUM
SP	VIDEO DETECTOR ROTATION	2	8	10	EACH
SP	18" STREET NAME SIGN	1	2	3	EACH
801	UNCLASSIFIED EXCAVATION FOR STRUCTURES-ROADWAY	3749		3749	CU. YD.
802	CLASS S CONCRETE-ROADWAY	711.14		711.14	CU. YD.
804	REINFORCING STEEL-ROADWAY (GRADE 60)	121474	1120	122594	POUND
816	FILTER BLANKET	693	40	733	SQ. YD.
816	DUMPED RIPRAP	506	20	526	CU. YD.
SP	CULVERT CLEAN OUT	11		11	EACH
SP	WIC FIBER ENCLOSURE	2	2	4	EACH
	STRUCTURES OVER 20' SPAN				
205	REMOVAL OF EXISTING BRIDGE STRUCTURE (SITE NO. 5)	1.00		1.00	LUMP SUM
205	REMOVAL OF EXISTING BRIDGE STRUCTURE (SITE NO. 6)	1.00		1.00	LUMP SUM
636	BRIDGE CONSTRUCTION CONTROL	0.60	0.40	1.00	LUMP SUM
801	UNCLASSIFIED EXCAVATION FOR STRUCTURES-BRIDGE	344	328	672	CU. YD.
801	UNCLASSIFIED EXCAVATION FOR STRUCTURES-ROADWAY	61		61	CU. YD.
802	CLASS S CONCRETE-BRIDGE	210.20	188.50	398.70	CU. YD.
802	CLASS S CONCRETE-ROADWAY	59.51		59.51	CU. YD.
802	CLASS S(AE) CONCRETE-BRIDGE	296.00	426.00	722.00	CU. YD.
803	CLASS 2 PROTECTIVE SURFACE TREATMENT	1264.2	1410.4	2674.6	SQ. YD.
804	REINFORCING STEEL-BRIDGE (GRADE 60)	33200	30340	63540	POUND
804	REINFORCING STEEL-ROADWAY (GRADE 60)	1221I		1221I	POUND
804	EPOXY COATED REINFORCING STEEL (GRADE 60)	79700	107130	186830	POUND
805	STEEL PILING (HP 10X42)	600	518	1118	LIN. FT.
805	STEEL PILING (HP 12X53)	846	618	1464	LIN. FT.
805	PREBORING	810		810	LIN. FT.
806	METAL BRIDGE RAILING (TYPE H)		258	258	LIN. FT.
806	TRANSITIONAL APPROACH RAILING		2	2	EACH
SP & 807	STRUCTURAL STEEL IN BEAM SPANS (M270-GR50)	179440	301060	480500	POUND
807	PAINTING STRUCTURAL STEEL	89.8	150.6	240.4	TON
808	ELASTOMERIC BEARINGS	11844	15588	27432	CU. IN.
809	SILICONE JOINT SEALANT	262	170	432	LIN. FT.
812	BRIDGE NAME PLATE (TYPE D)		1	1	EACH
816	CONCRETE RIPRAP		56	56	CU. YD.
SP & 820	CLEANING AND PAINTING EXISTING STRUCTURAL STEEL (TYPE II)		130.0	130.0	TON
820	DISPOSAL OF HAZARDOUS WASTE (SITE NO. 4)		1.00	1.00	LUMP SUM
821	MODIFICATION OF EXISTING BRIDGE STRUCTURE (BRIDGE NO. A5979)	1.00		1.00	LUMP SUM
821	MODIFICATION OF EXISTING BRIDGE STRUCTURE (BRIDGE NO. B5979)	1.00		1.00	LUMP SUM
821	MODIFICATION OF EXISTING BRIDGE STRUCTURE (BRIDGE NO. 05982)		1.00	1.00	LUMP SUM
SP	ARCHITECTURAL FINISH		1355	1355	SQ. FT.
SP	TEXTURED COATING FINISH		1280	1280	SQ. YD.

REVISIONS

DATE	REVISION	SHEET NUMBER
5-25-16	REVISED STANDARD DRAWINGS PM-1 AND SI-2	2, 176, 407, 430
6-09-16	ADDED SP "ISSUANCE OF PROPOSALS"	3, 176

STATE OF ARKANSAS
REGISTERED PROFESSIONAL ENGINEER
No. 8760
ANDREW E. FRIES
6/9/16

5/9/2016 3:43:58 PM
M:\DIV\CPA\0902 QTY HWY540 03a.dgn

DATE	DATE FILMED	DATE REVISED	DATE FILMED	FED.RD. DIST.NO.	STATE	FED.AID PROJ.NO.	SHEET NO.	TOTAL SHEETS
				6	ARK.			
				JOB NO.		CA0902	177	581

(2) SURVEY CONTROL DETAILS

STATE OF ARKANSAS
REGISTERED PROFESSIONAL ENGINEER
No. 8760
ANDREW E. FRIES
5/5/16

SURVEY CONTROL COORDINATES

Project Name: s090305
Date: 9/7/2011
Coordinate System: ARKANSAS STATE PLANE - NORTH ZONE BASED ON GPS CONTROL, PROJECTED TO GROUND.
Units: U.S. SURVEY FOOT

Point Name	Northing	Easting	Elev	Feature	Description
100	728286.4791	668599.5262	1229.70	GPS	AHTD GPS 040018 RTK ELEV
101	736025.4975	669232.0663	1305.45	GPS	AHTD GPS 040009 RTK ELEV
102	752766.3310	672068.3635	1310.14	GPS	AHTD GPS 040044 RTK ELEV
6095	732253.5966	668790.5974	1275.62	CTL	5/8"REBAR W/2"CAP PN:95
6096	733238.9201	668837.7168	1278.17	CTL	5/8"REBAR W/2"CAP PN:96
6097	734069.3116	668889.0076	1280.61	CTL	5/8"REBAR W/2"CAP PN:97
6098	735047.9840	668906.3727	1292.87	CTL	5/8"REBAR W/2"CAP PN:98
6099	734902.1631	669142.8067	1290.58	CTL	5/8"REBAR W/2"CAP PN:99
6120	735671.2421	669217.7699	1307.62	CTL	5/8"REBAR W/2"CAP PN:120
6121	735618.7358	671316.3654	1299.32	CTL	5/8"REBAR W/2"CAP PN:121
6122	735669.4407	670351.5376	1291.15	CTL	5/8"REBAR W/2"CAP PN:122
6123	735701.5528	669578.6031	1290.96	CTL	5/8"REBAR W/2"CAP PN:123
6124	735835.0930	668907.1839	1282.24	CTL	5/8"REBAR W/2"CAP PN:124
6125	735865.3649	667956.9887	1276.34	CTL	5/8"REBAR W/2"CAP PN:125
6126	735902.0649	667182.1779	1262.91	CTL	5/8"REBAR W/2"CAP PN:126
6127	736691.6897	669546.9804	1291.64	CTL	5/8"REBAR W/2"CAP PN:127
6128	737529.7470	669704.3311	1284.86	CTL	5/8"REBAR W/2"CAP PN:128
6130	739236.5815	670136.6083	1279.42	CTL	5/8"REBAR W/2"CAP PN:130
6201	740870.8377	670559.9594	1286.29	CTL	5/8"REBAR W/2"CAP PN:1
6202	741651.0590	670698.8953	1289.52	CTL	5/8"REBAR W/2"CAP PN:2
6203	742782.2510	670906.5353	1305.64	CTL	5/8"REBAR W/2"CAP PN:3
6204	743436.7893	671214.6621	1304.51	CTL	5/8"REBAR W/2"CAP PN:4
6205	743586.3390	670627.9621	1305.99	CTL	5/8"REBAR W/2"CAP PN:5
6206	744294.7053	671031.2596	1338.09	CTL	5/8"REBAR W/2"CAP PN:6
6207	745117.6777	671177.3740	1341.70	CTL	5/8"REBAR W/2"CAP PN:7
6208	745843.0707	671459.4750	1329.46	CTL	5/8"REBAR W/2"CAP PN:8
6209	743439.4636	672825.5127	1313.22	CTL	5/8"REBAR W/2"CAP PN:9
6211	743517.5621	669777.5227	1311.50	CTL	5/8"REBAR W/2"CAP PN:11
6213	746149.0834	670354.0033	1327.10	CTL	5/8"REBAR W/2"CAP PN:13
6214	746170.5029	669545.2228	1321.68	CTL	5/8"REBAR W/2"CAP PN:14
6215	750700.2767	673776.2601	1275.45	CTL	5/8"REBAR W/2"CAP PN:15
6216	751452.1449	673326.1384	1276.68	CTL	5/8"REBAR W/2"CAP PN:16
6217	752145.5176	672662.5893	1291.13	CTL	5/8"REBAR W/2"CAP PN:17
6220	753236.0409	671260.9238	1283.76	CTL	5/8"REBAR W/2"CAP PN:20
6221	753996.6736	670485.3266	1276.37	CTL	5/8"REBAR W/2"CAP PN:21
6222	753278.8706	673790.0796	1286.32	CTL	5/8"REBAR W/2"CAP PN:22
6223	753360.0543	672792.2669	1282.06	CTL	5/8"REBAR W/2"CAP PN:23
6226	752488.0369	672056.3369	1290.80	CTL	5/8"REBAR W/2"CAP PN:26
6980	728293.7831	668651.5810	1228.98	BM	AHTD CAP SET IN SOUTHWEST CORNE
6981	730915.9872	668709.8070	1242.89	TBM	SQUARE CUT IN NORTH END OF DROP
6982	732114.4464	668767.3132	1272.29	TBM	SQUARE CUT IN NORTH END OF DROP
6983	733312.8345	668825.4713	1275.86	TBM	SQUARE CUT IN NORTH END OF DROP
6984	734605.0472	668952.5831	1282.39	TBM	SQUARE CUT IN NORTH END OF DROP
6986	735613.4880	671459.4619	1301.89	TBM	SQUARE CUT IN BACK OF CATCH BAS
6987	735689.4923	669961.9056	1293.22	TBM	SQUARE CUT IN BASE SIGNAL POLE
6988	735824.9860	668873.1616	1282.39	TBM	SQUARE CUT IN BASE OF SIGNAL PO
6989	735900.2382	667262.2765	1261.55	BM	AHTD CAP SET IN EAST END OF HEA
6990	736839.9774	669512.3627	1285.95	TBM	SQUARE CUT IN NORTH END OF DROP
6991	738191.5231	669855.9783	1280.01	TBM	SQUARE CUT IN NORTH END OF DROP
6993	739410.1309	670164.5737	1276.48	TBM	SQUARE CUT IN SOUTH END OF DROP
8529	725495.9177	668659.1510	1268.42	CTL	5/8"REBAR W/2"CAP 7' EAST OF E I-540
8530	726437.5735	668484.3706	1252.47	CTL	5/8"REBAR W/2"CAP 7' EAST OF E I-540
8531	727205.7956	668510.7642	1240.65	CTL	5/8"REBAR W/2"CAP 5' EAST OF E I-540
8532	727849.9968	668748.4492	1224.52	CTL	5/8"REBAR W/2"CAP 3' EAST OF E I-540
8533	727724.3594	668186.2156	1221.61	CTL	5/8"REBAR W/2"CAP 3' BEHIND SID I-540
8534	728370.6789	669812.2109	1217.36	CTL	5/8"REBAR W/2"CAP 3' BEHIND END I-540
8535	728372.3264	668925.3930	1212.29	CTL	5/8"REBAR W/2"CAP 1' WEST OF SI I-540
8536	728456.0441	668174.4094	1211.94	CTL	5/8"REBAR W/2"CAP 3' NORTH OF C I-540
8537	728988.5988	668325.6609	1213.77	CTL	5/8"REBAR W/2"CAP 5' N OF BACK I-540
8538	728987.3693	668685.7724	1221.61	CTL	5/8"REBAR W/2"CAP 5' EAST OF E I-540
8539	729770.7631	668674.5885	1218.19	CTL	5/8"REBAR W/2"CAP 6' WEST OF W I-540
8540	730501.9919	668708.7382	1234.32	CTL	5/8"REBAR W/2"CAP 6' WEST OF W I-540
8541	731335.8239	668750.8247	1257.18	CTL	5/8"REBAR W/2"CAP 5' WEST OF W I-540
8542	740023.9540	670333.8667	1282.52	CTL	5/8"REBAR W/2"CAP 4' WEST OF W I-540
8543	746378.7281	671937.2120	1313.70	CTL	5/8"REBAR W/2"CAP 5' WEST OF W I-540
8544	747039.5224	672395.8906	1302.77	CTL	5/8"REBAR W/2"CAP 5' WEST OF W I-540
8545	747690.1671	672848.9822	1297.18	CTL	5/8"REBAR W/2"CAP 5' WEST OF W I-540
8546	748276.2391	673256.3613	1292.09	CTL	5/8"REBAR W/2"CAP 5' WEST OF W I-540
8547	749001.8696	673696.2572	1285.48	CTL	5/8"REBAR W/2"CAP 5' WEST OF W I-540
8548	749819.8891	673869.2558	1279.51	CTL	5/8"REBAR W/2"CAP 5' WEST OF W I-540
8549	753020.4571	672386.1809	1298.14	CTL	5/8"REBAR W/2"CAP REPLACES PN 11-540
8550	752269.2112	671576.1859	1298.17	CTL	5/8"REBAR W/2"CAP REPLACES PN 11-540
8551	751683.8980	671055.1944	1292.89	CTL	5/8"REBAR W/2"CAP REPLACES PN 2 I-540
8553	738312.3341	669901.1728	1281.86	CTL	5/8"REBAR W/2"CAP REPLACES PN 11-540
8906	743349.3593	674658.2763	1314.21	TBM	SO CUT IN BACK CA N SIDE HWY 62
8907	743414.9767	673313.1577	1311.11	TBM	SO CUT IN BACK OF CA N> PN:90
8908	743464.7101	672294.6315	1313.30	TBM	SO CUT IN BACK OF CA N> PN:90
8909	743519.1746	671116.1626	1303.99	TBM	SO CUT IN CA NORT OF 62 EAST I-
8910	743404.0280	671014.3766	1323.31	BM	AHTD DISK SE COR BR BR5979B PN:
8911	743572.4121	670020.0581	1309.55	TBM	SO CUT IN CA NORTH OF 62 N SIDE
8913	735672.8280	669287.1806	1308.04	BM	AHTD DISK SE COR BR 5977 PN:913
8915	740620.9975	670440.5814	1281.33	TBM	SO CUT DICENTER OF I540 PN:915
8916	741604.7256	670621.7243	1286.21	TBM	SO CUT IN DIIN MEDIAN PN:916 I
8917	742589.7448	670800.0630	1297.59	TBM	SO CUT DIIN MEDIAN I540 PN:917
8918	744733.6098	671113.7249	1344.48	TBM	SO CUT SW CORNER BR RR OVERPASS
8919	745713.2487	671458.8924	1326.47	TBM	SO CUT IN DII540 PN:919 IN
8920	747604.1989	672763.5236	1294.54	TBM	SO CUT IN DICENTER I540 PN:920
8921	750364.0633	673803.1359	1272.91	TBM	SO CUT IN DII540 PN:921 IN
8922	751126.9340	673489.3598	1267.57	TBM	SO CUT IN DICENTER I540 PN:922
8923	751868.5723	672803.6762	1283.66	TBM	SO CUT IN DICENTER I540 PN:923
8924	752535.7633	671915.9041	1314.08	BM	AHTD CAP SW COR BR*5982 PN:924
8925	753458.1128	671146.1424	1279.13	TBM	SO CUT IN DIIN MEDIAN PN:925 I
8926	754151.5497	670421.6085	1272.42	TBM	CUT SO IN DIIN MEDIAN PN:926 I
8927	753233.5561	673807.5230	1287.03	TBM	SO CUT IN SHN OF C\L MCCLAIN RD
8928	753313.0778	673085.0164	1272.47	TBM	SO CUT IN E END OF HW S OF C\L
8930	751069.6276	670953.7887	1303.05	TBM	SO CUT COR ES BLUE BERRY PN:930
8933	746134.8215	670366.7991	1328.55	TBM	RR SPIKE IN CP PN:933 IN 09
8934	746164.8762	669542.5398	1322.33	TBM	SO CUT BASE PA SE COR 8TH & MOB
9914	725516.2719	668741.9814	1265.74	TBM	SO CUT IN BASE OF SIGN E OF N B I-540
9915	726142.5687	668521.7299	1255.39	TBM	SO CUT IN DICENTER OF MEDIAN II-540
9916	727020.4757	668524.2043	1240.15	TBM	SO CUT IN DICENTER OF MEDIAN II-540
9917	728393.1540	669516.9397	1216.37	TBM	SO CUT NE COR BR * 4531OSAGE C I-540
9918	728756.8168	668205.6099	1213.75	TBM	SO CUT NW COR BR * 5962 OSAGE C I-540
9919	729578.2959	668645.8701	1213.76	TBM	SO CUT IN DICENTER OF MEDIAN II-540
9920	746621.3308	672079.7594	1304.66	TBM	SO CUT IN DICENTER OF MEDIAN II-540
9921	748427.0150	673336.6890	1287.52	TBM	SO CUT IN DICENTER OF MEDIAN II-540
9922	748683.3626	673338.0360	1309.54	BM	AHTD CAP NW COR BR 5984 CENTRAL I-540
9923	749316.0249	673780.7576	1280.52	TBM	SO CUT IN DICENTER OF MEDIAN II-540
9924	751581.8334	671092.0272	1292.14	TBM	SO CUT IN BACK OF CA S SIDE OF I-540

*Note - Rebar and Cap - Standard - 5/8" Rebar with 2" Aluminum Cap stamped
*(standard markings common to all caps), or as indicated
(other markings indicated in the point description of the individual point).
ALL DISTANCES ARE GROUND.
USE CAF = 1.0 FOR STAKEOUT FOR THIS PROJECT.
A PROJECT CAF OF 0.9999709446 HAS BEEN USED TO COMPUTE THE ABOVE GROUND COORDINATES.
THIS CAF IS INTENDED FOR USE WITHIN THE PROJECT LIMITS.
GRID DISTANCE = GROUND DISTANCE X CAF.
GRID COORDINATES ARE STORED UNDER FILE NAME.s090305gl.ctl
HORIZONTAL DATUM: NAD 83 (1997)
VERTICAL DATUM: NAVD 88 POSITIONAL ACCURACY THIRD ORDER, UNLESS SPECIFIED OTHERWISE AT A SPECIFIC POINT.

REFERENCE POINTS (1500 SERIES) ARE TO BE USED TO ESTABLISH CONTROL
IF THE PRIMARY CONTROL POINTS LISTED ABOVE HAVE BEEN DESTROYED.
REFERENCE POINTS ARE NOT TO BE USED FOR VERTICAL CONTROL

BASIS OF BEARING:
ARKANSAS STATE PLANE GRID BEARINGS - 0301-NORTH ZONE DETERMINED GPS CONTROL POINTS: 040018,04009,040044
CONVERGENCE ANGLE: D116 05 LEFT AT LT:36-20-56.8 LG:094-10-45.7
GRID AZIMUTH = ASTRONOMICAL AZIMUTH - CONVERGENCE ANGLE.

I-49 Alignment Data

Point No.	Point Type	Station	Northing	Easting
8000	P.O.B.	1245+00.00	735760.6610	669238.7835
8001	P.I. STA.	1245+06.47	735766.9332	669240.3746
8090	BEGIN OF PROJECT	1256+75.00	736899.6009	669527.6452
8003	P.C. STA.	1283+26.90	739470.1163	670179.5870
	P.I. STA.	1291+25.72	740244.4241	670375.9693
8004	C.C.		745104.3411	647964.6271
8005	P.T. STA.	1299+23.90	741030.5260	670517.9631
8007	P.C. STA.	1340+99.72	745139.8426	671260.2300
	P.I. STA.	1345+15.98	745549.4718	671334.2215
8008	C.C.		744800.3579	673139.6755
8009	P.T. STA.	1349+19.41	745891.1580	671571.9637
8010	P.C. STA.	1381+91.69	748577.2087	673440.8941
	P.I. STA.	1401+49.80	750184.5324	674559.2557
8011	C.C.		749886.1677	671559.6415
8012	P.T. STA.	1414+32.51	751540.0604	673146.1861
8091	END OF PROJECT	1438+00.00	753178.9845	671437.6903
8016	P.I. STA.	1448+06.05	753875.4338	670711.6771
8017	P.C. STA.	1453+13.01	754226.0846	670345.5423
	P.I. STA.	1456+75.97	754477.1319	670083.4093
8018	C.C.		756065.1854	672106.8667
8019	P.T. STA.	1460+34.07	754791.4193	669901.8552
8020	P.O.E.	1460+89.16	754839.1185	669874.3009

Walton Blvd. Ramp 3 Alignment Data

Point No.	Point Type	Station	Northing	Easting
8021	P.O.B.	1256+00.00	736846.3776	669435.4689
8022	P.C. STA.	1256+72.13	736914.0794	669460.3526
	P.I. STA.	1257+71.38	737007.2325	669494.5909
8023	C.C.		737572.9515	667667.7420
8024	P.T. STA.	1258+70.44	737103.4325	669518.9894
8025	P.O.E.	1260+50.00	737277.4739	669563.1303

Olive Street Alignment Data

Point No.	Point Type	Station	Northing	Easting
8026	P.O.B.	12+83.17	738420.9540	669186.1135
8027	P.I. STA.	18+31.83	738383.3440	669733.4830
8028	P.I. STA.	21+68.38	738362.6461	670069.3959
8029	P.O.E.	27+06.94	738335.5712	670607.2749

Hwy. 102 / Hwy. 62 Ramp 1 Alignment Data

Point No.	Point Type	Station	Northing	Easting
8030	P.O.B.	1309+00.00	741980.6824	670749.0368
8031	P.C. STA.	1310+84.24	742161.9896	670781.7863
	P.I. STA.	1311+81.25	742257.4505	670799.0295
8032	C.C.		741754.6081	673037.1201
8033	P.T. STA.	1312+78.14	742351.1129	670824.2776
8034	P.O.E.	1314+00.00	742468.7775	670855.9958

Hwy. 102 / Hwy. 62 Ramp 4 Alignment Data

Point No.	Point Type	Station	Northing	Easting
8035	P.O.B.	1020+93.14	742493.8134	670721.1363
8036	P.C. STA.	1021+25.38	742525.6443	670726.2394
	P.I. STA.	1023+05.16	742703.1567	670754.6983
8037	C.C.		742683.3812	669742.3551
8038	P.T. STA.	1024+81.11	742879.4223	670719.3286
8039	P.C. STA.	1026+94.58	743088.7165	670677.3313
	P.I. STA.	1028+36.56	743227.9260	670649.3973
8040	C.C.		743314.1637	671800.8508
8041	P.T. STA.	1029+77.11	743369.7434	670656.2839
8042	P.O.E.	1031+14.03	743506.5078	670662.9251

Hwy. 102 / Hwy. 62 Alignment Data

Point No.	Point Type	Station	Northing	Easting
8043	P.C. STA.	3+32.14	743574.6714	669296.7760
	P.I. STA.	4+43.28	743567.1649	669407.6646
8044	C.C.		755007.6659	670070.7167
8045	P.T. STA.	5+54.42	743561.8107	669518.6780
8046	P.I. STA.	13+49.09	743523.5279	670312.4254
8047	P.O.E.	28+00.00	743453.1550	671761.6305

E. Central Ave. / Hwy. 72 Ramp 5 Alignment Data

Point No.	Point Type	Station	Northing	Easting
8048	P.C. STA.	1432+52.00	752841.6508	671873.9496
8049	C.C.		752977.0454	672004.1718
8050	P.T. STA.	1441+37.03	752846.9802	672139.7172

E. Central Ave. / Hwy. 72 Ramp 6 Alignment Data

Point No.	Point Type	Station	Northing	Easting
8051	P.C. STA.	191+90.00	752491.8069	671798.9038
8052	C.C.		752621.8721	671663.3584
8053	P.T. STA.	200+75.36	752757.3405	671793.5038

E. Central Avenue / Hwy. 72 Alignment Data

Point No.	Point Type	Station	Northing	Easting
8054	P.O.B.	165+23.89	750123.0058	670869.5881
8055	P.C. STA.	174+01.08	750999.8200	670895.2647
	P.I. STA.	179+20.48	751518.9977	670910.4683
8056	C.C.		750960.3581	672242.8231
8057	P.T. STA.	183+92.62	751893.7672	671270.0856
8058	P.C. STA.	201+55.07	753165.4498	672490.3533
	P.I. STA.	204+17.82	753355.0319	672672.2704
8059	C.C.		752768.7510	672903.7667
8060	P.T. STA.	206+47.78	753340.8767	672934.6343
8061	P.O.E.	216+09.95	753289.0405	673895.4092

E. Central Ave. / Hwy. 72 Ramp 3 Alignment Data

Point No.	Point Type	Station	Northing	Easting
8062	P.O.B.	300+00.00	752210.3049	671573.8256
8063	P.C. STA.	301+33.43	752324.4579	671504.7411
	P.I. STA.	302+90.40	752458.7538	671423.4663
8064	C.C.		752654.0730	672049.3868
8065	P.T. STA.	304+41.24	752615.4389	671413.9401
8066	P.O.E.	306+53.55	752827.3607	671401.0557

Hwy. 102 / Hwy. 62 Temporary Ramp 2 Alignment Data

Point No.	Point Type	Station	Northing	Easting
8067	P.O.B.	100+00.00	743958.9243	671258.3108
8068	P.C. STA.	103+14.07	744271.2115	671224.8824
	P.I. STA.	104+41.14	744397.5579	671211.3578
8069	C.C.		744365.0317	672101.3488
8070	P.T. STA.	105+66.47	744522.5801	671234.0691
8071	P.C. STA.	113+46.93	745290.4769	671373.5638
	P.I. STA.	115+55.83	745496.0062	671410.8999
8072	C.C.		745062.9070	672626.3011
8073	P.T. STA.	117+61.03	745678.8310	671511.9509

Temporary Shared Use Path Alignment Data

Point No.	Point Type	Station	Northing	Easting
8074	P.O.B.	10+00.00	744888.5720	670960.7973
8075	P.C. STA.	10+15.64	744886.3399	670976.2773
	P.I. STA.	10+35.69	744883.4786	670996.1211
8076	C.C.		744787.3636	670962.0056
8077	P.T. STA.	10+55.21	744873.1889	671013.3283
8078	P.C. STA.	11+01.72	744849.3231	671053.2384
	P.I. STA.	11+26.14	744836.7886	671074.1994
8079	C.C.		744935.1484	671104.5610
8080	P.T. STA.	11+49.62	744835.3275	671098.5786
8081	P.I. STA.	12+55.32	744829.0044	671204.0832
8082	P.C. STA.	13+39.78	744825.1368	671288.4619
	P.I. STA.	13+72.16	744823.6544	671320.8039
8083	C.C.		744925.0319	671293.0407
8084	P.T. STA.	14+02.41	744841.4084	671347.8778
8085	P.C. STA.	14+24.85	744853.7134	671366.6422
	P.I. STA.	14+40.94	744862.5371	671380.0979
8086	C.C.		744811.9016	671394.0608
8087	P.T. STA.	14+55.98	744861.8569	671396.1742
8088	P.I. STA.	14+67.46	744861.3719	671407.6399
8089	P.O.E.	16+08.39	744854.1539	671548.3854

5/2016
4:16 AM
...PPV\rCA0902_SC_HWY540_01.dgn

SURVEY CONTROL DETAILS

DATE	DATE FILMED	DATE REVISED	DATE FILMED	FED.RD. DIST.NO.	STATE	FED.AID PROJ.NO.	SHEET NO.	TOTAL SHEETS
				6	ARK.			
				JOB NO.		CA0902	178	581

(2) SURVEY CONTROL DETAILS

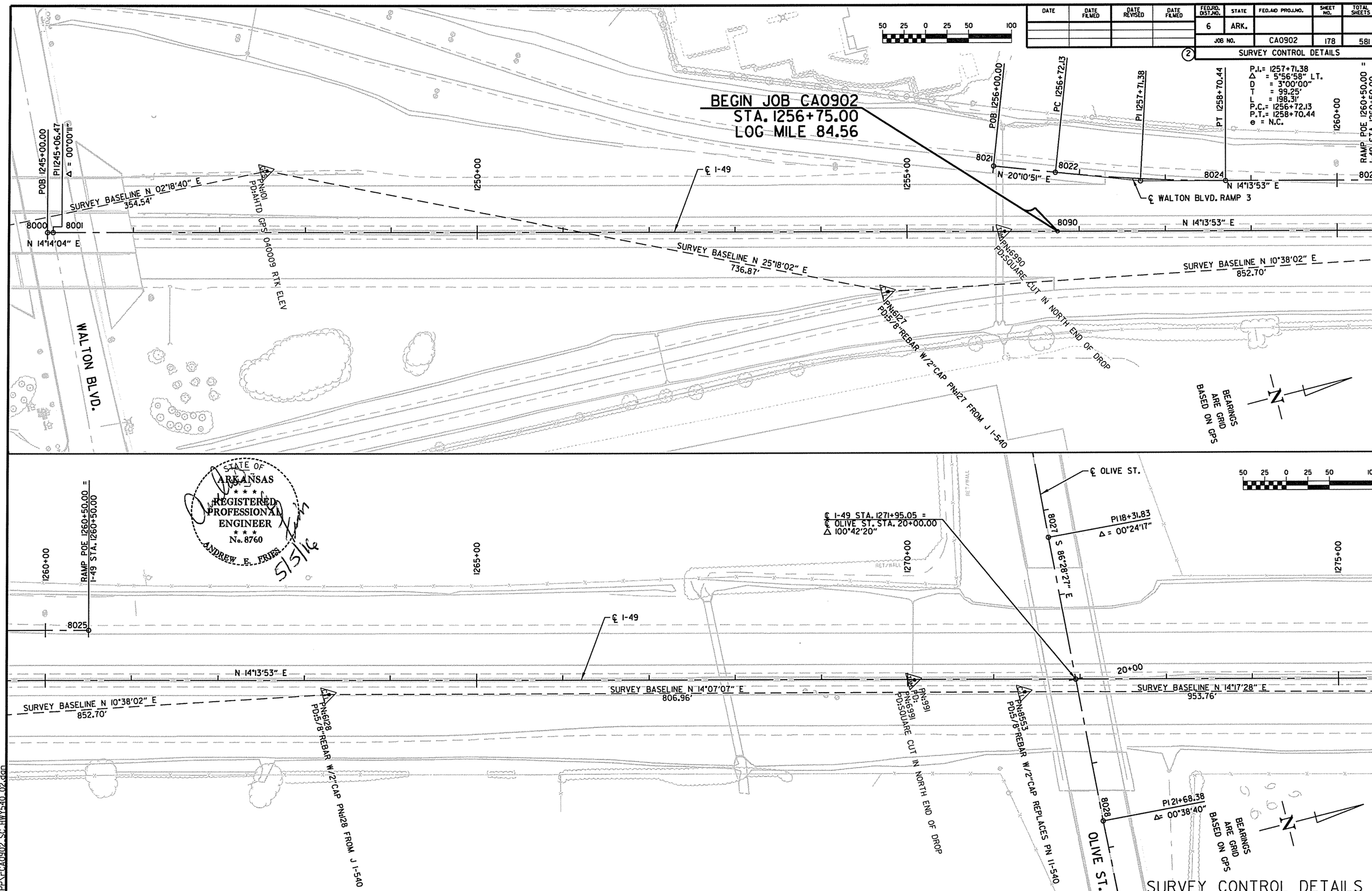

STATE OF ARKANSAS
REGISTERED PROFESSIONAL ENGINEER
No. 8760
ANDREW E. FRIES
5/5/16

SURVEY CONTROL DETAILS

DATE	DATE FILMED	DATE REVISED	DATE FILMED	FED.RD. DIST.NO.	STATE	FED.AID PROJ.NO.	SHEET NO.	TOTAL SHEETS
				6	ARK.			
				JOB NO.		CA0902	179	581

(2) SURVEY CONTROL DETAILS

STATE OF ARKANSAS
REGISTERED PROFESSIONAL ENGINEER
No. 8760
ANDREW E. FRIES
5/5/16

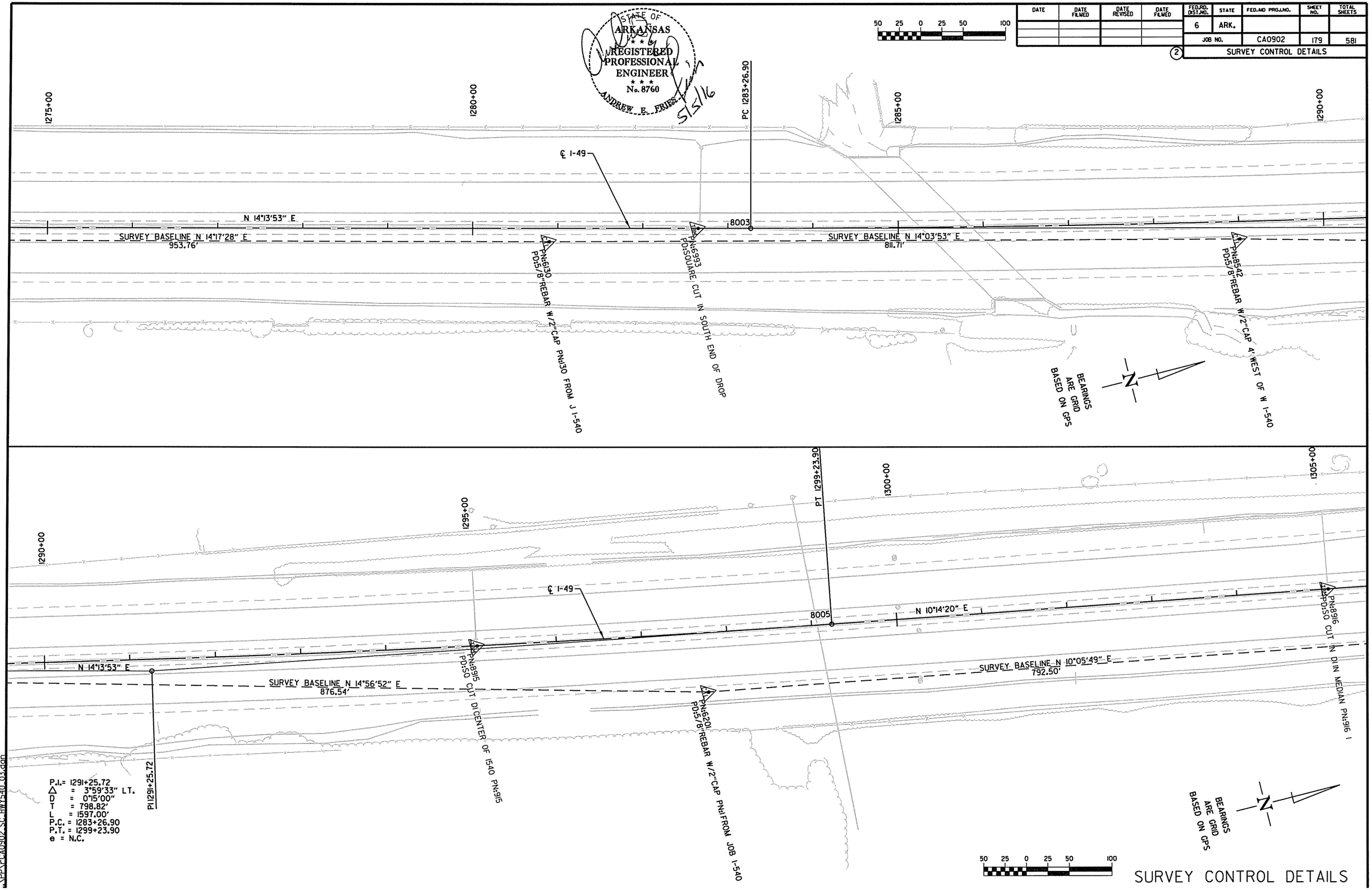

SURVEY CONTROL DETAILS

5/5/2016
8:30:55 PM
\\PPY\CA0902_SC_HWY540_03.dgn

STATE OF ARKANSAS
REGISTERED PROFESSIONAL ENGINEER
No. 8760
ANDREW E. FRIES
5/3/16

DATE	DATE FILMED	DATE REVISED	DATE FILMED

FED.RD. DIST.NO.	STATE	FED.AID PROJ.NO.	SHEET NO.	TOTAL SHEETS
6	ARK.			
JOB NO.		CA0902	180	581

(2) SURVEY CONTROL DETAILS

1305+00 1310+00 1315+00 1320+00

P.I.= 1023+05.16
Δ = 20°27'16" LT.
D = 5°45'00"
T = 179.78'
L = 355.73'
P.C. = 1021+25.38
P.T. = 1024+81.11
e = MATCH EXISTING

POB 1020+93.14 PC 1021+25.38

8035 8036 N 9°06'30" E

℄ RAMP 4

℄ I-49 N 10°14'20" E

℄ RAMP 1

PI 1023+05.16

PN:8916 PD:50 CUT IN DI IN MEDIAN PN:916 I

PN:8917 PD:50 CUT DI IN MEDIAN 1540 PN:917

SURVEY BASELINE N 10°24'05" E 1150.09'

8030 N 10°14'20" E 8031 8033 N15°05'11"E 8034

PN:6202 PD:5/8"REBAR W/2"CAP PN:2 FROM JOB I-540

POB 1309+00.00 PC 1310+84.24 PI 1311+81.25 PT 1312+78.14 POE 1314+00.00

P.I.= 1311+81.25
Δ = 4°50'51" RT.
D = 2°30'00"
T = 97.01'
L = 193.90'
P.C. = 1310+84.24
P.T. = 1312+78.14
e = MATCH EXISTING

PN:6203 PD:5/8"REBAR W/2"CAP PN:3 FROM JOB I-540

SURVEY BASELINE N 25°12'32" E 723.44'

50 25 0 25 50 100

BEARINGS ARE GRID BASED ON GPS

N

1320+00 1325+00 1330+00 1335+00

P.I.= 1028+36.56
Δ = 14°07'35" RT.
D = 5°00'00"
T = 141.98'
L = 282.53'
P.C. = 1026+94.58
P.T. = 1029+77.11
e = MATCH EXISTING

PI 1028+36.56 PC 1026+94.58 PT 1029+77.11

8039 8041 N 2°46'48" E 8042

℄ RAMP 4

℄ HWY. 102

HWY. 102

S 8°13'12" E

℄ I-49 STA. 1324+25.16 =
℄ HWY. 102 62 STA. 20+00.00
Δ 97°27'32"

℄ I-49 N 10°14'20" E

SURVEY BASELINE N 75°45'59" W 665.46'

20+00

PN:8910 PD:AHTD DISK SE COR BR BR5979B PN:

SURVEY BASELINE N 25°12'32" E 723.44'

℄ HWY. 62

HWY. 62

PN:8909 PD:50 CUT IN CA NORT OF 62 EAST I-

PN:6204 PD:5/8"REBAR W/2"CAP PN:4 FROM JOB I-540

PN:6205 PD:5/8"REBAR W/2"CAP PN:5 FROM JOB I-540

SURVEY BASELINE N 29°39'16" E 815.13'

PN:6206 PD:5/8"REBAR W/2"CAP PN:6 FROM JOB I-540

BEARINGS ARE GRID BASED ON GPS

N

POB 100+00.00

8067 N6°06'36"W 8068

℄ TEMP. RAMP

8070

P.I. 104+41.14
Δ = 16° 24'21" RT.
D = 6° 30'
T = 127.07'
L = 252.4'
P.C. = 103+14.07
P.T. = 105+66.47
e = 0.095 '/'
Ls = 280

P.C. STA. 103+14.07 P.I. STA. 104+41.14 105+00 P.T. STA. 105+66.47

50 25 0 25 50 100

SURVEY CONTROL DETAILS

5/5/2016 8:30:59 PM
\\PPS\CA0902 SC HWY540 04.dgn

DATE	DATE FILMED	DATE REVISED	DATE FILMED	FED.RD. DIST.NO.	STATE	FED.AID PROJ.NO.	SHEET NO.	TOTAL SHEETS
				6	ARK.			
				JOB NO.		CA0902	181	581

(2) SURVEY CONTROL DETAILS

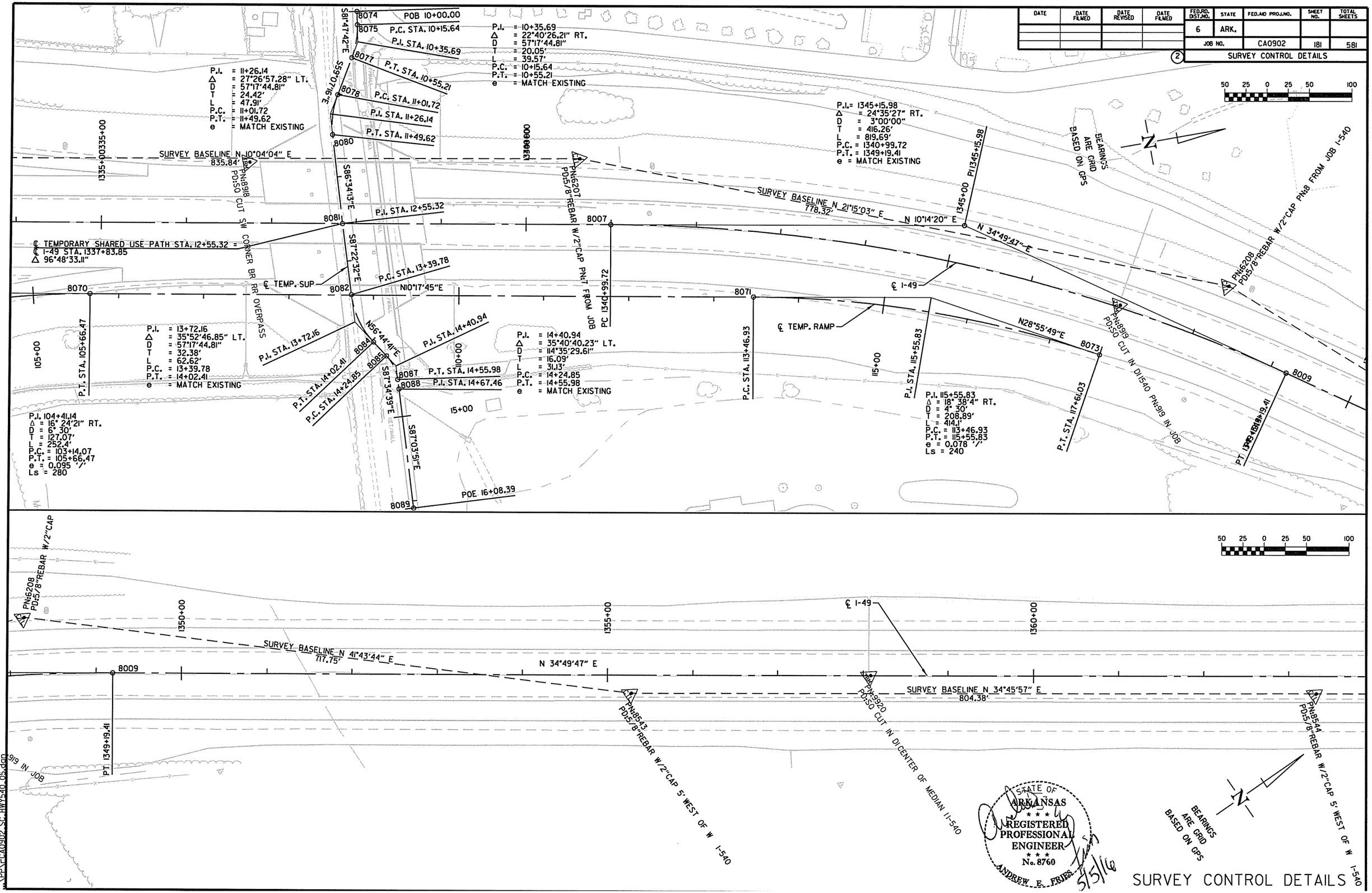

STATE OF ARKANSAS REGISTERED PROFESSIONAL ENGINEER No. 8760 ANDREW E. FRIES 5/5/16

SURVEY CONTROL DETAILS

5/5/2016 8:31:06 PM \\PP\CA0902 SC HWY540 05.dgn

DATE	DATE FILMED	DATE REVISED	DATE FILMED

FED.RD. DIST.NO.	STATE	FED.AID PROJ.NO.	SHEET NO.	TOTAL SHEETS
6	ARK.			
JOB NO.		CA0902	182	581

(2) SURVEY CONTROL DETAILS

50 25 0 25 50 100

STATE OF ARKANSAS
REGISTERED PROFESSIONAL ENGINEER
No. 8760
ANDREW E. FRIES
5/5/16

1365+00 1370+00 ℄ I-49 1375+00

N 34°49'47" E

SURVEY BASELINE N 34°51'08" E
792.86'

SURVEY BASELINE N 34°48'11" E
713.75'

PN:8544 PD:5/8"REBAR W/2"CAP 5' WEST OF W I-540

PN:9920 PD:50 CUT IN DI CENTER I540 PN:920

PN:8545 PD:5/8"REBAR W/2"CAP 5' WEST OF W I-540

PN:8546 PD:5/8"REBAR W/2"CAP 5' WEST OF W I-540

BEARINGS ARE GRID BASED ON GPS

50 25 0 25 50 100

BATTLEFIELD BLVD.

PN:9922 PD:AHTD CAP NW COR BR 5984 CENTRAL I-540

SURVEY BASELINE N 11°20'38" E
415.24'

1380+00

PC 1381+91.69

8010

SURVEY BASELINE N 48°21'31" E
479.34'

1385+00

℄ I-49

1390+00

SURVEY BASELINE N 11°56'28" E
836.11'

PN:9923 PD:50 CUT IN DI CENTER OF MEDIAN 11-540

N 34°49'47" E

PN:8546 PD:5/8"REBAR W/2"CAP 5' WEST OF W I-540

PN:9921 PD:50 CUT IN DI CENTER OF MEDIAN 11-540

PN:8547 PD:5/8"REBAR W/2"CAP 5' WEST OF W I-540

P.I.= 1401+49.80
Δ = 81°01'14" LT.
D = 2°30'00"
T = 1958.11'
L = 3240.82'
P.C.= 1381+91.69
P.T.= 1414+32.51
e = MATCH EXISTING

BEARINGS ARE GRID BASED ON GPS

SURVEY CONTROL DETAILS

5/5/2016
3:31:11 PM
\\PPV\TC\CA0902_SC_HW7540_06.dgn

STATE OF ARKANSAS
REGISTERED PROFESSIONAL ENGINEER
No. 8760
ANDREW E. FRIES
5/5/16

DATE	DATE FILMED	DATE REVISED	DATE FILMED	FED.RD. DST.NO.	STATE	FED.AID PROJ.NO.	SHEET NO.	TOTAL SHEETS
				6	ARK.			
				JOB NO.		CA0902	183	581

2 SURVEY CONTROL DETAILS

50 25 0 25 50 100

BASELINE N 11°56'28" E
836.11'

1395+00

PN:8548
PD:5/8"REBAR W/2"CAP 5' WEST OF W I-540

N 34°49'47" E

1400+00

℄ I-49

PN:8921
PD:SQ CUT IN DI1540 PN:921 IN JOB

N 34°49'47" E

N 46°11'26" W

P.I.= 1401+49.80
Δ = 81°01'14" LT.
D = 2°30'00"
T = 1958.11'
L = 3240.82'
P.C.= 1381+91.69
P.T.= 1414+32.51
e = MATCH EXISTING

PI 1401+49.80

1405+00

PN:6215
PD:5/8"REBAR W/2"CAP PN:15 FROM JO I-540

N 46°11'26" W

BEARINGS ARE GRID BASED ON GPS

N

50 25 0 25 50 100

BEARINGS ARE GRID BASED ON GPS

N

1405+00

1410+00

℄ I-49

PN:8922
PD:SQ CUT IN DICENTER 1540 PN:922

P.T. 1414+32.51

1415+00

1420+00

N 46°11'26" W

8012

N 46°11'26" W

PN:8923
PD:SQ CUT IN DICENTER 1540 PN:923

PN:6216
PD:5/8"REBAR W/2"CAP PN:16 FROM JO I-540

SURVEY CONTROL DETAILS

5/5/2016
3:15 PM
\PPL\CA0902_SC_HWY540_07.dgn

DATE	DATE FILMED	DATE REVISED	DATE FILMED	FED.RD. DIST.NO.	STATE	FED.AID PROJ.NO.	SHEET NO.	TOTAL SHEETS
				6	ARK.			
				JOB NO.		CA0902	184	581

(2) SURVEY CONTROL DETAILS

50 25 0 25 50 100

BEARINGS ARE GRID BASED ON GPS

℄ E. CENTRAL AVE.

N 43°49'05" E

℄ I-49 STA. 1430+31.09 =
℄ E. CENTRAL AVE./HWY. 72 STA. 194+36.12
△ 90°00'00"

PN:8924
PD:AHTD CAP SW COR BR#5982 PN:924

℄ RAMP 6 STA. 200+75.36 =
℄ I-49 STA. 1432+51.34

PT200+75.36

200+00

△ = 270°02'02" RT.
D = 30°30'00"
T = -
L = 885.36'
P.C. = 191+90.00
P.T. = 200+75.36
e = 0.060'/'

℄ RAMP 6

8053

1420+00

1425+00

℄ I-49

1430+00

PN:6226
PD:5/8"REBAR W/2"CAP
PN:26 FROM JO I-540

N 46°11'26" W

N 46°11'26" W

PN:8923
PD:SO CUT IN DI/CENTER I540 PN:923

PN:6217
PD:5/8"REBAR W/2"CAP PN:17 FROM JO I-540

195+00

8048

℄ RAMP 5 STA. 1432+52.00 =
℄ I-49 STA. 1432+51.65

℄ RAMP 5

PN:102
PD:AHTD GPS 040044 RTK ELEV
PN:102
PD:040044 040044 REBAR&CAP REBAR&C
PN:696
PD:040044 040044 REBAR&CAP REBAR&C
PN:1186
PD:040044 040044 REBAR&CAP REBAR&C

PC 1432+52.00

△ = 269°56'01" RT.
D = 30°30'00"
T = -
L = 885.03'
P.C. = 1432+52.00
P.T. = 1441+37.03
e = 0.060'/'

℄ HWY. 72

8050

PT1441+37.03

℄ RAMP 6

△ = 270°02'02" RT.
D = 30°30'00"
T = -
L = 885.36'
P.C. = 191+90.00
P.T. = 200+75.36
e = 0.060'/'

PN:6220
PD:5/8"REBAR W/2"CAP PN:20 FROM JO I-540

1435+00

1440+00

℄ I-49

1445+00

PI1448+06.05
Δ= 00°02'49"

N 46°11'26" W

8091

N 46°11'26" W

8016

PN:8925
PD:SO CUT IN DI/N MEDIAN PN:925

△ = 269°56'01" RT.
D = 30°30'00"
T = -
L = 885.03'
P.C. = 1432+52.00
P.T. = 1441+37.03
e = 0.060'/'

1435+00

℄ RAMP 5

END JOB CA0902
STA. 1438+00.00
LOG MILE 87.99

STATE OF ARKANSAS
REGISTERED PROFESSIONAL ENGINEER
No. 8760
ANDREW E. FRIES
5/5/16

50 25 0 25 50 100

BEARINGS ARE GRID BASED ON GPS

N

SURVEY CONTROL DETAILS

5/5/2016
3:31:16 PM
\PP\1-CA0902_SC_HWY540_08.dgn

DATE	DATE FILMED	DATE REVISED	DATE FILMED	FED.RD. DIST.NO.	STATE	FED.AID PROJ.NO.	SHEET NO.	TOTAL SHEETS
				6	ARK.			
				JOB NO.		CA0902	185	581

(2) SURVEY CONTROL DETAILS

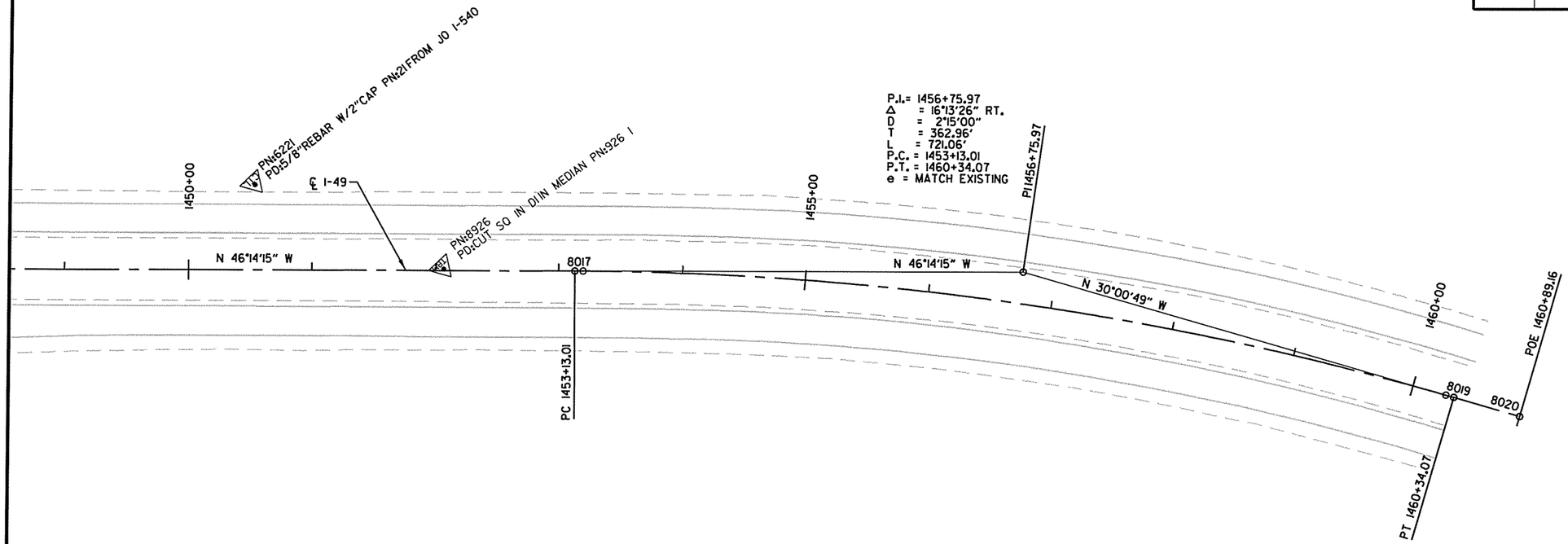

BEARINGS ARE GRID BASED ON GPS

50 25 0 25 50 100

STATE OF ARKANSAS
REGISTERED PROFESSIONAL ENGINEER
No. 8760
ANDREW E. FRIES
5/5/16

5/5/2016
8:31:22 PM
\\PS\...\CA0902_SC_HWY540_09.dgn

SURVEY CONTROL DETAILS

DATE	DATE FILMED	DATE REVISED	DATE FILMED	FED.RD. DIST.NO.	STATE	FED.AID PROJ.NO.	SHEET NO.	TOTAL SHEETS
				6	ARK.			
				JOB NO.		CA0902	186	581

(2) SURVEY CONTROL DETAILS

STATE OF ARKANSAS
REGISTERED PROFESSIONAL ENGINEER
No. 8760
ANDREW E. FRIES
5/5/16

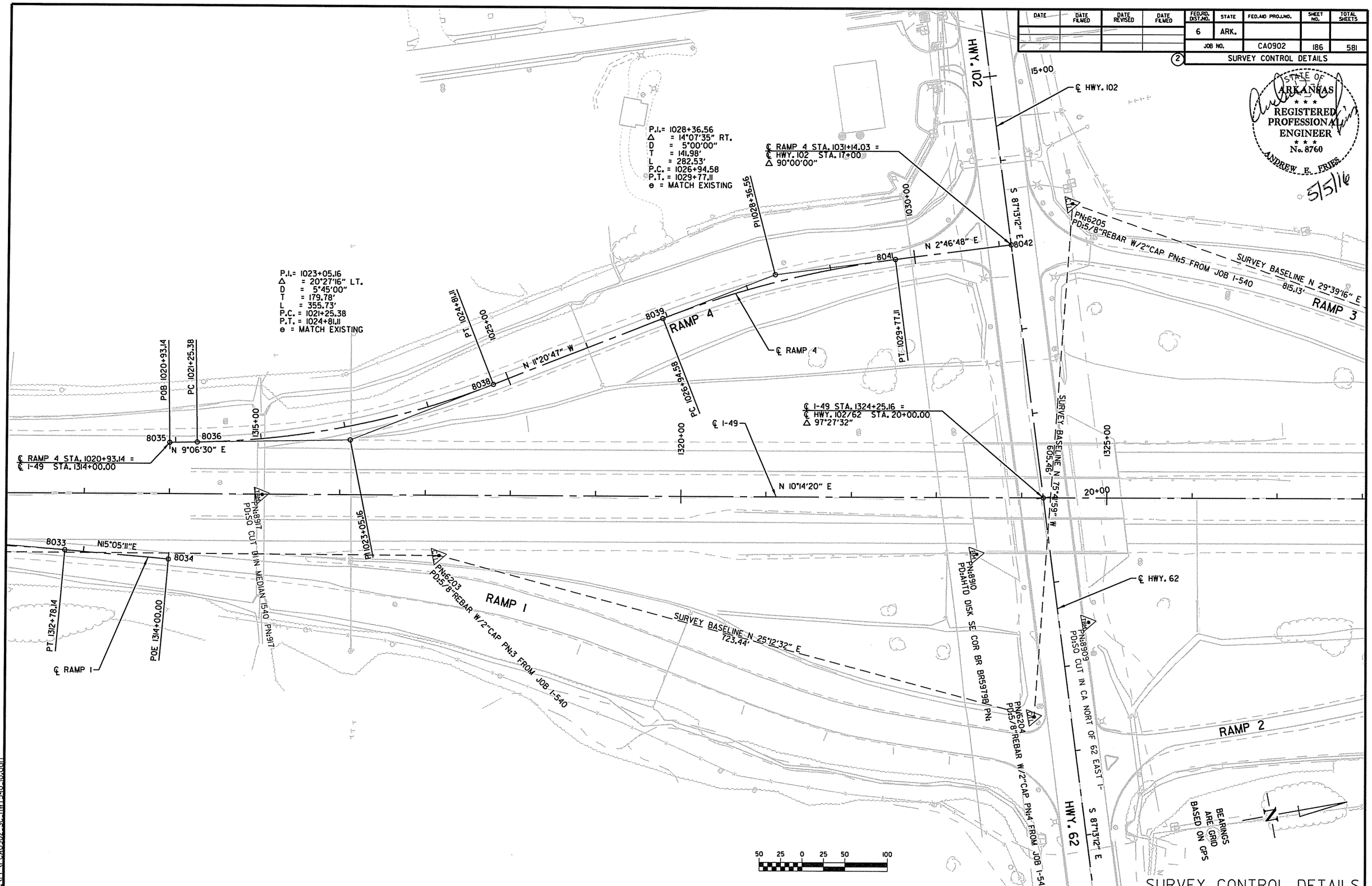

SURVEY CONTROL DETAILS

5/5/2016
8:31:25 PM
\\PP\CA0902_SC_HWY540_10.dgn

DATE	DATE FILMED	DATE REVISED	DATE FILMED	FED.RD. DIST.NO.	STATE	FED.AID PROJ.NO.	SHEET NO.	TOTAL SHEETS
				6	ARK.			
				JOB NO.		CA0902	187	581

(2) SURVEY CONTROL DETAILS

STATE OF ARKANSAS
REGISTERED PROFESSIONAL ENGINEER
No. 8760
ANDREW E. FRIES
5/5/16

P.I.= 302+90.40
Δ = 27°42'10" RT.
D = 09°00'00"
T = 156.97'
L = 307.81'
P.C. = 301+33.43
P.T. = 304+41.24
e = MATCH EXISTING

Δ = 270°02'02" RT.
D = 30°30'00"
T = -
L = 885.36'
P.C. = 191+90.00
P.T. = 200+75.36
e = 0.060'/'

Δ = 269°56'01" RT.
D = 30°30'00"
T = -
L = 885.03'
P.C. = 1432+52.00
P.T. = 1441+37.03
e = 0.060'/'

PT 304+41.24
PI 302+90.40
PC 301+33.43
PC 191+90.00
PT 200+75.36
PC 1432+52.00
PT 1441+37.03
PC 201+55.07

℄ RAMP 3 STA. 300+00.00 = ℄ E. CENTRAL AVE. STA. 188+31.32
Δ 75°00'00"

℄ RAMP 6 STA. 191+90.00 = ℄ E. CENTRAL AVE. STA. 191+90.27

℄ RAMP 6 STA. 200+75.36 = ℄ I-49 STA. 1432+51.34

℄ RAMP 5 STA. 1432+52.00 = ℄ I-49 STA. 1432+51.65

℄ RAMP 5 STA. 1441+37.03 = ℄ HWY. 72 STA. 196+82.51

℄ I-49 STA. 1430+31.09 = ℄ E. CENTRAL AVE./HWY. 72 STA. 194+36.12
Δ 90°00'00"

N 3°28'45" W
N 31°10'55" W
N 46°11'26" W
N 43°49'05" E

PN:8550
PD:5/8"REBAR W/2"CAP REPLACES PN 11-540

PN:8924
PD:AHTD CAP SW COR BR=5982 PN=924

PN:6226
PD:5/8"REBAR W/2"CAP
PN:26 FROM JO 1-540

PN:8549
PD:5/8"REBAR W/2"CAP REPLACES PN 11-540

PN:102
PD:AHTD GPS 040044 RTK ELEV
PN:102
PD:040044 040044 REBAR&CAP REBAR&C
PN:696
PD:040044 040044 REBAR&CAP REBAR&C
PN:1186
PD:040044 040044 REBAR&CAP REBAR&C

℄ RAMP 3
℄ RAMP 6
℄ RAMP 5
℄ E. CENTRAL AVE.
℄ HWY. 72
℄ I-49

E. CENTRAL AVE.
HWY. 72
NE 11TH ST.

BEARINGS ARE GRID BASED ON GPS

50 25 0 25 50 100

SURVEY CONTROL DETAILS

5/5/2016
8:36:29 PM
...\PLANS\CA0902_SC_HWY540.dgn

DATE	DATE FILMED	DATE REVISED	DATE FILMED	FED.RD. DIST.NO.	STATE	FED.AID PROJ.NO.	SHEET NO.	TOTAL SHEETS
				6	ARK.			
				JOB NO.		CA0902	188	581

(2) SURVEY CONTROL DETAILS

STATE OF ARKANSAS
REGISTERED PROFESSIONAL ENGINEER
No. 8760
ANDREW E. FRIES
5/5/16

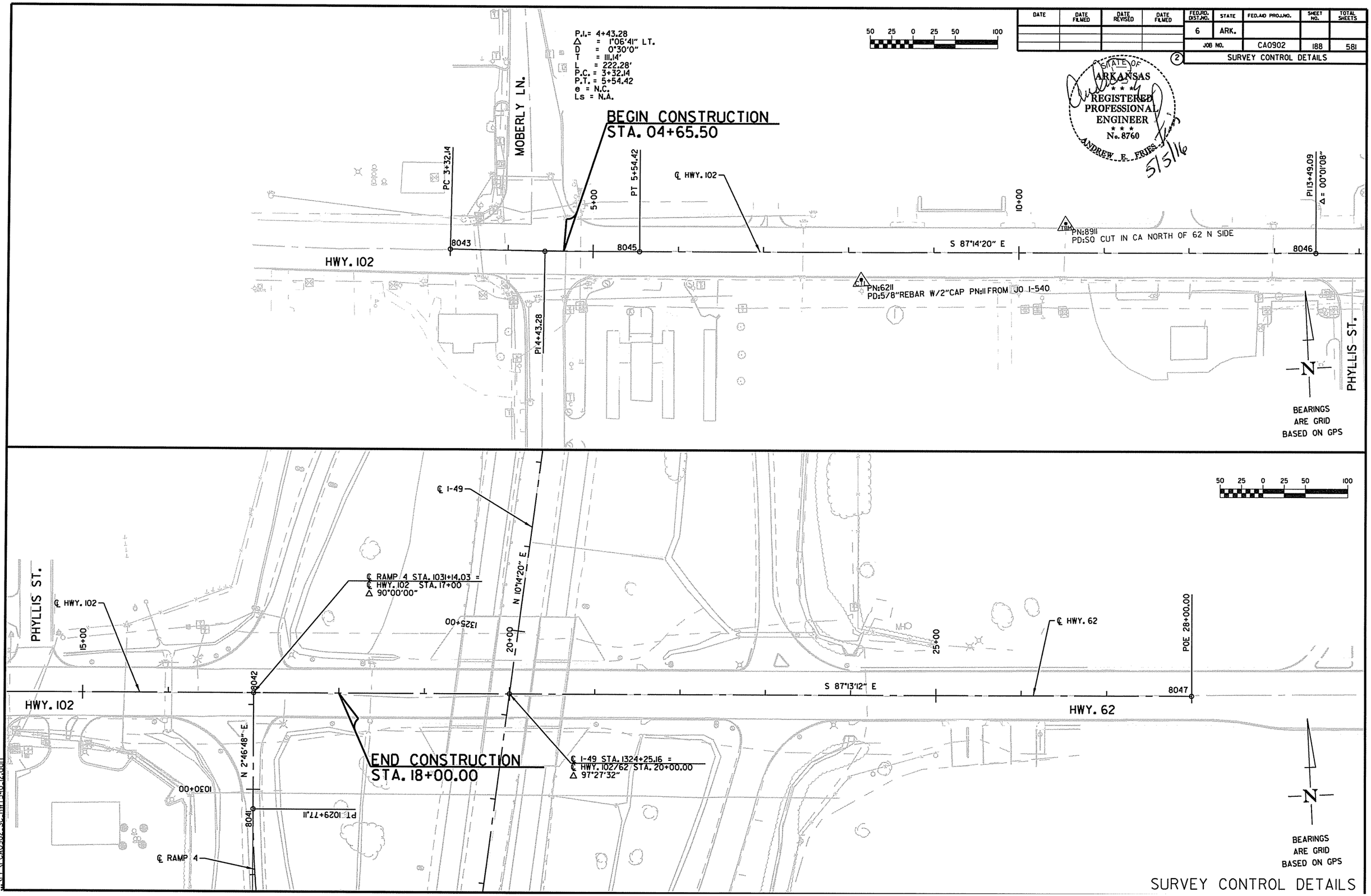

SURVEY CONTROL DETAILS

5/5/2016
8:31:32 PM
\\PP\CA0902_SC_HWY540_12.dgn

DATE	DATE FILMED	DATE REVISED	DATE FILMED	FED.RD. DST.NO.	STATE	FED.AID PROJ.NO.	SHEET NO.	TOTAL SHEETS
				6	ARK.			
				JOB NO.		CA0902	189	581

(2) SURVEY CONTROL DETAILS

50 25 0 25 50 100

STATE OF ARKANSAS
REGISTERED PROFESSIONAL ENGINEER
No. 8760
ANDREW E. FRIES
5/5/16

P.I.= 179+20.48
△ = 42°08'26" RT.
D = 04°15'00"
T = 519.40'
L = 991.54'
P.C. = 174+01.08
P.T. = 183+92.62
e = MATCH EXISTING

POB 165+23.89
8054
N 1°40'39" E
℄ E. CENTRAL AVE.
170+00
175+00
8055
PC 174+01.08
PI 179+20.48
N. WALKER ST.
E. CENTRAL AVE.
180+00
PN:8930
PD:SQ CUT COR ES BLUE BERRY PN:930
PN:6924
PD:SQ CUT IN BACK OF CA S SIDE OF I-540
BEARINGS ARE GRID BASED ON GPS

BEGIN CONSTRUCTION
STA. 183+59.00
McCOLLUM DR.
℄ E. CENTRAL AVE. STA. 188+31.32 =
℄ RAMP 3 STA. 300+00.00
△ 75°00'00"
℄ RAMP 3
℄ E. CENTRAL AVE.
PT 183+92.62
185+00
8057
300+00
8062
8063
N 31°10'55" W
PC 301+33.43
℄ RAMP 6
195+00
200+00
PT 200+75.36
8053
8052
℄ I-49 STA. 1430+31.09 =
℄ E. CENTRAL AVE./HWY. 72 STA. 194+36.12
△ 90°00'00"
PC 191+90.00
190+00
8051
N 43°49'05" E
PN:8924
PD:AHTD CAP SW COR BR#5982 PN:924
1430+00
℄ RAMP 6 STA. 191+90.00 =
℄ E. CENTRAL AVE. STA. 191+90.27
℄ I-49
PN:8555
PD:5/8"REBAR W/2"CAP REPLACES PN 2 I-540
PN:8550
PD:5/8"REBAR W/2"CAP REPLACES PN 11-540
PN:6226
PD:5/8"REBAR W/2"CAP
PN:26 FROM JO I-540

50 25 0 25 50 100

SURVEY CONTROL DETAILS

5/5/2016
8:31:36 PM
\\PPS\CA0902 SC HWY540 I3.dgn

DATE	DATE FILMED	DATE REVISED	DATE FILMED	FED.RD. DIST.NO.	STATE	FED.AID PROJ.NO.	SHEET NO.	TOTAL SHEETS
				6	ARK.			
				JOB NO.		CA0902	190	581

(2) SURVEY CONTROL DETAILS

STATE OF ARKANSAS
REGISTERED PROFESSIONAL ENGINEER
No. 8760
ANDREW E. FRIES
5/5/16

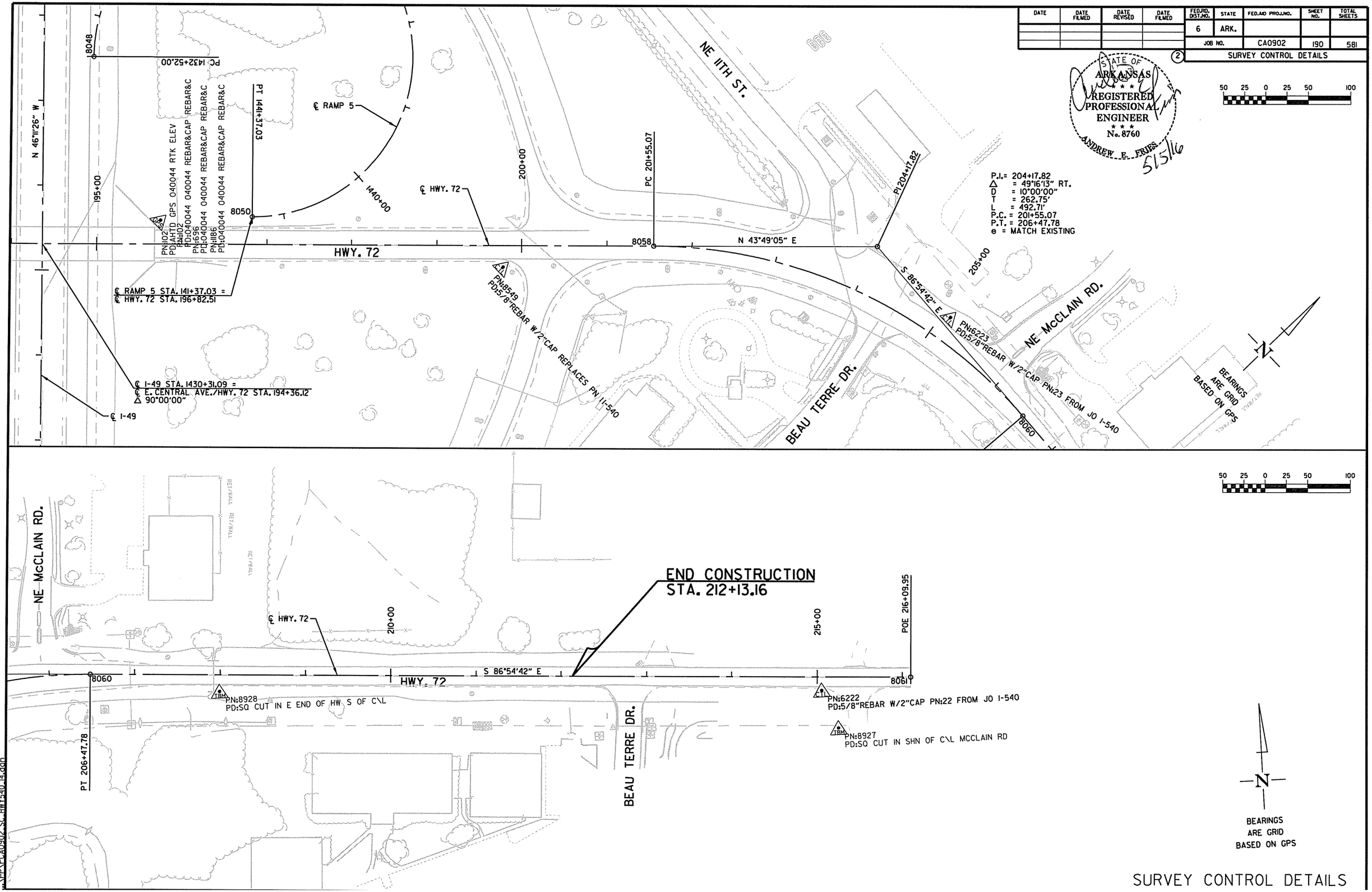

SURVEY CONTROL DETAILS

5/5/2016
8:31:40 PM
\\PP\CA0902_SC_HWY540_14.dgn

DATE	DATE FILMED	DATE REVISED	DATE FILMED	FED.RD. DIST.NO.	STATE	FED.AID PROJ.NO.	SHEET NO.	TOTAL SHEETS
				6	ARK.			
				JOB NO.		CA0902	191	581

(2) STA. 1245+00.00 TO 1260+00.00

EXISTING RIGHT OF WAY

POB 1245+00.00
PI 1245+06.47
Δ = 00°00'11"

N 14°14'04" E

1250+00

1255+00

POB 1256+00.00

N 20°10'51" E

P.I.= 1257+71.38
Δ = 5°56'58" LT.
D = 3°00'00"
T = 99.25'
L = 198.31'
P.C.= 1256+72.13
P.T.= 1258+70.44
e = N.C.

PC 1256+72.13

PI 1257+71.38

PT 1258+70.44

CONSTRUCTION LIMITS

1260+00

℄ RAMP 3

PROPOSED 4' FLAT BOTTOM DITCH

N 14°13'53" E

℄ I-49

N 14°13'53" E

WALTON BLVD.

EXISTING RIGHT OF WAY

STATE OF ARKANSAS
REGISTERED PROFESSIONAL ENGINEER
No. 8760
ANDREW E. FRIES
5/5/16

BEGIN JOB CA0902
STA. 1256+75.00
LOG MILE 84.56

I-49

EXISTING GROUND AT ℄ (I-49 MEDIAN SURFACE)

+74.80
1279.75
+00.00
1280.00

LT. DITCH GRADE 0.50%

+00.00
1281.50

LT. DITCH GRADE 0.99%

REFER TO SURVEY CONTROL DETAIL SHEETS FOR HORIZONTAL AND VERTICAL CONTROL DATA

1310 1305 1300 1295 1290 1285 1280 1275 1270 1265

1245+00 1246+00 1247+00 1248+00 1249+00 1250+00 1251+00 1252+00 1253+00 1254+00 1255+00 1256+00 1257+00 1258+00 1259+00 1260+00

5/5/2016
8:52:30 PM
W:\PRV\CA0902_PP_HWY540_01.dgn

STA.	STA.	GUARDRAIL (TYPE A)	TERMINAL ANCHOR POST (TYPE I)	GUARDRAIL TERMINAL (TYPE 2)
1260+73.00	1268+73.00 LT.	750'	1EA.	1EA.
1269+64.00	1273+64.00 RT.	350'	1EA.	1EA.
1270+54.00	1274+54.00 LT.	350'	1EA.	1EA.

STA. 1267+87.00 - IN PLACE
DBL. 4' X 3' X 185' R.C. BOX CULVERT
WITH 12° RT. FWD. SKEW
WITH 3:1 WINGS LT. & RT.
RETAIN & EXTEND 11.5' LT. & 8.5' RT.
050 = 137 CFS D.A .= 95 ACRES

STA. 1270+07.00 - IN PLACE
18" X 88' R.C. PIPE CULVERT WITH FES LT.
REMOVE FES LT. & EXTEND R.C. PIPE 15' LT.
(CLASS III) (TYPE 3 BEDDING) WITH FES LT.
050 = 2.8 CFS D.A. = 0.3 ACRES
18" R.C. PIPE = 15 LIN. FT.
18" FES = 1EA.

DATE	DATE FILMED	DATE REVISED	DATE FILMED	FED.RD. DIST.NO.	STATE	FED.AID PROJ.NO.	SHEET NO.	TOTAL SHEETS
				6	ARK.			
				JOB NO.		CA0902	192	581

(2) STA. 1260+00.00 TO 1275+00.00

RAMP POE 1260+50.00 I-49 STA. 1260+50.00

CONSTRUCTION LIMITS

PROPOSED GUARDRAIL FOR OVERHEAD SIGN STRUCTURE

EXISTING RIGHT OF WAY

PROPOSED RETAINING WALL A

PROPOSED 4' FLAT BOTTOM DITCH

℄ I-49 STA. 1271+95.05 =
℄ OLIVE ST. STA. 20+00.00
△ 100°42'20"

PROPOSED RETAINING WALL A1 & A2

PROPOSED 4' FLAT BOTTOM DITCH

PI 18+31.83
Δ = 00°24'17"
S 86°28'27" E

PROPOSED GUARDRAIL

EXISTING RIGHT OF WAY

1260+00 | 1265+00 | 1270+00 | 1275+00

12'-0" | 10'-0"

9'-8" OVERALL WIDTH | 9.88

℄ I-49

N 14°13'53" E

20+00

EXISTING RIGHT OF WAY

CONSTRUCTION LIMITS

1264+00 | 1267+00

300'-0" AUXILIARY LANE TRANSITION 0'-12'
300'-0" SHOULDER TRANSITION 6.50'-10'

PROPOSED GUARDRAIL

PROPOSED RETAINING WALL B1 & B2

PI 21+68.38
Δ= 00°38'40"

PROPOSED 8' FLAT BOTTOM DITCH

OLIVE ST.

STATE OF ARKANSAS
REGISTERED PROFESSIONAL ENGINEER
No. 8760
ANDREW E. FRIES
5/5/16

I-49

SEE RETAINING WALL LAYOUT SHEETS FOR ADDITIONAL INFORMATION

EXISTING GROUND (℄ I-49 MEDIAN SURFACE)

PROPOSED RETAINING WALL B1

PROPOSED RETAINING WALL B2

PROPOSED RETAINING WALL A

+00.00 1281.50 — LT. DITCH GRADE -1.25% — +00.00 1280.25 — LT. DITCH GRADE -0.50% — +00.00 1279.75 — LT. DITCH GRADE -0.25% — +00.00 1279.25

+00.00 1281.50 — RT. DITCH GRADE -0.50% — +00.00 1281.00 — RT. DITCH GRADE -0.77% — +50.00 1279.85 — LT. DITCH GRADE -1.00% — +00.00 1277.25 — LT. DITCH GRADE -0.50% — +00.00 1276.75 — LT. DITCH GRADE -1.74% — +50.00 1275.88

+00.00 1275.50 — LT. DITCH GRADE 0.94% — +06.67 1276.50

+00.00 1280.50 — RT. DITCH GRADE -0.25% — +00.00 1280.00

STA. 1270+07.00
F.L. OUTLET = 1276.50
EXIST. F.L. INLET = 1277.08
EXIST. F.L. OUTLET = 1276.55

STA. 1267+87.00
F.L. INLET = 1275.77
F.L. OUTLET = 1275.17
EXIST. F.L. INLET = 1275.75
EXIST. F.L. OUTLET = 1275.20 LT.

REFER TO SURVEY CONTROL DETAIL SHEETS FOR HORIZONTAL AND VERTICAL CONTROL DATA

1310 | 1305 | 1300 | 1295 | 1290 | 1285 | 1280 | 1275 | 1270 | 1265

1260+00 | 1261+00 | 1262+00 | 1263+00 | 1264+00 | 1265+00 | 1266+00 | 1267+00 | 1268+00 | 1269+00 | 1270+00 | 1271+00 | 1272+00 | 1273+00 | 1274+00 | 1275+00

5/5/2016
8:52:42 PM
\\FRFILE\CA0902_PP_HWY540_02.dgn

STA.	STA.	GUARDRAIL (TYPE A)	TERMINAL ANCHOR POST (TYPE I)	GUARDRAIL TERMINAL (TYPE 2)
1278+00.00	1281+50.00 LT.	300'	1EA.	1EA.
1284+29.73	1289+54.73 RT.	525'	1EA.	1EA.

STA. 1282+68.00 - IN PLACE
18" X 92' R.C. PIPE CULVERT WITH FES LT.
REMOVE FES LT. & EXTEND R.C. PIPE 8' LT.
(CLASS III) (TYPE 3 BEDDING) WITH FES LT.
18" R.C. PIPE = 8 LIN. FT.
18" FES = 1EA.

STA. 1285+56.00 - IN PLACE
QUINT. 8' X 4' X 241' R.C. BOX CULVERT
WITH 45° RT. FWD. SKEW
WITH 3:1 WINGS LT. & RT.
RETAIN & EXTEND 19' LT.
Q50 = 1200 CFS D.A .= 700 ACRES
SPAN = 60.00'

DATE	DATE FILMED	DATE REVISED	DATE FILMED	FED.RD. DIST.NO.	STATE	FED.AID PROJ.NO.	SHEET NO.	TOTAL SHEETS
				6	ARK.			
				JOB NO.		CA0902	193	581

(2) STA. 1275+00.00 TO 1290+00.00

STA. 1289+41.00 - CONSTRUCT
TYPE ST. DROP INLET 3.25' LT. OF C.L. H = 7'-0"
WITH 30" x 2' R.C. PIPE CULVERT
R.C. PIPE CULVERT (CLASS III)(TYPE 3 BEDDING)
CONNECT TO DROP INLET STA. 1289+41.00, RT. OF C.L.
DROP INLET = 4'-0" X 4'-6"

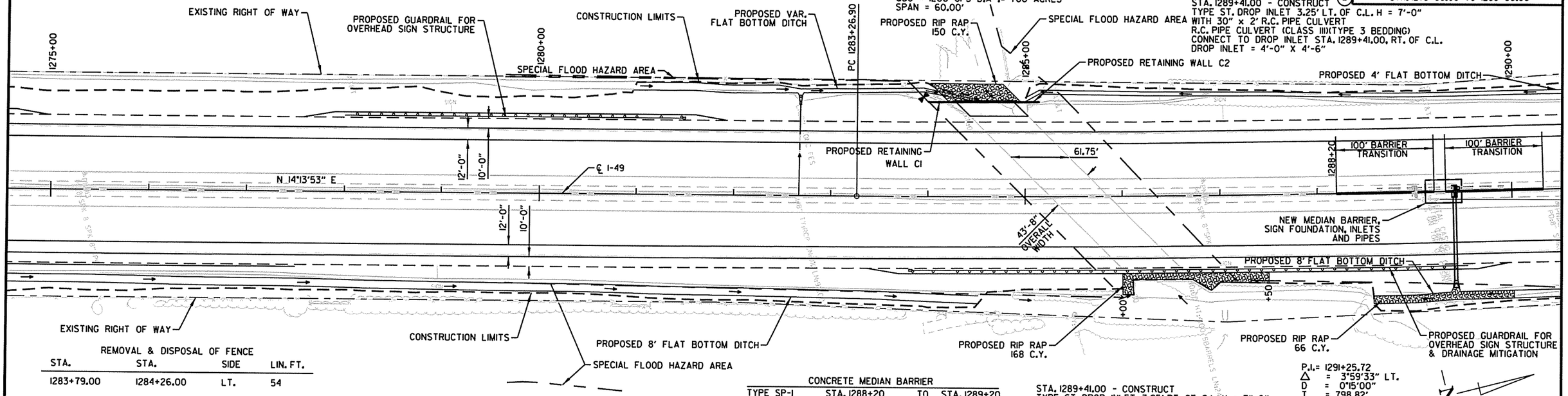

REMOVAL & DISPOSAL OF FENCE

STA.	STA.	SIDE	LIN. FT.
1283+79.00	1284+26.00	LT.	54

FENCE

STA.	STA.	SIDE	TYPE	LIN. FT.
1283+79.00	1284+00.00	LT.	A	30

REMOVAL OF MEDIAN BARRIER

STA.	STA.	SIDE	LIN. FT.
1288+20.00	1290+32.00	C.L.	212

CONCRETE MEDIAN BARRIER

TYPE SP-I	STA. 1288+20	TO	STA. 1289+20
TYPE SP-I	STA. 1289+32	TO	STA. 1290+32

STA. 1289+41.00 - CONSTRUCT
TYPE ST DROP INLET 3.25' RT. OF C.L. H = 7'-0"
WITH 36" X 86'
R.C. PIPE CULVERT (CLASS V) (JACK AND BORE)
WITH FES
DROP INLET = 4'-0" x 4'-6"

P.I.= 1291+25.72
Δ = 3°59'33" LT.
D = 0°15'00"
T = 798.82'
L = 1597.00'
P.C. = 1283+26.90
P.T. = 1299+23.90
e = N.C.

I-49

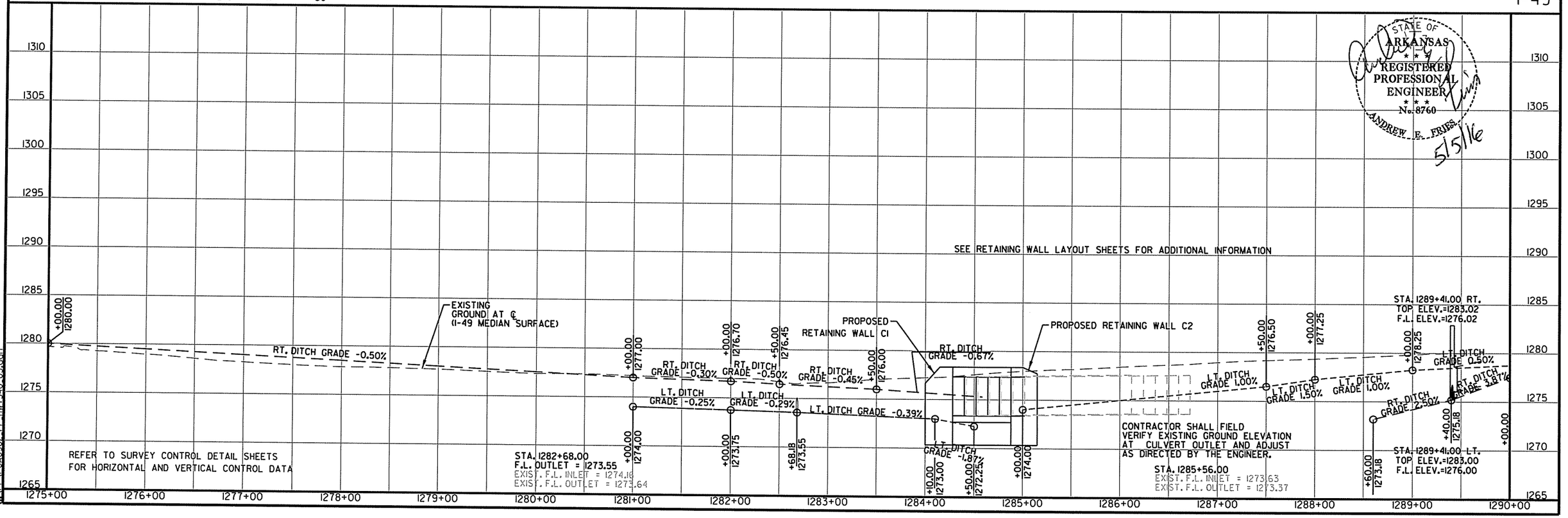

STATE OF ARKANSAS
REGISTERED PROFESSIONAL ENGINEER
No. 8760
ANDREW E. FRIES
5/5/16

5/5/2016
8:35:29 PM
K:\PE\CA0902 PP HWY540 03.dgn

STA.	STA.	GUARDRAIL (TYPE A)	TERMINAL ANCHOR POST (TYPE 1)	GUARDRAIL TERMINAL (TYPE 2)
1299+72.37	1301+97.00 LT.	175'	1EA.	1EA.

STA. 1290+50.00 - IN PLACE
DROP INLET ON LT.
WITH 30" x 148' R.C. PIPE CULVERT
PLUG AND ABANDON EXIST. 30" R.C. PIPE CULVERT 19' AND
REMOVE 26' EXIST. R.C. PIPE CULVERT AND
EXTEND 30" R.C. PIPE CULVERT (CLASS III)(TYPE 3 BEDDING) = 3 LIN. FT.
CONNECT TO DROP INLET STA. 1289+41.00, LT. OF C.L.

DATE	DATE FILMED	DATE REVISED	DATE FILMED

FED.RD. DIST.NO.	STATE	FED.AID PROJ.NO.	SHEET NO.	TOTAL SHEETS
6	ARK.			
JOB NO.		CA0902	194	581

(2) STA. 1290+00.00 TO 1304+50.00

1290+00 1295+00 1299+23.90 1300+00 1305+00

EXISTING RIGHT OF WAY
CONSTRUCTION LIMITS
PROPOSED 4' FLAT BOTTOM DITCH
PROPOSED GUARDRAIL FOR OVERHEAD SIGN STRUCTURE
℄ I-49
N 10°14'20" E
12'-0" 10'-0"
12'-0" 10'-0"
PROPOSED 4' FLAT BOTTOM DITCH
PI 1291+25.72
CONSTRUCTION LIMITS
PROPOSED 4' FLAT BOTTOM DITCH
EXISTING RIGHT OF WAY

P.I.= 1291+25.72
Δ = 3°59'33" LT.
D = 0°15'00"
T = 798.82'
L = 1597.00'
P.C. = 1283+26.90
P.T. = 1299+23.90
e = N.C.

STATE OF ARKANSAS
REGISTERED PROFESSIONAL ENGINEER
No. 8760
ANDREW E. FRIES
5/5/16

I-49

1310 1305 1300 1295 1290 1285 1280 1275 1270 1265

1277.50
+00.00 1279.00
+00.00 1281.50
+00.00 1282.60
+00.00 1285.75
+00.00 1285.00

RT. DITCH GRADE 0.50%
RT. DITCH GRADE 2.50%
RT. DITCH GRADE 1.10%
LT. DITCH GRADE 0.50%
EXISTING GROUND AT ℄ (I-49 MEDIAN SURFACE)
RT. DITCH GRADE 0.30%
LT. DITCH GRADE 0.45%
RT. DITCH GRADE 0.50%

REFER TO SURVEY CONTROL DETAIL SHEETS FOR HORIZONAL AND VERTICAL CONTROL DATA

1290+00 1291+00 1292+00 1293+00 1294+00 1295+00 1296+00 1297+00 1298+00 1299+00 1300+00 1301+00 1302+00 1303+00 1304+00 1304+50

5/5/2016
8:52:54 PM
M:\PW\CA0902.PP HWY540_04.dgn

STA.	STA.	GUARDRAIL (TYPE A)	TERMINAL ANCHOR POST (TYPE 1)	GUARDRAIL TERMINAL (TYPE 2)
1307+82.00	1310+32.00 RT.	200'	1EA.	1EA.

DATE	DATE FILMED	DATE REVISED	DATE FILMED

FED.RD. DIST.NO.	STATE	FED.AID PROJ.NO.	SHEET NO.	TOTAL SHEETS
6	ARK.			
JOB NO.		CA0902	195	581

STA. 1304+50.00 TO 1319+50.00

300'-0" AUXILIARY LANE TRANSITION 12'-0'
300'-0" SHOULDER TRANSITION 10'-3.85'

PROPOSED 4' FLAT BOTTOM DITCH

CONSTRUCTION LIMITS

EXISTING RIGHT OF WAY

1304+74.00 | 1305+00 | 1307+74.00 | 1310+00

℄ I-49

N 10°14'20" E

12'-0" | 10'-0"

STA. 1313+08.75 - IN PLACE
DROP INLET IN MEDIAN
REMOVE AND CONSTRUCT
TYPE TM DROP INLET 3.25' LT. OF C.L. H = 4'-5"
CONNECT TO R.C. BOX CULVERT
DROP INLET = 3'-0" x 4'-6"

STA. 1318+00.00 - CONSTRUCT
TYPE ST DROP INLET 3.25' LT. OF C.L. H = 4'-6"
WITH 18" X 287'
R.C. PIPE CULVERT (CLASS III) (TYPE 3 BEDDING)
CONNECT TO DROP INLET STA. 1315+10. LT. OF C.L.
DROP INLET = 3'-0" x 4'-6"

P.I.= 1023+05.16
Δ = 20°27'16" LT.
D = 5°45'00"
T = 179.78'
L = 355.73'
P.C. = 1021+25.38
P.T. = 1024+81.11
e = MATCH EXISTING

POB 1020+93.14 | PC 1021+25.38 | PT 1024+81.11 | 1025+00

N 11°20'47" W

RAMP 4

STA. 1314+25.00
BEGIN INSIDE WIDENING
MATCH EXISTING LANES
AND MEDIAN BARRIER

N 9°06'30" E

1315+00

12'-0" | 10'-0" | 16'-0"

P.I. 1023+05.16

10'-0" | 12'-0"

N 10°14'20" E

N 15°05'11" E

RAMP 1

POB 1309+00.00 | PC 1310+84.24 | PI 1311+81.25 | PT 1312+78.14 | ℄ RAMP 1 | POE 1314+00.00

PROPOSED 4' FLAT BOTTOM DITCH

CONSTRUCTION LIMITS

PROPOSED GUARDRAIL

EXISTING RIGHT OF WAY

P.I.= 1311+81.25
Δ = 4°50'51" RT.
D = 2°30'00"
T = 97.01'
L = 193.90'
P.C. = 1310+84.24
P.T. = 1312+78.14
e = MATCH EXISTING

STA. 1315+08.75 - CONSTRUCT
TYPE ST DROP INLET 3.25' RT. OF C.L. H = 4'-3"
WITH 18" X 2'
R.C. PIPE CULVERT (CLASS III) (TYPE 3 BEDDING)
CONNECT TO DROP INLET STA. 1315+10. LT. OF C.L.
DROP INLET = 3'-0" x 4'-6"

STA. 1315+07.00 IN PLACE
8.5' X 3' X 213.33' R.C. BOX CULVERT
WITH 4:1 WINGS LT. & RT.
RETAIN

STA. 1318+00.00 - CONSTRUCT
TYPE ST DROP INLET 3.25' RT. OF C.L. H = 4'-5"
WITH 18" X 2'
R.C. PIPE CULVERT (CLASS III) (TYPE 3 BEDDING)
CONNECT TO DROP INLET STA. 1318+00. LT. OF C.L.
DROP INLET = 3-0" x 4'-6"

CONCRETE MEDIAN BARRIER

TYPE B	STA. 1314+25	TO	STA. 1322+05

I-49

1310 | 1305 | 1300 | 1295 | 1290 | 1285 | 1280 | 1275 | 1270 | 1265

LT. DITCH GRADE 0.45% +00.00 1286.20
LT. DITCH GRADE 0.30% +00.00 1286.50
LT. DITCH GRADE 0.50% +00.00 1287.00
LT. DITCH GRADE 2.03% +74.00 1288.50
RT. DITCH GRADE 0.50%
RT. DITCH GRADE 1.00%
RT. DITCH GRADE 2.50%

EXISTING GROUND AT ℄ (I-49 MEDIAN SURFACE)

+00.00 1288.50 | +00.00 1289.50 | +00.00 1292.00

STA. 1318+08.75 LT.
TOP ELEV.=1309.29
F.L. ELEV.=1304.79

STA. 1315+10.00 LT.
TOP ELEV.=1301.51
F.L. ELEV.=1297.10 (Top of Box)

18" x 287' @ 2.68%

STA. 1318+08.75 RT.
TOP ELEV. = 1309.38
F.L. ELEV.=1304.96

STA. 1315+10.00 RT.
TOP ELEV. = 1301.60
F.L. ELEV.=1297.35

STA. 1316+07.00
F.L. INLET = 1293.19
F.L. OUTLET = 1292.62 RT.

REFER TO SURVEY CONTROL DETAIL SHEETS
FOR HORIZONTAL AND VERTICAL CONTROL DATA

1304+50 | 1305+00 | 1306+00 | 1307+00 | 1308+00 | 1309+00 | 1310+00 | 1311+00 | 1312+00 | 1313+00 | 1314+00 | 1315+00 | 1316+00 | 1317+00 | 1318+00 | 1319+00 | 1319+50

STATE OF ARKANSAS
REGISTERED PROFESSIONAL ENGINEER
No. 8760
ANDREW E. FRIES
5/3/16

5/5/2016
8:33:00 PM
V:\PW\CA0902 PP HWY540 05.dgn

DATE	DATE FILMED	DATE REVISED	DATE FILMED	FED.RD. DIST.NO.	STATE	FED.AID PROJ.NO.	SHEET NO.	TOTAL SHEETS
				6	ARK.			
				JOB NO.		CA0902	196	581
				(2)	STA. 1319+50.00 TO 1334+50.00			

RAMP 4

P.I.= 1023+05.16
Δ = 20°27'16" LT.
D = 5°45'00"
T = 179.78
L = 355.73'
P.C. = 1021+25.38
P.T. = 1024+81.11
e = MATCH EXISTING

℄ RAMP 4

PC 1026+41.38

PT 1029+77.11

℄ HWY. 102

HWY. 102

1320+00

12'-0" 10'-0"

℄ I-49

N 10°14'20" E

10'-0" 12'-0"

+04.67

100'-0" MEDIAN WALL TRANSITION

+04.67

RAMP 1

SEE SHEETS 209 AND 210 FOR HWY. 102 IMPROVEMENTS

CONCRETE MEDIAN BARRIER

TYPE B	STA. 1314+25	TO	STA. 1322+05
TYPE SPECIAL	STA. 1322+05	TO	STA. 1323+05
TYPE SPECIAL	STA. 1325+53	TO	STA. 1326+53
TYPE B	STA. 1326+53	TO	STA. 1338+15

HWY. 62

℄ I-49 STA. 1324+25.16 =
℄ HWY. 102/62 STA. 20+00.00
Δ 97°27'32"

STA. 1327+50.00 - CONSTRUCT
TYPE ST DROP INLET 3.25' LT. OF C.L. H = 4'-6"
WITH 18" X 141'
R.C. PIPE CULVERT (CLASS III) (TYPE 3 BEDDING)
CONNECT TO DROP INLET STA. 1326+05, RT. OF C.L.
TYPE ST DROP INLET = 3'-0" x 4'-6"

1329+00

20+00

+52.84

100'-0" MEDIAN WALL TRANSITION

+52.84

STA. 1327+50.00 - CONSTRUCT
TYPE ST DROP INLET 3.25' RT. OF C.L. H = 4'-3"
WITH 18" X 2'
R.C. PIPE CULVERT (CLASS III) (TYPE 3 BEDDING)
CONNECT TO DROP INLET STA. 1327+50, LT. OF C.L.
DROP INLET = 3'-0" x 4'-6"

STA. 1326+05.35 - IN PLACE
DROP INLET IN MEDIAN
REMOVE AND CONSTRUCT
TYPE ST DROP INLET 4.0' RT. OF C.L. H = 14'-5"
WITH 18" X 1'
R.C. PIPE CULVERT (CLASS IV) (TYPE 3 BEDDING)
CONNECT TO EXISTING R.C. PIPE CULVERT
DROP INLET = 3'-0" x 4'-6"

STA. 1330+50.00 - CONSTRUCT
TYPE ST DROP INLET 3.25' LT. OF C.L. H = 4'-0"
WITH 18" X 147'
R.C. PIPE CULVERT (CLASS III) (TYPE 3 BEDDING)
CONNECT TO DROP INLET STA. 1329+00, LT. OF C.L.
TYPE ST DROP INLET = 3'-0" x 4'-6"

RAMP 3

STA. 1329+00.00 - CONSTRUCT
TYPE ST DROP INLET 3.25' LT. OF C.L. H = 4'-0"
WITH 18" X 97'
R.C. PIPE CULVERT (CLASS III) (TYPE 3 BEDDING)
CONNECT TO DROP INLET STA. 1328+00, RT. OF C.L.
TYPE ST DROP INLET = 3'-0" x 4'-6"

STA. 1328+00.00 - CONSTRUCT
TYPE ST DROP INLET 3.25' LT. OF C.L. H = 4'-1"
WITH 18" X 47'
R.C. PIPE CULVERT (CLASS III) (TYPE 3 BEDDING)
CONNECT TO DROP INLET STA. 1327+50, RT. OF C.L.
TYPE ST DROP INLET = 3'-0" x 4'-6"

EXISTING RIGHT OF WAY

STA. 1334+00.00 - CONSTRUCT
TYPE ST DROP INLET 3.25' LT. OF C.L. H = 4'-3"
WITH 18" X 347'
R.C. PIPE CULVERT (CLASS III) (TYPE 3 BEDDING)
CONNECT TO DROP INLET STA. 1330+50, LT. OF C.L.
DROP INLET = 3'-0" x 4'-6"

1330+00

12'-0" 10'-0"

N 10°14'20" E

STA. 1328+00.00 - CONSTRUCT
TYPE ST DROP INLET 3.25' RT. OF C.L. H = 4'-0"
WITH 18" X 2'
R.C. PIPE CULVERT (CLASS III) (TYPE 3 BEDDING)
CONNECT TO DROP INLET STA. 1328+00, LT. OF C.L.
DROP INLET = 3'-0" x 4'-6"

STA. 1329+00.00 - CONSTRUCT
TYPE ST DROP INLET 3.25' RT. OF C.L. H = 4'-0"
WITH 18" X 2'
R.C. PIPE CULVERT (CLASS III) (TYPE 3 BEDDING)
CONNECT TO DROP INLET STA. 1329+00, LT. OF C.L.
DROP INLET = 3'-0" x 4'-6"

RAMP 2

STA. 1330+50.00 - CONSTRUCT
TYPE ST DROP INLET 3.25' RT. OF C.L. H = 4'-0"
WITH 18" X 2'
R.C. PIPE CULVERT (CLASS III) (TYPE 3 BEDDING)
CONNECT TO DROP INLET STA. 1330+50, LT. OF C.L.
DROP INLET = 3'-0" x 4'-6"

16'-0" 10'-0" 12'-0"

STA. 1334+00.00 - CONSTRUCT
TYPE ST DROP INLET 3.25' RT. OF C.L. H = 4'-0"
WITH 18" X 2'
R.C. PIPE CULVERT (CLASS III) (TYPE 3 BEDDING)
CONNECT TO DROP INLET STA. 1334+00, LT. OF C.L.
DROP INLET = 3'-0" x 4'-6"

I-49

BRIDGE 5979 A
STA. 1323+33.80 - STA. 1325+11.96 CONSTRUCT
178' - 1 5/16" X 62'-0"
BRIDGE CONSISTING OF CONT. COMP. W-BEAM UNIT 45', 79', 52'

BRIDGE 5979 B
STA. 1323+45.32 - STA. 1325+23.48 CONSTRUCT
178' - 1 5/16" X 62'-0"
BRIDGE CONSISTING OF CONT. COMP. W-BEAM UNIT 45', 79', 52'

STA. 1319+75.00 BEGIN SUPERELEVATION SB 0.020 '/'
STA. 1322+75.00 MAX. SUPERELEVATION SB -0.020 '/'
STA. 1325+75.00 MAX. SUPERELEVATION SB -0.020 '/'
STA. 1328+75.00 END SUPERELEVATION SB 0.020 '/'

STA. 1319+75.00 BEGIN SUPERELEVATION NB -0.020 '/'
STA. 1322+75.00 MAX. SUPERELEVATION NB 0.020 '/'
STA. 1325+75.00 MAX. SUPERELEVATION NB 0.020 '/'
STA. 1328+75.00 END SUPERELEVATION NB -0.020 '/'

BEGIN BRIDGE

END BRIDGE

EXISTING GROUND AT ℄ (I-49 MEDIAN SURFACE)

STA. 1326+05.35 RT.
TOP ELEV. = 1329.54
F.L. ELEV.=1315.10

STA. 1327+50.00 RT.
TOP ELEV. = 1331.39
F.L. ELEV.=1327.14

STA. 1327+50.00 LT.
TOP ELEV.=1331.49
F.L. ELEV.=1326.99

STA. 1328+00.00 LT.
TOP ELEV.=1332.12
F.L. ELEV.=1328.04

STA. 1328+00.00 RT.
TOP ELEV. = 1332.07
F.L. ELEV.=1328.07

STA. 1329+00.00 LT.
TOP ELEV.=1333.38
F.L. ELEV.=1329.38

STA. 1329+00.00 RT.
TOP ELEV. = 1333.52
F.L. ELEV.=1329.52

STA. 1330+50.00 LT.
TOP ELEV.=1335.90
F.L. ELEV.=1331.90

STA. 1330+50.00 RT.
TOP ELEV. = 1335.99
F.L. ELEV.=1331.99

STA. 1334+00.00 LT.
TOP ELEV.=1341.16
F.L. ELEV.=1336.91

STA. 1334+00.00 RT.
TOP ELEV. = 1341.14
F.L. ELEV.=1337.14

18"x 141' @ 1.56%
18"x 47' @ 2.23%
18"x 97' @ 1.38%
18"x 147' @ 1.71%
18"x 347' @ 1.42%

F.L. ELEV. = 1324.79

1345 1340 1335 1330 1325 1320 1315 1310 1305 1300

1319+50 1320+00 1321+00 1322+00 1323+00 1324+00 1325+00 1326+00 1327+00 1328+00 1329+00 1330+00 1331+00 1332+00 1333+00 1334+00 1334+50

REFER TO SURVEY CONTROL DETAIL SHEETS
FOR HORIZONTAL AND VERTICAL CONTROL DATA

STATE OF ARKANSAS
REGISTERED PROFESSIONAL ENGINEER
No. 8760
ANDREW E. FRIES
5/5/16

5/5/2016 8:33:06 PM
I:\PW\r-CA0902-PP-HWY540-06.dgn

DATE	DATE FILMED	DATE REVISED	DATE FILMED

FED.RD. DIST.NO.	STATE	FED.AID PROJ.NO.	SHEET NO.	TOTAL SHEETS
6	ARK.			
JOB NO.		CA0902	197	581

(2) STA. 1334+50.00 TO 1348+50.00

PROPOSED TCE
REMOVE EXISTING SMALL BLOCK WALL & REUSE BLOCK SOUTH OF I-49 ADJACENT TO EXISTING PATH
+36 250'
+36.91 196.09'
+03.79 250'
℄ TEMP PATH (SEE TRAIL DETAIL SHEETS)
+35.71 194.42'
EXISTING C.I.P. WALL & FENCE (DO NOT DISTURB)
GRADE TO DRAIN
EXISTING RIGHT OF WAY
CONSTRUCTION LIMITS

STA. 1338+04.00 - IN PLACE
24" X 20' R.C. PIPE CULVERTS
REMOVE R.C. PIPE & PLUG OPENING IN EXISTING RETAINING WALL

STA. 1336+53.00 - IN PLACE
DROP INLET ON LT. WITH
12" X 89' R.C. PIPE CULVERT
WITH FES LT.
REMOVE

STA. 1338+98.00 - IN PLACE
DROP INLET ON LT. WITH
12" X 88' R.C. PIPE CULVERT
WITH FES LT.
REMOVE

REMOVE AND REPLACE EXISTING GUARDRAIL

P.I.= 1345+15.98
Δ = 24°35'27" RT.
D = 3°00'00"
T = 416.26'
L = 819.69'
P.C. = 1340+99.72
P.T. = 1349+19.41
* e = MATCH EXISTING

STA. 1345+00.00 - CONSTRUCT
TYPE ST DROP INLET 3.25' LT. OF C.L. H = 5'-0"
WITH 18" X 204'
R.C. PIPE CULVERT (CLASS III) (TYPE 3 BEDDING)
CONNECT TO DROP INLET STA. 1347+07.00, LT. OF C.L.
DROP INLET = 3'-0" x 4'-6"

STA. 1347+06.70 - IN PLACE
DROP INLET IN MEDIAN
REMOVE AND CONSTRUCT
TYPE ST DROP INLET 3.25' LT. OF C.L. H = 12'-4"
WITH 18" X 4'
R.C. PIPE CULVERT (CLASS III) (TYPE 3 BEDDING)
CONNECT TO EXISTING R.C. PIPE CULVERT
DROP INLET = 3'-0" x 4'-6"

STA. 1338+25.00 CONSTRUCT
12' X 10' X 288' R.C. PED TUNNEL
WITH 7°30'21" RT. FWD. SKEW

1338+97.70
LT. 71.93'
℄ I-49

N 10°14'20" E
N 34°49'47" E

STA. 1337+73.00 - CONSTRUCT
48" x 322' R.C. PIPE CULVERT
WITH 7° 30' 21" RT. FWD. SKEW
(CLASS V) (TYPE 3 BEDDING)
WITH FES LT. & RT.

REMOVE AND REPLACE EXISTING GUARDRAIL

CONSTRUCTION LIMITS

270'-0"
REMOVE EXISTING BRIDGE AND APPROACH PAVEMENT
CONSTRUCT FULL ROADWAY TYPICAL SECTION

STA. 1336+71.00 - IN PLACE
DROP INLET ON RT. WITH
12" X 98' R.C. PIPE CULVERT
WITH FES RT.
REMOVE

STA. 1338+38.83 - IN PLACE
18" C.M. PIPE CULVERT OUTLET 180' RT.

STA. 1338+37.62 - IN PLACE
48" X 317' R.C. PIPE CULVERT WITH FES LT.
REMOVE R.C. PIPE AND FES LT. AND CONSTRUCT
60" X 317' R.C. PIPE CULVERT
WITH 7° 22' 53" RT. FWD. SKEW
TO TYPE ST JUNCTION BOX RT.
(CLASS V) (TYPE 3 BEDDING) WITH FES LT.
60" R.C. PIPE = 317 LIN. FT.
60" FES = 1 EA.

STA. 1338+00.00 - IN PLACE
DBL. 36" X 33' R.C. PIPE CULVERTS
WITH FES LT. & RT.
REMOVE R.C. PIPE & FES LT. & RT.

STA. 1338+41.12 - IN PLACE
24" R.C. PIPE CULVERT OUTLET 192.76' RT.

STA. 1339+15.00 - IN PLACE
DROP INLET ON RT. WITH
12" X 90' R.C. PIPE CULVERT
WITH FES RT.
REMOVE

STA. 1338+59.11 - IN PLACE
JUNCTION BOX ON LT. WITH
48" X 317' R.C. PIPE CULVERT INLET AND
48" X 20' R.C. PIPE CULVERT OUTLET
REMOVE TYPE ST JUNCTION AND CONSTRUCT
TYPE ST JUNCTION BOX 13.11' RT. OF C.L. H = 11'-6"
REMOVE 48" X 20' R.C. PIPE CULVERT AND CONSTRUCT
60" X 30' R.C. PIPE CULVERT
(CLASS III) (TYPE 3 BEDDING)
60" R.C. PIPE = 30 LIN. FT.
60" FES = 1 EA.
TYPE ST JUNCTION BOX = 6' x 6'

EXISTING RIGHT OF WAY

PC 1340+99.72
PT 1349+19.41

CONCRETE MEDIAN BARRIER

TYPE C	STA. 1338+15	TO	STA. 1339+01
TYPE SP-1	STA. 1339+01	TO	STA. 1340+01
TYPE SP-1	STA. 1340+13	TO	STA. 1341+13
TYPE C	STA. 1341+13	TO	STA. 1351+01

FENCE

STA.	STA.	SIDE	TYPE	LIN. FT.
1337+30.00	1337+95.00	LT.	A	66
1337+83.00	1338+44.00	RT.	A	61
1337+83.00	1338+44.00	LT.	CHAIN LINK	43
1337+83.00	1338+44.00	RT.	CHAIN LINK	62
1337+83.00	1338+44.00	RT.	CHAIN LINK	61
1337+83.00	1338+44.00	RT.	A	48

I-49

P.V.I. 1337+87.00
ELEV. 1344.08
0.40%
-0.65%
K 247
VC=260'
SSD=1158'
PROFILE GRADE
EXISTING GROUND AT ℄ (I-49 MEDIAN SURFACE)

P.V.I. 1336+50.00 ELEV. 1343.53
P.V.C. 1336+57.00 ELEV. 1343.56
P.V.T. 1339+17.00 ELEV. 1343.22
P.V.I. 1339+20.00 ELEV. 1343.20

BRIDGE 5980 A
STA. 1336+89.00 - STA. 1338+66.00 IN PLACE
179' - 2 1/8" X 48'-0"
BRIDGE CONSISTING OF CONT. COMP. W-BEAM UNIT 56', 65', 56'
REMOVE AS EXISTING BRIDGE STRUCTURE= 1.00 LUMP SUM

BRIDGE 5980 B
STA. 1337+02.00 - STA. 1338+79.00 IN PLACE
179' - 2 1/8" X 48'-0"
BRIDGE CONSISTING OF CONT. COMP. W-BEAM UNIT 56', 65', 56'
REMOVE AS EXISTING BRIDGE STRUCTURE= 1.00 LUMP SUM

STA. 1338+25.00 CONSTRUCT
12' X 10' X 287'-6" R.C. BOX CULVERT
WITH 7°30'21" RT. FWD. SKEW

STA. 1337+73.00
F.L. IN: 1313.50
F.L. OUT: 1308.50

STA. 1338+37.62
F.L. IN: 1310.85
F.L. OUT: 1309.00

REFER TO SURVEY CONTROL DETAIL SHEETS
FOR HORIZONTAL AND VERTICAL CONTROL DATA

STA.	STA.	GUARDRAIL (TYPE A)	TERMINAL ANCHOR POST (TYPE I)	GUARDRAIL TERMINAL (TYPE 2)
1334+95.97	1338+70.71 RT.	325'	1 EA.	1 EA.
1336+96.12	1340+71.03 LT.	325'	1 EA.	1 EA.

* MATCH EXISTING CROSS SLOPE FOR NB AND SB SUPERELEVATION

STA. 1345+00.00 LT.
TOP ELEV.=1332.02
F.L. ELEV.=1327.02

STA. 1347+06.70 LT.
TOP ELEV.=1328.20
F.L. ELEV.=1315.87

18"x 204' @ 2.00%

F.L. ELEV.=1322.96

REMOVAL & DISPOSAL OF FENCE

STA.	STA.	SIDE	LIN. FT.
1337+95.00	1338+53.00	LT. & RT.	738
1338+50.00	1339+05.00	RT.	80

STATE OF ARKANSAS
REGISTERED PROFESSIONAL ENGINEER
No. 8760
ANDREW E. FRIES
5/5/16

5/5/2016
8:53:12 PM
M:\PEW\CA0902.PP.HW1540.07.dgn

1345 1340 1335 1330 1325 1320 1315 1310 1305 1300

1334+50 1335+00 1336+00 1337+00 1338+00 1339+00 1340+00 1341+00 1342+00 1343+00 1344+00 1345+00 1346+00 1347+00 1348+00 1348+50

DATE	DATE FILMED	DATE REVISED	DATE FILMED	FED.RD. DIST.NO.	STATE	FED.AID PROJ.NO.	SHEET NO.	TOTAL SHEETS
				6	ARK.			
				JOB NO.		CA0902	198	581

(2) STA. 1348+50.00 TO 1363+00.00

EXISTING RIGHT OF WAY

P.I.= 1345+15.98
Δ = 24°35'27" RT.
D = 3°00'00"
T = 416.26'
L = 819.69'
P.C. = 1340+99.72
P.T. = 1349+19.41
e = MATCH EXISTING

STA. 1350+50.00 - CONSTRUCT
TYPE ST DROP INLET 3.25' LT. OF C.L. H = 4'-3"
WITH 18" X 347'
R.C. PIPE CULVERT (CLASS III) (TYPE 3 BEDDING)
CONNECT TO DROP INLET ~~STA. 1354+00, LT. OF C.L.~~
DROP INLET = 3'-0" x 4'-6"

STA. 1354+00.00 - CONSTRUCT
TYPE ST DROP INLET 3.25' LT. OF C.L. H = 4'-0"
WITH 18" X 403'
R.C. PIPE CULVERT (CLASS III) (TYPE 3 BEDDING)
CONNECT TO DROP INLET STA. 1358+06, LT. OF C.L.
DROP INLET = 3'-0" x 4'-6"

STA. 1358+06.27 - IN PLACE
DROP INLET IN MEDIAN
REMOVE AND CONSTRUCT
TYPE ST DROP INLET 3.25' LT. OF C.L. H = 6'-4"
WITH 18" X 5'
R.C. PIPE CULVERT (CLASS III) (TYPE 3 BEDDING)
CONNECT TO EXISTING R.C. PIPE CULVERT
DROP INLET = 3'-0" x 4'-6"

STA. 1359+50.00 - CONSTRUCT
TYPE ST DROP INLET 3.25' LT. OF C.L. H = 4'-3"
WITH 18" X 197'
R.C. PIPE CULVERT (CLASS III) (TYPE 3 BEDDING)
CONNECT TO DROP INLET STA. 1361+50, LT. OF C.L.
DROP INLET = 3'-0" x 4'-6"

STA. 1361+50.00 - CONSTRUCT
TYPE ST DROP INLET 3.25' LT. OF C.L. H = 4'-3"
WITH 18" X 197'
R.C. PIPE CULVERT (CLASS III) (TYPE 3 BEDDING)
CONNECT TO DROP INLET STA. 1363+50, LT. OF C.L.
DROP INLET = 3'-0" x 4'-6"

1350+00 1355+00 1360+00

12'-0" 10'-0" 16'-0"

℄ I-49

N 34°49'47" E

PT 1349+19.41

1351+01.00 1354+09.00

10'-0" 12'-0"

308'-0"
INSTALL TEMPORARY MEDIAN BARRIER

STA. 1354+00.00 - CONSTRUCT
TYPE ST DROP INLET 3.25' RT. OF C.L. H = 4'-0"
WITH 18" X 2'
R.C. PIPE CULVERT (CLASS III) (TYPE 3 BEDDING)
CONNECT TO DROP INLET STA. 1354+00, LT. OF C.L.
DROP INLET = 3'-0" x 4'-6"

STA. 1358+06.27 - CONSTRUCT
TYPE ST DROP INLET 3.25' RT. OF C.L. H = 5'-3"
WITH 18" X 2'
R.C. PIPE CULVERT (CLASS III) (TYPE 3 BEDDING)
CONNECT TO DROP INLET STA. 1358+06.27, LT. OF C.L.
DROP INLET = 3'-0" x 4'-6"

EXISTING RIGHT OF WAY

STA. 1359+50.00 - CONSTRUCT
TYPE ST DROP INLET 3.25' RT. OF C.L. H = 4'-0"
WITH 18" X 2'
R.C. PIPE CULVERT (CLASS III) (TYPE 3 BEDDING)
CONNECT TO DROP INLET STA. 1359+50, LT. OF C.L.
DROP INLET = 3'-0" x 4'-6"

STA. 1361+50.00 - CONSTRUCT
TYPE ST DROP INLET 3.25' RT. OF C.L. H = 4'-0"
WITH 18" X 2'
R.C. PIPE CULVERT (CLASS III) (TYPE 3 BEDDING)
CONNECT TO DROP INLET STA. 1361+50, LT. OF C.L.
~~DROP INLET = 3'-0" x 4'-6"~~

CONCRETE MEDIAN BARRIER

TYPE TEMP	STA. 1351+01	TO	STA. 1354+09
TYPE B	STA. 1354+09	TO	STA. 1379+05

I-49

STA. 1350+50.00 LT.
TOP ELEV.=1322.84
F.L. ELEV.=1318.59

+20.00
1319.40

18"x 347' @ 1.86%

RT. DITCH
GRADE -1.78%

STA. 1354+00.00 LT.
TOP ELEV.=1316.14
F.L. ELEV.=1312.14

EXISTING
GROUND AT ℄
(I-49 MEDIAN SURFACE)

+86.00
1309.30

18"x 403' @ 2.48%

STA. 1354+00.00 RT.
TOP ELEV. = 1316.39
F.L. ELEV.=1312.39

STA. 1358+06.27 LT.
TOP ELEV.=1308.49
F.L. ELEV.=1302.16
F.L. ELEV.=1303.21 (RT.)

STA. 1359+50.00 LT.
TOP ELEV. = 1306.46
F.L. ELEV.=1302.21

STA. 1361+50.00 LT.
TOP ELEV. = 1304.61
F.L. ELEV.=1300.36

18" x 197' @ 0.94%

18" x 197' @ 0.92%

STA. 1358+06.27 RT.
TOP ELEV. = 1308.56
F.L. ELEV.=1303.24

STA. 1359+50.00 RT.
TOP ELEV. = 1306.40
F.L. ELEV.=1302.40

STA. 1361+50.00 RT.
TOP ELEV. = 1304.53
F.L. ELEV.=1300.53

REFER TO SURVEY CONTROL DETAIL SHEETS
FOR HORIZONTAL AND VERTICAL CONTROL DATA

1330 1325 1320 1315 1310 1305 1300 1295 1290 1285

1348+50 1349+00 1350+00 1351+00 1352+00 1353+00 1354+00 1355+00 1356+00 1357+00 1358+00 1359+00 1360+00 1361+00 1362+00 1363+00

STATE OF ARKANSAS
REGISTERED PROFESSIONAL ENGINEER
No. 8760
ANDREW E. FRIES
5/5/16

5/5/2016
8:33:25 PM
\\FPR\CA0902 PP_HWY540_08.dgn

STA.	STA.	GUARDRAIL (TYPE A)	TERMINAL ANCHOR POST (TYPE I)	GUARDRAIL TERMINAL (TYPE 2)
1369+43.00	1371+68.00 LT.	175'	1EA.	1EA.

DATE	DATE FILMED	DATE REVISED	DATE FILMED	FED.RD. DIST.NO.	STATE	FED.AID PROJ.NO.	SHEET NO.	TOTAL SHEETS
				6	ARK.			
				JOB NO.		CA0902	199	581

(2) STA. 1363+00.00 TO 1378+00.00

STA. 1366+00.00 - CONSTRUCT
TYPE ST DROP INLET 3.25' LT. OF C.L. H = 5'-9"
WITH 24" X 197'
R.C. PIPE CULVERT (CLASS III) (TYPE 3 BEDDING)
CONNECT TO DROP INLET STA. 1368+00, LT. OF C.L.
DROP INLET = 3-0" x 4'-6"

STA. 1370+07.00 - IN PLACE
DROP INLET IN MEDIAN
WITH 18" X 87' R.C. PIPE CULVERT
REMOVE DROP INLET AND
PLUG AND ABANDON EXISTING 18" R.C. PIPE CULVERT

STA. 1372+50.00 - CONSTRUCT
TYPE ST DROP INLET 3.25' LT. OF C.L. H = 4'-0"
WITH 18" X 247'
R.C. PIPE CULVERT (CLASS III) (TYPE 3 BEDDING)
CONNECT TO DROP INLET STA. 1375+00, LT. OF C.L.
DROP INLET = 3'-0" x 4'-6"

STA. 1370+15.00 - CONSTRUCT
DROP INLET IN MEDIAN
TYPE ST DROP INLET 3.25' LT. OF C.L. H = 6'-6"
WITH 30" X 80'
R.C. PIPE CULVERT (CLASS V) (JACK AND BORE)
WITH FES
DROP INLET = 3-9" x 4'-6"

STA. 1375+00.00 - CONSTRUCT
TYPE ST DROP INLET 3.25' LT. OF C.L. H = 4'-6"
WITH 18" X 147'
R.C. PIPE CULVERT (CLASS III) (TYPE 3 BEDDING)
CONNECT TO DROP INLET STA. 1376+50, LT. OF C.L.
DROP INLET = 3'-0" x 4'-6"

STA. 1377+25.00 - CONSTRUCT
TYPE ST DROP INLET 3.25' LT. OF C.L. H = 5'-6"
WITH 18" X 97'
R.C. PIPE CULVERT (CLASS III) (TYPE 3 BEDDING)
CONNECT TO DROP INLET STA. 1378+25, RT. OF C.L.
DROP INLET = 3'-0" x 4'-6"

STA. 1363+50.00 - CONSTRUCT
TYPE ST DROP INLET 3.25' LT. OF C.L. H = 4'-6"
WITH 18" X 247'
R.C. PIPE CULVERT (CLASS III) (TYPE 3 BEDDING)
CONNECT TO DROP INLET STA. 1366+00, LT. OF C.L.
DROP INLET = 3'-0" x 4'-6"

EXISTING RIGHT OF WAY

STA. 1368+00.00 - CONSTRUCT
TYPE ST DROP INLET 3.25' LT. OF C.L. H = 5'-3"
WITH 24" X 212'
R.C. PIPE CULVERT (CLASS III) (TYPE 3 BEDDING)
CONNECT TO DROP INLET STA. 1370+15, LT. OF C.L.
DROP INLET = 3-0" x 4'-6"

PROPOSED GUARDRAIL FOR OVERHEAD SIGN STRUCTURE

STA. 1376+50.00 - CONSTRUCT
TYPE ST DROP INLET 3.25' LT. OF C.L. H = 5'-0"
WITH 18" X 72'
R.C. PIPE CULVERT (CLASS III) (TYPE 3 BEDDING)
CONNECT TO DROP INLET STA. 1377+25, LT. OF C.L.
DROP INLET = 3'-0" x 4'-6"

1365+00 | 12'-0" | 10'-0" | 1370+00 | 1375+00

℄ I-49

N 34°49'47" E

16'-0" | 10'-0" | 12'-0"

STA. 1363+50.00 - CONSTRUCT
TYPE ST DROP INLET 3.25' RT. OF C.L. H = 3'-6"
WITH 18" X 2'
R.C. PIPE CULVERT (CLASS III) (TYPE 3 BEDDING)
CONNECT TO DROP INLET STA. 1363+50, LT. OF C.L.
DROP INLET = 3'-0" x 4'-6"

STA. 1368+00.00 - CONSTRUCT
TYPE ST DROP INLET 3.25' RT. OF C.L. H = 3'-6"
WITH 18" X 2'
R.C. PIPE CULVERT (CLASS III) (TYPE 3 BEDDING)
CONNECT TO DROP INLET STA. 1368+00, LT. OF C.L.
DROP INLET = 3'-0" x 4'-6"

STA. 1375+00.00 - CONSTRUCT
TYPE ST DROP INLET 3.25' RT. OF C.L. H = 4'-0"
WITH 18" X 2'
R.C. PIPE CULVERT (CLASS III) (TYPE 3 BEDDING)
CONNECT TO DROP INLET STA. 1375+00, LT. OF C.L.
DROP INLET = 3'-0" x 4'-6"

STA. 1366+00.00 - CONSTRUCT
TYPE ST DROP INLET 3.25' RT. OF C.L. H = 3'-6"
WITH 18" X 2'
R.C. PIPE CULVERT (CLASS III) (TYPE 3 BEDDING)
CONNECT TO DROP INLET STA. 1366+00, LT. OF C.L.
DROP INLET = 3'-0" x 4'-6"

EXISTING RIGHT OF WAY

STA. 1372+50.00 - CONSTRUCT
TYPE ST DROP INLET 3.25' RT. OF C.L. H = 4'-0"
WITH 18" X 2'
R.C. PIPE CULVERT (CLASS III) (TYPE 3 BEDDING)
CONNECT TO DROP INLET STA. 1372+50, LT. OF C.L.
DROP INLET = 3'-0" x 4'-6"

STA. 1370+15.00 - CONSTRUCT
TYPE ST DROP INLET 3.25' RT. OF C.L. H = 3'-6"
WITH 18" X 2'
R.C. PIPE CULVERT (CLASS III) (TYPE 3 BEDDING)
CONNECT TO DROP INLET STA. 1370+15, LT. OF C.L.
DROP INLET = 3'-0" x 4'-6"

STA. 1376+50.00 - CONSTRUCT
TYPE ST DROP INLET 3.25' RT. OF C.L. H = 4'-0"
WITH 18" X 2'
R.C. PIPE CULVERT (CLASS III) (TYPE 3 BEDDING)
CONNECT TO DROP INLET STA. 1376+50, LT. OF C.L.
DROP INLET = 3'-0" x 4'-6"

I-49

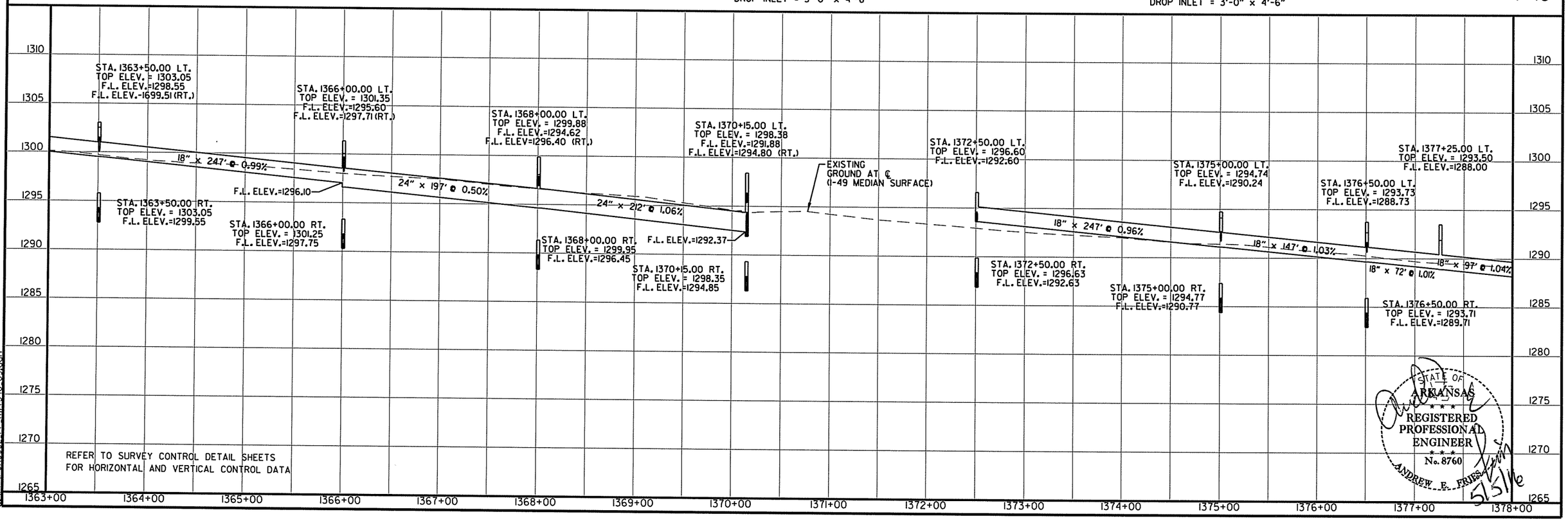

REFER TO SURVEY CONTROL DETAIL SHEETS FOR HORIZONTAL AND VERTICAL CONTROL DATA

STATE OF ARKANSAS
REGISTERED PROFESSIONAL ENGINEER
No. 8760
ANDREW E. FRIES
5/5/16

5/5/2016
8:33:29 PM
\\PPV\CA0902 PP HW7540 09.dgn

STA.	STA.	GUARDRAIL (TYPE A)	TERMINAL ANCHOR POST (TYPE 1)	GUARDRAIL TERMINAL (TYPE 2)
1379+58.00	1381+83.00 RT.	175'	1 EA.	1 EA.

CONCRETE MEDIAN BARRIER

TYPE C	STA. 1379+05	TO	STA. 1381+73
TYPE SPECIAL	STA. 1381+73	TO	STA. 1384+07
TYPE C	STA. 1384+07	TO	STA. 1416+36

STATE OF ARKANSAS REGISTERED PROFESSIONAL ENGINEER No. 8760 ANDREW E. FRIES 5/5/16

DATE	DATE FILMED	DATE REVISED	DATE FILMED	FED.RD. DIST.NO.	STATE	FED.AID PROJ.NO.	SHEET NO.	TOTAL SHEETS
				6	ARK.			
				JOB NO.		CA0902	200	581

(2) STA. 1378+00.00 TO 1392+00.00

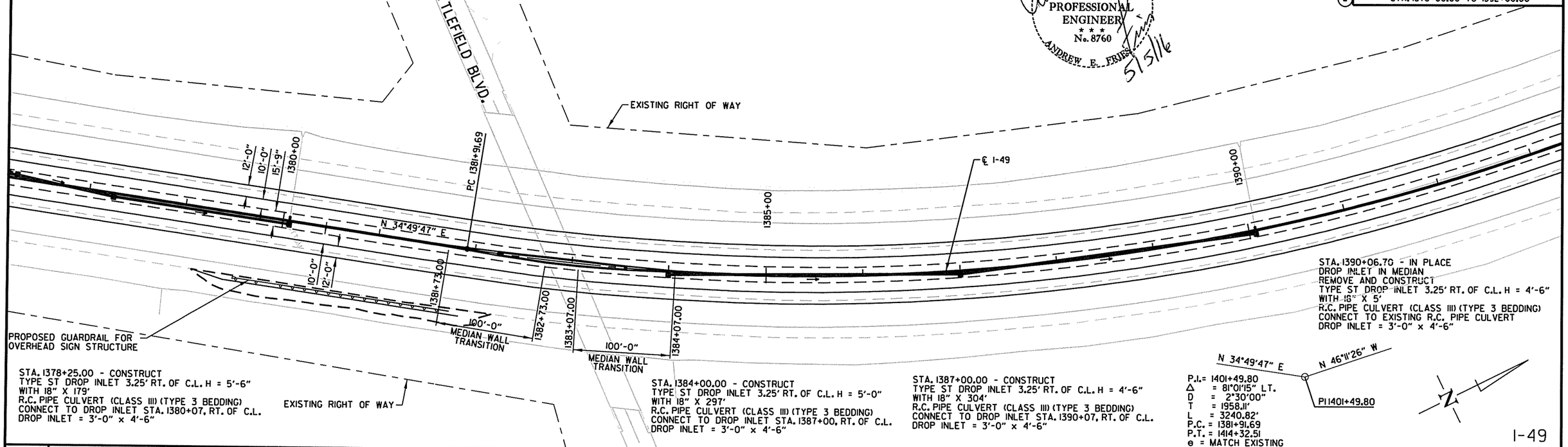

STA. 1378+25.00 - CONSTRUCT
TYPE ST DROP INLET 3.25' RT. OF C.L. H = 5'-6"
WITH 18" X 179'
R.C. PIPE CULVERT (CLASS III) (TYPE 3 BEDDING)
CONNECT TO DROP INLET STA. 1380+07, RT. OF C.L.
DROP INLET = 3'-0" x 4'-6"

STA. 1384+00.00 - CONSTRUCT
TYPE ST DROP INLET 3.25' RT. OF C.L. H = 5'-0"
WITH 18" X 297'
R.C. PIPE CULVERT (CLASS III) (TYPE 3 BEDDING)
CONNECT TO DROP INLET STA. 1387+00, RT. OF C.L.
DROP INLET = 3'-0" x 4'-6"

STA. 1387+00.00 - CONSTRUCT
TYPE ST DROP INLET 3.25' RT. OF C.L. H = 4'-6"
WITH 18" X 304'
R.C. PIPE CULVERT (CLASS III) (TYPE 3 BEDDING)
CONNECT TO DROP INLET STA. 1390+07, RT. OF C.L.
DROP INLET = 3'-0" x 4'-6"

STA. 1390+06.70 - IN PLACE
DROP INLET IN MEDIAN
REMOVE AND CONSTRUCT
TYPE ST DROP INLET 3.25' RT. OF C.L. H = 4'-6"
WITH 18" X 5'
R.C. PIPE CULVERT (CLASS III) (TYPE 3 BEDDING)
CONNECT TO EXISTING R.C. PIPE CULVERT
DROP INLET = 3'-0" x 4'-6"

P.I. = 1401+49.80
Δ = 81°01'15" LT.
D = 2°30'00"
T = 1958.11'
L = 3240.82'
P.C. = 1381+91.69
P.T. = 1414+32.51
e = MATCH EXISTING

I-49

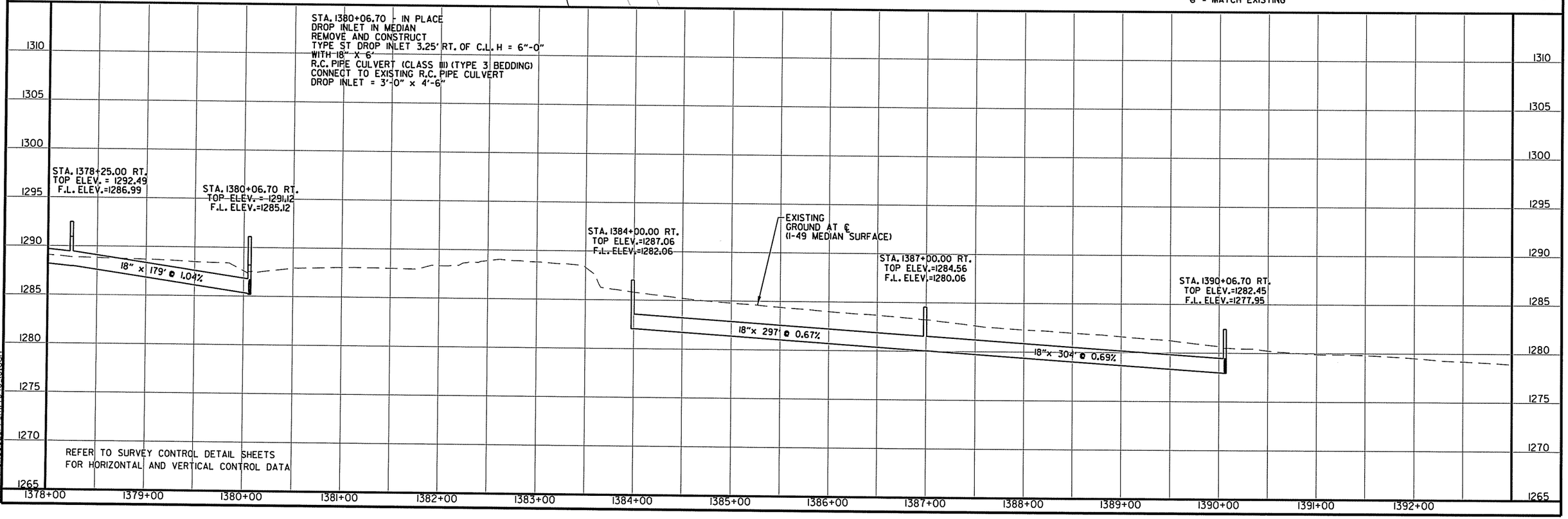

REFER TO SURVEY CONTROL DETAIL SHEETS
FOR HORIZONTAL AND VERTICAL CONTROL DATA

5/5/2016
8:33:36 PM
\\PP\FCA0902_PP_HWY540_10.dgn

DATE	DATE FILMED	DATE REVISED	DATE FILMED

FED.RD. DIST.NO.	STATE	FED.AID PROJ.NO.	SHEET NO.	TOTAL SHEETS
6	ARK.			
JOB NO.		CA0902	201	581

(2) STA. 1392+00.00 TO 1405+00.00

STATE OF ARKANSAS
REGISTERED PROFESSIONAL ENGINEER
No. 8760
ANDREW E. FRIES
5/5/16

EXISTING RIGHT OF WAY

℄ I-49

1395+00

1400+00

1405+00

12'-0" 10'-0" 16'-0"

10'-0" 12'-0"

STA. 1393+50.00 - CONSTRUCT
TYPE ST DROP INLET 3.25' RT. OF C.L. H = 5'-0"
WITH 18" X 347'
R.C. PIPE CULVERT (CLASS III) (TYPE 3 BEDDING)
CONNECT TO DROP INLET STA. 1397+00, RT. OF C.L.
DROP INLET = 3'-0" x 4'-6"

STA. 1397+00.00 - CONSTRUCT
TYPE ST DROP INLET 3.25' RT. OF C.L. H = 6'-0"
WITH 18" X 362'
R.C. PIPE CULVERT (CLASS III) (TYPE 3 BEDDING)
CONNECT TO DROP INLET STA. 1400+65, RT. OF C.L.
DROP INLET = 3'-0" x 4'-6"

N 34°49'47" E

N 46°11'26" W

PI 1401+49.80

P.I.= 1401+49.80
Δ = 81°01'15" LT.
D = 2°30'00"
T = 1958.11'
L = 3240.82'
P.C. = 1381+91.69
P.T. = 1414+32.51
e = MATCH EXISTING

STA. 1400+65.00 - IN PLACE
DROP INLET IN MEDIAN
REMOVE AND CONSTRUCT
TYPE ST SPECIAL DROP INLET 3.25' RT. OF C.L. H = 8'-0"
CONNECT TO EXISTING DROP INLET
DROP INLET = 4'-0" x 4'-6"

STA. 1403+00.00 - CONSTRUCT
TYPE ST DROP INLET 3.25' RT. OF C.L. H = 5'-0"
WITH 18" X 297'
R.C. PIPE CULVERT (CLASS III) (TYPE 3 BEDDING)
CONNECT TO DROP INLET STA. 1406+00, RT. OF C.L.
DROP INLET = 3'-0" x 4'-6"

STA. 1400+62.48 IN PLACE
5'X 6' X 349.33' R.C. BOX CULVERT
WITH 45° WINGS LT. & RT.
RETAIN

I-49

STA. 1393+50.00 RT.
TOP ELEV.=1280.10
F.L. ELEV.=1275.10

STA. 1397+00.00 RT.
TOP ELEV.=1277.67
F.L. ELEV.=1271.67

EXISTING GROUND AT ℄ (I-49 MEDIAN SURFACE)

STA. 1400+65.00 RT.
TOP ELEV.=1275.04
F.L. ELEV.=1267.04

STA. 1403+00.00 RT.
TOP ELEV.=1273.55
F.L. ELEV.=1268.55

STA. 1406+00.00 RT.
TOP ELEV.=1271.10
F.L. ELEV.=1266.10

18"x 347' @ 0.99%

18"x 362' @ 0.73%

F.L. ELEV.=1269.04

18"x 297' @ 0.82%

18"x 197'

STA. 1400+62.48
F.L. INLET = 1256.62
F.L. OUTLET = 1250.64 RT.

REFER TO SURVEY CONTROL DETAIL SHEETS
FOR HORIZONTAL AND VERTICAL CONTROL DATA

1290 1285 1280 1275 1270 1265 1260 1255 1250 1245

1392+00 1393+00 1394+00 1395+00 1396+00 1397+00 1398+00 1399+00 1400+00 1401+00 1402+00 1403+00 1404+00 1405+00 1406+00

5/5/2016
8:33:42 PM
\\PPVT\CA0902 PP HWY540 II.dgn

STA.	STA.	GUARDRAIL (TYPE A)	TERMINAL ANCHOR POST (TYPE 1)	GUARDRAIL TERMINAL (TYPE 2)
1409+10.00	1411+41.40 LT.	175'	1EA.	1EA.
1413+47.50	1415+70.00 RT.	175'	1EA.	1EA.

CONCRETE MEDIAN BARRIER			
TYPE SP-1	STA. 1416+36	TO	STA. 1417+36
TYPE SP-1	STA. 1417+48	TO	STA. 1418+48
TYPE B	STA. 1418+48	TO	STA. 1428+95

DATE	DATE FILMED	DATE REVISED	DATE FILMED

FED.RD. DIST.NO.	STATE	FED.AID PROJ.NO.	SHEET NO.	TOTAL SHEETS
6	ARK.			
JOB NO.		CA0902	202	581

(2) STA. 1405+00.00 TO STA. 1419+00.00

EXISTING RIGHT OF WAY

PROPOSED GUARDRAIL FOR OVERHEAD SIGN STRUCTURE

1405+00

1410+00

PT 1414+32.51

1415+00

℄ I-49

-12'-0"

-10'-0"

-9'-0"

-10'-0"

-12'-0"

STA. 1406+00.00 - CONSTRUCT
TYPE ST DROP INLET 3.25' RT. OF C.L. H = 5'-0"
WITH 18" X 197'
R.C. PIPE CULVERT (CLASS III) (TYPE 3 BEDDING)
CONNECT TO DROP INLET STA. 1408+00, RT. OF C.L.
DROP INLET = 3'-0" x 4'-6"

STA. 1408+00.00 - CONSTRUCT
TYPE ST DROP INLET 3.25' RT. OF C.L. H = 5'-0"
WITH 18" X 90'
R.C. PIPE CULVERT (CLASS III) (TYPE 3 BEDDING)
CONNECT TO DROP INLET STA. 1408+93, RT. OF C.L.
DROP INLET = 3'-0" x 4'-6"

N 34°49'47" E

N 46°11'26" W

PI 1401+49.80

P.I.= 1401+49.80
△ = 81°01'14" LT.
D = 2°30'00"
T = 1958.11'
L = 3240.82'
P.C. = 1381+91.69
P.T. = 1414+32.51
e = MATCH EXISTING

STA. 1408+93.00 IN PLACE
5' X 5' X 296.93' R.C. BOX CULVERT
WITH 45° WINGS LT. & RT.
RETAIN

STA. 1408+93.00 - IN PLACE
DROP INLET RT. OF C.L.
RETAIN AND CONSTRUCT
TYPE ST SPECIAL DROP INLET 3.25' RT. OF C.L. H = 7'-0"
CONNECT TO EXIST. DROP INLET
DROP INLET = 3'-0" x 4'-6"

STA. 1409+50.00 - CONSTRUCT
TYPE ST DROP INLET 3.25' RT. OF C.L. H = 4'-6"
WITH 18" X 54'
R.C. PIPE CULVERT (CLASS III) (TYPE 3 BEDDING)
CONNECT TO DROP INLET STA. 1408+93, RT. OF C.L.
DROP INLET = 3'-0" x 4'-6"

STA. 1411+00.00 - CONSTRUCT
TYPE ST DROP INLET 3.25' RT. OF C.L. H = 5'-0"
WITH 18" X 147'
R.C. PIPE CULVERT (CLASS III) (TYPE 3 BEDDING)
CONNECT TO DROP INLET STA. 1409+50, RT. OF C.L.
DROP INLET = 3'-0" x 4'-6"

PROPOSED GUARDRAIL FOR OVERHEAD SIGN STRUCTURE

STA. 1415+00.00 - CONSTRUCT
TYPE ST DROP INLET 3.25' RT. OF C.L. H = 4'-9"
WITH 18" X 397'
R.C. PIPE CULVERT (CLASS III) (TYPE 3 BEDDING)
CONNECT TO DROP INLET STA. 1411+00, RT. OF C.L.
DROP INLET = 3'-0" x 4'-6"

I-49

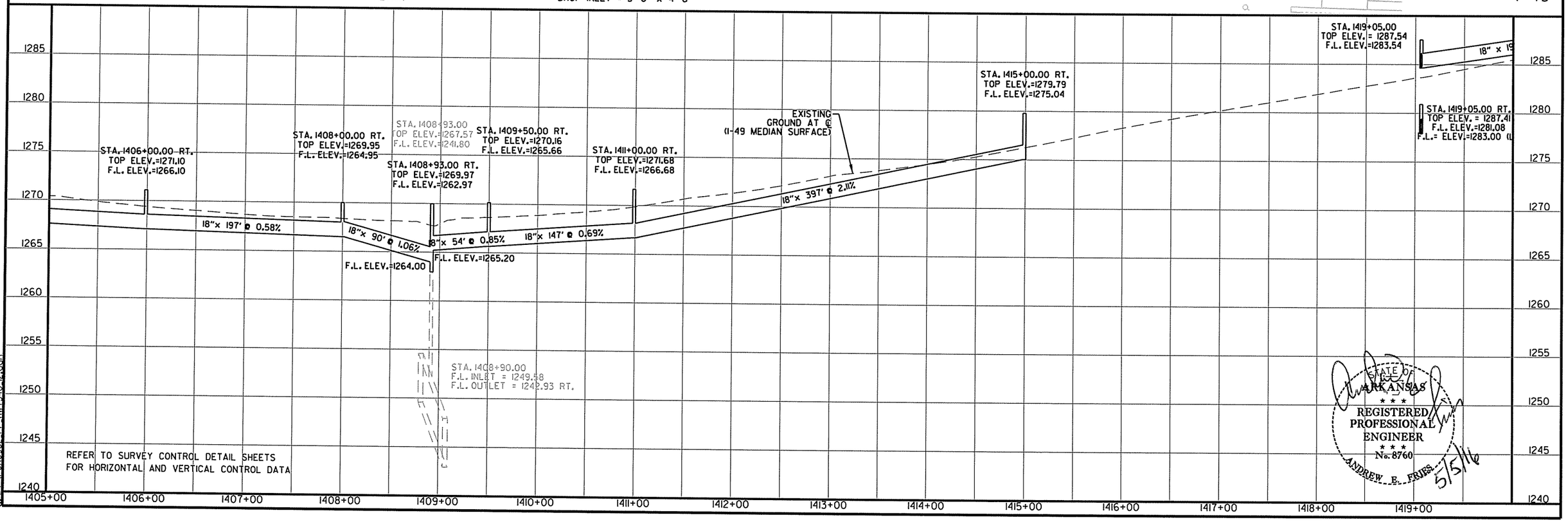

STATE OF ARKANSAS
REGISTERED PROFESSIONAL ENGINEER
No. 8760
ANDREW E. FRIES
5/5/16

5/5/2016
8:33:48 PM
\\PPLY\CA0902 PP HWY540 I2.dgn

STA.	STA.	GUARDRAIL (TYPE A)	TERMINAL ANCHOR POST (TYPE I)	GUARDRAIL TERMINAL (TYPE 2)
1426+95.00	1432+60.00 RT.	515'	1EA.	1EA.
1428+16.00	1432+66.00 LT.	400'	1EA.	1EA.

DATE	DATE FILMED	DATE REVISED	DATE FILMED

FED.RD. DIST.NO.	STATE	FED.AID PROJ.NO.	SHEET NO.	TOTAL SHEETS
6	ARK.			
JOB NO.		CA0902	203	581

(2) STA. 1419+00.00 TO 1434+00.00

EXISTING RIGHT OF WAY

STA. 1419+05.00 - CONSTRUCT TYPE ST DROP INLET 3.25' LT. OF C.L. H = 4'-0" WITH 18" X 2' R.C. PIPE CULVERT (CLASS III) (TYPE 3 BEDDING) CONNECT TO DROP INLET STA. 1419+05, RT. OF C.L. DROP INLET = 3'-0" x 4'-6"

STA. 1421+00.00 - CONSTRUCT TYPE ST DROP INLET 3.25' LT. OF C.L. H = 4'-3" WITH 18" X 192' R.C. PIPE CULVERT (CLASS III) (TYPE 3 BEDDING) CONNECT TO DROP INLET STA. 1419+05, LT. OF C.L. DROP INLET = 3'-0" x 4'-6"

RAMP 4

STA. 1429+70.00 - CONSTRUCT TYPE ST DROP INLET 4.50' LT. OF C.L. H = 4'-0" WITH 18" X 5' R.C. PIPE CULVERT (CLASS III) (TYPE 3 BEDDING) CONNECT TO DROP INLET STA. 1429+70, RT. OF C.L. DROP INLET = 3'-0" x 4'-6"

STA. 1432+00.00 - CONSTRUCT TYPE ST DROP INLET 3.25' LT. OF C.L. H = 3'-10" WITH 18" X 2' R.C. PIPE CULVERT (CLASS III) (TYPE 3 BEDDING) CONNECT TO DROP INLET STA. 1432+00, RT. OF C.L. DROP INLET = 3'-0" x 4'-6"

STA. 1428+00.00 - CONSTRUCT TYPE ST DROP INLET 3.25' LT. OF C.L. H = 4'-0" WITH 18" X 2' R.C. PIPE CULVERT (CLASS III) (TYPE 3 BEDDING) CONNECT TO DROP INLET STA. 1428+00, RT. OF C.L. DROP INLET = 3'-0" x 4'-6"

CONSTRUCTION LIMITS

I-49 STA. 1430+31.09 = HWY. 72 STA. 194+36.12 △ 90°00'00"

PROPOSED 8' FLAT BOTTOM DITCH

1424+11.34

1425+00

1420+00

12'-0" 10'-0" 16'-0"

℄ I-49

840'-0" LANE TRANSITION

N 46°11'26" W

10'-0" 12'-0"

STA. 1419+05.00 - IN PLACE DROP INLET IN MEDIAN REMOVE AND CONSTRUCT TYPE ST DROP INLET 3.25' RT. OF C.L. H = 6'-4" WITH 18" X 2' R.C. PIPE CULVERT (CLASS III) (TYPE 3 BEDDING) CONNECT TO EXIST. R.C. PIPE CULVERT DROP INLET = 3'-0" x 4'-6"

RAMP 1

STA. 1421+00.00 - CONSTRUCT TYPE ST DROP INLET 3.25' RT. OF C.L. H = 4'-0" WITH 18" X 2' R.C. PIPE CULVERT (CLASS III) (TYPE 3 BEDDING) CONNECT TO DROP INLET STA. 1421+00, LT. OF C.L. DROP INLET = 3'-0" x 4'-6"

E. CENTRAL AVE.

N 43°49'50" E

℄ E. CENTRAL AVE.

200+00

200+75.36

RAMP 6

PROPOSED 8' FLAT BOTTOM DITCH

NOSE ℄ RAMP 6 STA. 200+26.14, 7.50' LT. = ℄ I-49 STA. 1433+01.94, 57.09' LT.

STA. 1432+35.00 END MEDIAN BARRIER

RAMP 6 STA. 200+75.36 = I-49 STA. 1432+51.34

R 10'-0" R 60'-0" N 46°

R 60'-0"

STA. 1432+96 END INTERIOR WIDENING

840'-0" LANE TRANSITION

RAMP 5 STA. 1432+52.00 = I-49 STA. 1432+51.65

1424+11.65

1428+95.01

195+00

100'-0" MEDIAN WALL TRANSITION

100'-0" MEDIAN WALL TRANSITION

CONSTRUCTION LIMITS

PROPOSED 8' FLAT BOTTOM DITCH

STA. 1428+00.00 - CONSTRUCT TYPE ST DROP INLET 3.25' RT. OF C.L. H = 4'-0" WITH 18" X 167' R.C. PIPE CULVERT (CLASS III) (TYPE 3 BEDDING) CONNECT TO DROP INLET STA. 1429+70, RT. OF C.L. DROP INLET = 3'-0" x 4'-6"

1431+77.68

PROPOSED 8' FLAT BOTTOM DITCH

RAMP 5

PC 1432+52.00

℄ HWY. 72

STA. 1429+70.00 - CONSTRUCT TYPE ST DROP INLET 4.50' RT. OF C.L. H = 4'-0" WITH 18" X 111' R.C. PIPE CULVERT (CLASS III) (TYPE 3 BEDDING) CONNECT TO DROP INLET STA. 1430+84, RT. OF C.L. DROP INLET = 3'-0" x 4'-6"

NOSE ℄ RAMP 5 STA. 1433+32.29, 7.50' LT. = ℄ I-49 STA. 1433+32.62, 68.75' RT.

HWY. 72

PT 1441+37.03

I-49

CONCRETE MEDIAN BARRIER

TYPE SPECIAL	STA. 1428+95	TO	STA. 1431+78
TYPE B	STA. 1431+78	TO	STA. 1432+35

STA. 1429+70.00 - IN PLACE DROP INLET IN MEDIAN WITH 18" X 173' R.C. PIPE CULVERT WITH FES REMOVE DROP INLET AND FES AND PLUG AND ABANDON PIPE

STA. 1430+84.00 - CONSTRUCT TYPE ST DROP INLET 4.75' RT. OF C.L. H = 4'-0" WITH 18" X 113' R.C. PIPE CULVERT (CLASS III) (TYPE 3 BEDDING) CONNECT TO DROP INLET STA. 1432+00, RT. OF C.L. DROP INLET = 3'-0" x 4'-6"

STA. 1432+00.00 - CONSTRUCT TYPE ST DROP INLET 3.25' RT. OF C.L. H = 4'-0" WITH 18" X 297' R.C. PIPE CULVERT (CLASS III) (TYPE 3 BEDDING) CONNECT TO SAFETY END SECTION RT. OF C.L. DROP INLET = 3'-0" x 4'-6"

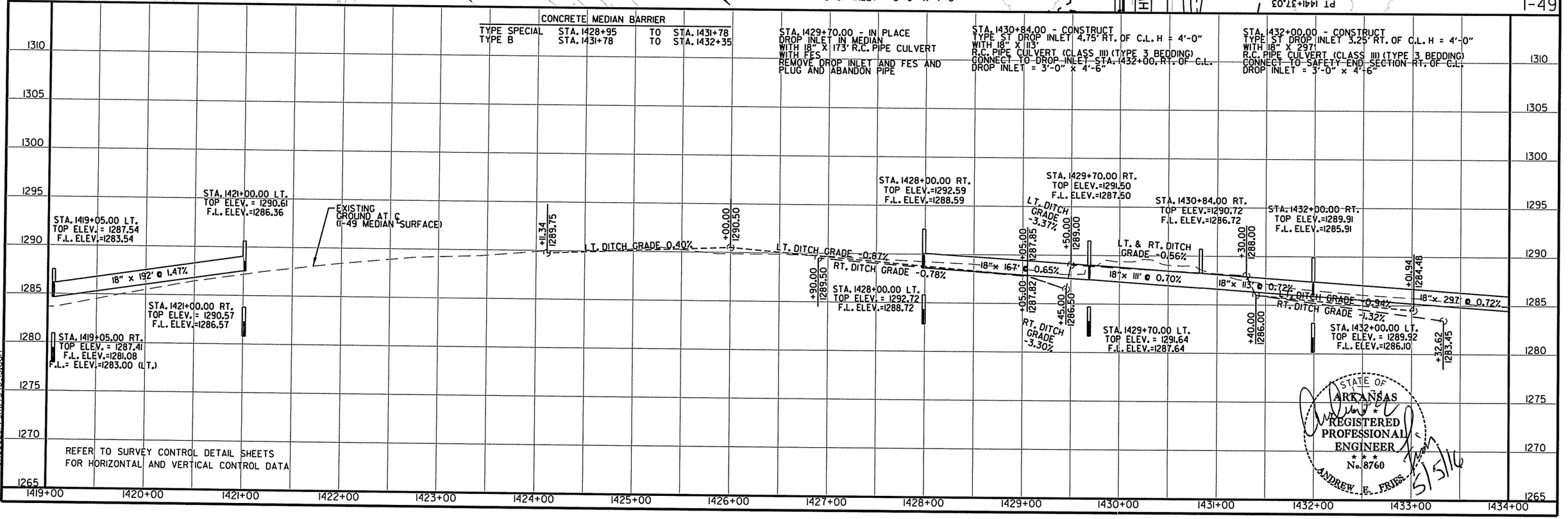

REFER TO SURVEY CONTROL DETAIL SHEETS FOR HORIZONTAL AND VERTICAL CONTROL DATA

STATE OF ARKANSAS REGISTERED PROFESSIONAL ENGINEER No. 8760 ANDREW E. FRIES 5/5/16

5/5/2016 8:34:02 PM
\\SPY\CA0902 PP HWY540 13.dgn

DATE	DATE FILMED	DATE REVISED	DATE FILMED	FED.RD. DIST.NO.	STATE	FED.AID PROJ.NO.	SHEET NO.	TOTAL SHEETS
				6	ARK.			
				JOB NO.		CA0902	204	581

(2) STA. 1434+00.00 TO 1449+00.00

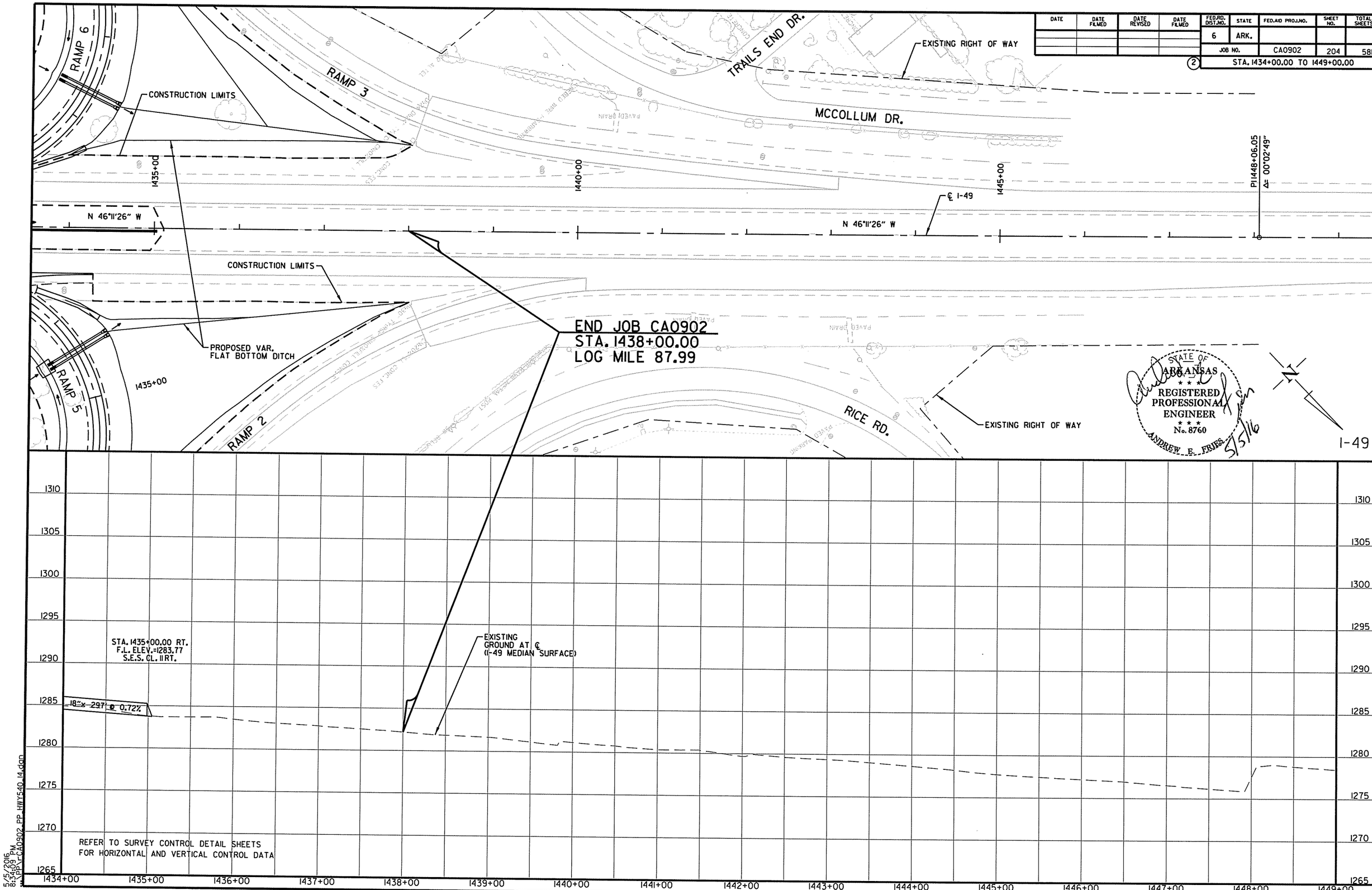

5/5/2016
8:34:09 PM
...\PP\r_CA0902_PP_HWY540_14.dgn

DATE	DATE FILMED	DATE REVISED	DATE FILMED	FED.RD. DIST.NO.	STATE	FED.AID PROJ.NO.	SHEET NO.	TOTAL SHEETS
				6	ARK.			
				JOB NO.		CA0902	205	581

(2) I-49 / HWY. 102/62 INTERCHANGE LAYOUT

CONCRETE DITCH PAVING (TYPE B)

STA.	STA.	SIDE	"W"	SQ.YDS.
1025+16	1026+01	RT.	6'-0"	57.2
1027+00	1029+45	LT.	6'-0"	163.3

CONCRETE DITCH PAVING (TYPE A)

STA.	STA.	SIDE	"B"	"W"	SQ.YDS.
1029+45	1030+65	LT.	VARIES	VARIES	198.0

STATE OF ARKANSAS
REGISTERED PROFESSIONAL ENGINEER
No. 8760
ANDREW E. FRIES
5/5/16

STA. 1026+01.00 IN PLACE
24" X 97' R.C. PIPE CULVERT WITH FES LT. & RT.
REMOVE FES RT. & EXTEND R.C. PIPE 10' RT.
(CLASS III) (TYPE 3 BEDDING) WITH FES RT.
24" R.C. PIPE = 10 LIN. FT.
24" FES = 1 EA.

P.I.= 1028+36.56
Δ = 14°07'35" RT.
D = 5°00'00"
T = 141.98'
L = 282.53'
P.C. = 1026+94.58
P.T. = 1029+77.11
e = MATCH EXISTING
Ls = NA

P.I.= 1023+05.16
Δ = 20°27'16" LT.
D = 5°45'00"
T = 179.78'
L = 355.73'
P.C. = 1021+25.38
P.T. = 1024+81.11
e = MATCH EXISTING
Ls = NA

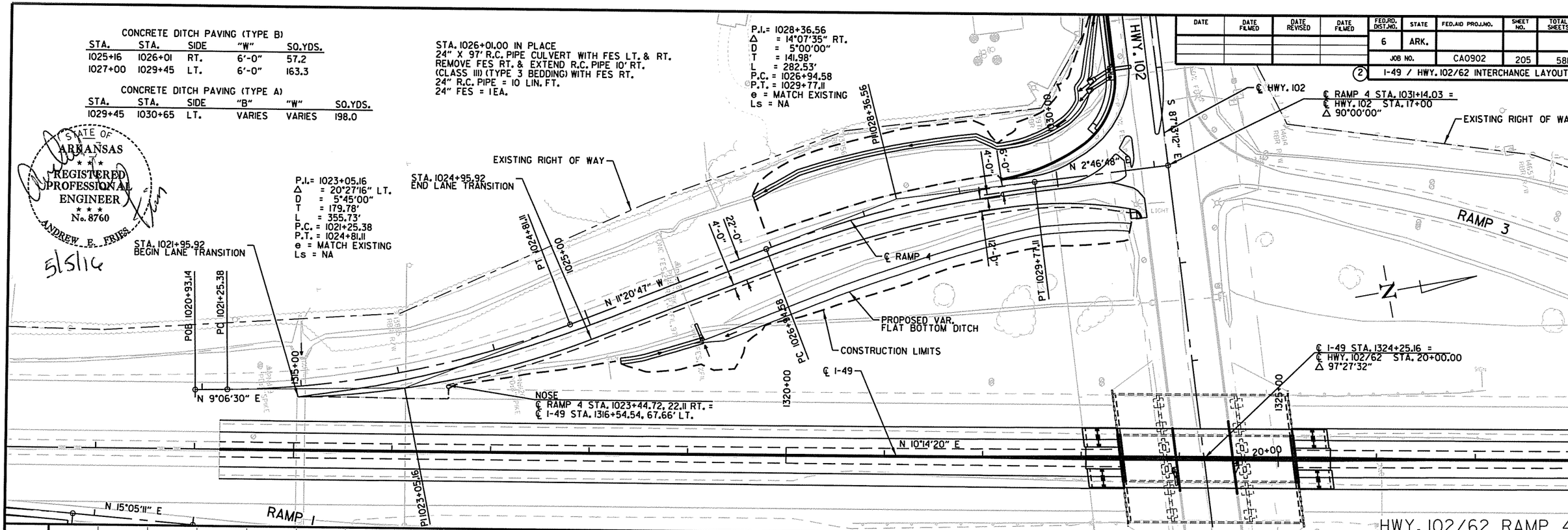

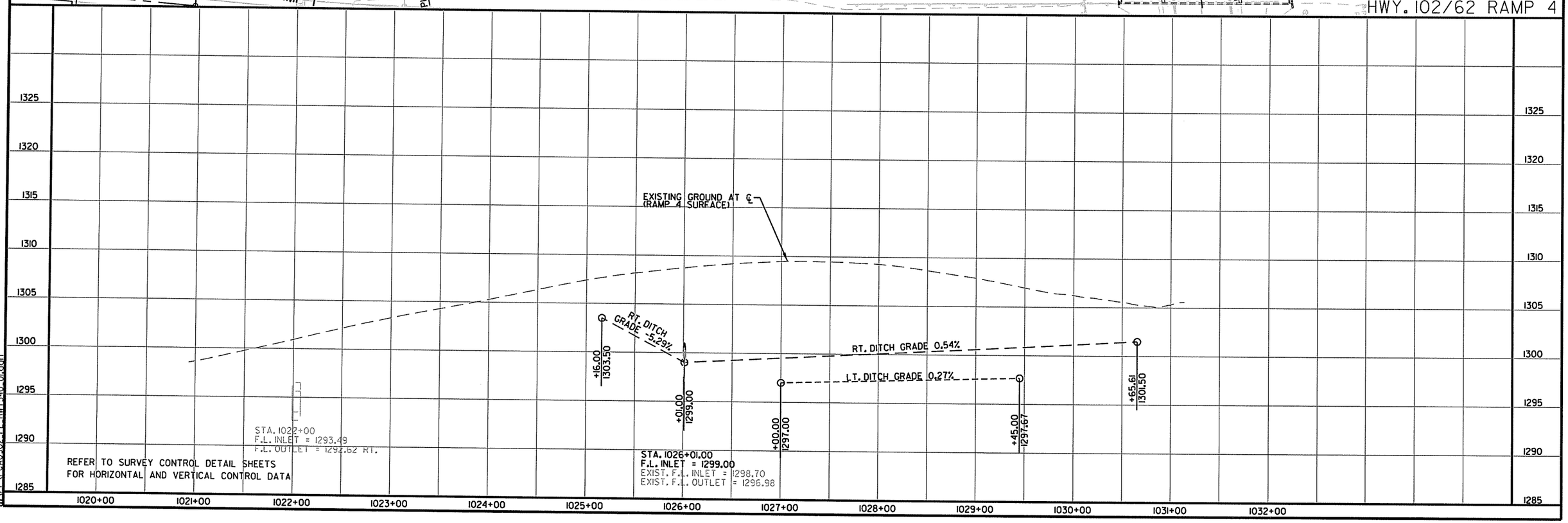

REFER TO SURVEY CONTROL DETAIL SHEETS
FOR HORIZONTAL AND VERTICAL CONTROL DATA

5/5/2016
8:34:15 PM
\\PP\CA0902_PL_HWY540_01.dgn

DATE	DATE FILMED	DATE REVISED	DATE FILMED	FED.RD. DIST.NO.	STATE	FED.AID PROJ.NO.	SHEET NO.	TOTAL SHEETS
				6	ARK.			
				JOB NO.		CA0902	206	581

(2) I-49 / HWY. 72 INTERCHANGE LAYOUT

STATE OF ARKANSAS
REGISTERED PROFESSIONAL ENGINEER
No. 8760
ANDREW E. FRIES
5/5/16

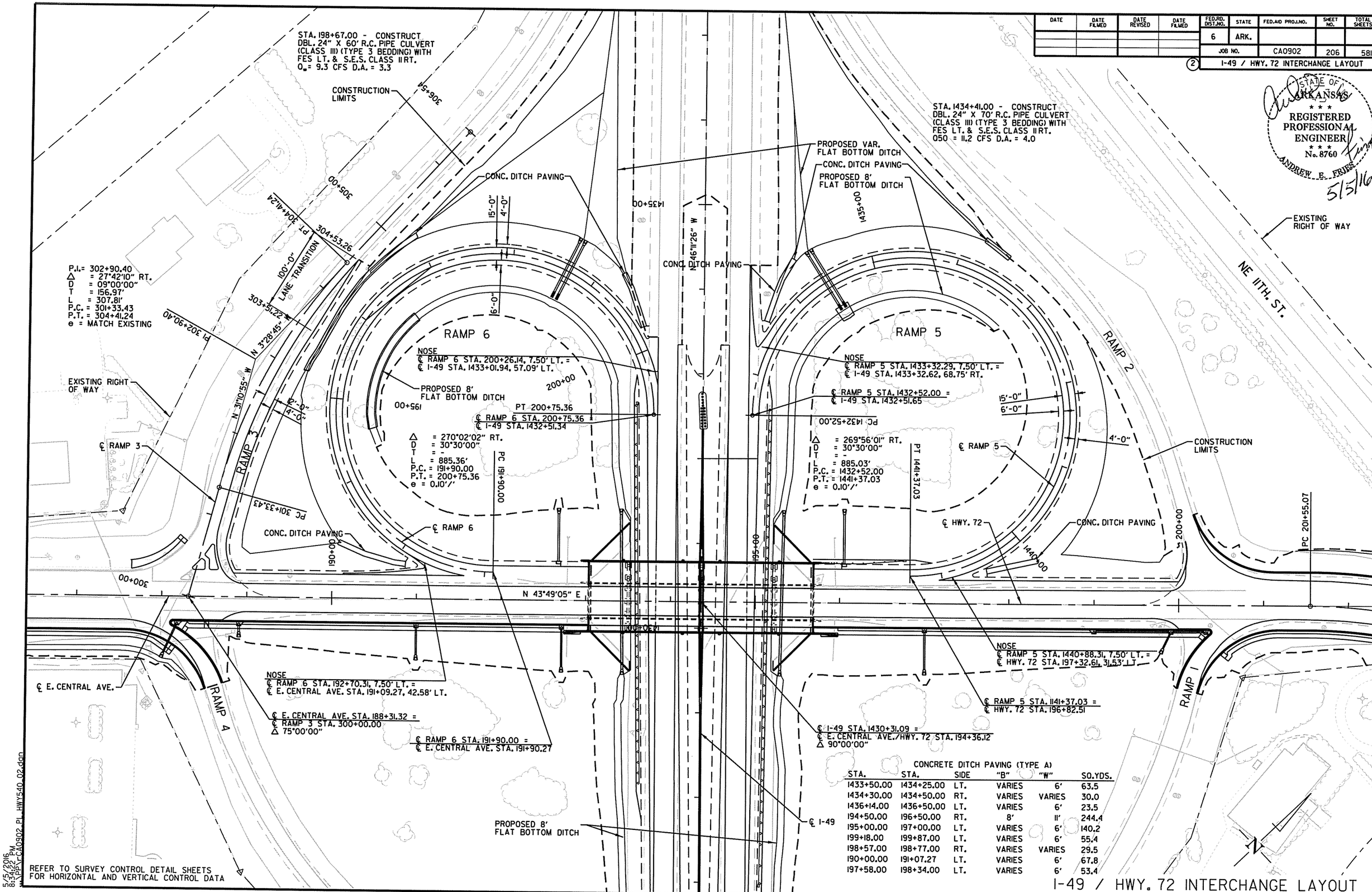

CONCRETE DITCH PAVING (TYPE A)

STA.	STA.	SIDE	"B"	"W"	SQ.YDS.
1433+50.00	1434+25.00	LT.	VARIES	6'	63.5
1434+30.00	1434+50.00	RT.	VARIES	VARIES	30.0
1436+14.00	1436+50.00	LT.	VARIES	6'	23.5
194+50.00	196+50.00	RT.	8'	11'	244.4
195+00.00	197+00.00	LT.	VARIES	6'	140.2
199+18.00	199+87.00	LT.	VARIES	6'	55.4
198+57.00	198+77.00	RT.	VARIES	VARIES	29.5
190+00.00	191+07.27	LT.	VARIES	6'	67.8
197+58.00	198+34.00	LT.	VARIES	6'	53.4

REFER TO SURVEY CONTROL DETAIL SHEETS FOR HORIZONTAL AND VERTICAL CONTROL DATA

I-49 / HWY. 72 INTERCHANGE LAYOUT

5/5/2016 8:34:22 PM \\PP\CA0902 PL HWY540 02.dgn

DATE	DATE FILMED	DATE REVISED	DATE FILMED	FED.RD. DIST.NO.	STATE	FED.AID PROJ.NO.	SHEET NO.	TOTAL SHEETS
				6	ARK.			
				JOB NO.		CA0902	207	581

(2) RAMP PROFILES

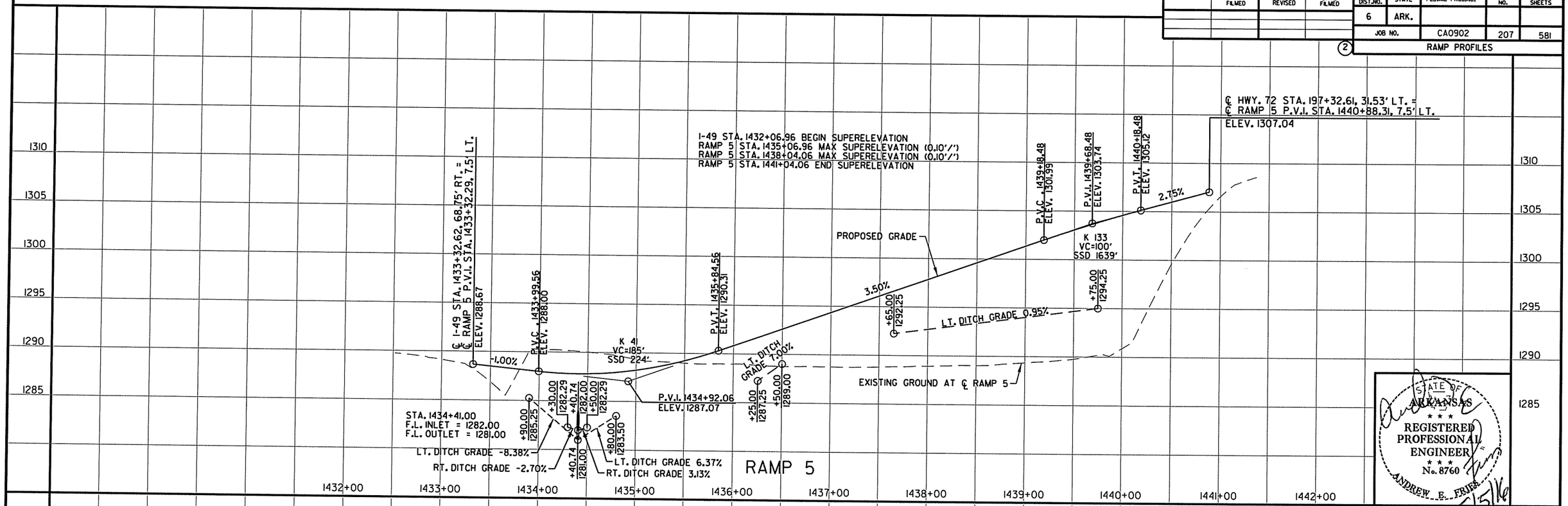

STATE OF ARKANSAS
REGISTERED PROFESSIONAL ENGINEER
No. 8760
ANDREW E. FRIES
5/5/16

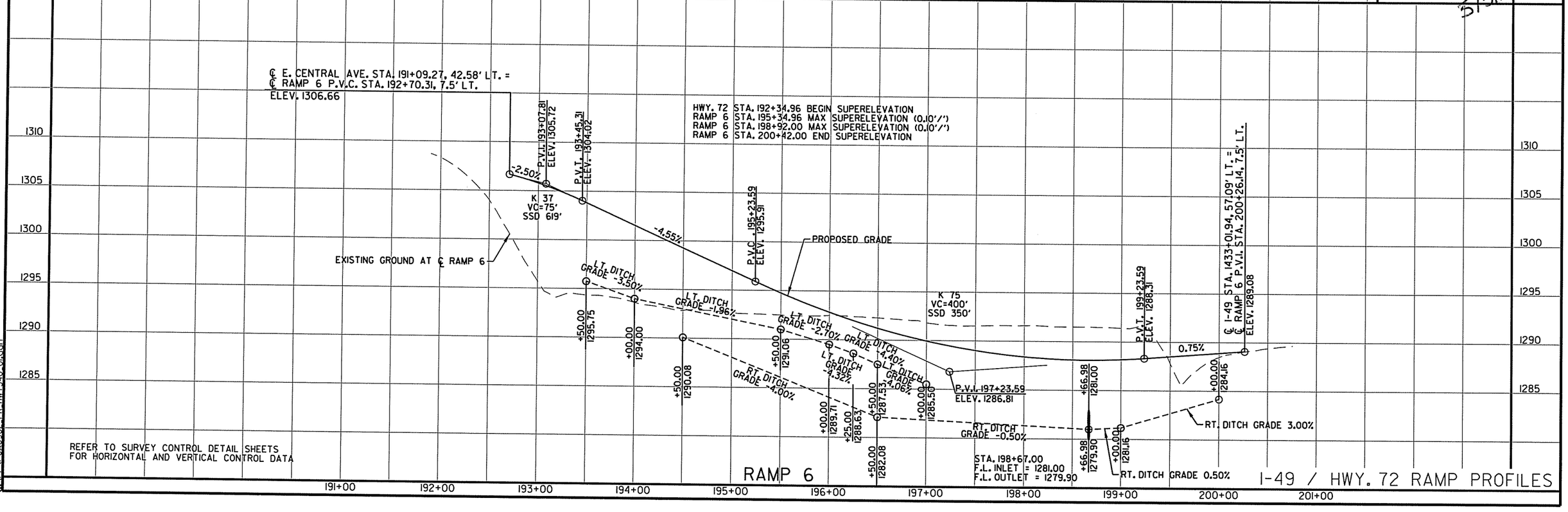

REFER TO SURVEY CONTROL DETAIL SHEETS
FOR HORIZONTAL AND VERTICAL CONTROL DATA

I-49 / HWY. 72 RAMP PROFILES

5/5/2016
8:34:26 PM
\\PP\CA0902 PR HWY540 01.dgn

DATE	DATE FILMED	DATE REVISED	DATE FILMED	FED.RD. DIST.NO.	STATE	FED.AID PROJ.NO.	SHEET NO.	TOTAL SHEETS
				6	ARK.			
				JOB NO.		CA0902	208	581

(2) TEMPORARY RAMP PLAN & PROFILE

EXISTING RIGHT OF WAY

℄ I-49

N 10°14'20" E

12' 12'

12' 12' 12'

11' 11' 11'

N 10°17'45" E

℄ TEMP. RAMP

PC 1340+99.72

CONST. LIMITS

EXISTING RIGHT OF WAY

PI 1345+55.83

N 6°06'36" W

PC 103+14.07

PI 104+41.14

PT 105+66.47

P.I. 104+41.14
Δ = 16° 24'21" RT.
D = 6° 30'
T = 127.07'
L = 252.4'
P.C. = 103+14.07
P.T. = 105+66.47
e = 0.095 '/'
Ls = 280

POB 100+00.00

WORK ZONE. STAGE I

STATE OF ARKANSAS
REGISTERED PROFESSIONAL ENGINEER
No. 8760
ANDREW E. FRIES
5/3/16

HWY. 102 TEMPORARY RAMP 2

℄ I-49 STA. 1334+73.00, 76.58' RT. =
℄ TEMP. RAMP P.V.I. STA. 105+51.95, 7.5' LT.
ELEV. 1341.06

P.V.C. 105+80.00
ELEV. 1341.37

1.10%

P.V.I. 109+30.00
ELEV. 1345.22

K 212
VC=700'
SSD 711'

PROPOSED GRADE

P.V.T. 112+80.00
ELEV. 1337.52

-2.20%

EXISTING GROUND AT ℄ TEMPORARY RAMP 2

℄ I-49 STA. 1343+13.62, 66.29' RT. =
℄ TEMP. RAMP P.V.I. STA. 113+84.38, 7.5' LT.
ELEV. 1335.22

1355 1350 1345 1340 1335 1330 1325 1320 1315 1310

100+00 101+00 102+00 103+00 104+00 105+00 106+00 107+00 108+00 109+00 110+00 111+00 112+00 113+00 114+00 115+00

5/5/2016
8:34:40 PM
\\MOT\...\CA0902 MOT HWY540 33a.dgn

DATE	DATE FILMED	DATE REVISED	DATE FILMED	FED.RD. DIST.NO.	STATE	FED.AID PROJ.NO.	SHEET NO.	TOTAL SHEETS
				6	ARK.			
				JOB NO.		CA0902	209	581

STATE OF ARKANSAS
REGISTERED PROFESSIONAL ENGINEER
No. 8760
ANDREW E. FRIES
5/5/16

STA. 10+55.00 - IN PLACE
DROP INLET ON LT.
WITH 18" x 60' R.C. PIPE CULVERT
TO DROP INLET ON RT.
REMOVE 4' OF R.C. PIPE CULVERT RT. AND
EXTEND 18" R.C. PIPE CULVERT (CLASS III) (TYPE 3 BEDDING) = 18 LIN. FT.
TO DROP INLET ON RT.

(2) STA. 03+00.00 TO 12+00.00

P.I.= 4+43.28
Δ = 1°06'41.0" LT.
D = 0°30'00.0"
T = 111.14'
L = 222.28'
P.C. = 3+32.14
P.T. = 5+54.42
e = N.C.

STA. 05+59.00 CONSTRUCT RT.
TYPE 3 WHEEL CHAIR RAMP -
3 SQ. YDS.

STA. 7+47.00 - IN PLACE
DROP INLET ON LT.
WITH 18" x 60' R.C. PIPE CULVERT
TO DROP INLET ON RT.
REMOVE 4' OF R.C. PIPE CULVERT RT. AND
EXTEND 18" R.C. PIPE CULVERT (CLASS III) (TYPE 3 BEDDING) = 5 LIN. FT.
TO JUNCTION BOX ON RT.

STA. 10+55.00 - IN PLACE
DROP INLET ON RT.
WITH 30" x 240' R.C. PIPE CULVERT
TO DROP INLET ON RT.
REMOVE DROP INLET AND
PLUG AND ABANDON 30" R.C. PIPE CULVERT

MOBERLY LN.
HWY. 102
℄ HWY. 102
4'-0" CURBED ISLAND
EXISTING RIGHT OF WAY
PC 3+32.14
PT 5+54.42
PI 4+43.28
5+00
0+00
+20.00
+50.00
+67
+84
+98
+19.76
+31.26
22'-0"
19'-6"
44'-0"
130'-0" TAPER
S 87°14'20" E
TYPE D CURB
EXISTING RIGHT OF WAY
CONSTRUCTION LIMITS
PROPOSED TCE
PROPOSED RIGHT OF WAY
PROPOSED TCE
13'-6"
16'
32'

STA. 3+66.00 - IN PLACE
DROP INLET ON RT.
WITH 30" x 376' R.C. PIPE CULVERT
EXTEND WITH 30" X 5' R.C.
TO DROP INLET STA. 7+46.00, RT. OF ON C.L.
REMOVE 4' EXISTING R.C. PIPE CULVERT RT. AND
EXTEND 30" R.C. PIPE CULVERT (CLASS III) (TYPE 3 BEDDING) = 5 LIN. FT.
TO JUNCTION BOX ON RT.

STA. 7+46.00 - IN PLACE
DROP INLET ON RT.
WITH 30" x 301' R.C. PIPE CULVERT
TO DROP INLET ON RT.
PLUG AND ABANDON EXIST. 30" R.C. PIPE CULVERT
REMOVE DROP INLET AND CONSTRUCT
TYPE ST JUNCTION BOX H = 4'-9"
WITH 30" x 9' R.C. PIPE CULVERT (CLASS III) (TYPE 3 BEDDING)
TO DROP INLET STA. 7+46.00, RT OF C.L.
JUNCTION BOX = 5' X 5'

STA. 7+46.00 - CONSTRUCT
DROP INLET ON RT. H = 5'-3"
WITH 4' EXTENSION AND 30" x 301'
PIPE CULVERT TO DROP INLET ON RT.
AND WITH 12" x 5' R.C. CULVERT EXTENSION
TO PIPE COLLAR ON RT.
TYPE MO DROP INLET = 5' DIA.
TYPE C DROP INLET = 4' x 3'-2"
30" R.C. PIPE (CLASS III) (TYPE 3 BEDDING) = 301 LIN. FT.
30" SLPPMCCS PIPE (TYPE 2 BEDDING) = 301 LIN. FT.

STA. 05+76 CONSTRUCT RT.
TYPE 3 WHEEL CHAIR RAMP -
3 SQ. YDS.

STA. 06+11 CONSTRUCT RT.
TYPE 3 WHEEL CHAIR RAMP -
3 SQ. YDS.

STA. 9+84.00 - CONSTRUCT
APPROACH ON RT. = 26 CU. YDS.

STA. 10+52.00 - CONSTRUCT
DROP INLET ON RT. H = 5'-1"
WITH 4' EXTENSION AND 36" x 241'
PIPE CULVERT TO DROP INLET ON RT.
TYPE MO DROP INLET = 5' DIA.
TYPE C DROP INLET = 4' x 3'-8"
36" R.C. PIPE (CLASS III) (TYPE 3 BEDDING) = 241 LIN. FT.
36" SLPPMCCS PIPE (TYPE 2 BEDDING) = 241 LIN. FT.

STA. 10+98.00 - CONSTRUCT
APPROACH ON RT. = 66 CU. YDS.

HWY. 102

BEGIN CONSTRUCTION
STA. 05+00

STA. 7+46.00 RT.
TOP ELEV. = 1311.93
F.L. ELEV. = 1307.18
F.L. ELEV. INLET = 1307.28
30" x 5' @ 0.71%
EXIST. FL=1307.31
30" R.C. FL = 1307.28
18" R.C. FL = 1307.18

STA. 7+46.00 RT.
TOP ELEV. = 1311.93
F.L. ELEV. = 1307.18
F.L. ELEV. INLET = 1307.18

STA. 7+47.00 LT. (EXIST. D.I.)
TOP ELEV. = 1311.96
F.L. ELEV. = 1307.25
EXIST. 18"
EXIST. FL=1307.20

STA. 7+46.00 RT.
TOP ELEV. = 1312.28
F.L. ELEV. = 1307.03
F.L. ELEV. INLET = 1307.15
30" x 8' @ 0.38%
30" R.C. FL = 1307.15
30" R.C. FL = 1307.28
18" x 5' @ 0.12%
18" R.C. FL = 1307.18

STA. 3+66.00 RT. (EXIST. D.I.)
TOP ELEV. = 1314.73
EXIST. F.L. ELEV. = 1309.85
EXIST. F.L. ELEV. INLET = 1309.92
EXIST. 30" @ 0.68%

EXISTING GROUND AT ℄
(HWY. 102 SURFACE)

18" x 18' @ 0.84%
30" F.L. ELEV. = 1304.92
18" F.L. ELEV. = 1304.95
EXIST. F.L. ELEV. = 1305.11
STA. 10+55.00 LT. (EXIST. D.I.)
TOP ELEV. = 1309.54
F.L. ELEV. = 1305.59

STA. 10+52.00 RT.
TOP ELEV. = 1309.88
F.L. ELEV. = 1304.80

30" R.C. FL = 1307.15
STA. 7+46.00 RT.
TOP ELEV. = 1312.28
F.L. ELEV. = 1307.03
30" x 301' @ 0.70%
18" F.L. ELEV. = 1304.95
36" x 241' @ 0.75%

STA. 10+52.00 RT.
TOP ELEV. = 1309.88
F.L. ELEV. = 1304.80

REFER TO SURVEY CONTROL DETAIL SHEETS
FOR HORIZONTAL AND VERTICAL CONTROL DATA

1335 1330 1325 1320 1315 1310 1305 1300 1295

3+00 4+00 5+00 6+00 7+00 8+00 9+00 10+00 11+00 12+00

5/5/2016
8:54:53 PM
\\PPW\CA0902 PP Hwy 102 Oldon

DATE	DATE FILMED	DATE REVISED	DATE FILMED	FED.RD. DIST.NO.	STATE	FED.AID PROJ.NO.	SHEET NO.	TOTAL SHEETS
				6	ARK.			
				JOB NO.		CA0902	210	581

(2) STA. 12+00.00 TO 27+00.00

STATE OF ARKANSAS
REGISTERED PROFESSIONAL ENGINEER
No. 8760
ANDREW E. FRIES
5/5/16

STA. 12+99.00 - IN PLACE
DROP INLET ON LT.
WITH 18" x 60' R.C. PIPE CULVERT
TO DROP INLET ON RT.
REMOVE 4' OF R.C. PIPE CULVERT RT. AND
EXTEND 18" R.C. PIPE CULVERT (CLASS III) (TYPE 3 BEDDING) = 18 LIN. FT.
TO DROP INLET ON RT.

STA. 14+80.00 - CONSTRUCT
APPROACH ON RT. = 14 CU. YDS.

EXISTING RIGHT OF WAY

RAMP 3

STA. 13+92.00 - CONSTRUCT
APPROACH ON RT. = 11 CU. YDS.

STA. 15+96.00 - IN PLACE
DROP INLET ON RT.
WITH 36" x 21' R.C. PIPE CULVERT
WITH FES
REMOVE

STA. 12+58.00 - CONSTRUCT
APPROACH ON RT. = 94 CU. YDS.

PHYLLIS ST.

℄ HWY. 102

℄ HWY. 102 STA. 17+00.00 =
℄ RAMP 4 STA. 1031+14.03
Δ 90°00'00"

STA. 14+18.00 - CONSRTUCT RT.
TYPE 3 WHEEL CHAIR RAMP =
5 SQ. YDS.

PI 13+49.09
Δ = 00°01'08"

CURBED ISLAND

CURBED ISLAND

22'-0"?

15+00

STA. 14+50.00 - CONSRTUCT RT.
TYPE 3 WHEEL CHAIR RAMP =
5 SQ. YDS.

STA. 15+09.00 - CONSRTUCT RT.
TYPE 3 WHEEL CHAIR RAMP =
5 SQ. YDS.

STA. 15+96.00 - IN PLACE
DROP INLET ON LT.
WITH 36" x 59' R.C. PIPE CULVERT
TO DROP INLET ON RT.
REMOVE 4' OF R.C. PIPE CULVERT RT. AND
EXTEND 36" R.C. PIPE CULVERT (CLASS III) (TYPE 3 BEDDING) = 19 LIN. FT.
TO DROP INLET ON RT.

RAMP 2

N 10°14'20" E

STA. 20+08.67 - IN PLACE
DROP INLET ON RT.
REMOVE AND CONSTRUCT
TYPE MO DROP INLET = 4' DIA.
WITH 8' EXTENSION AND 24" X 14'
PIPE CULVERT TO DROP INLET ON RT.
REMOVE 14' OF R.C. PIPE CULVERT RT. AND REPLACE
24" R.C. PIPE CULVERT (CLASS III) (TYPE 3 BEDDING) = 14 LIN. FT.
24" SLPPMCCS PIPE (TYPE 2 BEDDING) = 14 LIN. FT.
(CONTRACTOR SHALL FIELD VERIFY INLET ELEVATIONS AND EXISTING
PIPE SIZE PRIOR TO FABRICATION OF INLET)

℄ I-49

EXISTING RIGHT OF WAY

℄ HWY. 102/62 STA. 20+00.00 =
℄ I-49 STA. 1324+25.16
Δ 97°27'32"

20+00

25+00

S 87°13'12" E

REMOVE AND REPLACE
EXISTING
CURB & GUTTER

HWY. 102

HWY. 62

+58 +92 +80 +65 +40 +30

44'-0" 33'-0" 14'-0"

STA. 20+07.69 - IN PLACE
DROP INLET ON RT.
REMOVE AND CONSTRUCT
TYPE MO DROP INLET = 4' DIA.
WITH 8' EXTENSION AND 24" X 14'
PIPE CULVERT TO DROP INLET ON RT.
REMOVE 14' OF R.C. PIPE CULVERT RT. AND REPLACE
24" R.C. PIPE CULVERT (CLASS III) (TYPE 3 BEDDING) = 14 LIN. FT.
24" SLPPMCCS PIPE (TYPE 2 BEDDING) = 14 LIN. FT.
(CONTRACTOR SHALL FIELD VERIFY INLET ELEVATIONS AND EXISTING
PIPE SIZE PRIOR TO FABRICATION OF INLET)

EXISTING RIGHT OF WAY

STA. 16+04.00 - CONSTRUCT
DROP INLET ON RT. H = 7'-10"
WITH 48" x 22' PIPE CULVERT
TO FES ON RT.
TYPE MO DROP INLET = 5' DIA.
TYPE C DROP INLET = 4' x 4'-10"
48" R.C. PIPE (CLASS III) (TYPE 3 BEDDING) = 22 LIN. FT.
48" SLPPMCCS PIPE (TYPE 2 BEDDING) = 22 LIN. FT.

HWY. 102/62

60' +70 65' +92 65' +21 60' +27 92'

6'-0" 6'-0" 38'-6" 13'-6" 60' +86 92' +82.35 60' +82.23

30' 37' 89°

R 20'-0" R 20'-0" R 20'-0" R 20'-0"

+19.97 70' +10.1 70' +10

PROPOSED RIGHT OF WAY

PROPOSED T.C.E.

PHYLLIS ST.

1030+00

N 2°46'48" E

CURBED ISLAND

CONSTRUCTION LIMITS

℄ RAMP 4

PT 1029+77.11

PROPOSED VAR. FLAT BOTTOM DITCH

RAMP 4

STA. 16+57.00 - CONSRTUCT RT.
TYPE 3 WHEEL CHAIR RAMP =
8 SQ. YDS.

STA. 13+65.00 - CONSRTUCT RT.
TYPE 3 WHEEL CHAIR RAMP =
5 SQ. YDS.

STA. 12+98.00 - CONSTRUCT
DROP INLET ON RT. H = 5'-3"
WITH 4' EXTENSION AND 36" x 293'
PIPE CULVERT TO DROP INLET ON RT.
TYPE MO DROP INLET = 5' DIA.
TYPE C DROP INLET = 4' x 3'-8"
36" R.C. PIPE (CLASS III) (TYPE 3 BEDDING) = 293 LIN. FT.
36" SLPPMCCS PIPE (TYPE 2 BEDDING) = 293 LIN. FT.

EXISTING RIGHT OF WAY

CONSTRUCTION LIMITS

STA. 12+98.00 - IN PLACE
DROP INLET ON RT.
WITH 30" X 293' R.C. PIPE CULVERT
TO DROP INLET ON RT.
REMOVE DROP INLET AND
PLUG AND ABANDON 30" R.C. PIPE CULVERT

STA. 15+96.00 - CONSTRUCT
DROP INLET ON RT. H = 7'-10"
WITH 4' EXTENSION AND 48" x 18'
PIPE CULVERT TO FES ON RT.
TYPE MO DROP INLET = 5' DIA.
TYPE C DROP INLET = 4' x 4'-10"
48" R.C. PIPE (CLASS III) (TYPE 3 BEDDING) = 18 LIN. FT.
48" SLPPMCCS PIPE (TYPE 2 BEDDING) = 18 LIN. FT.

RAMP 1

N

P.I.= 1028+36.56
Δ = 14°07'35" RT.
D = 5°00'00"
T = 141.98'
L = 282.53'
P.C. = 1026+94.58
P.T. = 1029+77.11
℮ = MATCH EXISTING

END CONSTRUCTION
STA. 18+00.00

STA. 12+99.00 LT. (EXIST. D.I.)
TOP ELEV. = 1308.16
F.L. ELEV. = 1304.44

STA. 12+98.00 RT.
TOP ELEV. = 1308.16
F.L. ELEV. = 1302.91

EXIST. 18" R.C.
EXIST. F.L. ELEV. = 1303.38
18" x 18' ℮ 1.89%
36" F.L. ELEV. = 1303.00
18" F.L. ELEV. = 1303.04

EXISTING GROUND AT ℄
(HWY. 102/62 SURFACE)

18" F.L. = 1303.04
F.L. ELEV. = 1303.00
36" x 293' ℮ 1.61%

STA. 12+98.00 RT.
TOP ELEV. = 1308.16
F.L. ELEV. = 1302.91

36" F.L. ELEV. = 1298.19
36" F.L. ELEV. = 1298.31
48" F.L. ELEV. = 1298.17

+27.18 1306.25 ℄ GRADE

STA. 15+96.00 RT.
TOP ELEV. = 1306.00
F.L. ELEV. = 1298.17

RT. DITCH GRADE -8.68%

STA. 16+04.00 RT.
TOP ELEV. = 1305.86
F.L. ELEV. = 1298.03

RT. DITCH GRADE -0.21%

36" R.C. FL = 1298.49
36" F.L. ELEV. = 1298.03

+12.37 1298.00

+59.63 1297.67

STA. 16+07.00
F.L. INLET = 1298.17
F.L. OUTLET = 1297.99

STA. 16+16.00
F.L. ELEV. = 1298.03
F.L. ELEV. = 1297.99

STA. 15+96.00 LT.
TOP ELEV. = 1306.20
F.L. ELEV. = 1298.50

STA. 15+96.00 RT.
TOP ELEV. = 1306.00
F.L. ELEV. = 1298.16

48" x 18' ℮ 0.10%
WITH FES
F.L. ELEV. = 1297.99

EXIST. 36" R.C.
EXIST. F.L. ELEV. = 1298.36
36" x 19' ℮ 0.26%
36" F.L. ELEV. = 1298.31
36" F.L. ELEV. = 1298.19

48" R.C. FL = 1298.17

STA. 16+04.00 RT.
TOP ELEV. = 1305.86
F.L. ELEV. = 1298.03

48" x 22' ℮ 0.18%
WITH FES
F.L. ELEV. = 1297.99

EXIST. FL = 1298.55
EXIST. 36" R.C.
36" F.L. ELEV. = 1298.03

48" R.C. FL = 1298.03

REFER TO SURVEY CONTROL DETAIL SHEETS
FOR HORIZONTAL AND VERTICAL CONTROL DATA

1315 1310 1305 1300 1295

12+00 13+00 14+00 15+00 16+00 17+00 18+00 19+00 20+00 21+00 22+00 23+00 24+00 25+00 26+00 27+00

5/5/2016
8:45:59 PM
M:\PPT\CA0902.PP Hwy 102-02.dgn

DATE	DATE FILMED	DATE REVISED	DATE FILMED	FED.RD. DIST.NO.	STATE	FED.AID PROJ.NO.	SHEET NO.	TOTAL SHEETS
				6	ARK.			
				JOB NO.		CA0902	211	581

(2) HWY. 102 DRIVEWAY PROFILES

STATE OF ARKANSAS
REGISTERED PROFESSIONAL ENGINEER
No. 8760
ANDREW E. FRIES

5/5/16

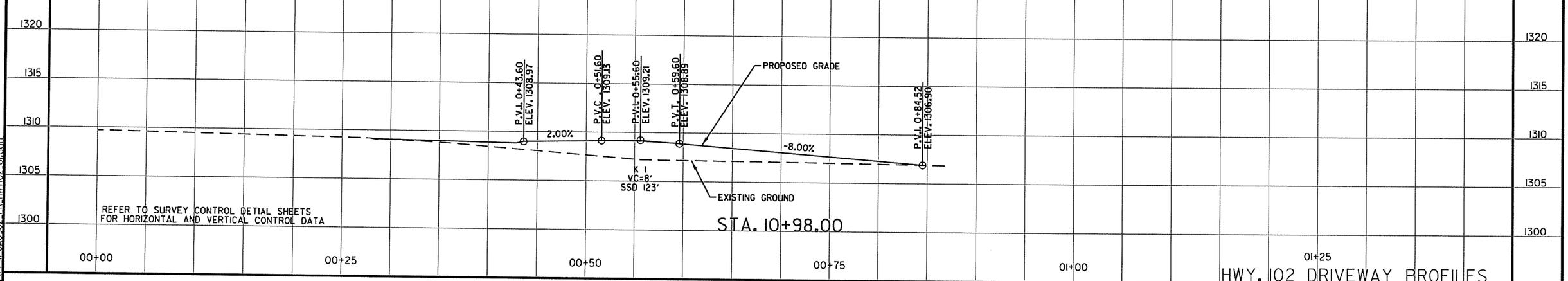

REFER TO SURVEY CONTROL DETIAL SHEETS
FOR HORIZONTAL AND VERTICAL CONTROL DATA

HWY. 102 DRIVEWAY PROFILES

5/5/2016
8:35:04 PM
\PP\rCA0902_PR_HWY102_01.dgn

DATE	DATE FILMED	DATE REVISED	DATE FILMED	FED.RD. DIST.NO.	STATE	FED.AID PROJ.NO.	SHEET NO.	TOTAL SHEETS
				6	ARK.			
				JOB NO.		CA0902	212	581

(2) HWY. 72 PLAN AND PROFILE

STA. 186+36.00 - IN PLACE
DROP INLET 86.75' RT. OF C.L.
WITH 24" x 26' R.C. PIPE CULVERT
WITH FES 61.0' RT. OF C.L.
REMOVE FES AND
EXTEND 24" x 1' R.C. PIPE CULVERT (CLASS III) (TYPE 3 BEDDING)
TO PROPOSED DROP INLETS (TYPE SPECIAL) ON RT.

STA. 186+36.00 - CONSTRUCT
DROP INLET 62.5' RT. OF C.L. H = 4'-8"
WITH 36" x 14' PIPE CULVERT
TO DROP INLET ON RT.
DROP INLETS (TYPE SPECIAL) = 5' X 5'
36" R.C. PIPE (CLASS III) (TYPE 3 BEDDING) = 14 LIN. FT.
36" SLPMCCS PIPE (TYPE 2 BEDDING) = 14 LIN. FT.

STA. 186+37.00 - CONSTRUCT
DROP INLET 40' RT. OF C.L. H = 7'-0"
WITH 42" x 12'
R.C. PIPE CULVERT (CLASS III) (TYPE 3 BEDDING)
TO PIPE COLLAR ON RT.
TYPE MO DROP INLET = 6' DIA.
TYPE C DROP INLET = 4' X 4'-4"

STA. 183+59.00 - IN PLACE
DROP INLET 30.0' RT. OF C.L.
WITH 36" x 273' R.C. PIPE CULVERT
TO EXISTING DROP INLET ON RT.
REMOVE R.C. PIPE AND INSTALL
36" x 275' R.C. PIPE CULVERT
TO PROPOSED TYPE MO DROP INLET ON RT.
36" R.C. PIPE (CLASS III) (TYPE 3 BEDDING) = 275 LIN. FT.
36" SLPMCCS PIPE (TYPE 2 BEDDING) = 275 LIN. FT.

P.I.= 179+20.48
△ = 42°08'26" RT.
D = 04°15'0"
T = 519.40'
L = 991.54'
P.C. = 174+01.08
P.T. = 183+92.62
⊖ = MATCH EXISTING

STA. 186+37.00 - IN PLACE
DROP INLET 29.5' RT. OF C.L.
WITH 42" x 60' R.C. PIPE CULVERT
TO EXISTING DROP INLET ON LT.
AND 30" x 16' R.C. PIPE CULVERT
TO EXISTING FES ON RT.
REMOVE DROP INLET AND
REMOVE 30" x 16' R.C. PIPE CULVERT WITH FES
AND INSTALL PIPE COLLAR ON 42" R.C. PIPE CULVERT

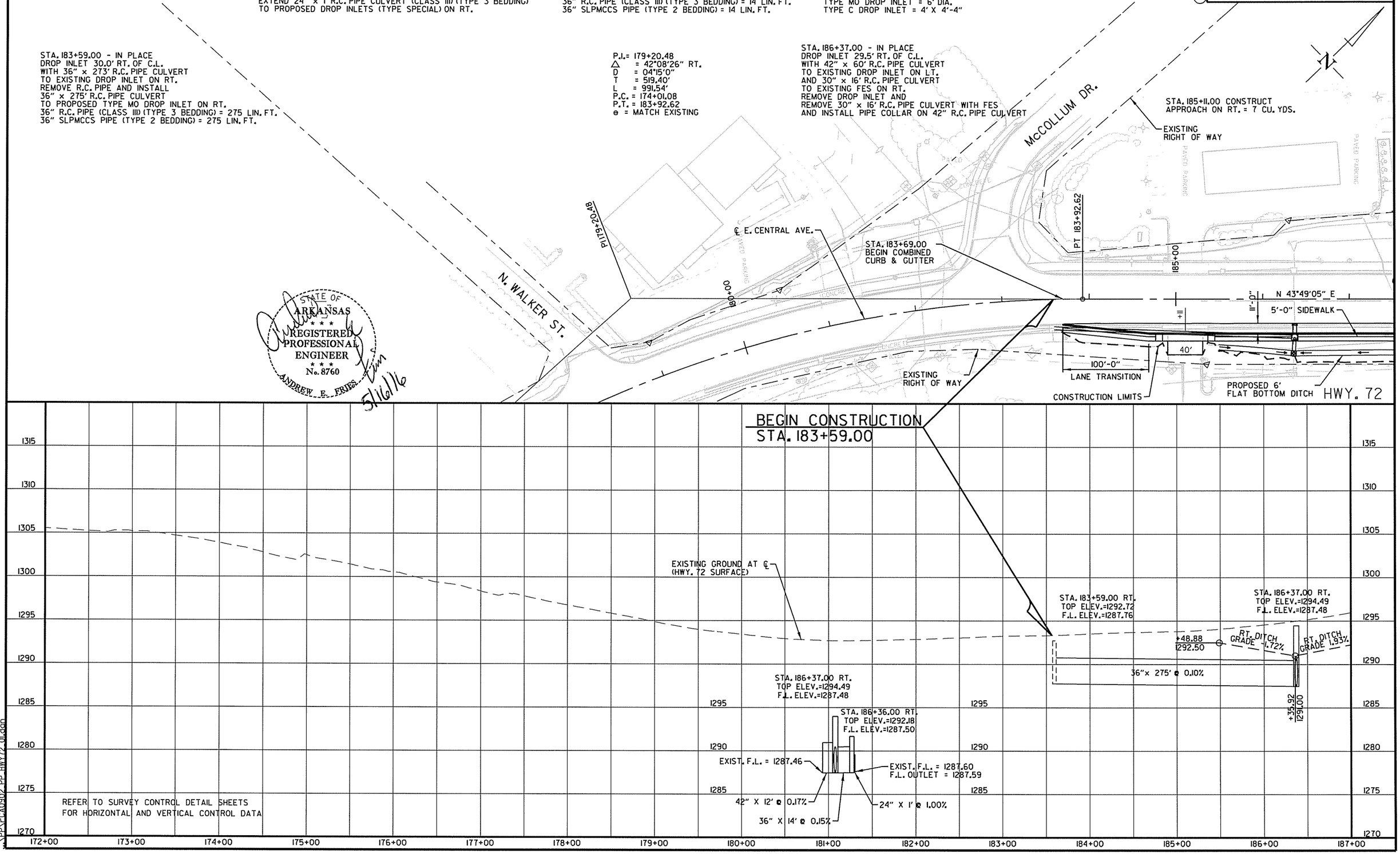

STATE OF ARKANSAS
REGISTERED PROFESSIONAL ENGINEER
No. 8760
ANDREW E. FRIES
5/16/16

REFER TO SURVEY CONTROL DETAIL SHEETS
FOR HORIZONTAL AND VERTICAL CONTROL DATA

5/16/2016
2:26:35 PM
\\PP\CA0902_PP_HWY72_01.dgn

DATE	DATE FILMED	DATE REVISED	DATE FILMED	FED.RD. DIST.NO.	STATE	FED.AID PROJ.NO.	SHEET NO.	TOTAL SHEETS
				6	ARK.			
				JOB NO.		CA0902	213	581

(2) HWY. 72 PLAN AND PROFILE

STA. 192+67.00 - CONSTRUCT
DROP INLET ON LT. H = 5'-0"
WITH 18" x 58'
R.C. PIPE (CLASS III) (TYPE 3 BEDDING)
WITH FES
TYPE N-3 DROP INLET = 4'-6" X 2'-2¾"
WITH DUMPED RIPRAP = 4 CU. YD.

P.I.= 302+90.40
△ = 27°42'10" RT.
D = 9°00'00"
T = 156.97'
L = 307.81'
P.C. = 301+33.43
P.T. = 304+41.24
e = MATCH EXISTING

℄ E. CENTRAL AVE. STA. 188+31.32 =
℄ RAMP 3 STA. 300+00.00
△ 75°00'00"

℄ E. CENTRAL AVE. STA. 194+36.12 =
℄ I-49 STA. 1430+31.09
△ 90°00'00"

℄ RAMP 6 = -
L = 885.36'
P.C. = 191+90.00
P.T. = 200+75.36
e = 0.060'/'

NOSE
℄ RAMP 6 STA. 200+26.14, 7.50' LT. =
℄ I-49 STA. 1433+01.94, 57.09' LT.

NOSE
℄ RAMP 5 STA. 1433+32.29, 7.50' LT. =
℄ I-49 STA. 1433+32.62, 68.75' RT.

PROPOSED 8'
FLAT BOTTOM DITCH

△ = 269°56'01" RT.
D = 30°30'00"
T = -
L = 885.03'
P.C. = 1432+52.00
P.T. = 1441+37.03
e = 0.060'/'

NOSE
℄ RAMP 5 STA. 1440+88.31, 7.50' LT. =
℄ HWY. 72 STA. 197+32.61, 31.53' LT.

℄ RAMP 6 STA. 191+90.00 =
℄ E. CENTRAL AVE. STA. 191+90.27

NOSE
℄ RAMP 6 STA. 192+70.31, 7.50' LT. =
℄ E. CENTRAL AVE. STA. 191+09.27, 42.58' LT.

℄ RAMP 5 STA. 1441+37.03 =
℄ HWY. 72 STA. 196+82.51

STA. 196+05.00 - CONSTRUCT
DROP INLET ON LT. H = 5'-0"
WITH 18" x 60'
R.C. PIPE (CLASS III) (TYPE 3 BEDDING)
WITH FES
TYPE N-3 DROP INLET = 4'-6" X 2'-2¾"
WITH DUMPED RIPRAP = 4 CU. YDS.

STA. 200+33.00 - CONSTRUCT
DROP INLET ON RT. H = 3'-11"
WITH 4' EXTENSION AND 18" x 38'
PIPE CULVERT TO DROP INLET ON RT.
TYPE MO DROP INLET = 4' DIA.
TYPE C DROP INLET = 4' x 2'-6"
18" R.C. PIPE (CLASS III) (TYPE 3 BEDDING) = 38 LIN. FT.
18" SLPPMCCS PIPE (TYPE 2 BEDDING) = 38 LIN. FT.

STA. 199+91.00 - CONSTRUCT
DROP INLET ON RT. H = 5'-6"
WITH 4' EXTENSION AND 18" x 20'
R.C. PIPE (CLASS III) (TYPE 3 BEDDING)
WITH FES
TYPE MO DROP INLET = 4' DIA.
TYPE C DROP INLET = 4' x 2'-6"

CONSTRUCTION LIMITS

STA. 188+29.00 CONSTRUCT RT.
TYPE 3 WHEEL CHAIR RAMP =
4 SQ. YDS.

STA. 200+25.00 CONSTRUCT RT.
TYPE 3 WHEEL CHAIR RAMP =
4 SQ. YDS.

STA. 200+57.00 CONSTRUCT RT.
TYPE 3 WHEEL CHAIR RAMP =
4 SQ. YDS.

STA. 188+91.00 - CONSTRUCT
DROP INLET ON RT. H = 3'-10"
WITH 4' EXTENSION AND 18" x 8'
R.C. PIPE (CLASS III) (TYPE 3 BEDDING)
WITH FES
TYPE MO DROP INLET = 4' DIA.
TYPE C DROP INLET = 4' x 2'-6"

STA. 188+18.00 - CONSTRUCT
DROP INLET ON RT. H = 4'-0"
WITH 4' EXTENSION AND 18" x 37'
R.C. PIPE (CLASS III) (TYPE 3 BEDDING)
WITH FES
TYPE MO DROP INLET = 4' DIA.
TYPE C DROP INLET = 4' x 2'-6"

STA. 187+94.00 CONSTRUCT RT.
TYPE 3 WHEEL CHAIR RAMP =
5 SQ. YDS.

STA. 191+00.00 - CONSTRUCT
DROP INLET ON RT. H = 5'-0"
WITH 18" x 33'
R.C. PIPE (CLASS III) (TYPE 3 BEDDING)
WITH FES
TYPE MO DROP INLET = 4' DIA.
TYPE C DROP INLET = 4' x 2'-6"
WITH DUMPED RIPRAP = 4 CU. YDS.

STA. 188+10.00 CONSTRUCT RT.
TYPE 3 WHEEL CHAIR RAMP =
4 SQ. YDS.

STA. 192+71.00 - CONSTRUCT
DROP INLET ON RT. H = 5'-0"
WITH 18" x 46'
R.C. PIPE (CLASS III) (TYPE 3 BEDDING)
WITH FES
TYPE MO DROP INLET = 4' DIA.
TYPE C DROP INLET = 4' x 2'-6"
WITH DUMPED RIPRAP = 4 CU. YDS.

STA. 193+43.00 - CONSTRUCT
24" x 184' R.C. PIPE CULVERT
WITH 0° 43' 48" RT. FWD. SKEW
(CLASS III) (TYPE 3 BEDDING)
WITH FES LT. AND RT.

STA. 195+30.00 - CONSTRUCT
24" x 184' R.C. PIPE CULVERT
WITH 1° 11' 11" LT. FWD. SKEW
(CLASS III) (TYPE 3 BEDDING)
WITH FES LT. AND RT.

STA. 197+00.00 - CONSTRUCT
DROP INLET ON RT. H = 5'-0"
WITH 18" x 46'
R.C. PIPE (CLASS III) (TYPE 3 BEDDING)
WITH FES
TYPE MO DROP INLET = 4' DIA.
TYPE C DROP INLET = 4' x 2'-6"
WITH DUMPED RIPRAP = 4 CU. YDS.

STA. 199+00.00 - CONSTRUCT
DROP INLET ON RT. H = 3'-11"
WITH 4' EXTENSION AND 18" x 87'
PIPE CULVERT TO DROP INLET ON RT.
TYPE MO DROP INLET = 4' DIA.
TYPE C DROP INLET = 4' x 2'-6"
18" R.C. PIPE (CLASS III) (TYPE 3 BEDDING) = 87 LIN. FT.
18" SLPPMCCS PIPE (TYPE 2 BEDDING) = 87 LIN. FT.

STA.	STA.	GUARD RAIL (TYPE A)	THRIE BEAM GUARD RAIL TERMINAL	GUARD RAIL TERMINAL (TYPE 2)
195+77.67	196+77.67 LT.	25'	1EA.	1EA.

BRIDGE NO. 5982
264'-0" CONT. COMP. W-BEAM UNIT
75'-0" CLEAR ROADWAY
266'-2 1/4" TOTAL BRIDGE LENGTH

BEGIN BRIDGE STA. 193+03.03
END BRIDGE STA. 195+69.21

STA. 188+18.00 RT.
TOP ELEV.=1298.71
F.L. ELEV.=1294.71

STA. 188+91.00 RT.
TOP ELEV.=1300.58
F.L. ELEV.=1296.75

STA. 191+00.00 RT.
TOP ELEV.=1307.18
F.L. ELEV.=1302.18

STA. 192+67.00 LT.
TOP ELEV.=1310.38
F.L. ELEV.=1305.38

STA. 192+7.00 RT.
TOP ELEV.=1311.23
F.L. ELEV.=1306.23

STA. 196+05.00 LT.
TOP ELEV.=1309.84
F.L. ELEV.=1304.84

STA. 197+00.00 RT.
TOP ELEV.=1308.58
F.L. ELEV.=1303.58

STA. 199+00.00 RT.
TOP ELEV.=1302.08
F.L. ELEV.=1298.25

STA. 199+91.00 RT.
TOP ELEV.=1299.02
F.L. ELEV.=1293.52

STA. 200+33.00 RT.
TOP ELEV.=1297.85
F.L. ELEV.=1294.02

EXISTING GROUND AT ℄ (HWY. 72 SURFACE)

DITCH GRADE 1.93%
+30.29
1295.50

18" x 87' @ 5.44%
18" x 38' @ 1.32%
LT. DITCH GRADE -2.24%
+37.01
1288.50

STA. 192+78.00 - IN PLACE
DROP INLET ON LT.
WITH 12" X 57' R.C. PIPE CULVERT
WITH HEADWALL
REMOVE DROP INLET AND HEADWALL AND
PLUG AND ABANDON PIPE

STA. 192+78.00 - IN PLACE
DROP INLET ON RT.
WITH 12" X 47' R.C. PIPE CULVERT
WITH HEADWALL
REMOVE DROP INLET AND HEADWALL AND
PLUG AND ABANDON PIPE

STA. 1429+45 LT. (I-49)
F.L. INLET = 1286.50
STA. 1431+40 LT. (I-49)
F.L. OUTLET = 1286.00
(SEE SECTIONS FOR ADDITIONAL INFORMATION)

STA. 1429+45 RT. (I-49)
F.L. INLET = 1286.50
STA. 1431+40 RT. (I-49)
F.L. OUTLET = 1286.00
(SEE SECTIONS FOR ADDITIONAL INFORMATION)

STA. 195+95.00 - IN PLACE
DROP INLET ON LT.
WITH 12" X 56' R.C. PIPE CULVERT
WITH HEADWALL
REMOVE DROP INLET AND HEADWALL AND
PLUG AND ABANDON PIPE

STA. 195+95.00 - IN PLACE
DROP INLET ON RT.
WITH 12" X 50' R.C. PIPE CULVERT
WITH HEADWALL
REMOVE DROP INLET AND HEADWALL AND
PLUG AND ABANDON PIPE

REFER TO SURVEY CONTROL DETAIL SHEETS
FOR HORIZONTAL AND VERTICAL CONTROL DATA

STATE OF ARKANSAS
REGISTERED PROFESSIONAL ENGINEER
No. 8760
ANDREW E. FRIES
5/5/16

5/5/2016 8:35:19 PM
J:\PW\CA0902\PP HWY72 02.dgn

DATE	DATE FILMED	DATE REVISED	DATE FILMED	FED.RD. DIST.NO.	STATE	FED.AID PROJ.NO.	SHEET NO.	TOTAL SHEETS
				6	ARK.			
				JOB NO.		CA0902	214	581

(2) HWY. 72 PLAN AND PROFILE

CONCRETE DITCH PAVING (TYPE B)

STA.	STA.	SIDE	"W"	SQ. YDS.
213+16	213+55	RT.	VARIES	23.7

CONCRETE DITCH PAVING (TYPE A)

STA.	STA.	SIDE	"B"	"W"	SQ.YDS.
204+40.00	204+60.00	RT.	VARIES	VARIES	11.7
206+55.00	207+25.00	RT.	VARIES	VARIES	153.0

STA. 205+45.00 - IN PLACE
FES ON LT.
WITH 18" x 77' R.C. PIPE CULVERT
TO FES ON LT.
REMOVE FES AND CONSTRUCT
DROP INLET ON LT. H = 2'-8"
WITH 18" x 4' R.C. PIPE CULVERT (CLASS III) (TYPE 3 BEDDING)
TYPE E DROP INLET = 3' X 3'

STA. 204+35.00 - IN PLACE
18" x 53' R.C. PIPE CULVERT
WITH FES ON LT.
REMOVE FES AND EXTEND R.C. PIPE CULVERT 21' LT.
(CLASS III) (TYPE 3 BEDDING)
WITH FES ON LT.

P.I.= 204+17.82
△ = 49°16'13" RT.
D = 10°00'00"
T = 262.75'
L = 492.70'
P.C. = 201+55.07
P.T. = 206+47.78
e = MATCH EXISTING

STA. 206+85.00 - IN PLACE
FES ON LT.
WITH 24"x 67' R.C. PIPE CULVERT
TO FES ON LT.
REMOVE FES AND EXTEND
R.C. PIPE CULVERT 123' LT.
TO DROP INLET ON LT.
24" R.C. PIPE (CLASS III) (TYPE 3 BEDDING) = 123 LIN. FT.
24" SLPPMCCS PIPE (TYPE 2 BEDDING) = 123 LIN. FT.

STA. 208+10.00 - CONSTRUCT
DROP INLET ON LT. H = 5'-0"
WITH 8' EXTENSION AND 24" x 56'
PIPE CULVERT TO DROP INLET ON LT.
TYPE MO DROP INLET = 4' DIA.
TYPE C DROP INLET = 4' X 2'-6"
24" R.C. PIPE (CLASS III) (TYPE 3 BEDDING) = 56 LIN. FT.
24" SLPPMCCS PIPE (TYPE 2 BEDDING) = 56 LIN. FT.

STA. 207+93.00 - IN PLACE
48" x 37' PIPE CULVERT
WITH HDWLS. LT. & RT.
REMOVE

STA. 208+71.00 - CONSTRUCT
DROP INLET ON LT. H = 9'-10"
WITH 4' EXTENSION AND 48" x 19'
PIPE CULVERT (CLASS III) (TYPE 3 BEDDING)
WITH FES ON LT.
TYPE MO DROP INLET = 6' DIA.
TYPE C DROP INLET = 4'-10" X 2'-6"
WITH DUMPED RIPRAP = 8 CU. YDS.

STA. 211+00.00 - CONSTRUCT
DROP INLET ON LT. H = 5'-0"
WITH 4' EXTENSION AND 24" x 224'
PIPE CULVERT TO DROP INLET ON LT.
TYPE MO DROP INLET = 4' DIA.
TYPE C DROP INLET = 4' X 2'-6"
24" R.C. PIPE CULVERT (CLASS III) (TYPE 3 BEDDING) = 224 LIN. FT.
24" SLPPMCCS PIPE (TYPE 2 BEDDING) = 224 LIN. FT.

STA. 212+80.00 - CONSTRUCT
FES TO DROP INLET ON LT.
WITH 24" x 177' PIPE CULVERT
24" R.C. PIPE (CLASS III) (TYPE 3 BEDDING) = 177 LIN. FT.
24" SLPPMCCS PIPE (TYPE 2 BEDDING) = 177 LIN. FT.

STA. 213+16.00 - CONSTRUCT
DROP INLET 27' RT. OF C.L. H = 4'-0"
WITH OPENINGS ON 4 SIDES
WITH 24" x 99' R.C. PIPE CULVERT (CLASS III) (TYPE 3 BEDDING)
TO DROP INLET ON RT.
DROP INLETS (TYPE SPECIAL) = 5' X 5'

STA. 206+49.00 - CONSTRUCT
DROP INLET ON RT. H = 3'-10"
WITH 4' EXTENSION AND 18" x 113'
PIPE CULVERT TO DROP INLET ON RT.
TYPE MO DROP INLET = 4' DIA.
TYPE C DROP INLET = 4' X 2'-6"
18" R.C. PIPE (CLASS III) (TYPE 3 BEDDING) = 113 LIN. FT.
18" SLPPMCCS PIPE (TYPE 2 BEDDING) = 113 LIN. FT.

STA. 207+67.00 - CONSTRUCT
DROP INLET ON RT. H = 6'-5"
WITH 8' EXTENSION AND 48" x 98'
PIPE CULVERT TO DROP INLET ON RT.
TYPE MO DROP INLET = 6' DIA.
TYPE C DROP INLET = 4' X 4'-10"
48" R.C. PIPE CULVERT (CLASS III) (TYPE 3 BEDDING) = 98 LIN. FT.
48" SLPPMCCS PIPE (TYPE 2 BEDDING) = 98 LIN. FT.

STA. 208+71.00 - CONSTRUCT
DROP INLET ON RT. H = 8'-0"
WITH 4' EXTENSION AND 48" x 49'
R.C. PIPE CULVERT (CLASS III) (TYPE 3 BEDDING)
TO DROP INLET ON LT.
TYPE MO DROP INLET = 6' DIA.
TYPE C DROP INLET = 4'-10" X 4'-10"
48" R.C. PIPE CULVERT (CLASS III) (TYPE 3 BEDDING) = 49 LIN. FT.

STA. 212+09.00 - CONSTRUCT
DROP INLET ON RT. H = 6'-0"
WITH 4' EXTENSION AND 36" X 333' PIPE CULVERT
TO DROP INLET RT.
TYPE MO DROP INLET = 5' DIA.
TYPE C DROP INLET = 4' X 3'-8"
36" R.C. PIPE (CLASS III) (TYPE 3 BEDDING) = 333 LIN. FT.
36" SLPPMCCS PIPE (TYPE 2 BEDDING) = 333 LIN. FT.

STA. 212+10.00 - IN PLACE
12" X 32' C.M. PIPE CULVERT ON RT.
INSTALL PIPE COLLAR AND 12" x 9'
R.C. PIPE CULVERT TO DROP INLET ON RT.
12" R.C. PIPE CULVERT (CLASS III) (TYPE 3 BEDDING) = 9 LIN. FT.
12" SLPPMCCS PIPE (TYPE 2 BEDDING) = 9 LIN. FT.

STA. 203+86.00 - CONSTRUCT
DROP INLET ON RT. H = 3'-10"
WITH 4' EXTENSION AND 18" x 132'
PIPE CULVERT TO DROP INLET ON RT.
TYPE MO DROP INLET = 4' DIA.
TYPE C DROP INLET = 4' X 2'-6"
18" R.C. PIPE (CLASS III) (TYPE 3 BEDDING) = 132 LIN. FT.

STA. 205+30.00 - CONSTRUCT
DROP INLET ON RT. H = 3'-10"
WITH 4' EXTENSION AND 18" x 109'
PIPE CULVERT TO DROP INLET ON RT.
TYPE MO DROP INLET = 4' DIA.
TYPE C DROP INLET = 4' X 2'-6"
18" R.C. PIPE (CLASS III) (TYPE 3 BEDDING) = 109 LIN. FT.
18" SLPPMCCS PIPE (TYPE 2 BEDDING) = 109 LIN. FT.

STA. 207+67.00 - CONSTRUCT
DROP INLET ON RT. H = 5'-2"
WITH OPENINGS ON 4 SIDES
WITH 36" x 10' R.C. PIPE CULVERT (CLASS III) (TYPE 3 BEDDING)
TO DROP INLET ON RT.
DROP INLETS (TYPE SPECIAL) = 5' X 5'

STA. 207+67.00 - IN PLACE
AREA INLET ON RT. H = 5'-2"
WITH 36" x 13' R.C. PIPE CULVERT
TO FES ON RT.
REMOVE FES RT. AND
EXTEND 36" x 7' R.C. PIPE CULVERT (CLASS III) (TYPE 3 BEDDING)
TO SPECIAL AREA INLET ON RT.

END CONSTRUCTION
STA. 213+55.00

REFER TO SURVEY CONTROL DETAIL SHEETS
FOR HORIZONTAL AND VERTICAL CONTROL DATA

STATE OF ARKANSAS
REGISTERED PROFESSIONAL ENGINEER
No. 8760
ANDREW E. FRIES
5/16/16

HWY. 72

5/16/2016 2:27:50 PM
C:\PPS\CA0902_PP_HWY72_03.dgn

STATE OF ARKANSAS
REGISTERED PROFESSIONAL ENGINEER
No. 8760
ANDREW E. FRIES
5/20/16

DATE	DATE FILMED	DATE REVISED	DATE FILMED	FED.RD. DIST.NO.	STATE	FED.AID PROJ.NO.	SHEET NO.	TOTAL SHEETS
				6	ARK.			
				JOB NO.		CA0902	215	581

(2) TRAFFIC SIGNAL NOTES AND SUMM. OF QUANT.

TRAFFIC SIGNAL NOTES

1. PERFORM ELECTRICAL WORK IN ACCORDANCE WITH THE CURRENT EDITIONS OF THE NFPA 70 (2014) NATIONAL ELECTRICAL CODE, NFPA 101 (2012) LIFE SAFETY CODE, STATE ELECTRICAL CODE AND LOCAL ELECTRICAL CODE.

2. EXTEND GREEN EQUIPMENT GROUNDING CONDUCTOR (EGC) FROM GROUND BAR AT MAIN BREAKER TO CONTROL PANEL AND TO FIRST POLE. SOLIDLY BOND EGC TO GROUND LUG OF CONTROL CABINET AND TO POLE GROUND. ENSURE THAT ONLY ONE NEUTRAL-TO-GROUND BOND EXISTS IN THE SYSTEM AND THAT IT IS AT THE MAIN BREAKER.

3. ELECTRICAL SERVICE SHALL BE PROVIDED BY THE CITY TO A SERVICE POLE WITH EXTERNAL RAINTIGHT BREAKER (MAIN BREAKER), GALVANIZED STEEL SERVICE RISER, METER LOOP (IF REQUIRED), AND WEATHERHEAD AT A MUTUALLY ACCEPTABLE POINT WITHIN THE RIGHT-OF-WAY. IF THE SERVICE POINT IS OVER 10 FEET FROM THE CONTROLLER, THE CONTRACTOR SHALL PROVIDE AND INSTALL A SEPARATE TWO CIRCUIT EXTERNAL BREAKER (SECONDARY BREAKER) ON OR NEAR THE TRAFFIC SIGNAL CONTROLLER CABINET AND SHALL INSTALL CONDUIT, ELECTRICAL SERVICE WIRE (2c/#6 USE RATED, WITH GROUND TYPICAL), AND PERFORM WIRING TO TAP INTO THE CITY'S MAIN BREAKER AS PART OF THIS CONTRACT. CONDUIT IS PAID FOR AS A SEPARATE ITEM OF THIS CONTRACT. TWO CIRCUIT BREAKERS, CONSIDERED SUBSIDIARY TO THE CONTROL EQUIPMENT, ARE NEEDED WHERE STREET LIGHTING IS INCLUDED. AS PART OF THE SIGNAL INSTALLATION, STREET LIGHTING CIRCUIT (2c/#12 AWG UF RATED, TYPICAL) SHALL BE KEPT FROM THE CIRCUIT SERVING THE TRAFFIC SIGNAL CONTROL EQUIPMENT FROM THE POINT OF TIE-IN AT THE SECONDARY BREAKER PROVIDED BY THE CONTRACTOR.

4. CONTRACTOR SHALL CONNECT A SEPARATE NEUTRAL FOR EACH LOAD SWITCH REPRESENTED ON EACH SIGNAL POLE.

5. TRAFFIC CONTROLLER CABINET AND LAYOUT SHALL BE SUCH THAT IT IS NOT NECESSARY TO SHUT DOWN POWER OR REMOVE LOAD SWITCHES IN ORDER TO EASILY TEST OR MODIFY DETECTOR INPUTS TO THE CONTROLLER.

6. CONTROLLER CABINET SHALL BE WIRED SUCH THAT DURING FLASH OPERATIONS POWER TO THE LOAD SWITCHES CANNOT BACKFEED TO LOAD SWITCH POWER BUSS.

7. ALL PARTS OF THIS INSTALLATION SHALL BE IN ACCORDANCE WITH THE ARKANSAS HIGHWAY AND TRANSPORTATION DEPARTMENT STANDARDS AND DETAILS AND WITH THE MANUAL ON UNIFORM TRAFFIC CONTROL DEVICES, CURRENT EDITIONS.

8. CONDUIT INSTALLED UNDER ROADWAY SURFACES SHALL BE INSTALLED BY PUSHING OR BORING METHODS. IF THE ENGINEER DETERMINES THIS IS NOT FEASIBLE, THEN A TRENCHING METHOD AS SHOWN IN THE DETAILS MAY BE USED.

9. TRAFFIC SIGNAL POLES SHALL BE GALVANIZED. BACKPLATES SHALL BE SUPPLIED FOR ALL SIGNAL HEADS.

10. PAVEMENT MARKING SHOWN FOR REFERENCE ONLY. SEE PAVEMENT MARKING PLAN SHEETS.

11. FOUNDATION FOR ALL POLES SHALL BE EXTENDED IF NECESSARY TO ACCOMMODATE THE REQUIREMENTS FOR SIGNAL HEAD CLEARANCE ABOVE ROADWAY ONLY AT LOCATIONS WHERE THE GROUND ELEVATION AT THE POLE IS BELOW THE ELEVATION OF THE ROADWAY (SEE NOTES ON SPECIAL DETAILS). PAYMENT WILL BE INCLUDED IN SECTION 714, AHTD STANDARD SPECIFICATIONS FOR HIGHWAY CONSTRUCTION.

12. ALL BOXES SHALL BE (TYPE 2 HD) UNLESS OTHERWISE INDICATED. ALL CONDUIT SHALL BE 3" DIAMETER UNLESS SPECIFIED ON PLANS.

13. CONTRACTOR SHALL NOTIFY ALL EXISTING UTILITY OWNERS BEFORE BEGINNING WORK ON THIS PROJECT.

14. LUMINAIRE ASSEMBLIES SHALL BE OF THE FULL CUTOFF TYPE.

15. HARDWARE INPUTS MAY BE DETERMINED BY SUPPLIER. EACH DETECTOR OUTPUT SHALL INPUT THE CONTROLLER THROUGH A SEPARATE INPUT UNLESS OTHERWISE NOTED AND BE PROGRAMMED TO ACTUATE THE ASSOCIATED PHASE. COMBINATION (COMB.) DETECTORS SHALL ALSO BE PROGRAMMED TO PROVIDE VEHICLE COUNT/OCCUPANCY DATA.

16. TO DETERMINE UTILITY CLEARANCES ABOVE THE TRAFFIC SIGNAL POLE, REFER TO THE POLE SCHEDULE FOR VERTICAL SHAFT HEIGHT. WHERE THE POLE SCHEDULE INDICATES THAT A LUMINAIRE ARM WILL BE USED, 38 FEET SHOULD BE USED TO DETERMINE UTILITY CLEARANCE ABOVE THE LUMINAIRE ARM. WHERE THE POLE SCHEDULE INDICATES A TRAFFIC SIGNAL POLE WITHOUT A LUMINAIRE ARM, A HEIGHT OF 21' SHOULD BE USED TO DETERMINE UTILITY CLEARANCE ABOVE THE TRAFFIC SIGNAL MAST ARM. AN ADDITIONAL 6 FEET SHOULD BE USED DIRECTLY ABOVE "VIDEO DETECTOR"AT LOCATIONS SHOWN ON THE SIGNAL PLANS.

17. THE DESIRABLE MINIMUM DISTANCE FROM THE FACE OF ROADWAY CURB OR SHOULDER EDGE TO THE FACE OF NON-BREAKAWAY POLE OR OBSTRUCTION IS 6 FEET. REFER TO TRAFFIC SIGNAL PLANS FOR SPECIFIC LOCATION OF POLES, CONTROLLER AND ANY OTHER NON-BREAKAWAY OBSTRUCTIONS. REFER TO "DESIGN PARAMETERS, MINIMUM CLEAR ZONE DISTANCE"FOR MINIMUM DISTANCE FROM THE EDGE OF TRAVELED WAY TO THE FACE OF A NON-BREAKAWAY POLE OR OBSTRUCTION.
TRAFFIC SIGNAL POLES OR ANY OTHER NON-BREAKAWAY OBSTRUCTION SHALL NOT BE INSTALLED WITHIN THE CLEAR ZONE.

18. AS DETERMINED BY THE ENGINEER, FOUNDATION EMBEDMENT MAY BE DECREASED BY A MAXIMUM OF TWO FEET IF COMPETENT ROCK IS ENCOUNTERED PRIOR TO ACHIEVING PLAN EMBEDMENT AND AT LEAST HALF OF THE REMAINING PLAN EMBEDMENT LENGTH IS KEYED INTO COMPETENT ROCK.

19. CONNECTION OF TRAFFIC SIGNAL DISPLAY TO FIELD WIRING SHALL UTILIZE AN APPROVED TERMINAL STRIP BEHIND HAND-HOLE COVER AT BASE OF POLE. TERMINAL STRIP SHALL PROVIDE PROTECTION TO PREVENT EXPOSURE TO THE PUBLIC IN THE EVENT THAT POLE COVER IS MISSING. PAYMENT FOR TERMINAL STRIPS SHALL BE INCLUDED IN ITEM 714-TRAFFIC SIGNAL MAST ARM AND POLE WITH FOUNDATION.

20. CONTROLLER CABINET LAYOUT AND ORIENTATION SHALL CONFORM TO IMSA STANDARDS.

21. ONE VIDEO PROGRAMMNG MODULE SHALL BE PROVIDED FOR AIMING AND SETUP OF DETECTORS IF THE VIDEO SYSTEM CANNOT BE ADJUSTED THROUGH HARDWARE AND SOFTWARE PROVIDED BY ITEMS WITHIN THE JOB.

22. TRAFFIC SIGNAL CONTRACTOR MUST NOTIFY RESIDENT ENGINEER OR ASSIGNED DEPARTMENT PROJECT INSPECTOR EACH DAY PRIOR TO SIGNAL RELATED WORK. NO WORK ON TRAFFIC SIGNALS WILL BE ALLOWED OR APPROVED WITHOUT THIS PRIOR NOTIFICATION.

23. All STEEL POLES SHALL BE DESIGNED TO MEET THE AASHTO STANDARD SPECIFICATIONS FOR STRUCTURAL SUPPORTS FOR HIGHWAY SIGNS, LUMINAIRES AND TRAFFIC SIGNALS, 4' EDITION (2001) WITH 2003 AND 2006 INTERIMS.

24. DOOR PANEL TEST PUSH BUTTONS SHALL ACTUATE INDICATED PHASES. DETECTOR ASSIGNMENTS AND/OR SIDE PANEL JUMPERS MAY REQUIRE MODFICATION.

25. ALL SYSTEM DETECTOR RACKS AND ASSOCIATED EQUIPMENT SHALL BE PROTECTED BY THE MAIN CONTROLLER CABINET POWER SURGE PROTECTION.

26. NEW TRAFFIC SIGNALS MUST BE OPERATIONAL PRIOR TO REMOVAL OF EXISITNG SIGNALS.

27. TRAFFIC SIGNAL EQUIPMENT FROM THE INTERSECTION SHALL BE THE PROPERTY OF THE CITY OF BENTONVILLE. (SEE SPECIAL PROVISIONS)

SUMMARY OF TRAFFIC SIGNAL QUANTITIES

ITEM NO.	ITEM	ACNHPP-49-1(18)85 - HWY. 102			BIM-B49-0(216) - HWY. 72			TOTAL	UNIT
		HWY. 62 NB RAMP	HWY. 102 SB RAMP	HWY. 62/102 TOTAL	HWY. 72 NB RAMP	HWY. 72 SB RAMP	HWY. 72 TOTAL		
SP & 701	SYSTEM LOCAL CONTROLLER - FIBER (8 PHASES)	1	1	2	1	1	2	4	EACH
SP & 701	TRAFFIC CABINET COMMUNICATIONS	1	1	2	1	1	2	4	EACH
SP & 706	TRAFFIC SIGNAL HEAD, LED, (3 SECTION, 1 WAY)	0	4	4	10	11	21	25	EACH
SP & 706	TRAFFIC SIGNAL HEAD, LED, (4 SECTION, 1 WAY)	1	1	2	1	0	1	3	EACH
SP & 707	COUNTDOWN PEDESTRIAN SIGNAL HEAD, LED	0	2	2	2	4	6	8	EACH
708	TRAFFIC SIGNAL CABLE (5C/14 A.W.G.)	0	2180	2180	702	1591	2293	4473	LIN. FT.
708	TRAFFIC SIGNAL CABLE (7C/14 A.W.G.)	0	0	0	62	0	62	62	LIN. FT.
708	TRAFFIC SIGNAL CABLE (12C/14 A.W.G.)	0	271	271	30	144	174	445	LIN. FT.
708	TRAFFIC SIGNAL CABLE (20C/14 A.W.G.)	294	429	723	298	366	664	1387	LIN. FT.
709	GALVANIZED STEEL CONDUIT (1.25")	28	28	56	28	28	56	112	LIN. FT.
710	NON-METALLIC CONDUIT (2")	403	492	895	721	680	1401	2296	LIN. FT.
710	NON-METALLIC CONDUIT (3")	519	670	1189	300	484	784	1973	LIN. FT.
711	CONCRETE PULL BOX (TYPE 1 HD)	0	0	0	0	1	1	1	EACH
711	CONCRETE PULL BOX (TYPE 2 HD)	6	7	13	7	6	13	26	EACH
711	CONCRETE PULL BOX (TYPE 2)	0	2	2	0	2	2	4	EACH
713	SPAN WIRE ASSEMBLY (TEMPORARY)	0	1	1	0	0	0	1	EACH
714	TRAFFIC SIGNAL MAST ARM AND POLE WITH FOUNDATION (26')	0	0	0	0	1	1	1	EACH
714	TRAFFIC SIGNAL MAST ARM AND POLE WITH FOUNDATION (34')	0	0	0	1	0	1	1	EACH
714	TRAFFIC SIGNAL MAST ARM AND POLE WITH FOUNDATION (36')	0	1	1	0	0	0	1	EACH
714	TRAFFIC SIGNAL MAST ARM AND POLE WITH FOUNDATION (38')	0	0	0	1	0	1	1	EACH
714	TRAFFIC SIGNAL MAST ARM AND POLE WITH FOUNDATION (40')	0	0	0	0	1	1	1	EACH
714	TRAFFIC SIGNAL MAST ARM AND POLE WITH FOUNDATION (42')	0	0	0	1	0	1	1	EACH
714	TRAFFIC SIGNAL MAST ARM AND POLE WITH FOUNDATION (46')	0	1	1	0	0	0	1	EACH
714	TRAFFIC SIGNAL MAST ARM AND POLE WITH FOUNDATION (24'-38')	0	0	0	0	1	1	1	EACH
715	TRAFFIC SIGNAL PEDESTAL POLE WITH FOUNDATION	0	2	2	1	3	4	6	EACH
716	TREATED WOOD POLE (CLASS 3, 36')	0	1	1	0	0	0	1	EACH
733	VIDEO DETECTOR RELOCATION	0	1	1	4	0	4	5	EACH
733	VIDEO MONITOR (CLR)	1	1	2	1	1	2	4	EACH
SP & 733	CENTRAL CONTROL UNIT (8 CHANNEL)	1	1	2	1	1	2	4	EACH
SP & 733	VEHICLE DETECTOR RACK (16 CHANNEL)	1	1	2	1	1	2	4	EACH
SP & 733	VIDEO DETECTOR (IP)	6	5	11	6	6	12	23	EACH
SP & 733	VIDEO PROCESSOR, EDGE CARD IP (2 CAMERA)	4	3	7	3	3	6	13	EACH
SP	BATTERY BACKUP SYSTEM	1	1	2	1	1	2	4	EACH
SP	COMMUNICATION CABLE, FIBER (6 CHANNEL)	402	482	884	719	626	1345	2229	LIN. FT.
SP	E-NET CABLE (EXTERIOR CAT 5)	1102	1619	2721	1130	1333	2463	5184	LIN. FT.
SP	ELECTRICAL CONDUCTORS FOR LUMINAIRES	0	806	806	407	476	883	1689	LIN. FT.
SP	ELECTRICAL CONDUCTORS-IN-CONDUIT (1C/8 A.W.G., E.G.C.)	318	726	1044	347	657	1004	2048	LIN. FT.
SP	ELECTRICAL CONDUCTORS-IN-CONDUIT (1C/12 A.W.G., E.G.C.)	0	108	108	107	113	220	328	LIN. FT.
SP	ELECTRICAL CONDUCTORS-IN-CONDUIT (2C/6 A.W.G.)	41	41	82	41	41	82	164	LIN. FT.
SP	INSTALLATION AND TESTING OF COMMUNICATION CABLE-FIBER	0.25	0.25	0.50	0.25	0.25	0.50	1.00	LUMP SUM
SP	LED LUMINAIRE ASSEMBLY	0	2	2	2	2	4	6	EACH
SP	RELOCATION OF TRAFFIC SIGNAL HEAD	0	0	0	5	2	7	7	EACH
SP	REMOVAL OF TRAFFIC SIGNAL EQUIPMENT	0.25	0.25	0.50	0.25	0.25	0.50	1.00	LUMP SUM
SP	SERVICE POINT ASSEMBLY (2 CIRCUITS)	1	1	2	1	1	2	4	EACH
SP	TEMPORARY TRAFFIC SIGNAL HEAD	0	2	2	0	0	0	2	EACH
SP	TRAFFIC SIGNAL MODIFICATION	1.00	0.00	1.00	0.00	0.00	0.00	1.00	LUMP SUM
SP	VIDEO DETECTOR ROTATION	0	2	2	2	6	8	10	EACH
SP	WIC FIBER ENCLOSURE	1	1	2	1	1	2	4	EACH
SP	18" STREET NAME SIGN	0	1	1	1	1	2	3	EACH

•ONE ADDITIONAL VIDEO DETECTOR AND ONE ADDITIONAL VIDEO PROCESSOR, EDGE CARD SHALL BE PROVIDED AT HWY. 62 FOR FUTURE USE.

TYPICAL OVERHEAD STREET NAME MARKER MAST ARM MOUNTED

2 SIGNS REQUIRED →

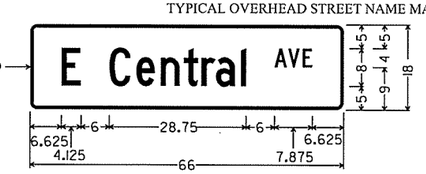

1 SIGN REQUIRED →

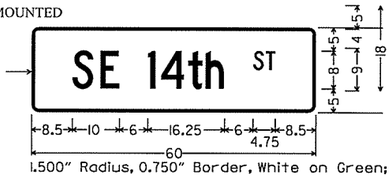

1.500" Radius, 0.750" Border, White on Green;
[E] SERIES C 2K; [Central] SERIES C 2K; [AVE] SERIES C 2K;

1.500" Radius, 0.750" Border, White on Green;
[SE] SERIES C 2K; [14th] SERIES C 2K; [ST] SERIES C 2K;

1. REFLECTIVE SHEETING SHALL COMPLY WITH ASTM 4956 TYPE 8 OR TYPE 9 REFLECTIVE SHEETING. SHEETING AND LEDGEND SHALL BE APPLIED IN SUCH A MANNER TO PROVIDE WRINKLE AND BUBBLE FREE SURFACES. APPLICATION OF SHEETING IS CAUSE FOR REJECTION OF MATERIALS DUE TO WORKMANSHIP.

2. ALUMINUM SIGN BLANK SHALL BE ALLOY 6061-T6 OR 5052-H38. THE ALUMINUM SIGN SHALL ALSO BE ANODIZED. THE ALUMINUM SHEETING SHALL BE 0.100 INCH NOMINAL THICKNESS AND OF THE SIZE SHOWN WITH 1.5" CORNER RADII. PRIOR TO FABRICATION OF THE SIGNS, THE LAYOUT SHALL FIRST BE APPROVED BY AN AGENT OF THE CITY OF BENTONVILLE.

3. SEE STD. DETAIL SHEET FOR MORE INFORMATION FOR MOUNTING ON MAST ARM ASSEMBLY.

4. STREET NAME "CENTRAL AVE" ON HWY 72 (EAST) POLE B AND HWY 72(WEST) POLE A. STREET NAME "14TH STREET" ON HWY 102 POLE B.

5. THE SERIES C FONT SHALL BE USED FOR ALL LETTERS

TRAFFIC SIGNAL NOTES AND SUMMARY OF QUANTITIES

5/20/2016
10:44:43 AM
\\...\CA0902_MS_Traffic_SignalNotes

STATE OF ARKANSAS
REGISTERED PROFESSIONAL ENGINEER
No. 8760
ANDREW E. FRIES
5/19/16

DATE	DATE FILMED	DATE REVISED	DATE FILMED	FED.RD. DIST.NO.	STATE	FED.AID PROJ.NO.	SHEET NO.	TOTAL SHEETS
				6	ARK.			
				JOB NO.		CA0902	216	581
				(2)	TRAFFIC SIGNAL QUANTITIES			

TRAFFIC SIGNAL QUANTITIES HWY. 62 AT NB RAMP

ITEM NO.	ITEM	STAGE 2A, 2B AND 2C	INTERSECTION TOTAL	UNIT	
SP & 701	SYSTEM LOCAL CONTROLLER - FIBER (8 PHASES)	1	1	EACH	
SP & 701	TRAFFIC CABINET COMMUNICATIONS	1	1	EACH	
SP & 706	TRAFFIC SIGNAL HEAD, LED, (4 SECTION, 1 WAY)	1	1	EACH	
708	TRAFFIC SIGNAL CABLE (20C/14 A.W.G.)	294	294	LIN. FT.	
709	GALVANIZED STEEL CONDUIT (1.25")	28	28	LIN. FT.	
710	NON-METALLIC CONDUIT (2")	403	403	LIN. FT.	
710	NON-METALLIC CONDUIT (3")	519	519	LIN. FT.	
711	CONCRETE PULL BOX (TYPE 2 HD)	6	6	EACH	
733	VIDEO MONITOR (CLR)	1	1	EACH	
SP & 733	CENTRAL CONTROL UNIT (8 CHANNEL)	1	1	EACH	
SP & 733	VEHICLE DETECTOR RACK (16 CHANNEL)	1	1	EACH	
SP & 733	VIDEO DETECTOR (IP)	6	6	EACH	•
SP & 733	VIDEO PROCESSOR, EDGE CARD IP (2 CAMERA)	4	4	EACH	•
SP	BATTERY BACKUP SYSTEM	1	1	EACH	
SP	COMMUNICATION CABLE, FIBER (6 CHANNEL)	402	402	LIN. FT.	
SP	E-NET CABLE (EXTERIOR CAT 5)	1102	1102	LIN. FT.	
SP	ELECTRICAL CONDUCTORS-IN-CONDUIT (1C/8 A.W.G., E.G.C.)	318	318	LIN. FT.	
SP	ELECTRICAL CONDUCTORS-IN-CONDUIT (2C/6 A.W.G.)	41	41	LIN. FT.	
SP	INSTALLATION AND TESTING OF COMMUNICATION CABLE-FIBER	0.25	0.25	LUMP SUM	
SP	REMOVAL OF TRAFFIC SIGNAL EQUIPMENT	0.25	0.25	LUMP SUM	
SP	SERVICE POINT ASSEMBLY (2 CIRCUITS)	1	1	EACH	
SP	TRAFFIC SIGNAL MODIFICATION	1.00	1.00	LUMP SUM	
SP	WIC FIBER ENCLOSURE	1	1	EACH	

•ONE ADDITIONAL VIDEO DETECTOR AND ONE ADDITIONAL VIDEO PROCESSOR, EDGE CARD SHALL BE PROVIDED AT HWY. 62 FOR FUTURE USE.

TRAFFIC SIGNAL QUANTITIES HWY. 102 AT SB RAMP

ITEM NO.	ITEM	STAGE 2A AND 2B	STAGE 2C	FINAL	INTERSECTION TOTAL	UNIT
SP & 701	SYSTEM LOCAL CONTROLLER - FIBER (8 PHASES)	1	0	0	1	EACH
SP & 701	TRAFFIC CABINET COMMUNICATIONS	1	0	0	1	EACH
SP & 706	TRAFFIC SIGNAL HEAD, LED, (3 SECTION, 1 WAY)	2	0	2	4	EACH
SP & 706	TRAFFIC SIGNAL HEAD, LED, (4 SECTION, 1 WAY)	1	0	0	1	EACH
SP & 707	COUNTDOWN PEDESTRIAN SIGNAL HEAD, LED	0	0	2	2	EACH
708	TRAFFIC SIGNAL CABLE (5C/14 A.W.G.)	722	1458	0	2180	LIN. FT.
708	TRAFFIC SIGNAL CABLE (12C/14 A.W.G.)	271	0	0	271	LIN. FT.
708	TRAFFIC SIGNAL CABLE (20C/14 A.W.G.)	372	57	0	429	LIN. FT.
709	GALVANIZED STEEL CONDUIT (1.25")	28	0	0	28	LIN. FT.
710	NON-METALLIC CONDUIT (2")	475	17	0	492	LIN. FT.
710	NON-METALLIC CONDUIT (3")	559	111	0	670	LIN. FT.
711	CONCRETE PULL BOX (TYPE 2 HD)	6	1	0	7	EACH
711	CONCRETE PULL BOX (TYPE 2)	0	2	0	2	EACH
713	SPAN WIRE ASSEMBLY (TEMPORARY)	1	0	0	1	EACH
714	TRAFFIC SIGNAL MAST ARM AND POLE WITH FOUNDATION (36')	1	0	0	1	EACH
714	TRAFFIC SIGNAL MAST ARM AND POLE WITH FOUNDATION (46')	0	1	0	1	EACH
715	TRAFFIC SIGNAL PEDESTAL POLE WITH FOUNDATION	0	2	0	2	EACH
716	TREATED WOOD POLE (CLASS 3, 36')	1	0	0	1	EACH
733	VIDEO DETECTOR RELOCATION	0	1	0	1	EACH
733	VIDEO MONITOR (CLR)	1	0	0	1	EACH
SP & 733	CENTRAL CONTROL UNIT (8 CHANNEL)	1	0	0	1	EACH
SP & 733	VEHICLE DETECTOR RACK (16 CHANNEL)	1	0	0	1	EACH
SP & 733	VIDEO DETECTOR (IP)	5	0	0	5	EACH
SP & 733	VIDEO PROCESSOR, EDGE CARD IP (2 CAMERA)	3	0	0	3	EACH
SP	BATTERY BACKUP SYSTEM	1	0	0	1	EACH
SP	COMMUNICATION CABLE, FIBER (6 CHANNEL)	482	0	0	482	LIN. FT.
SP	E-NET CABLE (EXTERIOR CAT 5)	1199	420	0	1619	LIN. FT.
SP	ELECTRICAL CONDUCTORS FOR LUMINAIRES	381	425	0	806	LIN. FT.
SP	ELECTRICAL CONDUCTORS-IN-CONDUIT (1C/8 A.W.G., E.G.C.)	400	326	0	726	LIN. FT.
SP	ELECTRICAL CONDUCTORS-IN-CONDUIT (1C/12 A.W.G., E.G.C.)	54	54	0	108	LIN. FT.
SP	ELECTRICAL CONDUCTORS-IN-CONDUIT (2C/6 A.W.G.)	41	0	0	41	LIN. FT.
SP	INSTALLATION AND TESTING OF COMMUNICATION CABLE-FIBER	0.25	0	0	0.25	LUMP SUM
SP	LED LUMINAIRE ASSEMBLY	1	1	0	2	EACH
SP	REMOVAL OF TRAFFIC SIGNAL EQUIPMENT	0.25	0.25	0	0.50	LUMP SUM
SP	SERVICE POINT ASSEMBLY (2 CIRCUITS)	1	0	0	1	EACH
SP	TEMPORARY TRAFFIC SIGNAL HEAD	2	0	0	2	EACH
SP	VIDEO DETECTOR ROTATION	2	0	0	2	EACH
SP	WIC FIBER ENCLOSURE	1	0	0	1	EACH
SP	18" STREET NAME SIGN	0	0	1	1	EACH

5/19/2016
5:31:03 PM
\\TCA0902_MS_Traffic_SignalQuantities_Hwy_62-102.dgn

TRAFFIC SIGNAL QUANTITIES

STATE OF ARKANSAS
REGISTERED PROFESSIONAL ENGINEER
No. 8760
ANDREW E. FRIES
5/19/16

DATE	DATE FILMED	DATE REVISED	DATE FILMED	FED.RD. DIST.NO.	STATE	FED.AID PROJ.NO.	SHEET NO.	TOTAL SHEETS
				6	ARK.			
				JOB NO.		CA0902	217	581
				(2)	TRAFFIC SIGNAL QUANTITIES			

TRAFFIC SIGNAL QUANTITIES HWY. 72 AT NB RAMP

ITEM NO.	ITEM	STAGE 3A	STAGE 3B	STAGE 3C	FINAL	INTERSECTION TOTAL	UNIT
SP & 701	SYSTEM LOCAL CONTROLLER - FIBER (8 PHASES)	0	0	1	0	1	EACH
SP & 701	TRAFFIC CABINET COMMUNICATIONS	0	0	1	0	1	EACH
SP & 706	TRAFFIC SIGNAL HEAD, LED, (3 SECTION, 1 WAY)	0	0	10	0	10	EACH
SP & 706	TRAFFIC SIGNAL HEAD, LED, (4 SECTION, 1 WAY)	0	0	1	0	1	EACH
SP & 707	COUNTDOWN PEDESTRIAN SIGNAL HEAD, LED	0	0	2	0	2	EACH
708	TRAFFIC SIGNAL CABLE (5C/14 A.W.G.)	0	0	702	0	702	LIN. FT.
708	TRAFFIC SIGNAL CABLE (7C/14 A.W.G.)	0	0	62	0	62	LIN. FT.
708	TRAFFIC SIGNAL CABLE (12C/14 A.W.G.)	0	0	30	0	30	LIN. FT.
708	TRAFFIC SIGNAL CABLE (20C/14 A.W.G.)	0	0	298	0	298	LIN. FT.
709	GALVANIZED STEEL CONDUIT (1.25")	0	0	28	0	28	LIN. FT.
710	NON-METALLIC CONDUIT (2")	0	0	721	0	721	LIN. FT.
710	NON-METALLIC CONDUIT (3")	0	0	300	0	300	LIN. FT.
711	CONCRETE PULL BOX (TYPE 2 HD)	0	0	7	0	7	EACH
714	TRAFFIC SIGNAL MAST ARM AND POLE WITH FOUNDATION (34')	0	0	1	0	1	EACH
714	TRAFFIC SIGNAL MAST ARM AND POLE WITH FOUNDATION (38')	0	0	1	0	1	EACH
714	TRAFFIC SIGNAL MAST ARM AND POLE WITH FOUNDATION (42')	0	0	1	0	1	EACH
715	TRAFFIC SIGNAL PEDESTAL POLE WITH FOUNDATION	0	0	1	0	1	EACH
733	VIDEO DETECTOR RELOCATION	0	2	2	0	4	EACH
733	VIDEO MONITOR (CLR)	0	0	1	0	1	EACH
SP & 733	CENTRAL CONTROL UNIT (8 CHANNEL)	0	0	1	0	1	EACH
SP & 733	VEHICLE DETECTOR RACK (16 CHANNEL)	0	0	1	0	1	EACH
SP & 733	VIDEO DETECTOR (IP)	0	0	6	0	6	EACH
SP & 733	VIDEO PROCESSOR, EDGE CARD IP (2 CAMERA)	0	0	3	0	3	EACH
SP	BATTERY BACKUP SYSTEM	0	0	1	0	1	EACH
SP	COMMUNICATION CABLE, FIBER (6 CHANNEL)	0	0	719	0	719	LIN. FT.
SP	E-NET CABLE (EXTERIOR CAT 5)	0	0	1130	0	1130	LIN. FT.
SP	ELECTRICAL CONDUCTORS FOR LUMINAIRES	0	0	407	0	407	LIN. FT.
SP	ELECTRICAL CONDUCTORS-IN-CONDUIT (1C/8 A.W.G., E.G.C.)	0	0	347	0	347	LIN. FT.
SP	ELECTRICAL CONDUCTORS-IN-CONDUIT (1C/12 A.W.G., E.G.C.)	0	0	107	0	107	LIN. FT.
SP	ELECTRICAL CONDUCTORS-IN-CONDUIT (2C/6 A.W.G.)	0	0	41	0	41	LIN. FT.
SP	INSTALLATION AND TESTING OF COMMUNICATION CABLE-FIBER	0	0	0.25	0	0.25	LUMP SUM
SP	LED LUMINAIRE ASSEMBLY	0	0	2	0	2	EACH
SP	RELOCATION OF TRAFFIC SIGNAL HEAD	0	4	1	0	5	EACH
SP	REMOVAL OF TRAFFIC SIGNAL EQUIPMENT	0	0	0.25	0	0.25	LUMP SUM
SP	SERVICE POINT ASSEMBLY (2 CIRCUITS)	0	0	1	0	1	EACH
SP	VIDEO DETECTOR ROTATION	0	2	0	0	2	EACH
SP	WIC FIBER ENCLOSURE	0	0	1	0	1	EACH
SP	18" STREET NAME SIGN	0	0	0	1	1	EACH

TRAFFIC SIGNAL QUANTITIES HWY. 72 AT SB RAMP

ITEM NO.	ITEM	STAGE 3A AND 3B	STAGE 3C	FINAL	INTERSECTION TOTAL	UNIT
SP & 701	SYSTEM LOCAL CONTROLLER - FIBER (8 PHASES)	0	1	0	1	EACH
SP & 706	TRAFFIC SIGNAL HEAD, LED, (3 SECTION, 1 WAY)	0	11	0	11	EACH
SP & 707	COUNTDOWN PEDESTRIAN SIGNAL HEAD, LED	0	4	0	4	EACH
708	TRAFFIC SIGNAL CABLE (5C/14 A.W.G.)	0	1591	0	1591	LIN. FT.
708	TRAFFIC SIGNAL CABLE (12C/14 A.W.G.)	0	144	0	144	LIN. FT.
708	TRAFFIC SIGNAL CABLE (20C/14 A.W.G.)	0	366	0	366	LIN. FT.
709	GALVANIZED STEEL CONDUIT (1.25")	0	28	0	28	LIN. FT.
710	NON-METALLIC CONDUIT (2")	0	680	0	680	LIN. FT.
710	NON-METALLIC CONDUIT (3")	0	484	0	484	LIN. FT.
711	CONCRETE PULL BOX (TYPE 1 HD)	0	1	0	1	EACH
711	CONCRETE PULL BOX (TYPE 2 HD)	0	6	0	6	EACH
711	CONCRETE PULL BOX (TYPE 2)	0	2	0	2	EACH
714	TRAFFIC SIGNAL MAST ARM AND POLE WITH FOUNDATION (26')	0	1	0	1	EACH
714	TRAFFIC SIGNAL MAST ARM AND POLE WITH FOUNDATION (40')	0	1	0	1	EACH
714	TRAFFIC SIGNAL MAST ARM AND POLE WITH FOUNDATION (24'-38')	0	1	0	1	EACH
715	TRAFFIC SIGNAL PEDESTAL POLE WITH FOUNDATION	0	3	0	3	EACH
733	VIDEO MONITOR (CLR)	0	1	0	1	EACH
SP & 733	CENTRAL CONTROL UNIT (8 CHANNEL)	0	1	0	1	EACH
SP & 733	VEHICLE DETECTOR RACK (16 CHANNEL)	0	1	0	1	EACH
SP & 733	VIDEO DETECTOR (IP)	0	6	0	6	EACH
SP & 733	VIDEO PROCESSOR, EDGE CARD IP (2 CAMERA)	0	3	0	3	EACH
SP	BATTERY BACKUP SYSTEM	0	1	0	1	EACH
SP	COMMUNICATION CABLE, FIBER (6 CHANNEL)	0	626	0	626	LIN. FT.
SP	E-NET CABLE (EXTERIOR CAT 5)	0	1333	0	1333	LIN. FT.
SP	ELECTRICAL CONDUCTORS FOR LUMINAIRES	0	476	0	476	LIN. FT.
SP	ELECTRICAL CONDUCTORS-IN-CONDUIT (1C/8 A.W.G., E.G.C.)	0	657	0	657	LIN. FT.
SP	ELECTRICAL CONDUCTORS-IN-CONDUIT (1C/12 A.W.G., E.G.C.)	0	113	0	113	LIN. FT.
SP	ELECTRICAL CONDUCTORS-IN-CONDUIT (2C/6 A.W.G.)	0	41	0	41	LIN. FT.
SP	INSTALLATION AND TESTING OF COMMUNICATION CABLE-FIBER	0	0.25	0	0.25	LUMP SUM
SP	LED LUMINAIRE ASSEMBLY	0	2	0	2	EACH
SP	RELOCATION OF TRAFFIC SIGNAL HEAD	0	2	0	2	EACH
SP	REMOVAL OF TRAFFIC SIGNAL EQUIPMENT	0	0.25	0	0.25	LUMP SUM
SP	SERVICE POINT ASSEMBLY (2 CIRCUITS)	0	1	0	1	EACH
SP	VIDEO DETECTOR ROTATION	2	4	0	6	EACH
SP	18" STREET NAME SIGN	0	0	1	1	EACH

5/19/2016
5:31:07 PM
...\CA0902_MS Traffic Signal Quantities Hwy72.dgn

TRAFFIC SIGNAL QUANTITIES

STATE OF ARKANSAS
REGISTERED PROFESSIONAL ENGINEER
No. 8760
ANDREW E. FRIES
5/16/16

DATE	DATE FILMED	DATE REVISED	DATE FILMED	FED.RD. DIST.NO.	STATE	FED.AID PROJ.NO.	SHEET NO.	TOTAL SHEETS
				6	ARK.			
				JOB NO.		CA0902	221	581

(2) SIGNALIZATION PLAN (HWY. 62 AT NB RAMP)

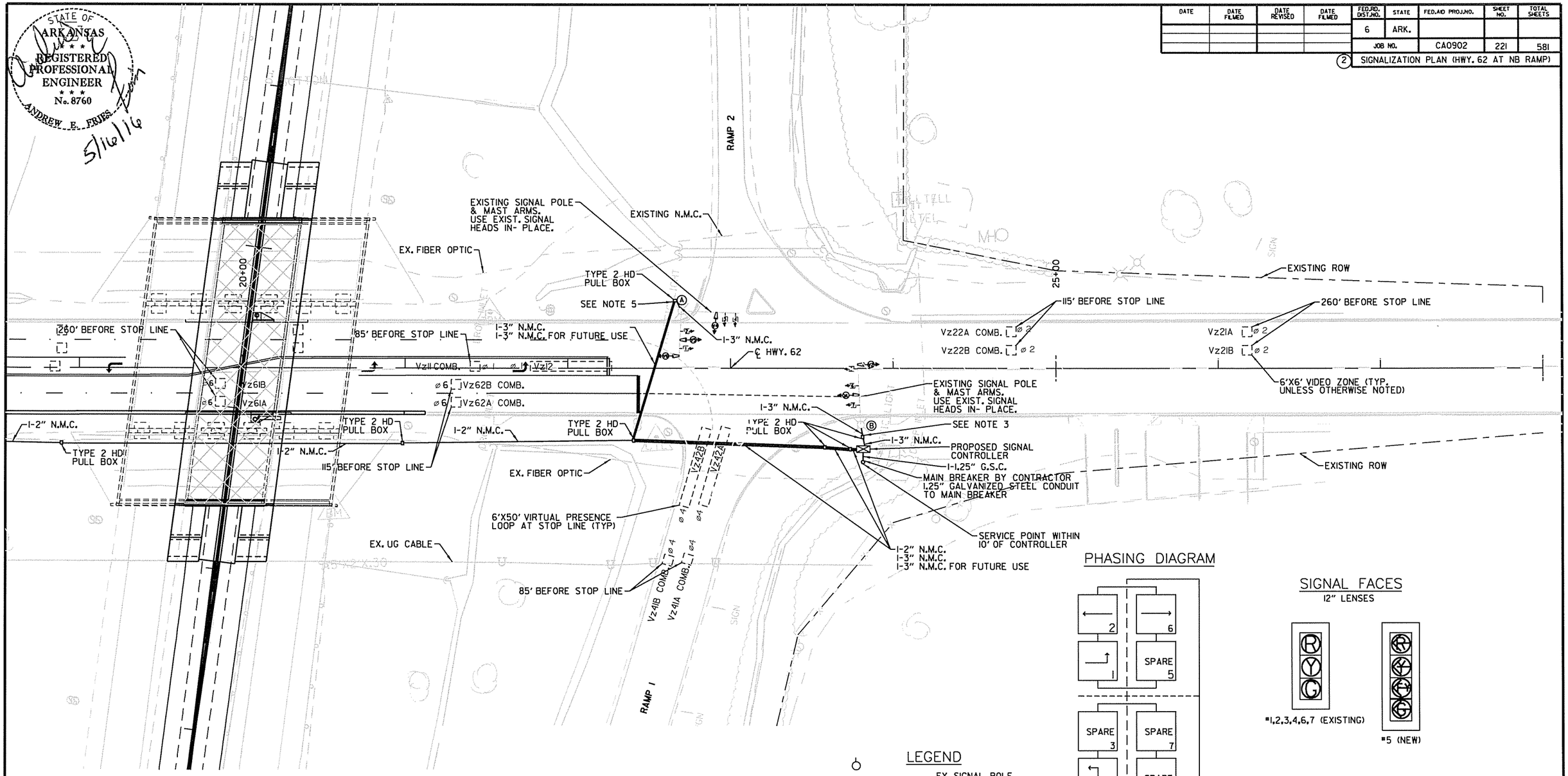

PHASING DIAGRAM

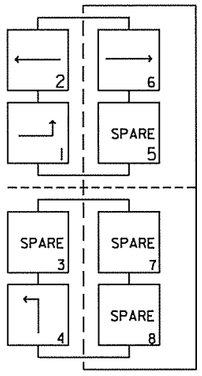

SIGNAL FACES

12" LENSES

*1,2,3,4,6,7 (EXISTING)

*5 (NEW)

LEGEND

- EX. SIGNAL POLE & MAST ARM
- PROP. SIGNAL POLE, MAST ARM, & LUMINAIRE
- TYPE 2 PULL BOX
- TYPE 1 PULL BOX
- SIGNAL HEAD
- VIDEO DETECTOR
- NMC - NON- METALLIC CONDUIT
- STAGE 2A
- STAGE 2B
- STAGE 2C

DESIGN PARAMETERS

POSTED SPEED LIMIT:
45 MPH HWY 62
35 MPH RAMPS 1 & 2

NO BUS STOPS
NO RAILROAD TRACKS
NO EXISTING INTERCONNECTIONS
NO FIRE STATION
NO PARKING
NO SIGHT DISTANCE RESTRICTIONS

LOCATION OF STOP LINES SHOWN ON PAVEMENT MARKING PLANS SHEETS

MINIMUM CLEAR ZONE DISTANCE:
2 FEET BEHIND CURB

CONSTRUCTION NOTES:

1. PRIOR TO IMPLEMENTATION OF STAGE 2A, CONTRACTOR SHALL REPLACE SIGNAL HEAD 5 AND INSTALL NEW CONTROLLER. PULL BOXES, CONDUIT, WIRING, AND VIDEO DETECTORS V1, V2, V4, V5, AND V6.

2. EXISTING SIGNAL POLES AND SIGNAL HEADS 1-4, 6, AND 7 SHALL BE MAINTAINED.

3. CONTRACTOR SHALL VERIFY THE LOCATION OF THE EXISTING CONDUIT AND INSTALL NEW PULL BOXES ON TOP OF THE CONDUIT NEAR POLES A AND B SO THAT THE NEW WIRING CAN BE INCORPORATED INTO THE EXISTING SIGNAL POLES.

4. EXISTING PULL BOXES AND CONTROLLER SHALL BE REMOVED.

5. EXISTING CONDUIT SHALL BE ABANDONED.

6. ADDITIONAL 0.5" NMC FROM CONTROLLER AND POLE TO NEAREST PULL BOX. REFER TO STANDARD DRAWING SD-6 HEAVY DUTY PULL BOX. THE COST OF THE 0.5" NMC IS INCLUDED IN ITEM NO. 701 AND 714 RESPECTIVELY.

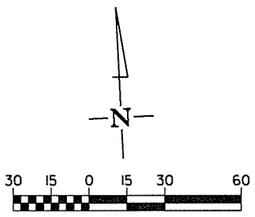

HWY. 62 AT NB RAMP STAGES 2A, 2B & 2C

5/16/2016
10:41 AM
A:\CA0902_MS_Hwy_62_TempSig-Stage2A-1.dgn

STATE OF ARKANSAS
REGISTERED PROFESSIONAL ENGINEER
No. 8760
ANDREW E. FRIES
5/16/16

DATE	DATE FILMED	DATE REVISED	DATE FILMED	FED.RD. DIST.NO.	STATE	FED.AID PROJ.NO.	SHEET NO.	TOTAL SHEETS
				6	ARK.			
				JOB NO.		CA0902	222	581

(2) SIGNALIZATION PLAN (HWY. 62 AT NB RAMP)

PHASING DIAGRAM

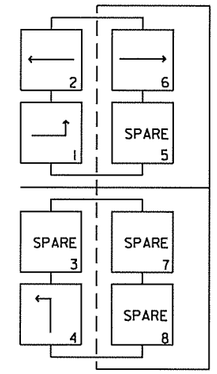

LEGEND

- EX. SIGNAL POLE & MAST ARM
- PROP. SIGNAL POLE, MAST ARM, & LUMINAIRE
- TYPE 2 PULL BOX
- TYPE 1 PULL BOX
- SIGNAL HEAD
- VIDEO DETECTOR
- NMC - NON- METALLIC CONDUIT

SIGNAL FACES

12" LENSES

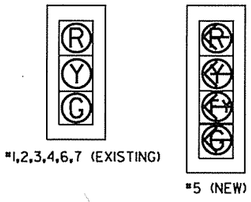

*1,2,3,4,6,7 (EXISTING)

*5 (NEW)

DESIGN PARAMETERS

POSTED SPEED LIMIT:
45 MPH HWY 62
35 MPH RAMPS 1 & 2

NO BUS STOPS
NO RAILROAD TRACKS
NO EXISTING INTERCONNECTIONS
NO FIRE STATION
NO PARKING
NO SIGHT DISTANCE RESTRICTIONS

LOCATION OF STOP LINES SHOWN ON PAVEMENT MARKING PLANS SHEETS

MINIMUM CLEAR ZONE DISTANCE:
2 FEET BEHIND CURB

RAMP 2
EX. FIBER OPTIC
EXISTING ROW
25+00
EXISTING SIGNAL POLE & MAST ARMS. USE EXIST. SIGNAL HEADS IN- PLACE.
TYPE 2 HD PULL BOX
SEE NOTE 5
1-3" N.M.C.
85' BEFORE STOP LINE
115' BEFORE STOP LINE
Vz22A COMB.
Vz22B COMB.
6'X6' VIDEO ZONE (TYP. UNLESS OTHERWISE NOTED)
Ø 1
Vz11 COMB.
Vz12
Ø 6
Vz62B COMB.
Vz62A COMB.
℄ HWY. 62
1-3" N.M.C.
1-3" N.M.C. FOR FUTURE USE
1-2" N.M.C.
1-3" N.M.C.
1-3" N.M.C. FOR FUTURE USE
EXISTING SIGNAL POLE & MAST ARMS. USE EXIST. SIGNAL HEADS IN- PLACE.
TYPE 2 HD PULL BOX
1-2" N.M.C.
EX. FIBER OPTIC
Vz42B
Vz42A
1-3" N.M.C.
SEE NOTE 3
PROPOSED SIGNAL CONTROLLER
1-1.25" G.S.C.
MAIN BREAKER BY CONTRACTOR 1.25" GALVANIZED STEEL CONDUIT TO MAIN BREAKER
SERVICE POINT WITHIN 10' OF CONTROLLER
1-2" N.M.C.
1-3" N.M.C.
1-3" N.M.C. FOR FUTURE USE
6'X50' VIRTUAL PRESENCE LOOP AT STOP LINE (TYP)
Ø 4
85' BEFORE STOP LINE
Vz41B COMB.
Vz41A COMB.
EX. UG CABLE
RAMP 1
SIGN
EX. FIBER OPTIC
EXISTING ROW
N
15 7.5 0 7.5 15 30

CONSTRUCTION NOTES:

1. PRIOR TO IMPLEMENTATION OF STAGE 2A, CONTRACTOR SHALL REPLACE SIGNAL HEAD 5 AND INSTALL NEW CONTROLLER, PULL BOXES, CONDUIT, WIRING, AND VIDEO DETECTORS V1, V2, V4, V5, AND V6.

2. EXISTING SIGNAL POLES AND SIGNAL HEADS 1-4, 6, AND 7 SHALL BE MAINTAINED.

3. CONTRACTOR SHALL VERIFY THE LOCATION OF THE EXISTING CONDUIT AND INSTALL NEW PULL BOXES ON TOP OF THE CONDUIT NEAR POLES A AND B SO THAT THE NEW WIRING CAN BE INCORPORATED INTO THE EXISTING SIGNAL POLES.

4. EXISTING PULL BOXES AND CONTROLLER SHALL BE REMOVED.

5. EXISTING CONDUIT SHALL BE ABANDONED.

6. ADDITIONAL 0.5" NMC FROM CONTROLLER AND POLE TO NEAREST PULL BOX. REFER TO STANDARD DRAWING SD-6 HEAVY DUTY PULL BOX. THE COST OF THE 0.5" NMC IS INCLUDED IN ITEM NO. 701 AND 714 RESPECTIVELY.

HWY. 62 AT NB RAMP STAGES 2A, 2B & 2C

5/16/2016
10:04:43 AM
\\Ca0902_MS_Hwy_62_TempSig-Stage2A-2.dgn

STATE OF ARKANSAS
REGISTERED PROFESSIONAL ENGINEER
No. 8760
ANDREW E. FRIES
5/16/16

DATE	DATE FILMED	DATE REVISED	DATE FILMED	FED.RD. DIST.NO.	STATE	FED.AID PROJ.NO.	SHEET NO.	TOTAL SHEETS
				6	ARK.			
				JOB NO.		CA0902	223	581

(2) SIGNALIZATION PLAN (HWY. 62 AT NB RAMP)

DETECTOR CHART

DETECTOR LOCATION				HARDWARE INPUTS BY SUPPLIER			PROGRAM ASSIGNMENTS			VIDEO DET. TUBE LENGTH	COMMENT
							LOCAL		MSTR.		
DETECTOR I.D. #	DIRECTION & LOCATION	TYPE	DET. #	CAB. TRM. #	AMP CHN. #	CON. INP. #	PHS.	SYS. DET. #	SYS. DET. #		
Vzll	EB LEFT FAR	COMB.			1	V9	1	1		23"	VI
Vzl2	EB LEFT NEAR	LOCAL			2	VI	1			23"	VI
Vz21 A+B	WB FAR	LOCAL			5	V2	2			74"	V2
Vz22 A+B	WB NEAR	COMB.			6	V10	2	2		23"	V5
Vz41 A+B	NB FAR	COMB.			9	V12	4	4		23"	V4
Vz42 A+B	NB NEAR	LOCAL			10	V4	4			23"	V4
Vz61 A+B	EB FAR	LOCAL			3	V6	6			74"	V6
Vz62 A+B	EB NEAR	COMB.			4	V14	6	6		23"	VI

CONTROLLER INPUT ABBREVIATIONS
V = VEHICLE INPUT
D = SYSTEM OR AUXILIARY INPUT
P = PEDESTRIAN INPUT

SPARE AMP CHN. #= 7, 8, 11-16

INTERVAL CHART

SIGNAL FACES	INTERSECTION INTERVALS						FLASH
	1+6	CLR.	2+6	CLR.	4	CLR.	SEQ.
1,2	R	R	G	Y	R	R	R
3,4	R	R	R	R	G	Y	R
5	~~G~~	•••	~~Y~~	•••	~~R~~	~~R~~	~~R~~
6,7	G	•	G	•	R	R	R

• DENOTES GREEN OR YELLOW BALL DEPENDING ON NEXT PHASE
•• DENOTES YELLOW BALL OR YELLOW ARROW DEPENDING ON NEXT PHASE
••• DENOTES YELLOW OR FLASHING YELLOW ARROW DEPEDING ON NEXT PHASE

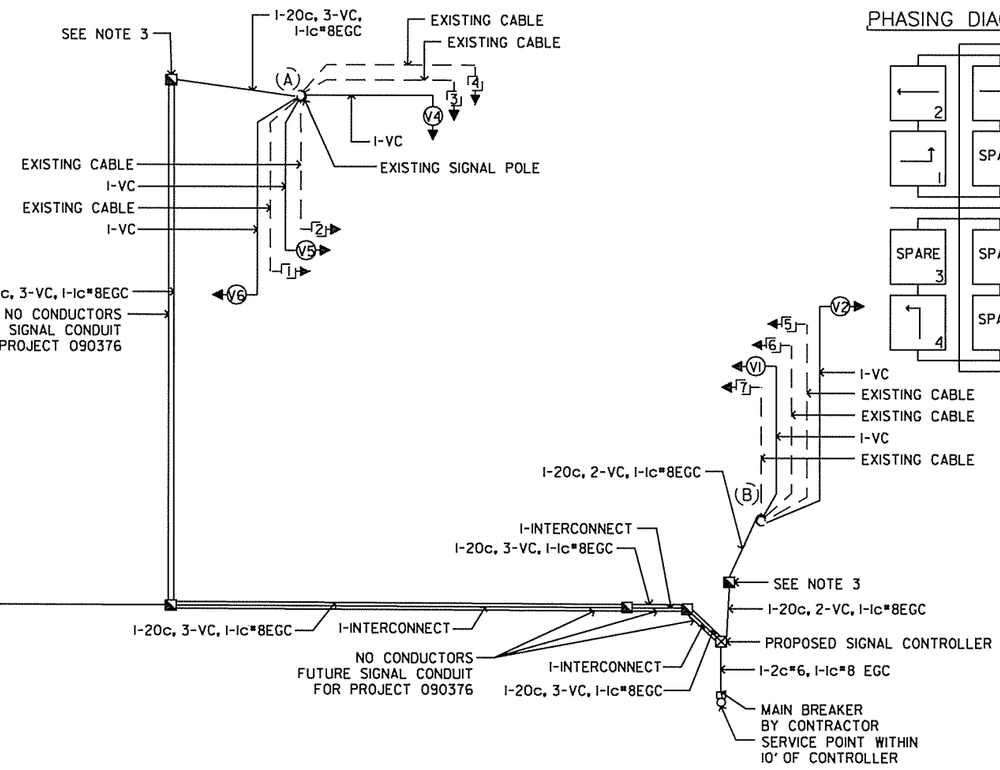

WIRING DIAGRAM
STAGE 2A, 2B & 2C

SIGNAL FACES

12" LENSES

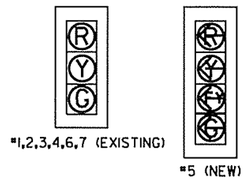

#1,2,3,4,6,7 (EXISTING)

#5 (NEW)

PHASING DIAGRAM

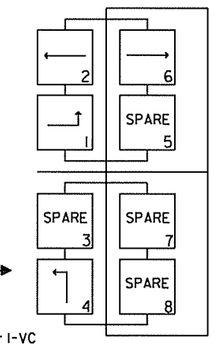

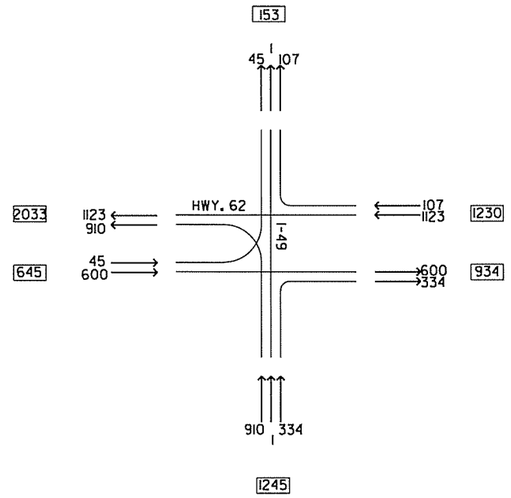

HWY. 62 AT NB RAMP
TRAFFIC FLOW DIAGRAM
TRAFFIC VOLUME
A.M. PEAK HOUR

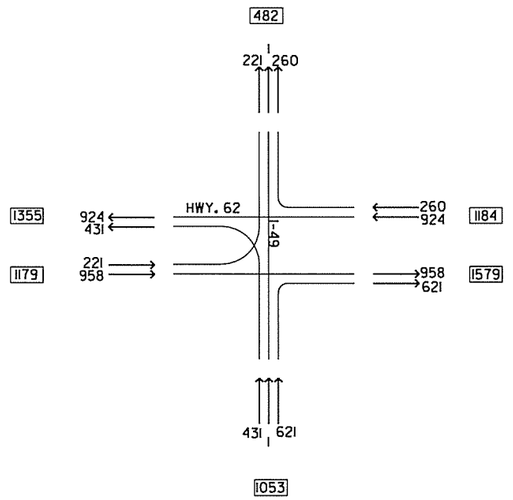

HWY. 62 AT NB RAMP
TRAFFIC FLOW DIAGRAM
TRAFFIC VOLUME
P.M. PEAK HOUR

N

NOTES TO CONTRACTOR

1. ALL DETECTOR RACK CHANNELS, INCLUDING UNUSED, SHALL BE BROUGHT TO TERMINAL STRIP IN DETECTOR AREA OF CABINET.
2. ADDITIONAL 1-1c#8EGC FROM CONTROLLER AND POLE TO NEAREST PULL BOX. THE COST OF THE 1-1c#8EGC IS INCLUDED IN ITEM NO. 701, 714 OR 715 RESPECTIVELY. FOR DETAILS SEE GROUNDING ARRAY DIAGRAM SHEET.
3. CONTRACTOR SHALL VERIFY THE LOCATION OF THE EXISTING CONDUIT AND INSTALL NEW PULL BOXES ON TOP OF THE CONDUIT NEAR POLES A AND B SO THAT THE NEW WIRING CAN BE INCORPORATED INTO THE EXISTING SIGNAL POLES.

HWY. 62 AT NB RAMP
STAGES 2A, 2B & 2C

5/16/2016
10:04:35 AM
U:\CA0902_MS_Hwy_62_TempSig-Stage2A-3

STATE OF ARKANSAS
REGISTERED PROFESSIONAL ENGINEER
No. 8760
ANDREW E. FRIES
5/5/16

DATE	DATE FILMED	DATE REVISED	DATE FILMED	FED.RD. DIST.NO.	STATE	FED.AID PROJ.NO.	SHEET NO.	TOTAL SHEETS
				6	ARK.			
				JOB NO.		CA0902	230	581

(2) SIGNALIZATION PLAN (HWY. 62 AT NB RAMP)

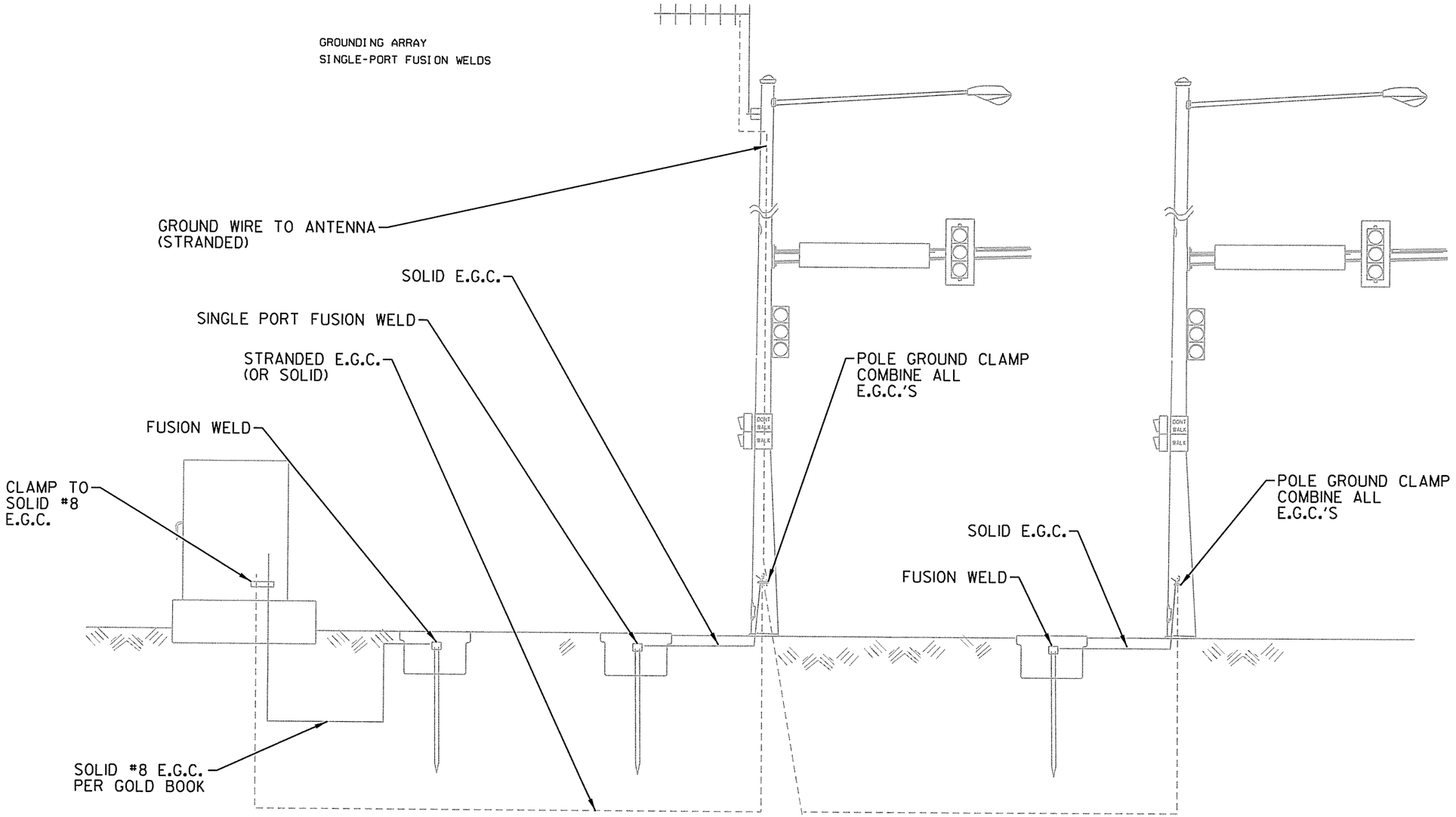

TRAFFIC SIGNAL GROUNDING DETAIL

5/5/2016
7:02:08 PM
...\CA0902 MS Hwy 62\Traffic Signal\Grounding Detail.dgn

HWY. 62 AT NB RAMP

STATE OF ARKANSAS
REGISTERED PROFESSIONAL ENGINEER
No. 8760
ANDREW E. FRIES
5/16/16

DATE	DATE FILMED	DATE REVISED	DATE FILMED	FED.RD. DIST.NO.	STATE	FED.AID PROJ.NO.	SHEET NO.	TOTAL SHEETS
				6	ARK.			
				JOB NO.		CA0902	234	581

SIGNALIZATION PLAN (HWY. 102 AT SB RAMP)

SIGNAL FACES
12" LENSES

LEGEND

- EX. SIGNAL POLE & MAST ARM
- PROP. SIGNAL POLE, MAST ARM, & LUMINAIRE
- TYPE 2 PULL BOX
- TYPE 1 PULL BOX
- SIGNAL HEAD
- VIDEO DETECTOR
- NMC - NON- METALLIC CONDUIT
- STAGE 2A
- STAGE 2B

PHASING DIAGRAM

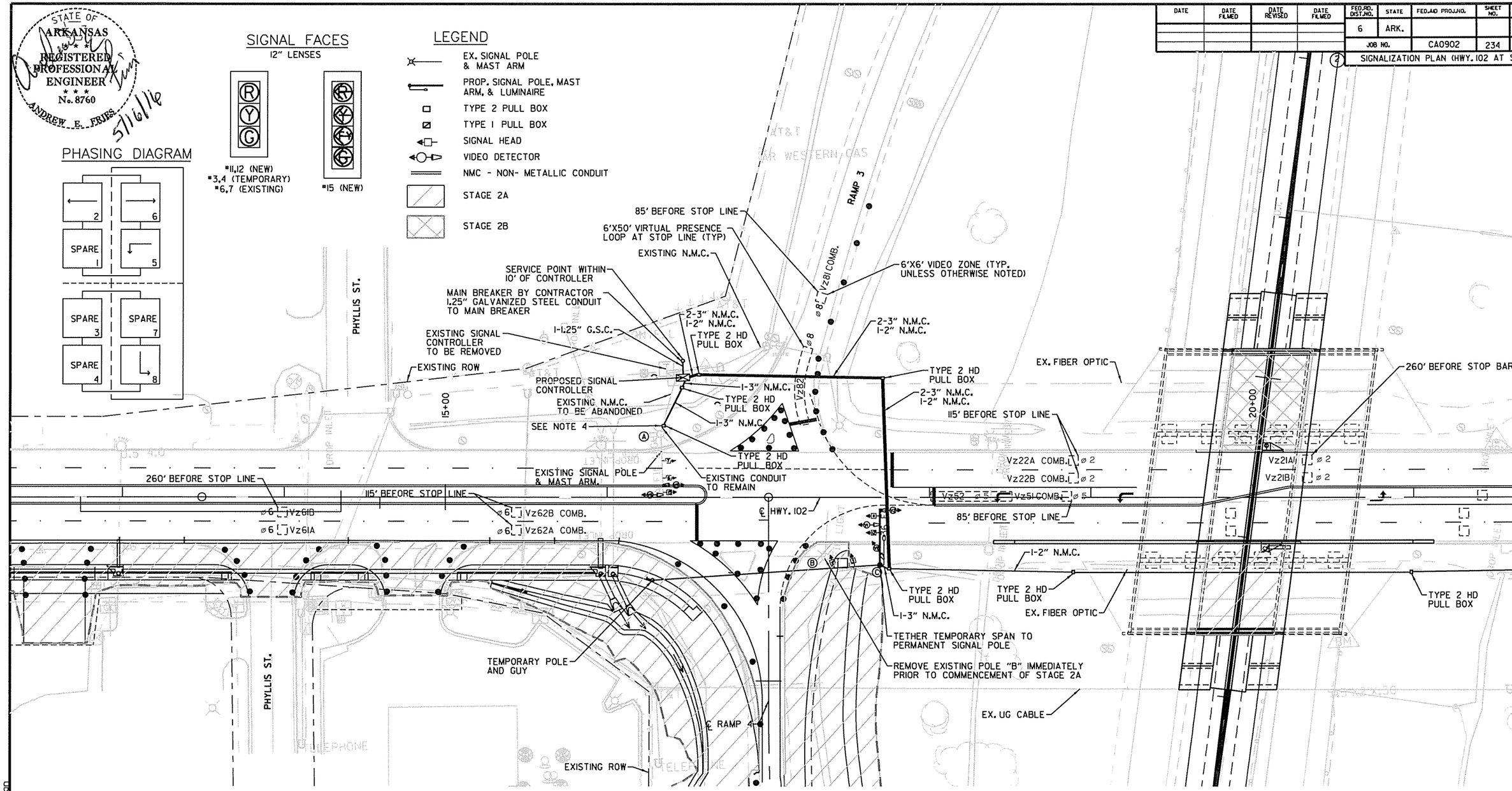

DESIGN PARAMETERS

POSTED SPEED LIMIT:
45 MPH HWY 102
35 MPH RAMPS 3 & 4

NO BUS STOPS
NO RAILROAD TRACKS
NO EXISTING INTERCONNECTIONS
NO FIRE STATION
NO PARKING
NO SIGHT DISTANCE RESTRICTIONS

LOCATION OF STOP LINES SHOWN ON PAVEMENT MARKING PLANS SHEETS

MINIMUM CLEAR ZONE DISTANCE:
2 FEET BEHIND CURB

CONSTRUCTION NOTES:

1. PRIOR TO IMPLEMENTATION OF STAGE 2A, CONTRACTOR SHALL INSTALL NEW CONTROLLER, TEMPORARY POLE, NEW POLE C, PULL BOXES, CONDUIT, WIRING, SIGNAL HEADS 3, 4, 11, 12, AND 15, AND VIDEO DETECTORS V1, V2, V5, V6 AND V8.

2. WORK TO TRANSITION SIGNAL CONTROLLER OPERATION TO NEW POLES AND CONTROLLER SHALL TAKE PLACE ON A SUNDAY MORNING BEFORE NOON.

3. EXISTING SIGNAL POLE A AND SIGNAL HEADS 6 AND 7 SHALL BE MAINTAINED.

4. CONTRACTOR SHALL VERIFY THE LOCATION OF THE EXISTING CONDUIT AND INSTALL NEW PULL BOX ON TOP OF THE CONDUIT NEAR POLE A SO THAT THE NEW WIRING CAN BE INCORPORATED INTO THE EXISTING SIGNAL POLE.

5. EXISTING POLE B, PULL BOXES AND CONTROLLER SHALL BE REMOVED.

6. EXISTING CONDUIT SHALL BE ABANDONED.

7. CONTRACTOR SHALL USE TWO GUY INSTALLATIONS PER TEMPORARY POLE.

8. ADDITIONAL 0.5" NMC FROM CONTROLLER AND POLE TO NEAREST PULL BOX. REFER TO STANDARD DRAWING SD-6 HEAVY DUTY PULL BOX. THE COST OF THE 0.5" NMC IS INCLUDED IN ITEM NO. 701 AND 714 RESPECTIVELY.

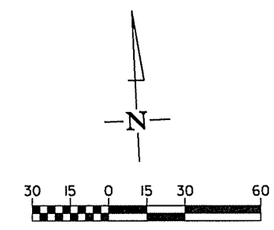

HWY. 102 AT SB RAMP
STAGES 2A & 2B

5/16/2016
10:42:25 AM
I:\CA0902_MS Hwy 102_102TempSig-Stage2A-1.dgn

STATE OF ARKANSAS
REGISTERED PROFESSIONAL ENGINEER
No. 8760
ANDREW E. FRIES
5/16/16

DATE	DATE FILMED	DATE REVISED	DATE FILMED	FED.RD. DIST.NO.	STATE	FED.AID PROJ.NO.	SHEET NO.	TOTAL SHEETS
				6	ARK.			
				JOB NO.		CA0902	235	581

(2) SIGNALIZATION PLAN (HWY. 102 AT SB RAMP)

PHASING DIAGRAM

LEGEND

- EX. SIGNAL POLE & MAST ARM
- PROP. SIGNAL POLE, MAST ARM, & LUMINAIRE
- TYPE 2 PULL BOX
- TYPE 1 PULL BOX
- SIGNAL HEAD
- VIDEO DETECTOR
- NMC - NON- METALLIC CONDUIT
- STAGE 2A

SIGNAL FACES

12" LENSES

#11,12 (NEW)
#3,4 (TEMPORARY)
#6,7 (EXISTING)

#15 (NEW)

CONSTRUCTION NOTES:

1. PRIOR TO IMPLEMENTATION OF STAGE 2A, CONTRACTOR SHALL INSTALL NEW CONTROLLER, TEMPORARY POLE, NEW POLE C, PULL BOXES, CONDUIT, WIRING, SIGNAL HEADS 3, 4, 11, 12, AND 15, AND VIDEO DETECTORS V1, V2, V5, V6 AND V8.
2. WORK TO TRANSITION SIGNAL CONTROLLER OPERATION TO NEW POLES AND CONTROLLER SHALL TAKE PLACE ON A SUNDAY MORNING BEFORE NOON.
3. EXISTING SIGNAL POLE A AND SIGNAL HEADS 6 AND 7 SHALL BE MAINTAINED.
4. CONTRACTOR SHALL VERIFY THE LOCATION OF THE EXISTING CONDUIT AND INSTALL NEW PULL BOX ON TOP OF THE CONDUIT NEAR POLE A SO THAT THE NEW WIRING CAN BE INCORPORATED INTO THE EXISTING SIGNAL POLE.
5. EXISTING POLE B, PULL BOXES AND CONTROLLER SHALL BE REMOVED.
6. EXISTING CONDUIT SHALL BE ABANDONED.
7. CONTRACTOR SHALL USE TWO GUY INSTALLATIONS PER TEMPORARY POLE.
8. ADDITIONAL 0.5" NMC FROM CONTROLLER AND POLE TO NEAREST PULL BOX. REFER TO STANDARD DRAWING SD-6 HEAVY DUTY PULL BOX. THE COST OF THE 0.5" NMC IS INCLUDED IN ITEM NO. 701 AND 714 RESPECTIVELY.

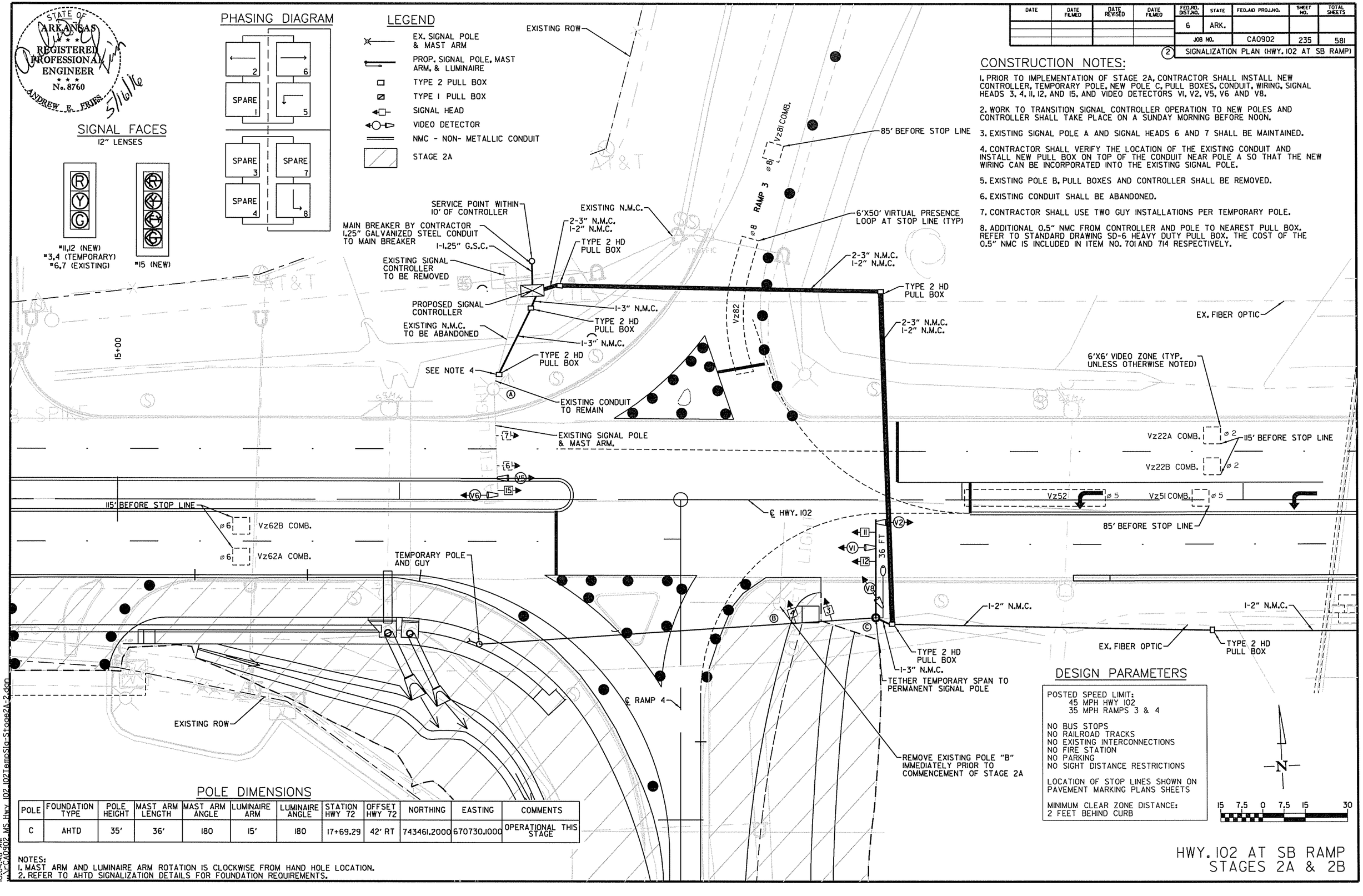

POLE DIMENSIONS

POLE	FOUNDATION TYPE	POLE HEIGHT	MAST ARM LENGTH	MAST ARM ANGLE	LUMINAIRE ARM	LUMINAIRE ANGLE	STATION HWY 72	OFFSET HWY 72	NORTHING	EASTING	COMMENTS
C	AHTD	35'	36'	180	15'	180	17+69.29	42' RT	743461.2000	670730.1000	OPERATIONAL THIS STAGE

NOTES:
1. MAST ARM AND LUMINAIRE ARM ROTATION IS CLOCKWISE FROM HAND HOLE LOCATION.
2. REFER TO AHTD SIGNALIZATION DETAILS FOR FOUNDATION REQUIREMENTS.

DESIGN PARAMETERS

POSTED SPEED LIMIT:
45 MPH HWY 102
35 MPH RAMPS 3 & 4

NO BUS STOPS
NO RAILROAD TRACKS
NO EXISTING INTERCONNECTIONS
NO FIRE STATION
NO PARKING
NO SIGHT DISTANCE RESTRICTIONS

LOCATION OF STOP LINES SHOWN ON PAVEMENT MARKING PLANS SHEETS

MINIMUM CLEAR ZONE DISTANCE:
2 FEET BEHIND CURB

N

15 7.5 0 7.5 15 30

HWY. 102 AT SB RAMP STAGES 2A & 2B

5/16/2016 10:04:48 AM
I:\CA0902 MS Hwy 102 102TempSig-Stage2A-2.dgn

STATE OF ARKANSAS
REGISTERED PROFESSIONAL ENGINEER
No. 8760
ANDREW E. FRIES
5/16/16

DATE	DATE FILMED	DATE REVISED	DATE FILMED	FED.RD. DIST.NO.	STATE	FED.AID PROJ.NO.	SHEET NO.	TOTAL SHEETS
				6	ARK.			
				JOB NO.		CA0902	236	581

(2) SIGNALIZATION PLAN (HWY. 102 AT SB RAMP)

DETECTOR CHART

DETECTOR LOCATION				HARDWARE INPUTS BY SUPPLIER			PROGRAM ASSIGNMENTS			VIDEO DET. TUBE LENGTH	COMMENT
DETECTOR I.D. #	DIRECTION & LOCATION	TYPE	DET. #	CAB. TRM. #	AMP CHN. #	CON. INP. #	LOCAL PHS.	LOCAL SYS. DET. #	MSTR. SYS. DET. #		
Vz21 A+B	WB FAR	LOCAL			1	V2	2			74"	V2
Vz22 A+B	WB NEAR	COMB.			2	V10	2	2		23"	V5
Vz51	WB LEFT FAR	COMB.			3	V13	5	5		23"	V5
Vz52	WB LEFT NEAR	LOCAL			4	V5	5			23"	V5
Vz61 A+B	EB FAR	LOCAL			5	V6	6			74"	V6
Vz62 A+B	EB NEAR	COMB.			6	V14	6	6		23"	V1
Vz81	SB FAR	COMB.			9	V16	8	8		23"	V8
Vz82	SB NEAR	LOCAL			10	V8	8			23"	V8

CONTROLLER INPUT ABBREVIATIONS
V = VEHICLE INPUT
D = SYSTEM OR AUXILIARY INPUT
P = PEDESTRIAN INPUT

SPARE AMP CHN. #= 7, 8, 11-16

INTERVAL CHART

SIGNAL FACES	INTERSECTION INTERVALS 2+5	CLR.	2+6	CLR.	8	CLR.	FLASH SEQ.
3,4	R	R	R	R	G	Y	R
6,7	G	•	G	•	R	R	R
11,12	R	R	G	Y	R	R	R
15	~~G~~	•••	~~FY~~	•••	~~R~~	~~R~~	~~R~~

• DENOTES GREEN OR YELLOW BALL DEPENDING ON NEXT PHASE
•• DENOTES YELLOW BALL OR YELLOW ARROW DEPENDING ON NEXT PHASE
••• DENOTES YELLOW OR FLASHING YELLOW ARROW DEPENDING ON NEXT PHASE

SIGNAL FACES
12" LENSES

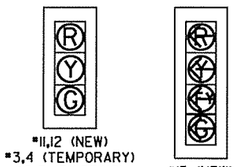

#11,12 (NEW)
#3,4 (TEMPORARY)
#6,7 (EXISTING)

#15 (NEW)

PHASING DIAGRAM

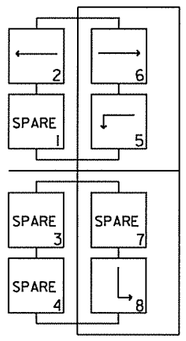

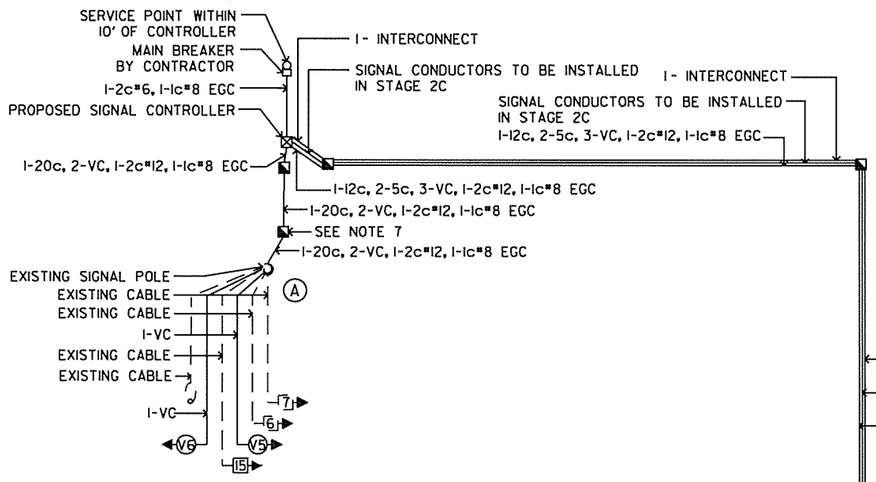

WIRING DIAGRAM
STAGE 2A & 2B

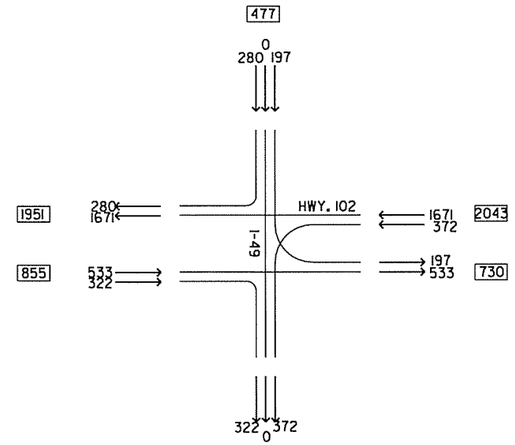

HWY. 102 AT SB RAMP
TRAFFIC FLOW DIAGRAM
TRAFFIC VOLUME
A.M. PEAK HOUR

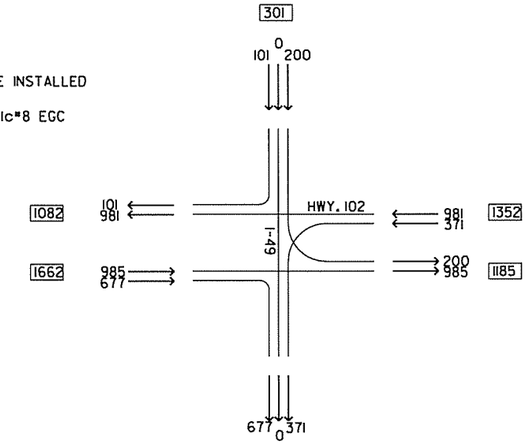

HWY. 102 AT SB RAMP
TRAFFIC FLOW DIAGRAM
TRAFFIC VOLUME
P.M. PEAK HOUR

N

NOTES TO CONTRACTOR

1. RUN SEPARATE 5c/#14 AWG FROM EACH 3 SEC SIGNAL HEAD TO BASE OF POLE.
2. RUN SEPARATE 7c/#14 AWG FROM EACH 4 SEC SIGNAL HEAD TO BASE OF POLE.
3. RUN SEPARATE 5c/#14 AWG TO EACH POLE WITH PEDESTRIAN PUSH BUTTONS
4. ALL DETECTOR RACK CHANNELS, INCLUDING UNUSED, SHALL BE BROUGHT TO TERMINAL STRIP IN DETECTOR AREA OF CABINET.
5. THE LOCAL GOVERNMENT SHALL BE RESPONSIBLE FOR PROVIDING POWER TO THE SERVICE POINT
6. ADDITIONAL 1-1c#8EGC FROM CONTROLLER AND POLE TO NEAREST PULL BOX. THE COST OF THE 1-1c#8EGC IS INCLUDED IN ITEM NO. 701, 714 OR 715 RESPECTIVELY. FOR DETAILS SEE GROUNDING ARRAY DIAGRAM SHEET.
7. CONTRACTOR SHALL VERIFY THE LOCATION OF THE EXISTING CONDUIT AND INSTALL NEW PULL BOXES ON TOP OF THE CONDUIT NEAR POLE A SO THAT THE NEW WIRING CAN BE INCORPORATED INTO THE EXISTING SIGNAL POLE.

5/16/2016
10:24:10 AM
\\CA0902 MS Hwy 102 102TempSig-Stage2A-3

HWY. 102 AT SB RAMP
STAGES 2A & 2B

STATE OF ARKANSAS
REGISTERED PROFESSIONAL ENGINEER
No. 8760
ANDREW E. FRIES
5/16/16

DATE	DATE FILMED	DATE REVISED	DATE FILMED	FED.RD. DIST.NO.	STATE	FED.AID PROJ.NO.	SHEET NO.	TOTAL SHEETS
				6	ARK.			
				JOB NO.		CA0902	240	581

SIGNALIZATION PLAN (HWY. 102 AT SB RAMP)

PHASING DIAGRAM

SIGNAL FACES
12" LENSES

LEGEND

- EX. SIGNAL POLE & MAST ARM
- PROP. SIGNAL POLE, MAST ARM, & LUMINAIRE
- TYPE 2 PULL BOX
- TYPE 1 PULL BOX
- SIGNAL HEAD
- VIDEO DETECTOR
- NMC - NON- METALLIC CONDUIT
- STAGE 2C

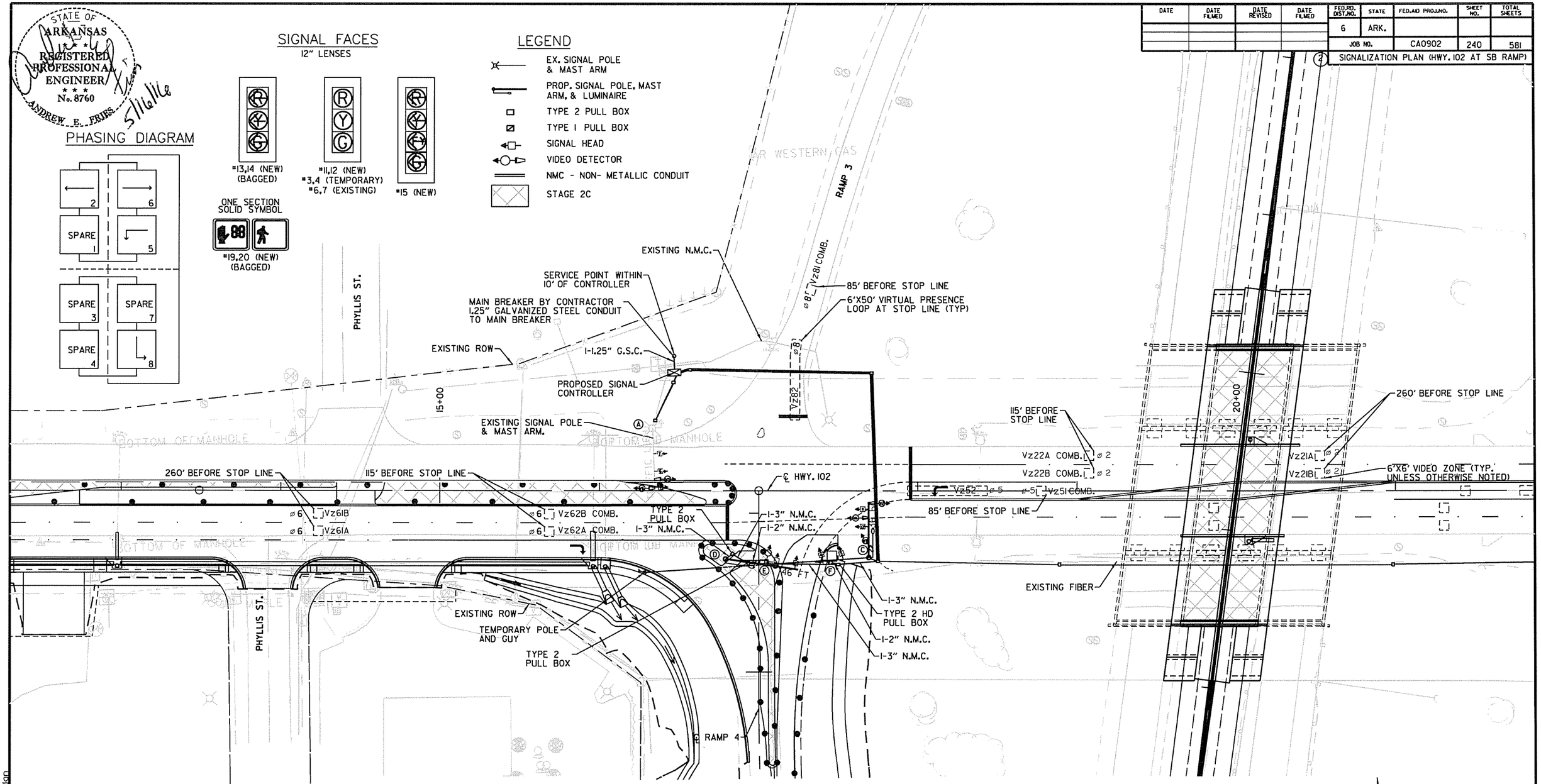

DESIGN PARAMETERS

POSTED SPEED LIMIT:
45 MPH HWY 102
35 MPH RAMPS 3 & 4

NO BUS STOPS
NO RAILROAD TRACKS
NO EXISTING INTERCONNECTIONS
NO FIRE STATION
NO PARKING
NO SIGHT DISTANCE RESTRICTIONS

LOCATION OF STOP LINES SHOWN ON PAVEMENT MARKING PLANS SHEETS

MINIMUM CLEAR ZONE DISTANCE:
2 FEET BEHIND CURB

CONSTRUCTION NOTES:

1. SIGNAL POLES A AND C, TEMPORARY SIGNAL POLE, AND SIGNAL HEADS 3, 4, 6, 7, 11 AND 12 SHALL BE MAINTAINED.

2. UPON COMPLETION OF THE CONCRETE ISLAND, NEW SIGNAL POLES D, E AND F ALONG WITH CONDUIT AND WIRING SHALL BE INSTALLED. VIDEO DETECTOR V8 SHALL BE SHIFTED TO SIGNAL POLE D. SEE FINAL PLANS.

3. NEW SIGNAL HEADS 13, 14 AND PEDESTRIAN SIGNAL HEADS 19 AND 20 SHALL BE BAGGED.

4. AFTER COMPLETION OF STAGE 2C, THE TEMPORARY POLE SHALL BE REMOVED AND POLES D, E AND F SHALL BE OPERATIONAL.

5. ADDITIONAL 0.5" NMC FROM CONTROLLER AND POLE TO NEAREST PULL BOX. REFER TO STANDARD DRAWING SD-6 HEAVY DUTY PULL BOX. THE COST OF THE 0.5" NMC IS INCLUDED IN ITEM NO. 701 AND 714 RESPECTIVELY.

N

30 15 0 15 30 60

HWY. 102 AT SB RAMP STAGE 2C

5/16/2016
10:04:59 AM
V:\CA0902_MS_Hwy 102_102TempSig-Stage2C-1.dgn

STATE OF ARKANSAS
REGISTERED PROFESSIONAL ENGINEER
No. 8760
ANDREW E. FRIES
5/16/16

DATE	DATE FILMED	DATE REVISED	DATE FILMED	FED.RD. DIST.NO.	STATE	FED.AID PROJ.NO.	SHEET NO.	TOTAL SHEETS
				6	ARK.			
				JOB NO.		CA0902	241	581

(2) SIGNALIZATION PLAN (HWY. 102 AT SB RAMP)

SIGNAL FACES

12" LENSES

#13,14 (NEW) (BAGGED)
#11,12 (NEW) #3,4 (TEMPORARY) #6,7 (EXISTING)
#15 (NEW)

ONE SECTION SOLID SYMBOL

#19, 20 (NEW) (BAGGED)

PHASING DIAGRAM

LEGEND

- EX. SIGNAL POLE & MAST ARM
- PROP. SIGNAL POLE, MAST ARM, & LUMINAIRE
- TYPE 2 PULL BOX
- TYPE 1 PULL BOX
- SIGNAL HEAD
- VIDEO DETECTOR
- NMC - NON- METALLIC CONDUIT
- STAGE 2C

DESIGN PARAMETERS

POSTED SPEED LIMIT:
45 MPH HWY 102
35 MPH RAMPS 3 & 4

NO BUS STOPS
NO RAILROAD TRACKS
NO EXISTING INTERCONNECTIONS
NO FIRE STATION
NO PARKING
NO SIGHT DISTANCE RESTRICTIONS

LOCATION OF STOP LINES SHOWN ON PAVEMENT MARKING PLANS SHEETS

MINIMUM CLEAR ZONE DISTANCE:
2 FEET BEHIND CURB

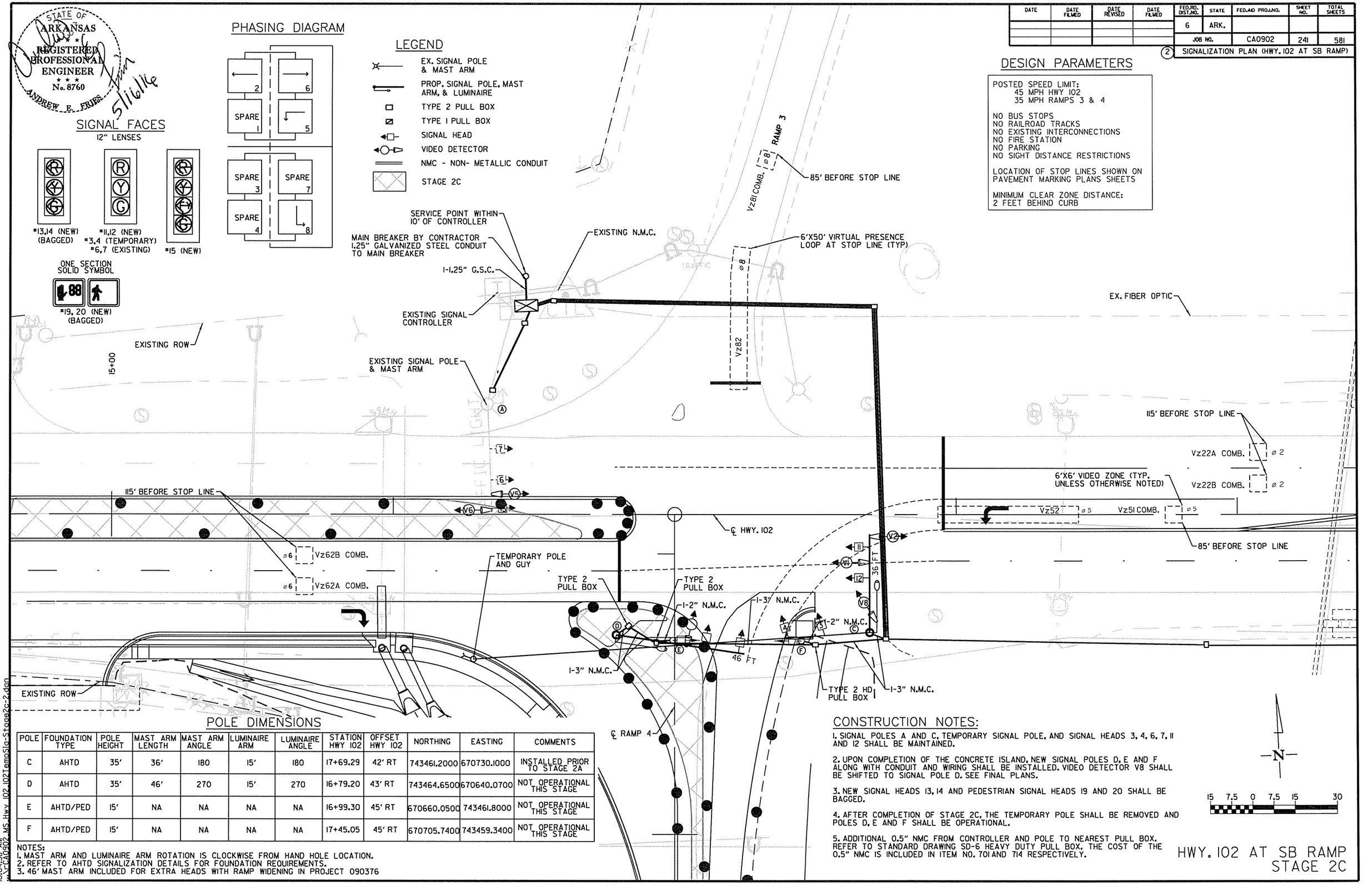

POLE DIMENSIONS

POLE	FOUNDATION TYPE	POLE HEIGHT	MAST ARM LENGTH	MAST ARM ANGLE	LUMINAIRE ARM	LUMINAIRE ANGLE	STATION HWY 102	OFFSET HWY 102	NORTHING	EASTING	COMMENTS
C	AHTD	35'	36'	180	15'	180	17+69.29	42' RT	743461.2000	670730.1000	INSTALLED PRIOR TO STAGE 2A
D	AHTD	35'	46'	270	15'	270	16+79.20	43' RT	743464.6500	670640.0700	NOT OPERATIONAL THIS STAGE
E	AHTD/PED	15'	NA	NA	NA	NA	16+99.30	45' RT	670660.0500	743461.8000	NOT OPERATIONAL THIS STAGE
F	AHTD/PED	15'	NA	NA	NA	NA	17+45.05	45' RT	670705.7400	743459.3400	NOT OPERATIONAL THIS STAGE

NOTES:
1. MAST ARM AND LUMINAIRE ARM ROTATION IS CLOCKWISE FROM HAND HOLE LOCATION.
2. REFER TO AHTD SIGNALIZATION DETAILS FOR FOUNDATION REQUIREMENTS.
3. 46' MAST ARM INCLUDED FOR EXTRA HEADS WITH RAMP WIDENING IN PROJECT 090376

CONSTRUCTION NOTES:

1. SIGNAL POLES A AND C, TEMPORARY SIGNAL POLE, AND SIGNAL HEADS 3, 4, 6, 7, 11 AND 12 SHALL BE MAINTAINED.

2. UPON COMPLETION OF THE CONCRETE ISLAND, NEW SIGNAL POLES D, E AND F ALONG WITH CONDUIT AND WIRING SHALL BE INSTALLED. VIDEO DETECTOR V8 SHALL BE SHIFTED TO SIGNAL POLE D. SEE FINAL PLANS.

3. NEW SIGNAL HEADS 13, 14 AND PEDESTRIAN SIGNAL HEADS 19 AND 20 SHALL BE BAGGED.

4. AFTER COMPLETION OF STAGE 2C, THE TEMPORARY POLE SHALL BE REMOVED AND POLES D, E AND F SHALL BE OPERATIONAL.

5. ADDITIONAL 0.5" NMC FROM CONTROLLER AND POLE TO NEAREST PULL BOX. REFER TO STANDARD DRAWING SD-6 HEAVY DUTY PULL BOX. THE COST OF THE 0.5" NMC IS INCLUDED IN ITEM NO. 701 AND 714 RESPECTIVELY.

N

15 7.5 0 7.5 15 30

HWY. 102 AT SB RAMP STAGE 2C

5/16/2016
10:04:58 AM
V:\CA0902_MS_Hwy_102_102TempSia-Stage2c-2.dgn

STATE OF ARKANSAS
REGISTERED PROFESSIONAL ENGINEER
No. 8760
ANDREW E. FRIES
5/16/16

DATE	DATE FILMED	DATE REVISED	DATE FILMED	FED.RD. DIST.NO.	STATE	FED.AID PROJ.NO.	SHEET NO.	TOTAL SHEETS
				6	ARK.			
				JOB NO.		CA0902	242	581
				(2)	SIGNALIZATION PLAN (HWY. 102 AT SB RAMP)			

DETECTOR CHART

DETECTOR LOCATION				HARDWARE INPUTS BY SUPPLIER			PROGRAM ASSIGNMENTS			VIDEO DET. TUBE LENGTH	COMMENT
							LOCAL		MSTR.		
DETECTOR I.D. #	DIRECTION & LOCATION	TYPE	DET. #	CAB. TRM. #	AMP CHN. #	CON. INP. #	PHS.	SYS. DET. #	SYS. DET. #		
Vz21A+B	WB FAR	LOCAL			1	V2	2			74″	V2
Vz22 A+B	WB NEAR	COMB.			2	V10	2	2		23″	V5
Vz51	WB LEFT FAR	COMB.			3	V13	5	5		23″	V5
Vz52	WB LEFT NEAR	LOCAL			4	V5	5			23″	V5
Vz61A+B	EB FAR	LOCAL			5	V6	6			74″	V6
Vz62 A+B	EB NEAR	COMB.			6	V14	6	6		23″	V1
Vz81	SB FAR	COMB.			9	V16	8	8		23″	V8
Vz82	SB NEAR	LOCAL			10	V8	8			23″	V8

CONTROLLER INPUT ABBREVIATIONS
V = VEHICLE INPUT
D = SYSTEM OR AUXILIARY INPUT
P = PEDESTRIAN INPUT

SPARE AMP CHN. #= 7, 8, 11-16

INTERVAL CHART

SIGNAL FACES	INTERSECTION INTERVALS 2+5	CLR.	2+6	CLR.	8	CLR.	FLASH SEQ.
3,4	R	R	R	R	G	Y	R
6,7	G	•	G	•	R	R	R
11,12	R	R	G	Y	R	R	R
13,14	B	B	B	B	B	B	B
15	⇦6	•••	⇦Y	•••	⇦R	⇦R	⇦R
19,20	B	B	B	B	B	B	B

• DENOTES GREEN OR YELLOW BALL DEPENDING ON NEXT PHASE
•• DENOTES YELLOW BALL OR YELLOW ARROW DEPENDING ON NEXT PHASE
••• DENOTES YELLOW OR FLASHING YELLOW ARROW DEPENDING ON NEXT PHASE

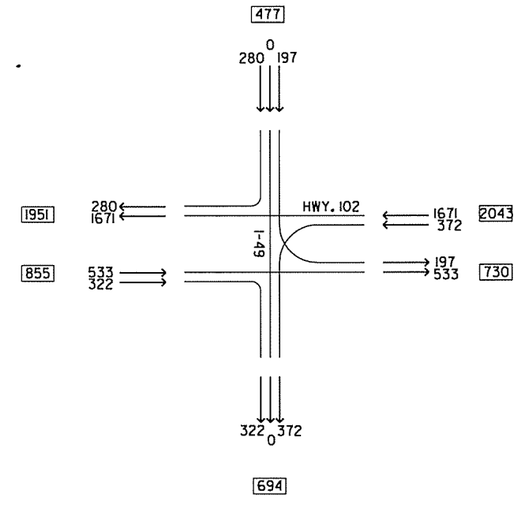

HWY. 102 AT SB RAMP
TRAFFIC FLOW DIAGRAM
TRAFFIC VOLUME
A.M. PEAK HOUR

SIGNAL FACES
12" LENSES

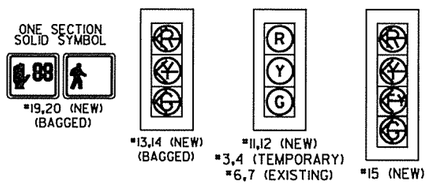

PHASING DIAGRAM

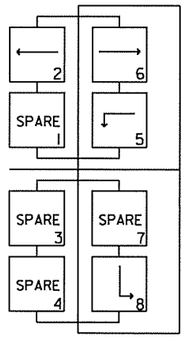

NOTES TO CONTRACTOR

1. RUN SEPARATE 5c/#14 AWG FROM EACH 3 SEC SIGNAL HEAD TO BASE OF POLE.
2. RUN SEPARATE 7c/#14 AWG FROM EACH 4 SEC SIGNAL HEAD TO BASE OF POLE.
3. RUN SEPARATE 5c/#14 AWG TO EACH POLE WITH PEDESTRIAN PUSH BUTTONS
4. ALL DETECTOR RACK CHANNELS, INCLUDING UNUSED, SHALL BE BROUGHT TO TERMINAL STRIP IN DETECTOR AREA OF CABINET.
5. THE LOCAL GOVERNMENT SHALL BE RESPONSIBLE FOR PROVIDING POWER TO THE SERVICE POINT
6. ADDITIONAL 1-1c#8EGC FROM CONTROLLER AND POLE TO NEAREST PULL BOX. THE COST OF THE 1-1c#8EGC IS INCLUDED IN ITEM NO. 701, 714 OR 715 RESPECTIVELY. FOR DETAILS SEE GROUNDING ARRAY DIAGRAM SHEET.
7. SIGNAL POLES D, E AND F SHALL BE INSTALLED AFTER THE ISLAND IS CONSTRUCTED AND SHALL NOT BE OPERATIONAL UNTIL AFTER STAGE 2C IS COMPLETED.

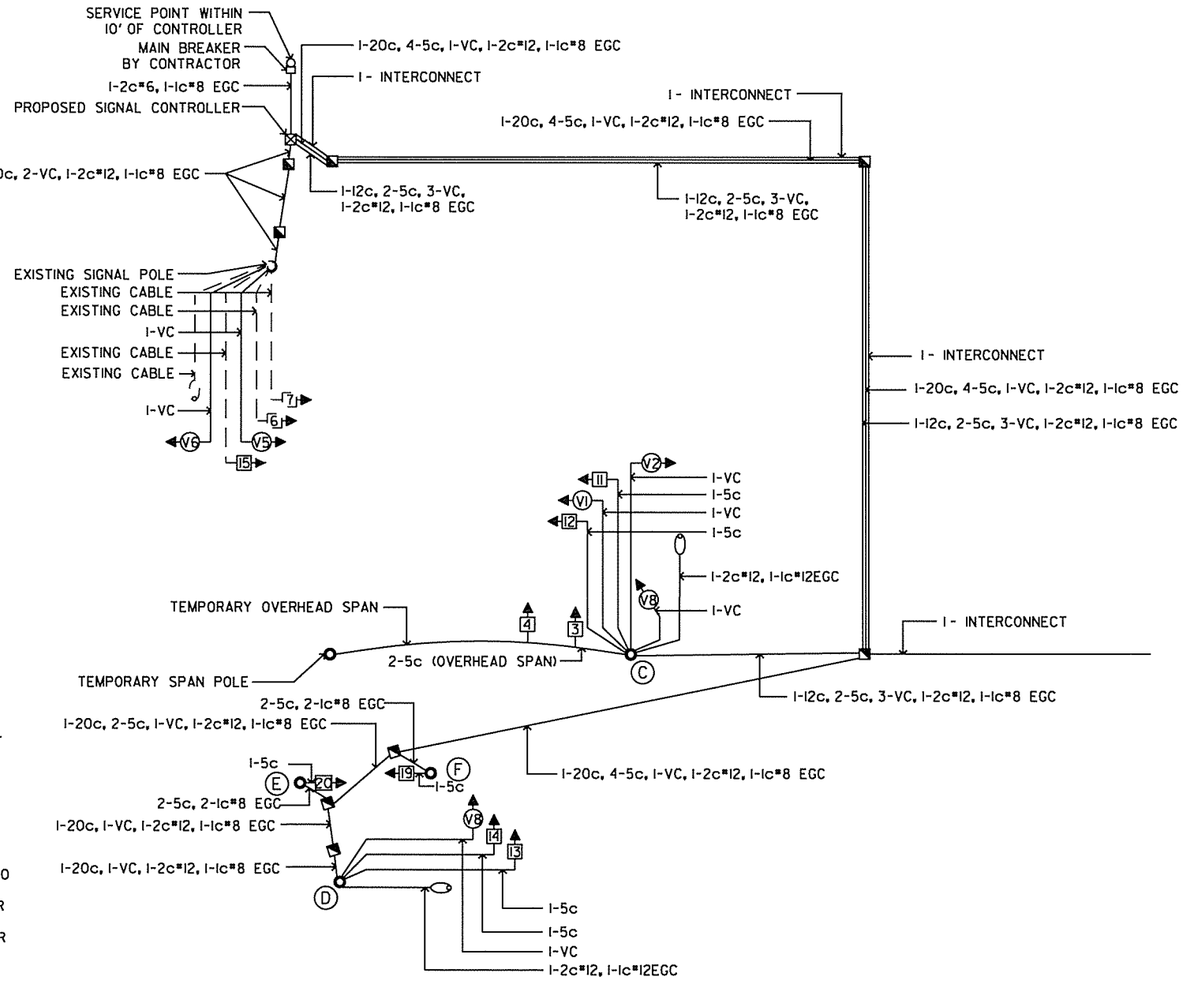

WIRING DIAGRAM
STAGE 2C

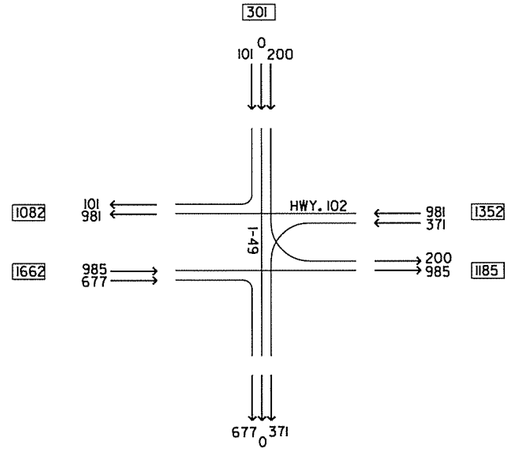

HWY. 102 AT SB RAMP
TRAFFIC FLOW DIAGRAM
TRAFFIC VOLUME
P.M. PEAK HOUR

N

HWY. 102 AT SB RAMP
STAGE 2C

5/16/2016
10:56:00 AM
I:\CA0902_MS_Hwy 102_102TempSig-Stage2C-3

DATE	DATE FILMED	DATE REVISED	DATE FILMED	FED.RD. DIST.NO.	STATE	FED.AID PROJ.NO.	SHEET NO.	TOTAL SHEETS
				6	ARK.			
				JOB NO.		CA0902	243	581

(2) SIGNALIZATION PLAN (HWY. 102 AT SB RAMP)

STATE OF ARKANSAS
REGISTERED PROFESSIONAL ENGINEER
No. 8760
ANDREW E. FRIES
5/16/16

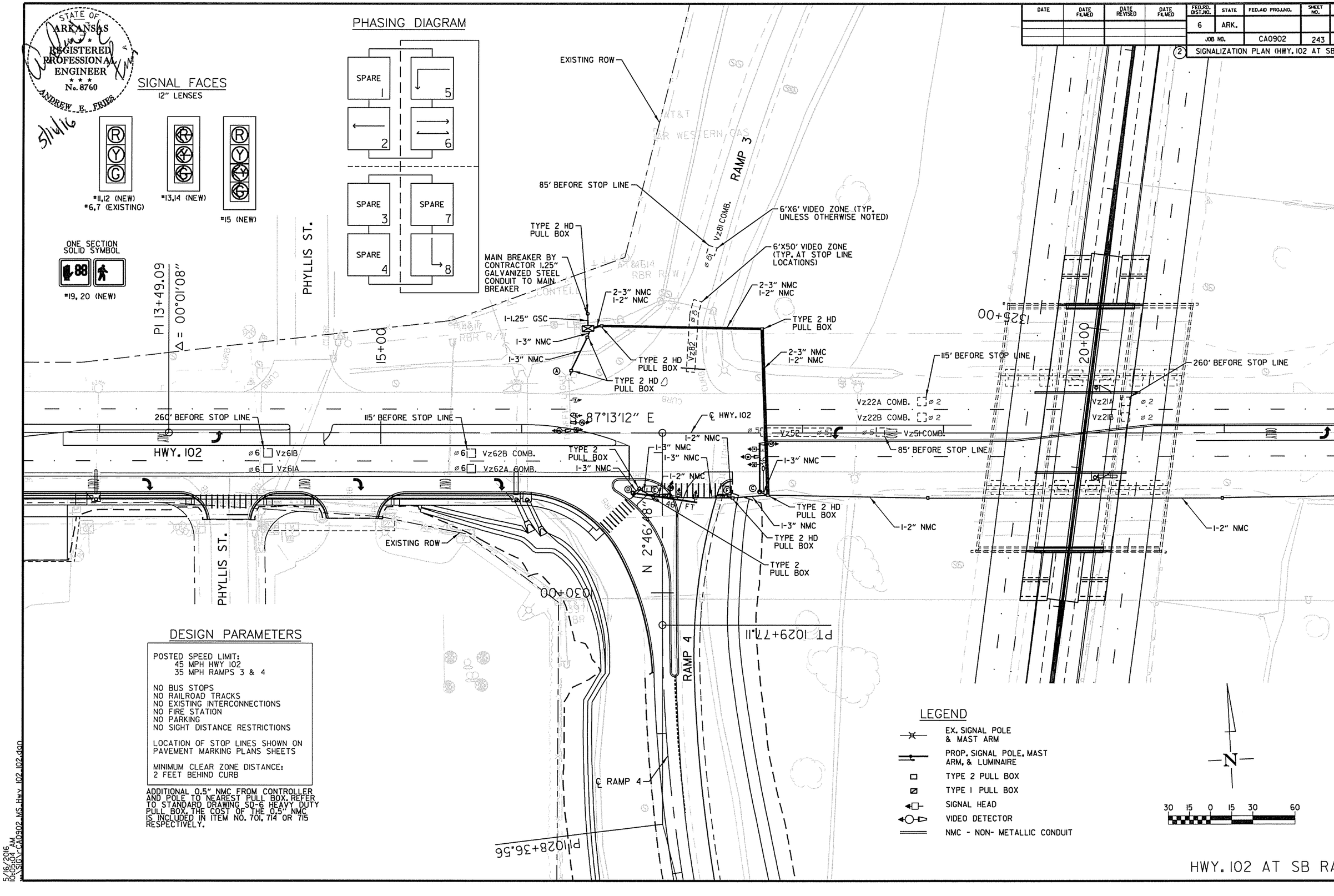

DESIGN PARAMETERS

POSTED SPEED LIMIT:
45 MPH HWY 102
35 MPH RAMPS 3 & 4

NO BUS STOPS
NO RAILROAD TRACKS
NO EXISTING INTERCONNECTIONS
NO FIRE STATION
NO PARKING
NO SIGHT DISTANCE RESTRICTIONS

LOCATION OF STOP LINES SHOWN ON PAVEMENT MARKING PLANS SHEETS

MINIMUM CLEAR ZONE DISTANCE:
2 FEET BEHIND CURB

ADDITIONAL 0.5" NMC FROM CONTROLLER AND POLE TO NEAREST PULL BOX. REFER TO STANDARD DRAWING SD-6 HEAVY DUTY PULL BOX. THE COST OF THE 0.5" NMC IS INCLUDED IN ITEM NO. 701, 714 OR 715 RESPECTIVELY.

LEGEND

- EX. SIGNAL POLE & MAST ARM
- PROP. SIGNAL POLE, MAST ARM, & LUMINAIRE
- TYPE 2 PULL BOX
- TYPE 1 PULL BOX
- SIGNAL HEAD
- VIDEO DETECTOR
- NMC - NON- METALLIC CONDUIT

N

30 15 0 15 30 60

HWY. 102 AT SB RAMP

5/16/2016
10:05:04 AM
\SIG\r CA0902 MS Hwy 102.102.dgn

DATE	DATE FILMED	DATE REVISED	DATE FILMED	FED.RD. DIST.NO.	STATE	FED.AID PROJ.NO.	SHEET NO.	TOTAL SHEETS
				6	ARK.			
				JOB NO.		CA0902	244	581

(2) SIGNALIZATION PLAN (HWY. 62 AT NB RAMP)

ADDITIONAL 0.5" NMC FROM CONTROLLER AND POLE TO NEAREST PULL BOX. REFER TO STANDARD DRAWING SD-6 HEAVY DUTY PULL BOX. THE COST OF THE 0.5" NMC IS INCLUDED IN ITEM NO. 701, 714 OR 715 RESPECTIVELY.

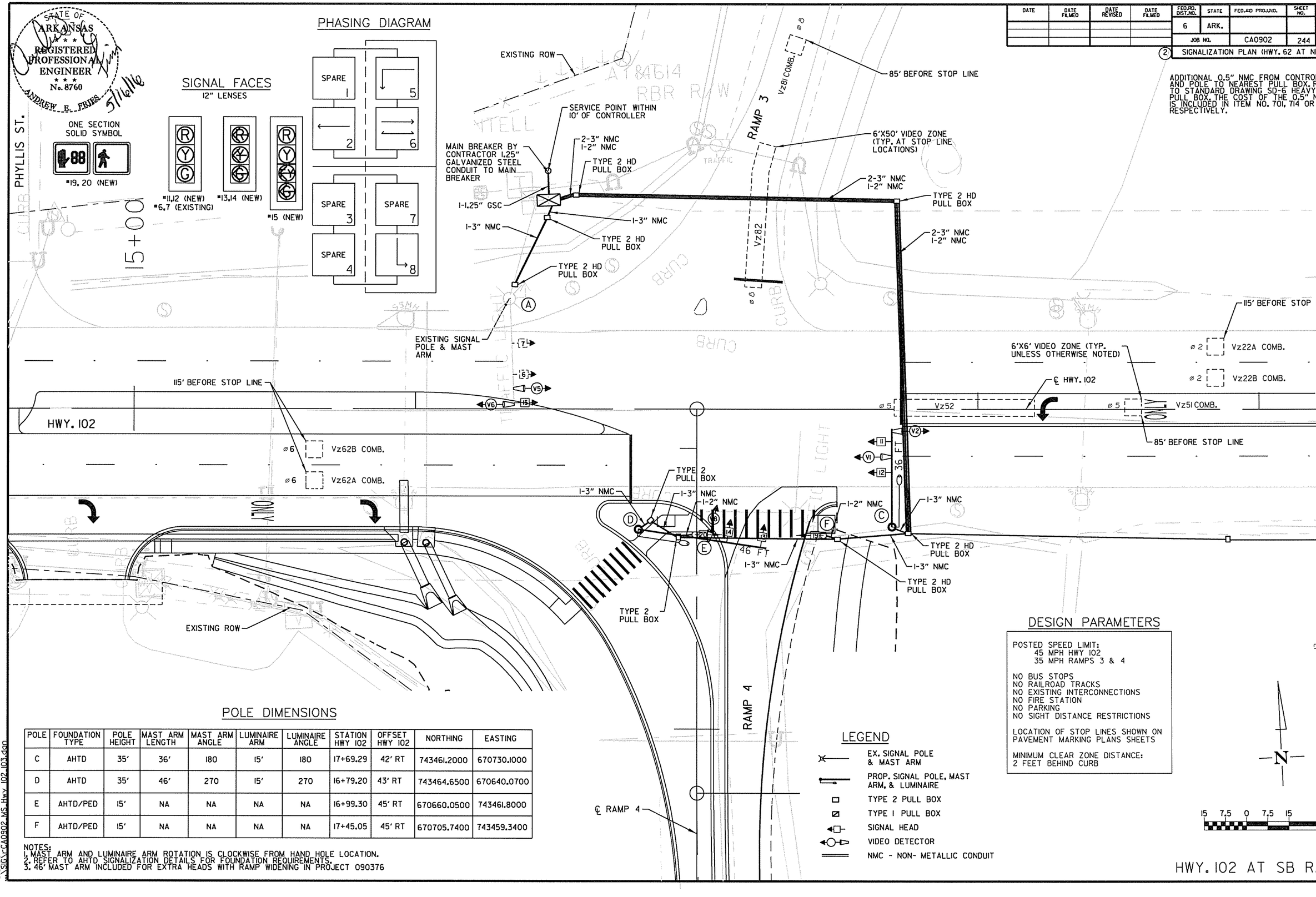

POLE DIMENSIONS

POLE	FOUNDATION TYPE	POLE HEIGHT	MAST ARM LENGTH	MAST ARM ANGLE	LUMINAIRE ARM	LUMINAIRE ANGLE	STATION HWY 102	OFFSET HWY 102	NORTHING	EASTING
C	AHTD	35'	36'	180	15'	180	17+69.29	42' RT	743461.2000	670730.1000
D	AHTD	35'	46'	270	15'	270	16+79.20	43' RT	743464.6500	670640.0700
E	AHTD/PED	15'	NA	NA	NA	NA	16+99.30	45' RT	670660.0500	743461.8000
F	AHTD/PED	15'	NA	NA	NA	NA	17+45.05	45' RT	670705.7400	743459.3400

NOTES:
1. MAST ARM AND LUMINAIRE ARM ROTATION IS CLOCKWISE FROM HAND HOLE LOCATION.
2. REFER TO AHTD SIGNALIZATION DETAILS FOR FOUNDATION REQUIREMENTS.
3. 46' MAST ARM INCLUDED FOR EXTRA HEADS WITH RAMP WIDENING IN PROJECT 090376

LEGEND

- EX. SIGNAL POLE & MAST ARM
- PROP. SIGNAL POLE, MAST ARM, & LUMINAIRE
- TYPE 2 PULL BOX
- TYPE 1 PULL BOX
- SIGNAL HEAD
- VIDEO DETECTOR
- NMC - NON- METALLIC CONDUIT

DESIGN PARAMETERS

POSTED SPEED LIMIT:
45 MPH HWY 102
35 MPH RAMPS 3 & 4

NO BUS STOPS
NO RAILROAD TRACKS
NO EXISTING INTERCONNECTIONS
NO FIRE STATION
NO PARKING
NO SIGHT DISTANCE RESTRICTIONS

LOCATION OF STOP LINES SHOWN ON PAVEMENT MARKING PLANS SHEETS

MINIMUM CLEAR ZONE DISTANCE:
2 FEET BEHIND CURB

HWY. 102 AT SB RAMP

5/16/2016
10:05:10 AM
\SIG\CA0902_MS_Hwy_102_103.dgn

STATE OF ARKANSAS
REGISTERED PROFESSIONAL ENGINEER
No. 8760
ANDREW E. FRIES
5/16/16

DATE	DATE FILMED	DATE REVISED	DATE FILMED	FED.RD. DIST.NO.	STATE	FED.AID PROJ.NO.	SHEET NO.	TOTAL SHEETS
				6	ARK.			
				JOB NO.		CA0902	245	581

(2) SIGNALIZATION PLAN (HWY. 102 AT SB RAMP)

DETECTOR CHART

DETECTOR LOCATION				HARDWARE INPUTS BY SUPPLIER			PROGRAM ASSIGNMENTS			VIDEO DET. TUBE LENGTH	COMMENT
							LOCAL		MSTR.		
DETECTOR I.D. *	DIRECTION & LOCATION	TYPE	DET. *	CAB. TRM. *	AMP CHN. *	CON. INP. *	PHS.	SYS. DET. *	SYS. DET. *		
Vz21 A+B	WB FAR	LOCAL			1	V2	2			74"	V2
Vz22 A+B	WB NEAR	COMB.			2	V10	2	2		23"	V5
Vz51	WB LEFT FAR	COMB.			3	V13	5	5		23"	V5
Vz52	WB LEFT NEAR	LOCAL			4	V5	5			23"	V5
Vz61 A+B	EB FAR	LOCAL			5	V6	6			74"	V6
Vz62 A+B	EB NEAR	COMB.			6	V14	6	6		23"	V1
Vz81	SB FAR	COMB.			9	V16	8	8		23"	V8
Vz82	SB NEAR	LOCAL			10	V8	8			23"	V8
PB6	W TO E	PED				P6	6				

CONTROLLER INPUT ABBREVIATIONS
V = VEHICLE INPUT
D = SYSTEM OR AUXILIARY INPUT
P = PEDESTRIAN INPUT

SPARE AMP CHN. *= 7, 8, 11-16

INTERVAL CHART

SIGNAL FACES	INTERSECTION INTERVALS						FLASH
	2+5	CLR.	2+6	CLR.	8	CLR.	SEQ.
6,7	G	•	G	•	R	R	R
11,12	R	R	G	Y	R	R	R
13,14	~~R~~	~~R~~	~~R~~	~~R~~	~~G~~	~~Y~~	~~R~~
15	~~G~~	•••	~~FY~~	•••	~~R~~	~~R~~	~~R~~
19,20	DW	DW	W	FDW	DW	DW	B

* DENOTES GREEN OR YELLOW BALL DEPENDING ON NEXT PHASE
** DENOTES YELLOW BALL OR YELLOW ARROW DEPENDING ON NEXT PHASE
*** DENOTES YELLOW OR FLASHING YELLOW ARROW DEPENDING ON NEXT PHASE

SIGNAL FACES

12" LENSES

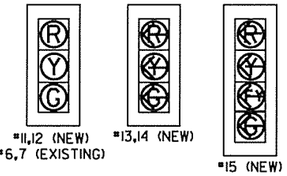

*11,12 (NEW)
*6,7 (EXISTING)

*13,14 (NEW)

*15 (NEW)

ONE SECTION SOLID SYMBOL

*19,20 (NEW)

PHASING DIAGRAM

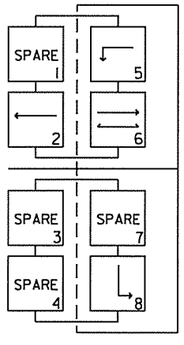

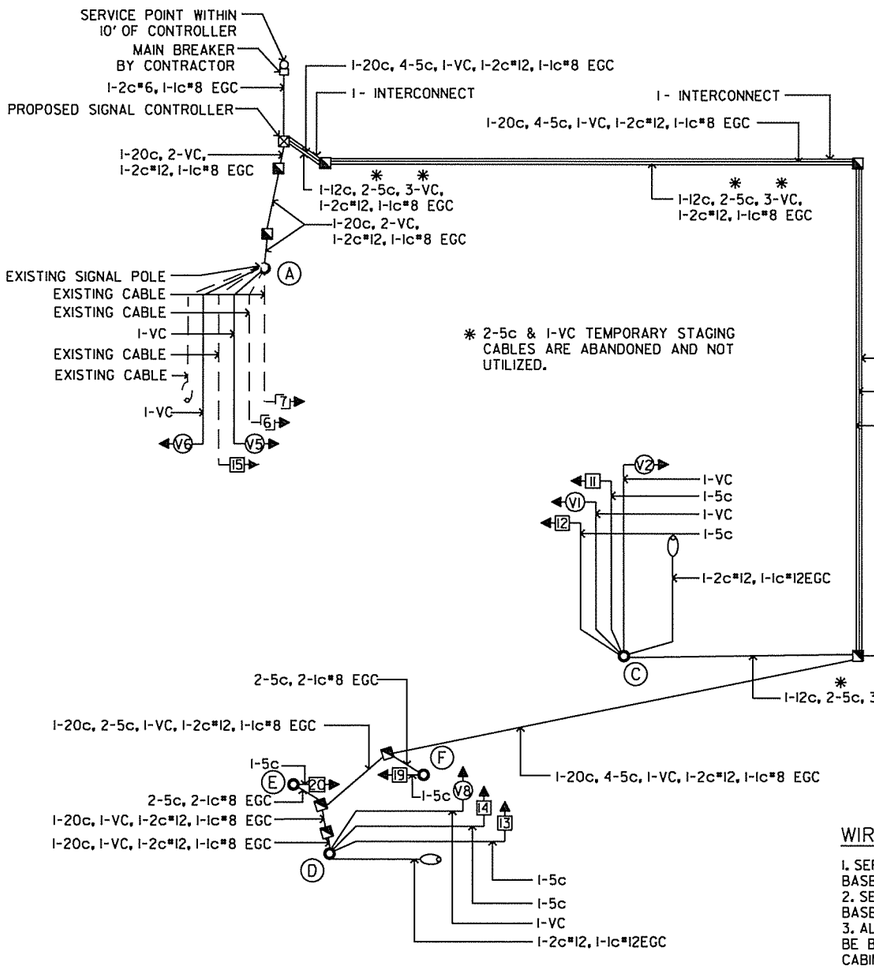

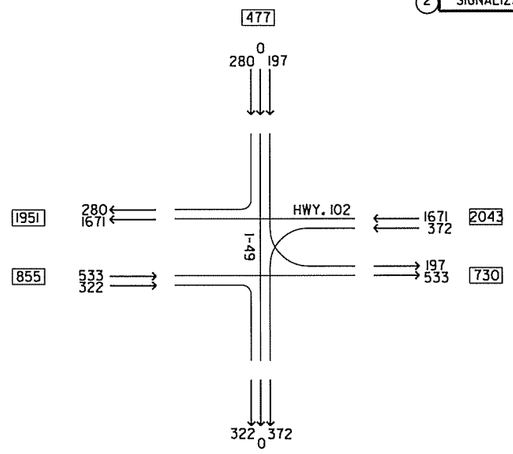

HWY. 102 AT SB RAMP
TRAFFIC FLOW DIAGRAM
TRAFFIC VOLUME
A.M. PEAK HOUR

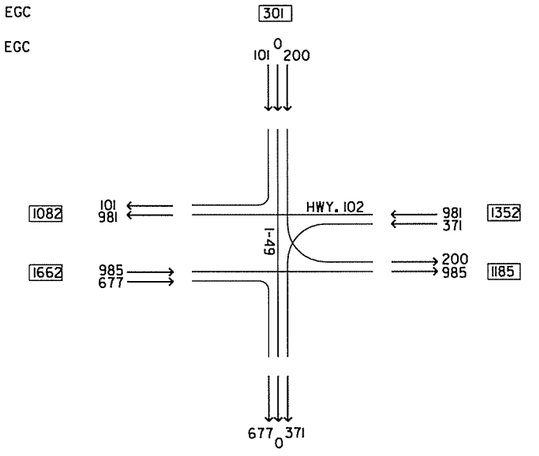

HWY. 102 AT SB RAMP
TRAFFIC FLOW DIAGRAM
TRAFFIC VOLUME
P.M. PEAK HOUR

WIRING DIAGRAM

1. SEPARATE 5c/*14 AWG FROM EACH 3 SEC SIGNAL HEAD TO BASE OF POLE.
2. SEPARATE 7c/*14 AWG FROM EACH 4 SEC SIGNAL HEAD TO BASE OF POLE
3. ALL DETECTOR RACK CHANNELS, INCLUDING UNUSED, SHALL BE BROUGHT TO TERMINAL STRIP IN DETECTOR AREA ON CABINET.
4. THE LOCAL GOV'T SHALL BE RESPONSIBLE FOR PROVIDING POWER TO THE SERVICE POINT.
5. ADDITIONAL 1-1c*8EGC FROM CONTROLLER AND POLE TO NEAREST PULL BOX. THE COST OF THE 1-1c*8EGC IS INCLUDED IN ITEM NO. 701, 714 OR 715 RESPECTIVELY. FOR DETAILS SEE GROUNDING ARRAY DIAGRAM SHEET.

N

HWY. 102 AT SB RAMP

5/16/2016
10:05:47 AM
\\SIS\...\CA0902_MS_Hwy_102_107

STATE OF ARKANSAS
REGISTERED PROFESSIONAL ENGINEER
No. 8760
ANDREW E. FRIES
5/5/16

DATE	DATE FILMED	DATE REVISED	DATE FILMED	FED.RD. DIST.NO.	STATE	FED.AID PROJ.NO.	SHEET NO.	TOTAL SHEETS
				6	ARK.			
				JOB NO.		CA0902	246	581

(2) SIGNALIZATION PLAN (HWY. 102 AT SB RAMP)

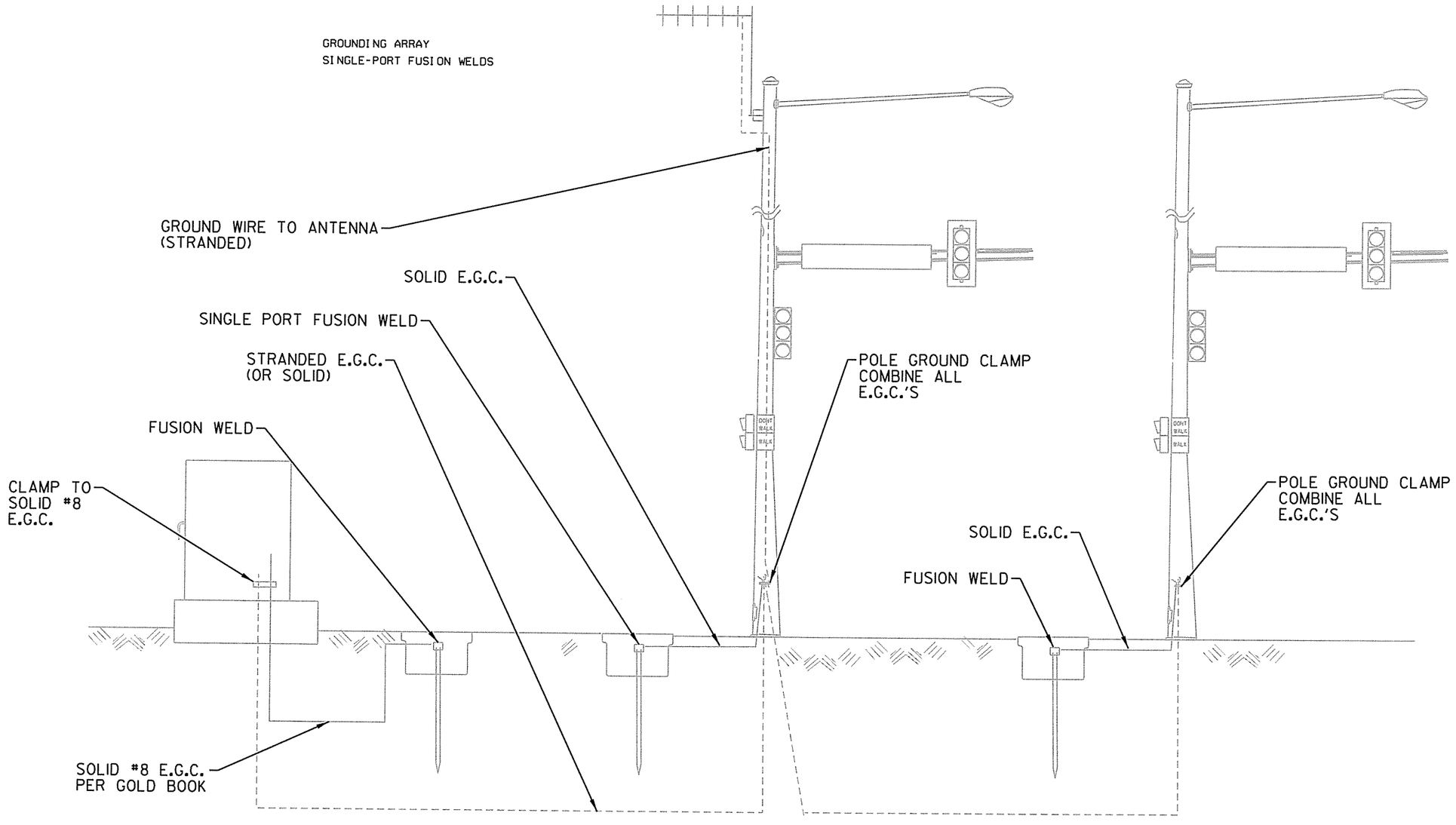

TRAFFIC SIGNAL GROUNDING DETAIL

5/5/2016
7:03:29 PM
...\CA0902_MS_Hwy_102Traffic SignalGrounding Detail.dgn

HWY. 102 AT SB RAMP

DATE	DATE FILMED	DATE REVISED	DATE FILMED	FED.RD. DIST.NO.	STATE	FED.AID PROJ.NO.	SHEET NO.	TOTAL SHEETS
				6	ARK.			
				JOB NO.		CA0902	247	581

(2) SIGNALIZATION PLAN (HWY. 72 AT SB RAMP)

STATE OF ARKANSAS
REGISTERED PROFESSIONAL ENGINEER
No. 8760
ANDREW E. FRIES
5/16/16

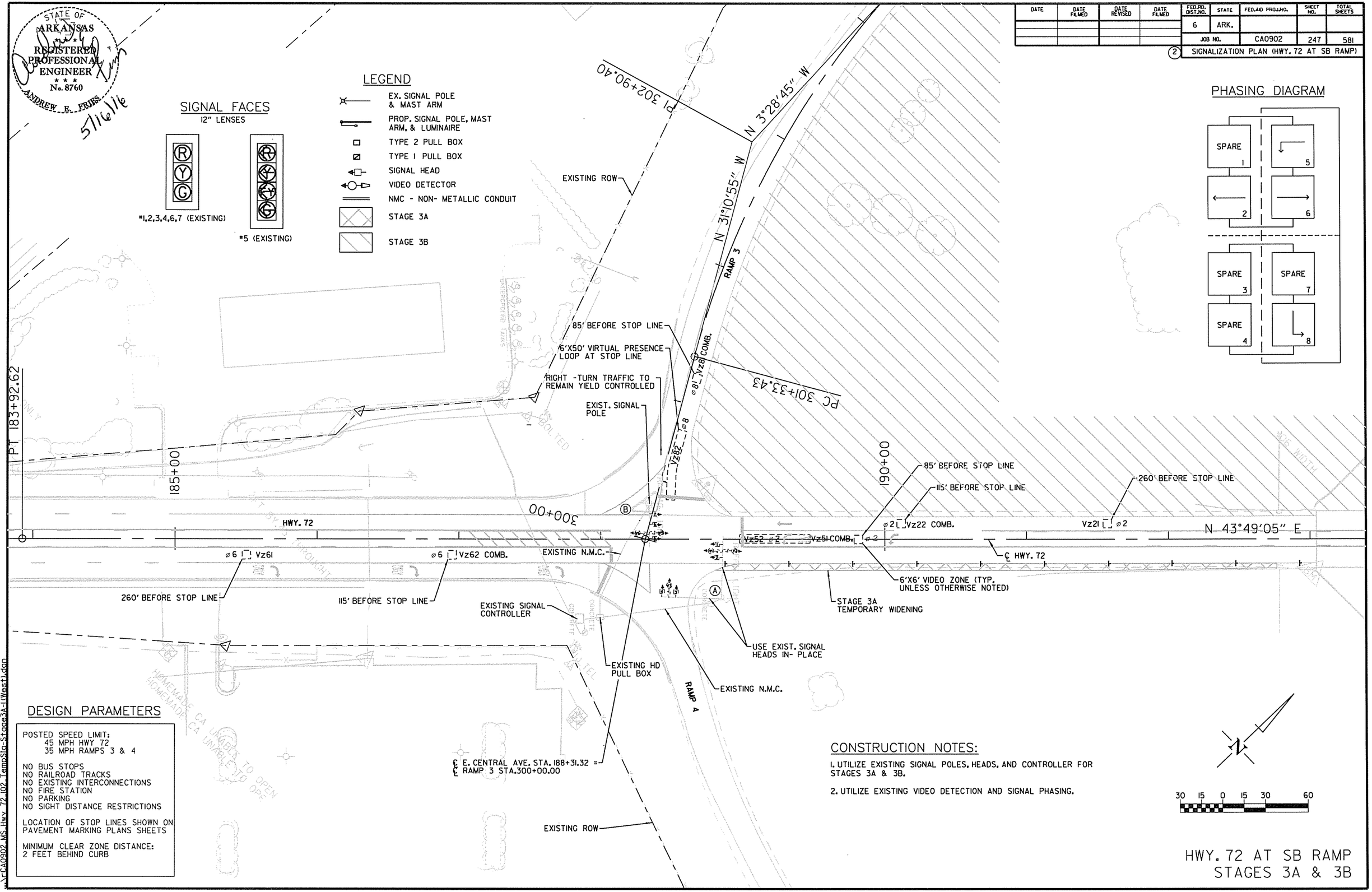

DESIGN PARAMETERS

POSTED SPEED LIMIT:
45 MPH HWY 72
35 MPH RAMPS 3 & 4

NO BUS STOPS
NO RAILROAD TRACKS
NO EXISTING INTERCONNECTIONS
NO FIRE STATION
NO PARKING
NO SIGHT DISTANCE RESTRICTIONS

LOCATION OF STOP LINES SHOWN ON PAVEMENT MARKING PLANS SHEETS

MINIMUM CLEAR ZONE DISTANCE:
2 FEET BEHIND CURB

CONSTRUCTION NOTES:

1. UTILIZE EXISTING SIGNAL POLES, HEADS, AND CONTROLLER FOR STAGES 3A & 3B.
2. UTILIZE EXISTING VIDEO DETECTION AND SIGNAL PHASING.

HWY. 72 AT SB RAMP
STAGES 3A & 3B

5/16/2016
10:05:21 AM
\\CA0902_MS_Hwy_72_102_TempSig-Stage3A-1(West).dgn

DATE	DATE FILMED	DATE REVISED	DATE FILMED	FED.RD. DIST.NO.	STATE	FED.AID PROJ.NO.	SHEET NO.	TOTAL SHEETS
				6	ARK.			
				JOB NO.		CA0902	248	581

(2) SIGNALIZATION PLAN (HWY. 72 AT SB RAMP)

STATE OF ARKANSAS
REGISTERED PROFESSIONAL ENGINEER
No. 8760
ANDREW E. FRIES
5/16/16

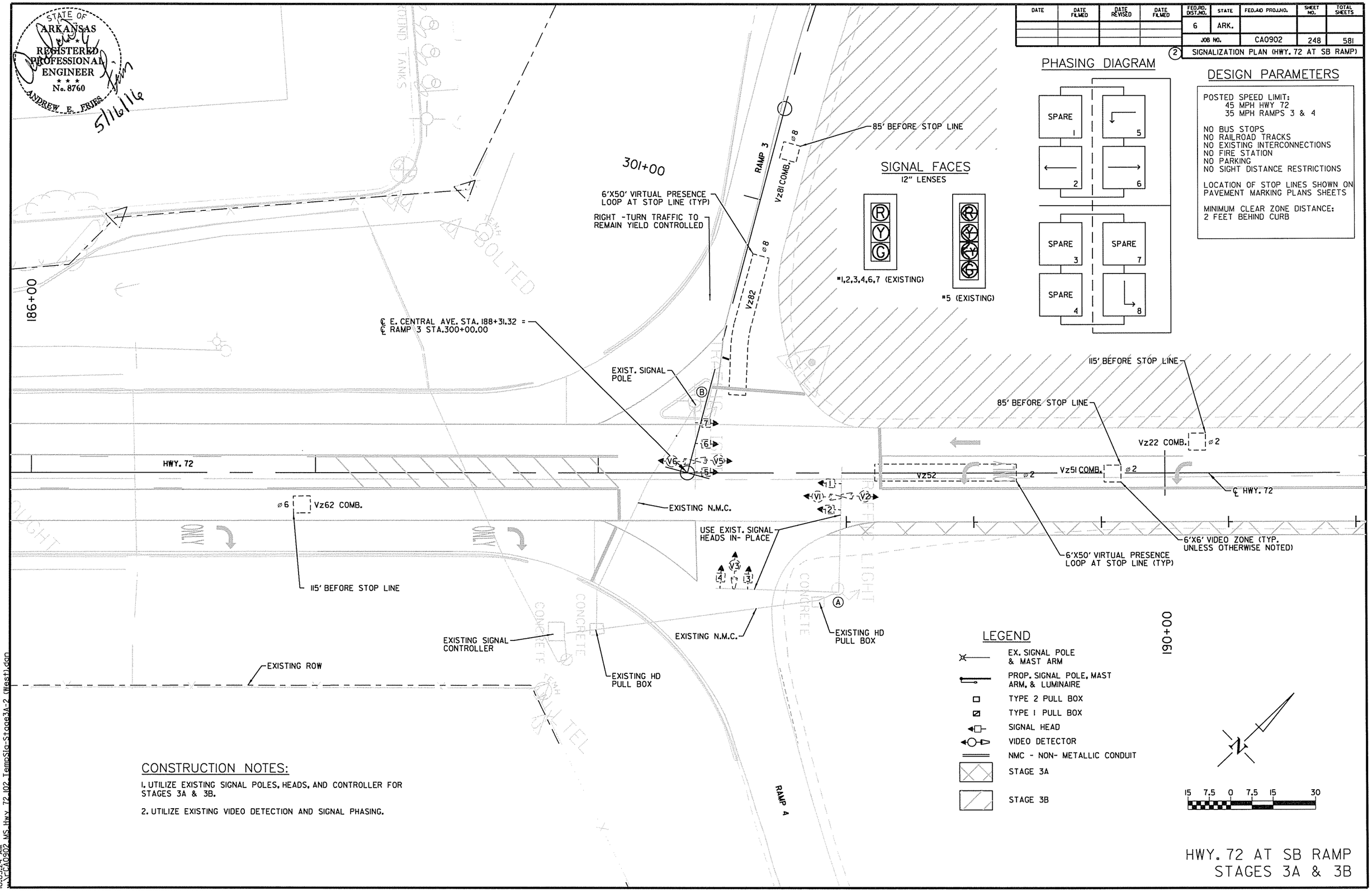

SIGNAL FACES

12" LENSES

PHASING DIAGRAM

DESIGN PARAMETERS

POSTED SPEED LIMIT:
45 MPH HWY 72
35 MPH RAMPS 3 & 4

NO BUS STOPS
NO RAILROAD TRACKS
NO EXISTING INTERCONNECTIONS
NO FIRE STATION
NO PARKING
NO SIGHT DISTANCE RESTRICTIONS

LOCATION OF STOP LINES SHOWN ON PAVEMENT MARKING PLANS SHEETS

MINIMUM CLEAR ZONE DISTANCE:
2 FEET BEHIND CURB

CONSTRUCTION NOTES:

1. UTILIZE EXISTING SIGNAL POLES, HEADS, AND CONTROLLER FOR STAGES 3A & 3B.
2. UTILIZE EXISTING VIDEO DETECTION AND SIGNAL PHASING.

HWY. 72 AT SB RAMP
STAGES 3A & 3B

5/16/2016
10:05:24 AM
\\CA0902_MS_Hwy_72_102_TempSig-Stage3A-2 (West).dgn

STATE OF ARKANSAS
REGISTERED PROFESSIONAL ENGINEER
No. 8760
ANDREW E. FRIES
5/16/16

DATE	DATE FILMED	DATE REVISED	DATE FILMED	FED.RD. DIST.NO.	STATE	FED.AID PROJ.NO.	SHEET NO.	TOTAL SHEETS
				6	ARK.			
				JOB NO.		CA0902	249	581

(2) SIGNALIZATION PLAN (HWY. 72 AT SB RAMP)

EXISTING DETECTOR CHART

DETECTOR LOCATION				HARDWARE INPUTS BY SUPPLIER			PROGRAM ASSIGNMENTS			VIDEO DET. TUBE LENGTH	COMMENT
DETECTOR I.D. #	DIRECTION & LOCATION	TYPE	DET. #	CAB. TRM. #	AMP CHN. #	CON. INP. #	LOCAL PHS.	LOCAL SYS. DET. #	MSTR. SYS. DET. #		
Vz21	WB FAR	LOCAL			1	V2	2			23"	V2
Vz22	WB NEAR	COMB.			2	V10	2	2		23"	V5
Vz51	WB LEFT FAR	COMB.			3	V13	5	5		23"	V5
Vz52	WB LEFT NEAR	LOCAL			4	V5	5			23"	V5
Vz61	EB FAR	LOCAL			5	V6	6			23"	V6
Vz62	EB NEAR	COMB.			6	V14	6	6		23"	V1
Vz81	SB FAR	COMB.			9	V16	8	8		23"	V3
Vz82	SB NEAR	LOCAL			10	V8	8			23"	V3

CONTROLLER INPUT ABBREVIATIONS
V = VEHICLE INPUT
D = SYSTEM OR AUXILIARY INPUT
P = PEDESTRIAN INPUT

SPARE AMP CHN. #= 7, 8, 11-16

SIGNAL FACES
12" LENSES

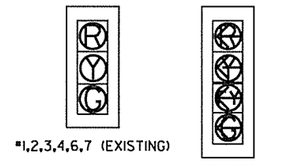

#1,2,3,4,6,7 (EXISTING)

#5 (EXISTING)

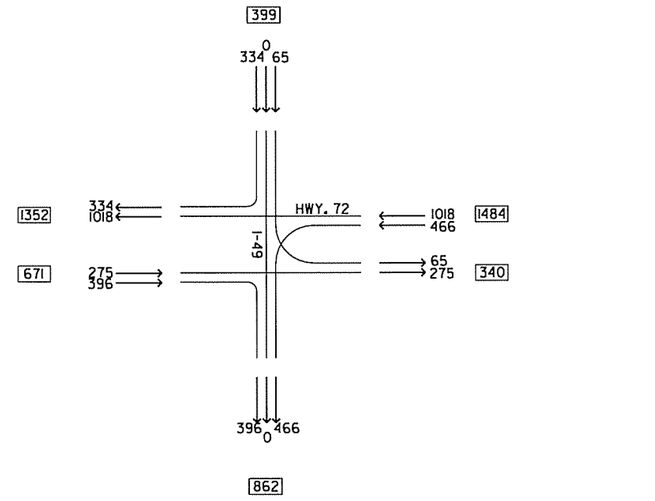

HWY. 72 AT SB RAMP
TRAFFIC FLOW DIAGRAM
TRAFFIC VOLUME
A.M. PEAK HOUR

PHASING DIAGRAM

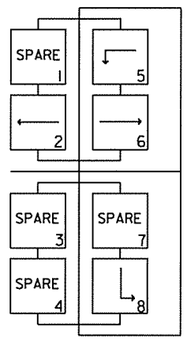

NOTES TO CONTRACTOR

1. UTILIZE EXISTING SIGNAL POLES, SIGNAL HEADS, AND CONTROLLER FOR STAGES 3A & 3B.

2. UTILIZE EXISTING VIDEO DETECTION AND SIGNAL PHASING.

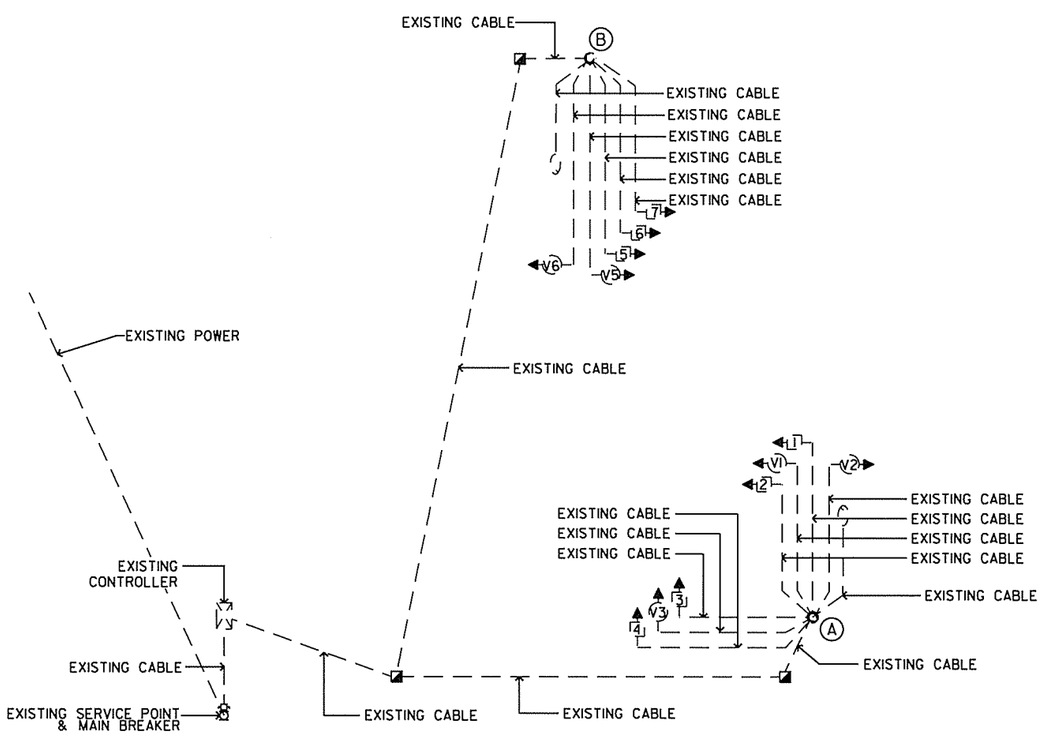

WIRING DIAGRAM
STAGES 3A & 3B

INTERVAL CHART

SIGNAL FACES	INTERSECTION INTERVALS 2+5	CLR.	2+6	CLR.	8	CLR.	FLASH SEQ.
1+2	R	R	G	Y	R	R	R
3+4	R	R	R	R	G	Y	R
5	←G	•••	←FY	•••	←R	←R	←R
6+7	G	•	G	•	R	R	R

• DENOTES GREEN OR YELLOW BALL DEPENDING ON NEXT PHASE
•• DENOTES YELLOW BALL OR YELLOW ARROW DEPENDING ON NEXT PHASE
••• DENOTED YELLOW OR FLASHING YELLOW ARROW DEPENDING ON NEXT PHASE

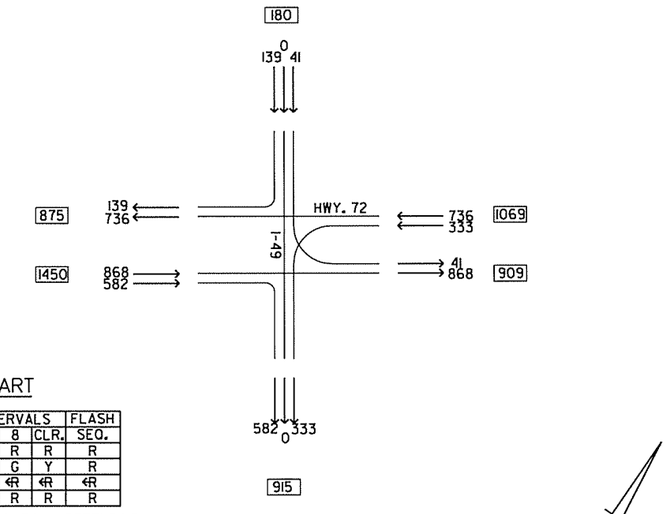

HWY. 72 AT SB RAMP
TRAFFIC FLOW DIAGRAM
TRAFFIC VOLUME
P.M. PEAK HOUR

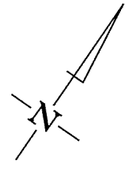

HWY. 72 AT SB RAMP
STAGES 3A & 3B

5/16/2016
10:05:23 AM
I:\CA0902_MS_Hwy_72_I02_TempSig-Stage3A-3 (West).dgn

STATE OF ARKANSAS
REGISTERED PROFESSIONAL ENGINEER
No. 8760
ANDREW E. FRIES
5/16/16

DATE	DATE FILMED	DATE REVISED	DATE FILMED

FED.RD. DIST.NO.	STATE	FED.AID PROJ.NO.	SHEET NO.	TOTAL SHEETS
6	ARK.			
JOB NO.		CA0902	253	581

(2) SIGNALIZATION PLAN (HWY. 72 AT SB RAMP)

SIGNAL FACES
12" LENSES

ONE SECTION SOLID SYMBOL

*21,22,23,24 (NEW) (BAGGED)

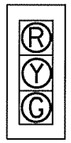

*10,11,12,15,16, 17,18,19 (NEW)

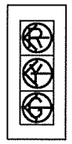

*13,14,20 (NEW)

LEGEND

- EX. SIGNAL POLE & MAST ARM
- PROP. SIGNAL POLE, MAST ARM, & LUMINAIRE
- TYPE 2 PULL BOX
- TYPE 1 PULL BOX
- SIGNAL HEAD
- VIDEO DETECTOR
- NMC - NON- METALLIC CONDUIT
- STAGE 3C

CONSTRUCTION NOTES:

1. PRIOR TO IMPLEMENTATION OF STAGE 3C, CONTRACTOR SHALL INSTALL NEW CONTROLLER, NEW SIGNAL POLES C, D, E, F, G AND H, PULL BOXES, CONDUIT, WIRING, SIGNAL HEADS 10-20, PEDESTRIAN SIGNAL HEADS 21-24, AND VIDEO DETECTORS V1, V2, V3, V5, V6 AND V8.

2. WORK TO TRANSITION SIGNAL CONTROLLER OPERATION TO NEW POLES AND CONTROLLER SHALL TAKE PLACE ON A SUNDAY MORNING BEFORE NOON.

3. EXISTING POLES A AND B, PULL BOXES AND CONTROLLER SHALL BE REMOVED.

4. EXISTING CONDUIT SHALL BE ABANDONED.

5. ADDITIONAL 0.5" NMC FROM CONTROLLER AND POLE TO NEAREST PULL BOX. REFER TO STANDARD DRAWING SD-6 HEAVY DUTY PULL BOX. THE COST OF THE 0.5" NMC IS INCLUDED IN ITEM NO. 701 AND 714 RESPECTIVELY.

6. PRIOR TO IMPLEMENTATION OF FINAL STAGE, SHIFT SIGNAL HEAD 10 AND 11 TO FINAL LOCATION AND ROTATE V1 AND V6. SEE FINAL PLANS.

PHASING DIAGRAM

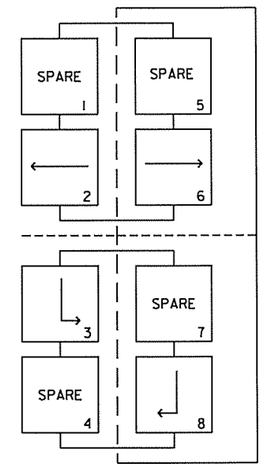

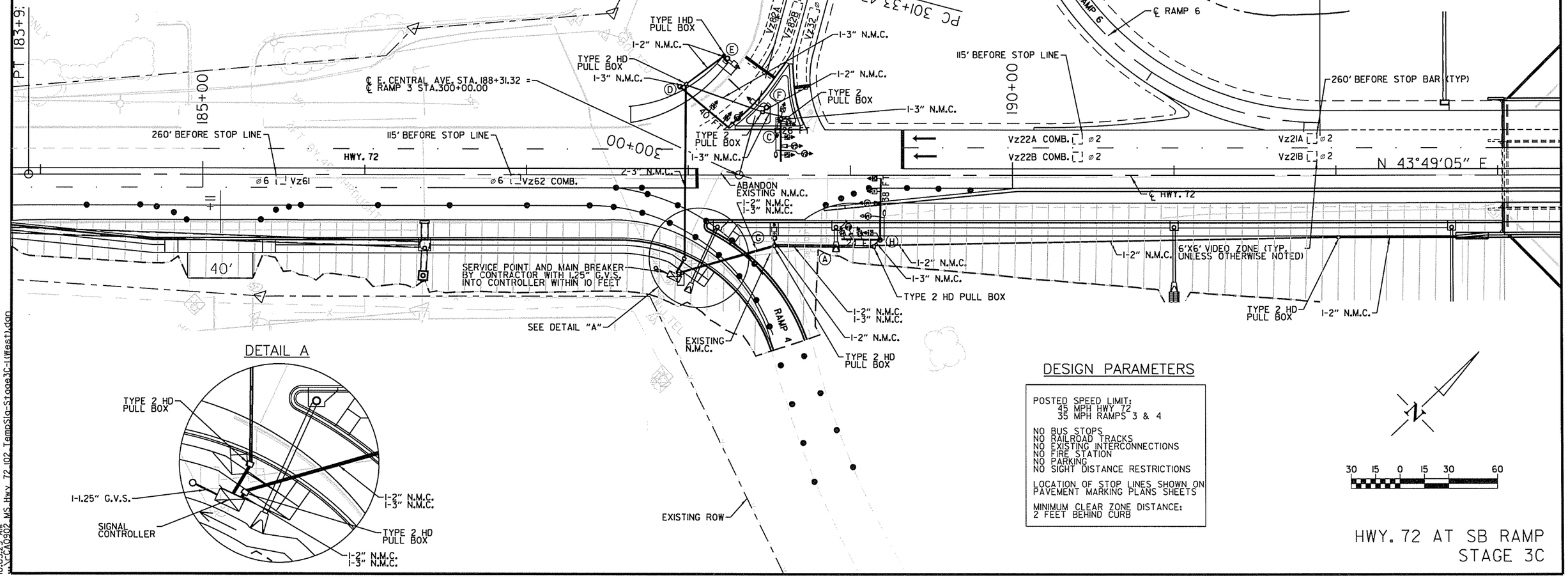

DETAIL A

DESIGN PARAMETERS

POSTED SPEED LIMIT:
45 MPH HWY 72
35 MPH RAMPS 3 & 4

NO BUS STOPS
NO RAILROAD TRACKS
NO EXISTING INTERCONNECTIONS
NO FIRE STATION
NO PARKING
NO SIGHT DISTANCE RESTRICTIONS

LOCATION OF STOP LINES SHOWN ON PAVEMENT MARKING PLANS SHEETS

MINIMUM CLEAR ZONE DISTANCE:
2 FEET BEHIND CURB

30 15 0 15 30 60

HWY. 72 AT SB RAMP
STAGE 3C

5/16/2016
8:02:27 AM
CA0902_MS_Hwy_72_102_TempSig-Stage3C-1(West1).dgn

STATE OF ARKANSAS
REGISTERED PROFESSIONAL ENGINEER
No. 8760
ANDREW E. FRIES
5/16/16

DATE	DATE FILMED	DATE REVISED	DATE FILMED	FED.RD. DIST.NO.	STATE	FED.AID PROJ.NO.	SHEET NO.	TOTAL SHEETS
				6	ARK.			
				JOB NO.		CA0902	254	581
				(2)	SIGNALIZATION PLAN (HWY. 72 AT SB RAMP)			

PHASING DIAGRAM

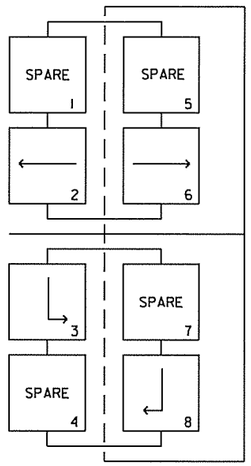

SIGNAL FACES
12" LENSES

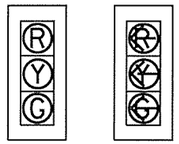

*10,11,12,15,16, 17,18,19 (NEW)

*13,14,20 (NEW)

ONE SECTION SOLID SYMBOL

*21,22,23,24 (NEW) (BAGGED)

LEGEND

- EX. SIGNAL POLE & MAST ARM
- PROP. SIGNAL POLE, MAST ARM, & LUMINAIRE
- TYPE 2 PULL BOX
- TYPE 1 PULL BOX
- SIGNAL HEAD
- VIDEO DETECTOR
- NMC - NON- METALLIC CONDUIT
- STAGE 3C

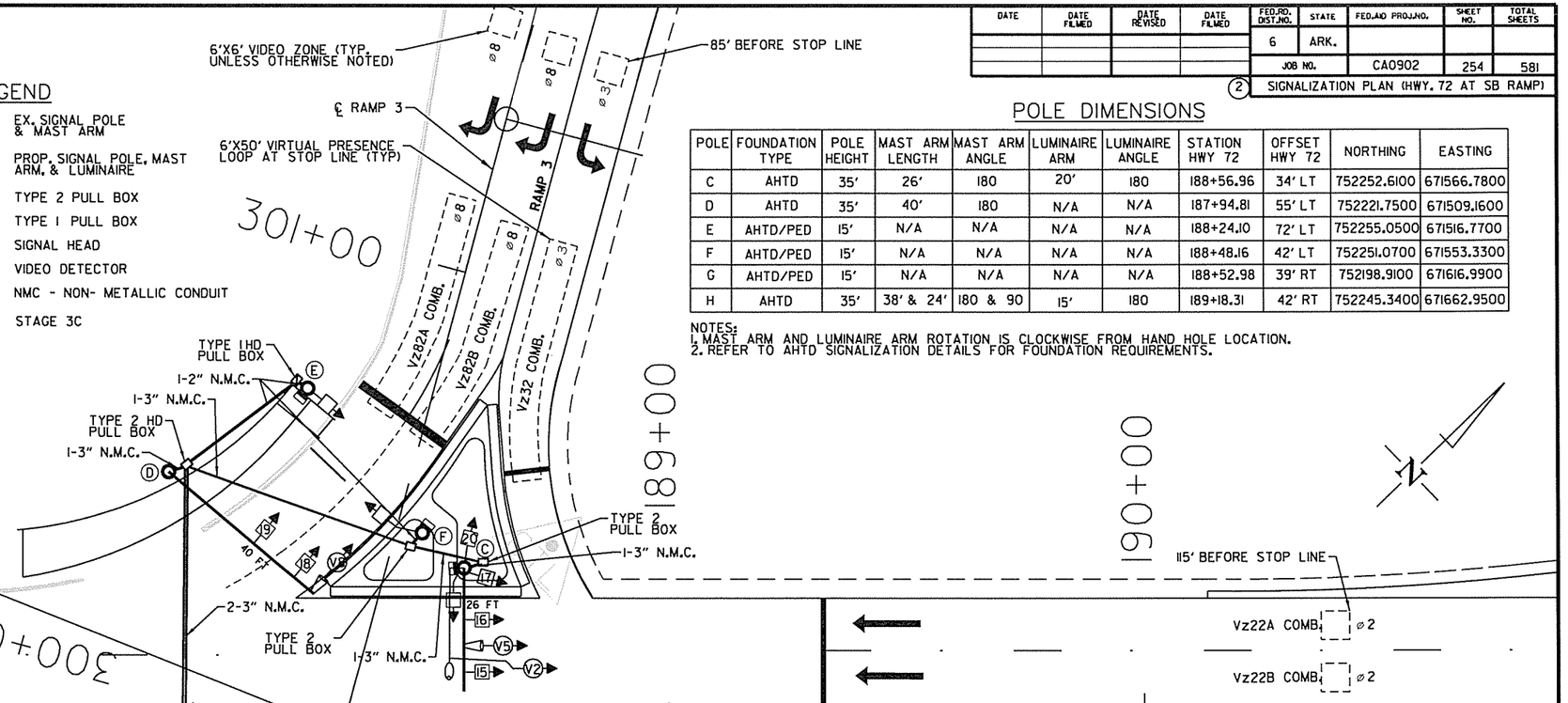

POLE DIMENSIONS

POLE	FOUNDATION TYPE	POLE HEIGHT	MAST ARM LENGTH	MAST ARM ANGLE	LUMINAIRE ARM	LUMINAIRE ANGLE	STATION HWY 72	OFFSET HWY 72	NORTHING	EASTING
C	AHTD	35'	26'	180	20'	180	188+56.96	34' LT	752252.6100	671566.7800
D	AHTD	35'	40'	180	N/A	N/A	187+94.81	55' LT	752221.7500	671509.1600
E	AHTD/PED	15'	N/A	N/A	N/A	N/A	188+24.10	72' LT	752255.0500	671516.7700
F	AHTD/PED	15'	N/A	N/A	N/A	N/A	188+48.16	42' LT	752251.0700	671553.3300
G	AHTD/PED	15'	N/A	N/A	N/A	N/A	188+52.98	39' RT	752198.9100	671616.9900
H	AHTD	35'	38' & 24'	180 & 90	15'	180	189+18.31	42' RT	752245.3400	671662.9500

NOTES:
1. MAST ARM AND LUMINAIRE ARM ROTATION IS CLOCKWISE FROM HAND HOLE LOCATION.
2. REFER TO AHTD SIGNALIZATION DETAILS FOR FOUNDATION REQUIREMENTS.

DETAIL A

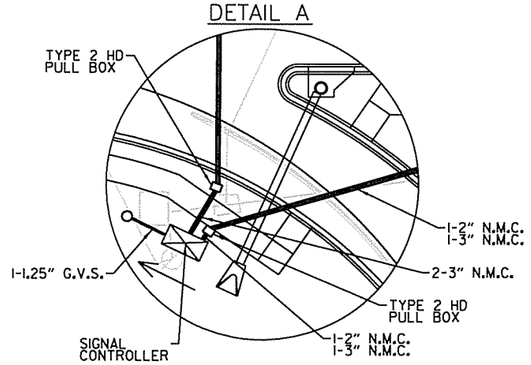

CONSTRUCTION NOTES:

1. PRIOR TO IMPLEMENTATION OF STAGE 3C, CONTRACTOR SHALL INSTALL NEW CONTROLLER, NEW SIGNAL POLES C, D, E, F, G AND H, PULL BOXES, CONDUIT, WIRING, SIGNAL HEADS 10-20, PEDESTRIAN SIGNAL HEADS 21-24, AND VIDEO DETECTORS V1, V2, V3, V5, V6 AND V8.

2. WORK TO TRANSITION SIGNAL CONTROLLER OPERATION TO NEW POLES AND CONTROLLER SHALL TAKE PLACE ON A SUNDAY MORNING BEFORE NOON.

3. EXISTING POLES A AND B, PULL BOXES AND CONTROLLER SHALL BE REMOVED.

4. EXISTING CONDUIT SHALL BE ABANDONED.

5. ADDITIONAL 0.5" NMC FROM CONTROLLER AND POLE TO NEAREST PULL BOX. REFER TO STANDARD DRAWING SD-6 HEAVY DUTY PULL BOX. THE COST OF THE 0.5" NMC IS INCLUDED IN ITEM NO. 701 AND 714 RESPECTIVELY.

6. PRIOR TO IMPLEMENTATION OF FINAL STAGE, SHIFT SIGNAL HEADS 10 AND 11 TO FINAL LOCATION AND ROTATE V1 AND V6. SEE FINAL PLANS.

DESIGN PARAMETERS

POSTED SPEED LIMIT:
45 MPH HWY 72
35 MPH RAMPS 3 & 4

NO BUS STOPS
NO RAILROAD TRACKS
NO EXISTING INTERCONNECTIONS
NO FIRE STATION
NO PARKING
NO SIGHT DISTANCE RESTRICTIONS

LOCATION OF STOP LINES SHOWN ON PAVEMENT MARKING PLANS SHEETS

MINIMUM CLEAR ZONE DISTANCE:
2 FEET BEHIND CURB

15 7.5 0 7.5 15 30

HWY. 72 AT SB RAMP
STAGE 3C

5/16/2016
10:05:37 AM
\\FCA0902_MS_Hwy_72_I02_TempSig-Stage3C-2 (West).dgn

STATE OF ARKANSAS
REGISTERED PROFESSIONAL ENGINEER
No. 8760
ANDREW E. FRIES
5/16/16

DATE	DATE FILMED	DATE REVISED	DATE FILMED	FED.RD. DIST.NO.	STATE	FED.AID PROJ.NO.	SHEET NO.	TOTAL SHEETS
				6	ARK.			
				JOB NO.		CA0902	255	581

(2) SIGNALIZATION PLAN (HWY. 72 AT SB RAMP)

DETECTOR CHART

DETECTOR LOCATION				HARDWARE INPUTS BY SUPPLIER			PROGRAM ASSIGNMENTS			VIDEO DET. TUBE LENGTH	COMMENT
							LOCAL		MSTR. SYS. DET. #		
DETECTOR I.D. #	DIRECTION & LOCATION	TYPE	DET. #	CAB. TRM. #	AMP CHN. #	CON. INP. #	PHS.	SYS. DET. #			
Vz21 A+B	WB FAR	LOCAL			1	V2	2			23"	V2
Vz22 A+B	WB NEAR	COMB.			2	V10	2	2		23"	V5
Vz31	SB LEFT FAR	COMB.			5	V11	3	3		23"	V3
Vz32	SB LEFT NEAR	LOCAL			6	V3	3			23"	V3
Vz61	EB FAR	LOCAL			9	V6	6			23"	V6
Vz62	EB NEAR	COMB.			10	V14	6	6		23"	V1
Vz81 A+B	SB RIGHT FAR	COMB.			7	V16	8	8		23"	V8
Vz82 A+B	SB RIGHT NEAR	LOCAL			8	V8	8			23"	V8

CONTROLLER INPUT ABBREVIATIONS
V = VEHICLE INPUT
D = SYSTEM OR AUXILIARY INPUT
P = PEDESTRIAN INPUT

SPARE AMP CHN. # 3, 4, 11-16

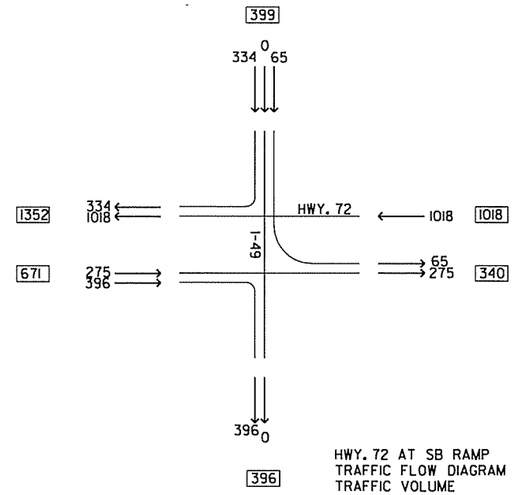

HWY. 72 AT SB RAMP
TRAFFIC FLOW DIAGRAM
TRAFFIC VOLUME
A.M. PEAK HOUR

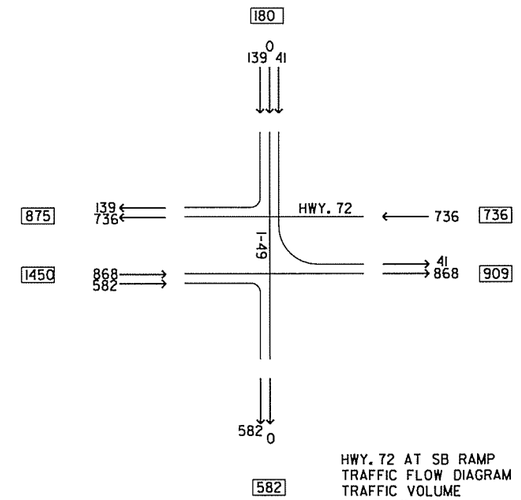

HWY. 72 AT SB RAMP
TRAFFIC FLOW DIAGRAM
TRAFFIC VOLUME
P.M. PEAK HOUR

SIGNAL FACES

12" LENSES

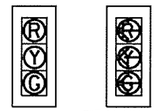

#10,11,12,15,16 17,18,19 (NEW)

#13,14,20 (NEW)

ONE SECTION SOLID SYMBOL

#21 & 22
#23 & 24
(BAGGED)

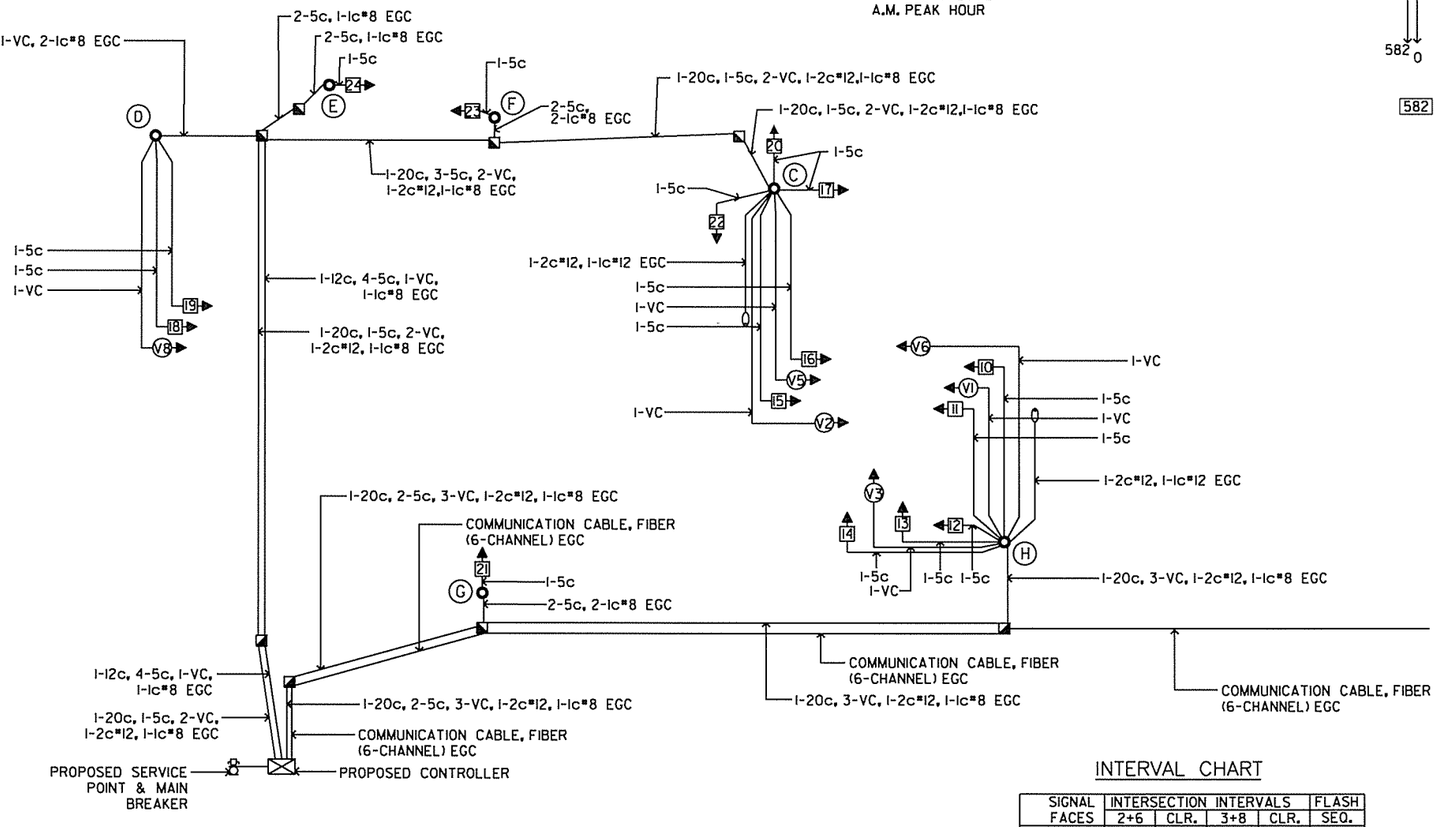

PHASING DIAGRAM

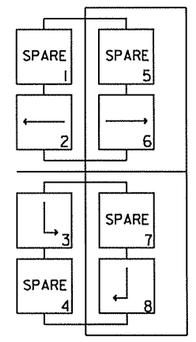

NOTES TO CONTRACTOR

1. RUN SEPARATE 5c/#14 AWG FROM EACH 3 SEC SIGNAL HEAD TO BASE OF POLE.
2. RUN SEPARATE 7c/#14 AWG FROM EACH 4 SEC SIGNAL HEAD TO BASE OF POLE.
3. RUN SEPARATE 5c/#14 AWG TO EACH POLE WITH PEDESTRIAN PUSH BUTTONS
4. ALL DETECTOR RACK CHANNELS, INCLUDING UNUSED, SHALL BE BROUGHT TO TERMINAL STRIP IN DETECTOR AREA OF CABINET.
5. THE LOCAL GOVERNMENT SHALL BE RESPONSIBLE FOR PROVIDING POWER TO THE SERVICE POINT
6. WORK TO TRANSITION SIGNAL CONTROLLER OPERATION TO NEW POLES AND/OR CONTROLLER SHALL TAKE PLACE ON A SUNDAY MORNING BEFORE NOON.
7. ADDITIONAL 1-1c#8EGC FROM CONTROLLER AND POLE TO NEAREST PULL BOX. THE COST OF THE 1-1c#8EGC IS INCLUDED IN ITEM NO. 701, 714 OR 715 RESPECTIVELY. FOR DETAILS, SEE GROUNDING ARRAY DIAGRAM SHEET.

WIRING DIAGRAM
STAGE 3C

INTERVAL CHART

SIGNAL FACES	INTERSECTION INTERVALS 2+6	CLR.	3+8	CLR.	FLASH SEQ.
10,11,+12	G	Y	R	R	R
13+14	~~G~~	~~Y~~	~~G~~	~~Y~~	~~R~~
15,16,+17	G	Y	R	R	R
18+19	R	R	G	Y	R
20	~~G~~	~~Y~~	~~G~~	~~Y~~	~~R~~
21+22	B	B	B	B	B
23+24	B	B	B	B	B

• DENOTES GREEN OR YELLOW ARROW DEPENDING ON NEXT PHASE
•• DENOTES YELLOW BALL OR YELLOW ARROW DEPENDING ON NEXT PHASE
••• DENOTES YELLOW OR FLASHING YELLOW ARROW DEPENDING ON NEXT PHASE

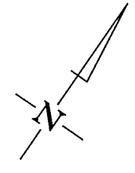

HWY. 72 AT SB RAMP
STAGE 3C

5/16/2016
10:05:25 AM
V:\CA0902 MS Hwy 72 102 TempSig-Stage3C-3 (West)

STATE OF ARKANSAS
REGISTERED PROFESSIONAL ENGINEER
No. 8760
ANDREW E. FRIES
5/16/16

DATE	DATE FILMED	DATE REVISED	DATE FILMED	FED.RD. DIST.NO.	STATE	FED.AID PROJ.NO.	SHEET NO.	TOTAL SHEETS
				6	ARK.			
				JOB NO.		CA0902	256	581

(2) SIGNALIZATION PLAN (HWY. 72 AT SB RAMP)

PHASING DIAGRAM

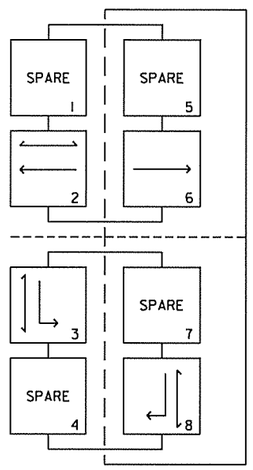

SIGNAL FACES

12" LENSES

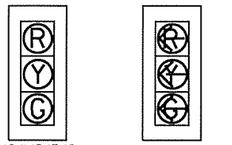

*10,11,12,15,16, 17,18,19 (NEW)

*13,14,20 (NEW)

ONE SECTION SOLID SYMBOL

*21,22,23,24 (NEW)

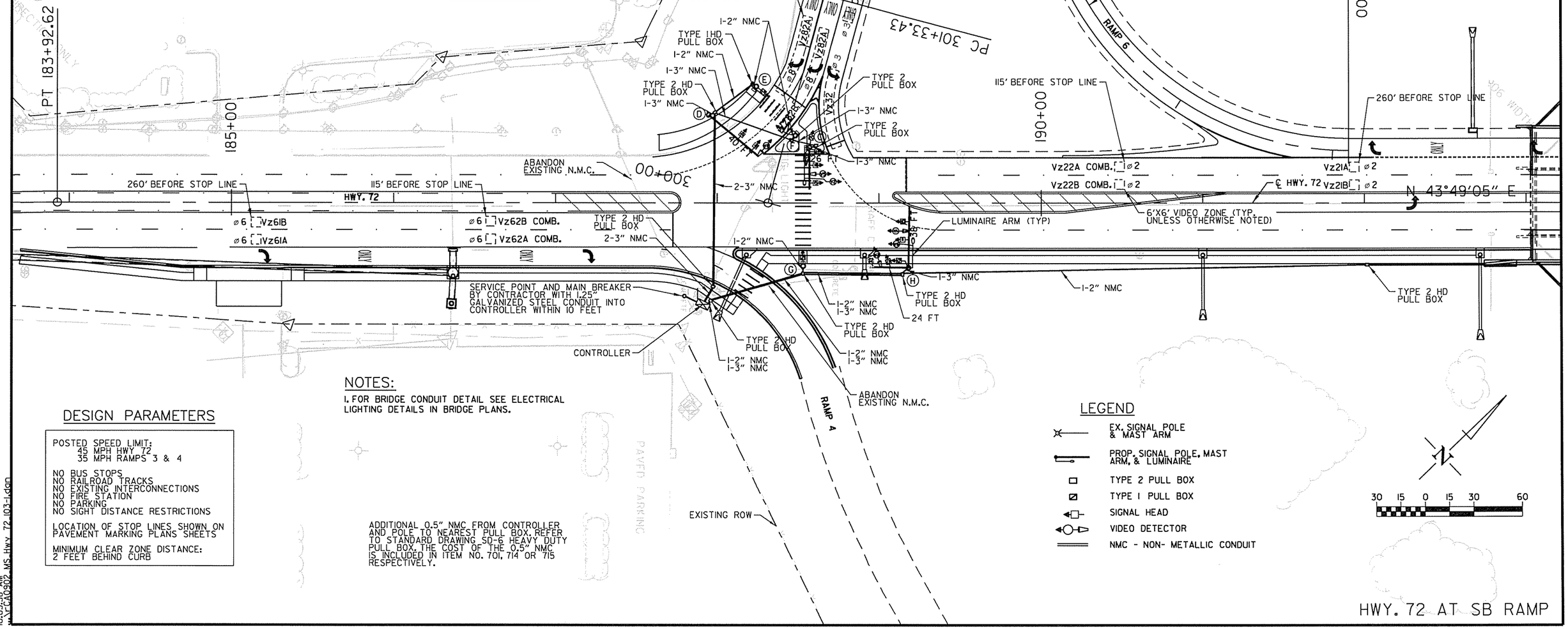

NOTES:

1. FOR BRIDGE CONDUIT DETAIL SEE ELECTRICAL LIGHTING DETAILS IN BRIDGE PLANS.

ADDITIONAL 0.5" NMC FROM CONTROLLER AND POLE TO NEAREST PULL BOX. REFER TO STANDARD DRAWING SD-6 HEAVY DUTY PULL BOX. THE COST OF THE 0.5" NMC IS INCLUDED IN ITEM NO. 701, 714 OR 715 RESPECTIVELY.

DESIGN PARAMETERS

POSTED SPEED LIMIT:
45 MPH HWY 72
35 MPH RAMPS 3 & 4

NO BUS STOPS
NO RAILROAD TRACKS
NO EXISTING INTERCONNECTIONS
NO FIRE STATION
NO PARKING
NO SIGHT DISTANCE RESTRICTIONS

LOCATION OF STOP LINES SHOWN ON PAVEMENT MARKING PLANS SHEETS

MINIMUM CLEAR ZONE DISTANCE:
2 FEET BEHIND CURB

LEGEND

- EX. SIGNAL POLE & MAST ARM
- PROP. SIGNAL POLE, MAST ARM, & LUMINAIRE
- TYPE 2 PULL BOX
- TYPE 1 PULL BOX
- SIGNAL HEAD
- VIDEO DETECTOR
- NMC - NON- METALLIC CONDUIT

30 15 0 15 30 60

HWY. 72 AT SB RAMP

5/16/2016
10:07:58 AM
\\CA0902 MS Hwy 72 103-1.dgn

STATE OF ARKANSAS
REGISTERED PROFESSIONAL ENGINEER
No. 8760
ANDREW E. FRIES
5/16/16

DATE	DATE FILMED	DATE REVISED	DATE FILMED	FED.RD. DIST.NO.	STATE	FED.AID PROJ.NO.	SHEET NO.	TOTAL SHEETS
				6	ARK.			
				JOB NO.		CA0902	257	581
				2	SIGNALIZATION PLAN (HWY. 72 AT SB RAMP)			

SIGNAL FACES
12" LENSES

*10,11,12,15,16 17,18,19 (NEW)

*13,14,20 (NEW)

ONE SECTION SOLID SYMBOL

*21,22,23,24 (NEW)

PHASING DIAGRAM

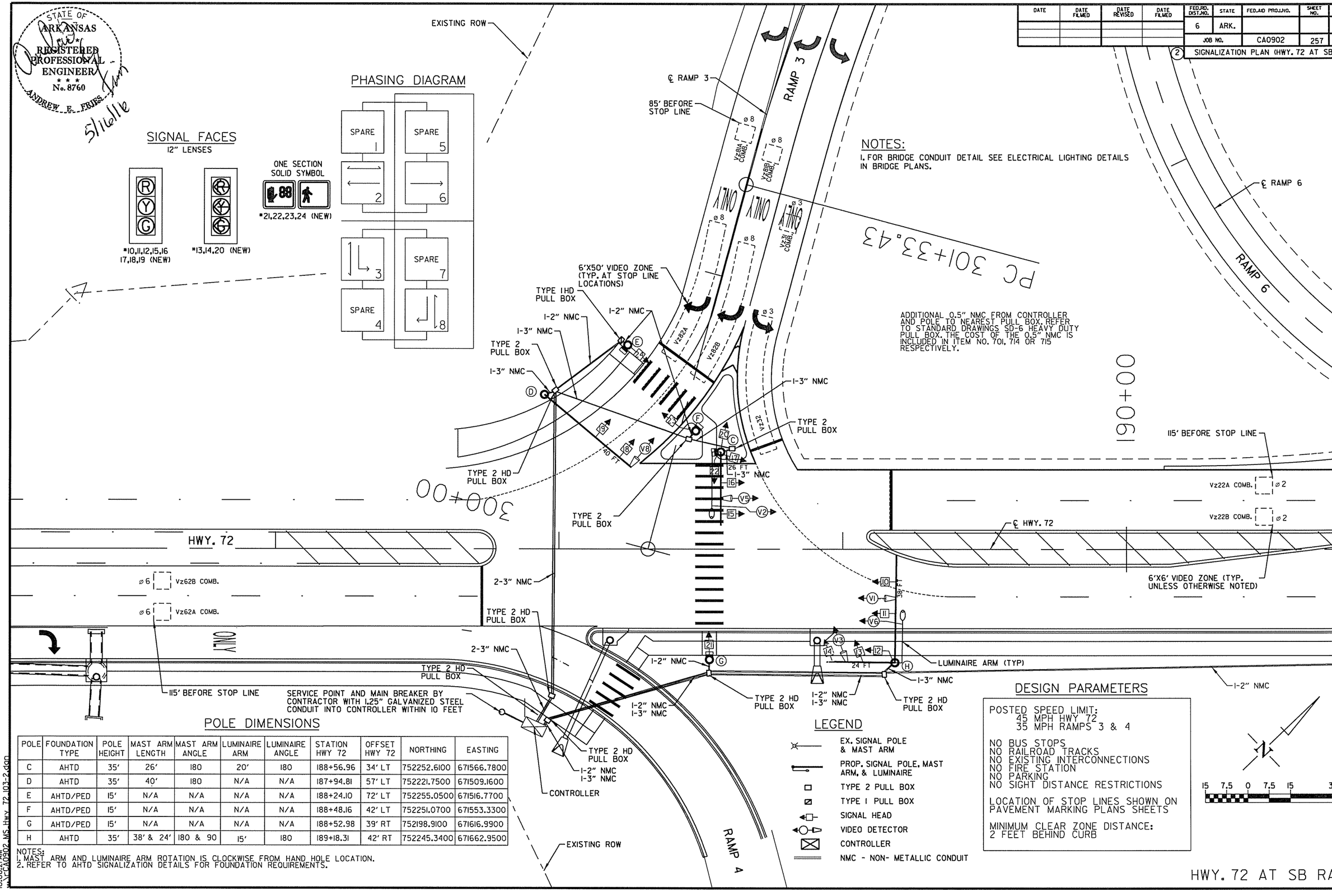

NOTES:
1. FOR BRIDGE CONDUIT DETAIL SEE ELECTRICAL LIGHTING DETAILS IN BRIDGE PLANS.

ADDITIONAL 0.5" NMC FROM CONTROLLER AND POLE TO NEAREST PULL BOX. REFER TO STANDARD DRAWINGS SD-6 HEAVY DUTY PULL BOX. THE COST OF THE 0.5" NMC IS INCLUDED IN ITEM NO. 701, 714 OR 715 RESPECTIVELY.

POLE DIMENSIONS

POLE	FOUNDATION TYPE	POLE HEIGHT	MAST ARM LENGTH	MAST ARM ANGLE	LUMINAIRE ARM	LUMINAIRE ANGLE	STATION HWY 72	OFFSET HWY 72	NORTHING	EASTING
C	AHTD	35'	26'	180	20'	180	188+56.96	34' LT	752252.6100	671566.7800
D	AHTD	35'	40'	180	N/A	N/A	187+94.81	57' LT	752221.7500	671509.1600
E	AHTD/PED	15'	N/A	N/A	N/A	N/A	188+24.10	72' LT	752255.0500	671516.7700
F	AHTD/PED	15'	N/A	N/A	N/A	N/A	188+48.16	42' LT	752251.0700	671553.3300
G	AHTD/PED	15'	N/A	N/A	N/A	N/A	188+52.98	39' RT	752198.9100	671616.9900
H	AHTD	35'	38' & 24'	180 & 90	15'	180	189+18.31	42' RT	752245.3400	671662.9500

NOTES:
1. MAST ARM AND LUMINAIRE ARM ROTATION IS CLOCKWISE FROM HAND HOLE LOCATION.
2. REFER TO AHTD SIGNALIZATION DETAILS FOR FOUNDATION REQUIREMENTS.

LEGEND

- EX. SIGNAL POLE & MAST ARM
- PROP. SIGNAL POLE, MAST ARM, & LUMINAIRE
- TYPE 2 PULL BOX
- TYPE 1 PULL BOX
- SIGNAL HEAD
- VIDEO DETECTOR
- CONTROLLER
- NMC - NON- METALLIC CONDUIT

DESIGN PARAMETERS

POSTED SPEED LIMIT:
45 MPH HWY 72
35 MPH RAMPS 3 & 4

NO BUS STOPS
NO RAILROAD TRACKS
NO EXISTING INTERCONNECTIONS
NO FIRE STATION
NO PARKING
NO SIGHT DISTANCE RESTRICTIONS

LOCATION OF STOP LINES SHOWN ON PAVEMENT MARKING PLANS SHEETS

MINIMUM CLEAR ZONE DISTANCE:
2 FEET BEHIND CURB

15 7.5 0 7.5 15 30

5/16/2016
10:06:21 AM
CA0902_MS_Hwy_72_103-2.dgn

HWY. 72 AT SB RAMP

STATE OF ARKANSAS
REGISTERED PROFESSIONAL ENGINEER
No. 8760
ANDREW E. FRIES
5/16/16

DATE	DATE FILMED	DATE REVISED	DATE FILMED	FED.RD. DIST.NO.	STATE	FED.AID PROJ.NO.	SHEET NO.	TOTAL SHEETS
				6	ARK.			
				JOB NO.		CA0902	258	581

(2) SIGNALIZATION PLANS (HWY. 72 AT SB RAMP)

DETECTOR CHART

DETECTOR LOCATION				HARDWARE INPUTS BY SUPPLIER			PROGRAM ASSIGNMENTS			VIDEO DET. TUBE LENGTH	COMMENT
							LOCAL		MSTR.		
DETECTOR I.D. #	DIRECTION & LOCATION	TYPE	DET. #	CAB. TRM. #	AMP CHN. #	CON. INP. #	PHS.	SYS. DET. #	SYS. DET. #		
Vz21 A+B	WB FAR	LOCAL			1	V2	2			23″	V2
Vz22 A+B	WB NEAR	COMB.			2	V10	2	2		23″	V5
Vz31	SB LEFT FAR	COMB.			5	V11	3	3		23″	V3
Vz32	SB LEFT NEAR	LOCAL			6	V3	3			23″	V3
Vz61 A+B	EB FAR	LOCAL			9	V6	6			23″	V6
Vz62 A+B	EB NEAR	COMB.			10	V14	6	6		23″	V1
Vz81 A+B	SB RIGHT FAR	COMB.			7	V16	8	8		23″	V8
Vz82 A+B	SB RIGHT NEAR	LOCAL			8	V8	8			23″	V8

CONTROLLER INPUT ABBREVIATIONS
V = VEHICLE INPUT
D = SYSTEM OR AUXILIARY INPUT
P = PEDESTRIAN INPUT

SPARE AMP CHN. #= 3, 4, 11-16

SIGNAL FACES
12" LENSES

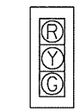

#10,11,12,15,16 17,18,19 (NEW)

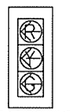

#13,14,20 (NEW)

ONE SECTION SOLID SYMBOL

#21,22,23,24 (NEW)

PHASING DIAGRAM

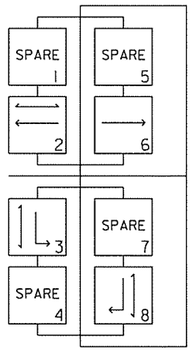

INTERVAL CHART

SIGNAL FACES	INTERSECTION INTERVALS 2+6	CLR.	3+8	CLR.	FLASH SEQ.
10,11,+12	G	Y	R	R	R
13+14	~~R~~	~~R~~	~~G~~	~~Y~~	~~R~~
15,16,+17	G	Y	R	R	R
18+19	R	R	G	Y	R
20	~~R~~	~~R~~	~~G~~	~~Y~~	~~R~~
21+22	DW	DW	W	FDW	B
23+24	W	FDW	DW	DW	B

• DENOTES GREEN OR YELLOW ARROW DEPENDING ON NEXT PHASE
•• DENOTES YELLOW BALL OR YELLOW ARROW DEPENDING ON NEXT PHASE
••• DENOTES YELLOW OR FLASHING YELLOW ARROW DEPENDING ON NEXT PHASE

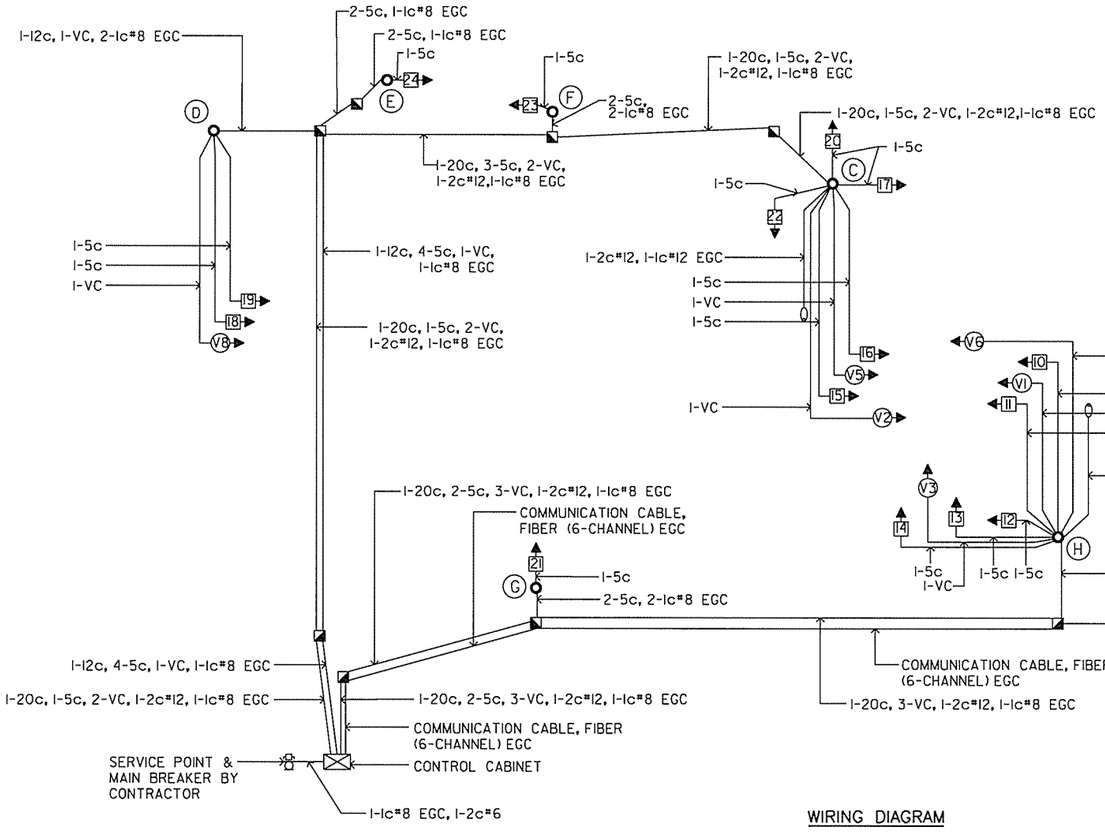

WIRING DIAGRAM

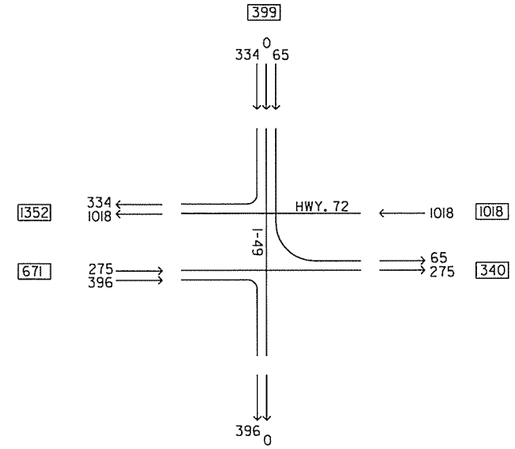

HWY. 72 AT SB RAMP
TRAFFIC FLOW DIAGRAM
TRAFFIC VOLUME
A.M. PEAK HOUR

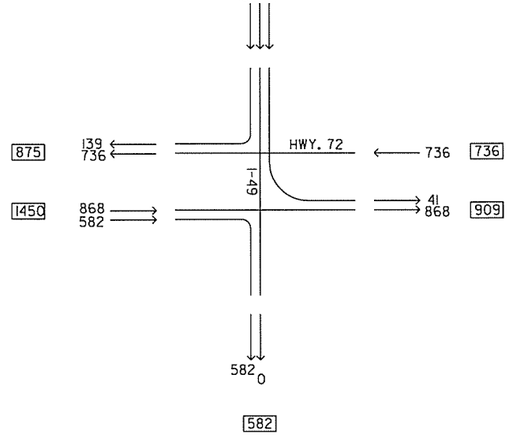

HWY. 72 AT SB RAMP
TRAFFIC FLOW DIAGRAM
TRAFFIC VOLUME
P.M. PEAK HOUR

NOTES TO CONTRACTOR

1. SEPARATE 5c/#14 AWG FROM EACH 3 SEC SIGNAL HEAD TO BASE OF POLE.
2. SEPARATE 7c/#14 AWG FROM EACH 4 SEC SIGNAL HEAD TO BASE OF POLE
3. ALL DETECTOR RACK CHANNELS, INCLUDING UNUSED, SHALL BE BROUGHT TO TERMINAL STRIP IN DETECTOR AREA ON CABINET.
4. THE LOCAL GOV'T SHALL BE RESPONSIBLE FOR PROVIDING POWER TO THE SERVICE POINT.
5. ADDITIONAL 1-Ic#8EGC FROM CONTROLLER AND POLE TO NEAREST PULL BOX. THE COST OF THE 1-Ic#8EGC IS INCLUDED IN ITEM NO. 701, 714 OR 715 RESPECTIVELY. FOR DETAILS, SEE GROUNDING ARRAY DIAGRAM SHEET.

5/16/2016
10:06:22 AM
\\SIG\T-CA0902_MS_Hwy_72.105

HWY. 72 AT SB RAMP

STATE OF ARKANSAS
REGISTERED PROFESSIONAL ENGINEER
No. 8760
ANDREW E. FRIES
5/16/16

DATE	DATE FILMED	DATE REVISED	DATE FILMED	FED.RD. DIST.NO.	STATE	FED.AID PROJ.NO.	SHEET NO.	TOTAL SHEETS
				6	ARK.			
				JOB NO.		CA0902	259	581

(2) SIGNALIZATION PLAN (HWY. 62 AT SB RAMP)

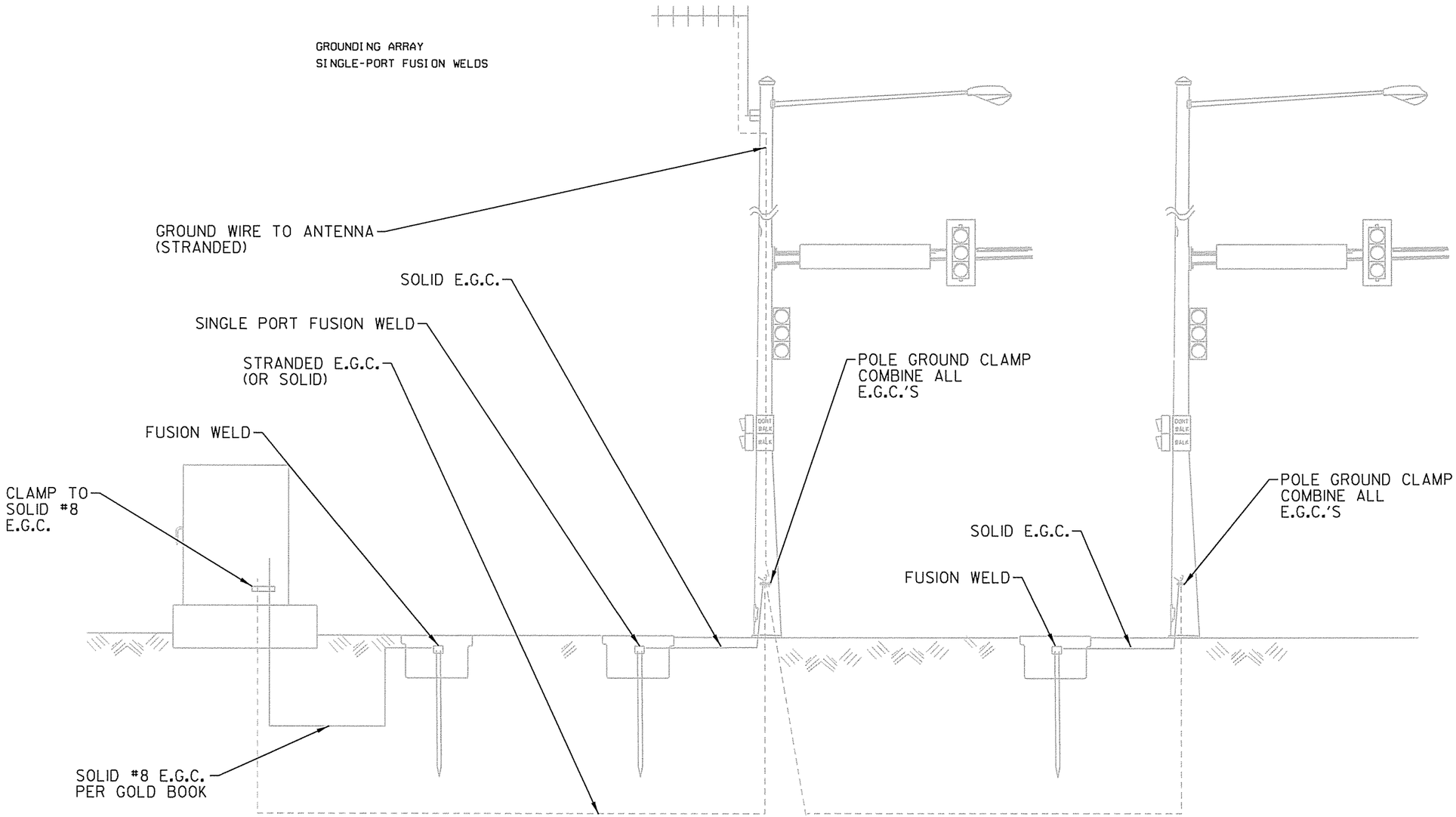

TRAFFIC SIGNAL GROUNDING DETAIL

5/16/2016
10:06:24 AM
\\FCA0902_MS_Hwy_72_I02Traffic_SignalGroundIng_Detail(West).dgn

HWY. 72 AT SB RAMP

STATE OF ARKANSAS
REGISTERED PROFESSIONAL ENGINEER
No. 8760
ANDREW E. FRIES
5/16/16

DATE	DATE FILMED	DATE REVISED	DATE FILMED	FED.RD. DIST.NO.	STATE	FED.AID PROJ.NO.	SHEET NO.	TOTAL SHEETS
				6	ARK.			
				JOB NO.		CA0902	260	581

(2) SIGNALIZATION PLAN (HWY. 72 AT NB RAMP)

SIGNAL FACES
12" LENSES

#1,2,4,5,6,7 (EXISTING)

#3 (EXISTING)

LEGEND

- EX. SIGNAL POLE & MAST ARM
- PROP. SIGNAL POLE, MAST ARM, & LUMINAIRE
- TYPE 2 PULL BOX
- TYPE 1 PULL BOX
- SIGNAL HEAD
- VIDEO DETECTOR
- NMC - NON- METALLIC CONDUIT
- STAGE 3A

PHASING DIAGRAM

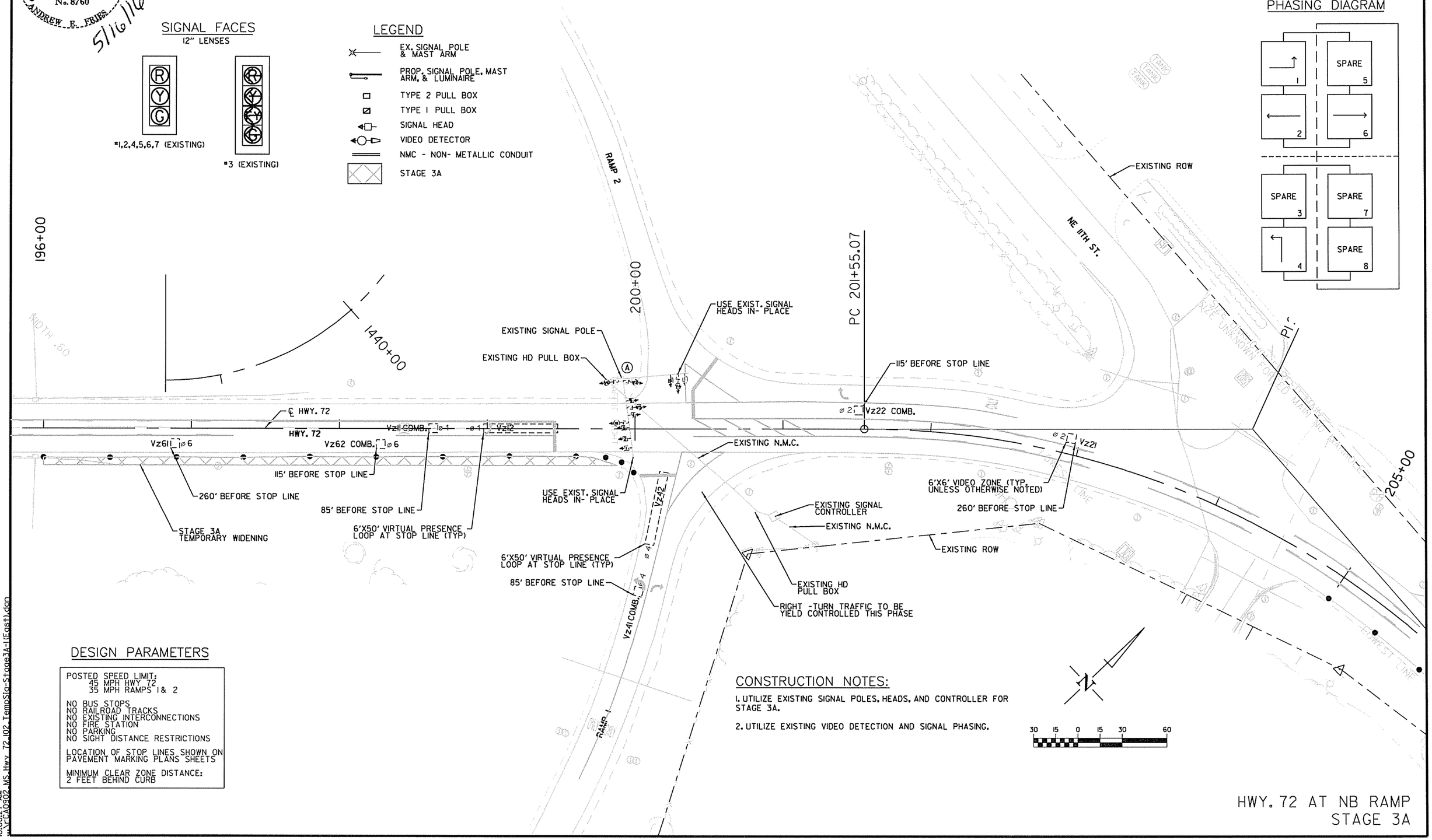

DESIGN PARAMETERS

POSTED SPEED LIMIT:
45 MPH HWY 72
35 MPH RAMPS 1& 2

NO BUS STOPS
NO RAILROAD TRACKS
NO EXISTING INTERCONNECTIONS
NO FIRE STATION
NO PARKING
NO SIGHT DISTANCE RESTRICTIONS

LOCATION OF STOP LINES SHOWN ON PAVEMENT MARKING PLANS SHEETS

MINIMUM CLEAR ZONE DISTANCE:
2 FEET BEHIND CURB

CONSTRUCTION NOTES:

1. UTILIZE EXISTING SIGNAL POLES, HEADS, AND CONTROLLER FOR STAGE 3A.

2. UTILIZE EXISTING VIDEO DETECTION AND SIGNAL PHASING.

HWY. 72 AT NB RAMP
STAGE 3A

5/16/2016
10:06:27 AM
V:\CA0902_MS_Hwy_72_102_Temp\Sig-Stage3A-1(East).dgn

STATE OF ARKANSAS
REGISTERED PROFESSIONAL ENGINEER
No. 8760
ANDREW E. FRIES
5/16/16

DATE	DATE FILMED	DATE REVISED	DATE FILMED	FED.RD. DIST.NO.	STATE	FED.AID PROJ.NO.	SHEET NO.	TOTAL SHEETS
				6	ARK.			
				JOB NO.		CA0902	261	581

(2) SIGNALIZATION PLAN (HWY. 72 AT NB RAMP)

SIGNAL FACES
12" LENSES

#1,2,4,5,6,7 (EXISTING)

#3 (EXISTING)

PHASING DIAGRAM

LEGEND

- EX. SIGNAL POLE & MAST ARM
- PROP. SIGNAL POLE, MAST ARM, & LUMINAIRE
- TYPE 2 PULL BOX
- TYPE 1 PULL BOX
- SIGNAL HEAD
- VIDEO DETECTOR
- NMC - NON- METALLIC CONDUIT
- STAGE 3A

DESIGN PARAMETERS

POSTED SPEED LIMIT:
45 MPH HWY 72
35 MPH RAMPS 1& 2

NO BUS STOPS
NO RAILROAD TRACKS
NO EXISTING INTERCONNECTIONS
NO FIRE STATION
NO PARKING
NO SIGHT DISTANCE RESTRICTIONS

LOCATION OF STOP LINES SHOWN ON PAVEMENT MARKING PLANS SHEETS

MINIMUM CLEAR ZONE DISTANCE:
2 FEET BEHIND CURB

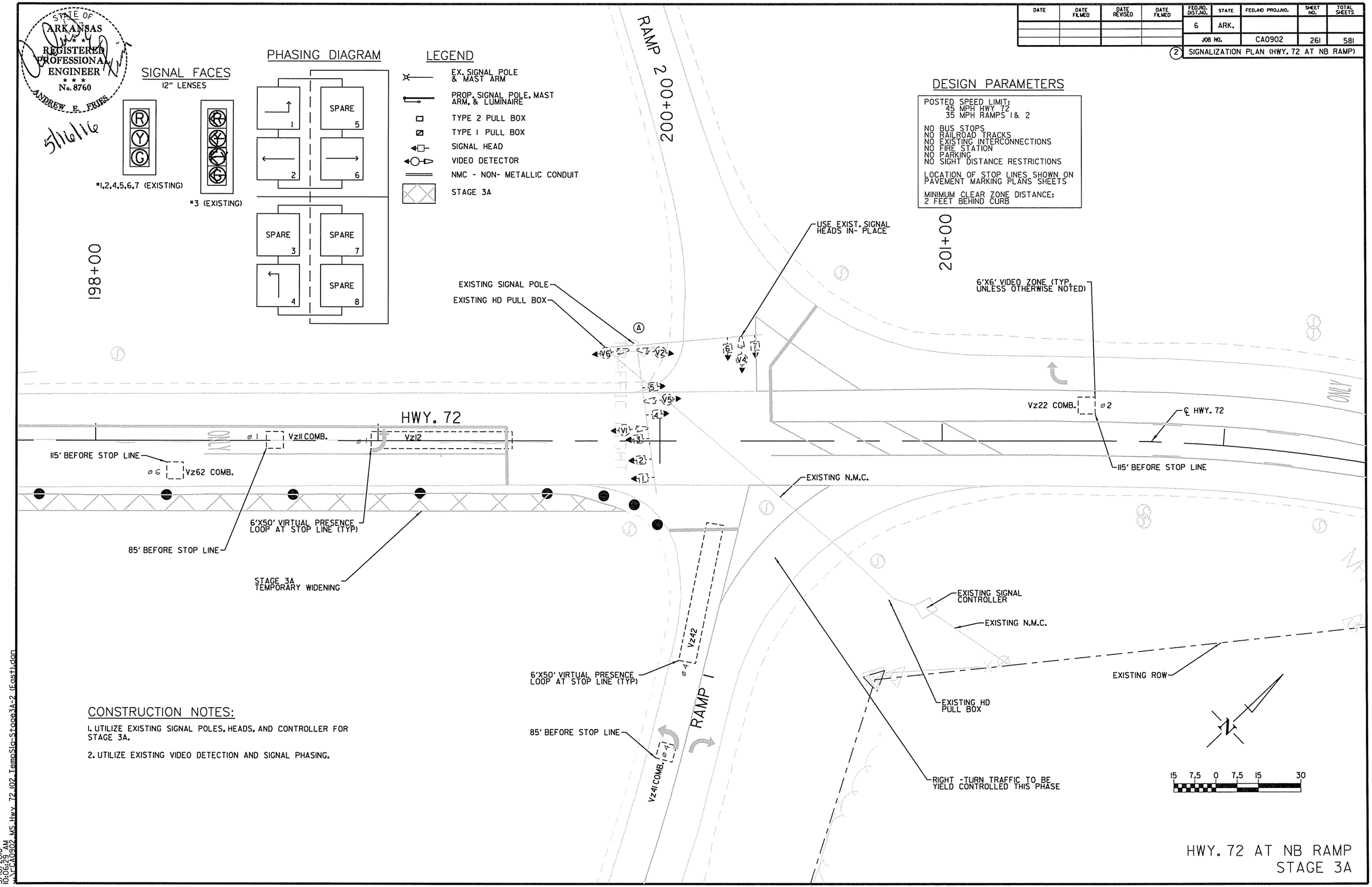

CONSTRUCTION NOTES:

1. UTILIZE EXISTING SIGNAL POLES, HEADS, AND CONTROLLER FOR STAGE 3A.

2. UTILIZE EXISTING VIDEO DETECTION AND SIGNAL PHASING.

HWY. 72 AT NB RAMP
STAGE 3A

5/16/2016
10:16:39 AM
V:\CA0902_MS_Hwy_72_102_Tempsig-Stage3A-2_(East).dgn

STATE OF ARKANSAS
REGISTERED PROFESSIONAL ENGINEER
No. 8760
ANDREW E. FRIES
5/16/16

DATE	DATE FILMED	DATE REVISED	DATE FILMED	FED.RD. DIST.NO.	STATE	FED.AID PROJ.NO.	SHEET NO.	TOTAL SHEETS
				6	ARK.			
				JOB NO.		CA0902	262	581

(2) SIGNALIZATION PLAN (HWY. 72 AT NB RAMP)

DETECTOR CHART

DETECTOR LOCATION				HARDWARE INPUTS BY SUPPLIER			PROGRAM ASSIGNMENTS			VIDEO DET. TUBE LENGTH	COMMENT
							LOCAL		MSTR. SYS. DET. #		
DETECTOR I.D. #	DIRECTION & LOCATION	TYPE	DET. #	CAB. TRM. #	AMP CHN. #	CON. INP. #	PHS.	SYS. DET. #			
Vz11	EB LEFT FAR	COMB.			1	V9	1	1		23"	VI
Vz12	EB LEFT NEAR	LOCAL			2	VI	1			23"	VI
Vz21	WB FAR	LOCAL			5	V2	2			23"	V2
Vz22	WB NEAR	COMB.			6	V10	2	2		23"	V5
Vz41	NB FAR	COMB.			9	VI2	4	4		23"	V4
Vz42	NB NEAR	LOCAL			10	V4	4			23"	V4
Vz61	EB FAR	LOCAL			3	V6	6			23"	V6
Vz62	EB NEAR	COMB.			4	VI4	6	6		23"	VI

SPARE AMP CHN. #= 7, 8, 11-16

CONTROLLER INPUT ABBREVIATIONS
V = VEHICLE INPUT
D = SYSTEM OR AUXILIARY INPUT
P = PEDESTRIAN INPUT

PHASING DIAGRAM

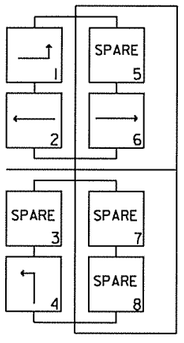

SIGNAL FACES
12" LENSES

#1,2,4,5,6,7 (EXISTING)

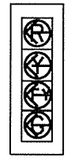

#3 (EXISTING)

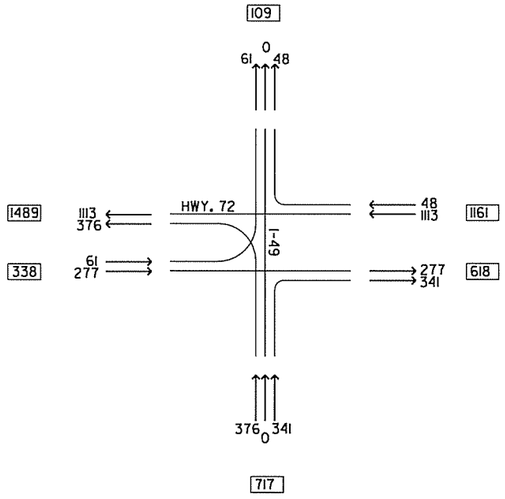

HWY. 72 AT NB RAMP
TRAFFIC FLOW DIAGRAM
TRAFFIC VOLUME
A.M. PEAK HOUR

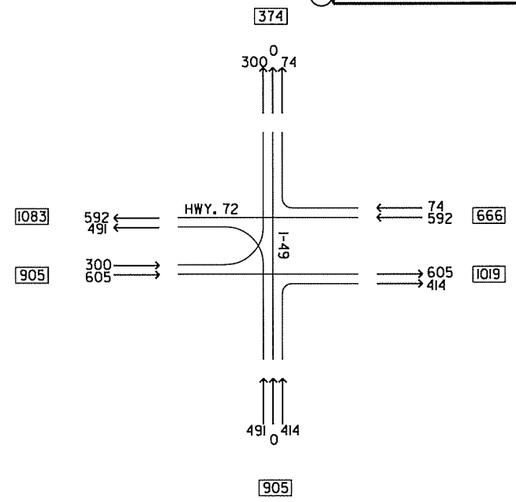

HWY. 72 AT NB RAMP
TRAFFIC FLOW DIAGRAM
TRAFFIC VOLUME
P.M. PEAK HOUR

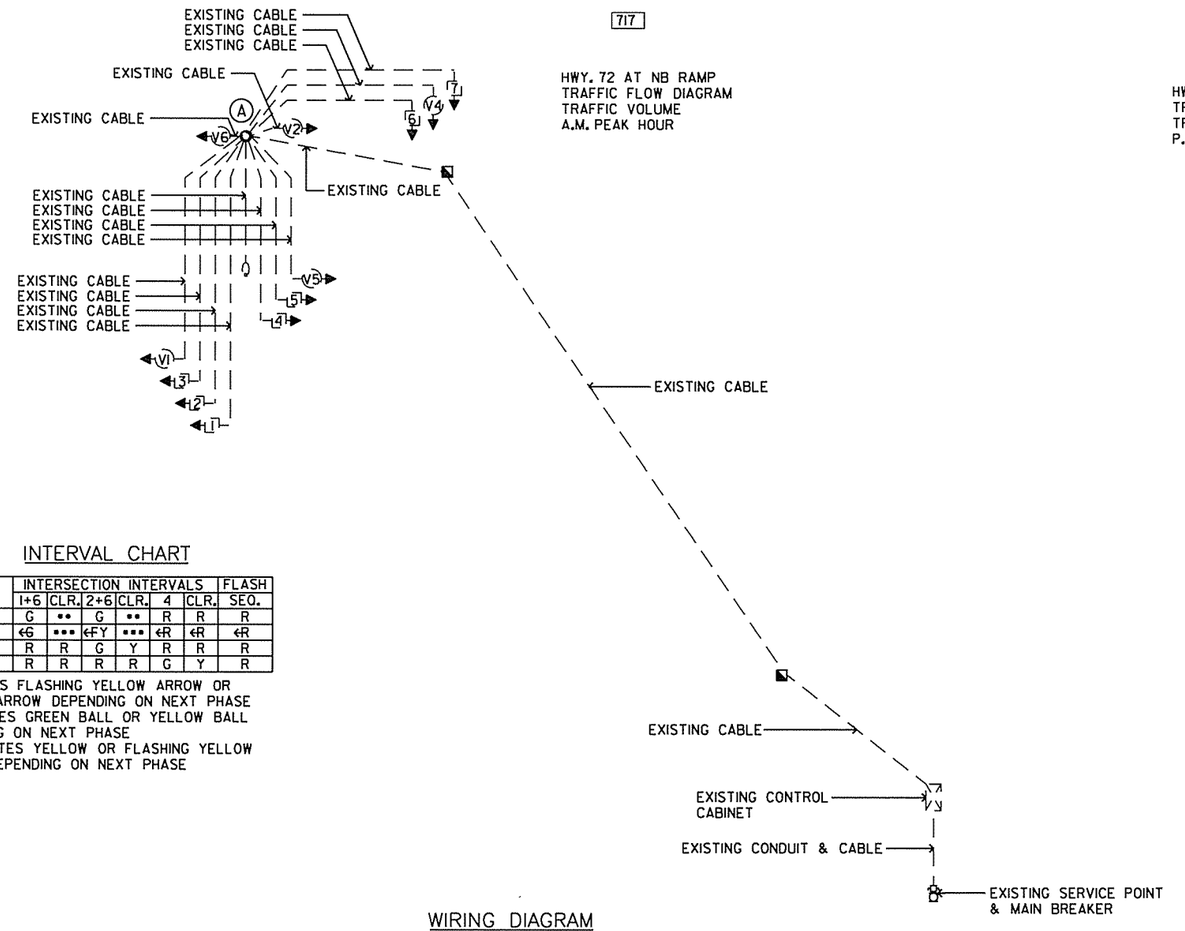

WIRING DIAGRAM
STAGE 3A

NOTES TO CONTRACTOR

1. UTILIZE EXISTING SIGNAL POLES, SIGNAL HEADS AND CONTROLLER FOR STAGE 3A.
2. UTILIZE EXISTING VIDEO DETECTION AND SIGNAL PHASING.

INTERVAL CHART

SIGNAL FACES	INTERSECTION INTERVALS						FLASH
	1+6	CLR.	2+6	CLR.	4	CLR.	SEQ.
1+2	G	••	G	••	R	R	R
3	←G	•••	←FY	•••	←R	←R	←R
4+5	R	R	G	Y	R	R	R
6+7	R	R	R	R	G	Y	R

• DENOTES FLASHING YELLOW ARROW OR YELLOW ARROW DEPENDING ON NEXT PHASE
•• DENOTES GREEN BALL OR YELLOW BALL DEPENDING ON NEXT PHASE
••• DENOTES YELLOW OR FLASHING YELLOW ARROW DEPENDING ON NEXT PHASE

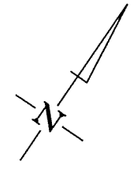

HWY. 72 AT NB RAMP
STAGE 3A

5/16/2016
10:06:30 AM
\\CFA0902_MS_Hwy_72_I02_TempSig-Stage3A-3 (East).dgn

DATE	DATE FILMED	DATE REVISED	DATE FILMED	FED.RD. DIST.NO.	STATE	FED.AID PROJ.NO.	SHEET NO.	TOTAL SHEETS
				6	ARK.			
				JOB NO.		CA0902	263	581

(2) SIGNALIZATION PLAN (HWY. 72 AT NB RAMP)

STATE OF ARKANSAS
REGISTERED PROFESSIONAL ENGINEER
No. 8760
ANDREW E. FRIES
5/16/16

SIGNAL FACES

12" LENSES

LEGEND

- EX. SIGNAL POLE & MAST ARM
- PROP. SIGNAL POLE, MAST ARM, & LUMINAIRE
- TYPE 2 PULL BOX
- TYPE 1 PULL BOX
- SIGNAL HEAD
- VIDEO DETECTOR
- NMC - NON- METALLIC CONDUIT
- STAGE 3B

PHASING DIAGRAM

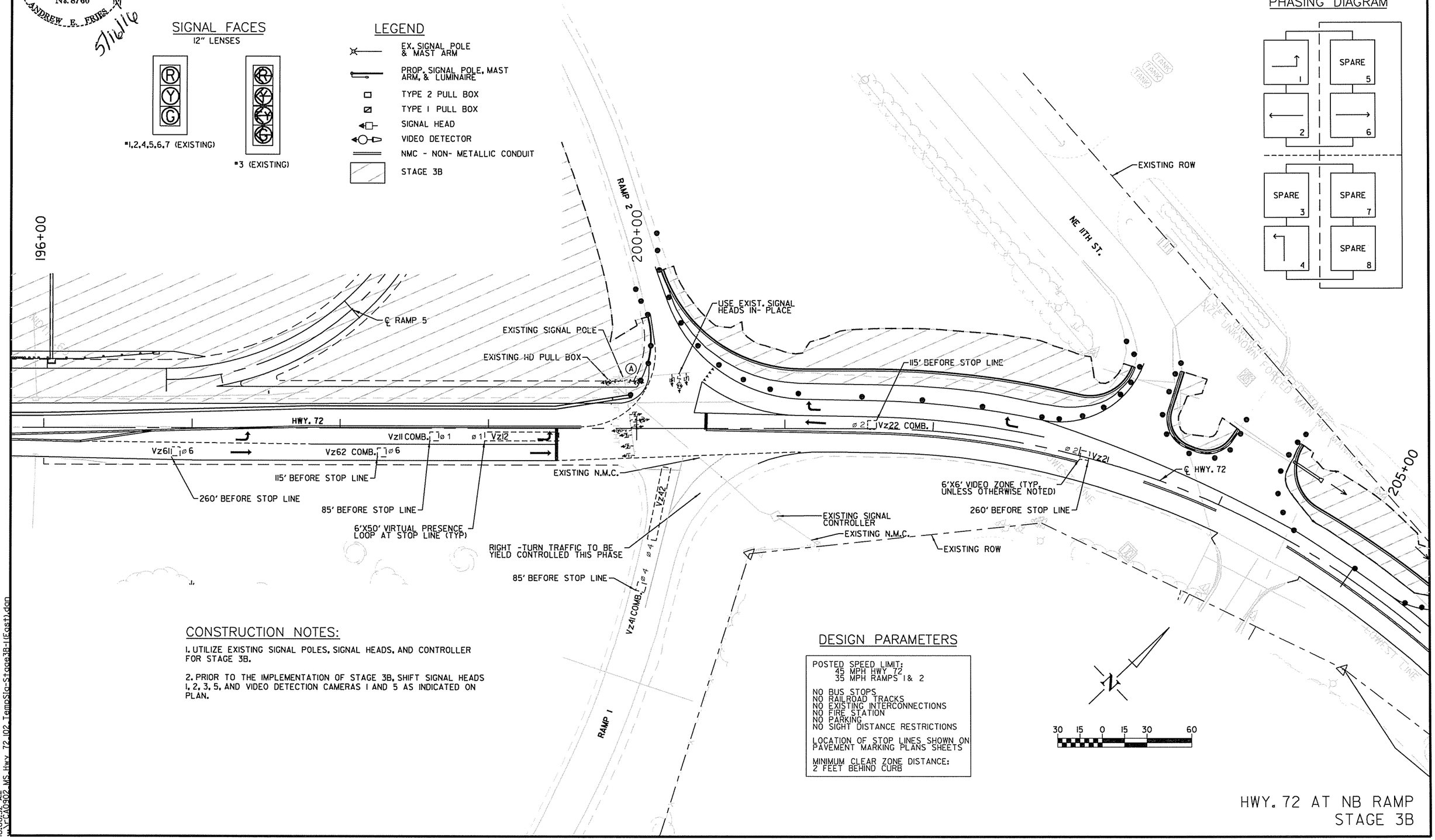

CONSTRUCTION NOTES:

1. UTILIZE EXISTING SIGNAL POLES, SIGNAL HEADS, AND CONTROLLER FOR STAGE 3B.

2. PRIOR TO THE IMPLEMENTATION OF STAGE 3B, SHIFT SIGNAL HEADS 1, 2, 3, 5, AND VIDEO DETECTION CAMERAS 1 AND 5 AS INDICATED ON PLAN.

DESIGN PARAMETERS

POSTED SPEED LIMIT:
45 MPH HWY 72
35 MPH RAMPS 1 & 2

NO BUS STOPS
NO RAILROAD TRACKS
NO EXISTING INTERCONNECTIONS
NO FIRE STATION
NO PARKING
NO SIGHT DISTANCE RESTRICTIONS

LOCATION OF STOP LINES SHOWN ON PAVEMENT MARKING PLANS SHEETS

MINIMUM CLEAR ZONE DISTANCE:
2 FEET BEHIND CURB

HWY. 72 AT NB RAMP
STAGE 3B

5/16/2016
10:06:32 AM
\\CA0902_MS_Hwy_72_102_TempSig-Stage3B-1(East).dgn

STATE OF ARKANSAS
REGISTERED PROFESSIONAL ENGINEER
No. 8760
ANDREW E. FRIES
5/16/16

DATE	DATE FILMED	DATE REVISED	DATE FILMED	FED.RD. DIST.NO.	STATE	FED.AID PROJ.NO.	SHEET NO.	TOTAL SHEETS
				6	ARK.			
				JOB NO.		CA0902	264	581

(2) SIGNALIZATION PLAN (HWY. 72 AT NB RAMP)

PHASING DIAGRAMS

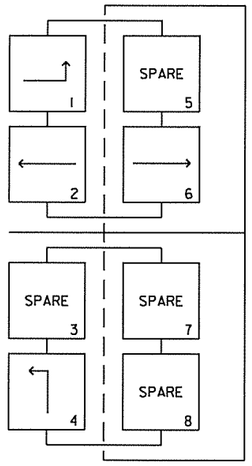

LEGEND

- EX. SIGNAL POLE & MAST ARM
- PROP. SIGNAL POLE, MAST ARM, & LUMINAIRE
- TYPE 2 PULL BOX
- TYPE 1 PULL BOX
- SIGNAL HEAD
- VIDEO DETECTOR
- NMC - NON- METALLIC CONDUIT
- STAGE 3B

SIGNAL FACES

12" LENSES

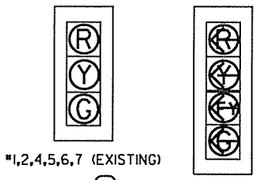

*1,2,4,5,6,7 (EXISTING)

*3 (EXISTING)

198+00

DESIGN PARAMETERS

POSTED SPEED LIMIT:
45 MPH HWY 72
35 MPH RAMPS 1 & 2

NO BUS STOPS
NO RAILROAD TRACKS
NO EXISTING INTERCONNECTIONS
NO FIRE STATION
NO PARKING
NO SIGHT DISTANCE RESTRICTIONS

LOCATION OF STOP LINES SHOWN ON PAVEMENT MARKING PLANS SHEETS

MINIMUM CLEAR ZONE DISTANCE:
2 FEET BEHIND CURB

RAMP 2

200+00

201+00

USE EXIST. SIGNAL HEADS IN- PLACE

EXISTING SIGNAL POLE

EXISTING HD PULL BOX

6'X6' VIDEO ZONE (TYP. UNLESS OTHERWISE NOTED)

HWY. 72

115' BEFORE STOP LINE

Ø1 Vz11 COMB.

Ø1 Vz12

Ø6 Vz62 COMB.

85' BEFORE STOP LINE

6'X50' VIRTUAL PRESENCE LOOP AT STOP LINE (TYP)

Vz22 COMB. Ø2

℄ HWY. 72

115' BEFORE STOP LINE

EXISTING N.M.C.

RIGHT -TURN TRAFFIC TO BE YIELD CONTROLLED THIS PHASE

Vz42

6'X50' VIRTUAL PRESENCE LOOP AT STOP LINE (TYP)

Ø4

RAMP 1

85' BEFORE STOP LINE

Ø4 Vz41 COMB.

EXISTING SIGNAL CONTROLLER

EXISTING N.M.C.

EXISTING ROW

15 7.5 0 7.5 15 30

CONSTRUCTION NOTES:

1. UTILIZE EXISTING SIGNAL POLES, SIGNAL HEADS, AND CONTROLLER FOR STAGE 3B.

2. PRIOR TO THE IMPLEMENTATION OF STAGE 3B, SHIFT SIGNAL HEADS 1, 2, 3, 5, AND VIDEO DETECTION CAMERAS 1 AND 5 AS INDICATED ON PLAN.

HWY. 72 AT NB RAMP
STAGE 3B

5/16/2016
10:06:34 AM
\\FC\A0902_MS_Hwy_72_I02_TempSig-Stage3B-2 (East).dgn

STATE OF ARKANSAS
REGISTERED PROFESSIONAL ENGINEER
No. 8760
ANDREW E. FRIES
5/16/16

DATE	DATE FILMED	DATE REVISED	DATE FILMED	FED.RD. DIST.NO.	STATE	FED.AID PROJ.NO.	SHEET NO.	TOTAL SHEETS
				6	ARK.			
				JOB NO.		CA0902	265	581

(2) SIGNALIZATION PLAN (HWY. 72 AT NB RAMP)

DETECTOR CHART

DETECTOR LOCATION				HARDWARE INPUTS BY SUPPLIER			PROGRAM ASSIGNMENTS			VIDEO DET. TUBE LENGTH	COMMENT
							LOCAL		MSTR. SYS. DET. #		
DETECTOR I.D. #	DIRECTION & LOCATION	TYPE	DET. #	CAB. TRM. #	AMP CHN. #	CON. INP. #	PHS.	SYS. DET. #			
Vz11	EB LEFT FAR	COMB.			1	V9	1	1		23"	VI
Vz12	EB LEFT NEAR	LOCAL			2	VI	1			23"	VI
Vz21	WB FAR	LOCAL			5	V2	2			23"	V2
Vz22	WB NEAR	COMB.			6	VI0	2	2		23"	V5
Vz41	NB FAR	COMB.			9	VI2	4	4		23"	V4
Vz42	NB NEAR	LOCAL			10	V4	4			23"	V4
Vz61	EB FAR	LOCAL			3	V6	6			23"	V6
Vz62	EB NEAR	COMB.			4	VI4	6	6		23"	VI

SPARE AMP CHN. #= 7, 8, 11-16

CONTROLLER INPUT ABBREVIATIONS
V = VEHICLE INPUT
D = SYSTEM OR AUXILIARY INPUT
P = PEDESTRIAN INPUT

PHASING DIAGRAM

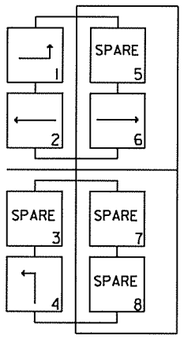

SIGNAL FACES
12" LENSES

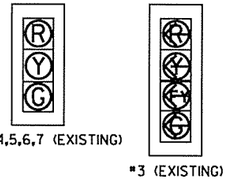

#1,2,4,5,6,7 (EXISTING)

#3 (EXISTING)

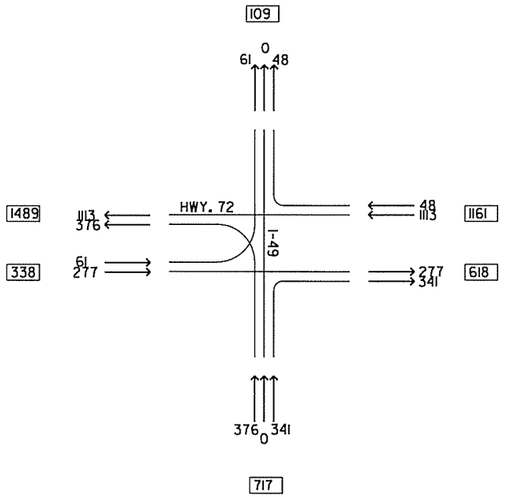

HWY. 72 AT NB RAMP
TRAFFIC FLOW DIAGRAM
TRAFFIC VOLUME
A.M. PEAK HOUR

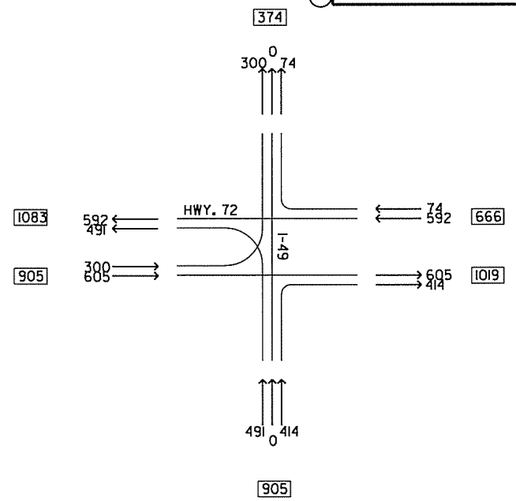

HWY. 72 AT NB RAMP
TRAFFIC FLOW DIAGRAM
TRAFFIC VOLUME
P.M. PEAK HOUR

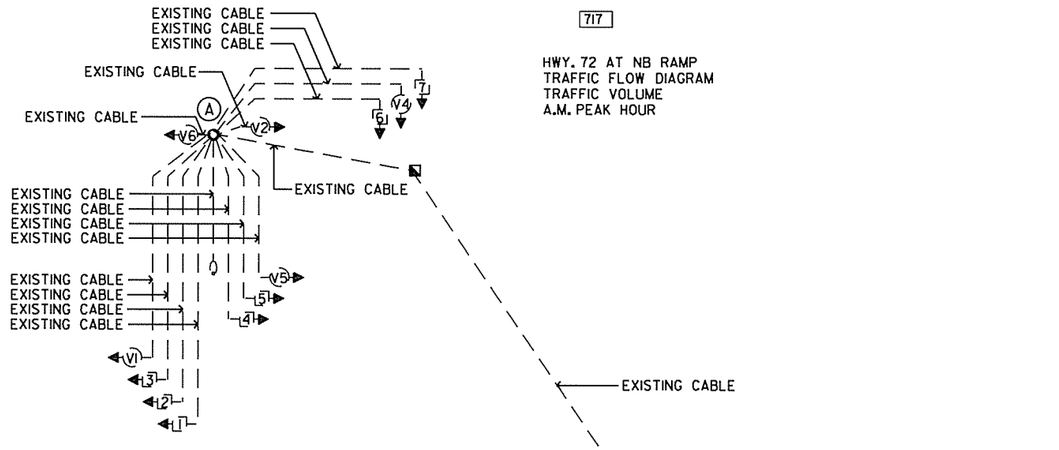

WIRING DIAGRAM
STAGE 3B

NOTES TO CONTRACTOR

1. UTILIZE EXISTING SIGNAL POLES, SIGNAL HEADS AND CONTROLLER FOR STAGE 3B.
2. UTILIZE EXISTING VIDEO DETECTION AND SIGNAL PHASING.

INTERVAL CHART

SIGNAL FACES	INTERSECTION INTERVALS						FLASH
	1+6	CLR.	2+6	CLR.	4	CLR.	SEQ.
1+2	G	••	G	••	R	R	R
3	←G	•••	←FY	•••	←R	←R	←R
4+5	R	R	G	Y	R	R	R
6+7	R	R	R	R	G	Y	R

• DENOTES FLASHING YELLOW ARROW OR YELLOW ARROW DEPENDING ON NEXT PHASE
•• DENOTES GREEN BALL OR YELLOW BALL DEPENDING ON NEXT PHASE
••• DENOTES YELLOW OR FLASHING YELLOW ARROW DEPENDING ON NEXT PHASE

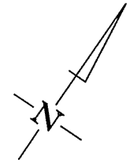

HWY. 72 AT NB RAMP
STAGE 3B

5/16/2016
10:06:36 AM
\\CA0902_MS_Hwy_72_I02_TempSig-Stage3B-3 (East)

STATE OF ARKANSAS
REGISTERED PROFESSIONAL ENGINEER
No. 8760
ANDREW E. FRIES
5/16/16

DATE	DATE FILMED	DATE REVISED	DATE FILMED	FED.RD. DIST.NO.	STATE	FED.AID PROJ.NO.	SHEET NO.	TOTAL SHEETS
				6	ARK.			
				JOB NO.		CA0902	266	581

(2) SIGNALIZATION PLAN (HWY. 72 AT NB RAMP)

CONSTRUCTION NOTES:

1. UTILIZE EXISTING SIGNAL POLES, HEADS, AND CONTROLLER FOR STAGE 3C.

2. PRIOR TO IMPLEMENTATION OF STAGE 3C, CONTRACTOR SHALL BAG SIGNAL HEADS 6 & 7. CONTRACTOR SHALL ALSO SHIFT SIGNAL HEAD 4 AND VIDEO DETECTORS V1 & V5.

3. PRIOR TO IMPLEMENTATION OF FINAL STAGE, CONTRACTOR SHALL INSTALL NEW CONTROLLER, NEW SIGNAL POLES B, C, D AND E, PULL BOXES, CONDUIT, WIRING, SIGNAL HEADS 11-21, PEDESTRIAN HEADS 22 AND 23, AND VIDEO DETECTORS V1, V2, V4, V5, V6, AND V7. SEE FINAL SIGNAL PLANS.

4. WORK TO TRANSITION SIGNAL CONTROLLER OPERATION TO NEW POLES AND CONTROLLER SHALL TAKE PLACE ON A SUNDAY MORNING BEFORE NOON.

5. EXISTING POLE A, PULL BOXES, AND CONTROLLER SHALL BE REMOVED AFTER THE NEW SIGNAL IS OPERATIONAL, PRIOR TO FINAL.

6. EXISTING CONDUIT SHALL BE ABANDONED AFTER THE NEW SIGNAL IS OPERATIONAL, PRIOR TO FINAL.

7. ADDITIONAL 0.5" NMC FROM CONTROLLER AND POLE TO NEAREST PULL BOX. REFER TO STANDARD DRAWING SD-6 HEAVY DUTY PULL BOX. THE COST OF THE 0.5" NMC IS INCLUDED IN ITEM NO. 701 AND 714 RESPECTIVELY.

8. FOR BRIDGE CONDUIT DETAIL SEE ELECTRICAL LIGHTING DETAILS IN BRIDGE PLANS.

LEGEND

- EX. SIGNAL POLE & MAST ARM
- PROP. SIGNAL POLE, MAST ARM, & LUMINAIRE
- TYPE 2 PULL BOX
- TYPE 1 PULL BOX
- SIGNAL HEAD
- VIDEO DETECTOR
- NMC - NON- METALLIC CONDUIT
- STAGE 3C

SIGNAL FACES

12" LENSES

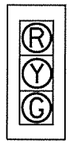

*1,2,4,5 (EXISTING)

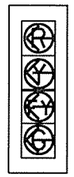

*3 (EXISTING)

PHASING DIAGRAM

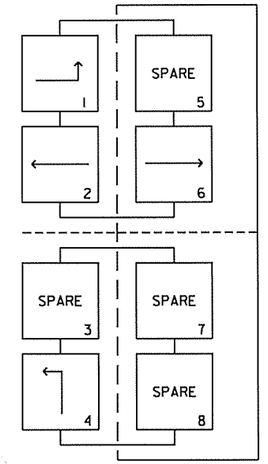

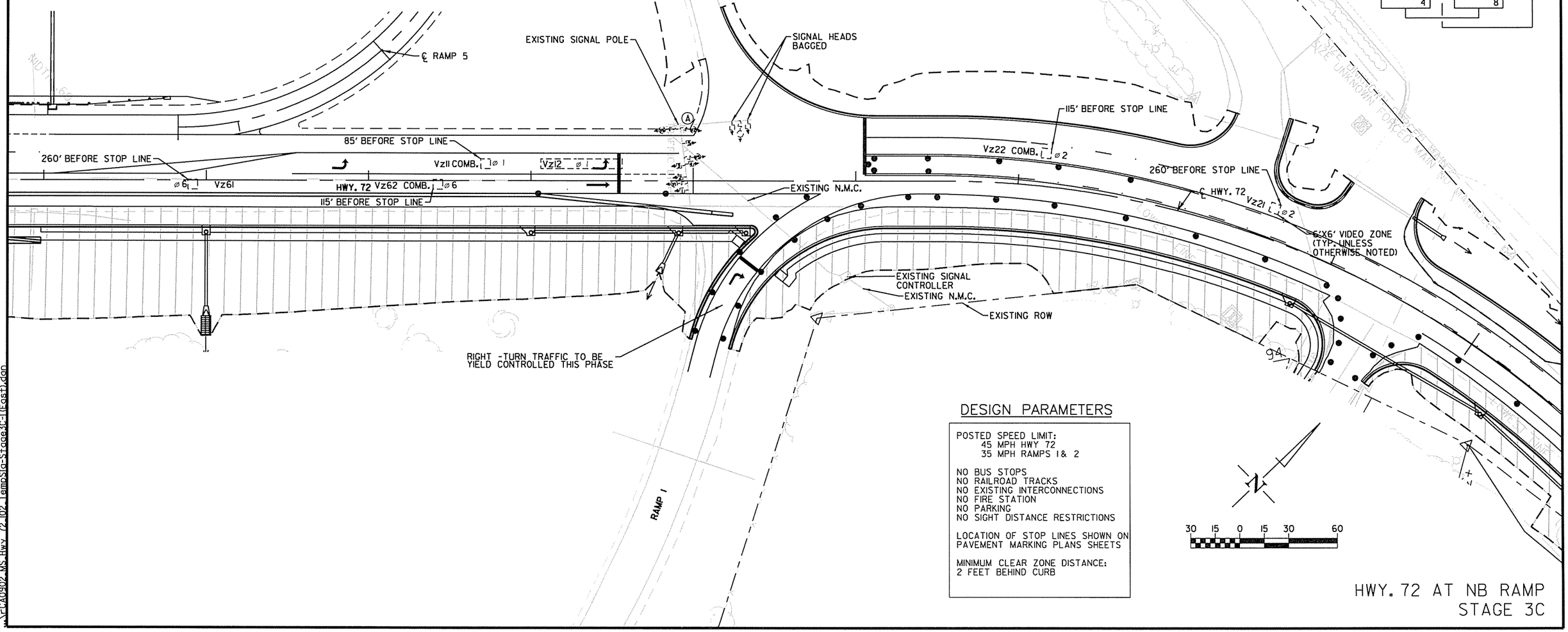

DESIGN PARAMETERS

POSTED SPEED LIMIT:
45 MPH HWY 72
35 MPH RAMPS 1 & 2

NO BUS STOPS
NO RAILROAD TRACKS
NO EXISTING INTERCONNECTIONS
NO FIRE STATION
NO PARKING
NO SIGHT DISTANCE RESTRICTIONS

LOCATION OF STOP LINES SHOWN ON PAVEMENT MARKING PLANS SHEETS

MINIMUM CLEAR ZONE DISTANCE:
2 FEET BEHIND CURB

HWY. 72 AT NB RAMP
STAGE 3C

5/16/2016
10:06:38 AM
M:\CA0902_MS_Hwy_72_I02_TempSig-Stage3C-1(East).dgn

STATE OF ARKANSAS
REGISTERED PROFESSIONAL ENGINEER
No. 8760
ANDREW E. FRIES
5/16/16

DATE	DATE FILMED	DATE REVISED	DATE FILMED	FED.RD. DIST.NO.	STATE	FED.AID PROJ.NO.	SHEET NO.	TOTAL SHEETS
				6	ARK.			
				JOB NO.		CA0902	267	581

(2) SIGNALIZATION PLAN (HWY. 72 AT NB RAMP)

PHASING DIAGRAM

LEGEND

- EX. SIGNAL POLE & MAST ARM
- PROP. SIGNAL POLE, MAST ARM, & LUMINAIRE
- TYPE 2 PULL BOX
- TYPE 1 PULL BOX
- SIGNAL HEAD
- VIDEO DETECTOR
- NMC - NON- METALLIC CONDUIT
- STAGE 3C

SIGNAL FACES

12" LENSES

#1,2,4,5 (EXISTING)

#3 (EXISTING)

DESIGN PARAMETERS

POSTED SPEED LIMIT:
45 MPH HWY 72
35 MPH RAMPS 1& 2

NO BUS STOPS
NO RAILROAD TRACKS
NO EXISTING INTERCONNECTIONS
NO FIRE STATION
NO PARKING
NO SIGHT DISTANCE RESTRICTIONS

LOCATION OF STOP LINES SHOWN ON PAVEMENT MARKING PLANS SHEETS

MINIMUM CLEAR ZONE DISTANCE:
2 FEET BEHIND CURB

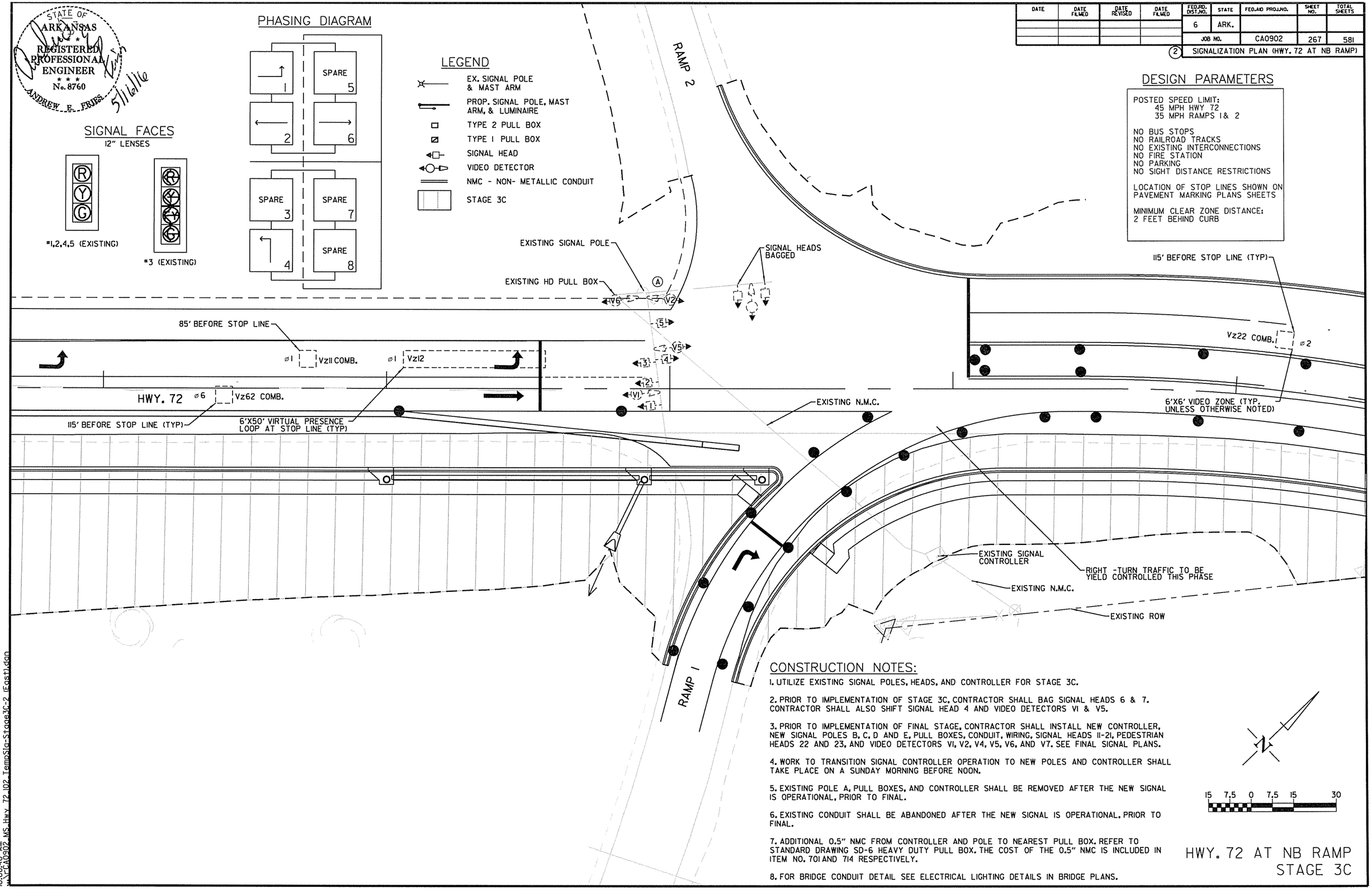

CONSTRUCTION NOTES:

1. UTILIZE EXISTING SIGNAL POLES, HEADS, AND CONTROLLER FOR STAGE 3C.

2. PRIOR TO IMPLEMENTATION OF STAGE 3C, CONTRACTOR SHALL BAG SIGNAL HEADS 6 & 7. CONTRACTOR SHALL ALSO SHIFT SIGNAL HEAD 4 AND VIDEO DETECTORS V1 & V5.

3. PRIOR TO IMPLEMENTATION OF FINAL STAGE, CONTRACTOR SHALL INSTALL NEW CONTROLLER, NEW SIGNAL POLES B, C, D AND E, PULL BOXES, CONDUIT, WIRING, SIGNAL HEADS 11-21, PEDESTRIAN HEADS 22 AND 23, AND VIDEO DETECTORS V1, V2, V4, V5, V6, AND V7. SEE FINAL SIGNAL PLANS.

4. WORK TO TRANSITION SIGNAL CONTROLLER OPERATION TO NEW POLES AND CONTROLLER SHALL TAKE PLACE ON A SUNDAY MORNING BEFORE NOON.

5. EXISTING POLE A, PULL BOXES, AND CONTROLLER SHALL BE REMOVED AFTER THE NEW SIGNAL IS OPERATIONAL, PRIOR TO FINAL.

6. EXISTING CONDUIT SHALL BE ABANDONED AFTER THE NEW SIGNAL IS OPERATIONAL, PRIOR TO FINAL.

7. ADDITIONAL 0.5" NMC FROM CONTROLLER AND POLE TO NEAREST PULL BOX. REFER TO STANDARD DRAWING SD-6 HEAVY DUTY PULL BOX. THE COST OF THE 0.5" NMC IS INCLUDED IN ITEM NO. 701 AND 714 RESPECTIVELY.

8. FOR BRIDGE CONDUIT DETAIL SEE ELECTRICAL LIGHTING DETAILS IN BRIDGE PLANS.

15 7.5 0 7.5 15 30

HWY. 72 AT NB RAMP STAGE 3C

5/16/2016
10:06:40 AM
w:\CA0902_MS_Hwy_72_102_TempSig-Stage3C-2 (East).dgn

STATE OF ARKANSAS
ANDREW E. FRIES
REGISTERED PROFESSIONAL ENGINEER
No. 8760
5/16/16

DATE	DATE FILMED	DATE REVISED	DATE FILMED	FED.RD. DST.NO.	STATE	FED.AID PROJ.NO.	SHEET NO.	TOTAL SHEETS
				6	ARK.			
				JOB NO.		CA0902	268	581
				(2)	SIGNALIZATION PLAN (HWY. 72 AT NB RAMP)			

DETECTOR CHART

DETECTOR LOCATION				HARDWARE INPUTS BY SUPPLIER			PROGRAM ASSIGNMENTS			VIDEO DET. TUBE LENGTH	COMMENT
							LOCAL		MSTR. SYS. DET. #		
DETECTOR I.D. #	DIRECTION & LOCATION	TYPE	DET. #	CAB. TRM. #	AMP CHN. #	CON. INP. #	PHS.	SYS. DET. #			
Vz11	EB LEFT FAR	COMB.			1	V9	1	1		23"	V1
Vz12	EB LEFT NEAR	LOCAL			2	V1	1			23"	V1
Vz21	WB FAR	LOCAL			5	V2	2			23"	V2
Vz22	WB NEAR	COMB.			6	V10	2	2		23"	V5
Vz61	EB FAR	LOCAL			3	V6	6			23"	V6
Vz62	EB NEAR	COMB.			4	V14	6	6		23"	V1

CONTROLLER INPUT ABBREVIATIONS
V = VEHICLE INPUT
D = SYSTEM OR AUXILIARY INPUT
P = PEDESTRIAN INPUT

SPARE AMP CHN. #'s 7 - 16

INTERVAL CHART

SIGNAL FACES	INTERSECTION INTERVALS						FLASH
	1+6	CLR.	2+6	CLR.	4	CLR.	SEQ.
1+2	G	••	G	••	R	R	R
3	~~G~~	•••	~~Y~~	•••	~~R~~	~~R~~	~~R~~
4+5	R	R	G	Y	R	R	R
6+7	B	B	B	B	B	B	B

• DENOTES FLASHING YELLOW ARROW OR YELLOW ARROW DEPENDING ON NEXT PHASE
•• DENOTES GREEN BALL OR YELLOW BALL DEPENDING ON NEXT PHASE
••• DENOTES YELLOW OR FLASHING YELLOW ARROW DEPENDING ON NEXT PHASE

SIGNAL FACES
12" LENSES

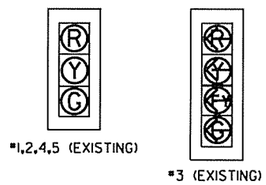

#1,2,4,5 (EXISTING)

#3 (EXISTING)

PHASING DIAGRAM

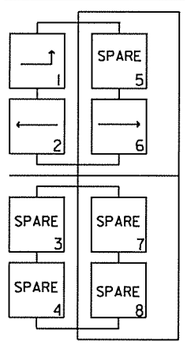

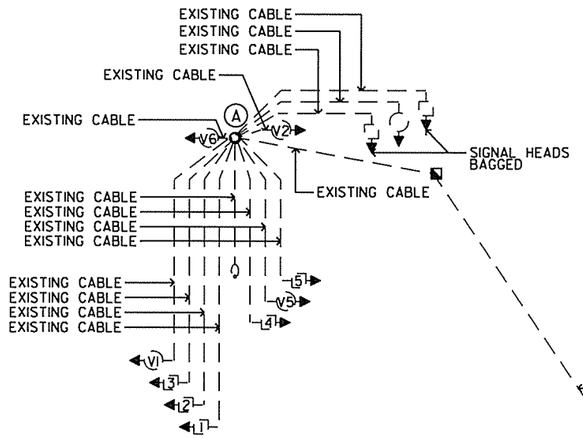

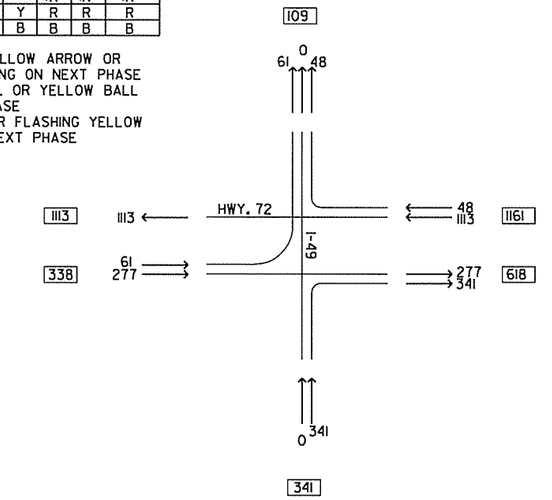

HWY. 72 AT NB RAMP
TRAFFIC FLOW DIAGRAM
TRAFFIC VOLUME
A.M. PEAK HOUR

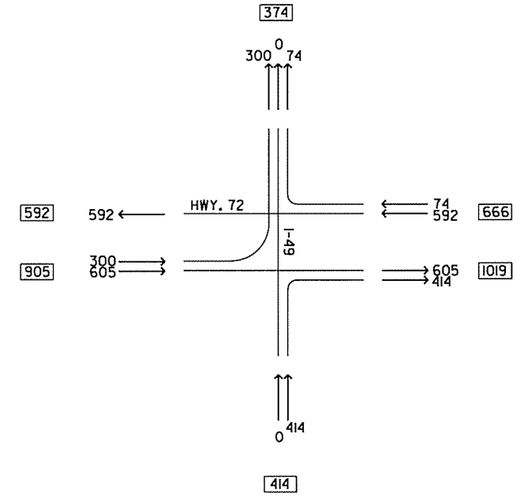

HWY. 72 AT NB RAMP
TRAFFIC FLOW DIAGRAM
TRAFFIC VOLUME
P.M. PEAK HOUR

EXISTING CABLE

EXISTING CABLE

EXISTING CONTROL CABINET

EXISTING CONDUIT & CABLE

EXISTING SERVICE POINT & MAIN BREAKER

WIRING DIAGRAM
STAGE 3C

NOTES TO CONTRACTOR

1. UTILIZE EXISTING SIGNAL POLES, SIGNAL HEADS AND CONTROLLER FOR STAGE 3C.
2. UTILIZE EXISTING VIDEO DETECTION AND SIGNAL PHASING.

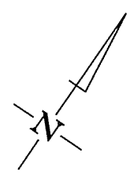

HWY. 72 AT NB RAMP
STAGE 3C

5/16/2016
10:06:42 AM
\\TCA0902_MS_Hwy_72_I02_TempSig-Stage3C-3 (East)

STATE OF ARKANSAS
REGISTERED PROFESSIONAL ENGINEER
No. 8760
ANDREW E. FRIES
5/16/16

DATE	DATE FILED	DATE REVISED	DATE FILED	FED.RD. DIST.NO.	STATE	FED.AID PROJ.NO.	SHEET NO.	TOTAL SHEETS
				6	ARK.			
				JOB NO.		CA0902	269	581

(2) SIGNALIZATION PLAN (HWY. 72 AT NB RAMP)

PHASING DIAGRAM

SIGNAL FACES
12" LENSES

*11,12,13,14,15,16,17 19,20,21 (NEW)

*18 (NEW)

ONE SECTION SOLID SYMBOL

*22,23 (NEW)

ADDITIONAL 0.5" NMC FROM CONTROLLER AND POLE TO NEAREST PULL BOX. REFER TO STANDARD DRAWING SD-6 HEAVY DUTY PULL BOX. THE COST OF THE 0.5" NMC IS INCLUDED IN ITEM NO. 701, 714 OR 715 RESPECTIVELY.

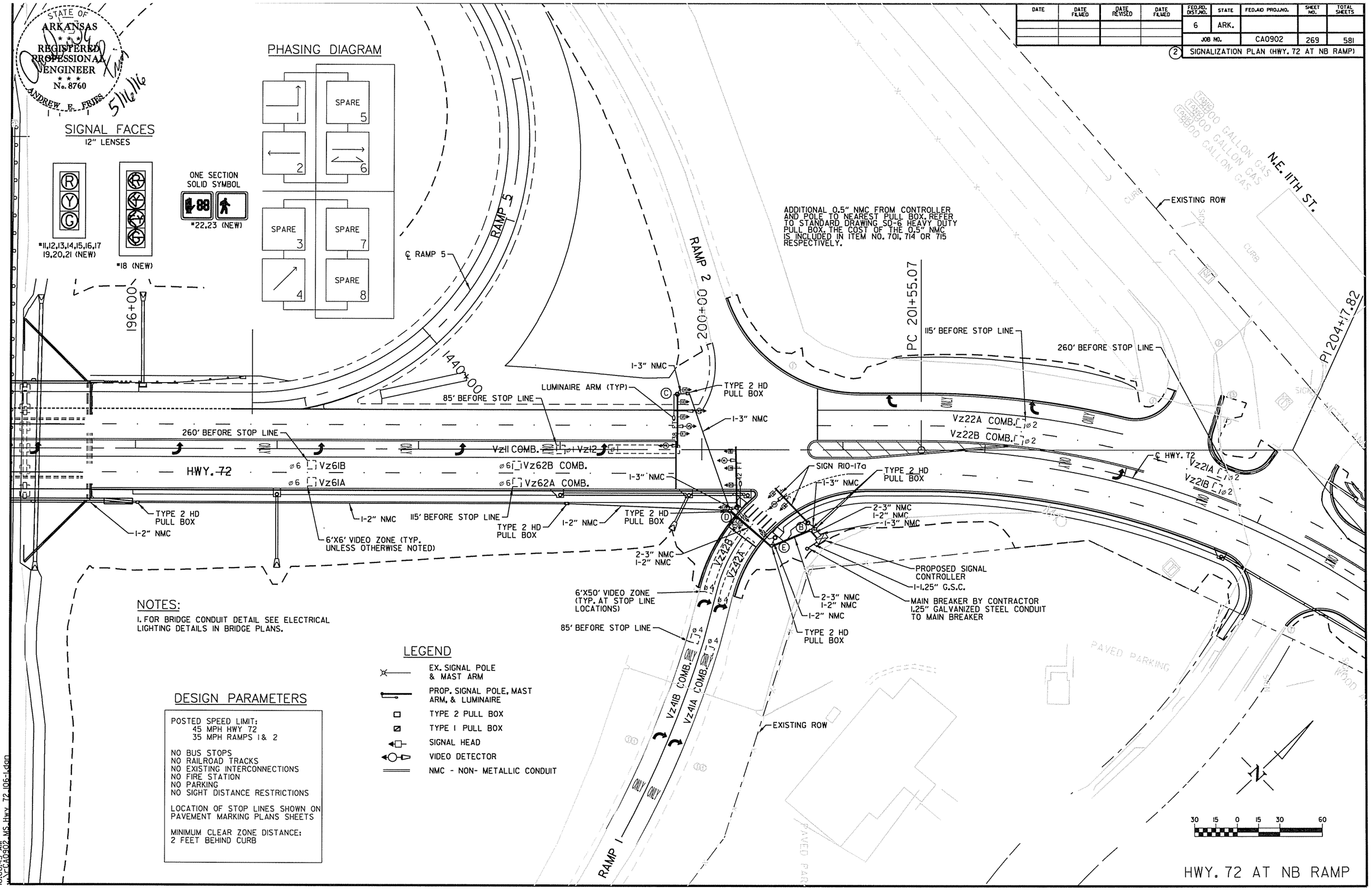

NOTES:

1. FOR BRIDGE CONDUIT DETAIL SEE ELECTRICAL LIGHTING DETAILS IN BRIDGE PLANS.

LEGEND

- EX. SIGNAL POLE & MAST ARM
- PROP. SIGNAL POLE, MAST ARM, & LUMINAIRE
- TYPE 2 PULL BOX
- TYPE 1 PULL BOX
- SIGNAL HEAD
- VIDEO DETECTOR
- NMC - NON- METALLIC CONDUIT

DESIGN PARAMETERS

POSTED SPEED LIMIT:
45 MPH HWY 72
35 MPH RAMPS 1 & 2

NO BUS STOPS
NO RAILROAD TRACKS
NO EXISTING INTERCONNECTIONS
NO FIRE STATION
NO PARKING
NO SIGHT DISTANCE RESTRICTIONS

LOCATION OF STOP LINES SHOWN ON PAVEMENT MARKING PLANS SHEETS

MINIMUM CLEAR ZONE DISTANCE:
2 FEET BEHIND CURB

HWY. 72 AT NB RAMP

5/16/2016
10:06:45 AM
...\CA0902_MS_Hwy 72_106-1.dgn

DATE	DATE FILMED	DATE REVISED	DATE FILMED	FED.RD. DIST.NO.	STATE	FED.AID PROJ.NO.	SHEET NO.	TOTAL SHEETS
				6	ARK.			
				JOB NO.		CA0902	270	581

(2) SIGNALIZATION PLAN (HWY. 72 AT NB RAMP)

STATE OF ARKANSAS
REGISTERED PROFESSIONAL ENGINEER
No. 8760
ANDREW E. FRIES
5/16/16

℄ RAMP 5

1440+00

SIGNAL FACES
12" LENSES

*11,12,13,14,15,16,17 19,20,21 (NEW)

*18 (NEW)

ONE SECTION SOLID SYMBOL

*22,23 (NEW)

PHASING DIAGRAM

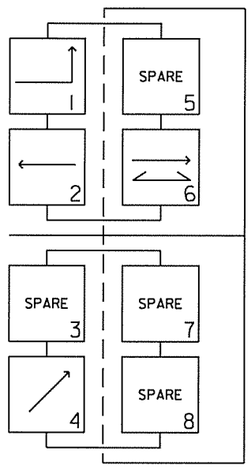

200+00

RAMP 2

PC 201+55.07

ADDITIONAL 0.5" NMC FROM CONTROLLER AND POLE TO NEAREST PULL BOX. REFER TO STANDARD DRAWING SD-6 HEAVY DUTY PULL BOX. THE COST OF THE 0.5" NMC IS INCLUDED IN ITEM NO. 701, 714 OR 715 RESPECTIVELY.

1-3" NMC

TYPE 2 HD PULL BOX

6'X6' VIDEO ZONE (TYP. UNLESS OTHERWISE NOTED)

115' BEFORE STOP LINE

85' BEFORE STOP LINE

HWY. 72

℄ HWY. 72

Vz11 COMB. ⌀1

Vz12 ⌀1

Vz22A COMB. ⌀2

Vz22B COMB. ⌀2

⌀6 Vz62B COMB.

⌀6 Vz62A COMB.

38 FT

42 FT

LUMINAIRE ARM (TYP)

SIGN R10-17a

1-3" NMC

1-2" NMC

TYPE 2 HD PULL BOX

6'X50' VIDEO ZONE (TYP. AT STOP LINE LOCATIONS)

⌀4 Vz41B COMB.

⌀4 Vz41A COMB.

RAMP 1

ONLY

85' BEFORE STOP LINE

EXISTING ROW

PROPOSED SIGNAL CONTROLLER

1-1.25" G.S.C.

MAIN BREAKER BY CONTRACTOR 1.25" GALVANIZED STEEL CONDUIT TO MAIN BREAKER

SERVICE POINT WITHIN 10' OF CONTROLLER

2-3" NMC 1-2" NMC

Vz42B

Vz42A

NOTES:
1. FOR BRIDGE CONDUIT DETAIL SEE ELECTRICAL LIGHTING DETAILS IN BRIDGE PLANS.

POLE DIMENSIONS

POLE	FOUNDATION TYPE	POLE HEIGHT	MAST ARM LENGTH	MAST ARM ANGLE	LUMINAIRE ARM	LUMINAIRE ANGLE	STATION HWY 72	OFFSET HWY 72	NORTHING	EASTING
B	AHTD	35'	34'	270	N/A	N/A	200+75.35	52' RT	753072.1400	672472.4500
C	AHTD	35'	38'	180	15'	180	199+82.76	39' LT	753068.3000	672342.7300
D	AHTD	35'	42'	90	15'	90	200+24.80	41' RT	753043.2300	672429.5600
E	AHTD/PED	15'	N/A	N/A	N/A	N/A	200+51.93	62' RT	753047.9900	672463.7900

NOTES:
1. MAST ARM AND LUMINAIRE ARM ROTATION IS CLOCKWISE FROM HAND HOLE LOCATION.
2. REFER TO AHTD SIGNALIZATION DETAILS FOR FOUNDATION REQUIREMENTS.

LEGEND

- EX. SIGNAL POLE & MAST ARM
- PROP. SIGNAL POLE, MAST ARM, & LUMINAIRE
- TYPE 2 PULL BOX
- TYPE 1 PULL BOX
- SIGNAL HEAD
- VIDEO DETECTOR
- NMC - NON- METALLIC CONDUIT

DESIGN PARAMETERS

POSTED SPEED LIMIT:
45 MPH HWY 72
35 MPH RAMPS 1 & 2

NO BUS STOPS
NO RAILROAD TRACKS
NO EXISTING INTERCONNECTIONS
NO FIRE STATION
NO PARKING
NO SIGHT DISTANCE RESTRICTIONS

LOCATION OF STOP LINES SHOWN ON PAVEMENT MARKING PLANS SHEETS

MINIMUM CLEAR ZONE DISTANCE:
2 FEET BEHIND CURB

15 7.5 0 7.5 15 30

HWY. 72 AT NB RAMP

5/16/2016 10:06:46 AM \\CA0902_MS_Hwy_72_106-2.dgn

STATE OF ARKANSAS
REGISTERED PROFESSIONAL ENGINEER
No. 8760
ANDREW E. FRIES
5/16/16

DATE	DATE FILMED	DATE REVISED	DATE FILMED	FED.RD. DIST.NO.	STATE	FED.AID PROJ.NO.	SHEET NO.	TOTAL SHEETS
				6	ARK.			
				JOB NO.		CA0902	271	581

(2) SIGNALIZATION PLAN (HWY. 72 AT NB RAMP)

DETECTOR CHART

DETECTOR LOCATION				HARDWARE INPUTS BY SUPPLIER			PROGRAM ASSIGNMENTS			VIDEO DET. TUBE LENGTH	COMMENT
							LOCAL		MSTR. SYS. DET. #		
DETECTOR I.D. #	DIRECTION & LOCATION	TYPE	DET. #	CAB. TRM. #	AMP CHN. #	CON. INP. #	PHS.	SYS. DET. #			
Vz11	EB LEFT FAR	COMB.			1	V9	1	1		23"	VI
Vz12	EB LEFT NEAR	LOCAL			2	VI	1			23"	VI
Vz21 A+B	WB FAR	LOCAL			5	V2	2			23"	V2
Vz22 A+B	WB NEAR	COMB.			6	V10	2	2		23"	V5
Vz41 A+B	NB FAR	COMB.			9	V12	4	4		23"	V4
Vz42 A+B	NB NEAR	LOCAL			10	V4	4			23"	V7
Vz61 A+B	EB FAR	LOCAL			3	V6	6			74"	V6
Vz62 A+B	EB NEAR	COMB.			4	V14	6	6		23"	VI
P6	W TO E	PED				P6	6				

CONTROLLER INPUT ABBREVIATIONS
V = VEHICLE INPUT
D = SYSTEM OR AUXILIARY INPUT
P = PEDESTRIAN INPUT

SPARE AMP CHN. #= 7, 8, 11 & 12-16

SIGNAL FACES
12" LENSES

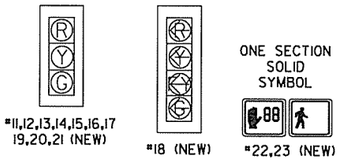

INTERVAL CHART

SIGNAL FACES	INTERSECTION INTERVALS						FLASH
	1+6	CLR.	2+6	CLR.	4	CLR.	SEQ.
11,12,13+14	R	R	G	Y	R	R	R
15,16+17	R	R	R	R	G	Y	R
18	~~G~~	*	~~FY~~	*	~~R~~	~~R~~	~~R~~
19,20+21	G	**	G	**	R	R	R
22+23	DW	DW	W	FDW	DW	DW	B

* DENOTES FLASHING YELLOW ARROW OR YELLOW ARROW DEPENDING ON NEXT PHASE
** DENOTES GREEN BALL OR YELLOW BALL DEPENDING ON NEXT PHASE
*** DENOTES YELLOW OR FLASHING YELLOW ARROW DEPENDING ON NEXT PHASE

PHASING DIAGRAM

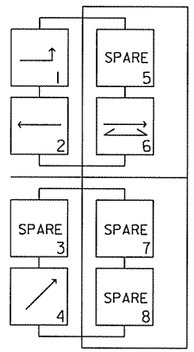

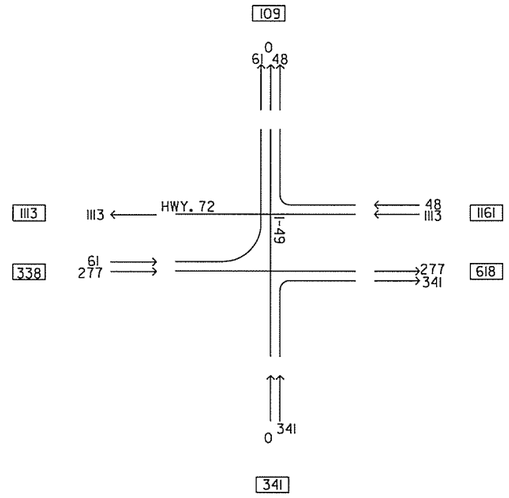

HWY. 72 AT NB RAMP
TRAFFIC FLOW DIAGRAM
TRAFFIC VOLUME
A.M. PEAK HOUR

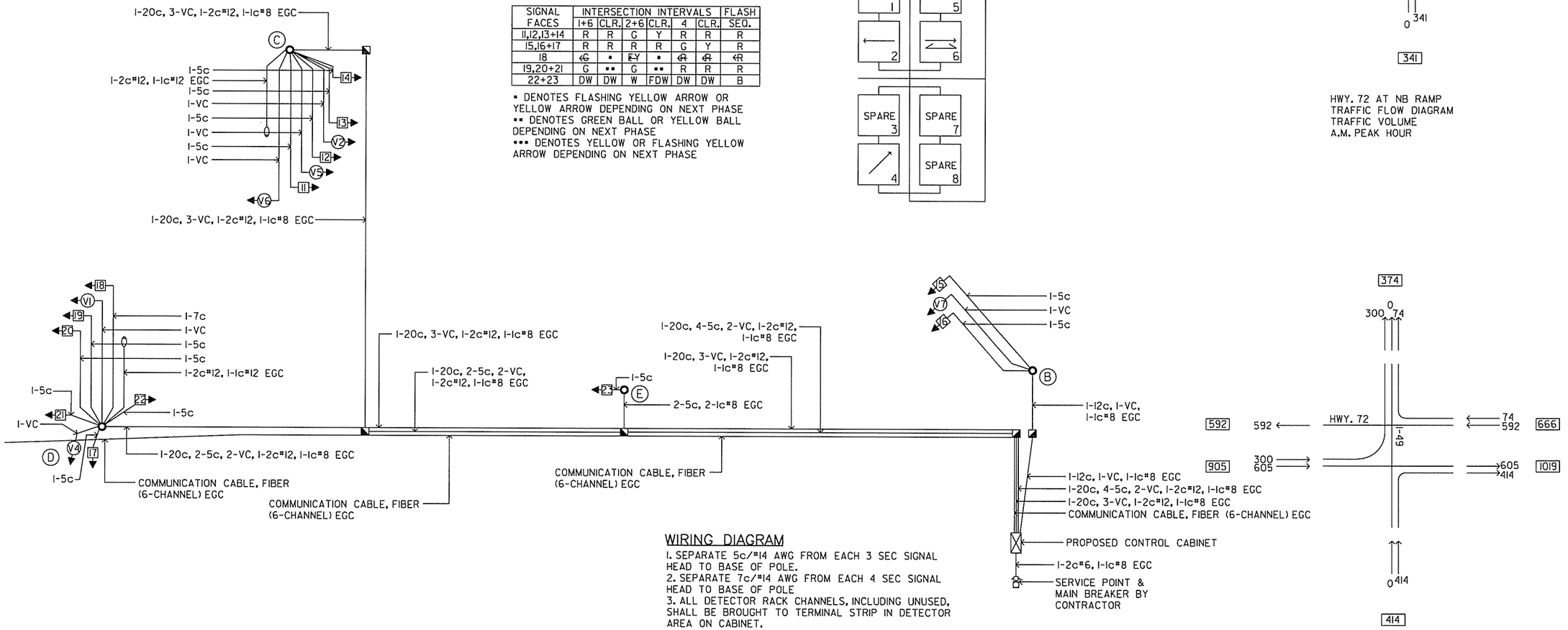

WIRING DIAGRAM

1. SEPARATE 5c/#14 AWG FROM EACH 3 SEC SIGNAL HEAD TO BASE OF POLE.
2. SEPARATE 7c/#14 AWG FROM EACH 4 SEC SIGNAL HEAD TO BASE OF POLE
3. ALL DETECTOR RACK CHANNELS, INCLUDING UNUSED, SHALL BE BROUGHT TO TERMINAL STRIP IN DETECTOR AREA ON CABINET.
4. THE LOCAL GOV'T SHALL BE RESPONSIBLE FOR PROVIDING POWER TO THE SERVICE POINT.
5. ADDITIONAL I-Ic#8EGC FROM CONTROLLER AND POLE TO NEAREST PULL BOX. THE COST OF THE I-Ic#8EGC IS INCLUDED IN ITEM NO. 701, 714 OR 715 RESPECTIVELY. FOR DETAILS SEE GROUNDING ARRAY DIAGRAM SHEET.

HWY. 72 AT NB RAMP
TRAFFIC FLOW DIAGRAM
TRAFFIC VOLUME
P.M. PEAK HOUR

5/16/2016
10:06:50 AM
\\SIG\C\CA0902 MS Hwy 72 106

HWY. 72 AT NB RAMP

STATE OF ARKANSAS
REGISTERED PROFESSIONAL ENGINEER
No. 8760
ANDREW E. FRIES
5/16/16

DATE	DATE FILMED	DATE REVISED	DATE FILMED	FED.RD. DIST.NO.	STATE	FED.AID PROJ.NO.	SHEET NO.	TOTAL SHEETS
				6	ARK.			
				JOB NO.		CA0902	272	581

(2) SIGNALIZATION PLAN (HWY. 72 AT NB RAMP)

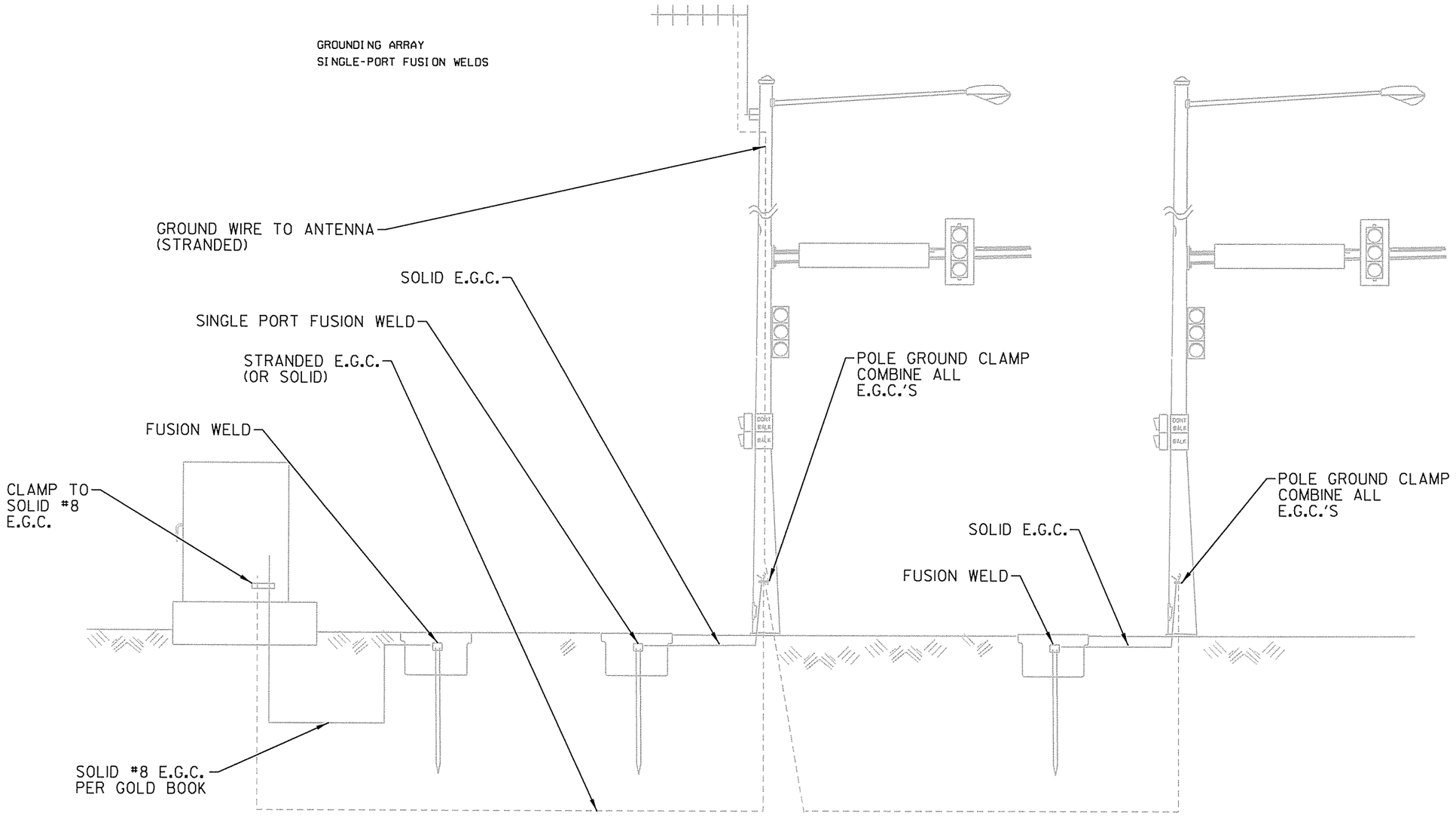

TRAFFIC SIGNAL GROUNDING DETAIL

5/16/2016
10:06:52 AM
\\rCA0902_MS_Hwy_72_I02\Traffic Signal\Grounding Detail\East1.dgn

HWY. 72 AT NB RAMP

STATE OF ARKANSAS
REGISTERED PROFESSIONAL ENGINEER
No. 8760
ANDREW E. FRIES
5/16/16

DATE	DATE FILMED	DATE REVISED	DATE FILMED

FED.RD. DIST.NO.	STATE	FED.AID PROJ.NO.	SHEET NO.	TOTAL SHEETS
6	ARK.			
JOB NO.		CA0902	273	581

2 HWY. 72 PEDESTRIAN LIGHTING PLAN

℄ RAMP 3
N 3°28'45" W
N 31°10'55" W
RAMP 3
PI 302+90.40
PAVED PARKING
PAVED PARKING
UNDERGROUND TANKS
℄ RAMP 6
RAMP 6
PC 301+33.43
195+00
200+00
PT 200+75.36
PC 191+90.00
190+00
INSTALL NEW LIGHTING BLISTER (SEE DETAIL SHEET)
TYPE 2 PULL BOX
1-3" NMC
NORTH CIRCUIT
2-2" NMC IN BRIDGE RAIL (SEE DETAIL SHEET)
300+00
HWY. 72
℄ HWY. 72
N 43°49'05" E
TYPE 2 PULL BOX
2-2" NMC IN BRIDGE RAIL (SEE DETAIL SHEET)
SOUTH CIRCUIT
TYPE 2 PULL BOX
1-3" NMC
RAMP 4
TYPE 2 PULL BOX
PAVED PARKING

NOTE:

1. THE GENERAL SCOPE OF THE LIGHTING WORK SHALL INCLUDE PULL BOXES AND CONDUIT FOR INSTALLATION OF FINAL LIGHTING, WIRING, POWER SUPPLY, AND ADDITIONAL PULL BOXES BY OTHERS. ONLY LIGHTING MATERIALS AND SCOPE SHOWN ON THE LIGHTING PLANS WILL BE INCLUDED IN THIS CONTRACT.

2. FOR INSTALLATION OF LIGHTING BLISTER SEE BRIDGE SHEETS FOR ADDITIONAL INFORMATION

LEGEND

- EX. SIGNAL POLE & MAST ARM
- PROP. SIGNAL POLE, MAST ARM, & LUMINAIRE
- TYPE 2 PULL BOX
- TYPE 1 PULL BOX
- SIGNAL HEAD
- VIDEO DETECTOR
- NMC – NON METALLIC CONDUIT
- LUMINAIRE & BASE/FOUNDATION

N

60 30 0 30 60 120

HWY. 72 / LIGHTING PLAN

5/16/2016
10:06:25 AM
...\ILL\CA0902_ILL_HWY72_02.dgn

DATE	DATE FILMED	DATE REVISED	DATE FILMED	FED.RD. DIST.NO.	STATE	FED.AID PROJ.NO.	SHEET NO.	TOTAL SHEETS
				6	ARK.			
				JOB NO.		CA0902	274	581

(2) HWY. 72 PEDESTRIAN LIGHTING PLAN

STATE OF ARKANSAS
REGISTERED PROFESSIONAL ENGINEER
No. 8760
ANDREW E. FRIES
5/16/16

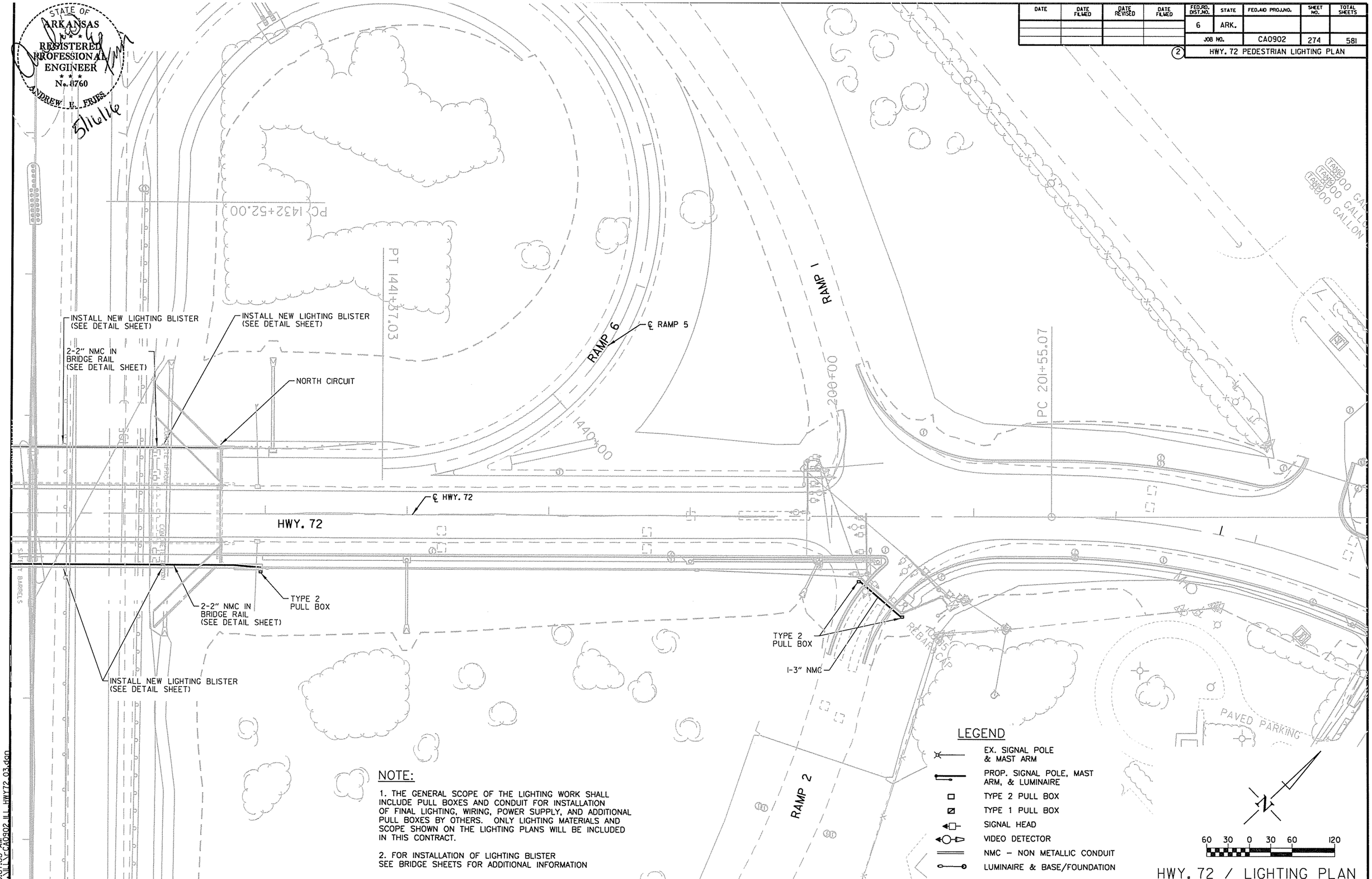

NOTE:

1. THE GENERAL SCOPE OF THE LIGHTING WORK SHALL INCLUDE PULL BOXES AND CONDUIT FOR INSTALLATION OF FINAL LIGHTING, WIRING, POWER SUPPLY, AND ADDITIONAL PULL BOXES BY OTHERS. ONLY LIGHTING MATERIALS AND SCOPE SHOWN ON THE LIGHTING PLANS WILL BE INCLUDED IN THIS CONTRACT.

2. FOR INSTALLATION OF LIGHTING BLISTER SEE BRIDGE SHEETS FOR ADDITIONAL INFORMATION

LEGEND

- EX. SIGNAL POLE & MAST ARM
- PROP. SIGNAL POLE, MAST ARM, & LUMINAIRE
- TYPE 2 PULL BOX
- TYPE 1 PULL BOX
- SIGNAL HEAD
- VIDEO DETECTOR
- NMC – NON METALLIC CONDUIT
- LUMINAIRE & BASE/FOUNDATION

N

60 30 0 30 60 120

HWY. 72 / LIGHTING PLAN

5/16/2016
10:07:00 AM
\\ILL\CA0902_ILL_HWY72_03.dgn

DATE	DATE FILMED	DATE REVISED	DATE FILMED	FED.RD. DIST.NO.	STATE	FED.AID PROJ.NO.	SHEET NO.	TOTAL SHEETS
				6	ARK.			
				JOB NO.		CA0902	275	581

(2) HWY. 72 PEDESTRIAN LIGHTING PLAN

STATE OF ARKANSAS
REGISTERED PROFESSIONAL ENGINEER
No. 8760
ANDREW E. FRIES
5/19/16

SERVICE VOLTAGE - 240v/480v

MAIN BREAKER - 2P-100A

CIRCUIT	S	IP	30A
CIRCUIT	N	IP	15A
SPARE	X	IP	15A
SPARE	X	IP	15A

POLE AND BRACKET WIRE - 2C#10 AWG AND GROUND

WIRE FROM METER TO CONTROLLER - 25' - 2#2H+1#2N+1#2G

HOT AND NEUTRAL LEADS - USE NON-FUSED TYPE CONNECTORS

GROUND - USE FUSED CONNECTOR

PB TO POLE - 15' OF WIRE

LIGHTING SUMMARY OF QUANTITIES

ITEM NUMBER	ITEM	BIM-B49-0(216) - HWY. 72	TOTAL	UNIT
710	NON-METALLIC CONDUIT (2")	769	769	LIN. FT.
711	CONCRETE PULL BOX (TYPE 2 HD)	9	9	EACH

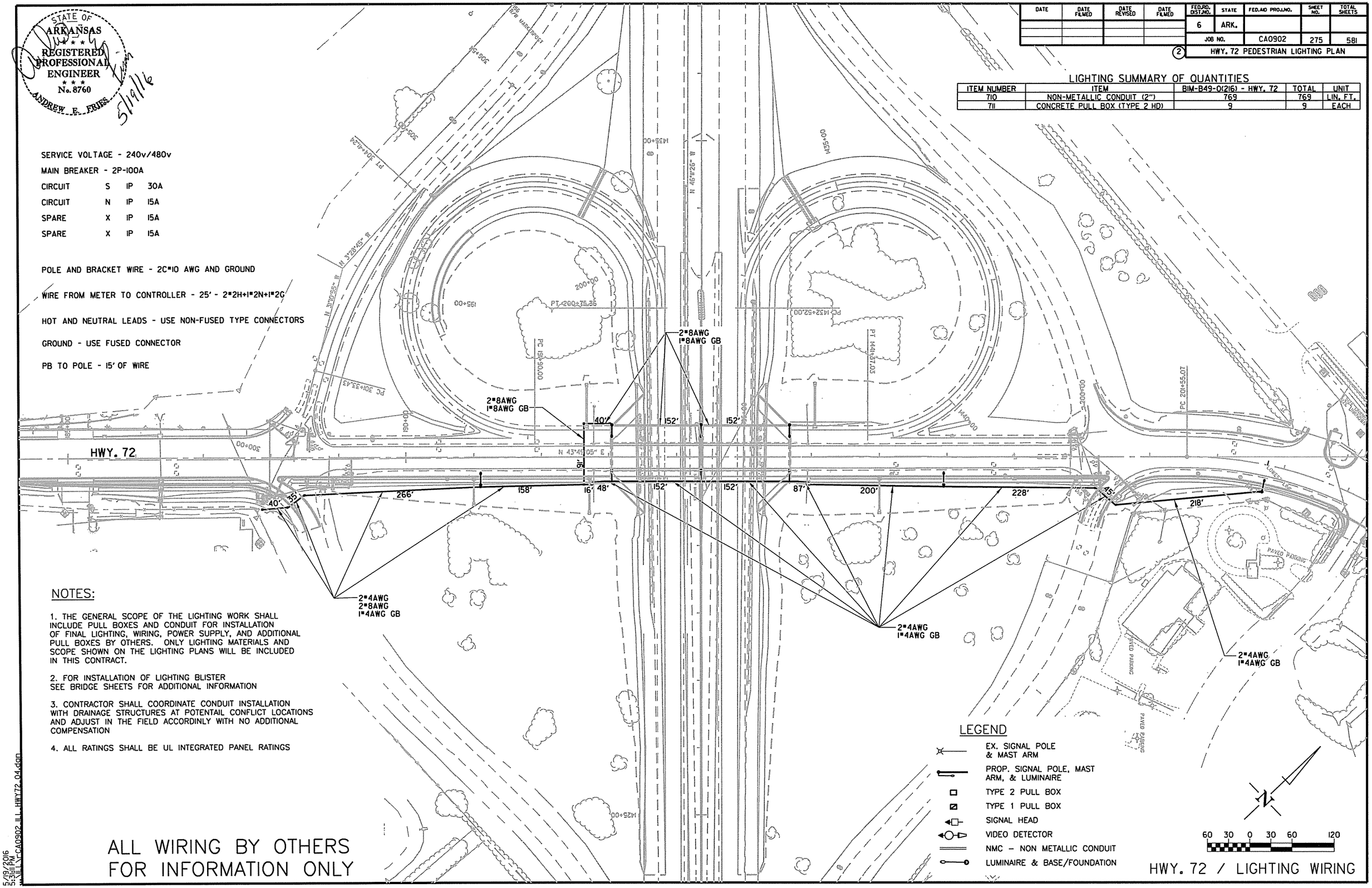

NOTES:

1. THE GENERAL SCOPE OF THE LIGHTING WORK SHALL INCLUDE PULL BOXES AND CONDUIT FOR INSTALLATION OF FINAL LIGHTING, WIRING, POWER SUPPLY, AND ADDITIONAL PULL BOXES BY OTHERS. ONLY LIGHTING MATERIALS AND SCOPE SHOWN ON THE LIGHTING PLANS WILL BE INCLUDED IN THIS CONTRACT.

2. FOR INSTALLATION OF LIGHTING BLISTER SEE BRIDGE SHEETS FOR ADDITIONAL INFORMATION

3. CONTRACTOR SHALL COORDINATE CONDUIT INSTALLATION WITH DRAINAGE STRUCTURES AT POTENTAIL CONFLICT LOCATIONS AND ADJUST IN THE FIELD ACCORDINLY WITH NO ADDITIONAL COMPENSATION

4. ALL RATINGS SHALL BE UL INTEGRATED PANEL RATINGS

LEGEND

- EX. SIGNAL POLE & MAST ARM
- PROP. SIGNAL POLE, MAST ARM, & LUMINAIRE
- TYPE 2 PULL BOX
- TYPE 1 PULL BOX
- SIGNAL HEAD
- VIDEO DETECTOR
- NMC - NON METALLIC CONDUIT
- LUMINAIRE & BASE/FOUNDATION

60 30 0 30 60 120

ALL WIRING BY OTHERS
FOR INFORMATION ONLY

HWY. 72 / LIGHTING WIRING

5/19/2016
5:31:11 PM
\\ILL\CA0902_ILL_HWY72_04.dgn

DATE	DATE FILMED	DATE REVISED	DATE FILMED	FED.RD. DIST.NO.	STATE	FED.AID PROJ.NO.	SHEET NO.	TOTAL SHEETS
				6	ARK.			
				JOB NO.		CA0902	276	581

(2) CULVERT DIAGRAM

STATE OF ARKANSAS
REGISTERED PROFESSIONAL ENGINEER
No. 8760
ANDREW E. FRIES
5/16/16

BOX CULVERT DIAGRAM 1338+25

CONCRETE:

A SECTION	TOTAL FOR 4'-0" SKEWED LENGTH OF BARREL & HEADWALL			=	6.37
A SECTION	72.29	X	1.56	=	112.77
A1 SECTION	21.46	X	1.49	=	31.98
B SECTION	190.13	X	1.77	=	336.53
APRON & WINGS (BOTH SIDES)				=	0.00
TOTAL C.Y.					487.65

REINFORCING STEEL:

A SECTION	TOTAL FOR 4'-0" SKEWED LENGTH OF BARREL & HEADWALL			=	1131.00
A SECTION	72.29	X	194.00	=	14024.26
A1 SECTION	21.46	X	237.00	=	5086.02
B SECTION	190.13	X	216.00	=	41068.08
9.00	LAPS @ LBS. EACH		70.00	=	630.00
NO WINGS				=	0.00
TOTAL LBS.					61939.36
*INCLUDES HDWL, APRONS, & 1 LAP					

UNCLASSIFIED EXCAVATION FOR STRUCTURES - ROADWAY:

A SECTION	72.29	X	1.321	=	95.48
A1 SECTION	21.46	X	8.008	=	171.86
B SECTION	190.13	X	14.597	=	2775.41
V.I.				=	11.14
V.O.				=	11.14
TOTAL C.Y.					3065.03

SOLID SODDING & WATER:

(K + W-1 + W-2 +3.46)(1 SIDE)(2' WIDE) / 9 S.F./S.Y.				=	0.00
12.60 (GAL/S.Y. SOLID SODDING)/1000 = M. GAL				=	0.00

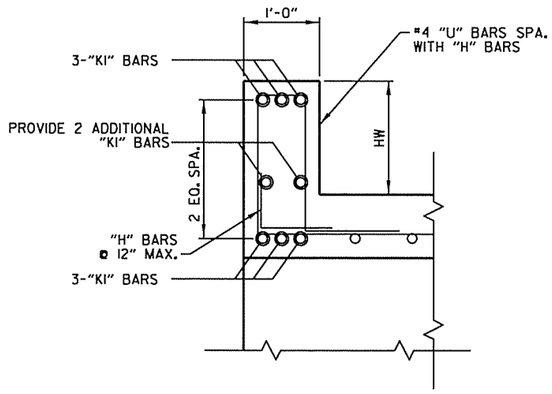

HEADWALL SPECIAL DETAIL

EAST END: HW = 1'-0½"
WEST END: HW = 1'-6¼"

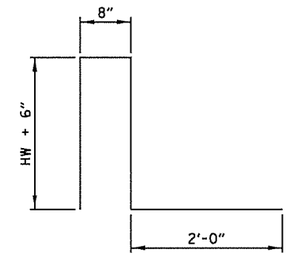

"U" BARS

ADDITIONAL CONCRETE AND REINFORCEMENT FOR HEADWALL SPECIAL DETAIL INCIDENTAL TO THE COST OF 12'x10' R.C. BOX CULVERT. STA. 1338+25

STA. 1338+25 CONSTRUCT
12' X 10' X 287'-10⅝" R.C. BOX CULVERT
WITH 7°30' RT. FWD. SKEW

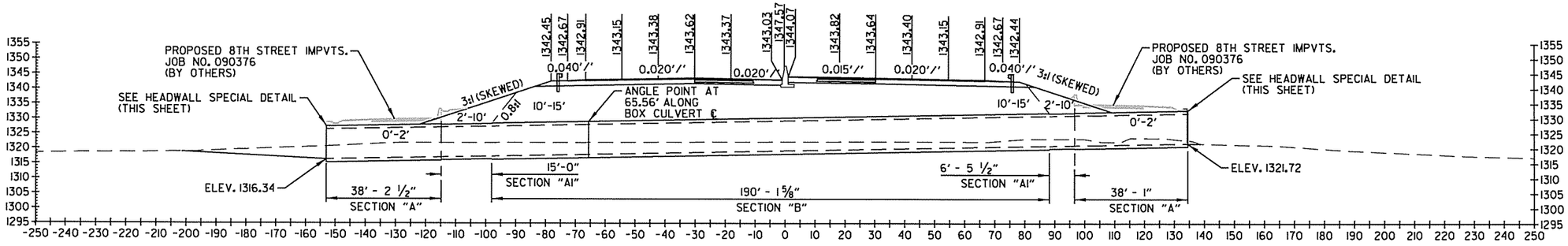

STA. 1338+25

5/16/2016
10:07:06 AM
...\MS\CA0902_SD_HWY540_16.dgn

CULVERT DIAGRAM

DATE	DATE FILMED	DATE REVISED	DATE FILMED	FED.RD. DIST.NO.	STATE	FED.AID PROJ.NO.	SHEET NO.	TOTAL SHEETS
				6	ARK.			
				JOB NO.		CA0902	277	581

(2) CULVERT DIAGRAM

STATE OF ARKANSAS
REGISTERED PROFESSIONAL ENGINEER
No. 8760
ANDREW E. FRIES
5/5/16

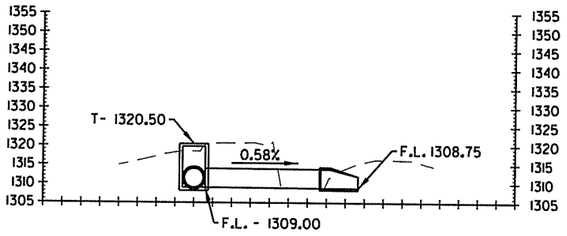

STA. 1338+59.11 - IN PLACE
JUNCTION BOX ON LT. WITH
48" X 317' R.C. PIPE CULVERT INLET AND
48" X 20' R.C. PIPE CULVERT OUTLET
REMOVE TYPE ST JUNCTION AND CONSTRUCT
TYPE ST JUNCTION BOX 13.11' RT. OF C.L. H = 11'-6"
REMOVE 48" X 20' R.C. PIPE CULVERT AND CONSTRUCT
60" X 30' R.C. PIPE CULVERT
(CLASS III) (TYPE 3 BEDDING)
60" R.C. PIPE = 30 LIN. FT.
60" FES = 1EA.
TYPE ST JUNCTION BOX = 6' x 6'

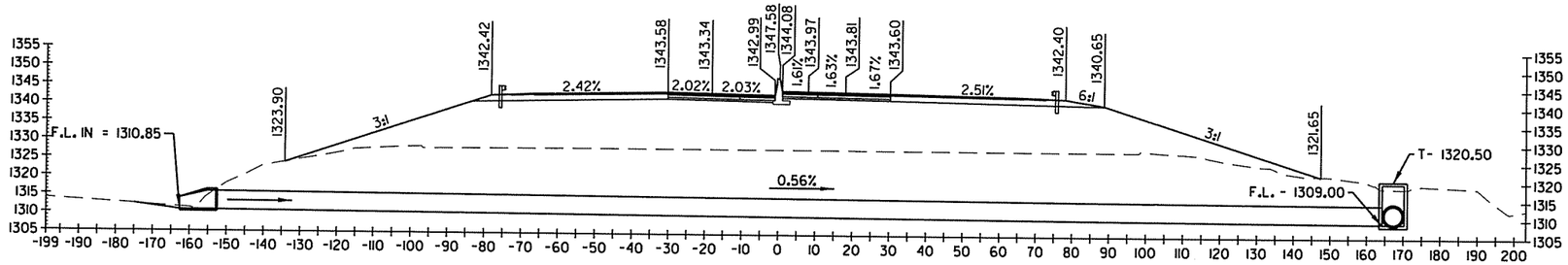

1338+37.62
SKEW 7°22' 53" RA

STA. 1338+37.62 - IN PLACE
48" X 317' R.C. PIPE CULVERT WITH FES LT.
REMOVE R.C. PIPE AND FES LT. AND CONSTRUCT
60" X 317' R.C. PIPE CULVERT
WITH 7° 22' 53" RT. FWD. SKEW
TO TYPE ST JUNCTION BOX RT.
(CLASS V) (TYPE 3 BEDDING) WITH FES LT.
60" R.C. PIPE = 317 LIN. FT.
60" FES = 1EA.

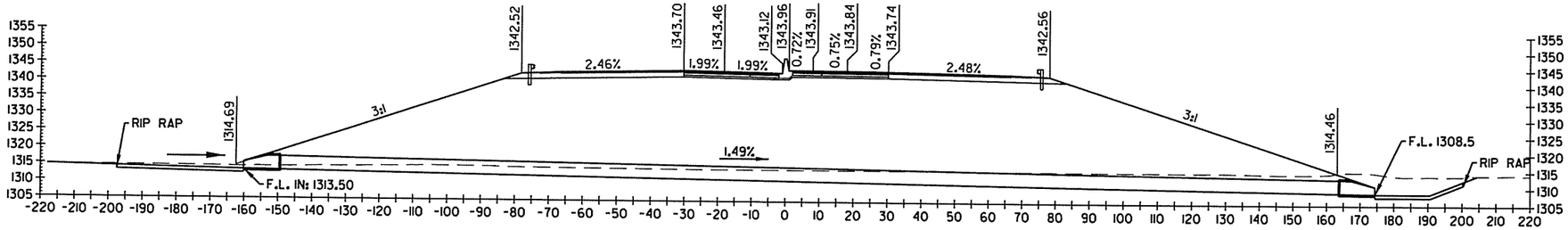

1337+73.00
SKEW 7°30' 00" RA

STA. 1337+73.00 - CONSTRUCT
48" x 322' R.C. PIPE CULVERT
WITH 7° 30' 21" RT. FWD. SKEW
(CLASS V) (TYPE 3 BEDDING)
WITH FES LT. & RT.

5/5/2016
5:07:29 PM
\MS\-CA0902 SD HWY540 16a.dgn

CULVERT DIAGRAM

DATE	DATE FILMED	DATE REVISED	DATE FILMED	FED.RD. DIST.NO.	STATE	FED.AID PROJ.NO.	SHEET NO.	TOTAL SHEETS
				6	ARK.			
				JOB NO.		CA0902	278	581

(2) LAYOUT OF RETAINING WALL A & A1

STATE OF ARKANSAS
REGISTERED PROFESSIONAL ENGINEER
No. 8760
ANDREW E. FRIES
5/5/16

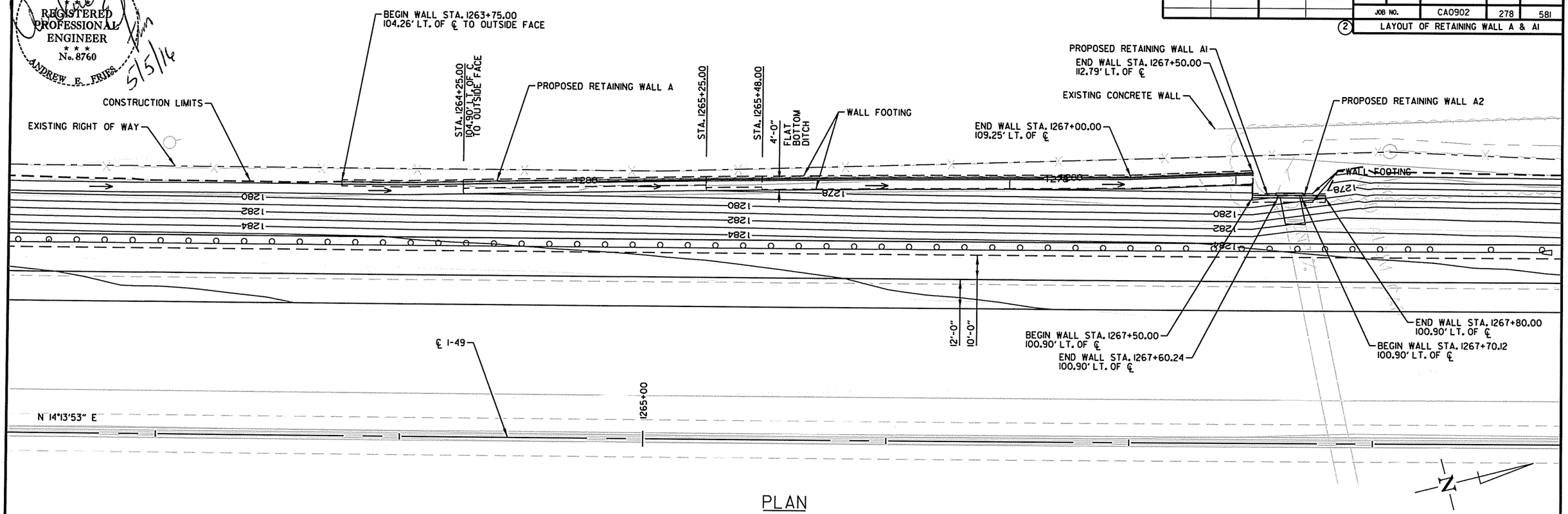

PLAN

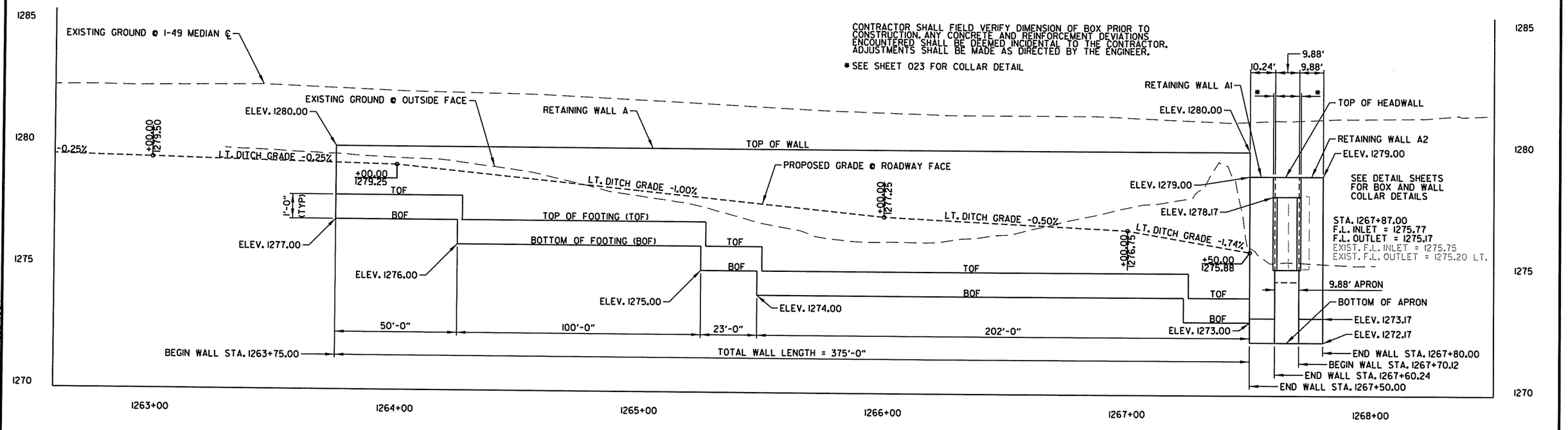

ELEVATION

LAYOUT OF RETAINING WALL A, A1 & A2

5/5/2016
4:06:42 PM
...\PP\CA0902_PP_RET_WALL_A.dgn

STATE OF ARKANSAS
ANDREW E. FRIES
REGISTERED PROFESSIONAL ENGINEER
No. 8760
5/5/16

DATE	DATE FILMED	DATE REVISED	DATE FILMED

FED.RD. DIST.NO.	STATE	FED.AID PROJ.NO.	SHEET NO.	TOTAL SHEETS
6	ARK.			
JOB NO.		CA0902	279	581

(2) LAYOUT OF RETAINING WALL B

1265+00 1270+00

℄ I-49

END WALL STA. 1268+25.00
95.59' RT. OF ℄

PROPOSED RETAINING WALL B2
BEGIN WALL STA. 1268+11.69
95.57' RT. OF ℄
END WALL STA. 1268+01.81
95.56' RT. OF ℄
WALL FOOTING
PROPOSED RETAINING WALL B1
BEGIN WALL STA. 1267+80.00
95.58' RT. OF ℄

12'-0"
10'-0"
30'-0"

1284 1284 1284
1282 1282 1282 1282
1280

PROPOSED CONSTRUCTION LIMITS
EXISTING RIGHT OF WAY

N

PLAN

1285
1280
1275
1270

+00.00 1281.00
+50.00 1279.85

RT. DITCH GRADE -0.77%

9.88'
21.81' 13.31'

EXISTING GROUND ℄ I-49 MEDIAN ℄
RETAINING WALL B1
TOP OF HEADWALL
ELEV. 1280.73
ELEV. 1280.73
TOP OF SLAB
RETAINING WALL B2
EXISTING GROUND ℄ FACE OF WALL
ELEV. 1278.77
ELEV. 1278.77
EXISTING GROUND ℄ FACE OF WALL
PROPOSED GROUND ℄ DITCH LINE
PROPOSED GROUND ℄ DITCH LINE
EXISTING GROUND ℄ DITCH LINE
EXISTING GROUND ℄ DITCH LINE
F.L. INLET: 1275.77
F.L. INLET: 1275.76
TOP OF FOOTING
1'-0"
BOTTOM OF SLAB
ELEV. 1273.73
ELEV. 1273.73
BOTTOM OF FOOTING
BOTTOM OF APRON
BEGIN WALL STA. 1267+80.00
END WALL STA. 1268+25.00
9.88' APRON
END WALL STA. 1268+01.81
BEGIN WALL STA. 1268+11.69

1265+00 1266+00 1267+00 1268+00 1269+00 1270+00 1271+00

CONTRACTOR SHALL FIELD VERIFY DIMENSION OF BOX PRIOR TO CONSTRUCTION. ANY CONCRETE AND REINFORCEMENT DEVIATIONS ENCOUNTERED SHALL BE DEEMED INCIDENTAL TO THE CONTRACTOR. ADJUSTMENTS SHALL BE MADE AS DIRECTED BY THE ENGINEER.

* SEE SHEET 023 FOR COLLAR DETAIL

ELEVATION

LAYOUT OF RETAINING WALL B1 & B2

5/5/2016
4:06:46 PM
\\PPV\CA0902 PP RET WALL B.dgn

STATE OF ARKANSAS
REGISTERED PROFESSIONAL ENGINEER
No. 8760
ANDREW E. FRIES
5/5/16

DATE	DATE FILMED	DATE REVISED	DATE FILMED

FED.RD. DIST.NO.	STATE	FED.AID PROJ.NO.	SHEET NO.	TOTAL SHEETS
6	ARK.			
JOB NO.		CA0902	280	581

(2) LAYOUT OF RETAINING WALL C

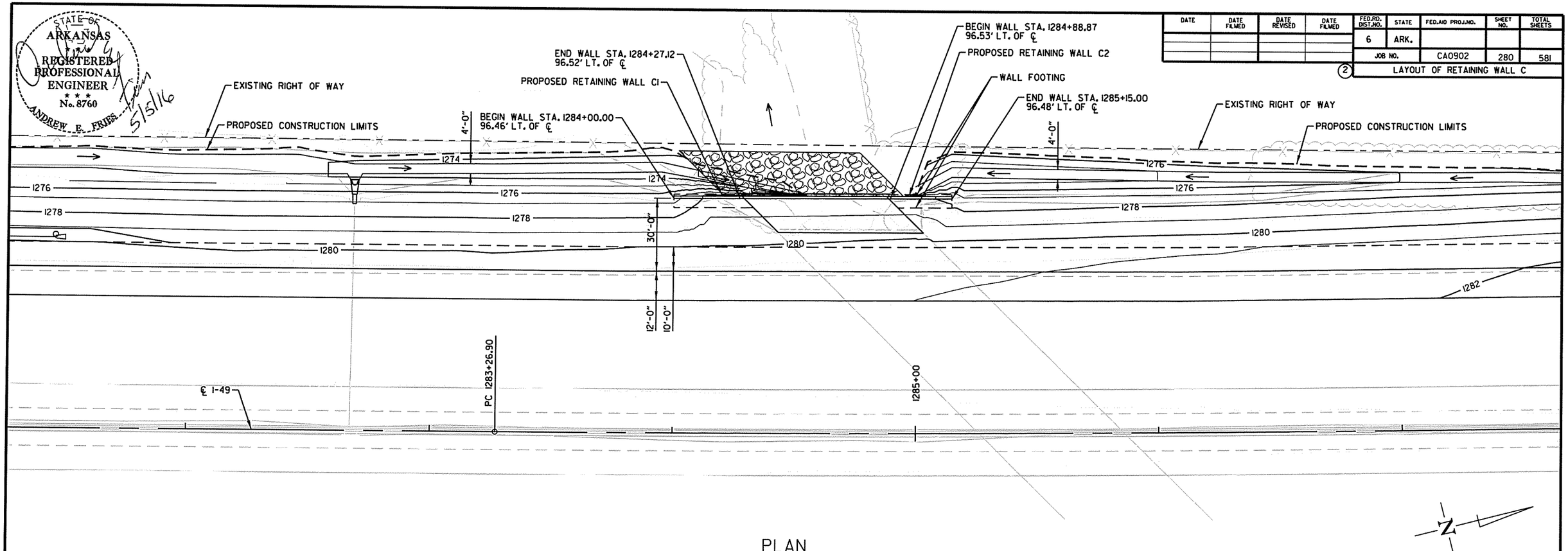

PLAN

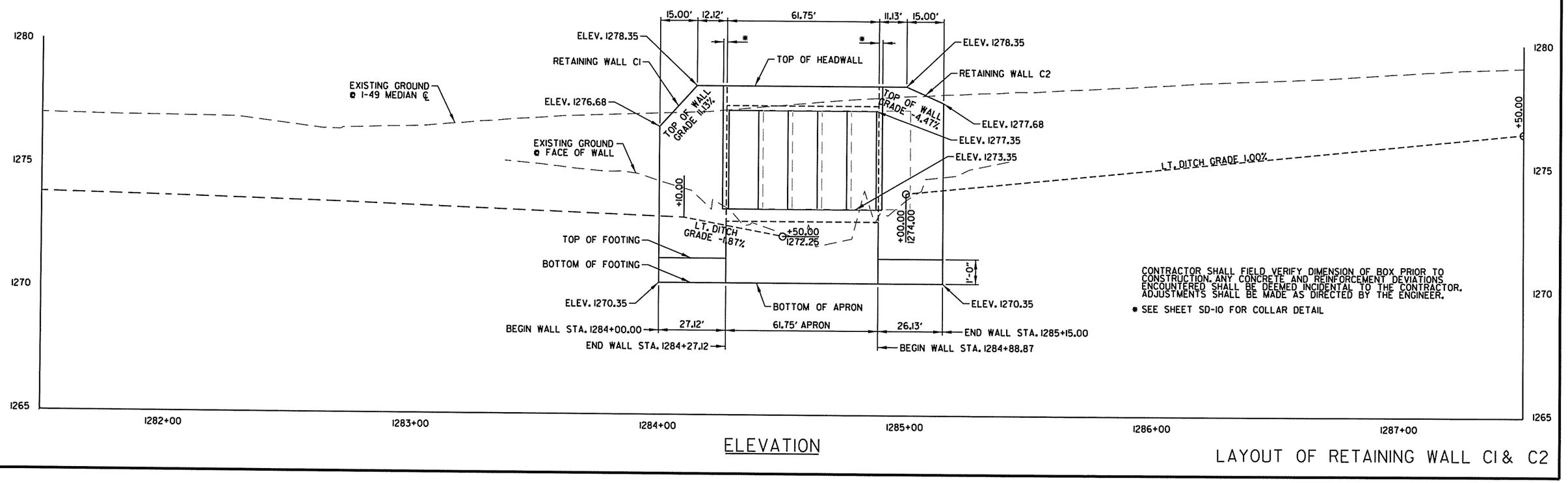

ELEVATION

CONTRACTOR SHALL FIELD VERIFY DIMENSION OF BOX PRIOR TO CONSTRUCTION. ANY CONCRETE AND REINFORCEMENT DEVIATIONS ENCOUNTERED SHALL BE DEEMED INCIDENTAL TO THE CONTRACTOR. ADJUSTMENTS SHALL BE MADE AS DIRECTED BY THE ENGINEER.

* SEE SHEET SD-10 FOR COLLAR DETAIL

LAYOUT OF RETAINING WALL C1 & C2

5/5/2016
4:06:49 PM
...\PLANS\CA0902 PP RET WALL C.dgn

DATE REVISED	DATE FILMED	DATE REVISED	DATE FILMED	FED. ROAD DIST. NO.	STATE	FED. AID PROJ. NO.	SHEET NO.	TOTAL SHEETS
				6	ARK.			
				JOB NO.		CA0902	281	581
				(1) A5979		LAYOUT		57153

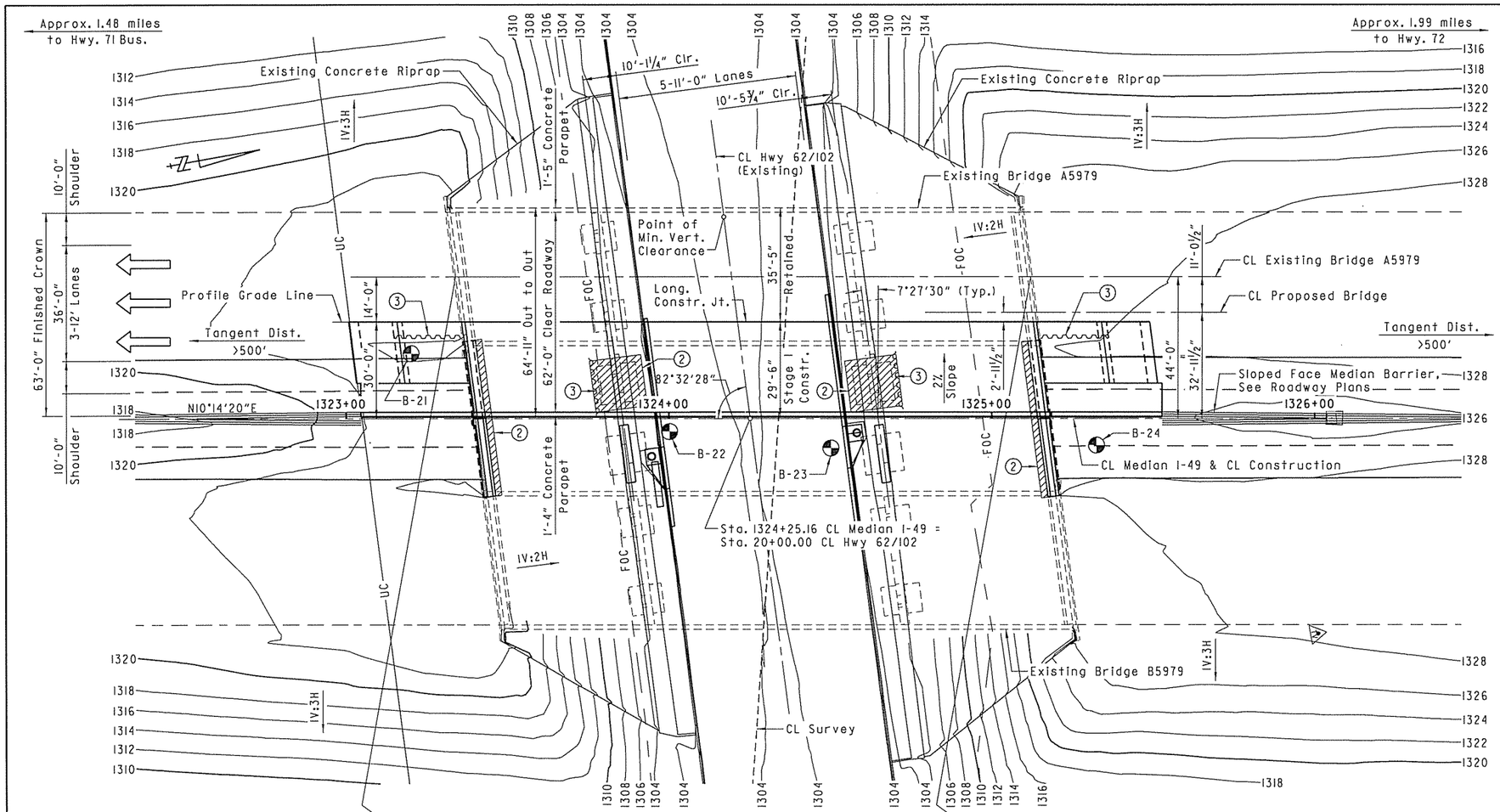

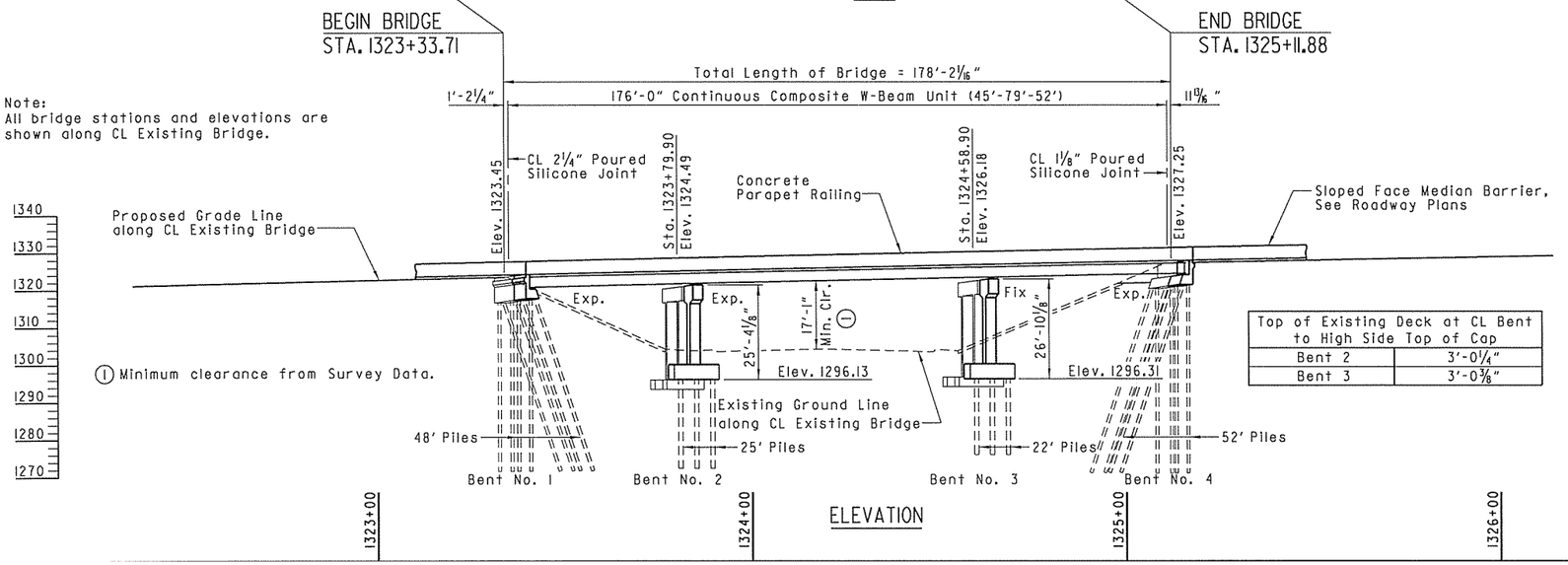

Top of Existing Deck at CL Bent to High Side Top of Cap	
Bent 2	3'-0¼"
Bent 3	3'-0⅜"

NOTES:

For R/W data, see Roadway Plans.

Remove Existing Approach Gutters (inside gutters) at both ends of Bridge. Use Type Special I Approach Slabs at both ends of Bridge, see Dwg. Nos. 57197 & 57199. Use Type Special I Approach Gutters (inside gutters) at both ends of Bridge, see Dwg. No. 57200.

(2) Remove Existing Concrete Riprap & replace with New Concrete Riprap, as necessary for Bent Construction. See Std. Dwg. No. 55002. Removal shall extend to the location of an existing Construction Joint. Payment for this work shall be considered subsidiary to the pay item "Modification of Existing Bridge Structure (Br. No. A5979)".

(3) Shoring may be required during construction. Payment for this work, if required, shall be considered subsidiary to the pay item "Unclassified Excavation for Structures - Bridge", see SP Job No. CA0902 "Shoring".

L = 600'

+2.69% +1.63%

PVI Sta. 1324+06.77
Elev. 1326.15

VERTICAL CURVE DATA
(Along Profile Grade Line)

NOTE:

The vertical curve is a "best-fit" curve based on elevations obtained from a survey of the existing bridge deck. The Contractor shall verify the accuracy of the proposed vertical curve prior to any construction.

STATE OF ARKANSAS JERRY D. STEPHENSON REGISTERED PROFESSIONAL ENGINEER No. 16183
4.29.2016
BRIDGE ENGINEER

SHEET 1 OF 4
LAYOUT OF BRIDGE A OVER HWY. 62/102
HWY. 62/102 - HWY. 72 WIDENING & INTCHNG. IMPVTS. (S)
BENTON COUNTY
ROUTE I-49 SEC. 29

ARKANSAS STATE HIGHWAY COMMISSION
LITTLE ROCK, ARK.

DRAWN BY: TLW DATE: 05/01/15 FILENAME: bCA0902a1_L1.dgn
CHECKED BY: JDS DATE: 05/01/15 SCALE: 1" = 20'
DESIGNED BY: TG DATE: 05/01/15

BRIDGE NO. A5979 DRAWING NO. 57153

DATE REVISED	DATE FILMED	DATE REVISED	DATE FILMED	FED. ROAD DIST. NO.	STATE	FED. AID PROJ. NO.	SHEET NO.	TOTAL SHEETS
				6	ARK.			
				JOB NO.		CA0902	282	581
				(1) B5979		LAYOUT		57154

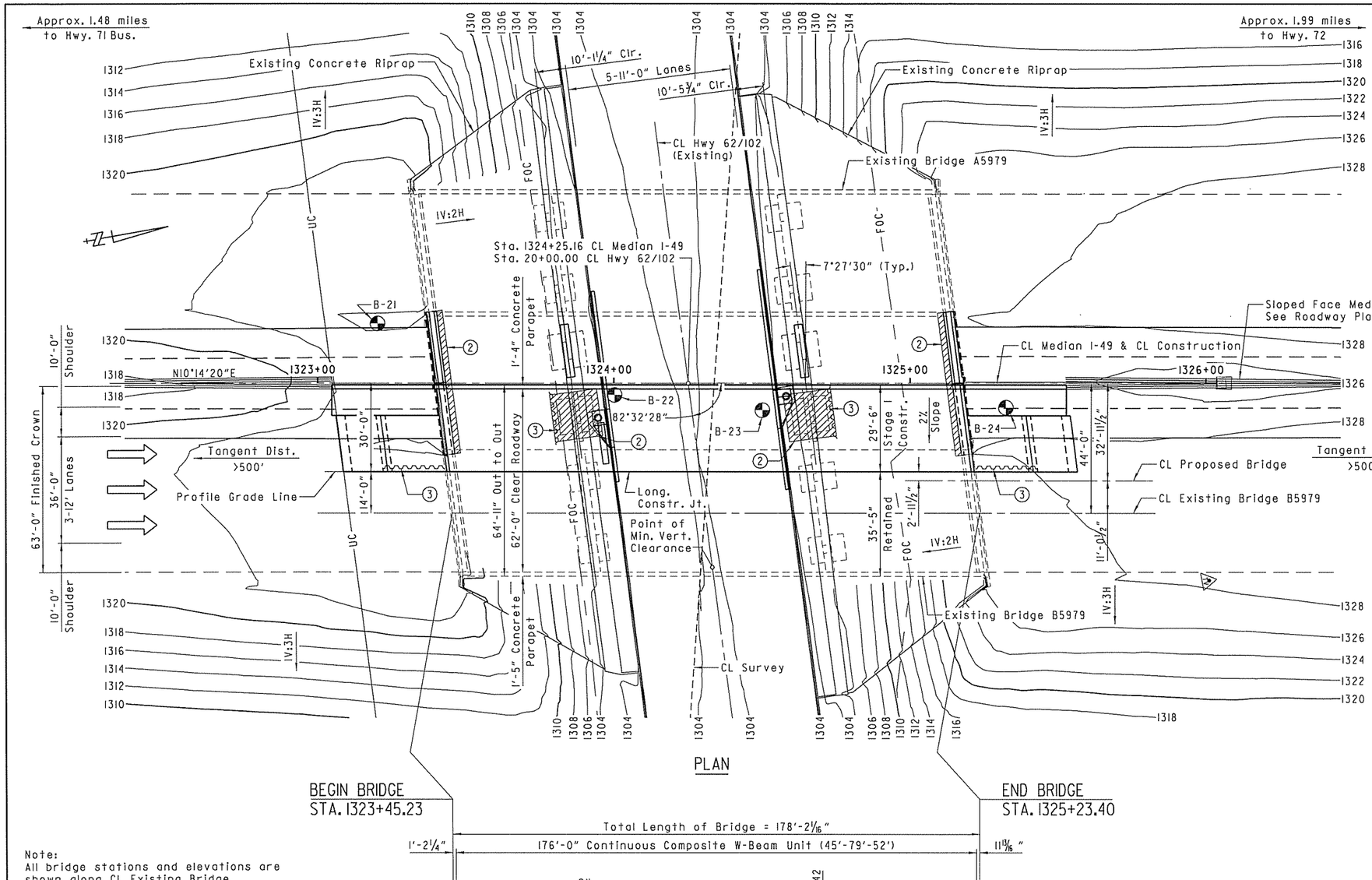

PLAN

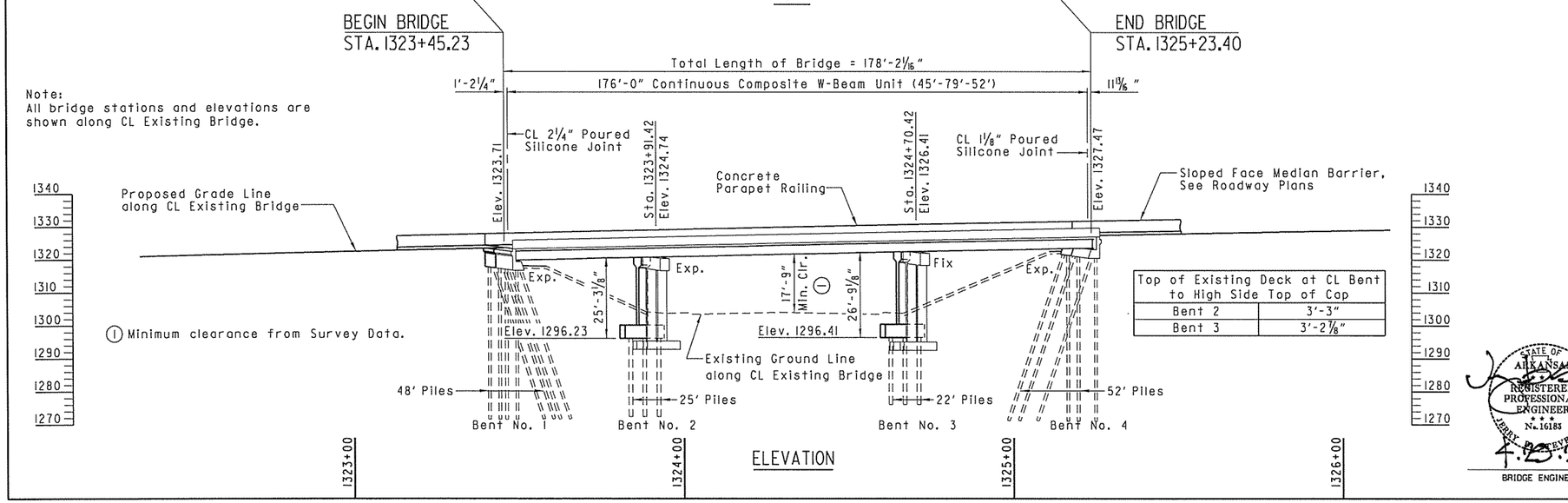

ELEVATION

Note:
All bridge stations and elevations are shown along CL Existing Bridge.

Top of Existing Deck at CL Bent to High Side Top of Cap	
Bent 2	3'-3"
Bent 3	3'-2⅞"

NOTES:

For R/W data, see Roadway Plans.

Remove Existing Approach Gutters (inside gutters) at both ends of Bridge. Use Type Special I Approach Slabs at both ends of Bridge, see Dwg. Nos. 57198 & 57199. Use Type Special I Approach Gutters (inside gutters) at both ends of Bridge, see Dwg. No. 57201.

(2) Remove Existing Concrete Riprap & replace with New Concrete Riprap, as necessary for Bent Construction. See Std. Dwg. No. 55002. Removal shall extend to the location of an existing Construction Joint. Payment for this work shall be considered subsidiary to the pay item "Modification of Existing Bridge Structure (Br. No. B5979)".

(3) Shoring may be required during construction. Payment for this work, if required, shall be considered subsidiary to the pay item "Unclassified Excavation for Structures - Bridge", see SP Job No. CA0902 "Shoring".

L = 600'

+2.69% +1.63%

PVI Sta. 1324+06.77
Elev. 1326.15

VERTICAL CURVE DATA
(Along Profile Grade Line)

NOTE:

The vertical curve is a "best-fit" curve based on elevations obtained from a survey of the existing bridge deck. The Contractor shall verify the accuracy of the proposed vertical curve prior to any construction.

STATE OF ARKANSAS
REGISTERED PROFESSIONAL ENGINEER
No. 16183
JERRY D. STEVENSON
4.25.2016
BRIDGE ENGINEER

SHEET 2 OF 4
LAYOUT OF BRIDGE B OVER
HWY. 62/102
HWY. 62/102 - HWY. 72 WIDENING
& INTCHNG. IMPVTS. (S)
BENTON COUNTY
ROUTE I-49 SEC. 29
ARKANSAS STATE HIGHWAY COMMISSION
LITTLE ROCK, ARK.

DRAWN BY: TLW DATE: 05/01/15
CHECKED BY: JDS DATE: 05/01/15
DESIGNED BY: TG DATE: 05/01/15
FILENAME: bCA0902bl_L2.dgn
SCALE: 1" = 20'

BRIDGE NO. B5979 DRAWING NO. 57154

DATE REVISED	DATE FILMED	DATE REVISED	DATE FILMED	FED. ROAD DIST. NO.	STATE	FED. AID PROJ. NO.	SHEET NO.	TOTAL SHEETS
				6	ARK.			
				JOB NO.		CA0902	283	581
				(1) A&B5979		LAYOUT		57155

GENERAL NOTES:

BENCH MARK: AHTD disk SE corner of existing Bridge B5979, 66.61 ft. right of CL I-49, Sta. 1323+47.84, Elev. 1323.31.

CONSTRUCTION SPECIFICATIONS: Arkansas State Highway and Transportation Department Standard Specifications for Highway Construction, 2014 edition, with applicable Supplemental Specifications and Special Provisions. Unless otherwise noted in the plans Section and Subsection refer to the Standard Construction Specifications.

DESIGN SPECIFICATIONS: AASHTO Standard Specifications for Highway Bridges (17th Edition, 2002) with current interim specifications.

LIVE LOADING: HS20 DESIGN METHOD: LOAD FACTOR SEISMIC PERFORMANCE CATEGORY: A

MATERIALS AND STRENGTHS:

Class S(AE) Concrete (superstructure)	f'c = 4,000 psi
Class S Concrete (substructure)	f'c = 3,500 psi
Reinforcing Steel (Grade 60, AASHTO M31 or M322, Type A)	fy = 60,000 psi
Structural Steel (AASHTO M 270, Gr. 36)	Fy = 36,000 psi
Structural Steel (AASHTO M 270, Gr. 50)	Fy = 50,000 psi

BORING LOGS: Boring logs may be obtained from the Construction Contract Procurement Section of the Program Management Division.

STEEL PILING: Piling for Bents 1 and 4 shall be HP10x42 (Grade 50) and shall be driven to a minimum safe bearing capacity of 78 tons per pile. Piling in Bents 2 and 3 shall be HP12x53 (Grade 50) and shall be driven to a minimum safe bearing capacity of 97 tons per pile. All piling shall be driven into the material designated as Cherty Limestone on the boring legend unless bearing is achieved at a higher elevation. Lengths of piling shown are for estimating quantities and for use in determining payment for cut-off and build-up in accordance with the Standard Specifications. Actual lengths to be determined in the field. Piles in end bents shall be driven after embankment to bottom of cap is in place. On all piles the Contractor shall use approved steel H-Pile driving points.

PREBORING: Preboring is required for all piling at Bents 2 and 3 and shall be to a 1' depth into the material designated as Cherty Limestone on the boring legend. Quantities of preboring shown are for bidding purposes only. The actual size and depths of the preboring are to be determined in the field by the Engineer. The Contractor shall be responsible for keeping the prebored holes free from debris prior to backfilling, which may require casings or other methods. After driving is completed, the prebored holes shall be backfilled with an approved non-shrink grout, or other approved material to completely fill voids. The backfill and any required casings will not be paid for directly but shall be considered subsidiary to the item "Preboring".

FOOTINGS: Top of footings shall be a minimum of 2'-0" below finished ground line at Bents 2 and 3. Foundations for footings shall be prepared in accordance with Subsection 801.04.

PAINT: All new Structural Steel except galvanized members, surfaces in contact with concrete, and as otherwise noted, shall be painted as specified in Subsection 807.75. The color of paint shall be Green and shall match existing.

BRIDGE DECK: The concrete bridge deck shall be given a tine finish as specified for final finishing in Subsection 802.19 for Class S, Tined Bridge Roadway Surface Finish.

DETAIL DRAWINGS:	DRAWING NOS.
Stage Construction	57157 & 57158
End Bents	57159 - 57164 & 57178 - 57183
Intermediate Bents	57165 - 57168 & 57184 - 57187
176' Continuous Composite W-Beam Unit	57169 - 57176 & 57188 - 57195
Elastomeric Bearings	57177 & 57196
Type Special I Approach Slabs	57197 - 57199
Type Special I Approach Gutters	57200 & 57201
Concrete Riprap	55002
Steel Piling	55020

EXISTING BRIDGE: Existing Bridge Nos. A&B5979 are 42'-10" wide and 178'-2 1/16" long and consists of a 176'-0" Cont. Comp. W-Beam unit supported by two column concrete intermediate bents with spread footings and steel H-Pile trestle end bents. Plans of the existing structures may be obtained upon request to the Construction Contract Procurement Section of the Program Management Division.

THE PROPOSED WORK CONSIST OF: Widening the existing bridges, modifying the existing end bents, constructing new intermediate bents to the median side of existing bents, removing and replacing portions of the concrete decks, removing and replacing portions of the existing concrete riprap, and replacing the joint seals. For additional requirements in conducting the work, see Section 821.

VERIFICATION: Except as noted, components of the existing bridges are to be retained and joined to the proposed work. Information and dimensions shown are based on existing bridge plans. The Contractor is to adhere strictly to the requirements for verification of the geometry of the existing bridges and its relationship to the proposed work described in Subsection 821.02 and make necessary adjustments to fit the proposed work to the existing structures. Payment for this work shall be considered subsidiary to the pay item "Modification of Existing Bridge Structure (Br. No. A5979)" and "Modification of Existing Bridge Structure (Br. No. B5979)".

REMOVAL AND SALVAGE: All material removed from the existing bridges under Item 821 shall be disposed of according to Section 205. All material removed from the existing bridges shall become the property of the Contractor.

MAINTENANCE OF TRAFFIC: See Roadway Plans.

STATE OF ARKANSAS
REGISTERED PROFESSIONAL ENGINEER
No. 16183
JERRY D. STEVENSON
4.25.2016
BRIDGE ENGINEER

SHEET 3 OF 4
LAYOUT OF BRIDGE A & B OVER HWY. 62/102
HWY. 62/102 - HWY. 72 WIDENING & INTCHNG. IMPVTS. (S)
BENTON COUNTY
ROUTE I-49 SEC. 29
ARKANSAS STATE HIGHWAY COMMISSION
LITTLE ROCK, ARK.

DRAWN BY: TLW DATE: 05/01/15 FILENAME: bCA0902x1_L3.dgn
CHECKED BY: JDS DATE: 05/01/15 SCALE: NONE
DESIGNED BY: TG DATE: 05/01/15
BRIDGE NO. A&B5979 DRAWING NO. 57155

DATE REVISED	DATE FILMED	DATE REVISED	DATE FILMED	FED. ROAD DIST. NO.	STATE	FED. AID PROJ. NO.	SHEET NO.	TOTAL SHEETS
				6	ARK.			
				JOB NO.		CA0902	284	581
				(1) A&B5979		LAYOUT		57156

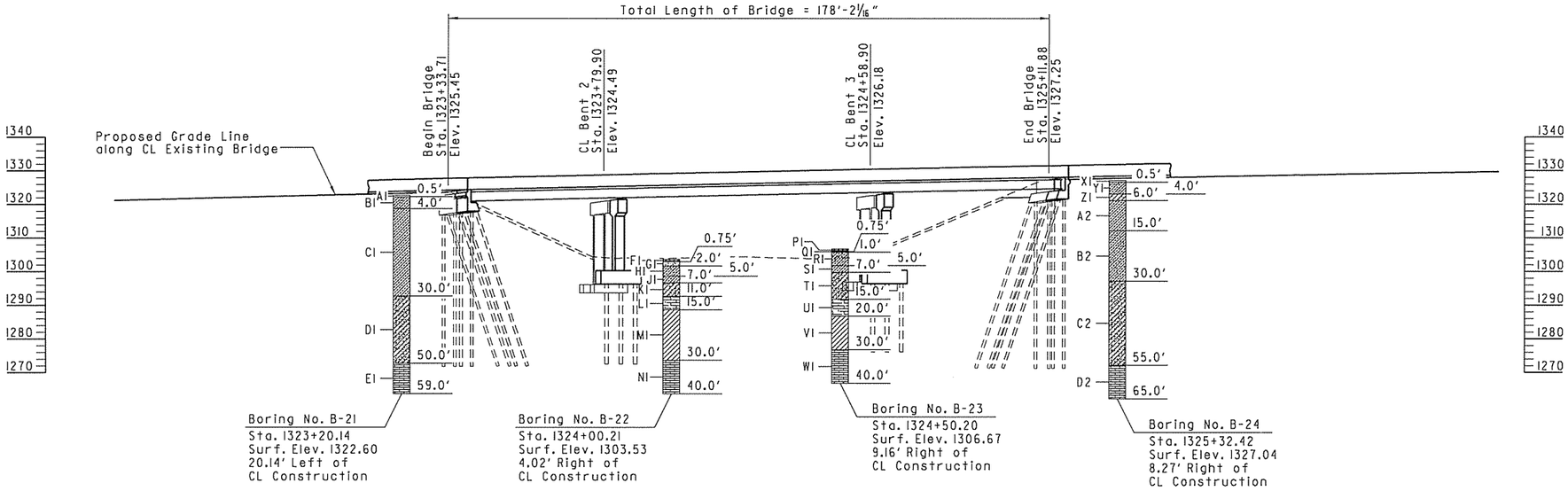

ELEVATION

Bridge A5979 shown.
For Bridge B5979, see Bridge Layout.

BORING LEGEND

A1 - Brown Silty Topsoil
B1 - Brown Sandy Clay with Fine Gravel, Firm
C1 - Reddish-Brown Sandy Clay, Firm
D1 - Reddish-Brown Clayey Chert Gravel
E1 - Cherty Limestone, Gray to Light Gray, Generally massive with some crystalline internal structure
F1 - Asphalt
G1 - Base Course Material
H1 - Reddish-Brown Clayey Sand with Gravel, Loose
J1 - Olive-Brown to Gray Sandy Clay, Soft
K1 - Reddish-Brown Clayey Chert Gravel, Medium-Dense
L1 - Hard Chert Seams
M1 - Reddish-Brown Clayey Sand with Gravel, Very Dense, Saturated
N1 - Cherty Limestone, Gray to Light Gray, Generally massive with some crystalline internal structure
P1 - Asphalt
Q1 - Base Course Material
R1 - Reddish-Brown Sandy Clay with Gravel, Firm
S1 - Olive-Brown to Gray Sandy Clay, Soft
T1 - Reddish-Brown Clayey Chert Gravel, Dense
U1 - Hard Weathered Chert Seams
V1 - Reddish-Brown Clayey Sand with Fine Gravel, Very Loose, Saturated
W1 - Cherty Limestone, Gray to Light Gray, Generally massive with some crystalline internal structure
X1 - Brown Silty Topsoil with Fine Gravel
Y1 - Brown Sandy Clay with Fine Gravel, Firm
Z1 - Brown Clayey Sand with Fine Gravel, Loose
A2 - Reddish-Brown Sandy Clay, Soft
B2 - Reddish-Brown Clayey Sand with Fine Chert Gravel, Medium-Dense
C2 - Reddish-Brown Clayey Chert Gravel
D2 - Cherty Limestone, Gray to Light Gray, Generally massive with some crystalline internal structure

"N" VALUES

Boring No. B-21
Sta. 1323+20.14 - 20.14' Left of CL Construction
1.0 - 2.0, N = 20
2.0 - 3.0, N = 15
4.0 - 5.0, N = 18
6.0 - 7.0, N = 13
8.0 - 9.0, N = 6
10.0 - 11.0, N = 10
15.0 - 16.0, N = 12
20.0 - 21.0, N = 4
25.0 - 26.0, N = 14
30.0 - 30.3, N = 50 (3")
35.0 - 36.0, N = 10
40.0 - 40.0, N = 50 (0")
45.0 - 45.0, N = 50 (0")

Boring No. B-22
Sta. 1324+00.21 - 4.02' Right of CL Construction
2.0 - 3.0, N = 6
3.0 - 4.0, N = 8
5.0 - 6.0, N = 6
7.0 - 8.0, N = 15
9.0 - 10.0, N = 20
11.0 - 11.4, N = 50 (5")
15.0 - 15.7, N = 50 (8")
25.0 - 25.0, N = 50 (0")

Boring No. B-23
Sta. 1324+50.20 - 9.16' Right of CL Construction
1.0 - 2.0, N = 11
3.0 - 4.0, N = 15
5.0 - 6.0, N = 9
7.0 - 8.0, N = 40
9.0 - 10.0, N = 29
15.0 - 15.0, N = 50 (0")
20.0 - 21.0, N = 4
25.0 - 26.0, N = 24
29.5 - 29.9, N = 50 (5")

Boring No. B-24
Sta. 1325+32.42 - 8.27' Right of CL Construction
0.5 - 1.5, N = 15
2.0 - 3.0, N = 12
4.0 - 5.0, N = 8
6.0 - 7.0, N = 8
8.0 - 9.0, N = 13
10.0 - 11.0, N = 20
15.0 - 16.0, N = 18
20.0 - 21.0, N = 18
25.0 - 26.0, N = 8
30.0 - 31.0, N = 39
35.0 - 35.5, N = 50 (6")
40.0 - 40.0, N = 50 (0")
45.0 - 45.0, N = 50 (0")
50.0 - 50.0, N = 50 (0")

STATE OF ARKANSAS
REGISTERED PROFESSIONAL ENGINEER
No. 16183
JERRY D. STEVENSON
4.29.16
BRIDGE ENGINEER

SHEET 4 OF 4
LAYOUT OF BRIDGE A & B OVER
HWY. 62/102
HWY. 62/102 - HWY. 72 WIDENING
& INTCHNG. IMPVTS. (S)
BENTON COUNTY
ROUTE I-49 SEC. 29
ARKANSAS STATE HIGHWAY COMMISSION
LITTLE ROCK, ARK.

DRAWN BY: TLW DATE: 05/01/15
CHECKED BY: JDS DATE: 05/01/15
DESIGNED BY: TG DATE: 05/01/15
FILENAME: bCA0902xl_L4.dgn
SCALE: 1" = 20'
BRIDGE NO. A&B5979 DRAWING NO. 57156

1323+00 1324+00 1325+00 1326+00

DATE REVISED	DATE FILMED	DATE REVISED	DATE FILMED	FED. ROAD DIST. NO.	STATE	FED. AID PROJ. NO.	SHEET NO.	TOTAL SHEETS
				6	ARK.			
				JOB NO.		CA0902	285	581
				(1) A&B5979		STAGE CONSTR.		57157

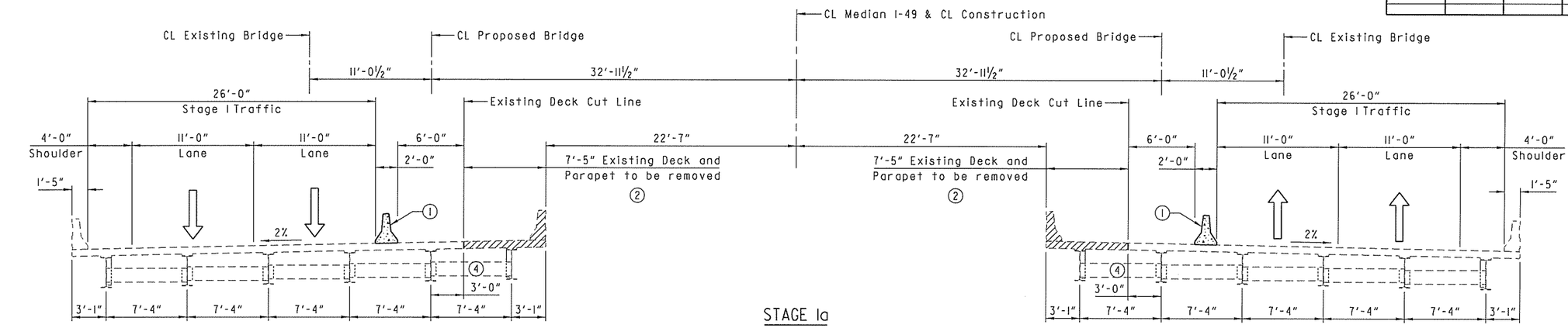

STAGE Ia

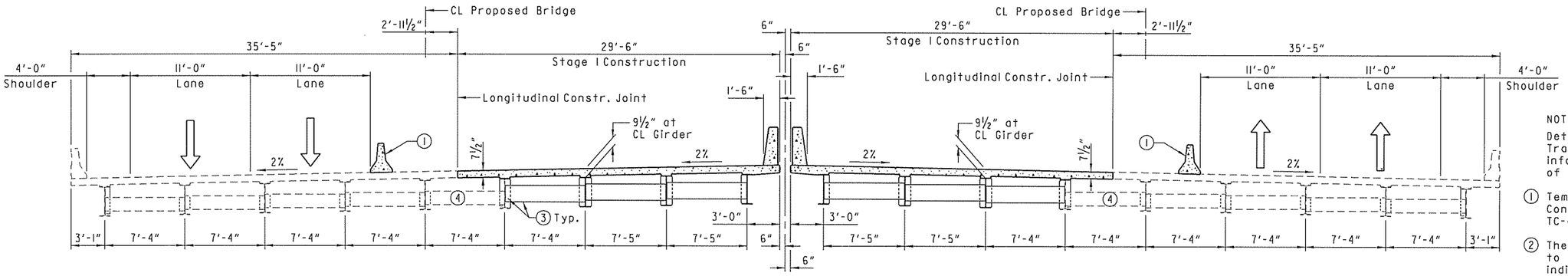

STAGE Ib

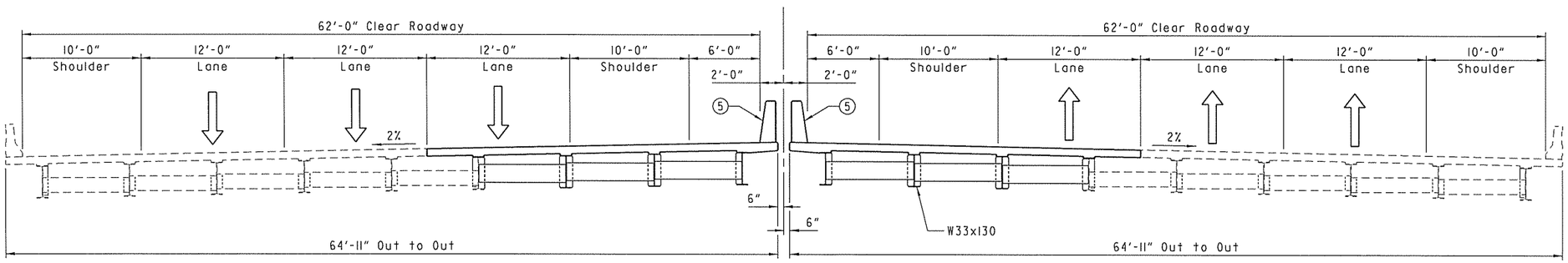

SOUTHBOUND BRIDGE A5979

NORTHBOUND BRIDGE B5979

COMPLETED TYPICAL SECTION

NOTES:

Details related to Maintenance of Traffic on bridge plans for information only. For Maintenance of Traffic, see Roadway Plans.

(1) Temporary Precast Barrier (Do Not Connect to Deck), see Std. Dwg. No. TC-4.

(2) The concrete slab and parapet are to be removed to the cut line as indicated in accordance with Section 821. The existing transverse slab reinforcing shall be retained to be lapped with the new reinforcing steel. Care shall be exercised during the removal of the existing deck to ensure that the beams, diaphragms, shear connectors, bolted connections and reinforcement are not damaged. Damaged items that are not salvageable as determined by the Engineer, shall be replaced by the contractor at no additional payment.

(3) Install new diaphragms and connection plates prior to deck pour. The new connection plate shall be field welded to the existing beam.

(4) See "Typical Roadway Section", Dwg. Nos. 57169 & 57188.

(5) 1'-4" Concrete Parapet Rail.

STATE OF ARKANSAS
JERRY D. STEVENSON
REGISTERED PROFESSIONAL ENGINEER
No. 16183
4.29.2016
BRIDGE ENGINEER

SHEET 1 OF 2
DETAILS OF STAGE CONSTRUCTION
BRIDGES OVER HWY. 62/102
HWY. 62/102 - HWY. 72 WIDENING
& INTCHNG. IMPVTS. (S)
BENTON COUNTY
ROUTE I-49 SEC. 29
ARKANSAS STATE HIGHWAY COMMISSION
LITTLE ROCK, ARK.

DRAWN BY: TLW DATE: 05/01/15
CHECKED BY: JDS DATE: 05/01/15
DESIGNED BY: TG DATE: 05/01/15
FILENAME: bCA0902x1_scl.dgn
SCALE: 3/16" = 1'-0"

BRIDGE NO. A&B5979 DRAWING NO. 57157

DATE REVISED	DATE FILMED	DATE REVISED	DATE FILMED	FED. ROAD DIST. NO.	STATE	FED. AID PROJ. NO.	SHEET NO.	TOTAL SHEETS
				6	ARK.			
				JOB NO.		CA0902	286	581
				(1) A&B5979		STAGE CONSTR.		57158

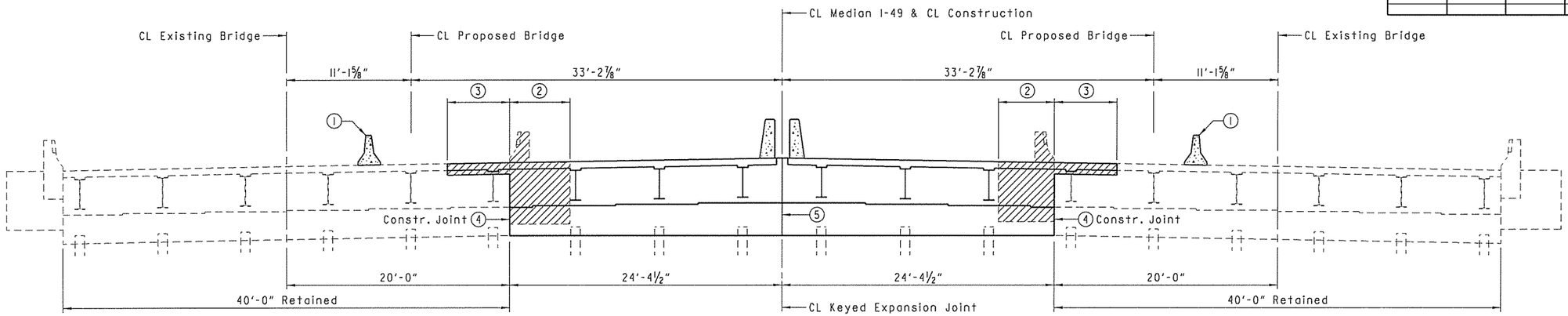

STAGE I

Looking Ahead Normal to Bents
Shown at Existing Bents 4A & 4B
(Bents 1A & 1B Similar)

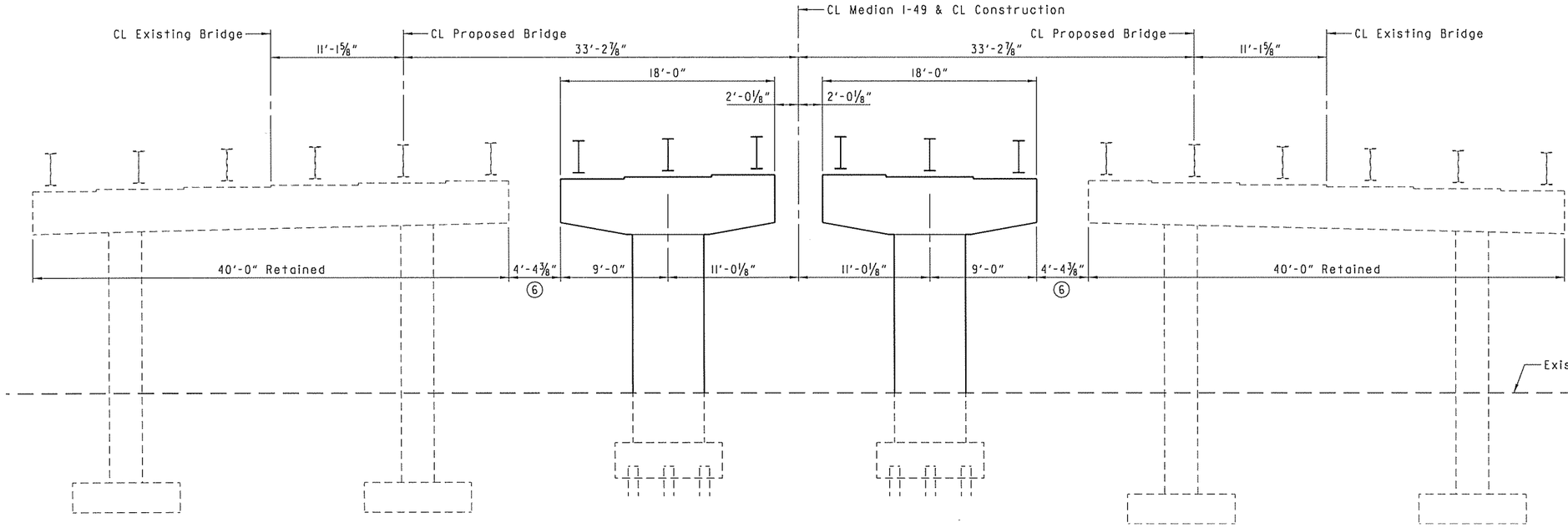

SOUTHBOUND BRIDGE A5979

NORTHBOUND BRIDGE B5979

STAGE I

Looking Ahead Normal to Bents
Shown at Existing Intermediate Bents 2A & 2B
(Intermediate Bents 3A & 3B Similar)

NOTES:

(1) Temporary Precast Barrier, see Std. Dwg. No. TC-4.

(2) Saw cut and remove wing and portions of existing backwall. Clean, retain, and straighten existing reinforcement as required to lap with new reinforcement.

(3) Portion of backwall removed above the paving bracket during Stage I Construction, see End Bent Details.

(4) Drill & dowel into existing cap and backwall, see End Bent Details.

(5) CL ½" Joint Filler, see End Bent Details.

(6) Dimensions based on existing plans. The contractor shall verify dimensions in the field.

STATE OF ARKANSAS
REGISTERED PROFESSIONAL ENGINEER
No. 16183
JERRY D. STEVENSON
4.29.2016
BRIDGE ENGINEER

SHEET 2 OF 2
DETAILS OF STAGE CONSTRUCTION
BRIDGES OVER HWY. 62/102
HWY. 62/102 - HWY. 72 WIDENING & INTCHNG. IMPVTS. (S)
BENTON COUNTY

ROUTE I-49 SEC. 29

ARKANSAS STATE HIGHWAY COMMISSION

LITTLE ROCK, ARK.

DRAWN BY: TLW DATE: 05/01/15 FILENAME: bCA0902xl_sc2.dgn
CHECKED BY: JDS DATE: 05/01/15 SCALE: 3/16" = 1'-0"
DESIGNED BY: TG DATE: 05/01/15

BRIDGE NO. A&B5979 DRAWING NO. 57158

DATE REVISED	DATE FILMED	DATE REVISED	DATE FILMED	FED. ROAD DIST. NO.	STATE	FED. AID PROJ. NO.	SHEET NO.	TOTAL SHEETS
				6	ARK.			
				JOB NO.		CA0902	287	581
				(1) A5979		BENT 1		57159

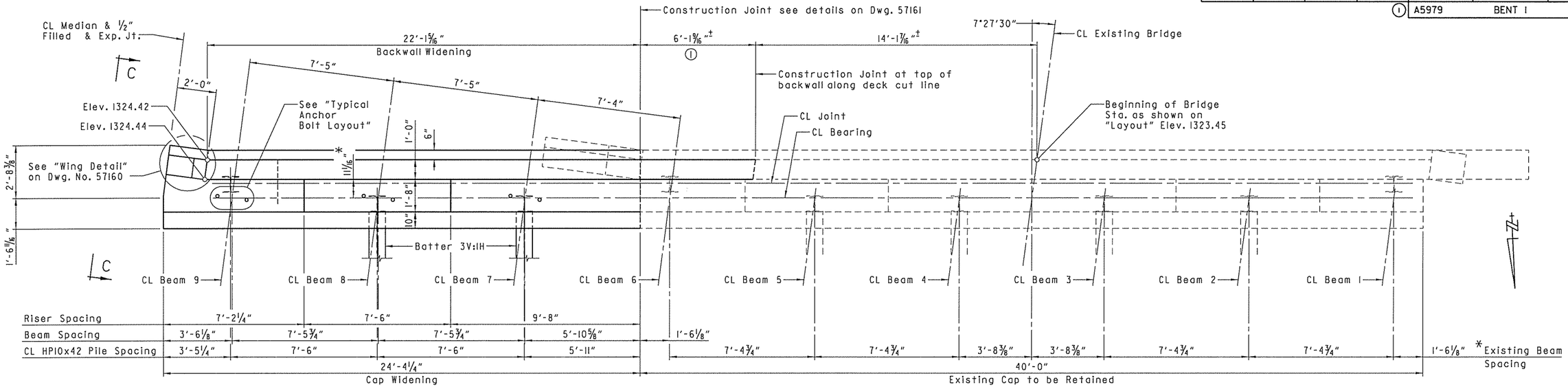

PLAN

Scale: ⅜" = 1'-0"

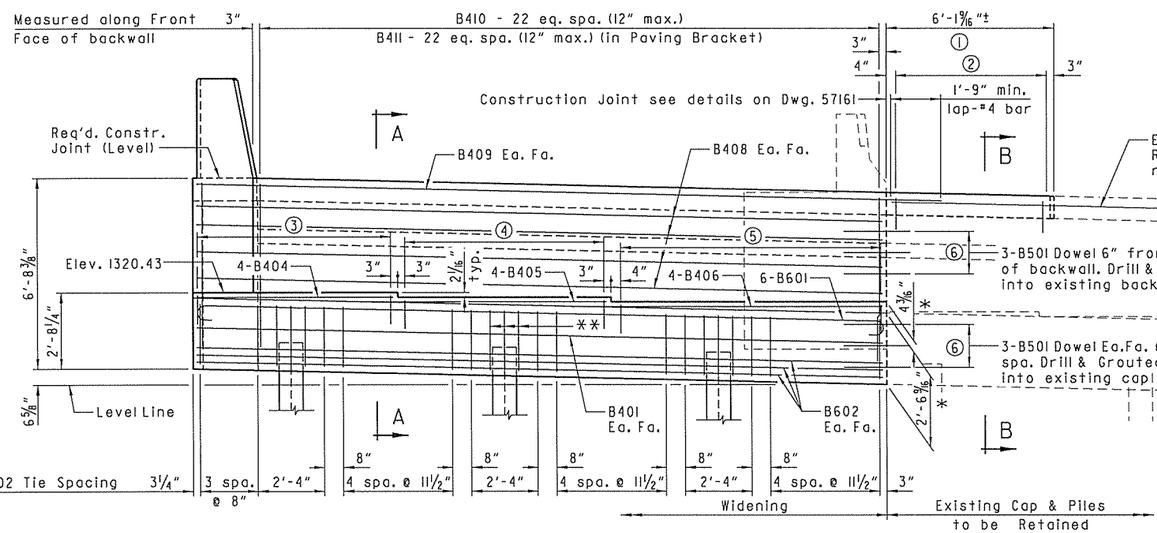

ELEVATION

Looking Back

Scale: ⅜" = 1'-0"

* These dimensions are based on the original plans. The Contractor shall verify these in the field.

** B403 @ 6" Typ. centered over each pile

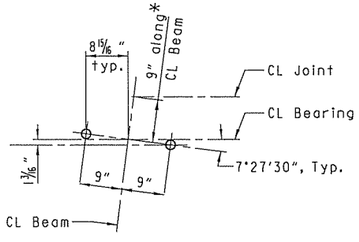

TYPICAL ANCHOR BOLT LAYOUT

Scale: ¾" = 1'-0"

For details of Elastomeric Bearings, see Dwg. No. 57177.

① Portion of backwall concrete above the paving bracket to be removed. Existing backwall reinforcing steel to be retained and cleaned to lap to new reinforcing steel as shown. Replace the portion of backwall during new construction. Any damaged reinforcing steel shall be replaced by dowel bars drilled and grouted into place at the contractor's expense.

② B412 - 6 eq. spa. (12" max.) Ea. Fa. (Drill and Grout into Existing Backwall)

③ B407 - 7 eq. spa. (12" max.)

④ B407 - 7 spa. @ 12"

⑤ B407 - 9 spa. @ 12"

⑥ Minimum 8" embedment into existing cap and backwall. Grout used shall be an approved epoxy grout listed on the QPL. Hole diameter and installation procedure shall be as recommended by the grout manufacturer.

STATE OF ARKANSAS
REGISTERED PROFESSIONAL ENGINEER
No. 16183
JERRY D. STEVENSON
4.29.15
BRIDGE ENGINEER

SHEET 1 OF 3
DETAILS OF BENT 1 - BRIDGE A
BRIDGES OVER HWY. 62/102
ROUTE SEC.
ARKANSAS STATE HIGHWAY COMMISSION
LITTLE ROCK, ARK.

DRAWN BY:	TLW	DATE:	05/01/15	FILENAME:	bCA0902cl_bll.dgn
CHECKED BY:	RMH	DATE:	05/01/15	SCALE:	AS NOTED
DESIGNED BY:	TG	DATE:	05/01/15		

BRIDGE NO. A5979 DRAWING NO. 57159

DATE REVISED	DATE FILMED	DATE REVISED	DATE FILMED	FED. ROAD DIST. NO.	STATE	FED. AID PROJ. NO.	SHEET NO.	TOTAL SHEETS
				6	ARK.			
				JOB NO.		CA0902	288	581
				(1) A5979		BENT 1		57160

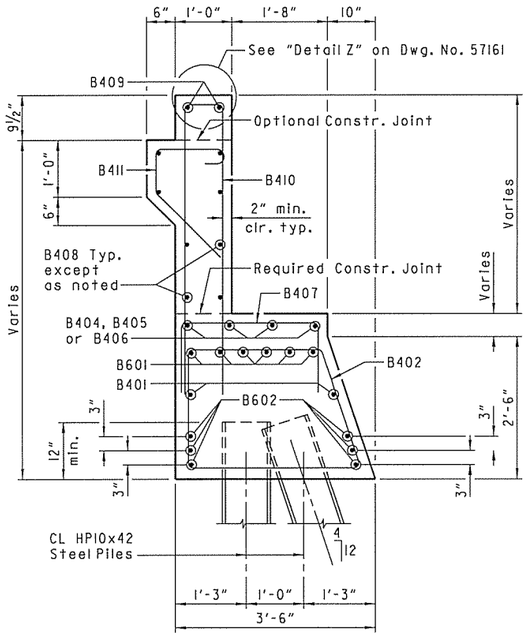

SECTION A-A
Scale: ¾" = 1'-0"

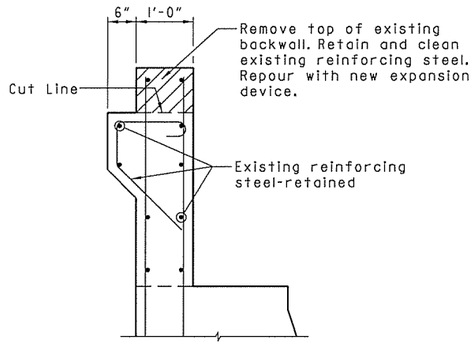

REMOVAL

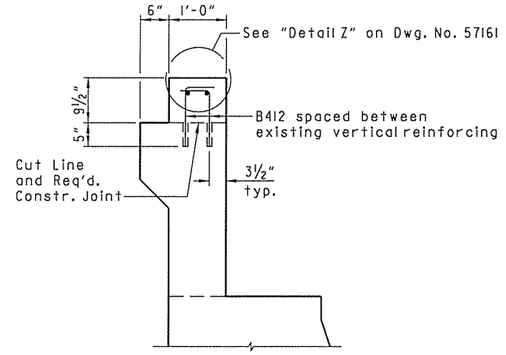

CONSTRUCTION

Grout B412 bars into 5" min. deep drilled holes. Grout used shall be an approved epoxy grout listed on the QPL. Hole diameter and installation procedure shall be as recommended by the grout manufacturer.

B412 bars shall be located to avoid damaging the existing backwall reinforcing steel. Payment for grouting and placement of bars shall be considered subsidiary to the pay item "Modification of Existing Bridge Structure (Br. No. A5979)".

SECTION B-B
Scale: ¾" = 1'-0"

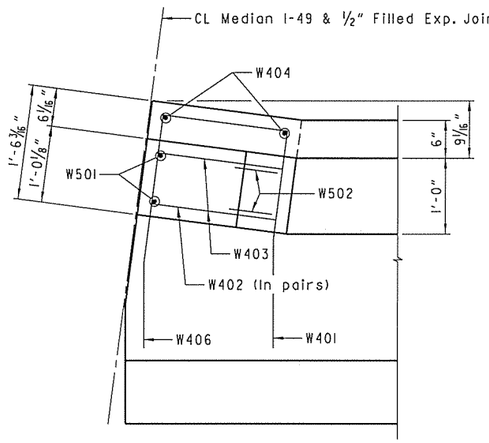

WING DETAIL
Scale: 1" = 1'-0"

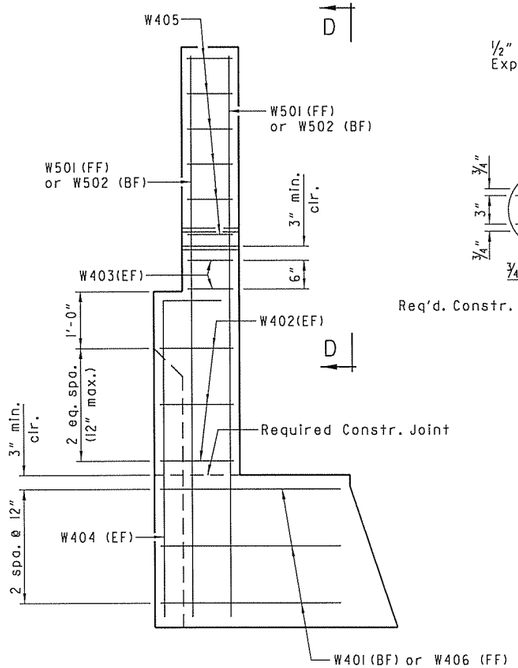

VIEW C-C
Scale: ¾" = 1'-0"

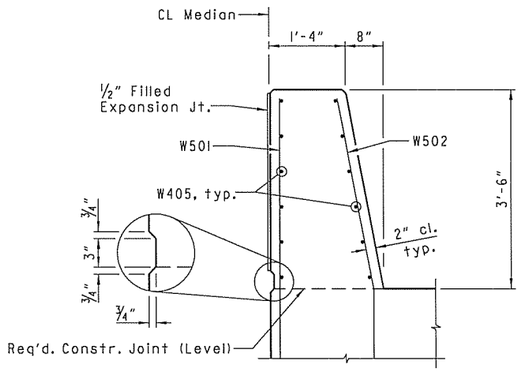

VIEW D-D
Scale: ¾" = 1'-0"

BF = Back Face
FF = Front Face
EF = Each Face

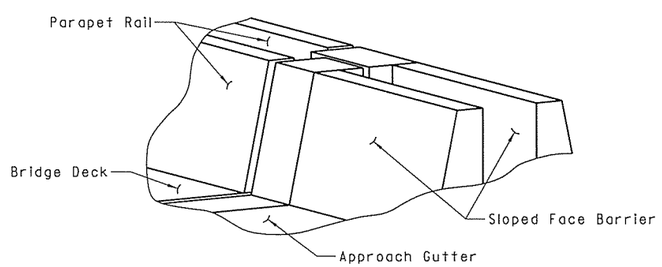

DETAIL OF BARRIER AT BRIDGE END
No Scale

GENERAL NOTES:

Work required to remove & dispose portions of the existing bridge, retain and clean existing reinforcing steel, and any required doweling will not be paid for directly but will be considered subsidiary to the item "Modification of Existing Bridge Structure (Br. No. A5979)".

No portion of the backwall for new construction shall be poured until the beams are in place. The portion of the backwall above the optional construction joint or paving bracket shall not be placed until the adjacent deck pour has been made.

All concrete shall be Class "S" and be poured in the dry. All exposed corners to be chamfered ¾" unless otherwise noted.

All reinforcing steel shall be Grade 60 (Yield Strength = 60,000 psi) conforming to AASHTO M31 or M322, Type A, with mill test reports.

Structural steel in end bents shall be AASHTO M 270, Gr. 50 and shall be paid for as "Structural Steel in Beam Spans (M 270, Grade 50)".

Top reinforcing bars shall be properly placed to avoid interference with anchor bolts or sheet metal sleeves.

For additional information, see "Layout".

STATE OF ARKANSAS
REGISTERED PROFESSIONAL ENGINEER
No. 16183
JERRY T. GARRETT
4-25-2016
BRIDGE ENGINEER

SHEET 2 OF 3
DETAILS OF BENT 1 - BRIDGE A
BRIDGES OVER HWY. 62/102
ROUTE SEC.
ARKANSAS STATE HIGHWAY COMMISSION
LITTLE ROCK, ARK.

DRAWN BY: TLW DATE: 05/01/15 FILENAME: bCA0902al_bl2.dgn
CHECKED BY: RMH DATE: 05/01/15 SCALE: AS NOTED
DESIGNED BY: TG DATE: 05/01/15

BRIDGE NO. A5979 DRAWING NO. 57160

DATE REVISED	DATE FILMED	DATE REVISED	DATE FILMED	FED. ROAD DIST. NO.	STATE	FED. AID PROJ. NO.	SHEET NO.	TOTAL SHEETS
				6	ARK.			
				JOB NO.		CA0902	289	581
				(1) A5979		BENT 1		57161

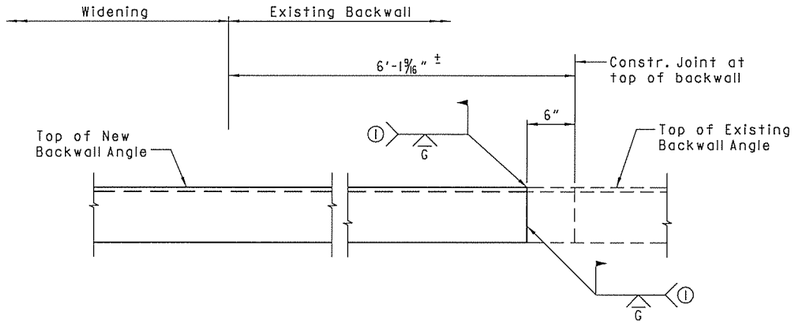

DETAIL OF WELD LOCATION
FOR EXPANSION DEVICE
No Scale

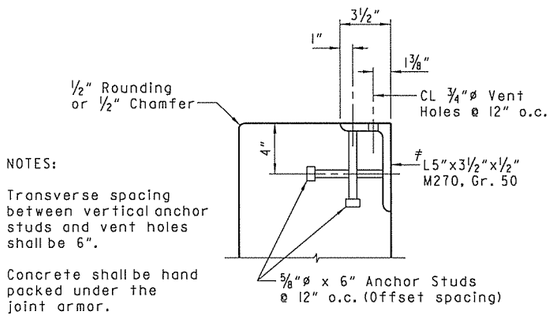

NOTES:

Transverse spacing between vertical anchor studs and vent holes shall be 6".

Concrete shall be hand packed under the joint armor.

For additional joint details, see Dwg. No. 57176.

DETAIL Z
No Scale

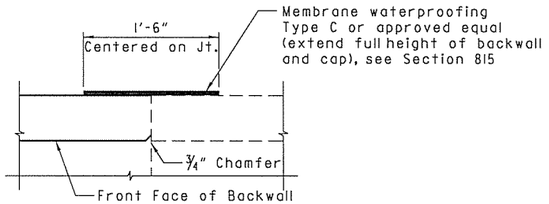

NOTE:

Payment for membrane to be considered subsidiary to "Class S Concrete-Bridge".

CONSTRUCTION JOINT DETAIL
No Scale

‡Angle size is based on orginal plans. The contractor shall verify in the field.

BAR LIST

MARK	NO. REQ'D.	LENGTH	PIN. DIA.
B401	2	24'-1"	Str.
B402	24	10'-0"	2"
B403	9	6'-5"	2"
B404	4	6'-11"	Str.
B405	4	8'-3"	Str.
B406	4	10'-5"	Str.
B407	26	5'-6"	2"
B408	8	23'-10"	2"
B409	2	25'-9"	2"
B410	23	11'-2"	2"
B411	23	3'-11"	2"
B412	14	1'-6"	2"
B501	9	2'-9"	Str.
B601	6	25'-5"	4½"
B602	6	24'-1"	Str.
W401	3	3'-6"	3"
W402	6	2'-9"	3"
W403	4	2'-3"	3"
W404	2	6'-6"	3"
W405	12	0'-9"	Str.
W406	3	4'-1"	3"
W501	2	9'-11"	Str.
W502	2	9'-11"	3¾"

BENDING DIAGRAM

Dimensions are out to out of bars.

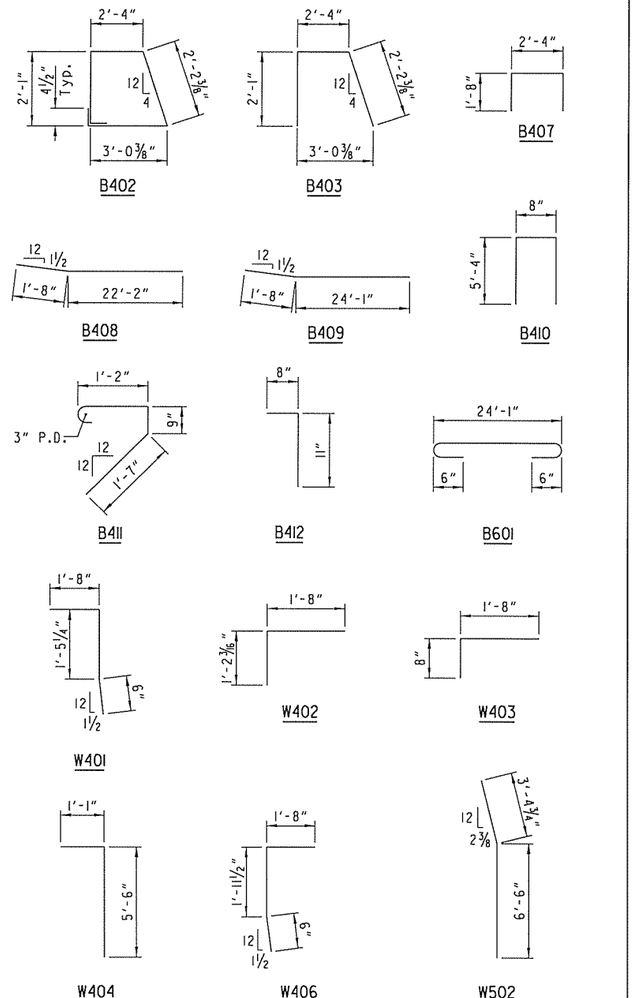

STATE OF ARKANSAS
REGISTERED PROFESSIONAL ENGINEER
No. 16183
JERRY D. STEVENSON
4.25.2016
BRIDGE ENGINEER

SHEET 3 OF 3
DETAILS OF BENT 1 - BRIDGE A
BRIDGES OVER HWY. 62/102
ROUTE SEC.
ARKANSAS STATE HIGHWAY COMMISSION
LITTLE ROCK, ARK.

DRAWN BY: TLW DATE: 05/01/15
CHECKED BY: RMH DATE: 05/01/15
DESIGNED BY: TG DATE: 05/01/15
FILENAME: bCA0902a1_bl3.dgn
SCALE: AS NOTED

BRIDGE NO. A5979 DRAWING NO. 57161

DATE REVISED	DATE FILMED	DATE REVISED	DATE FILMED	FED. ROAD DIST. NO.	STATE	FED. AID PROJ. NO.	SHEET NO.	TOTAL SHEETS
				6	ARK.			
				JOB NO.		CA0902	290	581
				① A5979		BENT 4		57162

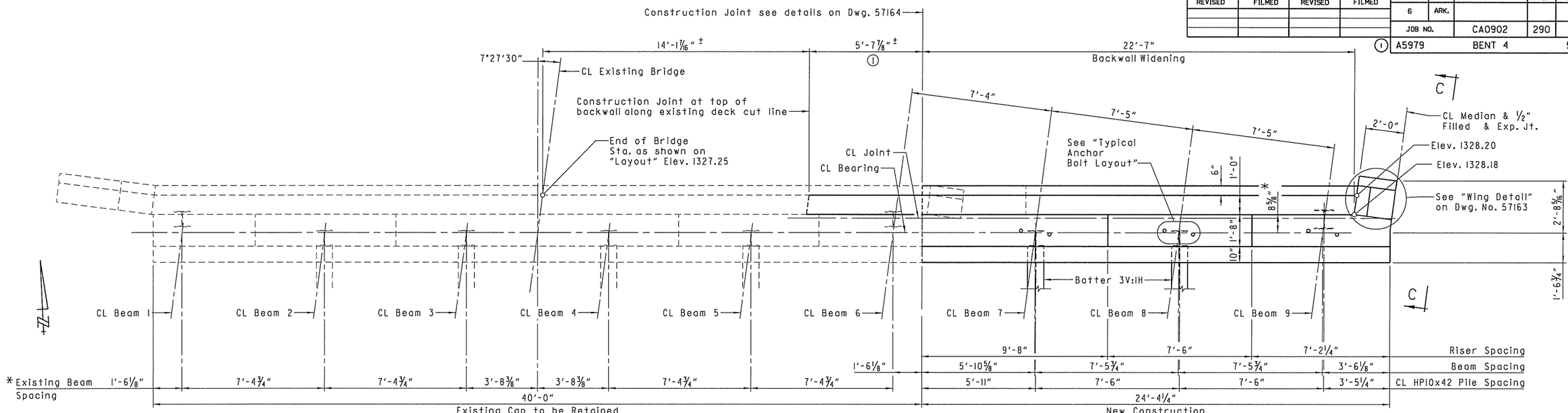

PLAN

Scale: 3/8" = 1'-0"

* These dimensions are based on the original plans. The Contractor shall verify these in the field.

** B403 @ 6" Typ. centered over each pile

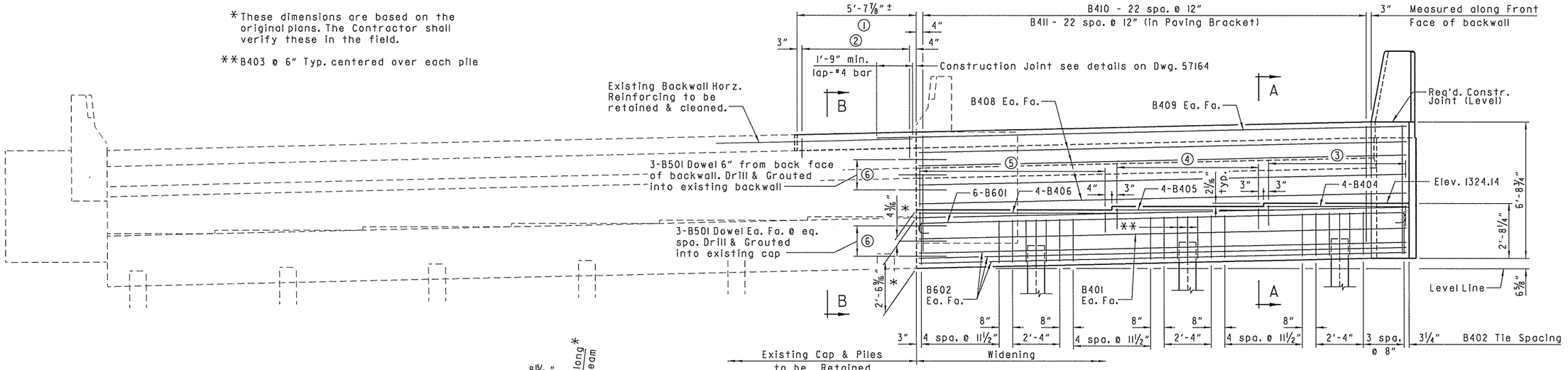

ELEVATION

Looking Ahead

Scale: 3/8" = 1'-0"

① Portion of backwall concrete above the paving bracket to be removed. Existing backwall reinforcing steel to be retained and cleaned to lap to new reinforcing steel as shown. Replace the portion of backwall during new construction. Any damaged reinforcing steel shall be replaced by dowel bars drilled and grouted into place at the contractor's expense.

② B412 - 6 eq. spa. (12" max.) Ea. Fa. (Drill and Grout into Existing Backwall)

③ B407 - 7 eq. spa. (12" max.)

④ B407 - 7 spa. @ 12"

⑤ B407 - 9 spa. @ 12"

⑥ Minimum 8" embedment into existing cap and backwall. Grout used shall be an approved epoxy grout listed on the QPL. Hole diameter and installation procedure shall be as recommended by the grout manufacturer.

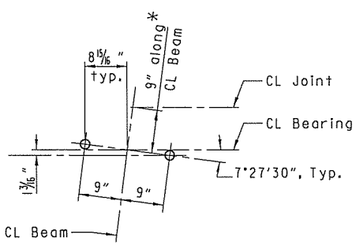

TYPICAL ANCHOR BOLT LAYOUT

Scale: 3/4" = 1'-0"

For details of Elastomeric Bearings, see Dwg. No. 57177.

STATE OF ARKANSAS
REGISTERED PROFESSIONAL ENGINEER
No. 16183
JERRY D. STEVENSON
4.29.2016
BRIDGE ENGINEER

SHEET 1 OF 3

DETAILS OF BENT 4 - BRIDGE A

BRIDGES OVER HWY. 62/102

ROUTE SEC.

ARKANSAS STATE HIGHWAY COMMISSION

LITTLE ROCK, ARK.

DRAWN BY:	TLW	DATE:	05/01/15	FILENAME:	bCA0902a1_b41.dgn
CHECKED BY:	RMH	DATE:	05/01/15	SCALE:	AS NOTED
DESIGNED BY:	TG	DATE:	05/01/15		

BRIDGE NO. A5979 DRAWING NO. 57162

DATE REVISED	DATE FILMED	DATE REVISED	DATE FILMED	FED. ROAD DIST. NO.	STATE	FED. AID PROJ. NO.	SHEET NO.	TOTAL SHEETS
				6	ARK.			
				JOB NO.		CA0902	291	581
				(1) A5979		BENT 4		57163

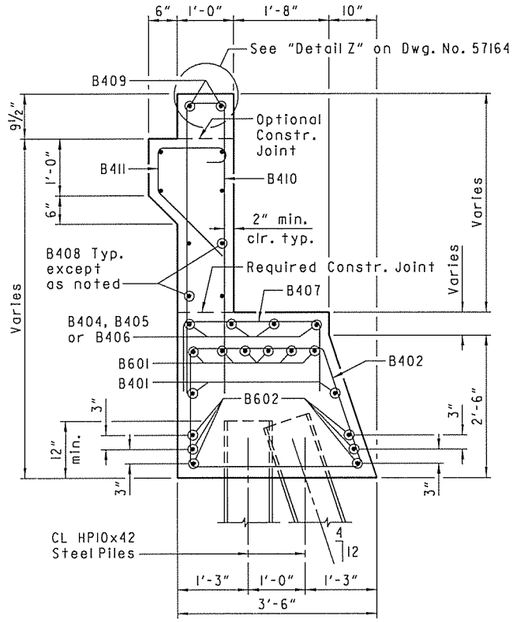

SECTION A-A
Scale: ¾" = 1'-0"

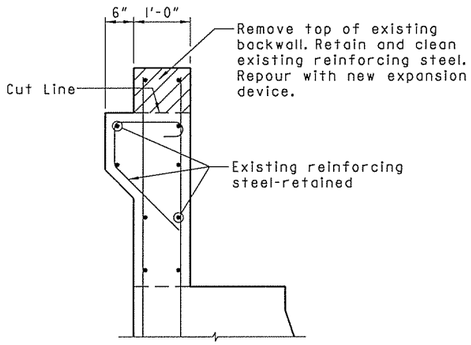

REMOVAL

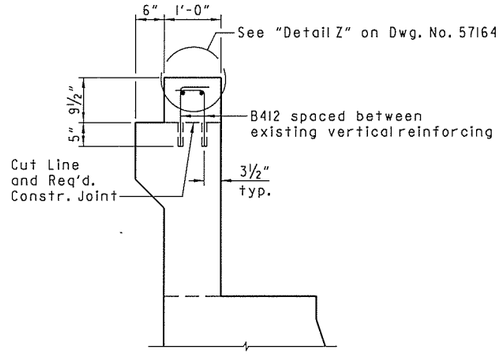

CONSTRUCTION

Grout B412 bars into 5" min. deep drilled holes. Grout used shall be an approved epoxy grout listed on the QPL. Hole diameter and installation procedure shall be as recommended by the grout manufacturer.

B412 bars shall be located to avoid damaging the existing backwall reinforcing steel. Payment for grouting and placement of bars shall be considered subsidiary to the pay item "Modification of Existing Bridge Structure (Br. No. A5979)".

SECTION B-B
Scale: ¾" = 1'-0"

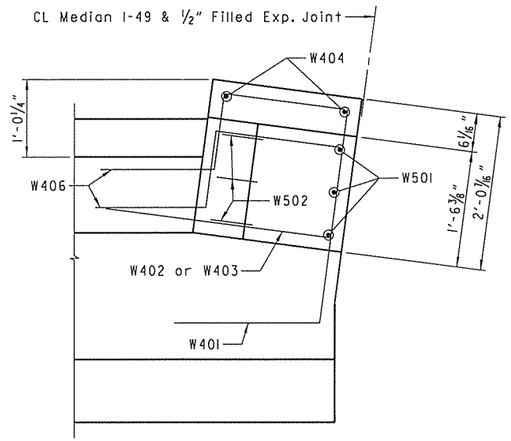

WING DETAIL
Scale: 1" = 1'-0"

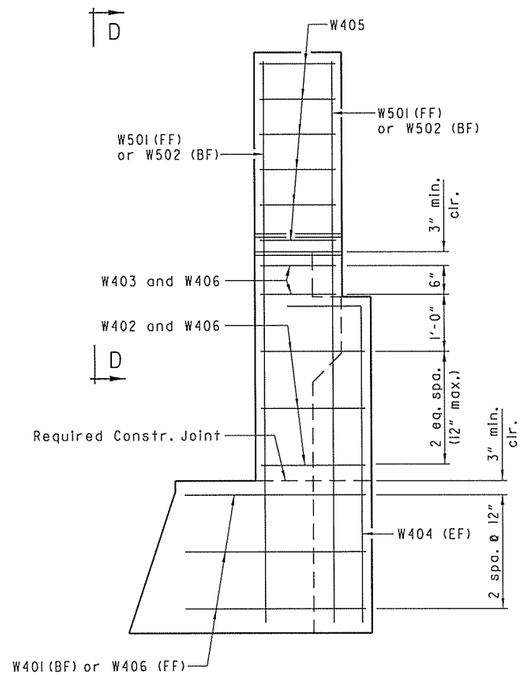

VIEW C-C
Scale: ¾" = 1'-0"

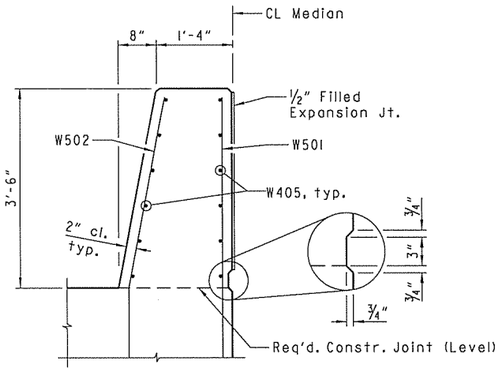

VIEW D-D
Scale: ¾" = 1'-0"

BF = Back Face
FF = Front Face
EF = Each Face

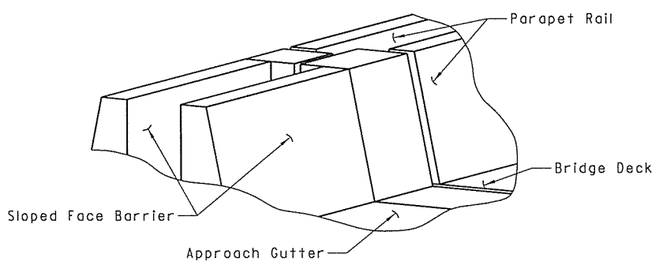

DETAIL OF BARRIER AT BRIDGE END
No Scale

GENERAL NOTES:

Work required to remove & dispose portions of the existing bridge, retain and clean existing reinforcing steel, and any required doweling will not be paid for directly but will be considered subsidiary to the item "Modification of Existing Bridge Structure (Br. No. A5979)".

No portion of the backwall for new construction shall be poured until the beams are in place. The portion of the backwall above the optional construction joint or paving bracket shall not be placed until the adjacent deck pour has been made.

All concrete shall be Class "S" and be poured in the dry. All exposed corners to be chamfered ¾" unless otherwise noted.

All reinforcing steel shall be Grade 60 (Yield Strength = 60,000 psi) conforming to AASHTO M31 or M322, Type A, with mill test reports.

Structural steel in end bents shall be AASHTO M 270, Gr. 50 and shall be paid for as "Structural Steel in Beam Spans (M 270, Grade 50)".

Top reinforcing bars shall be properly placed to avoid interference with anchor bolts or sheet metal sleeves.

For additional information, see "Layout".

STATE OF ARKANSAS REGISTERED PROFESSIONAL ENGINEER No. 16183 JERRY T. STEVENSON
4.25.2016
BRIDGE ENGINEER

SHEET 2 OF 3
DETAILS OF BENT 4 - BRIDGE A
BRIDGES OVER HWY. 62/102
ROUTE SEC.
ARKANSAS STATE HIGHWAY COMMISSION
LITTLE ROCK, ARK.

DRAWN BY: TLW DATE: 05/01/15
CHECKED BY: RMH DATE: 05/01/15
DESIGNED BY: TG DATE: 05/01/15
FILENAME: bCA0902a1_b42.dgn
SCALE: AS NOTED

BRIDGE NO. A5979 DRAWING NO. 57163

DATE REVISED	DATE FILMED	DATE REVISED	DATE FILMED	FED. ROAD DIST. NO.	STATE	FED. AID PROJ. NO.	SHEET NO.	TOTAL SHEETS
				6	ARK.			
				JOB NO.		CA0902	292	581
				(1) A5979		BENT 4		57164

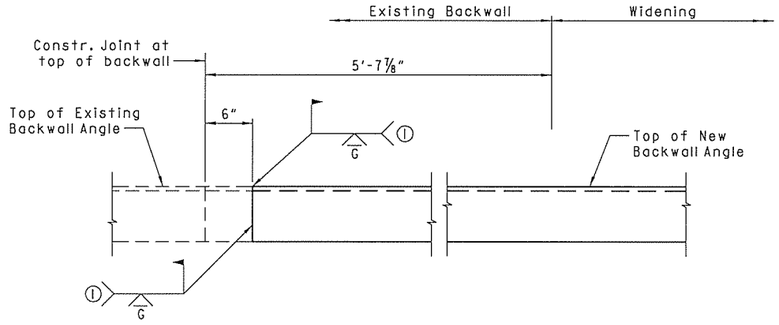

(1) Weld prior to pouring.

DETAIL OF WELD LOCATION
FOR EXPANSION DEVICE
No Scale

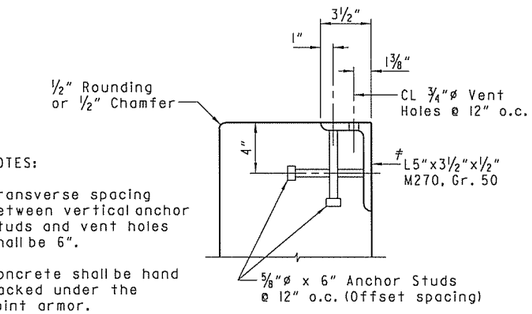

NOTES:

Transverse spacing between vertical anchor studs and vent holes shall be 6".

Concrete shall be hand packed under the joint armor.

For additional joint details, see Dwg. No. 57176.

DETAIL Z
No Scale

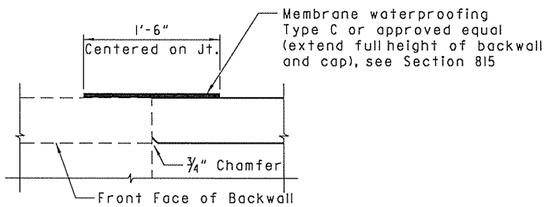

NOTE:

Payment for membrane to be considered subsidiary to "Class S Concrete-Bridge".

CONSTRUCTION JOINT DETAIL
No Scale

#Angle size is based on orginal plans. The contractor shall verify in the field.

BAR LIST

MARK	NO. REQ'D.	LENGTH	PIN. DIA.
B401	2	24'-1"	Str.
B402	24	10'-0"	2"
B403	9	6'-5"	2"
B404	4	6'-11"	Str.
B405	4	8'-3"	Str.
B406	4	10'-5"	Str.
B407	26	5'-6"	2"
B408	8	24'-4"	2"
B409	2	26'-3"	2"
B410	23	11'-2"	2"
B411	23	3'-11"	2"
B412	14	1'-6"	2"
B501	9	2'-9"	Str.
B601	6	25'-5"	4½"
B602	6	24'-1"	Str.
W401	3	5'-9"	3"
W402	3	5'-10"	3"
W403	2	5'-4"	3"
W404	2	6'-6"	3"
W405	12	1'-3"	Str.
W406	8	3'-10"	3"
W501	3	9'-11"	Str.
W502	3	9'-11"	3¾"

BENDING DIAGRAM

Dimensions are out to out of bars.

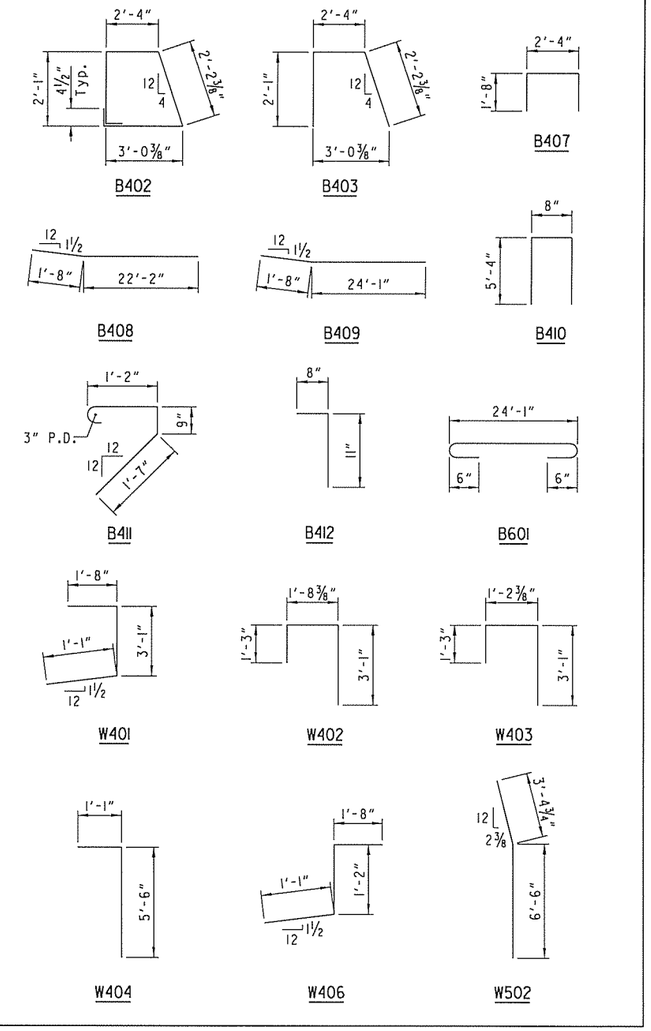

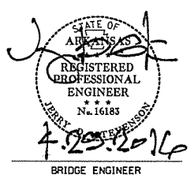

SHEET 3 OF 3
DETAILS OF BENT 4 - BRIDGE A
BRIDGES OVER HWY. 62/102
ROUTE SEC.
ARKANSAS STATE HIGHWAY COMMISSION
LITTLE ROCK, ARK.

DRAWN BY: TLW DATE: 05/01/15 FILENAME: bCA0902al_b43.dgn
CHECKED BY: RMH DATE: 05/01/15 SCALE: AS NOTED
DESIGNED BY: TG DATE: 05/01/15

BRIDGE NO. A5979 DRAWING NO. 57164

DATE REVISED	DATE FILMED	DATE REVISED	DATE FILMED	FED. ROAD DIST. NO.	STATE	FED. AID PROJ. NO.	SHEET NO.	TOTAL SHEETS
				6	ARK.			
				JOB NO.		CA0902	293	581
				(1) A5979		INT. BENTS		57165

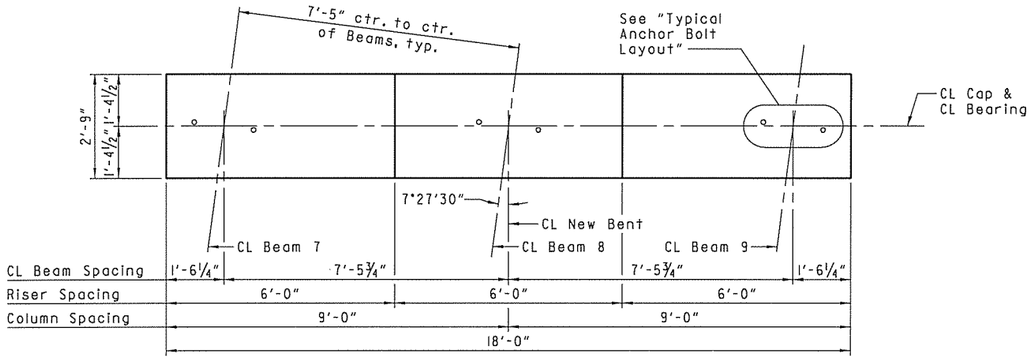

PLAN - BENT 2

Scale: ½"=1'-0"

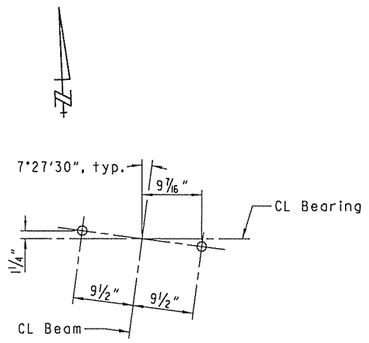

TYPICAL ANCHOR BOLT LAYOUT

Scale: 1"=1'-0"

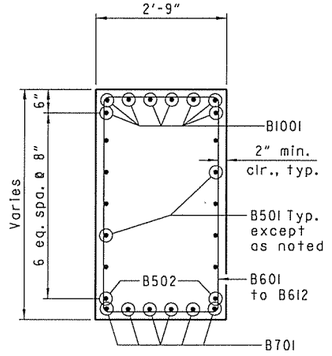

SECTION A-A

No Scale

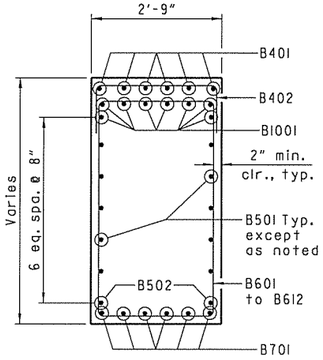

SECTION C-C

No Scale

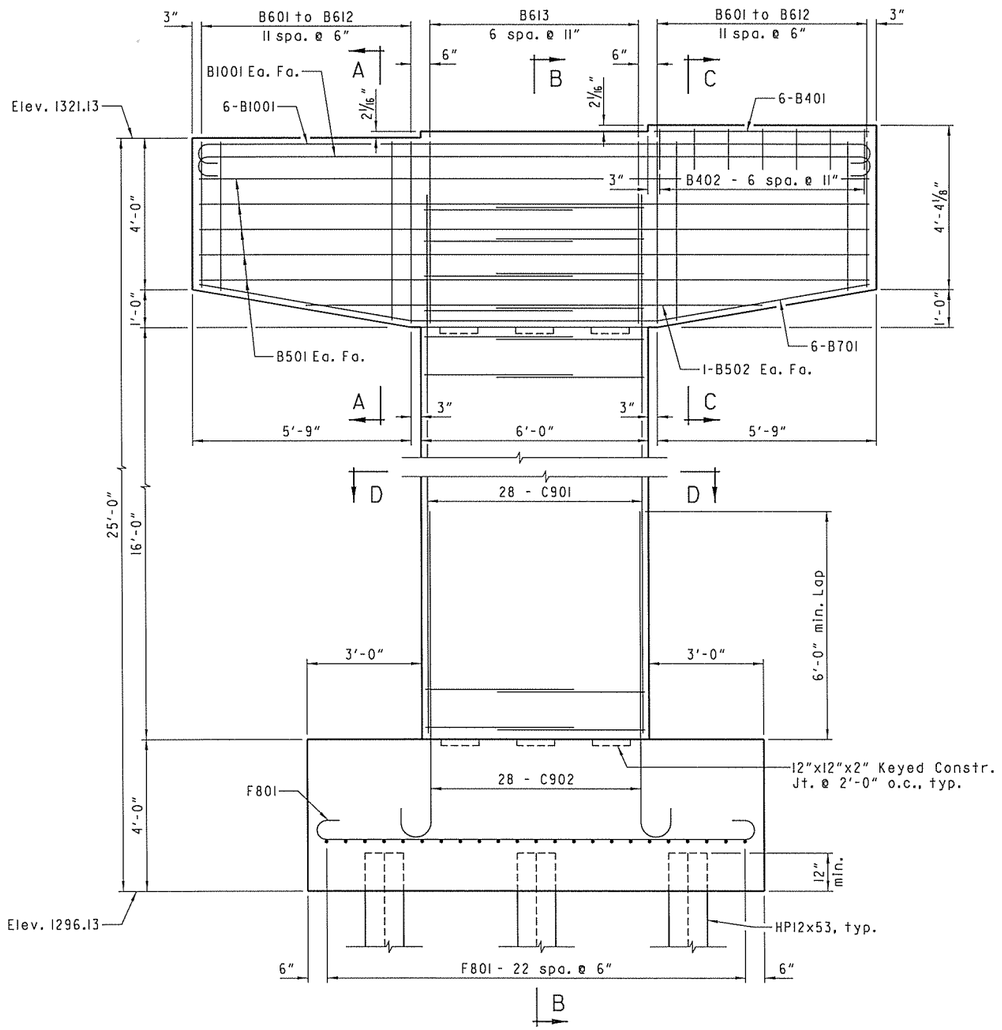

ELEVATION - BENT 2

Lookin Ahead

Scale: ½"=1'-0"

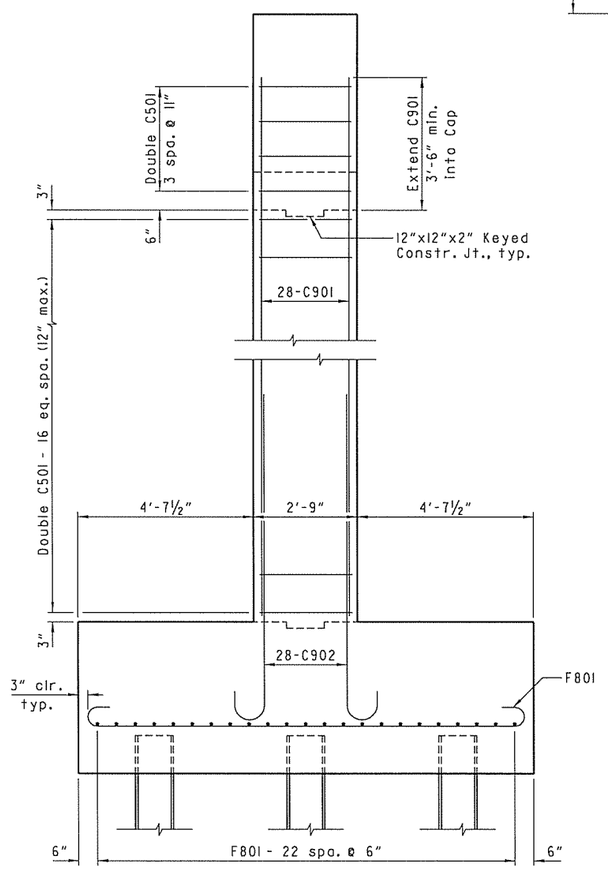

SECTION B-B

Cap reinforcement not shown for clarity.

Scale: ½"=1'-0"

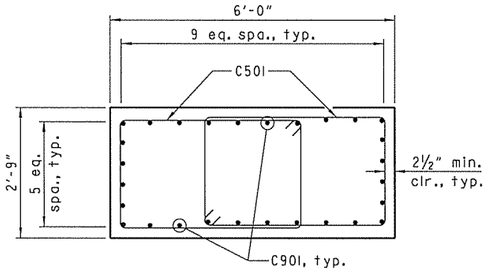

SECTION D-D

No Scale

STATE OF ARKANSAS
REGISTERED PROFESSIONAL ENGINEER
No. 16183
JERRY L. STEVENSON
4.29.2016
BRIDGE ENGINEER

SHEET 1 OF 4

DETAILS OF INTERMEDIATE BENTS - BRIDGE A

BRIDGES OVER HWY. 62/102

ROUTE SEC.

ARKANSAS STATE HIGHWAY COMMISSION

LITTLE ROCK, ARK.

DRAWN BY: TLW DATE: 05/01/15 FILENAME: bCA0902al_b2l.dgn

CHECKED BY: RMH DATE: 05/01/15 SCALE: AS NOTED

DESIGNED BY: TG DATE: 05/01/15

BRIDGE NO. A5979 DRAWING NO. 57165

DATE REVISED	DATE FILMED	DATE REVISED	DATE FILMED	FED. ROAD DIST. NO.	STATE	FED. AID PROJ. NO.	SHEET NO.	TOTAL SHEETS
				6	ARK.			
				JOB NO.		CA0902	294	581
				(1) A5979		INT. BENTS		57166

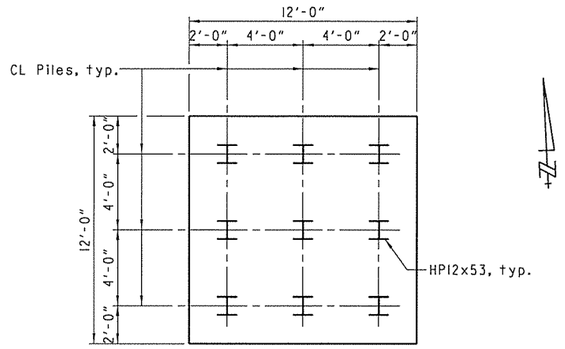

TYPICAL FOOTING PLAN

Scale: 1/4" = 1'-0"

BAR LIST - BENT 2

MARK	NO. REQ'D.	LENGTH	"A"	"B"	PIN. DIA.
B401	6	5'-8"			Str.
B402	7	6'-3"			2"
B501	10	17'-8"			Str.
B502	2	12'-0"			Str.
B601 To B612	2 Ea.	13'-4" to 15'-2"	2'-5"	3'-8" TO 4'-7"	4½"
B613	7	11'-5"			4½"
B701	6	17'-10"			5¼"
B1001	8	20'-6"			10"
C501	42	13'-0"			3¾"
C901	28	19'-6"			Str.
C902	28	9'-11"			9"
F801	46	13'-4"			6"

BENDING DIAGRAM

Dimensions are out to out of bars.

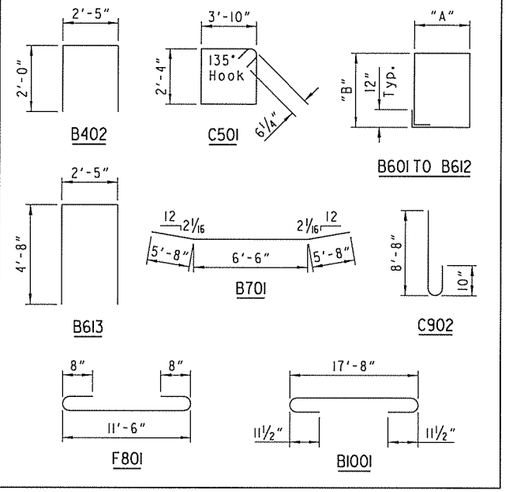

GENERAL NOTES:

All concrete shall be Class S with a minimum 28 day compressive strength, f'c = 3,500 psi, and shall be poured in the dry. All exposed corners to be chamfered ¾" unless otherwise noted.

All reinforcing steel shall be Grade 60 (yield strength = 60,000 psi) conforming to AASHTO M31 or M322, Type A, with mill test reports.

Top reinforcing bars shall be properly placed to avoid interference with anchor bolts or sheet metal sleeves.

For additional information, see "Layout".

STATE OF ARKANSAS REGISTERED PROFESSIONAL ENGINEER No. 16183 JERRY R. STEVENSON

4.25.2016

BRIDGE ENGINEER

SHEET 2 OF 4

DETAILS OF INTERMEDIATE BENTS - BRIDGE A

BRIDGES OVER HWY. 62/102

ROUTE SEC.

ARKANSAS STATE HIGHWAY COMMISSION

LITTLE ROCK, ARK.

DRAWN BY: TLW DATE: 05/01/15 FILENAME: bCA0902a1_b22.dgn

CHECKED BY: RMH DATE: 05/01/15 SCALE: AS NOTED

DESIGNED BY: TG DATE: 05/01/15

BRIDGE NO. A5979 DRAWING NO. 57166

DATE REVISED	DATE FILMED	DATE REVISED	DATE FILMED	FED. ROAD DIST. NO.	STATE	FED. AID PROJ. NO.	SHEET NO.	TOTAL SHEETS
				6	ARK.			
				JOB NO.		CA0902	295	581
				(1) A5979		INT. BENTS		57167

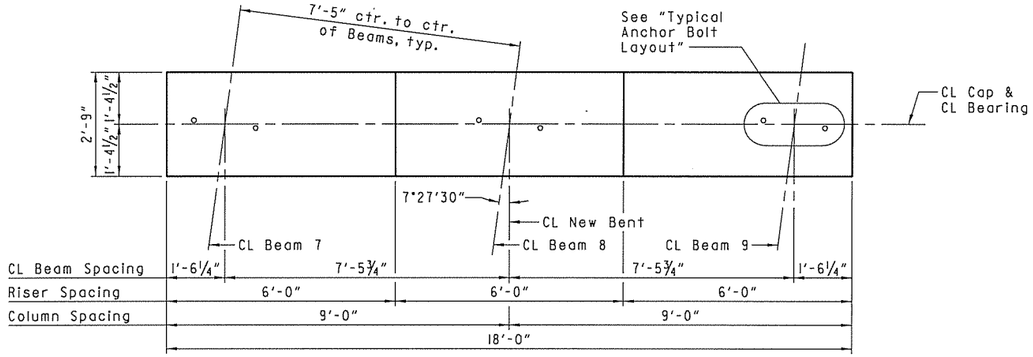

PLAN - BENT 3

Scale: ½"=1'-0"

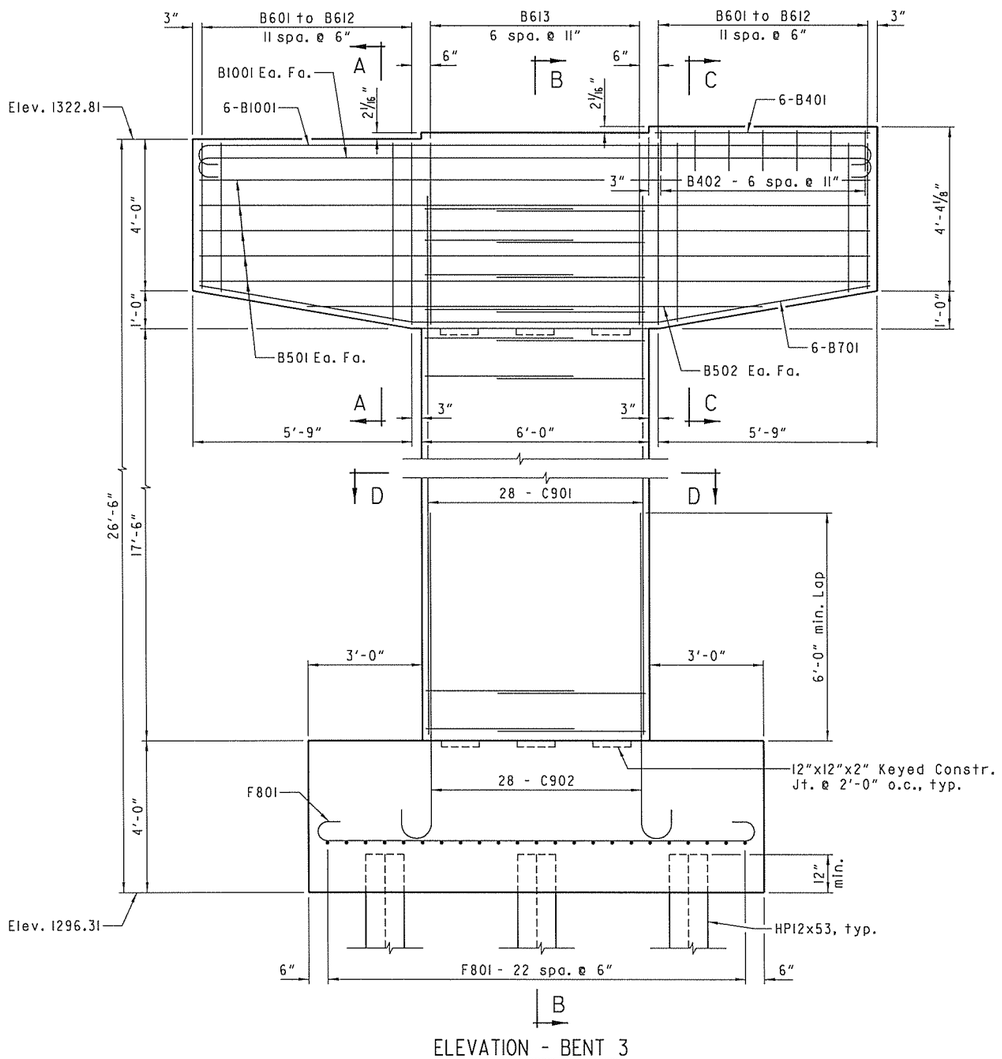

ELEVATION - BENT 3

Lookin Ahead

Scale: ½"=1'-0"

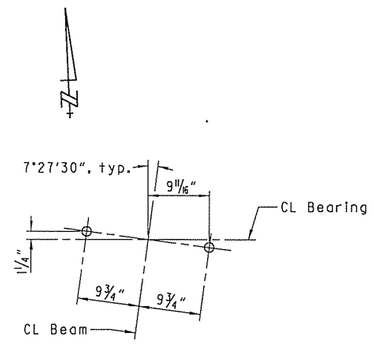

TYPICAL ANCHOR BOLT LAYOUT

Scale: 1"=1'-0"

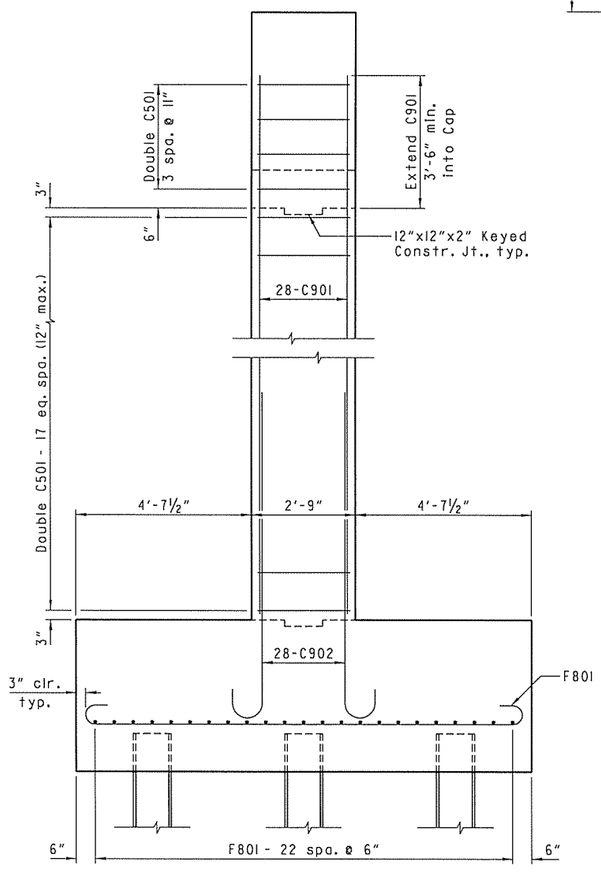

SECTION B-B

Cap reinforcement not shown for clarity.

Scale: ½"=1'-0"

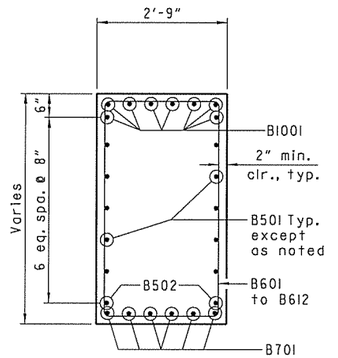

SECTION A-A

No Scale

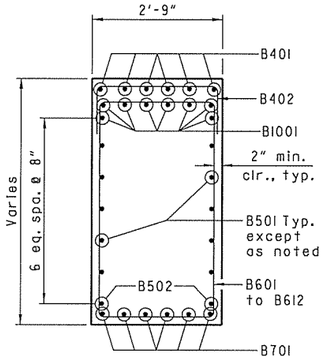

SECTION C-C

No Scale

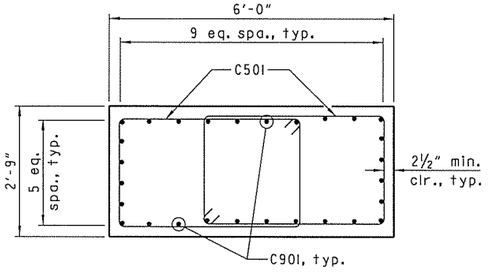

SECTION D-D

No Scale

STATE OF ARKANSAS
REGISTERED PROFESSIONAL ENGINEER
No. 16183
JERRY D. STEVENSON
4.23.2015
BRIDGE ENGINEER

SHEET 3 OF 4

DETAILS OF INTERMEDIATE BENTS - BRIDGE A

BRIDGES OVER HWY. 62/102

ROUTE SEC.

ARKANSAS STATE HIGHWAY COMMISSION

LITTLE ROCK, ARK.

DRAWN BY: TLW DATE: 05/01/15 FILENAME: bCA0902al_b3l.dgn

CHECKED BY: RMH DATE: 05/01/15 SCALE: AS NOTED

DESIGNED BY: TG DATE: 05/01/15

BRIDGE NO. A5979 DRAWING NO. 57167

DATE REVISED	DATE FILMED	DATE REVISED	DATE FILMED	FED. ROAD DIST. NO.	STATE	FED. AID PROJ. NO.	SHEET NO.	TOTAL SHEETS
				6	ARK.			
				JOB NO.		CA0902	296	581
				(1) A5979		INT. BENTS		57168

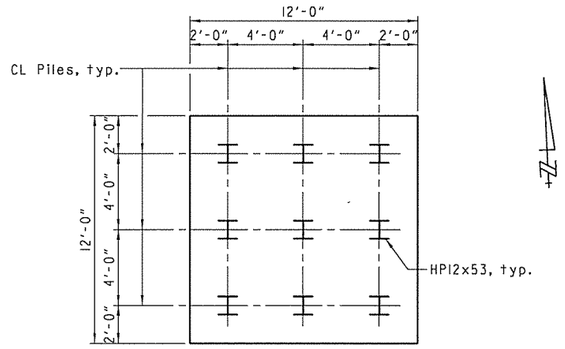

TYPICAL FOOTING PLAN

Scale: 1/4" = 1'-0"

BAR LIST - BENT 3

MARK	NO. REQ'D.	LENGTH	"A"	"B"	PIN. DIA.
B401	6	5'-8"			Str.
B402	7	6'-3"			2"
B501	10	17'-8"			Str.
B502	2	12'-0"			Str.
B601 To B612	2 Ea.	13'-4" to 15'-2"	2'-5"	3'-8" TO 4'-7"	4½"
B613	7	11'-5"			4½"
B701	6	17'-10"			5¼"
B1001	8	20'-6"			10"
C501	44	13'-0"			3¾"
C901	28	21'-0"			Str.
C902	28	9'-11"			9"
F801	46	13'-4"			6"

BENDING DIAGRAM

Dimensions are out to out of bars.

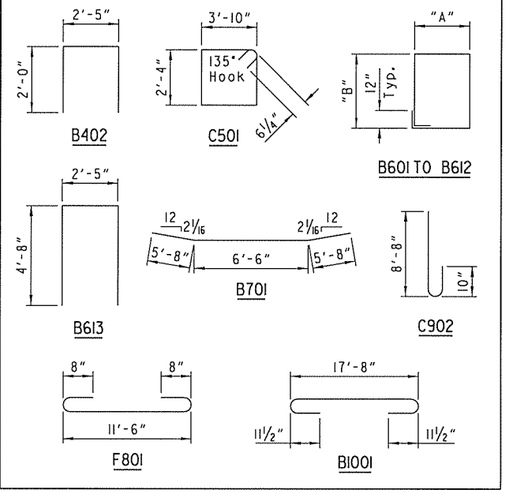

GENERAL NOTES:

All concrete shall be Class S with a minimum 28 day compressive strength, f'c = 3,500 psi, and shall be poured in the dry. All exposed corners to be chamfered 3/4" unless otherwise noted.

All reinforcing steel shall be Grade 60 (yield strength = 60,000 psi) conforming to AASHTO M31 or M322, Type A, with mill test reports.

Top reinforcing bars shall be properly placed to avoid interference with anchor bolts or sheet metal sleeves.

For additional information, see "Layout".

STATE OF ARKANSAS
REGISTERED PROFESSIONAL ENGINEER
No. 16183
JERRY D. STEVENSON
4.25.2016
BRIDGE ENGINEER

SHEET 4 OF 4

DETAILS OF INTERMEDIATE BENTS - BRIDGE A

BRIDGES OVER HWY. 62/102

ROUTE SEC.

ARKANSAS STATE HIGHWAY COMMISSION

LITTLE ROCK, ARK.

DRAWN BY: TLW DATE: 05/01/15 FILENAME: bCA0902al_b32.dgn

CHECKED BY: RMH DATE: 05/01/15 SCALE: AS NOTED

DESIGNED BY: TG DATE: 05/01/15

BRIDGE NO. A5979 DRAWING NO. 57168

DATE REVISED	DATE FILMED	DATE REVISED	DATE FILMED	FED. ROAD DIST. NO.	STATE	FED. AID PROJ. NO.	SHEET NO.	TOTAL SHEETS
				6	ARK.			
				JOB NO.		CA0902	297	581
				(1) A5979		176 FT. UNIT		57169

(1) Tolerance: Minus = 1/4", Plus equal to amount of Slab Thickening used to meet Slab Thickness Tolerance, see "Adjustment for Slab Thickness Tolerance", Dwg. No. 57170.

(2) See "Adjustment for Slab Thickness Tolerance", Dwg. No. 57170.

(3) Measured at CL Bearing and CL New Beams, typ.

(4) Measured at CL Bearing and CL Existing Beams, typ.

(5) The concrete slab and parapet are to be removed to the cut line as indicated in accordance with Section 821. Care shall be exercised during the removal of the existing deck to ensure that the beams, diaphragms, shear connectors, bolted connections and reinforcement are not damaged. Damaged items that are not salvageable as determined by the Engineer, shall be replaced by the contractor at no additional payment.

(6) Clean and retain existing transverse reinforcing steel. Splice existing transverse reinforcing steel with proposed transverse reinforcing steel. Retain existing #6 truss bars, bent up over existing exterior beam, 4'-10" from cut line. Use 3'-3" minimum lap for #5 bars.

(7) Bolts in the existing diaphragms and end struts may be loosened to the satisfaction of the Engineer at Beam Nos. 5 & 6 during deck removal. Any existing bolt that is loosened or removed shall be replaced with a new high-strength bolt. The diaphragm and end strut bolts located in the bays between Beam Nos. 5 & 6 shall be tightened after the completion of the deck pour.

NOTE:

Class 2 Protective Surface Treatment shall be applied to the Roadway Surface, Roadway Face and top of Concrete Parapet Rail.

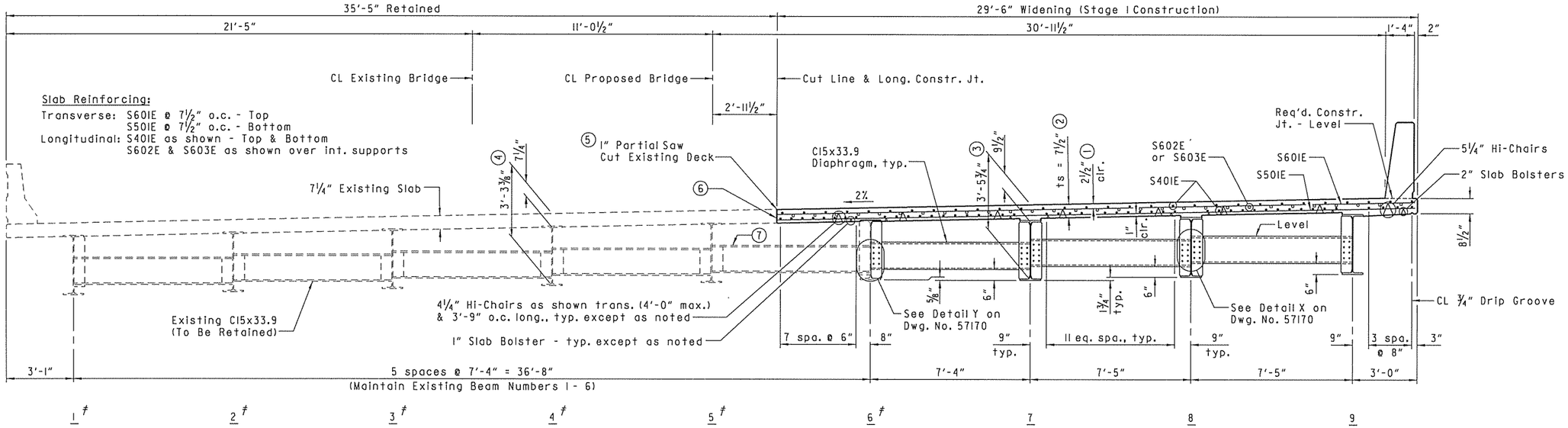

Beam No.	1 #	2 #	3 #	4 #	5 #	6 #	7	8	9

For Joint Details, see Dwg. No. 57176.

Existing Beams

* Measured perpendicular to CL Bridge.

TYPICAL ROADWAY SECTION

Looking Ahead
Scale: ⅜" = 1'-0"

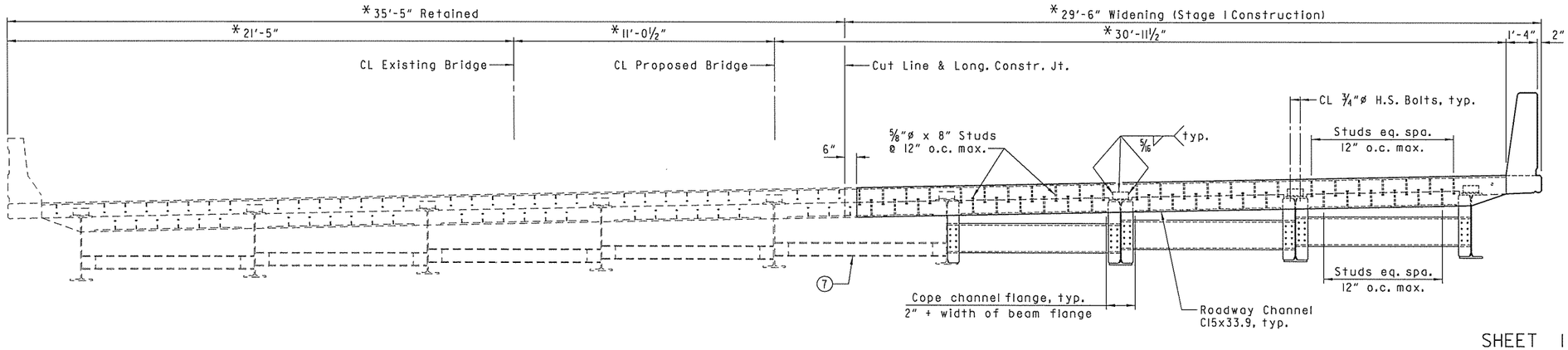

TYPICAL SECTION THROUGH JOINT

Looking Ahead - Bent 1
Bent 4 Similar
Scale: ⅜" = 1'-0"

EXPANSION DEVICE
Roadway Channel - C15x33.9
Conn. Angle - L8"x4"x½"
Note: Detail device ⅛" high and provide ¼" shims using 2 - 1/16" plates and 1 - ⅛" plate.

STATE OF ARKANSAS
REGISTERED PROFESSIONAL ENGINEER
No. 16183
JERRY D. STEVENSON
4.03.2015
BRIDGE ENGINEER

SHEET 1 OF 8
DETAILS OF 176'-0" CONTINUOUS COMPOSITE W-BEAM UNIT - BRIDGE A
BRIDGES OVER HWY. 62/102

ROUTE SEC.

ARKANSAS STATE HIGHWAY COMMISSION
LITTLE ROCK, ARK.

DRAWN BY: TLW DATE: 05/01/15 FILENAME: bCA0902al_sl.dgn
CHECKED BY: JDS DATE: 05/01/15 SCALE: Scale: ⅜" = 1'-0"
DESIGNED BY: TG DATE: 05/01/15

BRIDGE NO. A5979 DRAWING NO. 57169

DATE REVISED	DATE FILMED	DATE REVISED	DATE FILMED	FED. ROAD DIST. NO.	STATE	FED. AID PROJ. NO.	SHEET NO.	TOTAL SHEETS
				6	ARK.			
				JOB NO.		CA0902	298	581
				① A5979		176 FT. UNIT		57170

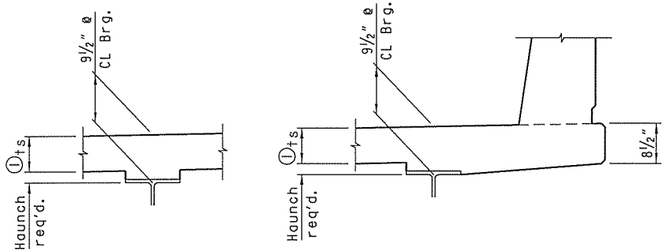

INTERIOR BEAM EXTERIOR BEAM

① Tolerance when removable deck forming is used is +½", -¼". Haunch forming is required and shall be adjusted to maintain slab thickness tolerance.

Note: ts = slab thickness as shown on superstructure detail drawings.

Haunch dimension may vary within the following limits to maintain the grade and slab thickness tolerance: Minimum - occurs when top flange contacts bottom reinforcing steel: Maximum - top flange thickness plus 1¾". No increase in concrete and structural steel quantities will be made to maintain tolerances.

Tolerances shown are applicable only when removable deck forming is used, see Std. Dwg. No. 55005 for tolerances when permanent steel deck forms are used. Payment for concrete shall be based on removable deck forming.

ADJUSTMENT FOR SLAB THICKNESS TOLERANCE

Scale: ¾" = 1'-0"

TABLE FOR WELD

MATERIAL THICKNESS OF THICKER PART JOINED (INCHES)	MINIMUM SIZE OF FILLET WELD (INCHES)	SINGLE PASS WELD MUST BE USED
To ¾" Inclusive	¼"	
Over ¾"	5/16"	

NOTE: When a fillet weld size, as shown on the plans, is larger than the minimum, the first pass shall be that specified for minimum size of fillet weld.

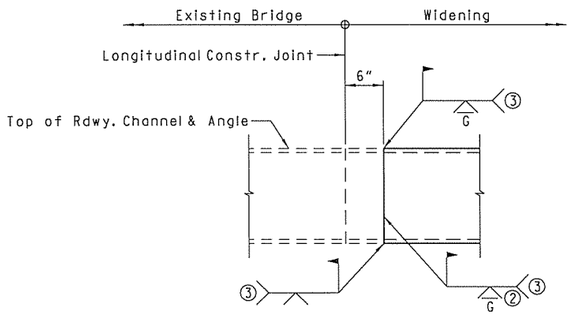

② Grind flush 5" from top of deck.
③ Weld prior to pouring deck.

DETAIL OF WELD LOCATION FOR EXPANSION DEVICE

No Scale

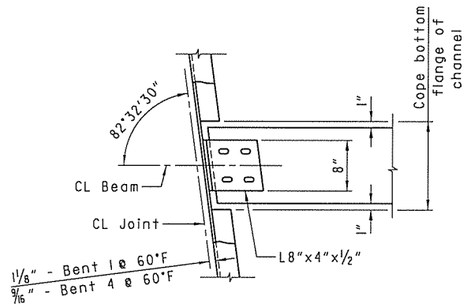

CHANNEL CONNECTION DETAIL

Scale: 1" = 1'-0"

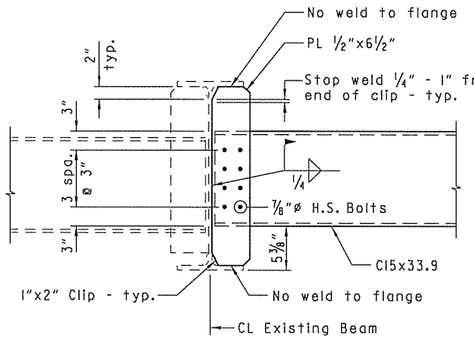

DETAIL Y

Scale: 1" = 1'-0"

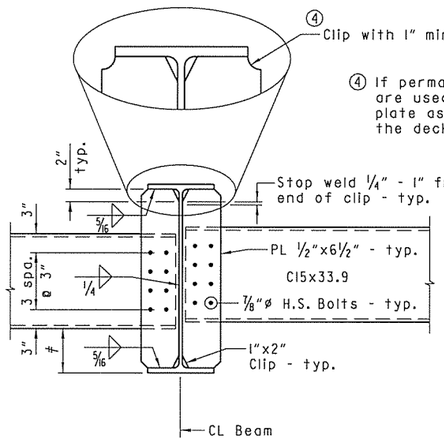

④ If permanent steel bridge deck forms are used, the Fabricator shall clip plate as necessary to accommodate the deck form supports.

♯ See "Typical Roadway Section" for dimensions on Dwg. No. 57169.

DETAIL X

Scale: 1" = 1'-0"

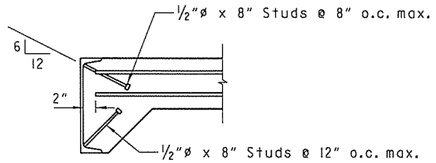

NOTE: As an alternate to ⅝"ø studs, ½"ø x 8" studs spaced as shown may be used. Use weight of ⅝"ø stud as basis of measurement of structural steel in anchors.

DETAILS OF ALTERNATE ANCHORS

Scale: 1" = 1'-0"

STATE OF ARKANSAS
REGISTERED PROFESSIONAL ENGINEER
No. 16183
JERRY D. STEVENSON
4.25.2016
BRIDGE ENGINEER

SHEET 2 OF 8
DETAILS OF 176'-0" CONTINUOUS COMPOSITE W-BEAM UNIT - BRIDGE A
BRIDGES OVER HWY. 62/102

ROUTE SEC.

ARKANSAS STATE HIGHWAY COMMISSION

LITTLE ROCK, ARK.

DRAWN BY: TLW DATE: 05/01/15 FILENAME: bCA0902a1_s2.dgn
CHECKED BY: JDS DATE: 05/01/15 SCALE: AS NOTED
DESIGNED BY: TG DATE: 05/01/15

BRIDGE NO. A5979 DRAWING NO. 57170

DATE REVISED	DATE FILMED	DATE REVISED	DATE FILMED	FED. ROAD DIST. NO.	STATE	FED. AID PROJ. NO.	SHEET NO.	TOTAL SHEETS
				6	ARK.			
				JOB NO.		CA0902	299	581
				(1) A5979		176 FT. UNIT		57171

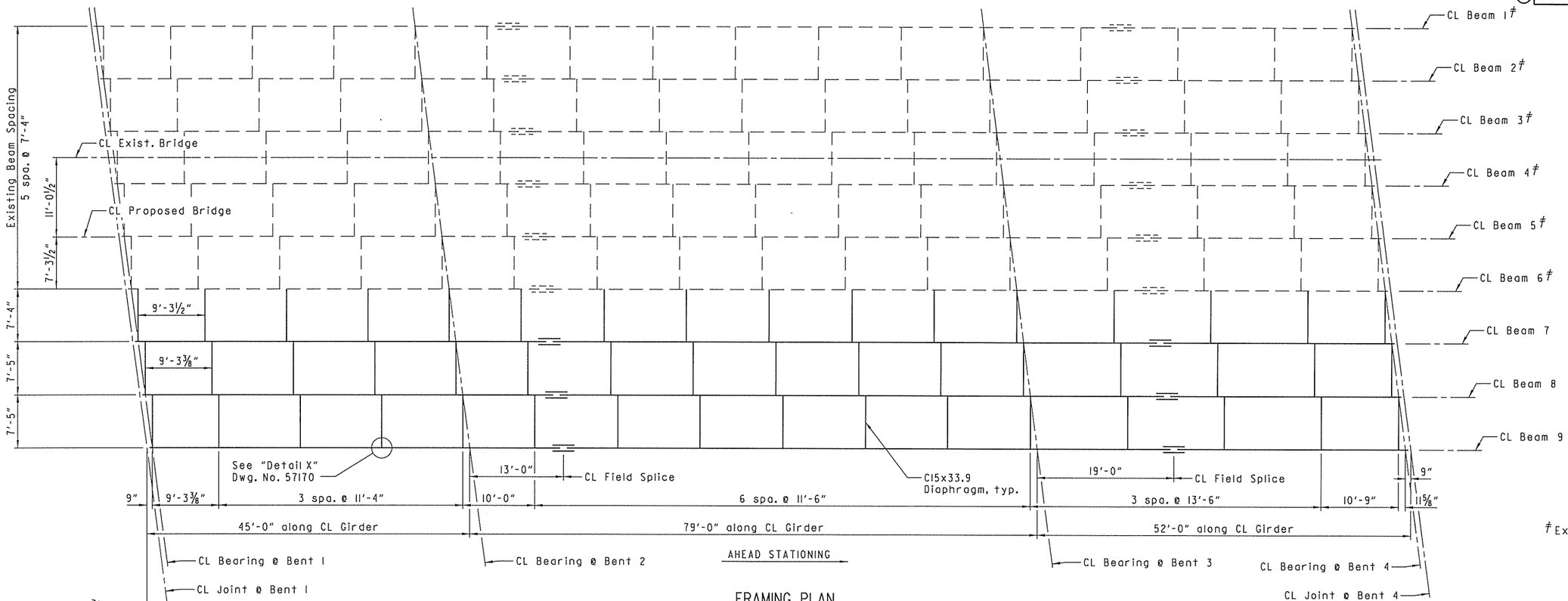

FRAMING PLAN

Scale: ⅛" = 1'-0"

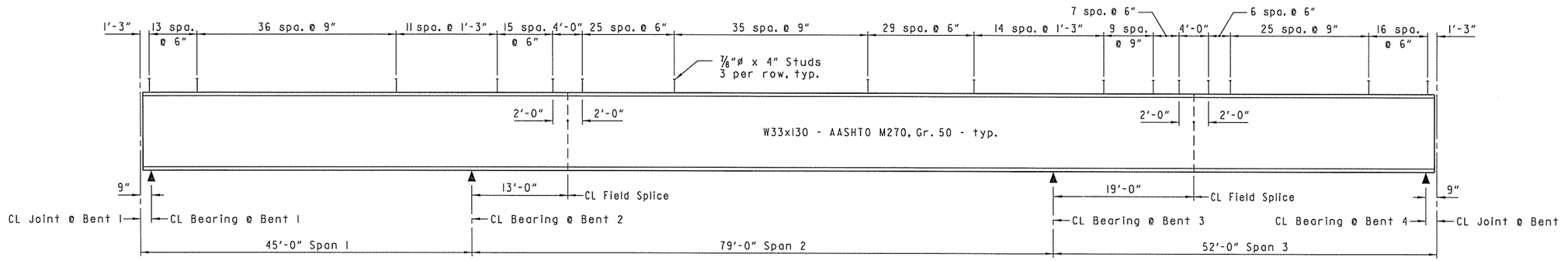

BEAM ELEVATION

No Scale

NOTES:

All structural steel shall be AASHTO M270, Gr. 50 unless noted otherwise.

Bolted Field Splices may be eliminated or shop welded splices may be substituted with the approval of the Engineer. Payment will be made on the basis of plan quantities.

CL Joint and End of Beam are normal to grade.

STATE OF ARKANSAS
REGISTERED PROFESSIONAL ENGINEER
No. 16183
JERRY D. STEVENSON
4-29-2015
BRIDGE ENGINEER

SHEET 3 OF 8
DETAILS OF 176'-0" CONTINUOUS COMPOSITE W-BEAM UNIT - BRIDGE A
BRIDGES OVER HWY. 62/102
ROUTE SEC.
ARKANSAS STATE HIGHWAY COMMISSION
LITTLE ROCK, ARK.

DRAWN BY: TMW DATE: 05/01/15
CHECKED BY: TG DATE: 05/01/15
DESIGNED BY: PMT DATE: 05/01/15
FILENAME: bCA0902al_s3.dgn
SCALE: AS NOTED

BRIDGE NO. A5979 DRAWING NO. 57171

DATE REVISED	DATE FILMED	DATE REVISED	DATE FILMED	FED. ROAD DIST. NO.	STATE	FED. AID PROJ. NO.	SHEET NO.	TOTAL SHEETS
				6	ARK.			
				JOB NO.		CA0902	300	581
				(1) A5979		176 FT. UNIT		57172

NOTE:

Bolted field splices may be eliminated or shop welded splices may be substituted with the approval of the Engineer. Payment will be made on the basis of plan quantities.

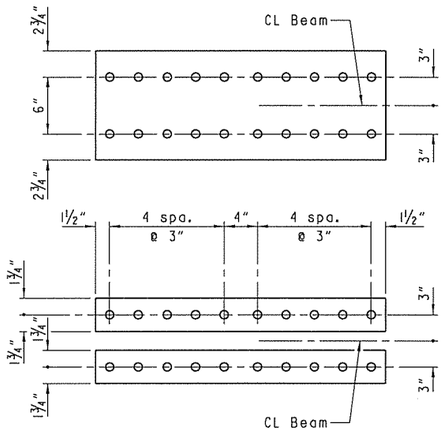

FLANGE SPLICE

WEB SPLICE

NOTE: All field splice plates shall be AASHTO M270, Gr. 50.

FIELD SPLICE DETAILS

1½" = 1'-0"

TABLE OF DEAD LOAD DEFLECTIONS (INCHES)

	POINT OF DEFLECTION	STRUCTURAL STEEL		STRUCTURAL STEEL + SLAB		STRUCTURAL STEEL + SLAB + PARAPET	
		BMS. 7 & 8	BM. 9	BMS. 7 & 8	BM. 9	BMS. 7 & 8	BM. 9
SPAN 1	0	0	0	0	0	0	0
	0.1	0.002	0.002	0.012	0.012	0.012	0.014
	0.2	0.003	0.003	0.017	0.017	0.018	0.020
	0.3	0.002	0.002	0.013	0.013	0.014	0.015
	0.4	-0.001	0.000	-0.003	-0.003	-0.003	-0.004
	0.5	-0.005	-0.005	-0.027	-0.027	-0.028	-0.032
	0.6	-0.010	-0.009	-0.056	-0.055	-0.058	-0.065
	0.7	-0.015	-0.013	-0.080	-0.078	-0.083	-0.093
	0.8	-0.016	-0.015	-0.088	-0.086	-0.092	-0.102
	0.9	-0.012	-0.011	-0.067	-0.066	-0.070	-0.078
SPAN 2	0	0	0	0	0	0	0
	0.1	0.046	0.042	0.254	0.249	0.264	0.295
	0.2	0.107	0.098	0.588	0.576	0.612	0.683
	0.3	0.164	0.149	0.898	0.880	0.934	1.044
	0.4	0.203	0.185	1.110	1.087	1.154	1.290
	0.5	0.216	0.196	1.181	1.157	1.228	1.373
	0.6	0.200	0.183	1.097	1.075	1.141	1.275
	0.7	0.160	0.146	0.876	0.858	0.911	1.018
	0.8	0.103	0.094	0.563	0.552	0.586	0.655
	0.9	0.043	0.039	0.236	0.231	0.245	0.274
SPAN 3	0	0	0	0	0	0	0
	0.1	-0.010	-0.009	-0.054	-0.052	-0.056	-0.062
	0.2	-0.008	-0.007	-0.045	-0.044	-0.047	-0.052
	0.3	0.000	0.000	-0.003	-0.002	-0.003	-0.002
	0.4	0.009	0.009	0.051	0.050	0.053	0.059
	0.5	0.018	0.016	0.098	0.096	0.102	0.114
	0.6	0.023	0.021	0.127	0.125	0.132	0.148
	0.7	0.024	0.022	0.131	0.128	0.136	0.152
	0.8	0.020	0.018	0.107	0.105	0.111	0.125
	0.9	0.011	0.010	0.061	0.059	0.063	0.070
	0	0	0	0	0	0	0

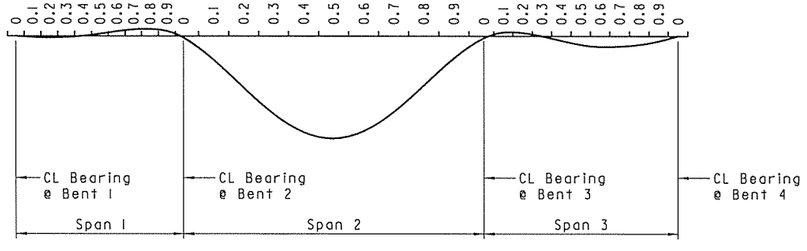

TYPICAL DEAD LOAD DEFLECTIONS DIAGRAM

No Scale

NOTE:

Camber for Dead Load Deflection plus Vertical Curve ±¼" tolerance. Deflections shown are from a chord from CL Bearing to CL Bearing. Vertical curve corrections not included. Negative sign (-) indicates point above chord.

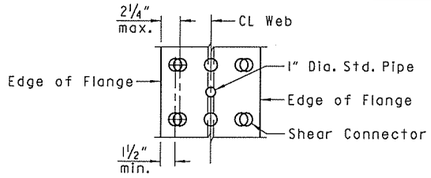

VIEW A-A

No Scale

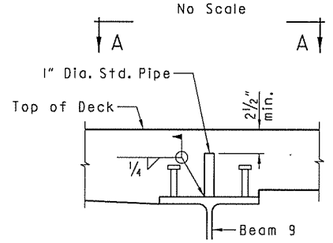

TRANSVERSE SCREED RAIL SUPPORT DETAIL

No Scale

NOTES:

The transverse screed rail supports shall be centered over the beam web and centered longitudinally between adjacent rows of shear connectors.

The pipe shall not interfere with the proper vertical position of the deck reinforcing steel.

The pipe shall be free of dirt, grease, rust, or other foreign substance before the deck is poured.

Care shall be exercised so as air voids do not exist in the pipe after placement of the deck concrete.

All welding shall be performed by a certified welder and in accordance with Subsections 802.13 and 807.26.

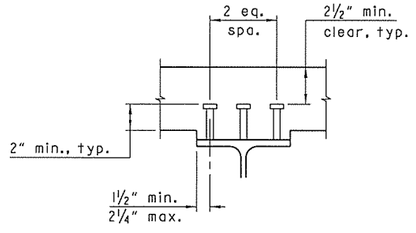

Stud Shear Connectors shown shall be ⅞"ø x 4" long, granular flux filled, solid fluxed or equal, and automatically end welded to the beam flange in accordance with the recommendations of the Manufacturer.

SHEAR CONNECTOR DETAIL

No Scale

STATE OF ARKANSAS JERRY T. STEPHENSON REGISTERED PROFESSIONAL ENGINEER No. 16183

4.23.2015

BRIDGE ENGINEER

SHEET 4 OF 8

DETAILS OF 176'-0" CONTINUOUS COMPOSITE W-BEAM UNIT - BRIDGE A BRIDGES OVER HWY. 62/102

ROUTE SEC.

ARKANSAS STATE HIGHWAY COMMISSION

LITTLE ROCK, ARK.

DRAWN BY: TLW DATE: 05/01/15 FILENAME: bCA0902al_s4.dgn

CHECKED BY: TG DATE: 05/01/15 SCALE: AS NOTED

DESIGNED BY: PMT DATE: 05/01/15

BRIDGE NO. A5979 DRAWING NO. 57172

DATE REVISED	DATE FILMED	DATE REVISED	DATE FILMED	FED. ROAD DIST. NO.	STATE	FED. AID PROJ. NO.	SHEET NO.	TOTAL SHEETS
				6	ARK.			
				JOB NO.		CA0902	301	581
				(1) A5979		176 FT. UNIT		57173

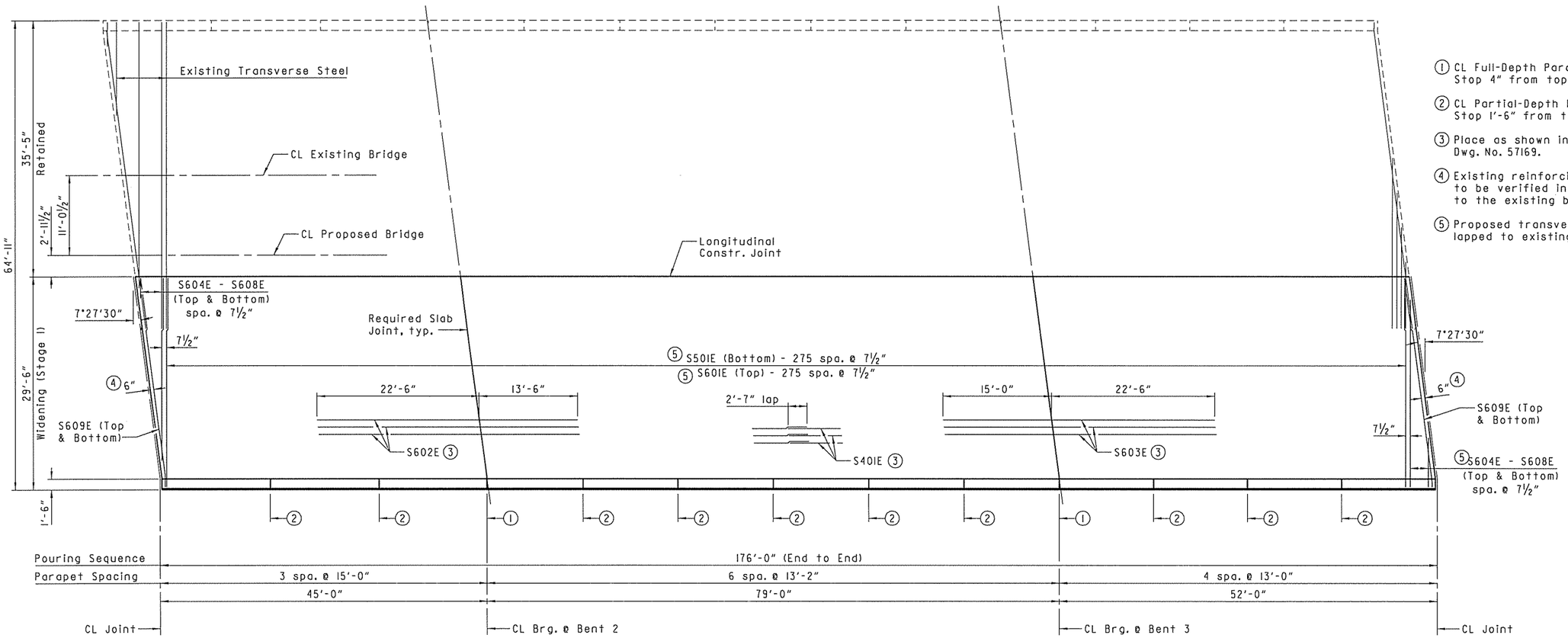

(1) CL Full-Depth Parapet Joint (¼" to 1" Max.). Stop 4" from top of slab, see Dwg. No. 57174.

(2) CL Partial-Depth Parapet Joint (¼" to 1" Max.). Stop 1'-6" from top of slab, see Dwg. No. 57174.

(3) Place as shown in "Typical Roadway Section", Dwg. No. 57169.

(4) Existing reinforcing steel spacing from CL Joint to be verified in the field. S609E shall be lapped to the existing bar along the skew.

(5) Proposed transverse reinforcing steel shall be lapped to existing transverse reinforcing steel.

REINFORCING PLAN & DECK POURING SEQUENCE

Scale: ⅛" = 1'-0"

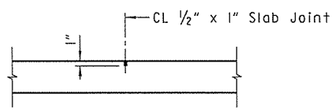

Use Type 3 or 4 Joint Sealer. See Subsections 501.02(h) and 501.05(j). Backer Rod filler will not be required. Joint Sealer shall be measured and paid for as "Class S(AE) Concrete-Bridge". Slab joints shall extend to the outside edge of the deck slab. Slab joints shall be installed before the parapet railing is poured. If slab joints are to be sawed, they shall be sawed as soon as the concrete has sufficiently set to allow sawing of the joint without damage to the slab. Slab joints shall be placed at all required slab joint locations.

SLAB JOINT DETAIL

No Scale

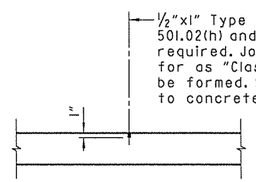

LONGITUDINAL CONSTRUCTION JOINT

No Scale

NOTES:

The pouring sequence of the deck concrete shall be from end to end, beginning at Bent 1, in one continuous pour. The continuous placement of the deck concrete may create uplift at Bent 4 during various stages of the deck pour. The Contractor is responsible for securing the beams to prevent any upward movement at Bent 4 during the deck pour.

72 hours shall elapse between the end of the deck pour and the start of the parapet railing pour. The concrete in a bridge superstructure unit must be consolidated for the entire pour before concrete has taken its initial set. This may require the use of a retarding agent.

The Contractor must obtain approval from the Engineer for any deviations from the pouring sequence shown.

STATE OF ARKANSAS
REGISTERED PROFESSIONAL ENGINEER
No. 16183
JERRY D. STEVENSON
4.25.2016
BRIDGE ENGINEER

SHEET 5 OF 8
DETAILS OF 176'-0" CONTINUOUS COMPOSITE W-BEAM UNIT - BRIDGE A
BRIDGES OVER HWY. 62/102
ROUTE SEC.
ARKANSAS STATE HIGHWAY COMMISSION
LITTLE ROCK, ARK.

DRAWN BY: TLW DATE: 05/01/15 FILENAME: bCA0902a1_s5.dgn
CHECKED BY: JDS DATE: 05/01/15 SCALE: AS NOTED
DESIGNED BY: TG DATE: 05/01/15

BRIDGE NO. A5979 DRAWING NO. 57173

DATE REVISED	DATE FILMED	DATE REVISED	DATE FILMED	FED. ROAD DIST. NO.	STATE	FED. AID PROJ. NO.	SHEET NO.	TOTAL SHEETS
				6	ARK.			
				JOB NO.		CA0902	302	581
				① A5979		176 FT. UNIT		57174

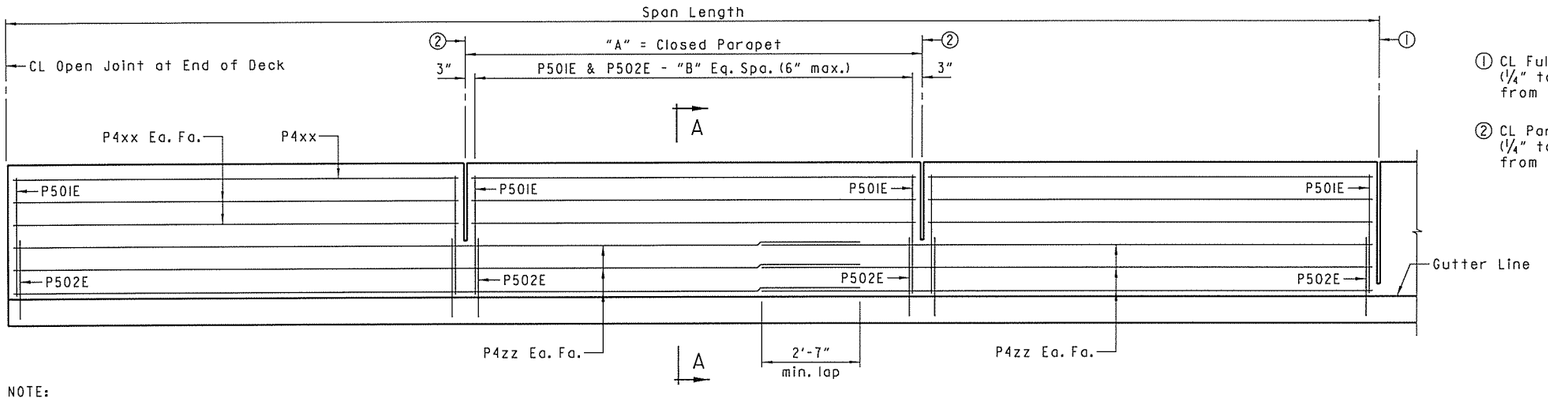

① CL Full-Depth Parapet Joint (¼" to 1" max.). Stop 4" from top of Slab.

② CL Partial-Depth Parapet Joint (¼" to 1" max.). Stop 1'-6" from top of Slab.

NOTE:

For location of full and partial depth joints, see "Reinforcing Plan and Deck Pouring Sequence", Dwg. No. 57173.

ELEVATION - CONCRETE PARAPET RAIL

Scale: ½" = 1'-0"

TABLE OF VARIABLES

"A"	"B"	P4xx BAR	P4zz BAR
13'-0"	25	P405E	P406E
13'-2"	26	P403E	P404E
15'-0"	29	P401E	P402E

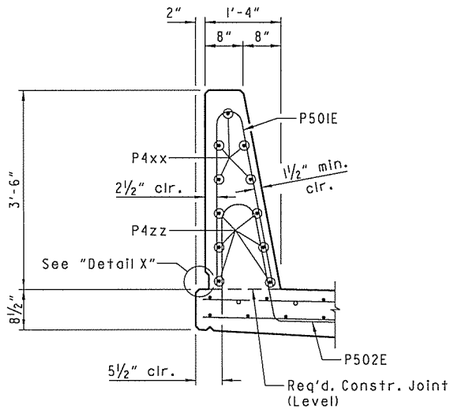

SECTION A-A

Scale: ¾" = 1'-0"

BAR LIST

MARK	NO. REQ'D.	LENGTH	PIN. DIA.
P401E	15	14'-8"	str.
P402E	12	23'-8"	str.
P403E	30	12'-10"	str.
P404E	18	28'-0"	str.
P405E	20	12'-8"	str.
P406E	12	27'-2"	str.
P501E	356	6'-8"	3¾"
P502E	356	5'-4"	6"
S401E	390	37'-3"	str.
S501E	276	29'-3"	str.
S601E	276	29'-3"	str.
S602E	29	36'-0"	str.
S603E	29	37'-6"	str.
S604-S608E	4 Each	5'-4" to 24'-4"	str.
S609E	4	29'-4"	3¾"

BENDING DIAGRAM

Dimensions are out to out of bars.

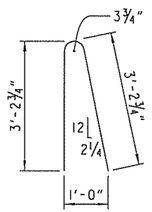

P501E

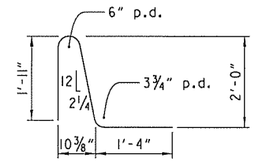

P502E

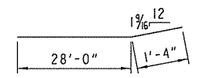

S609E

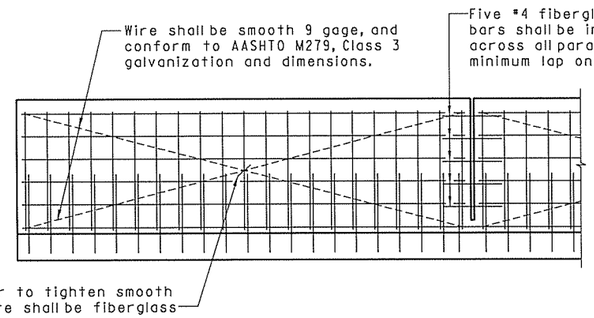

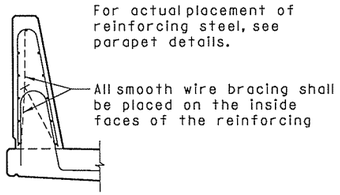

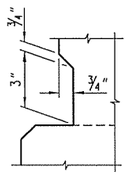

DETAIL X

No Scale

All panels shall be braced as required to prevent racking. All parapet joints shall be sawed as soon as practical to a minimum width of ¼". To control cracking before sawing, all joints must be grooved before the concrete is set. Sawing of the joints must be controlled so it will follow the grooved joint.

The extruded parapet shall conform to the horizontal and vertical lines shown on the plans or as directed by the Engineer and shall present a smooth, uniform appearance and texture. Exposed surfaces may be given a light brush finish or a Class 3 Textured Coating Finish in place of the Class 2 Rubbed Finish.

DETAILS OF OPTIONAL SLIP FORMING OF CONCRETE PARAPET RAIL

Scale: ½" = 1'-0"

STATE OF ARKANSAS
JERRY D. STEVENSON
REGISTERED PROFESSIONAL ENGINEER
No. 16183
4.25.2016
BRIDGE ENGINEER

SHEET 6 OF 8
DETAILS OF 176'-0" CONTINUOUS COMPOSITE W-BEAM UNIT - BRIDGE A
BRIDGES OVER HWY. 62/102
ROUTE SEC.
ARKANSAS STATE HIGHWAY COMMISSION
LITTLE ROCK, ARK.

DRAWN BY: TLW DATE: 05/01/15
CHECKED BY: JDS DATE: 05/01/15
DESIGNED BY: TG DATE: 05/01/15
FILENAME: bCA0902al_s6.dgn
SCALE: AS NOTED

BRIDGE NO. A5979 DRAWING NO. 57174

DATE REVISED	DATE FILMED	DATE REVISED	DATE FILMED	FED. ROAD DIST. NO.	STATE	FED. AID PROJ. NO.	SHEET NO.	TOTAL SHEETS
				6	ARK.			
				JOB NO.		CA0902	303	581
				(1) A5979		176 FT. UNIT		57175

GENERAL NOTES - SUPERSTRUCTURE

CONSTRUCTION SPECIFICATIONS: Arkansas State Highway and Transportation Department Standard Specifications for Highway Construction, 2014 edition, with applicable Supplemental Specifications and Special Provisions.

DESIGN SPECIFICATION: AASHTO Standard Specifications (17th Edition, 2002) with current interim specifications.

MATERIAL AND STRENGTHS:

Class S(AE) Concrete	f'c= 4,000 psi
Reinforcing Steel (Grade 60, AASHTO M31 or M322, Type A)	fy = 60,000 psi
Structural Steel (AASHTO M 270, Gr. 50)	Fy = 50,000 psi
Structural Steel (AASHTO M 270, Gr. 36)	Fy = 36,000 psi

CONCRETE:
Concrete shall be poured in the dry and all exposed corners to be chamfered $\frac{3}{4}$" unless otherwise noted. All concrete shall be Class S(AE) with a minimum 28 day compressive strength f'c = 4,000 psi. The superstructure details shown are for use when removable deck forming is used and are the basis for measurement of Class S(AE) Concrete. See Standard Drawing No. 55005 for allowable modifications and for tolerances when Permanent Steel Deck Forms are used.

Concrete in bridge superstructure shall be placed, consolidated and screeded off for the entire pour before any concrete has taken its initial set. This may require the use of a retarding agent. The Contractor must obtain approval from the Engineer for any deviations from the pouring sequence shown.

The concrete deck shall be given a tine finish in accordance with Subsection 802.19 for Class 5 Tined Bridge Roadway Surface Finish. Movement of the finishing machine across new concrete shall be on planks placed on the surface and shall be prohibited for 72 hours after finishing the pour. Sufficient concrete must be placed ahead of the strike-off to fully load the beam. A mininum of 72 hours shall elapse between completion of the slab pour and the start of the parapet railing pour.

Use of a longitudinal screed is prohibited.

Slab joints shall align with slab joints from existing construction. Required Slab Joints shall align with the parapet open joint.

REINFORCING STEEL:
All reinforcing steel shall be Grade 60 (Yield Strength = 60,000 psi) conforming to AASHTO M31 or M322, Type A, with mill test reports and shall be epoxy coated. The reinforcing steel is to be accurately located in the forms and firmly held in place by steel wire supports, sufficient in number and size to prevent displacement during the course of construction. The wire supports will not be paid for directly, but will be considered subsidiary to the item "Epoxy Coated Reinforcing Steel (Grade 60)".

NEW STRUCTURAL STEEL:
All new structural steel shall be AASHTO M 270, Grade 50 unless otherwise noted and shall be paid for as "Structural Steel in Beam Spans (M 270, Gr. 50)". All exposed surfaces shall be cleaned in accordance with Subsection 807.84 unless otherwise noted. Structural steel completely embedded in concrete may be AASHTO M 270, Gr. 36 or Gr. 50, unless otherwise noted.

Drawings show general features of design only. Shop drawings shall be made in accordance with Subsection 807.04, submitted and approval secured before fabrication is begun.

Requests for substitution of structural steel shapes shown with shapes of greater size must be submitted by The Contractor to the Engineer for approval. Steels of equal or greater strengths will be accepted only when shown on the approved shop drawings. Payment will be based on the basis of shapes and materials shown in the plans, and no additional compensation will be made for any adjustments due to substitutions.

Bolted field splices shown may be eliminated or shop welded splices may be substituted with approval of the Engineer. Payment will be made on the basis of plan quantities.

Beams and field splice plates are considered main load carrying members and shall meet the Longitudinal Charpy V-Notch Test specified in Subsection 807.05. This work and material will not be paid for directly, but shall be considered subsidiary to the item "Structural Steel in Beam Spans (M 270, Gr. 50)".

All beams shall be blocked in their true position in the shop with the webs horizontal in groups as specified in Subsection 807.54(b)(2). The camber, length of sections, distance between bearings and openings of joints shall be measured with the beams in their true position and this information shall become part of the permanent records for this job. The component parts shall be match marked in this assembly and these marks shall be shown on the erection diagram. All beam dimensions are based on a temperature of 60 degrees F. A tolerance of $\frac{1}{4}$"+/- is allowed for camber.

Flange field splice plates shall be cut and fabricated so that the primary direction of rolling is parallel to the direction of the main tensile and/or compressive stresses.

All welding that is to be done during fabrication of structural steel, including temporary welds, shall be detailed on the shop drawings and submitted for approval. If additional welds are required, whether permanent or temporary, a formal request with detailed drawings shall be submitted to the Engineer for approval; however, additional welds used for attaching falsework support devices or screed rail supports to the structural steel that do not exceed the limitations of Subsection 802.13 will not require approval prior to construction. Field welding of new diaphragm connection plates to the existing beams shall be as shown in the plans. All welding shall conform to Subsection 807.26.

GENERAL NOTES - SUPERSTRUCTURE (CONT.)

Field connections shall be bolted with high-strength bolts and shall be $\frac{7}{4}$"ø bolts unless otherwise noted. Holes for $\frac{7}{4}$"ø bolts shall be $\frac{15}{16}$"ø unless otherwise noted. Bolts shall be placed with heads on the outside face of the exterior beam webs and on the bottom of the beam flanges.

Unless otherwise noted, steel diaphragms shall be installed as beams are erected. All bolts in diaphragms and field splices shall be installed and tightened in accordance with Subsection 807.71 prior to pouring the concrete deck.

All stud shear connectors shall be granular flux filled, solid fluxed, or equal and shall be automatically end welded in accordance with the recommendations of the Manufacturer.

Bearings shall be seated in accordance with Subsection 808.08. This work and material are to be considered as subsidiary to the item "Structural Steel in Beam Spans (M 270, Gr. 50)" and will not be paid for directly.

PAINTING STRUCTURAL STEEL:
Unless noted otherwise, all new structural steel except galvanized steel and steel which is completely encased in concrete shall be painted in accordance with Subsection 807.75. The color of paint shall match the color of existing structural steel.

The roadway channels and end bent armor (both new and existing) shall be cleaned and painted in accordance with Section 638. This work shall not be paid for separately but shall be considered included in the contract unit price for the various items of the Contract.

The existing paint system used on the existing beams may consist of a lead based paint system. The Contractor shall take all necessary steps to protect the workers modifying the existing beams.

The area of the existing beams where new diaphragm connection plates will be field welded shall be cleaned and painted in accordance with Section 638.

The elastomeric bearing pads shall be protected against overspray.

REMOVAL OF EXISTING DECK:
Care shall be exercised during the removal of the existing deck to ensure that the existing paint system and the existing structural steel, including shear connectors, are not damaged. Damaged items that are not salvageable, as determined by the Engineer, shall be replaced at the Contractor's expense.

The deck removal shall progress in a manner that will ensure the stability of the existing structure.

The existing concrete deck shall be completely removed to the top flange of the existing beams. The portions of the top flange that will be embedded in the new concrete shall be cleaned and free of laitance and protected until the new deck is placed. This work will not be paid for directly but will be considered subsidiary to the item "Modification of Existing Bridge Structure (Br. A5979)".

METHOD OF WORK:
The Contractor shall remove portions of the existing deck as shown in "Details of Stage Construction" Dwg. No. 57157. During deck removal, the Contractor shall loosen the diaphragm and end strut bolts adjacent to Beam Nos. 5 & 6, as shown in the plans, to facilitate construction. This work will not be paid for directly but will be considered subsidiary to the item "Modification of Existing Bridge Structure (Br. No. A5979)".

All applicable provisions of Section 807, as determined by the Engineer, shall be followed, See Special Provision Job No. CA0902 "Special Safety Requirements for Bridges" for additional information.

The Contractor may submit an alternate Method of Work. The plan shall be submitted to the Engineer for information and record keeping purposed at least three weeks prior to any work being performed. The submittal shall be prepared and/or approved by an Arkansas Professional Engineer and shall include sufficient details and information to the Engineer's satisfaction. The Contractor shall be responsible for the results obtained by the use the alternate Method of Work. All work, materials, and labor required for the Contractor to develop and execute the plan will not be paid directly but will be considered subsidiary to the item "Modification of Existing Bridge Structure (Br. No. A5979)".

STATE OF ARKANSAS
REGISTERED PROFESSIONAL ENGINEER
No. 16183
JERRY D. SIMPSON
4-23-2015
BRIDGE ENGINEER

SHEET 7 OF 8
DETAILS OF 176'-0" CONTINUOUS COMPOSITE W-BEAM UNIT - BRIDGE A
BRIDGES OVER HWY. 62/102
ROUTE SEC.
ARKANSAS STATE HIGHWAY COMMISSION
LITTLE ROCK, ARK.

DRAWN BY: TLW DATE: 05/01/15 FILENAME: bCA0902al_s7.dgn
CHECKED BY: JDS DATE: 05/01/15 SCALE: NONE
DESIGNED BY: TG DATE: 05/01/15
BRIDGE NO. A5979 DRAWING NO. 57175

DATE REVISED	DATE FILMED	DATE REVISED	DATE FILMED	FED. ROAD DIST. NO.	STATE	FED. AID PROJ. NO.	SHEET NO.	TOTAL SHEETS
				6	ARK.			
				JOB NO.		CA0902	304	581
				① A5979		176 FT. UNIT		57176

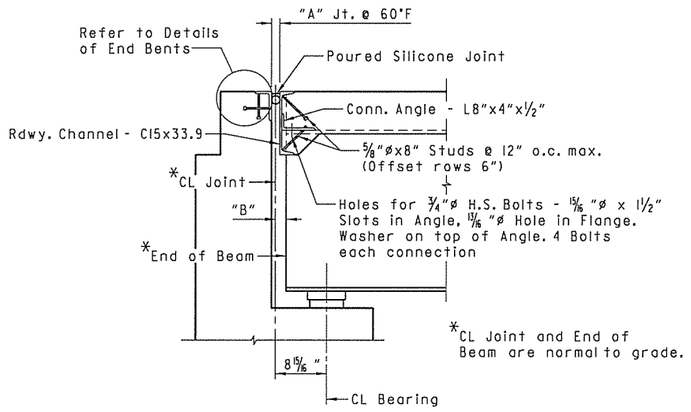

JOINT AT END BENTS

Perpendicular to CL Joint

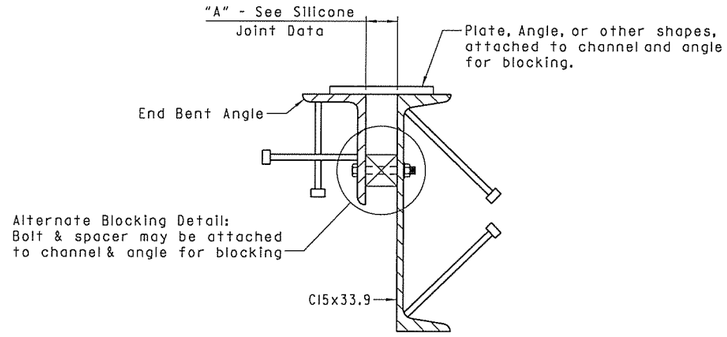

Note: Each expansion joint device shall be blocked in the Shop by the Fabricator to the dimension "A" shown @ 60°F, and the blocking details shall be shown on the Shop Drawings. Blocking shall be placed within 2 feet of each end of the device and with a maximum spacing of 8 feet.

DETAILS FOR BLOCKING EXPANSION JOINT DEVICE

SILICONE JOINT DATA

BENT NUMBER	"A" WIDTH PERPENDICULAR TO JOINT AT 24 HOUR AVERAGE TEMPERATURE ① OF:			"B" PERPENDICULAR TO JOINT AT 60°F	BUMPER BAR SIZE	"D"
	40°F	60°F	80°F			
1	2 7/16"	2 1/4"	2 1/16"	± 2 3/8"	1"x1 1/8"	4"
4	1 3/16"	1 1/8"	1 1/16"	± 1 1/8"	1"x⅝"	3"

① The temperature used to set the joint opening shall be the approximate average air temperature during the 24 hour period immediately before the bolts are tightened. The Engineer shall establish the temperature. Interpolation of the table may be necessary.

Notes: The temperature limitations recommended by the sealant manufacturer shall be observed.

The sealant shall be installed only when the average 24 hour air temperature is between 40° and 80°F.

② BACKER ROD NOTE:

Use an appropriately sized backer rod at the depth shown in the manufacturer's literature based on the joint width at the time of sealing.

Except as noted, do not install more backer rod than that which can be sealed in the same day.

The Contractor shall verify separation of the backer rod from the joint material after the joint material has set.

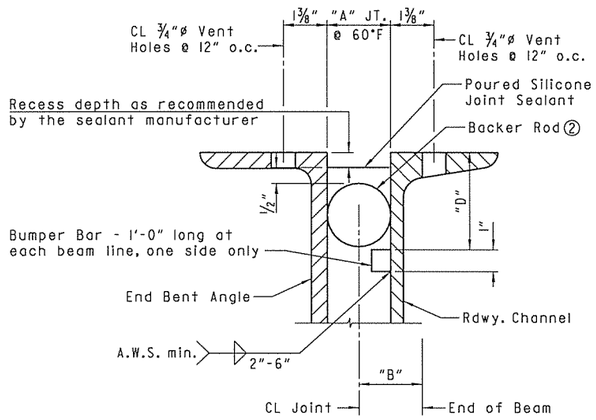

DETAIL OF POURED SILICONE JOINT SEAL

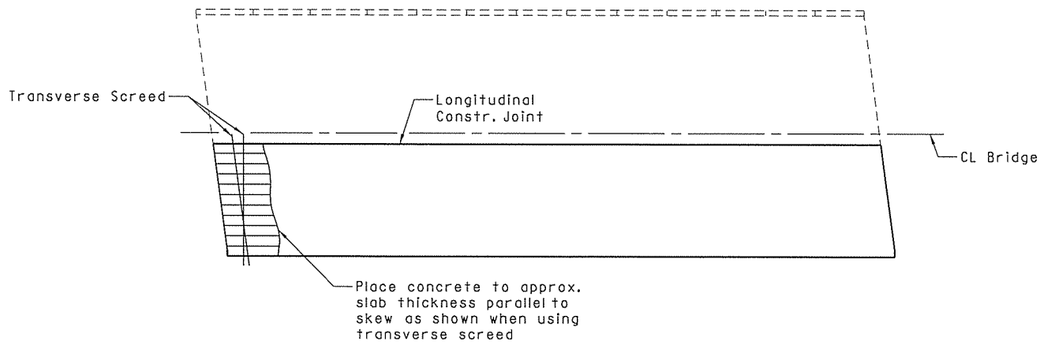

Note: At the Contractor's option, the transverse screed may be placed parallel to the skew or perpendicular to CL Bridge.

CONCRETE PLACEMENT PROCEDURE

No Scale

EXPANSION DEVICE INSTALLATION AT END BENTS

The Contractor may elect to install the expansion device for the end bents using one of the following two alternatives:

1. The concrete span pour adjacent to joint shall be placed before the end bent backwall is placed. After the end bent backwall forms are in place and the beams erected, the blocked expansion device shall be installed and adjusted for grade. All connection bolts shall be fully tightened prior to placing the deck concrete adjacent to the bent. Immediately prior to pouring the backwall concrete, the blocking shall be removed, the opening adjusted for temperature, and the backwall constructed.

2. The backwall shall be poured to the optional construction joint after beams are erected. The blocked expansion device shall be installed and adjusted for grade. All connection bolts shall be fully tightened prior to placing the deck concrete adjacent to the bent. Immediately prior to pouring the remainder of the backwall concrete, the blocking shall be removed and the opening adjusted for temperature. Backfill shall not be placed behind the backwall until the deck concrete on the adjacent span has been placed.

STATE OF ARKANSAS
JERRY D. PETERSON
No. 16183
REGISTERED PROFESSIONAL ENGINEER
4.23.2016
BRIDGE ENGINEER

SHEET 8 OF 8
DETAILS OF 176'-0" CONTINUOUS COMPOSITE W-BEAM UNIT - BRIDGE A
BRIDGES OVER HWY. 62/102

ROUTE SEC.

ARKANSAS STATE HIGHWAY COMMISSION

LITTLE ROCK, ARK.

DRAWN BY: TLW DATE: 05/01/15 FILENAME: bCA0902al_s8.dgn
CHECKED BY: JDS DATE: 05/01/15 SCALE: NO SCALE
DESIGNED BY: PMT DATE: 05/01/15

BRIDGE NO. A5979 DRAWING NO. 57176

DATE REVISED	DATE FILMED	DATE REVISED	DATE FILMED	FED. ROAD DIST. NO.	STATE	FED. AID PROJ. NO.	SHEET NO.	TOTAL SHEETS
				6	ARK.			
				JOB NO.		CA0902	305	581
				(1) A5979		ELASTO. BRGS.		57177

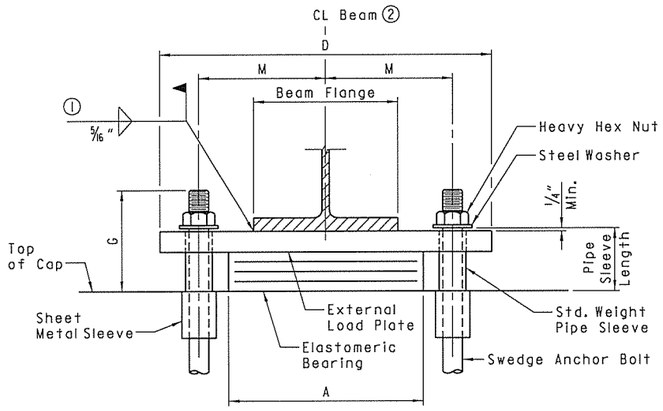

FRONT VIEW
BENT NOS. 2 & 3

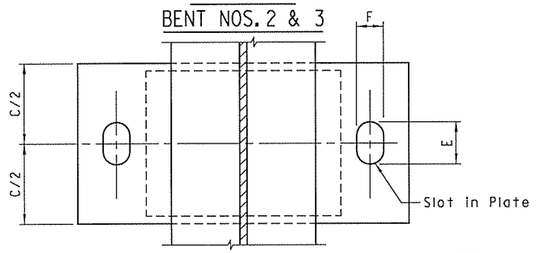

PLAN VIEW
BENT NOS. 2 & 3

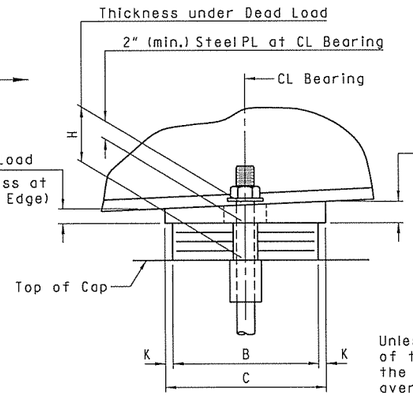

SIDE VIEW
BENT NOS. 2 & 3

NOTE:

The direction of bevel of the external load plate may not be accurately depicted with respect to T_a and T_b values shown in "Table of Fabricator Variables".

Unless otherwise approved by the Engineer, welding of the external load plate at expansion bearings to the girder will be allowed only when: 1) the approximate average air temperature during the 24 hour period immediately preceding welding is between 40 Deg. F and 80 Deg. F; and 2) the slots in the external load plate are positioned to center on the anchor bolts; and 3) no horizontal deformation of the elastomeric pad is evident. If welding at other temperatures is required, the Engineer will provide adjustment data.

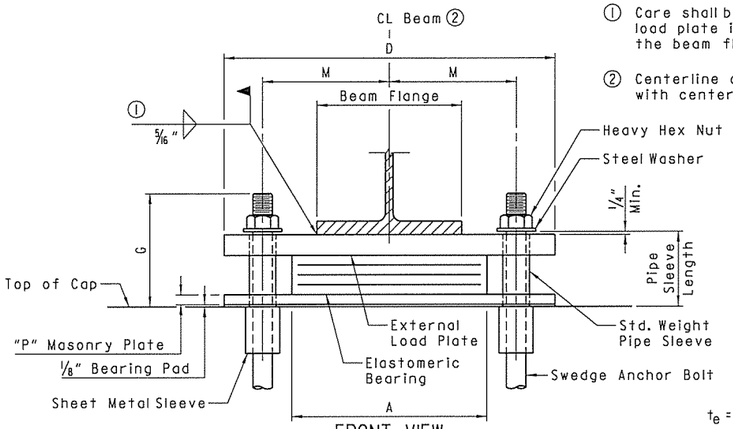

FRONT VIEW
BENT NOS. 1 & 4

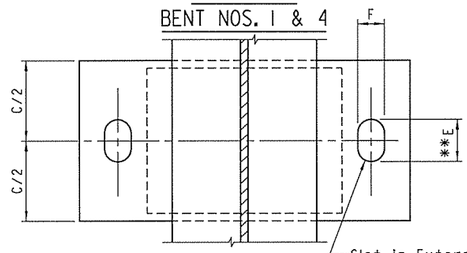

PLAN VIEW
BENT NOS. 1 & 4

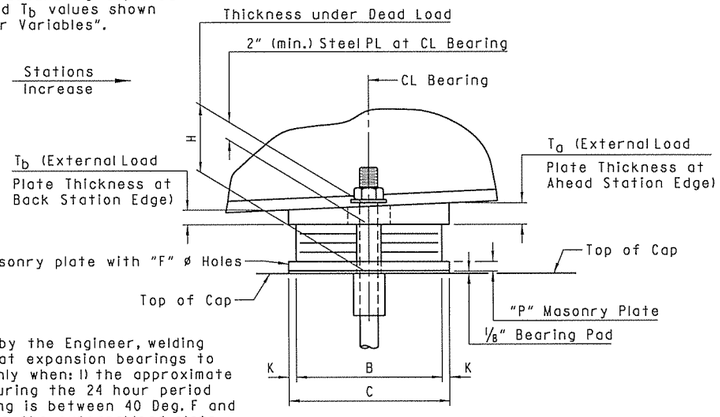

SIDE VIEW
BENT NOS. 1 & 4

① Care shall be taken to ensure that the external load plate is in full complete contact with the beam flange before welding begins.

② Centerline of the elastomeric pad shall be aligned with centerline of the beam.

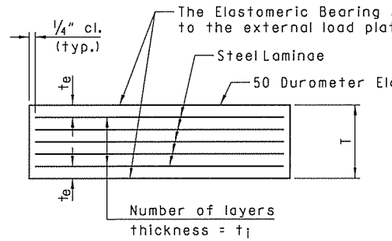

ELASTOMERIC BEARING

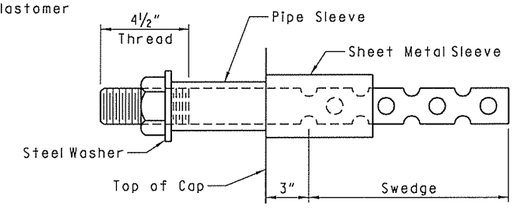

ANCHOR BOLT DETAIL

t_e = thickness of elastomer cover on top and bottom of pad

t_i = thickness of elastomer between steel laminae

N = number of elastomer layers of thickness t_i

NOTES:

Anchor bolts may be cast in place or drilled and grouted into place. If anchor bolts are to be cast in place, the galvanized sheet metal sleeves will not be required.

If anchor bolts are to be drilled and grouted in place, the galvanized sheet metal sleeves shall be cast in place as shown. Sleeves shall be dry packed with styrofoam, urethane foam or approved equal prior to pouring of concrete. After pouring of the cap and prior to erection of structural steel, the dry pack shall be removed and holes for the anchor bolts shall be accurately drilled into masonry. Bolts placed in drilled holes shall be accurately set and fixed using a QPL approved epoxy or non-shrink grout that completely fills the holes. Galvanized sheet metal sleeve will not be paid for directly, but will be considered subsidiary to the item "Structural Steel in Beam Spans (M 270, Gr. 50)".

GENERAL NOTES

Elastomeric Bearings shall conform to Section 808 of the Standard Specifications and shall be paid for at the unit price bid for "Elastomeric Bearings".

External load plates and masonry plates shall conform to AASHTO M 270, Grade 50. Pipe sleeves shall be ASTM A500, Grade B, and shall be galvanized to conform to AASHTO M 232, Class C or AASHTO M 298, Class 50.

External load plates and masonry plates shall be completely fabricated (including bevel and bolt holes) and shall be cleaned before vulcanizing to the elastomeric bearing. Surfaces in contact with the elastomeric bearing shall be cleaned in accordance with subsection 808.03. Other surfaces shall be blast cleaned in accordance with subsection 807.84(b) for painted steel and painted in accordance with subsection 807.75. The color of the paint shall be Green and shall match existing. Painting will not be paid for directly, but shall be considered subsidiary to "Elastomeric Bearings".

Anchor Bolts, Washers and Nuts shall conform to subsection 807.07 of the Standard Specifications. The anchor bolt grade of steel shall be as specified in the "Table of Fabricator Variables". Indentations shall be circular with rounded bottoms and staggered as shown in details.

Pipe Sleeves, Anchor Bolts, Washers and Nuts shall be paid for at the unit price bid for "Structural Steel in Beam Spans (M 270, Gr. 50)". External load plates, masonry plates and 1/8" bearing pads will not be measured or paid for separately but will be considered included in the unit bid price for "Elastomeric Bearings".

Bearings with masonry plates shall be seated in accordance with subsection 807.66. Bearings without masonry plates shall be seated in accordance with subsection 808.08. This work and materials are considered as subsidiary to the item "Elastomeric Bearings" and will not be paid for directly.

TABLE OF FABRICATOR VARIABLES

BRIDGE NO.	LOCATION: BENT NO(S).	LOCATION: BEAM NO.	BEARING TYPE	NO. OF BEARINGS EACH BENT	*MAXIMUM DESIGN LOAD (KIPS)	G	H	ELASTOMERIC PAD: A	B	N	t_i	t_e	NO. & THICKNESS OF STEEL LAMINAE	T	EXTERNAL LOAD PLATE: C	D	**E	F	K	M	P	T_a	T_b	ANCHOR BOLT: (Dia. x L)	GRADE	PIPE SLEEVE SIZE (Dia. x L)	SHEET METAL SLEEVE SIZE (Dia. x L)	STEEL WASHER SIZE (O.D.)
A5979	1	7-9	Exp.	3	58	8 5/8"	6 1/8"	14"	9"	4	1/2"	1/4"	5 @ 12 Gauge	3"	10"	23"	4"	2"	1/2"	9"	1"	2.11"	1.89"	1 1/4"x24"	55	1 1/4"x6 3/8"	3"x12"	2 1/2"
	2	7-9	Exp.	3	146	8 5/8"	5 5/8"	14"	12"	5	1/2"	1/4"	6 @ 12 Gauge	3 3/8"	13"	25"	4 1/8"	2 5/8"	1/2"	9 1/2"	-	2.14"	1.86"	1 3/4"x30"	55	2"x5 7/8"	4"x12"	3 3/8"
	3	7-9	Fix	3	151	9 1/8"	5 5/8"	14"	12"	5	1/2"	1/4"	6 @ 12 Gauge	3 5/8"	13"	26"	3 1/8"	3 1/8"	1/2"	9 3/4"	-	2.13"	1.87"	2 1/4"x36"	55	2 1/2"x5 7/8"	4"x12"	4"
	4	7-9	Exp.	3	64	8 5/8"	6 1/8"	14"	9"	4	1/2"	1/4"	5 @ 12 Gauge	3"	10"	23"	4"	2"	1/2"	9"	1"	2.10"	1.90"	1 1/4"x24"	55	1 1/4"x6 3/8"	3"x12"	2 1/2"

*Maximum Design Load = Service Load

**The dimension "E" does not apply to masonry plates - see "PLAN VIEW"

STATE OF ARKANSAS
REGISTERED PROFESSIONAL ENGINEER
No. 16183
JERRY D. STEVENSON
4.25.2016
BRIDGE ENGINEER

DETAILS OF ELASTOMERIC BEARINGS - BRIDGE A
BRIDGES OVER HWY. 62/102

ROUTE SEC.

ARKANSAS STATE HIGHWAY COMMISSION

LITTLE ROCK, ARK.

DRAWN BY: TLW DATE: 05/01/15 FILENAME: bCA0902al_el.dgn

CHECKED BY: TG DATE: 05/01/15 SCALE: NO SCALE

DESIGNED BY: PMT DATE: 05/01/15

BRIDGE NO. A5979 DRAWING NO. 57177

DATE REVISED	DATE FILMED	DATE REVISED	DATE FILMED	FED. ROAD DIST. NO.	STATE	FED. AID PROJ. NO.	SHEET NO.	TOTAL SHEETS
				6	ARK.			
				JOB NO.		CA0902	306	581
				(1) B5979		BENT 1		57178

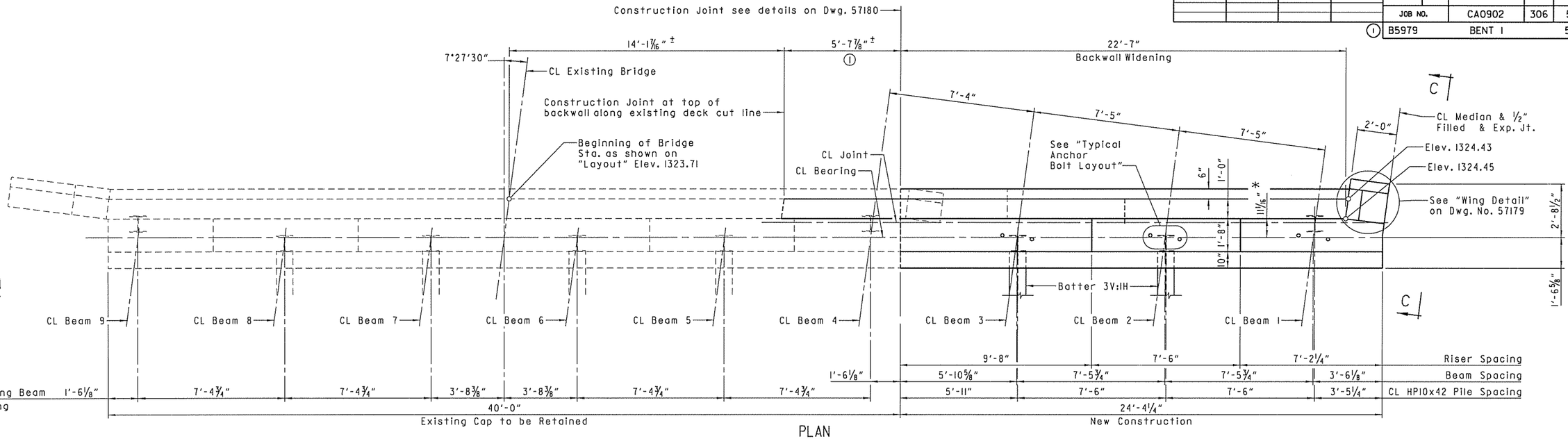

PLAN

Scale: 3/8" = 1'-0"

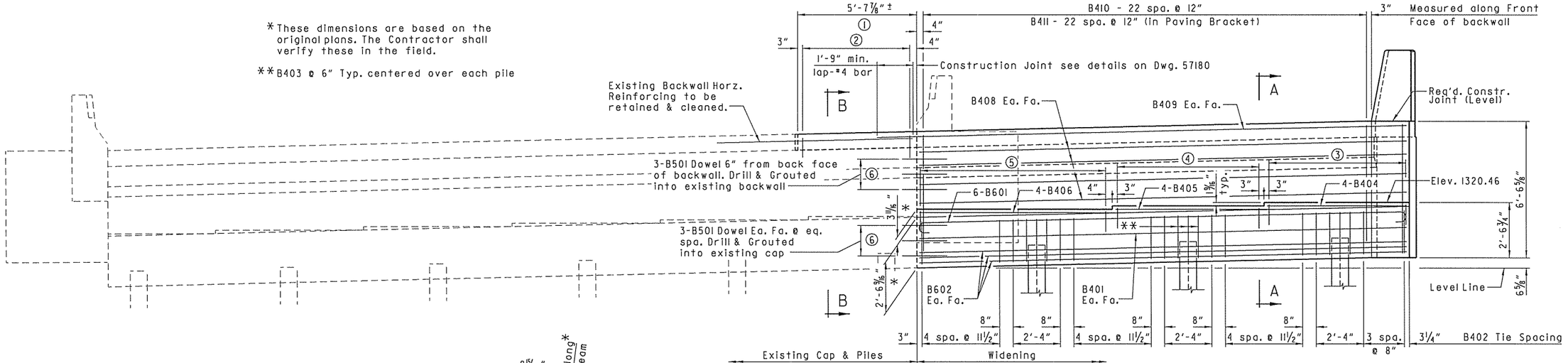

*These dimensions are based on the original plans. The Contractor shall verify these in the field.

**B403 @ 6" Typ. centered over each pile

ELEVATION

Looking Back

Scale: 3/8" = 1'-0"

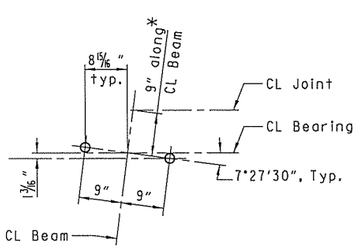

TYPICAL ANCHOR BOLT LAYOUT

Scale: 3/4" = 1'-0"

For details of Elastomeric Bearings, see Dwg. No. 57196.

(1) Portion of backwall concrete above the paving bracket to be removed. Existing backwall reinforcing steel to be retained and cleaned to lap to new reinforcing steel as shown. Replace the portion of backwall during new construction. Any damaged reinforcing steel shall be replaced by dowel bars drilled and grouted into place at the contractor's expense.

(2) B412 - 6 eq. spa. (12" max.) Ea. Fa. (Drill and Grout into Existing Backwall)

(3) B407 - 7 eq. spa. (12" max.)

(4) B407 - 7 spa. @ 12"

(5) B407 - 9 spa. @ 12"

(6) Minimum 8" embedment into existing cap and backwall. Grout used shall be an approved epoxy grout listed on the QPL. Hole diameter and installation procedure shall be as recommended by the grout manufacturer.

STATE OF ARKANSAS REGISTERED PROFESSIONAL ENGINEER No. 16183 JERRY D. STEPHENSON

4-25-2016

BRIDGE ENGINEER

SHEET 1 OF 3

DETAILS OF BENT 1 - BRIDGE B

BRIDGES OVER HWY. 62/102

ROUTE SEC.

ARKANSAS STATE HIGHWAY COMMISSION

LITTLE ROCK, ARK.

DRAWN BY:	TLW	DATE:	05/01/15	FILENAME:	bCA0902b1_b11.dgn
CHECKED BY:	RMH	DATE:	05/01/15	SCALE:	AS NOTED
DESIGNED BY:	TG	DATE:	05/01/15		

BRIDGE NO. B5979 DRAWING NO. 57178

DATE REVISED	DATE FILMED	DATE REVISED	DATE FILMED	FED. ROAD DIST. NO.	STATE	FED. AID PROJ. NO.	SHEET NO.	TOTAL SHEETS
				6	ARK.			
				JOB NO.		CA0902	307	581
				(1) B5979		BENT 1		57179

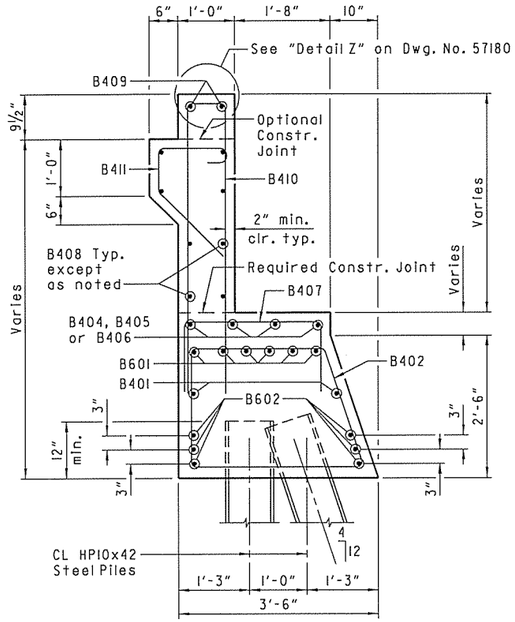

SECTION A-A
Scale: ¾" = 1'-0"

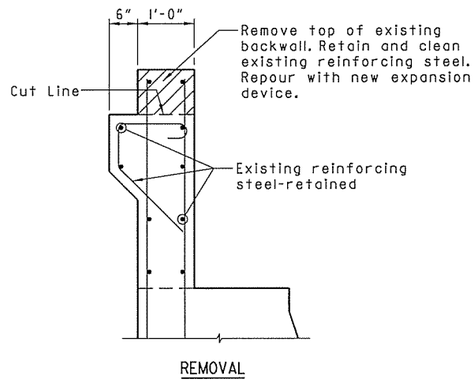

REMOVAL

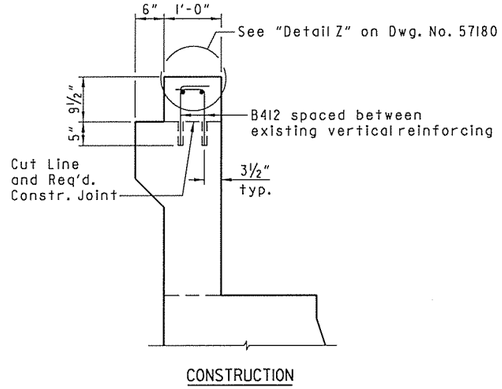

CONSTRUCTION

Grout B412 bars into 5" min. deep drilled holes. Grout used shall be an approved epoxy grout listed on the QPL. Hole diameter and installation procedure shall be as recommended by the grout manufacturer.

B412 bars shall be located to avoid damaging the existing backwall reinforcing steel. Payment for grouting and placement of bars shall be considered subsidiary to the pay item "Modification of Existing Bridge Structure (Br. No. B5979)".

SECTION B-B
Scale: ¾" = 1'-0"

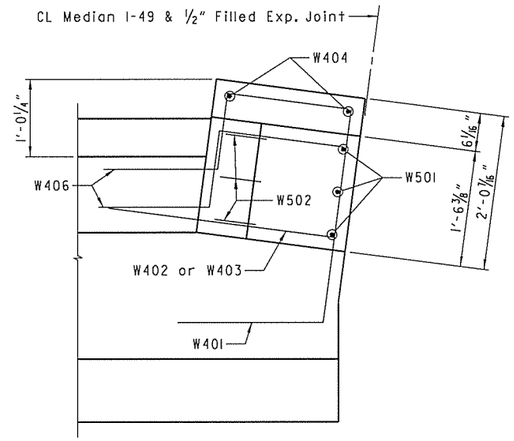

WING DETAIL
Scale: 1" = 1'-0"

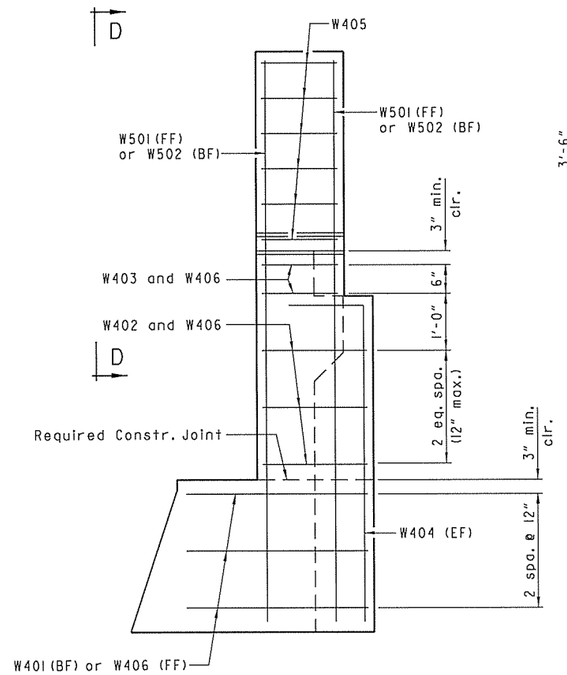

VIEW C-C
Scale: ¾" = 1'-0"

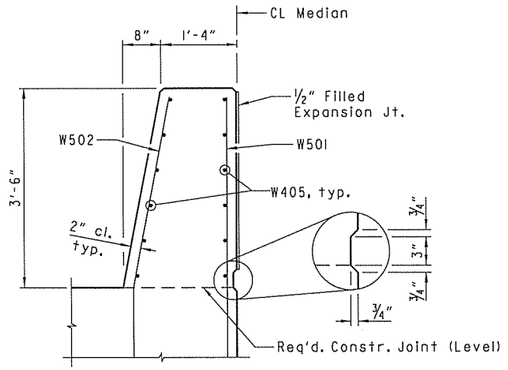

VIEW D-D
Scale: ¾" = 1'-0"

BF = Back Face
FF = Front Face
EF = Each Face

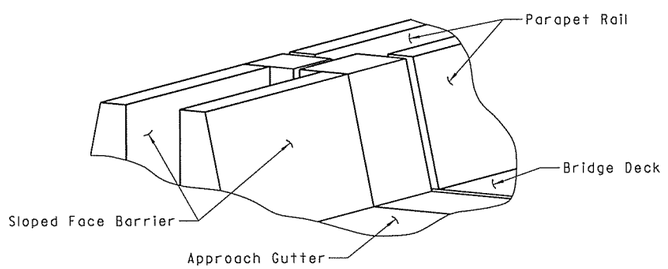

DETAIL OF BARRIER AT BRIDGE END
No Scale

GENERAL NOTES:

Work required to remove & dispose portions of the existing bridge, retain and clean existing reinforcing steel, and any required doweling will not be paid for directly but will be considered subsidiary to the item "Modification of Existing Bridge Structure (Br. No. B5979)".

No portion of the backwall for new construction shall be poured until the beams are in place. The portion of the backwall above the optional construction joint or paving bracket shall not be placed until the adjacent deck pour has been made.

All concrete shall be Class "S" and be poured in the dry. All exposed corners to be chamfered ¾" unless otherwise noted.

All reinforcing steel shall be Grade 60 (Yield Strength = 60,000 psi) conforming to AASHTO M31 or M322, Type A, with mill test reports.

Structural steel in end bents shall be AASHTO M 270, Gr. 50 and shall be paid for as "Structural Steel in Beam Spans (M 270, Grade 50)".

Top reinforcing bars shall be properly placed to avoid interference with anchor bolts or sheet metal sleeves.

For additional information, see "Layout".

STATE OF ARKANSAS
REGISTERED PROFESSIONAL ENGINEER
No. 16183
JERRY R. TENNISON
4.23.2015
BRIDGE ENGINEER

SHEET 2 OF 3
DETAILS OF BENT 1 - BRIDGE B
BRIDGES OVER HWY. 62/102
ROUTE SEC.
ARKANSAS STATE HIGHWAY COMMISSION
LITTLE ROCK, ARK.

DRAWN BY: TLW DATE: 05/01/15
CHECKED BY: RMH DATE: 05/01/15
DESIGNED BY: TG DATE: 05/01/15
FILENAME: bCA0902b1_b12.dgn
SCALE: AS NOTED

BRIDGE NO. B5979 DRAWING NO. 57179

DATE REVISED	DATE FILMED	DATE REVISED	DATE FILMED	FED. ROAD DIST. NO.	STATE	FED. AID PROJ. NO.	SHEET NO.	TOTAL SHEETS
				6	ARK.			
				JOB NO.		CA0902	308	581
				① B5979		BENT 1		57180

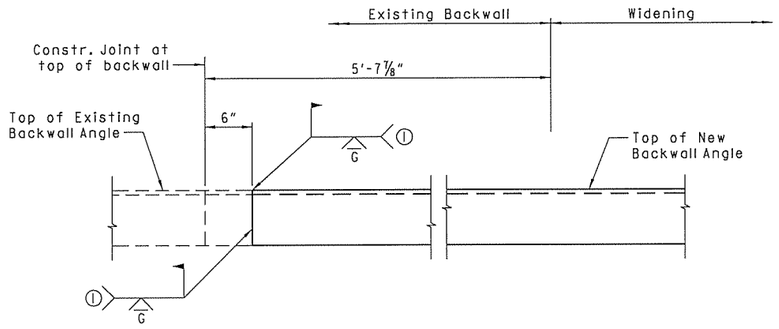

① Weld prior to pouring.

DETAIL OF WELD LOCATION
FOR EXPANSION DEVICE.
No Scale

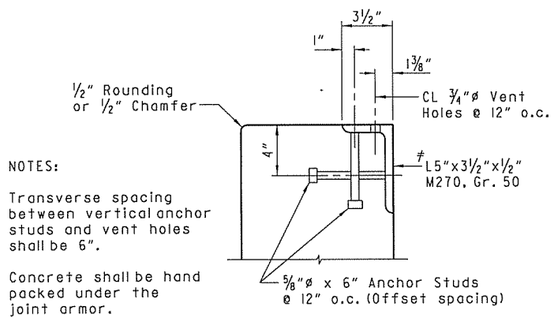

NOTES:

Transverse spacing between vertical anchor studs and vent holes shall be 6".

Concrete shall be hand packed under the joint armor.

For additional joint details, see Dwg. No. 57195.

DETAIL Z
No Scale

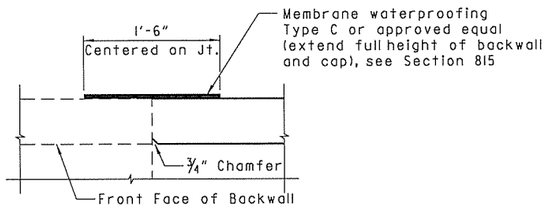

NOTE:

Payment for membrane to be considered subsidiary to "Class S Concrete-Bridge".

CONSTRUCTION JOINT DETAIL
No Scale

#Angle size is based on orginal plans. The contractor shall verify in the field.

BAR LIST

MARK	NO. REQ'D.	LENGTH	PIN. DIA.
B401	2	24'-1"	Str.
B402	24	10'-0"	2"
B403	9	6'-5"	2"
B404	4	6'-11"	Str.
B405	4	8'-3"	Str.
B406	4	10'-5"	Str.
B407	26	5'-6"	2"
B408	8	24'-4"	2"
B409	2	26'-3"	2"
B410	23	11'-2"	2"
B411	23	3'-11"	2"
B412	14	1'-6"	2"
B501	9	2'-9"	Str.
B601	6	25'-5"	4½"
B602	6	24'-1"	Str.
W401	3	5'-9"	3"
W402	3	5'-10"	3"
W403	2	5'-4"	3"
W404	2	6'-6"	3"
W405	12	1'-3"	Str.
W406	8	3'-10"	3"
W501	3	9'-11"	Str.
W502	3	9'-11"	3¾"

BENDING DIAGRAM

Dimensions are out to out of bars.

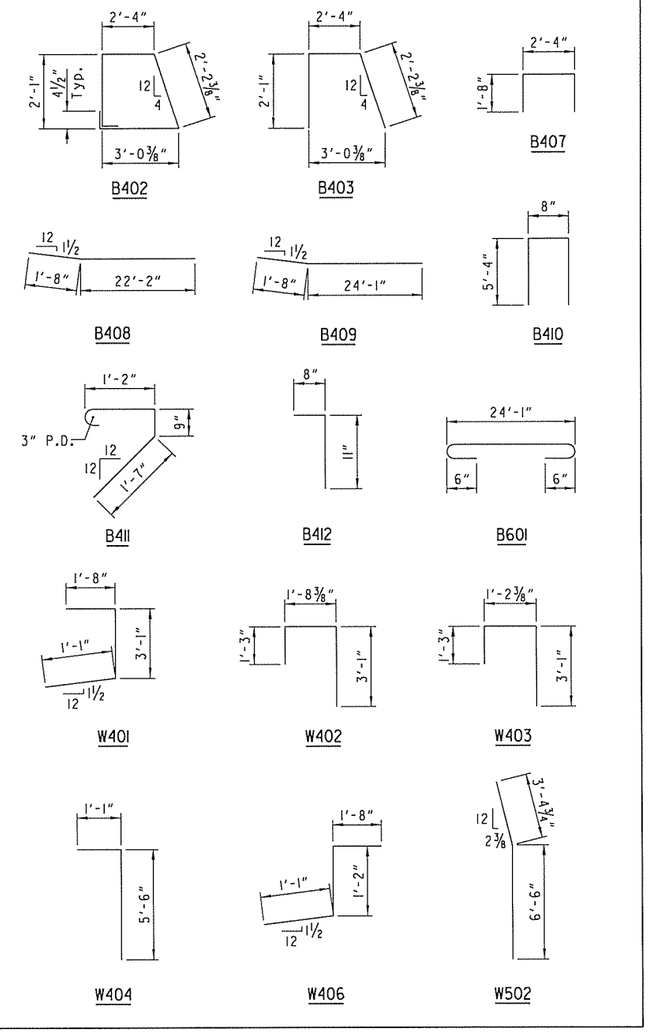

STATE OF ARKANSAS
REGISTERED PROFESSIONAL ENGINEER
No. 16183
JERRY D. STEVENSON
4.28.2016
BRIDGE ENGINEER

SHEET 3 OF 3
DETAILS OF BENT 1 - BRIDGE B
BRIDGES OVER HWY. 62/102
ROUTE SEC.
ARKANSAS STATE HIGHWAY COMMISSION
LITTLE ROCK, ARK.

DRAWN BY: TLW DATE: 05/01/15
CHECKED BY: RMH DATE: 05/01/15
DESIGNED BY: TG DATE: 05/01/15
FILENAME: bCA0902b1_b13.dgn
SCALE: AS NOTED

BRIDGE NO. B5979 DRAWING NO. 57180

DATE REVISED	DATE FILMED	DATE REVISED	DATE FILMED	FED. ROAD DIST. NO.	STATE	FED. AID PROJ. NO.	SHEET NO.	TOTAL SHEETS
				6	ARK.			
				JOB NO.		CA0902	309	581
				(1) B5979		BENT 4		57181

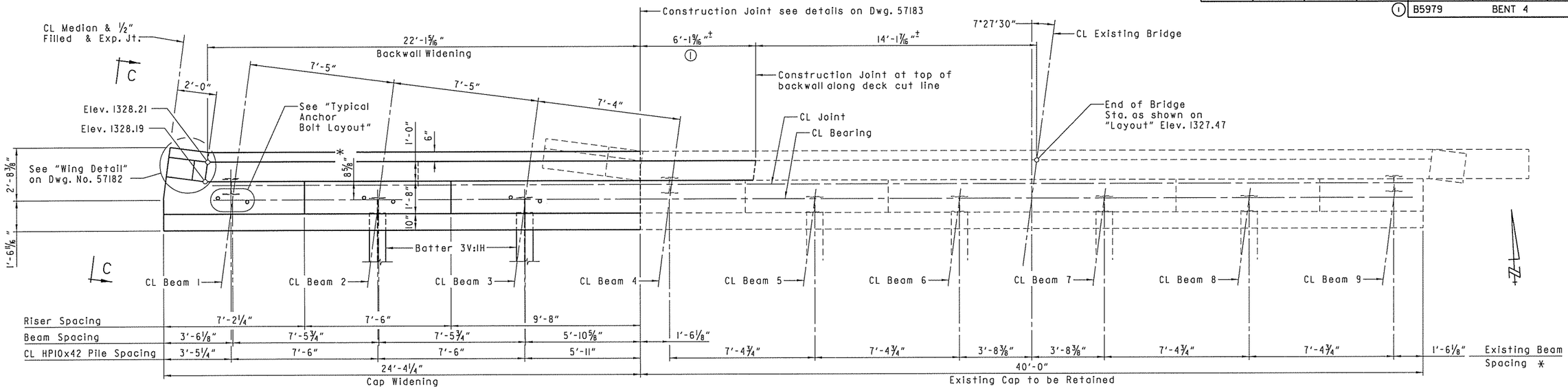

PLAN

Scale: ⅜" = 1'-0"

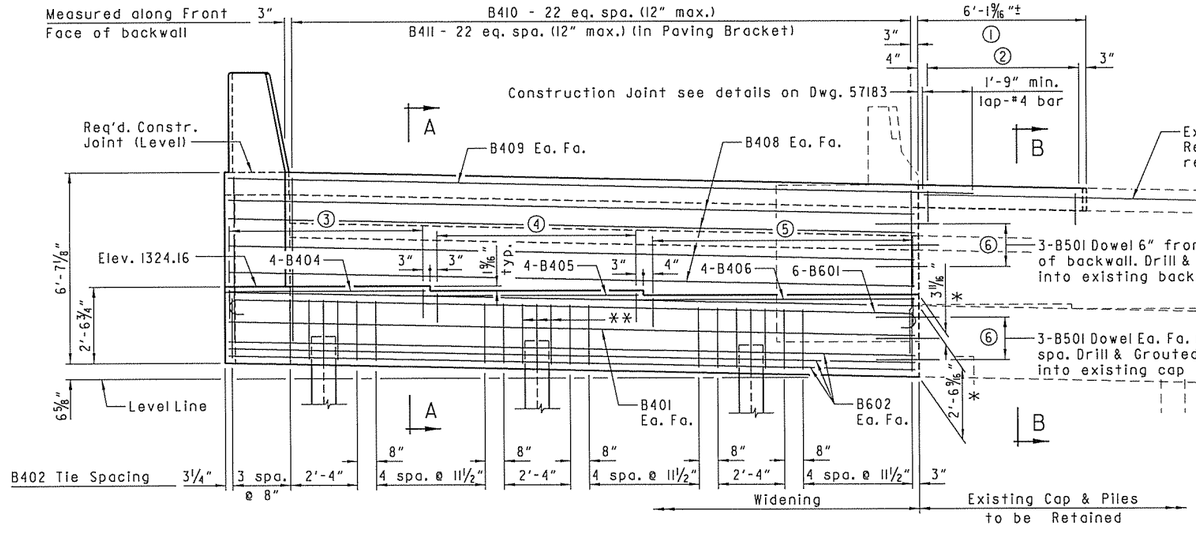

ELEVATION

Looking Ahead

Scale: ⅜" = 1'-0"

* These dimensions are based on the original plans. The Contractor shall verify these in the field.

** B403 @ 6" Typ. centered over each pile

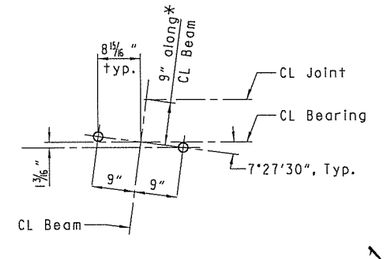

TYPICAL ANCHOR BOLT LAYOUT

Scale: ¾" = 1'-0"

For details of Elastomeric Bearings, see Dwg. No. 57196.

① Portion of backwall concrete above the paving bracket to be removed. Existing backwall reinforcing steel to be retained and cleaned to lap to new reinforcing steel as shown. Replace the portion of backwall during new construction. Any damaged reinforcing steel shall be replaced by dowel bars drilled and grouted into place at the contractor's expense.

② B412 - 6 eq. spa. (12" max.) Ea. Fa. (Drill and Grout into Existing Backwall)

③ B407 - 7 eq. spa. (12" max.)

④ B407 - 7 spa. @ 12"

⑤ B407 - 9 spa. @ 12"

⑥ Minimum 8" embedment into existing cap and backwall. Grout used shall be an approved epoxy grout listed on the QPL. Hole diameter and installation procedure shall be as recommended by the grout manufacturer.

STATE OF ARKANSAS
REGISTERED PROFESSIONAL ENGINEER
No. 16183
JERRY D. STEVENSON
4.29.2014
BRIDGE ENGINEER

SHEET 1 OF 3
DETAILS OF BENT 4 - BRIDGE B
BRIDGES OVER HWY. 62/102
ROUTE SEC.
ARKANSAS STATE HIGHWAY COMMISSION
LITTLE ROCK, ARK.

DRAWN BY: TLW DATE: 05/01/15
CHECKED BY: RMH DATE: 05/01/15
DESIGNED BY: TG DATE: 05/01/15
FILENAME: bCA0902bl_b4l.dgn
SCALE: AS NOTED

BRIDGE NO. B5979 DRAWING NO. 57181

DATE REVISED	DATE FILMED	DATE REVISED	DATE FILMED	FED. ROAD DIST. NO.	STATE	FED. AID PROJ. NO.	SHEET NO.	TOTAL SHEETS
				6	ARK.			
				JOB NO.		CA0902	310	581
				(1) B5979		BENT 4		57182

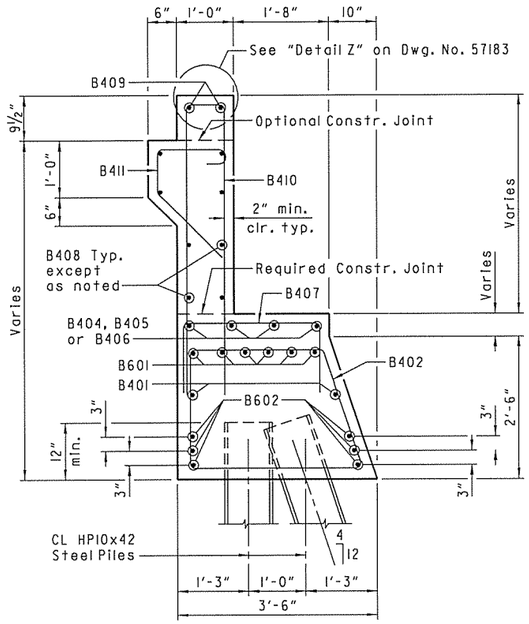

SECTION A-A
Scale: ¾" = 1'-0"

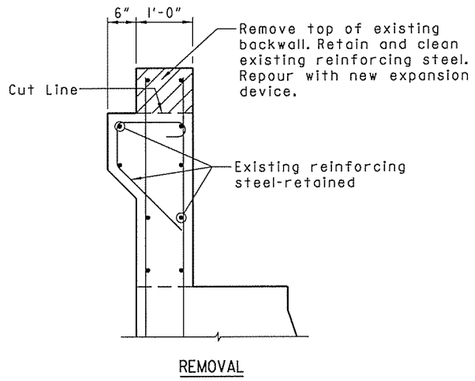

REMOVAL

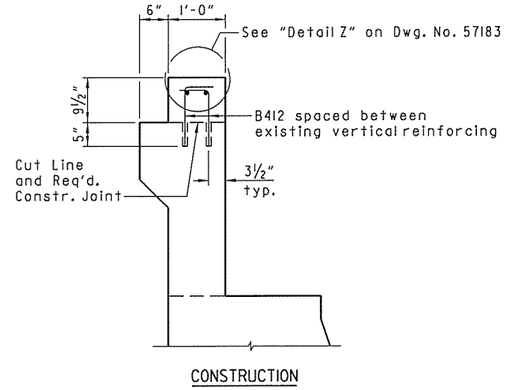

CONSTRUCTION

Grout B412 bars into 5" min. deep drilled holes. Grout used shall be an approved epoxy grout listed on the QPL. Hole diameter and installation procedure shall be as recommended by the grout manufacturer.

B412 bars shall be located to avoid damaging the existing backwall reinforcing steel. Payment for grouting and placement of bars shall be considered subsidiary to the pay item "Modification of Existing Bridge Structure (Br. No. B5979)".

SECTION B-B
Scale: ¾" = 1'-0"

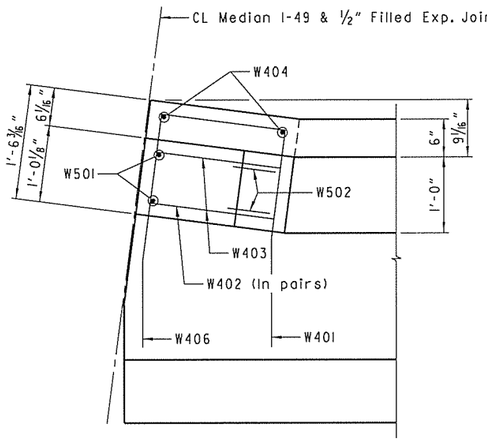

WING DETAIL
Scale: 1" = 1'-0"

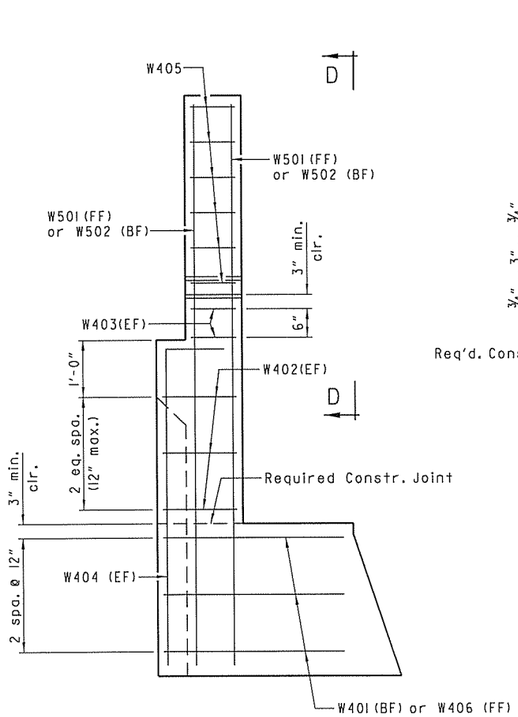

VIEW C-C
Scale: ¾" = 1'-0"

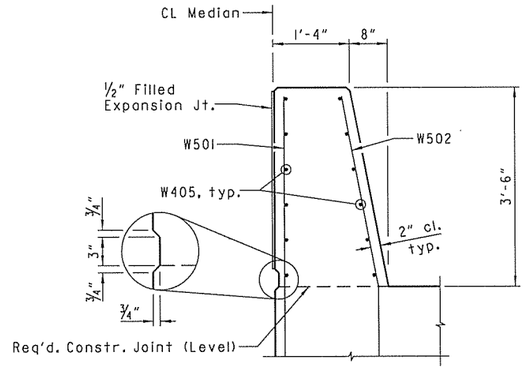

VIEW D-D
Scale: ¾" = 1'-0"

BF = Back Face
FF = Front Face
EF = Each Face

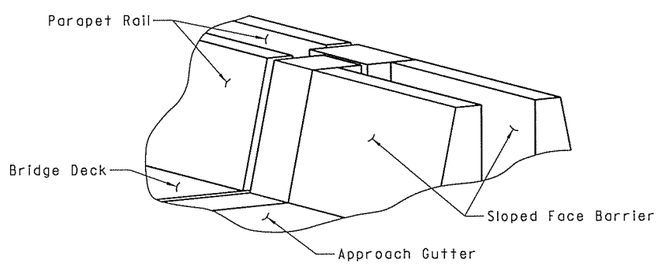

DETAIL OF BARRIER AT BRIDGE END
No Scale

GENERAL NOTES:

Work required to remove & dispose portions of the existing bridge, retain and clean existing reinforcing steel, and any required doweling will not be paid for directly but will be considered subsidiary to the item "Modification of Existing Bridge Structure (Br. No. B5979)".

No portion of the backwall for new construction shall be poured until the beams are in place. The portion of the backwall above the optional construction joint or paving bracket shall not be placed until the adjacent deck pour has been made.

All concrete shall be Class "S" and be poured in the dry. All exposed corners to be chamfered ¾" unless otherwise noted.

All reinforcing steel shall be Grade 60 (Yield Strength = 60,000 psi) conforming to AASHTO M31 or M322, Type A, with mill test reports.

Structural steel in end bents shall be AASHTO M 270, Gr. 50 and shall be paid for as "Structural Steel in Beam Spans (M 270, Grade 50)".

Top reinforcing bars shall be properly placed to avoid interference with anchor bolts or sheet metal sleeves.

For additional information, see "Layout".

STATE OF ARKANSAS
REGISTERED PROFESSIONAL ENGINEER
No. 16183
JERRY D. STEVENSON
4.25.2016
BRIDGE ENGINEER

SHEET 2 OF 3
DETAILS OF BENT 4 - BRIDGE B
BRIDGES OVER HWY. 62/102
ROUTE SEC.
ARKANSAS STATE HIGHWAY COMMISSION
LITTLE ROCK, ARK.

DRAWN BY: TLW DATE: 05/01/15
CHECKED BY: RMH DATE: 05/01/15
DESIGNED BY: TG DATE: 05/01/15
FILENAME: bCA0902bl_b42.dgn
SCALE: AS NOTED

BRIDGE NO. B5979 DRAWING NO. 57182

DATE REVISED	DATE FILMED	DATE REVISED	DATE FILMED	FED. ROAD DIST. NO.	STATE	FED. AID PROJ. NO.	SHEET NO.	TOTAL SHEETS
				6	ARK.			
				JOB NO.		CA0902	311	581
				① B5979		BENT 4		57183

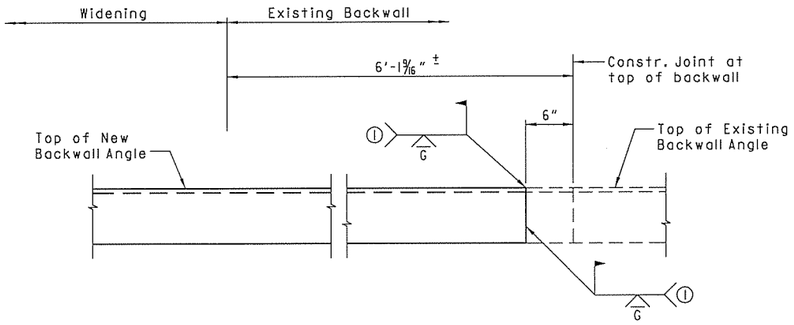

① Weld prior to pouring.

DETAIL OF WELD LOCATION
FOR EXPANSION DEVICE
No Scale

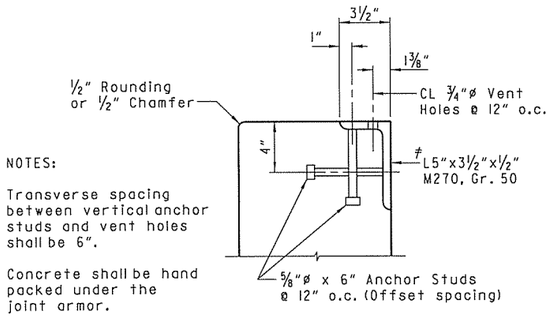

NOTES:

Transverse spacing between vertical anchor studs and vent holes shall be 6".

Concrete shall be hand packed under the joint armor.

For additional joint details, see Dwg. No. 57195.

DETAIL Z
No Scale

≠Angle size is based on orginal plans. The contractor shall verify in the field.

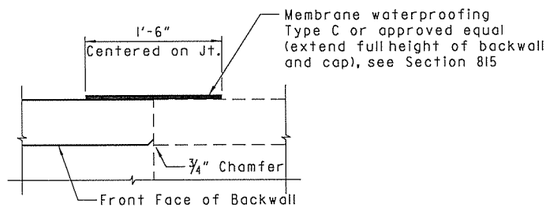

NOTE:

Payment for membrane to be considered subsidiary to "Class S Concrete-Bridge".

CONSTRUCTION JOINT DETAIL
No Scale

BAR LIST

MARK	NO. REQ'D.	LENGTH	PIN. DIA.
B401	2	24'-1"	Str.
B402	24	10'-0"	2"
B403	9	6'-5"	2"
B404	4	6'-11"	Str.
B405	4	8'-3"	Str.
B406	4	10'-5"	Str.
B407	26	5'-6"	2"
B408	8	23'-10"	2"
B409	2	25'-9"	2"
B410	23	11'-2"	2"
B411	23	3'-11"	2"
B412	14	1'-6"	2"
B501	9	2'-9"	Str.
B601	6	25'-5"	4½"
B602	6	24'-1"	Str.
W401	3	3'-6"	3"
W402	6	2'-9"	3"
W403	4	2'-3"	3"
W404	2	6'-6"	3"
W405	12	0'-9"	Str.
W406	3	4'-1"	3"
W501	2	9'-11"	Str.
W502	2	9'-11"	3¾"

BENDING DIAGRAM

Dimensions are out to out of bars.

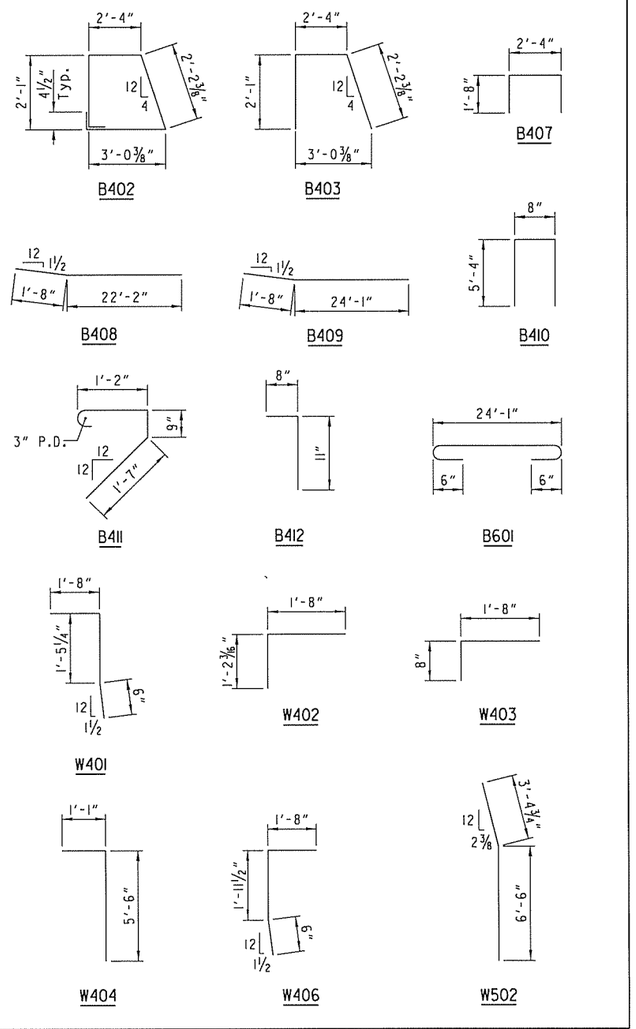

STATE OF ARKANSAS
REGISTERED PROFESSIONAL ENGINEER
No. 16183
JERRY D. STEVENSON
4.25.2016
BRIDGE ENGINEER

SHEET 3 OF 3
DETAILS OF BENT 4 - BRIDGE B
BRIDGES OVER HWY. 62/102
ROUTE SEC.
ARKANSAS STATE HIGHWAY COMMISSION
LITTLE ROCK, ARK.

DRAWN BY: TLW DATE: 05/01/15
CHECKED BY: RMH DATE: 05/01/15
DESIGNED BY: TG DATE: 05/01/15
FILENAME: bCA0902bl_b43.dgn
SCALE: AS NOTED

BRIDGE NO. B5979 DRAWING NO. 57183

DATE REVISED	DATE FILMED	DATE REVISED	DATE FILMED	FED. ROAD DIST. NO.	STATE	FED. AID PROJ. NO.	SHEET NO.	TOTAL SHEETS
				6	ARK.			
				JOB NO.		CA0902	312	581
				(1) B5979		INT. BENTS		57184

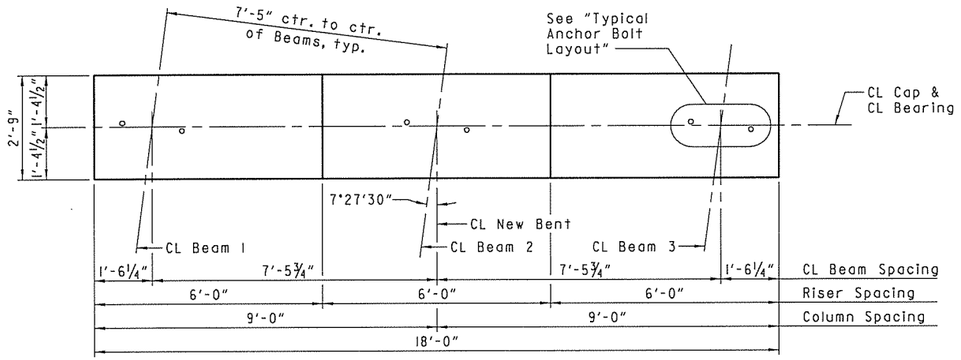

PLAN - BENT 2

Scale: ½"=1'-0"

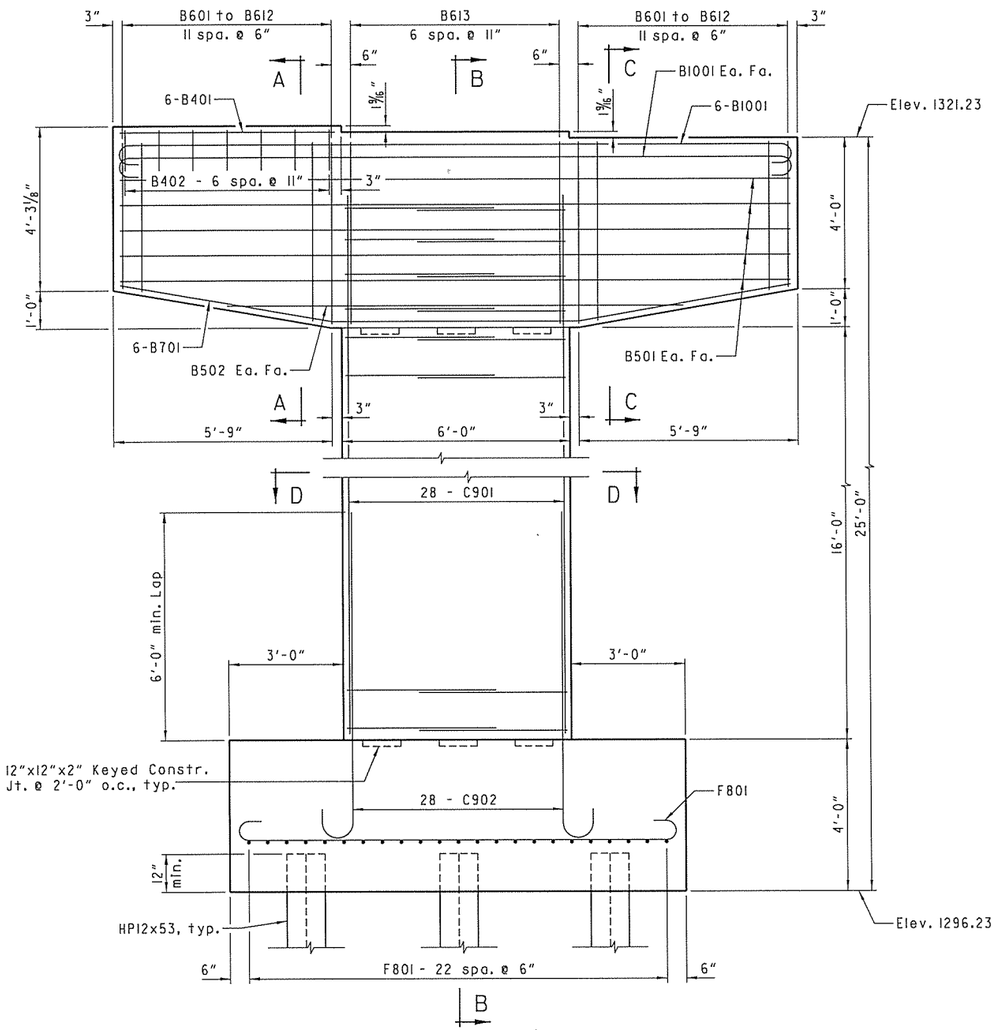

ELEVATION - BENT 2

Lookin Ahead

Scale: ½"=1'-0"

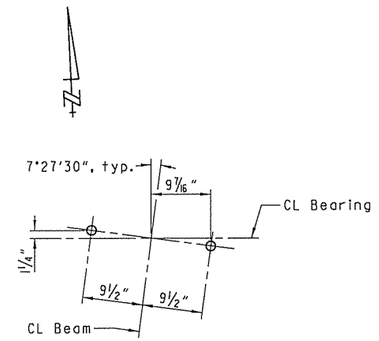

TYPICAL ANCHOR BOLT LAYOUT

Scale: 1"=1'-0"

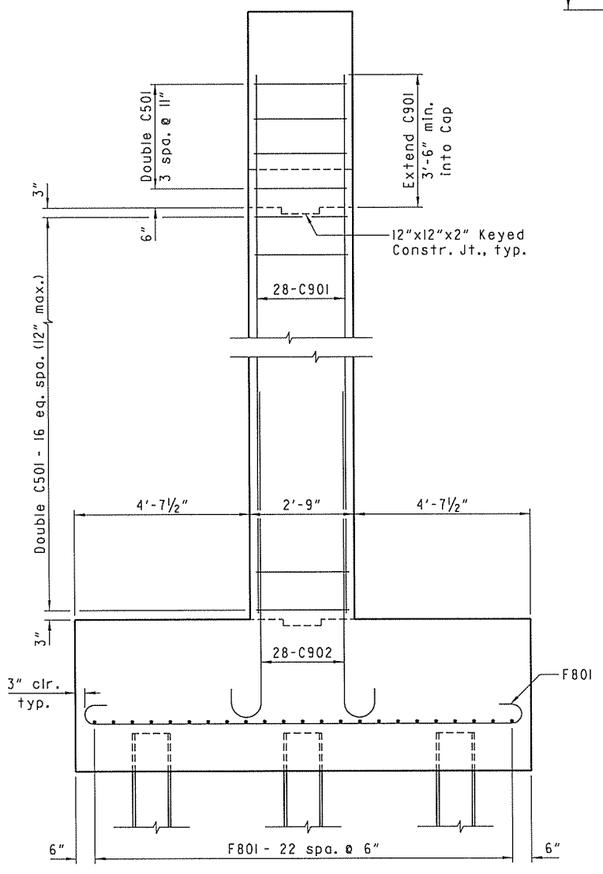

SECTION B-B

Cap reinforcement not shown for clarity.

Scale: ½"=1'-0"

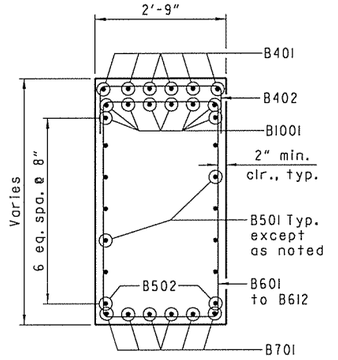

SECTION A-A

No Scale

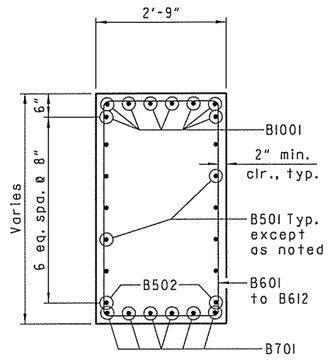

SECTION C-C

No Scale

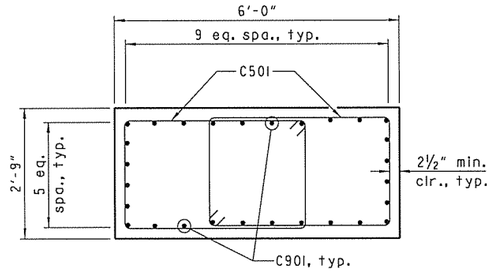

SECTION D-D

No Scale

STATE OF ARKANSAS
REGISTERED PROFESSIONAL ENGINEER
No. 16183
JERRY D. STEVENSON
4.25.2016
BRIDGE ENGINEER

SHEET 1 OF 4

DETAILS OF INTERMEDIATE BENTS - BRIDGE B

BRIDGES OVER HWY. 62/102

ROUTE SEC.

ARKANSAS STATE HIGHWAY COMMISSION

LITTLE ROCK, ARK.

DRAWN BY: TLW DATE: 05/01/15 FILENAME: bCA0902b1_b2l.dgn

CHECKED BY: RMH DATE: 05/01/15 SCALE: AS NOTED

DESIGNED BY: TG DATE: 05/01/15

BRIDGE NO. B5979 DRAWING NO. 57184

DATE REVISED	DATE FILMED	DATE REVISED	DATE FILMED	FED. ROAD DIST. NO.	STATE	FED. AID PROJ. NO.	SHEET NO.	TOTAL SHEETS
				6	ARK.			
				JOB NO.		CA0902	313	581
				(1) B5979		INT. BENTS		57185

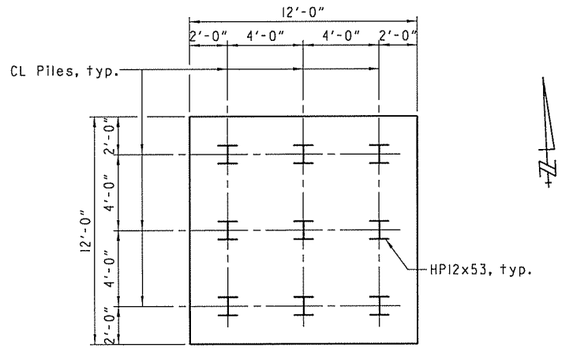

TYPICAL FOOTING PLAN

Scale: 1/4" = 1'-0"

BAR LIST - BENT 2

MARK	NO. REQ'D.	LENGTH	"A"	"B"	PIN. DIA.
B401	6	5'-8"			Str.
B402	7	6'-3"			2"
B501	10	17'-8"			Str.
B502	2	12'-0"			Str.
B601 To B612	2 Ea.	13'-4" to 15'-2"	2'-5"	3'-8" TO 4'-7"	4½"
B613	7	11'-5"			4½"
B701	6	17'-10"			5¼"
B1001	8	20'-6"			10"
C501	42	13'-0"			3¾"
C901	28	19'-6"			Str.
C902	28	9'-11"			9"
F801	46	13'-4"			6"

BENDING DIAGRAM

Dimensions are out to out of bars.

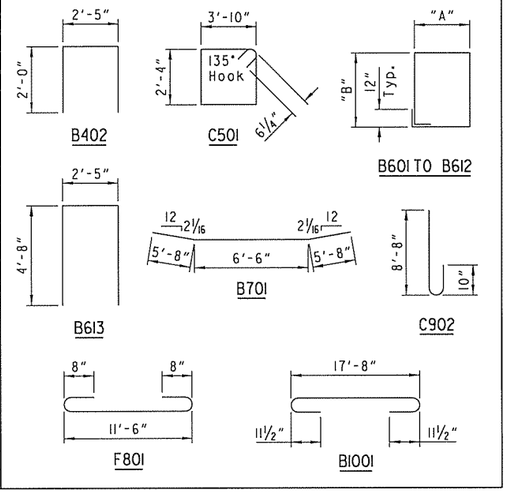

GENERAL NOTES:

All concrete shall be Class S with a minimum 28 day compressive strength, f'c = 3,500 psi, and shall be poured in the dry. All exposed corners to be chamfered 3/4" unless otherwise noted.

All reinforcing steel shall be Grade 60 (yield strength = 60,000 psi) conforming to AASHTO M31 or M322, Type A, with mill test reports.

Top reinforcing bars shall be properly placed to avoid interference with anchor bolts or sheet metal sleeves.

For additional information, see "Layout".

STATE OF ARKANSAS REGISTERED PROFESSIONAL ENGINEER No. 16183 JERRY D. STEVENSON

4.29.2016

BRIDGE ENGINEER

SHEET 2 OF 4

DETAILS OF INTERMEDIATE BENTS - BRIDGE B

BRIDGES OVER HWY. 62/102

ROUTE SEC.

ARKANSAS STATE HIGHWAY COMMISSION

LITTLE ROCK, ARK.

DRAWN BY: TLW DATE: 05/01/15 FILENAME: bCA0902bl_b22.dgn

CHECKED BY: RMH DATE: 05/01/15 SCALE: AS NOTED

DESIGNED BY: TG DATE: 05/01/15

BRIDGE NO. B5979 DRAWING NO. 57185

DATE REVISED	DATE FILMED	DATE REVISED	DATE FILMED	FED. ROAD DIST. NO.	STATE	FED. AID PROJ. NO.	SHEET NO.	TOTAL SHEETS
				6	ARK.			
				JOB NO.		CA0902	314	581
				(1) B5979		INT. BENTS		57186

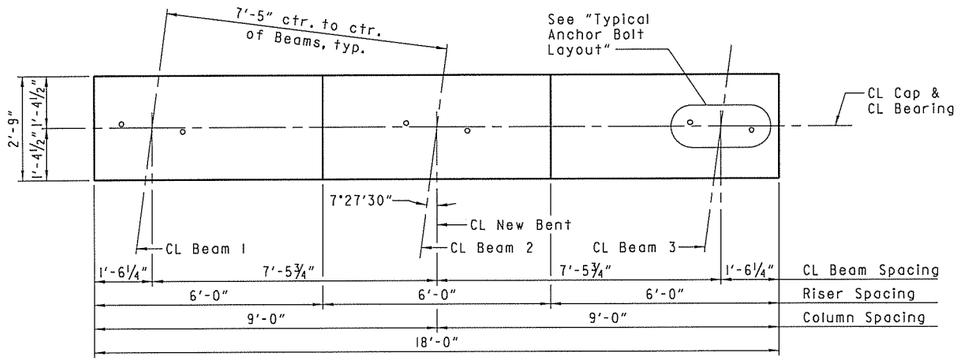

PLAN - BENT 3

Scale: ½"=1'-0"

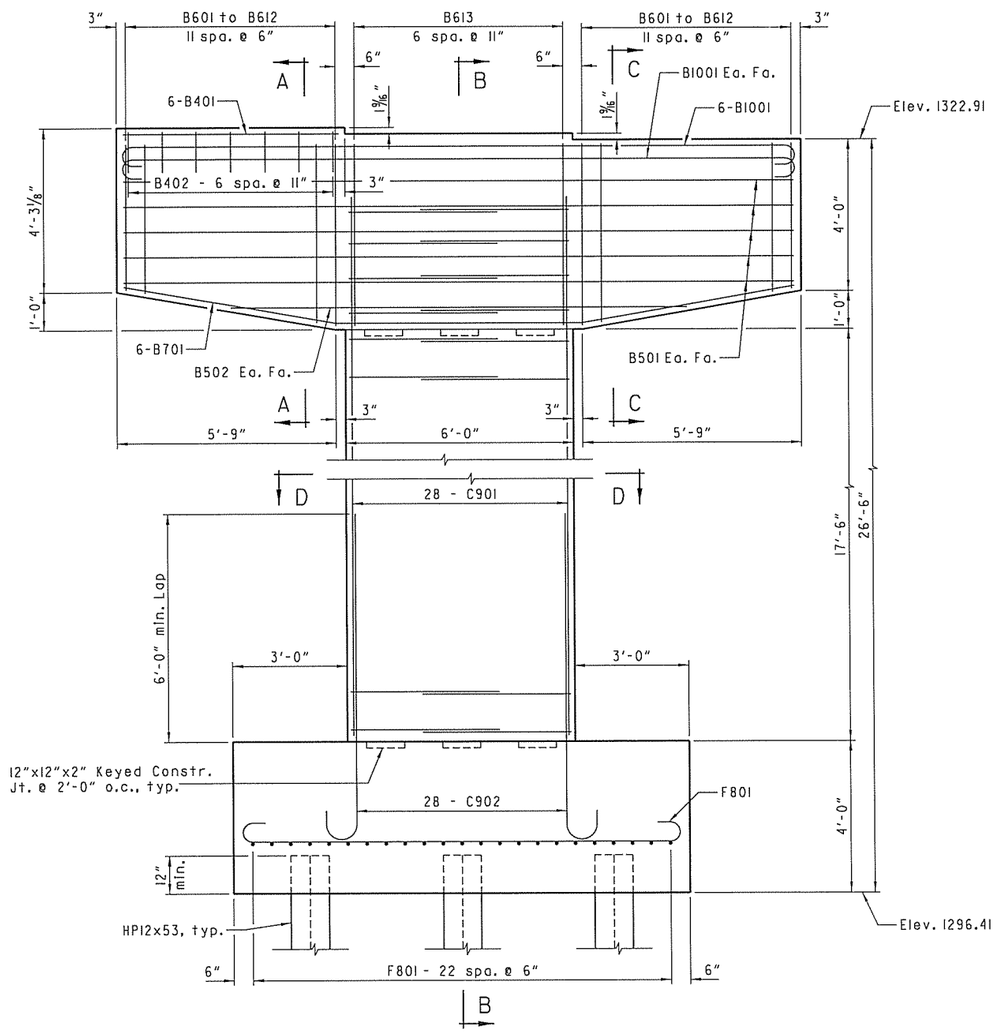

ELEVATION - BENT 3

Lookin Ahead

Scale: ½"=1'-0"

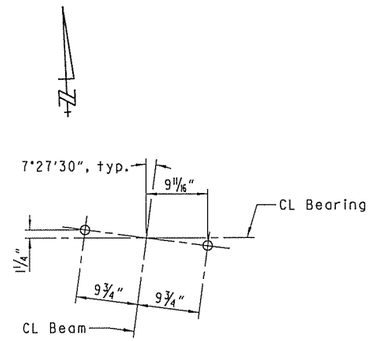

TYPICAL ANCHOR BOLT LAYOUT

Scale: 1"=1'-0"

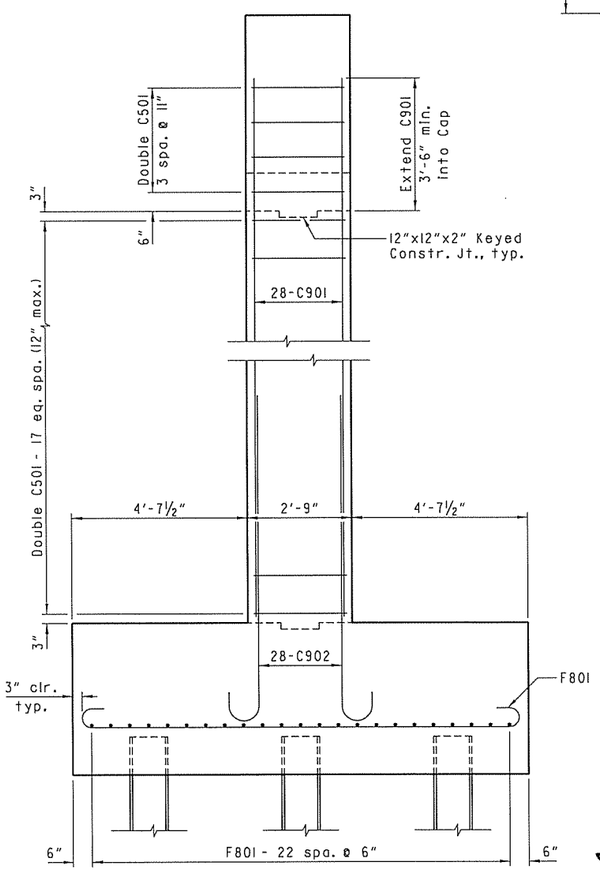

SECTION B-B

Cap reinforcement not shown for clarity.

Scale: ½"=1'-0"

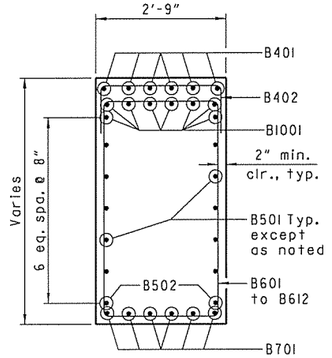

SECTION A-A

No Scale

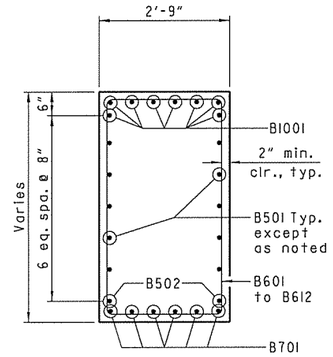

SECTION C-C

No Scale

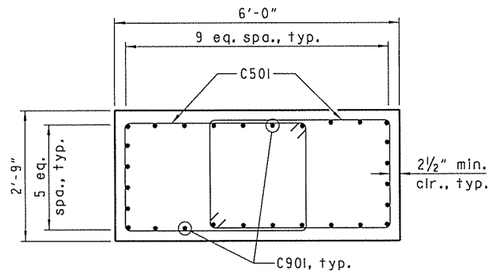

SECTION D-D

No Scale

STATE OF ARKANSAS
REGISTERED PROFESSIONAL ENGINEER
No. 16183
JERRY T. STEVENSON
4.25.2016
BRIDGE ENGINEER

SHEET 3 OF 4

DETAILS OF INTERMEDIATE BENTS - BRIDGE B

BRIDGES OVER HWY. 62/102

ROUTE SEC.

ARKANSAS STATE HIGHWAY COMMISSION

LITTLE ROCK, ARK.

DRAWN BY:	TLW	DATE:	05/01/15	FILENAME:	bCA0902bl_b31.dgn
CHECKED BY:	RMH	DATE:	05/01/15	SCALE:	AS NOTED
DESIGNED BY:	TG	DATE:	05/01/15		

BRIDGE NO. B5979 DRAWING NO. 57186

DATE REVISED	DATE FILMED	DATE REVISED	DATE FILMED	FED. ROAD DIST. NO.	STATE	FED. AID PROJ. NO.	SHEET NO.	TOTAL SHEETS
				6	ARK.			
				JOB NO.		CA0902	315	581
				(1) B5979		INT. BENTS		57187

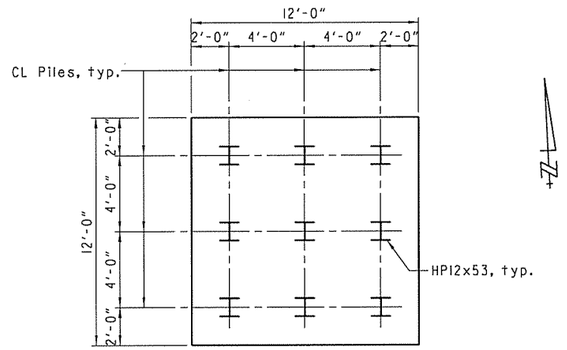

TYPICAL FOOTING PLAN

Scale: 1/4" = 1'-0"

BAR LIST - BENT 3

MARK	NO. REQ'D.	LENGTH	"A"	"B"	PIN. DIA.
B401	6	5'-8"			Str.
B402	7	6'-3"			2"
B501	10	17'-8"			Str.
B502	2	12'-0"			Str.
B601 To B612	2 Ea.	13'-4" to 15'-2"	2'-5"	3'-8" TO 4'-7"	4½"
B613	7	11'-5"			4½"
B701	6	17'-10"			5¼"
B1001	8	20'-6"			10"
C501	44	13'-0"			3¾"
C901	28	21'-0"			Str.
C902	28	9'-11"			9"
F801	46	13'-4"			6"

BENDING DIAGRAM

Dimensions are out to out of bars.

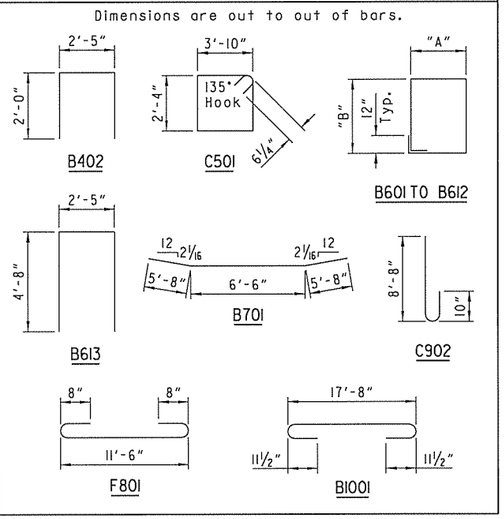

GENERAL NOTES:

All concrete shall be Class S with a minimum 28 day compressive strength, f'c = 3,500 psi, and shall be poured in the dry. All exposed corners to be chamfered ¾" unless otherwise noted.

All reinforcing steel shall be Grade 60 (yield strength = 60,000 psi) conforming to AASHTO M31 or M322, Type A, with mill test reports.

Top reinforcing bars shall be properly placed to avoid interference with anchor bolts or sheet metal sleeves.

For additional information, see "Layout".

STATE OF ARKANSAS
REGISTERED PROFESSIONAL ENGINEER
No. 16183
JERRY D. STEVENSON
4.25.2016
BRIDGE ENGINEER

SHEET 4 OF 4

DETAILS OF INTERMEDIATE BENTS - BRIDGE B

BRIDGES OVER HWY. 62/102

ROUTE SEC.

ARKANSAS STATE HIGHWAY COMMISSION

LITTLE ROCK, ARK.

DRAWN BY: TLW DATE: 05/01/15 FILENAME: bCA0902bl_b32.dgn

CHECKED BY: RMH DATE: 05/01/15 SCALE: AS NOTED

DESIGNED BY: TG DATE: 05/01/15

BRIDGE NO. B5979 DRAWING NO. 57187

(1) Tolerance: Minus = 1/4", Plus equal to amount of Slab Thickening used to meet Slab Thickness Tolerance, see "Adjustment for Slab Thickness Tolerance", Dwg. No. 57189.

(2) See "Adjustment for Slab Thickness Tolerance", Dwg. No. 57189.

(3) Measured at CL Bearing and CL New Beams, typ.

(4) Measured at CL Bearing and CL Existing Beams, typ.

(5) The concrete slab and parapet are to be removed to the cut line as indicated in accordance with Section 821. Care shall be exercised during the removal of the existing deck to ensure that the beams, diaphragms, shear connectors, bolted connections and reinforcement are not damaged. Damaged items that are not salvageable as determined by the Engineer, shall be replaced by the contractor at no additional payment.

(6) Clean and retain existing transverse reinforcing steel. Splice existing transverse reinforcing steel with proposed transverse reinforcing steel. Retain existing #6 truss bars, bent up over existing exterior beam, 4'-10" from cut line. Use 3'-3" minimum lap for #5 bars.

(7) Bolts in the existing diaphragms and end struts may be loosened to the satisfaction of the Engineer at Beam Nos. 4 & 5 during deck removal. Any existing bolt that is loosened or removed shall be replaced with a new high-strength bolt. The diaphragm and end strut bolts located in the bays between Beam Nos. 4 & 5 shall be tightened after the completion of the deck pour.

DATE REVISED	DATE FILMED	DATE REVISED	DATE FILMED	FED. ROAD DIST. NO.	STATE	FED. AID PROJ. NO.	SHEET NO.	TOTAL SHEETS
				6	ARK.			
				JOB NO.		CA0902	316	581
				(1) B5979		176 FT. UNIT		57188

NOTE:

Class 2 Protective Surface Treatment shall be applied to the Roadway Surface, Roadway Face and top of Concrete Parapet Rail.

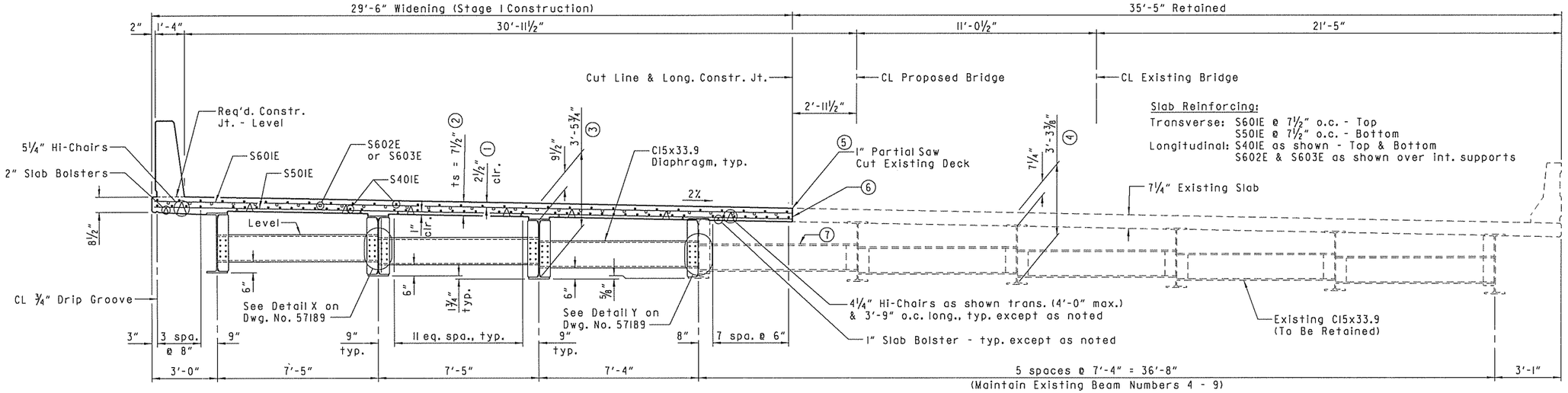

Beam No.	1	2	3	4 ♯	5 ♯	6 ♯	7 ♯	8 ♯	9 ♯

♯ Existing Beams

* Measured perpendicular to CL Bridge.

TYPICAL ROADWAY SECTION

Looking Ahead
Scale: ⅜" = 1'-0"

For Joint Details, see Dwg. No. 57195.

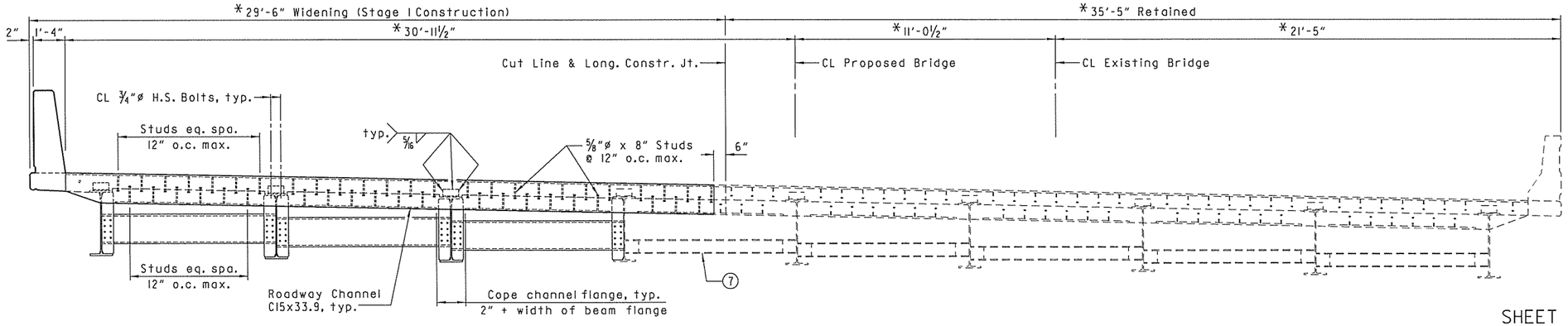

TYPICAL SECTION THROUGH JOINT

Looking Ahead - Bent 1
Bent 4 Similar
Scale: ⅜" = 1'-0"

EXPANSION DEVICE
Roadway Channel - C15x33.9
Conn. Angle - L8"x4"x½"
Note: Detail device ⅛" high and provide ¼" shims using 2 - 1/16" plates and 1 - ⅛" plate.

STATE OF ARKANSAS
REGISTERED PROFESSIONAL ENGINEER
No. 16183
JERRY D. STEVENSON
4.29.2016
BRIDGE ENGINEER

SHEET 1 OF 8
DETAILS OF 176'-0" CONTINUOUS COMPOSITE W-BEAM UNIT - BRIDGE B
BRIDGES OVER HWY. 62/102

ROUTE SEC.

ARKANSAS STATE HIGHWAY COMMISSION

LITTLE ROCK, ARK.

DRAWN BY: TLW DATE: 05/01/15 FILENAME: bCA0902bl_sl.dgn
CHECKED BY: JDS DATE: 05/01/15 SCALE: Scale: ⅜" = 1'-0"
DESIGNED BY: TG DATE: 05/01/15

BRIDGE NO. B5979 DRAWING NO. 57188

DATE REVISED	DATE FILMED	DATE REVISED	DATE FILMED	FED. ROAD DIST. NO.	STATE	FED. AID PROJ. NO.	SHEET NO.	TOTAL SHEETS
				6	ARK.			
				JOB NO.		CA0902	317	581
				① B5979		176 FT. UNIT		57189

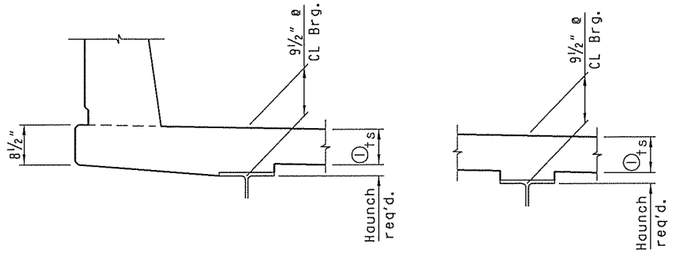

EXTERIOR BEAM

INTERIOR BEAM

① Tolerance when removable deck forming is used is +½", -¼", Haunch forming is required and shall be adjusted to maintain slab thickness tolerance.

Note: ts = slab thickness as shown on superstructure detail drawings.

Haunch dimension may vary within the following limits to maintain the grade and slab thickness tolerance: Minimum - occurs when top flange contacts bottom reinforcing steel: Maximum - top flange thickness plus 1¾". No increase in concrete and structural steel quantities will be made to maintain tolerances.

Tolerances shown are applicable only when removable deck forming is used, see Std. Dwg. No. 55005 for tolerances when permanent steel deck forms are used. Payment for concrete shall be based on removable deck forming.

ADJUSTMENT FOR SLAB THICKNESS TOLERANCE

Scale: ¾" = 1'-0"

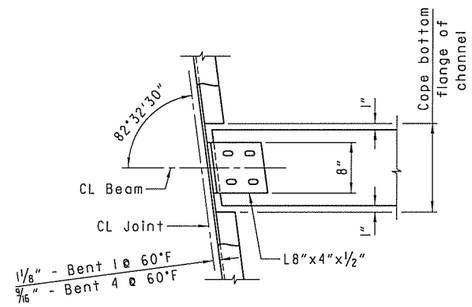

CHANNEL CONNECTION DETAIL

Scale: 1" = 1'-0"

TABLE FOR WELD

MATERIAL THICKNESS OF THICKER PART JOINED (INCHES)	MINIMUM SIZE OF FILLET WELD (INCHES)	SINGLE PASS WELD
To ¾" Inclusive	¼"	MUST BE USED
Over ¾"	5/16"	

NOTE: When a fillet weld size, as shown on the plans, is larger than the minimum, the first pass shall be that specified for minimum size of fillet weld.

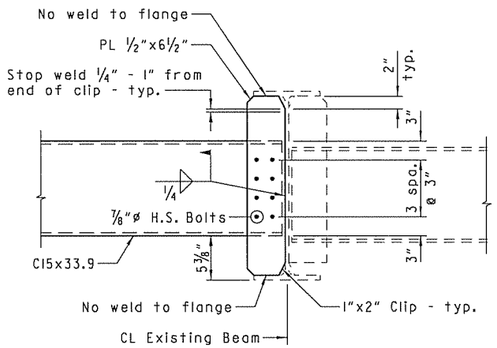

DETAIL Y

Scale: 1" = 1'-0"

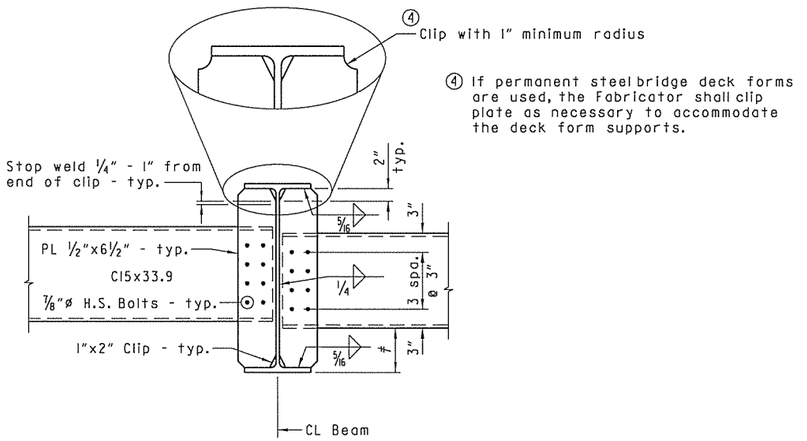

④ If permanent steel bridge deck forms are used, the Fabricator shall clip plate as necessary to accommodate the deck form supports.

♯See "Typical Roadway Section" for dimensions on Dwg. No. 57188.

DETAIL X

Scale: 1" = 1'-0"

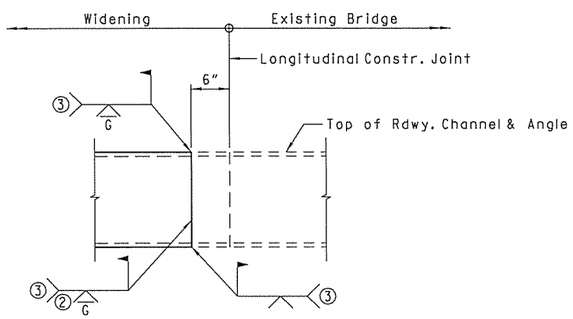

② Grind flush 5" from top of deck.
③ Weld prior to pouring deck.

DETAIL OF WELD LOCATION FOR EXPANSION DEVICE

No Scale

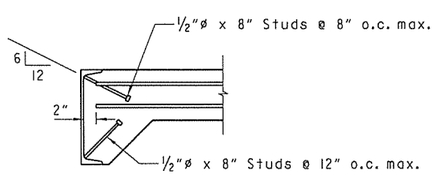

NOTE: As an alternate to ⅝"ø studs, ½"ø x 8" studs spaced as shown may be used. Use weight of ⅝"ø stud as basis of measurement of structural steel in anchors.

DETAILS OF ALTERNATE ANCHORS

Scale: 1" = 1'-0"

STATE OF ARKANSAS
REGISTERED PROFESSIONAL ENGINEER
No. 16183
JERRY STEVENSON
4.19.2016
BRIDGE ENGINEER

SHEET 2 OF 8
DETAILS OF 176'-0" CONTINUOUS COMPOSITE W-BEAM UNIT - BRIDGE B
BRIDGES OVER HWY. 62/102
ROUTE SEC.
ARKANSAS STATE HIGHWAY COMMISSION
LITTLE ROCK, ARK.

DRAWN BY: TLW DATE: 05/01/15
CHECKED BY: JDS DATE: 05/01/15
DESIGNED BY: TG DATE: 05/01/15
FILENAME: bCA0902bl_s2.dgn
SCALE: AS NOTED

BRIDGE NO. B5979 DRAWING NO. 57189

DATE REVISED	DATE FILMED	DATE REVISED	DATE FILMED	FED. ROAD DIST. NO.	STATE	FED. AID PROJ. NO.	SHEET NO.	TOTAL SHEETS
				6	ARK.			
				JOB NO.		CA0902	318	581
				(1) B5979		176 FT. UNIT		57190

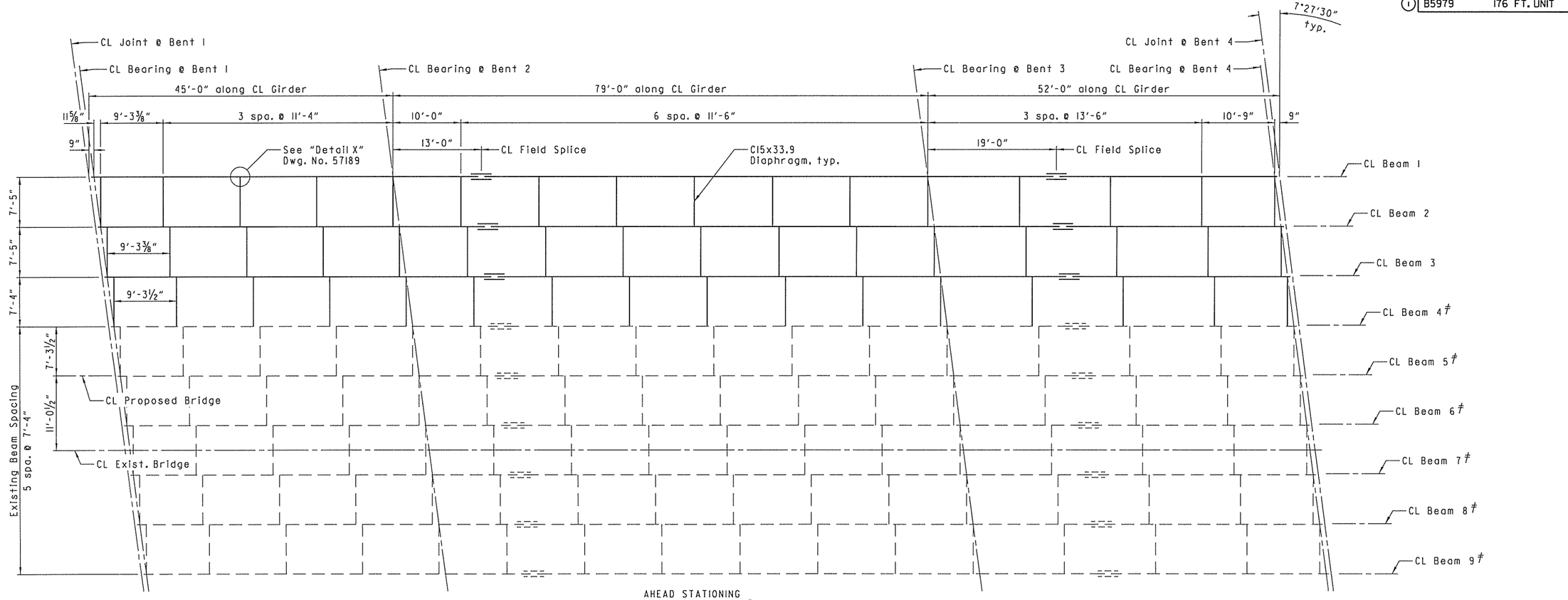

FRAMING PLAN

Scale: 1/8" = 1'-0"

‡ Existing Beams

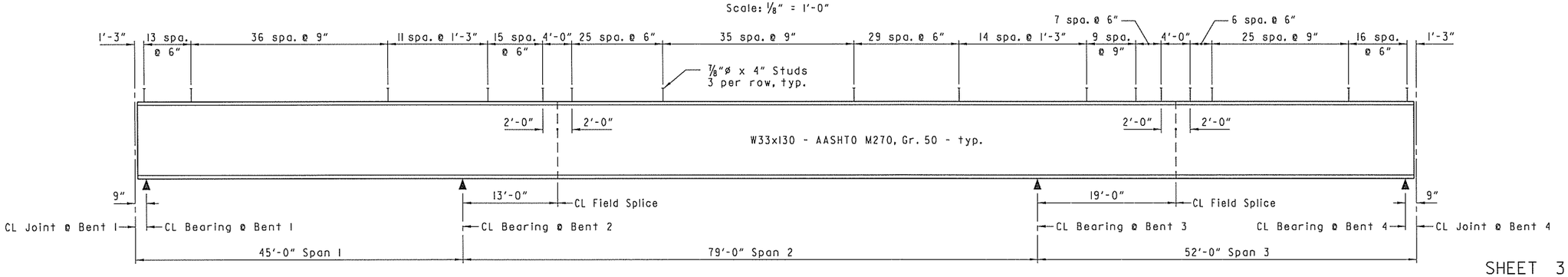

BEAM ELEVATION

No Scale

NOTES:

All structural steel shall be AASHTO M270, Gr. 50 unless noted otherwise.

Bolted Field Splices may be eliminated or shop welded splices may be substituted with the approval of the Engineer. Payment will be made on the basis of plan quantities.

CL Joint and End of Beam are normal to grade.

STATE OF ARKANSAS
REGISTERED PROFESSIONAL ENGINEER
No. 16183
JERRY D. STEVENSON

4.29.2016
BRIDGE ENGINEER

SHEET 3 OF 8
DETAILS OF 176'-0" CONTINUOUS COMPOSITE W-BEAM UNIT - BRIDGE B
BRIDGES OVER HWY. 62/102
ROUTE SEC.
ARKANSAS STATE HIGHWAY COMMISSION
LITTLE ROCK, ARK.

DRAWN BY: TMW DATE: 05/01/15
CHECKED BY: TG DATE: 05/01/15
DESIGNED BY: PMT DATE: 05/01/15
FILENAME: bCA0902bl_s3.dgn
SCALE: AS NOTED

BRIDGE NO. B5979 DRAWING NO. 57190

DATE REVISED	DATE FILMED	DATE REVISED	DATE FILMED	FED. ROAD DIST. NO.	STATE	FED. AID PROJ. NO.	SHEET NO.	TOTAL SHEETS
				6	ARK.			
				JOB NO.		CA0902	319	581
				(1) B5979		176 FT. UNIT		57191

NOTE:

Bolted field splices may be eliminated or shop welded splices may be substituted with the approval of the Engineer. Payment will be made on the basis of plan quantities.

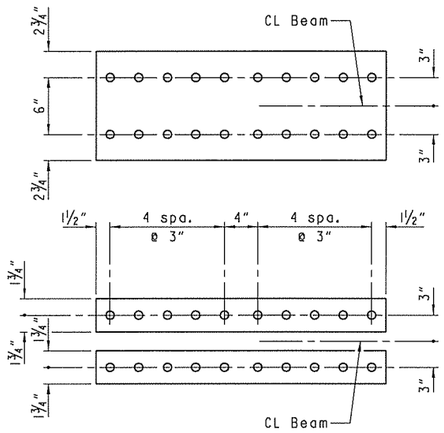

FLANGE SPLICE

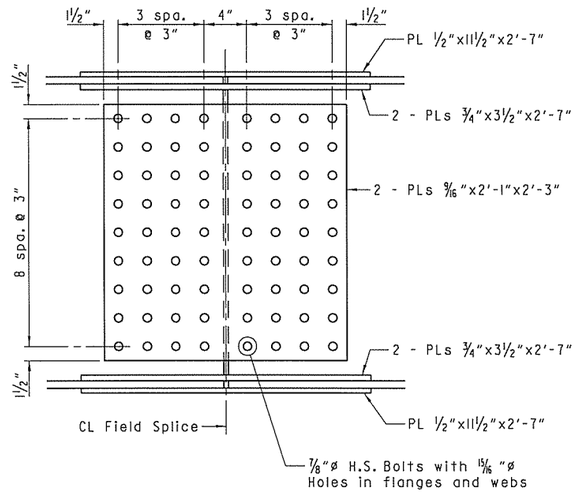

WEB SPLICE

NOTE: All field splice plates shall be AASHTO M270, Gr. 50.

FIELD SPLICE DETAILS

1½" = 1'-0"

TABLE OF DEAD LOAD DEFLECTIONS (INCHES)

	POINT OF DEFLECTION	STRUCTURAL STEEL		STRUCTURAL STEEL + SLAB		STRUCTURAL STEEL + SLAB + PARAPET	
		BMS. 2 & 3	BM. 1	BMS. 2 & 3	BM. 1	BMS. 2 & 3	BM. 1
SPAN 1	0	0	0	0	0	0	0
	0.1	0.002	0.002	0.012	0.012	0.014	0.012
	0.2	0.003	0.003	0.017	0.017	0.020	0.018
	0.3	0.002	0.002	0.013	0.013	0.015	0.014
	0.4	0.000	-0.001	-0.003	-0.003	-0.004	-0.003
	0.5	-0.005	-0.005	-0.027	-0.027	-0.032	-0.028
	0.6	-0.009	-0.010	-0.055	-0.056	-0.065	-0.058
	0.7	-0.013	-0.015	-0.078	-0.080	-0.093	-0.083
	0.8	-0.015	-0.016	-0.086	-0.088	-0.102	-0.092
	0.9	-0.011	-0.012	-0.066	-0.067	-0.078	-0.070
SPAN 2	0	0	0	0	0	0	0
	0.1	0.042	0.046	0.249	0.254	0.295	0.264
	0.2	0.098	0.107	0.576	0.588	0.683	0.612
	0.3	0.149	0.164	0.880	0.898	1.044	0.934
	0.4	0.185	0.203	1.087	1.110	1.290	1.154
	0.5	0.196	0.216	1.157	1.181	1.373	1.228
	0.6	0.183	0.200	1.075	1.097	1.275	1.141
	0.7	0.146	0.160	0.858	0.876	1.018	0.911
	0.8	0.094	0.103	0.552	0.563	0.655	0.586
	0.9	0.039	0.043	0.231	0.236	0.274	0.245
SPAN 3	0	0	0	0	0	0	0
	0.1	-0.009	-0.010	-0.052	-0.054	-0.062	-0.056
	0.2	-0.007	-0.008	-0.044	-0.045	-0.052	-0.047
	0.3	0.000	0.000	-0.002	-0.003	-0.002	-0.003
	0.4	0.009	0.009	0.050	0.051	0.059	0.053
	0.5	0.016	0.018	0.096	0.098	0.114	0.102
	0.6	0.021	0.023	0.125	0.127	0.148	0.132
	0.7	0.022	0.024	0.128	0.131	0.152	0.136
	0.8	0.018	0.020	0.105	0.107	0.125	0.111
	0.9	0.010	0.011	0.059	0.061	0.070	0.063
	0	0	0	0	0	0	0

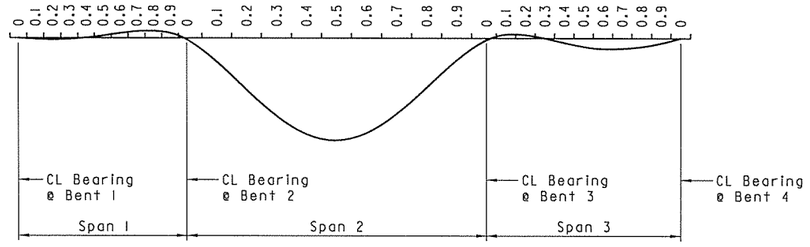

TYPICAL DEAD LOAD DEFLECTIONS DIAGRAM

No Scale

NOTE:

Camber for Dead Load Deflection plus Vertical Curve ±1/4" tolerance. Deflections shown are from a chord from CL Bearing to CL Bearing. Vertical curve corrections not included. Negative sign (-) indicates point above chord.

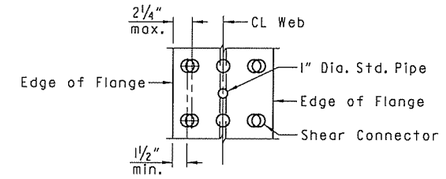

VIEW A-A

No Scale

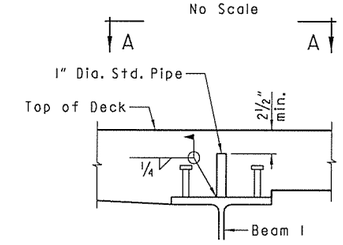

TRANSVERSE SCREED RAIL SUPPORT DETAIL

No Scale

NOTES:

The transverse screed rail supports shall be centered over the beam web and centered longitudinally between adjacent rows of shear connectors.

The pipe shall not interfere with the proper vertical position of the deck reinforcing steel.

The pipe shall be free of dirt, grease, rust, or other foreign substance before the deck is poured.

Care shall be exercised so as air voids do not exist in the pipe after placement of the deck concrete.

All welding shall be performed by a certified welder and in accordance with Subsections 802.13 and 807.26.

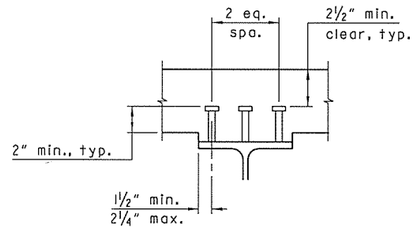

Stud Shear Connectors shown shall be 7/8"ø x 4" long, granular flux filled, solid fluxed or equal, and automatically end welded to the beam flange in accordance with the recommendations of the Manufacturer.

SHEAR CONNECTOR DETAIL

No Scale

STATE OF ARKANSAS
REGISTERED PROFESSIONAL ENGINEER
No. 16183
JERRY D. STEVENSON
4.23.2015
BRIDGE ENGINEER

SHEET 4 OF 8
DETAILS OF 176'-0" CONTINUOUS COMPOSITE W-BEAM UNIT - BRIDGE B
BRIDGES OVER HWY. 62/102
ROUTE SEC.
ARKANSAS STATE HIGHWAY COMMISSION
LITTLE ROCK, ARK.

DRAWN BY: TLW DATE: 05/01/15 FILENAME: bCA0902bl_s4.dgn
CHECKED BY: TG DATE: 05/01/15 SCALE: AS NOTED
DESIGNED BY: PMT DATE: 05/01/15

BRIDGE NO. B5979 DRAWING NO. 57191

DATE REVISED	DATE FILMED	DATE REVISED	DATE FILMED	FED. ROAD DIST. NO.	STATE	FED. AID PROJ. NO.	SHEET NO.	TOTAL SHEETS
				6	ARK.			
				JOB NO.		CA0902	320	581
				(1) B5979		176 FT. UNIT		57192

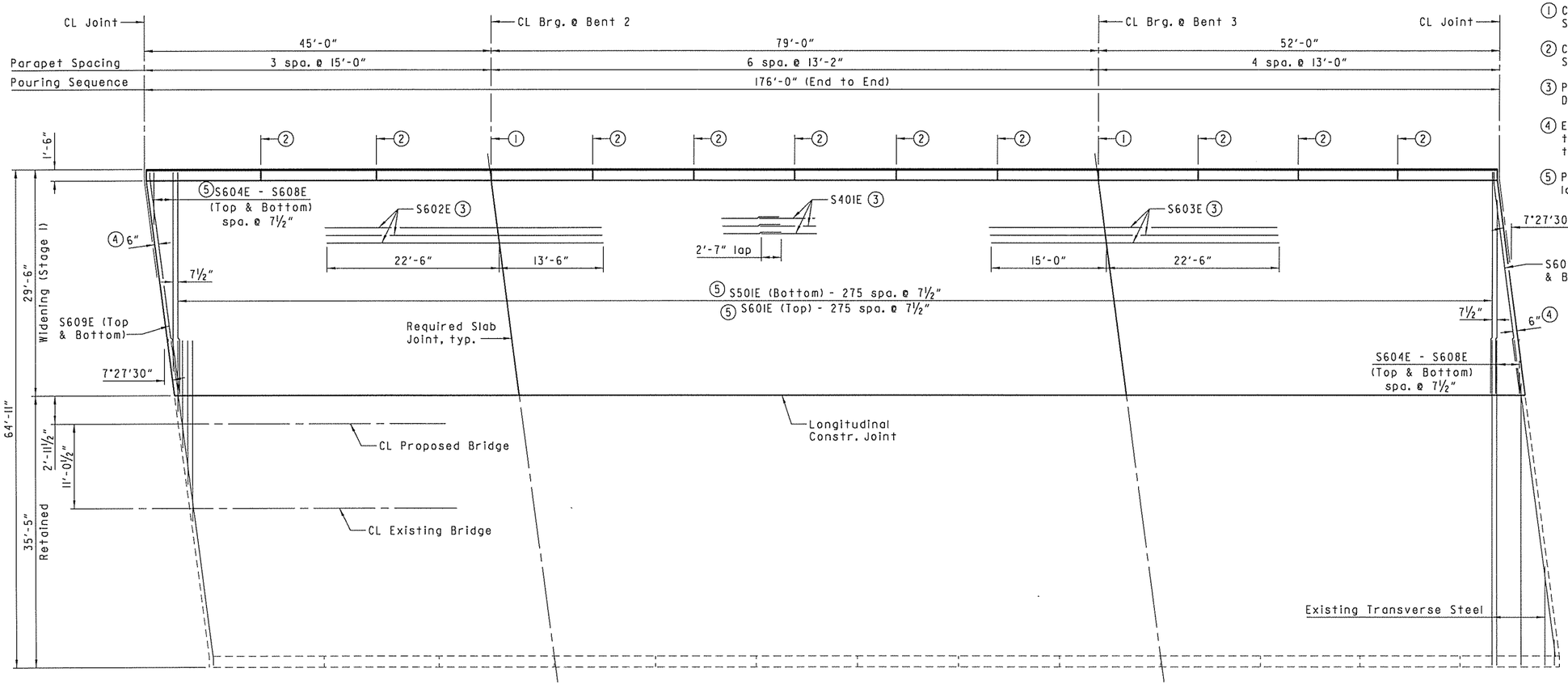

REINFORCING PLAN & DECK POURING SEQUENCE

Scale: ⅛" = 1'-0"

(1) CL Full-Depth Parapet Joint (¼" to 1" Max.). Stop 4" from top of slab, see Dwg. No. 57193.

(2) CL Partial-Depth Parapet Joint (¼" to 1" Max.). Stop 1'-6" from top of slab, see Dwg. No. 57193.

(3) Place as shown in "Typical Roadway Section", Dwg. No. 57188.

(4) Existing reinforcing steel spacing from CL Joint to be verified in the field. S609E shall be lapped to the existing bar along the skew.

(5) Proposed transverse reinforcing steel shall be lapped to existing transverse reinforcing steel.

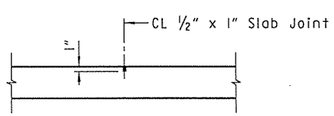

Use Type 3 or 4 Joint Sealer. See Subsections 501.02(h) and 501.05(j). Backer Rod filler will not be required. Joint Sealer shall be measured and paid for as "Class S(AE) Concrete-Bridge". Slab joints shall extend to the outside edge of the deck slab. Slab joints shall be installed before the parapet railing is poured. If slab joints are to be sawed, they shall be sawed as soon as the concrete has sufficiently set to allow sawing of the joint without damage to the slab. Slab joints shall be placed at all required slab joint locations.

SLAB JOINT DETAIL

No Scale

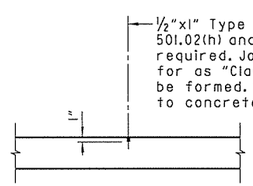

LONGITUDINAL CONSTRUCTION JOINT

No Scale

NOTES:

The pouring sequence of the deck concrete shall be from end to end, beginning at Bent 1, in one continuous pour. The continuous placement of the deck concrete may create uplift at Bent 4 during various stages of the deck pour. The Contractor is responsible for securing the beams to prevent any upward movement at Bent 4 during the deck pour.

72 hours shall elapse between the end of the deck pour and the start of the parapet railing pour. The concrete in a bridge superstructure unit must be consolidated for the entire pour before concrete has taken its initial set. This may require the use of a retarding agent.

The Contractor must obtain approval from the Engineer for any deviations from the pouring sequence shown.

STATE OF ARKANSAS REGISTERED PROFESSIONAL ENGINEER No. 16183 JERRY D. STEVENSON

4.25.2016

BRIDGE ENGINEER

SHEET 5 OF 8

DETAILS OF 176'-0" CONTINUOUS COMPOSITE W-BEAM UNIT - BRIDGE B

BRIDGES OVER HWY. 62/102

ROUTE SEC.

ARKANSAS STATE HIGHWAY COMMISSION

LITTLE ROCK, ARK.

DRAWN BY: TLW DATE: 05/01/15 FILENAME: bCA0902bl_s5.dgn

CHECKED BY: JDS DATE: 05/01/15 SCALE: AS NOTED

DESIGNED BY: TG DATE: 05/01/15

BRIDGE NO. B5979 DRAWING NO. 57192

DATE REVISED	DATE FILMED	DATE REVISED	DATE FILMED	FED. ROAD DIST. NO.	STATE	FED. AID PROJ. NO.	SHEET NO.	TOTAL SHEETS
				6	ARK.			
				JOB NO.		CA0902	321	581
				(1) B5979		176 FT. UNIT		57193

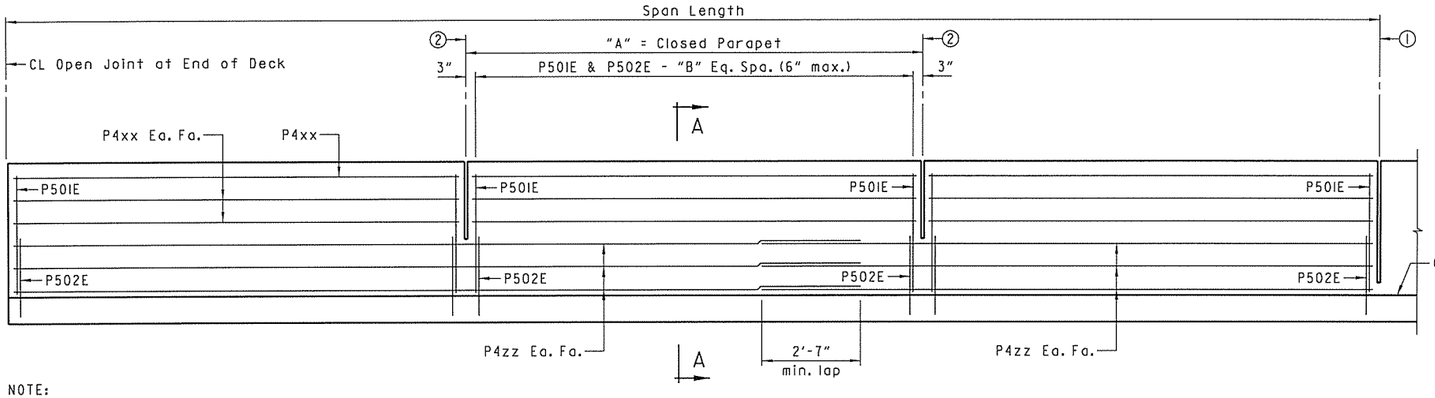

NOTE:

For location of full and partial depth joints, see "Reinforcing Plan and Deck Pouring Sequence", Dwg. No. 57192.

ELEVATION - CONCRETE PARAPET RAIL

Scale: ½" = 1'-0"

① CL Full-Depth Parapet Joint (¼" to 1" max.). Stop 4" from top of Slab.

② CL Partial-Depth Parapet Joint (¼" to 1" max.). Stop 1'-6" from top of Slab.

TABLE OF VARIABLES

"A"	"B"	P4xx BAR	P4zz BAR
13'-0"	25	P405E	P406E
13'-2"	26	P403E	P404E
15'-0"	29	P401E	P402E

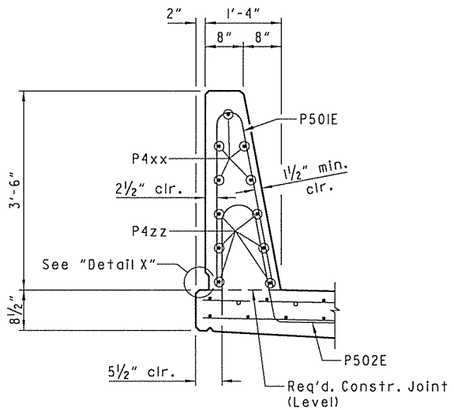

SECTION A-A

Scale: ¾" = 1'-0"

BAR LIST

MARK	NO. REQ'D.	LENGTH	PIN. DIA.
P401E	15	14'-8"	str.
P402E	12	23'-8"	str.
P403E	30	12'-10"	str.
P404E	18	28'-0"	str.
P405E	20	12'-8"	str.
P406E	12	27'-2"	str.
P501E	356	6'-8"	3¾"
P502E	356	5'-4"	6"
S401E	390	37'-3"	str.
S501E	276	29'-3"	str.
S601E	276	29'-3"	str.
S602E	29	36'-0"	str.
S603E	29	37'-6"	str.
S604-S608E	4 Each	5'-4" to 24'-4"	str.
S609E	4	29'-4"	3¾"

BENDING DIAGRAM

Dimensions are out to out of bars.

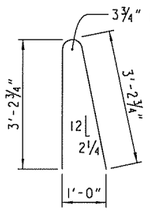

P501E

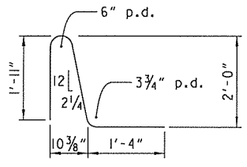

P502E

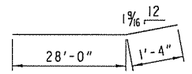

S609E

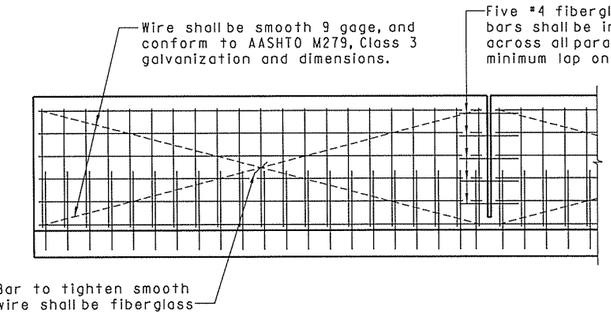

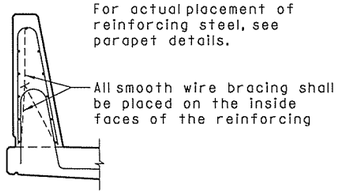

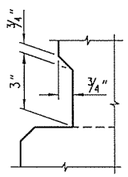

DETAIL X

No Scale

All panels shall be braced as required to prevent racking. All parapet joints shall be sawed as soon as practical to a minimum width of ¼". To control cracking before sawing, all joints must be grooved before the concrete is set. Sawing of the joints must be controlled so it will follow the grooved joint.

The extruded parapet shall conform to the horizontal and vertical lines shown on the plans or as directed by the Engineer and shall present a smooth, uniform appearance and texture. Exposed surfaces may be given a light brush finish or a Class 3 Textured Coating Finish in place of the Class 2 Rubbed Finish.

DETAILS OF OPTIONAL SLIP FORMING OF CONCRETE PARAPET RAIL

Scale: ½" = 1'-0"

STATE OF ARKANSAS
JERRY B. STEVENSON
REGISTERED PROFESSIONAL ENGINEER
No. 16183
4.23.2016
BRIDGE ENGINEER

SHEET 6 OF 8
DETAILS OF 176'-0" CONTINUOUS COMPOSITE W-BEAM UNIT - BRIDGE B
BRIDGES OVER HWY. 62/102

ROUTE SEC.

ARKANSAS STATE HIGHWAY COMMISSION

LITTLE ROCK, ARK.

DRAWN BY: TLW DATE: 05/01/15 FILENAME: bCA0902bl_s6.dgn
CHECKED BY: JDS DATE: 05/01/15 SCALE: AS NOTED
DESIGNED BY: TG DATE: 05/01/15

BRIDGE NO. B5979 DRAWING NO. 57193

DATE REVISED	DATE FILMED	DATE REVISED	DATE FILMED	FED. ROAD DIST. NO.	STATE	FED. AID PROJ. NO.	SHEET NO.	TOTAL SHEETS
				6	ARK.			
				JOB NO.		CA0902	322	581
				(1) B5979		176 FT. UNIT		57194

GENERAL NOTES - SUPERSTRUCTURE

CONSTRUCTION SPECIFICATIONS: Arkansas State Highway and Transportation Department Standard Specifications for Highway Construction, 2014 edition, with applicable Supplemental Specifications and Special Provisions.

DESIGN SPECIFICATION: AASHTO Standard Specifications (17th Edition, 2002) with current interim specifications.

MATERIAL AND STRENGTHS:

Class S(AE) Concrete	f'c= 4,000 psi
Reinforcing Steel (Grade 60, AASHTO M31 or M322, Type A)	fy = 60,000 psi
Structural Steel (AASHTO M 270, Gr. 50)	Fy = 50,000 psi
Structural Steel (AASHTO M 270, Gr. 36)	Fy = 36,000 psi

CONCRETE:
Concrete shall be poured in the dry and all exposed corners to be chamfered ¾" unless otherwise noted. All concrete shall be Class S(AE) with a minimum 28 day compressive strength f'c = 4,000 psi. The superstructure details shown are for use when removable deck forming is used and are the basis for measurement of Class S(AE) Concrete. See Standard Drawing No. 55005 for allowable modifications and for tolerances when Permanent Steel Deck Forms are used.

Concrete in bridge superstructure shall be placed, consolidated and screeded off for the entire pour before any concrete has taken its initial set. This may require the use of a retarding agent. The Contractor must obtain approval from the Engineer for any deviations from the pouring sequence shown.

The concrete deck shall be given a tine finish in accordance with Subsection 802.19 for Class 5 Tined Bridge Roadway Surface Finish. Movement of the finishing machine across new concrete shall be on planks placed on the surface and shall be prohibited for 72 hours after finishing the pour. Sufficient concrete must be placed ahead of the strike-off to fully load the beam. A mininum of 72 hours shall elapse between completion of the slab pour and the start of the parapet railing pour.

Use of longitudinal screed is prohibited.

Slab joints shall align with slab joints from existing construction. Required Slab Joints shall align with the parapet open joint.

REINFORCING STEEL:
All reinforcing steel shall be Grade 60 (Yield Strength = 60,000 psi) conforming to AASHTO M31 or M322, Type A, with mill test reports and shall be epoxy coated. The reinforcing steel is to be accurately located in the forms and firmly held in place by steel wire supports, sufficient in number and size to prevent displacement during the course of construction. The wire supports will not be paid for directly, but will be considered subsidiary to the item "Epoxy Coated Reinforcing Steel (Grade 60)".

NEW STRUCTURAL STEEL:
All new structural steel shall be AASHTO M 270, Grade 50 unless otherwise noted and shall be paid for as "Structural Steel in Beam Spans (M 270, Gr. 50)". All exposed surfaces shall be cleaned in accordance with Subsection 807.84 unless otherwise noted. Structural steel completely embedded in concrete may be AASHTO M 270, Gr. 36 or Gr. 50, unless otherwise noted.

Drawings show general features of design only. Shop drawings shall be made in accordance with Subsection 807.04, submitted and approval secured before fabrication is begun.

Requests for substitution of structural steel shapes shown with shapes of greater size must be submitted by The Contractor to the Engineer for approval. Steels of equal or greater strengths will be accepted only when shown on the approved shop drawings. Payment will be based on the basis of shapes and materials shown in the plans, and no additional compensation will be made for any adjustments due to substitutions.

Bolted field splices shown may be eliminated or shop welded splices may be substituted with approval of the Engineer. Payment will be made on the basis of plan quantities.

Beams and field splice plates are considered main load carrying members and shall meet the Longitudinal Charpy V-Notch Test specified in Subsection 807.05. This work and material will not be paid for directly, but shall be considered subsidiary to the item "Structural Steel in Beam Spans (M 270, Gr. 50)".

All beams shall be blocked in their true position in the shop with the webs horizontal in groups as specified in Subsection 807.54(b)(2). The camber, length of sections, distance between bearings and openings of joints shall be measured with the beams in their true position and this information shall become part of the permanent records for this job. The component parts shall be match marked in this assembly and these marks shall be shown on the erection diagram. All beam dimensions are based on a temperature of 60 degrees F. A tolerance of ¼"+/- is allowed for camber.

Flange field splice plates shall be cut and fabricated so that the primary direction of rolling is parallel to the direction of the main tensile and/or compressive stresses.

All welding that is to be done during fabrication of structural steel, including temporary welds, shall be detailed on the shop drawings and submitted for approval. If additional welds are required, whether permanent or temporary, a formal request with detailed drawings shall be submitted to the Engineer for approval; however, additional welds used for attaching falsework support devices or screed rail supports to the structural steel that do not exceed the limitations of Subsection 802.13 will not require approval prior to construction. Field welding of new diaphragm connection plates to the existing beams shall be as shown in the plans. All welding shall conform to Subsection 807.26.

GENERAL NOTES - SUPERSTRUCTURE (CONT.)

Field connections shall be bolted with high-strength bolts and shall be ¾"ø bolts unless otherwise noted. Holes for ¾"ø bolts shall be 13/16 "ø unless otherwise noted. Bolts shall be placed with heads on the outside face of the exterior beam webs and on the bottom of the beam flanges.

Unless otherwise noted, steel diaphragms shall be installed as beams are erected. All bolts in diaphragms and field splices shall be installed and tightened in accordance with Subsection 807.71 prior to pouring the concrete deck.

All stud shear connectors shall be granular flux filled, solid fluxed, or equal and shall be automatically end welded in accordance with the recommendations of the Manufacturer.

Bearings shall be seated in accordance with Subsection 808.08. This work and material are to be considered as subsidiary to the item "Structural Steel in Beam Spans (M 270, Gr. 50)" and will not be paid for directly.

PAINTING STRUCTURAL STEEL:
Unless noted otherwise, all new structural steel except galvanized steel and steel which is completely encased in concrete shall be painted in accordance with Subsection 807.75. The color of paint shall match the color of existing structural steel.

The roadway channels and end bent armor (both new and existing) shall be cleaned and painted in accordance with Section 638. This work shall not be paid for separately but shall be considered included in the contract unit price for the various items of the Contract,

The existing paint system used on the existing beams may consist of a lead based paint system. The Contractor shall take all necessary steps to protect the workers modifying the existing beams.

The area of the existing beams where new diaphragm connection plates will be field welded shall be cleaned and painted in accordance with Section 638.

The elastomeric bearing pads shall be protected against overspray.

REMOVAL OF EXISTING DECK:
Care shall be exercised during the removal of the existing deck to ensure that the existing paint system and the existing structural steel, including shear connectors, are not damaged. Damaged items that are not salvageable, as determined by the Engineer, shall be replaced at the Contractor's expense.

The deck removal shall progress in a manner that will ensure the stability of the existing structure.

The existing concrete deck shall be completely removed to the top flange of the existing beams. The portions of the top flange that will be embedded in the new concrete shall be cleaned and free of laitance and protected until the new deck is placed. This work will not be paid for directly but will be considered subsidiary to the item "Modification of Existing Bridge Structure (Br. B5979)".

METHOD OF WORK:
The Contractor shall remove portions of the existing deck as shown in "Details of Stage Construction" Dwg. No. 57157. During deck removal, the Contractor shall loosen the diaphragm and end strut bolts adjacent to Beam Nos. 4 & 5, as shown in the plans, to facilitate construction. This work will not be paid for directly but will be considered subsidiary to the item "Modification of Existing Bridge Structure (Br. No. B5979)".

All appilicable provisions of Section 807, as determined by the Engineer, shall be followed, See Special Provision Job No. CA0902 "Special Safety Requirements for Bridges" for additional information.

The Contractor may submit an alternate Method of Work. The plan shall be submitted to the Engineer for information and record keeping purposed at least three weeks prior to any work being performed. The submittal shall be prepared and/or approved by an Arkansas Professional Engineer and shall include sufficient details and information to the Engineer's satisfaction. The Contractor shall be responsible for the results obtained by the use the alternate Method of Work. All work, materials, and labor required for the Contractor to develop and execute the plan will not be paid directly but will be considered subsidiary to the item "Modification of Existing Bridge Structure (Br. No. B5979)".

STATE OF ARKANSAS
REGISTERED PROFESSIONAL ENGINEER
No. 16183
JERRY D. STEVENSON
4.25.2016
BRIDGE ENGINEER

SHEET 7 OF 8
DETAILS OF 176'-0" CONTINUOUS COMPOSITE W-BEAM UNIT - BRIDGE B
BRIDGES OVER HWY. 62/102
ROUTE SEC.
ARKANSAS STATE HIGHWAY COMMISSION
LITTLE ROCK, ARK.

DRAWN BY: TLW DATE: 05/01/15 FILENAME: bCA0902bl_s7.dgn
CHECKED BY: JDS DATE: 05/01/15 SCALE: NONE
DESIGNED BY: TG DATE: 05/01/15

BRIDGE NO. B5979 DRAWING NO. 57194

DATE REVISED	DATE FILMED	DATE REVISED	DATE FILMED	FED. ROAD DIST. NO.	STATE	FED. AID PROJ. NO.	SHEET NO.	TOTAL SHEETS
				6	ARK.			
				JOB NO.		CA0902	323	581
				① B5979		176 FT. UNIT		57195

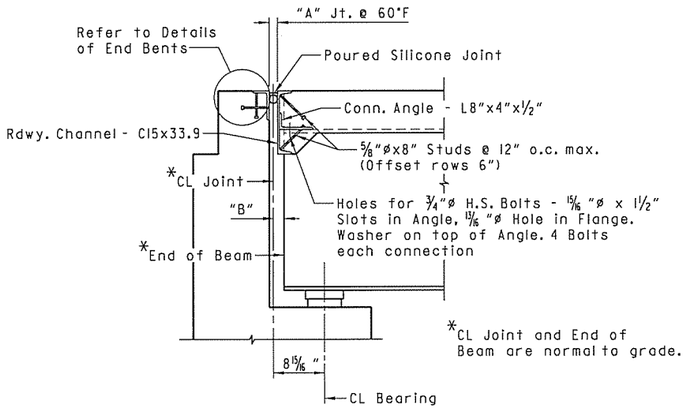

JOINT AT END BENTS

Perpendicular to CL Joint

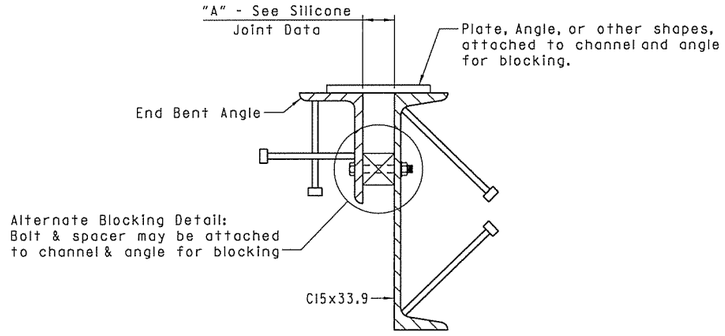

NOTE: Each expansion joint device shall be blocked in the Shop by the Fabricator to the dimension "A" shown @ 60°F, and the blocking details shall be shown on the Shop Drawings. Blocking shall be placed within 2 feet of each end of the device and with a maximum spacing of 8 feet.

DETAILS FOR BLOCKING EXPANSION JOINT DEVICE

SILICONE JOINT DATA

BENT NUMBER	"A" WIDTH PERPENDICULAR TO JOINT AT 24 HOUR AVERAGE TEMPERATURE ① OF:			"B" PERPENDICULAR TO JOINT AT 60°F	BUMPER BAR SIZE	"D"
	40°F	60°F	80°F			
1	2 7/16"	2 1/4"	2 1/16"	± 2 3/8"	1"x1 1/8"	4"
4	1 3/16"	1 1/8"	1 1/16"	± 1 7/8"	1"x5/8"	3"

① The temperature used to set the joint opening shall be the approximate average air temperature during the 24 hour period immediately before the bolts are tightened. The Engineer shall establish the temperature. Interpolation of the table may be necessary.

Notes: The temperature limitations recommended by the sealant manufacturer shall be observed.

The sealant shall be installed only when the average 24 hour air temperature is between 40° and 80°F.

② BACKER ROD NOTE:

Use an appropriately sized backer rod at the depth shown in the manufacturer's literature based on the joint width at the time of sealing.

Except as noted, do not install more backer rod than that which can be sealed in the same day.

The Contractor shall verify separation of the backer rod from the joint material after the joint material has set.

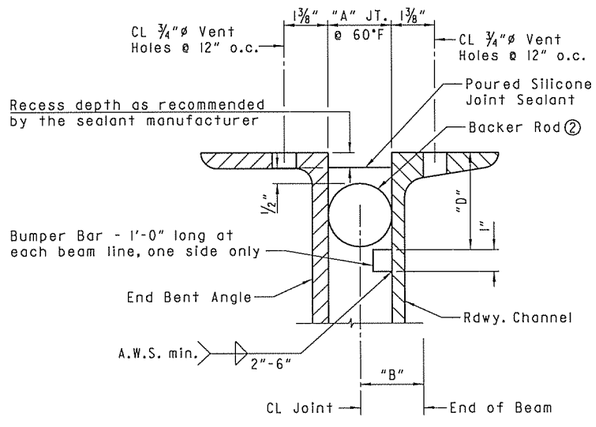

DETAIL OF POURED SILICONE JOINT SEAL

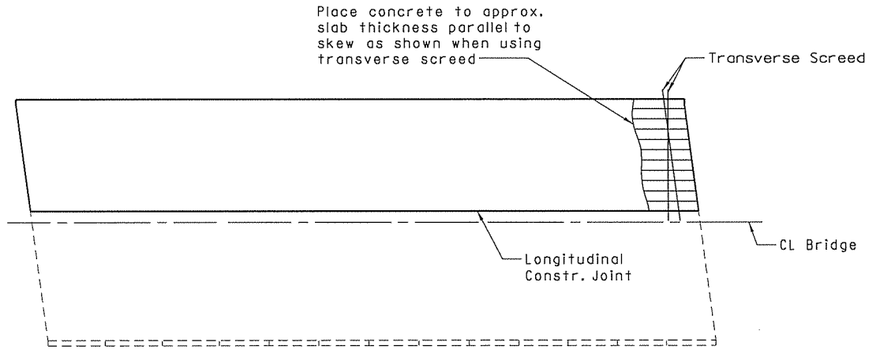

Note: At the Contractor's option, the transverse screed may be placed parallel to the skew or perpendicular to CL Bridge.

CONCRETE PLACEMENT PROCEDURE

No Scale

EXPANSION DEVICE INSTALLATION AT END BENTS

The Contractor may elect to install the expansion device for the end bents using one of the following two alternatives:

1. The concrete span pour adjacent to joint shall be placed before the end bent backwall is placed. After the end bent backwall forms are in place and the beams erected, the blocked expansion device shall be installed and adjusted for grade. All connection bolts shall be fully tightened prior to placing the deck concrete adjacent to the bent. Immediately prior to pouring the backwall concrete, the blocking shall be removed, the opening adjusted for temperature, and the backwall constructed.

2. The backwall shall be poured to the optional construction joint after beams are erected. The blocked expansion device shall be installed and adjusted for grade. All connection bolts shall be fully tightened prior to placing the deck concrete adjacent to the bent. Immediately prior to pouring the remainder of the backwall concrete, the blocking shall be removed and the opening adjusted for temperature. Backfill shall not be placed behind the backwall until the deck concrete on the adjacent span has been placed.

STATE OF ARKANSAS
REGISTERED PROFESSIONAL ENGINEER
No. 16183
JERRY D. STEVENSON
4.25.2016
BRIDGE ENGINEER

SHEET 8 OF 8
DETAILS OF 176'-0" CONTINUOUS COMPOSITE W-BEAM UNIT - BRIDGE B
BRIDGES OVER HWY. 62/102

ROUTE SEC.

ARKANSAS STATE HIGHWAY COMMISSION

LITTLE ROCK, ARK.

DRAWN BY: TLW DATE: 05/01/15 FILENAME: bCA0902bl_s8.dgn
CHECKED BY: JDS DATE: 05/01/15 SCALE: NO SCALE
DESIGNED BY: PMT DATE: 05/01/15

BRIDGE NO. B5979 DRAWING NO. 57195

DATE REVISED	DATE FILMED	DATE REVISED	DATE FILMED	FED. ROAD DIST. NO.	STATE	FED. AID PROJ. NO.	SHEET NO.	TOTAL SHEETS
				6	ARK.			
				JOB NO.		CA0902	324	581
				(1) B5979		ELASTO. BRGS.		57196

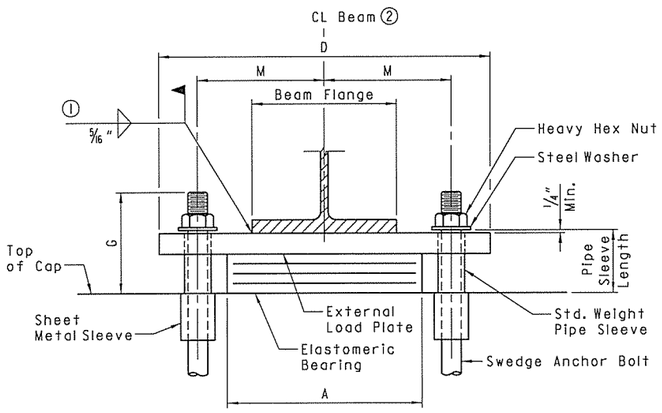

FRONT VIEW
BENT NOS. 2 & 3

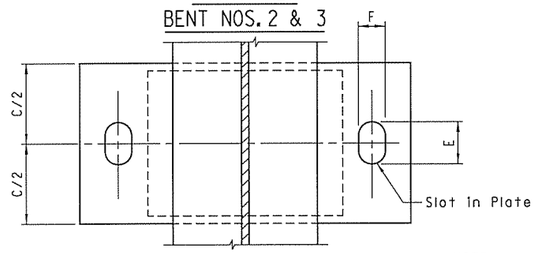

PLAN VIEW
BENT NOS. 2 & 3

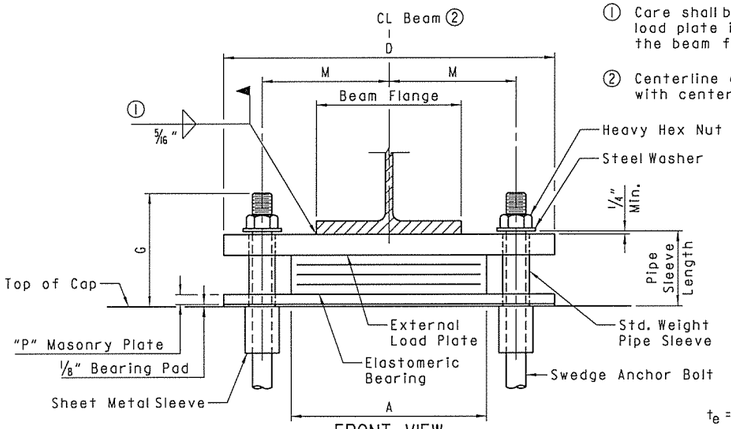

FRONT VIEW
BENT NOS. 1 & 4

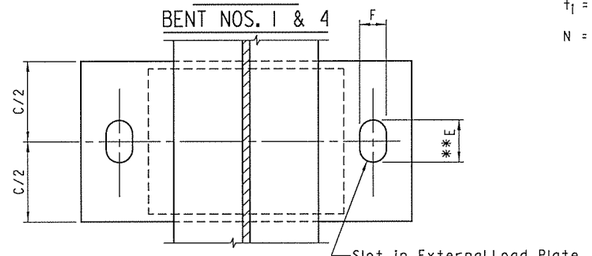

PLAN VIEW
BENT NOS. 1 & 4

NOTE:

The direction of bevel of the external load plate may not be accurately depicted with respect to T_a and T_b values shown in "Table of Fabricator Variables".

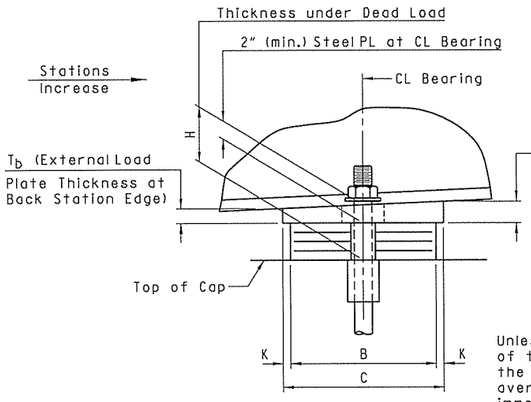

SIDE VIEW
BENT NOS. 2 & 3

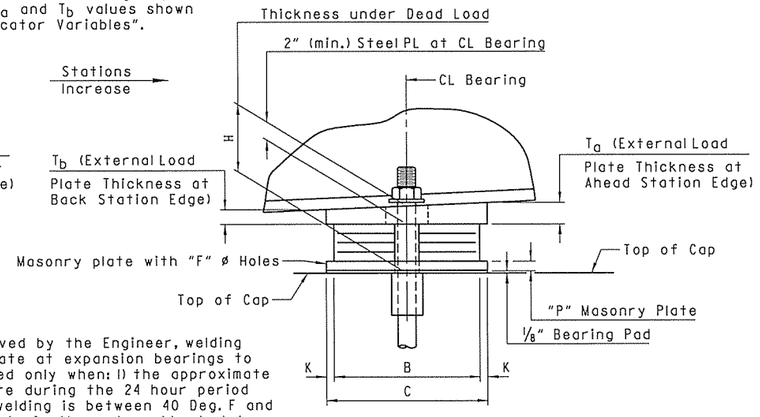

SIDE VIEW
BENT NOS. 1 & 4

Unless otherwise approved by the Engineer, welding of the external load plate at expansion bearings to the girder will be allowed only when: 1) the approximate average air temperature during the 24 hour period immediately preceding welding is between 40 Deg. F and 80 Deg. F; and 2) the slots in the external load plate are positioned to center on the anchor bolts; and 3) no horizontal deformation of the elastomeric pad is evident. If welding at other temperatures is required, the Engineer will provide adjustment data.

① Care shall be taken to ensure that the external load plate is in full complete contact with the beam flange before welding begins.

② Centerline of the elastomeric pad shall be aligned with centerline of the beam.

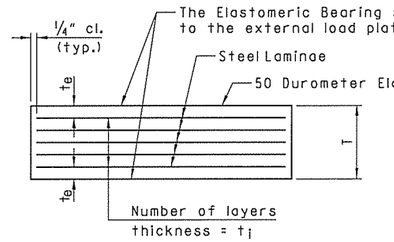

ELASTOMERIC BEARING

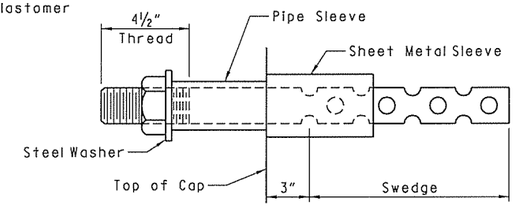

ANCHOR BOLT DETAIL

t_e = thickness of elastomer cover on top and bottom of pad

t_i = thickness of elastomer between steel laminae

N = number of elastomer layers of thickness t_i

NOTES:

Anchor bolts may be cast in place or drilled and grouted into place. If anchor bolts are to be cast in place, the galvanized sheet metal sleeves will not be required.

If anchor bolts are to be drilled and grouted in place, the galvanized sheet metal sleeves shall be cast in place as shown. Sleeves shall be dry packed with styrofoam, urethane foam or approved equal prior to pouring of concrete. After pouring of the cap and prior to erection of structural steel, the dry pack shall be removed and holes for the anchor bolts shall be accurately drilled into masonry. Bolts placed in drilled holes shall be accurately set and fixed using a QPL approved epoxy or non-shrink grout that completely fills the holes. Galvanized sheet metal sleeve will not be paid for directly, but will be considered subsidiary to the item "Structural Steel in Beam Spans (M 270, Gr. 50)".

GENERAL NOTES

Elastomeric Bearings shall conform to Section 808 of the Standard Specifications and shall be paid for at the unit price bid for "Elastomeric Bearings".

External load plates and masonry plates shall conform to AASHTO M 270, Grade 50. Pipe sleeves shall be ASTM A500, Grade B, and shall be galvanized to conform to AASHTO M 232, Class C or AASHTO M 298, Class 50.

External load plates and masonry plates shall be completely fabricated (including bevel and bolt holes) and shall be cleaned before vulcanizing to the elastomeric bearing. Surfaces in contact with the elastomeric bearing shall be cleaned in accordance with subsection 808.03. Other surfaces shall be blast cleaned in accordance with subsection 807.84(b) for painted steel and painted in accordance with subsection 807.75. The color of the paint shall be Green and shall match existing. Painting will not be paid for directly, but shall be considered subsidiary to "Elastomeric Bearings".

Anchor Bolts, Washers and Nuts shall conform to subsection 807.07 of the Standard Specifications. The anchor bolt grade of steel shall be as specified in the "Table of Fabricator Variables". Indentations shall be circular with rounded bottoms and staggered as shown in details.

Pipe Sleeves, Anchor Bolts, Washers and Nuts shall be paid for at the unit price bid for "Structural Steel in Beam Spans (M 270, Gr. 50)". External load plates, masonry plates and 1/8" bearing pads will not be measured or paid for separately but will be considered included in the unit bid price for "Elastomeric Bearings".

Bearings with masonry plates shall be seated in accordance with subsection 807.66. Bearings without masonry plates shall be seated in accordance with subsection 808.08. This work and materials are considered as subsidiary to the item "Elastomeric Bearings" and will not be paid for directly.

TABLE OF FABRICATOR VARIABLES

BRIDGE NO.	LOCATION		BEARING TYPE	NO. OF BEARINGS EACH BENT	*MAXIMUM DESIGN LOAD (KIPS)	ELASTOMERIC PAD								EXTERNAL LOAD PLATE									ANCHOR BOLT				
	BENT NO(S).	BEAM NO.				G	H	A	B	N	t_i	t_e	NO. & THICKNESS OF STEEL LAMINAE	T	C	D	**E	F	K	M	P	T_a	T_b	ANCHOR BOLT (Dia. x L)	GRADE	PIPE SLEEVE SIZE (Dia. x L)	SHEET METAL SLEEVE SIZE (Dia. x L)	STEEL WASHER SIZE (O.D.)
B5979	1	1-3	Exp.	3	58	8 5/8"	6 1/8"	14"	9"	4	1/2"	1/4"	5 @ 12 Gauge	3"	10"	23"	4"	2"	1/2"	9"	1"	2.11"	1.89"	1 1/4"x24"	55	1 1/4"x6 3/8"	3"x12"	2 1/2"
	2	1-3	Exp.	3	146	8 5/8"	5 5/8"	14"	12"	5	1/2"	1/4"	6 @ 12 Gauge	3 5/8"	13"	25"	4 1/8"	2 5/8"	1/2"	9 1/2"	-	2.14"	1.86"	1 3/4"x30"	55	2"x5 7/8"	4"x12"	3 3/8"
	3	1-3	Fix	3	151	9 1/8"	5 5/8"	14"	12"	5	1/2"	1/4"	6 @ 12 Gauge	3 5/8"	13"	26"	3 1/8"	3 1/8"	1/2"	9 3/4"	-	2.13"	1.87"	2 1/4"x36"	55	2 1/2"x5 7/8"	4"x12"	4"
	4	1-3	Exp.	3	64	8 5/8"	6 1/8"	14"	9"	4	1/2"	1/4"	5 @ 12 Gauge	3"	10"	23"	4"	2"	1/2"	9"	1"	2.10"	1.90"	1 1/4"x24"	55	1 1/4"x6 3/8"	3"x12"	2 1/2"

*Maximum Design Load = Service Load

**The dimension "E" does not apply to masonry plates - see "PLAN VIEW"

STATE OF ARKANSAS
REGISTERED PROFESSIONAL ENGINEER
No. 16183
JERRY D. STEVENSON
4-29-2016
BRIDGE ENGINEER

DETAILS OF ELASTOMERIC BEARINGS - BRIDGE B
BRIDGES OVER HWY. 62/102

ROUTE SEC.

ARKANSAS STATE HIGHWAY COMMISSION

LITTLE ROCK, ARK.

DRAWN BY: TLW DATE: 05/01/15 FILENAME: bCA0902bl_el.dgn

CHECKED BY: TG DATE: 05/01/15 SCALE: NO SCALE

DESIGNED BY: PMT DATE: 05/01/15

BRIDGE NO. B5979 DRAWING NO. 57196

DATE REVISED	DATE FILMED	DATE REVISED	DATE FILMED	FED. ROAD DIST. NO.	STATE	FED. AID PROJ. NO.	SHEET NO.	TOTAL SHEETS
				6	ARK.			
				JOB NO.		CA0902	325	581
				(1) A5979		APPR. SLAB		57197

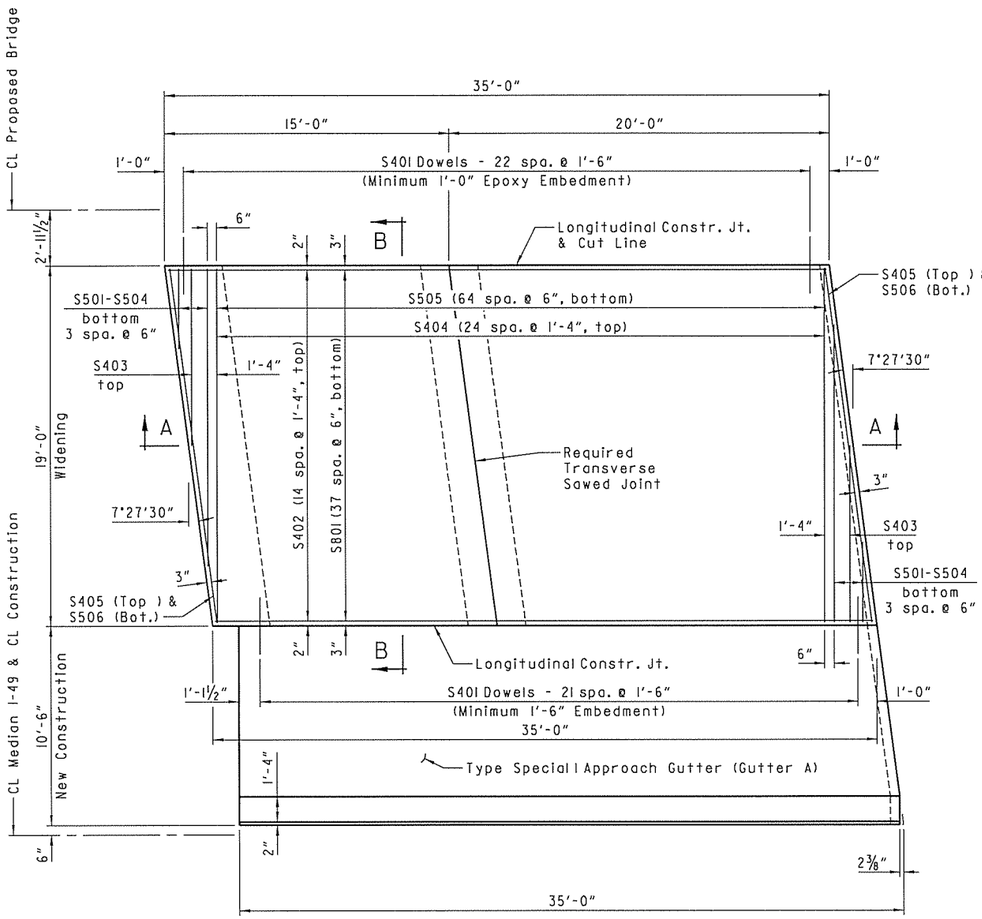

PLAN - APPROACH SLAB
(BEGIN BRIDGE A)

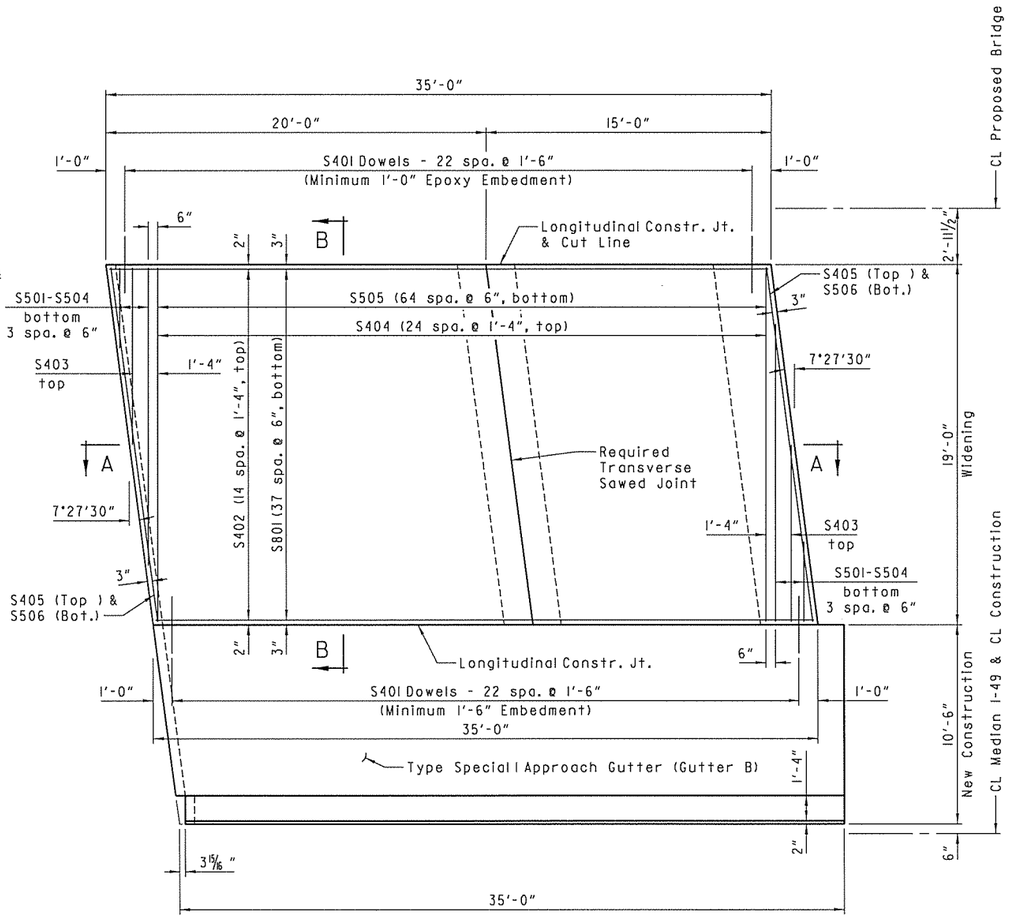

PLAN - APPROACH SLAB
(END BRIDGE A)

NOTES:

Surface finish for approach slab shall match that used on bridge deck.

For General Notes, Sections, Bar List, and additional details, see Dwg. No. 57199.

For details of Type Special I Approach Gutters, see Dwg. No. 57200.

STATE OF ARKANSAS
REGISTERED PROFESSIONAL ENGINEER
No. 16183
JERRY D. STEVENSON
4.23.2015
BRIDGE ENGINEER

SHEET 1 OF 3

DETAILS OF TYPE SPECIAL I APPROACH SLABS BRIDGES OVER HWY. 62/102

ROUTE SEC.

ARKANSAS STATE HIGHWAY COMMISSION

LITTLE ROCK, ARK.

DRAWN BY: TWM DATE: 05/01/15 FILENAME: bCA0902x1_asl.dgn
CHECKED BY: JDS DATE: 05/01/15 SCALE: 1/4" = 1'-0"
DESIGNED BY: PMT DATE: 05/01/15

BRIDGE NO. A5979 DRAWING NO. 57197

DATE REVISED	DATE FILMED	DATE REVISED	DATE FILMED	FED. ROAD DIST. NO.	STATE	FED. AID PROJ. NO.	SHEET NO.	TOTAL SHEETS
				6	ARK.			
				JOB NO.		CA0902	326	581
				(1) B5979		APPR. SLAB		57198

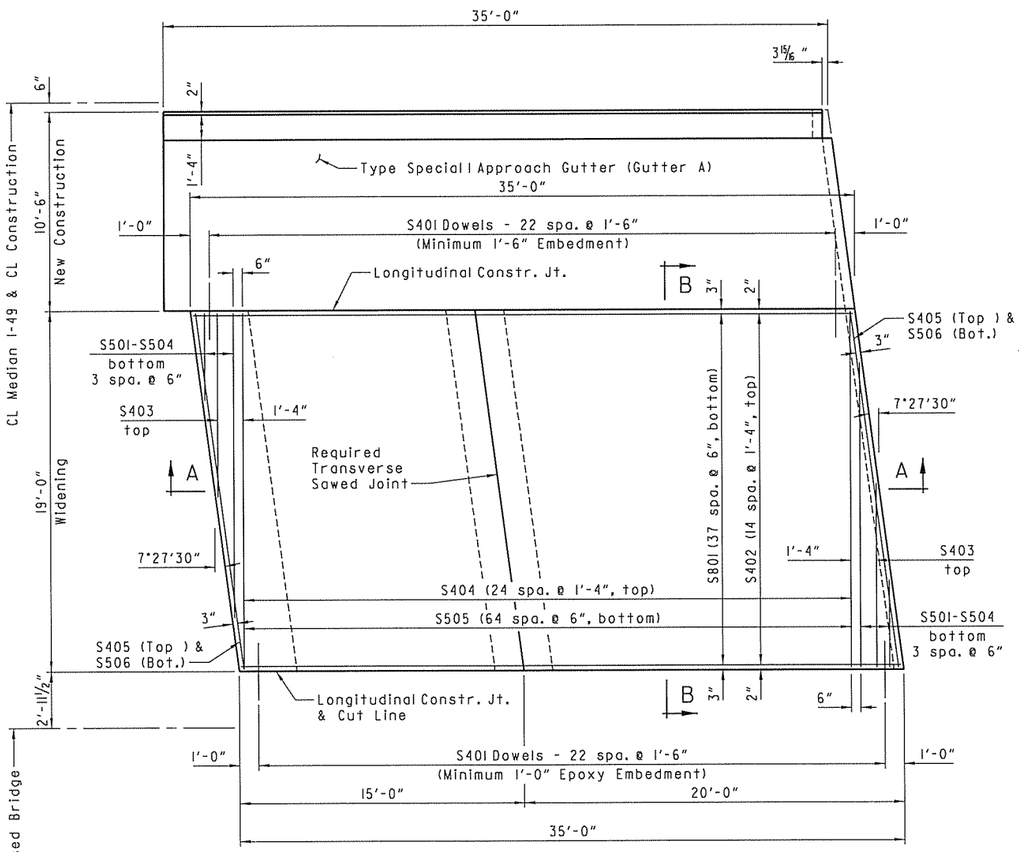

PLAN - APPROACH SLAB
(BEGIN BRIDGE B)

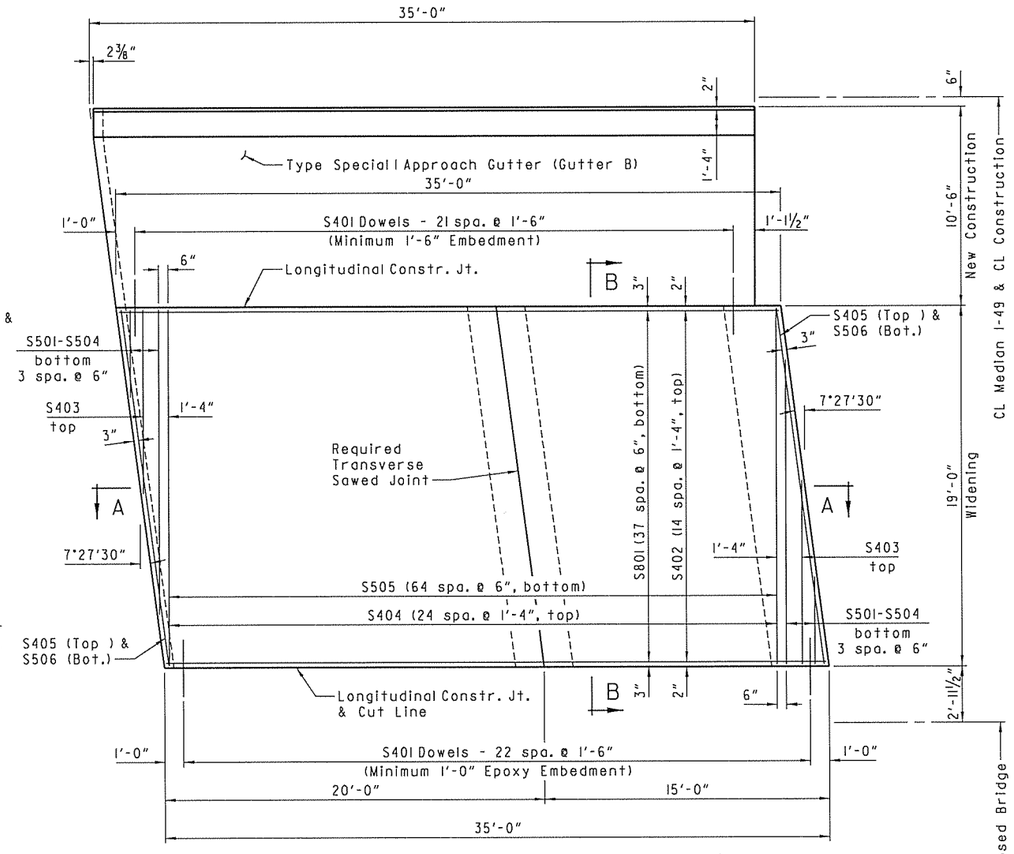

PLAN - APPROACH SLAB
(END BRIDGE B)

NOTES:

Surface finish for approach slab shall match that used on bridge deck.

For General Notes, Sections, Bar List, and additional details, see Dwg. No. 57199.

For details of Type Special I Approach Gutters, see Dwg. No. 57201.

STATE OF ARKANSAS
REGISTERED PROFESSIONAL ENGINEER
No. 16183
JERRY D. STEVENSON
4.28.2016
BRIDGE ENGINEER

SHEET 2 OF 3
DETAILS OF TYPE SPECIAL I APPROACH SLABS
BRIDGES OVER HWY. 62/102
ROUTE SEC.
ARKANSAS STATE HIGHWAY COMMISSION
LITTLE ROCK, ARK.

DRAWN BY: TWM DATE: 05/01/15
CHECKED BY: JDS DATE: 05/01/15
DESIGNED BY: PMT DATE: 05/01/15
FILENAME: bCA0902xl_as2.dgn
SCALE: 1/4" = 1'-0"

BRIDGE NO. B5979 DRAWING NO. 57198

DATE REVISED	DATE FILMED	DATE REVISED	DATE FILMED	FED. ROAD DIST. NO.	STATE	FED. AID PROJ. NO.	SHEET NO.	TOTAL SHEETS
				6	ARK.			
				JOB NO.		CA0902	327	581
				(1) A&B5979		APPR. SLAB		57199

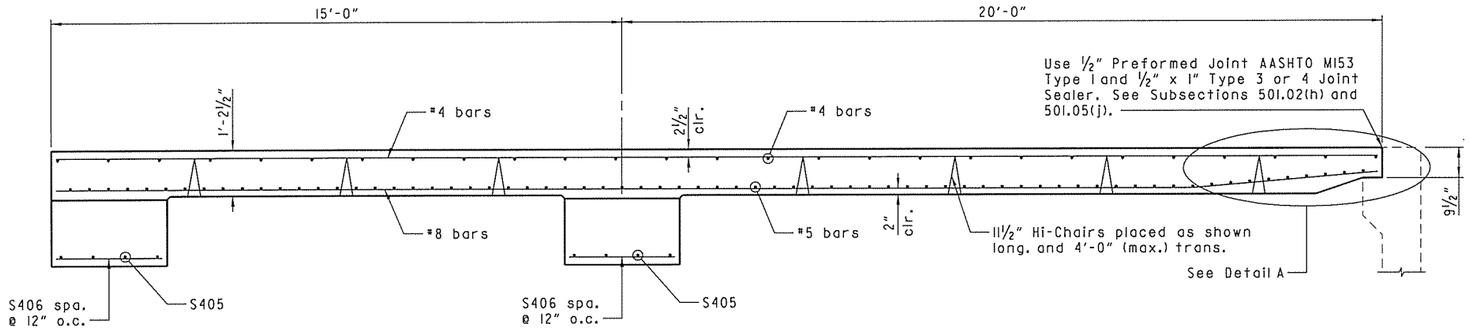

SECTION A-A
No Scale

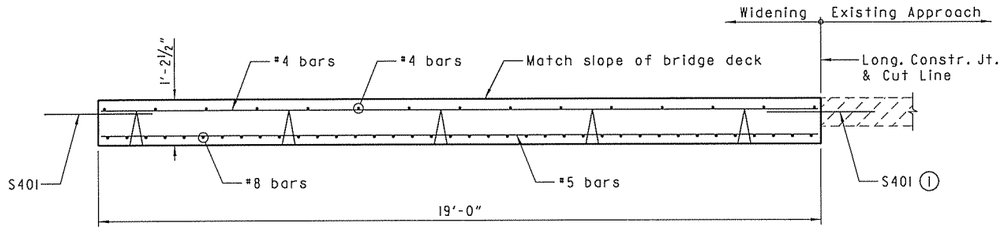

SECTION B-B
No Scale

(1) Drill and grout bars where shown using an approved cement or epoxy system from the QPL. Minimum embedment shall be 12" for cement based grout. Minimum embedment shall be per the Manufacturer's recommendations for epoxy based grout.

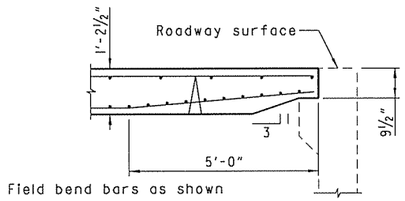

DETAIL A
No Scale

BAR LIST
(BRIDGE A)

MARK	NO. REQ'D. BEG. BR.	NO. REQ'D. END BR.	LENGTH
S401	45	46	3'-0"
S402	15	15	34'-8"
S403	2	2	9'-3"
S404	25	25	18'-8"
S405	10	10	18'-10"
S406	19	19	2'-8"
S501 - S504	8	8	4'-2" to 15'-8"
S505	65	65	18'-8"
S506	2	2	18'-10"
S801	38	38	34'-8"

BAR LIST
(BRIDGE B)

MARK	NO. REQ'D. BEG. BR.	NO. REQ'D. END BR.	LENGTH
S401	46	45	3'-0"
S402	15	15	34'-8"
S403	2	2	9'-3"
S404	25	25	18'-8"
S405	10	10	18'-10"
S406	19	19	2'-8"
S501 - S504	8	8	4'-2" to 15'-8"
S505	65	65	18'-8"
S506	2	2	18'-10"
S801	38	38	34'-8"

GENERAL NOTES:

Concrete shall be Class S(AE) f'c = 4,000 psi.

All reinforcing steel shall be Grade 60 (yield strength = 60,000 psi) conforming to AASHTO M31 or M322, Type A, with mill test reports.

Approach Slabs will be measured and paid for in accordance with Section 504.

Preformed joint and joint sealer included in the pay item "Approach Slabs".

Work required to remove & dispose portions of the existing approach slab & gutter, retain and clean existing reinforcing steel, and any required doweling will not be paid for directly, but will be considered subsidiary to the item "Modification of Existing Bridge Structure (Br. No. A5979" and "Modification of Existing Bridge Structure (Br. No. B5979).

TABLE OF QUANTITIES FOR TYPE SPECIAL I APPROACH SLABS
(for information only)

		SLAB WIDTH	REINFORCING STEEL (LBS.)	CONCRETE (CU.YDS.)
BRIDGE A	BEG. OF BRIDGE	19'-0"	5,827	37.0
	END OF BRIDGE	19'-0"	5,829	37.0
BRIDGE B	BEG. OF BRIDGE	19'-0"	5,829	37.0
	END OF BRIDGE	19'-0"	8,527	37.0

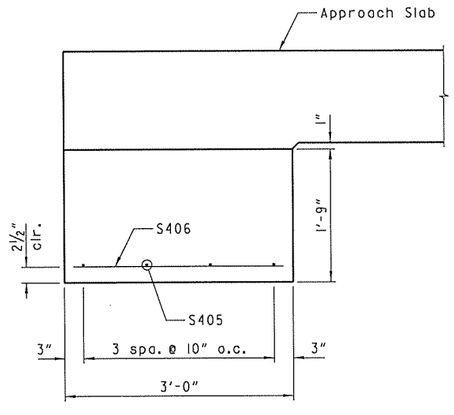

DETAILS OF SUPPORT AT END OF SLAB
No Scale

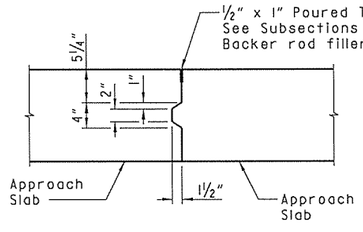

DETAILS OF LONGITUDINAL CONSTRUCTION JOINT
No Scale

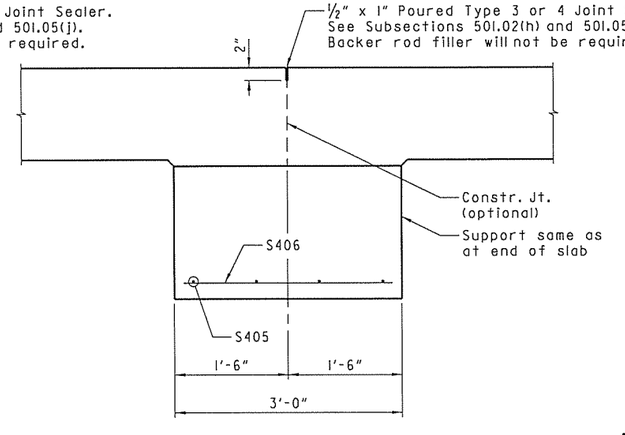

DETAILS OF REQUIRED TRANSVERSE SAWED JOINT
No Scale

STATE OF ARKANSAS
REGISTERED PROFESSIONAL ENGINEER
No. 16183
JERRY D. STEVENSON
4.25.2016
BRIDGE ENGINEER

SHEET 3 OF 3
DETAILS OF TYPE SPECIAL I APPROACH SLABS
BRIDGES OVER HWY. 62/102
ROUTE SEC.
ARKANSAS STATE HIGHWAY COMMISSION
LITTLE ROCK, ARK.

DRAWN BY: TWM DATE: 05/01/15
CHECKED BY: JDS DATE: 05/01/15
DESIGNED BY: PMT DATE: 05/01/15
FILENAME: bCA0902xl_as3.dgn
SCALE: NO SCALE

BRIDGE NO. A&B5979 DRAWING NO. 57199

DATE REVISED	DATE FILMED	DATE REVISED	DATE FILMED	FED. ROAD DIST. NO.	STATE	FED. AID PROJ. NO.	SHEET NO.	TOTAL SHEETS
				6	ARK.			
				JOB NO.		CA0902	328	581
				(1) A5979		APPR. GUTTER		57200

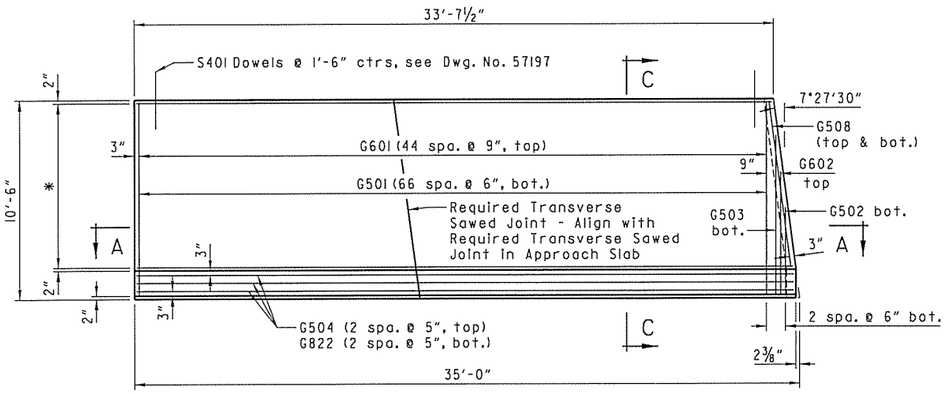

* G401-G408 (7 eq. spa., top)
G801-G821 (20 eq. spa., bot.)

GUTTER A
(Begin Bridge A)
No Scale

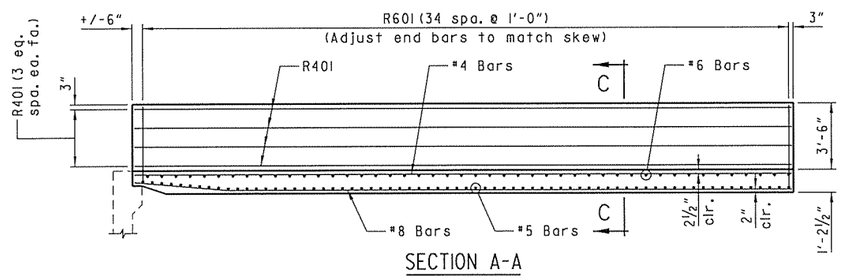

SECTION A-A
No Scale

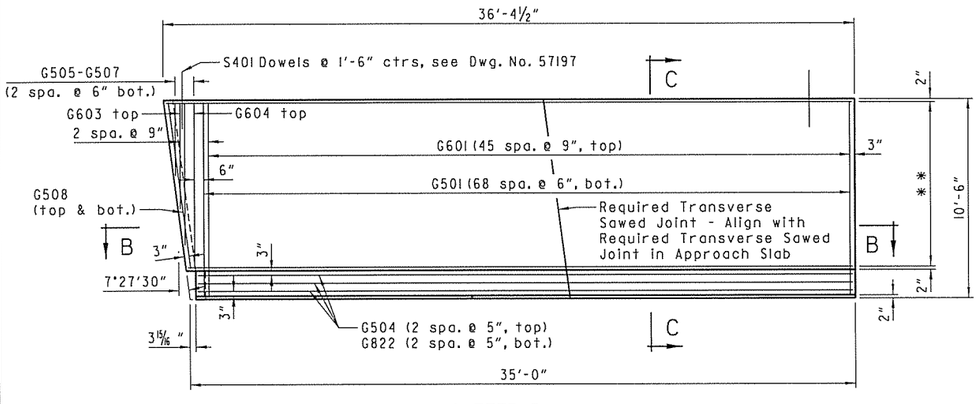

** G409-G416 (7 eq. spa., top)
G823-G843 (20 eq. spa., bot.)

GUTTER B
(End Bridge A)
No Scale

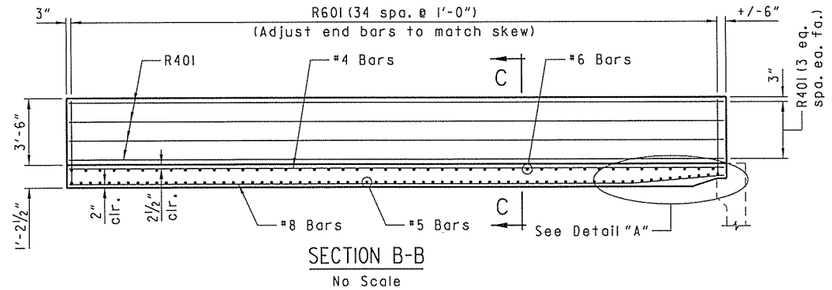

SECTION B-B
No Scale

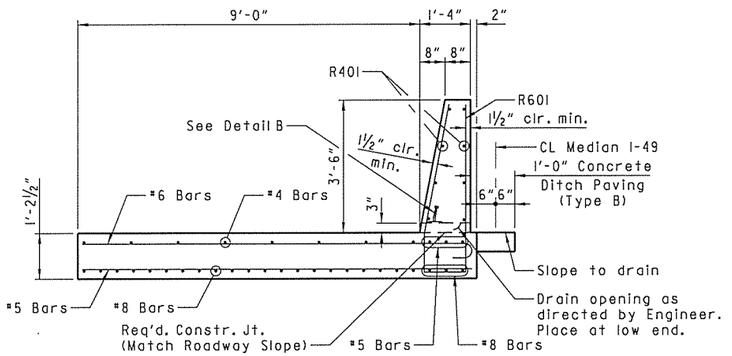

SECTION C-C
No Scale

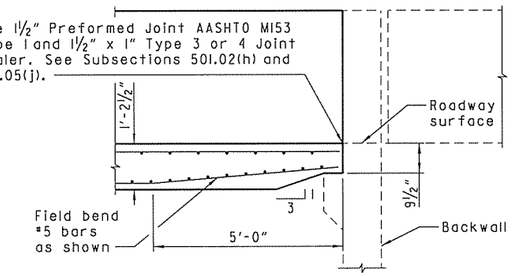

DETAIL A
No Scale

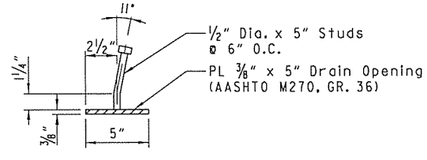

DETAIL B
No Scale

NOTES:

Parapet studs shall be 5" long, granular flux filled, solid fluxed, or equal, and automatically end welded to the plate. Studs and plate shall meet the requirements of Section 807. Studs and plate shall be subsidiary to other bid items.

The surfaces of the ⅜" plates which will not be in contact with concrete shall be painted in accordance with Section 638, or as approved by the Engineer. Only one coat is required and shall be applied in the fabricator's shop. Painting will not be paid for directly, but will be considered subsidiary to other bid items.

BAR LIST
(BRIDGE A)

MARK	NO. REQ'D. BEG. BR.	NO. REQ'D. END BR.	LENGTH	BENDING DIAGRAM
G401 - G408	8	-	33'-3" to 34'-5"	
G409 - G416	-	8	34'-10" to 36'-0"	
G501	67	69	10'-2"	
G502	1	-	4'-7"	
G503	1	-	8'-5"	
G504	3	3	34'-4"	
G505 - G507	-	3	3'-9" to 8'-8"	
G508	2	2	8'-8"	
G601	45	46	10'-10"	
G602	1	-	8'-5"	
G603	-	1	5'-6"	
G604	-	1	8'-8"	
G801 - G821	21	-	33'-3" to 34'-5"	
G822	3	3	34'-4"	
G823 - G843	-	21	34'-10" to 36'-0"	
R401	8	8	34'-4"	
R601	35	35	9'-6"	

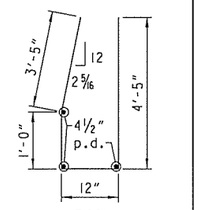

R601

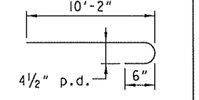

G601

GENERAL NOTES:

Concrete shall be Class S(AE) (f'c = 4,000 psi)

All reinforcing steel shall be Grade 60 (yield strength = 60,000 psi) conforming to AASHTO M31 or M322, Type A, with mill test reports.

Approach Gutters will be measured and paid for in accordance with Section 504 of the Standard Specifications.

Concrete Ditch Paving shall be subsidiary to other bid items.

Field modify reinforcing steel as needed near backwall.

TABLE OF QUANTITIES FOR TYPE SPECIAL I APPROACH SLABS
(for information only)

		REINFORCING STEEL (LBS.)	CONCRETE (CU.YDS.)
BRIDGE A	GUTTER A	4,629	20.4
	GUTTER B	4,777	21.1
BRIDGE B	GUTTER A	4,777	21.1
	GUTTER B	4,629	20.4

STATE OF ARKANSAS
REGISTERED PROFESSIONAL ENGINEER
No. 16183
JERRY D. STEVENSON
4.29.2016
BRIDGE ENGINEER

SHEET 1 OF 2
DETAILS OF TYPE SPECIAL I APPROACH GUTTERS BRIDGES OVER HWY. 62/102

ROUTE SEC.

ARKANSAS STATE HIGHWAY COMMISSION
LITTLE ROCK, ARK.

DRAWN BY: TWM DATE: 05/01/15 FILENAME: bCA0902xl_agl.dgn
CHECKED BY: JDS DATE: 05/01/15 SCALE: NO SCALE
DESIGNED BY: PMT DATE: 05/01/15

BRIDGE NO. A5979 DRAWING NO. 57200

DATE REVISED	DATE FILMED	DATE REVISED	DATE FILMED	FED. ROAD DIST. NO.	STATE	FED. AID PROJ. NO.	SHEET NO.	TOTAL SHEETS
				6	ARK.			
				JOB NO.		CA0902	329	581
				(1) B5979		APPR. GUTTER		57201

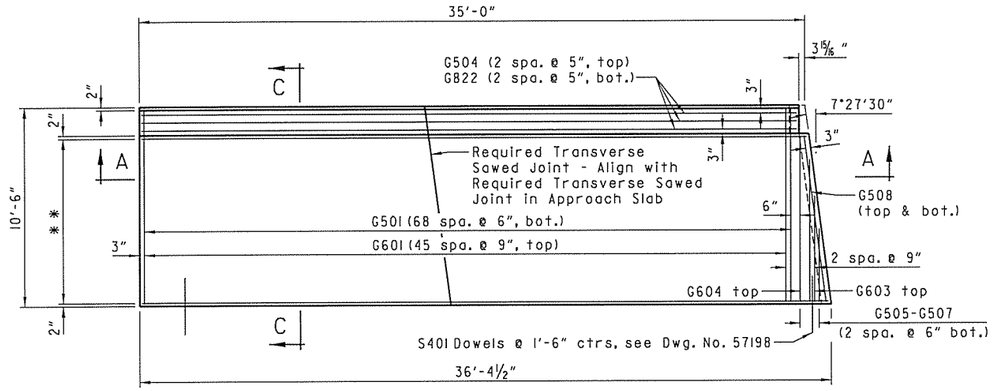

GUTTER A

(Begin Bridge B)
No Scale

** G409-G416 (7 eq. spa., top)
G823-G843 (20 eq. spa., bot.)

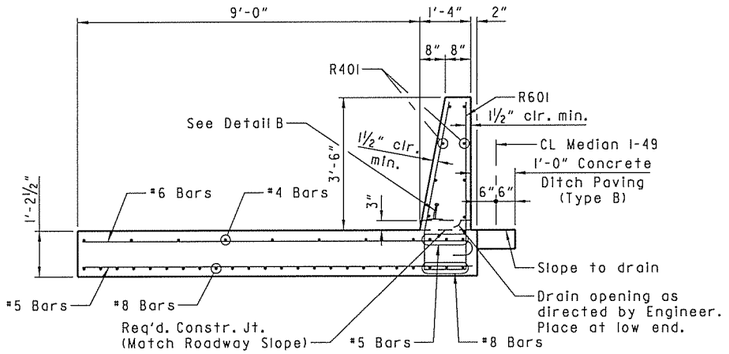

SECTION C-C

No Scale

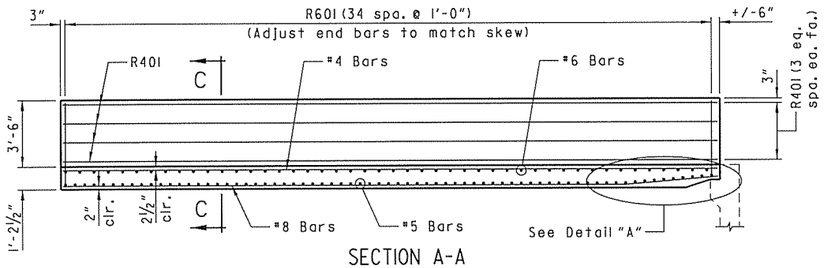

SECTION A-A

No Scale

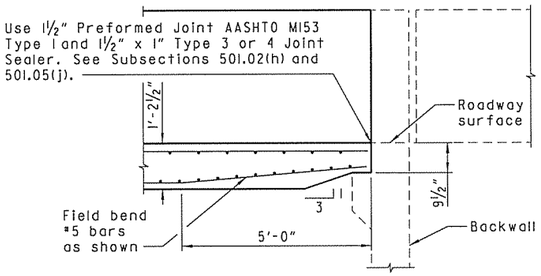

DETAIL A

No Scale

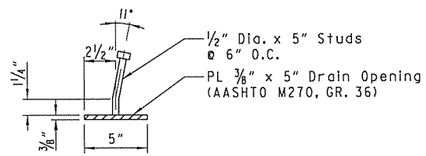

DETAIL B

No Scale

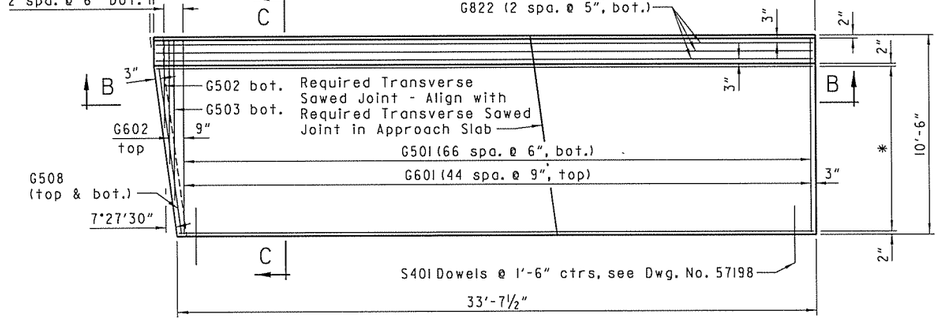

GUTTER B

(End Bridge B)
No Scale

* G401-G408 (7 eq. spa., top)
G801-G821 (20 eq. spa., bot.)

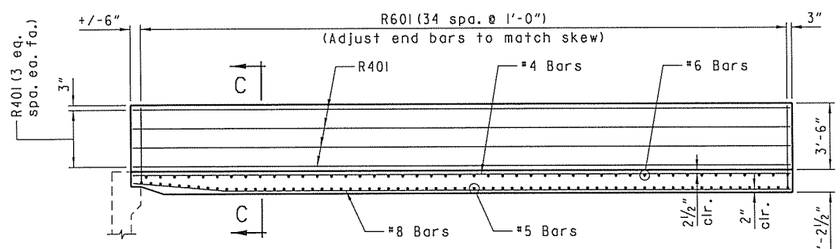

SECTION B-B

No Scale

NOTES:

Parapet studs shall be 5" long, granular flux filled, solid fluxed, or equal, and automatically end welded to the plate. Studs and plate shall meet the requirements of Section 807. Studs and plate shall be subsidiary to other bid items.

The surfaces of the ⅜" plates which will not be in contact with concrete shall be painted in accordance with Section 638, or as approved by the Engineer. Only one coat is required and shall be applied in the fabricator's shop. Painting will not be paid for directly, but will be considered subsidiary to other bid items.

BAR LIST

(BRIDGE B)

MARK	NO. REQ'D. BEG. BR.	NO. REQ'D. END BR.	LENGTH	BENDING DIAGRAM
G401 - G408	-	8	33'-3" to 34'-5"	
G409 - G416	8	-	34'-10" to 36'-0"	
G501	69	67	10'-2"	
G502	-	1	4'-7"	
G503	-	1	8'-5"	
G504	3	3	34'-4"	
G505 - G507	3	-	3'-9" to 8'-8"	
G508	2	2	8'-8"	
G601	46	45	10'-10"	
G602	-	1	8'-5"	
G603	1	-	5'-6"	
G604	1	-	8'-8"	
G801 - G821	-	21	33'-3" to 34'-5"	
G822	3	3	34'-4"	
G823 - G843	21	-	34'-10" to 36'-0"	
R401	8	8	34'-4"	
R601	35	35	9'-6"	

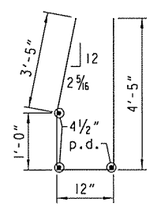

R601

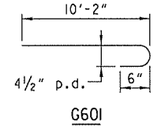

G601

GENERAL NOTES:

Concrete shall be Class S(AE) (f'c = 4,000 psi)

All reinforcing steel shall be Grade 60 (yield strength = 60,000 psi) conforming to AASHTO M31 or M322, Type A, with mill test reports.

Approach Gutters will be measured and paid for in accordance with Section 504 of the Standard Specifications.

Concrete Ditch Paving shall be subsidiary to other bid items.

Field modify reinforcing steel as needed near backwall.

STATE OF ARKANSAS
REGISTERED PROFESSIONAL ENGINEER
No. 16183
JERRY D. STEVENSON
4.25.2016
BRIDGE ENGINEER

SHEET 2 OF 2
DETAILS OF TYPE SPECIAL I APPROACH GUTTERS
BRIDGES OVER HWY. 62/102
ROUTE SEC.
ARKANSAS STATE HIGHWAY COMMISSION
LITTLE ROCK, ARK.

DRAWN BY: TWM DATE: 05/01/15 FILENAME: bCA0902xl_ag2.dgn
CHECKED BY: JDS DATE: 05/01/15 SCALE: NO SCALE
DESIGNED BY: PMT DATE: 05/01/15
BRIDGE NO. B5979 DRAWING NO. 57201

DATE REVISED	DATE FILMED	DATE REVISED	DATE FILMED	FED. ROAD DIST. NO.	STATE	FED. AID PROJ. NO.	SHEET NO.	TOTAL SHEETS
				6	ARK.			
				JOB NO.		CA0902	330	581
				(1) 05982		LAYOUT		57202

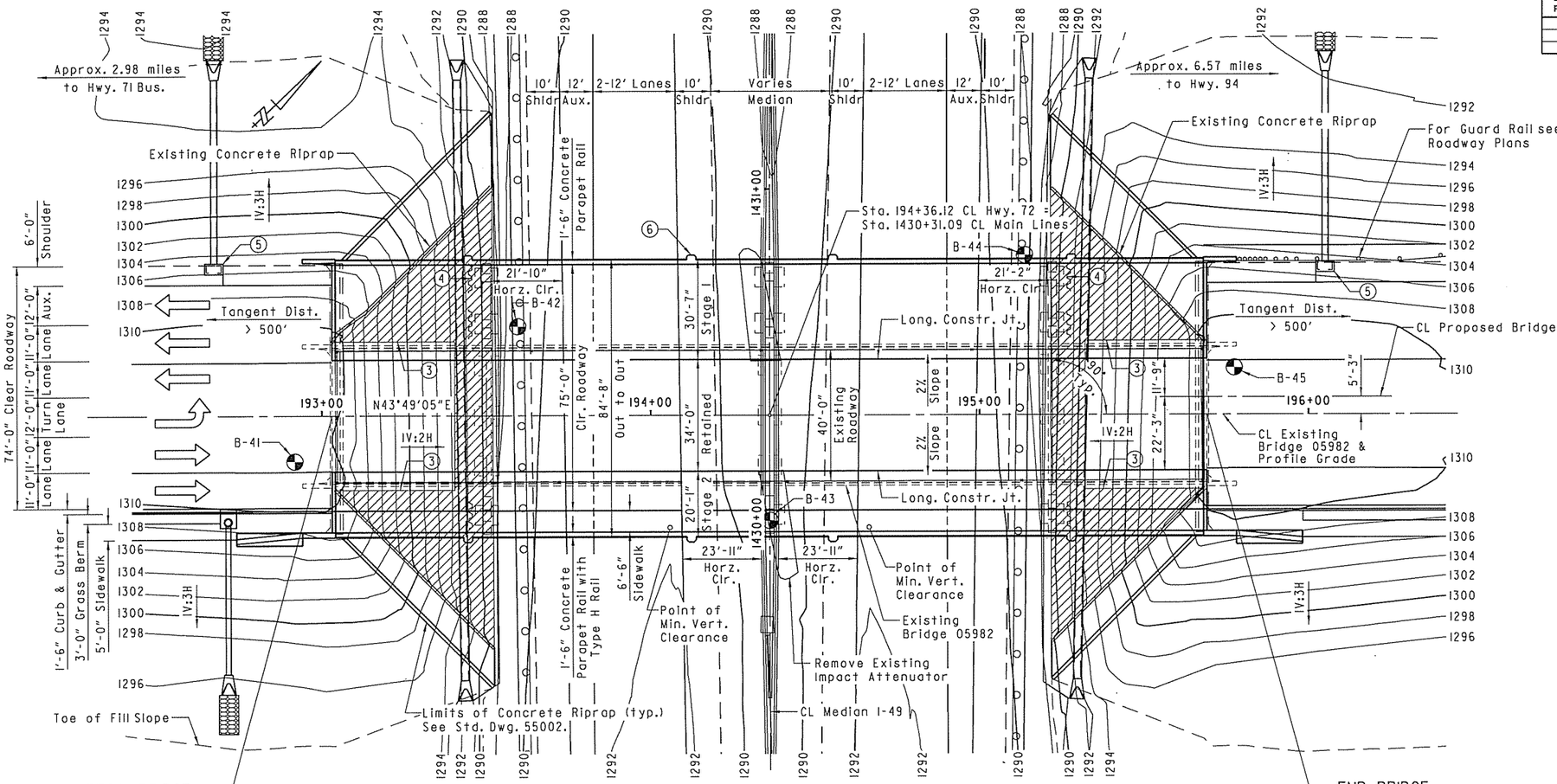

NOTES:

For R/W data, see Roadway Plans.

Type B Approach Gutters ("W"= 6'-0") shall be placed at both ends of the bridge, north side only, see Std. Dwg. 55030B.

Use Type N-3 Drop Inlets at both ends of bridge, north side only, see Roadway Plans.

(3) Remove Existing Concrete Riprap & replace with New Concrete Riprap, as necessary for Bent Construction, see Std. Dwg. No. 55002. Removal shall extend to the location of an existing Construction Joint. Payment for this work shall be considered subsidiary to the pay item "Modification of Existing Bridge Structure (Br. No. 05982)".

(4) Shoring may be required during construction. Payment for this work, if required, shall be considered subsidiary to the pay item "Unclassified Excavation for Structures - Bridge", see SP Job No. CA0902 "Shoring".

(5) Type N-3 Drop Inlet, 4'-6" x 2'-2¾".

(6) Light Pole Support Pedestal, typ. 8 locations.

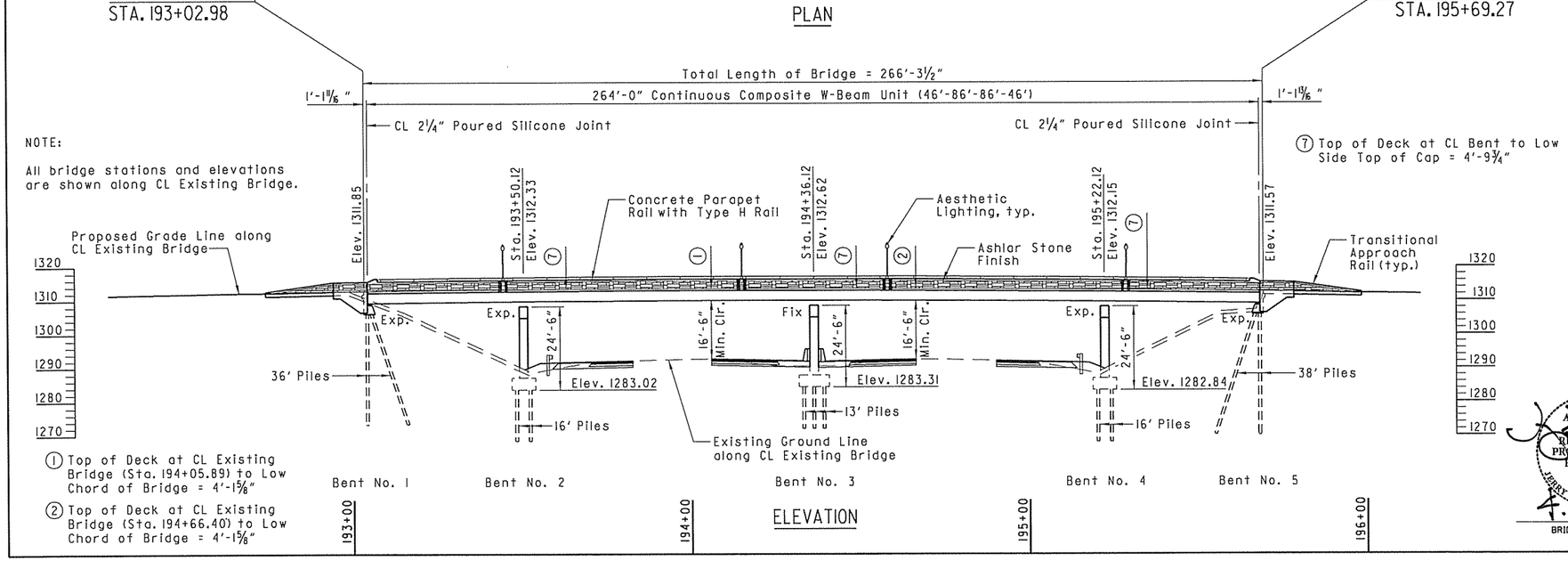

NOTE:

All bridge stations and elevations are shown along CL Existing Bridge.

(1) Top of Deck at CL Existing Bridge (Sta. 194+05.89) to Low Chord of Bridge = 4'-1⅝"

(2) Top of Deck at CL Existing Bridge (Sta. 194+66.40) to Low Chord of Bridge = 4'-1⅝"

L = 630'

+3.12% -3.33%

PVI Sta. 194+36.12
Elev. 1317.70

VERTICAL CURVE DATA

(Theoretical Profile Grade along CL Existing Bridge)

NOTE:

The vertical curve is a "best-fit" curve based on elevations obtained from a survey of the existing bridge deck. The Contractor shall verify the accuracy of the proposed vertical curve prior to any construction.

STATE OF ARKANSAS
REGISTERED PROFESSIONAL ENGINEER
No. 16185
JERRY D. STEVENSON
4-29-2016
BRIDGE ENGINEER

SHEET 1 OF 3
LAYOUT OF
BRIDGE OVER I-49
HWY. 62/102 - HWY. 72 WIDENING
& INTCHNG. IMPVTS. (S)
BENTON COUNTY
ROUTE I-49 SEC. 29
ARKANSAS STATE HIGHWAY COMMISSION
LITTLE ROCK, ARK.

DRAWN BY: TLW DATE: 05/01/15 FILENAME: bCA0902x2_LL.dgn
CHECKED BY: JDS DATE: 05/01/15 SCALE: 1" = 20'
DESIGNED BY: TG DATE: 05/01/15

BRIDGE NO. 05982 DRAWING NO. 57202

DATE REVISED	DATE FILMED	DATE REVISED	DATE FILMED	FED. ROAD DIST. NO.	STATE	FED. AID PROJ. NO.	SHEET NO.	TOTAL SHEETS
				6	ARK.			
				JOB NO.		CA0902	331	581
				(1) 05982		LAYOUT		57203

GENERAL NOTES:

BENCH MARK: AHTD cap SW corner of bridge, 21.49 ft. right of CL Existing Bridge, Sta 193+03.00, Elev. 1314.08.

CONSTRUCTION SPECIFICATIONS: Arkansas State Highway and Transportation Department Standard Specifications for Highway Construction, 2014 edition, with applicable Supplemental Specifications and Special Provisions. Unless otherwise noted in the plans Section and Subsection refer to the Standard Construction Specifications.

DESIGN SPECIFICATIONS: AASHTO Standard Specifications for Highway Bridges (17th Edition, 2002) with current interim specifications.

LIVE LOADING: HS20 DESIGN METHOD: LOAD FACTOR SEISMIC PERFORMANCE CATEGORY: A

MATERIALS AND STRENGTHS:

Class S(AE) Concrete (superstructure)	f'c = 4,000 psi
Class S Concrete (substructure)	f'c = 3,500 psi
Reinforcing Steel (Grade 60, AASHTO M31 or M322, Type A)	fy = 60,000 psi
Structural Steel (AASHTO M 270, Gr. 36)	Fy = 36,000 psi
Structural Steel (AASHTO M 270, Gr. 50)	Fy = 50,000 psi

BORING LOGS: Boring logs may be obtained from the Construction Contract Procurement Section of the Program Management Division.

STEEL PILING: Piling for Bents 1 and 5 shall be HP10x42 (Grade 50) and shall be driven to a minimum safe bearing capacity of 78 tons per pile. Piling in Bents 2 through 4 shall be HP12x53 (Grade 50) and shall be driven to a minimum safe bearing capacity of 97 tons per pile. All piling shall be driven into the material designated as Cherty Limestone on the boring legend unless bearing is achieved at a higher elevation. Lengths of piling shown are for estimating quantities and for use in determining payment for cut-off and build-up in accordance with the Standard Specifications. Actual lengths to be determined in the field. Piles in end bents shall be driven after embankment to bottom of cap is in place. On all piles the Contractor shall use approved steel H-Pile driving points.

FOOTINGS: Top of footings shall be a minimum of 2'-0" below finished ground line at Bents 2, 3 and 4. Foundations for footings shall be prepared in accordance with Subsection 801.04.

PAINT: All new structural steel except galvanized members, surfaces in contact with concrete, and as otherwise noted, shall be painted as specified in Subsection 807.75. The color of paint shall be Gray and shall match Fed. Std. 595B. Color Chip No. 26122.

PAINTING EXISTING STEEL: The existing structural steel shall be cleaned and painted in accordance with Section 820 "Cleaning and Painting Existing Structural Steel (Type II)". The color of paint shall be Gray and shall match Fed. Std. 595B, Color Chip No. 26122. For additional information, see SP Job No. CA0902 "Containment System", "Contractor Certification" and "Paint Contractor Label".

TEXTURED COATING FINISH: Class 3 Textured Coating Finish shall be applied to all areas as specified in SP Job No. CA0902 "Textured Coating Finish" and in accordance with Subsection 802.19(b)(3). Textured Coating Finish shall not be applied on surfaces where Class 2 Protective Surface Treatment is applied.

BRIDGE DECK: The concrete bridge deck, except sidewalk, shall be given a tine finish as specified for final finishing in Subsection 802.19 for Class 5, Tined Bridge Roadway Surface Finish. Sidewalk shall be given a Class 6, Broomed Finish.

DETAIL DRAWINGS:	DRAWING NOS.
Stage Construction	57205 - 57209
End Bents	57210 - 57219
Intermediate Bents	57220 - 57223
264' Continuous Composite W-Beam Unit	57224 - 57234
Elastomeric Bearings	57235
Transitional Approach Railing	57236 - 57237
Type H Metal Bridge Rail	57238
Electrical Lighting Details	57239
Concrete Riprap	55002
Steel Piling	55020

EXISTING BRIDGE: The Existing Bridge No. 05982 is 42'-10" wide and 266'-3½" long and consists of a 264'-0" Cont. Comp. W-Beam unit supported by three column concrete intermediate bents with spread footings, pile cap footings and steel H-Pile trestle end bents. Plans of the existing structure may be obtained upon request to the Construction Contract Procurement Section of the Program Management Division.

THE PROPOSED WORK CONSIST OF: Widening the existing bridge, modifying the existing end bents, constructing new intermediate bents to each side of existing bents, removing and replacing portions of the concrete deck, removing and replacing portions of the existing concrete riprap, and replacing the joint seals. For additional requirements in conducting the work, see Section 821.

VERIFICATION: Except as noted, components of the existing bridge are to be retained and joined to the proposed work. Information and dimensions shown are based on existing bridge plans. The Contractor is to adhere strictly to the requirements for verification of the geometry of the existing bridge and its relationship to the proposed work described in Subsection 821.02 and make necessary adjustments to fit the proposed work to the existing structure. Payment for this work shall be considered subsidiary to the pay item "Modification of Existing Bridge Structure (Br. No. 05982).

REMOVAL AND SALVAGE: All material removed from the existing bridge under Item 821 shall be disposed of according to Section 205. All material removed from the existing bridge shall become the property of the Contractor.

MAINTENANCE OF TRAFFIC: See Roadway Plans.

STATE OF ARKANSAS
REGISTERED PROFESSIONAL ENGINEER
No. 16183
JERRY D. STEPHENSON
4.29.2016
BRIDGE ENGINEER

SHEET 2 OF 3
LAYOUT OF
BRIDGE OVER I-49
HWY. 62/102 - HWY. 72 WIDENING
& INTCHNG. IMPVTS. (S)
BENTON COUNTY
ROUTE I-49 SEC. 29
ARKANSAS STATE HIGHWAY COMMISSION
LITTLE ROCK, ARK.

DRAWN BY: TLW DATE: 05/01/15 FILENAME: bCA0902x2_L2.dgn
CHECKED BY: JDS DATE: 05/01/15 SCALE: NONE
DESIGNED BY: TG DATE: 05/01/15

BRIDGE NO. 05982 DRAWING NO. 57203

DATE REVISED	DATE FILMED	DATE REVISED	DATE FILMED	FED. ROAD DIST. NO.	STATE	FED. AID PROJ. NO.	SHEET NO.	TOTAL SHEETS
				6	ARK.			
				JOB NO.		CA0902	332	581
				(1) 05982		LAYOUT		57204

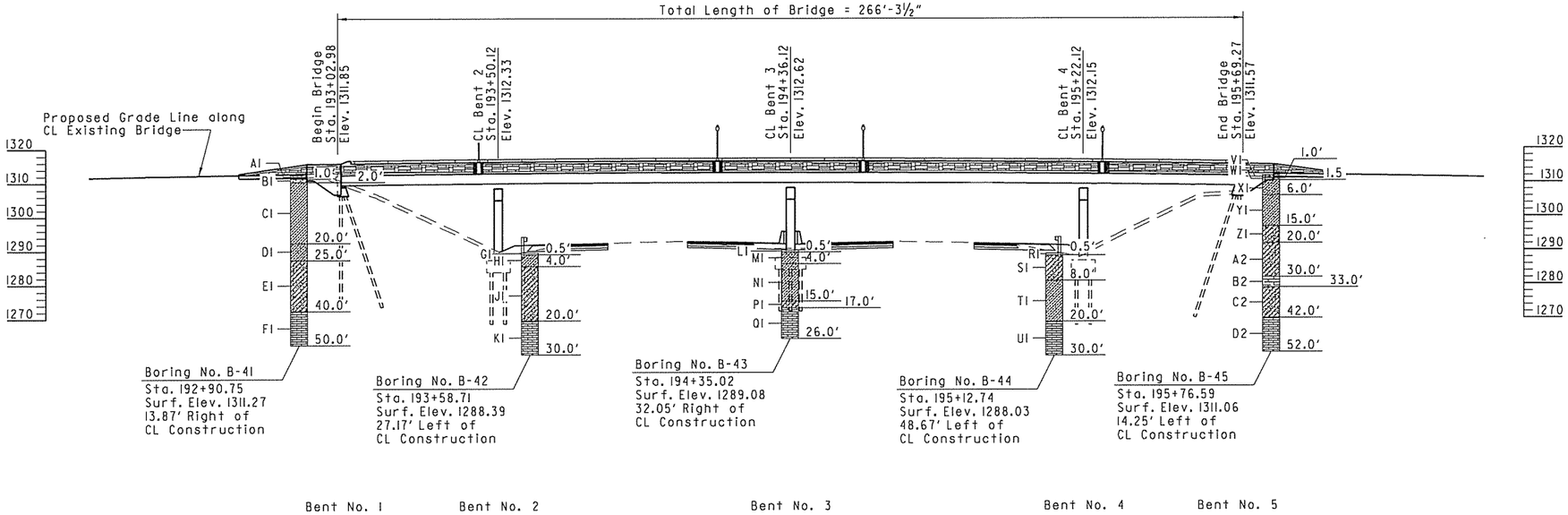

ELEVATION

BORING LEGEND

AI - Asphalt
BI - Base Course Material
CI - Reddish-Brown Sandy Clay, Very Soft
DI - Reddish-Brown Sandy Clay with Chert Gravel, Stiff
EI - Reddish-Brown Clayey Chert Gravel with Sand, Dense, Hard Chert Seams from 25 to 28 feet
FI - Cherty Limestone, Gray to Light Gray, Generally massive with some crystalline internal structure
GI - Light Brown Silty Topsoil with Gravel
HI - Reddish-Brown Sandy Clay with Fine Gravel, Firm
JI - Reddish-Brown Clayey Chert Gravel with Sand, Loose
KI - Cherty Limestone, Gray to Light Gray, Generally massive with some crystalline internal structure
LI - Light Brown Silty Topsoil with Gravel
MI - Reddish-Brown Sandy Clay with Fine Gravel, Stiff
NI - Reddish-Brown Clayey Sand with Fine Gravel, Dense
PI - Reddish-Brown Clayey Chert Gravel, Dense with Chert Seams
QI - Cherty Limestone, Gray to Light Gray, Generally massive with some crystalline internal structure
RI - Light Brown Silty Topsoil with Gravel
SI - Reddish-Brown Clayey Chert Gravel with Sand, Dense
TI - Reddish-Brown Sandy Clay with Fine Chert Gravel, Firm
UI - Cherty Limestone, Gray to Light Gray, Generally massive with some crystalline internal structure
VI - Asphalt
WI - Base Course Material
XI - Reddish-Brown Sandy Clay, Very Soft
YI - Dark Red Sandy Clay with Gravel, Firm High Plasticity
ZI - Dark Red Sandy Clay with Gravel, Firm
A2 - Reddish-Brown Clayey Chert Gravel
B2 - Weathered Chert Seams
C2 - Reddish-Brown Clayey Chert Gravel
D2 - Cherty Limestone: Gray to Light Gray, Generally massive with some crystalline internal structure

"N" VALUES

Boring No. B-41
Sta. 192+90.75 - 13.87' Right of CL Construction
2.0 - 3.0, N = 4
4.0 - 5.0, N = 9
6.0 - 7.0, N = 11
8.0 - 9.0, N = 10
10.0 - 11.0, N = 12
15.0 - 16.0, N = 12
20.0 - 20.7, N = 50 (8")
30.0 - 31.0, N = 23

Boring No. B-42
Sta. 193+58.71 - 27.17' Left of CL Construction
0.5 - 1.5, N = 12
2.0 - 3.0, N = 11
4.0 - 5.0, N = 7
6.0 - 7.0, N = 6
8.0 - 9.0, N = 6
10.0 - 11.0, N = 8
15.0 - 15.0, N = 50 (0")

Boring No. B-43
Sta. 194+35.02 - 32.05' Right of CL Construction
0.5 - 1.5, N = 20
2.0 - 3.0, N = 37
4.0 - 5.0, N = 45
6.0 - 7.0, N = 7
8.0 - 9.0, N = 12
10.0 - 11.0, N = 12
15.0 - 15.0, N = 50 (0")

Boring No. B-44
Sta. 195+12.74 - 48.67' Left of CL Construction
0.5 - 1.5, N = 45
2.0 - 3.0, N = 43
4.0 - 5.0, N = 30
6.0 - 6.9, N = 50 (11")
8.0 - 9.0, N = 18
10.0 - 11.0, N = 7

Boring No. B-45
Sta. 195+76.59 - 14.25' Left of CL Construction
2.0 - 3.0, N = 4
4.0 - 5.0, N = 2
6.0 - 7.0, N = 15
8.0 - 9.0, N = 10
10.0 - 11.0, N = 15
15.0 - 16.0, N = 12
20.0 - 20.0, N = 50 (0")
25.0 - 25.0, N = 50 (0")

193+00 194+00 195+00 196+00

STATE OF ARKANSAS
REGISTERED PROFESSIONAL ENGINEER
No. 16183
JERRY D. STEPHENSON
4.23.2015
BRIDGE ENGINEER

SHEET 3 OF 3
LAYOUT OF
BRIDGE OVER I-49
HWY. 62/102 - HWY. 72 WIDENING
& INTCHNG. IMPVTS. (S)
BENTON COUNTY
ROUTE I-49 SEC. 29
ARKANSAS STATE HIGHWAY COMMISSION
LITTLE ROCK, ARK.

DRAWN BY: TLW DATE: 05/01/15 FILENAME: bCA0902x2_L3.dgn
CHECKED BY: JDS DATE: 05/01/15 SCALE: 1" = 20'
DESIGNED BY: TG DATE: 05/01/15
BRIDGE NO. 05982 DRAWING NO. 57204

DATE REVISED	DATE FILMED	DATE REVISED	DATE FILMED	FED. ROAD DIST. NO.	STATE	FED. AID PROJ. NO.	SHEET NO.	TOTAL SHEETS
				6	ARK.			
				JOB NO.		CA0902	333	581
				(1) 05982		STAGE CONSTR.		57205

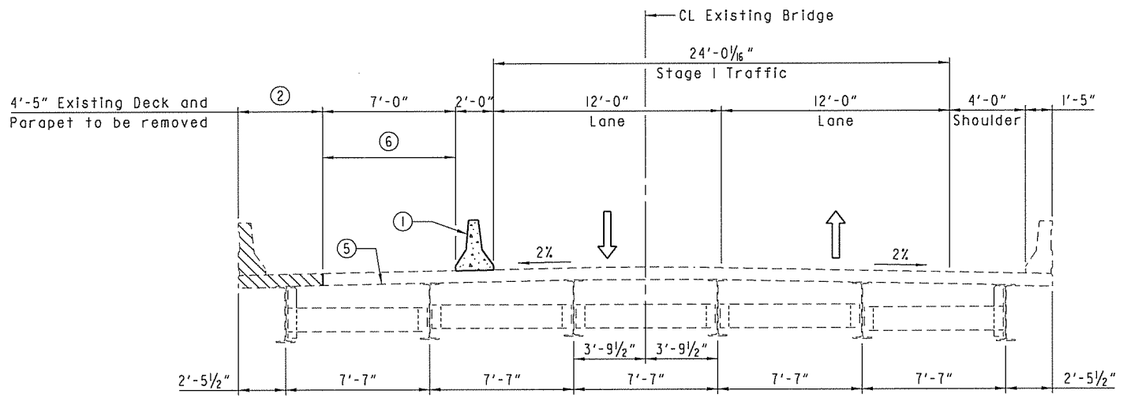

STAGE Ia - BRIDGE 05982

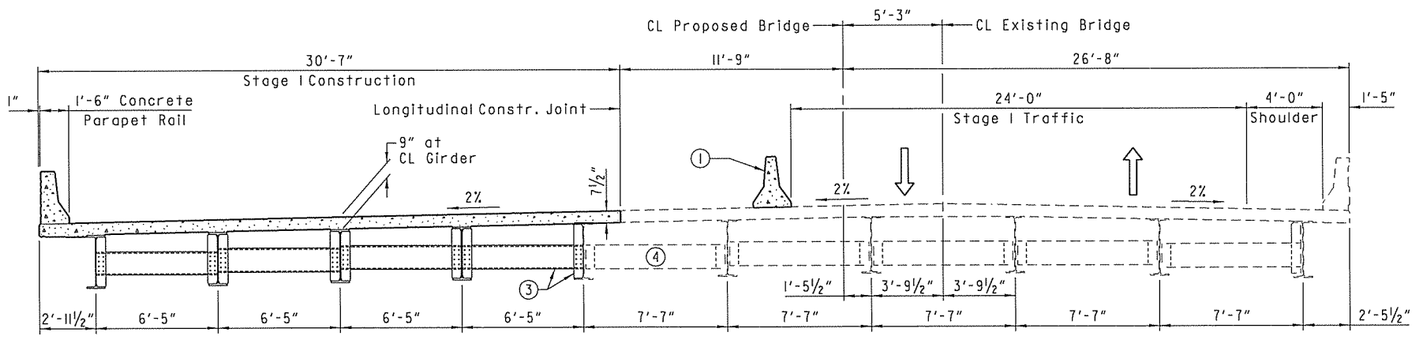

STAGE Ib - BRIDGE 05982

NOTES:

Details related to Maintenance of Traffic on bridge plans for information only. For Maintenance of Traffic, see Roadway Plans.

(1) Temporary Precast Barrier (Do Not Connect to Deck), see Std. Dwg. No. TC-4.

(2) The concrete slab and parapet are to be removed to the cut line as indicated in accordance with Section 821. The existing transverse slab reinforcing shall be retained to be lapped with the new reinforcing steel. Care shall be exercised during the removal of the existing deck to ensure that the beams, diaphragms, shear connectors, bolted connections and reinforcement are not damaged. Damaged items that are not salvageable as determined by the Engineer, shall be replaced by the contractor at no additional payment.

(3) Install new diaphragms and connection plates prior to deck pour. The new connection plate shall be field welded to the existing beam.

(4) See "Typical Roadway Section", Dwg. No. 57224.

(5) Stage I external supports in this bay will be required prior to deck removal and shall remain in place until after completion of the Stage I deck pour.

(6) Construction vehicles shall not travel beyond the centerline of the beam.

STATE OF ARKANSAS
REGISTERED PROFESSIONAL ENGINEER
No. 16183
JERRY D. STEPHENSON
4.25.2016
BRIDGE ENGINEER

SHEET 1 OF 5
DETAILS OF STAGE CONSTRUCTION
BRIDGE OVER I-49
HWY. 62/102 - HWY. 72 WIDENING
& INTCHNG. IMPVTS. (S)
BENTON COUNTY
ROUTE I-49 SEC. 29
ARKANSAS STATE HIGHWAY COMMISSION
LITTLE ROCK, ARK.

DRAWN BY: TLW DATE: 05/01/15 FILENAME: bCA0902x2_scl.dgn
CHECKED BY: JDS DATE: 05/01/15 SCALE: 1/4" = 1'-0"
DESIGNED BY: TG DATE: 05/01/15

BRIDGE NO. 05982 DRAWING NO. 57205

DATE REVISED	DATE FILMED	DATE REVISED	DATE FILMED	FED. ROAD DIST. NO.	STATE	FED. AID PROJ. NO.	SHEET NO.	TOTAL SHEETS
				6	ARK.			
				JOB NO.		CA0902	334	581
				(1) 05982	STAGE CONSTR.			57206

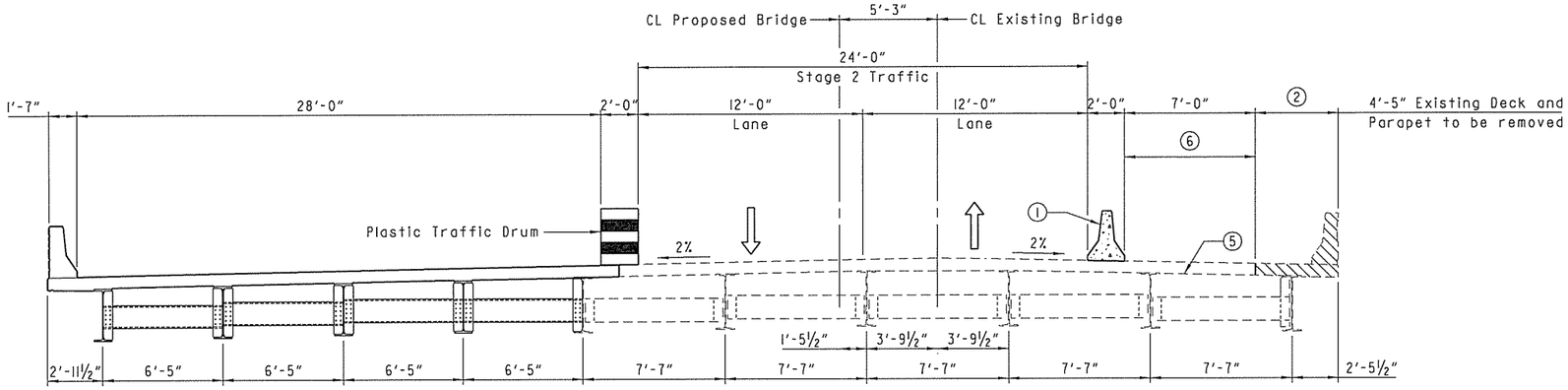

STAGE 2a - BRIDGE 05982

NOTES:

Details related to Maintenance of Traffic on bridge plans for information only. For Maintenance of Traffic, see Roadway Plans.

(1) Temporary Precast Barrier (Do Not Connect to Deck), see Std. Dwg. No. TC-4.

(2) The concrete slab and parapet are to be removed to the cut line as indicated in accordance with Section 821. The existing transverse slab reinforcing shall be retained to be lapped with the new reinforcing steel. Care shall be exercised during the removal of the existing deck to ensure that the beams, diaphragms, shear connectors, bolted connections and reinforcement are not damaged. Damaged items that are not salvageable as determined by the Engineer, shall be replaced by the contractor at no additional payment.

(3) Install new diaphragms and connection plates prior to deck pour. The new connection plate shall be field welded to the existing beam.

(4) See "Typical Roadway Section", Dwg. No. 57224.

(5) Stage 2 external supports in this bay will be required prior to deck removal and shall remain in place until after completion of the Stage 2 deck pour.

(6) Construction vehicles shall not travel beyond the centerline of the beam.

(7) Type H Metal Bridge Rail.

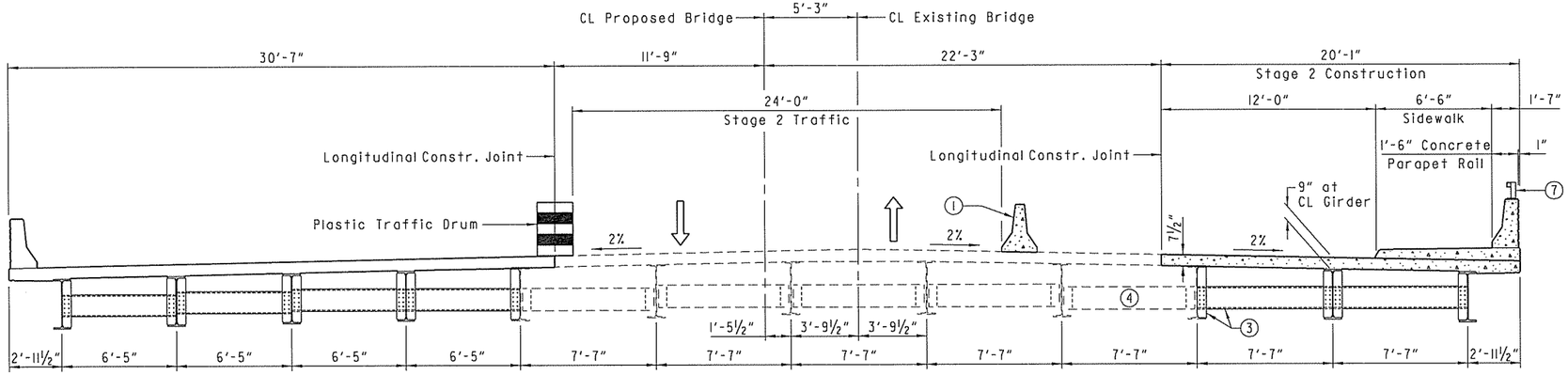

STAGE 2b - BRIDGE 05982

STATE OF ARKANSAS
REGISTERED PROFESSIONAL ENGINEER
No. 16183
JERRY D. STEVENSON
4.29.2016
BRIDGE ENGINEER

SHEET 2 OF 5
DETAILS OF STAGE CONSTRUCTION
BRIDGE OVER I-49
HWY. 62/102 - HWY. 72 WIDENING
& INTCHNG. IMPVTS. (S)
BENTON COUNTY
ROUTE I-49 SEC. 29
ARKANSAS STATE HIGHWAY COMMISSION
LITTLE ROCK, ARK.

DRAWN BY: TLW DATE: 05/01/15 FILENAME: bCA0902x2_sc2.dgn
CHECKED BY: JDS DATE: 05/01/15 SCALE: 1/4" = 1'-0"
DESIGNED BY: TG DATE: 05/01/15

BRIDGE NO. 05982 DRAWING NO. 57206

DATE REVISED	DATE FILMED	DATE REVISED	DATE FILMED

FED. ROAD DIST. NO.	STATE	FED. AID PROJ. NO.	SHEET NO.	TOTAL SHEETS
6	ARK.			
JOB NO.		CA0902	335	581
(1) 05982	STAGE CONSTR.			57207

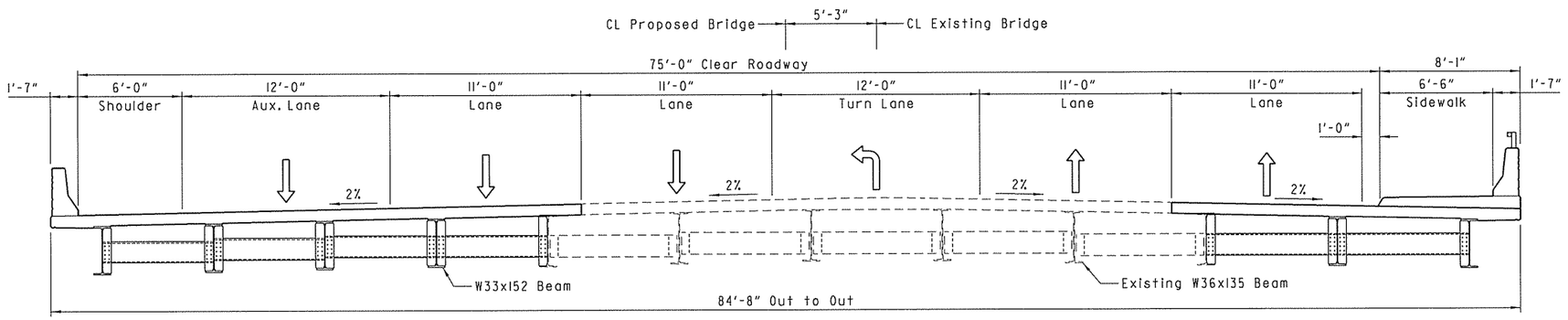

COMPLETED TYPICAL SECTION - BRIDGE 05982

STATE OF ARKANSAS
REGISTERED PROFESSIONAL ENGINEER
No. 16183
JERRY D. JEFFERSON
4.29.2015
BRIDGE ENGINEER

SHEET 3 OF 5
DETAILS OF STAGE CONSTRUCTION
BRIDGE OVER I-49
HWY. 62/102 - HWY. 72 WIDENING
& INTCHNG. IMPVTS. (S)
BENTON COUNTY
ROUTE I-49 SEC. 29
ARKANSAS STATE HIGHWAY COMMISSION
LITTLE ROCK, ARK.

DRAWN BY: TLW DATE: 05/01/15
CHECKED BY: JDS DATE: 05/01/15
DESIGNED BY: TG DATE: 05/01/15
FILENAME: bCA0902x2_sc3.dgn
SCALE: 1/4" = 1'-0"

BRIDGE NO. 05982 DRAWING NO. 57207

DATE REVISED	DATE FILMED	DATE REVISED	DATE FILMED	FED. ROAD DIST. NO.	STATE	FED. AID PROJ. NO.	SHEET NO.	TOTAL SHEETS
				6	ARK.			
				JOB NO.		CA0902	336	581
				(1) 05982	STAGE CONSTR.			57208

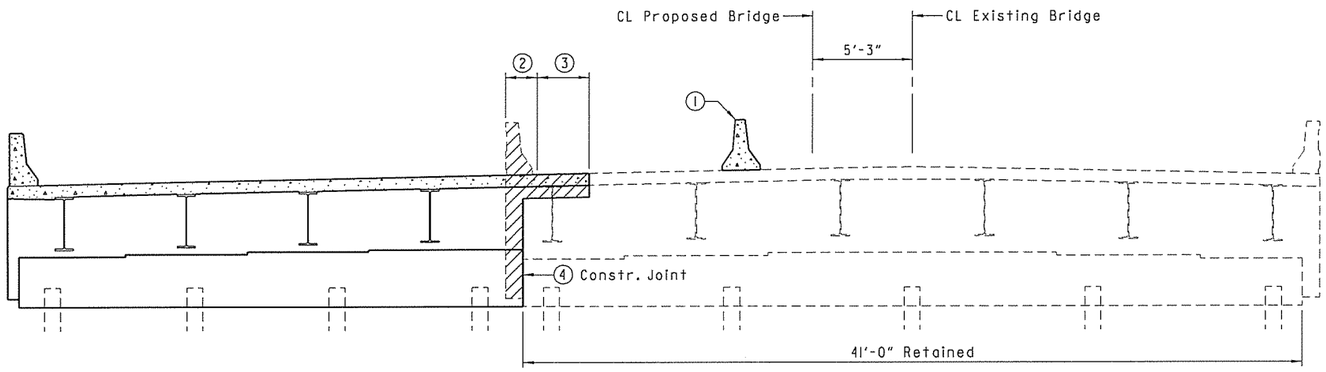

STAGE I

Looking Ahead Normal to Bent
Shown at Existing Bent 5
(Bent 1 Similar)

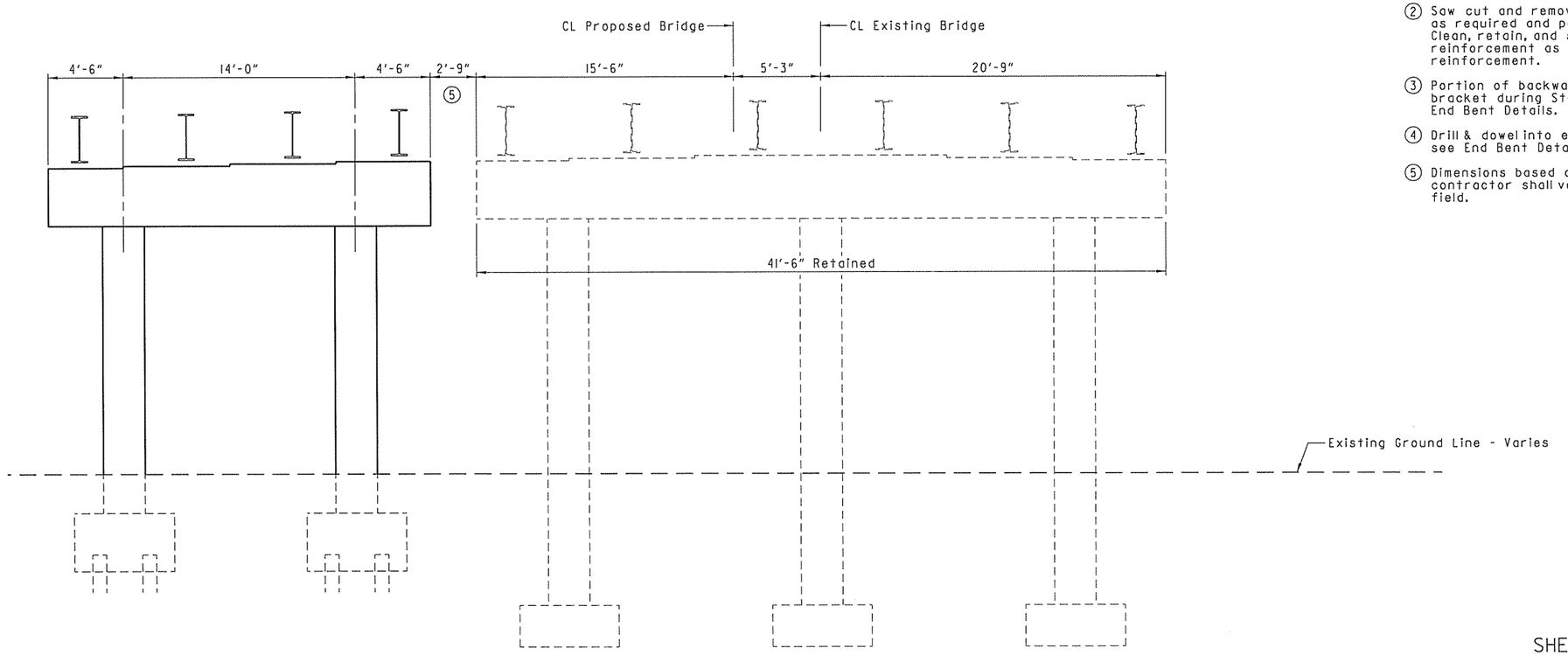

STAGE I

Looking Ahead Normal to Bent
Shown at Existing Intermediate Bent 2
(Intermediate Bents 3 & 4 Similar)

BRIDGE 05982

NOTES:

(1) Temporary Precast Barrier, see Std. Dwg. No. TC-4.

(2) Saw cut and remove wing, wingwall fillet as required and portions of existing backwall. Clean, retain, and straighten existing reinforcement as required to lap with new reinforcement.

(3) Portion of backwall removed above the paving bracket during Stage I Construction, see End Bent Details.

(4) Drill & dowel into existing cap and backwall, see End Bent Details.

(5) Dimensions based on existing plans. The contractor shall verify dimensions in the field.

STATE OF ARKANSAS
REGISTERED PROFESSIONAL ENGINEER
No. 16183
JERRY D. STEVENSON
4.23.2015
BRIDGE ENGINEER

SHEET 4 OF 5
DETAILS OF STAGE CONSTRUCTION
BRIDGE OVER I-49
HWY. 62/102 - HWY. 72 WIDENING
& INTCHNG. IMPVTS. (S)
BENTON COUNTY
ROUTE I-49 SEC. 29
ARKANSAS STATE HIGHWAY COMMISSION
LITTLE ROCK, ARK.

DRAWN BY: TLW DATE: 05/01/15 FILENAME: bCA0902x2_sc4.dgn
CHECKED BY: JDS DATE: 05/01/15 SCALE: 1/4" = 1'-0"
DESIGNED BY: TG DATE: 05/01/15

BRIDGE NO. 05982 DRAWING NO. 57208

DATE REVISED	DATE FILMED	DATE REVISED	DATE FILMED	FED. ROAD DIST. NO.	STATE	FED. AID PROJ. NO.	SHEET NO.	TOTAL SHEETS
				6	ARK.			
				JOB NO.		CA0902	337	581
				(1) 05982		STAGE CONSTR.		57209

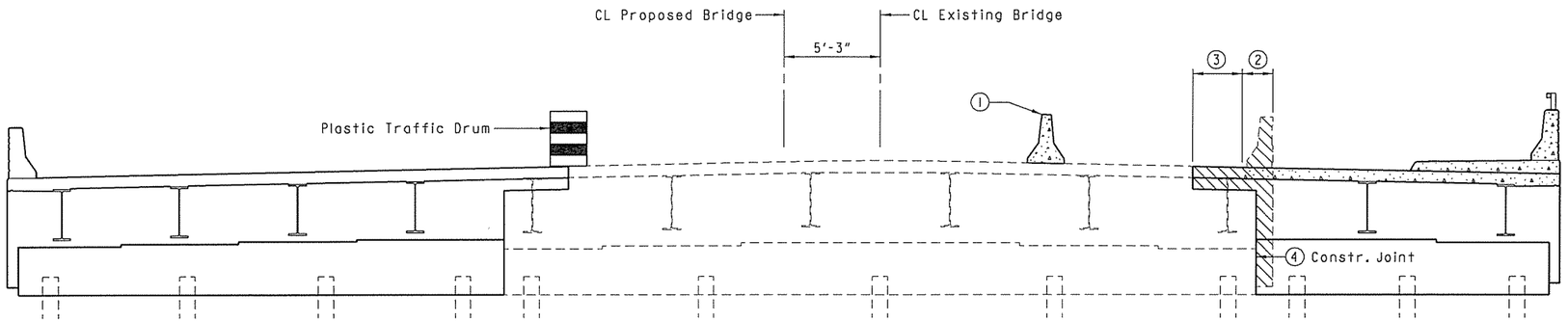

STAGE 2

Looking Ahead Normal to Bent
Shown at Existing Bent 5
(Bent 1 Similar)

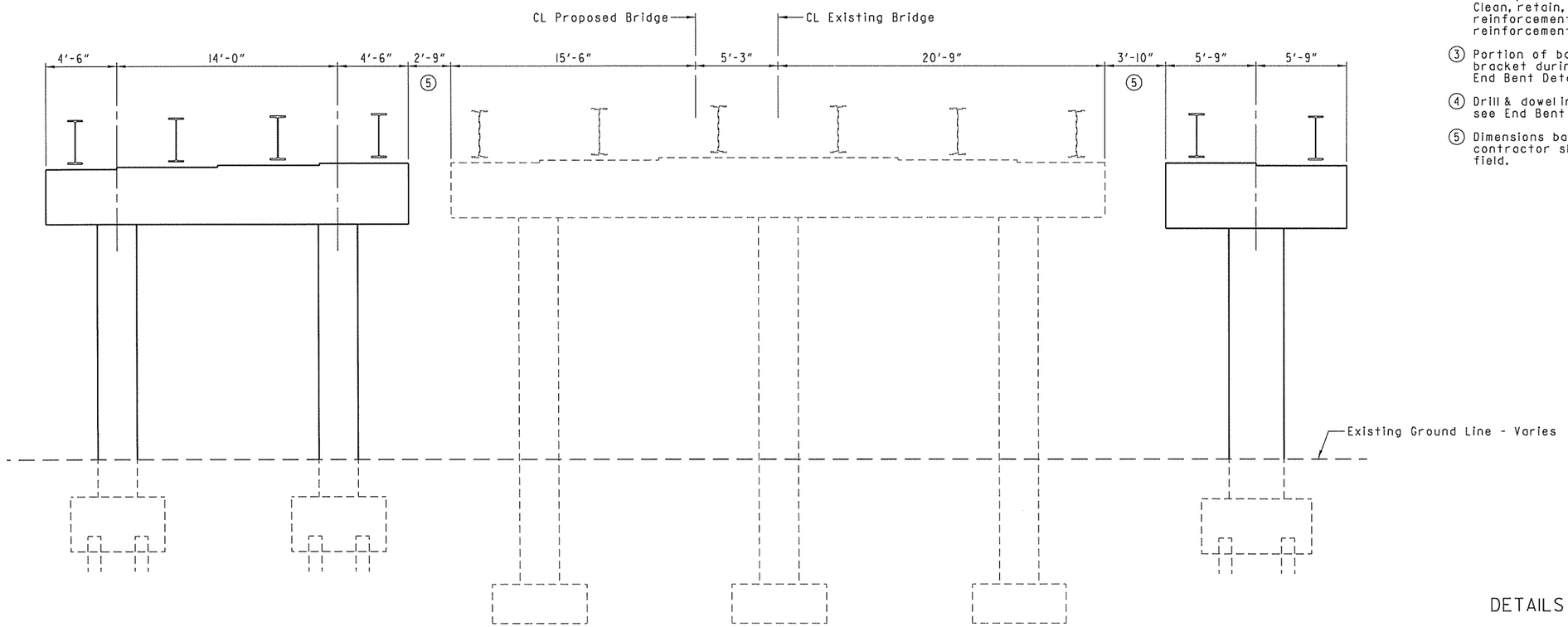

STAGE 2

Looking Ahead Normal to Bent
Shown at Existing Intermediate Bent 2
(Intermediate Bents 3 & 4 Similar)

BRIDGE 05982

NOTES:

(1) Temporary Precast Barrier, see Std. Dwg. No. TC-4.

(2) Saw cut and remove wing, wingwall fillet as required and portions of existing backwall. Clean, retain, and straighten existing reinforcement as required to lap with new reinforcement.

(3) Portion of backwall removed above the paving bracket during Stage 2 Construction, see End Bent Details.

(4) Drill & dowel into existing cap and backwall, see End Bent Details.

(5) Dimensions based on existing plans. The contractor shall verify dimensions in the field.

STATE OF ARKANSAS
REGISTERED PROFESSIONAL ENGINEER
No. 16183
JERRY D. STEVENSON
4.25.2016
BRIDGE ENGINEER

SHEET 5 OF 5
DETAILS OF STAGE CONSTRUCTION
BRIDGE OVER I-49
HWY. 62/102 - HWY. 72 WIDENING
& INTCHNG. IMPVTS. (S)
BENTON COUNTY
ROUTE I-49 SEC. 29
ARKANSAS STATE HIGHWAY COMMISSION
LITTLE ROCK, ARK.

DRAWN BY: TLW DATE: 05/01/15 FILENAME: bCA0902x2_sc5.dgn
CHECKED BY: JDS DATE: 05/01/15 SCALE: 1/4" = 1'-0"
DESIGNED BY: TG DATE: 05/01/15

BRIDGE NO. 05982 DRAWING NO. 57209

DATE REVISED	DATE FILMED	DATE REVISED	DATE FILMED	FED. ROAD DIST. NO.	STATE	FED. AID PROJ. NO.	SHEET NO.	TOTAL SHEETS
				6	ARK.			
				JOB NO.		CA0902	338	581
				(1) 05982		BENT 1		57210

⑤ Remove existing wingwall, wingwall fillet as required and barrier, typ. Any exposed or projecting reinforcing left from the removal to be removed to 1½" clear and the remaining hole filled with grout.

(1) Portion of backwall concrete above the paving bracket to be removed. Existing backwall reinforcing steel to be retained and cleaned to lap to new reinforcing steel as shown. Replace the portion of backwall during new construction. Any damaged reinforcing steel shall be replaced by dowel bars drilled and grouted into place at the Contractor's expense.

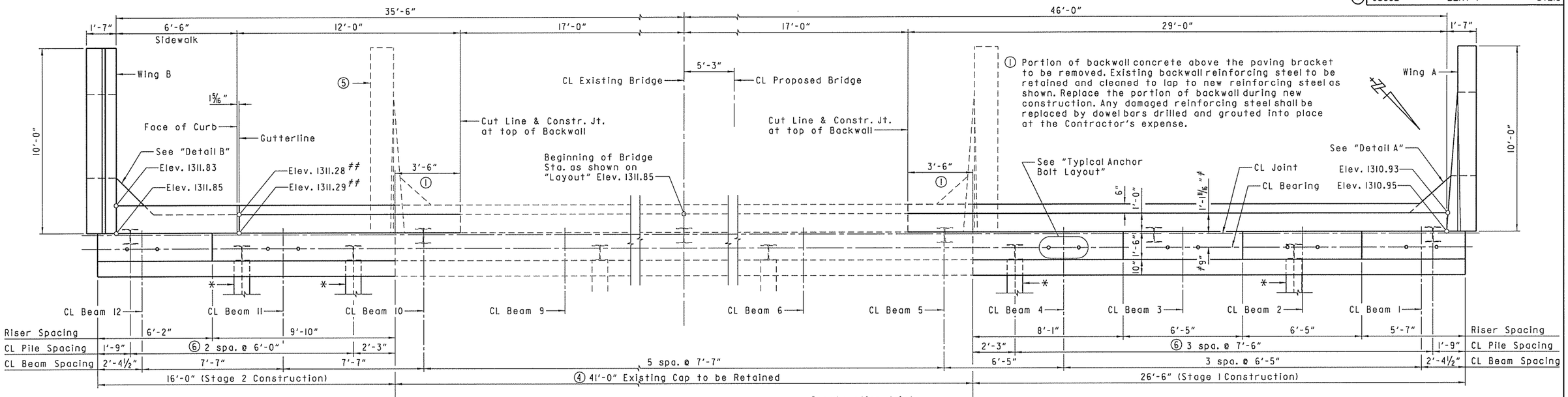

⑥ HP10x42 Steel Pile spacing.

*Batter 3V:1H
≠Measured from CL Joint
≠≠At Gutterline

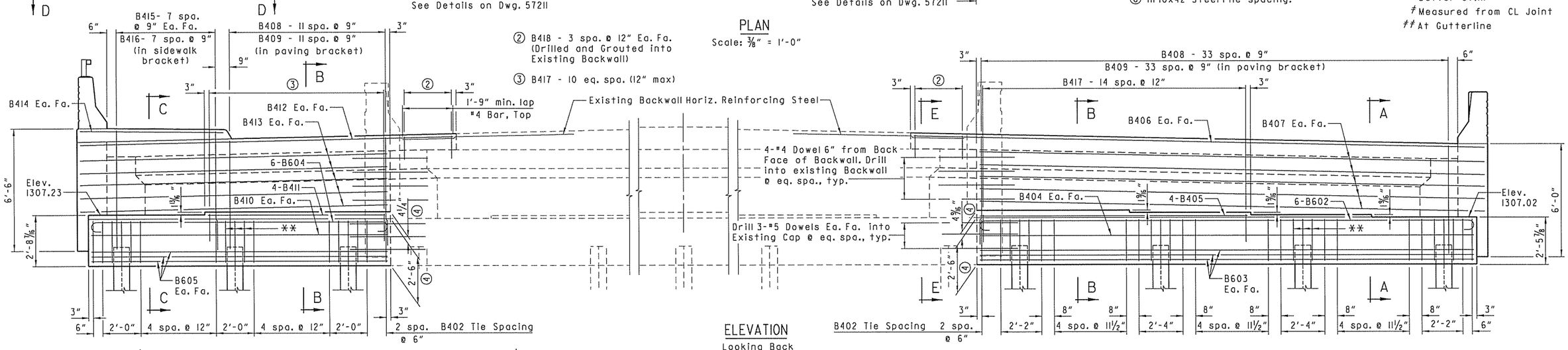

PLAN
Scale: ⅜" = 1'-0"

ELEVATION
Looking Back
Scale: ⅜" = 1'-0"

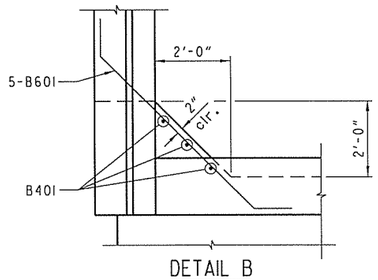

DETAIL B
Scale: ½" = 1'-0"

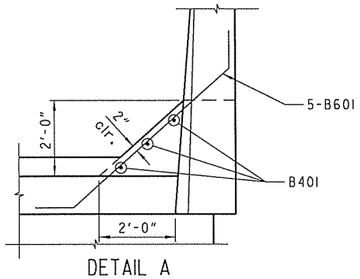

DETAIL A
Scale: ½" = 1'-0"

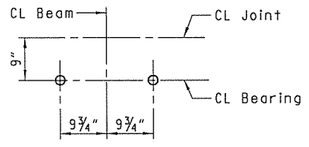

TYPICAL ANCHOR BOLT LAYOUT
Scale: ¾" = 1'-0"
For details of Elastomeric Bearings, see Dwg. No. 57235

④ These dimensions are based on the original plans. The Contractor shall verify in the field.

**B403 @ 6" typ. centered over each pile

STATE OF ARKANSAS
JERRY D. STEPHENSON
No. 16183
REGISTERED PROFESSIONAL ENGINEER
4-25-16
BRIDGE ENGINEER

SHEET 1 OF 5
DETAILS OF BENT 1
BRIDGE OVER I-49
ROUTE SEC.
ARKANSAS STATE HIGHWAY COMMISSION
LITTLE ROCK, ARK.

DRAWN BY: TLW DATE: 05/01/15 FILENAME: bCA0902x2_bll.dgn
CHECKED BY: RMH DATE: 05/01/15 SCALE: AS NOTED
DESIGNED BY: TG DATE: 05/01/15
BRIDGE NO. 05982 DRAWING NO. 57210

DATE REVISED	DATE FILMED	DATE REVISED	DATE FILMED	FED. ROAD DIST. NO.	STATE	FED. AID PROJ. NO.	SHEET NO.	TOTAL SHEETS
				6	ARK.			
				JOB NO.		CA0902	339	581
				(1) 05982		BENT 1		57211

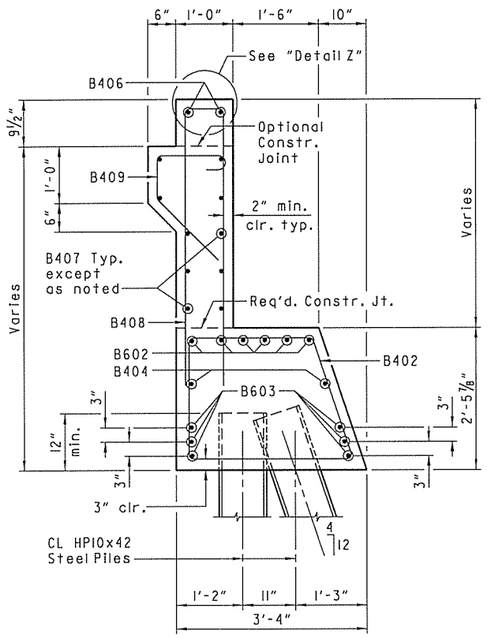

SECTION A-A
Scale: ¾" = 1'-0"

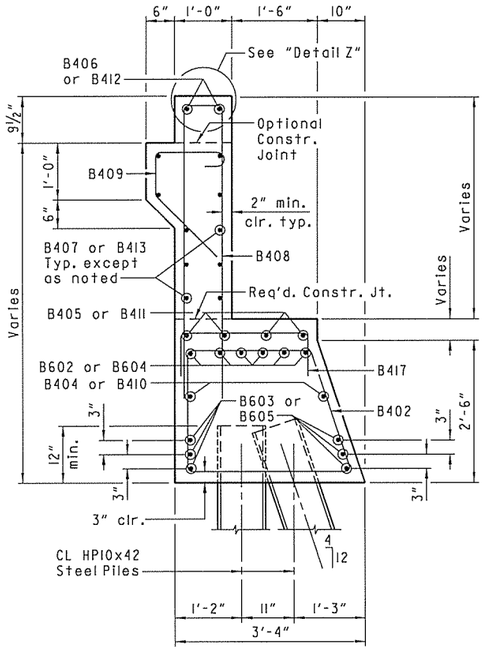

SECTION B-B
Scale: ¾" = 1'-0"

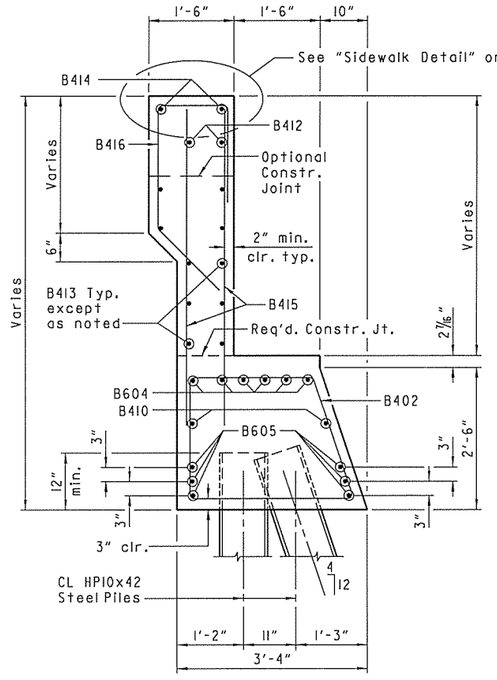

SECTION C-C
Scale: ¾" = 1'-0"

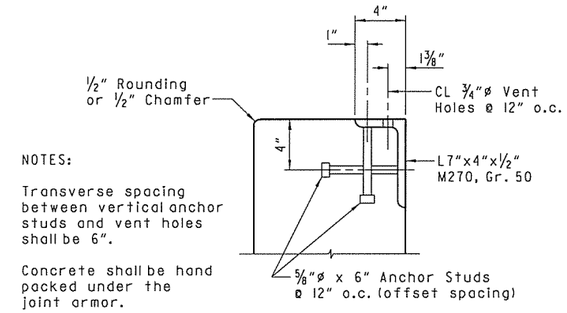

NOTES:

Transverse spacing between vertical anchor studs and vent holes shall be 6".

Concrete shall be hand packed under the joint armor.

For additional joint details, see Dwg. Nos. 57232 and 57233.

DETAIL Z
No Scale

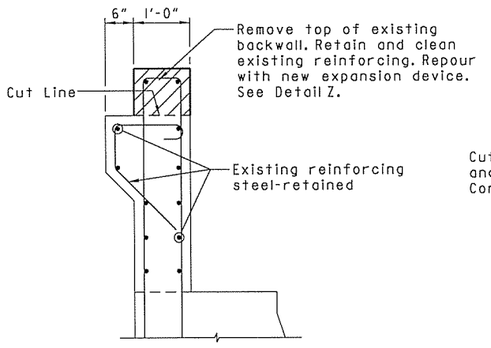

REMOVAL

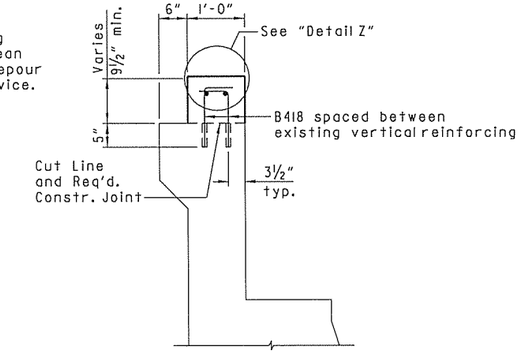

CONSTRUCTION

SECTION E-E
Scale: ¾" = 1'-0"

Grout B418 bars into 5" min. deep drilled holes. Grout used shall be an approved epoxy grout listed on the QPL. Hole diameter and installation procedure shall be as recommended by the grout manufacturer.

B418 bars shall be located to avoid damaging the existing backwall reinforcing steel. Payment for grouting and placement of bars shall be considered subsidiary to the pay item "Modification of Existing Bridge Structure (Br. No. 05982)".

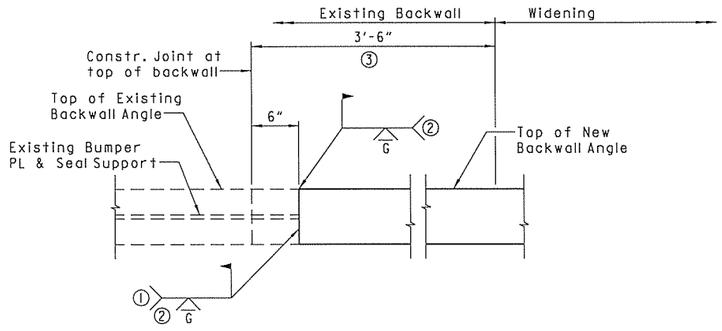

① Grind flush 5" from top of deck.

② Weld prior to pouring respective stage.

③ Portion of backwall concrete above paving bracket to be removed and then replaced during new construction.

DETAIL OF WELD LOCATION FOR EXPANSION DEVICE
No Scale
Stage I Construction shown.
Stage 2 Construction - Similar & Opposite

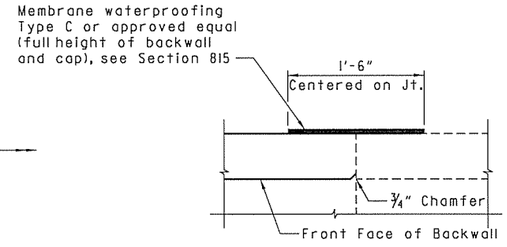

NOTE:

Payment for membrane to be considered subsidiary to "Class S Concrete-Bridge".

CONSTRUCTION JOINT DETAIL
No Scale

STATE OF ARKANSAS
REGISTERED PROFESSIONAL ENGINEER
No. 16183
JERRY D. STEVENSON
4.28.2015
BRIDGE ENGINEER

SHEET 2 OF 5
DETAILS OF BENT 1
BRIDGE OVER I-49
ROUTE SEC.
ARKANSAS STATE HIGHWAY COMMISSION
LITTLE ROCK, ARK.

DRAWN BY: TLW DATE: 05/01/15
CHECKED BY: RMH DATE: 05/01/15
DESIGNED BY: TG DATE: 05/01/15
FILENAME: bCA0902x2_bl2.dgn
SCALE: AS NOTED

BRIDGE NO. 05982 DRAWING NO. 57211

DATE REVISED	DATE FILMED	DATE REVISED	DATE FILMED	FED. ROAD DIST. NO.	STATE	FED. AID PROJ. NO.	SHEET NO.	TOTAL SHEETS
				6	ARK.			
				JOB NO.		CA0902	340	581
				(1) 05982		BENT 1		57212

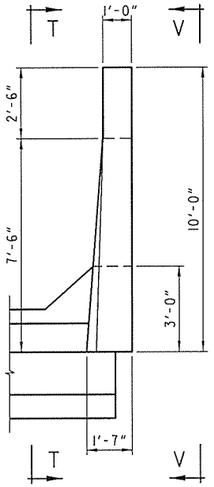

PLAN OF WING
Scale: 3/8" = 1'-0"

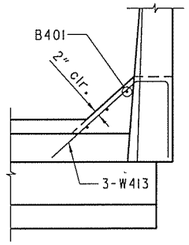

SECTION Z-Z
Scale: 3/8" = 1'-0"

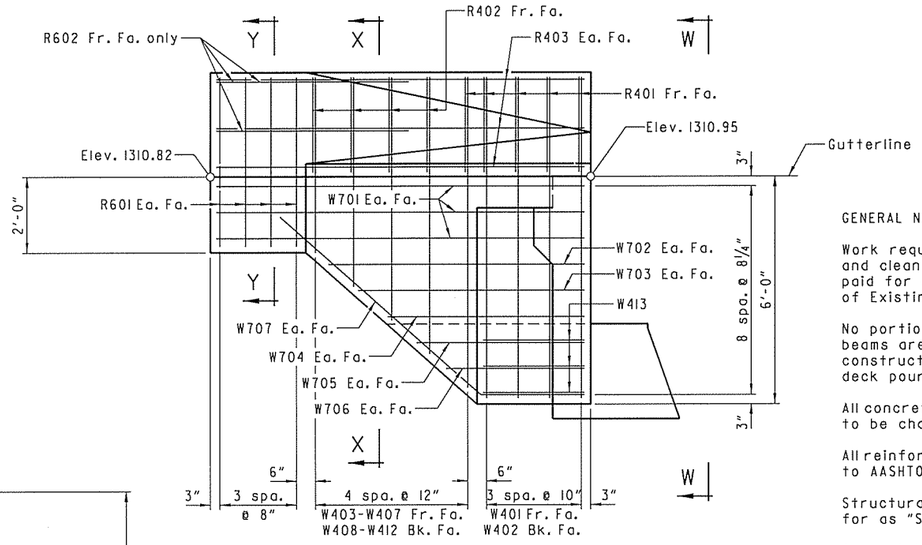

VIEW T-T
Scale: 1/2" = 1'-0"

GENERAL NOTES:

Work required to remove & dispose portions of the existing bridge, retain and clean existing reinforcing steel, and any required doweling will not be paid for directly but will be considered subsidiary to the item "Modification of Existing Bridge Structure (Br. No. 05982)".

No portion of the backwall for new construction shall be poured until the beams are in place. The portion of the backwall above the optional construction joint or paving bracket shall not be placed until the adjacent deck pour has been made.

All concrete shall be Class "S" and be poured in the dry. All exposed corners to be chamfered 3/4" unless otherwise noted.

All reinforcing steel shall be Grade 60 (Yield Strength = 60,000 psi) conforming to AASHTO M31 or M322, Type A, with mill test reports.

Structural steel in end bents shall be AASHTO M 270, Gr. 50 and shall be paid for as "Structural Steel in Beam Spans (M 270, Grade 50)".

Top reinforcing bars shall be properly placed to avoid interference with anchor bolts or sheet metal sleeves.

For additional information, see "Layout".

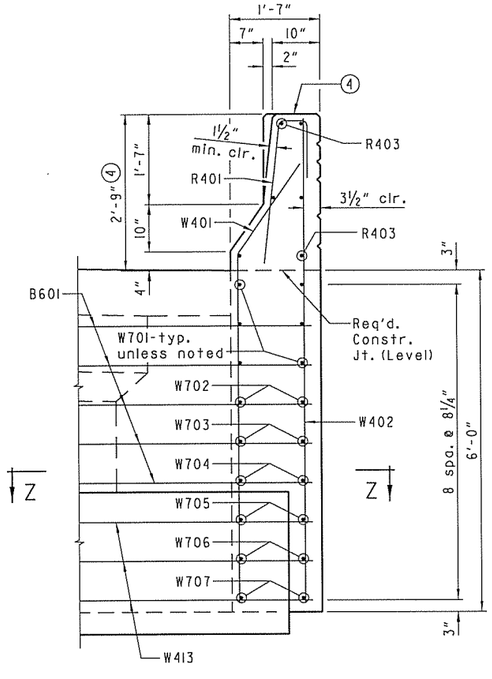

VIEW W-W
Scale: 3/4" = 1'-0"

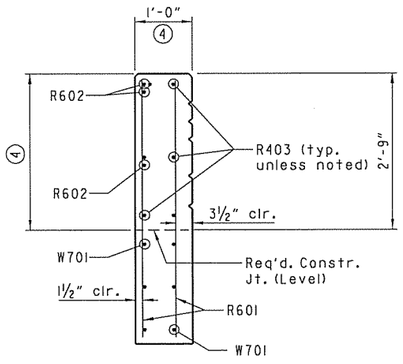

SECTION Y-Y
Scale: 3/4" = 1'-0"

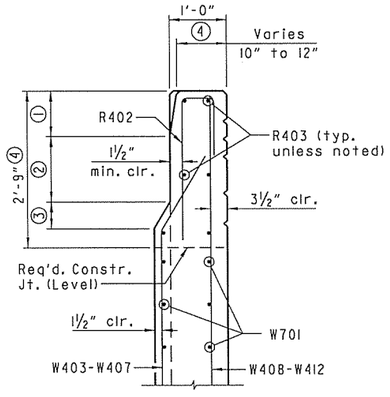

SECTION X-X
Scale: 3/4" = 1'-0"

① Varies 1'-7" to 0"
② Varies 0" to 2'-5"
③ Varies 10" to 0"

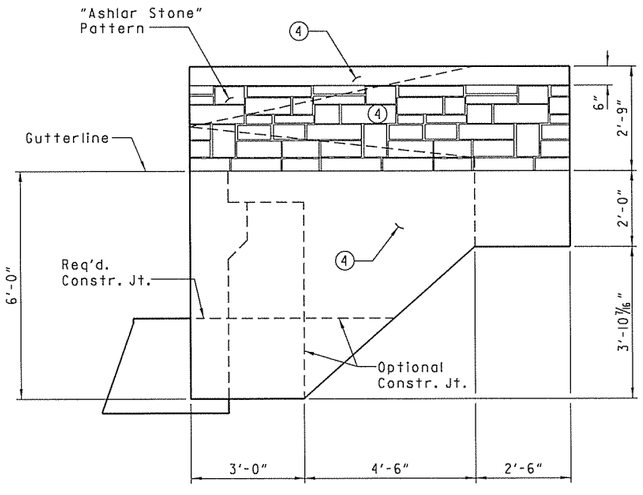

VIEW V-V
Scale: 1/2" = 1'-0"

④ Class 3 Textured Coating Finish (Color = Gray, Color Chip No. 37150)

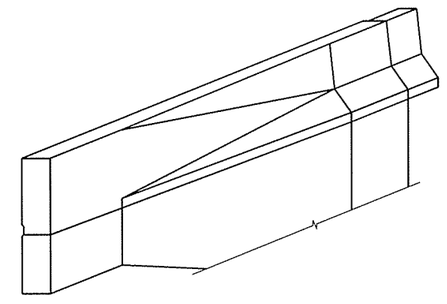

THREE DIMENSIONAL VIEW OF RAIL
Scale: 3/8" = 1'-0"

DETAILS - WING A

STATE OF ARKANSAS
REGISTERED PROFESSIONAL ENGINEER
No. 16183
JERRY D. STEVENSON
4.29.2016
BRIDGE ENGINEER

SHEET 3 OF 5
DETAILS OF BENT 1
BRIDGE OVER I-49
ROUTE SEC.
ARKANSAS STATE HIGHWAY COMMISSION
LITTLE ROCK, ARK.

DRAWN BY: TLW DATE: 05/01/15
CHECKED BY: RMH DATE: 05/01/15
DESIGNED BY: TG DATE: 05/01/15
FILENAME: bCA0902x2_bl3.dgn
SCALE: AS NOTED

BRIDGE NO. 05982 DRAWING NO. 57212

DATE REVISED	DATE FILMED	DATE REVISED	DATE FILMED	FED. ROAD DIST. NO.	STATE	FED. AID PROJ. NO.	SHEET NO.	TOTAL SHEETS
				6	ARK.			
				JOB NO.		CA0902	341	581
				(1) 05982		BENT 1		57213

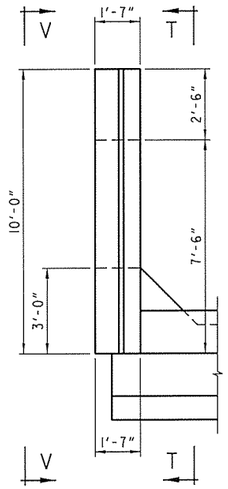

PLAN OF WING
Scale: 3/8" = 1'-0"

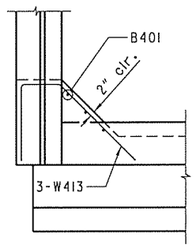

SECTION Z-Z
Scale: 3/8" = 1'-0"

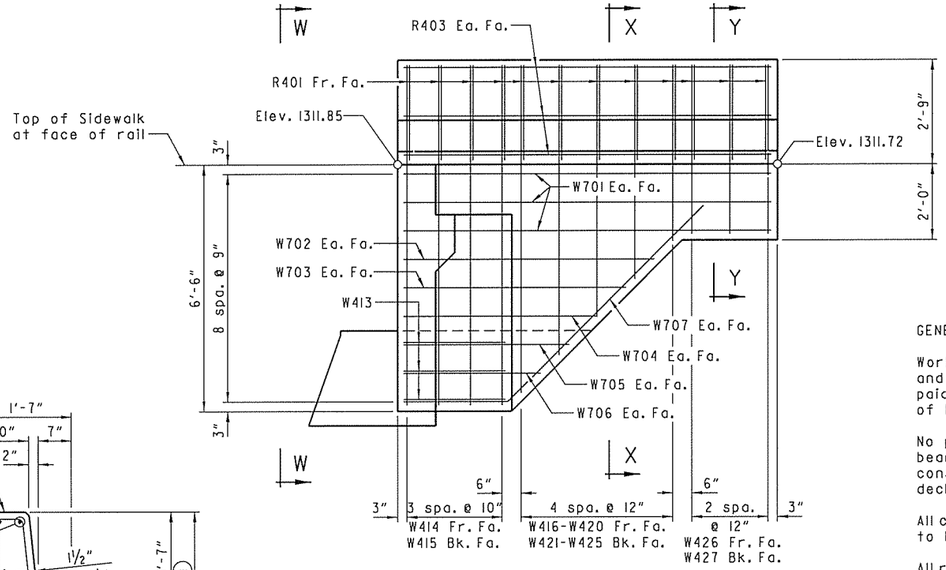

VIEW T-T
Scale: 1/2" = 1'-0"

GENERAL NOTES:

Work required to remove & dispose portions of the existing bridge, retain and clean existing reinforcing steel, and any required doweling will not be paid for directly but will be considered subsidiary to the item "Modification of Existing Bridge Structure (Br. No. 05982)".

No portion of the backwall for new construction shall be poured until the beams are in place. The portion of the backwall above the optional construction joint or paving bracket shall not be placed until the adjacent deck pour has been made.

All concrete shall be Class "S" and be poured in the dry. All exposed corners to be chamfered 3/4" unless otherwise noted.

All reinforcing steel shall be Grade 60 (Yield Strength = 60,000 psi) conforming to AASHTO M31 or M322, Type A, with mill test reports.

Structural steel in end bents shall be AASHTO M 270, Gr. 50 and shall be paid for as "Structural Steel in Beam Spans (M 270, Grade 50)".

Top reinforcing bars shall be properly placed to avoid interference with anchor bolts or sheet metal sleeves.

For additional information, see "Layout".

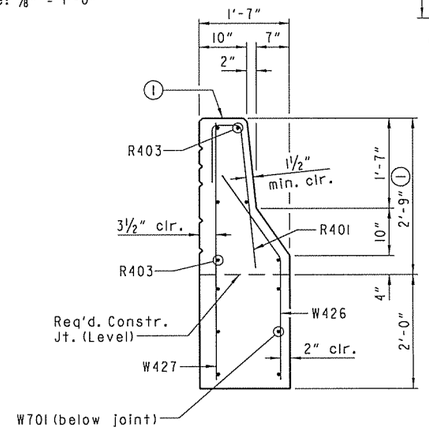

SECTION Y-Y
Scale: 3/4" = 1'-0"

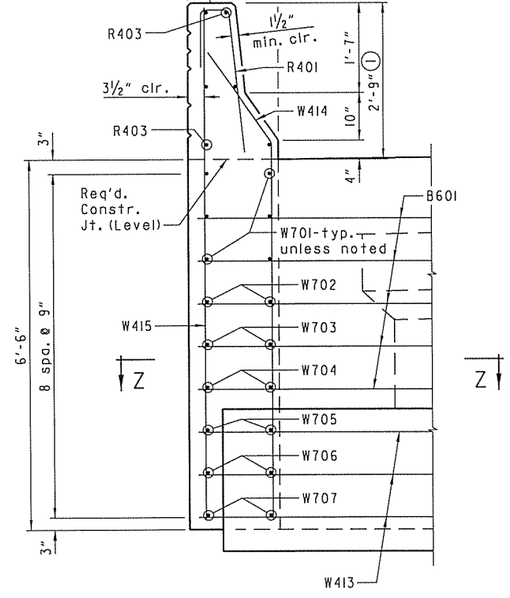

VIEW W-W
Scale: 3/4" = 1'-0"

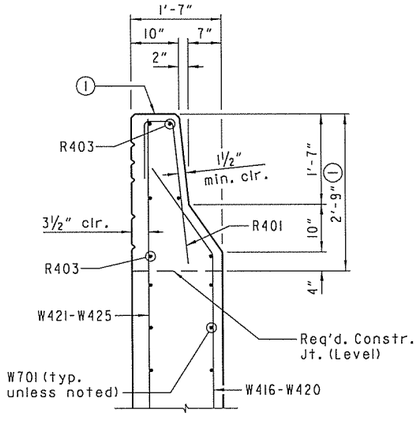

SECTION X-X
Scale: 3/4" = 1'-0"

DETAILS - WING B

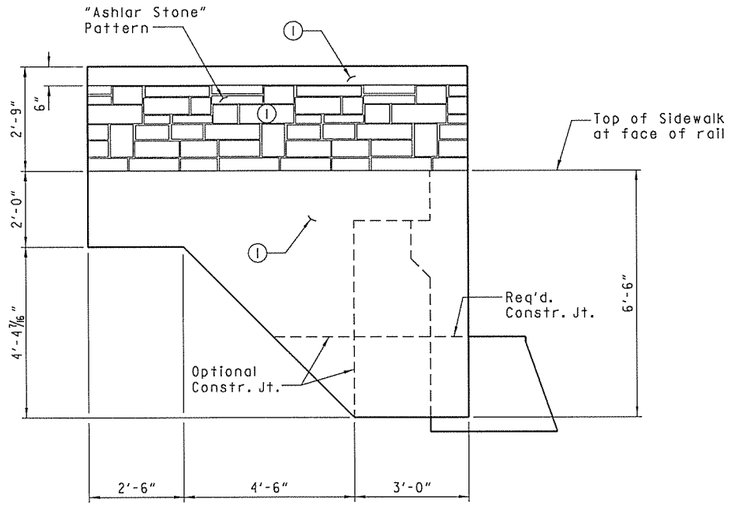

VIEW V-V
Scale: 1/2" = 1'-0"

(1) Class 3 Textured Coating Finish (Color = Gray, Color Chip No. 37150)

STATE OF ARKANSAS
REGISTERED PROFESSIONAL ENGINEER
No. 16183
JERRY D. PETTEYSON
4.23.15
BRIDGE ENGINEER

SHEET 4 OF 5
DETAILS OF BENT 1
BRIDGE OVER I-49
ROUTE SEC.
ARKANSAS STATE HIGHWAY COMMISSION
LITTLE ROCK, ARK.

DRAWN BY: TLW DATE: 05/01/15 FILENAME: bCA0902x2_bl4.dgn
CHECKED BY: RMH DATE: 05/01/15 SCALE: AS NOTED
DESIGNED BY: TG DATE: 05/01/15

BRIDGE NO. 05982 DRAWING NO. 57213

DATE REVISED	DATE FILMED	DATE REVISED	DATE FILMED	FED. ROAD DIST. NO.	STATE	FED. AID PROJ. NO.	SHEET NO.	TOTAL SHEETS
				6	ARK.			
				JOB NO.		CA0902	342	581
				(1) 05982		BENT 1		57214

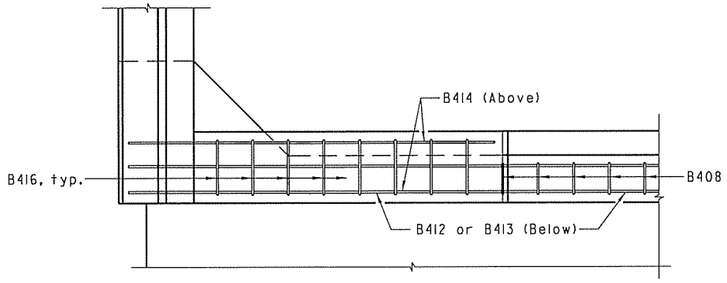

VIEW D-D
No Scale

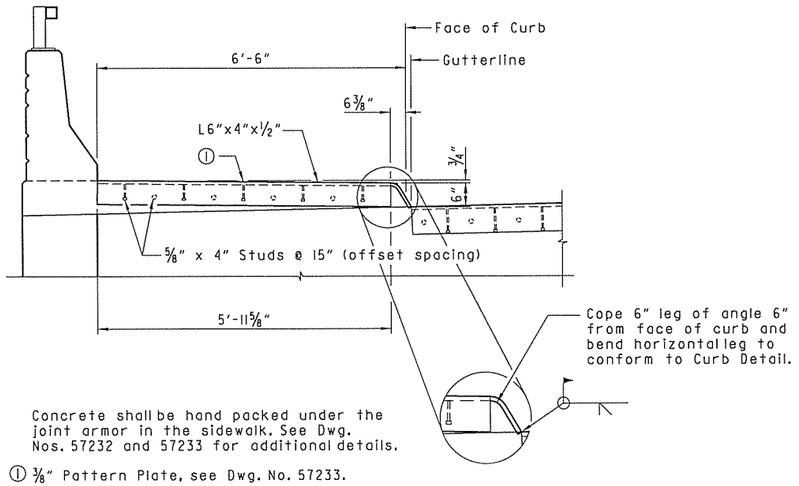

Concrete shall be hand packed under the joint armor in the sidewalk. See Dwg. Nos. 57232 and 57233 for additional details.

(1) 3/8" Pattern Plate, see Dwg. No. 57233.

SIDEWALK DETAIL
No Scale

BAR LIST

MARK	NO. REQ'D.	LENGTH	PIN. DIA.
B401	6	4'-10"	str.
B402	41	9'-8"	2"
B403	21	6'-3"	2"
B404	2	26'-3"	Str.
B405	4	14'-3"	Str.
B406	2	28'-10"	Str.
B407	10	26'-10"	Str.
B408	46	11'-10"	2"
B409	46	3'-11"	2"
B410	2	15'-9"	Str.
B411	4	9'-7"	Str.
B412	2	18'-4"	Str.
B413	10	16'-4"	Str.
B414	2	7'-7"	Str.
B415	16	6'-3"	Str.
B416	8	5'-8"	2"
B417	26	5'-4"	2"
B418	16	1'-5"	2"
R401	17	3'-10"	2"
R402	4	3'-11"	2"
R403	12	9'-9"	Str.
R601	8	4'-5"	Str.
R602	3	5'-0"	Str.
B601	10	7'-2"	4 1/2"
B602	6	27'-7"	4 1/2"
B603	6	26'-3"	Str.
B604	6	17'-1"	4 1/2"
B605	6	15'-9"	Str.
W401	4	8'-0"	2"
W402	4	8'-5"	Str.
W403-W407	1 Ea.	Var. 7'-10" to 4'-2"	2"
W408-W412	1 Ea.	Var. 8'-3" to 4'-7"	Str.
W413	6	7'-8"	2"
W414	4	8'-6"	2"
W415	4	8'-11"	Str.
W416-W420	1 Ea.	Var. 4'-3" to 8'-3"	2"
W421-W425	1 Ea.	Var. 4'-8" to 8'-8"	Str.
W426	3	4'-0"	2"
W427	3	4'-5"	Str.
W701	12	9'-9"	Str.
W702	4	6'-7"	Str.
W703	4	5'-10"	Str.
W704	4	5'-1"	Str.
W705	4	4'-4"	Str.
W706	4	3'-7"	Str.
W707	4	10'-3"	5 1/4"

BENDING DIAGRAM

Dimensions are out to out of bars.

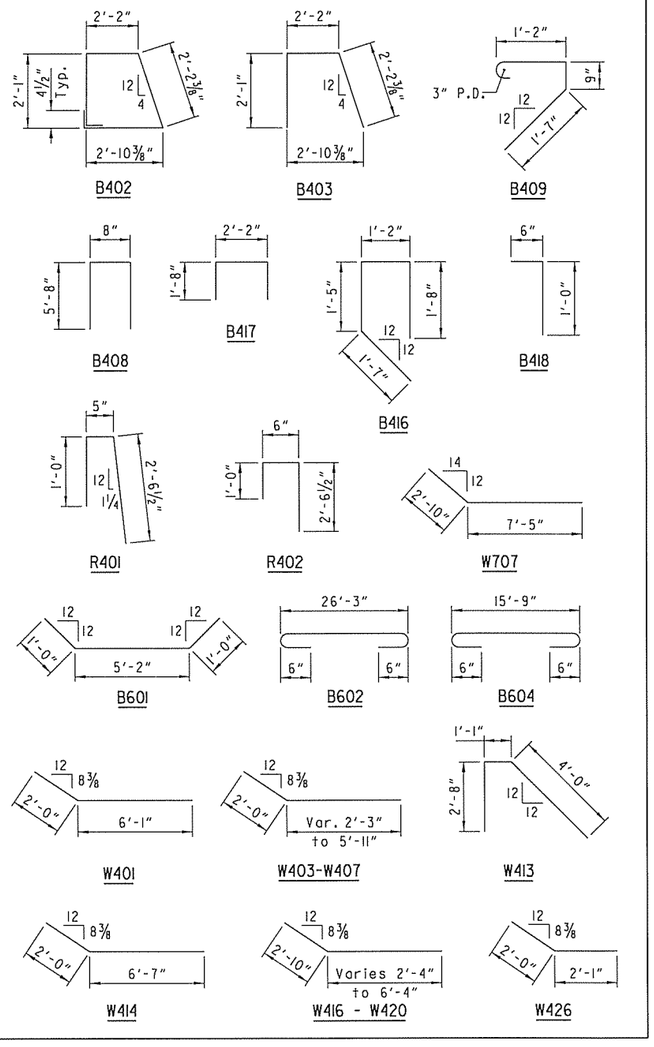

STATE OF ARKANSAS
REGISTERED PROFESSIONAL ENGINEER
No. 16183
JERRY M. PETTENGILL
4.29.15
BRIDGE ENGINEER

SHEET 5 OF 5
DETAILS OF BENT 1
BRIDGE OVER I-49
ROUTE SEC.
ARKANSAS STATE HIGHWAY COMMISSION
LITTLE ROCK, ARK.

DRAWN BY: TLW DATE: 05/01/15
CHECKED BY: RMH DATE: 05/01/15
DESIGNED BY: TG DATE: 05/01/15
FILENAME: bCA0902x2_bl5.dgn
SCALE: AS NOTED

BRIDGE NO. 05982 DRAWING NO. 57214

DATE REVISED	DATE FILMED	DATE REVISED	DATE FILMED	FED. ROAD DIST. NO.	STATE	FED. AID PROJ. NO.	SHEET NO.	TOTAL SHEETS
				6	ARK.			
				JOB NO.		CA0902	343	581
				(1) 05982		BENT 5		57215

⑤ Remove existing wingwall, wingwall fillet as required and barrier, typ. Any exposed or projecting reinforcing left from the removal to be removed to 1½" clear and the remaining hole filled with grout.

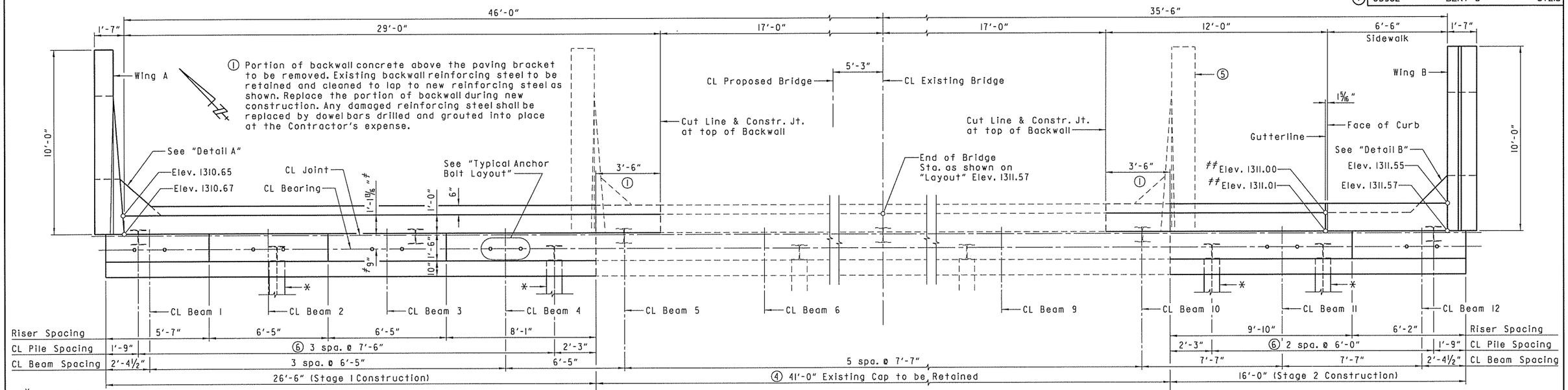

PLAN
Scale: ⅜" = 1'-0"

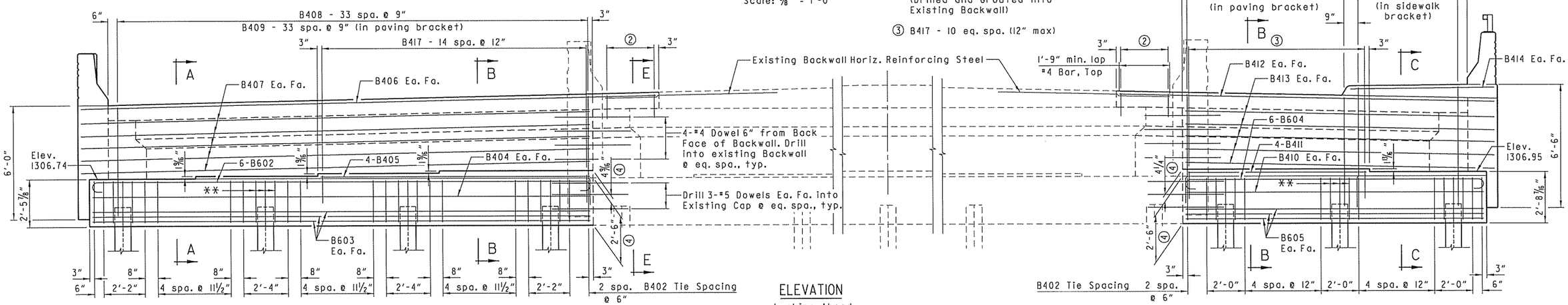

ELEVATION
Looking Ahead
Scale: ⅜" = 1'-0"

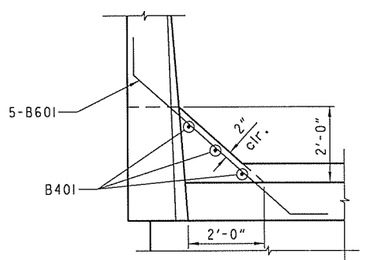

DETAIL A
Scale: ½" = 1'-0"

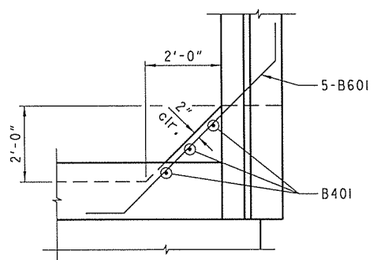

DETAIL B
Scale: ½" = 1'-0"

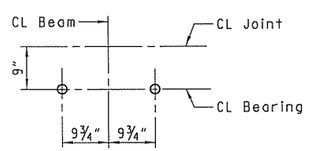

TYPICAL ANCHOR BOLT LAYOUT
Scale: ¾" = 1'-0"
For details of Elastomeric Bearings, see Dwg. No. 57235

④ These dimensions are based on the original plans. The Contractor shall verify in the field.

** B403 @ 6" typ. centered over each pile

STATE OF ARKANSAS
REGISTERED PROFESSIONAL ENGINEER
No. 16185
JERRY D. STEVENSON
4.23.2016
BRIDGE ENGINEER

SHEET 1 OF 5
DETAILS OF BENT 5
BRIDGE OVER I-49
ROUTE SEC.
ARKANSAS STATE HIGHWAY COMMISSION
LITTLE ROCK, ARK.

DRAWN BY: TLW DATE: 05/01/15
CHECKED BY: RMH DATE: 05/01/15
DESIGNED BY: TG DATE: 05/01/15
FILENAME: bCA0902x2_b51.dgn
SCALE: AS NOTED

BRIDGE NO. 05982 DRAWING NO. 57215

DATE REVISED	DATE FILMED	DATE REVISED	DATE FILMED	FED. ROAD DIST. NO.	STATE	FED. AID PROJ. NO.	SHEET NO.	TOTAL SHEETS
				6	ARK.			
				JOB NO.		CA0902	344	581
				(1) 05982		BENT 5		57216

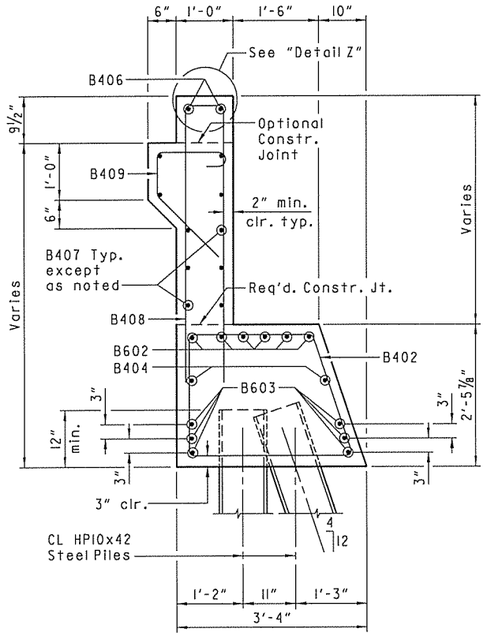

SECTION A-A
Scale: ¾" = 1'-0"

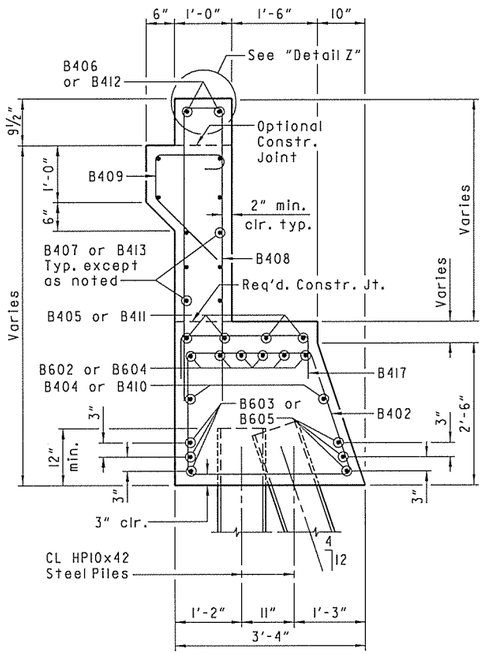

SECTION B-B
Scale: ¾" = 1'-0"

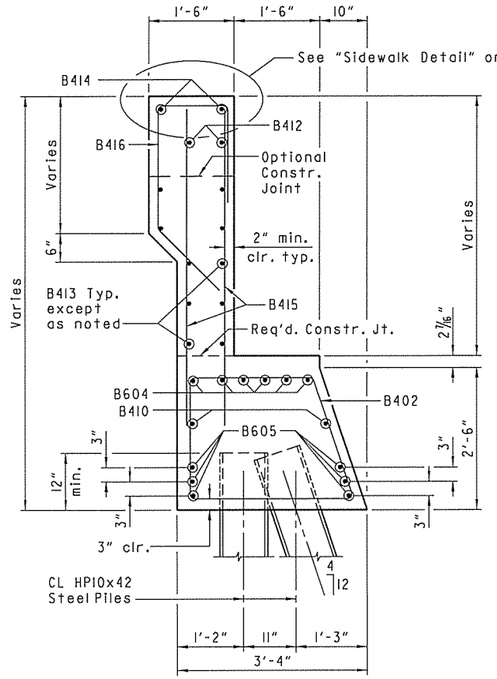

SECTION C-C
Scale: ¾" = 1'-0"

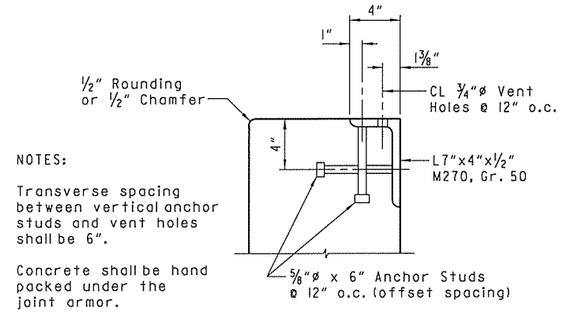

NOTES:

Transverse spacing between vertical anchor studs and vent holes shall be 6".

Concrete shall be hand packed under the joint armor.

For additional joint details, see Dwg. Nos. 57232 and 57233.

DETAIL Z
No Scale

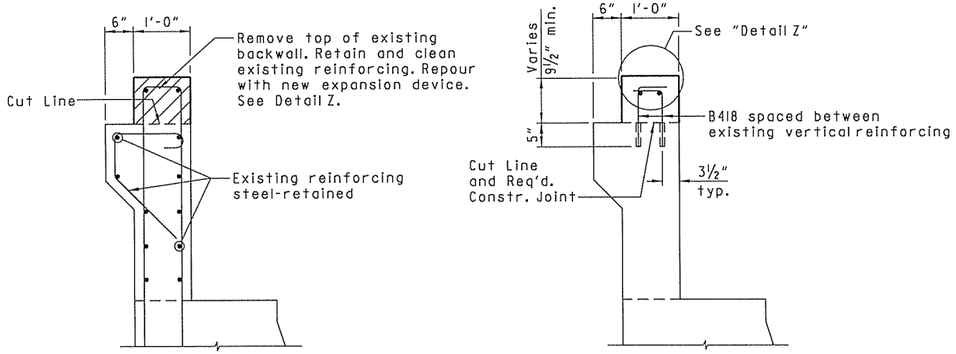

SECTION E-E
Scale: ¾" = 1'-0"

Grout B418 bars into 5" min. deep drilled holes. Grout used shall be an approved epoxy grout listed on the OPL. Hole diameter and installation procedure shall be as recommended by the grout manufacturer.

B418 bars shall be located to avoid damaging the existing backwall reinforcing steel. Payment for grouting and placement of bars shall be considered subsidiary to the pay item "Modification of Existing Bridge Structure (Br. No. 05982)".

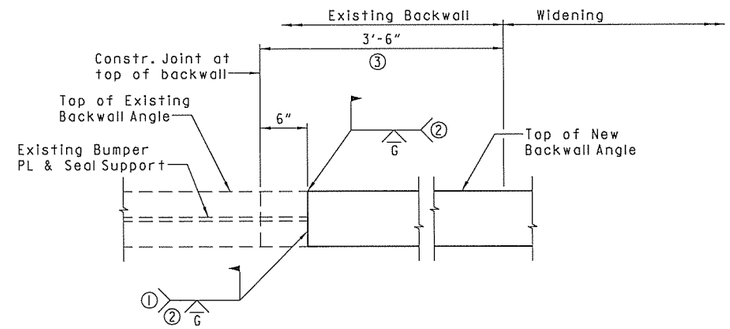

① Grind flush 5" from top of deck.

② Weld prior to pouring respective stage.

③ Portion of backwall concrete above paving bracket to be removed and then replaced during new construction.

DETAIL OF WELD LOCATION FOR EXPANSION DEVICE
No Scale
Stage 1 Construction - Similar & Opposite
Stage 2 Construction shown.

Membrane waterproofing Type C or approved equal (full height of backwall and cap), see Section 815

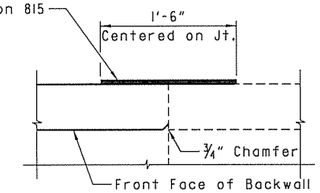

NOTE:

Payment for membrane to be considered subsidiary to "Class S Concrete-Bridge".

CONSTRUCTION JOINT DETAIL
No Scale

STATE OF ARKANSAS
REGISTERED PROFESSIONAL ENGINEER
N. 16185
JERRY M. GUESSFORD
4.23.2015
BRIDGE ENGINEER

SHEET 2 OF 5
DETAILS OF BENT 5
BRIDGE OVER I-49
ROUTE SEC.
ARKANSAS STATE HIGHWAY COMMISSION
LITTLE ROCK, ARK.

DRAWN BY: TLW DATE: 05/01/15
CHECKED BY: RMH DATE: 05/01/15
DESIGNED BY: TG DATE: 05/01/15
FILENAME: bCA0902x2_b52.dgn
SCALE: AS NOTED

BRIDGE NO. 05982 DRAWING NO. 57216

DATE REVISED	DATE FILMED	DATE REVISED	DATE FILMED	FED. ROAD DIST. NO.	STATE	FED. AID PROJ. NO.	SHEET NO.	TOTAL SHEETS
				6	ARK.			
				JOB NO.		CA0902	345	581
				(1) 05982		BENT 5		57217

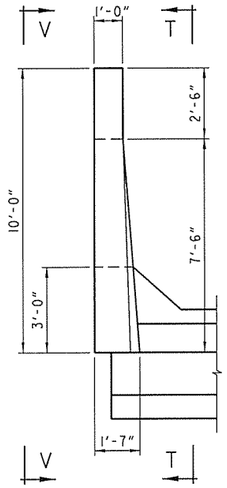

PLAN OF WING
Scale: 3/8" = 1'-0"

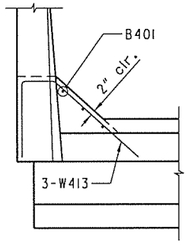

SECTION Z-Z
Scale: 3/8" = 1'-0"

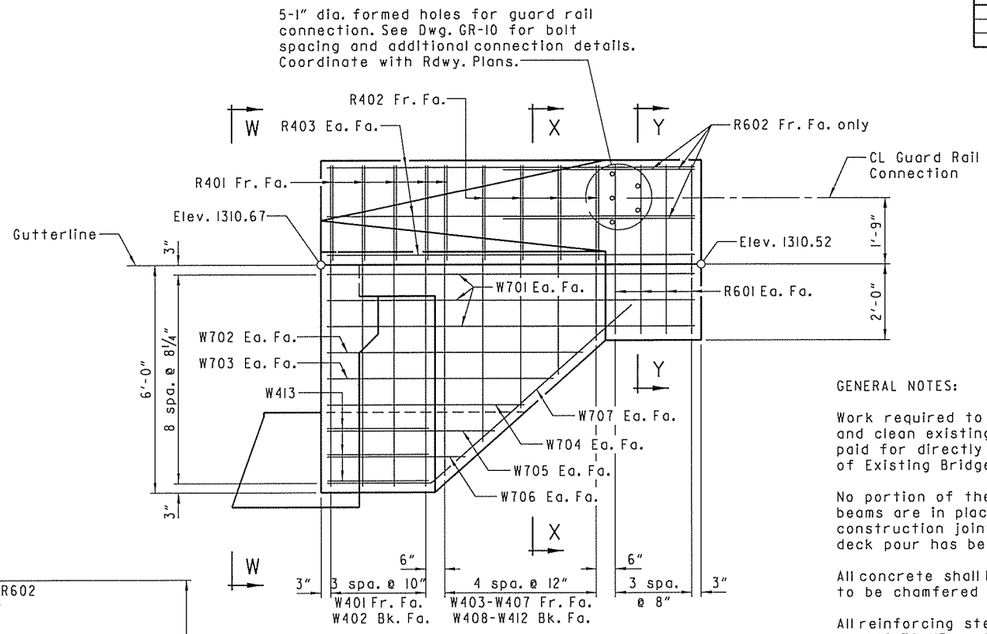

VIEW T-T
Scale: 1/2" = 1'-0"

GENERAL NOTES:

Work required to remove & dispose portions of the existing bridge, retain and clean existing reinforcing steel, and any required doweling will not be paid for directly but will be considered subsidiary to the item "Modification of Existing Bridge Structure (Br. No. 05982)".

No portion of the backwall for new construction shall be poured until the beams are in place. The portion of the backwall above the optional construction joint or paving bracket shall not be placed until the adjacent deck pour has been made.

All concrete shall be Class "S" and be poured in the dry. All exposed corners to be chamfered 3/4" unless otherwise noted.

All reinforcing steel shall be Grade 60 (Yield Strength = 60,000 psi) conforming to AASHTO M31 or M322, Type A, with mill test reports.

Structural steel in end bents shall be AASHTO M 270, Gr. 50 and shall be paid for as "Structural Steel in Beam Spans (M 270, Grade 50)".

Top reinforcing bars shall be properly placed to avoid interference with anchor bolts or sheet metal sleeves.

For additional information, see "Layout".

SECTION Y-Y
Scale: 3/4" = 1'-0"

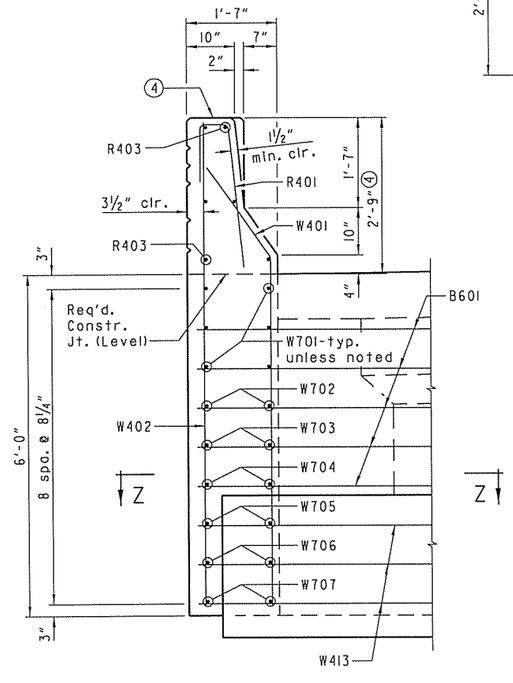

VIEW W-W
Scale: 3/4" = 1'-0"

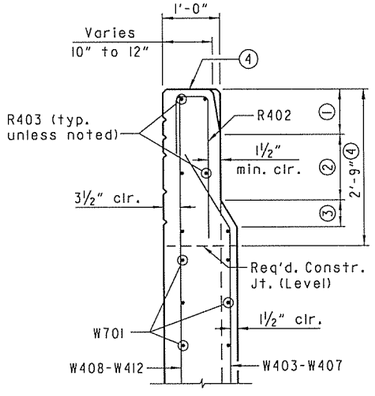

SECTION X-X
Scale: 3/4" = 1'-0"

① Varies 1'-7" to 0"
② Varies 0" to 2'-5"
③ Varies 10" to 0"

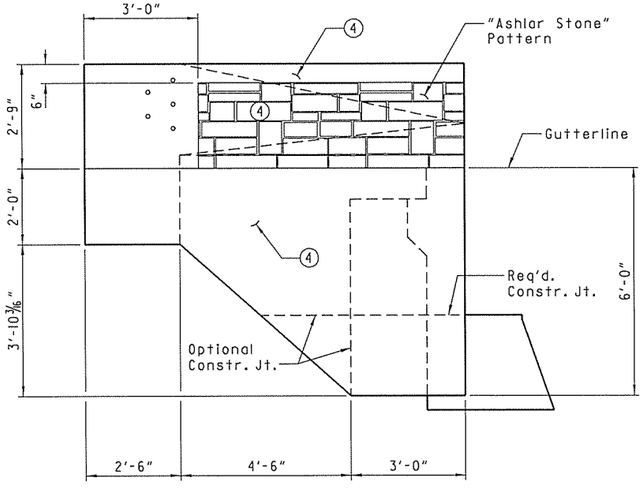

VIEW V-V
Scale: 1/2" = 1'-0"

④ Class 3 Textured Coating Finish (Color = Gray, Color Chip No. 37150)

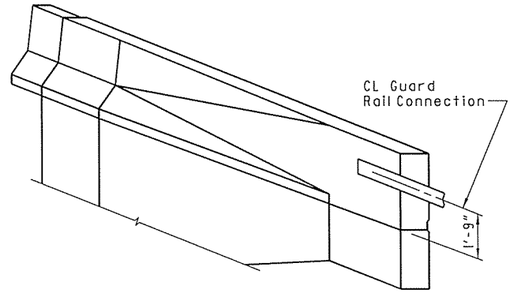

For details of guard rail connection, see Std. Dwg. No. GR-10

THREE DIMENSIONAL VIEW OF RAIL
Scale: 3/8" = 1'-0"

STATE OF ARKANSAS
REGISTERED PROFESSIONAL ENGINEER
No. 16183
JERRY R. PEVERSON
4.25.2016
BRIDGE ENGINEER

DETAILS - WING A

SHEET 3 OF 5
DETAILS OF BENT 5
BRIDGE OVER I-49
ROUTE SEC.
ARKANSAS STATE HIGHWAY COMMISSION
LITTLE ROCK, ARK.

DRAWN BY: TLW DATE: 05/01/15 FILENAME: bCA0902x2_b53.dgn
CHECKED BY: RMH DATE: 05/01/15 SCALE: AS NOTED
DESIGNED BY: TG DATE: 05/01/15

BRIDGE NO. 05982 DRAWING NO. 57217

DATE REVISED	DATE FILMED	DATE REVISED	DATE FILMED	FED. ROAD DIST. NO.	STATE	FED. AID PROJ. NO.	SHEET NO.	TOTAL SHEETS
				6	ARK.			
				JOB NO.		CA0902	346	581
				(1) 05982		BENT 5		57218

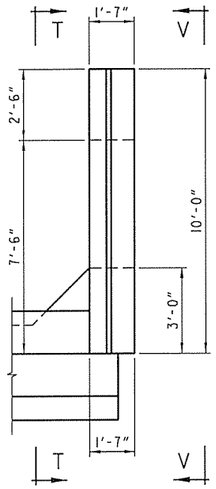

PLAN OF WING
Scale: 3/8" = 1'-0"

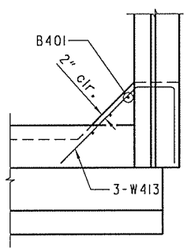

SECTION Z-Z
Scale: 3/8" = 1'-0"

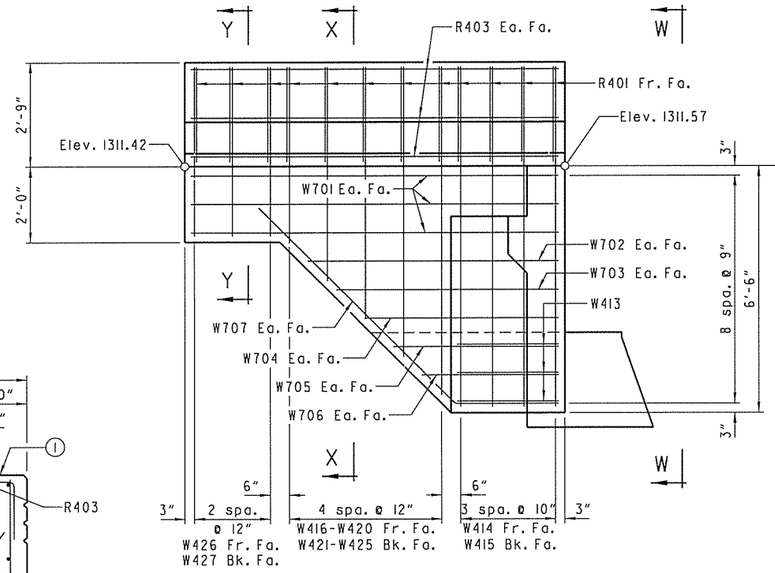

VIEW T-T
Scale: 1/2" = 1'-0"

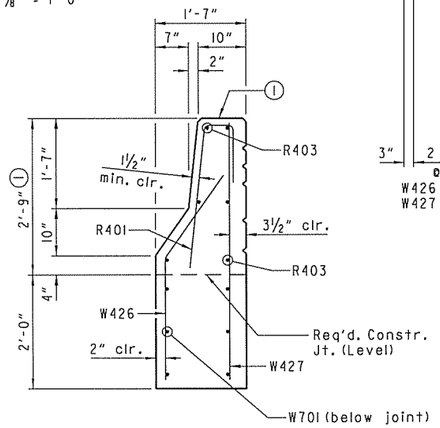

SECTION Y-Y
Scale: 3/4" = 1'-0"

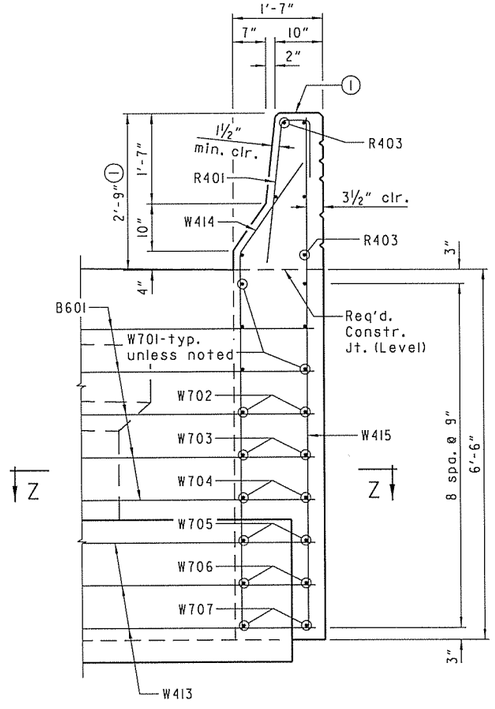

VIEW W-W
Scale: 3/4" = 1'-0"

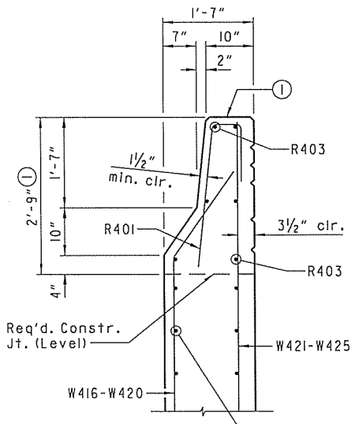

SECTION X-X
Scale: 3/4" = 1'-0"

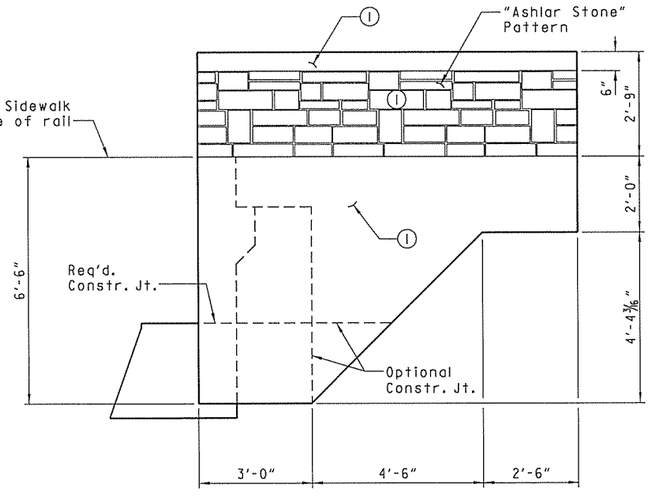

VIEW V-V
Scale: 1/2" = 1'-0"

(1) Class 3 Textured Coating Finish (Color = Gray, Color Chip No. 37150)

GENERAL NOTES:

Work required to remove & dispose portions of the existing bridge, retain and clean existing reinforcing steel, and any required doweling will not be paid for directly but will be considered subsidiary to the item "Modification of Existing Bridge Structure (Br. No. 05982)".

No portion of the backwall for new construction shall be poured until the beams are in place. The portion of the backwall above the optional construction joint or paving bracket shall not be placed until the adjacent deck pour has been made.

All concrete shall be Class "S" and be poured in the dry. All exposed corners to be chamfered 3/4" unless otherwise noted.

All reinforcing steel shall be Grade 60 (Yield Strength = 60,000 psi) conforming to AASHTO M31 or M322, Type A, with mill test reports.

Structural steel in end bents shall be AASHTO M 270, Gr. 50 and shall be paid for as "Structural Steel in Beam Spans (M 270, Grade 50)".

Top reinforcing bars shall be properly placed to avoid interference with anchor bolts or sheet metal sleeves.

For additional information, see "Layout".

DETAILS - WING B

STATE OF ARKANSAS
JERRY D. STEVENSON
REGISTERED PROFESSIONAL ENGINEER
No. 16185
4.23.2015
BRIDGE ENGINEER

SHEET 4 OF 5
DETAILS OF BENT 5
BRIDGE OVER I-49
ROUTE SEC.
ARKANSAS STATE HIGHWAY COMMISSION
LITTLE ROCK, ARK.

DRAWN BY: TLW DATE: 05/01/15 FILENAME: bCA0902x2_b54.dgn
CHECKED BY: RMH DATE: 05/01/15 SCALE: AS NOTED
DESIGNED BY: TG DATE: 05/01/15
BRIDGE NO. 05982 DRAWING NO. 57218

DATE REVISED	DATE FILMED	DATE REVISED	DATE FILMED	FED. ROAD DIST. NO.	STATE	FED. AID PROJ. NO.	SHEET NO.	TOTAL SHEETS
				6	ARK.			
				JOB NO.		CA0902	347	581
				(1) 05982		BENT 5		57219

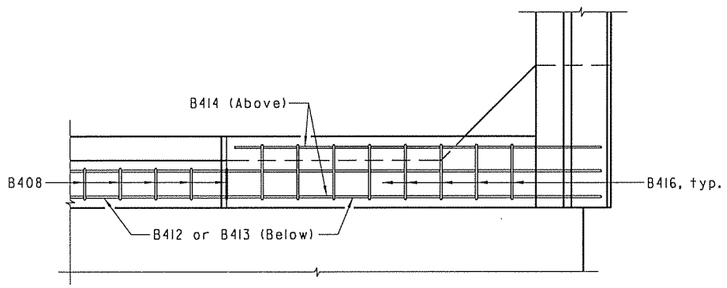

VIEW D-D
No Scale

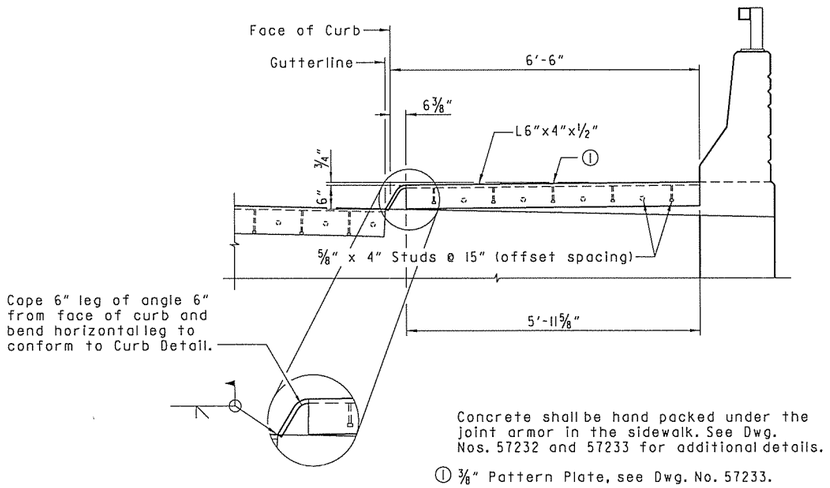

Concrete shall be hand packed under the joint armor in the sidewalk. See Dwg. Nos. 57232 and 57233 for additional details.

① ⅜" Pattern Plate, see Dwg. No. 57233.

SIDEWALK DETAIL
No Scale

BAR LIST

MARK	NO. REQ'D.	LENGTH	PIN. DIA.
B401	6	4'-10"	str.
B402	41	9'-8"	2"
B403	21	6'-3"	2"
B404	2	26'-3"	Str.
B405	4	14'-3"	Str.
B406	2	28'-10"	Str.
B407	10	26'-10"	Str.
B408	46	11'-10"	2"
B409	46	3'-11"	2"
B410	2	15'-9"	Str.
B411	4	9'-7"	Str.
B412	2	18'-4"	Str.
B413	10	16'-4"	Str.
B414	2	7'-7"	Str.
B415	16	6'-3"	Str.
B416	8	5'-8"	2"
B417	26	5'-4"	2"
B418	16	1'-5"	2"
R401	17	3'-10"	2"
R402	4	3'-11"	2"
R403	12	9'-9"	Str.
R601	8	4'-5"	Str.
R602	3	5'-0"	Str.
B601	10	7'-2"	4½"
B602	6	27'-7"	4½"
B603	6	26'-3"	Str.
B604	6	17'-1"	4½"
B605	6	15'-9"	Str.
W401	4	8'-0"	2"
W402	4	8'-5"	Str.
W403-W407	1 Ea.	Var. 7'-10" to 4'-2"	2"
W408-W412	1 Ea.	Var. 8'-3" to 4'-7"	Str.
W413	6	7'-8"	2"
W414	4	8'-6"	2"
W415	4	8'-11"	Str.
W416-W420	1 Ea.	Var. 4'-3" to 8'-3"	2"
W421-W425	1 Ea.	Var. 4'-8" to 8'-8"	Str.
W426	3	4'-0"	2"
W427	3	4'-5"	Str.
W701	12	9'-9"	Str.
W702	4	6'-7"	Str.
W703	4	5'-10"	Str.
W704	4	5'-1"	Str.
W705	4	4'-4"	Str.
W706	4	3'-7"	Str.
W707	4	10'-3"	5¼"

BENDING DIAGRAM

Dimensions are out to out of bars.

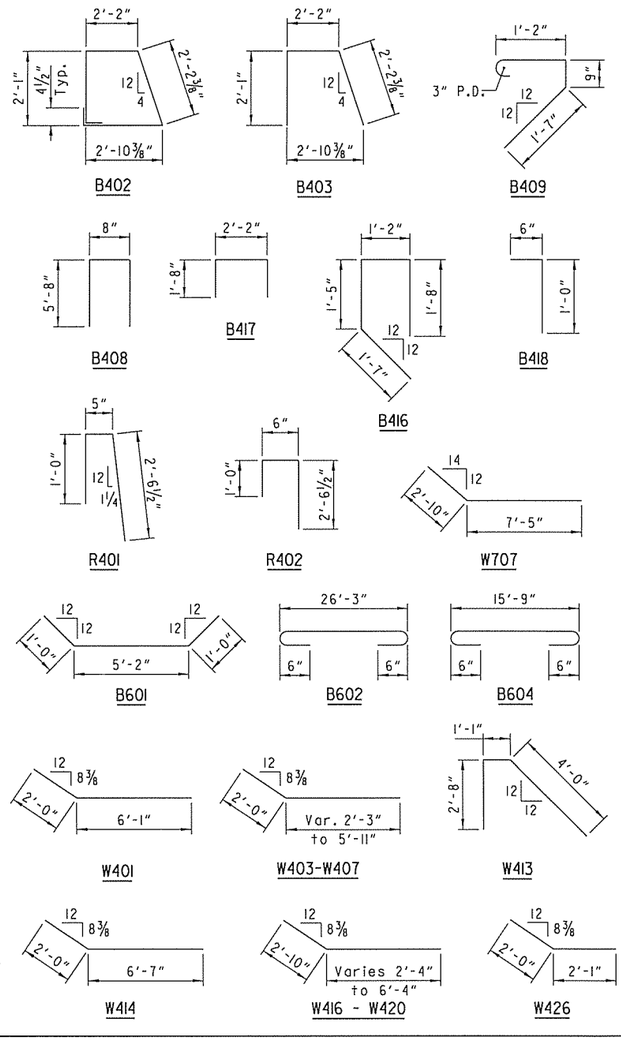

STATE OF ARKANSAS
REGISTERED PROFESSIONAL ENGINEER
No. 16183
JERRY R. STEVENSON
4.25.2016
BRIDGE ENGINEER

SHEET 5 OF 5
DETAILS OF BENT 5
BRIDGE OVER I-49
ROUTE SEC.
ARKANSAS STATE HIGHWAY COMMISSION
LITTLE ROCK, ARK.

DRAWN BY: TLW DATE: 05/01/15 FILENAME: bCA0902x2_b55.dgn
CHECKED BY: RMH DATE: 05/01/15 SCALE: AS NOTED
DESIGNED BY: TG DATE: 05/01/15

BRIDGE NO. 05982 DRAWING NO. 57219

DATE REVISED	DATE FILMED	DATE REVISED	DATE FILMED	FED. ROAD DIST. NO.	STATE	FED. AID PROJ. NO.	SHEET NO.	TOTAL SHEETS
				6	ARK.			
				JOB NO.		CA0902	348	581
				(1) 05982		INT. BENTS		57220

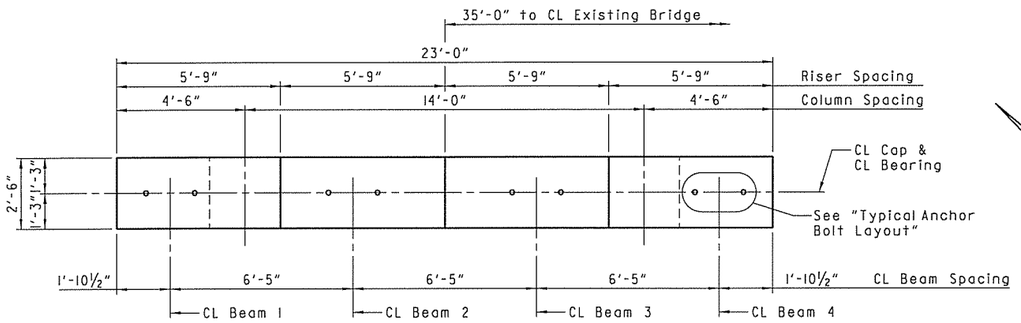

PLAN - BENT 2 & 4

Scale: ⅜" = 1'-0"

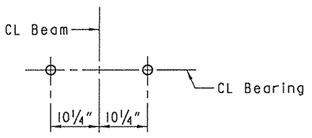

TYPICAL ANCHOR BOLT LAYOUT

Scale: ¾" = 1'-0"
For details of Elastomeric Bearings, see Dwg. No. 57235.

BAR LIST - PER BENT

MARK	NO. REQ'D.	LENGTH	PIN. DIA.
B401	4	11'-2"	Str.
B402	12	6'-0"	2"
B501	39	11'-2"	2½"
B502	6	8'-4"	2½"
B503	8	22'-8"	Str.
B801	6	24'-6"	6"
B802	6	22'-8"	Str.
C401	44	8'-10"	3"
C801	32	20'-6"	Str.
C802	32	8'-2"	6"
F601	22	7'-10"	4½"
F602	26	6'-10"	4½"

BENDING DIAGRAM

Dimensions are out to out of bars.

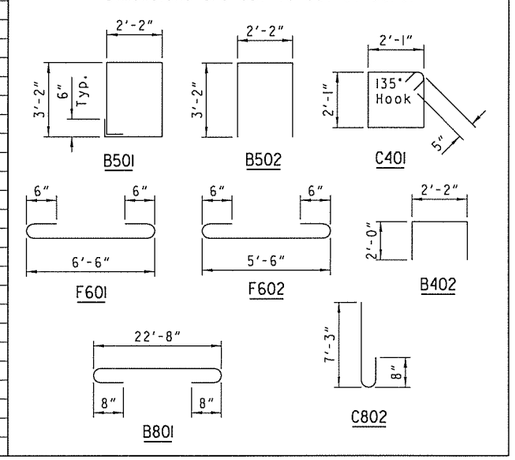

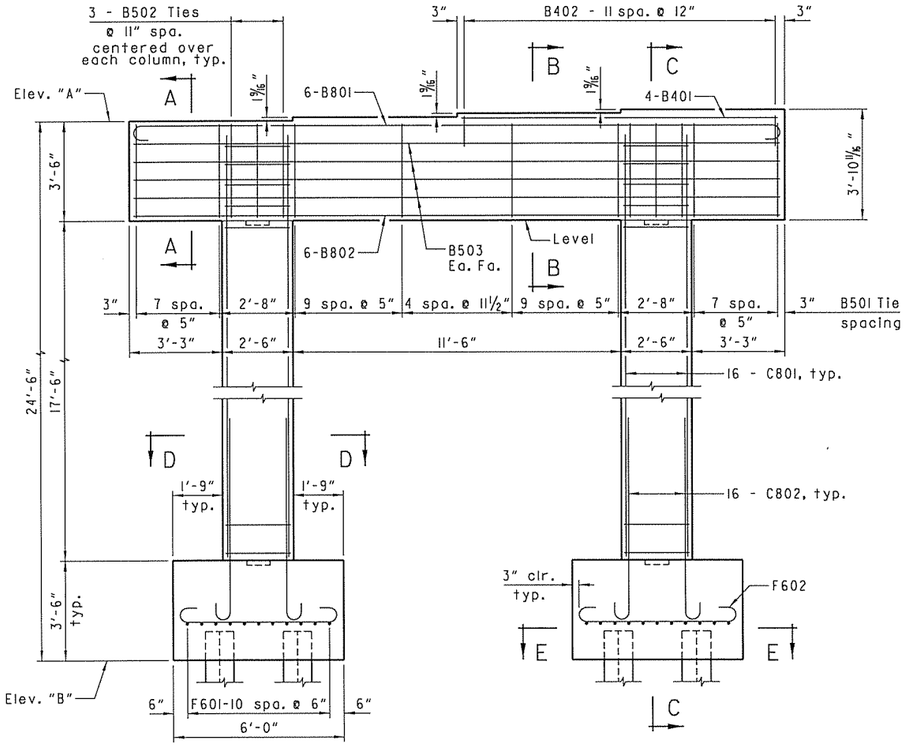

ELEVATION - BENT 2 & 4

(Looking Ahead)
Scale: ⅜" = 1'-0"

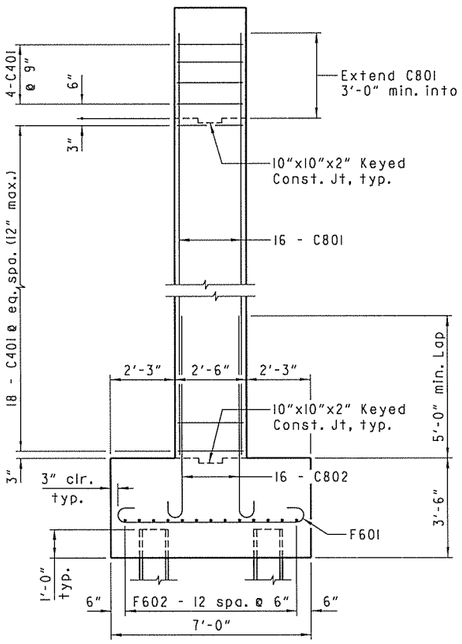

SECTION C-C

Cap reinforcement not shown for clarity.
Scale: ⅜" = 1'-0"

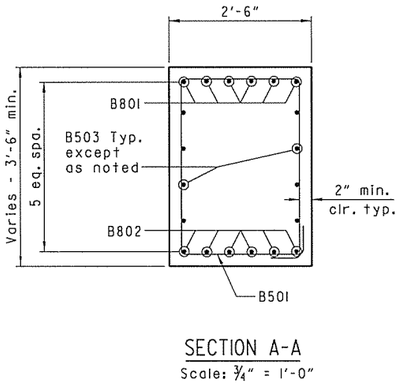

SECTION A-A

Scale: ¾" = 1'-0"

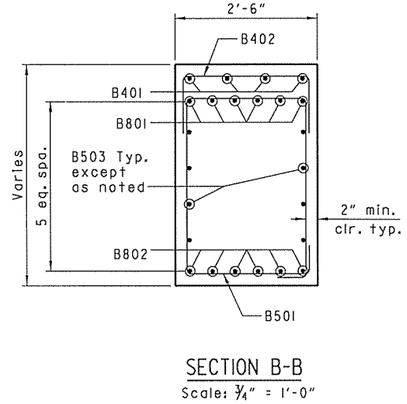

SECTION B-B

Scale: ¾" = 1'-0"

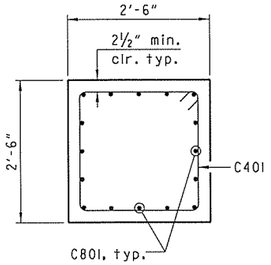

SECTION D-D

Scale: ¾" = 1'-0"

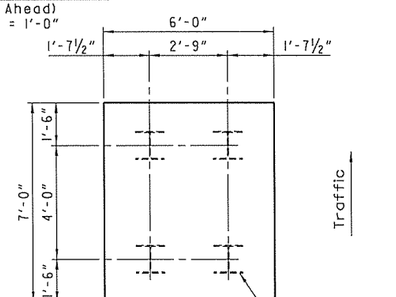

SECTION E-E

Scale: ⅜" = 1'-0"

TABLE OF VARIABLES

	BENT 2	BENT 4
ELEV. "A"	1307.52	1307.34
ELEV. "B"	1283.02	1282.84

GENERAL NOTES:

All concrete shall be Class S with a minimum 28 day compressive strength, f'c = 3,500 psi, and shall be poured in the dry. All exposed corners to be chamfered ¾" unless otherwise noted.

All reinforcing steel shall be Grade 60 (yield strength = 60,000 psi) conforming to AASHTO M 31 or M 322, Type A, with mill test reports.

Top reinforcing bars shall be properly placed to avoid interference with anchor bolts or sheet metal sleeves.

For additional information, see "Layout".

STATE OF ARKANSAS
REGISTERED PROFESSIONAL ENGINEER
No. 16185
JERRY D. STEVENSON
4.25.2016
BRIDGE ENGINEER

SHEET 1 OF 4
DETAILS OF INTERMEDIATE BENTS
BRIDGE OVER I-49

ROUTE SEC.

ARKANSAS STATE HIGHWAY COMMISSION

LITTLE ROCK, ARK.

DRAWN BY: TLW DATE: 05/01/15 FILENAME: bCA0902x2_b21.dgn
CHECKED BY: RMH DATE: 05/01/15 SCALE: AS NOTED
DESIGNED BY: TG DATE: 05/01/15

BRIDGE NO. 05982 DRAWING NO. 57220

DATE REVISED	DATE FILMED	DATE REVISED	DATE FILMED	FED. ROAD DIST. NO.	STATE	FED. AID PROJ. NO.	SHEET NO.	TOTAL SHEETS
				6	ARK.			
				JOB NO.		CA0902	349	581
				(1) 05982		INT. BENTS		57221

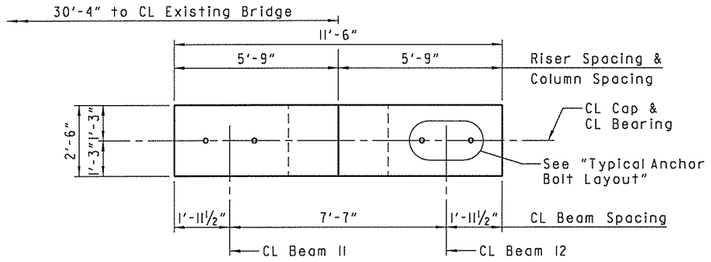

PLAN - BENT 2 & 4

Scale: ⅜" = 1'-0"

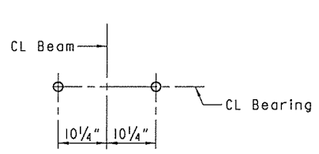

TYPICAL ANCHOR BOLT LAYOUT

Scale: ¾" = 1'-0"

For details of Elastomeric Bearings, see Dwg. No. 57235.

BAR LIST - PER BENT

MARK	NO. REQ'D.	LENGTH	PIN. DIA.
B501	16	12'-2"	2½"
B502	5	9'-4"	2½"
B503	10	11'-2"	Str.
B801	6	13'-0"	6"
B802	6	11'-2"	Str.
C401	44	8'-10"	3"
C801	20	20'-6"	Str.
C802	20	8'-2"	6"
F601	26	7'-10"	4½"

BENDING DIAGRAM

Dimensions are out to out of bars.

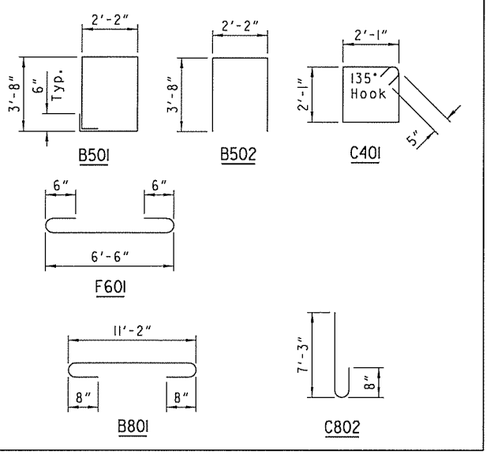

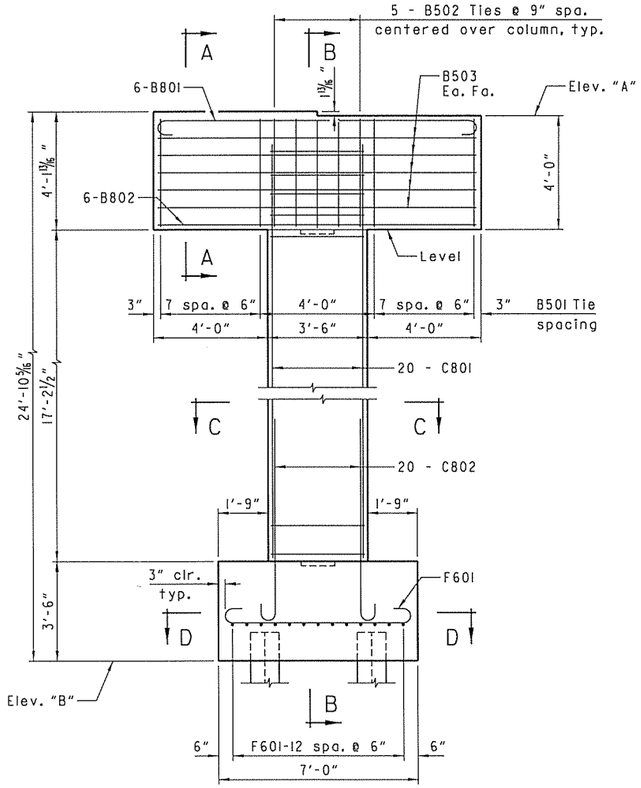

ELEVATION - BENT 2 & 4

(Looking Ahead)

Scale: ⅜" = 1'-0"

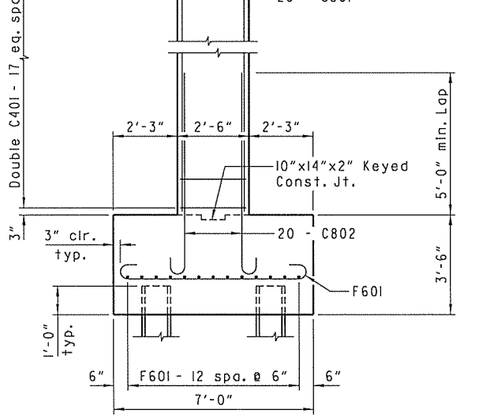

SECTION B-B

Cap reinforcement not shown for clarity.

Scale: ⅜" = 1'-0"

TABLE OF VARIABLES

	BENT 2	BENT 4
ELEV. "A"	1307.73	1307.55
ELEV. "B"	1283.02	1282.84

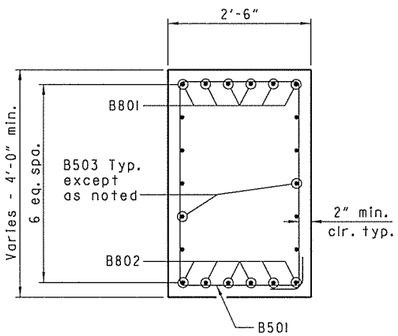

SECTION A-A

Scale: ¾" = 1'-0"

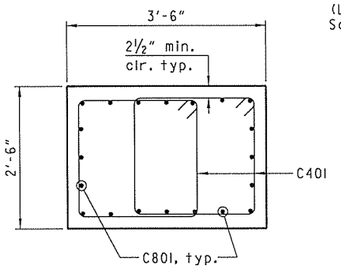

SECTION C-C

Scale: ¾" = 1'-0"

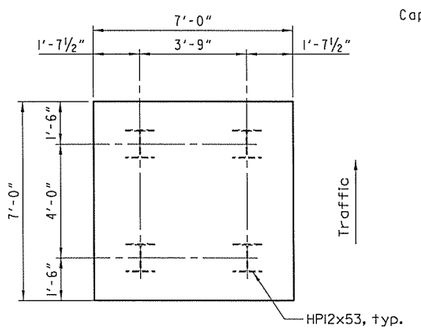

SECTION D-D

Scale: ⅜" = 1'-0"

GENERAL NOTES:

All concrete shall be Class S with a minimum 28 day compressive strength, f'c = 3,500 psi, and shall be poured in the dry. All exposed corners to be chamfered ¾" unless otherwise noted.

All reinforcing steel shall be Grade 60 (yield strength = 60,000 psi) conforming to AASHTO M 31 or M 322, Type A, with mill test reports.

Top reinforcing bars shall be properly placed to avoid interference with anchor bolts or sheet metal sleeves.

For additional information, see "Layout".

STATE OF ARKANSAS REGISTERED PROFESSIONAL ENGINEER No. 16183 JERRY D. PETERSON

4-23-15

BRIDGE ENGINEER

SHEET 2 OF 4

DETAILS OF INTERMEDIATE BENTS

BRIDGE OVER I-49

ROUTE SEC.

ARKANSAS STATE HIGHWAY COMMISSION

LITTLE ROCK, ARK.

DRAWN BY: TLW DATE: 05/01/15 FILENAME: bCA0902x2_b22.dgn

CHECKED BY: RMH DATE: 05/01/15 SCALE: AS NOTED

DESIGNED BY: TG DATE: 05/01/15

BRIDGE NO. 05982 DRAWING NO. 57221

DATE REVISED	DATE FILMED	DATE REVISED	DATE FILMED	FED. ROAD DIST. NO.	STATE	FED. AID PROJ. NO.	SHEET NO.	TOTAL SHEETS
				6	ARK.			
				JOB NO.		CA0902	350	581
				(1) 05982		INT. BENTS		57222

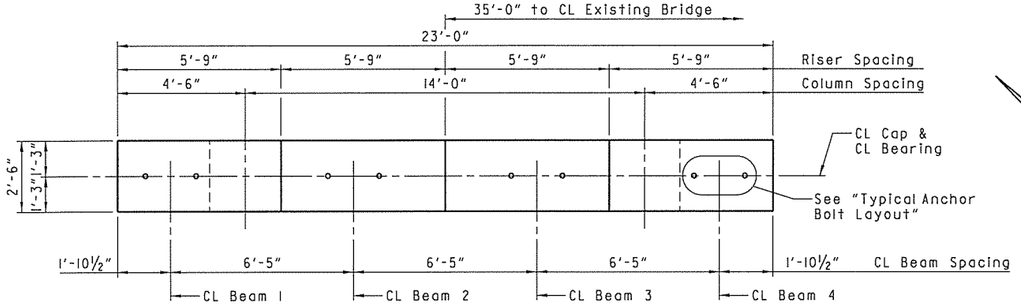

PLAN - BENT 3

Scale: ⅜" = 1'-0"

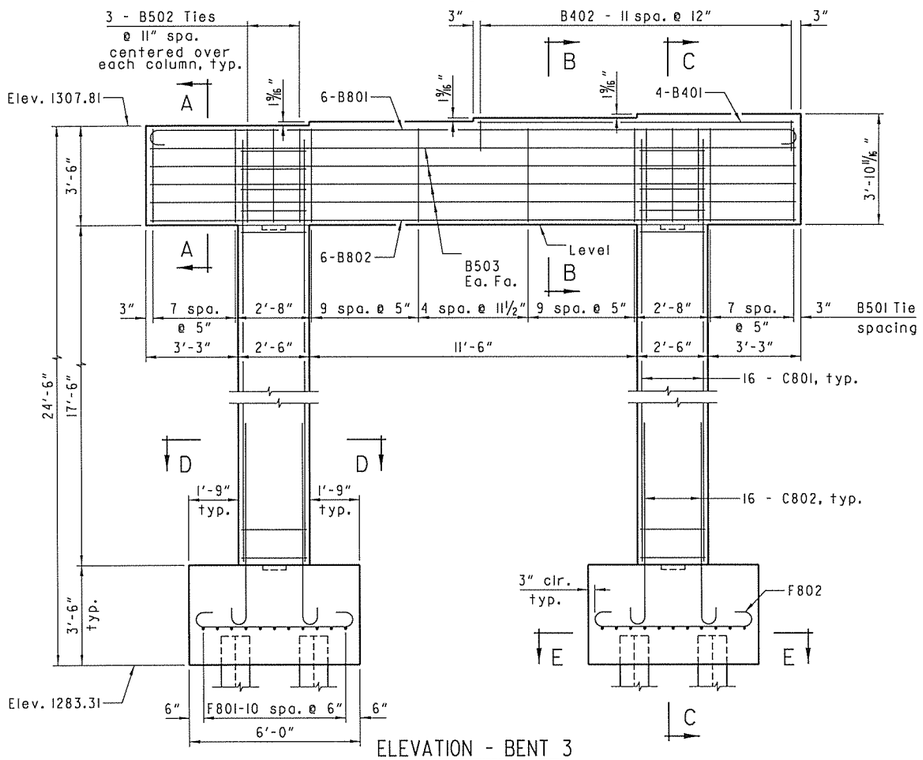

ELEVATION - BENT 3

(Looking Ahead)
Scale: ⅜" = 1'-0"

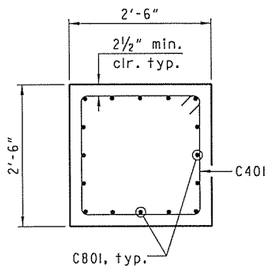

SECTION D-D

Scale: ¾" = 1'-0"

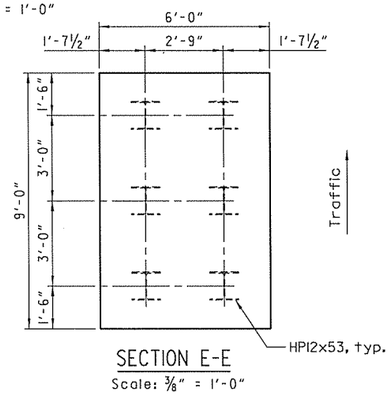

SECTION E-E

Scale: ⅜" = 1'-0"

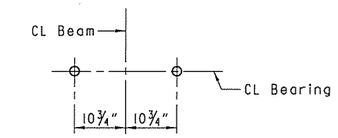

TYPICAL ANCHOR BOLT LAYOUT

Scale: ¾" = 1'-0"
For details of Elastomeric Bearings, see Dwg. No. 57235.

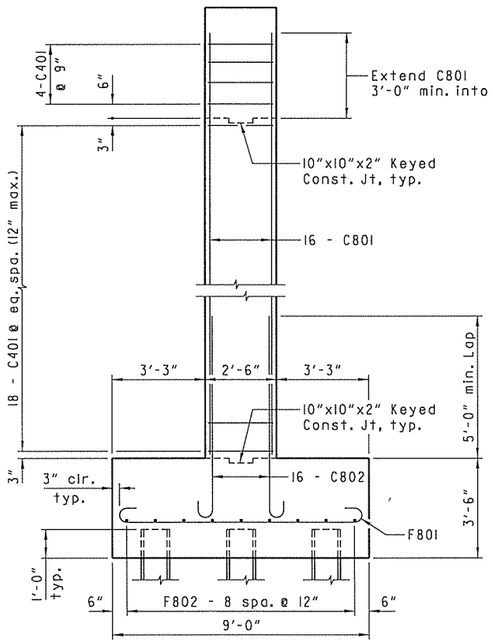

SECTION C-C

Cap reinforcement not shown for clarity.
Scale: ⅜" = 1'-0"

BAR LIST

MARK	NO. REQ'D.	LENGTH	PIN. DIA.
B401	4	11'-2"	Str.
B402	12	6'-0"	2"
B501	39	11'-2"	2½"
B502	6	8'-4"	2½"
B503	8	22'-8"	Str.
B801	6	24'-6"	6"
B802	6	22'-8"	Str.
C401	44	8'-10"	3"
C801	32	20'-6"	Str.
C802	32	8'-2"	6"
F801	22	10'-4"	6"
F802	18	7'-4"	6"

BENDING DIAGRAM

Dimensions are out to out of bars.

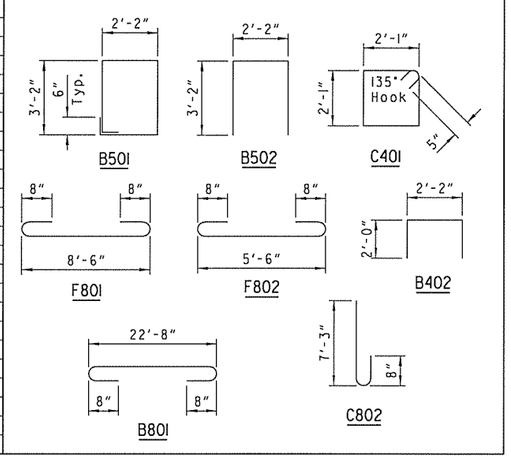

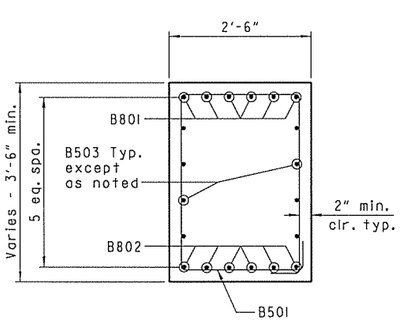

SECTION A-A

Scale: ¾" = 1'-0"

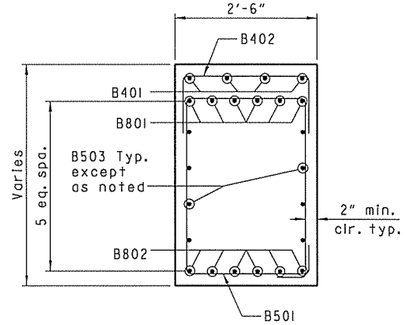

SECTION B-B

Scale: ¾" = 1'-0"

GENERAL NOTES:

All concrete shall be Class S with a minimum 28 day compressive strength, f'c = 3,500 psi, and shall be poured in the dry. All exposed corners to be chamfered ¾" unless otherwise noted.

All reinforcing steel shall be Grade 60 (yield strength = 60,000 psi) conforming to AASHTO M 31 or M 322, Type A, with mill test reports.

Top reinforcing bars shall be properly placed to avoid interference with anchor bolts or sheet metal sleeves.

For additional information, see "Layout".

STATE OF ARKANSAS
REGISTERED PROFESSIONAL ENGINEER
No. 16183
JERRY D. PETTENGILL
4-25-2016
BRIDGE ENGINEER

SHEET 3 OF 4
DETAILS OF INTERMEDIATE BENTS
BRIDGE OVER I-49
ROUTE SEC.
ARKANSAS STATE HIGHWAY COMMISSION
LITTLE ROCK, ARK.

DRAWN BY: TLW DATE: 05/01/15
CHECKED BY: RMH DATE: 05/01/15
DESIGNED BY: TG DATE: 05/01/15
FILENAME: bCA0902x2_b31.dgn
SCALE: AS NOTED

BRIDGE NO. 05982 DRAWING NO. 57222

DATE REVISED	DATE FILMED	DATE REVISED	DATE FILMED	FED. ROAD DIST. NO.	STATE	FED. AID PROJ. NO.	SHEET NO.	TOTAL SHEETS
				6	ARK.			
				JOB NO.		CA0902	351	581
				(1) 05982		INT. BENTS		57223

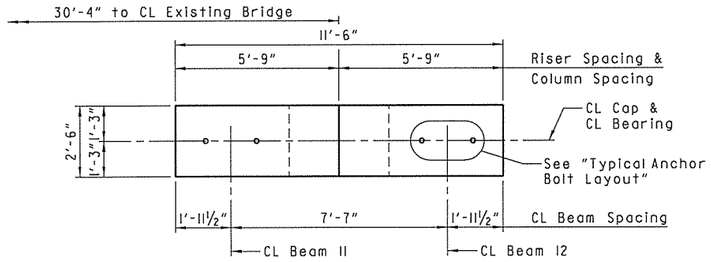

PLAN - BENT 3

Scale: ⅜" = 1'-0"

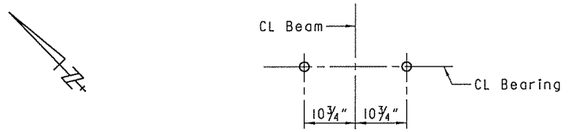

TYPICAL ANCHOR BOLT LAYOUT

Scale: ¾" = 1'-0"
For details of Elastomeric Bearings, see Dwg. No. 57235.

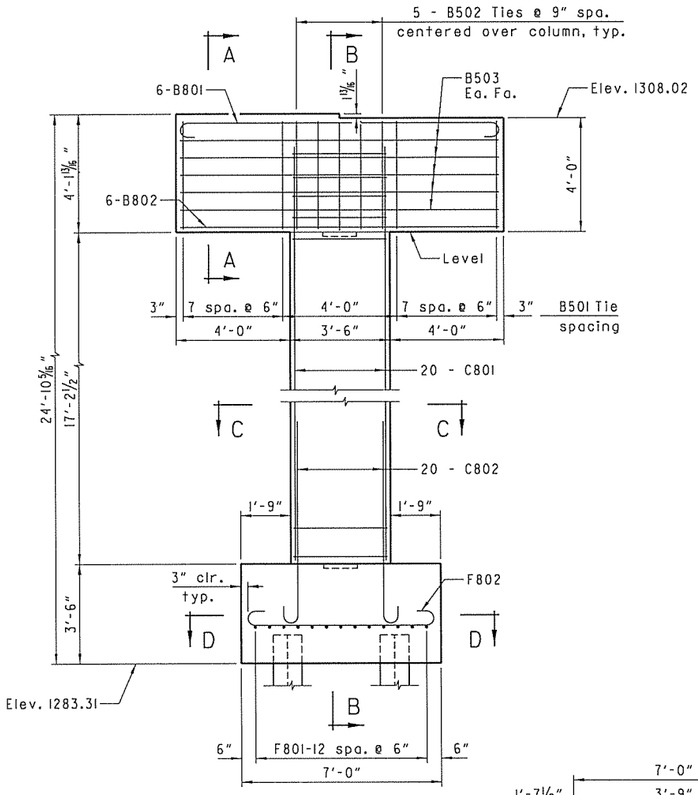

ELEVATION - BENT 3

(Looking Ahead)
Scale: ⅜" = 1'-0"

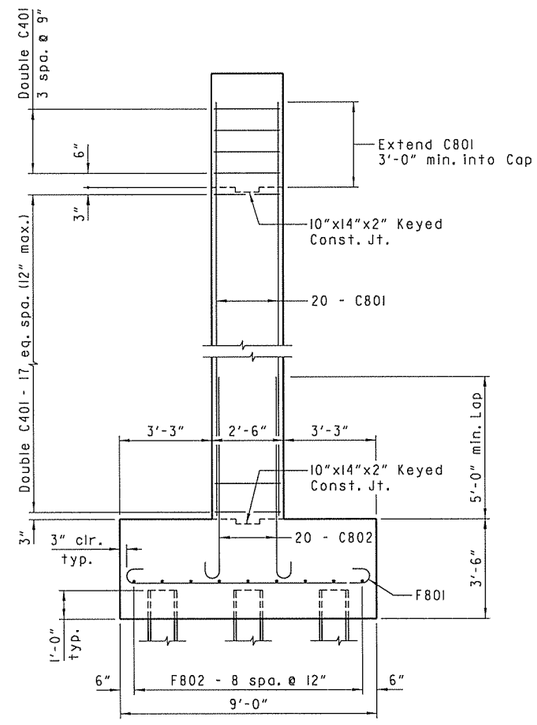

SECTION B-B

Cap reinforcement not shown for clarity.
Scale: ⅜" = 1'-0"

BAR LIST

MARK	NO. REQ'D.	LENGTH	PIN. DIA.
B501	16	12'-2"	2½"
B502	5	9'-4"	2½"
B503	10	11'-2"	Str.
B801	6	13'-0"	6"
B802	6	11'-2"	Str.
C401	44	8'-10"	3"
C801	20	20'-6"	Str.
C802	20	8'-2"	6"
F801	13	10'-4"	6"
F802	9	8'-4"	6"

BENDING DIAGRAM

Dimensions are out to out of bars.

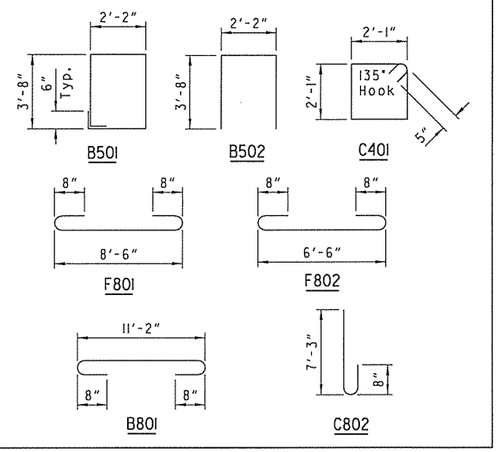

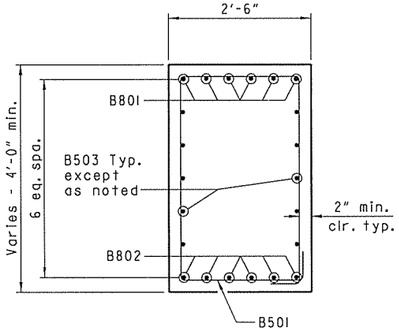

SECTION A-A

Scale: ¾" = 1'-0"

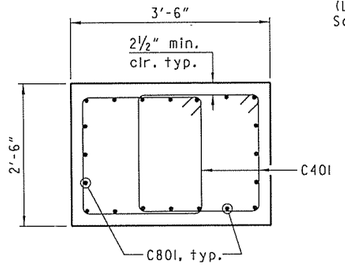

SECTION C-C

Scale: ¾" = 1'-0"

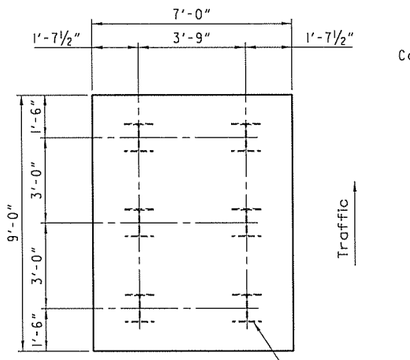

SECTION D-D

Scale: ⅜" = 1'-0"

GENERAL NOTES:

All concrete shall be Class S with a minimum 28 day compressive strength, f'c = 3,500 psi, and shall be poured in the dry. All exposed corners to be chamfered ¾" unless otherwise noted.

All reinforcing steel shall be Grade 60 (yield strength = 60,000 psi) conforming to AASHTO M 31 or M 322, Type A, with mill test reports.

Top reinforcing bars shall be properly placed to avoid interference with anchor bolts or sheet metal sleeves.

For additional information, see "Layout".

STATE OF ARKANSAS
REGISTERED PROFESSIONAL ENGINEER
No. 16185
JERRY T. STEVENSON
4-25-2016
BRIDGE ENGINEER

SHEET 4 OF 4
DETAILS OF INTERMEDIATE BENTS
BRIDGE OVER I-49
ROUTE SEC.
ARKANSAS STATE HIGHWAY COMMISSION
LITTLE ROCK, ARK.

DRAWN BY: TLW DATE: 05/01/15
CHECKED BY: RMH DATE: 05/01/15
DESIGNED BY: TG DATE: 05/01/15
FILENAME: bCA0902x2_b32.dgn
SCALE: AS NOTED

BRIDGE NO. 05982 DRAWING NO. 57223

DATE REVISED	DATE FILMED	DATE REVISED	DATE FILMED	FED. ROAD DIST. NO.	STATE	FED. AID PROJ. NO.	SHEET NO.	TOTAL SHEETS
				6	ARK.			
				JOB NO.		CA0902	352	581
				(1) 05982		264 FT. UNIT		57224

(1) Tolerance: Minus = 1/4", Plus equal to amount of Slab Thickening used to meet Slab Thickness Tolerance, see "Adjustment for Slab Thickness Tolerance", Dwg. No. 57225.

(2) See "Adjustment for Slab Thickness Tolerance", Dwg. No. 57225.

(3) Measured at CL Bearing and CL New Beams, typ.

(4) Measured at CL Bearing and CL Existing Beams, typ.

(5) The concrete slab and parapet are to be removed to the cut line as indicated in accordance with Section 821. Care shall be exercised during the removal of the existing deck to ensure that the beams, diaphragms, shear connectors, bolted connections and reinforcement are not damaged. Damaged items that are not salvageable as determined by the Engineer, shall be replaced by the contractor at no additional payment.

(6) Clean and retain existing transverse reinforcing steel. Splice existing transverse reinforcing steel with proposed transverse reinforcing steel. Use 3'-10" & 3'-3" min. lap for #6 & #5 bars respectively.

(7) Bolts in the existing diaphragms and end struts may be loosened to the satisfaction of the Engineer at Beam Nos. 5 & 6 (Stage 1) and 9 & 10 (Stage 2) during deck removal. Any existing bolt that is loosened or removed shall be replaced with a new high-strength bolt. The diaphragm and end strut bolts located in the bays between Beam Nos. 5 & 6 or 9 & 10 shall be tightened after the completion of their respective deck pour.

(8) For details of Conduits, Expansion Fittings and Junction Boxes, see Dwg. 57239.

NOTES:

Class 2 Protective Surface Treatment shall be applied to the Roadway Surface and Top of Sidewalk.

Light pole support pedestals not shown for clarity.

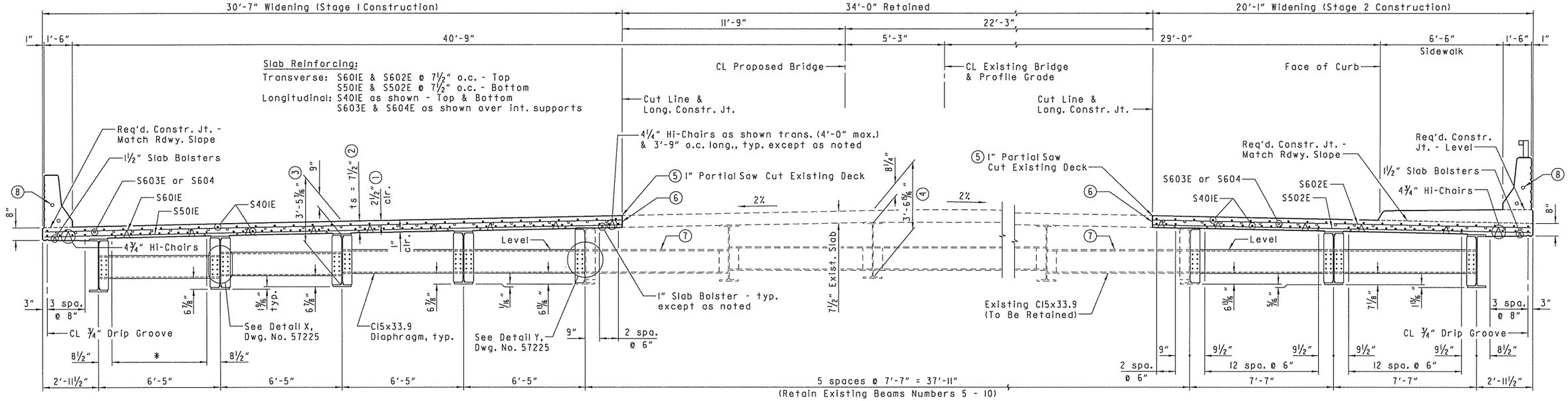

*10 spa. @ 6", typ., unless noted.

#Existing Beams

TYPICAL ROADWAY SECTION

Looking Ahead
Scale: 3/8" = 1'-0"

For Joint Details, see Dwg. Nos. 57232 & 57233.

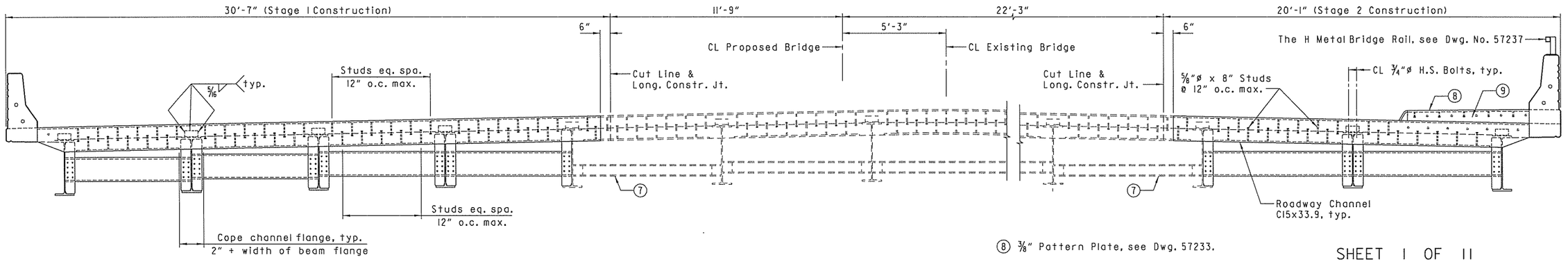

TYPICAL SECTION THROUGH JOINT

Looking Ahead - Bent 1
Bent 5 Similar
Scale: 3/8" = 1'-0"

EXPANSION DEVICE
Roadway Channel - C15x33.9
Conn. Angle - L8"x4"x½"
Note: Detail device ⅛" high and provide ¼" shims using 2 - 1/16" plates and 1 - ⅛" plate.

(8) ⅜" Pattern Plate, see Dwg. 57233.

(9) L8"x4"x½" (trimmed as required) with ⅝"ø x4" Studs.

STATE OF ARKANSAS REGISTERED PROFESSIONAL ENGINEER No. 16183 JERRY D. GUTHRIE
4.23.15
BRIDGE ENGINEER

SHEET 1 OF 11
DETAILS OF 264'-0" CONTINUOUS COMPOSITE W-BEAM UNIT BRIDGE OVER I-49

ROUTE SEC.

ARKANSAS STATE HIGHWAY COMMISSION

LITTLE ROCK, ARK.

DRAWN BY: TLW DATE: 05/01/15 FILENAME: bCA0902x2_sl.dgn
CHECKED BY: JDS DATE: 05/01/15 SCALE: 3/8" = 1'-0"
DESIGNED BY: TG DATE: 05/01/15

BRIDGE NO. 05982 DRAWING NO. 57224

DATE REVISED	DATE FILMED	DATE REVISED	DATE FILMED	FED. ROAD DIST. NO.	STATE	FED. AID PROJ. NO.	SHEET NO.	TOTAL SHEETS
				6	ARK.			
				JOB NO.		CA0902	353	581
				(1) 05982		264 FT. UNIT		57225

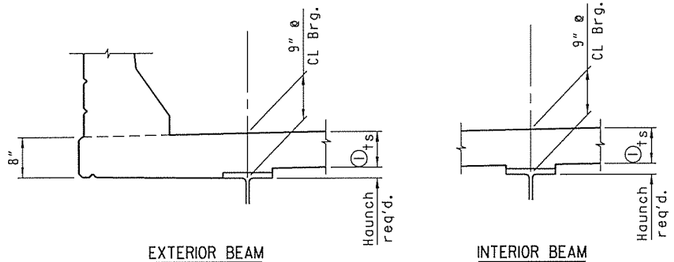

EXTERIOR BEAM INTERIOR BEAM

(1) Tolerance when removable deck forming is used is +½", -¼". Haunch forming is required and shall be adjusted to maintain slab thickness tolerance.

Note: ts = slab thickness as shown on superstructure detail drawings.

Haunch dimension may vary within the following limits to maintain the grade and slab thickness tolerance: Minimum - occurs when top flange contacts bottom reinforcing steel: Maximum - top flange thickness plus 1¾". No increase in concrete and structural steel quantities will be made to maintain tolerances.

Tolerances shown are applicable only when removable deck forming is used, see Std. Dwg. No. 55005 for tolerances when permanent steel deck forms are used. Payment for concrete shall be based on removable deck forming.

ADJUSTMENT FOR SLAB THICKNESS TOLERANCE

Scale: ¾" = 1'-0"

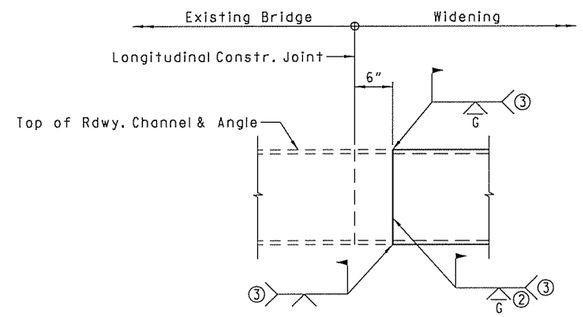

② Grind flush 5" from top of deck.
③ Weld prior to pouring respective stage.

DETAIL OF WELD LOCATION FOR EXPANSION DEVICE

No Scale

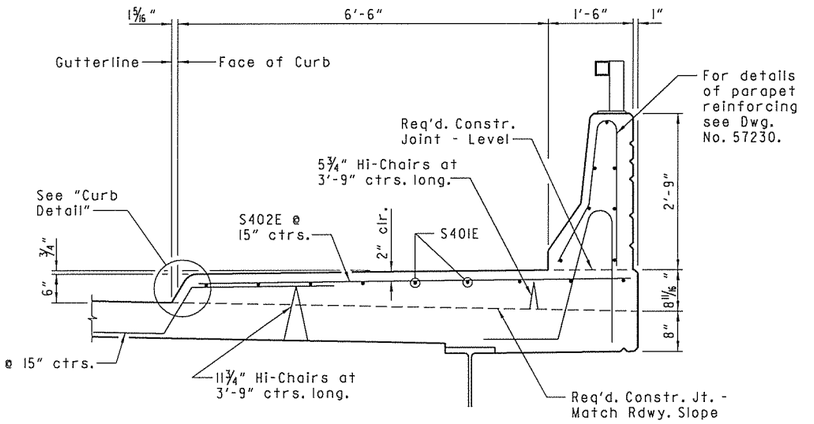

STAGE 2 SIDEWALK DETAIL

Scale: ¾" = 1'-0"

TABLE FOR WELD

MATERIAL THICKNESS OF THICKER PART JOINED (INCHES)	MINIMUM SIZE OF FILLET WELD (INCHES)	SINGLE PASS WELD MUST BE USED
To ¾" Inclusive	¼"	
Over ¾"	5/16"	

NOTE: When a fillet weld size, as shown on the plans, is larger than the minimum, the first pass shall be that specified for minimum size of fillet weld.

NOTE: As an alternate to ⅝"ø studs, ½"ø x 8" studs spaced as shown may be used. Use weight of ⅝"ø stud as basis of measurement of structural steel in anchors.

DETAILS OF ALTERNATE ANCHORS

Scale: 1" = 1'-0"

CURB DETAIL

No Scale

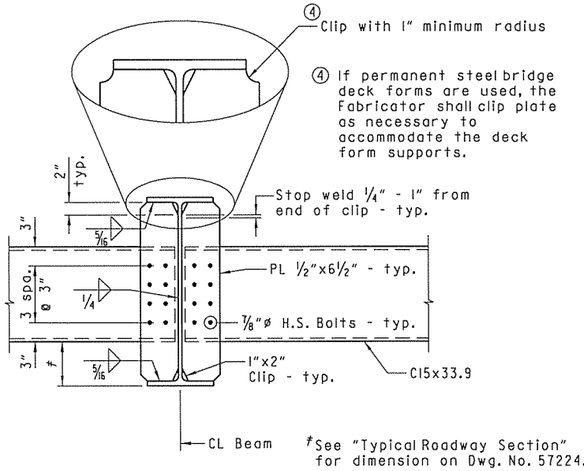

DETAIL X

Scale: 1" = 1'-0"

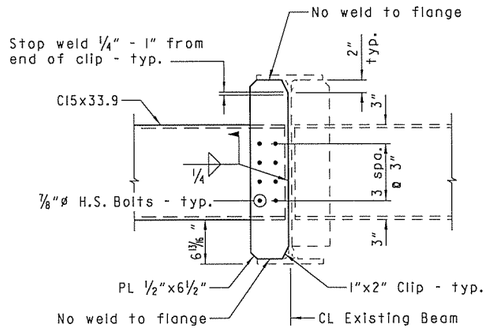

DETAIL Y

Scale: 1" = 1'-0"

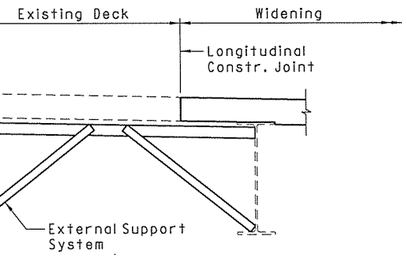

External supports will be required prior to deck removal and shall remain in place for both stages of construction until completion of the deck pour for each respective stage. See Subsection 802.15 for additional information regarding their removal.

DECK SUPPORT AT LONGITUDINAL CONSTRUCTION JOINT

Scale: ½" = 1'-0"

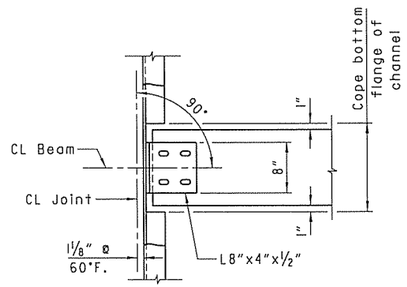

CHANNEL CONNECTION DETAIL

Scale: 1" = 1'-0"

STATE OF ARKANSAS
REGISTERED PROFESSIONAL ENGINEER
No. 16185
JERRY D. STEVENSON
4.29.2016
BRIDGE ENGINEER

SHEET 2 OF 11
DETAILS OF 264'-0" CONTINUOUS COMPOSITE W-BEAM UNIT BRIDGE OVER I-49

ROUTE SEC.

ARKANSAS STATE HIGHWAY COMMISSION
LITTLE ROCK, ARK.

DRAWN BY: TLW DATE: 05/01/15 FILENAME: bCA0902x2_s2.dgn
CHECKED BY: JDS DATE: 05/01/15 SCALE: AS NOTED
DESIGNED BY: TG DATE: 05/01/15

BRIDGE NO. 05982 DRAWING NO. 57225

DATE REVISED	DATE FILMED	DATE REVISED	DATE FILMED	FED. ROAD DIST. NO.	STATE	FED. AID PROJ. NO.	SHEET NO.	TOTAL SHEETS
				6	ARK.			
				JOB NO.		CA0902	354	581
				(1) 05982		264 FT. UNIT		57226

AHEAD STATIONING →

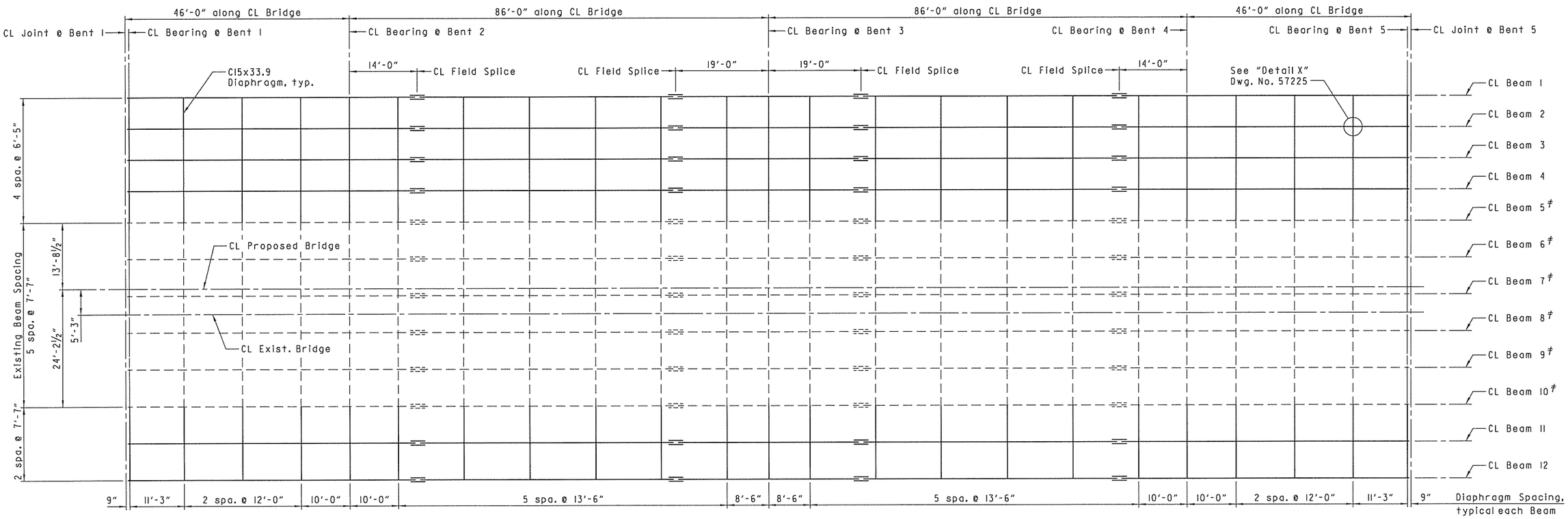

FRAMING PLAN

Scale: 1/32 " = 1'-0"

#Existing Beams

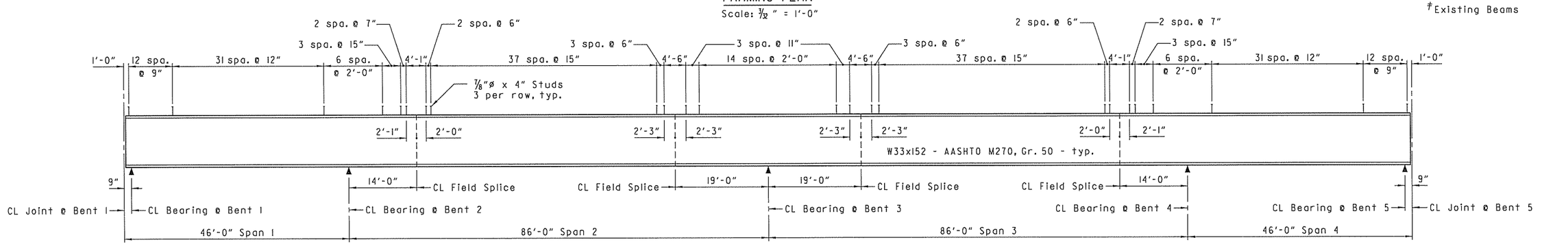

BEAM ELEVATION

No Scale

NOTES:

All structural steel shall be AASHTO M270, Gr. 50 unless noted otherwise.

Bolted Field Splices may be eliminated or shop welded splices may be substituted with the approval of the Engineer. Payment will be made on the basis of plan quantities.

CL Joint and End of Beam are normal to grade.

STATE OF ARKANSAS
REGISTERED PROFESSIONAL ENGINEER
No. 16183
JEREMY D. PEPPERSON
4.25.2016
BRIDGE ENGINEER

SHEET 3 OF 11
DETAILS OF 264'-0" CONTINUOUS COMPOSITE W-BEAM UNIT BRIDGE OVER I-49

ROUTE SEC.

ARKANSAS STATE HIGHWAY COMMISSION

LITTLE ROCK, ARK.

DRAWN BY: TLW DATE: 05/01/15 FILENAME: bCA0902x2_s3.dgn
CHECKED BY: JDS DATE: 05/01/15 SCALE: AS NOTED
DESIGNED BY: PMT DATE: 05/01/15

BRIDGE NO. 05982 DRAWING NO. 57226

DATE REVISED	DATE FILMED	DATE REVISED	DATE FILMED	FED. ROAD DIST. NO.	STATE	FED. AID PROJ. NO.	SHEET NO.	TOTAL SHEETS
				6	ARK.			
				JOB NO.		CA0902	355	581
				(1) 05982		264 FT. UNIT		57227

NOTE:

Bolted field splices may be eliminated or shop welded splices may be substituted with the approval of the Engineer. Payment will be made on the basis of plan quantities.

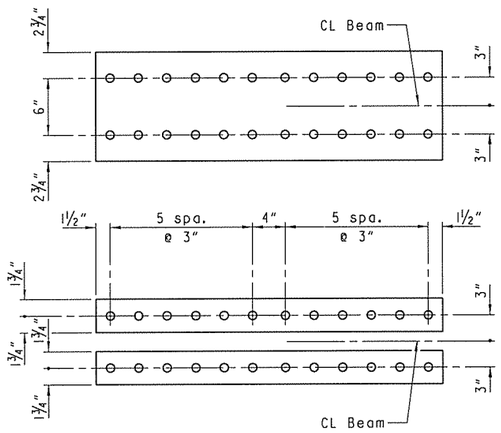

FLANGE SPLICE

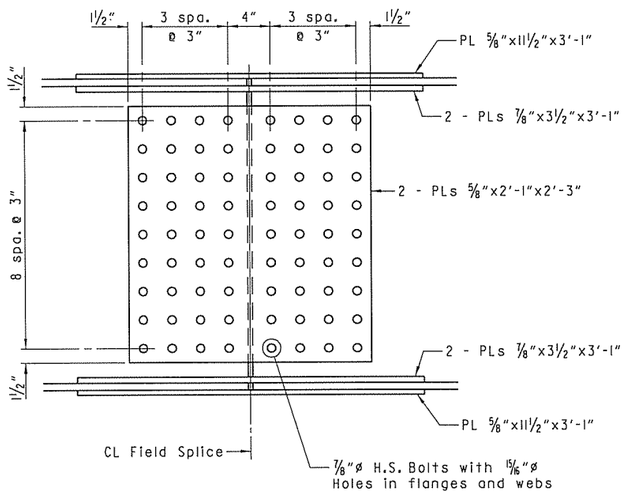

WEB SPLICE

NOTE: All field splice plates shall be AASHTO M270, Gr. 50.

FIELD SPLICE DETAILS

1½" = 1'-0"

TABLE OF DEAD LOAD DEFLECTIONS (INCHES)

	POINT OF DEFLECTION	STRUCTURAL STEEL				STRUCTURAL STEEL + SLAB				STRUCTURAL STEEL + SLAB + PARAPET + SIDEWALK			
		BM. 1	BMS. 2-4	BM. 11	BM. 12	BM. 1	BMS. 2-4	BM. 11	BM. 12	BM. 1	BMS. 2-4	BM. 11	BM. 12
SPAN 1	0	0	0	0	0	0	0	0	0	0	0	0	0
	0.1	0.002	0.002	0.002	0.002	0.008	0.008	0.009	0.009	0.009	0.008	0.010	0.013
	0.2	0.002	0.002	0.002	0.002	0.011	0.010	0.012	0.011	0.012	0.010	0.013	0.016
	0.3	0.001	0.001	0.001	0.001	0.005	0.005	0.006	0.005	0.006	0.005	0.006	0.007
	0.4	-0.002	-0.002	-0.002	-0.002	-0.010	-0.009	-0.011	-0.010	-0.012	-0.009	-0.011	-0.014
	0.5	-0.006	-0.007	-0.007	-0.006	-0.031	-0.030	-0.034	-0.033	-0.036	-0.031	-0.039	-0.047
	0.6	-0.011	-0.012	-0.012	-0.011	-0.055	-0.053	-0.061	-0.059	-0.064	-0.055	-0.069	-0.085
	0.7	-0.015	-0.016	-0.016	-0.015	-0.074	-0.072	-0.082	-0.079	-0.086	-0.075	-0.093	-0.114
	0.8	-0.016	-0.018	-0.018	-0.016	-0.080	-0.078	-0.088	-0.086	-0.093	-0.081	-0.101	-0.122
	0.9	-0.012	-0.013	-0.013	-0.012	-0.060	-0.058	-0.066	-0.064	-0.070	-0.060	-0.075	-0.092
SPAN 2	0	0	0	0	0	0	0	0	0	0	0	0	0
	0.1	0.049	0.053	0.053	0.049	0.241	0.233	0.266	0.257	0.280	0.242	0.303	0.370
	0.2	0.113	0.122	0.122	0.113	0.554	0.536	0.611	0.591	0.644	0.556	0.696	0.850
	0.3	0.170	0.183	0.183	0.170	0.834	0.808	0.920	0.890	0.970	0.837	1.048	1.280
	0.4	0.206	0.222	0.222	0.206	1.011	0.980	1.116	1.080	1.175	1.015	1.272	1.552
	0.5	0.213	0.230	0.230	0.213	1.047	1.014	1.155	1.117	1.216	1.050	1.316	1.606
	0.6	0.190	0.205	0.205	0.190	0.933	0.904	1.030	0.996	1.085	0.937	1.174	1.432
	0.7	0.142	0.153	0.153	0.142	0.698	0.676	0.770	0.745	0.810	0.700	0.876	1.070
	0.8	0.081	0.087	0.087	0.081	0.398	0.385	0.439	0.424	0.462	0.399	0.499	0.610
	0.9	0.025	0.027	0.027	0.025	0.124	0.120	0.137	0.132	0.144	0.124	0.155	0.190
	0	0	0	0	0	0	0	0	0	0	0	0	0

← Symmetrical

Note: Table is symmetrical about CL Bent 3

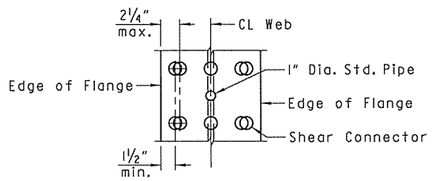

VIEW A-A

No Scale

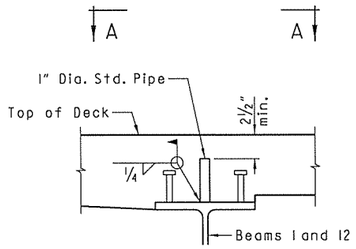

TRANSVERSE SCREED RAIL SUPPORT DETAIL

No Scale

NOTES:

The transverse screed rail supports shall be centered over the beam web and centered longitudinally between adjacent rows of shear connectors.

The pipe shall not interfere with the proper vertical position of the deck reinforcing steel.

The pipe shall be free of dirt, grease, rust, or other foreign substance before the deck is poured.

Care shall be exercised so as air voids do not exist in the pipe after placement of the deck concrete.

All welding shall be performed by a certified welder and in accordance with Subsections 802.13 and 807.26.

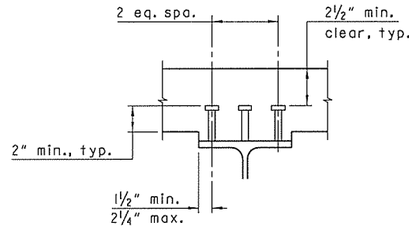

Stud Shear Connectors shown shall be ⅞"ø x 4" long, granular flux filled, solid fluxed or equal, and automatically end welded to the beam flange in accordance with the recommendations of the Manufacturer.

SHEAR CONNECTOR DETAIL

No Scale

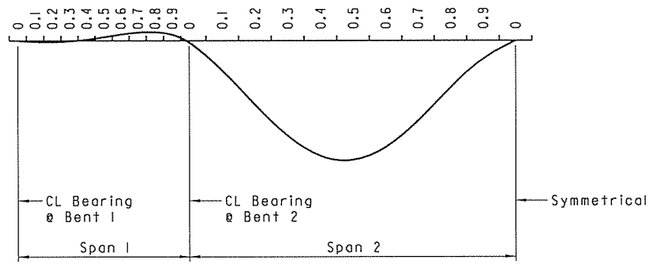

TYPICAL DEAD LOAD DEFLECTIONS DIAGRAM

No Scale

NOTE:

Camber for Dead Load Deflection plus Vertical Curve ±¼" tolerance. Deflections shown are from a chord from CL Bearing to CL Bearing. Vertical curve corrections not included. Negative sign (-) indicates point above chord.

STATE OF ARKANSAS REGISTERED PROFESSIONAL ENGINEER No. 16185 JERRY D. STEVENSON 4-29-2015

BRIDGE ENGINEER

SHEET 4 OF 11
DETAILS OF 264'-0" CONTINUOUS COMPOSITE W-BEAM UNIT BRIDGE OVER I-49

ROUTE SEC.

ARKANSAS STATE HIGHWAY COMMISSION

LITTLE ROCK, ARK.

DRAWN BY: TLW DATE: 05/01/15
CHECKED BY: TG DATE: 05/01/15
DESIGNED BY: PMT DATE: 05/01/15

FILENAME: bCA0902x2_s4.dgn
SCALE: AS NOTED

BRIDGE NO. 05982 DRAWING NO. 57227

DATE REVISED	DATE FILMED	DATE REVISED	DATE FILMED	FED. ROAD DIST. NO.	STATE	FED. AID PROJ. NO.	SHEET NO.	TOTAL SHEETS
				6	ARK.			
				JOB NO.		CA0902	356	581
				(1) 05982		264 FT. UNIT		57228

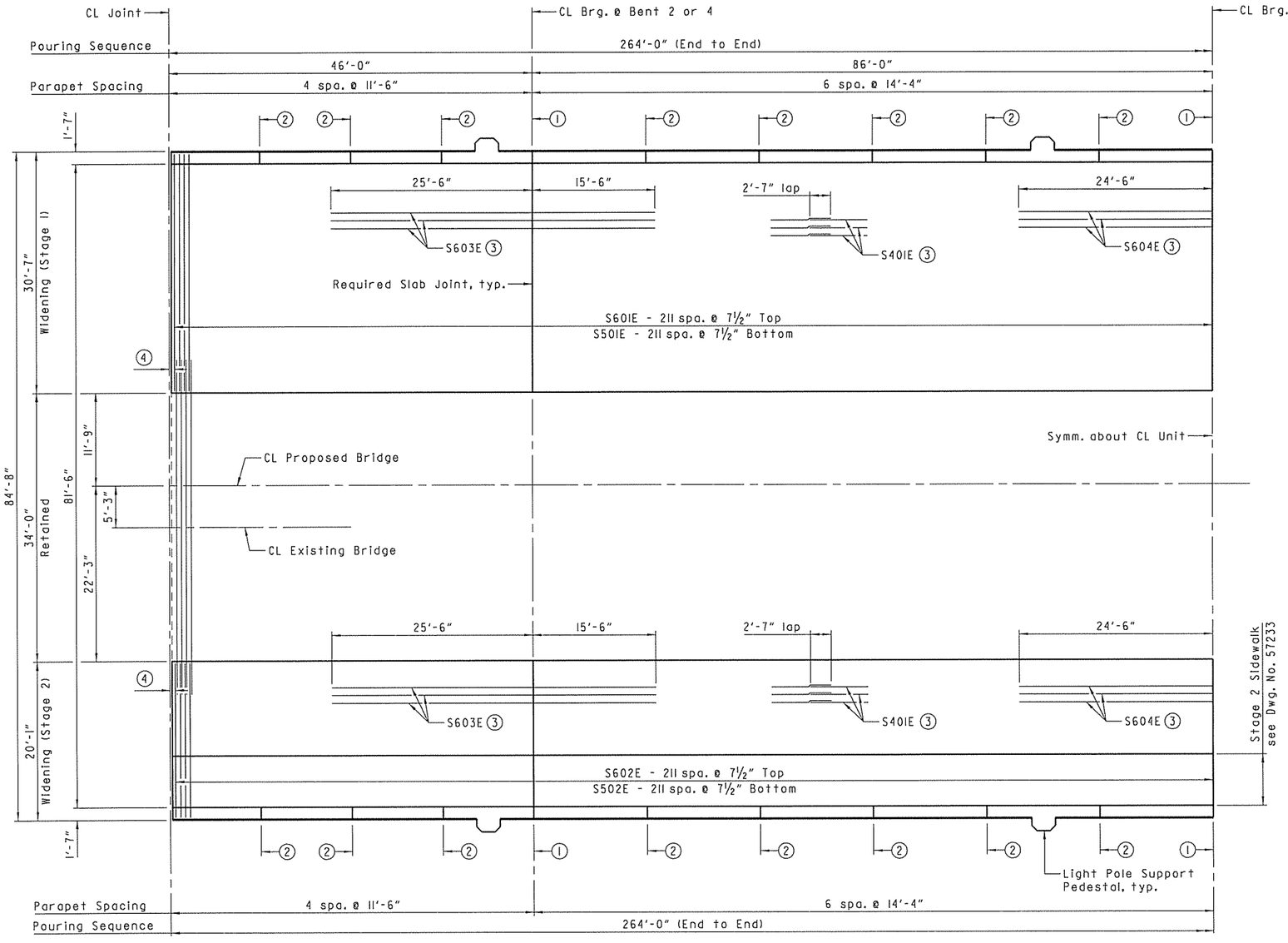

REINFORCING PLAN & DECK POURING SEQUENCE

Scale: ⅛" = 1'-0"

(1) CL Full-Depth Parapet Joint (¼" to 1" Max.). Stop 4" from top of slab or sidewalk, see Dwg. Nos. 57229 & 57230.

(2) CL Partial-Depth Parapet Joint (¼" to 1" Max.). Stop 1'-2" from top of slab or sidewalk, see Dwg. Nos. 57229 & 57230.

(3) Place as shown in "Typical Roadway Section", see Dwg. No. 57224.

(4) Existing reinforcing steel spacing from CL Joint to be verified in the field. New transverse reinforcing steel shall be lapped to the existing transverse reinforcing steel in the deck.

NOTES:

The pouring sequence of the deck concrete shall be from end to end, beginning at Bent 1, in one continuous pour. The continuous placement of the deck concrete may create uplift at Bent 5 during various stages of the deck pour. The Contractor is responsible for securing the beams to prevent any upward movement at Bent 5 during the deck pour. The above pouring sequence may be reversed beginning at Bent 5 and securing the beams at Bent 1.

72 hours shall elapse between the end of the deck pour and the start of a parapet railing and/or sidewalk pour. 72 hours shall elapse between the end of a sidewalk pour and the start of a parapet railing pour. The concrete in a bridge superstructure unit must be consolidated for the entire pour before concrete has taken its initial set. This may require the use of a retarding agent.

The Contractor must obtain approval from the Engineer for any deviations from the pouring sequence shown.

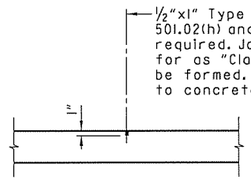

LONGITUDINAL CONSTRUCTION JOINT

No Scale

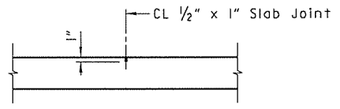

Use Type 3 or 4 Joint Sealer. See Subsections 501.02(h) and 501.05(j). Backer Rod filler will not be required. Joint Sealer shall be measured and paid for as "Class S(AE) Concrete-Bridge". Slab joints shall extend to the outside edge of the deck slab. Slab joints shall be installed before the parapet railing and/or sidewalk is poured. If slab joints are to be sawed, they shall be sawed as soon as the concrete has sufficiently set to allow sawing of the joint without damage to the slab. Slab joints shall be placed at all required slab joint locations.

SLAB JOINT DETAIL

No Scale

STATE OF ARKANSAS
JERRY D. STEVENSON
REGISTERED PROFESSIONAL ENGINEER
No. 16183
4.29.2016
BRIDGE ENGINEER

SHEET 5 OF 11
DETAILS OF 264'-0" CONTINUOUS COMPOSITE W-BEAM UNIT BRIDGE OVER I-49
ROUTE SEC.
ARKANSAS STATE HIGHWAY COMMISSION
LITTLE ROCK, ARK.

DRAWN BY: TLW DATE: 05/01/15
CHECKED BY: JDS DATE: 05/01/15
DESIGNED BY: TG DATE: 05/01/15
FILENAME: bCA0902x2_s5.dgn
SCALE: AS NOTED

BRIDGE NO. 05982 DRAWING NO. 57228

DATE REVISED	DATE FILMED	DATE REVISED	DATE FILMED	FED. ROAD DIST. NO.	STATE	FED. AID PROJ. NO.	SHEET NO.	TOTAL SHEETS
				6	ARK.			
				JOB NO.		CA0902	357	581
				① 05982		264 FT. UNIT		57229

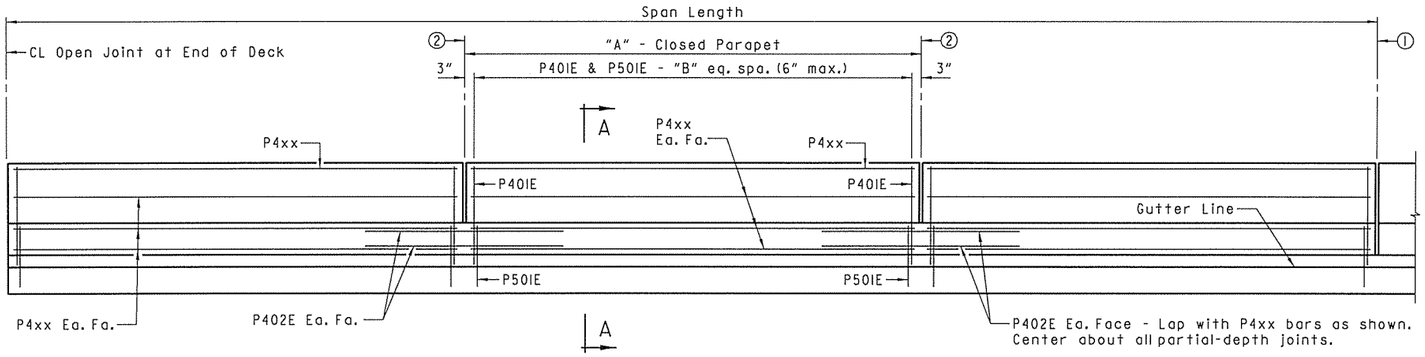

NOTE:

For location of full and partial depth joints, see "Reinforcing Plan and Deck Pouring Sequence", Dwg. No. 57228.

ELEVATION - CONCRETE PARAPET RAIL - STAGE I

Scale: ½" = 1'-0"

① CL Full-Depth Parapet Joint (¼" to 1" max.). Stop 4" from top of Slab.

② CL Partial-Depth Parapet Joint (¼" to 1" max.). Stop 1'-2" from top of Slab.

TABLE OF VARIABLES

"A" Closed Parapet	"B"	P4xx BAR
11'-6"	22	P403E
14'-4"	28	P404E

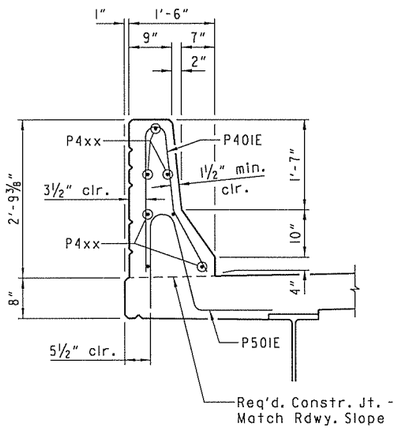

SECTION A-A

Scale: ¾" = 1'-0"

NOTE:

Form liner shall be a max. depth of 2" to provide a min. clearance of 1½" to parapet reinforcing.

BAR LIST

MARK	NO. REQ'D.	LENGTH	PIN. DIA.
P401E	1064	5'-6"	3"
P402E	128	5'-6"	Str.
P403E	112	11'-2"	Str.
P404E	168	14'-0"	Str.
P405E	2	3'-10"	2"
P406E	6	5'-2"	3"
P501E	532	4'-8"	3¾"
P502E	532	6'-3"	3¾"
S401E	1015	40'-0"	Str.
S402E	211	7'-7"	Str.
S403E	211	5'-1"	3"
S501E	423	30'-4"	Str.
S502E	423	19'-10"	Str.
S601E	423	30'-4"	Str.
S602E	423	19'-10"	Str.
S603E	100	41'-0"	Str.
S604E	50	49'-0"	Str.

BENDING DIAGRAM

Dimensions are out to out of bars.

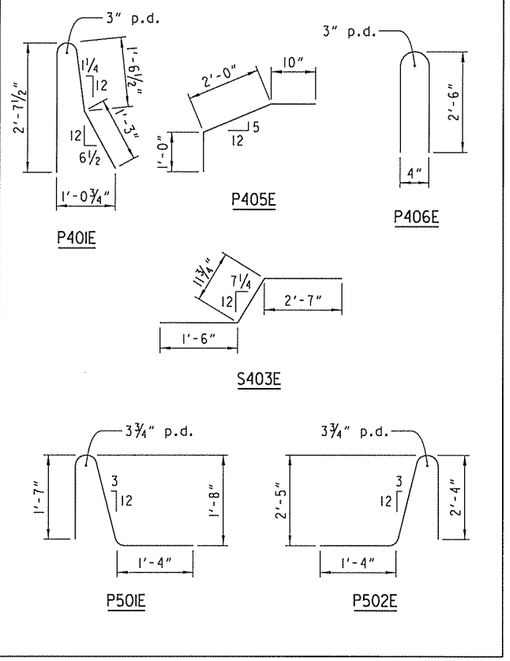

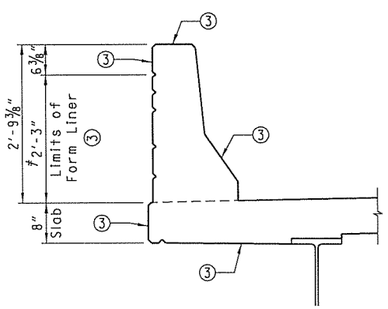

SECTION B-B

Scale: ¾" = 1'-0"

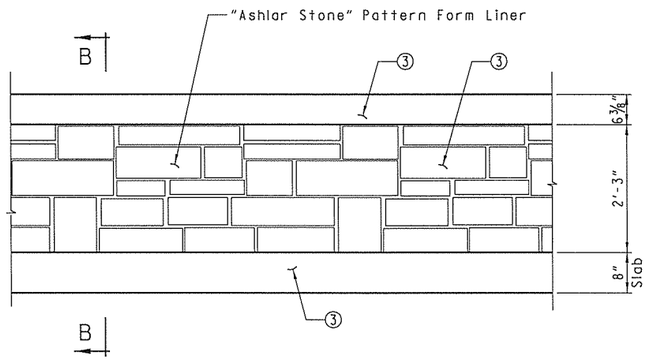

PANEL ELEVATION

Scale: ¾" = 1'-0"

† "Ashlar Stone" Pattern

③ Class 3 Textured Coating Finish (Color = Gray, Color Chip No. 37150).

STATE OF ARKANSAS
JERRY D. STEPHENSON
REGISTERED PROFESSIONAL ENGINEER
No. 16183
4-29-2016
BRIDGE ENGINEER

SHEET 6 OF 11
DETAILS OF 264'-0" CONTINUOUS COMPOSITE W-BEAM UNIT BRIDGE OVER I-49
ROUTE SEC.
ARKANSAS STATE HIGHWAY COMMISSION
LITTLE ROCK, ARK.

DRAWN BY: TLW DATE: 05/01/15 FILENAME: bCA0902x2_s6.dgn
CHECKED BY: JDS DATE: 05/01/15 SCALE: AS NOTED
DESIGNED BY: PMT DATE: 05/01/15

BRIDGE NO. 05982 DRAWING NO. 57229

DATE REVISED	DATE FILMED	DATE REVISED	DATE FILMED	FED. ROAD DIST. NO.	STATE	FED. AID PROJ. NO.	SHEET NO.	TOTAL SHEETS
				6	ARK.			
				JOB NO.		CA0902	358	581
				①	05982	264 FT. UNIT		57230

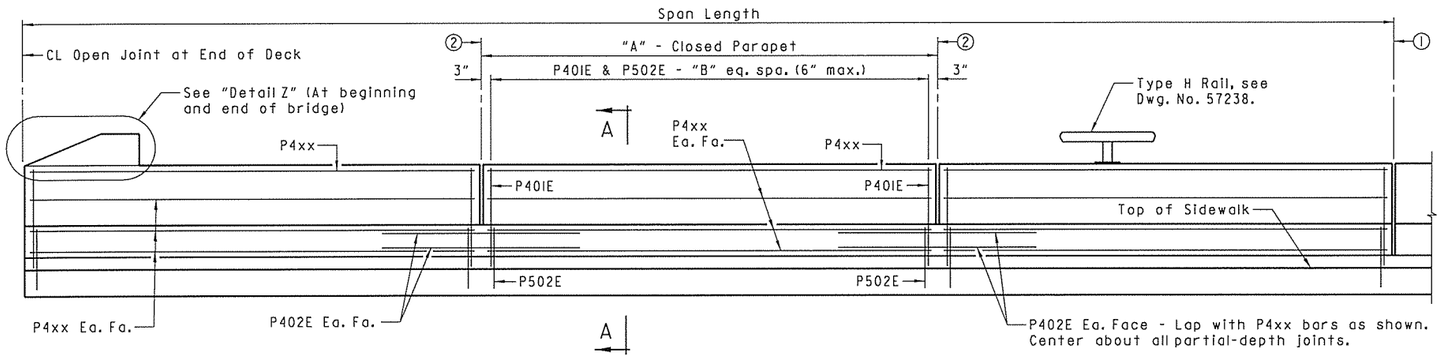

① CL Full-Depth Parapet Joint (¼" to 1" max.). Stop 4" from top of Sidewalk.

② CL Partial-Depth Parapet Joint (¼" to 1" max.). Stop 1'-2" from top of Sidewalk.

NOTE:

For location of full and partial depth joints, see "Reinforcing Plan and Deck Pouring Sequence", Dwg. No. 57228.

ELEVATION - CONCRETE PARAPET RAIL - STAGE 2

Scale: ½" = 1'-0"

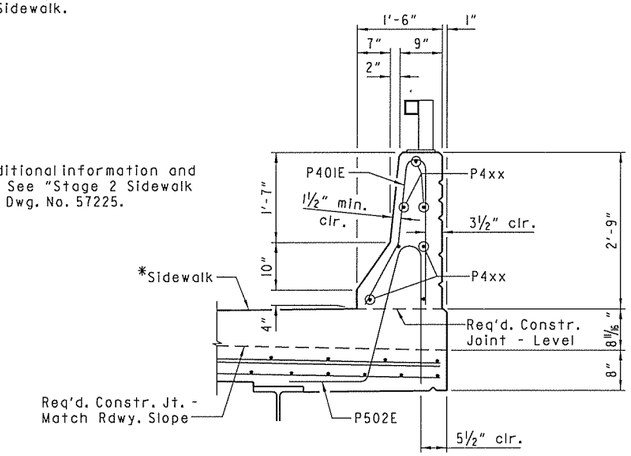

SECTION A-A

Scale: ¾" = 1'-0"

NOTE:

Form liner shall be a max. depth of 2" to provide a min. clearance of 1½" to parapet reinforcing.

TABLE OF VARIABLES

"A" Closed Parapet	"B"	P4xx BAR
11'-6"	22	P403E
14'-4"	28	P404E

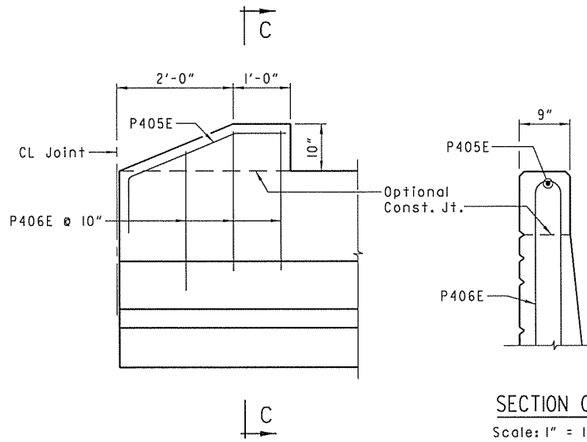

DETAIL Z

Scale: ¾" = 1'-0"

SECTION C-C

Scale: 1" = 1'-0"

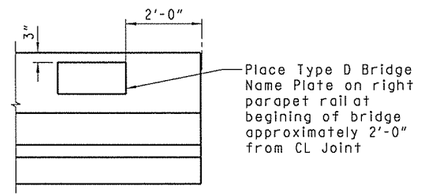

VIEW SHOWING LOCATION OF NAME PLATE

Scale: ½" = 1'-0"

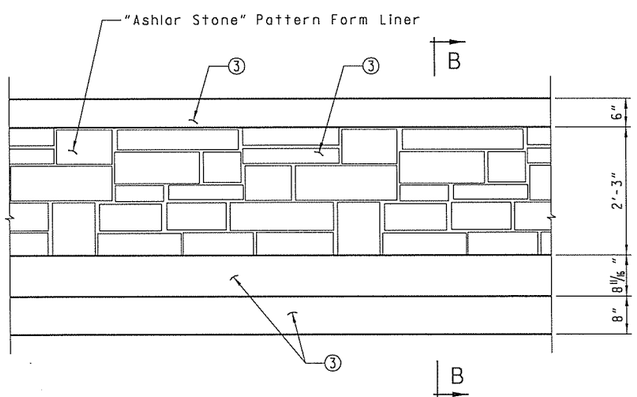

PANEL ELEVATION

Scale: ¾" = 1'-0"

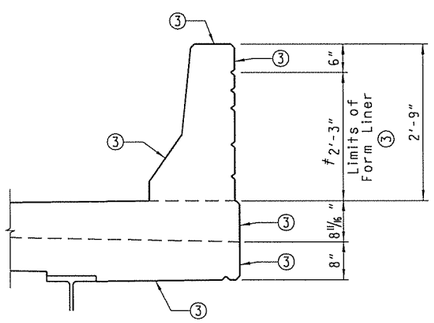

SECTION B-B

Scale: ¾" = 1'-0"

♯ "Ashlar Stone" Pattern

③ Class 3 Textured Coating Finish (Color = Gray, Color Chip No. 37150).

STATE OF ARKANSAS
REGISTERED PROFESSIONAL ENGINEER
No. 16183
JERRY M. PETTY
7-23-2015
BRIDGE ENGINEER

SHEET 7 OF 11
DETAILS OF 264'-0" CONTINUOUS COMPOSITE W-BEAM UNIT
BRIDGE OVER I-49
ROUTE SEC.
ARKANSAS STATE HIGHWAY COMMISSION
LITTLE ROCK, ARK.

DRAWN BY: TLW DATE: 05/01/15
CHECKED BY: JDS DATE: 05/01/15
DESIGNED BY: PMT DATE: 05/01/15
FILENAME: bCA0902x2_s7.dgn
SCALE: AS NOTED

BRIDGE NO. 05982 DRAWING NO. 57230

DATE REVISED	DATE FILMED	DATE REVISED	DATE FILMED	FED. ROAD DIST. NO.	STATE	FED. AID PROJ. NO.	SHEET NO.	TOTAL SHEETS
				6	ARK.			
				JOB NO.		CA0902	359	581
				(1) 05982		264 FT. UNIT		57231

GENERAL NOTES - SUPERSTRUCTURE

CONSTRUCTION SPECIFICATIONS: Arkansas State Highway and Transportation Department Standard Specifications for Highway Construction, 2014 edition, with applicable Supplemental Specifications and Special Provisions.

DESIGN SPECIFICATION: AASHTO Standard Specifications (17th Edition, 2002) with current interim specifications.

MATERIAL AND STRENGTHS:

Class S(AE) Concrete	f'c= 4,000 psi
Reinforcing Steel (Grade 60, AASHTO M31 or M322, Type A)	fy = 60,000 psi
Structural Steel (AASHTO M 270, Gr. 50)	Fy = 50,000 psi
Structural Steel (AASHTO M 270, Gr. 36)	Fy = 36,000 psi

CONCRETE:
Concrete shall be poured in the dry and all exposed corners to be chamfered ¾" unless otherwise noted. All concrete shall be Class S(AE) with a minimum 28 day compressive strength f'c = 4,000 psi. The superstructure details shown are for use when removable deck forming is used and are the basis for measurement of Class S(AE) Concrete. See Standard Drawing No. 55005 for allowable modifications and for tolerances when Permanent Steel Deck Forms are used.

Concrete in bridge superstructure shall be placed, consolidated and screeded off for the entire pour before any concrete has taken its initial set. This may require the use of a retarding agent. The Contractor must obtain approval from the Engineer for any deviations from the pouring sequence shown.

The concrete deck, except sidewalks, shall be given a tine finish in accordance with Subsection 802.19 for Class 5 Tined Bridge Roadway Surface Finish. Sidewalks shall be given a Class 6 Broomed Finish. Movement of the finishing machine across new concrete shall be on planks placed on the surface and shall be prohibited for 72 hours after finishing the pour. Sufficient concrete must be placed ahead of the strike-off to fully load the beam. A minimum of 72 hours shall elapse between completion of the slab pour and the start of the parapet railing pour for Stage 1. A minimum of 72 hours shall elapse between completion of the slab and the start of the sidewalk pour for Stage 2. A minimum of 72 hours shall elapse between completion of a sidewalk pour and the beginning of a parapet pour for Stage 2.

Use of a longitudinal screed is prohibited.

Slab joints shall align with slab joints from existing construction. Required Slab Joints shall align with the parapet open joint.

REINFORCING STEEL:
All reinforcing steel shall be Grade 60 (Yield Strength = 60,000 psi) conforming to AASHTO M31 or M322, Type A, with mill test reports and shall be epoxy coated. The reinforcing steel is to be accurately located in the forms and firmly held in place by steel wire supports, sufficient in number and size to prevent displacement during the course of construction. The wire supports will not be paid for directly, but will be considered subsidiary to the item "Epoxy Coated Reinforcing Steel (Grade 60)".

NEW STRUCTURAL STEEL:
All new structural steel shall be AASHTO M 270, Grade 50 unless otherwise noted and shall be paid for as "Structural Steel in Beam Spans (M 270, Gr. 50)". All exposed surfaces shall be cleaned in accordance with Subsection 807.84 unless otherwise noted. Structural steel completely embedded in concrete may be AASHTO M 270, Gr. 36 or Gr. 50, unless otherwise noted.

Drawings show general features of design only. Shop drawings shall be made in accordance with Subsection 807.04, submitted and approval secured before fabrication is begun.

Requests for substitution of structural steel shapes shown with shapes of greater size must be submitted by The Contractor to the Engineer for approval. Steels of equal or greater strengths will be accepted only when shown on the approved shop drawings. Payment will be based on the basis of shapes and materials shown in the plans, and no additional compensation will be made for any adjustments due to substitutions.

Bolted field splices shown may be eliminated or shop welded splices may be substituted with approval of the Engineer. Payment will be made on the basis of plan quantities.

Beams and field splice plates are considered main load carrying members and shall meet the Longitudinal Charpy V-Notch Test specified in Subsection 807.05. This work and material will not be paid for directly, but shall be considered subsidiary to the item "Structural Steel in Beam Spans (M 270, Gr. 50)".

All beams shall be blocked in their true position in the shop with the webs horizontal in groups as specified in Subsection 807.54(b)(2). The camber, length of sections, distance between bearings and openings of joints shall be measured with the beams in their true position and this information shall become part of the permanent records for this job. The component parts shall be match marked in this assembly and these marks shall be shown on the erection diagram. All beam dimensions are based on a temperature of 60 degrees F. A tolerance of ¼"+/- is allowed for camber.

Flange field splice plates shall be cut and fabricated so that the primary direction of rolling is parallel to the direction of the main tensile and/or compressive stresses.

All welding that is to be done during fabrication of structural steel, including temporary welds, shall be detailed on the shop drawings and submitted for approval. If additional welds are required, whether permanent or temporary, a formal request with detailed drawings shall be submitted to the Engineer for approval; however, additional welds used for attaching falsework support devices or screed rail supports to the structural steel that do not exceed the limitations of Subsection 802.13 will not require approval prior to construction. Field welding of new diaphragm connection plates to the existing beams shall be as shown in the plans. All welding shall conform to Subsection 807.26.

GENERAL NOTES - SUPERSTRUCTURE (CONT.)

Field connections shall be bolted with high-strength bolts and shall be ¾"ø bolts unless otherwise noted. Holes for ¾"ø bolts shall be 13/16 "ø unless otherwise noted. Bolts shall be placed with heads on the outside face of the exterior beam webs and on the bottom of the beam flanges.

Unless otherwise noted, steel diaphragms shall be installed as beams are erected. All bolts in diaphragms and field splices shall be installed and tightened in accordance with Subsection 807.71 prior to pouring the concrete deck.

All stud shear connectors shall be granular flux filled, solid fluxed, or equal and shall be automatically end welded in accordance with the recommendations of the Manufacturer.

Bearings shall be seated in accordance with Subsection 808.08. This work and material are to be considered as subsidiary to the item "Structural Steel in Beam Spans (M 270, Gr. 50)" and will not be paid for directly.

PAINTING STRUCTURAL STEEL:
Unless noted otherwise, all new structural steel except galvanized steel and steel which is completely encased in concrete shall be painted in accordance with Subsection 807.75. The color of paint shall conform to Federal Standard 595B, Color Chip No. 26122, Gray.

The existing structural steel shall be cleaned and painted in accordance with Section 820 "Cleaning and Painting Existing Structural Steel (Type II)". The color of paint shall be Gray and shall match Fed. Std. 595B, Color Chip No. 26122. For additional information, see SP Job CA0902 "Containment System", "Contractor Certification" and "Paint Contractor Label".

The roadway channels and end bent armor (both new and existing) shall be cleaned and painted in accordance with Section 638. This work shall not be paid for separately but shall be considered included in the contract unit price for the various items of the Contract.

The existing paint system used on the existing beams may consist of a lead based paint system. The Contractor shall take all necessary steps to protect the workers modifying the existing beams.

The elastomeric bearing pads shall be protected against overspray.

REMOVAL OF EXISTING DECK:
Care shall be exercised during the removal of the existing deck to ensure that the existing paint system and the existing structural steel, including shear connectors, are not damaged. Damaged items that are not salvageable, as determined by the Engineer, shall be replaced at the Contractor's expense.

The deck removal shall progress in a manner that will ensure the stability of the existing structure.

The existing concrete deck shall be completely removed to the top flange of the existing beams. The portions of the top flange that will be embedded in the new concrete shall be cleaned and free of laitance and protected until the new deck is placed for the respective Stage of Construction. This work will not be paid for directly but will be considered subsidiary to the item "Modification of Existing Bridge Structure (Br. 05982)".

METHOD OF WORK:
The Contractor shall remove portions of the existing deck as shown in "Details of Stage Construction" Dwg. Nos. 57205 & 57206. During deck removal, the Contractor shall loosen the diaphragm and end strut bolts adjacent to Beam Nos. 5 & 6 and 9 & 10, as shown in the plans, to facilitate construction. This work will not be paid for directly but will be considered subsidiary to the item "Modification of Existing Bridge Structure (Br. No. 05982)".

All appilicable provisions of Section 807, as determined by the Engineer, shall be followed, See Special Provision Job No. CA0902 "Special Safety Requirements for Bridges" for additional information.

The Contractor may submit an alternate Method of Work. The plan shall be submitted to the Engineer for information and record keeping purposed at least three weeks prior to any work being performed. The submittal shall be prepared and/or approved by an Arkansas Professional Engineer and shall include sufficient details and information to the Engineer's satisfaction. The Contractor shall be responsible for the results obtained by the use the alternate Method of Work. All work, materials, and labor required for the Contractor to develop and execute the plan will not be paid directly but will be considered subsidiary to the item "Modification of Existing Bridge Structure (Br. No. 05982)".

STATE OF ARKANSAS
REGISTERED PROFESSIONAL ENGINEER
No. 16183
JERRY D. STEVENSON
4.23.2015
BRIDGE ENGINEER

SHEET 8 OF 11
DETAILS OF 264'-0" CONTINUOUS
COMPOSITE W-BEAM UNIT
BRIDGE OVER I-49
ROUTE SEC.
ARKANSAS STATE HIGHWAY COMMISSION
LITTLE ROCK, ARK.

DRAWN BY: TLW DATE: 05/01/15 FILENAME: bCA0902x2_s8.dgn
CHECKED BY: JDS DATE: 05/01/15 SCALE: NONE
DESIGNED BY: TG DATE: 05/01/15

BRIDGE NO. 05982 DRAWING NO. 57231

DATE REVISED	DATE FILMED	DATE REVISED	DATE FILMED	FED. ROAD DIST. NO.	STATE	FED. AID PROJ. NO.	SHEET NO.	TOTAL SHEETS
				6	ARK.			
				JOB NO.		CA0902	360	581
				① 05982		264' FT. UNIT		57232

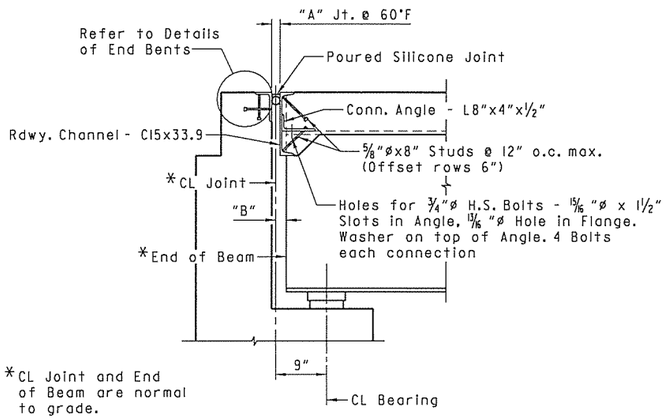

JOINT AT END BENTS

Perpendicular to CL Joint

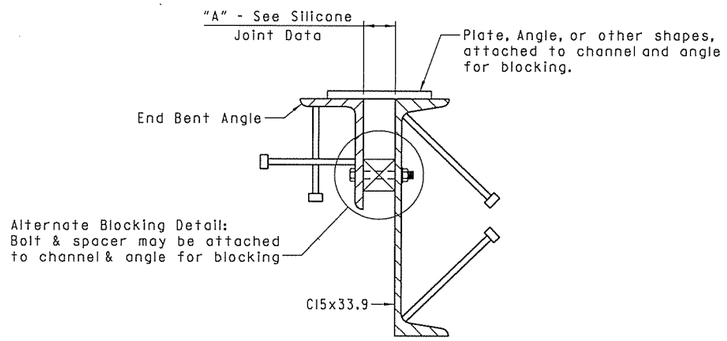

Note: Each expansion joint device shall be blocked in the Shop by the Fabricator to the dimension "A" shown @ 60°F, and the blocking details shall be shown on the Shop Drawings. Blocking shall be placed within 2 feet of each end of the device and with a maximum spacing of 8 feet.

DETAILS FOR BLOCKING EXPANSION JOINT DEVICE

SILICONE JOINT DATA

BENT NUMBER	"A" WIDTH PERPENDICULAR TO JOINT AT 24 HOUR AVERAGE TEMPERATURE ① OF:			"B" PERPENDICULAR TO JOINT AT 60°F	BUMPER BAR SIZE	"D"
	40°F	60°F	80°F			
1 & 5	2 7/16"	2 1/4"	2 1/16"	± 2 3/8"	1"x1 1/8"	4"

① The temperature used to set the joint opening shall be the approximate average air temperature during the 24 hour period immediately before the bolts are tightened. The Engineer shall establish the temperature. Interpolation of the table may be necessary.

Notes: The temperature limitations recommended by the sealant manufacturer shall be observed.

The sealant shall be installed only when the average 24 hour air temperature is between 40° and 80°F.

② BACKER ROD NOTE:

Use an appropriately sized backer rod at the depth shown in the manufacturer's literature based on the joint width at the time of sealing.

Except as noted, do not install more backer rod than that which can be sealed in the same day.

The Contractor shall verify separation of the backer rod from the joint material after the joint material has set.

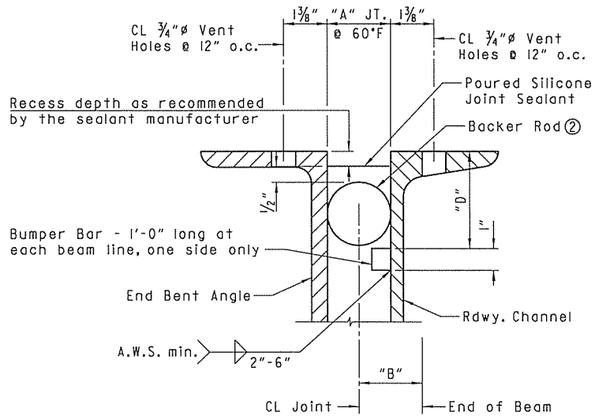

DETAIL OF POURED SILICONE JOINT SEAL

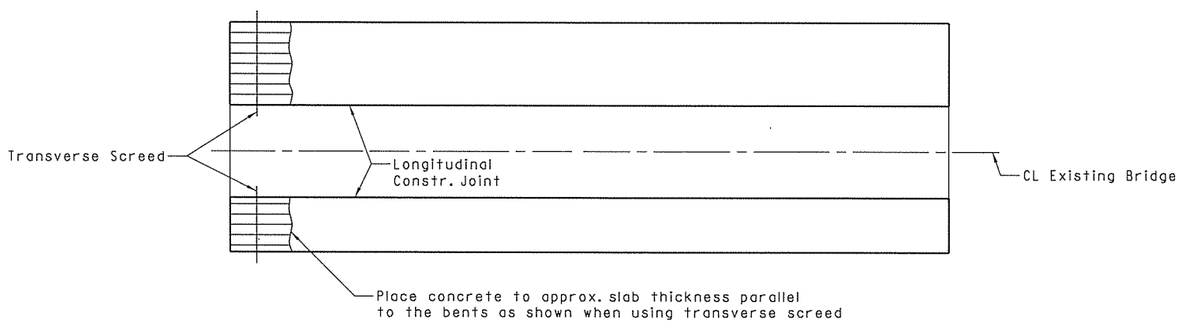

CONCRETE PLACEMENT PROCEDURE

No Scale

EXPANSION DEVICE INSTALLATION AT END BENTS

The Contractor may elect to install the expansion device for the end bents using one of the following two alternatives:

1. The concrete span pour adjacent to joint shall be placed before the end bent backwall is placed. After the end bent backwall forms are in place and the beams erected, the blocked expansion device shall be installed and adjusted for grade. All connection bolts shall be fully tightened prior to placing the deck concrete adjacent to the bent. Immediately prior to pouring the backwall concrete, the blocking shall be removed, the opening adjusted for temperature, and the backwall constructed.

2. The backwall shall be poured to the optional construction joint after beams are erected. The blocked expansion device shall be installed and adjusted for grade. All connection bolts shall be fully tightened prior to placing the deck concrete adjacent to the bent. Immediately prior to pouring the remainder of the backwall concrete, the blocking shall be removed and the opening adjusted for temperature. Backfill shall not be placed behind the backwall until the deck concrete on the adjacent span has been placed.

STATE OF ARKANSAS REGISTERED PROFESSIONAL ENGINEER No. 16183 JEFFREY D. STEVENSON
4.23.2016
BRIDGE ENGINEER

SHEET 9 OF 11
DETAILS OF 264'-0" CONTINUOUS COMPOSITE W-BEAM UNIT BRIDGE OVER I-49

ROUTE SEC.

ARKANSAS STATE HIGHWAY COMMISSION

LITTLE ROCK, ARK.

DRAWN BY: TLW DATE: 05/01/15 FILENAME: bCA0902x2_s9.dgn
CHECKED BY: JDS DATE: 05/01/15 SCALE: NO SCALE
DESIGNED BY: PMT DATE: 05/01/15

BRIDGE NO. 05982 DRAWING NO. 57232

DATE REVISED	DATE FILMED	DATE REVISED	DATE FILMED	FED. ROAD DIST. NO.	STATE	FED. AID PROJ. NO.	SHEET NO.	TOTAL SHEETS
				6	ARK.			
				JOB NO.		CA0902	361	581
				(1) 05982		264 FT. UNIT		57233

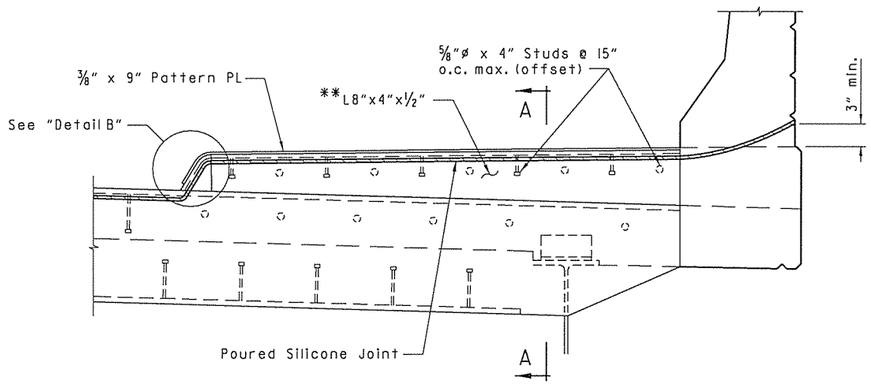

SECTION THROUGH SIDEWALK - STAGE 2

No Scale

Note: Install seal in slab joint and parapet joint with damming procedure as recommended by the Manufacturer. The sealant shall be recessed to prevent damage and be allowed to cure prior to removal of the outer damming material.

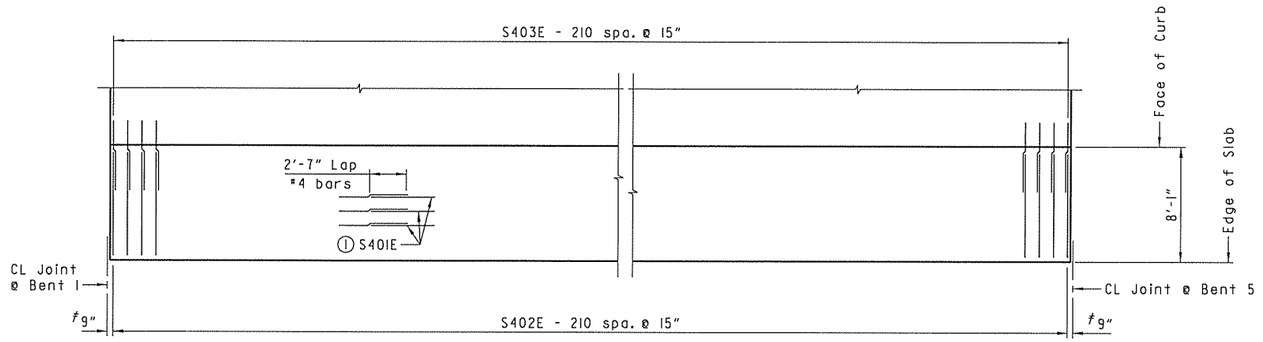

STAGE 2 SIDEWALK REINFORCING PLAN

Scale: 3/16" = 1'-0"

f Measured from CL Joint.

(1) Place as shown in "Stage 2 Sidewalk Detail", Dwg. No. 57225.

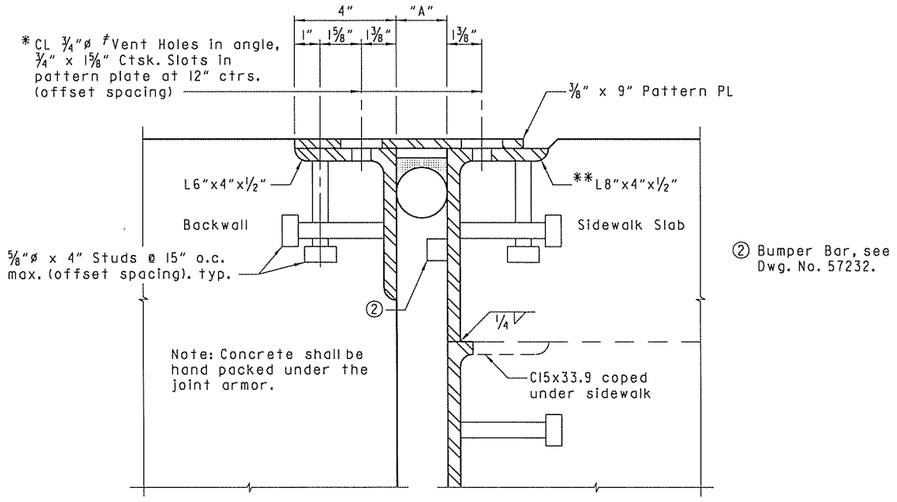

SECTION A-A

No Scale

* ¾" x 1⅝" Ctsk. Slots in ⅜" Pattern Plates. Tap 4" leg of angle for ⅝"ø Flat Head Cap Screws @ 12" o.c. Install screws in the shop and ship as a unit. Remove screws on one side after erection is complete.

** Trim vertical leg of L8"x4"x½" as needed.

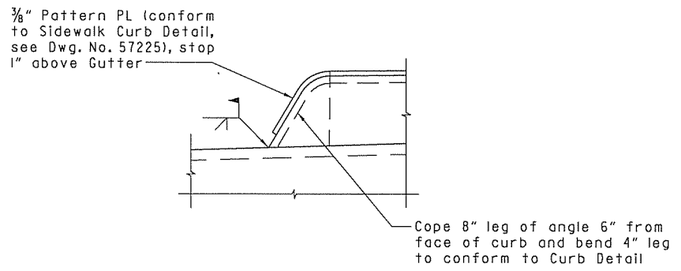

DETAIL B

No Scale

The surfaces of the ⅜" plates shall be painted with aluminum epoxy paint in accordance with Section 638, or as approved by the Engineer. Only one coat is required and shall be applied in the Fabricator's shop. Painting will not be paid for directly, but will be considered subsidiary to "Structural Steel in Beam Spans (M 270, Gr. 50)".

STATE OF ARKANSAS
REGISTERED PROFESSIONAL ENGINEER
No. 16185
JERRY D. SIMPSON
4-29-15

BRIDGE ENGINEER

SHEET 10 OF 11
DETAILS OF 264'-0" CONTINUOUS COMPOSITE W-BEAM UNIT
BRIDGE OVER I-49
ROUTE SEC.
ARKANSAS STATE HIGHWAY COMMISSION
LITTLE ROCK, ARK.

DRAWN BY: TLW DATE: 05/01/15 FILENAME: bCA0902x2_sl0.dgn
CHECKED BY: JDS DATE: 05/01/15 SCALE: NO SCALE
DESIGNED BY: PMT DATE: 05/01/15

BRIDGE NO. 05982 DRAWING NO. 57233

DATE REVISED	DATE FILMED	DATE REVISED	DATE FILMED	FED. ROAD DIST. NO.	STATE	FED. AID PROJ. NO.	SHEET NO.	TOTAL SHEETS
				6	ARK.			
				JOB NO.		CA0902	362	581
				① 05982		264 FT. UNIT		57234

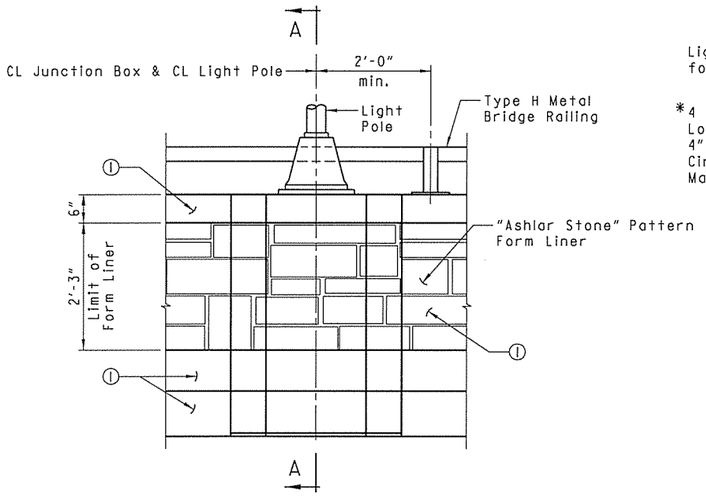

ELEVATION SHOWING LIGHT POLE SUPPORT DETAIL

For locations see Dwg. No. 57202
Scale: ¾" = 1'-0"

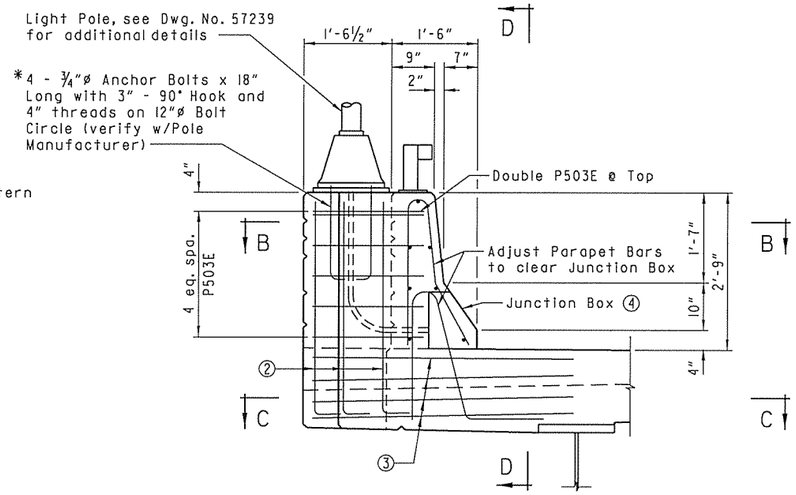

SECTION A-A

Scale: ¾" = 1'-0"

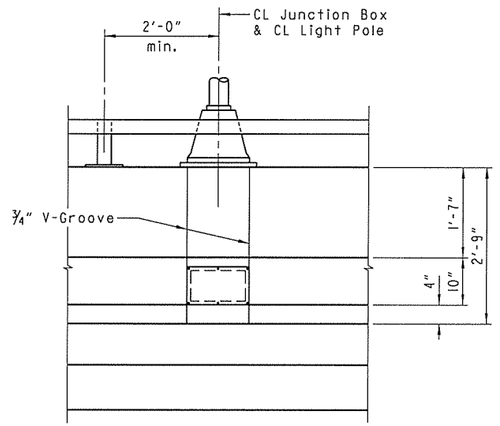

VIEW D-D

Scale: ¾" = 1'-0"

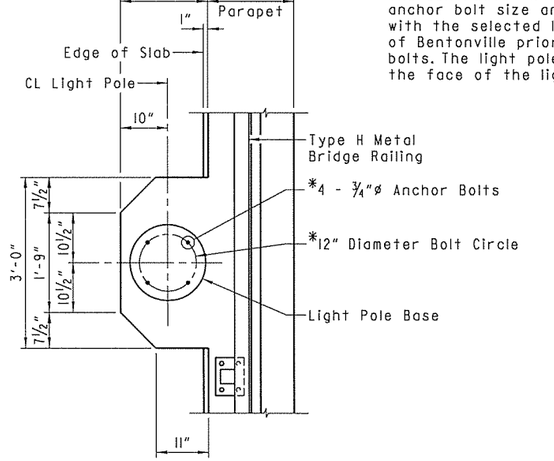

*The Contractor shall verify the required anchor bolt size and corresponding bolt circle with the selected light pole base with the City of Bentonville prior to installing the anchor bolts. The light pole base shall not hang over the face of the light pole support pedestal.

PLAN - LIGHT POLE SUPPORT PEDESTAL

For locations see Dwg. No. 57202
Scale: ¾" = 1'-0"

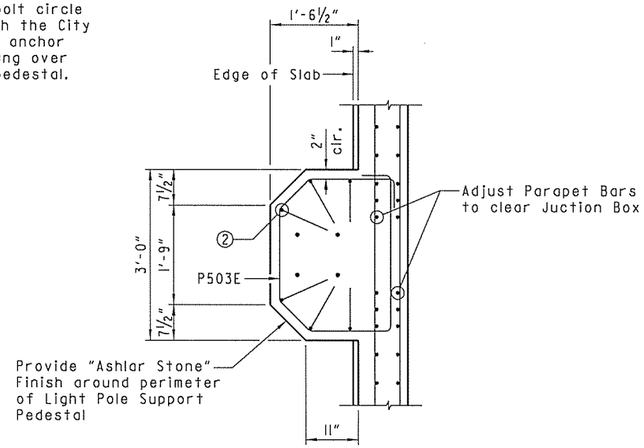

SECTION B-B

Scale: ¾" = 1'-0"

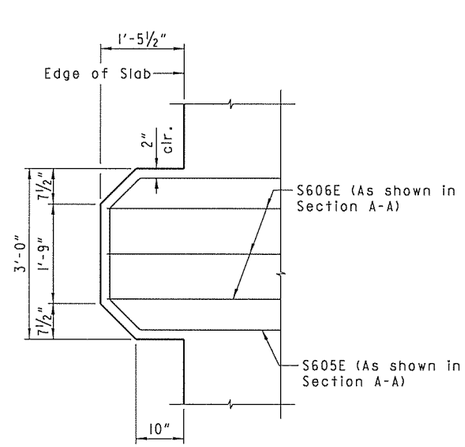

SECTION C-C

Scale: ¾" = 1'-0"

BAR LIST

MARK	NO. REQ'D.	LENGTH	PIN. DIA.
P503E	48	9'-4"	2½"
P504E	24	3'-10"	3¾"
P505E	24	4'-6"	3¾"
S605E	24	11'-1"	4½"
S606E	72	4'-0"	Str.

BENDING DIAGRAM

Dimensions are out to out of bars.

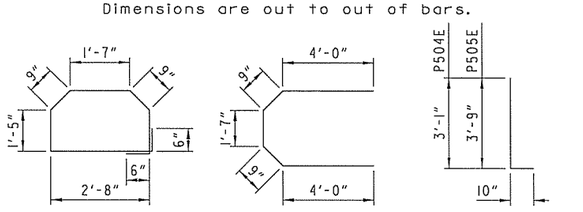

P503E S605E P504E & P505E

NOTES:

Light fixtures and poles are not included in this contract and will be installed by others.

① Class 3 Textured Coating Finish (Color = Gray, Color Chip No. 37150).

② P504E bars at north edge of deck, no sidewalk. P505E bars at south edge of deck, with sidewalk.

③ S605E or S606E bars, 2 layers required at north edge of deck and 4 layers required at south edge of deck.

④ For details of Junction Box, Conduits and Expansion Fittings, see Dwg. No. 57239.

STATE OF ARKANSAS REGISTERED PROFESSIONAL ENGINEER No. 16183 JERRY D. DEVENSON
4.25.2016
BRIDGE ENGINEER

SHEET 11 OF 11
DETAILS OF 264'-0" CONTINUOUS COMPOSITE W-BEAM UNIT
BRIDGE OVER I-49

ROUTE SEC.

ARKANSAS STATE HIGHWAY COMMISSION

LITTLE ROCK, ARK.

DRAWN BY: JJR DATE: 05/01/15 FILENAME: bCA0902x2_sll.dgn
CHECKED BY: JDS DATE: 05/01/15 SCALE: ¾" = 1'-0"
DESIGNED BY: TG DATE: 05/01/15

BRIDGE NO. 05982 DRAWING NO. 57234

DATE REVISED	DATE FILMED	DATE REVISED	DATE FILMED	FED. ROAD DIST. NO.	STATE	FED. AID PROJ. NO.	SHEET NO.	TOTAL SHEETS
				6	ARK.			
				JOB NO.		CA0902	363	581
				(1) 05982		ELASTO. BRGS.		57235

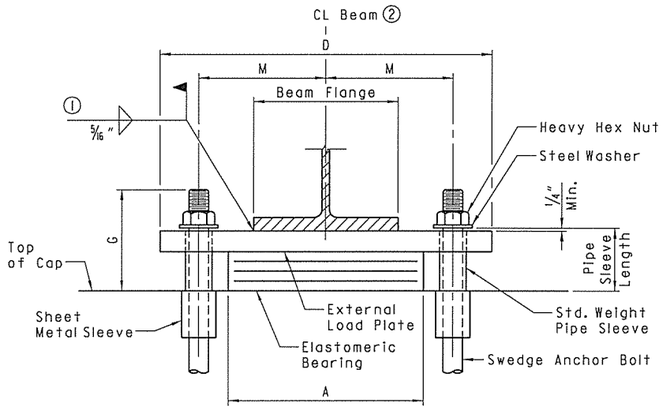

FRONT VIEW
BENT NOS. 2, 3 & 4

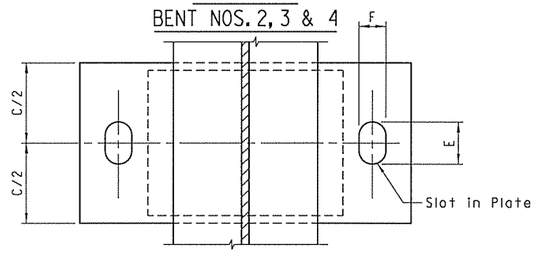

PLAN VIEW
BENT NOS. 2, 3 & 4

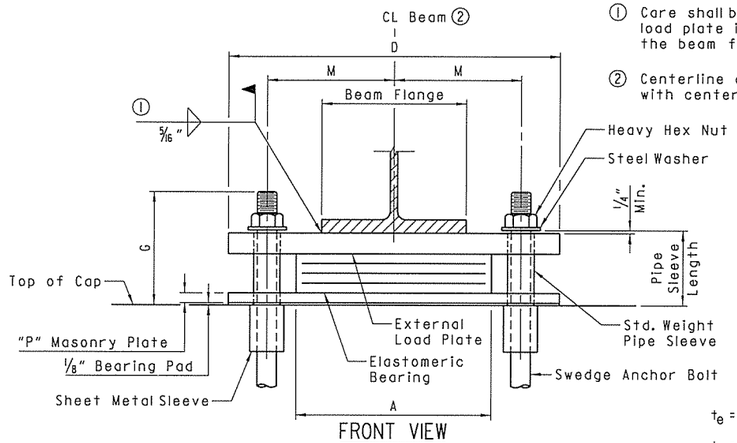

FRONT VIEW
BENT NOS. 1 & 5

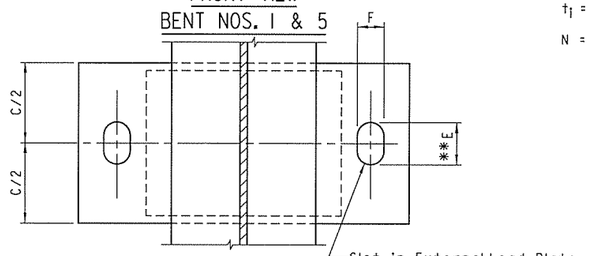

PLAN VIEW
BENT NOS. 1 & 5

NOTE:

The direction of bevel of the external load plate may not be accurately depicted with respect to T_a and T_b values shown in "Table of Fabricator Variables".

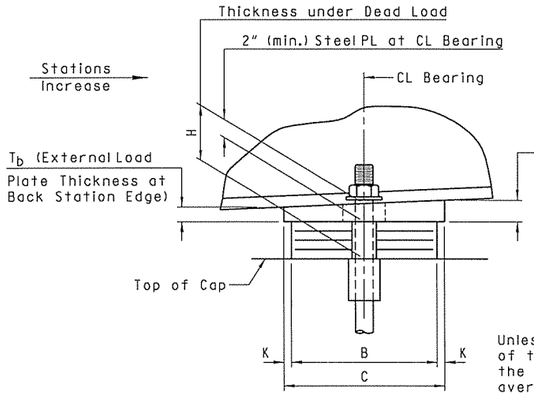

SIDE VIEW
BENT NOS. 2, 3 & 4

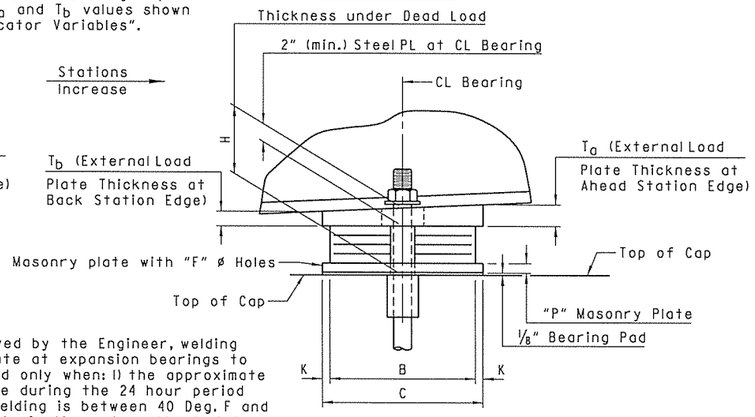

SIDE VIEW
BENT NOS. 1 & 5

Unless otherwise approved by the Engineer, welding of the external load plate at expansion bearings to the girder will be allowed only when: 1) the approximate average air temperature during the 24 hour period immediately preceding welding is between 40 Deg. F and 80 Deg. F; and 2) the slots in the external load plate are positioned to center on the anchor bolts; and 3) no horizontal deformation of the elastomeric pad is evident. If welding at other temperatures is required, the Engineer will provide adjustment data.

(1) Care shall be taken to ensure that the external load plate is in full complete contact with the beam flange before welding begins.

(2) Centerline of the elastomeric pad shall be aligned with centerline of the beam.

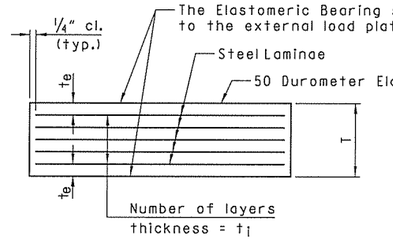

ELASTOMERIC BEARING

t_e = thickness of elastomer cover on top and bottom of pad

t_i = thickness of elastomer between steel laminae

N = number of elastomer layers of thickness t_i

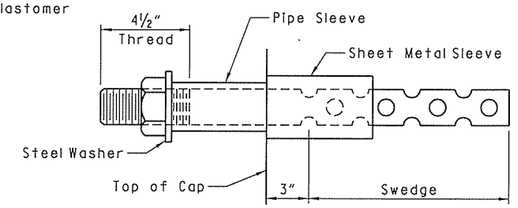

ANCHOR BOLT DETAIL

NOTES:

Anchor bolts may be cast in place or drilled and grouted into place. If anchor bolts are to be cast in place, the galvanized sheet metal sleeves will not be required.

If anchor bolts are to be drilled and grouted in place, the galvanized sheet metal sleeves shall be cast in place as shown. Sleeves shall be dry packed with styrofoam, urethane foam or approved equal prior to pouring of concrete. After pouring of the cap and prior to erection of structural steel, the dry pack shall be removed and holes for the anchor bolts shall be accurately drilled into masonry. Bolts placed in drilled holes shall be accurately set and fixed using a QPL approved epoxy or non-shrink grout that completely fills the holes. Galvanized sheet metal sleeve will not be paid for directly, but will be considered subsidiary to the item "Structural Steel in Beam Spans (M 270, Gr. 50)".

GENERAL NOTES

Elastomeric Bearings shall conform to Section 808 of the Standard Specifications and shall be paid for at the unit price bid for "Elastomeric Bearings".

External load plates and masonry plates shall conform to AASHTO M 270, Grade 50. Pipe sleeves shall be ASTM A500, Grade B, and shall be galvanized to conform to AASHTO M 232, Class C or AASHTO M 298, Class 50.

External load plates and masonry plates shall be completely fabricated (including bevel and bolt holes) and shall be cleaned before vulcanizing to the elastomeric bearing. Surfaces in contact with the elastomeric bearing shall be cleaned in accordance with subsection 808.03. Other surfaces shall be blast cleaned in accordance with subsection 807.84(b) for painted steel and painted in accordance with subsection 807.75. The color of the paint shall conform to Federal Standard 585B, Color Chip No. 26122, Gray. Painting will not be paid for directly, but shall be considered subsidiary to "Elastomeric Bearings".

Anchor Bolts, Washers and Nuts shall conform to subsection 807.07 of the Standard Specifications. The anchor bolt grade of steel shall be as specified in the "Table of Fabricator Variables". Indentations shall be circular with rounded bottoms and staggered as shown in details.

Pipe Sleeves, Anchor Bolts, Washers and Nuts shall be paid for at the unit price bid for "Structural Steel in Beam Spans (M 270, Gr. 50)". External load plates, masonry plates and 1/8" bearing pads will not be measured or paid for separately but will be considered included in the unit bid price for "Elastomeric Bearings".

Bearings with masonry plates shall be seated in accordance with subsection 807.66. Bearings without masonry plates shall be seated in accordance with subsection 808.08. This work and materials are considered as subsidiary to the item "Elastomeric Bearings" and will not be paid for directly.

TABLE OF FABRICATOR VARIABLES

BRIDGE NO.	LOCATION: BENT NO(S).	LOCATION: BEAM NO.	BEARING TYPE	NO. OF BEARINGS EACH BENT	*MAXIMUM DESIGN LOAD (KIPS)	G	H	ELASTOMERIC PAD: A	B	N	t_i	t_e	NO. & THICKNESS OF STEEL LAMINAE	T	EXTERNAL LOAD PLATE: C	D	**E	F	K	M	P	T_a	T_b	ANCHOR BOLT: (Dia. x L)	GRADE	PIPE SLEEVE SIZE (Dia. x L)	SHEET METAL SLEEVE SIZE (Dia. x L)	STEEL WASHER SIZE (O.D.)
05982	1	1-4, 11-12	Exp.	6	62	8 5/8"	6 1/8"	15 1/2"	8"	4	1/2"	1/4"	5 @ 12 Gauge	3"	9"	24 1/2"	4 1/8"	2"	1/2"	9 3/4"	1"	2.06"	1.94"	1 1/4"x24"	55	1 1/4"x6 3/8"	3"x12"	2 1/2"
	2	1-4, 11-12	Exp.	6	164	8 5/8"	5 5/8"	15 1/2"	11"	5	1/2"	1/4"	6 @ 12 Gauge	3 5/8"	12"	26 1/2"	4 1/4"	2 5/8"	1/2"	10 1/4"	-	2.05"	1.95"	1 3/4"x30"	55	2"x5 7/8"	4"x12"	3 3/8"
	3	1-4, 11-12	Fix	6	192	9 3/8"	5 5/8"	15 1/2"	11"	5	1/2"	1/4"	6 @ 12 Gauge	3 5/8"	12"	28 1/2"	3 3/4"	3 3/4"	1/2"	10 3/4"	-	1.99"	2.01"	2 1/2"x38"	55	3"x5 7/8"	4"x12"	4 1/2"
	4	1-4, 11-12	Exp.	6	164	8 5/8"	5 5/8"	15 1/2"	11"	5	1/2"	1/4"	6 @ 12 Gauge	3 5/8"	12"	26 1/2"	4 1/4"	2 5/8"	1/2"	10 1/4"	-	1.94"	2.06"	1 3/4"x30"	55	2"x5 7/8"	4"x12"	3 3/8"
	5	1-4, 11-12	Exp.	6	62	8 5/8"	6 1/8"	15 1/2"	8"	4	1/2"	1/4"	5 @ 12 Gauge	3"	9"	24 1/2"	4 1/8"	2"	1/2"	9 3/4"	1"	1.93"	2.07"	1 1/4"x24"	55	1 1/4"x6 3/8"	3"x12"	2 1/2"

*Maximum Design Load = Service Load

**The dimension "E" does not apply to masonry plates - see "PLAN VIEW"

STATE OF ARKANSAS
JERRY D. PETERSON
REGISTERED PROFESSIONAL ENGINEER
No. 16183
4-23-2016
BRIDGE ENGINEER

DETAILS OF ELASTOMERIC BEARINGS
BRIDGE OVER I-49

ROUTE SEC.

ARKANSAS STATE HIGHWAY COMMISSION

LITTLE ROCK, ARK.

DRAWN BY: TLW DATE: 05/01/15 FILENAME: bCA0902x2_el.dgn

CHECKED BY: TG DATE: 05/01/15 SCALE: NO SCALE

DESIGNED BY: PMT DATE: 05/01/15

BRIDGE NO. 05982 DRAWING NO. 57235

DATE REVISED	DATE FILMED	DATE REVISED	DATE FILMED	FED. ROAD DIST. NO.	STATE	FED. AID PROJ. NO.	SHEET NO.	TOTAL SHEETS
				6	ARK.			
				JOB NO.		CA0902	364	581
				(1) 05982		RAIL		57236

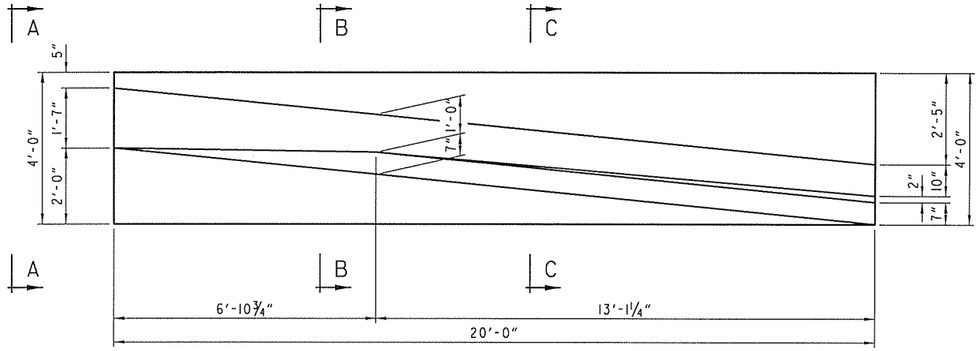

PLAN OF TRANSITIONAL APPROACH RAILING

Scale: ½" = 1'-0"

FOR INFORMATION ONLY
SCHEDULE OF QUANTITIES PER RAIL UNIT

CLASS "S" CONCRETE	REINFORCING STEEL (GRADE 60)
4.20 Cu. Yds.	374 Lbs.

BAR LIST - ONE TRANSITIONAL RAIL

MARK	NO. REQ'D.	LENGTH	A	B	PIN. DIA.
F401	8	19'-8"			Str.
F402	40	3'-8"			Str.
R401	2	4'-10"	1'-2"	1'-1"	2"
R402	2	3'-0"			Str.
R403	3	17'-9"			Str.
R404	1	5'-0"			Str.
R405	1	12'-9"			Str.
R406	12	6'-3"	2'-0"	1'-1½"	2"
R407-R417	1 ea.	3'-0"-5'-5"	1'-3"-2'-5½"	1'-3"-2'-5½"	2"
R418-R423	1 ea.	3'-9"-5'-1"	1'-4"-1'-11½"	1'-1½"	2"
R424	2	10'-9"			Str.

BENDING DIAGRAM

Dimensions are out to out of bars.

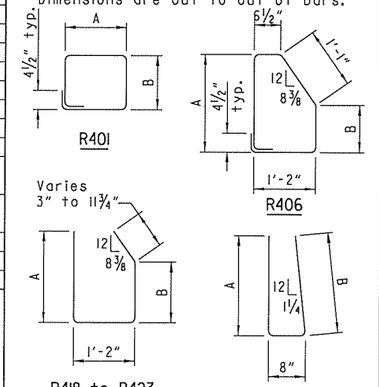

GENERAL NOTES

Transitional Approach Railing shall be placed at ends of turnback wings at locations shown on the layout and at end of Concrete Barrier Wall.

All Concrete shall be Class "S" and be poured in the dry. All exposed corners to be chamfered ¾" unless otherwise noted.

All reinforcing steel shall be Grade 60 (yield strength = 60,000 psi) conforming to AASHTO M31 or M322, Type A, with mill test reports.

Transitional Approach Railing shall be paid for at the contract unit price bid per each for "Transitional Approach Railing", as specified in Subsection 806.07(b).

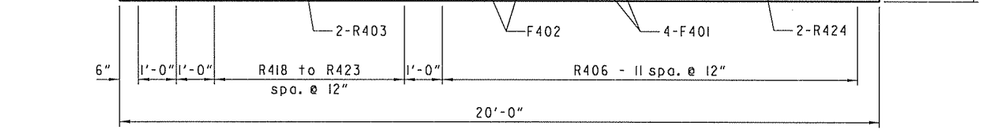

ELEVATION OF TRANSITIONAL APPROACH RAILING

Scale: ½" = 1'-0"

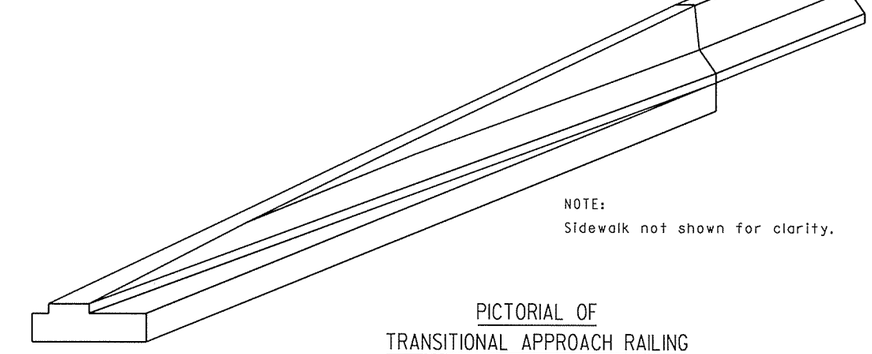

PICTORIAL OF
TRANSITIONAL APPROACH RAILING

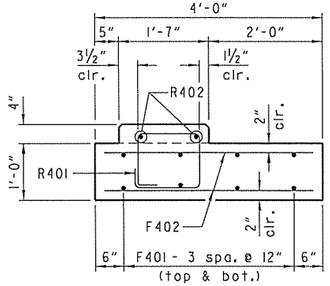

VIEW A-A

Scale: ¾" = 1'-0"

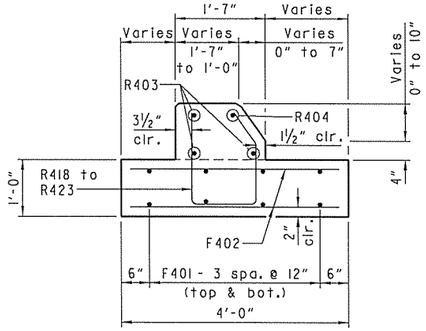

SECTION B-B

Scale: ¾" = 1'-0"

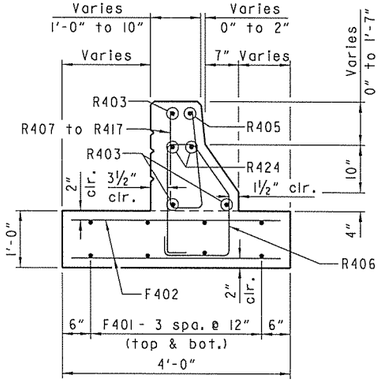

SECTION C-C

Scale: ¾" = 1'-0"

STATE OF ARKANSAS
REGISTERED PROFESSIONAL ENGINEER
No. 16183
JERRY D. PETERSON
4.23.2016
BRIDGE ENGINEER

SHEET 1 OF 2
DETAILS OF
TRANSITIONAL APPROACH RAILING
BRIDGE OVER I-49

ROUTE SEC.

ARKANSAS STATE HIGHWAY COMMISSION
LITTLE ROCK, ARK.

DRAWN BY: TLW DATE: 05/01/15 FILENAME: bCA0902x2_trl.dgn
CHECKED BY: TG DATE: 05/01/15 SCALE: AS NOTED
DESIGNED BY: JDS DATE: 05/01/15

BRIDGE NO. 05982 DRAWING NO. 57236

DATE REVISED	DATE FILMED	DATE REVISED	DATE FILMED	FED. ROAD DIST. NO.	STATE	FED. AID PROJ. NO.	SHEET NO.	TOTAL SHEETS
				6	ARK.			
				JOB NO.		CA0902	365	581
				(1) 05982		RAIL		57237

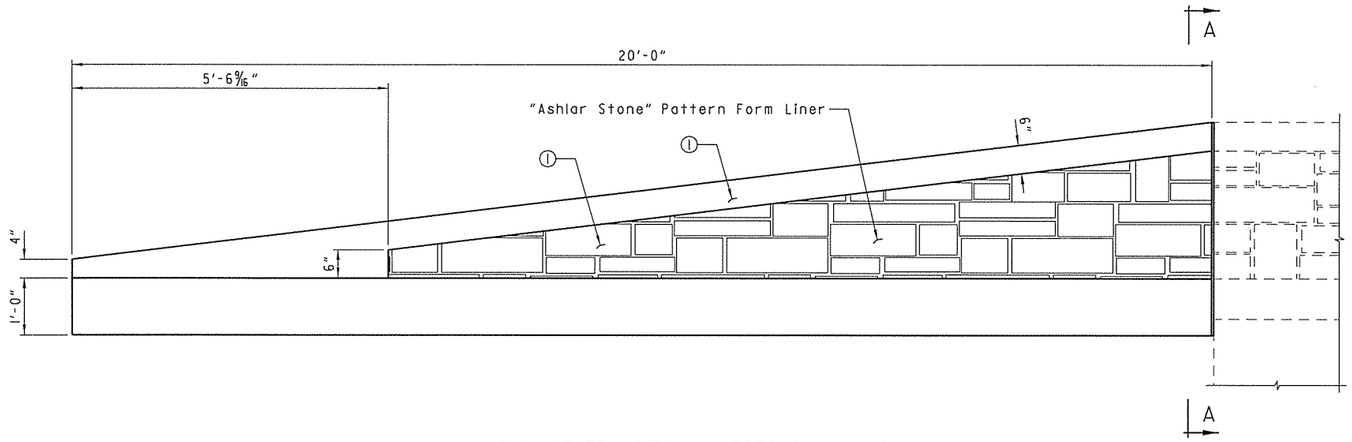

ELEVATION OF TRANSITIONAL APPROACH RAILING

Scale: 3/4" = 1'-0"

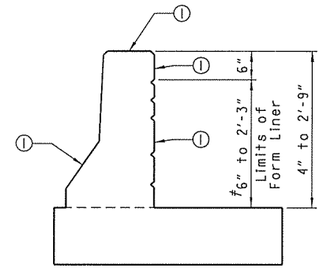

SECTION A-A

Scale: 3/4" = 1'-0"

"Ashlar Stone" Pattern

(1) Class 3 Textured Coating Finish
(Color = Gray, Color Chip No. 37150)

STATE OF ARKANSAS
REGISTERED PROFESSIONAL ENGINEER
No. 16183
JERRY L. STEVENSON
4.25.2016
BRIDGE ENGINEER

SHEET 2 OF 2
DETAILS OF
TRANSITIONAL APPROACH RAILING
BRIDGE OVER I-49

ROUTE SEC.

ARKANSAS STATE HIGHWAY COMMISSION

LITTLE ROCK, ARK.

DRAWN BY: TLW DATE: 05/01/15 FILENAME: bCA0902x2_tr2.dgn
CHECKED BY: TG DATE: 05/01/15 SCALE: AS NOTED
DESIGNED BY: JDS DATE: 05/01/15

BRIDGE NO. 05982 DRAWING NO. 57237

DATE REVISED	DATE FILMED	DATE REVISED	DATE FILMED	FED. ROAD DIST. NO.	STATE	FED. AID PROJ. NO.	SHEET NO.	TOTAL SHEETS
				6	ARK.			
				JOB NO.		CA0902	366	581
				(1) 05982		TYPE H RAIL		57238

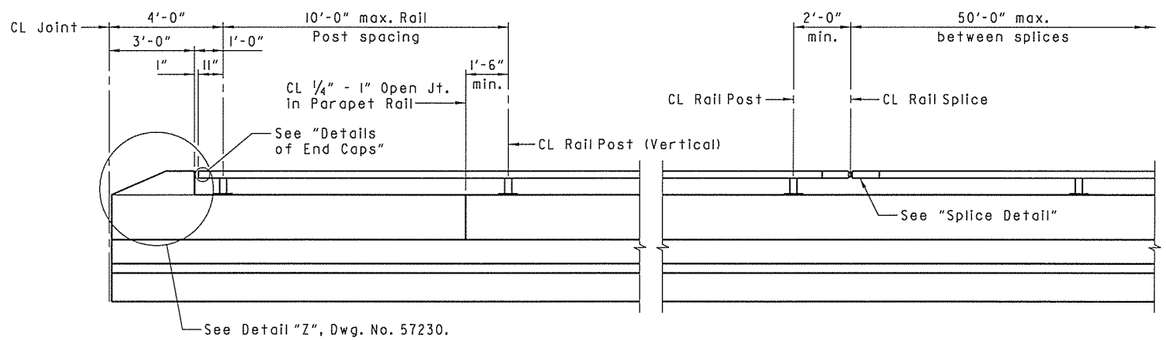

RAIL POST SPACING DETAIL

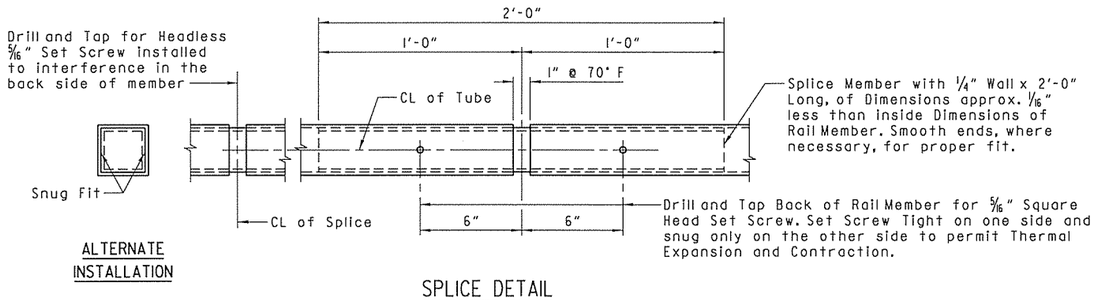

ALTERNATE INSTALLATION

SPLICE DETAIL

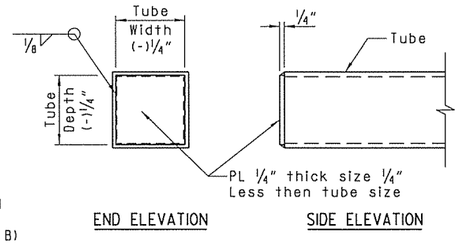

END ELEVATION SIDE ELEVATION

DETAILS OF END CAPS

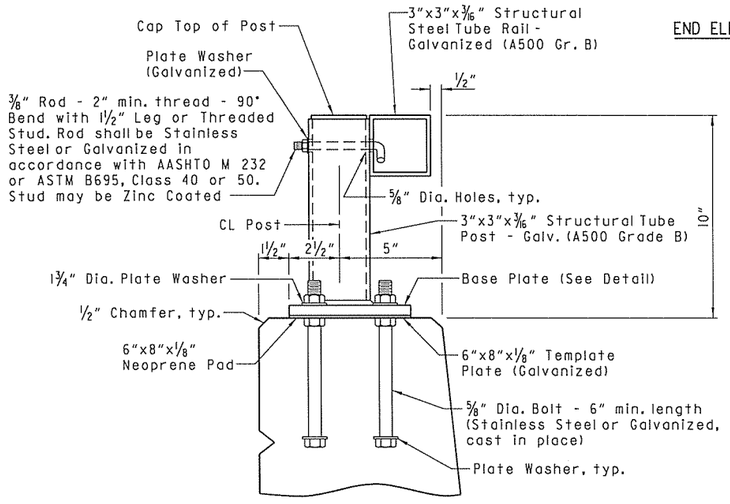

DETAILS OF POST ANCHOR SYSTEM

(CAST IN PLACE BOLTS)

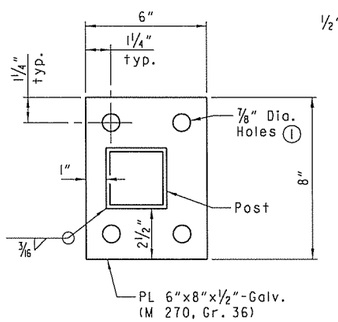

BASE PLATE

NOTES FOR BRIDGE RAILING:

Rail layout shall conform to vertical and horizontal alignment of bridge. All post shall be vertical.

Maximum post spacing = 10'-0"

Minimum distance from centerline post to centerline apen or contraction joints in parapet = 1'-6".

Rail splices shall be at 50' maximum spacing. Centerline splices shall be located at a minimum of 2 feet from centerline of post. Rail sections shall be fabricated to attach to at least three posts.

Base plates shall not be placed upon areas that are improperly finished, deformed or irregular.

Metal bridge railing, including post, fasteners, base plates, template plates, anchor bolts, neoprene pads, galvanizing and powder coatings shall be paid for at the contract unit price bid per linear foot for "Metal Bridge Railing (Type H)".

Shop drawings showing details of railing shall be submitted and approval secured before fabrication is begun.

*HILTI HIT RE 500 Epoxy Adhesive Anchor System with 4 1/2" embedment or an approved equal.

The HILTI Epoxy Adhesive Anchor System shall be installed in accordance with Manufacturer's recommendations.

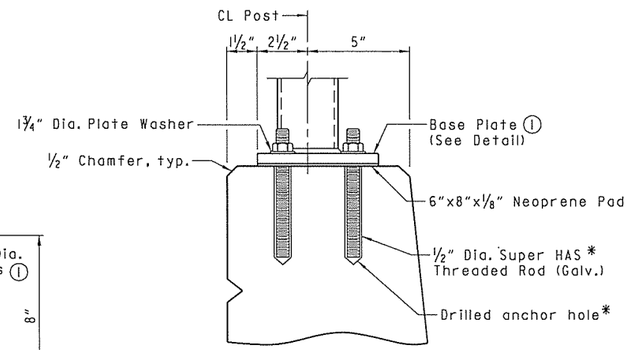

DETAILS OF ALTERNATE POST ANCHOR SYSTEM

(EPOXY ADHESIVE ANCHORS)

(1) Holes shall be 3/4" diameter if epoxy adhesive anchors are used.

MATERIALS:

Tubing, Posts, and Accessories: AASHTO M 270, Gr. 36 or ASTM A500-Grade B.

Railing End Caps shall conform to AASHTO M 270, Gr. 36 galvanized.

Steel rail members shall be galvanized in accordance with AASHTO M 111 after fabrication and shall receive a powder coating process after galvanizing. Galvanizing shall not interfere with the powder coating process. Galvanized surfaces shall be prepared in accordance with Subsection 807.87 and the powder coating manufacturer's recommendations before application of the powder coating process. The powder coating process shall be a two coat system applied using electrostatic spray. The base coat shall be a thermosetting epoxy powder with a minimum thickness of 2-4 mils. The top coat shall be a tough polyester powder coat with a minimum thickness of 2-4 mils. Color shall be Bronze. Coated galvanized framework shall have a salt spray resistance of 3,000 hours using ASTM B117 without loss of adhesion. The powder coating process shall be in accordance with the Manufacturer's recommendations.

The Contractor shall submit a paint color sample prior to fabrication for Owner's approval.

Cast in place anchor bolts shall be of stainless steel or high strength steel. Stainless steel anchor bolts shall conform to ASTM A193 or A320-Grade B8 with a minimum yield strength of 80,000 psi. High strength steel anchor bolts shall conform to AASHTO M 164 or A354-Grade BC galvanized in accordance with AASHTO M 232 or ASTM B695, Class 40 or 50.

Splice Set Screws shall conform to the requirements of ASTM A193 or A320-Grade B8 (stainless steel) or AASHTO M 270, Gr. 36 (galvanized).

Nuts shall conform to AASHTO M 292, Gr. 8A (stainless steel) or galvanized in accordance with AASHTO M 232 or ASTM B695, Class 40 or 50.

Threads on bolts, screws, and nuts shall conform to American Standard Coarse Series, Class 2 FIT, ASA Specification B1.1.

Washers shall be stainless steel and conform to the requirements of ASTM A276 or A167-Type 302 with dimensions meeting ASTM F436, or high strength steel conforming to AASHTO M 293 and galvanized in accordance with AASHTO M 232 or ASTM B695, Class 40 or 50.

Plate Washers shall be stainless steel and conform to the requirements of ASTM A167-Type 302 or AASHTO M 270, Gr. 36, galvanized in accordance with AASHTO M 232 or ASTM B695, Class 40 or 50. Plate Washers shall have dimensions meeting the requirements of ANSI/ASME B18.22.1, Type A plain washer (Wide Series).

Mixing of stainless steel and galvanized fasteners will not be permitted.

NOTE:

For details of post and rail not shown, see alternate for cast in place bolts.

STATE OF ARKANSAS REGISTERED PROFESSIONAL ENGINEER No. 16183 JERRY D. SVENSSON

4.23.2015

BRIDGE ENGINEER

DETAILS OF TYPE H METAL BRIDGE RAILING BRIDGE OVER I-49

ROUTE SEC.

ARKANSAS STATE HIGHWAY COMMISSION

LITTLE ROCK, ARK.

DRAWN BY: TLW DATE: 05/01/15 FILENAME: bCA0902x2_hr.dgn

CHECKED BY: JDS DATE: 05/01/15 SCALE: NO SCALE

DESIGNED BY: PMT DATE: 05/01/15

BRIDGE NO. 05982 DRAWING NO. 57238

STATE OF ARKANSAS
REGISTERED PROFESSIONAL ENGINEER
No. 8760
ANDREW E. FRIES
5/16/16

DATE REVISED	DATE FILMED	DATE REVISED	DATE FILMED	FED. ROAD DIST. NO.	STATE	FED. AID PROJ. NO.	SHEET NO.	TOTAL SHEETS
				6	ARK.			
				JOB NO.		CA0902	367	581
				①		LIGHTING		

NOTES:

Light fixtures and poles are not included in this contract and will be installed by others.

All hardware shall be corrosion resistant, galvanized or stainless rigid steel.

Construct foundation in accordance with pole manufacturers guidelines and per these plans. Contractor shall coordinate with the Engineer for manufacturing requirements

Refer to plan for conduit and conductor sizes. Use long sweep 90° elbows on all conduit bends that meet NEC minimum radius requirements.

Tie all pole, equipment ground, and all other metal equipment and grounding lugs together using minimum #6 AWG solid bare copper and approved exothermic welds and connect to ground rod system.

Contractor shall coordinate with the Engineer and the City of Bentonville to determine bolt spacing prior to the construction of the lighting blisters.

The Contractor shall use caution when installing conduits in barrier to not impact rebar or construction joints.

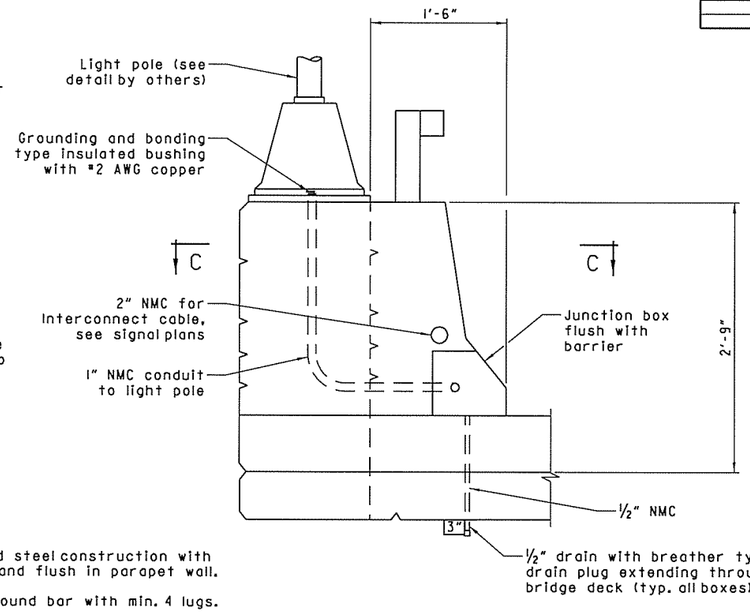

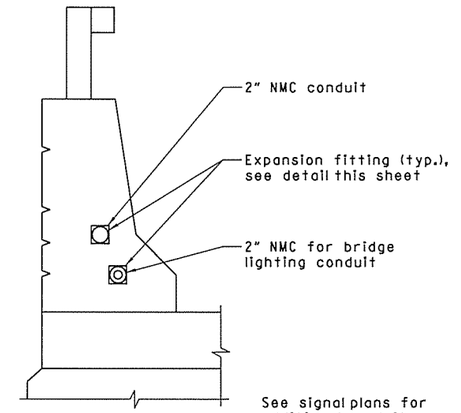

SECTION B-B
No Scale

BOX NOTES:

NEMA 3R galvanized steel construction with gasket, recessed and flush in parapet wall.

Internal copper ground bar with min. 4 lugs.

External ground lug, bonded to #2/0 ground wire system using #6 AWG copper wire.

Splice wires in box according to NEC. All wires shall be type THHW or greater.

SECTION A-A
No Scale

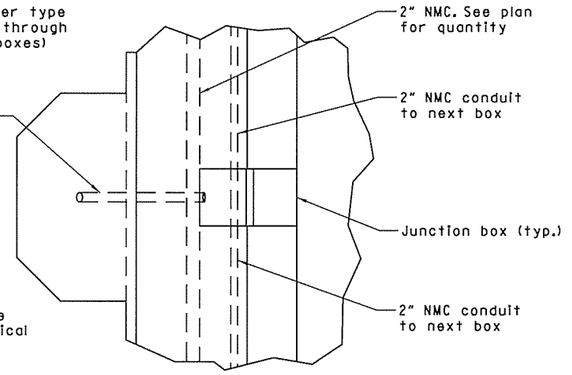

Note: Junction box and lid material shall be ¼" A36 steel. Fasteners shall be ⅜"ø x ¾" S.S. FH socket screws. Weld per AHTD standard spec. Hot dip galvanized and powder coat after fabrication per bridge railing general notes. Prefabricated junction boxes may be substituted by the contractor if approved by the engineer. The junction boxes shall be adequately anchored to the parapet by means of an approved mechanical device. Junction boxes shall not interfere with slider plates or expansion joints. Provide at least one ½" min. Drainage hole near the bottom of the junction box.

SECTION C-C
No Scale

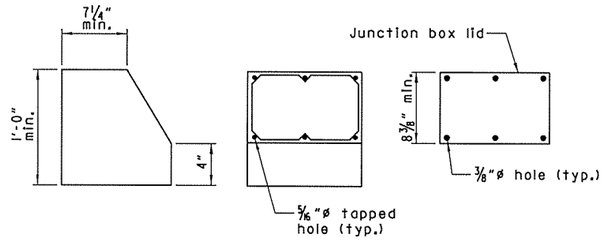

BRIDGE JUNCTION BOX DETAILS
No Scale

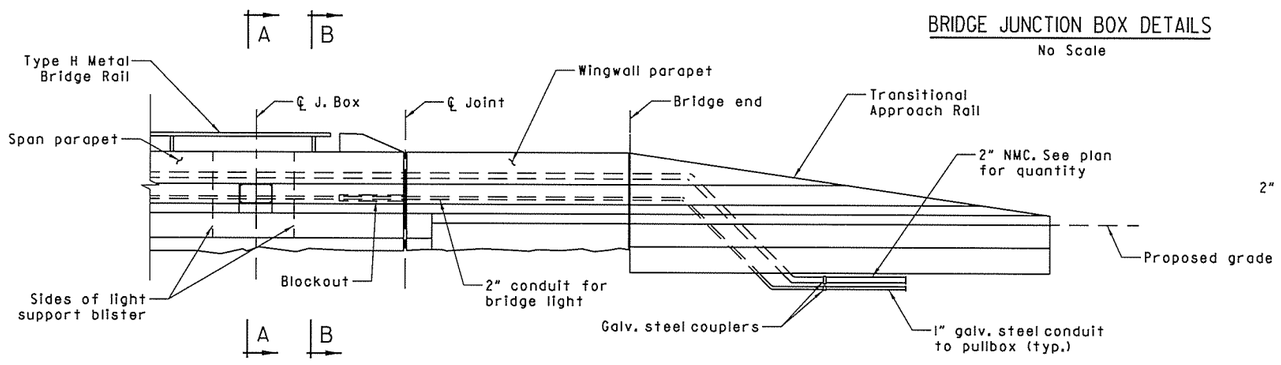

CONDUIT DETAILS
No Scale

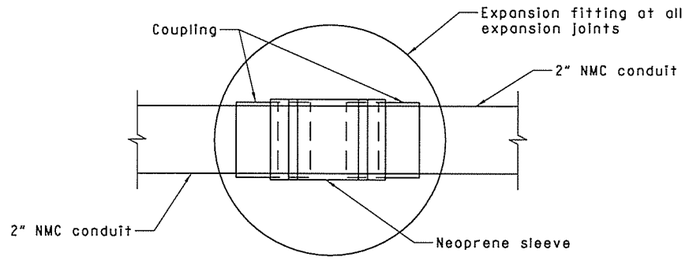

EXPANSION FITTING DETAIL (TYP)
No Scale

Note: The movement range of the expansion fitting shall meet or exceed the movement range of the bridge expansion joints.

ELECTRICAL LIGHTING DETAILS
HWY. 72 OVER I-49
ROUTE SEC.
ARKANSAS STATE HIGHWAY COMMISSION
LITTLE ROCK, ARK.

DRAWN BY: ADR DATE: 05/01/15
CHECKED BY: PH DATE: 05/01/15
DESIGNED BY: AWR DATE: 05/01/15
FILENAME: $FILES$
SCALE: NO SCALE

BRIDGE NO. 05982 DRAWING NO. DN_x2_ELI

DATE REVISED	DATE FILMED	DATE REVISED	DATE FILMED	FED. ROAD DIST. NO.	STATE	FED. AID PROJ. NO.	SHEET NO.	TOTAL SHEETS
				6	ARK.			
				JOB NO.		CA0902	368	581
				①		SIGN STRUCTURE		57240

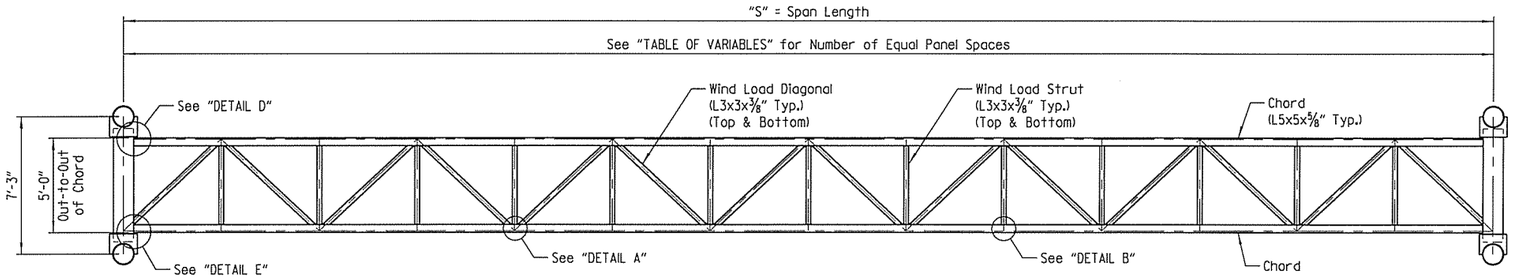

PLAN

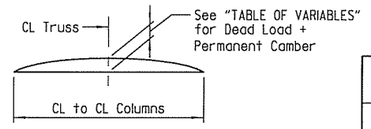

TRUSS CAMBER DIAGRAM

TABLE OF VARIABLES

Span (ft)	No. of Equal Panel Spaces	Dead Load + Permanent Camber
60' thru 65'	12	1"
66' thru 75'	14	1¼"
76' thru 85'	16	1½"

* Note:
The Contractor shall make field measurements to determine the Column heights "H1" and "H2" that are required to maintain the minimum vertical clearance with the centerline of the sign located at the centerline of the truss. These column heights shall be shown on the shop drawings with a note stating that the Contractor has made the required field measurements. If the structure height ("H1" or "H2") exceeds 30'-0" contact the Engineer. The Contractor shall also verify that the variable span length (60'-0" to 85'-0") is sufficient to meet the minimum clearances and to fit the new structure to the existing and/or proposed conditions.

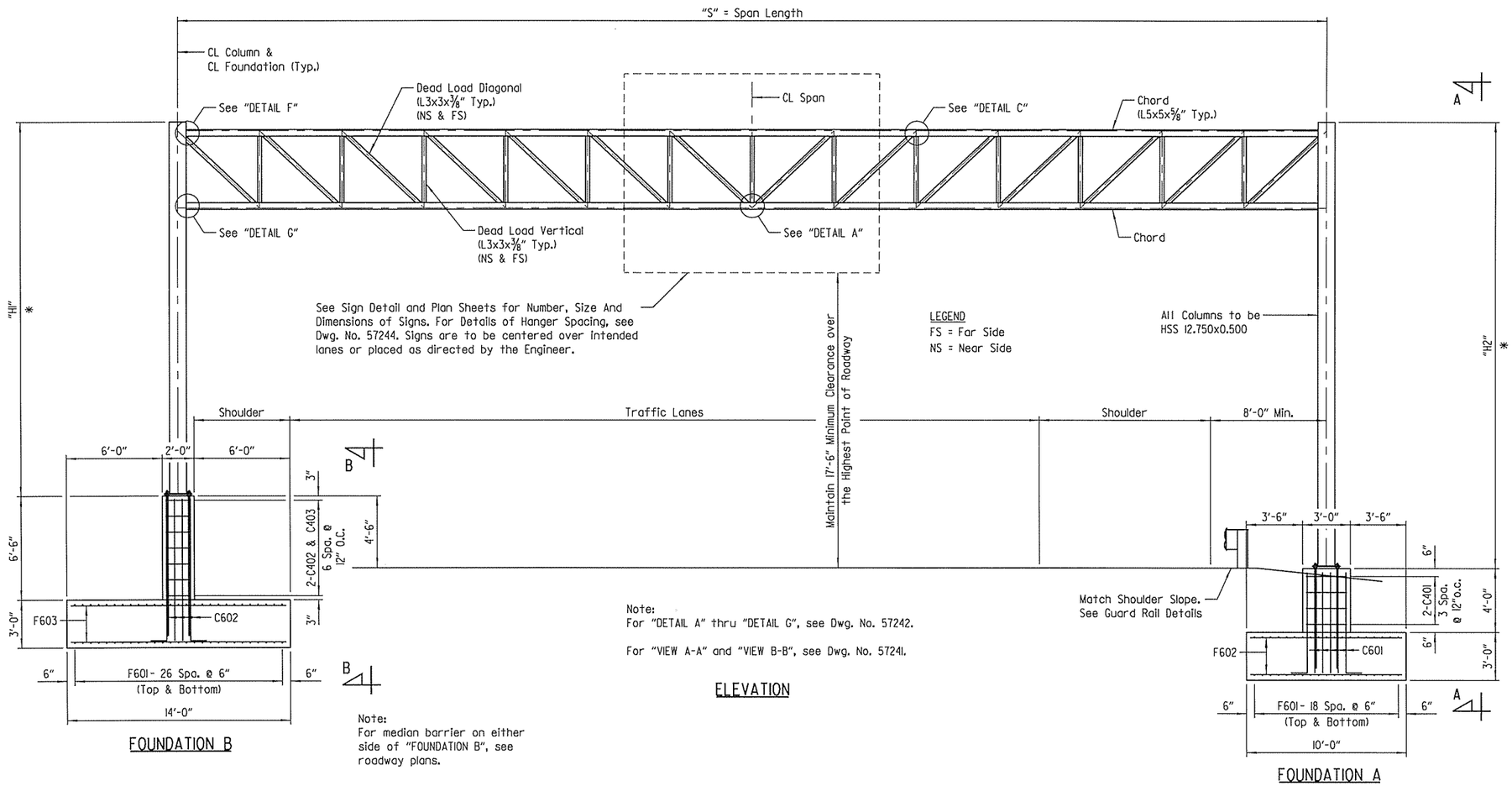

Note:
For "DETAIL A" thru "DETAIL G", see Dwg. No. 57242.

For "VIEW A-A" and "VIEW B-B", see Dwg. No. 57241.

ELEVATION

Note:
For median barrier on either side of "FOUNDATION B", see roadway plans.

FOUNDATION B

FOUNDATION A

SPAN LENGTH TABLE

Structure No.	"S"
OH-49-04-05	84'-0"
OH-49-04-08	84'-0"
OH-49-04-10	84'-0"
OH-49-04-11	82'-0"
OH-49-04-13	74'-0"
OH-49-04-14	75'-0"

APPROXIMATE QUANTITIES FOR FOUNDATION (FOR INFORMATION ONLY)

FOUNDATION	CLASS S CONCRETE (Cu. Yards)	REINFORCING STEEL (Lbs.)	EXCAVATION (Cu. Yards)
A	27.6	2947	78
B	40.7	4678	72

BAR LIST - FOUNDATION A

MARK	NO. REQ'D	LENGTH	P.D.
C401	8	20'-10"	3"
C601	56	7'-3"	4½"
F601	38	19'-6"	Str.
F602	78	9'-6"	Str.

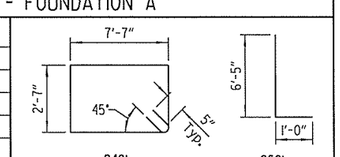

NOTE: Dimensions of bars are out-to-out.

BAR LIST - FOUNDATION B

MARK	NO. REQ'D	LENGTH	P.D.
C402	14	19'-4"	3"
C403	7	26'-4"	3"
C602	82	9'-10"	4½"
F601	54	19'-6"	Str.
F603	78	13'-6"	Str.

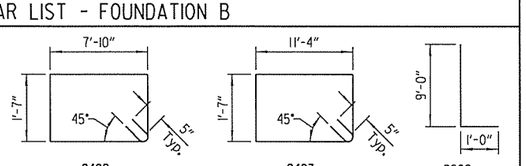

NOTE: Dimensions of bars are out-to-out.

STATE OF ARKANSAS
REGISTERED PROFESSIONAL ENGINEER
No. 16183
JERRY L. PETTY
4.23.2015
BRIDGE ENGINEER

SHEET 1 OF 5
DETAILS FOR 60' TO 85'
STEEL OVERHEAD SIGN STRUCTURES
WITH MEDIAN FOUNDATION
BENTON COUNTY
ROUTE SEC.
ARKANSAS STATE HIGHWAY COMMISSION
LITTLE ROCK, ARK.

DRAWN BY: TLW DATE: 05/01/15 FILENAME: bCA0902x3_t1.dgn
CHECKED BY: BLA DATE: 05/01/15 SCALE: NO SCALE
DESIGNED BY: YZ DATE: 05/01/15
STR. NO. OH-49-04-05, OH-49-04-08, OH-49-04-10, OH-49-04-11, OH-49-04-13, OH-49-04-14 DRAWING NO. 57240

DATE REVISED	DATE FILMED	DATE REVISED	DATE FILMED	FED. ROAD DIST. NO.	STATE	FED. AID PROJ. NO.	SHEET NO.	TOTAL SHEETS
				6	ARK.			
				JOB NO.		CA0902	369	581
				(1)		SIGN STRUCTURE		57241

(1) Bolts shall be 1" Dia. and slotted hole in gusset plate and chord angle 11/16" x 2 1/2". Use plate washer on gusset plate side. 11/16" Dia. holes in 3/4" shim plate and beam flange.

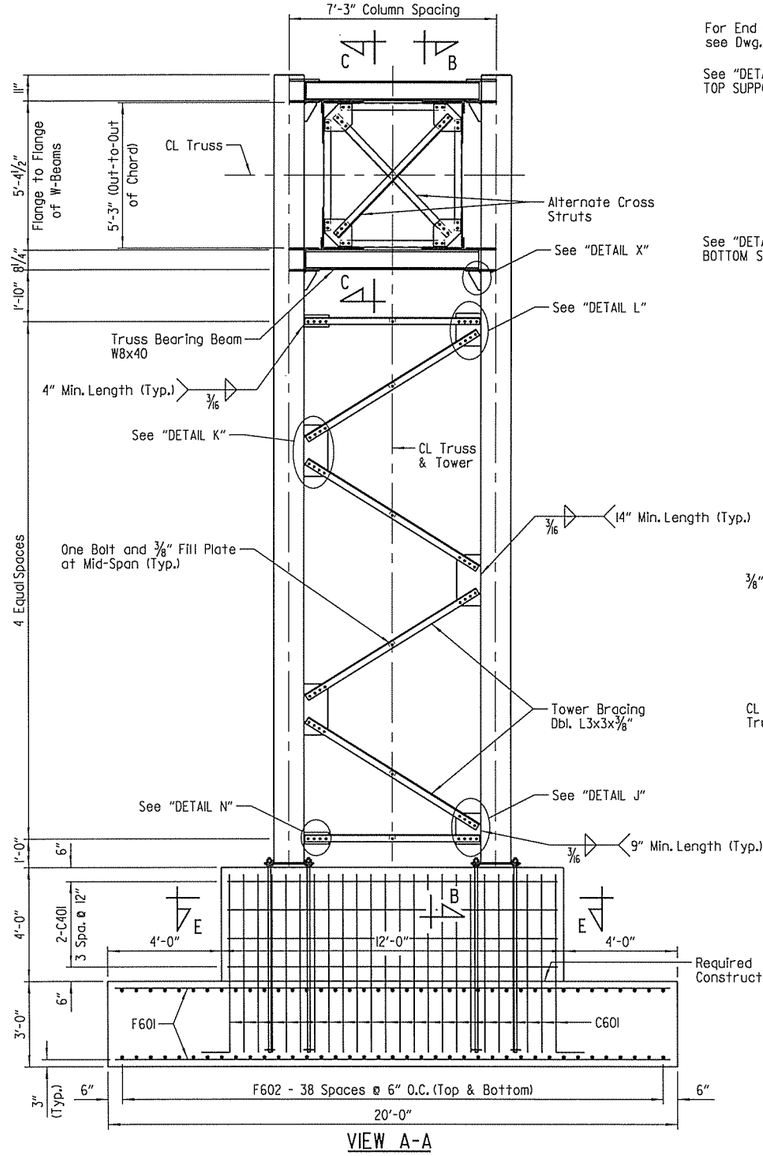

VIEW A-A

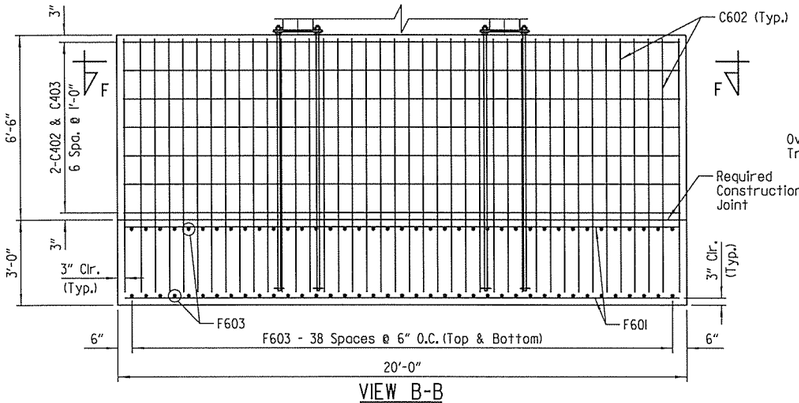

VIEW B-B

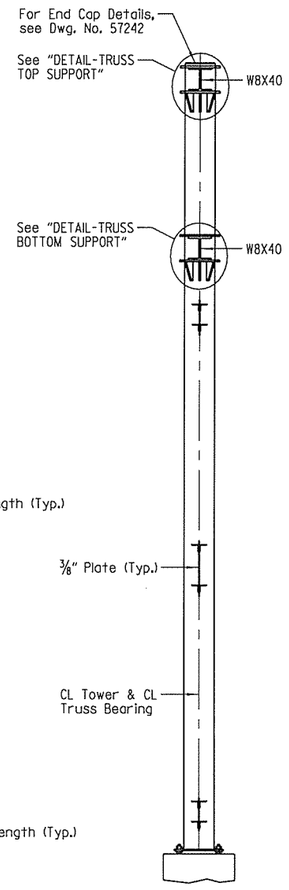

SECTION B-B

Note:
For "SECTION E-E" and "SECTION F-F", see Dwg. No. 57242.

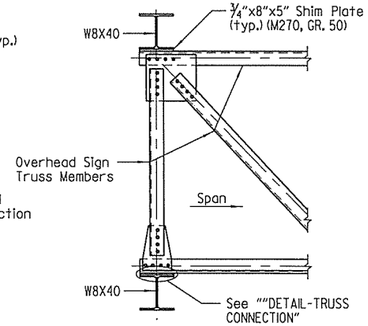

SECTION C-C

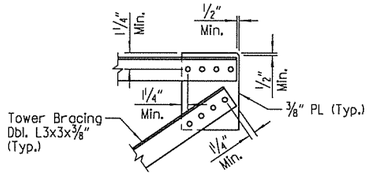

DETAIL L

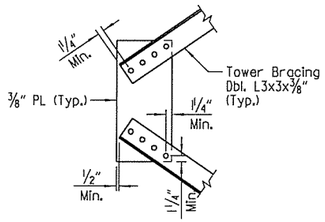

DETAIL K

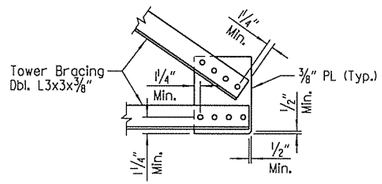

DETAIL J

DETAIL N

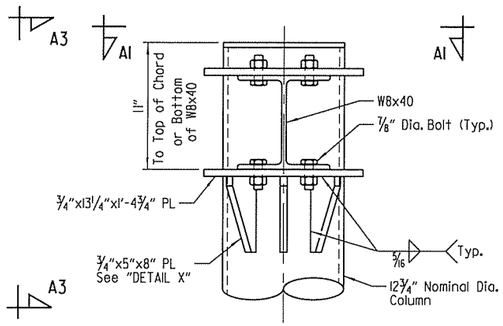

DETAIL - TRUSS TOP SUPPORT

(L5x5x5/8" Top Chord not shown for clarity)

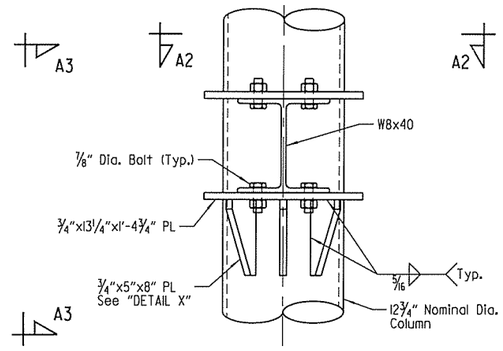

DETAIL - TRUSS BOTTOM SUPPORT

(L5x5x5/8" Bottom Chord not shown for clarity)

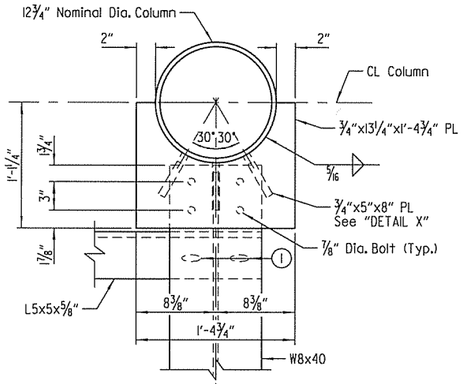

VIEW A1-A1

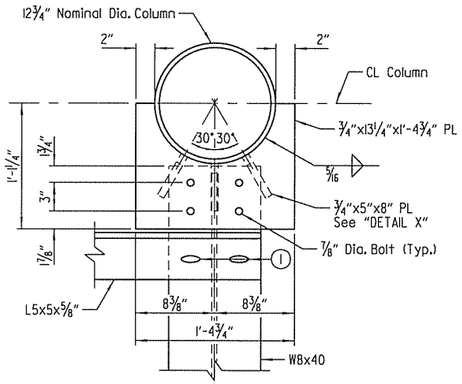

VIEW A2-A2

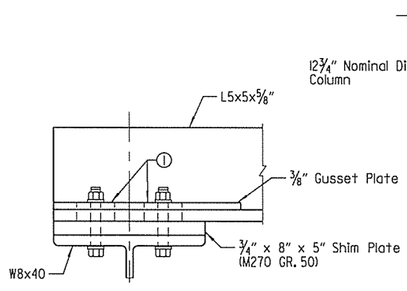

DETAIL - TRUSS CONNECTION

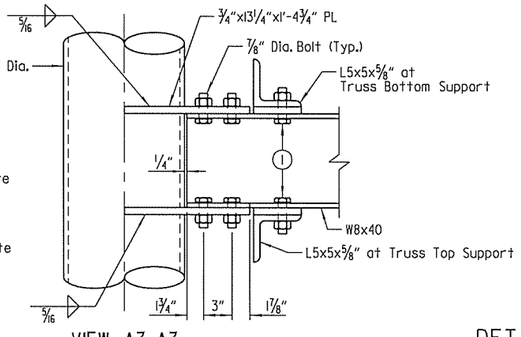

VIEW A3-A3

(3/4"x5"x8" Plates not shown for clarity)

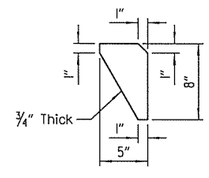

DETAIL X

STATE OF ARKANSAS
JERRY L. STEVENSON
REGISTERED PROFESSIONAL ENGINEER
No. 16185
4.23.2015
BRIDGE ENGINEER

SHEET 2 OF 5
DETAILS FOR 60' TO 85'
STEEL OVERHEAD SIGN STRUCTURES
WITH MEDIAN FOUNDATION
BENTON COUNTY
ROUTE SEC.

ARKANSAS STATE HIGHWAY COMMISSION
LITTLE ROCK, ARK.

DRAWN BY: TLW DATE: 05/01/15 FILENAME: bCA0902x3_t2.dgn
CHECKED BY: BLA DATE: 05/01/15 SCALE: NO SCALE
DESIGNED BY: YZ DATE: 05/01/15

STR. NO. 04-48-04-25, 04-48-04-26, 04-48-04-01, 04-48-04-02, 04-48-04-03, 04-48-04-12, 04-48-04-04 DRAWING NO. 57241

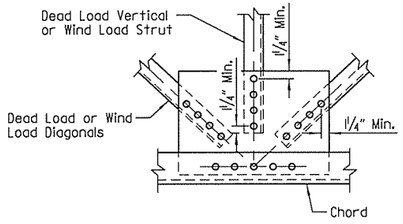

DETAIL A

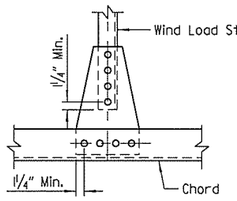

DETAIL B

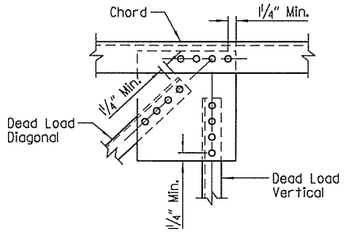

DETAIL C

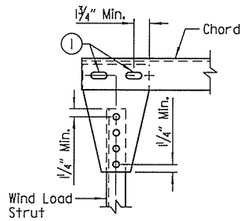

DETAIL D

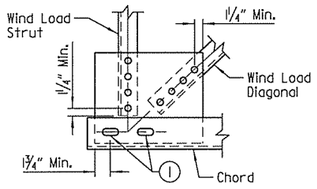

DETAIL E

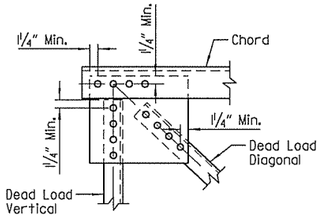

DETAIL F

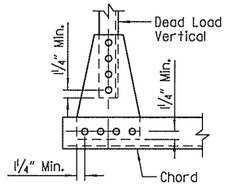

DETAIL G

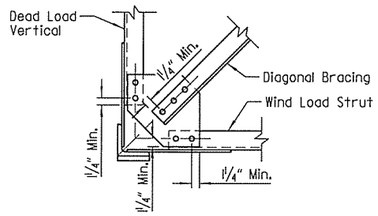

DETAIL M

1. Bolts shall be 1" Dia. and slotted holes in gusset plate and chord angle 1 1/16" x 2 1/2". Use plate washer an gusset plate side.
2. Bolts shall be 3/4" Dia. and open holes shall be 1 1/16".
3. 1 1/16" Dia. Holes at top or bottom flanges as required.

NOTE:
Thickness of all gusset plates shall be 3/8".

DATE REVISED	DATE FILMED	DATE REVISED	DATE FILMED	FED. ROAD DIST. NO.	STATE	FED. AID PROJ. NO.	SHEET NO.	TOTAL SHEETS
				6	ARK.			
				JOB NO.		CA0902	370	581
				(1)		SIGN STRUCTURE		57242

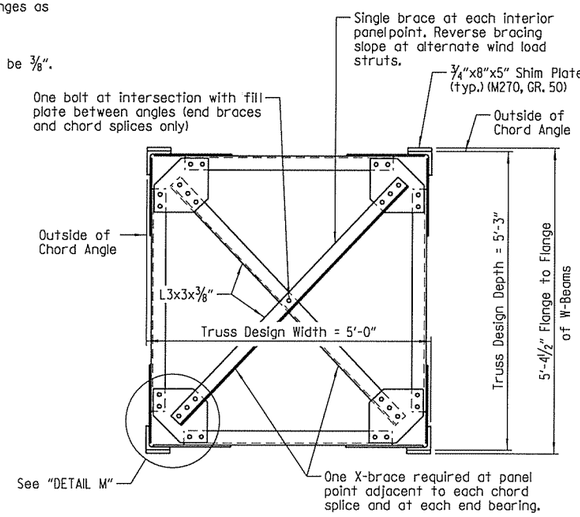

TRUSS SECTION

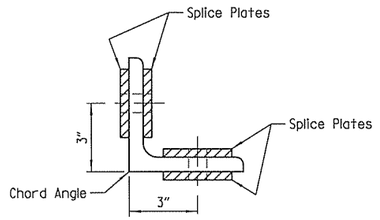

SECTION ON CL SPLICE

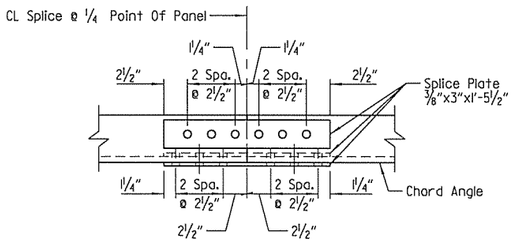

CHORD SPLICE USING PLATE (2)

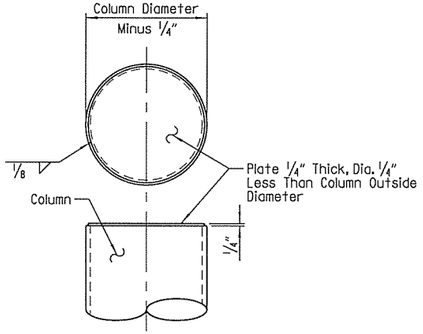

END CAP DETAILS

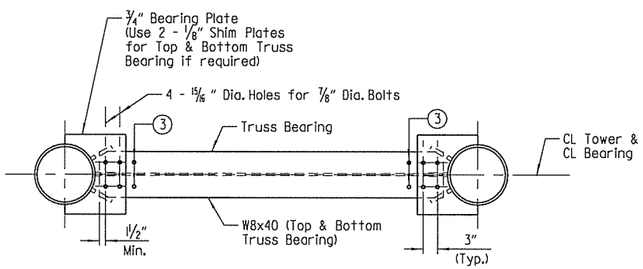

PLAN AT TRUSS BEARING

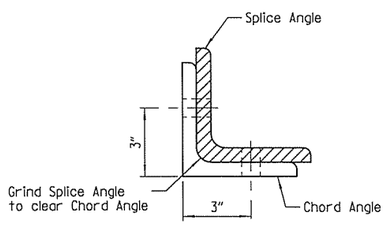

SECTION ON CL SPLICE

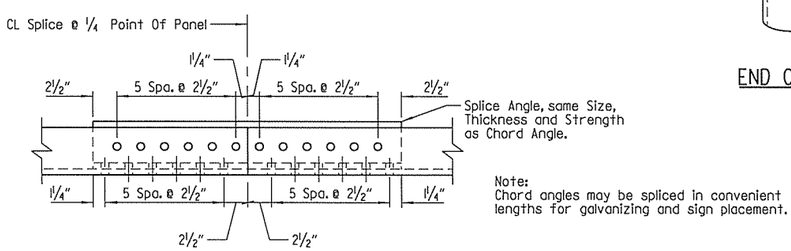

OPTIONAL CHORD SPLICE USING ANGLES (2)
Place Splice Angle on inside of Truss

Note:
Chord angles may be spliced in convenient lengths for galvanizing and sign placement.

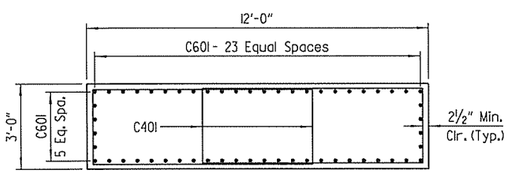

SECTION "E-E"
Foundation A

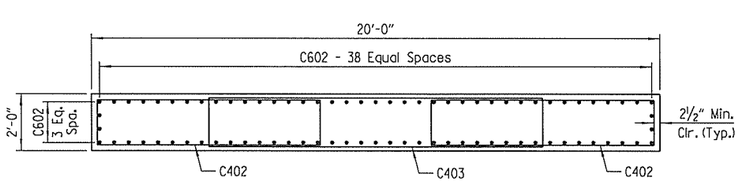

SECTION "F-F"
Foundation B

STATE OF ARKANSAS
JERRY D. STEVENSON
REGISTERED PROFESSIONAL ENGINEER
No. 16185
4.25.2016
BRIDGE ENGINEER

SHEET 3 OF 5
DETAILS FOR 60' TO 85'
STEEL OVERHEAD SIGN STRUCTURES
WITH MEDIAN FOUNDATION
BENTON COUNTY
ROUTE SEC.
ARKANSAS STATE HIGHWAY COMMISSION
LITTLE ROCK, ARK.

DRAWN BY: TLW DATE: 05/01/15 FILENAME: bCA0902x3_t3.dgn
CHECKED BY: BLA DATE: 05/01/15 SCALE: NO SCALE
DESIGNED BY: YZ DATE: 05/01/15
STR. NO. 04-49-04-05 04-49-04-06 04-49-04-10 04-49-04-11 04-49-04-12 04-49-04-13 04-49-04-14 DRAWING NO. 57242

DATE REVISED	DATE FILMED	DATE REVISED	DATE FILMED	FED. ROAD DIST. NO.	STATE	FED. AID PROJ. NO.	SHEET NO.	TOTAL SHEETS
				6	ARK.			
				JOB NO.		CA0902	371	581
				①		SIGN STRUCTURE		57243

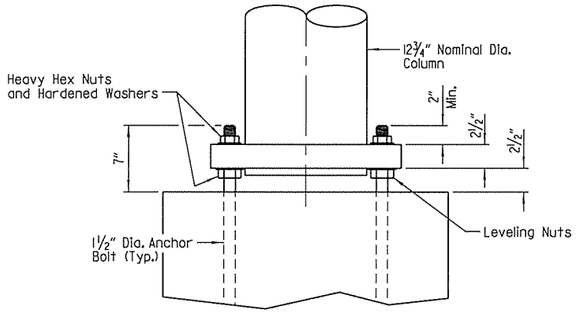

ELEVATION - COLUMN BASE

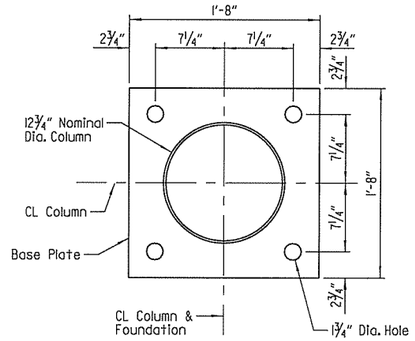

PLAN - COLUMN BASE

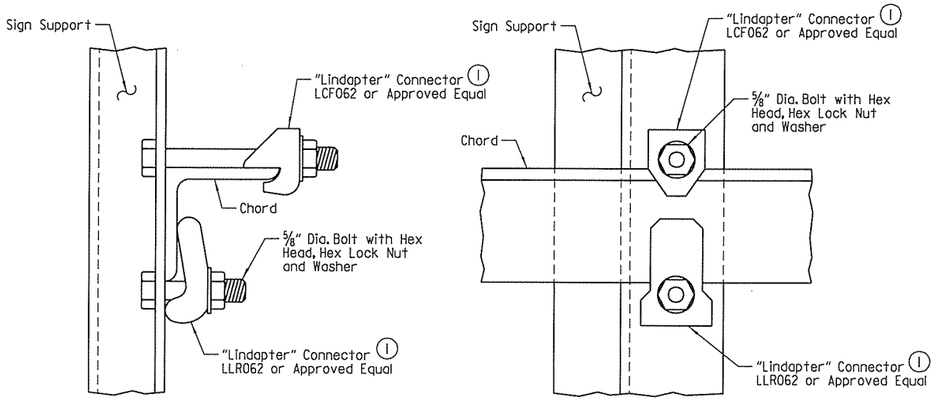

TOP CHORD

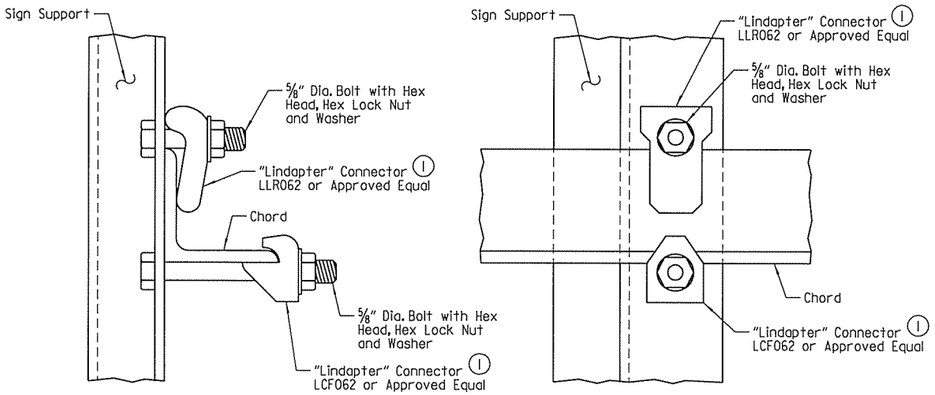

BOTTOM CHORD

① Note:
All "Lindapter" connectors or approved equal shall be installed according to manufacturer's recommendations. All connectors, bolts, nuts and washers shall be galvanized.

Note:
Install all support connectors clear of the gusset plates and splice locations.

DETAILS OF SIGN SUPPORT CONNECTED TO TRUSS

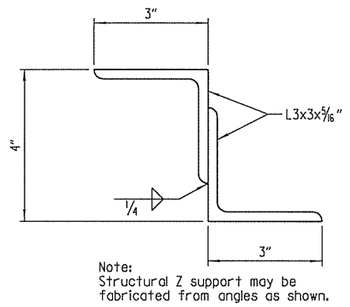

Note:
Structural Z support may be fabricated from angles as shown.

DETAIL OF ALTERNATE Z SUPPORT

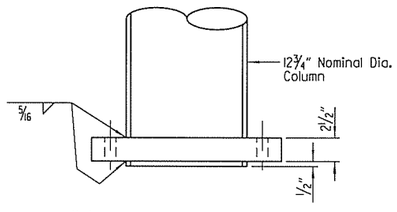

Note:
Diameter of hole in base plate to be ⅛" larger than column diameter.

DETAIL OF COLUMN CONNECTION TO BASE PLATE

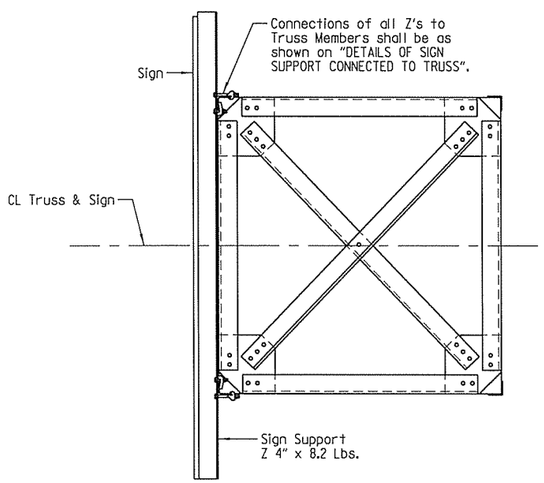

SECTION THRU TRUSS

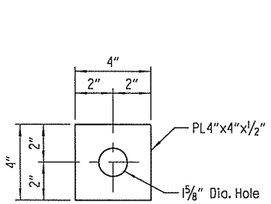

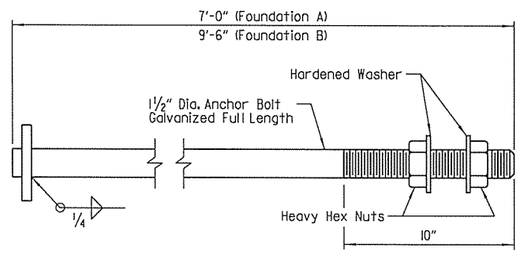

Anchor bolts shall comply with AASHTO M314, Grade 55, with Supplementary Requirement S1and galvanized according to Section 807.07. Nuts for bolts shall be as specified in Section 807.07.

ANCHOR BOLT DETAIL

STATE OF ARKANSAS
REGISTERED PROFESSIONAL ENGINEER
No. 16183
JEFFERY B. STEPHENSON
4.23.2015
BRIDGE ENGINEER

SHEET 4 OF 5
DETAILS FOR 60' TO 85'
STEEL OVERHEAD SIGN STRUCTURES
WITH MEDIAN FOUNDATION
BENTON COUNTY
ROUTE SEC.
ARKANSAS STATE HIGHWAY COMMISSION
LITTLE ROCK, ARK.

DRAWN BY: TLW DATE: 05/01/15 FILENAME: bCA0902x3_t4.dgn
CHECKED BY: BLA DATE: 05/01/15 SCALE: NO SCALE
DESIGNED BY: YZ DATE: 05/01/15
STR. NO. 01-43-04-05, 01-43-04-08, 01-43-04-10, 01-43-04-4, 01-43-04-13, 01-43-04-14 DRAWING NO. 57243

DATE REVISED	DATE FILMED	DATE REVISED	DATE FILMED	FED. ROAD DIST. NO.	STATE	FED. AID PROJ. NO.	SHEET NO.	TOTAL SHEETS
				6	ARK.			
				JOB NO.		CA0902	372	581
				(1)		SIGN STRUCTURE		57244

GENERAL NOTES:

CONSTRUCTION SPECIFICATIONS: Arkansas State Highway and Transportation Department Standard Specifications for Highway Construction, 2014 Edition, with applicable supplemental specifications and special provisions. Section and subsection refer to the Standard Construction Specifications unless otherwise noted in the plans.

DESIGN SPECIFICATIONS: AASHTO Standard Specifications for Structural Supports for Highway Signs, Luminaires and Traffic Signals, Sixth Edition, 2013.

Basic Wind Speed = 90 mph.
Fatigue Category: I

This structure is approved for a maximum sign area equal to 75% of the span length times a sign height of 15 feet with a weight of 2.5 lbs. per sq. foot and an additional load of 1200 lbs. for a Variable Message Sign panel when required under this contract or for future installation. Use of additional sign area must be approved by the Engineer. If the structure height ("H1" or "H2") exceeds 30'-0" contact the Engineer.

FOUNDATION MATERIALS AND STRENGTHS:

Class S Concrete	f'c = 3,500 psi
Reinforcing Steel (Grade 60, AASHTO M 31 or M 322, Type A)	fy = 60,000 psi

Structural steel sign support members shall comply with the following specifications:

Angles:	AASHTO M 270, Grade 36 (Fy = 36,000 psi)
Plate, W-Section:	AASHTO M 270, Grade 50 (Fy = 50,000 psi)
(1) Pipe:	ASTM A 139, Gr. C, straight-seam welded (Fy = 42,000 psi) ASTM A 500, Gr. B (Fy = 42,000 psi) ASTM A 501, Gr. B (Fy = 50,000 psi) ASTM A 714, Class 2, Grade II, Type E or S (Fy = 50,000 psi)
Z-Shapes:	AASHTO M 270, Grade 36 (Fy = 36,000 psi)
Shim Plates:	ASTM A 1011, SS, Grade 36, Type 2 or Grade 40
Bolts:	ASTM A 325, Type 1
Locknuts - Approved Type:	Meeting or exceeding AASHTO M 292
Washers:	ASTM F 436
Nuts:	ASTM A 563 or AASHTO M 292, Grade DH or Grade 2H

The Contractor shall make check measurements in the field and make any adjustments necessary to meet the required clearances and to fit the new structure to the existing conditions.

Drawings show general features of design only. Shop drawings shall be made in accordance with Subsection 807.04, submitted and approval secured before fabrication is begun.

Requests for substitution of structural steel shapes shown with shapes of greater size must be submitted by the Contractor to the Engineer for approval. Steels of equal or greater strengths will be accepted only when shown on the approved shop drawings. Shapes and materials shown in the plans will be the basis of payment and no additional compensation will be made for any adjustments due to substitutions.

All steel shall be galvanized according to Subsection 807.19. Steel completely encased in concrete may not be galvanized. Galvanized coating damaged during transport, handling or erection shall be field repaired in accordance with Subsection 807.88.

All main load carrying tension members greater than ½" in thickness shall conform to the requirements of the Longitudinal Charpy V-Notch test specified for Zone 1 minimum service temperature. This work and materials shall be paid for in accordance with SP Job No. CA0902 "Steel Sign Structures".

Field splices shall be located in order to avoid sign panel connections. There shall be a maximum of two field splices and they shall be spaced a minimum of 15' apart.

Truss field sections shall be shop assembled. Entire truss shall be fully assembled and lifted into place as one unit on to tower supports. All truss member connections shall be bolted connections.

All welding that is to be done during fabrication of structural steel, including temporary welds, shall be detailed on the shop drawings and submitted for approval. If additional welds are required, whether temporary or permanent, a formal request with detailed drawings shall be submitted to the Engineer for approval. All welding shall conform to Subsection 807.26.

No circumferential butt welds will be allowed in any pipe sections.

All fillet welds of critical members shall be tested according to AWS D1.1 Structural Welding Code - Steel using the magnetic particle method. Critical welds shall include: column to base plate and truss bottom support to column.

Connections shall be bolted with high-strength bolts. Unless otherwise noted, bolts shall be ¾" diameter and open holes shall be 13/16" diameter. Bolt spacing shall be 2½" for ¾" diameter bolts unless otherwise noted. Bolts shall be placed with heads on the outside face of all members. All high strength bolts shall be installed to obtain the specified minimum tension in accordance with Subsection 807.71.

All truss frame bolts shall comply with ASTM A325 Type 1, galvanized according to Subsection 807.06. Heavy hex nuts and hardened washers for ASTM A325 Type 1 bolts shall be furnished and galvanized in accordance with Subsection 807.06.

Lock nuts to be equipped with nylon locking inserts or other approved type locking system. Lock nuts to be installed according to manufacturer's recommendations.

Anchor bolts shall comply with AASHTO M 314, Grade 55 including Supplementary Requirement S1, and galvanized according to Subsection 807.07. Nuts and washers for anchor bolts shall be furnished and galvanized in accordance with Subsection 807.07.

Shoring may be required to protect existing shoulders during excavation. Any shoring required shall not be paid for directly, but shall be considered incidental to the item "Steel Overhead Sign Structure". The excavations for the footings shall be backfilled before the structure is attached to the foundations.

(1) In addition to material requirements all pipe used for welded applications shall have a maximum carbon equivalency (CE) of 0.4 using the following equation: CE = %C + %Mn/6 + %Cu/40 + %Ni/20 + %Cr/10 - %Mo/50 - %V/10

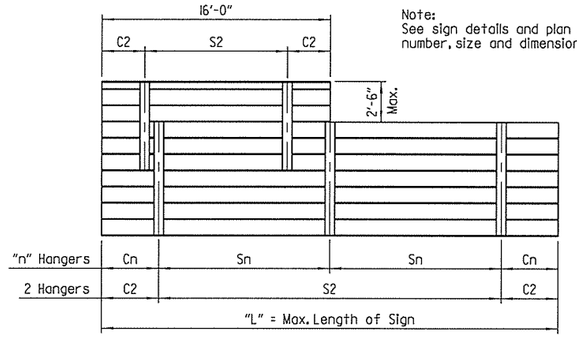

Note:
See sign details and plan sheets for number, size and dimensions of signs.

HANGER SPACING DETAILS FOR EXTRUDED PANEL SIGNS

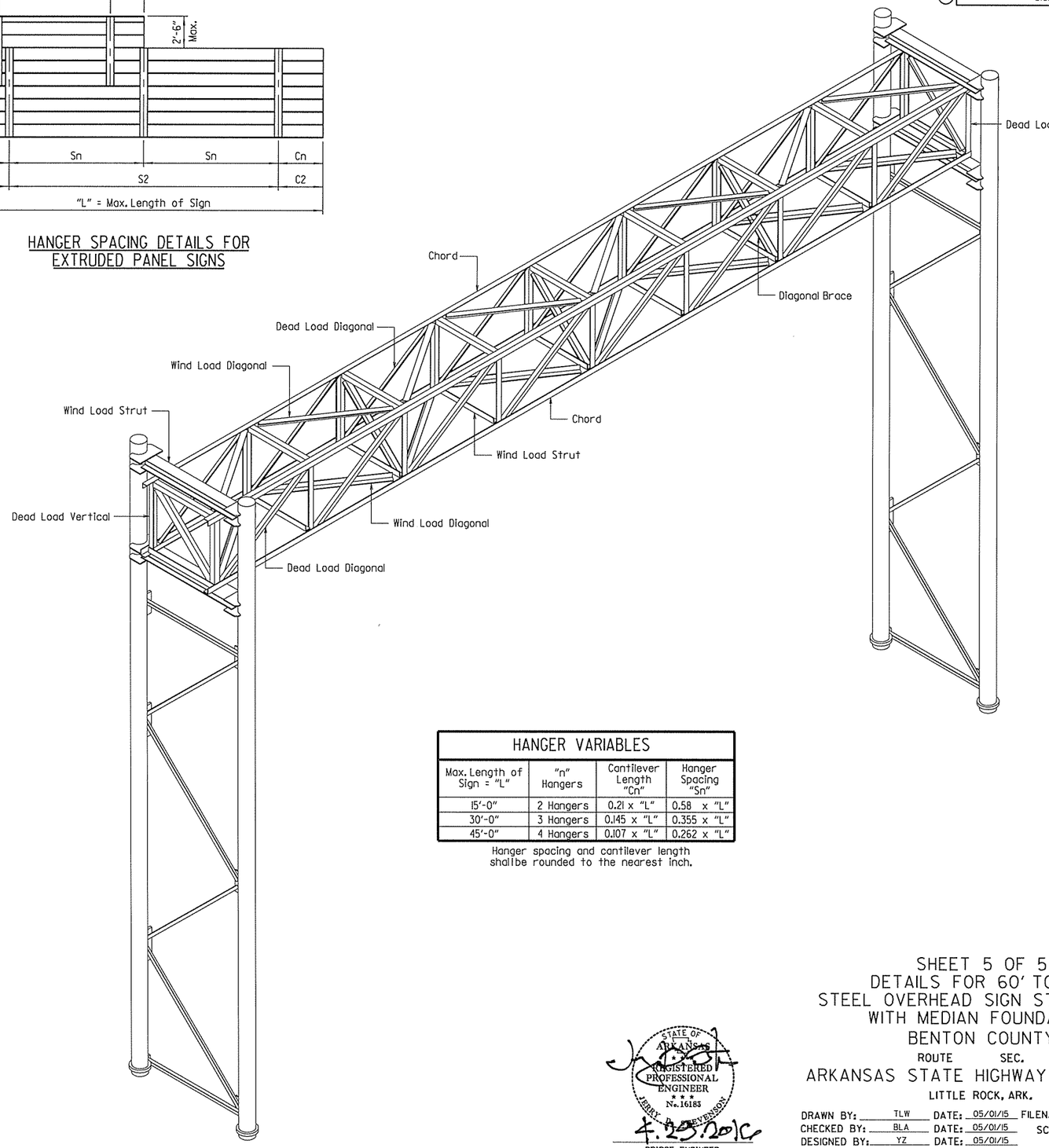

HANGER VARIABLES			
Max. Length of Sign = "L"	"n" Hangers	Cantilever Length "Cn"	Hanger Spacing "Sn"
15'-0"	2 Hangers	0.21 x "L"	0.58 x "L"
30'-0"	3 Hangers	0.145 x "L"	0.355 x "L"
45'-0"	4 Hangers	0.107 x "L"	0.262 x "L"

Hanger spacing and cantilever length shall be rounded to the nearest inch.

STATE OF ARKANSAS
REGISTERED PROFESSIONAL ENGINEER
No. 16185
JERRY D. STEVENSON
4.29.2015
BRIDGE ENGINEER

SHEET 5 OF 5
DETAILS FOR 60' TO 85'
STEEL OVERHEAD SIGN STRUCTURES
WITH MEDIAN FOUNDATION
BENTON COUNTY
ROUTE SEC.

ARKANSAS STATE HIGHWAY COMMISSION
LITTLE ROCK, ARK.

DRAWN BY: TLW DATE: 05/01/15 FILENAME: bCA0902x3_t5.dgn
CHECKED BY: BLA DATE: 05/01/15 SCALE: NO SCALE
DESIGNED BY: YZ DATE: 05/01/15
STR. NO. 01-43-01-05, 01-43-04-08, 01-43-01-10, 01-43-01-12, 01-43-01-15, 01-43-01-18, 01-43-01-20, 01-43-01-23, 01-43-01-25, 01-43-01-28, 01-43-01-30, 01-43-01-33, 01-43-01-35, 01-43-01-38, 01-43-01-40, 01-43-01-43, 01-43-01-45, 01-43-01-48, 01-43-01-50, 01-43-01-53, 01-43-01-55, 01-43-01-58, 01-43-01-60, 01-43-01-63, 01-43-01-65, 01-43-01-68, 01-43-01-70, 01-43-01-73, 01-43-01-75, 01-43-01-78, 01-43-01-80, 01-43-01-83, 01-43-01-85 DRAWING NO. 57244

DATE REVISED	DATE FILMED	DATE REVISED	DATE FILMED	FED. ROAD DIST. NO.	STATE	FED. AID PROJ. NO.	SHEET NO.	TOTAL SHEETS
				6	ARK.			
				JOB NO.		CA0902	373	581
				(1)		SIGN STRUCTURE		57245

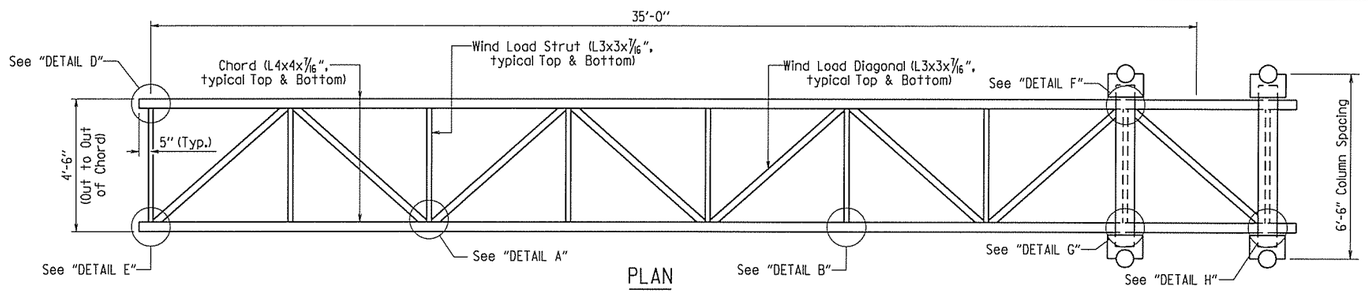

PLAN

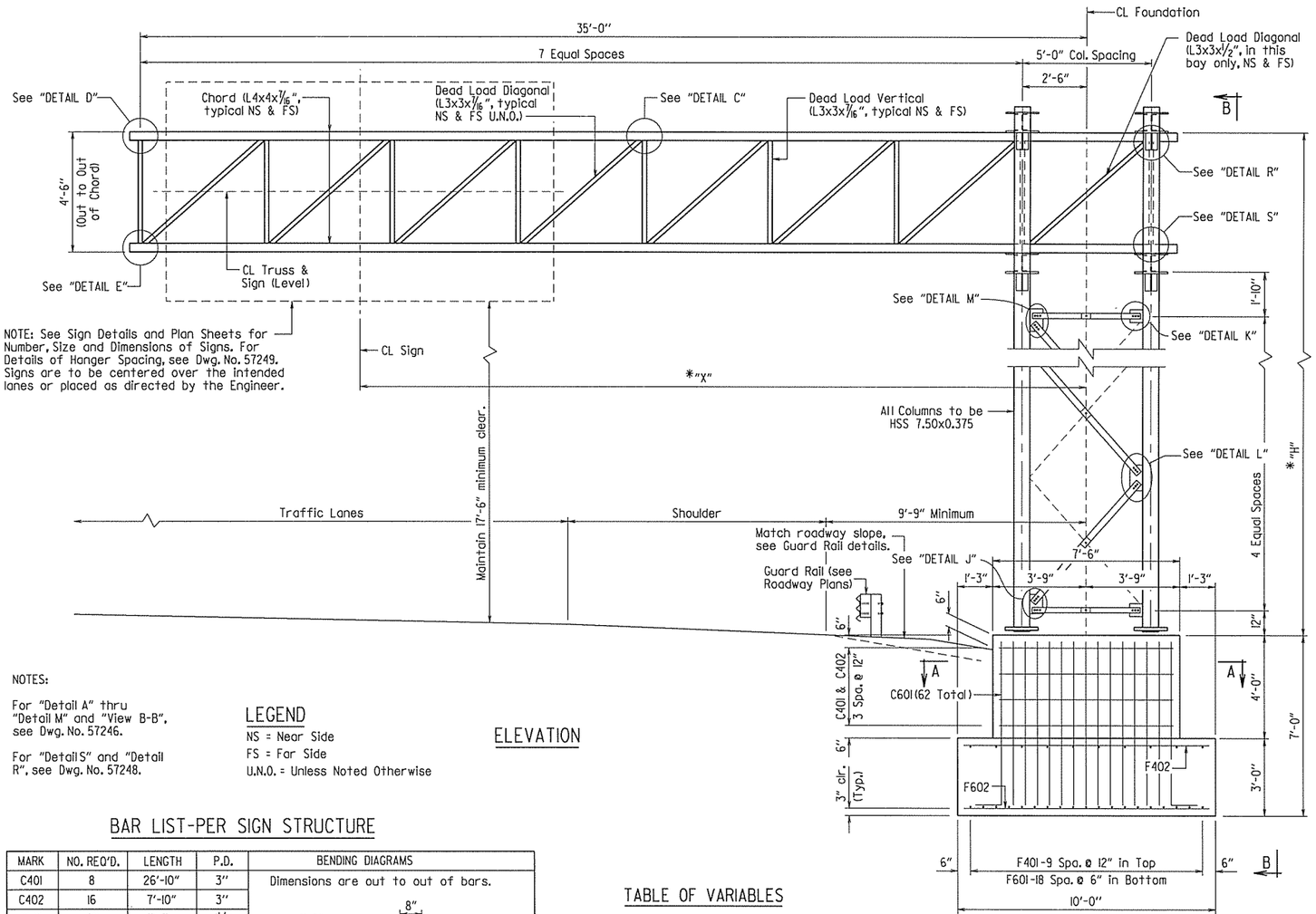

ELEVATION

NOTES:

For "Detail A" thru "Detail M" and "View B-B", see Dwg. No. 57246.

For "Detail S" and "Detail R", see Dwg. No. 57248.

LEGEND

NS = Near Side
FS = Far Side
U.N.O. = Unless Noted Otherwise

BAR LIST-PER SIGN STRUCTURE

MARK	NO. REQ'D.	LENGTH	P.D.	BENDING DIAGRAMS
C401	8	26'-10"	3"	Dimensions are out to out of bars.
C402	16	7'-10"	3"	
C601	62	7'-3"	4½"	
F401	10	14'-6"	Str.	
F402	15	9'-6"	Str.	
F601	19	14'-6"	Str.	
F602	29	9'-6"	Str.	

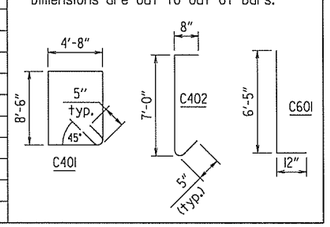

TABLE OF VARIABLES

STRUCTURE NUMBER	"X"
CL-49-04-06	35'-0"
CL-49-04-07	35'-0"
CL-49-04-09	35'-0"
CL-49-04-12	35'-0"
CL-49-04-15	35'-0"

APPROXIMATE QUANTITIES (FOR INFORMATION ONLY)

STRUCTURE NUMBER	CLASS S CONCRETE (Cu. Yards)	REINFORCING STEEL (Lbs.)	EXCAVATION (Cu. Yards)
EACH STRUCTURE	26.7	1,922	56

*NOTE:
The Contractor shall make field measurements to determine the following:

1) To verify that dimension "X" is sufficient to center the sign over the intended lane while maintaining minimum horizontal clearances.

2) To determine the column height "H" required to maintain the minimum vertical clearance with the centerline of the sign located at the CL of the truss. If the structure height "H" exceeds 30'-0" contact the Engineer.

These verifications and measurements are required prior to submittal of the shop drawings. The column height "H" shall be shown on the shop drawings with a note stating that the Contractor has made the required field measurements.

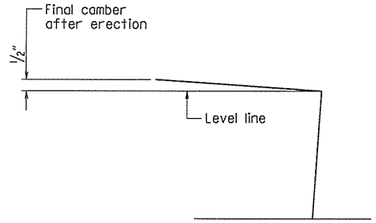

TRUSS CAMBER DIAGRAM

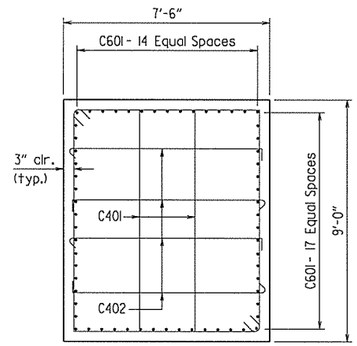

SECTION A-A

STATE OF ARKANSAS
REGISTERED PROFESSIONAL ENGINEER
No. 16183
JERRY R. DEPASSE
4-29-2015
BRIDGE ENGINEER

SHEET 1 OF 5
DETAILS FOR 35' STEEL CANTILEVER SIGN STRUCTURE
BENTON COUNTY
ROUTE SEC.

ARKANSAS STATE HIGHWAY COMMISSION
LITTLE ROCK, ARK.

DRAWN BY: JJR DATE: 05/01/15 FILENAME: bCA0902x3_16.dgn
CHECKED BY: TG DATE: 05/01/15 SCALE: NO SCALE
DESIGNED BY: SLW DATE: 05/01/15

STR. NO. CL-49-04-06, CL-49-04-07, CL-49-04-09, CL-49-04-12, CL-49-04-15 DRAWING NO. 57245

DATE REVISED	DATE FILMED	DATE REVISED	DATE FILMED	FED. ROAD DIST. NO.	STATE	FED. AID PROJ. NO.	SHEET NO.	TOTAL SHEETS
				6	ARK.			
				JOB NO.		CA0902	374	581
				①		SIGN STRUCTURE		57246

NOTE:

Thickness of all gusset plates shall be 3/8".

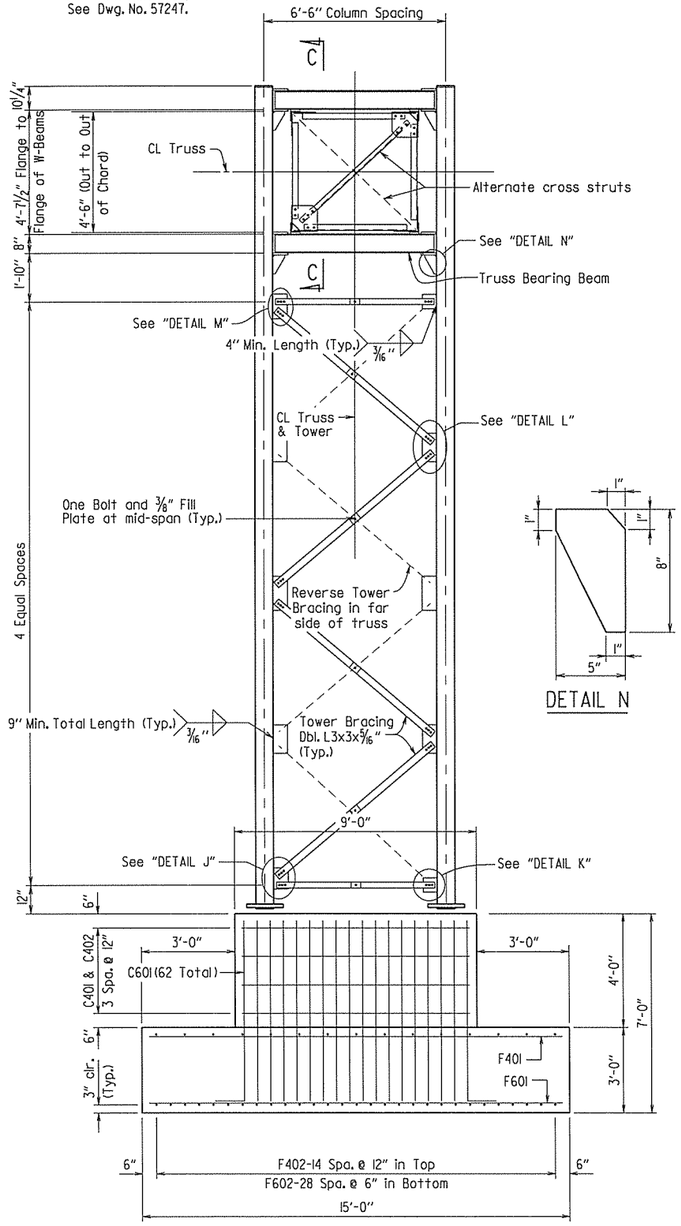

VIEW B-B

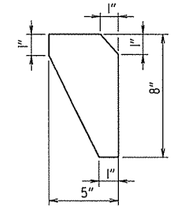

DETAIL N

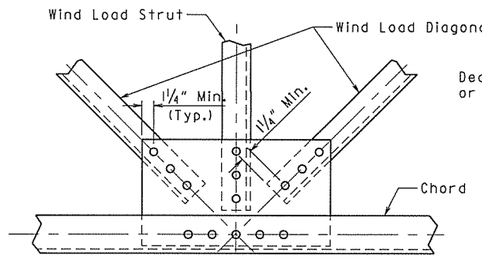

DETAIL A

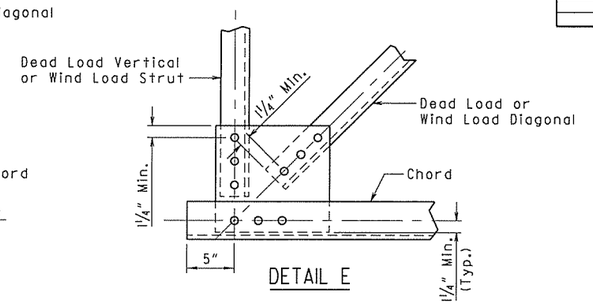

DETAIL E

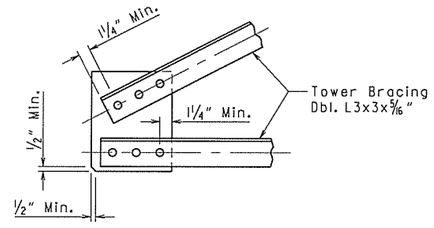

DETAIL J

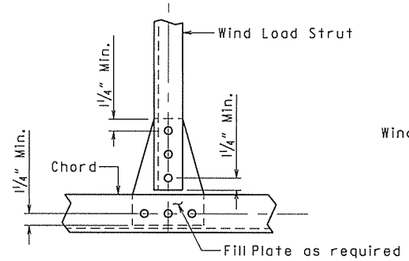

DETAIL B

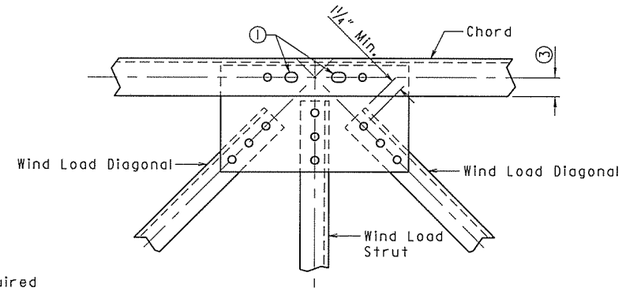

DETAIL F

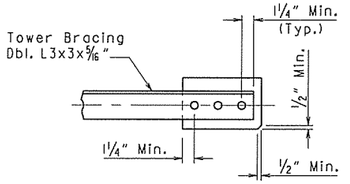

DETAIL K

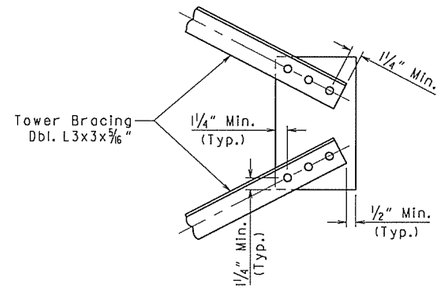

DETAIL L

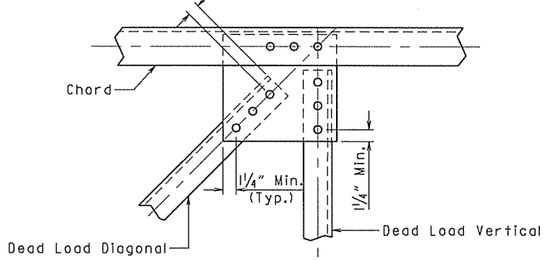

DETAIL C

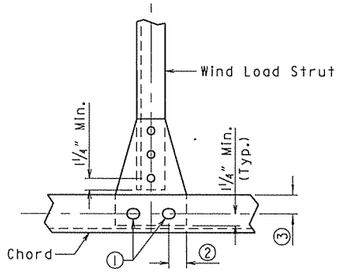

DETAIL G

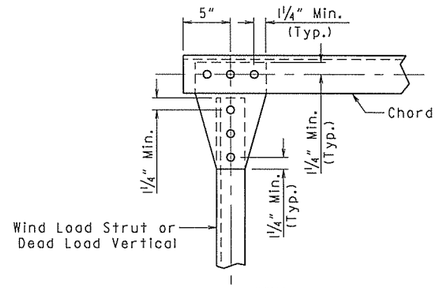

DETAIL D

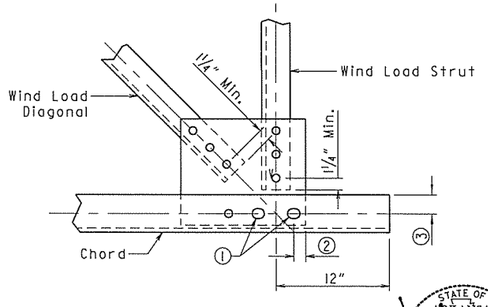

DETAIL H

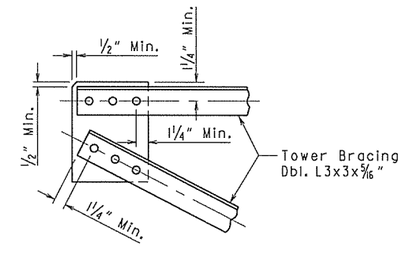

DETAIL M

① Bolts shall be 1 1/8" Dia. and slotted hole in gusset plate and chord angle 1 3/16"x1 1/2". Use plate washer on gusset plate side. 1 3/16" Dia. holes in 3/4" shim plate and beam flange.

② 1 1/4" minimum edge distance for slotted holes, typical.

③ 1 1/2" minimum edge distance for slotted holes, typical.

STATE OF ARKANSAS
JERRY D. STEVENSON
REGISTERED PROFESSIONAL ENGINEER
No. 16183
4.25.2016
BRIDGE ENGINEER

SHEET 2 OF 5
DETAILS FOR 35' STEEL CANTILEVER SIGN STRUCTURE
BENTON COUNTY

ROUTE SEC.

ARKANSAS STATE HIGHWAY COMMISSION

LITTLE ROCK, ARK.

DRAWN BY: JJR DATE: 05/01/15 FILENAME: bCA0902x3_t7.dgn

CHECKED BY: TG DATE: 05/01/15 SCALE: NO SCALE

DESIGNED BY: SLW DATE: 05/01/15

STR. NO. CL-49-04-06, CL-49-04-07, CL-49-04-09, CL-49-04-10, CL-49-04-11 DRAWING NO. 57246

DATE REVISED	DATE FILMED	DATE REVISED	DATE FILMED	FED. ROAD DIST. NO.	STATE	FED. AID PROJ. NO.	SHEET NO.	TOTAL SHEETS
				6	ARK.			
				JOB NO.		CA0902	375	581
				①		SIGN STRUCTURE		57247

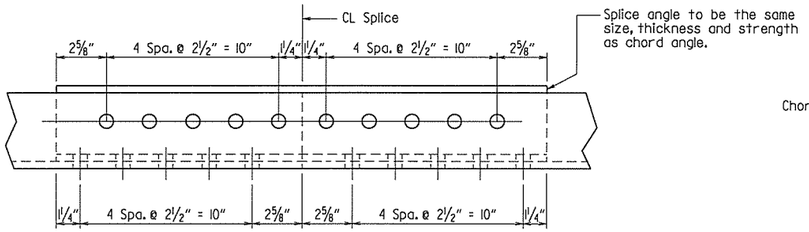

NOTE: Place splice angles on inside of truss. Bolts shall be ¾" ø and open holes shall be 13/16" ø. Minimum center to center of bolt spacing shall be 2½".

OPTIONAL CHORD SPLICE USING ANGLES

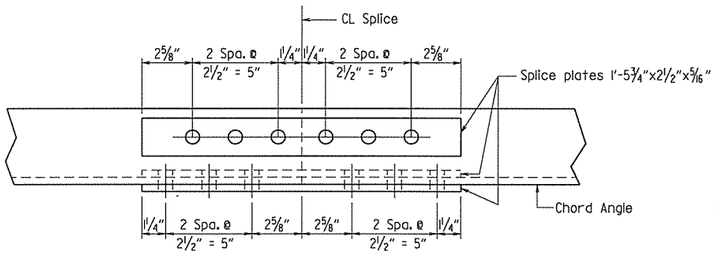

NOTE: Bolts shall be ¾" ø and open holes shall be 13/16" ø. Minimum center to center of bolt spacing shall be 2½".

OPTIONAL CHORD SPLICE USING PLATES

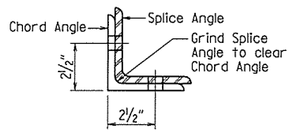

SECTION AT CL SPLICE

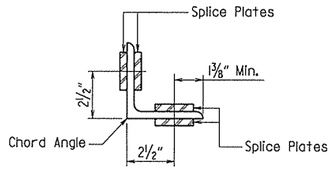

SECTION AT CL SPLICE

① Bolts shall be 1⅛" Dia. and slotted hole in gusset plate and chord angle 13/16"x1½". Use plate washer on gusset plate side. 13/16" Dia. hole in ¾" shim plate and beam flange.

② 13/16" Dia. holes at top or bottom flange as required.

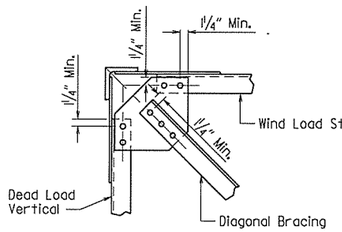

DETAIL P

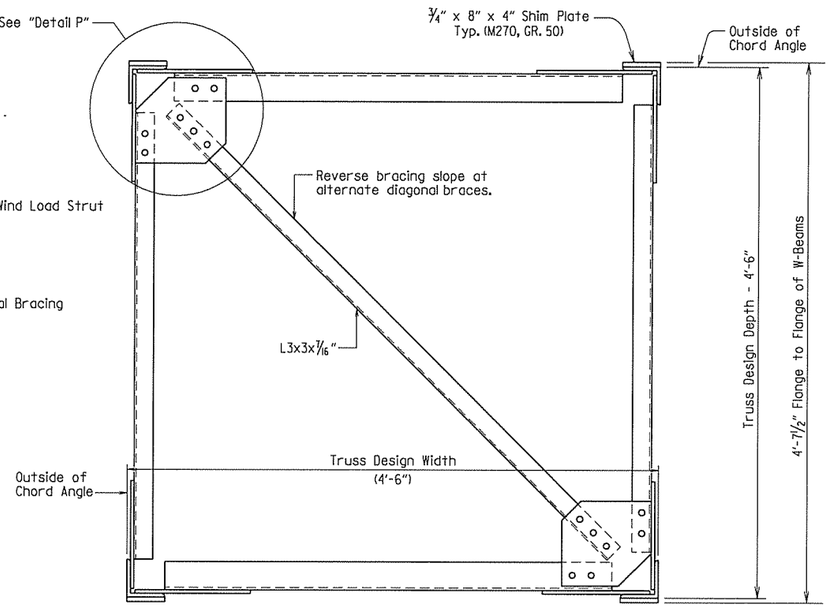

TRUSS SECTION

SPLICE DETAILS

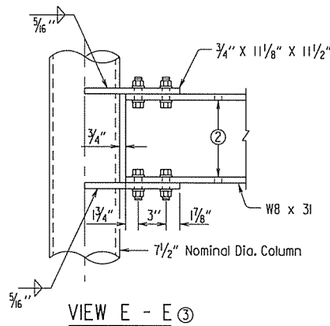

VIEW E - E ③

¾" X 5" X 8" Plate not shown for clarity

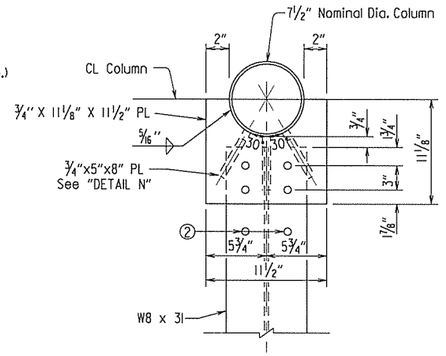

VIEW D - D ③

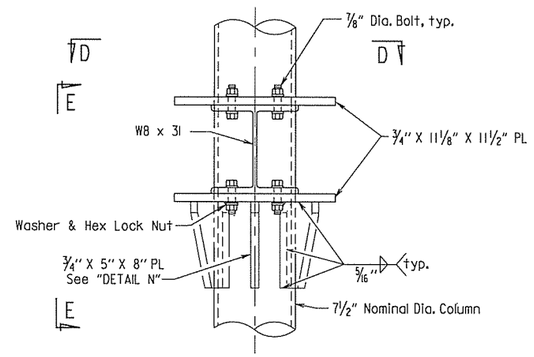

DETAIL - TRUSS BEARING SUPPORT

Bottom support shown, Top support similar.

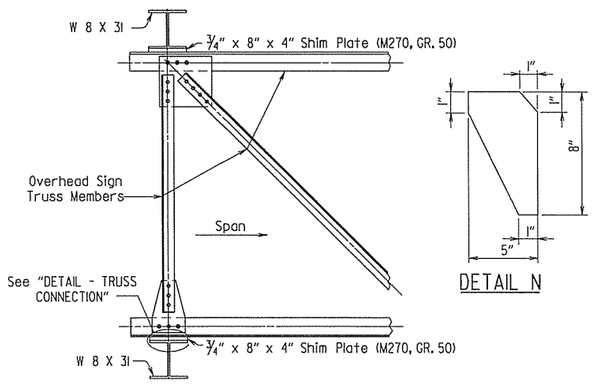

SECTION C-C

DETAIL N

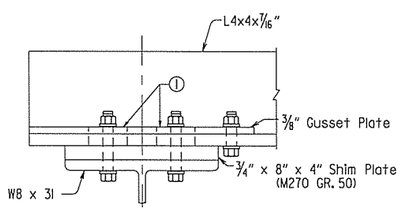

DETAIL - TRUSS CONNECTION

Shown for bottom connection, top connection similar.

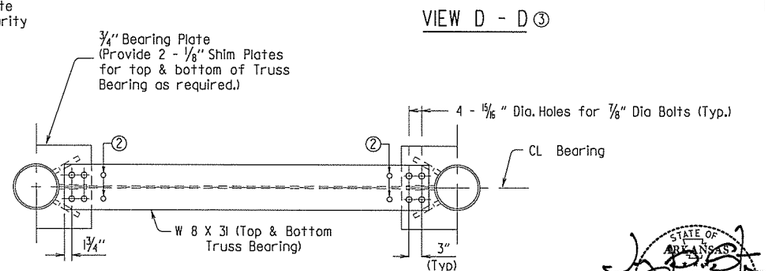

PLAN AT TRUSS BEARING ③

③ Chord Angle and shim plate not shown for clarity.

STATE OF ARKANSAS
JERRY D. STEVENSON
REGISTERED PROFESSIONAL ENGINEER
No. 16183
4.23.2015
BRIDGE ENGINEER

SHEET 3 OF 5
DETAILS FOR 35' STEEL CANTILEVER SIGN STRUCTURE
BENTON COUNTY
ROUTE SEC.

ARKANSAS STATE HIGHWAY COMMISSION
LITTLE ROCK, ARK.

DRAWN BY: JJR DATE: 05/01/15 FILENAME: bCA0902x3_t8.dgn
CHECKED BY: TG DATE: 05/01/15 SCALE: NO SCALE
DESIGNED BY: SLW DATE: 05/01/15

STR. NO. S-49-04-06, CL-49-04-07, CL-49-04-09, CL-49-04-12, CL-49-04-13 DRAWING NO. 57247

DATE REVISED	DATE FILMED	DATE REVISED	DATE FILMED	FED. ROAD DIST. NO.	STATE	FED. AID PROJ. NO.	SHEET NO.	TOTAL SHEETS
				6	ARK.			
				JOB NO.		CA0902	376	581
				①		SIGN STRUCTURE		57248

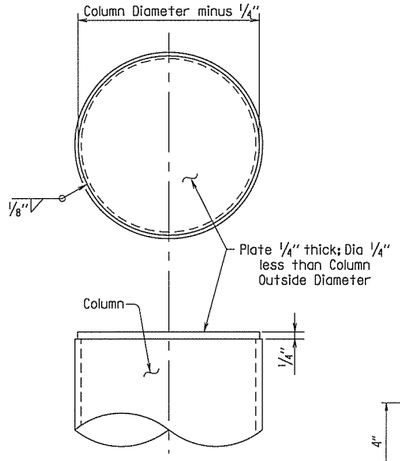

END CAP DETAILS

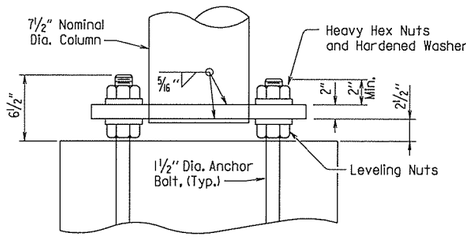

ELEVATION - COLUMN BASE

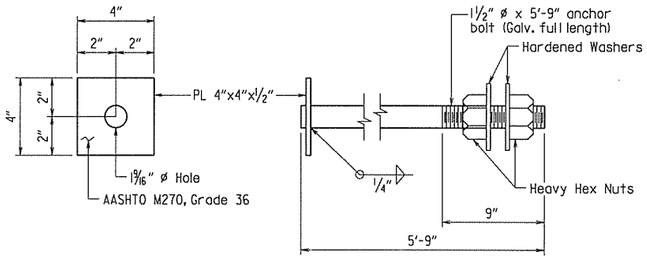

Anchor bolts shall comply with AASHTO M314, Grade 55, with Supplementary Requirement S1, and galvanized according to subsection 807.07. Nuts and washers for bolts shall be as specified in subsection 807.07.

ANCHOR BOLT DETAIL

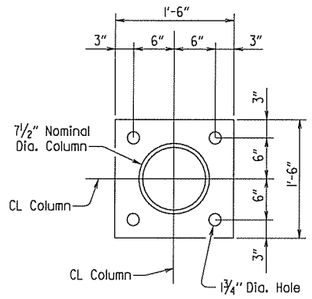

PLAN - COLUMN BASE

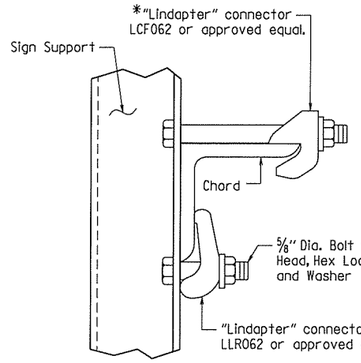

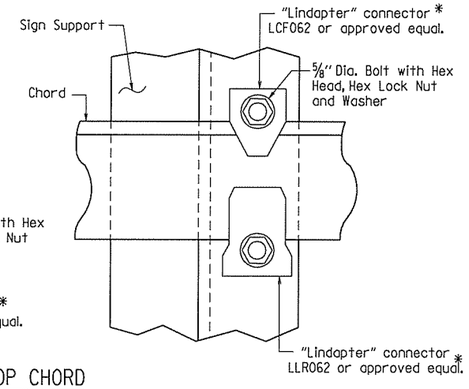

TOP CHORD

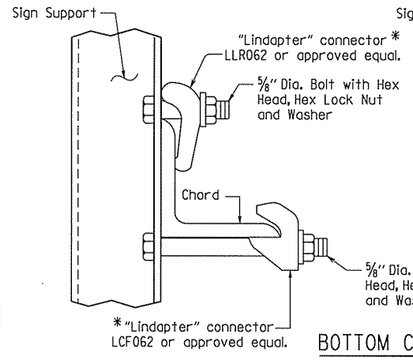

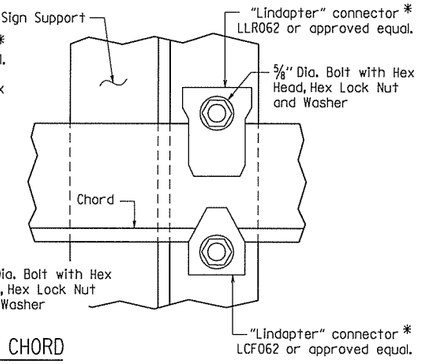

BOTTOM CHORD

*All "Lindapter" connectors or approved equal shall be installed according to manufacturer's recommendations. All connectors, bolts, nuts and washers shall be galvanized.

NOTE: Install all support connectors clear of the gusset plates and splice locations.

DETAILS OF SIGN SUPPORT CONNECTION TO TRUSS

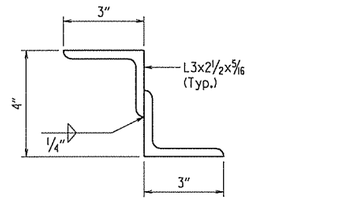

NOTE: Structural Z support may be fabricated from angles as shown.

DETAILS OF ALTERNATE Z SUPPORT

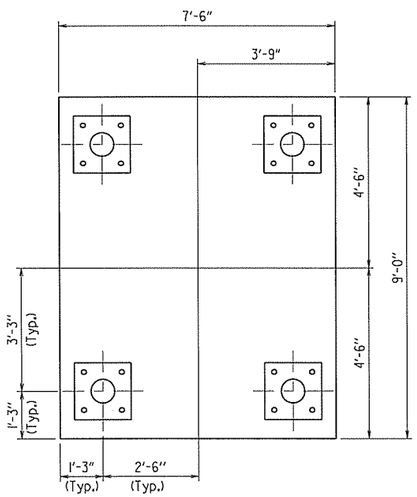

PLAN - TOWER BASE

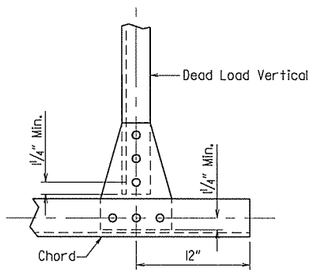

DETAIL S

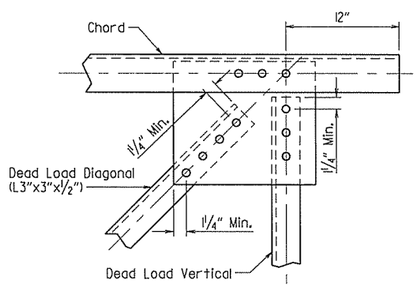

DETAIL R

4 - 3/4" Bolts on both ends of dead load diagonal in this bay only.

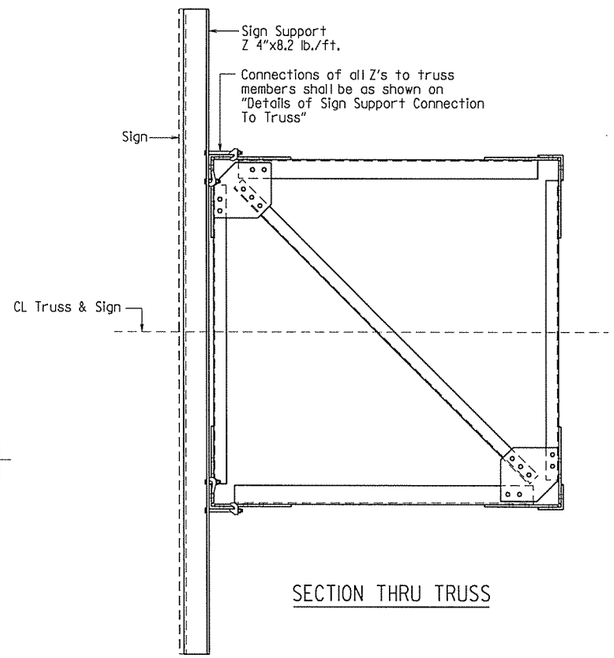

SECTION THRU TRUSS

STATE OF ARKANSAS
REGISTERED PROFESSIONAL ENGINEER
No. 16185
JERRY D. STEVENSON
4.29.2016
BRIDGE ENGINEER

SHEET 4 OF 5
DETAILS FOR 35' STEEL CANTILEVER SIGN STRUCTURE
BENTON COUNTY
ROUTE SEC.
ARKANSAS STATE HIGHWAY COMMISSION
LITTLE ROCK, ARK.

DRAWN BY: JJR DATE: 05/01/15
CHECKED BY: TG DATE: 05/01/15
DESIGNED BY: SLW DATE: 05/01/15
FILENAME: bCA0902x3_t9.dgn
SCALE: NO SCALE

STR. NO. CL-42-04-06, CL-42-04-07, CL-43-04-09, CL-43-04-10, CL-43-04-15 DRAWING NO. 57248

DATE REVISED	DATE FILMED	DATE REVISED	DATE FILMED	FED. ROAD DIST. NO.	STATE	FED. AID PROJ. NO.	SHEET NO.	TOTAL SHEETS
				6	ARK.			
				JOB NO.		CA0902	377	581
				(1)		SIGN STRUCTURE		57249

GENERAL NOTES

CONSTRUCTION SPECIFICATIONS:

Arkansas State Highway and Transportation Department Standard Specifications for Highway Construction, 2014 edition, with applicable supplemental specifications and Special Provisions. Section and Subsection refer to the Standard Construction Specifications unless otherwise noted in the plans.

DESIGN SPECIFICATIONS:

Standard Specifications for Structural Supports for Highway Signs, Luminaries and Traffic Signals, AASHTO 2013 (Sixth Edition) with current interim Revisions.

Basic Wind Speed = 90 mph

Fatigue Category: I

This structure is approved for 325 square feet of sign area. Use of additional area must be approved by the Engineer.

If the structure height ("H") exceeds 30'-0" contact the Engineer.

FOUNDATION MATERIALS AND STRENGTHS:

Class S Concrete	f'c = 3,500 psi
Reinforcing Steel (Grade 60, AASHTO M 31 or M 322, Type A)	fy = 60,000 psi

Structural steel sign support members shall comply with the following specifications:

Angles:	AASHTO M 270, Grade 36 (Fy = 36,000 psi)
Plate, W-Section:	AASHTO M 270, Grade 50 (Fy = 50,000 psi)
(1) Pipe:	ASTM A139, Grade C (Fy = 42,000 psi), ASTM A500, Grade B (Fy = 42,000 psi), ASTM A501, Grade B (Fy = 50,000 psi) or ASTM A714, Class 2, Grade II, Type E or S (Fy = 50,000 psi)
Z-shapes:	AASHTO M 270, Grade 36 (Fy = 36,000 psi)
Bolts:	ASTM A325, Type 1
Locknuts:	Approved Type - Meeting or exceeding AASHTO M 292
Washers:	ASTM F436
Nuts:	ASTM A563 or AASHTO M 292, Grade DH or Grade 2H

All steel shall be galvanized according to Subsection 807.19. Steel completely encased in concrete may not be galvanized.

Drawings show general features of design only. Shop drawings shall be made in accordance with Subsection 807.04, submitted and approval secured before fabrication is begun.

Requests for substitution of structural steel shapes shown with shapes of greater size must be submitted by the Contractor to the Engineer for approval. Steels of equal or greater strengths will be accepted only when shown on the approved shop drawings. Shapes and materials shown in the plans will be the basis of payment and no additional compensation will be made for any adjustments due to substitutions.

Connections shall be bolted with high-strength bolts. Unless noted otherwise, bolts shall be ¾" diameter and open holes shall be 13/16" diameter. Bolt spacing shall be 2½" for ¾" diameter bolts unless otherwise noted. Bolts shall be placed with heads on the outside face of all members. All high strength bolts shall be installed to obtain the specified minimum tension in accordance with Subsection 807.71.

All welding that is to be done during fabrication of structural steel, including temporary welds, shall be detailed on the shop drawings and submitted for approval. If additional welds are required, whether temporary or permanent, a formal request with detailed drawings shall be submitted to the Engineer for approval. All welding shall conform to Subsection 807.26.

Anchor bolts shall comply with AASHTO M314, Grade 55, with Supplementary Requirement S1, and galvanized according to Subsection 807.07. Nuts and washers for anchor bolts shall be furnished and galvanized in accordance with Subsection 807.07.

All truss frame bolts shall comply with ASTM A325, Type 1, and galvanized according to Subsection 807.06. Nuts and washers for ASTM A325, Type 1, bolts shall be furnished and galvanized in accordance with Subsection 807.06.

Field splices shall be located in order to avoid sign panel connections. Only one chord splice is permitted with a minimum section length of 15 feet.

All main load carrying tension members greater than ½" in thickness shall conform to the requirements of the Longitudinal Charpy V-notch test specified for Zone 1 minimum service temperature. This work and materials shall be paid for in accordance with SP Job No. CA0902 "Steel Sign Structures".

All fillet welds of critical members shall be tested according to AWS D1.1 Structural Welding Code-Steel, using the magnetic particle method. Critical welds shall include: column to base plate and column to truss connection plate welds.

Truss field sections shall be shop assembled. Entire truss shall be fully assembled and lifted into place as one unit onto the support. All truss member connections shall be bolted connections.

All truss member connections shall be bolted.

Lock nuts to be equipped with nylon locking inserts or other approved type locking system. Lock nuts to be installed according to manufacturer's recommendations.

Shoring may be required to protect existing shoulders during excavation. Any shoring required shall not be paid for directly, but shall be considered incidental to the item "Steel Cantilever Sign Structure". The excavations for the footings shall be backfilled before the structure is attached to the foundation.

Galvanized coating damaged during transport, handling or erection shall be field repaired in accordance with Subsection 807.88.

The Contractor shall make check measurements in the field and make any adjustments necessary to meet the required clearances and to fit the new structures to the existing conditions.

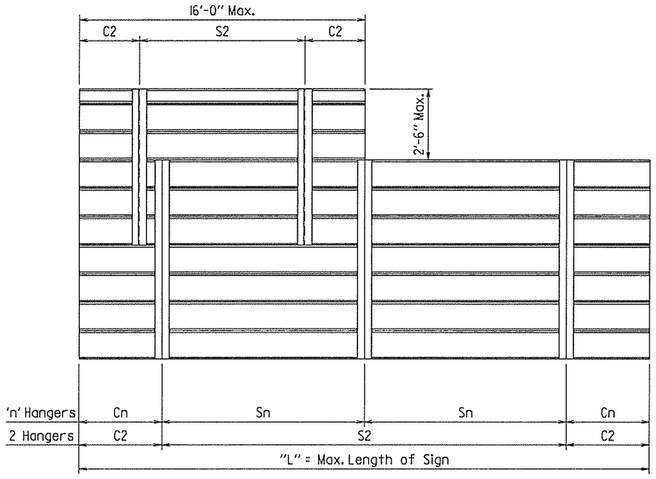

NOTE: See sign details and plan sheets for number, size and dimensions of signs.

HANGER SPACING DETAILS FOR EXTRUDED PANEL SIGNS

HANGER VARIABLES

Max. Length of Sign = "L"	"n" Hangers	Cantilever Length "Cn"	Hanger Spacing "Sn"
15'-0"	2 Hangers	0.21 x "L"	0.58 x "L"
30'-0"	3 Hangers	0.145 x "L"	0.355 x "L"

Hanger spacing and cantilever length shall be rounded to the nearest inch.

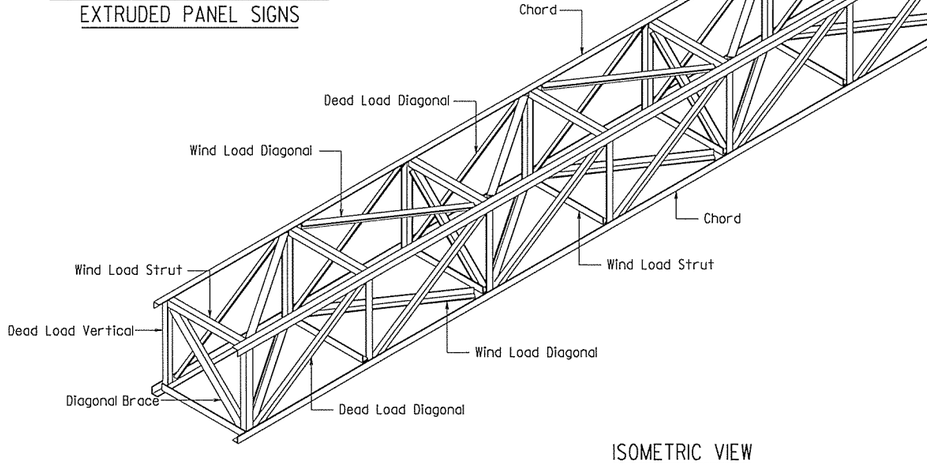

ISOMETRIC VIEW

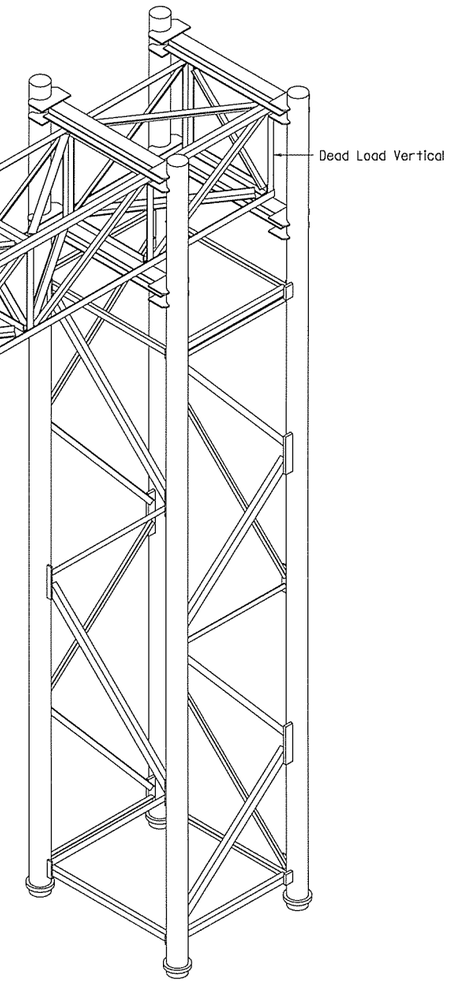

(1) In addition to material requirements, all pipe used for welding applications shall have a maximum carbon equivalency (CE) of 0.4 using the following equation:
CE = %C + %Mn/6 + %Cu/40 + %Ni/20 + %Cr/10 - %Mo/50 - %V/10

STATE OF ARKANSAS
REGISTERED PROFESSIONAL ENGINEER
No. 16183
JERRY L. STEVENSON
4.23.2015
BRIDGE ENGINEER

SHEET 5 OF 5
DETAILS FOR 35' STEEL CANTILEVER SIGN STRUCTURE
BENTON COUNTY

ROUTE SEC.

ARKANSAS STATE HIGHWAY COMMISSION

LITTLE ROCK, ARK.

DRAWN BY: JJR DATE: 05/01/15 FILENAME: bCA0902x3_t10.dgn
CHECKED BY: TG DATE: 05/01/15 SCALE: NO SCALE
DESIGNED BY: SLW DATE: 05/01/15

STR. NO. CL-49-04-05, CL-49-04-07, CL-49-04-09, CL-49-04-11, CL-49-04-13 DRAWING NO. 57249

DATE REVISED	DATE FILMED	DATE REVISED	DATE FILMED	FED. ROAD DIST. NO.	STATE	FED. AID PROJ. NO.	SHEET NO.	TOTAL SHEETS
				6	ARK.		378	
				JOB NO.				
				(1) EMBANKMENT & BACKFILL 55000				

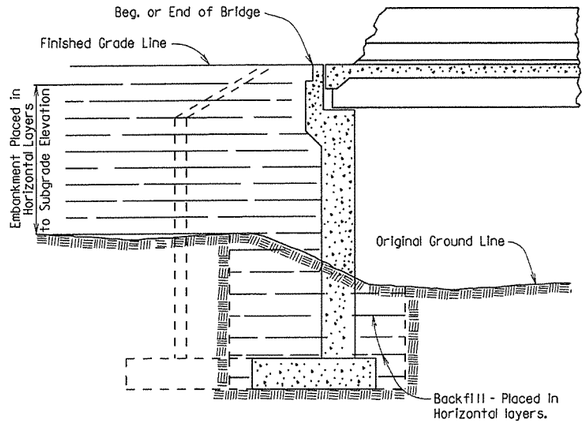

EMBANKMENT CONSTRUCTION AND FOOTING BACKFILL AT VERTICAL WALL ABUTMENTS

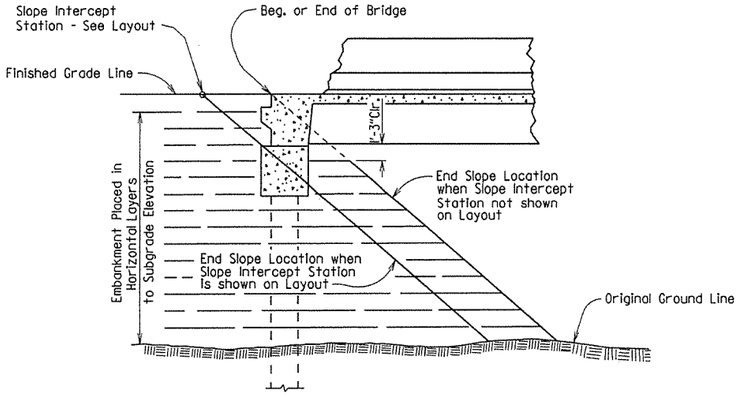

EMBANKMENT CONSTRUCTION AT SPILL-THROUGH PILE END BENTS

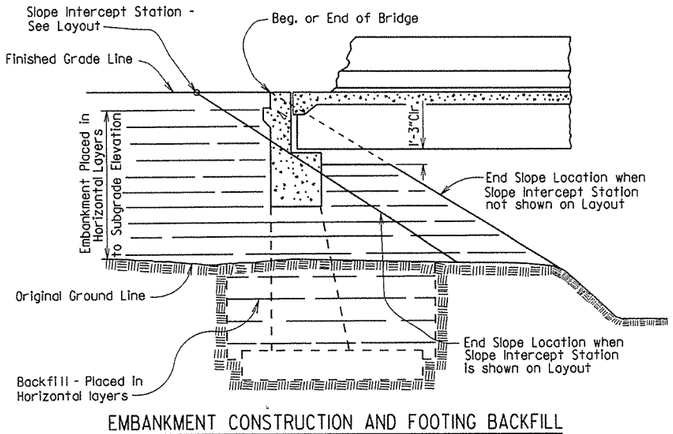

EMBANKMENT CONSTRUCTION AND FOOTING BACKFILL AT SPILL-THROUGH END BENTS

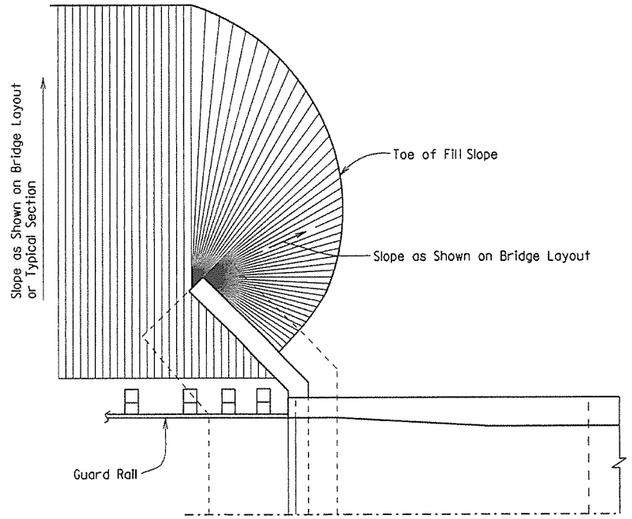

VERTICAL WALL ABUTMENTS

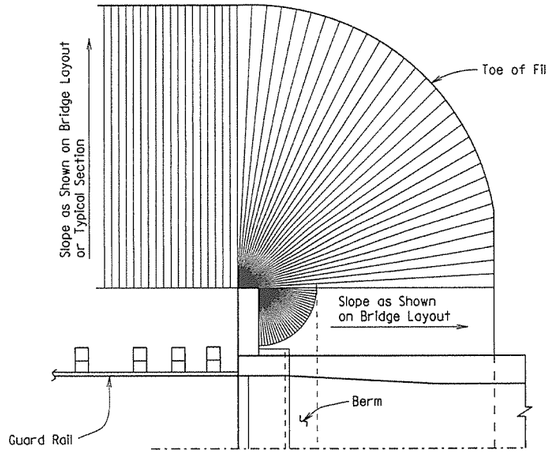

SPILL-THROUGH END BENTS WITH STUB WING

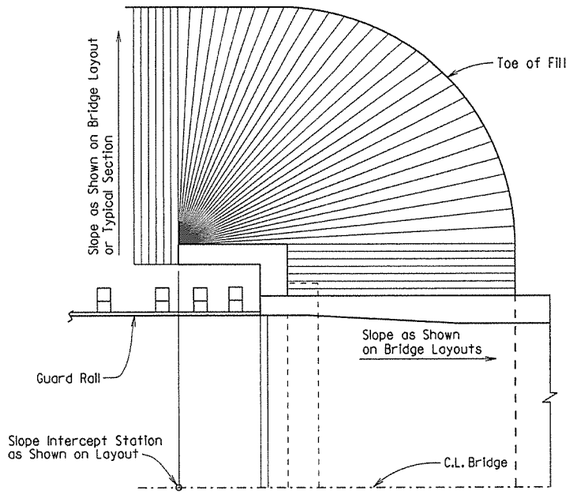

SPILL-THROUGH END BENTS WITH TURNBACK WING

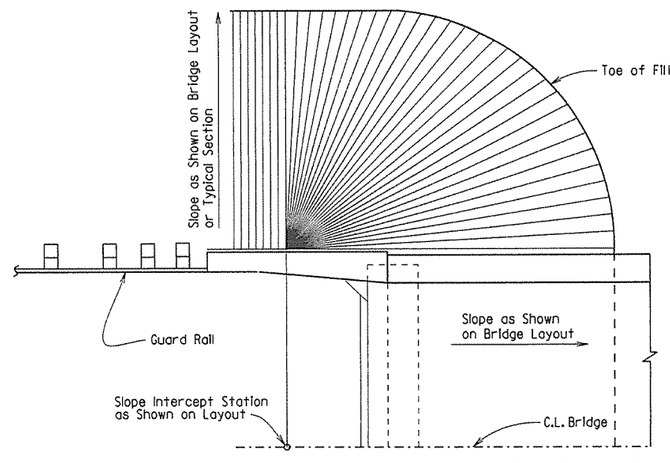

SPILL-THROUGH END BENTS WITH TRANSITION WING

METHOD OF DETERMINING FILL SLOPE LOCATION AT BRIDGE ENDS

GENERAL NOTES

The Bridge End Embankment shall be defined as a section of embankment, not less than 20 feet long adjacent to the bridge end, together with the side slopes and slopes under the bridge end including around the end of wingwalls. Embankment adjacent to structures shall be constructed in 6 inch horizontal layers (loose measure) and compacted by the use of mechanical equipment to the satisfaction of the Engineer. Refer to Subsections 210.09, 210.10 and 801.08 for construction requirements.

STANDARD DETAILS FOR EMBANKMENT CONSTRUCTION AND BACKFILL AT BRIDGE ENDS

ARKANSAS STATE HIGHWAY COMMISSION

LITTLE ROCK, ARK.

DRAWN BY: KDH DATE: 2-27-2014 FILENAME: b55000.dgn

CHECKED BY: BEF DATE: 2-27-2014 SCALE: NO SCALE

DESIGNED BY: STD. DATE: -

DRAWING NO. 55000

DATE REVISED	DATE FILMED	DATE REVISED	DATE FILMED	FED. ROAD DIST. NO.	STATE	FED. AID PROJ. NO.	SHEET NO.	TOTAL SHEETS
				6	ARK.		379	
				JOB NO.				

① CONCRETE RIPRAP 55002

Note:
Sloped surfaces of concrete riprap to be marked off into blocks (construction joints optional) with an approved grooving tool, spacing the grooved lines about 5' apart.

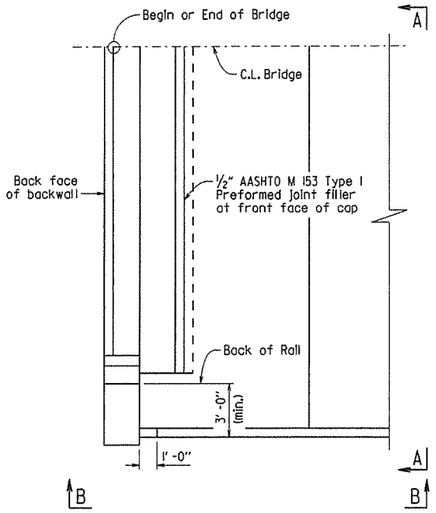

PLAN OF CONCRETE RIPRAP
PERPENDICULAR TO WING
¼" = 1'-0"

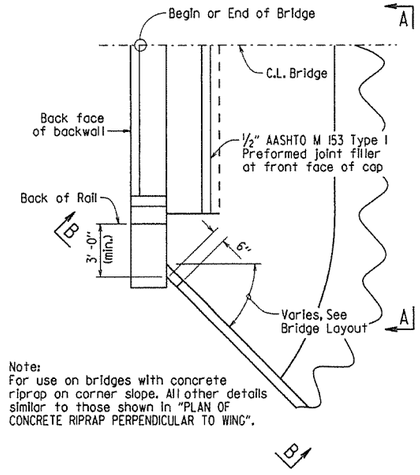

Note:
For use on bridges with concrete riprap on corner slope. All other details similar to those shown in "PLAN OF CONCRETE RIPRAP PERPENDICULAR TO WING".

PLAN OF CONCRETE RIPRAP
AT ANGLE TO WING
¼" = 1'-0"

Note:
For use on bridges with turned back wings. All other details similar to those shown in "PLAN OF CONCRETE RIPRAP PERPENDICULAR TO WING".

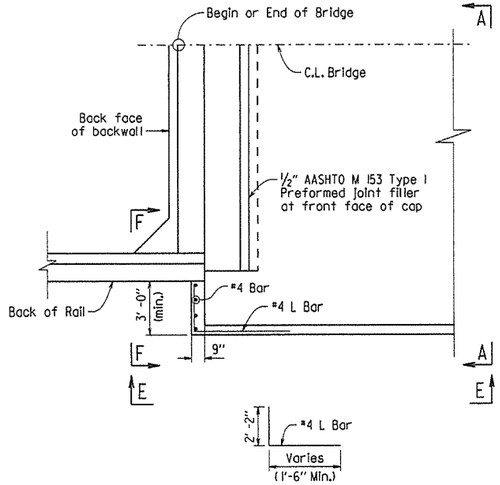

PLAN OF CONCRETE RIPRAP
PERPENDICULAR TO TURNED BACK WING
¼" = 1'-0"

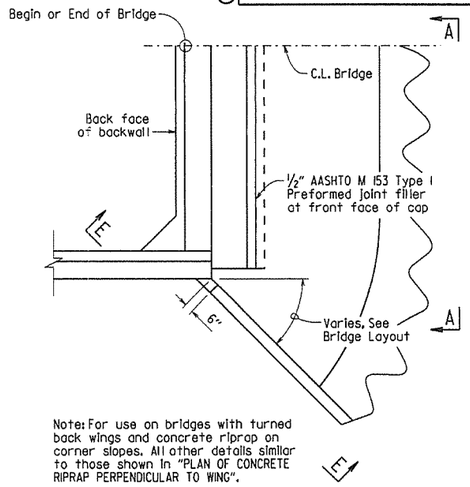

Note: For use on bridges with turned back wings and concrete riprap on corner slopes. All other details similar to those shown in "PLAN OF CONCRETE RIPRAP PERPENDICULAR TO WING".

PLAN OF CONCRETE RIPRAP
AT ANGLE FROM TURNED BACK WING
¼" = 1'-0"

Note:
Wing is shown perpendicular to concrete riprap. Details are similar when wing is at an angle to riprap.

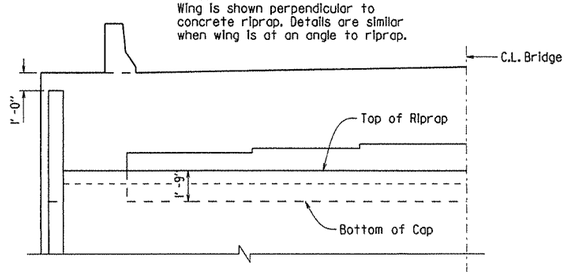

VIEW A-A
¼" = 1'-0"

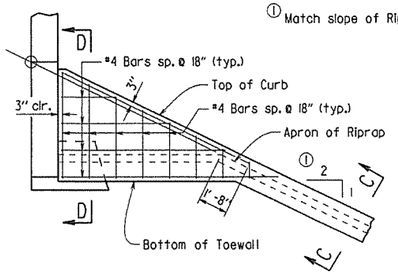

VIEW B-B
¼" = 1'-0"

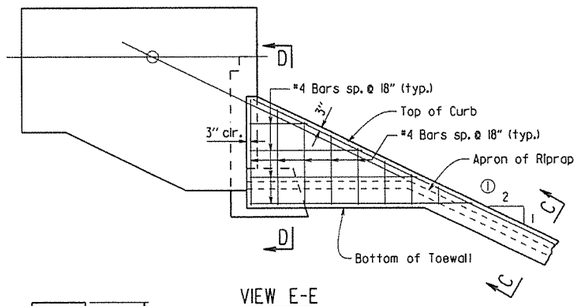

VIEW E-E
¼" = 1'-0"

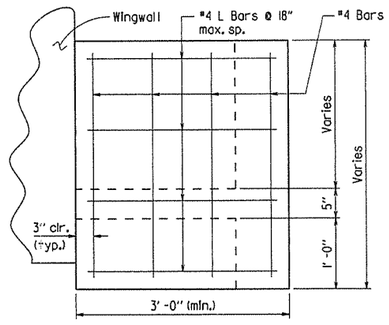

VIEW F-F
1" = 1'-0"

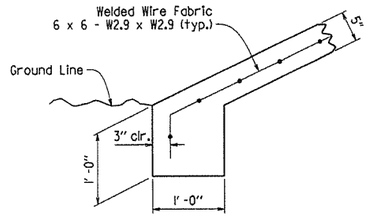

TOE OF CONCRETE RIPRAP
1" = 1'-0"

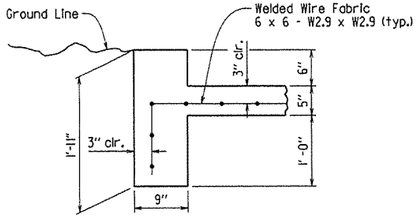

SECTION C-C
1" = 1'-0"

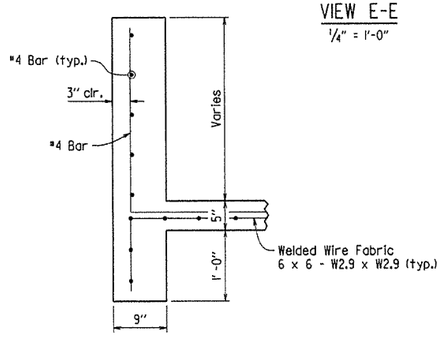

SECTION D-D
1" = 1'-0"

GENERAL NOTES

All concrete shall be Class A with a minimum compressive strength, f'c = 2,100 psi.

Welded wire fabric shall conform to AASHTO M55 or M221.

STANDARD DETAILS FOR CONCRETE RIPRAP

ARKANSAS STATE HIGHWAY COMMISSION

LITTLE ROCK, ARK.

DRAWN BY: ACP DATE: 2/27/2014 FILENAME: b55002.dgn
CHECKED BY: BEF DATE: 2/27/2014 SCALE: AS SHOWN
DESIGNED BY: Std. DATE: ---

DRAWING NO. 55002

DATE REVISED	DATE FILMED	DATE REVISED	DATE FILMED	FED. ROAD DIST. NO.	STATE	FED. AID PROJ. NO.	SHEET NO.	TOTAL SHEETS
3/24/16				6	ARK.		380	
				JOB NO.				
				① BRIDGE DECK FORMS 55005				

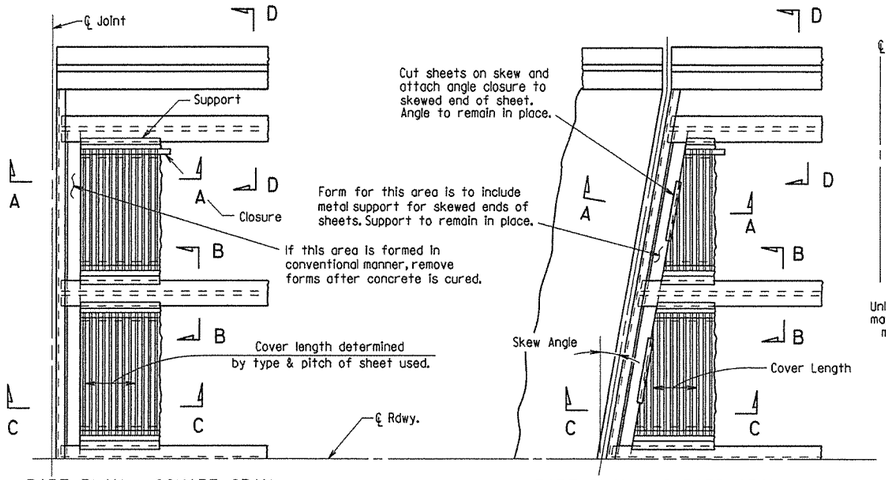

PART PLAN - SQUARE SPAN

3/8" = 1'-0"

PART PLAN - SKEWED SPAN

3/8" = 1'-0"

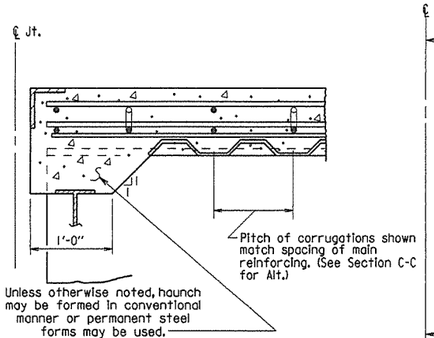

SECTION A-A

N.T.S.

(Angle at end of span)

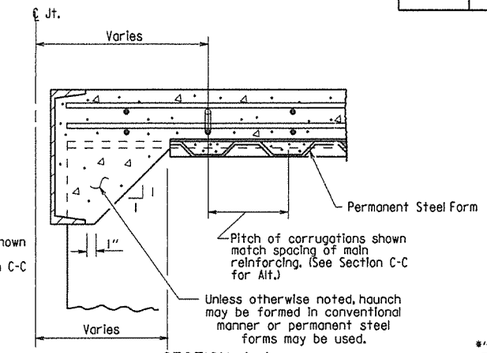

SECTION A-A

N.T.S.

(Channel at end of span)

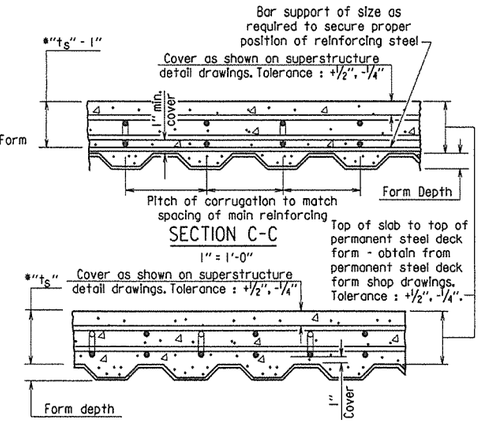

SECTION C-C - ALTERNATE

1" = 1'-0"

(Applicable when corrugations do not match spacing of main reinforcement)

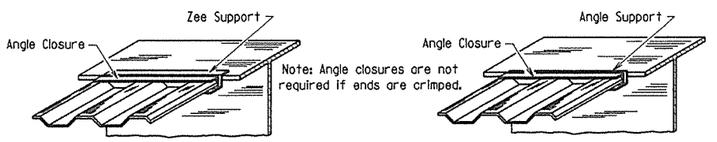

SKETCH OF PERMISSIBLE SUPPORTS

N.T.S.

*t_s = slab thickness as shown on superstructure detail drawings.

GENERAL NOTES

Permanent steel deck forms may be used at the Contractor's option and shall be at no additional cost to the Department. Such use may result in changes to the dead load deflection of the girder. Any cost for adjustments due to a change in the dead load deflection will be borne by the Contractor. Payment for deck concrete and structural steel will not be increased due to use of permanent steel deck forms.

Permanent steel deck forms shall conform to Subsection 802.14(b). Detailed plans, including detailed calculations and manufacturer's technical brochure, shall be submitted to and approved by the Engineer before work of forming the bridge deck is started.

Welding of form supports to the tension flange of steel girders will be permitted only in areas where shear connectors are used. When welding is not allowed, the method of fastening Z or ∠ supports to the flange must be approved by the Engineer.

Form sheets shall be fastened to supporting members and to each other with galvanized metal screws sufficient in size and number to provide a secure attachment. Alternate methods of attachment must be approved by the Engineer.

When the pitch of form corrugations match the reinforcing spacing, transversely align form sheets across the bridge to maintain the correct orientation of continuous reinforcing bars in the corrugations.

Bar support rods, when used, shall be sized and spaced to adequately support the bottom reinforcing mat at the required position.

High chairs shall be sized to support the top mat of reinforcing at the proper position. High chairs shall be placed at locations shown on the detail drawings.

Specifications: Arkansas State Highway and Transportation Department Standard Specifications for Highway Construction (2014 Edition), with applicable Supplemental Specifications and Special Provisions.

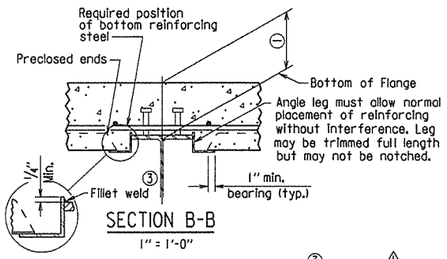

SECTION B-B

1" = 1'-0"

(Showing permissible support for tension flange where shear connectors are used, and for all compression flanges)

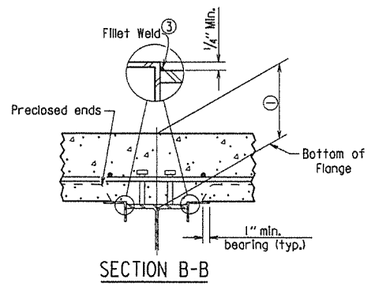

SECTION B-B

1" = 1'-0"

(Showing permissible support for tension flange where shear connectors are used and for all compression flanges)

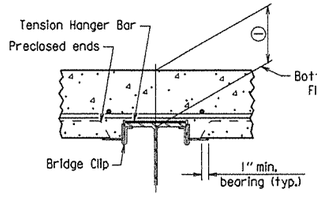

SECTION B-B

1" = 1'-0"

(Showing permissible support for tension flange where shear connectors are not used)

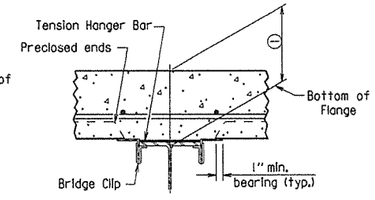

SECTION B-B

1" = 1'-0"

(Showing permissible support for tension flange where shear connectors are not used)

③ Minimum weld: ⅛" x 1" @ 18". More weld may be required; maximum length per weld = 1½" (typ.)

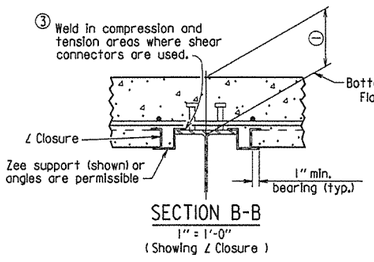

SECTION B-B

1" = 1'-0"

(Showing ∠ Closure)

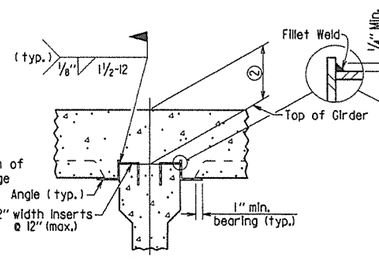

SECTION B-B

(FOR CONCRETE GIRDERS)

1" = 1'-0"

(Showing support by insert cast in girder)

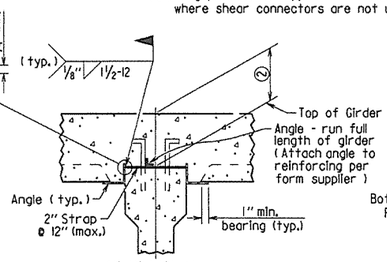

SECTION B-B

(FOR CONCRETE GIRDERS)

1" = 1'-0"

(Showing support by Strap)

① Distance from top of slab to bottom of top flange as measured at centerline girder and as shown on superstructure detail drawings. This dimension may vary within the following limits to maintain the grade and slab thickness tolerances : Minimum - occurs when either the top flange or the support angle leg contacts the bottom reinforcing steel; Maximum = t_s + 1¾" + flange thickness. See Section C-C for slab thickness tolerance between adjacent girder flanges.

② Distance from top of slab to top of girder as measured at centerline girder and as shown on superstructure detail drawings. This dimension may vary within the following limits to maintain the grade and slab thickness tolerances : Minimum - occurs when either the top of girder or the support angle leg contacts the bottom reinforcing steel; Maximum - value shown on the superstructure detail drawings when removable forms are used. See Section C-C for slab thickness tolerance between adjacent girder flanges.

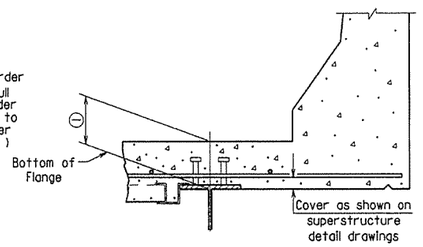

SECTION D-D

1" = 1'-0"

Note: Only Bottom Reinforcing is shown.

⚠ Revised weld dimension by KWY, Ck'd. by BEF, 3/24/16.

STANDARD DETAILS FOR PERMANENT STEEL BRIDGE DECK FORMS FOR STEEL & CONCRETE GIRDER SPANS

ARKANSAS STATE HIGHWAY COMMISSION

LITTLE ROCK, ARK.

DRAWN BY: KDH DATE: 2-27-2014 FILENAME: b55005.dgn

CHECKED BY: BEF DATE: 2-27-2014 SCALE: NONE

DESIGNED BY: STD. DATE: —

DRAWING NO. 55005

DATE REVISED	DATE FILMED	DATE REVISED	DATE FILMED	FED. ROAD DIST. NO.	STATE	FED. AID PROJ. NO.	SHEET NO.	TOTAL SHEETS
12-1-14				6	ARK.		381	
1-14-15				JOB NO.				

1 TYPE D NAME PLATE 55010

The name of the bridge as shown on the plans shall be placed on Lines 1 - 3 using 1/8" raised letters and numerals 3/8" high.

	Example 1	Example 2	Example 3	Example 4
Line 1	Red River	Southern	Saline	
Line 2	Relief	Railroad	River	Highway 5
Line 3		Overpass	Relief	

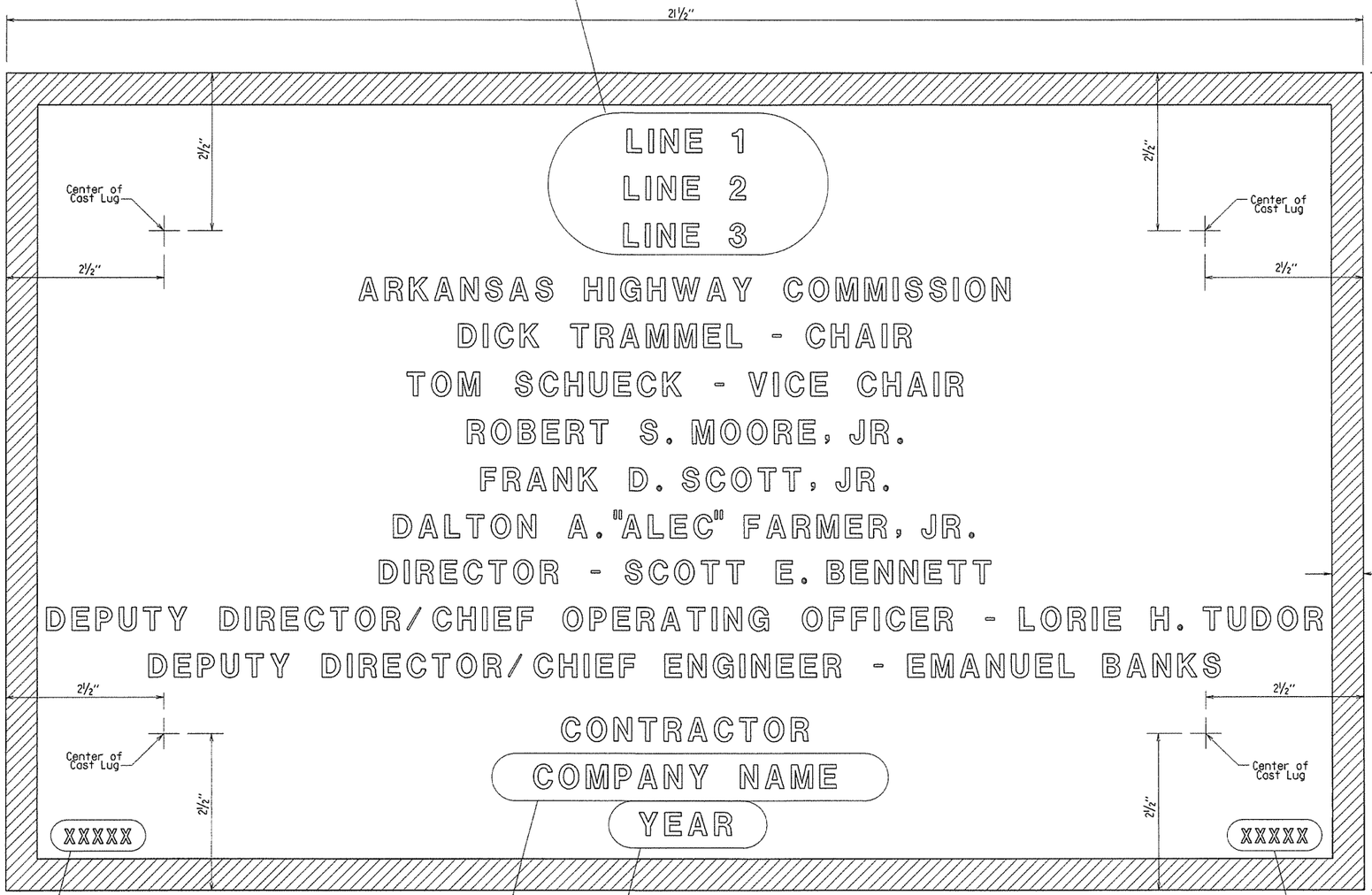

TYPICAL BRIDGE NAME PLATE

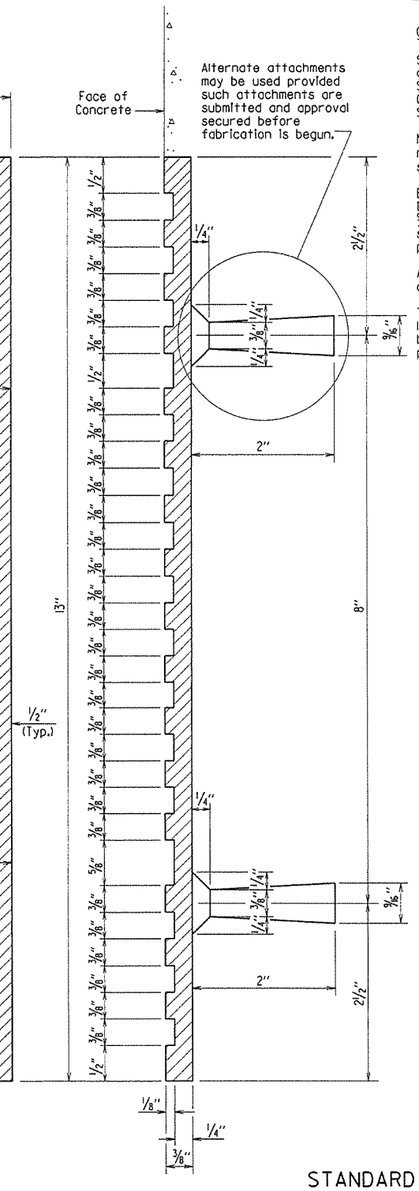

GENERAL NOTES

Specifications: Arkansas State Highway and Transportation Department Standard Specifications for Highway Construction, (2014 Edition) with applicable Supplemental Specifications and Special Provisions.

Name plates shall be cast bronze and shall meet the material requirements as specified in Section 812.

Body of plate shall be 1/4" thick and shall include four tapering cone lugs 3/8" to 9/16" x 2" long. The border and all lettering shall be raised 1/8" above the face of plate and shall be polished.

All lettering shall be plain gothic, square cut and not tapered.

The number of plates required and the location and name on the plate for each bridge shall be as designated on the plans.

2 Revised Chair and Vice Chair Added New Commissioner
1-14-15 KDH Checked By: CRE

1 Revised Deputy Director/ Chief Engineer Added Deputy Director/ Chief Operating Officer
12-1-14 KDH Checked By: CRE

STANDARD DETAILS FOR TYPE D BRIDGE NAME PLATE

ARKANSAS STATE HIGHWAY COMMISSION
LITTLE ROCK, ARK.

DRAWN BY: KDH DATE: 2-27-2014 FILENAME: b55010.dgn
CHECKED BY: BEF DATE: 2-27-2014 SCALE: NO SCALE
DESIGNED BY: STD. DATE: —

DRAWING NO. 55010

DATE REVISED	DATE FILMED	DATE REVISED	DATE FILMED	FED. ROAD DIST. NO.	STATE	FED. AID PROJ. NO.	SHEET NO.	TOTAL SHEETS
3/24/16				6	ARK.		329	
				JOB NO.				
				①	STEEL H-PILES		55020	

GENERAL NOTES FOR STEEL H-PILES:

Steel H-Piles shall conform to AASHTO M 270, Grade 36 or greater.

See Bridge Layout and Bent Details for pile size, estimated length, spacing, pile anchorage (if required) and for driving information.

Steel H-Piles that extend above the ground and are not protected by pile encasement shall be painted in accordance with Subsection 805.02.

Brackets, lugs, cap plates, pile tips, driving points, pile painting, splicing and welding shall not be paid for directly, but shall be considered subsidiary to the item "Steel Piling".

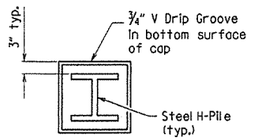

VIEW X-X

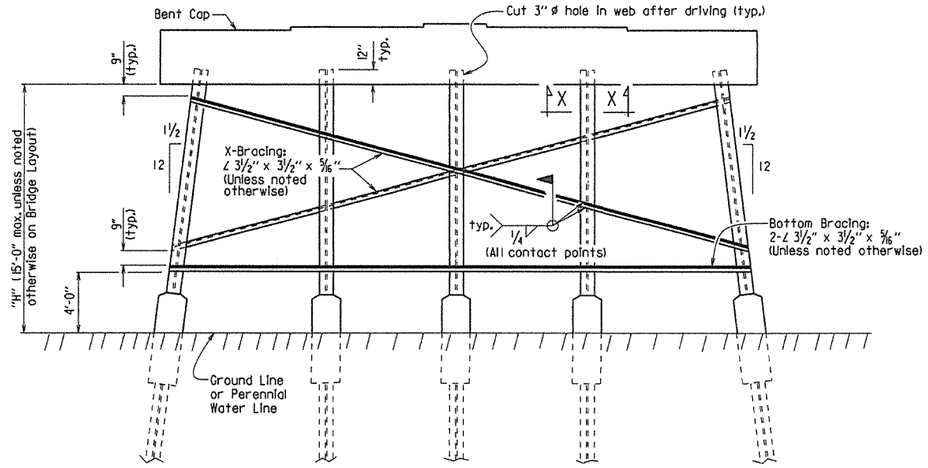

Notes:
All bracing shall be cut and welded in the field. Each brace shall be furnished in one piece. Payment shall be made under Item 807.

Unless noted otherwise, omit X-Bracing when "H" is less than 8 feet.

Omit X-Bracing and Bottom Bracing when "H" is 5 feet or less.

When required on the Bridge Layout sheet, pile encasements shall be constructed. See Notes and Details for H-Pile Encasements.

Omit all bracing (and V-groove in cap) when pile encasement is extended to bottom of bent cap.

TYPICAL DETAILS OF H-PILE TRESTLE INTERMEDIATE BENT

(Shown with Partial Height Encasement)

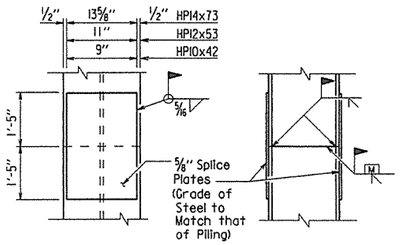

The Contractor may for his own convenience and at his own expense provide as many as three splices per pile. Minimum spacing between splices shall be 5 feet.

TYPICAL SPLICE DETAILS

⚠ H-pile splicers manufactured by Associated Pile and Fitting Corporation, LB Foster Piling, Skyline Steel or equivalent may be used in lieu of the "Typical Splice Details" shown. H-pile splicers shall match the same grade of steel specified for the piling and shall be welded to the pile with a 5/16" fillet weld around the entire perimeter of the splice. Flanges shall be welded with a complete penetration groove weld complying with AASHTO/AWS Joint Designation B-U4a or B-U4b. All welding shall conform to Subsection 807.26 of the AHTD Standard Specifcations for Highway Construction (2014 Edition).

Notes:
Steel pile tip reinforcing not required when approved H-Pile driving points are used.

Steel pile tip reinforcing shall not be paid for directly, but shall be considered subsidiary to the item "Steel Piling".

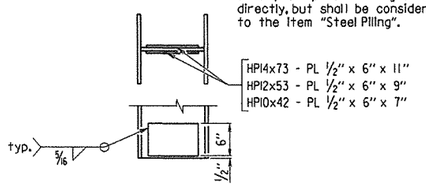

REINFORCING DETAIL FOR STEEL H-PILE TIP

GENERAL NOTES FOR H-PILE ENCASEMENTS:

⚠ See Bridge Layout for additional notes, any pile encasement restrictions and required location of pile encasements.

All concrete shall be Class S with a minimum 28-day compressive strength, f'c = 3,500 psi. If concrete cannot be placed in the dry, Seal Concrete may be used from top to bottom of encasement.

Reinforcing steel shall be Grade 60 conforming to AASHTO M 31 or M 322, Type A.

Welded Wire Fabric shall conform to AASHTO M 55 or M 221. Galvanized Corrugated Steel Pipe shall conform to AASHTO M 36 and M 218.

Concrete, welded wire fabric or reinforcing steel and galvanized pipe shall not be paid for directly, but shall be considered subsidiary to the item "Pile Encasement".

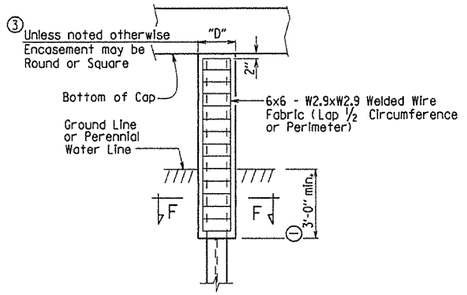

PILE ENCASEMENT DETAIL FOR STEEL H-PILES

④ (Shown with Encasement to Bottom of Cap)

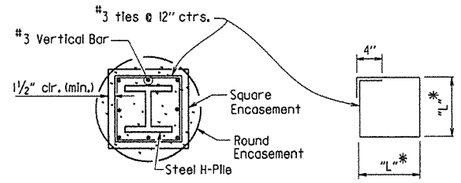

SECTION F-F

*Measured out-to-out of bar.

TABLE OF VARIABLES FOR PILE ENCASEMENT

Pile Size	"D" Square Encsmt.	"D" Round Encsmt.	"L"*
HP10x42	1'-7"	2'-0"	1'-4"
HP12x53	1'-8"	2'-2"	1'-5"
HP14x73	1'-11"	2'-6"	1'-8"

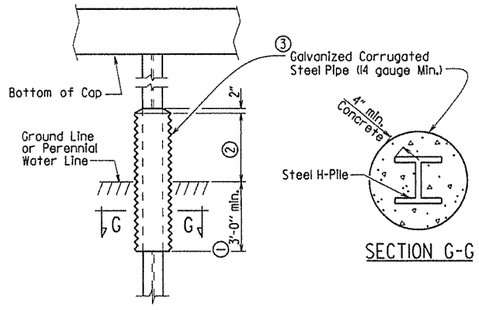

SECTION G-G

① Unless otherwise noted on Bridge Layout.

② 3'-0" minimum or as shown on Bridge Layout.

③ Encasement dimensions shall be sized to maintain a minimum concrete cover of 4" from the H-Pile. Reinforcement shall be sized to provide a minimum concrete cover of 1½" and a minimum clearance of 1¼" from the pile.

④ Alternate pile encasement, when not extended to bottom of cap, shall have 2" concrete taper for water runoff as shown in the Partial Height Encasement detail.

ALTERNATE PILE ENCASEMENT DETAIL FOR STEEL H-PILES

(Shown with Partial Height Encasement)

⚠ Added alternate method of splicing H-piles and revised pile encasement note.
3/24/2016 AMS

This document was originally issued and sealed by Charles R. Ellis, PE No. 9235, on March 24, 2016. This copy is not a signed and sealed document.

STATE OF ARKANSAS
REGISTERED PROFESSIONAL ENGINEER
No. 9235
CHARLES R. ELLIS

BRIDGE ENGINEER

STANDARD DETAILS FOR STEEL H-PILES AND PILE ENCASEMENTS

ARKANSAS STATE HIGHWAY COMMISSION
LITTLE ROCK, ARK.

DRAWN BY: A.M.S. DATE: 2/27/2014 FILENAME: b55020.dgn
CHECKED BY: B.E.F. DATE: 2/27/2014 SCALE: NO SCALE
DESIGNED BY: STD. DATE: —

DRAWING NO. 55020

DATE REVISED	DATE FILMED	DATE REVISED	DATE FILMED	FED. ROAD DIST. NO.	STATE	FED. AID PROJ. NO.	SHEET NO.	TOTAL SHEETS
9/2/15				6	ARK.		583	
				JOB NO.				
				①	TYPE B GUTTERS		55030B	

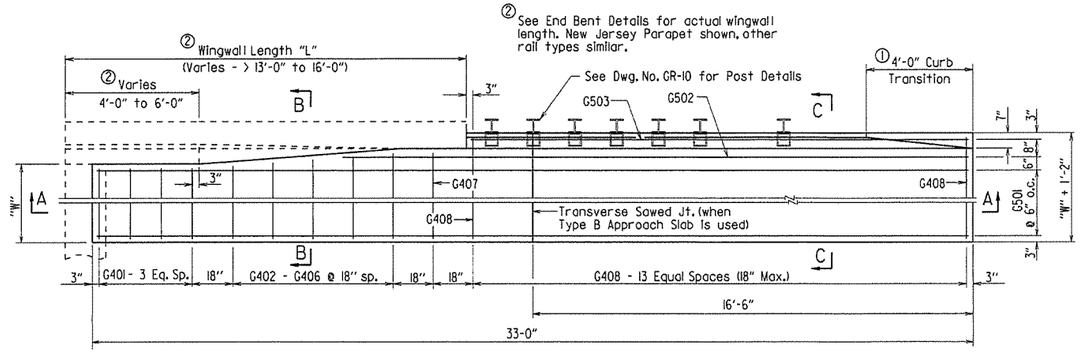

HALF PLAN OF APPROACH GUTTERS FOR SQUARE BRIDGE

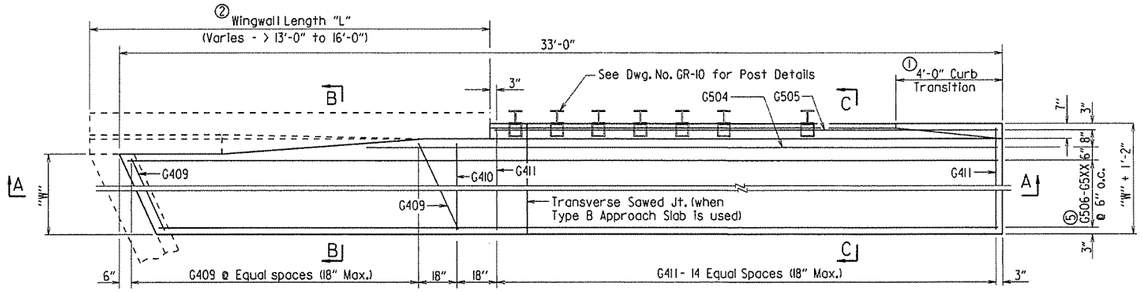

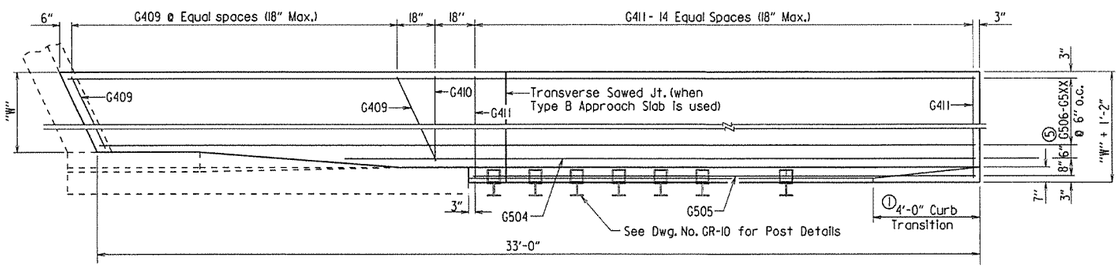

PLAN OF APPROACH GUTTERS FOR SKEWED BRIDGE

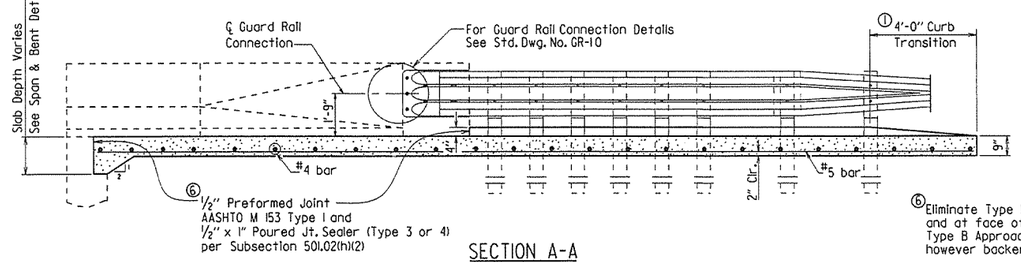

SECTION A-A

① Construct gutter curb with height-transition as shown if drop inlet is not placed at end of gutter.

Construct gutter curb full height (no height-transition) if drop inlet is placed at end of gutter. Curb height transition placed on drop inlet. See drop inlet details.

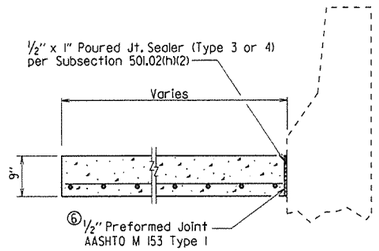

SECTION B-B
N.T.S.

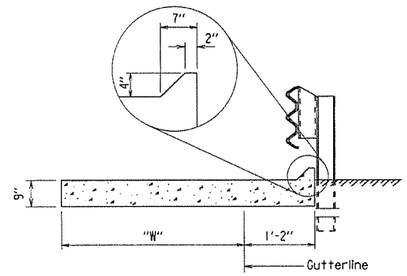

SECTION C-C
N.T.S.

BAR LIST FOR ONE TYPE B GUTTER

	Mark	No. Req'd. for Width "W" △ 2'-0"	3'-0"	4'-0"	6'-0"	8'-0"	Length
Square Bridge	G401	4	4	4	4	4	"W"-4"
	G402-G406	1 each	1 each	1 each	1 each	1 each	"W"-3" to "W"+2"
	G407	1	1	1	1	1	"W"+3"
	G408	14	14	14	14	14	"W"+ 10"
	G501	4	6	8	12	16	32'-8"
	G502	1	1	1	1	1	(38'-5")-"L"
	G503	1	1	1	1	1	(33'-8")-"L"
Skewed Bridge	G409	③	③	③	③	③	④
	G410	1	1	1	1	1	"W"+3"
	G411	15	15	15	15	15	"W"+ 10"
	G504	1	1	1	1	1	④
	G505	1	1	1	1	1	④
	G506 - G5XX ⑤	1 each	1 each	1 each	1 each	1 each	④

③ No. Req'd. varies with Skew and Wingwall length.

④ Bar Lengths vary with Skew and Wingwall Length.

⑤ G509 for "W" = 2' △
G511 for "W" = 3'
G513 for "W" = 4'
G517 for "W" = 6'
G521 for "W" = 8'

QUANTITIES FOR ONE SQUARE APPROACH GUTTER

(FOR INFORMATION ONLY)

△	"W" Width (ft.)	Reinforcing Steel (Lbs.)	Concrete (Cu. Yds.)
△	2	225	2.70
	3	310	3.60
	4	390	4.55
	6	560	6.35
	8	730	8.20

Quantities are based on "L" = 14'-0".

Note:
All longitudinal lines within the limits of horizontal curves shall be on curves concentric to C.L. Bridge. Adjustment to longitudinal bar lengths may be required. Transverse reinforcing shall be placed on radial lines to C.L. Bridge.

△ Revised to add "W" = 2'-0"; By LJB
Checked By: KWY 9/2/15

⑥ Eliminate Type I Preformed Joint at end bent backwall and at face of wingwalls when gutters used with Type B Approach Slabs. Poured joint sealer is required, however backer rod shall be eliminated.

GENERAL NOTES

All concrete shall be Class S or Class S(AE) or mixture used for Portland Cement Concrete Pavement and shall be poured in the dry.

All reinforcing steel shall be Grade 60 (yield strength = 60,000 psi) conforming to AASHTO M 31 or M 322, Type A, with mill test reports.

Approach Gutters will be measured and paid for in accordance with Section 504.

STANDARD DETAILS FOR TYPE B APPROACH GUTTERS

ARKANSAS STATE HIGHWAY COMMISSION

LITTLE ROCK, ARK.

DRAWN BY: A.M.S. DATE: 2/27/2014 FILENAME: b55030b.dgn
CHECKED BY: K.W.Y. DATE: 2/27/2014 SCALE: 3/8" = 1'-0" or As Shown
DESIGNED BY: STD. DATE:

DRAWING NO. 55030B

REFER TO TABULATION OF QUANTITIES FOR 'W' & 'B' DIMENSIONS

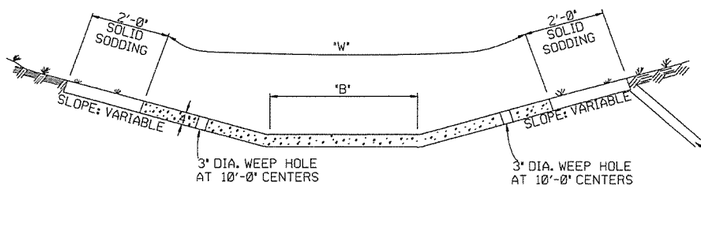

TYPE A

REFER TO TABULATION OF QUANTITIES FOR 'W' DIMENSIONS

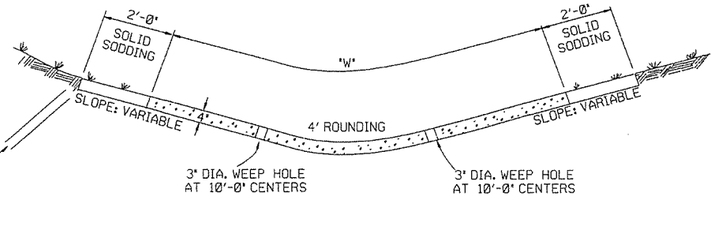

TYPE B

THE STEEL AND ADDITIONAL CONCRETE FOR THE WALLS SHALL NOT BE PAID FOR DIRECTLY, BUT SHALL BE CONSIDERED TO BE INCLUDED IN THE PRICE BID FOR 'CONCRETE DITCH PAVING.'

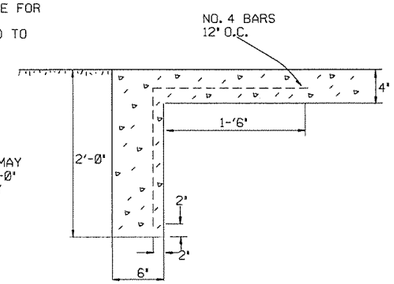

TOE WALL DEPTH MAY BE ALTERED TO 1'-0" WHEN DIRECTED BY THE ENGINEER IN ROCK EXCAVATION

TOE WALL DETAIL FOR CONCRETE DITCH PAVING

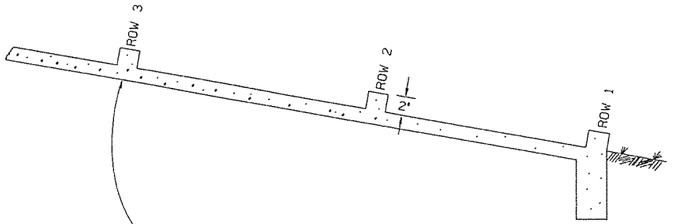

NUMBER OF ELEMENTS PER ROW VARIES WITH WIDTH OF PAVING SPECIFIED

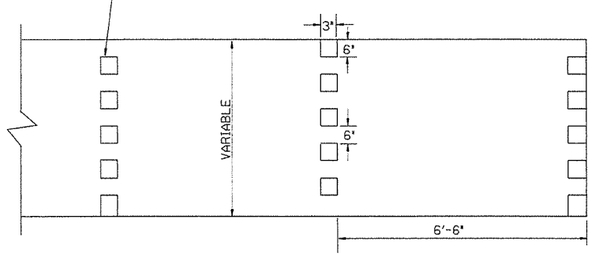

ENERGY DISSIPATORS
(NO SCALE)

ENERGY DISSIPATORS TO BE USED FOR THE ENTIRE LENGTH OF DITCH WHEN SLOPE OF DITCH PAVING EXCEEDS 7%. THE DISSIPATORS WILL NOT BE PAID FOR DIRECTLY, BUT SHALL BE CONSIDERED TO BE UNCLUDED IN THE PRICE BID FOR CONCRETE DITCH PAVING.

GENERAL NOTES:

THE FULL WIDTH OF EACH SECTION SHALL BE POURED MONOLITHICALLY.

TOE WALLS TO BE CONSTRUCTED FULL WIDTH AT EACH END OF DITCH PAVING, AND POURED MONOLITHICALLY.

SOLID SOD ALONG DITCH PAVING TO BE PLACED WITHIN 14 DAYS OF DITCH PAVING CONSTRUCTION.

1" WIDE TRANSVERSE EXPANSION JOINTS SHALL BE PLACED IN CONCRETE DITCH PAVING AT 45' INTERVALS. THE SPACE SHALL BE FILLED WITH APPROVED JOINT FILLER COMPLYING WITH AASHTO M213.

DATE	REVISION	DATE FILM'D
11-17-10	ADDED GENERAL NOTE	
6-2-94	ADDED GENERAL NOTE ABOUT SOLID SODDING	
11-30-8	ELIMINATED MIN. ROWS OF ELEMENTS	111-30-89
7-15-88	REVISED DISSIPATOR NOTE	653-7-15-88
4-3-87	REVISED ENERGY DISSIPATOR	671-4-3-87
1-9-87	MODIFIED NOTE ON ENERGY DISS.	532-1-9-87
11-3-86	ADDED NOTE TO ENERGY DISS.	599-12-1-86
11-1-84	ENERGY DISSIPATOR DETAILS ADDED	508-11-1-84
11-1-84	EXCAVATION DETAILS ADDED TYPED A & B	
10-2-72	REVISED AND REDRAWN	508-10-2-72

ARKANSAS STATE HIGHWAY COMMISSION

CONCRETE DITCH PAVING

STANDARD DRAWING CDP-1

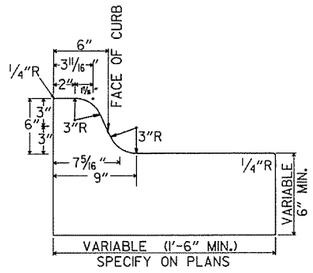

TYPE A

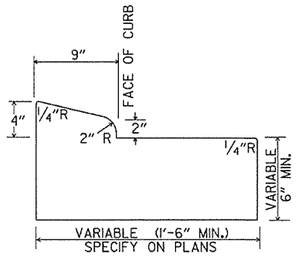

TYPE B-1

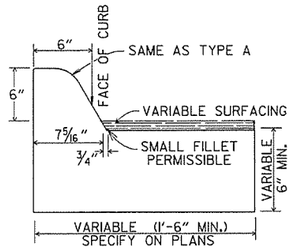

TYPE C

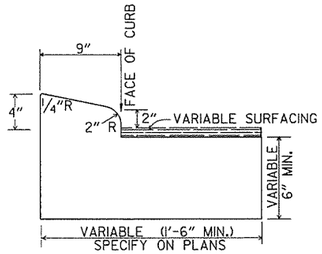

TYPE B-2

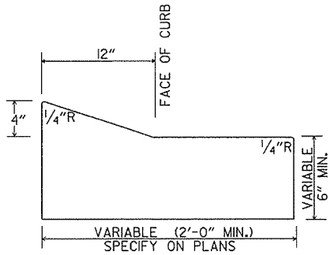

TYPE E-1

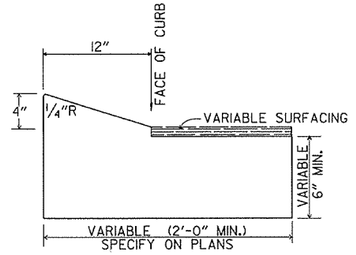

TYPE E-2

CONCRETE COMBINATION CURB AND GUTTER

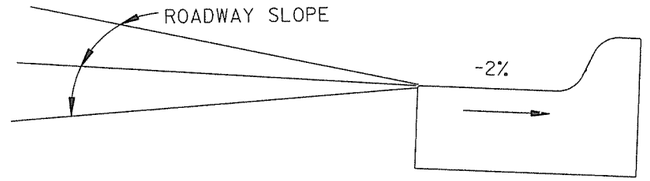

DETAIL OF GUTTER SLOPE

GUTTER SHALL BE CONSTRUCTED ON 2% SLOPE AWAY FROM ROADWAY, REGARDLESS OF ROADWAY SLOPE.

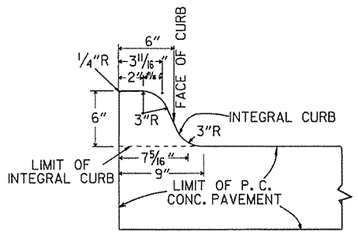

TYPE A

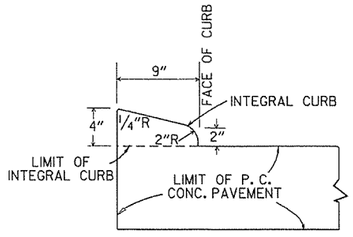

TYPE B

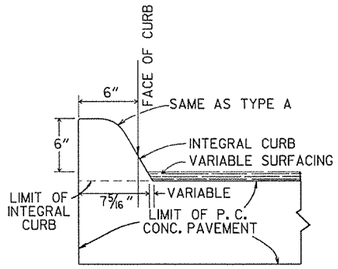

TYPE C

INTEGRAL CURB

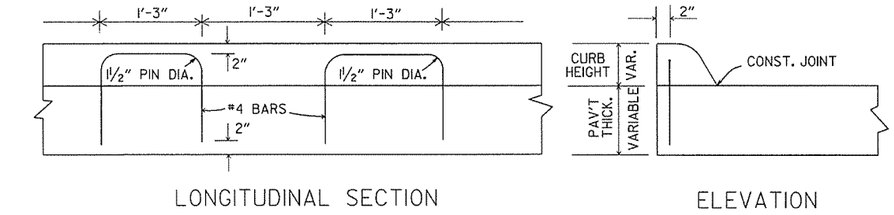

ALTERNATE CONSTRUCTION METHOD FOR INTEGRAL CURB

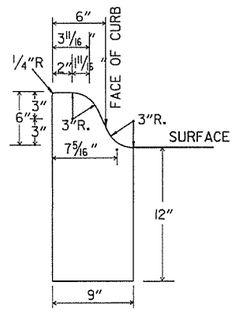

TYPE A

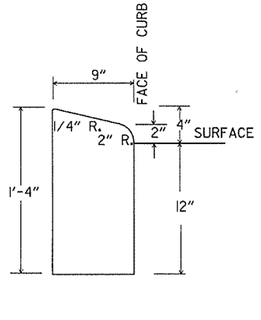

TYPE B

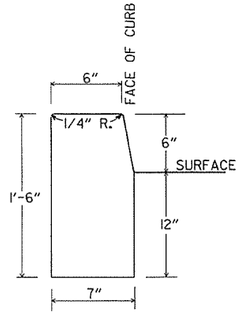

TYPE D

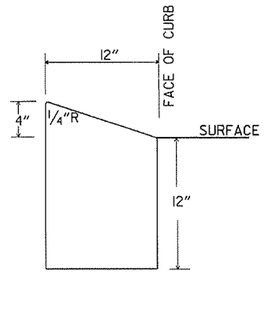

TYPE E

CONCRETE CURB

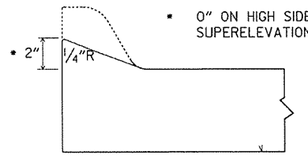

NOTE: USE MODIFIED CURB AS SPECIFIED ON STD. DR-1. COMPENSATION FOR MODIFIED CURB WILL BE CONSIDERED INCLUDED IN THE PRICE BID FOR THE TYPE OF CURB OR CURB AND GUTTER SPECIFIED.

DETAILS OF MODIFIED CURB

DATE	REVISION	DATE FILMED
11-29-07	REVISED GUTTER SLOPE & MODIFIED CURB DETAILS	
11-10-05	ADDED DETAILS OF TYPE E CURBS	
11-16-01	REVISED CONCRETE CURB TYPE B	
11-18-98	REVISED MODIFIED CURB	
6-2-94	ADDED NOTE TO SPECIAL MODIFIED CURB	
8-5-93	CORRECTED GUTTER SLOPE	8-5-93
10-1-92	ADDED DETAILS OF GUTTER SLOPE	10-1-92
5-24-90	ADDED DETAILS OF MODIFIED CURB	5-24-90
11-30-89	VARIBLE DEPTH TYPE A & B I	11-30-89
7-15-88	REVISED MODIFIED CURB	630-7-15-88
11-1-73	REVISED MODIFIED CURB	500-11-1-73
10-2-72	REVISED AND REDRAWN	512-10-2-72

ARKANSAS STATE HIGHWAY COMMISSION

CURBING DETAILS

STANDARD DRAWING CG-1

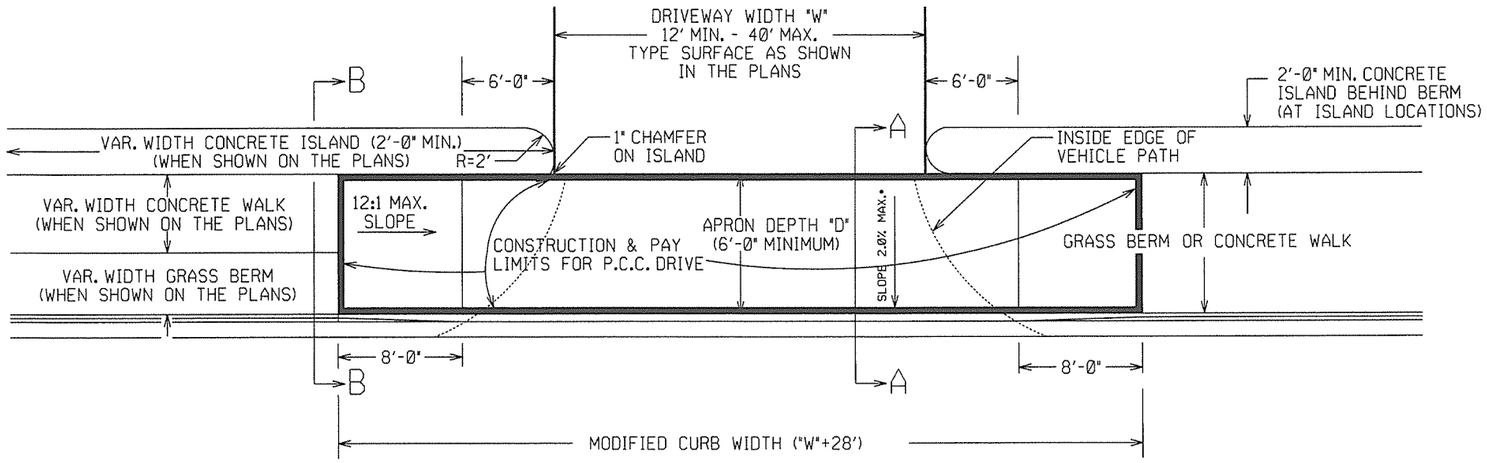

PLAN VIEW

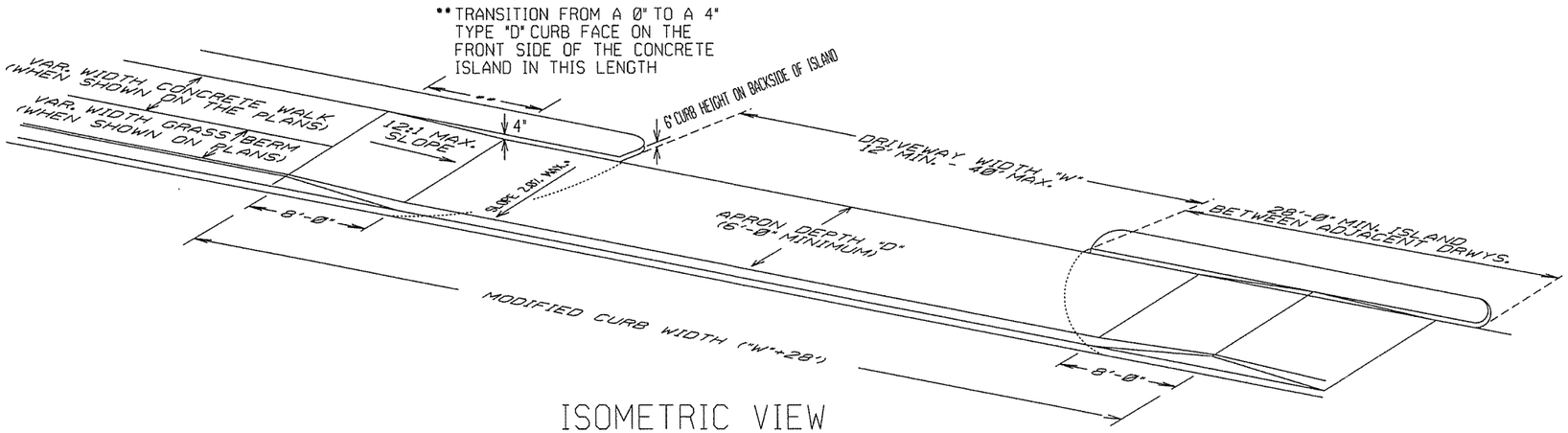

ISOMETRIC VIEW

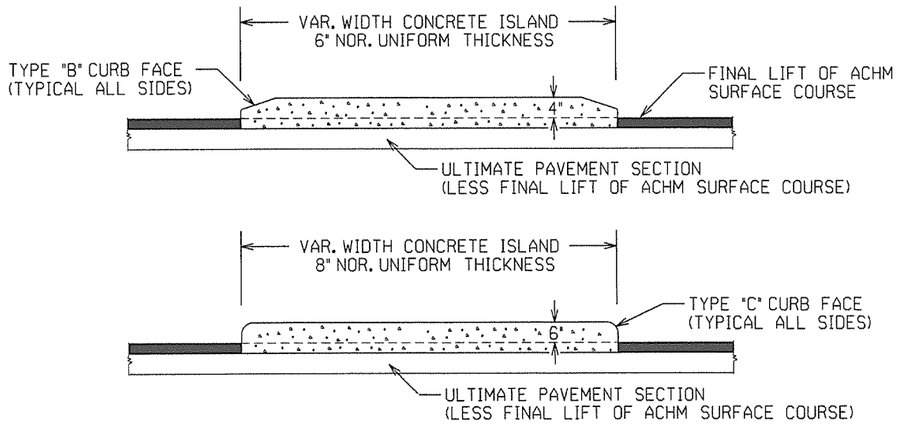

CURBED ISLANDS FOR CHANNELIZATION

REFER TO PLANS FOR TYPE OF CURB FACE TO BE USED. NO DIRECT PAYMENT WILL BE MADE FOR THE CURB FACES SHOWN ON THE ISLAND DETAILS. PAYMENT FOR THE CURB FACE WILL BE INCLUDED IN THE UNIT PRICE BID FOR THE ITEM "CONCRETE ISLAND".

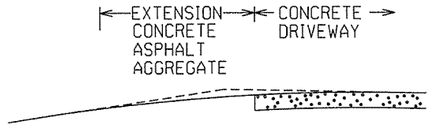

EXTENSION TYPICAL SECTIONS

1: CONCRETE - 6" P.C. CONCRETE DRIVEWAY

2: ASPHALT - 2" ACHM SURFACE COURSE (1/2")
4" ACHM BINDER COURSE.(1") OR
4" ACHM BASE COURSE (1-1/2")

3: ASPHALT - 2" ACHM SURFACE COURSE (1/2")
7" AGGREGATE BASE COURSE

4: AGGREGATE - 6" AGGREGATE BASE COURSE

THE TYPE OF EXTENSION SHALL BE AS SHOWN IN THE PLANS. THE CONTRACTOR MAY, WITH THE APPROVAL OF THE ENGINEER, SUBSTITUTE A LOWER NUMBERED TYPE OF EXTENSION IN LIEU OF THE TYPE SPECIFIED IN THE PLANS, BUT AT NO ADDITIONAL COST TO THE DEPARTMENT.

DRIVEWAY EXTENSION DETAILS

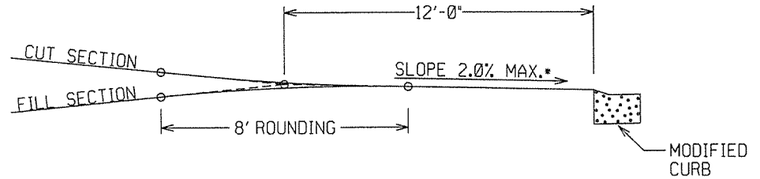

DRIVEWAY VERTICAL ALIGNMENT DETAILS

* NOTE: DRIVEWAYS MAY NOT BE SLOPED AWAY FROM THE ROADWAY UNLESS APPROVED BY THE ENGINEER.

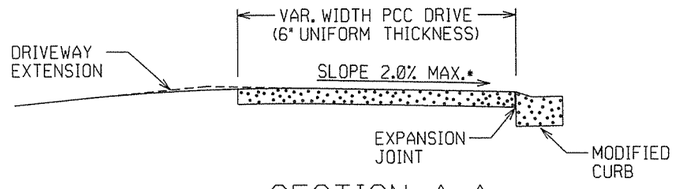

SECTION A-A

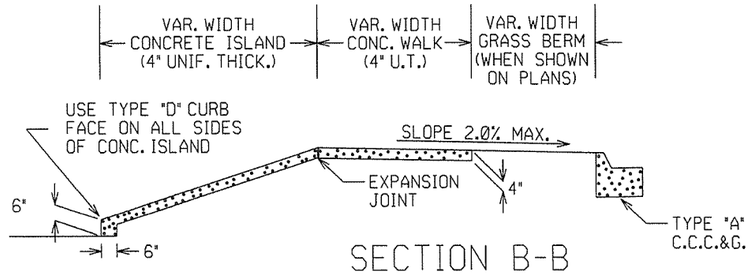

SECTION B-B
CURBED ISLAND BEHIND WALK

2-27-14		REVISED PLAN & ISOMETRIC VIEW
11-29-07		ADDED CHANNELIZATION ISLAND WITH TYPE C CURB FACE & REVISED DRIVEWAY SLOPE NOTE & VERTICAL ALIGNMENT DETAIL
11-10-05		REV. APRON SLOPE & DEPTH OF AGG. BASE.
8-22-02		ADDED ISLAND DETAILS & NOTES
3-30-00		REV. MOD. CURB WIDTH & TRANS. NOTE
11-19-98		REVISED NOTES
11-18-98		REDRAWN AND REISSUED
DATE REV.	DATE FILMED	DESCRIPTION

ARKANSAS STATE HIGHWAY COMMISSION
DETAILS OF DRIVEWAYS & ISLANDS
STANDARD DRAWING DR-1

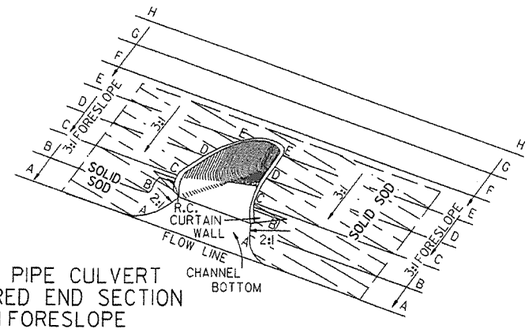

TYPICAL PIPE CULVERT
WITH FLARED END SECTION
& 3:1 FORESLOPE

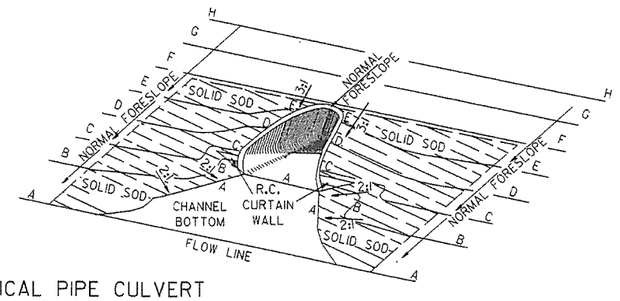

TYPICAL PIPE CULVERT
WITH FLARED END SECTION
& FLATTENED ADJACENT SLOPES

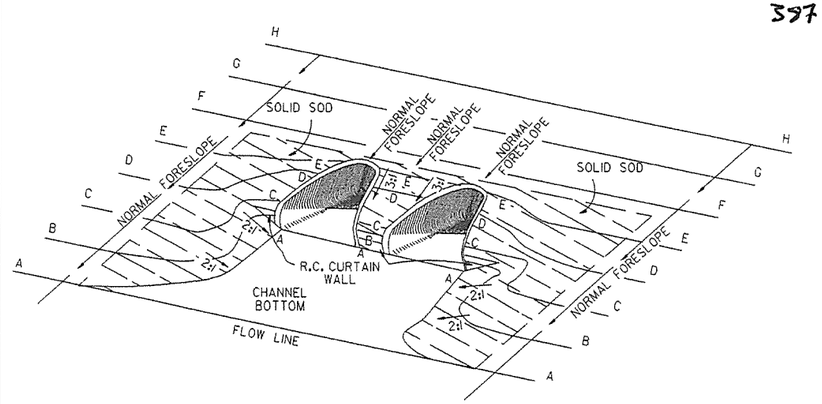

TYPICAL MULTIPLE PIPE CULVERT
WITH FLARED END SECTIONS
& FLATTENED ADJACENT SLOPES

R.C. CURTAIN WALL
DIMENSIONS & QUANTITIES

PIPE DIA.	H_1	L_1	L	L (DBL.)/2	SINGLE R.C.P.C. CONC. CU. YDS.	SINGLE R.C.P.C. REINF. STEEL LBS.	DOUBLE R.C.P.C. CONC. CU. YDS.	DOUBLE R.C.P.C. REINF. STEEL LBS.
18"	11½"	3'-5"	8'-0"	6'-3"	0.31	27.7	0.45	39.5
24"	1'-0½"	4'-6"	9'-6"	7'-6"	0.37	33.4	0.53	48.0
30"	1'-3½"	5'-7"	11'-0"	9'-0"	0.45	39.0	0.67	59.0
36"	1'-7"	6'-8"	13'-0"	10'-6"	0.58	52.6	0.83	73.9
42"	2'-1½"	7'-3"	15'-6"	12'-0"	0.82	77.1	1.10	100.7
48"	2'-5"	7'-10"	17'-0"	13'-0"	0.98	94.9	1.27	120.4
54"	2'-9½"	8'-5"	18'-6"	14'-0"	1.16	115.8	1.47	143.7
60"	3'-4"	9'-0"	20'-6"	15'-6"	1.47	149.7	1.84	180.3
72"	4'-5"	10'-2"	25'-6"	18'-6"	2.31	232.6	2.73	271.0

NOTE: QUANTITIES SHOWN ARE FOR ONE (1) CURTAIN WALL.

REINFORCING STEEL SCHEDULE

PIPE DIA.	SINGLE R.C. PIPE CULVERT H401 L	NO.	H402 L	NO.	V401 L	NO.	V402 L	NO.	DOUBLE R.C. PIPE CULVERT H401 L	NO.	H402 L	NO.	H403 L	NO.	V401 L	NO.	V402 L	NO.
18"	7'-8"	2	1'-11½"	4	1'-7½"	8	8"	8	12'-2"	2	1'-11½"	4	8"	2	1'-7½"	10	8"	14
24"	9'-2"	2	2'-2"	4	1'-8½"	10	8"	9	14'-8"	2	2'-2"	4	8"	2	1'-8½"	12	8"	18
30"	10'-8"	2	2'-4½"	4	1'-11½"	10	8"	12	17'-8"	2	2'-4½"	4	8"	2	1'-11½"	14	8"	22
36"	12'-8"	2	2'-10"	6	2'-3"	12	8"	14	20'-8"	2	2'-10"	6	8"	3	2'-3"	14	8"	28
42"	15'-2"	2	3'-9½"	8	2'-9½"	16	8"	15	23'-8"	2	3'-9½"	8	8"	4	2'-9½"	18	8"	30
48"	16'-8"	2	4'-3"	10	3'-1"	18	8"	16	25'-8"	2	4'-3"	10	8"	5	3'-1"	20	8"	32
54"	18'-2"	2	4'-8½"	12	3'-5½"	20	8"	17	27'-8"	2	4'-9"	12	8"	6	3'-5½"	22	8"	34
60"	20'-2"	2	5'-5"	14	4'-0"	24	8"	18	30'-8"	2	5'-5"	14	8"	7	4'-0"	26	8"	36
72"	25'-2"	2	7'-4"	18	5'-1"	30	8"	20	36'-8"	2	7'-4"	18	8"	9	5'-1"	33	8"	40

ALL REINFORCING STEEL #4 BARS @ 6" O.C.

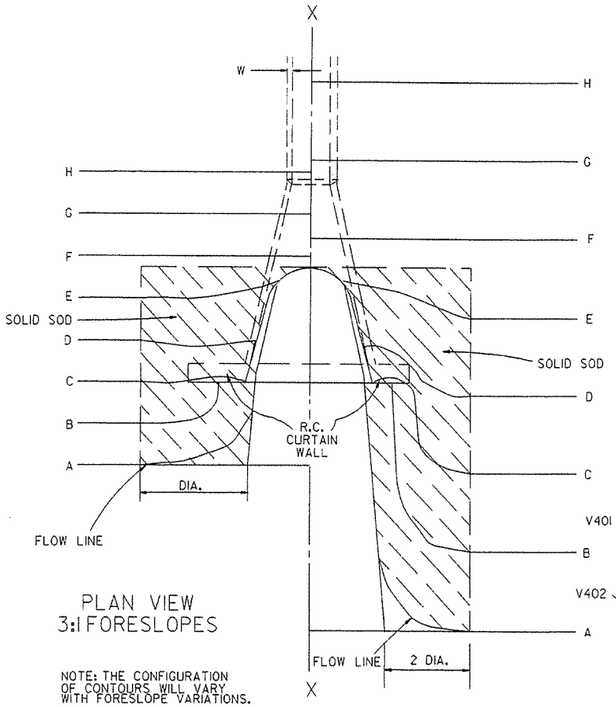

PLAN VIEW
3:1 FORESLOPES

NOTE: THE CONFIGURATION OF CONTOURS WILL VARY WITH FORESLOPE VARIATIONS.

PLAN VIEW
FLATTENED FORESLOPES

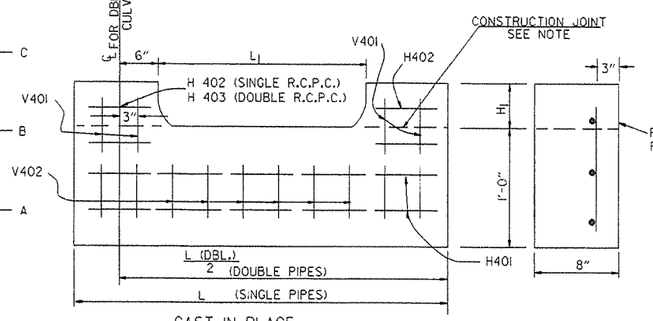

CAST-IN-PLACE

NOTE: THE PORTION OF THE R.C. CURTAIN WALL BENEATH THE FLARED END SECTION (LOWER 1'-0") SHALL BE PLACED MONOLITHICALLY. THE FLARED END SECTION SHALL THEN BE SET IN PLACE & THE REMAINING PORTIONS OF THE R.C. CURTAIN WALL PLACED.

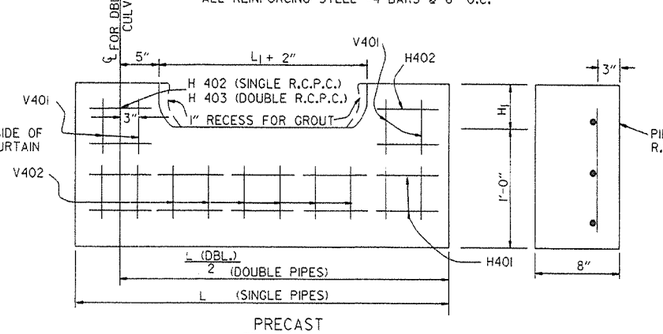

PRECAST

NOTE: THE PRECAST CURTAIN WALL WILL BE SET AND BACKFILLED WITH COMPACTED MATERIAL. THE FLARED END SECTION SHALL THEN BE SET IN PLACE AND THE 1" RECESS FILLED WITH GROUT. WHERE "L" EXCEEDS 11' THE CURTAIN WALL MAY BE CAST IN TWO (2) OR MORE SECTIONS. THE METHOD OF JOINING THE SECTIONS FOR INSTALLATION SHALL BE APPROVED BY THE ENGINEER.

R.C. CURTAIN WALL DETAILS

SOLID SODDING

PIPE DIA.	SINGLE R.C.P.C. 3:1 SQ. YDS.	SINGLE R.C.P.C. 4:1 SQ. YDS.	SINGLE R.C.P.C. 6:1 SQ. YDS.	DOUBLE R.C.P.C. 3:1 SQ. YDS.	DOUBLE R.C.P.C. 4:1 SQ. YDS.	DOUBLE R.C.P.C. 6:1 SQ. YDS.
18"	5	7	12	6	8	13
24"	8	12	19	9	13	20
30"	13	18	29	14	19	30
36"	17	26	41	18	28	43
42"	23	35	55	25	37	57
48"	29	46	68	31	48	70
54"	35	57	85	37	59	87
60"	45	62	104	48	65	107
72"	64	92	156	67	95	159

NOTE: QUANTITIES SHOWN ABOVE ARE FOR ONE (1) END OF F.E.S.

GENERAL NOTES

1. A CAST-IN-PLACE OR PRECAST CURTAIN WALL MAY BE USED. PAYMENT FOR THE CURTAIN WALL SHALL BE CONSIDERED TO BE INCLUDED IN THE UNIT PRICE BID EACH FOR FLARED END SECTIONS OF THE SEVERAL SIZES, WHICH PRICE SHALL BE FULL COMPENSATION FOR FURNISHING ALL MATERIALS INCLUDING REINFORCING STEEL AND CONCRETE: FOR FORMS, MIXING AND PLACING; FOR EXCAVATION AND BACKFILL, AND FOR ALL LABOR, TOOLS, EQUIPMENT AND INCIDENTALS NECESSARY TO COMPLETE THE WORK.
2. ALL EXPOSED EDGES SHALL BE CHAMFERED ¾".
3. CONCRETE FOR CURTAIN WALL SHALL MEET THE REQUIREMENTS FOR CLASS A OR S CONCRETE AS PROVIDED IN SECTION 802 OF THE STANDARD SPECIFICATIONS OR FOR PAVING CONCRETE AS PROVIDED IN SECTION 501 OF THE STANDARD SPECIFICATIONS.
4. WELDED WIRE MESH 3 x 3 W10 x W10 MAY BE USED IN LIEU OF REINFORCING BARS.

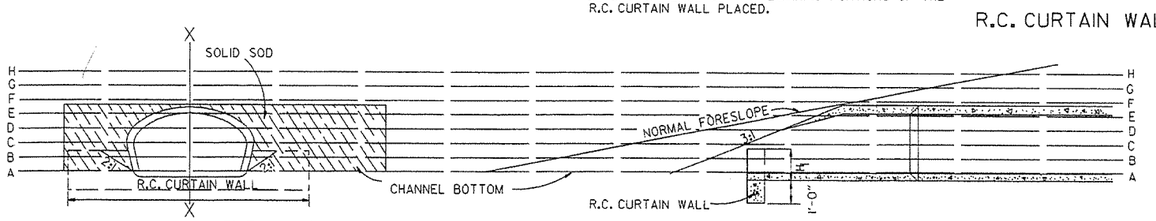

END VIEW

SECTIONAL VIEW "X-X"

DATE	REVISION	FILMED
10-18-96	ADDED NOTE TO SOLID SODDING	10-18-96
10-12-95	CORRECTED SPELLING	
11- 3-94	ADDED GENERAL NOTE NO. 4	
8-15-91	REV. CURTAIN WALL QUANT. STEEL SCH. & SOLID SOD QUANT.	
3-2-81	ALLOW PRECAST IN 2 OR MORE PIECES CHAMFER EDGES	
5-15-80	ADDED PRECAST WALL & GENERAL NOTES	
10-2-72	REVISED AND REDRAWN	

ARKANSAS STATE HIGHWAY COMMISSION

FLARED END SECTION

STANDARD DRAWING FES-1

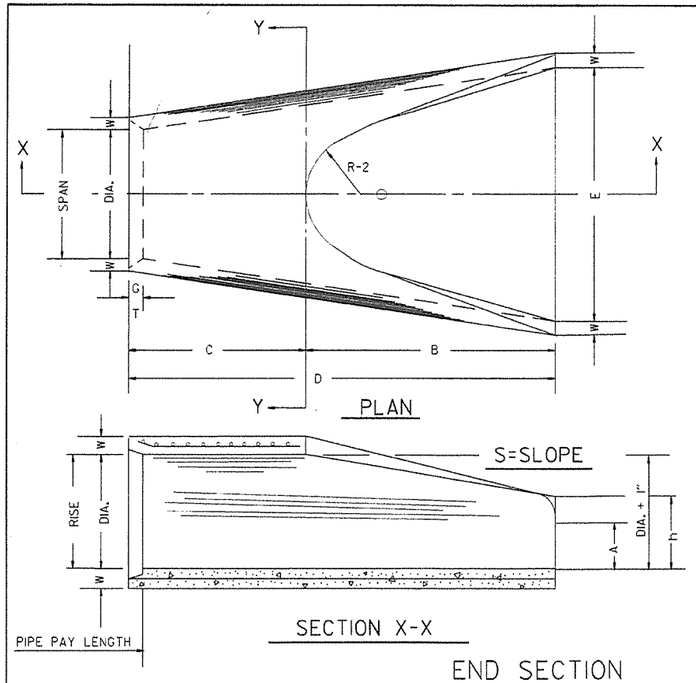

END SECTION FOR REINFORCED CONCRETE PIPE CULVERTS

TABLE OF DIMENSIONS

DIA.	WALL	A	B	C	D	E	S	DIA. + 1"	P	R-1	R-2	G-T	WT.	h
18"	2½"	9"	2'-3"	3'-10"	6'-1"	3'-0"	3:1	19"	29"	15½"	12"	2"	1000	1'-0½"
24"	3"	9½"	3'-7½"	2'-6"	6'-1½"	4'-0"	3:1	25"	33 3/16"	16 13/16"	14"	2½"	1600	1'-1½"
30"	3½"	1'-0"	4'-6"	1'-7 3/4"	6'-1 3/4"	5'-0"	3:1	31"	37"	18½"	15"	3¼"	1940	1'-4 3/4"
36"	4"	1'-3"	5'-3"	2'-10 3/4"	8'-1 3/4"	6'-0"	3:1	37"	47 1/16"	24 5/16"	20"	3½"	4100	1'-8"
42"	4½"	1'-9"	5'-3"	2'-11"	8'-2"	6'-6"	3:1	43"	53 5/8"	27½"	22"	3½"	5380	2'-2½"
48"	5"	2'-0"	6'-0"	2'-2"	8'-2"	7'-0"	3:1	49"	56½"	28½"	22"	3½"	6550	2'-6"
54"	5½"	2'-4"	6'-6"	1'-10"	8'-4"	7'-6"	3:1	55"	65½"	33 1/8"	24"	4"	8750	2'-10½"
60"	6"	2'-10"	6'-6"	1'-10"	8'-4"	8'-0"	3:1	61"	72½"	36 11/16"	24"	4"	9270	3'-5"
72"	7"	3'-10"	6'-6"	1'-10"	8'-4"	9'-0"	3:1	73"	77 13/16"	38 5/16"	24"	5"	13250	4'-6"

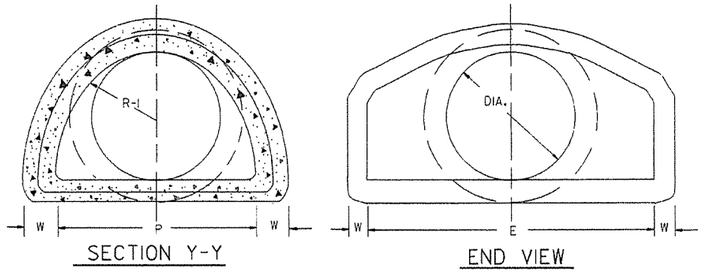

NOTE: TONGUE END ON UPSTREAM SECTION
GROOVE END ON DOWNSTREAM SECTION

ARCH PIPE

EQUIV. DIA.	• SPAN AASHTO M 206	• SPAN AHD NOMINAL	• RISE AASHTO M 206	• RISE AHD NOMINAL	W	A	B	C	D	E	P	R2	G-T	S
	INCHES													
15	18	18	11	11	2"	4"	2'-0"	4'-0"	6'-0"	3'-0"	29"	12"	1½"	2½:1
18	22	22	13½	14	2½"	5"	2'-0"	4'-1"	6'-1"	3'-6"	32 1/8"	13"	2½"	2½:1
21	26	26	15½	16	2¾"	7"	2'-3"	3'-10"	6'-1"	4'-0"	34 1/8"	14"	2½"	2½:1
24	28½	29	18	18	3"	9"	2'-3"	3'-10"	6'-1"	5'-0"	36 13/16"	15"	2½"	2½:1
30	36¼	36	22½	23	3½"	10"	3'-1"	3'-0½"	6'-1½"	6'-0"	47 13/16"	20"	3"	2½:1
36	43¾	44	26⅝	27	4"	10½"	4'-0"	2'-1½"	6'-1½"	6'-6"	54 5/16"	22"	3½"	2½:1
42	51⅛	51	31 9/16	31	4½"	11½"	4'-7"	1-10¼"	6'-5¼"	7'-2"	59½"	23"	3¾"	2½:1
48	58½	59	36	36	5"	1'-3"	5'-3"	2'-10¾"	8'-1¾"	7'-10"	70 5/16"	24"	4¼"	2½:1
54	65	65	40	40	5½"	1'-7"	5'-3"	2'-11"	8'-2"	8'-6"	72 1/16"	24"	4¾"	2¼:1
60	73	73	45	45	6"	1'-10"	5'-6"	2'-8"	8'-2"	9'-0"	77 13/16"	24"	5"	2¼:1

• THE MEASURED SPAN AND RISE SHALL NOT VARY MORE THAN ± 2 PER CENT FROM THE VALUES SPECIFIED BY AASHTO M 206.

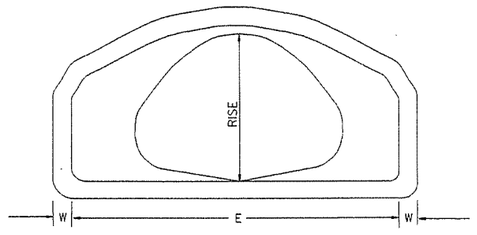

END VIEW
CONCRETE ARCH PIPE

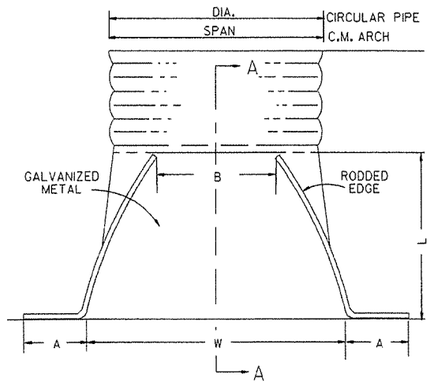

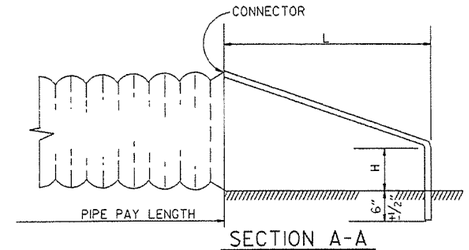

NOTE: ALTERNATE CONNECTIONS TO THE PIPE CULVERTS, IN ACCORDANCE WITH MANUFACTURER'S STANDARD PRACTICES, MAY BE MADE SUBJECT TO THE APPROVAL OF THE ENGINEER.

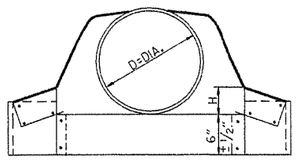

CIRCULAR PIPE

CIRCULAR PIPE

D. DIA.	GAUGE	A 1" ±	B. MAX.	H 1" ±	L 1½" ±	W 2" ±	S
		INCHES					
12	16	6	6	6	21	24	2½:1
15	16	7	8	6	26	30	2½:1
18	16	8	10	6	31	36	2½:1
21	16	9	12	6	36	42	2½:1
24	16	10	13	6	41	48	2½:1
30	14	12	16	8	51	60	2½:1
36	14	14	19	9	60	72	2½:1
42	12	16	22	11	69	84	2½:1
48	12	18	27	12	78	90	2½:1
54	12	18	30	12	84	102	2:1
60	12	18	33	12	87	114	1¾:1
66	12	18	36	12	87	120	1½:1
72	12	18	39	12	87	126	1 1/3:1

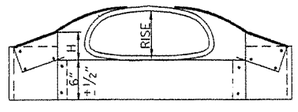

C.M. ARCH PIPE

C.M. ARCH PIPE

EQUIV. DIA.	SPAN	RISE	A 1" ±	B MAX.	H 1" ±	L 1½" ±	W 2" ±	S	GAUGE
	INCHES								
15"	17	13	7	9	6	19	30	2½:1	16
18"	21	15	7	10	6	23	36	2½:1	16
21"	24	18	8	12	6	28	42	2½:1	16
24"	28	20	9	14	6	32	48	2½:1	16
30"	35	24	10	16	6	39	60	2½:1	14
36"	42	29	12	18	8	46	75	2½:1	14
42"	49	33	13	21	9	53	85	2½:1	12
48"	57	38	18	26	12	63	90	2½:1	12
54"	64	43	18	30	12	70	102	2¼:1	12
60"	71	47	18	33	12	77	114	2¼:1	12

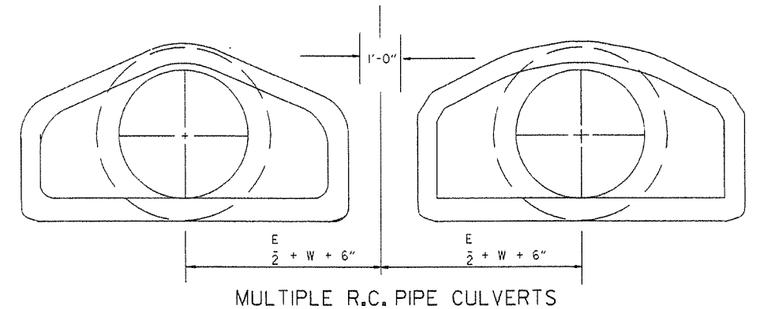

MULTIPLE R.C. PIPE CULVERTS

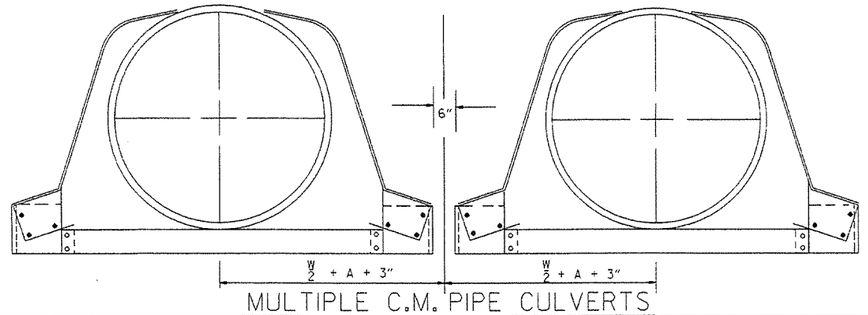

MULTIPLE C.M. PIPE CULVERTS

END SECTIONS FOR CORRUGATED METAL PIPE CULVERTS

DATE	REVISION	FILMED
10-18-96	REVISED ASTM REF. TO AASHTO	10-18-96
5-15-80	REVISED DISTANCE BETWEEN MULTIPLE R.C.P. F.E.S.	664-5-15-80
7-14-78	C.M. ARCH SIZES TO CONFORM WITH AASHTO SIZES	752-7-14-78
8-22-75	ADDED MULTIPLE PIPE CULVERTS	517-8-22-75
12-5-74	REMOVED NOTE RE REINF. FOR R.C. F.E.S.	500-12-5-74
5-24-73	CMP END SECTION, SHOW PIPE PAY LENGTH	627-5-24-73
10-2-72	REVISED AND REDRAWN	760-10-2-72

ARKANSAS STATE HIGHWAY COMMISION

FLARED END SECTION

STANDARD DRAWING FES-2

stdfes2.dgn

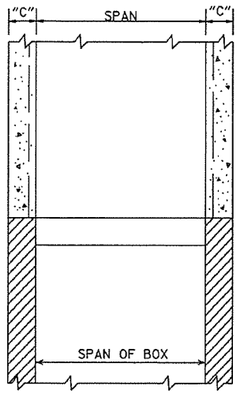

SECTION B-B

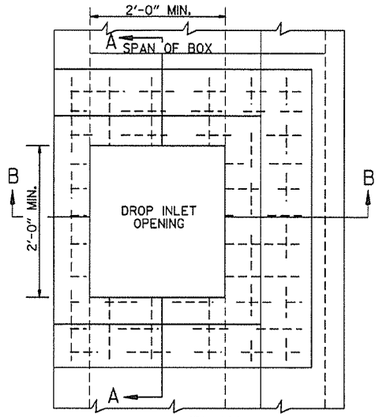

PLAN

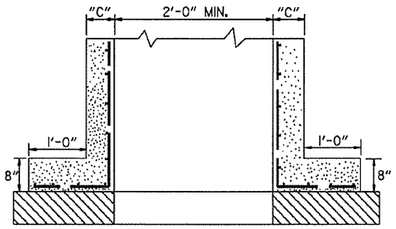

SECTION A-A

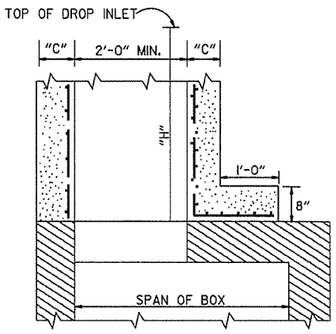

SECTION B-B

METHOD OF CONSTRUCTING DROP INLET ON EXISTING R.C. BOX CULVERT

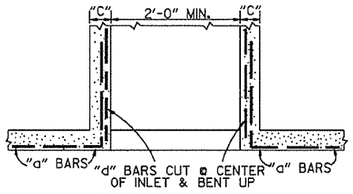

SECTION A-A

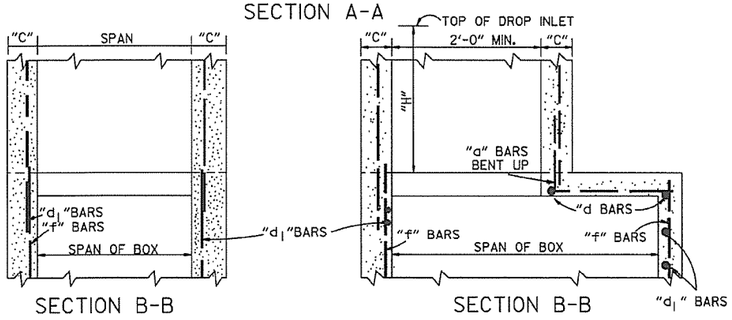

SECTION B-B SECTION B-B

METHOD OF CONSTRUCTING DROP INLET ON NEW R.C. BOX CULVERT

NOTE: "C" DIMENSIONS AND REINFORCING BAR SIZES, SHALL CONFORM TO THOSE SHOWN ON STANDARD DRAWING FOR DROP INLET.

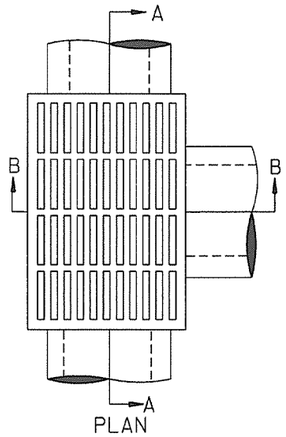

PLAN

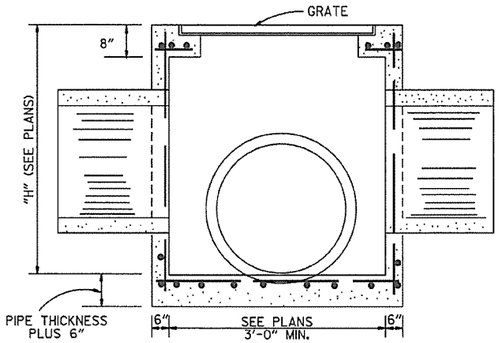

SECTION A-A

NOTE: REINF. BARS TO BE #4 BARS ON 6" CTRS. WITH 1½" MIN. COVER. THIS TYPE DROP INLET TO BE USED WHERE NOT SUBJECTED TO TRAFFIC.

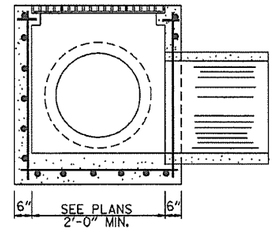

SECTION B-B

DROP INLET (TYPE E)

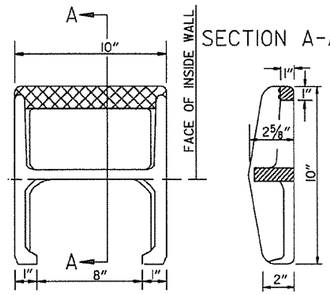

APPROX. WEIGHT = 11 LBS. (CAST IRON)

PLAN

NOTE: THIS DETAIL IS TYPICAL. OTHERS MAY BE USED WITH PRIOR APPROVAL OF THE ENGINEER.

DETAIL OF STEP FOR DROP INLET

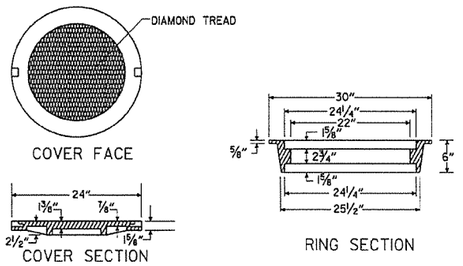

APPROXIMATE TOTAL WEIGHT = 333 LBS.

HEAVY DUTY RING & COVER

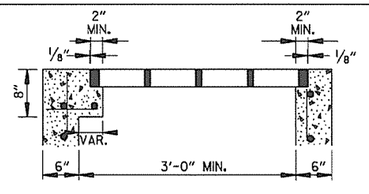

SECTION A-A

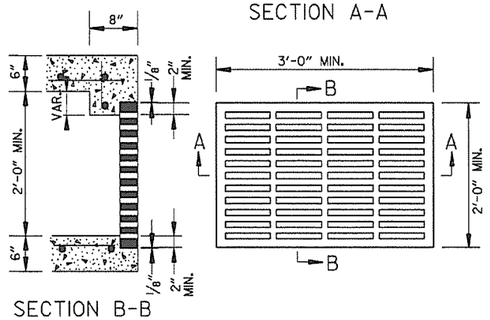

SECTION B-B

APPROXIMATE MINIMUM WATERWAY OPENING = 260 SQ. IN.

GRATE FOR TYPE E DROP INLET

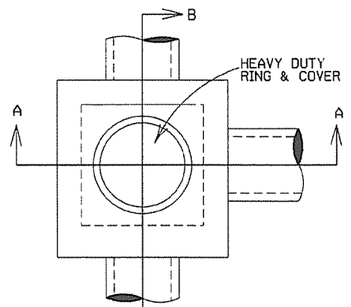

PLAN

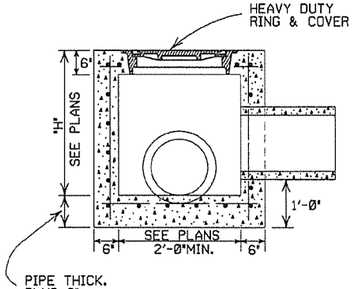

SECTION A-A

NOTE: REINF. BARS TO BE #4 BARS ON 6" CTRS. WITH 1½" MIN. COVER. THIS TYPE JUNCTION BOX TO BE USED WHERE NOT SUBJECTED TO TRAFFIC.

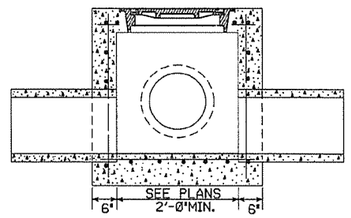

SECTION B-B

JUNCTION BOX (TYPE E)

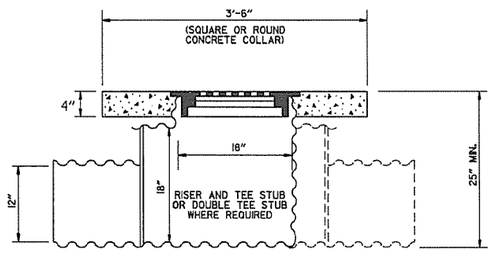

NOTE: CONCRETE COLLAR TO BE CAST IN PLACE. 12" PIPE CULVERTS TO BE MEASURED AND PAID FOR AS " 12" SIDE DRAIN ".

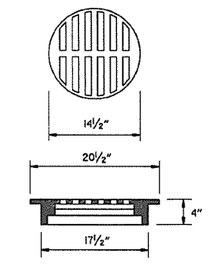

USE NEENAH R-5901-C OR EQUIVALENT BICYCLE SAFE FRAME AND GRATE

DETAIL OF YARD DRAIN

GENERAL NOTES:

1. ALL EXPOSED CORNERS SHALL BE ¾" CHAMFERED.
2. STEPS SHALL BE INSTALLED ON 16" CENTERS ON ALL INLETS 4'-0" HIGH OR OVER, OR AS APPROVED BY THE ENGINEER.
3. EXPANSION JOINT MATERIAL SHALL BE ¾" PREFORMED FIBER.
4. GRATE OR GRATE AND FRAME SHALL BE CONSTRUCTED OF CAST IRON AND SHALL CONFORM TO THE REQUIREMENTS OF THE STANDARD SPECIFICATIONS FOR GRAY IRON CASTINGS AASHTO M 105 CLASS 35B. GRATE MAY BE USED WITHOUT FRAME.
5. GRATE AND FRAME SHALL NOT BE PAINTED.
6. GRATE SHALL BE BICYCLE SAFE.
7. HEAVY DUTY RING SHALL ALWAYS BE INSTALLED WITH FLANGE ON TOP.
8. HEAVY DUTY RING AND COVER SHALL BE CONSTRUCTED OF CAST IRON AND SHALL CONFORM TO THE REQUIREMENTS OF THE STANDARD SPECIFICATIONS FOR GRAY IRON CASTINGS AASHTO M105 CLASS 35B & AASHTO M306.
9. HEAVY DUTY RING AND COVER SHALL NOT BE PAINTED.
10. DIMENSIONS SHOWN FOR RING AND COVER ARE TYPICAL. THE CONTRACTOR MAY SUBSTITUTE SIMILAR CASTINGS WITH THE APPROVAL OF THE ENGINEER. REQUESTING APPROVAL FOR CASTING DESIGNS MAY BE MADE BY REFERRING TO PREVIOUSLY APPROVED DRAWINGS.

DATE REV.	REVISION	DATE FILMED
11-16-01	ADDED NOTE 10	
1-12-00	REVISED HEAVY DUTY RING & COVER	
7-02-98	CHANGED GRATE DETAIL, DELETED DI(TYPE D), REPLACED RING & COVER W/HEAVY DUTY RING & COVER, ADDED JUNCTION BOX (TYPE E)	
6-26-97	ADDED DIMENSION TO TYPE IV-A	
10-18-96	ADDED DETAIL OF YARD DRAIN	
8-15-91	DELETE TYPE IV GRATE	
7-15-88	REVISED STEP DETAIL	
5-20-83	REVISED DETAILS OF GRATES (TYPE IV & IV-A)	
2-4-83	ADDED GENERAL NOTE NO. 4	
3-2-81	ADDED TYPE IV-A GRATE	
5-22-74	DELETED INLET (TYPE F) & GRATE (TYPE III)	
10-2-72	REVISED AND REDRAWN	

ARKANSAS STATE HIGHWAY COMMISSION

DETAILS OF DROP INLETS & JUNCTION BOXES

STANDARD DRAWING FPC-9

4'-0" LENGTH DROP INLET — DROP INLET EXTENSION

PIPE SIZE	MIN. WIDTH	HEIGHT 5'-0" CLASS A CONC.	HEIGHT 5'-0" REINF. STEEL	PLUS OR MINUS PER LIN. FT. OF HEIGHT CLASS A CONC.	PLUS OR MINUS PER LIN. FT. OF HEIGHT REINF. STEEL	4'-0" CLASS A CONC.	4'-0" REINF. STEEL	8'-0" CLASS A CONC.	8'-0" REINF. STEEL
		CU. YDS.	POUNDS	CU. YDS.	POUNDS	CU. YDS.	POUNDS	CU. YDS.	POUNDS
18"	2'-6"	1.77	156	0.28	22	0.58	38	0.87	72
24"	2'-6"	1.79	156	0.28	22				
30"	3'-2"	2.39	205	0.30	26				
36"	3'-8"	2.63	236	0.32	28				
42"	4'-4"	2.95	250	0.34	30	DEDUCT FROM QUANTITY COMPUTED FOR EACH EXTENSION ADDED.			
48"	4'-10"	3.21	265	0.36	32				
						0.04	3		

NOTE: QUANTITIES ARE APPROXIMATE AND ARE SHOWN FOR BIDDER INFORMATION ONLY.

DEDUCT FROM QUANTITY COMPUTED FOR EACH PIPE ENTERING INLET

INSIDE DIA. PIPE	CLASS A CONC.	REINF. STEEL
INCHES	CU. YDS.	POUNDS
18	0.05	2
24	0.09	3
30	0.13	4
42	0.24	8

BAR DIAGRAM

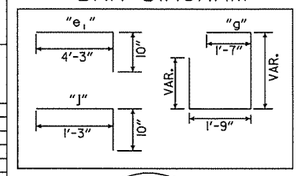

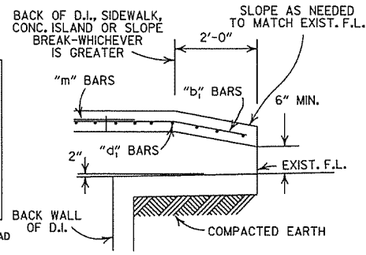

BACK OPENING

WHEN OPENING IN BACK IS CALLED FOR ON PLANS EXTEND OPENING AS SHOWN IN DETAIL. PAYMENT TO BE INCLUDED IN PRICE BID FOR DROP INLET (TYPE C).

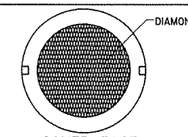

APPROXIMATE TOTAL WEIGHT = 333 LBS.

HEAVY DUTY RING & COVER

GENERAL NOTES:
1. ALL EXPOSED CORNERS TO HAVE 3/4" CHAMFER.
2. STEPS SHALL BE INSTALLED IN ALL INLETS 4'-0" HIGH AND OVER OF AS APPROVED BY THE ENGINEER.
3. ALL REINF. BARS SHALL BE #4 AND HAVE 1½" COVER.
4. DROP INLETS AND EXTENSION ON CURVED SECTIONS SHALL CONFORM TO THE CURVATURE OF THE CURB.
5. THIS DROP INLET MAY BE CONSTRUCTED ON NEW OR EXISTING R.C. BOX CULVERT AS SHOWN ON F.P.C.-9.
6. WHEN PLANS CALL FOR DROP INLET OVER 10'-0" HIGH, FLOOR AND WALLS SHALL BE CONSTRUCTED AS SHOWN FOR TYPE "RM" DROP INLET (F.P.C.-9D).
7. HEAVY DUTY RING SHALL ALWAYS BE INSTALLED WITH FLANGE ON TOP.
8. DURING CONSTRUCTION OF THE ROADWAY THE CONTRACTOR SHALL MAINTAIN DRAINAGE INTO OR AROUND THE DROP INLET AS APPROVED BY THE ENGINEER.
9. PAYMENT FOR CURB AND/OR CURB AND GUTTER WITHIN THE LIMITS OF DROP INLETS AND DROP INLET EXTENSIONS SHALL BE CONSIDERED INCLUDED IN PAYMENT MADE FOR DROP INLETS AND/OR DROP INLET EXTENSIONS.
10. HEAVY DUTY RING AND COVER SHALL BE CONSTRUCTED OF CAST IRON AND SHALL CONFORM TO THE REQUIREMENTS OF THE STANDARD SPECIFICATIONS FOR GRAY IRON CASTINGS AASHTO M105 CLASS 35B & AASHTO M306.
11. HEAVY DUTY RING AND COVER SHALL NOT BE PAINTED.
12. 4"x2" NOTCH SHALL BE FORMED IN ALL DROP INLETS TO SUPPORT SIDEWALK CONSTRUCTION. REFER TO DETAIL OF NOTCH FOR SIDEWALKS.
13. DIMENSIONS SHOWN FOR RING AND COVER ARE TYPICAL. THE CONTRACTOR MAY SUBSTITUTE SIMILAR CASTINGS WITH THE APPROVAL OF THE ENGINEER. REQUESTING APPROVAL FOR CASTING DESIGNS MAY BE MADE BY REFERRING TO PREVIOUSLY APPROVED DRAWINGS.

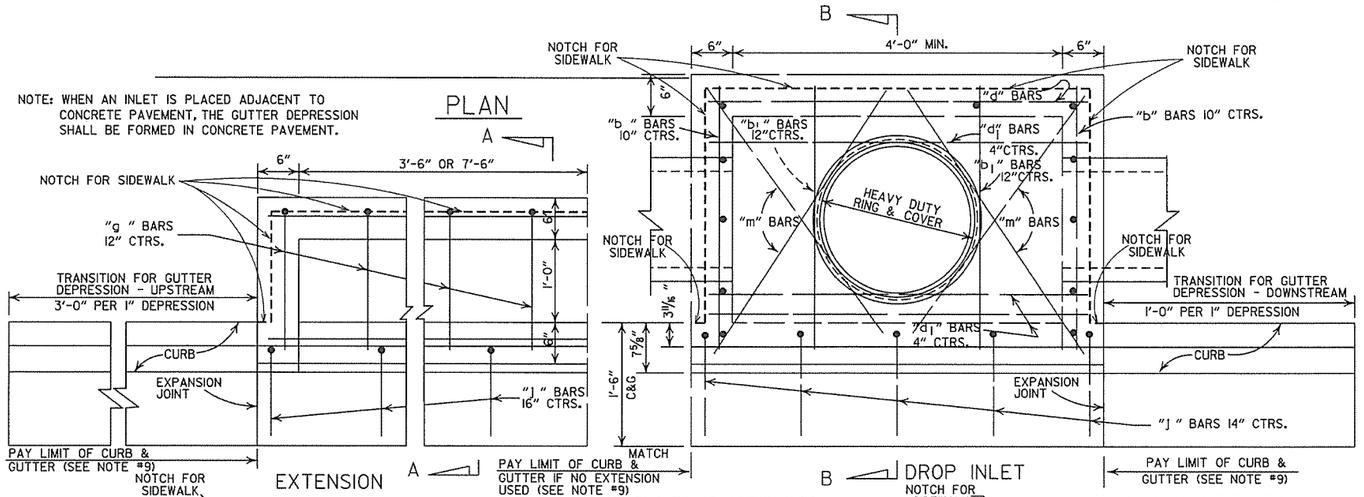

NOTE: WHEN AN INLET IS PLACED ADJACENT TO CONCRETE PAVEMENT, THE GUTTER DEPRESSION SHALL BE FORMED IN CONCRETE PAVEMENT.

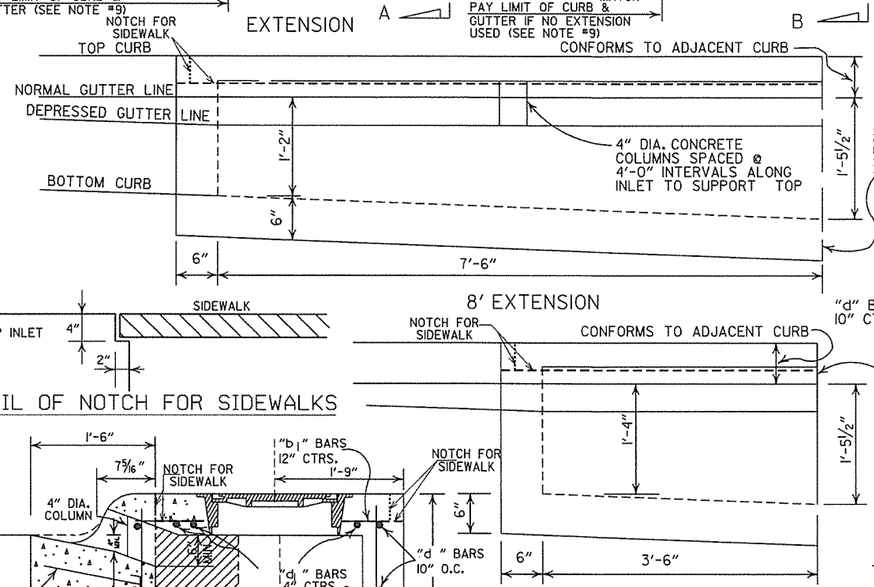

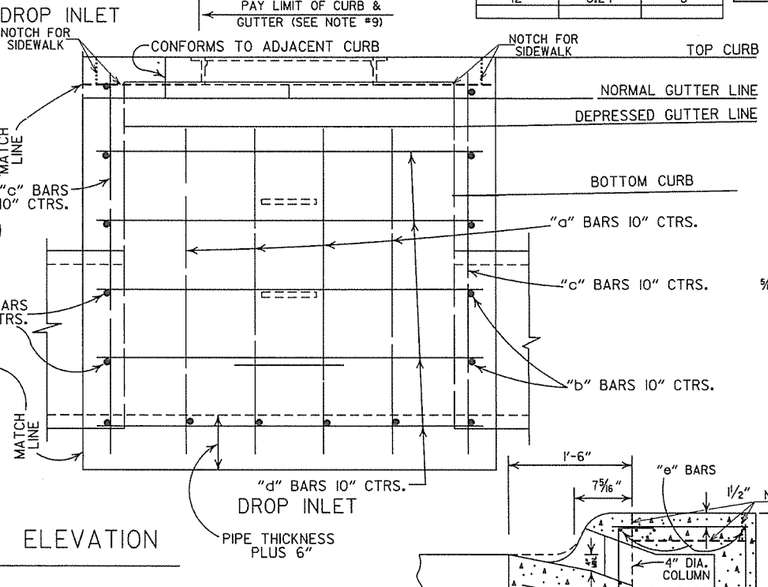

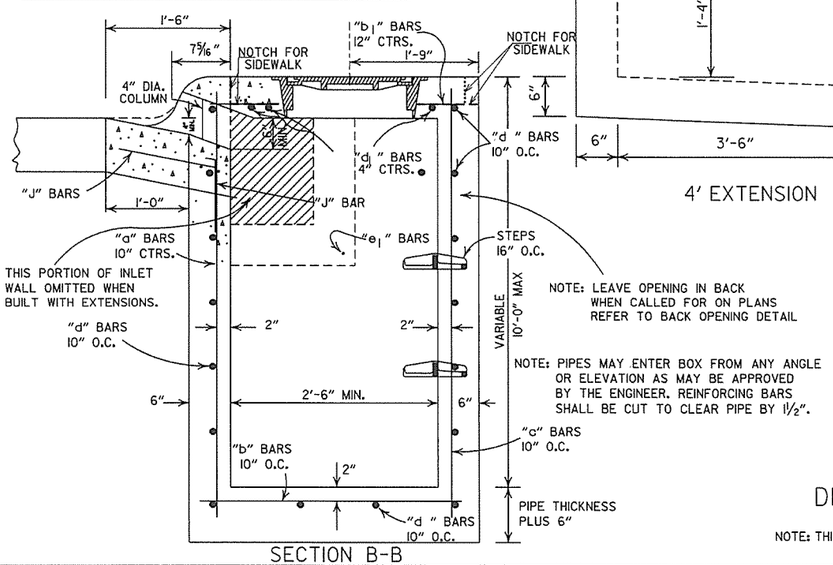

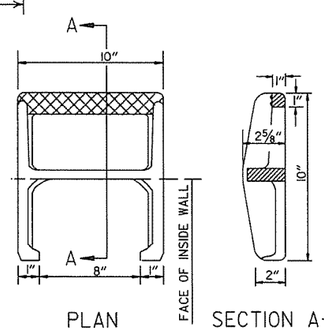

DETAIL OF STEP FOR DROP INLET

APPROX. WEIGHT = 11 LBS. (CAST IRON)

NOTE: THIS DETAIL IS TYPICAL. OTHERS MAY BE USED WITH PRIOR APPROVAL OF THE ENGINEER.

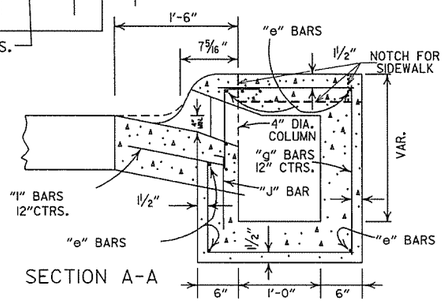

DATE REV.	REVISION	DATE FILMED
8-22-02	ADDED PAY LIMIT CURB NOTES TO SECTIONS A-A & B-B	
11-16-01	ADDED NOTE 13; REVISED SECTION B-B	
1-12-00	CORRECTED DIMENSION ON SECTION B-B & REVISED RING & COVER	
5-13-99	ADDED DETAIL OF NOTCH FOR SIDEWALKS	
7-02-98	REPLACED RING & COVER W/HEAVY DUTY RING & COVER ADDED NOTES 9,10,&11	
10-18-96	CORRECTED SPELLING	
4-26-96	ADDED NOTE 8 & REVISED (4')(8') EXTENSION TITLES	10-18-96
4-1-93	REVISED BACK OPENING & NOTE	
8-15-91	DELETE TYPE IV GRATE	
7-15-88	REVISED STEP DETAIL	
5-20-83	REVISED DETAILS OF GRATES (TYPE IV & IV-A)	
2-4-83	ADDED GENERAL NOTE NO. 4	
3-2-81	ADDED TYPE IV-A GRATE	
5-22-74	DELETED INLET (TYPE F) & GRATE (TYPE III)	
10-2-72	REVISED AND REDRAWN	

ARKANSAS STATE HIGHWAY COMMISSION

DETAILS OF DROP INLETS

(TYPE C)

STANDARD DRAWING FPC-9E

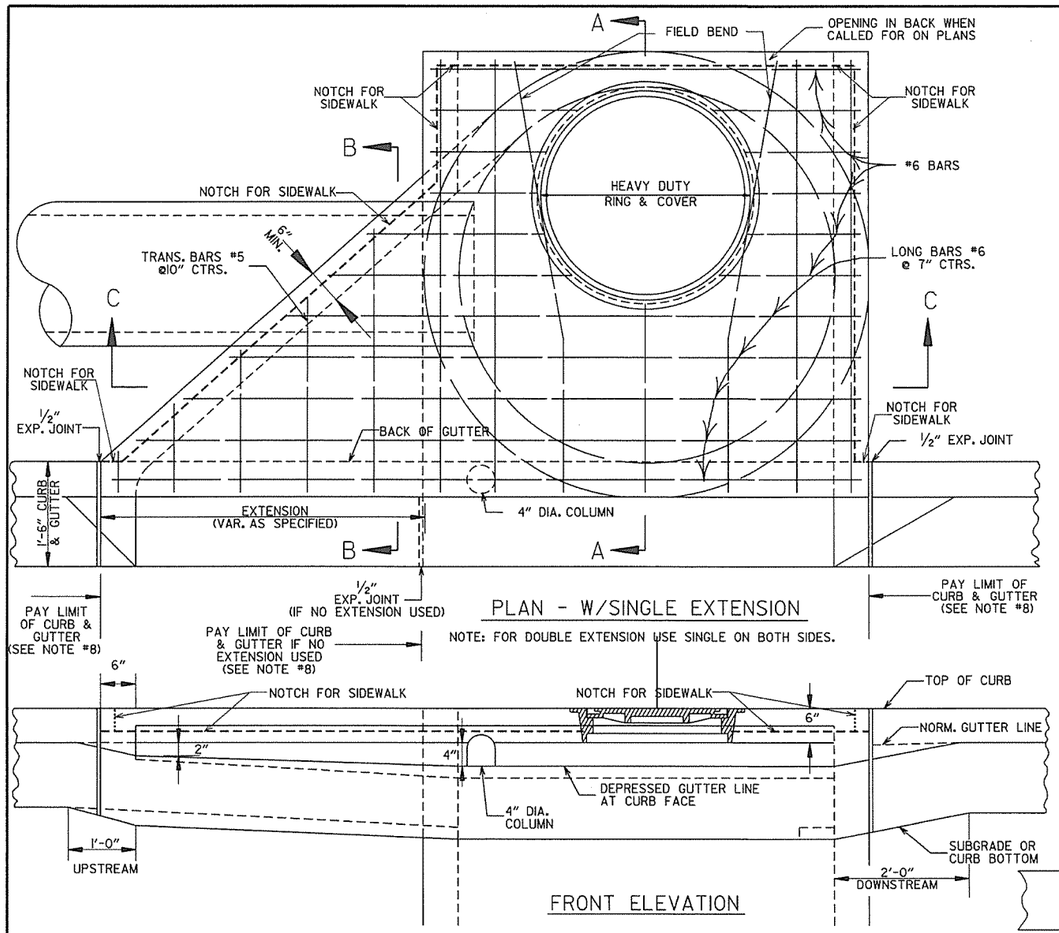

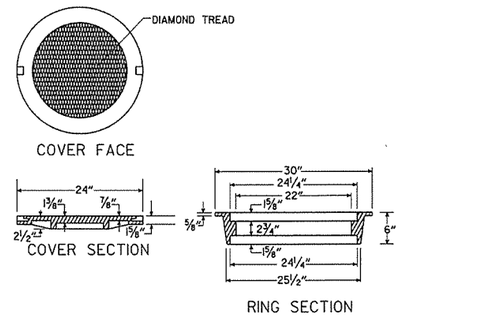

HEAVY DUTY RING & COVER

1. HEAVY DUTY RING AND COVER SHALL BE CONSTRUCTED OF CAST IRON AND SHALL CONFORM TO THE REQUIREMENTS OF THE STANDARD SPECIFICATIONS FOR GRAY IRON CASTINGS AASHTO M105 CLASS 35B & AASHTO M306.
2. HEAVY DUTY RING AND COVER SHALL NOT BE PAINTED.
3. HEAVY DUTY RING SHALL ALWAYS BE INSTALLED WITH FLANGE ON TOP.

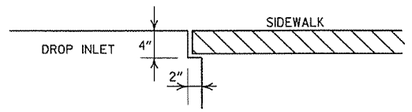

DETAIL OF NOTCH FOR SIDEWALKS

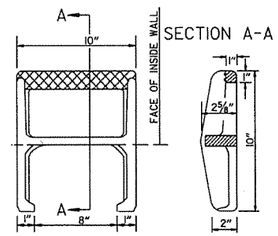

APPROX. WEIGHT = 11 LBS. (CAST IRON)

PLAN

NOTE: THIS DETAIL IS TYPICAL. OTHERS MAY BE USED WITH PRIOR APPROVAL OF THE ENGINEER.

DETAIL OF STEP FOR DROP INLET

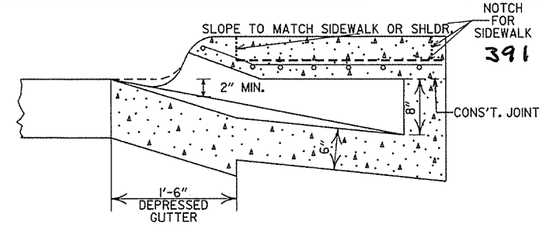

SECTION B-B

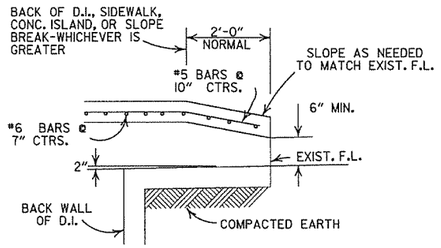

BACK OPENING

WHEN OPENING IN BACK IS CALLED FOR ON PLANS EXTEND OPENING AS SHOWN IN DETAIL. PAYMENT TO BE INCLUDED IN PRICE BID FOR DROP INLET (TYPE MO).

GENERAL NOTES:

1. ALL EXPOSED CORNERS TO HAVE ¾" CHAMFER.
2. STEPS SHALL BE INSTALLED IN ALL INLETS 4'-0" HIGH AND OVER OR AS DIRECTED BY THE ENGINEER.
3. ALL REINFORCING BARS SHALL BE GRADE 60 AND HAVE MIN. 1½" COVER.
4. DROP INLETS AND EXTENSION ON CURVED SECTIONS SHALL CONFORM TO THE CURVATURE OF THE CURB.
5. 4" DIA. COLUMNS SPACED AT MAX. 4'-0" INTERVALS SHALL BE INSTALLED ALONG INLET AND EXTENSION TO SUPPORT TOP.
6. BASE AND INLET WALLS SHALL BE CAST MONOLITHICALLY.
7. THE THROAT SHALL BE CAST INTEGRALLY WITH THE GUTTER.
8. PAYMENT FOR CURB AND/OR CURB AND GUTTER WITHIN THE LIMITS OF DROP INLETS AND DROP INLET EXTENSIONS SHALL BE CONSIDERED INCLUDED IN PAYMENT MADE FOR DROP INLETS AND/OR DROP INLET EXTENSIONS.
9. PIPES MAY ENTER DROP INLET FROM ANY ANGLE OR ELEVATION AS MAY BE APPROVED BY THE ENGINEER.
10. APPROPRIATE SIZE TYPE C DROP INLETS MAY BE SUBSTITUTED FOR TYPE MO DROP INLETS AS APPROVED BY THE ENGINEER. PAYMENT TO BE AS DROP INLET (TYPE MO).
11. DURING CONSTRUCTION OF THE ROADWAY THE CONTRACTOR SHALL MAINTAIN DRAINAGE INTO OR AROUND THE DROP INLET AS APPROVED BY THE ENGINEER.
12. 4"x2" NOTCH SHALL BE FORMED IN ALL DROP INLETS TO SUPPORT SIDEWALK CONSTRUCTION. REFER TO DETAIL OF NOTCH FOR SIDEWALKS.
13. DIMENSIONS SHOWN FOR RING AND COVER ARE TYPICAL. THE CONTRACTOR MAY SUBSTITUTE SIMILAR CASTINGS WITH THE APPROVAL OF THE ENGINEER. REQUESTING APPROVAL FOR CASTING DESIGNS MAY BE MADE BY REFERRING TO PREVIOUSLY APPROVED DRAWINGS.

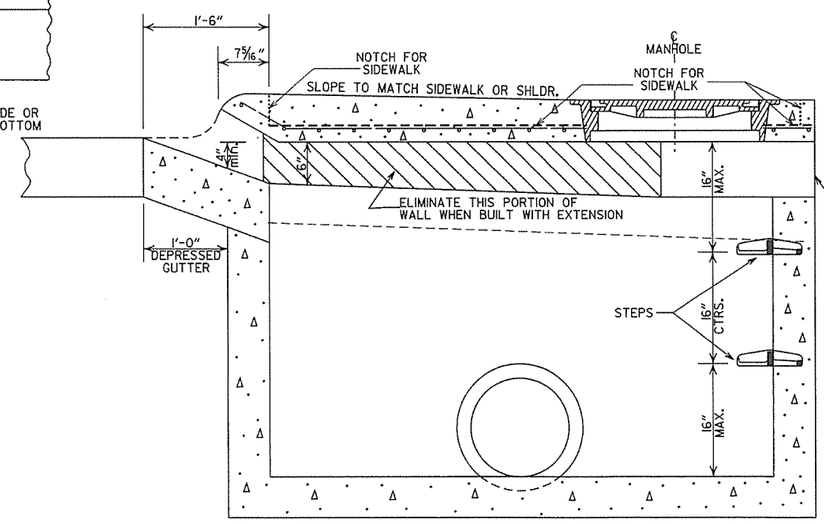

SECTION A-A

DIA. OF D.I.	DIA. OF OUTLET PIPE	MINIMUM WALL THICKNESS CAST IN PLACE	MINIMUM WALL THICKNESS PRECAST
4' I.D.	12" THRU 27"	6"	5"
5' I.D.	30" THRU 42"	8"	6"
6' I.D.	48" THRU 54"	8"	7"

DATE	REVISIONS	DATE FILMED
8-22-02	ADDED PAY LIMIT CURB NOTES TO SECTIONS A-A & B-B	
11-16-01	ADDED NOTE 13	
1-12-00	REVISED HEAVY DUTY RING & COVER	
5-13-99	ADDED NOTCH DETAIL FOR SIDEWALKS	
7-02-98	REP. NOTE 8, REM. PLAN DET., REV. PICTURE FOR NEW RING & COVER, ADDED HEAVY DUTY RING & COVER AND DETAIL OF STEP FOR DROP INLET	
4-26-95	ADDED NOTE 11 ADJ. OPENING DIMENSION	
10-12-95	CORRECTED #6 BAR SPACING	
1-20-95	CORRECTED DIAMETER OF D.I. IN BOX	
7-2-95	TYPE C TO MO (OPEN, BACK DETAIL)	
11-3-94	REVISED GENERAL NOTES	11-3-94
4-1-93	REV. BACK OPEN. DETAIL & NOTE	4-1-93
8-15-91	REVISED NOTES 11,12 & ADDED BK.OPEN DETAIL	8-15-91
11-30-89	ADDED NOTE NO. 12	11-30-89
5-23-89	ADDED NOTE & MINUMUM WALL THICKNESS	513-5-23-89
7-15-88	ADDED EXTEND NOTE TO SECTION A-A	639-7-15-88
1-14-87	MODIFIED WALL THICKNESS	783-1-14-87
6-12-87	ISSUED	467-12-87

ARKANSAS STATE HIGHWAY COMMISSION

DETAILS OF DROP INLET (TYPE MO)

STANDARD DRAWING FPC-9M

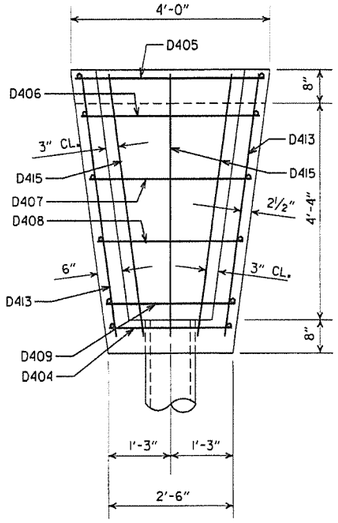

PLAN

BAR LIST (CONCRETE SPILLWAY)

MARK	NO. REQ'D.	LENGTH	BENDING DIAGRAM
D404	3	2'-2"	5'-4", 1'-2", 2" P.D., D415
D405	2	3'-8"	
D406	1	3'-5"	
D407	1	3'-1"	
D408	1	2'-9"	
D409	1	2'-5"	
D410	2	2'-5"	
D411	2	2'-2"	
D412	2	1'-9"	
D413	2	5'-6"	
D414	2	1'-2"	
D415	3	6'-5"	

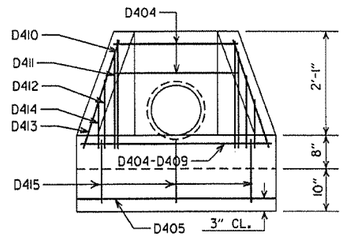

FRONT ELEVATION

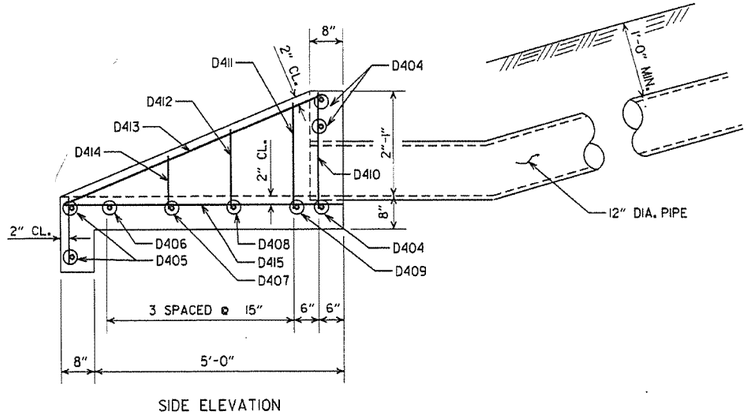

SIDE ELEVATION
CONCRETE SPILLWAY

DETAILS OF CONCRETE SPILLWAY (TYPE A)

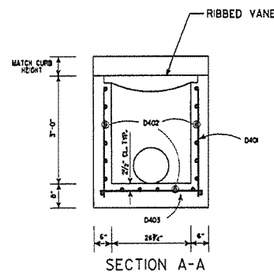

SECTION A-A

BAR LIST (DROP INLET)

MARK	TYPE N-1		TYPE N-2		TYPE N-3	
	NO. REQ'D.	LENGTH	NO. REQ'D.	LENGTH	NO. REQ'D.	LENGTH
D401	20	3'-0"	26	3'-0"	32	3'-0"
D402	19	2'-2"	19	3'-8"	19	5'-2"
D403	17	2'-11"	20	2'-11"	23	2'-11"

ALL BARS #4 @ 6" SPACING

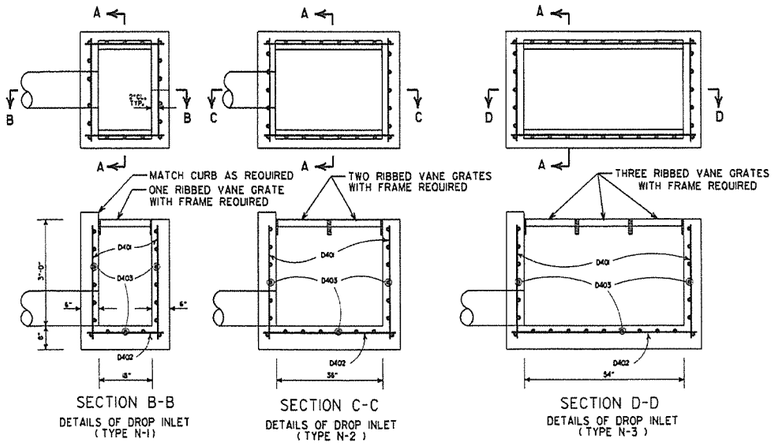

SECTION B-B
DETAILS OF DROP INLET
(TYPE N-1)

SECTION C-C
DETAILS OF DROP INLET
(TYPE N-2)

SECTION D-D
DETAILS OF DROP INLET
(TYPE N-3)

DETAILS OF DROP INLET

GENERAL NOTES (GRATE & FRAME)

1. RIBBED VANE GRATE AND FRAME SHALL BE CONSTRUCTED OF CAST IRON AND SHALL CONFORM TO THE REQUIREMENTS OF THE STANDARD SPECIFICATIONS FOR GRAY IRON CASTINGS AASHTO M 105 CLASS 35B & AASHTO M 306.
2. GRATE AND FRAME SHALL NOT BE PAINTED.
3. GRATE AND FRAME SHALL BE INSTALLED IN DROP INLET IN ASSEMBLED POSITION.
4. APPROXIMATE WEIGHT OF GRATE SHALL BE 170 LBS.

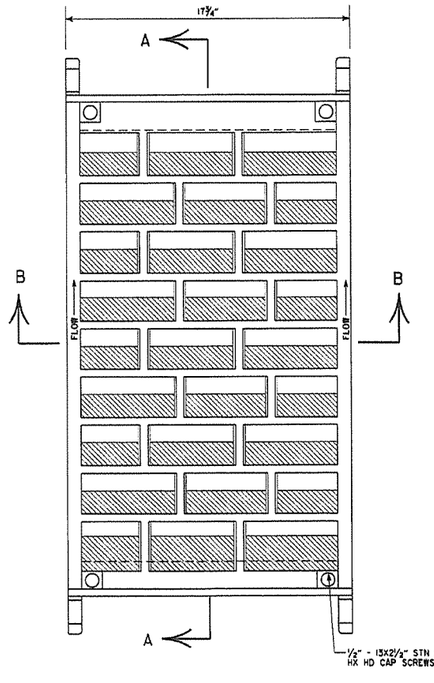

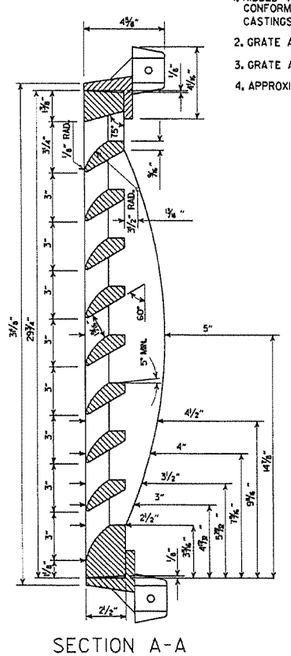

SECTION A-A

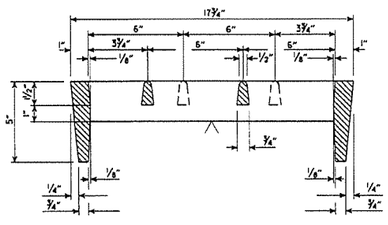

SECTION B-B

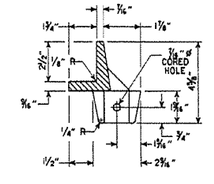

SECTION THRU FRAME

DETAILS OF RIBBED VANE GRATE AND FRAME

DATE REVISED	DATE FILMED	DESCRIPTION
7-02-98	7-2-98	REVISED SECT. A-A DETAIL OF DROP INLET & ADDED AASHTO REF. TO NOTE 1. REVISED GRATE
10-18-96		REVISED ASTM REF. TO AASHTO
8-15-91		ISSUED

ARKANSAS STATE HIGHWAY COMMISSION

DETAILS OF DROP INLETS AND SPILLWAY OUTLET

STANDARD DRAWING FPC-9N

STD:fpc9N.DGN

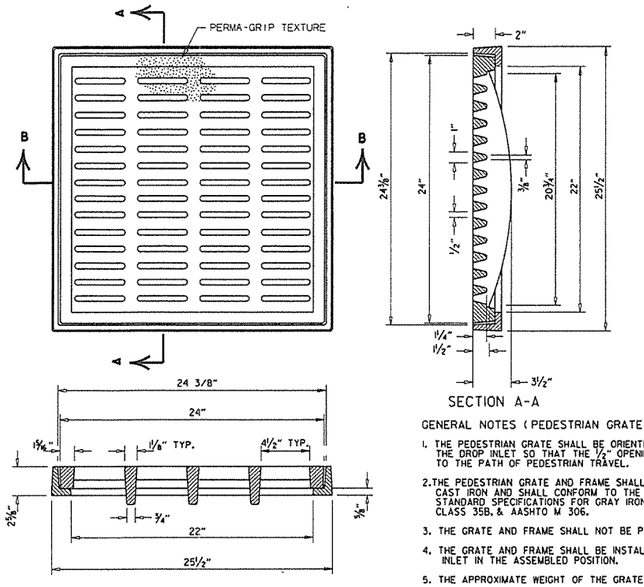

DETAILS OF PEDESTRIAN GRATE AND FRAME

GENERAL NOTES (PEDESTRIAN GRATE & FRAME)

1. THE PEDESTRIAN GRATE SHALL BE ORIENTED IN THE TOP OF THE DROP INLET SO THAT THE ½" OPENINGS ARE PERPENDICULAR TO THE PATH OF PEDESTRIAN TRAVEL.
2. THE PEDESTRIAN GRATE AND FRAME SHALL BE CONSTRUCTED OF CAST IRON AND SHALL CONFORM TO THE REQUIREMENTS OF THE STANDARD SPECIFICATIONS FOR GRAY IRON CASTINGS AASHTO M 105, CLASS 35B, & AASHTO M 306.
3. THE GRATE AND FRAME SHALL NOT BE PAINTED.
4. THE GRATE AND FRAME SHALL BE INSTALLED IN THE DROP INLET IN THE ASSEMBLED POSITION.
5. THE APPROXIMATE WEIGHT OF THE GRATE AND FRAME SHALL BE 211 LBS.
6. THE MINIMUM WATERWAY OPENING SHALL BE 122 SQ. IN.

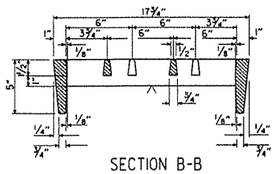

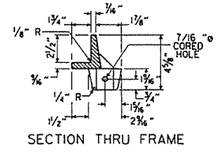

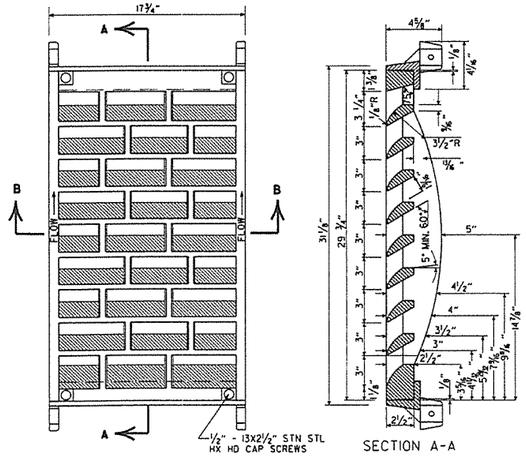

DETAILS OF RIBBED VANE GRATE AND FRAME

GENERAL NOTES (RIBBED VANE GRATE & FRAME)

1. RIBBED VANE GRATE AND FRAME SHALL BE CONSTRUCTED OF CAST IRON AND SHALL CONFORM TO THE REQUIREMENTS OF THE STANDARD SPECIFICATIONS FOR GRAY IRON CASTINGS AASHTO M 105, CLASS 35B, & AASHTO M 306.
2. GRATE AND FRAME SHALL NOT BE PAINTED.
3. GRATE AND FRAME SHALL BE INSTALLED IN DROP INLET IN ASSEMBLED POSITION.
4. APPROXIMATE WEIGHT OF GRATE SHALL BE 170 LBS.

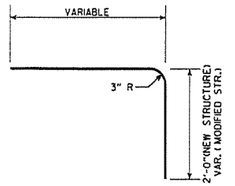

DETAIL OF BENT "b" BAR

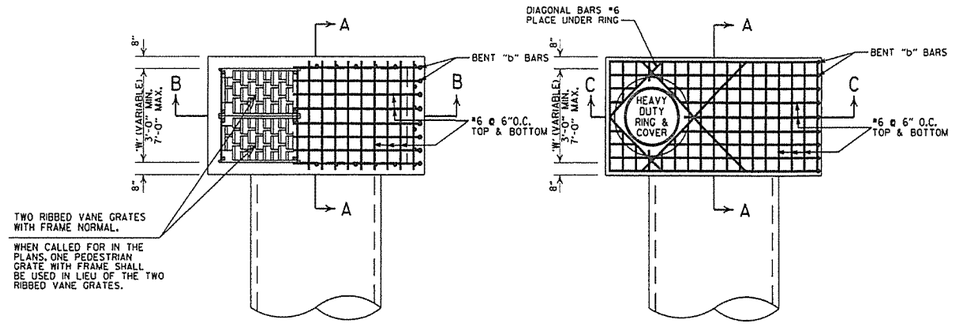

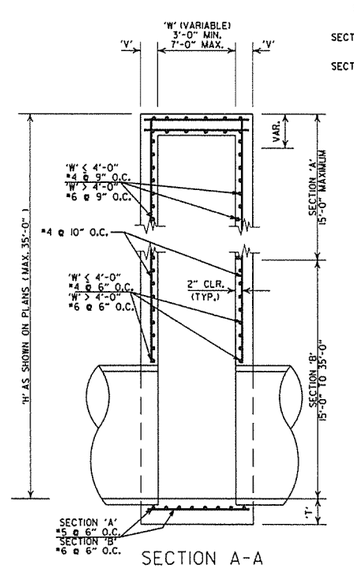

SECTION A-A

DETAILS OF DROP INLET
(TYPE ST)

SECTION 'A'
'V' = 8"

SECTION 'B' (W≤4'-0")
'V' = 8"

SECTION 'B' (W>4'-0")
'V' = 10"

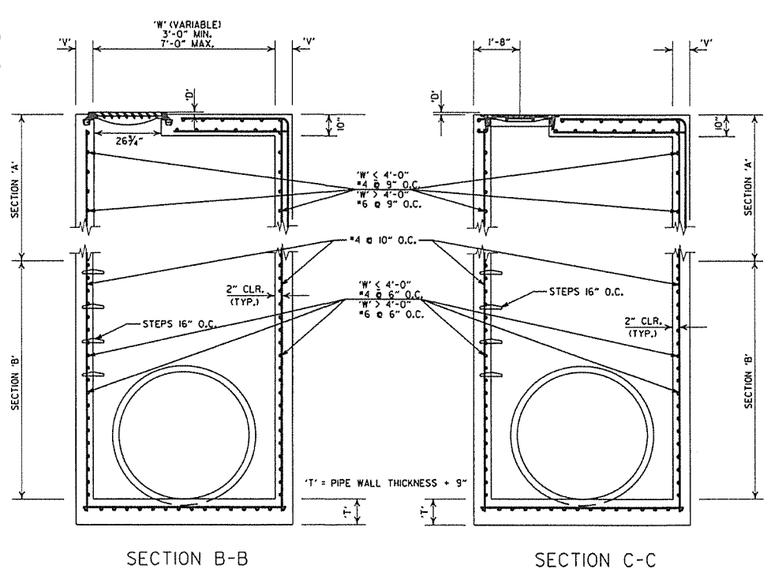

SECTION B-B

SECTION C-C

DETAILS OF JUNCTION BOX
(TYPE ST)

GENERAL NOTES (TYPE ST DROP INLET & JUNCTION BOX)

1. THE 'D' DIMENSION SHALL MATCH THE FINAL LIFT OF ACHM SURFACE COURSE SHOWN IN THE PLANS WHEN ASPHALT PAVING SURROUNDS THE GRATE OR RING COVER, AND SHALL BE 0" AT OTHER INSTALLATIONS.
2. THE STEPS SHALL BE OMITTED WHERE 'H' IS LESS THAN 4'-0".
3. ALL EXPOSED CORNERS ARE TO HAVE A ¾" CHAMFER.

GENERAL NOTES (HEAVY DUTY RING & COVER):

1. HEAVY DUTY RING AND COVER SHALL BE CONSTRUCTED OF CAST IRON AND SHALL CONFORM TO THE REQUIREMENTS OF THE STANDARD SPECIFICATIONS FOR GRAY IRON CASTINGS AASHTO M 105, CLASS 35B, & AASHTO M 306.
2. HEAVY DUTY RING AND COVER SHALL NOT BE PAINTED.
3. HEAVY DUTY RING SHALL ALWAYS BE INSTALLED WITH FLANGE ON TOP.
4. DIMENSIONS SHOWN FOR RING AND COVER ARE TYPICAL. THE CONTRACTOR MAY SUBSTITUTE SIMILAR CASTINGS WITH THE APPROVAL OF THE ENGINEER, REQUESTING APPROVAL FOR CASTING DESIGNS MAY BE MADE BY REFERRING TO PREVIOUSLY APPROVED DRAWINGS.

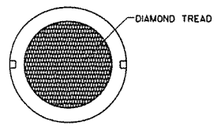

COVER FACE

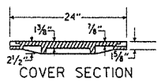

COVER SECTION

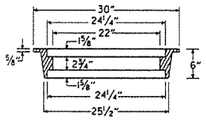

RING SECTION

HEAVY DUTY
RING & COVER

APPROXIMATE TOTAL WEIGHT = 333 LBS.

DATE REVISED	DATE FILMED	DESCRIPTION
7-26-12		REMOVED NOTE 4, REVISED 'T', REVISED BOTTOM SLAB REBAR FOR SECTION 'A', SHOWED REBAR CLEARANCE IN SECTIONS
11-16-01		ADDED NOTE 4
1-12-00		REVISED HEAVY DUTY RING & COVER
5-13-99		ADDED PEDESTRIAN FRAME & GRATE
7-02-98		REMOVED NOTE 5, REV. DIMENSIONS, ADDED HEAVY DUTY RING & COVER ADDED AASHTO REF. REVISED GRATE
10-18-96		REVISED ASTM REF. TO AASHTO
10-1-92		REVISED & REISSUED
8-15-91	8-15-91	REVISED & REISSUED

ARKANSAS STATE HIGHWAY COMMISSION

DETAILS OF DROP INLET & JUNCTION BOX (TYPE ST)

STANDARD DRAWING FPC-9S

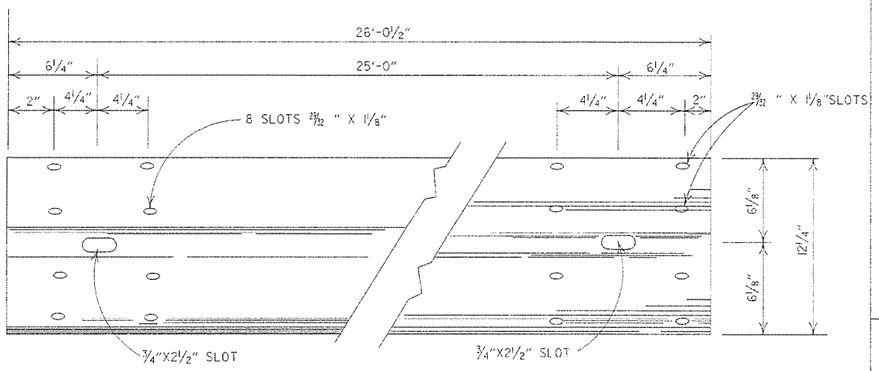

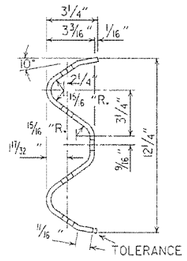

DETAILS OF
W-BEAM GUARD RAIL

RAIL SECTION OF CLOSELY SIMILAR DIMENSIONS AND COMPARABLE STRENGTH MAY BE SUBSTITUTED IF APPROVED BY THE ENGINEER.

SPLICE BOLT
POST BOLT - SAME EXCEPT LENGTH

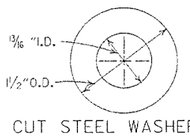

CUT STEEL WASHER

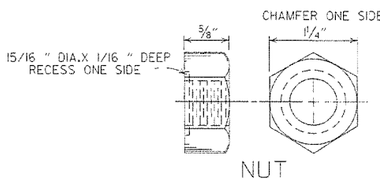

NUT

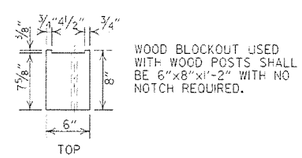

WOOD BLOCKOUT USED WITH WOOD POSTS SHALL BE 6"x8"x1'-2" WITH NO NOTCH REQUIRED.

TOP

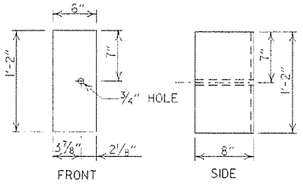

WOOD BLOCKOUT
(W-BEAM)

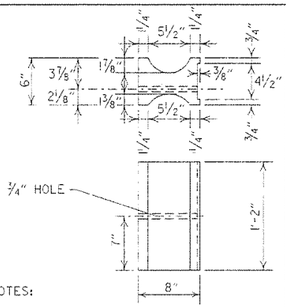

NOTES:
1. SIMILAR SHAPED PLASTIC BLOCKOUTS MAY BE USED AS LONG AS THEY MEET NCHRP-350 TEST LEVEL 3 SPECIFICATIONS OR REQUIREVENTS FOR MANUAL FOR ASSESSING SAFETY HARDWARE (MASH).
2. DIMENSIONS ARE SUBJECT TO MANUFACTURERS TOLERANCES.

PLASTIC BLOCKOUT
(W-BEAM)

HOLES IN POSTS AND BLOCKS TO BE 3/4" DIA.

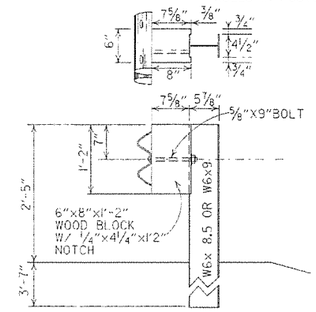

WOOD BLOCKOUT CONNECTIONS

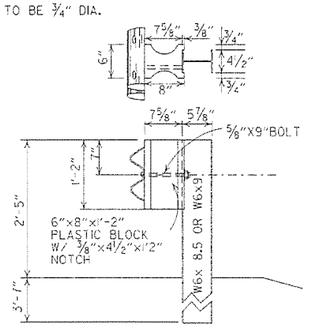

PLASTIC BLOCKOUT CONNECTIONS

DETAILS OF STEEL LINE POST CONNECTIONS
(W-BEAM)

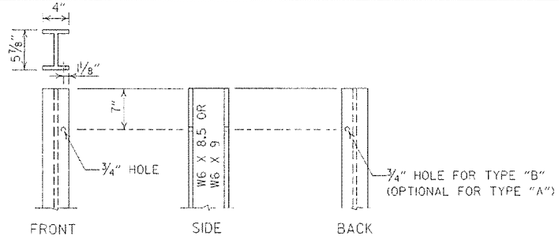

STEEL POST

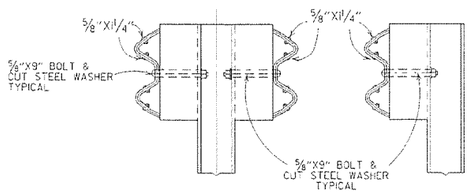

TYPE "B" TYPE "A"

DETAILS OF STEEL LINE POST CONNECTIONS
(W-BEAM)

HOLES IN POSTS AND BLOCKS TO BE 3/4" DIA.

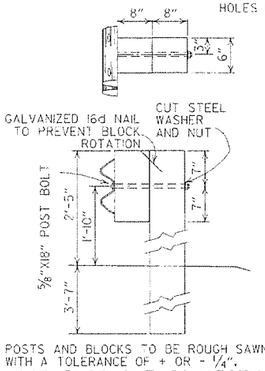

POSTS AND BLOCKS TO BE ROUGH SAWN 6"X8" WITH A TOLERANCE OF + OR - 1/4".

WOOD BLOCKOUT CONNECTIONS

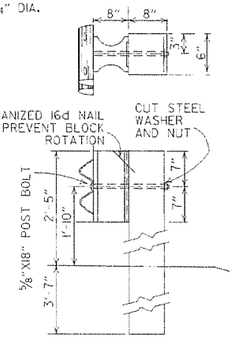

PLASTIC BLOCKOUT CONNECTIONS

DETAILS OF WOOD LINE POST CONNECTIONS
(W-BEAM)

-GENERAL NOTES-

ALL BOLTS SHALL BE SUFFICIENT LENGTH TO EXTEND THROUGH THE FULL THICKNESS OF THE NUT AND NO MORE THAN 3/4" BEYOND IT.

WHERE W-BEAM GUARD RAIL CONTINUES, THE INTERMEDIATE SECTIONS SHALL HAVE A POST SPACING OF 6'-3" UNLESS OTHERWISE NOTED.

W-BEAM GUARD RAIL REPRESENTING INTERMEDIATE SECTIONS WILL BE MEASURED ALONG THE ROADWAY FACE FROM CENTERLINE OF POST TO CENTERLINE OF POST.

USE W-BEAM GUARD RAIL COMPONENTS OF SAME MATERIAL FOR ENTIRE JOB. FOR EXTENSIONS OR MODIFICATION OF EXISTING GUARD RAIL, W-BEAM GUARD RAIL COMPONENTS OF THE SAME TYPE AS THOSE EXISTING SHALL BE USED.

ANY BACKFILLING UNDER OR AROUND POST SHALL BE DAMP SAND THOROUGHLY TAMPED IN PLACE.

WOOD POSTS & WOOD BLOCKS SHALL BE EITHER DENSE NO. 1 STRUCTURAL OR BETTER 9.7# (1400 f) OR NO. 1 1350 f SOUTHERN PINE.

CONTRACTOR SHALL HAVE THE OPTION OF USING WOOD BLOCKOUTS FOR W-BEAM GUARD RAIL OR PLASTIC BLOCKOUTS, AS LONG AS BLOCKOUT USED MEETS NCHRP-350 TEST LEVEL 3 SPECIFICATIONS OR REQUIREMENTS FOR MANUAL FOR ASSESSING SAFETY HARDWARE (MASH) FOR W-BEAM GUARD RAIL.

DATE	REVISION	DATE FILM
7-4-10	RAISED HEIGHT OF GUARD RAIL 1"	
0-15-09	ADDED REFERENCE TO MASH	
4-10-03	REVISED GENERAL NOTES	
9-22-02	REVISED DIMENSION ON WOOD & PLASTIC BLOCKOUT CONNECTIONS & ON STEEL POST	
11-16-01	REVISED WOOD BLOCKOUT & DETAILS OF WOOD LINE POST CONNECTIONS	
3-30-00	REMOVED GUARD RAIL AT BRIDGE ENDS	
1-12-00	ADDED PLASTIC BLOCKOUT	
8-12-98	REV. BLOCKOUTS TO WOOD, DELETED CONC. POST & REV. GENERAL NOTE, DELETED DET. OF GUARD RAIL REPLACE. BEHIND CURB & DET. OF POST PLACE. IN SOLID ROCK, & ADDED DETAILS OF STEEL LINE POST CONN. REMOVED BACK-UP PLATE, REVISED HOLES IN STEEL POLES	
4-3-97	REMOVED "LAP IN DIRECTION OF TRAFFIC" NOTE & PLACED ARROWS ON WASHERS	
10-18-96	REVISED WOOD POST NOTE	
6-2-94	ADDED ALT. STEEL POST SIZE	
8-5-93	REVISED STEEL POST SIZE	8-5-93
10-1-92	REDRAWN & REVISED	10-1-92
8-15-91	REVISED WASHER NOTE	8-5-91
8-2-90	REV. GEN. NOTE & DEPHT OF ANC. POST IN ROCK	8-2-90
7-15-88	REVISED SECTION 3 & GENERAL NOTES	
3-4-88	REV. ANCHOR POST, ELEV. NOTES & POST IN ROCK	780-3-4-88
10-30-87	REVISED WOOD LINE POST DETAIL	546-10-30-87
10-9-87	REDRAWN & REVISED	802-10-9-87

ARKANSAS STATE HIGHWAY COMMISSION

GUARD RAIL DETAILS

STANDARD DRAWING GR-8

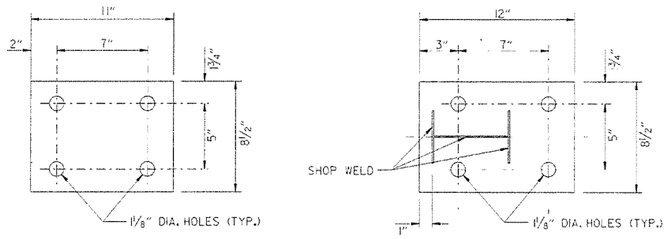

WASHER PLATE

BASE PLATE

Note: Bolts, nuts, washers and plates shall be galvanized in accordance with Section 807 of the Standard Specifications.

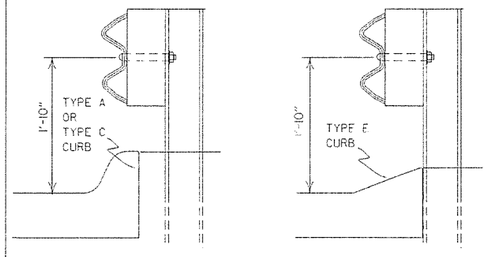

FOR DESIGN SPEEDS OF 50 MPH OR LESS

ALIGN FACE OF GUARD RAIL WITH FACE OF CURB.

FOR DESIGN SPEEDS OF 55 MPH OR MORE

PLACE GUARD RAIL POSTS AGAINST BACK OF CURB.

DETAIL OF GUARD RAIL PLACEMENT BEHIND CURB (W-BEAM)

FOR DESIGN SPEEDS OF 50 MPH OR LESS ALL CURB FACES, AS SHOWN ON STD. DRWG. CG-1, MAY BE USED. FOR DESIGN SPEEDS OF 55 MPH OR MORE TYPE "E" CURB FACE SHALL BE USED.

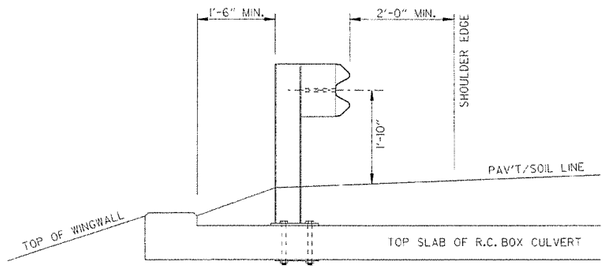

SECTION A-A

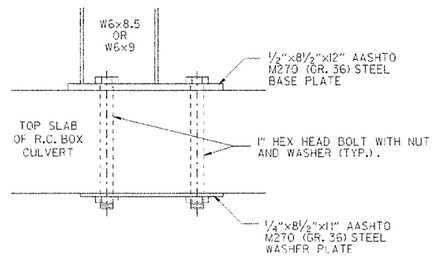

DETAIL OF CONNECTION

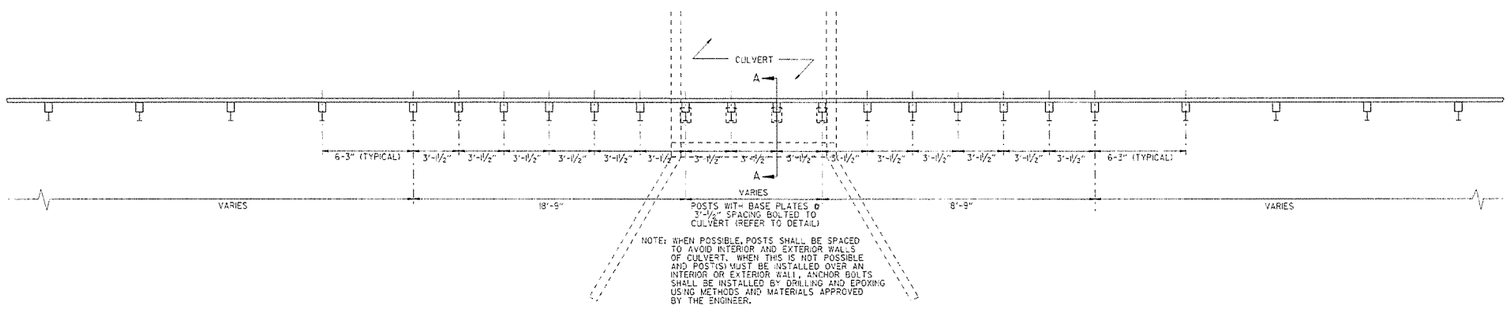

PLAN LAYOUT OF TYPE A GUARD RAIL AT LOW-FILL CULVERTS

NOTE: THIS DETAIL IS TO BE USED ONLY WHEN THE COVER OVER THE CULVERT DOES NOT PERMIT FULL EMBEDMENT OF GUARD RAIL POSTS AS SHOWN ON STD. DWG. GR-8.

Case 1

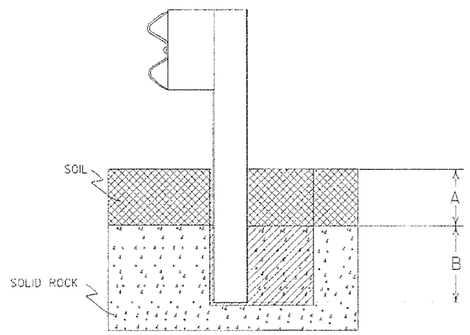

Case 2

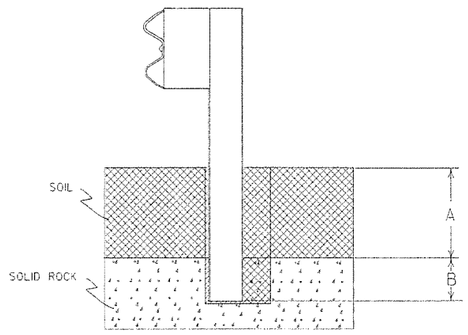

Plan View Steel Posts

Either hole configuration acceptable

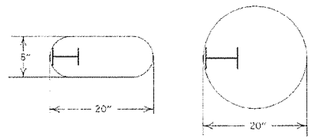

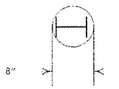

Plan View Wood Posts

Either hole configuration acceptable

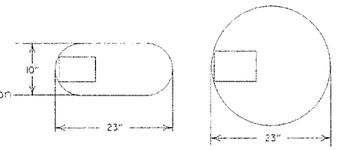

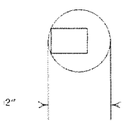

Notes: For overlying soil depths (A) ranging from 0 to 18", the depth of required drilling (B) is equal to 24".

Zone A:
Backfill according to Section 617.03(a).

Zone B:
Backfill hole in 6" lifts with material meeting the requirements of Section 802.02(c) - Alternate gradation. Compact to 95% maximum dry density per ASTM D-698.

Notes: For overlying soil depths (A) ranging from 18" to 44", the depth of required drilling (B) is equal to either 12" or 44" minus the depth of soil whichever is less.

Zone A & B:
Backfill according to Section 617.03(a).

DETAIL OF POST PLACEMENT IN SOLID ROCK (W-BEAM)

DATE	REVISION	DATE FILM
7-14-10	RAISED HEIGHT OF GUARD RAIL 1"	
4-12-07	REVISED DETAIL OF GUARD RAIL PLACEMENT BEHIND CURB	
11-10-05	ADDED GUARD RAIL PLACEMENT BEHIND CURB; REVISED DETAIL OF CONNECTION	
11-18-04	REVISED POST PLACEMENT IN ROCK & CULVERT CONNECTION DETAILS. ADDED DETAIL FOR GUARD RAIL PLACEMENT AT LOW-FILL CULVERTS	
3-30-00	REMOVED CONCRETE INSERT ANCHOR	
6-12-98	CHANGED STEEL SPACER BLOCK TO WOOD BLOCKOUT, ADD. DET. OF GUARD RAIL CONNECTION TO R.C. BOX CULV'T. DELETED DET. OF STEEL LINE POST CONN. & ADDED DET. OF GUARD RAIL PLACE. BEHIND CURB & DET. OF POST PLACE. IN SOLID ROCK	
4-3-96	PLACED ARROWS AT CUT STEEL WASHERS	4-3-96
10-18-96	REV. ASTM REF. TO AASHTO	
11-22-95	ADDED OPTIONAL HOLES	
6-2-94	REVISED ALTERNATE POST SIZE	
8-5-93	REVISED STEEL POST SIZE	
10-1-92	REDRAWN & REVISED	10-1-92
8-2-90	DEL. WASHER ON ANCHOR ASSEMBLY	8-2-90
7-15-88	CONFORMED TO 1988 SPECS	
3-4-88	REVISED ANCHOR NOTE	
10-30-87	REVISED ANCHOR ASSEMBLY	712-10-30-87
10-30-87	REVISED PLACEMENT BEHIND CURB	547-10-30-87
10-9-87	REDRAWN & REVISED	803-10-9-87

ARKANSAS STATE HIGHWAY COMMISSION

GUARD RAIL DETAILS

STANDARD DRAWING GR-8A

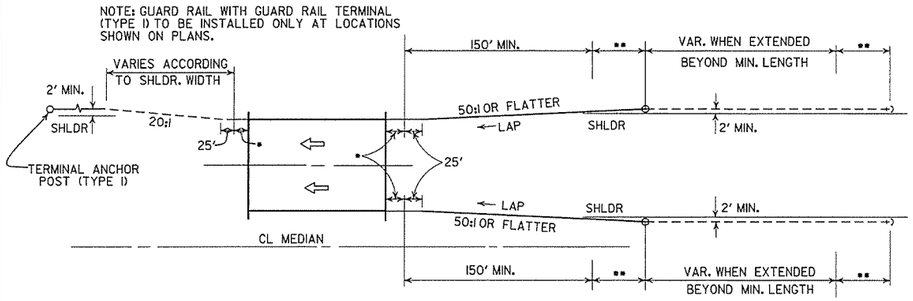

ONE-WAY TRAFFIC

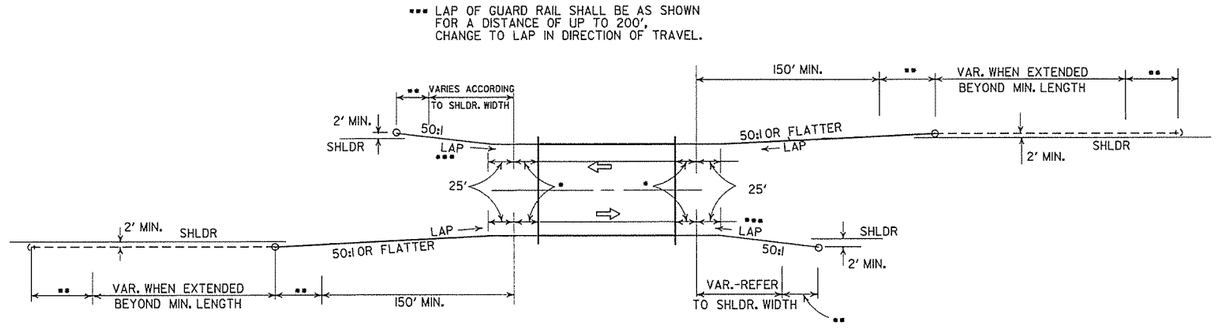

TWO-WAY TRAFFIC

METHODS OF INSTALLATION OF GUARD RAIL AT LESS THAN FULL SHOULDER WIDTH BRIDGES USING GUARD RAIL TERMINAL (TYPE 2)

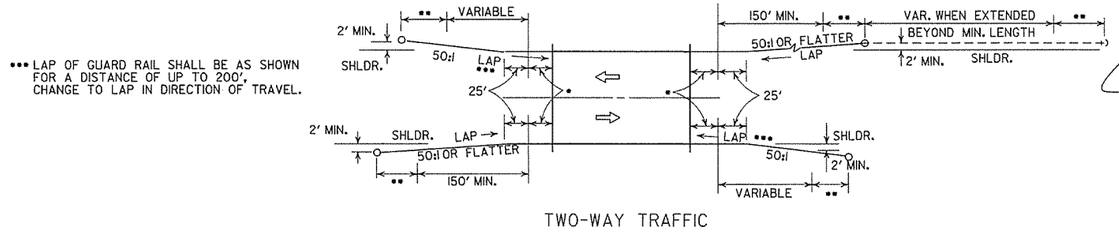

TWO-WAY TRAFFIC

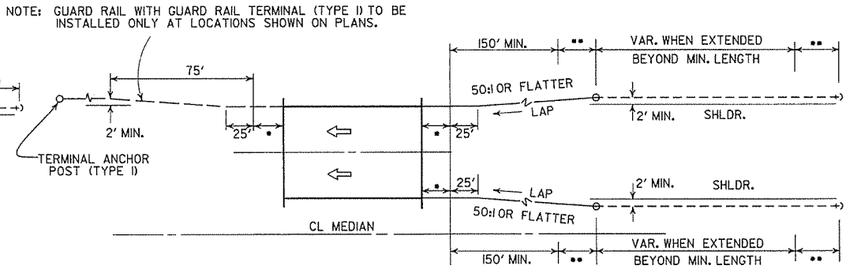

ONE-WAY TRAFFIC

METHOD OF INSTALLATION OF GUARD RAIL AT FULL SHOULDER WIDTH BRIDGES USING GUARD RAIL TERMINAL (TYPE 2)

••• LAP OF GUARD RAIL SHALL BE AS SHOWN FOR A DISTANCE OF UP TO 200', CHANGE TO LAP IN DIRECTION OF TRAVEL.

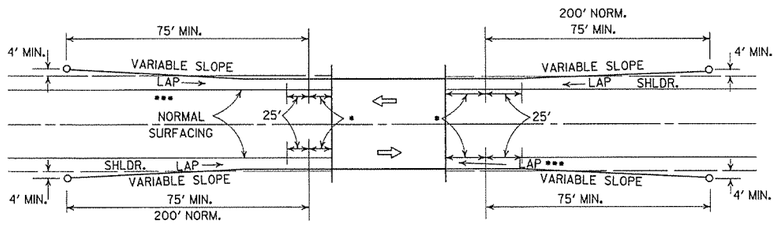

METHOD OF INSTALLATION OF GUARD RAIL USING GUARD RAIL TERMINAL (TYPE I) (FULL SHOULDER WIDTH OR LESS BRIDGES)

LEGEND

- • THRIE BEAM GUARD RAIL TERMINAL
- •• GUARD RAIL TERMINAL (TYPE 2)

DATE	REVISION	DATE FILM
4-17-08	REVISED LAYOUTS	
11-10-05	REMOVED GUARD RAIL NOTES AND DETAILS	
11-16-01	DELETED NOTE-METHOD OF INSTALLATION OF GUARD RAIL USING GUARD RAIL TERM. (TY. I)	
1-12-00	ADDED CONSTRUCTION NOTE	1-12-00
6-26-97	REVISED LAYOUT	
10-1-92	REDRAWN & REVISED	10-1-92
	ADDED NOTE	
10-9-87	REDRAWN & REVISED	

ARKANSAS STATE HIGHWAY COMMISSION

GUARD RAIL DETAILS

STANDARD DRAWING GR-9

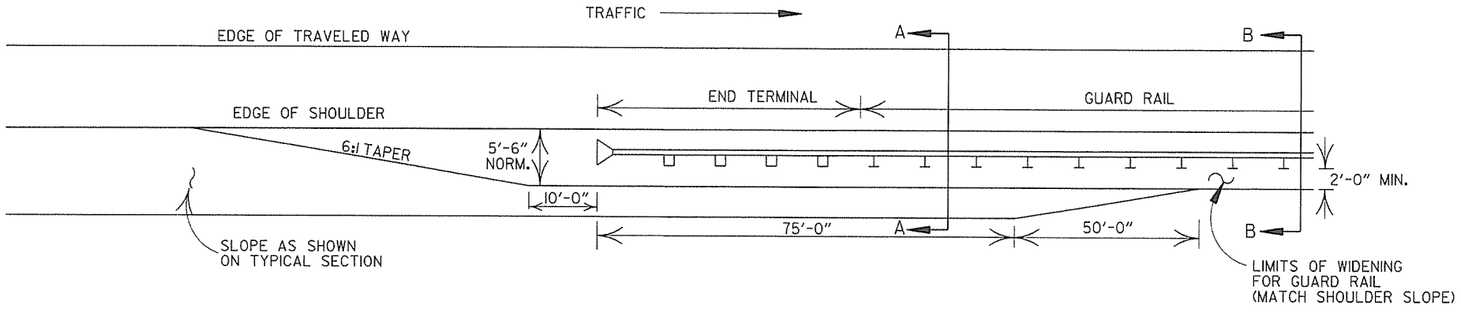

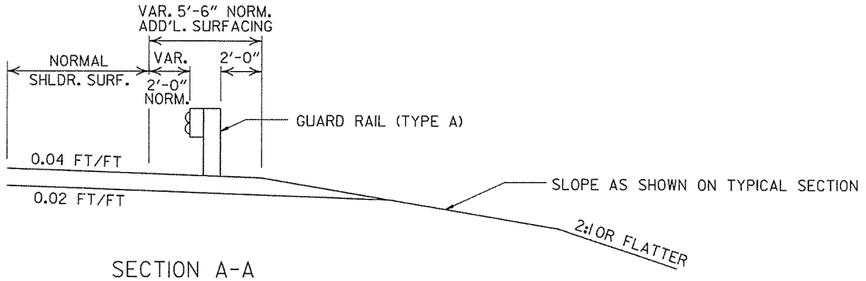

SECTION A-A

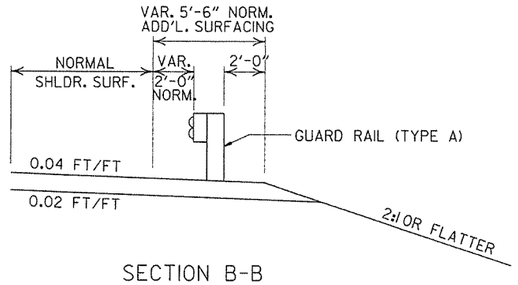

SECTION B-B

DETAILS OF WIDENING FOR GUARD RAIL

NOTE: NORMAL SECTION TO BE WIDENED APPROX. 5'-6" EACH SIDE TO SUPPORT GUARD RAIL.

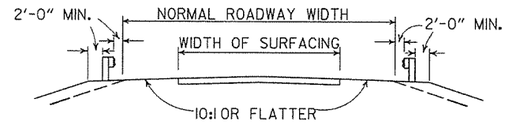

SECTION ON TANGENT

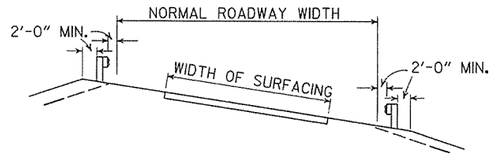

SECTION ON CURVE

DETAILS SHOWING POSITION OF GUARD RAIL ON HIGHWAY

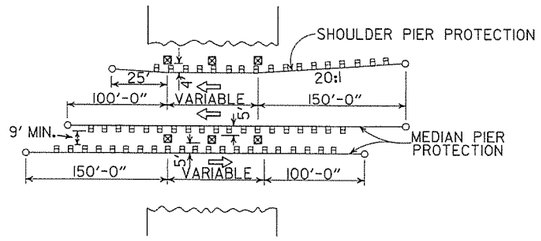

METHOD OF INSTALLATION OF GUARD RAIL AT FIXED OBSTACLE

DATE	REVISION	DATE FILM
4-17-08	MINOR REVISION	
11-10-05	DRAWN	

ARKANSAS STATE HIGHWAY COMMISSION

GUARD RAIL DETAILS

STANDARD DRAWING GR-9A

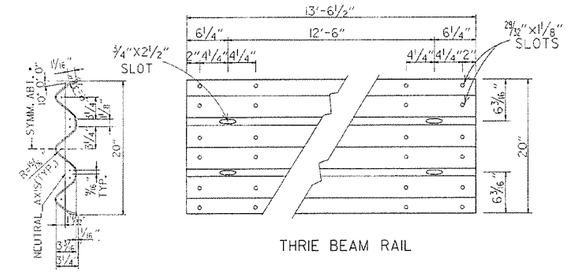

THRIE BEAM RAIL

SECTION THRU THRIE BEAM RAIL

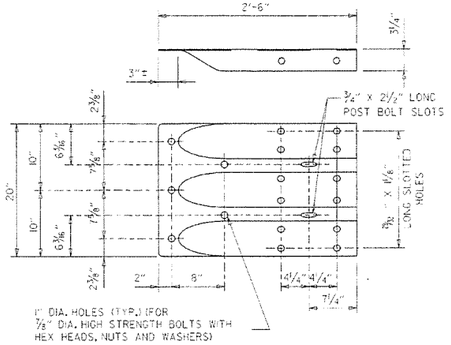

1" DIA. HOLES (TYP.) FOR ⅞" DIA. HIGH STRENGTH BOLTS WITH HEX HEADS, NUTS AND WASHERS)

SPECIAL END SHOE

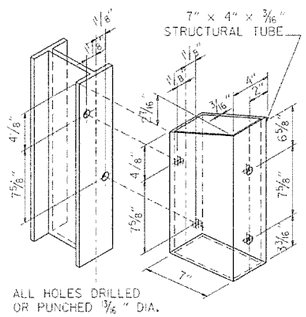

ALL HOLES DRILLED OR PUNCHED ⅜" DIA.

STRUCTURAL STEEL TUBING BLOCKOUT DETAIL

ATTACH BLOCKOUT TO POST USING ⅝" DIA. HEX HEAD BOLTS WITH 1½" O.D. CUT STEEL WASHERS AND NUT.

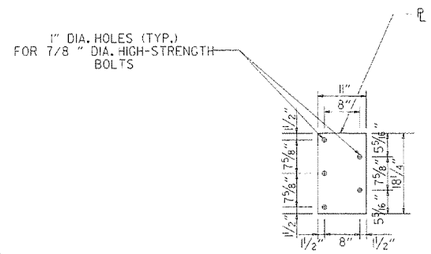

CONNECTOR PLATE

NOTE:
SEE STANDARD DRAWING GR-10A FOR GUARD RAIL POST EMBEDMENT DEPTHS.

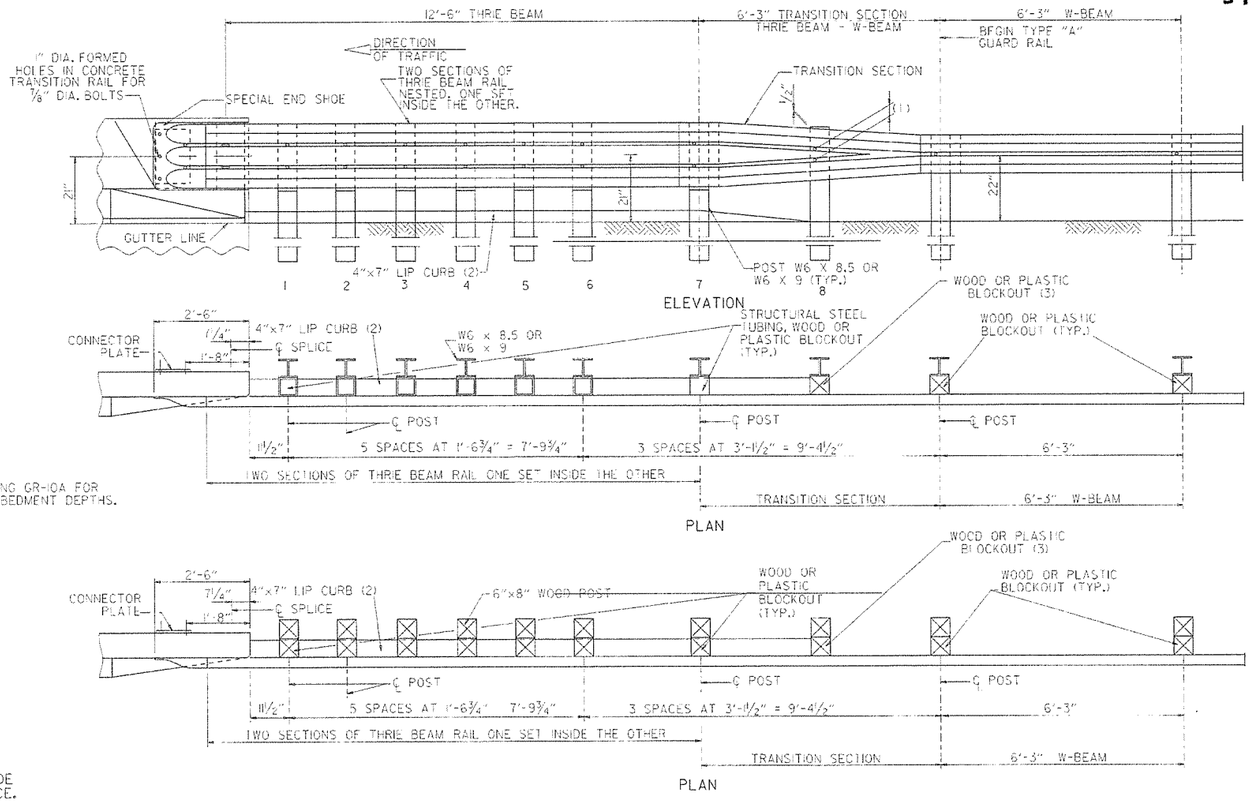

(1) VERIFY BOLT SPACING FROM RAIL TRANSITION PRODUCER.
(2) REFER TO APPROACH GUTTER DETAILS.
(3) LENGTH OF BLOCKOUT ON POST 8 TO BE MODIFIED TO FIT RAIL WIDTH.

THRIE BEAM GUARD RAIL CONNECTION AT BRIDGE ENDS

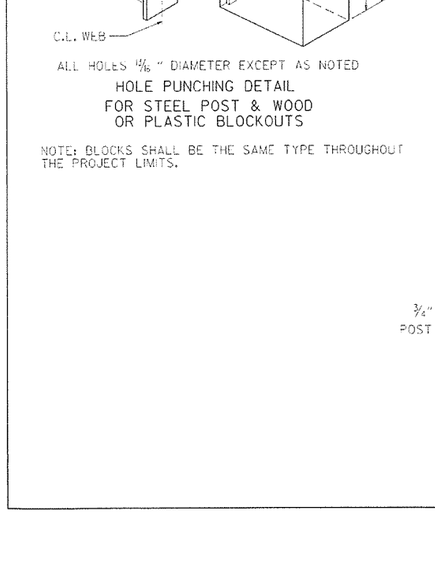

ALL HOLES 1⅛" DIAMETER EXCEPT AS NOTED

HOLE PUNCHING DETAIL
FOR STEEL POST & WOOD OR PLASTIC BLOCKOUTS

NOTE: BLOCKS SHALL BE THE SAME TYPE THROUGHOUT THE PROJECT LIMITS.

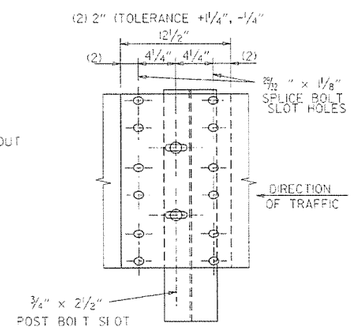

THRIE BEAM RAIL SPLICE AT POST

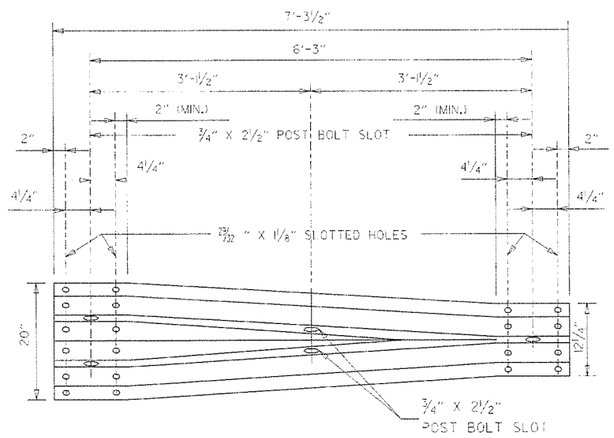

TRANSITION SECTION

GENERAL NOTES:

THE THRIE BEAM RAIL, SPECIAL END SHOE, AND THE TRANSITION SECTION SHALL BE MADE OF STEEL AND SHALL BE 12 GAGE. ZINC COATING SHALL BE TYPE I.

RAIL POSTS SHALL BE SET PERPENDICULAR TO THE ROADWAY PROFILE GRADE AND VERTICALLY IN CROSS SECTION.

ALL BOLTS SHALL BE SUFFICIENT LENGTH TO EXTEND THROUGH THE FULL THICKNESS OF THE NUT AND NO MORE THAN ¾" BEYOND IT.

ALL LAP SPLICES, INCLUDING SPECIAL END SHOES, SHALL BE MADE IN THE DIRECTION SHOWN ON STANDARD DRAWINGS GR-9 & GR-11.

WOOD POSTS & WOOD BLOCKS SHALL BE EITHER DENSE NO. 1 STRUCTURAL OR BETTER 9.7# (1400 f) OR NO. 1 (1350 f SOUTHERN PINE.

REFER TO STD. DRWG. GR-10A FOR POST DETAILS.

USE THRIE BEAM GUARD RAIL COMPONENTS OF SAME MATERIAL FOR ENTIRE JOB.

THRIE BEAM POSTS SHALL BE SAME MATERIAL AS W BEAM POSTS FOR ENTIRE JOB.

DATE	REVISION	DATE FILM
7-14-10	RAISED HEIGHT OF W-BEAM 1"	
11-29-07	ADDED PLASTIC BLOCKOUTS	
11-10-05	ADDED NOTE FOR ATTACHING STEEL BLOCKOUT	
11-18-04	REVISED GENERAL NOTES	
10-9-03	REVISED GENERAL NOTES	
4-10-03	REVISED GENERAL NOTES	
8-22-02	REVISED NOTE (2)	
6-29-00	MOVED DIMENSION LINES	
5-18-00	ADDED NOTE	
3-30-00	DRAWN & ISSUED	

ARKANSAS STATE HIGHWAY COMMISSION

GUARD RAIL DETAILS

STANDARD DRAWING GR-10

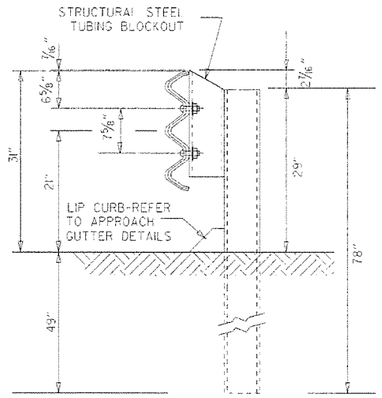

THRIE BEAM RAIL WITH STEEL TUBING BLOCKOUT
AND STEEL POST
POSTS 1-7

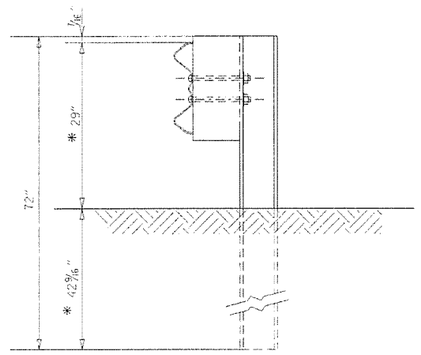

W-BEAM TO THRIE BEAM TRANSITION RAIL
WITH WOOD OR PLASTIC BLOCKOUT AND STEEL POST
POST 8

* NOTE:
THESE DIMENSIONS WILL NEED TO BE ADJUSTED IN THE FIELD TO MAKE THE TRANSITION FROM 21" MID POINT OF THRIE BEAM TO 22" MID POINT OF W-BEAM.

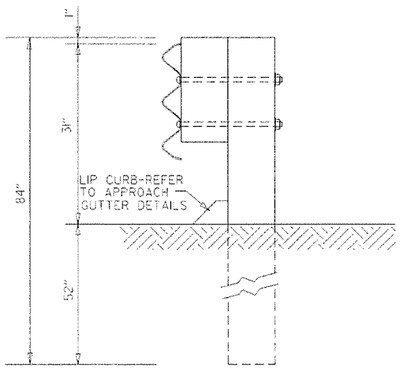

THRIE BEAM RAIL
WITH WOOD OR PLASTIC
BLOCKOUTS & WOOD POSTS
POSTS 1-6

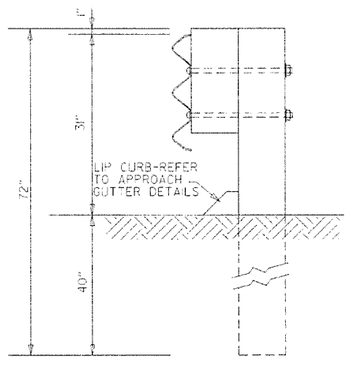

THRIE BEAM RAIL
WITH WOOD OR PLASTIC
BLOCKOUT & WOOD POST
POST 7

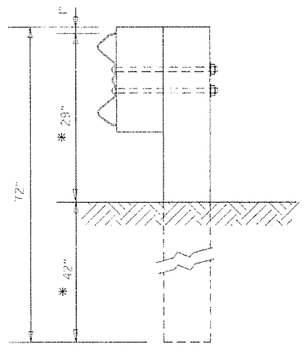

W-BEAM TO THRIE BEAM
TRANSITION RAIL WITH WOOD OR
PLASTIC BLOCKOUT & WOOD POST
POST 8

GENERAL NOTES:

RAIL POSTS SHALL BE SET PERPENDICULAR TO THE ROADWAY PROFILE GRADE AND VERTICALLY IN CROSS SECTION.

WOOD POSTS & WOOD BLOCKS SHALL BE EITHER DENSE NO. 1 STRUCTURAL OR BETTER 9.7 f (1400 f) OR NO. 1 1350 # SOUTHERN PINE.

DATE	REVISION	DATE FILM
7-14-10	REVISED POST 8 DIMENSIONS	
11-29-07	ADDED PLASTIC BLOCKOUTS	
8-22-02	REVISED LIP CURB NOTE	
3-30-00	DRAWN & ISSUED	

ARKANSAS STATE HIGHWAY COMMISSION

GUARD RAIL DETAILS

STANDARD DRAWING GR-10A

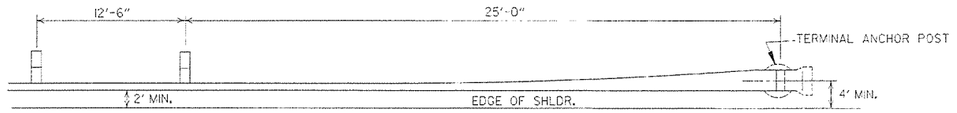

PLAN - GUARD RAIL TERMINAL (TYPE I)

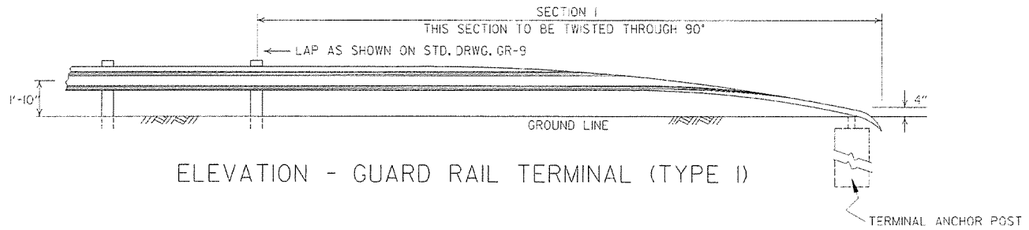

ELEVATION - GUARD RAIL TERMINAL (TYPE I)

NOTE:
SECTIONS 1 AND 2 OF GUARD RAIL TERMINAL SHALL BE PAID FOR AT THE PRICE BID PER LINEAR FOOT OF THE TYPE OF GUARD RAIL SPECIFIED.

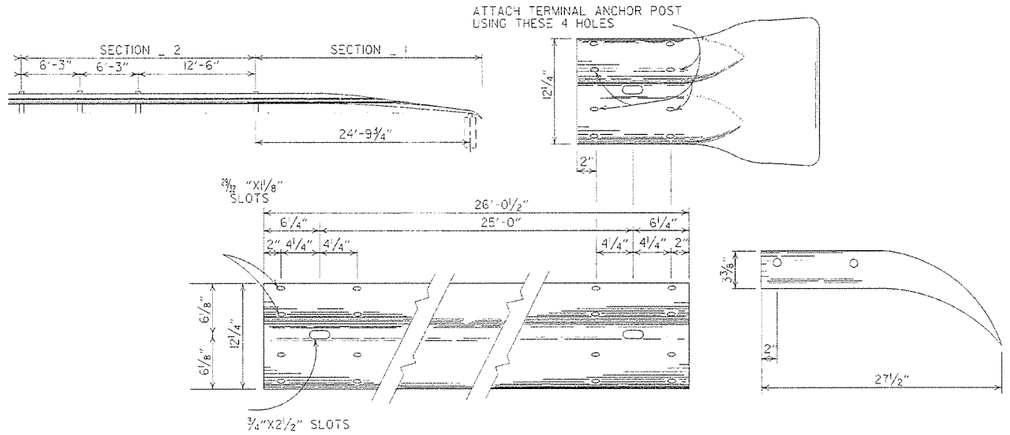

SECTION 1

TERMINAL SECTION

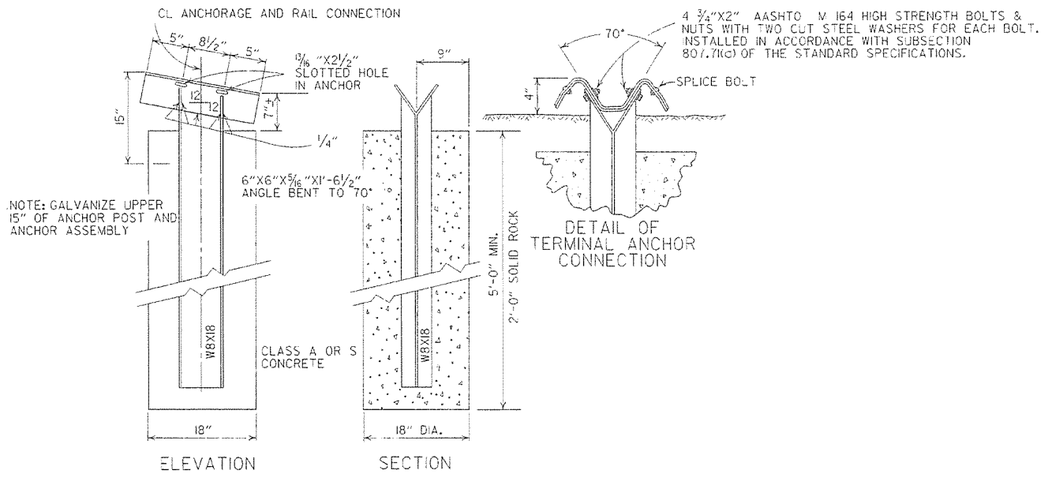

NOTE: RAIL MEMBERS MAY BE BOLTED TO ANGLE AT TERMINAL ANCHOR AND THE TWO ASSEMBLIES POSITIONED TO PROPER ALIGNMENT PRIOR TO PLACING CONCRETE AROUND 8 WF 17 POST IF CONTRACTOR SO DESIRES.

DETAIL OF TERMINAL ANCHOR POST (TYPE I)

DATE	REVISION	DATE FILM
7-14-10	RAISED HEIGHT OF GUARD RAIL 1"	
6-26-97	REVISED LAP NOTE	
10-18-96	REVISED ASTM REF. TO AASHTO	
11-3-94	DIVENSION TERMINAL DETAIL	
11-11-92	ADDED NOTE FOR PAYMENT	11-11-92
10-1-92	DRAWN & ISSUED	10-1-92

ARKANSAS STATE HIGHWAY COMMISSION

GUARD RAIL DETAILS

STANDARD DRAWING GRT-1

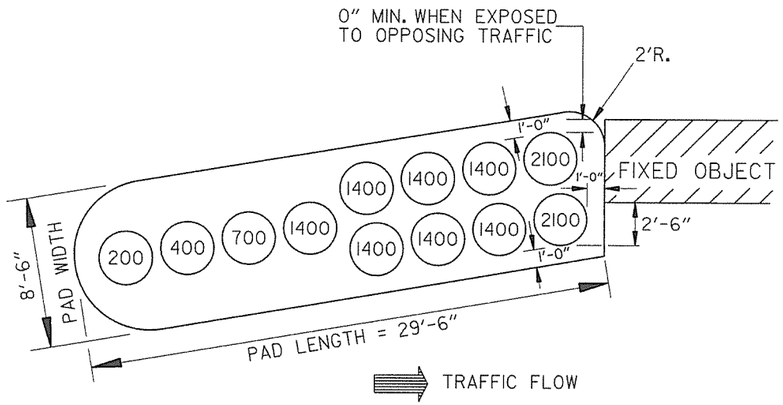

(TYPE C)

BARRIER LENGTH = 27'-6"
DESIGN IMPACT SPEED = 50 M.P.H.= 73.3 fps

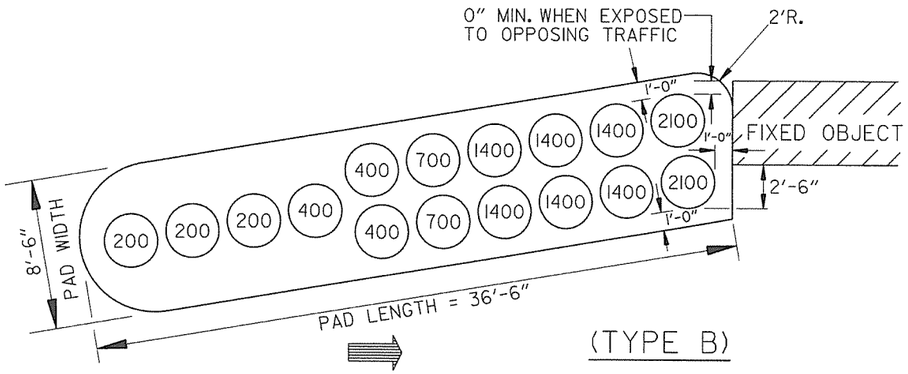

(TYPE B)

BARRIER LENGTH = 34'-6"
DESIGN IMPACT SPEED = 60 M.P.H.= 88 fps

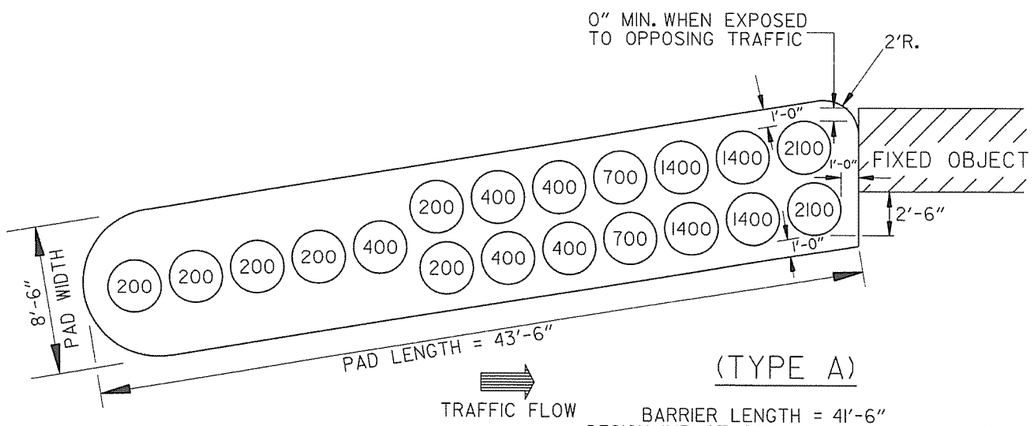

(TYPE A)

BARRIER LENGTH = 41'-6"
DESIGN IMPACT SPEED = 70 M.P.H.= 103 fps

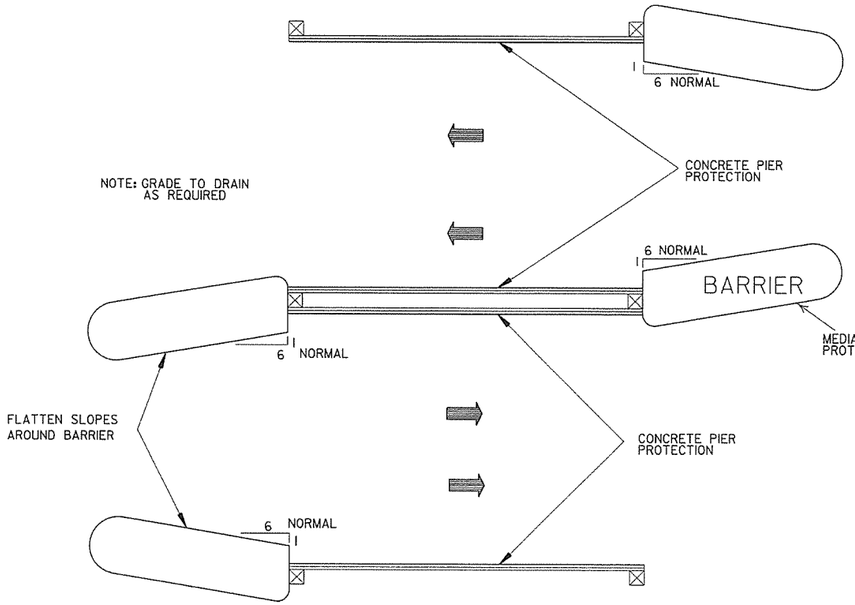

METHOD OF INSTALLATION OF IMPACT ATTENUATION BARRIER FOR PIER PROTECTION

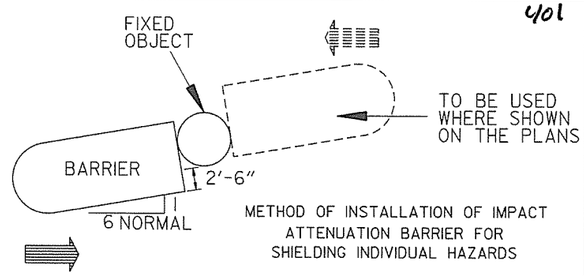

METHOD OF INSTALLATION OF IMPACT ATTENUATION BARRIER FOR SHIELDING INDIVIDUAL HAZARDS

APPROXIMATE QUANTITIES PER PAD

TYPE	ALTERNATE #1		ALTERNATE #2
	AGGR. BASE COURSE	A.C.H.M. SURFACE COURSE	P.C.CONC. BASE (4"U.T.)
	TONS	TONS	SQ.YDS.
A	9.7	4.6	41.6
B	8.1	3.8	34.9
C	6.6	3.1	28.3

NOTE: APPROXIMATE QUANTITIES SHOWN ARE FOR INFORMATIONAL PURPOSES ONLY. PAYMENT TO BE INCLUDED IN UNIT PRICE BID FOR IMPACT ATTENUATION BARRIER.

GENERAL NOTES

1. DIMENSIONS SHOWN ARE TO TOP OF PLASTIC MODULES.
2. SPACING BETWEEN PLASTIC MODULES SHALL NOT EXCEED 6" AT THE TOP.
3. PLASTIC MODULES SHALL MEET THE REQUIREMENTS OF NCHRP-350 OR MANUAL FOR ASSESSING SAFETY HARDWARE (MASH).

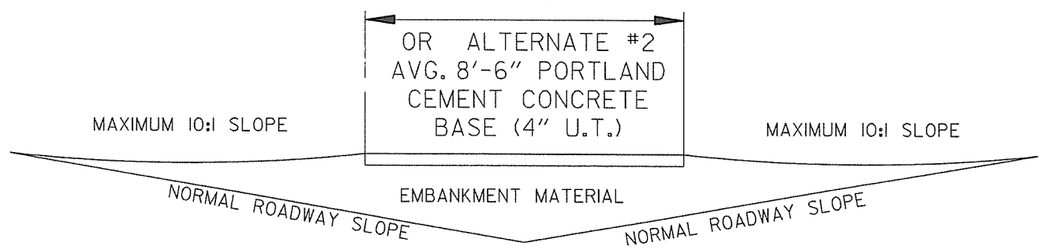

DETAIL OF BARRIER PAD

NOTE: BARRIER PAD TO BE SKEWED TOWARD ONCOMING TRAFFIC A MAXIMUM OF 6:1 WITH 6:1 BEING NORMAL

DATE	REVISION	DATE FILMED
10-15-09	ADDED REFERENCE TO MASH	
11-29-07	REVISED TY. A & TY. C ARRAYS	
11-19-98	REVISED FIXED OBJECT	
11-18-98	REV. NOTES & TYPE A MOD. WTS.	
10-18-96	REDRAWN	
7-15-88	CONFORMED TO 1988 SPECS	
7-29-87	REDRAWN	

ARKANSAS STATE HIGHWAY COMMISSION

IMPACT ATTENUATION BARRIER

STANDARD DRAWING IB-1

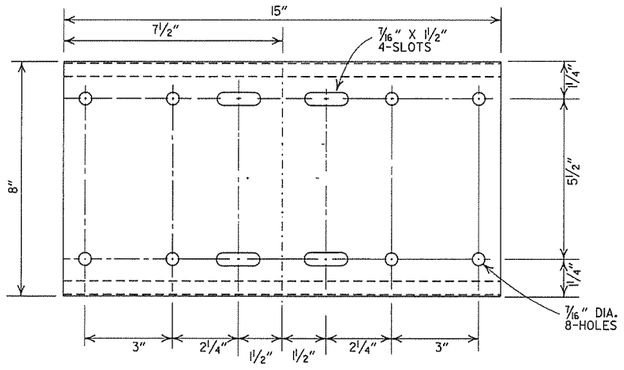

SHELF

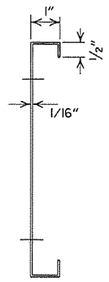

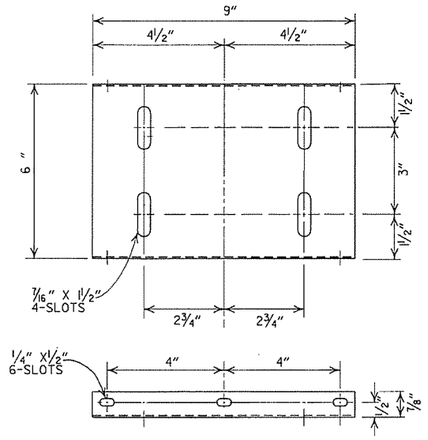

PLATFORM

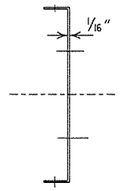

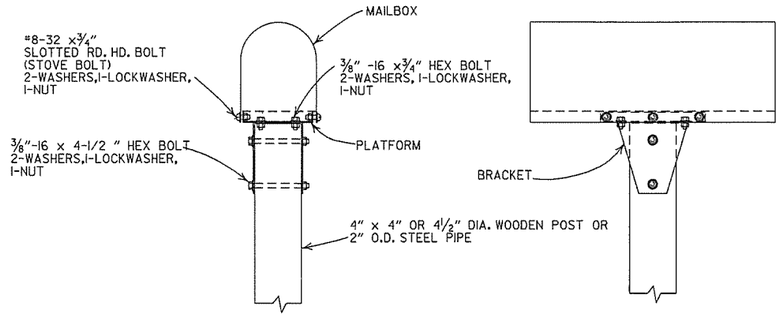

SINGLE INSTALLATION

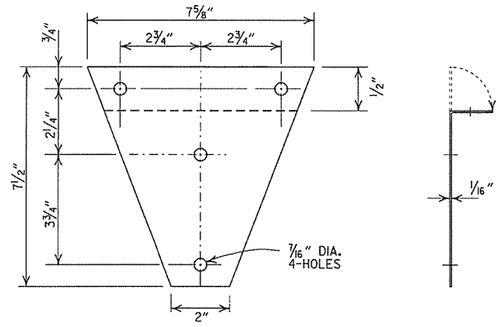

BRACKET

GENERAL NOTES

1. MAILBOX POSTS MAY BE WOOD OR METAL. WOOD POSTS SHALL BE PRESSURE TREATED FOR GROUND CONTACT IN ACCORDANCE WITH SECTION 637.02 OF THE STANDARD SPECIFICATIONS.
2. ANTI-TWIST PLATES SHALL BE USED ONLY ON METAL POSTS.
3. MAILBOX SHELF, BRACKET & PLATFORM SHALL BE GALVANIZED OR PAINTED STEEL, HOWEVER TREATED WOOD MAY BE USED WITH WOODEN POSTS. THE WOODEN SHELF, BRACKET & PLATFORM SHALL BE A MINIMUM OF ¾" THICK AND SHALL BE ASSEMBLED WITH BOLTS OF THE APPROPRIATE LENGTH WITH SIX 8 X¾" FLATHEAD WOOD SCREWS USED TO ATTACH THE MAILBOX TO THE PLATFORM.
4. THE MAILBOX SHELF AND PLATFORM THAT IS SHOWN IS FOR STANDARD SIZE MAILBOXES. THE SHELF AND PLATFORM SIZE SHALL BE MODIFIED TO FIT MAILBOXES OF A DIFFERENT SIZE.
5. METAL PIPE FOR MAILBOX SUPPORT SHALL BE 2" OUTSIDE DIAMETER STEEL WITH A WALL THICKNESS OF 0.145" AND A WEIGHT OF 2.72 LBS PER FT. OUTSIDE DIAMETER AND WEIGHT SHALL HAVE A TOLERANCE OF +/- 5% ACCORDING TO AASHTO M 181.
6. MAILBOX SUPPORT SYSTEM DIFFERING FROM THOSE SHOWN MAY BE USED, PROVIDED THEY ARE ON THE AHTD QUALIFIED PRODUCTS LIST FOR MAILBOX SUPPORTS.

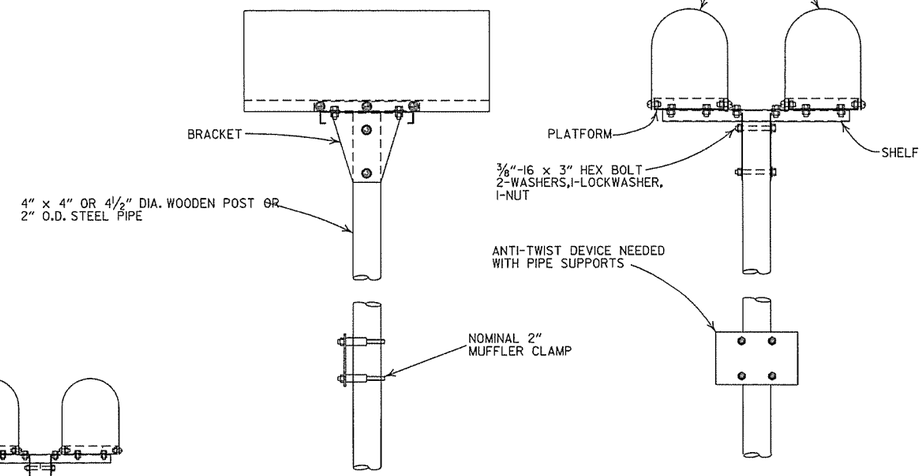

DOUBLE INSTALLATION

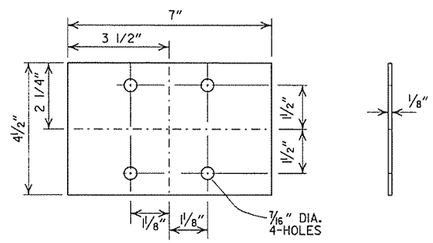

ANTI-TWIST PLATE

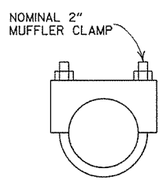

CLAMP

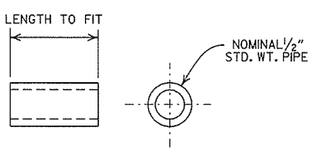

SPACER

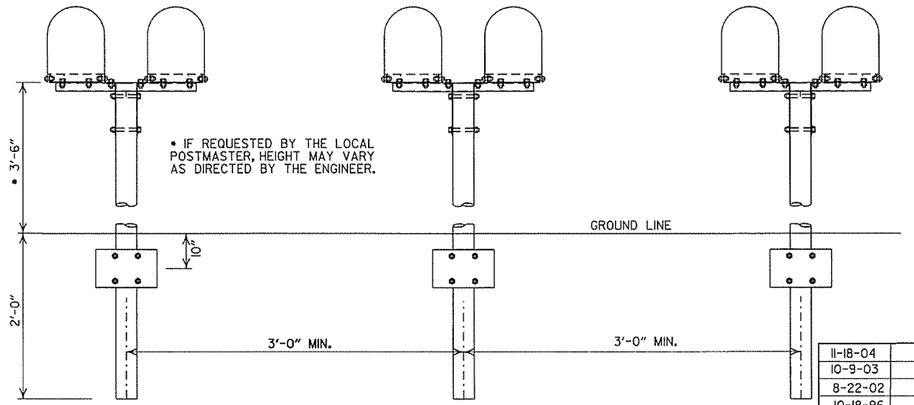

SPACING FOR MULTIPLE POST INSTALLATION

DATE	FILMED	REVISION
11-18-04		REVISED NOTES
10-9-03		REVISED NOTE 6
8-22-02		REVISED NOTE 6
10-18-96		CORRECTED AASHTO
10-1-92		CORRECTED SPELLING
9-26-91		NEW PHONE NUMBER
8-15-91		ADDED NOTE
11-30-89		ADJUSTED HEIGHT & ADDED NOTE
2-16-89		DELETED SLOTS FROM SHELF & PLTF
11-17-88	10-1-92	ADJUSTED DIMENSIONS OF STEEL POSTS
7-15-88	20-7-15-88	ISSUED

ARKANSAS STATE HIGHWAY COMMISSION

MAILBOX DETAILS

STANDARD DRAWING MB-1

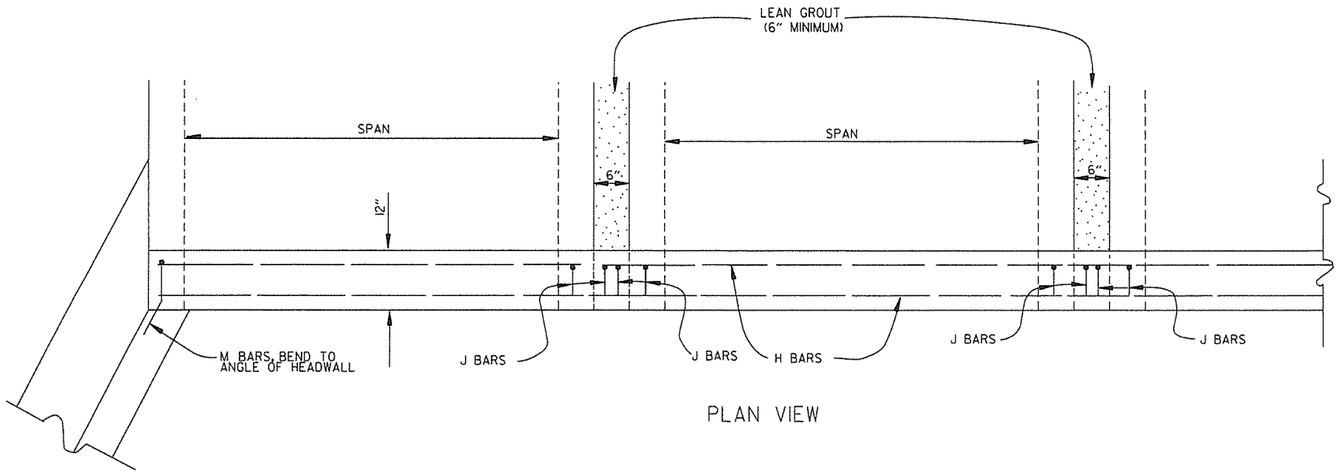

PLAN VIEW

BAR LIST

BAR	NO.	SIZE	LENGTH	BAR BENDING DIAGRAM
H	2	#4	•	
I	•	#4	•	
J	•	#4	1'-5"	
L	•	#4	3'-2"	
M	•	#4	1'-8"	

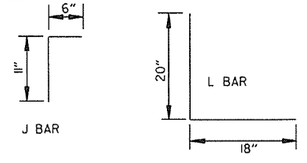

• NOTE: LENGTH AND NUMBER OF BARS VARIES WITH SIZE OF CULVERT

GENERAL NOTES

WINGS, CURTAIN WALLS AND APRONS SHALL BE TIED TO THE PRECAST CULVERT SECTION BY CASTING BARS IN CULVERT END SECTIONS AS SHOWN OR BY DOWELING AND GROUTING. J BARS AND M BARS SHALL BE EMBEDDED A MINIMUM OF 10" IN PRECAST BOX.

WINGS, FOOTINGS, APRONS AND CURTAIN WALLS SHALL BE CONSTRUCTED IN ACCORDANCE WITH THE APPLICABLE WING DRAWING, STEEL AND CONCRETE QUANTITIES WILL BE ADJUSTED TO FIT THE IN-PLACE WIDTH & HEIGHT OF THE PRECAST CONCRETE BOX CULVERTS.

ALL EXPOSED CORNERS TO HAVE ¾" CHAMFERS.

WINGWALLS AND FOOTINGS MAY BE ADJUSTED IN THE FIELD AS DIRECTED BY THE ENGINEER.

ALL CONCRETE, REINFORCING STEEL, LEAN GROUT, MEMBRANE WATERPROOFING, DRAINAGE FILL MATERIAL, GEOTEXTILE FILTER FABRIC, LABOR, MATERIALS AND EQUIPMENT REQUIRED FOR INSTALLING PRECAST BOX CULVERTS WILL NOT BE PAID FOR DIRECTLY BUT WILL BE CONSIDERED TO BE INCLUDED IN THE PRICE BID FOR THE ITEMS AS SPECIFIED IN SECTION 607 OF THE STANDARD SPECIFICATIONS.

LEAN GROUT SHALL CONSIST OF A SAND CEMENT MIXTURE MEETING THE FOLLOWING REQUIREMENTS:
PORTLAND CEMENT SHALL BE TYPE I AND SHALL MEET THE REQUIREMENTS OF AASHTO M 85.
SAND SHALL MEET THE REQUIREMENTS OF FINE AGGREGATE AS SPECIFIED IN SECTION 802.02 OF THE STANDARD SPECIFICATIONS.
THE SAND CEMENT MIXTURE SHALL CONSIST OF NOT LESS THAN 1.5 SACKS OF PORTLAND CEMENT PER TON OF MATERIAL MIXTURE.
THE MIXTURE SHALL CONTAIN SUFFICIENT WATER TO HYDRATE THE CEMENTS. THE SAND CEMENT MIXTURE SHALL BE PLACED IN MAXIMUM 8 INCH THICK LIFTS, LOOSE MEASURE, AND THOROUGHLY RODDED AND TAMPED AROUND BOX TO THOROUGHLY FILL ALL VOIDS.

MEMBRANE WATERPROOFING CONFORMING TO THE REQUIREMENTS OF SECTION 815 OF THE STANDARD SPECIFICATIONS SHALL BE APPLIED TO ALL BOX CULVERT JOINTS.

THE MEMBRANE WATERPROOFING WILL BE REQUIRED ON THE TOP EXTERNAL JOINT AND SHALL EXTEND 1 FOOT DOWN THE SIDES OF THE CULVERT.

IN OUTER BARRELS, ONE WEEP HOLE IS REQUIRED IN EXTERIOR WALLS OF EACH PRECAST CULVERT SECTION. WEEP HOLES SHALL HAVE A MAXIMUM HORIZONTAL SPACING OF 10'-0" IN THE ASSEMBLED CULVERT AND SHALL BE SPACED TO CLEAR ALL REINFORCING STEEL. THE DRAIN OPENING SHALL BE 4" DIAMETER AND SHALL BE PLACED 12" ABOVE THE TOP OF THE BOTTOM SLAB.

DRAINAGE FILL MATERIAL WITH GEOTEXTILE FABRIC IS REQUIRED AT THE EXTERIOR WALLS OF THE ASSEMBLED CULVERT, SEE DETAILS ON THIS DRAWING.

MINIMUM WIDTH SHALL BE 12" (6" ON EACH SIDE OF JOINT), ON MULTIPLE BARREL CULVERTS, MEMBRANE WATERPROOFING SHALL BE APPLIED TO EACH BARREL AS DESCRIBED ABOVE.

WITH THE APPROVAL OF THE ENGINEER, THE CONTRACTOR WILL BE ALLOWED TO SUBSTITUTE, AT NO ADDITIONAL COST TO THE DEPARTMENT, FLOWABLE SELECT MATERIAL CONFORMING TO SECTION 206 OF THE STANDARD SPECIFICATIONS IN LIEU OF LEAN GROUT.

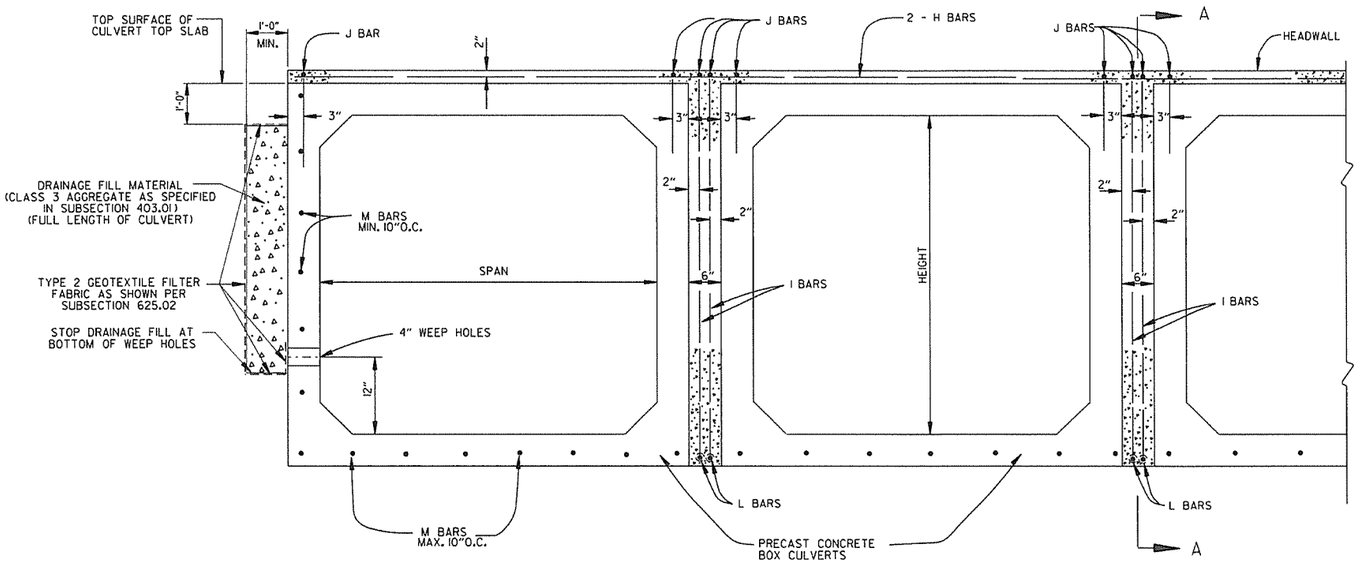

END VIEW

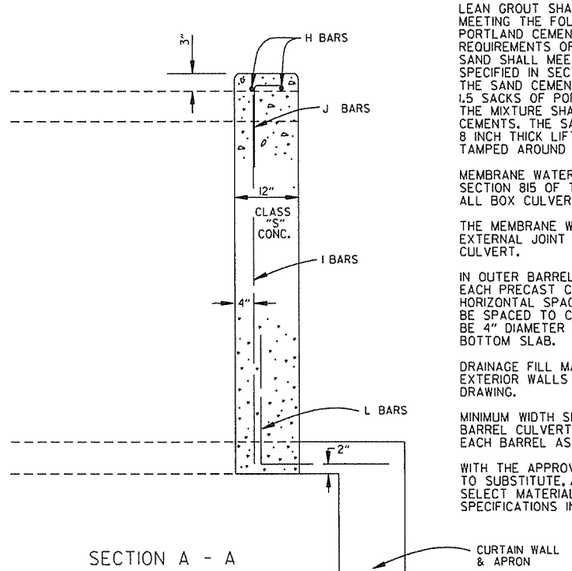

SECTION A - A

DATE	REVISION	DATE FILMED
1-28-15	REVISED GEOTEXTILE FABRIC PLACEMENT	
12-15-11	ADDED NOTE & DTLS FOR WEEP HOLE AND DRAINAGE FILL	
10-15-09	ADDED GENERAL NOTE	
11-10-05	REVISED SPACING OF "M" BARS	
4-10-03	REVISED GENERAL NOTES	
10-18-96	CORRECTED AASHTO REF.	
10-1-92	ADDED NOTE FOR MEMBRANE WATERPROOFING	
8-15-91	ADDED NOTE FOR LEAN GROUT	
11- 8-90	REVISED FOR 1991 SPECS	
11-30-89	ISSUED; JABE	

ARKANSAS STATE HIGHWAY COMMISSION

PRECAST CONCRETE BOX CULVERTS

STANDARD DRAWING PBC-1

REINFORCED CONCRETE ARCH PIPE DIMENSIONS

EQUIV. DIA.	SPAN		RISE	
	AASHTO M 206	AHTD NOMINAL	AASHTO M 206	AHTD NOMINAL
INCHES	INCHES			
15	18	18	11	11
18	22	22	13½	14
21	26	26	15½	16
24	28½	29	18	18
30	36¼	36	22½	23
36	43⅜	44	26⅝	27
42	51⅛	51	31⅞	31
48	58½	59	36	36
54	65	65	40	40
60	73	73	45	45
72	88	88	54	54
84	102	102	62	62
90	115	115	72	72
96	122	122	77½	77
108	138	138	87⅛	87
120	154	154	96⅞	97
132	168¾	169	106½	107

THE MEASURED SPAN AND RISE SHALL NOT VARY MORE THAN ± 2 PERCENT FROM THE VALUES SPECIFIED BY AASHTO M206.

REINFORCED CONCRETE HORIZONTAL ELLIPTICAL PIPE DIMENSIONS

EQUIV. DIA.	AASHTO M 207	
	SPAN	RISE
INCHES	INCHES	
18	23	14
24	30	19
27	34	22
30	38	24
33	42	27
36	45	29
39	49	32
42	53	34
48	60	38
54	68	43
60	76	48
66	83	53
72	91	58
78	98	63
84	106	68

THE MEASURED SPAN AND RISE SHALL NOT VARY MORE THAN ± 2 PERCENT FROM THE VALUES SPECIFIED BY AASHTO M207.

CONSTRUCTION SEQUENCE

1. PLACE STRUCTURAL BEDDING MATERIAL TO GRADE. DO NOT COMPACT.
2. INSTALL PIPE TO GRADE.
3. COMPACT STRUCTURAL BEDDING OUTSIDE THE MIDDLE THIRD OF THE PIPE.
4. PLACE AND COMPACT THE HAUNCH AREA UP TO THE MIDDLE OF THE PIPE.
5. COMPLETE BACKFILL ACCORDING TO SUBSECTION 606.03.(f)(1).

NOTE: HAUNCH AND STRUCTURAL BEDDING MATERIAL WILL NOT BE PAID FOR SEPARATELY, BUT COMPENSATION WILL BE CONSIDERED TO BE INCLUDED IN THE PRICE BID PER LINEAR FOOT OF CONCRETE PIPE.

- LEGEND -

D_1 = NORMAL INSIDE DIAMETER OF PIPE
D_o = OUTSIDE DIAMETER OF PIPE
H = FILL COVER HEIGHT OVER PIPE (FEET)
MIN. = MINIMUM
▨ = UNDISTURBED SOIL

INSTALLATION TYPE	MATERIAL REQUIREMENTS FOR HAUNCH AND STRUCTURAL BEDDING
TYPE 1	AGGREGATE BASE COURSE (CLASS 5 OR CLASS 7)
TYPE 2	SELECTED MATERIALS (CLASS SM-1, SM-2, OR SM-4) OR TYPE 1 INSTALLATION MATERIAL*
TYPE 3**	AASHTO CLASSIFICATION A-1 THRU A-6 SOIL OR TYPE 1 OR 2 INSTALLATION MATERIAL

*SM-3 WILL NOT BE ALLOWED.

**MATERIALS SHALL NOT INCLUDE ORGANIC MATERIALS OR STONES LARGER THAN 3 INCHES.

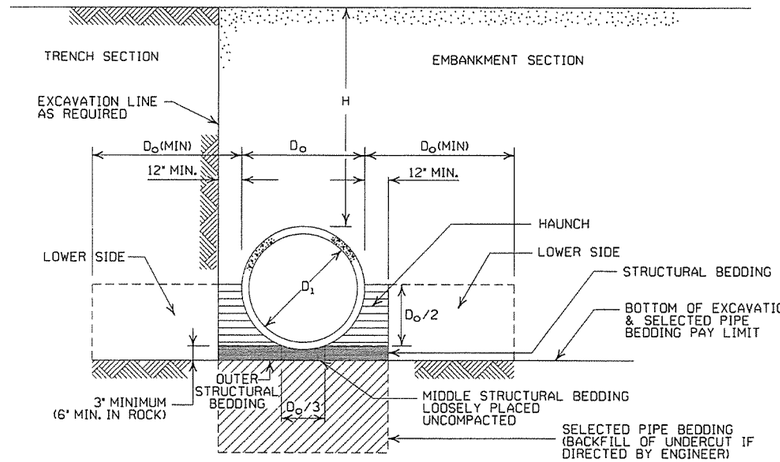

EMBANKMENT AND TRENCH INSTALLATIONS

1. MATERIAL IN THE HAUNCH AND OUTER STRUCTURAL BEDDING SHALL BE COMPACTED TO 95% OF THE MAXIMUM DENSITY ACCORDING TO THE TYPE OR CLASS OF MATERIAL USED.
2. FOR TRENCHES WITH WALLS OF NATURAL SOIL, THE DENSITY OF THE SOIL IN THE LOWER SIDE ZONE SHALL BE AS FIRM AS THE 95% DENSITY REQUIRED FOR THE HAUNCH. IF THE EXISTING SOIL DOES NOT MEET THIS CRITERIA, IT SHALL BE REMOVED AND RECOMPACTED TO 95% OF THE MAXIMUM DENSITY ACCORDING TO THE TYPE OF MATERIAL USED.
3. FOR EMBANKMENTS, THE MATERIAL IN THE LOWER SIDE ZONE SHALL BE COMPACTED TO 95% OF THE MAXIMUM DENSITY ACCORDING TO THE TYPE OR CLASS OF MATERIAL USED.

MINIMUM HEIGHT OF FILL "H" OVER CIRCULAR R.C. PIPE CULVERTS

	CLASS OF PIPE			
	CLASS III		CLASS IV	CLASS V
INSTALLATION TYPE	TYPE 1 OR 2	TYPE 3	ALL	ALL
PIPE ID (IN.)	FEET			
12-15	2	2.5	2	1
18-24	2.5	3	2	1
27-33	3	4	2	1
36-42	3.5	5	2	1
48	4.5	5.5	2	1
54-60	5	7	2	1
66-78	6	8	2	1
84-108	7.5	8	2	1

NOTE: FOR MINIMUM COVER VALUES, "H" SHALL INCLUDE A MINIMUM OF 12" OF PAVEMENT AND/OR BASE.

MAXIMUM HEIGHT OF FILL "H" OVER CIRCULAR R.C. PIPE CULVERTS

INSTALLATION TYPE	CLASS OF PIPE		
	CLASS III	CLASS IV	CLASS V
	FEET		
TYPE 1	21	32	50
TYPE 2	16	25	39
TYPE 3	12	20	30

NOTE: IF FILL HEIGHT EXCEEDS 50 FEET, A SPECIAL DESIGN CONCRETE PIPE WILL BE REQUIRED USING TYPE 1 INSTALLATION.

MINIMUM HEIGHT OF FILL "H" OVER R.C. ARCH & HORIZONTAL ELLIPTICAL PIPE CULVERTS

INSTALLATION TYPE	CLASS OF PIPE	
	CLASS III	CLASS IV
	FEET	
TYPE 2 OR TYPE 3	2.5	1.5

NOTE: TYPE 1 INSTALLATION WILL NOT BE ALLOWED FOR ARCH & HORIZONTAL ELLIPTICAL PIPE CULVERTS.

NOTE: FOR MINIMUM COVER VALUES, "H" SHALL INCLUDE A MINIMUM OF 12" OF PAVEMENT AND/OR BASE.

MAXIMUM HEIGHT OF FILL "H" OVER R.C. ARCH & HORIZONTAL ELLIPTICAL PIPE CULVERTS

INSTALLATION TYPE	CLASS OF PIPE	
	CLASS III	CLASS IV
	FEET	
TYPE 2	13	21
TYPE 3	10	16

NOTE: TYPE 1 INSTALLATION WILL NOT BE ALLOWED FOR ARCH & HORIZONTAL ELLIPTICAL PIPE CULVERTS.

GENERAL NOTES

1. CONCRETE PIPE CULVERT CONSTRUCTION SHALL CONFORM TO ARKANSAS STATE HIGHWAY AND TRANSPORTATION DEPARTMENT STANDARD SPECIFICATIONS FOR HIGHWAY CONSTRUCTION (CURRENT EDITION), WITH APPLICABLE SUPPLEMENTAL SPECIFICATIONS AND SPECIAL PROVISIONS. UNLESS OTHERWISE NOTED IN THE PLANS, SECTION AND SUBSECTION REFER TO THE STANDARD CONSTRUCTION SPECIFICATIONS.
2. CONCRETE PIPE CULVERT DESIGN SHALL CONFORM TO AASHTO LRFD BRIDGE DESIGN SPECIFICATIONS, FIFTH EDITION (2010) WITH 2010 INTERIMS.
3. ALL PIPE SHALL CONFORM TO SECTION 606. CIRCULAR R.C. PIPE CULVERTS SHALL CONFORM TO AASHTO M170, R.C. ARCH PIPE CULVERTS SHALL CONFORM TO AASHTO M206 AND HORIZONTAL ELLIPTICAL PIPE CULVERTS SHALL CONFORM TO AASHTO M207.
4. ALL PIPE SHALL BE PROTECTED DURING CONSTRUCTION BY A COVER SUFFICIENT TO PREVENT DAMAGE FROM PASSAGE OF EQUIPMENT.
5. THE MINIMUM TRENCH WIDTH SHALL BE THE OUTSIDE DIAMETER OF THE PIPE PLUS 24 INCHES. THE MAXIMUM ALLOWABLE TRENCH WIDTH SHALL BE THE MINIMUM WIDTH PRACTICABLE FOR WORKING CONDITIONS.
6. MULTIPLE PIPE CULVERTS SHALL BE INSTALLED WITH A MINIMUM CLEARANCE OF 24 INCHES BETWEEN STRINGS OF PIPE. REFER TO STD. DWG. FES-2 FOR MINIMUM CLEARANCE WHERE FLARED END SECTIONS ARE USED.
7. IMPERVIOUS MATERIAL SHOULD BE PLACED AS DIRECTED BY THE ENGINEER AT THE ENDS OF THE CULVERT TO PREVENT LOSS OF STRUCTURAL BEDDING WHEN PERVIOUS MATERIAL IS USED FOR STRUCTURAL BEDDING AND/OR BACKFILL.
8. NOT MORE THAN ONE LIFTING HOLE MAY BE PROVIDED IN CONCRETE PIPE TO FACILITATE HANDLING. HOLE MAY BE CAST IN PLACE, CUT INTO THE FRESH CONCRETE AFTER FORMS ARE REMOVED, OR DRILLED. THE HOLE SHALL NOT BE MORE THAN TWO INCHES IN DIAMETER OR TWO INCHES SQUARE. CUTTING OR DISPLACEMENT OF REINFORCEMENT WILL NOT BE PERMITTED. SPALLED AREAS AROUND THE HOLE SHALL BE REPAIRED IN A WORKMANLIKE MANNER. LIFTING HOLE SHALL BE FILLED WITH MORTAR, CONCRETE, OR OTHER METHOD AS APPROVED BY THE ENGINEER.
9. WHEN DIRECTED BY THE ENGINEER, UNSUITABLE MATERIAL THAT IS ENCOUNTERED AT THE BOTTOM OF THE EXCAVATED TRENCH (BELOW THE AREA IDENTIFIED AS "STRUCTURAL BEDDING" ABOVE) WILL BE EXCAVATED AND REPLACED WITH SELECTED PIPE BEDDING. THE QUANTITY OF MATERIAL REQUIRED TO BACKFILL THE UNDERCUT AREA UP TO THE SELECTED PIPE BEDDING PAY LIMIT DESIGNATED ABOVE WILL BE MEASURED AND PAID FOR AS "SELECTED PIPE BEDDING."
10. WHEN THE EXISTING MATERIAL EXCAVATED FOR THE PIPE TRENCH IS DETERMINED BY THE ENGINEER TO BE UNSUITABLE FOR BACKFILLING THE PIPE (ABOVE THE AREA IDENTIFIED ABOVE AS THE HAUNCH), BORROW MATERIAL OR MATERIAL FROM THE ROADWAY EXCAVATION WILL BE USED TO BACKFILL THE PIPE. IF SUITABLE MATERIAL IS NOT AVAILABLE, THE ENGINEER MAY AUTHORIZE THE USE OF "SELECTED PIPE BACKFILL."

DATE	REVISION	DATE FILMED
2-27-14	REVISED GENERAL NOTE 1.	
12-15-11	REVISED FOR LRFD DESIGN SPECIFICATIONS	
5-18-00	REVISED TYPE 3 BEDDING & ADDED NOTE	
3-30-00	REVISED INSTALLATIONS	
11-06-97	ISSUED	

ARKANSAS STATE HIGHWAY COMMISSION

CONCRETE PIPE CULVERT FILL HEIGHTS & BEDDING

STANDARD DRAWING PCC-1

INSTALLATION TYPE	•• MATERIAL REQUIREMENTS FOR STRUCTURAL BACKFILL AND STRUCTURAL BEDDING
TYPE 2	•SELECTED MATERIALS (CLASS SM-1, SM-2 OR SM-4)

• AGGREGATE BASE COURSE (CLASS 4, 5, 6, OR 7) MAY BE USED IN LIEU OF SELECTED MATERIAL.

SM3 WILL NOT BE ALLOWED.

•• STRUCTURAL BEDDING MATERIAL SHALL HAVE A MAXIMUM PARTICLE SIZE OF 1INCH. STRUCTURAL BACKFILL MATERIAL SHALL BE FREE OF ORGANIC MATERIAL, STONES LARGER THAN 1.50 INCH IN GREATEST DIMENSION, OR FROZEN LUMPS.

STRUCTURAL BACKFILL AND STRUCTURAL BEDDING MATERIAL WILL NOT BE PAID FOR SEPARATELY, BUT COMPENSATION WILL BE CONSIDERED TO BE INCLUDED IN THE PRICE BID PER LINEAR FOOT OF HDPE PIPE.

MINIMUM TRENCH WIDTH BASED ON FILL HEIGHT "H"

PIPE DIAMETER	TRENCH WIDTH (FEET)	
	"H" < 10'-0"	"H" >OR= 10'-0"
18"	4'-6"	4'-6"
24"	5'-0"	6'-0"
30"	5'-6"	7'-6"
36"	6'-0"	9'-0"
42"	7'-0"	10'-6"
48"	8'-0"	12'-0"

①NOTE:
18" MIN. (18" - 30" DIAMETERS)
24" MIN. (36" - 48" DIAMETERS)

MINIMUM COVER VALUES, "H" SHALL INCLUDE A MINIMUM 12" OF PAVEMENT AND/OR BASE.

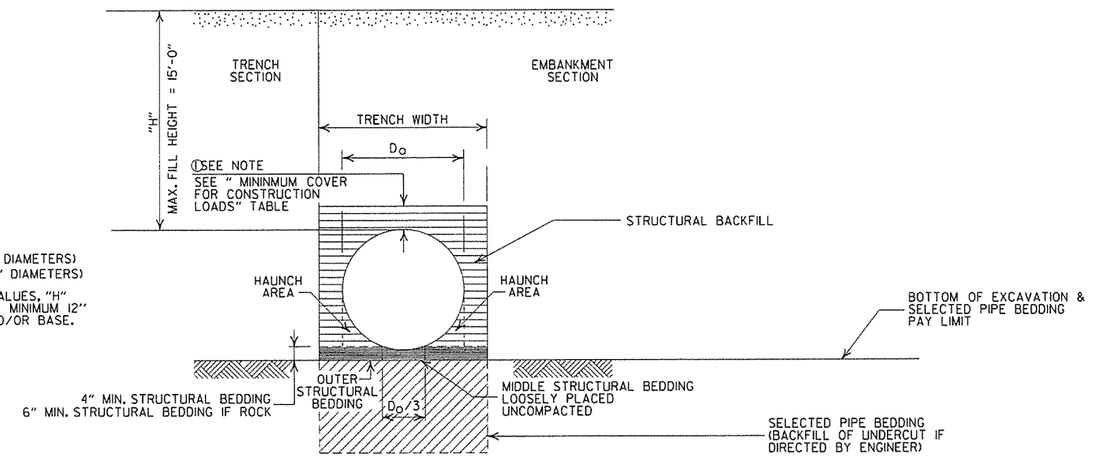

TYPE 2 EMBANKMENT AND TRENCH INSTALLATIONS

1. STRUCTURAL BACKFILL, EMBANKMENT, AND OUTER STRUCTURAL BEDDING MATERIAL SHALL BE COMPACTED TO 95% OF THE MAXIMUM DENSITY ACCORDING TO THE TYPE OR CLASS OF MATERIAL USED.

MULTIPLE INSTALLATION OF HIGH DENSITY POLYETHYLENE PIPES

PIPE DIAMETER	CLEAR DISTANCE BETWEEN PIPES
18"	1'-6"
24"	2'-0"
30"	2'-6"
36"	3'-0"
42"	3'-6"
48"	4'-0"

MINIMUM COVER FOR CONSTRUCTION LOADS

PIPE DIAMETER	② MIN. COVER (FEET) FOR INDICATED CONSTRUCTION LOADS			
	18.0-50.0 (KIPS)	50.0-75.0 (KIPS)	75.0-110.0 (KIPS)	110.0-175.0 (KIPS)
36" OR LESS	2'-0"	2'-6"	3'-0"	3'-0"
42" OR GREATER	3'-0"	3'-0"	3'-6"	4'-0"

②MINIMUM COVER SHALL BE MEASURED FROM TOP OF PIPE TO TOP OF THE MAINTAINED CONSTRUCTION ROADWAY SURFACE. THE SURFACE SHALL BE MAINTAINED.

CONSTRUCTION SEQUENCE

1. PLACE STRUCTURAL BEDDING MATERIAL TO GRADE. DO NOT COMPACT.
2. INSTALL PIPE TO GRADE.
3. COMPACT STRUCTURAL BEDDING OUTSIDE THE MIDDLE THIRD OF THE PIPE.
4. THE STRUCTURAL BACKFILL SHALL BE PLACED AND COMPACTED IN LAYERS NOT EXCEEDING 8". THE LAYERS SHALL BE BROUGHT UP EVENLY AND SIMULTANEOUSLY TO THE ELEVATION OF THE MINIMUM COVER.
5. PIPE INSTALLATION MAY REQUIRE THE USE OF RESTRAINTS, WEIGHTING OR OTHER APPROVED METHODS IN ORDER TO HELP MAINTAIN GRADE AND ALIGNMENT.

GENERAL NOTES

1. PIPE SHALL CONFORM TO AASHTO M294, TYPE S. INSTALLATION SHALL CONFROM TO JOB SPECIAL PROVISION "PLASTIC PIPE" AND SECTION 606 OF THE STANDARD SPECIFICIATIONS FOR HIGHWAY CONSTRUCTION (CURRENT EDITION).
2. PLASTIC PIPE CULVERT DESIGN SHALL CONFORM TO AASHTO LRFD BRIDGE DESIGN SPECIFICATIONS, FIFTH EDITION (2010) WITH 2010 INTERIMS.
3. THE MAXIMUM ALLOWABLE TRENCH WIDTH SHALL BE THE MINIMUM WIDTH PLUS A SUFFICIENT WIDTH TO ENSURE WORKING ROOM TO PROPERLY AND SAFELY PLACE AND COMPACT HAUNCHING AND OTHER BACKFILL MATERIAL.
4. IMPERVIOUS MATERIAL SHOULD BE PLACED AS DIRECTED BY THE ENGINEER AT THE ENDS OF THE CULVERT TO PREVENT LOSS OF STRUCTURAL BEDDING WHEN PERVIOUS MATERIAL IS USED FOR STRUCTURAL BEDDING AND/OR BACKFILL.
5. WHEN DIRECTED BY THE ENGINEER, UNSUITABLE MATERIAL THAT IS ENCOUNTERED AT THE BOTTOM OF THE EXCAVATED TRENCH (BELOW THE AREA IDENTIFIED AS "STRUCTURAL BEDDING" ABOVE) WILL BE EXCAVATED AND REPLACED WITH SELECTED PIPE BEDDING. THE QUANTITY OF MATERIAL REQUIRED TO BACKFILL THE UNDERCUT AREA UP TO THE SELECTED PIPE BEDDING PAY LIMIT DESIGNATED ABOVE WILL BE MEASURED AND PAID FOR AS "SELECTED PIPE BEDDING."
6. WHEN THE EXISTING MATERIAL EXCAVATED FOR THE PIPE TRENCH IS DETERMINED BY THE ENGINEER TO BE UNSUITABLE FOR BACKFILLING THE PIPE (ABOVE THE AREA IDENTIFIED ABOVE AS STRUCTURAL BACKFILL), BORROW MATERIAL OR MATERIAL FROM THE ROADWAY EXCAVATION WILL BE USED TO BACKFILL THE PIPE. IF SUITABLE MATERIAL IS NOT AVAILABLE, THE ENGINEER MAY AUTHORIZE THE USE OF "SELECTED PIPE BACKFILL."
7. FOR PIPE TYPES THAT ARE NOT SMOOTH ON THE OUTSIDE (CORRUGATED OR PROFILE WALLS), BACKFILL GRADATIONS SHOULD BE SELECTED THAT WILL PERMIT THE FILLING OF THE CORRUGATION OR PROFILE VALLEY.
8. HIGH DENSITY POLYETHYLENE PIPES OF DIAMETERS OTHER THAN SHOWN WILL NOT BE ALLOWED.
9. JOINTS FOR HDPE PIPE SHALL MEET THE REQUIREMENTS FOR SOIL TIGHTNESS AS SPECIFIED IN AASHTO SECTION 26.4.2.4 AND 30.4.2 "AASHTO LRFD BRIDGE CONSTRUCTION SPECIFICATIONS." JOINTS SHALL BE INSTALLED PER MANUFACTURER'S RECOMMENDATIONS.

- LEGEND -

H = FILL HEIGHT (FT.)
Ø = OUTSIDE DIAMETER OF PIPE
MAX. = MAXIMUM
MIN. = MINIMUM

= STRUCTURAL BACKFILL MATERIAL

= UNDISTURBED SOIL

DATE	REVISION	DATE FILMED
2-27-14	REVISED GENERAL NOTE 1.	
12-15-11	REVISED GENERAL NOTES & MINIMUM COVER NOTE	
11-17-10	ISSUED	

ARKANSAS STATE HIGHWAY COMMISSION

PLASTIC PIPE CULVERT (HIGH DENSITY POLYETHYLENE)

STANDARD DRAWING PCP-1

INSTALLATION TYPE	•• MATERIAL REQUIREMENTS FOR STRUCTURAL BACKFILL AND STRUCTURAL BEDDING
TYPE 2	•SELECTED MATERIALS (CLASS SM-1, SM-2, OR SM-4)

• AGGREGATE BASE COURSE (CLASS 4, 5, 6, OR 7) MAY BE USED IN LIEU OF SELECTED MATERIAL.

SM3 WILL NOT BE ALLOWED.

•• STRUCTURAL BEDDING MATERIAL SHALL HAVE A MAXIMUM PARTICLE SIZE OF 1 INCH. STRUCTURAL BACKFILL MATERIAL SHALL BE FREE OF ORGANIC MATERIAL, STONES LARGER THAN 1.50 INCH IN GREATEST DIMENSION, OR FROZEN LUMPS.

STRUCTURAL BACKFILL AND STRUCTURAL BEDDING MATERIAL WILL NOT BE PAID FOR SEPARATELY, BUT COMPENSATION WILL BE CONSIDERED TO BE INCLUDED IN THE PRICE BID PER LINEAR FOOT OF PVC PIPE.

MINIMUM TRENCH WIDTH BASED ON FILL HEIGHT "H"

PIPE DIAMETER	TRENCH WIDTH (FEET)	
	"H" < 10'-0"	"H" >OR= 10'-0"
18"	4'-6"	4'-6"
24"	5'-0"	6'-0"
30"	5'-6"	7'-6"
36"	6'-0"	9'-0"

MULTIPLE INSTALLATION OF PVC PIPES

PIPE DIAMETER	CLEAR DISTANCE BETWEEN PIPES
18"	1'-6"
24"	2'-0"
30"	2'-6"
36"	3'-0"

MAXIMUM FILL HEIGHT BASED ON STRUCTURAL BACKFILL

PIPE DIAMETER	"H"
18"	45'-0"
24"	45'-0"
30"	40'-0"
36"	40'-0"

① NOTE:
12" MIN. (18" - 36" DIAMETERS)
MINIMUM COVER VALUE, "H" SHALL INCLUDE A MINIMUM 12" OF PAVEMENT AND/OR BASE.

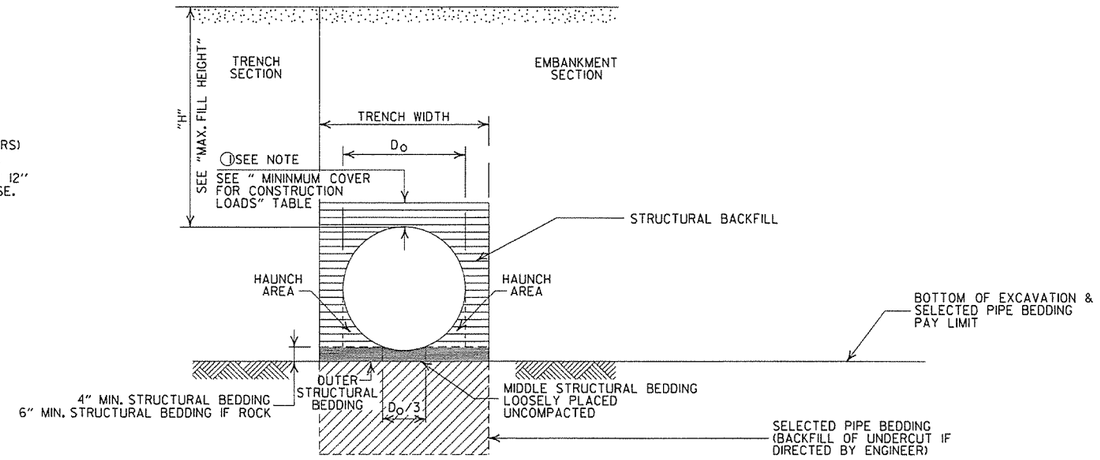

TYPE 2 EMBANKMENT AND TRENCH INSTALLATIONS

1. STRUCTURAL BACKFILL, EMBANKMENT, AND OUTER STRUCTURAL BEDDING MATERIAL SHALL BE COMPACTED TO 95% OF THE MAXIMUM DENSITY ACCORDING TO THE TYPE OR CLASS OF MATERIAL USED.

MINIMUM COVER FOR CONSTRUCTION LOADS

PIPE DIAMETER	② MIN. COVER (FEET) FOR INDICATED CONSTRUCTION LOADS			
	18.0-50.0 (KIPS)	50.0-75.0 (KIPS)	75.0-110.0 (KIPS)	110.0-175.0 (KIPS)
18" THRU 36"	2'-0"	2'-6"	3'-0"	3'-0"

②MINIMUM COVER SHALL BE MEASURED FROM TOP OF PIPE TO TOP OF THE MAINTAINED CONSTRUCTION ROADWAY SURFACE. THE SURFACE SHALL BE MAINTAINED.

CONSTRUCTION SEQUENCE

1. PLACE STRUCTURAL BEDDING MATERIAL TO GRADE. DO NOT COMPACT.
2. INSTALL PIPE TO GRADE.
3. COMPACT STRUCTURAL BEDDING OUTSIDE THE MIDDLE THIRD OF THE PIPE.
4. THE STRUCTURAL BACKFILL SHALL BE PLACED AND COMPACTED IN LAYERS NOT EXCEEDING 8". THE LAYERS SHALL BE BROUGHT UP EVENLY AND SIMULTANEOUSLY TO THE ELEVATION OF THE MINIMUM COVER.
5. PIPE INSTALLATION MAY REQUIRE THE USE OF RESTRAINTS, WEIGHTING OR OTHER APPROVED METHODS IN ORDER TO HELP MAINTAIN GRADE AND ALIGNMENT.

GENERAL NOTES

1. PIPE SHALL CONFORM TO ASTM F949, CELL CLASS 12454. INSTALLATION SHALL CONFROM TO JOB SPECIAL PROVISION "PLASTIC PIPE" AND SECTION 606 OF THE STANDARD SPECIFICIATIONS FOR HIGHWAY CONSTRUCTION (CURRENT EDITION).
2. PLASTIC PIPE CULVERT DESIGN SHALL CONFORM TO AASHTO LRFD BRIDGE DESIGN SPECIFICATIONS, FIFTH EDITION (2010) WITH 2010 INTERIMS.
3. THE MAXIMUM ALLOWABLE TRENCH WIDTH SHALL BE THE MINIMUM WIDTH PLUS A SUFFICIENT WIDTH TO ENSURE WORKING ROOM TO PROPERLY AND SAFELY PLACE AND COMPACT HAUNCHING AND OTHER BACKFILL MATERIAL.
4. IMPERVIOUS MATERIAL SHOULD BE PLACED AS DIRECTED BY THE ENGINEER AT THE ENDS OF THE CULVERT TO PREVENT LOSS OF STRUCTURAL BEDDING WHEN PERVIOUS MATERIAL IS USED FOR STRUCTURAL BEDDING AND/OR BACKFILL.
5. WHEN DIRECTED BY THE ENGINEER, UNSUITABLE MATERIAL THAT IS ENCOUNTERED AT THE BOTTOM OF THE EXCAVATED TRENCH (BELOW THE AREA IDENTIFIED AS "STRUCTURAL BEDDING" ABOVE) WILL BE EXCAVATED AND REPLACED WITH SELECTED PIPE BEDDING. THE QUANTITY OF MATERIAL REQUIRED TO BACKFILL THE UNDERCUT AREA UP TO THE SELECTED PIPE BEDDING PAY LIMIT DESIGNATED ABOVE WILL BE MEASURED AND PAID FOR AS "SELECTED PIPE BEDDING."
6. WHEN THE EXISTING MATERIAL EXCAVATED FOR THE PIPE TRENCH IS DETERMINED BY THE ENGINEER TO BE UNSUITABLE FOR BACKFILLING THE PIPE (ABOVE THE AREA IDENTIFIED ABOVE AS STRUCTURAL BACKFILL), BORROW MATERIAL OR MATERIAL FROM THE ROADWAY EXCAVATION WILL BE USED TO BACKFILL THE PIPE. IF SUITABLE MATERIAL IS NOT AVAILABLE, THE ENGINEER MAY AUTHORIZE THE USE OF "SELECTED PIPE BACKFILL."
7. FOR PIPE TYPES THAT ARE NOT SMOOTH ON THE OUTSIDE (CORRUGATED OR PROFILE WALLS), BACKFILL GRADATIONS SHOULD BE SELECTED THAT WILL PERMIT THE FILLING OF THE CORRUGATION OR PROFILE VALLEY.
8. PVC PIPES OF DIAMETERS OTHER THAN SHOWN WILL NOT BE ALLOWED.
9. JOINTS FOR PVC PIPE SHALL MEET THE REQUIREMENTS FOR SOIL TIGHTNESS AS SPECIFIED IN AASHTO SECTION 26.4.2.4 AND 30.4.2 "AASHTO LRFD BRIDGE CONSTRUCTION SPECIFICATIONS." JOINTS SHALL BE INSTALLED PER MANUFACTURER'S RECOMMENDATIONS.

- LEGEND -

H = FILL HEIGHT (FT.)
D_O = OUTSIDE DIAMETER OF PIPE
MAX. = MAXIMUM
MIN. = MINIMUM

= STRUCTURAL BACKFILL MATERIAL

= UNDISTURBED SOIL

DATE	REVISION	DATE FILMED
2-27-14	REVISED GENERAL NOTE 1.	
12-15-11	REV GENERAL NOTES & MINIMUM COVER NOTE; DELETED SM3 MATERIAL	
11-17-10	ISSUED	

ARKANSAS STATE HIGHWAY COMMISSION

PLASTIC PIPE CULVERT (PVC F949)

STANDARD DRAWING PCP-2

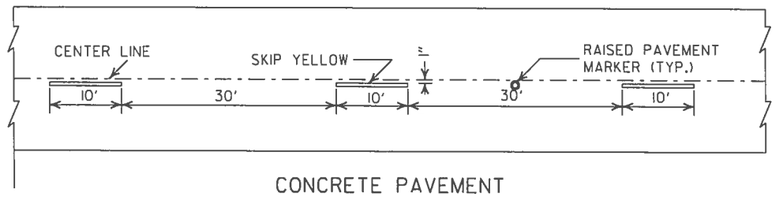

CONCRETE PAVEMENT

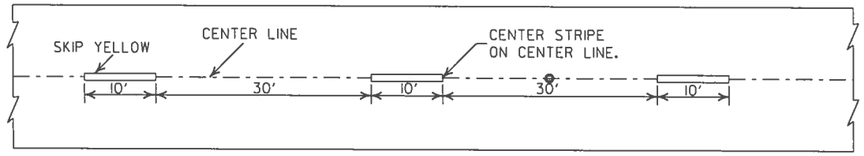

ASPHALT PAVEMENT

BROKEN LINE STRIPING

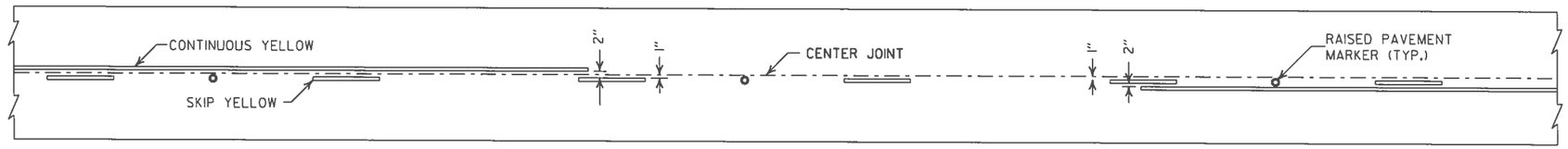

SOLID LINE STRIPING ON CONCRETE PAVEMENT

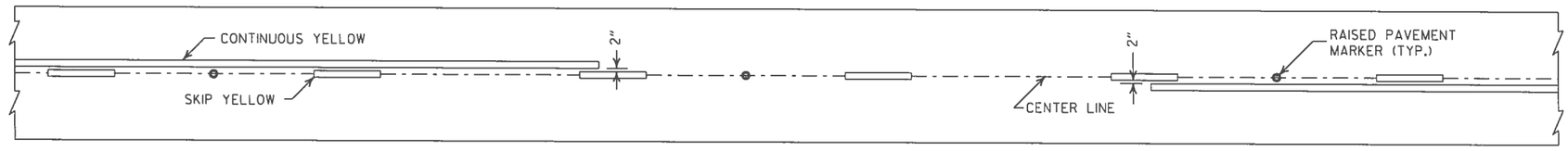

SOLID LINE STRIPING ON ASPHALT PAVEMENT

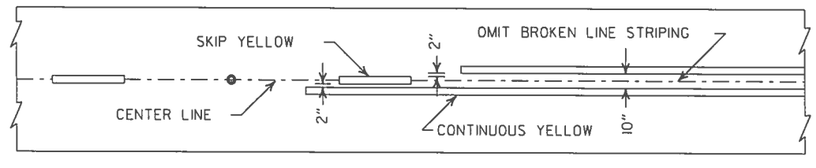

ASPHALT PAVEMENT

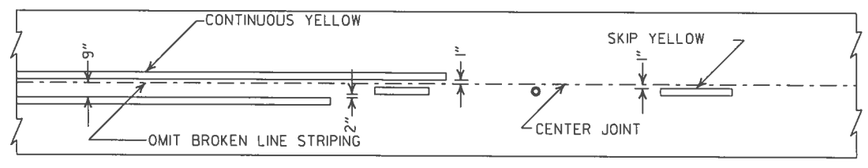

CONCRETE PAVEMENT

STRIPING AT ADJACENT NO PASSING LANES

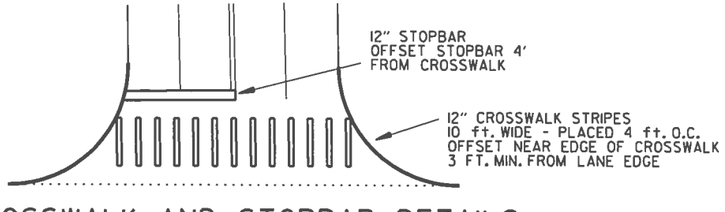

CROSSWALK AND STOPBAR DETAILS

NOTES:

1. REFER TO THE STRIPING DETAILS FOR PAVEMENT MARKING LINE WIDTHS.
2. THIS DRAWING SHALL BE USED IN CONJUNCTION WITH THE LATEST REVISED ADDITION OF THE "MANUAL ON UNIFORM TRAFFIC CONTROL DEVICES."
3. RAISED PAVEMENT MARKERS SHALL BE PLACED ON AN 80 FEET SPACING UNLESS OTHERWISE SHOWN IN THE PLANS.

2" FOR ASPHALT OR CONCRETE PAVEMENT
6" FOR BITUMINOUS SURFACE TREATMENT

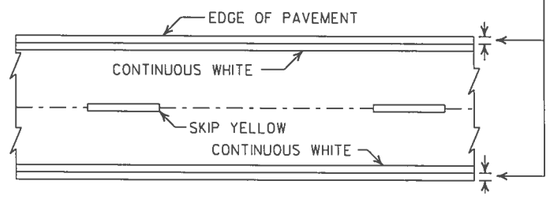

PAVEMENT EDGE LINE MARKING

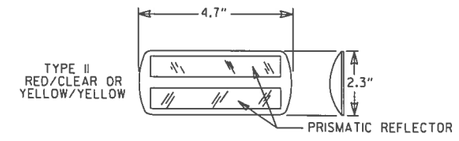

NOTE:
THE RED LENS OF THE TYPE II R.P.M. SHALL FACE THE INCORRECT TRAFFIC MOVEMENT.

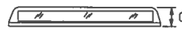

DETAIL OF STANDARD RAISED PAVEMENT MARKERS

NOTE:
DIMENSIONS SHOWN FOR RAISED PAVEMENT MARKERS ARE TYPICAL. THE CONTRACTOR MAY SUBSTITUTE SIMILAR MARKERS WITH THE APPROVAL OF THE ENGINEER. REQUESTING APPROVAL FOR SIMILAR MARKERS MAY BE MADE BY REFERRING TO THE AHTD QUALIFIED PRODUCTS LIST.

DATE	REVISION	FILMED
5-12-16	REVISED LINE WIDTHS, SPACING, & NOTES	
9-12-13	REVISED DETAIL OF STANDARD RAISED PAVEMENT MARKERS	
11-17-10	REVISED GENERAL NOTES & REMOVED PLOWABLE PVMT MRKRS	
11-18-04	REVISED NOTE 2 & GENERAL NOTES	
8-22-02	ADDED CROSSWALK & STOPBAR DTLS.	
7-02-98	ADDED DETAILS OF STD. RAISED PAV'T. MARKERS	
4-26-96	REV. NOTES 3&4; ADDED R.P.M.	
9-30-80	DRAWN	1-9-30-80

ARKANSAS STATE HIGHWAY COMMISSION

PAVEMENT MARKING DETAILS

STANDARD DRAWING PM-1

PAVEMENT MARKING QUANTITIES
(BASED ON 700' ACCEL. LANE + 300' TAPER)

ENTRANCE RAMP

8" WHITE = 228 LIN. FT.
RAISED PAVEMENT MARKERS TYPE II (WHITE/RED) = 38 EACH

EXIT RAMP

4" WHITE = 280 LIN. FT.
8" WHITE = 655 LIN. FT.
RAISED PAVEMENT MARKERS TYPE II (WHITE/RED) = 38 EACH
RAISED PAVEMENT MARKERS TYPE II (WHITE/RED) = 48 EACH
RAISED PAVEMENT MARKERS TYPE II (WHITE/RED) = 38 EACH

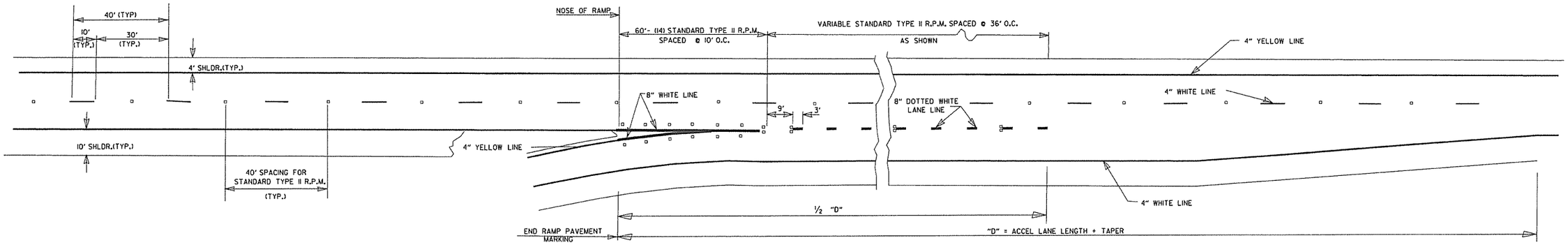

ENTRANCE RAMPS

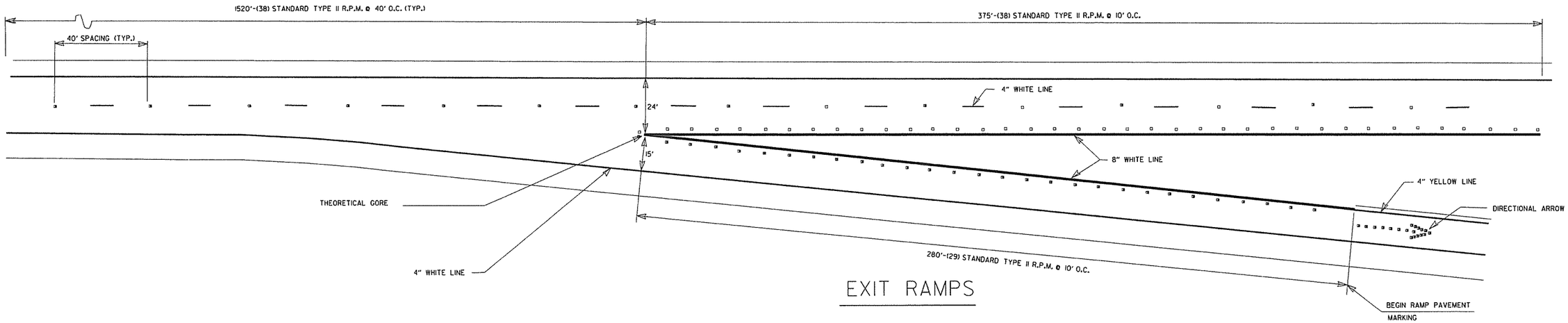

EXIT RAMPS

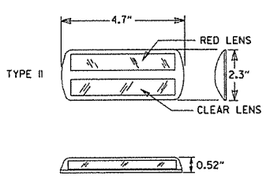

DETAIL OF
STANDARD
RAISED PAVEMENT MARKERS

NOTE:
THE RED LENS OF THE TYPE II R.P.M. SHALL FACE THE INCORRECT TRAFFIC MOVEMENT.

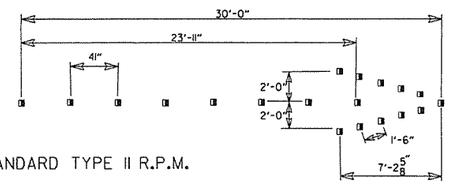

(19) STANDARD TYPE II R.P.M.

DIRECTIONAL ARROWS

GENERAL NOTES:

THIS DRAWING SHOULD BE CONSIDERED AS TYPICAL ONLY AND THE FINAL LOCATION OF THE STRIPING AND PAVEMENT MARKERS SHALL BE DETERMINED BY THE ENGINEER.

THIS DRAWING SHOULD BE USED IN CONJUNCTION WITH THE "MANUAL ON UNIFORM TRAFFIC CONTROL DEVICES", LATEST REVISION.

NOTE:
DIMENSIONS SHOWN FOR RAISED PAVEMENT MARKERS ARE TYPICAL. THE CONTRACTOR MAY SUBSTITUTE SIMILAR MARKERS WITH THE APPROVAL OF THE ENGINEER. REQUESTING APPROVAL FOR SIMILAR MARKERS MAY BE MADE BY REFERRING TO THE AHTD QUALIFIED PRODUCTS LIST.

DATE	REVISION	FILMED
9-12-13	REVISED DETAIL OF STANDARD RAISED PAVEMENT MARKERS	
7-26-12	REVISED RPM NOTATION	
12-15-11	REVISED RPMs ACCORDING TO LATEST POLICY	
11-17-10	REMOVED PLOWABLE PAVEMENT MARKERS	
6-3-10	REVISED PER 2009 MUTCD	
11-18-04	REVISED NOTES	
8-22-02	ADDED & REVISED NOTES; REV. ENTRANCE & EXIT RAMPS	
5-18-00	REMOVED HASHMARKS	
7-02-98	CHANGED TYPES TO ROMAN NUMERALS	
4-26-96	ADDED DIMENSIONS & QUANTITIES; REVISED LANE WIDTH ON EXIT RAMP	
2-2-95	PLACED IN USE	2-2-95

ARKANSAS STATE HIGHWAY COMMISSION

PERMANENT PAVEMENT MARKING ON ACCESS CONTROLLED ROADWAYS

STANDARD DRAWING PM-2

NOTE:
1. GRANULAR BACKFILL TO BE SUBSIDIARY TO PIPE UNDERDRAIN.

2. UNLESS OTHERWISE SPECIFIED ON THE PLANS, THE UNDERDRAIN COVER SHALL BE THOROUGHLY COMPACTED EARTH AND SHALL BE SUBSIDIARY TO PIPE UNDERDRAIN.

3. GRANULAR MATERIAL SHALL BE WRAPPED WITH GEOTEXTILE FABRIC. LAP FABRIC 12" OR THE WIDTH OF THE TRENCH AT THE TOP.

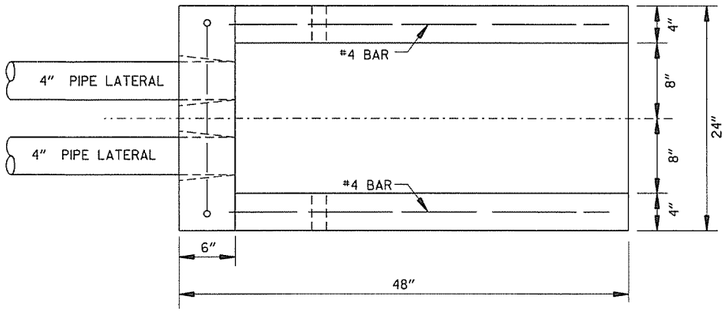

PLAN VIEW

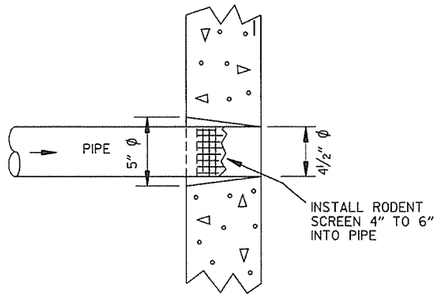

DETAIL OF HOLE FOR 4" PIPE

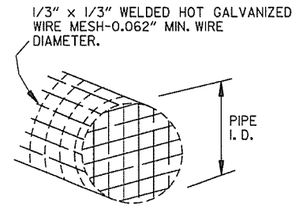

DETAIL OF RODENT SCREEN

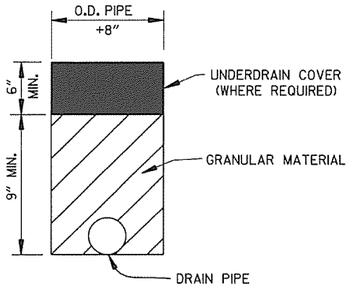

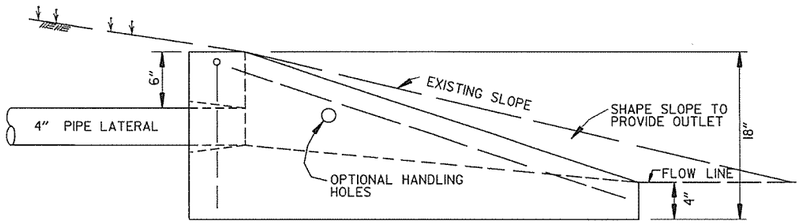

SIDE VIEW

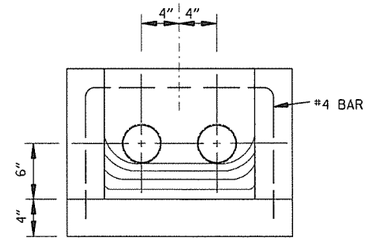

FRONT VIEW

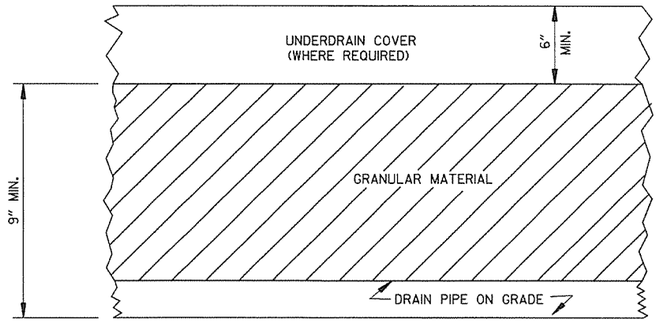

DETAILS OF PIPE UNDERDRAIN

UNDERDRAIN OUTLET PROTECTORS

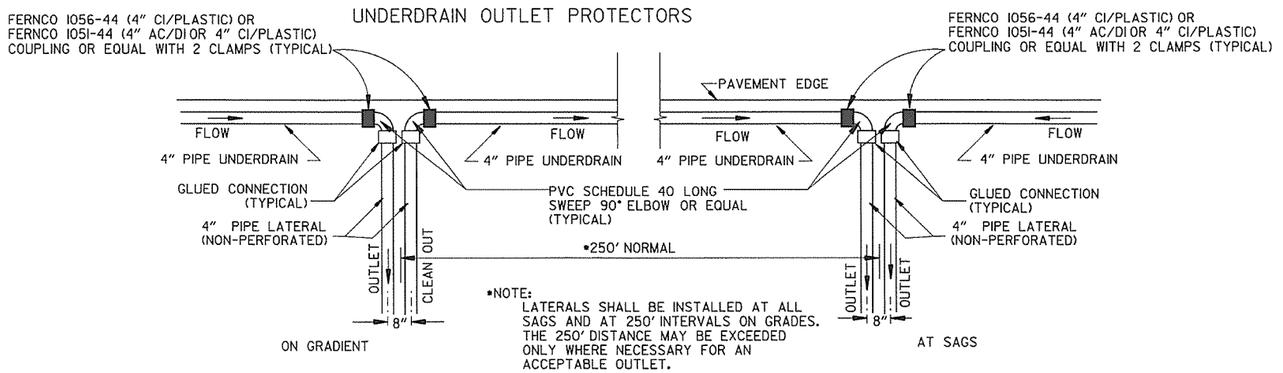

DETAIL OF PIPE UNDERDRAIN LATERALS WHEN PLACED ALONG PAVEMENT EDGE

NOTE: PVC PIPE FOR LATERALS SHALL MEET THE REQUIREMENTS OF ASTM D 1785 (LATEST REVISION) FOR SCHEDULE 40 PIPE.

DATE	REVISION	DATE FILMED
4-10-03	REVISED NOTE 3	
1-12-00	REVISED DETAIL OF UNDERDRAIN LATERALS	
11-18-98	REVISED NOTE	
10-18-96	REVISED MIN. DEPTH & GEOTEXTILE FABRIC	
4-26-96	ADDED LATERAL NOTE; 5½" TO 5"	
11-22-95	REVISED LATERALS	
7-20-95	REVISED LATERALS & ADDED NOTE	
11- 3-94	REVISED FOR DUAL LATERALS	11- 3-94
10- 1-92	SUBSTITUTED GEOTEXTILE	10- 1-92
8-15-91	ADDED POLYEDTHYLENE PIPE	8-15-91
11- 8-90	DELETED ALTERNATE NOTE	11- 8-90
1-25-90	ADDED 4" SNAP ADAPTER	1-25-90
11-30-89	DEL. (SUBGRADE); ADDED (WHERE REQUIRED)	11-30-89
7-15-88	ISSUED P.L.M.	647-7-15-88

ARKANSAS STATE HIGHWAY COMMISSION

DETAILS OF PIPE UNDERDRAIN

STANDARD DRAWING PU-1

7-20-95 INSTD.PUI

STEEL FABRICATION: REINFORCING STEEL FABRICATION SHALL CONFORM TO THE DIMENSIONS LISTED IN THE TABLE BELOW:

BAR SIZE	PIN DIAMETER	HOOK EXTENSION "K"
3	2¼"	4"
4	3 "	4½"
5	3¾"	5"
6	4½"	6"
7	5¼"	7"
8	6"	8"

IF THE OVERALL HEIGHT OF THE HOOK (SEE DIAGRAM BELOW) FOR A "b", "b1", "b2" or "b3" BENT BAR IS GREATER THAN THE CORRESPONDING TOP OR BOTTOM SLAB THICKNESS, LESS 2¾ INCHES, EACH BENT BAR SHALL BE REPLACED WITH ONE HOOKED BAR AND ONE STRAIGHT BAR, USING LENGTHS AS SHOWN IN THE TABLE BELOW. THE TWO BARS SHALL BE THE SAME DIAMETER AS, AND PLACED AT THE SAME SPACING AS, THE "b", "b1", "b2" OR "b3" BENT BARS THEY REPLACE.

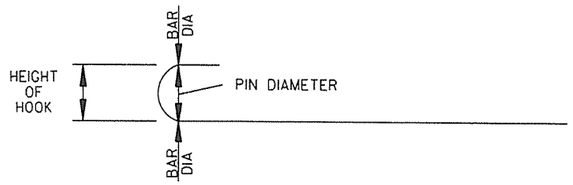

NOTE: DIMENSIONS OF BARS ARE MEASURED OUT TO OUT OF BARS.

OVERALL HEIGHT OF HOOKED BAR DIAGRAM

THE HOOKED BARS SHALL BE PLACED IN THE BOTTOM OF THE TOP SLAB AND THE TOP OF THE BOTTOM SLAB. THE STRAIGHT BARS SHALL BE PLACED IN THE TOP OF THE TOP SLAB AND THE BOTTOM OF THE BOTTOM SLAB. SEE TABLE BELOW FOR LENGTHS OF REPLACEMENT HOOKED AND STRAIGHT BARS.

FOR SKEWED CULVERTS, THE REPLACEMENT STRAIGHT BAR MAY HAVE TO BE CUT IN FIELD TO FIT.

REPLACEMENT BAR LENGTHS TABLE

BAR SIZE: "b", "b1", "b2" OR "b3"	LENGTH OF HOOKED BAR	LENGTH OF STRAIGHT BAR
#4	L + 1' - 0"	SEE "c" BAR LENGTH
#5	L + 1' - 2"	SEE "c" BAR LENGTH
#6	L + 1' - 4"	SEE "c" BAR LENGTH
#7	L + 1' - 8"	SEE "c" BAR LENGTH
#8	L + 1' - 10"	SEE "c" BAR LENGTH
#9	L + 2' - 6"	SEE "c" BAR LENGTH

L = "OW" - 3 INCHES

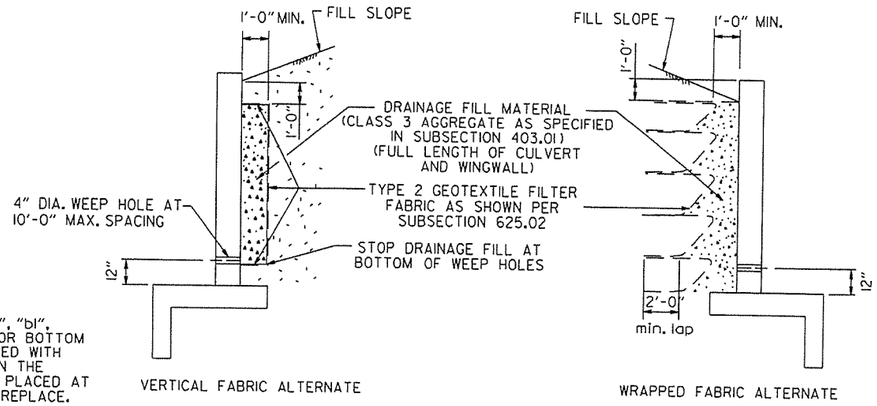

WINGWALL & CULVERT DRAINAGE DETAIL

REINFORCED CONCRETE BOX CULVERT GENERAL NOTES

CONCRETE SHALL BE CLASS S WITH A MINIMUM 28 DAY COMPRESSIVE STRENGTH OF 3500 PSI.

REINFORCING STEEL SHALL BE AASHTO M 31 OR M 53, GRADE 60.

CONSTRUCTION AND MATERIALS FOR WINGWALL & CULVERT DRAINAGE, INCLUDING WEEP HOLES AND GRANULAR MATERIAL, SHALL BE SUBSIDIARY TO THE BID ITEM, "CLASS S CONCRETE".

MEMBRANE WATERPROOFING SHALL CONFORM TO THE REQUIREMENTS OF SECTION 815 OF THE STANDARD SPECIFICATIONS.

MEMBRANE WATERPROOFING SHALL BE APPLIED TO ALL CONSTRUCTION JOINTS IN THE TOP SLAB AND THE SIDEWALLS OF R.C. BOX CULVERTS AS DIRECTED BY THE ENGINEER. NO PAYMENT SHALL BE MADE FOR THIS ITEM, BUT PAYMENT WILL BE CONSIDERED TO BE INCLUDED IN THE VARIOUS ITEMS BID FOR THE R.C. BOX CULVERT.

REINFORCING STEEL TOLERANCES: THE TOLERANCES FOR REINFORCING STEEL SHALL MEET THOSE LISTED IN "MANUAL OF STANDARD PRACTICE" PUBLISHED BY CONCRETE REINFORCING STEEL INSTITUTE (CRSI) EXCEPT THAT THE TOLERANCE FOR TRUSS BARS SUCH AS FIGURE 3 ON PAGE 7-4 OF THE CRSI MANUAL SHALL BE MINUS ZERO TO PLUS ½ INCH.

WEEP HOLES IN BOX CULVERT WALLS SHALL HAVE A MAXIMUM HORIZONTAL SPACING OF 10'-0" AND SHALL BE SPACED TO CLEAR ALL REINFORCING STEEL. THE DRAIN OPENING SHALL BE 4" DIAMETER AND SHALL BE PLACED 12" ABOVE THE TOP OF THE BOTTOM SLAB.

WEEP HOLES IN WINGWALLS SHALL HAVE A MAXIMUM HORIZONTAL SPACING OF 10'-0" AND SHALL BE SPACED TO CLEAR ALL REINFORCING STEEL. THERE SHALL BE A MINIMUM OF TWO (2) WEEP HOLES IN EACH WINGWALL. THE DRAIN OPENING SHALL BE 4" DIAMETER AND SHALL BE PLACED 12" ABOVE THE TOP OF THE WINGWALL FOOTING.

THE REQUIREMENTS SHOWN ON THIS DRAWING SHALL SUPERCEDE THE CORRESPONDING REQUIREMENTS ON ALL REINFORCED CONCRETE BOX CULVERT STANDARD DRAWINGS.

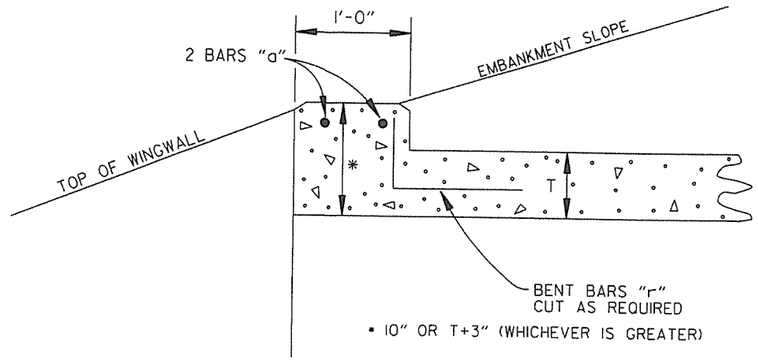

NOTE: FOR ALL SKEWED R.C. BOX CULVERTS THE LENGTH "K" OF THE MODIFIED HEADWALL SHALL BE EQUAL TO THE ROADWAY LENGTH "RL". THE ENDS OF THE HEADWALL SHALL BE CONSTRUCTED PARALLEL TO THE SKEW ANGLE OF THE BOX CULVERT.

R.C. BOX CULVERT HEADWALL MODIFICATIONS

DATE	REVISION	DATE FILMED
7/26/12	REV. DRAINAGE FILL MATERIAL & DETAIL	
12/15/11	REQUIRE WEEP HOLES IN BOX CULVERT WALLS	
5-25-06	REV. GEN. NOTES AND DETAILS FOR WEEP HOLES; BAR DIAGRAM	
11-16-01	ADDED WINGWALL DRAINAGE DETAIL/EDITED GEN. NOTES	
10-18-96	REV. ASTM REF. TO AASHTO & ADDED BAR DIAGRAM	
10-12-95	MOVED SOLID SODDING DETAIL TO RCB-2	
6-2-94	ADDED SOLID SODDING PLAN DETAIL	
8-5-93	REVISED PIN DIAMETER TO SPECS.	
8-15-91	DRAWN AND ISSUED	

ARKANSAS STATE HIGHWAY COMMISSION

REINFORCED CONCRETE BOX CULVERT DETAILS

STANDARD DRAWING RCB-1

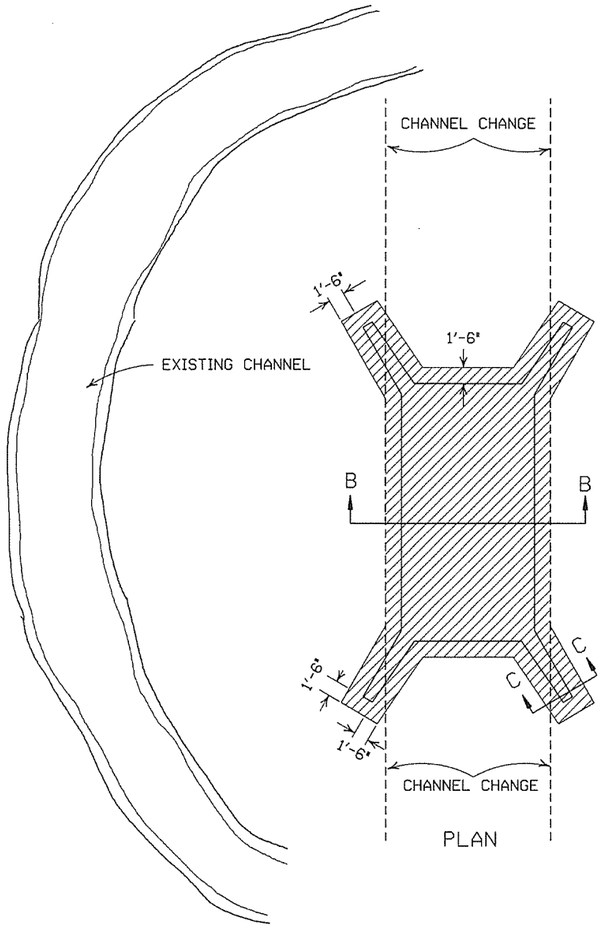

PLAN

SOLID SODDING

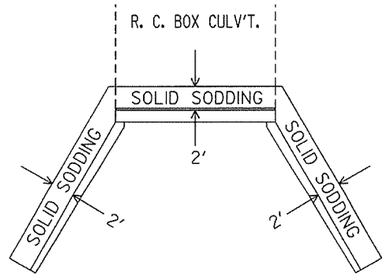

PLAN

PARTIAL SECTION SHOWING SOLID SODDING AT HEADWALLS AND WING WALLS

NOTE: LENGTH MEASURED ALONG THE CENTER OF 2' STRIP OF SOLID SODDING.

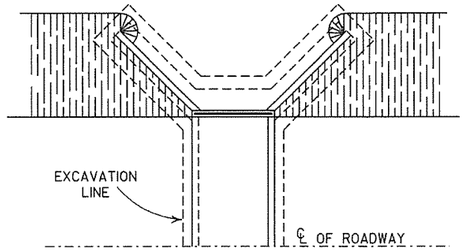

PLAN

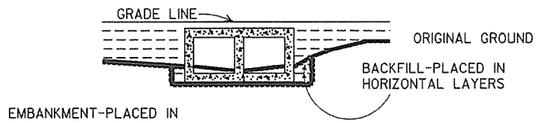

LONGITUDINAL SECTION

BACKFILL DETAILS FOR BOX CULVERT

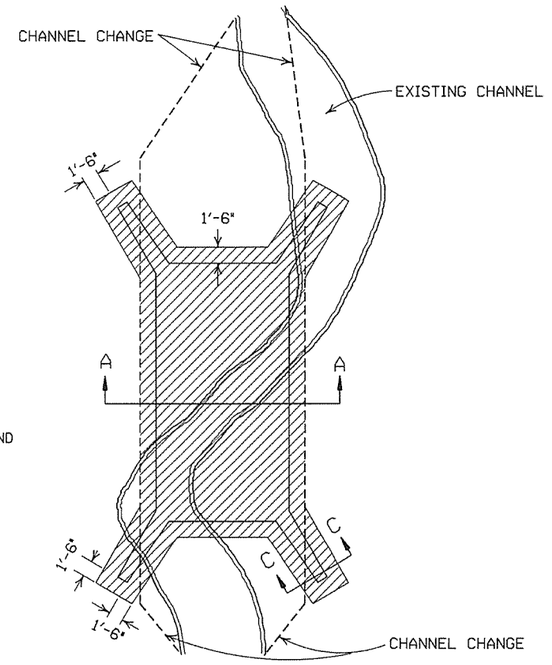

PLAN

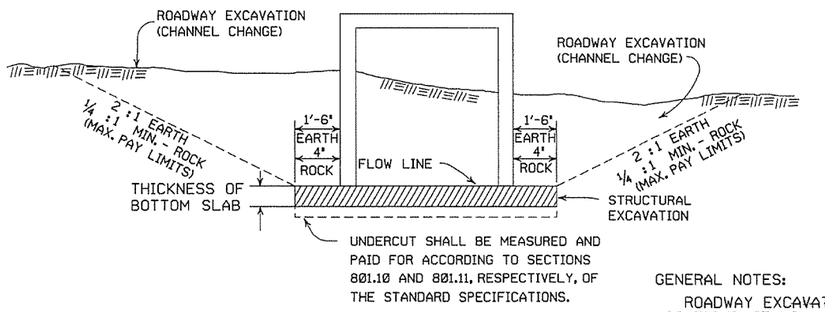

SECTION B-B

DETAILS FOR NEW CHANNELS

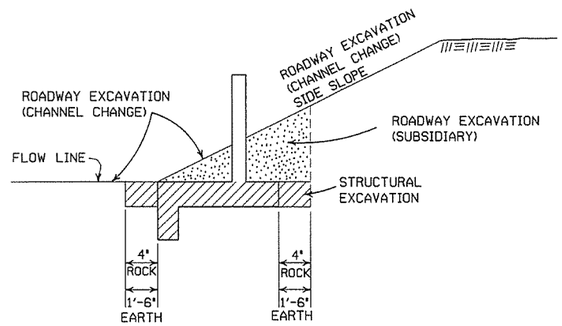

SECTION C-C

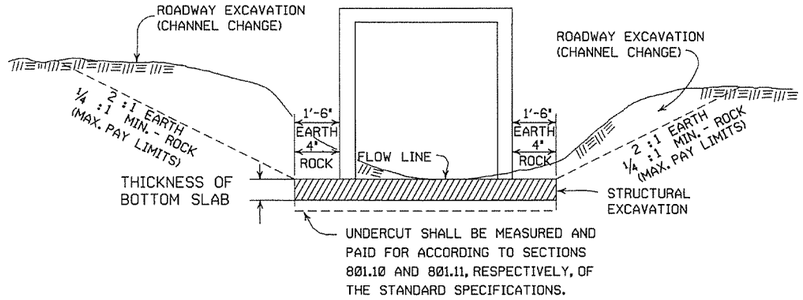

SECTION A-A

DETAILS THROUGH EXISTING CHANNELS

GENERAL NOTES:

ROADWAY EXCAVATION (CHANNEL CHANGE) WILL BE PAID FOR AT R.C. BOX CULVERT LOCATIONS. IT WILL BE PAID TO THE LIMITS ACTUALLY CUT AND WILL BE CONFINED TO THAT PORTION OF THE INDICATED AREA THAT IS ABOVE THE FLOW LINE. ROADWAY EXCAVATION (CHANNEL CHANGE) SHALL BE MEASURED BY CROSS SECTIONS AND VOLUMES COMPUTED BY AVERAGE END AREA METHOD. ALL CHANNEL CHANGES SHALL BE BROUGHT TO GRADE PRIOR TO MAKING ANY EXCAVATION FOR STRUCTURES.

EXCAVATION FOR STRUCTURES WILL BE PAID FOR AT ALL R.C. BOX CULVERT LOCATIONS. IT WILL BE PAID TO THE LIMITS SHOWN AND SHALL BE CONFINED TO THAT PORTION OF THE INDICATED AREA THAT IS BELOW THE CHANNEL FLOW LINE.

ROADWAY EXCAVATION SHOWN IN SECTION C-C ABOVE AS SUBSIDIARY WILL NOT BE MEASURED OR PAID FOR DIRECTLY, BUT PAYMENT WILL BE CONSIDERED TO BE INCLUDED IN THE VARIOUS ITEMS OF EXCAVATION.

DATE	REVISION	FILMED
11-20-03	REVISED SECTION A-A NOTE	
8-22-02	REVISED SECTION B-B NOTE	
10-12-95	COMBINED 1891B AND 1888A	
1-4-83	REVISED GENERAL NOTES	674-1-4-83
	AND ADDED MAXIMUM PAY	
	LIMIT NOTES.	
2-2-76	EXCAV. PAY LIMITS	917-2-2-76
10-2-72	REVISED AND REDRAWN	564-10-16-72

ARKANSAS STATE HIGHWAY COMMISSION

EXCAVATION PAY LIMITS, BACKFILL, & SOLID SODDING FOR BOX CULVERTS

STANDARD DRAWING RCB-2

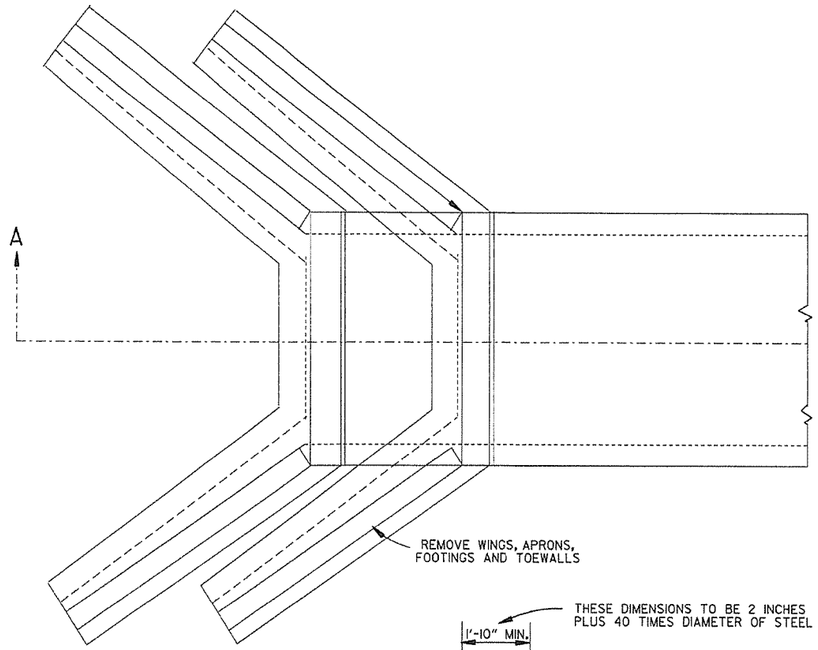

TOP VIEW
R.C. BOX CULVERT

SECTION A-A
METHOD 1

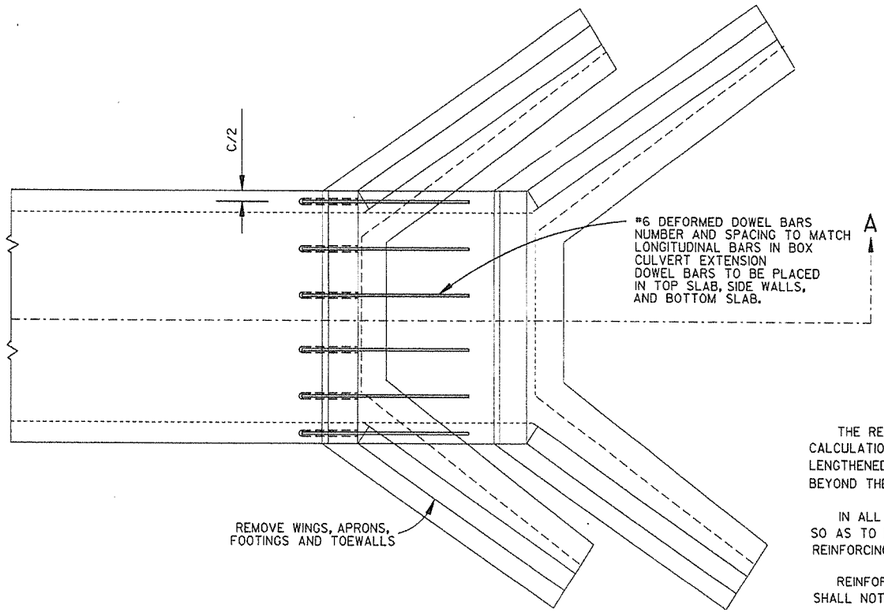

TOP VIEW
R.C. BOX CULVERT

SECTION A-A
METHOD 2

GENERAL NOTES

	USE FOR METHOD
THE RESIDENT ENGINEER WILL MAKE INDIVIDUAL CALCULATIONS OF QUANTITIES FOR EACH STRUCTURE LENGTHENED, MAKING NO ALLOWANCE FOR OVERBREAKAGE BEYOND THE LINES INDICATED.	1
IN ALL INSTANCES CONCRETE SHALL BE REMOVED SO AS TO PERMIT FULL 40 DIAMETER SPLICE OF REINFORCING STEEL.	1
REINFORCING STEEL REMOVED FROM EXISTING STRUCTURE SHALL NOT BE REUSED IN CONSTRUCTING EXTENSION.	1&2
ON R.C. BOX CULVERTS THAT HAVE AN EXISTING CONCRETE APRON; THE CONCRETE APRON SHALL BE REMOVED WITH THE WINGS. THE COST OF REMOVING ALL OLD CONCRETE WILL BE INCLUDED IN THE PRICE BID PER CUBIC YARD FOR NEW CONCRETE OF THE CLASS SPECIFIED AND NO ADDITIONAL COMPENSATION WILL BE ALLOWED.	1&2
MATERIALS FOR SECURING DOWEL BARS SHALL MEET THE REQUIREMENTS OF SECTION 507.02 OF THE STANDARD SPECIFICATIONS.	2
DOWEL BARS SHALL BE INSTALLED AS FOLLOWS: THE DRILLING PROCEDURE SHALL BE APPROVED BY THE ENGINEER, THE FILLING SYSTEM SHALL BE APPROVED BY THE ENGINEER. AND SHALL BE AN INJECTION-TYPE SYSTEM WHICH WILL INSURE THAT SUFFICIENT MATERIAL IS INJECTED SO IT COMPLETELY SURROUNDS THE BARS AND FILLS THE HOLES.	2
THE CONTRACTOR SHALL HAVE THE OPTION OF USING EITHER METHOD 1 OR METHOD 2. REGARDLESS OF WHICH METHOD IS USED, PAY QUANTITIES WILL BE CALCULATED BASED ON METHOD 1.	1&2

NOTE:
NO PART OF THIS STANDARD IS TO BE USED FOR ANY DETAILS RELATIVE TO NEW CONSTRUCTION.
SEE STANDARD DRAWING LISTED IN TABULATION OF STRUCTURES FOR ALL NEW CONSTRUCTION DETAILS.

DATE	REVISION	DATE FILM
10-12-95	CHANGED DRAWING # FROM 144-A	
4-1-93	ADDED GENERAL NOTE	
10-1-92	ADDED ALT. METHOD OF EXTENSION	
11-30-89	REDRAWN	
1-4-83	ELIMINATED CONCRETE CLASS	
12-20-56	RETRACED	

ARKANSAS STATE HIGHWAY COMMISSION

METHOD OF EXTENDING EXISTING R.C. BOX CULVERTS

STANDARD DRAWING RCB-3

LOOP DETECTOR INSTALLATION AND TESTING

NOTES:

1. LOOPS WITH A PERIMETER GREATER THAN 40' SHALL HAVE TWO TURNS. LOOPS WITH A PERIMETER LESS THAN OR EQUAL TO 40' SHALL HAVE THREE TURNS, UNLESS OTHERWISE NOTED ON THE PLANS. QUADRUPOLE LOOPS SHALL BE TWO TURNS (2-4-2 CONFIGURATION) UNLESS OTHERWISE NOTED.
2. LOOP AND FEEDER WIRE SHALL BE CONTINUOUS WITHOUT SPLICES EXCEPT AT THE LOOP/FEEDER WIRE SPLICE AS SHOWN. SPLICE SHALL BE ROSIN SOLDERED AND WATERPROOFED WITH AN ACCEPTED SPLICE KIT. DRAIN WIRE SHALL BE GROUNDED IN CABINET AND INSULATED AT LOOP TO FEEDER SPLICE.
3. THE LOOP TO FEEDER SPLICE, FEEDER JACKET AND JACKET OF LOOP WIRE IN DUCT SHALL BE COMPLETELY SEALED AND WATERPROOFED.
4. CONTRACTOR MAY MAKE CONNECTIONS TO SIGNAL CABLE AND LOOP TO FEEDER CONNECTION AT TERMINAL STRIPS MOUNTED TO POLE INSIDE HAND HOLD COVER AS SHOWN IN DETAIL. TERMINALS MUST BE EASILY ACCESSIBLE, BUT PROTECTED AGAINST ACCIDENTAL CONTACT. CONNECTION OF POWER CARRYING CIRCUITS MUST BE SEPARATED FROM LOOP OR LOGIC CIRCUITS. ALL CONNECTIONS TO TERMINAL STRIPS SHALL UTILIZE SPADE LUGS OR AS APPROVED BY THE ENGINEER.
5. EACH LOOP SHALL HAVE A SEPARATE "FEEDER WIRE" UNLESS OTHERWISE NOTED. ALL FEEDER WIRES SHALL BE LABELED AS TO LOOP NUMBER AS DESIGNATED ON THE PLANS.
6. ALL LOOP WIRE ENTERING PULL BOXES SHALL BE ENCLOSED IN CONDUIT. EACH LOOP WIRE SHALL ENTER PULL BOX OR POLE BASE THROUGH A SEPARATE PIECE OF ONE INCH (1"Ø) CONDUIT.
7. LOOP WIRE FROM LOOP TO CONDUIT IS NOT TWISTED. LOOP WIRE IN THE CONDUIT MUST BE TWISTED TWO TO FIVE TURNS PER FOOT.
8. WARRANTY PERIOD FOR LOOPS SHALL NOT COMMENCE UNTIL TESTED BY THE CONTRACTOR AND ACCEPTED BY THE ENGINEER. CONTRACTOR SHALL PERFORM TEST AND PROVIDE A RECORD TO THE ENGINEER AS LISTED IN THE DETECTOR LOOP TESTING PROCEDURE.
9. UNLESS OTHERWISE APPROVED BY THE ENGINEER, BACKER ROD SHALL BE INSTALLED IN SHORT SECTIONS SPACED NOT MORE THAN 18" APART AND WEDGED INTO SLOT TO HOLD CABLE IN PLACE. CABLE SHALL BE TOTALLY ENCAPSULATED IN SEALER.
10. "HOT POUR" SEALER SHALL NOT BE ALLOWED WITH 705-LOOP WIRING IN DUCT.
11. WHERE UNDERGROUND SPLICES OF SIGNAL CABLE ARE REQUIRED, CONNECTIONS SHALL BE SOLDERED AND COMPLETELY WATERPROOFED TO THE SATISFACTION OF THE ENGINEER. WATERPROOFING SHALL EXTEND A MINIMUM OF TWO INCHES PAST THE SIGNAL CABLE JACKET AND SHALL COMPLETELY COVER ALL INDIVIDUAL CONDUCTORS OF THE SIGNAL CABLE. WATERPROOFING DOES NOT APPLY TO CONNECTIONS MADE IN POLE BASES.
12. CONTRACTOR SHALL CONNECT A SEPARATE NEUTRAL FOR EACH LOAD SWITCH REPRESENTED ON EACH SIGNAL POLE. ONLY ONE NEUTRAL IS REQUIRED FOR PEDESTRIAN SIGNALS. A SEPARATE 5C (TYPICAL) IS PROVIDED FOR PEDESTRIAN PUSH BUTTONS.
13. TRAFFIC CONTROLLER CABINET AND LAYOUT SHALL BE SUCH THAT IT IS NOT NECESSARY TO SHUT DOWN POWER OR REMOVE LOAD SWITCHES IN ORDER TO EASILY TEST OR MODIFY DETECTOR INPUTS TO CONTROLLER. CONTROLLER CABINET SHALL BE WIRED SUCH POWER TO LOAD SWITCHES CANNOT BACKFEED TO LOAD SWITCH POWER BUSS DURING FLASH OPERATION.

SERIES CONNECTED LOOPS

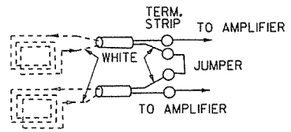

WIND LOOPS COUNTERCLOCKWISE; TAG WIRE EXITING SLOT AND TIE TO WHITE LEAD OF FEEDER WIRE; WHEN LOOPS ARE TIED TO SAME VEHICLE DETECTOR, SERIES CONNECT IN CABINET AS SHOWN.

TRAFFIC SIGNAL PRE-EMPTION INTERFACE WIRING DIAGRAM

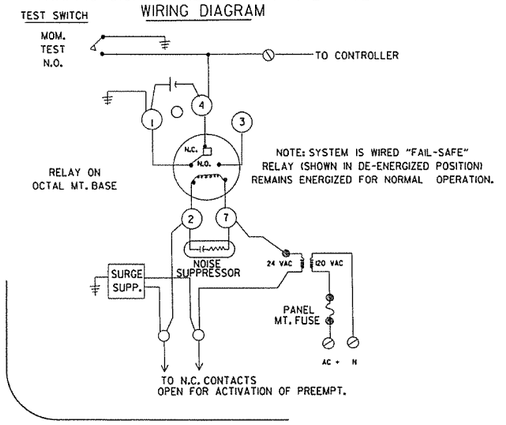

HANDHOLE TERMINAL

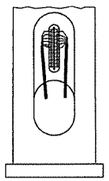

QUADRUPOLE LOOP

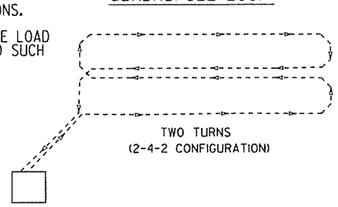

TYPICAL INTERSECTION

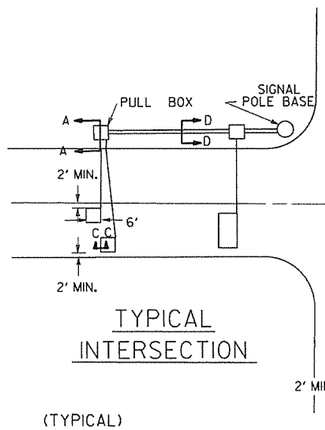

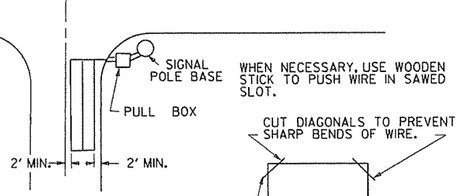

TRENCHING DETAIL

(FOR SAW CUT TRENCH IN ROADWAY)

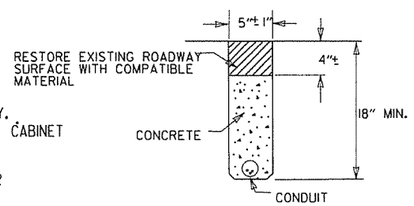

TYPICAL PROCEDURE FOR DETECTOR LOOP TESTING

1. DISCONNECT AND TEST CONTINUITY (< 10 OHMS) IF CONTINUITY IS BAD, GO TO TEST 3
2. TEST INSULATION (@ 500 VOLT TEST > 10 MEG-OHM)
   IF TESTS 1& 2 ARE GOOD, NO FURTHER TESTING IS NECESSARY. RECORDED RESULTS CONSIST OF TESTS 1& 2 FROM CONTROL CABINET WITH FEEDER WIRE CONNECTED TO LOOP.
3. OPEN SPLICE (DO NOT BREAK CONNECTION) REPEAT TEST 1& 2 IF TEST 3 IS BAD, GO TO TEST 4
4. BREAK SPLICE, INSTALL JUMPER IN CABINET, REPEAT TESTS 1& 2 SEPARATELY FOR FEEDER AND FOR LOOP

FAILURES TYPICALLY RESULT FROM BROKEN WIRE IN PAVEMENT, FAULTY INSULATION OF LOOP OR FEEDER WIRE, OR POORLY INSULATED SPLICE CONNECTION.

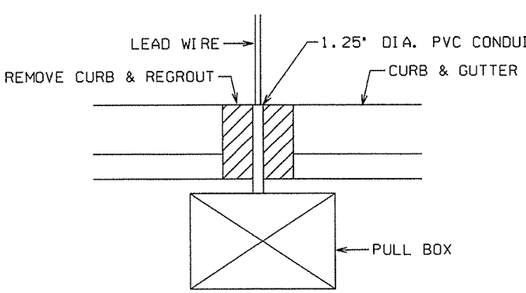

NOTE: CONDUIT SHALL BE INSTALLED IN CURB AS SHOWN OR AS DIRECTED BY THE ENGINEER. END OF CONDUIT SHALL BE WATER-TIGHT.

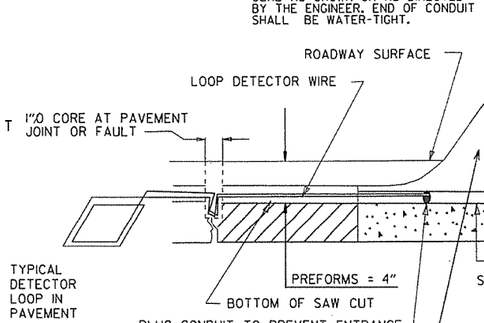

ALTERNATE - WHEN INSTALLING PREFORMS ON SUBSTRATE, LEAD-INS MAY BE INSTALLED IN CONDUIT UNDERNEATH THE CURB AND GUTTER.

SECTION A-A

1'-6" CONCRETE COMBINATION CURB AND GUTTER

(TYPICAL)

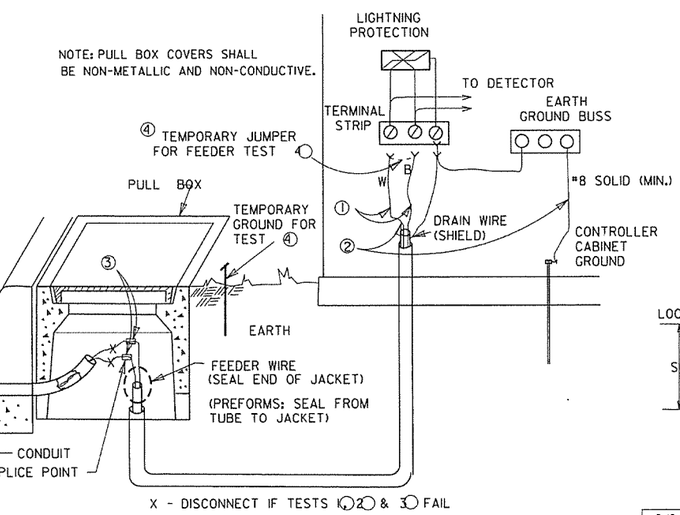

SPECIAL NOTE

IF FEEDER WIRE JACKET IS LEFT UNSEALED AND WATER IS ALLOWED TO ENTER JACKET, CONTRACTOR WILL BE REQUIRED TO REPLACE FEEDER AT NO COST TO THE DEPARTMENT.

TYPICAL SECTIONS FOR PULSE AND PRESENCE LOOP DETECTORS

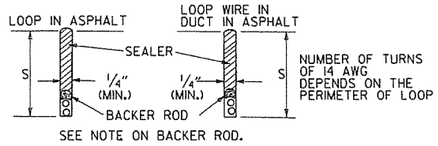

SEE NOTE ON BACKER ROD.

SECTION C-C

S=2 ½" IN ASPHALT
S=1½" IN CONCRETE

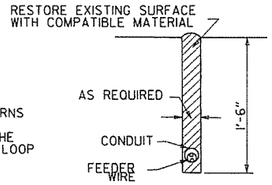

SECTION D-D

DATE	REVISION	DATE FILM
9-12-13	ISSUED AS STANDARD DRAWING	
5-17-01	REVISED	
4-11-01	REVISED	
2-4-00	REVISED PRE-EMPTION TEST SWITCH	
11-18-98	REVISED NOTES	
11-21-95	ISSUED	

ARKANSAS STATE HIGHWAY COMMISSION

LOOP DETECTOR INSTALLATION

STANDARD DRAWING SD-4

DRAWER PLAN VIEW

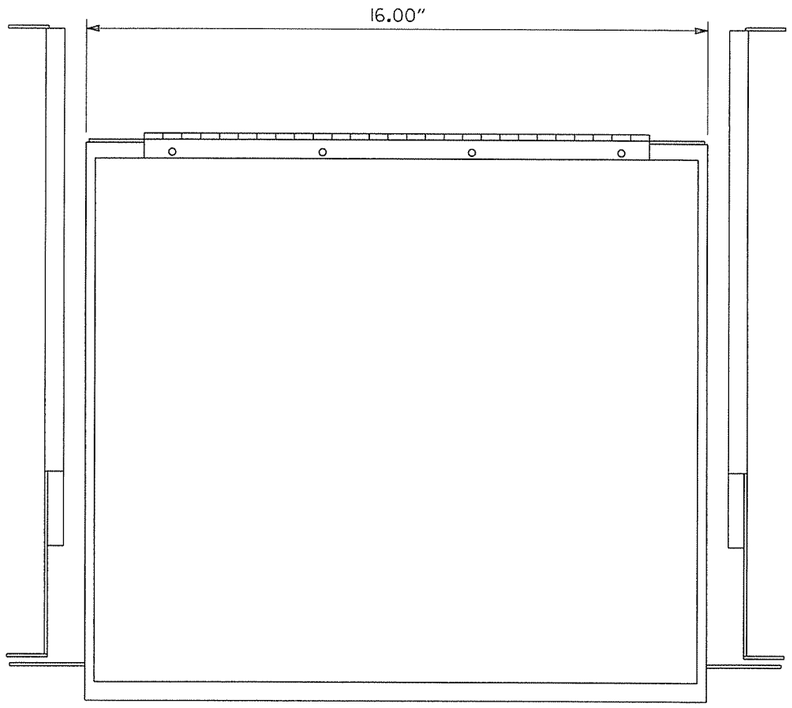

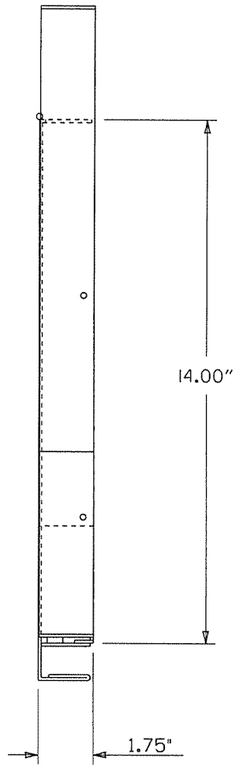

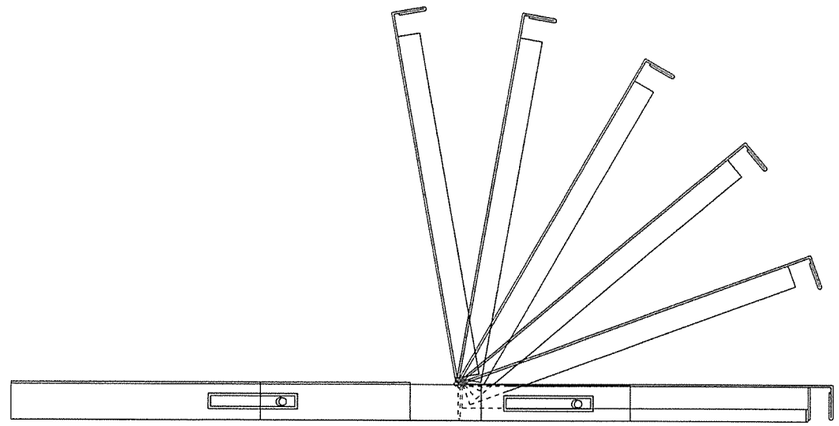

NOTES:
1. RIGHT HAND SLIDE SHOWN, LEFT SLIDE OPPOSITE.
2. GENERAL DEVICES (CC3002-99-0102) OR EQUAL AND CONTAINS (1) RIGHT HAND SLIDE ASSEMBLY, (1) LEFT HAND SLIDE ASSEMBLY.
3. ALL HARDWARE NECESSARY TO FASTEN SLIDE ASSEMBLY TO UNDERSIDE OF CONTROLLER SHELF SHALL BE INCLUDED.

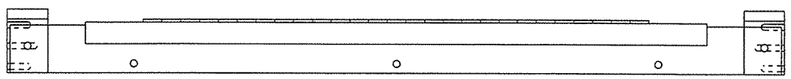

FRONT VIEW

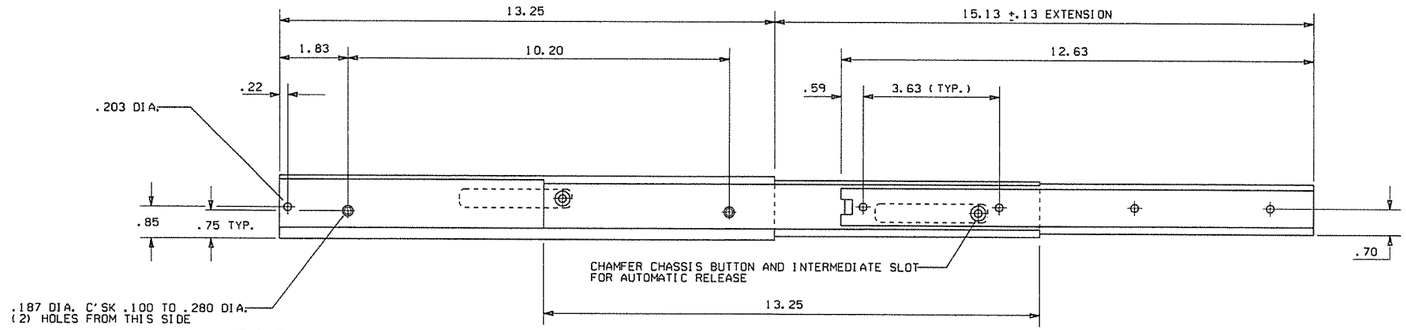

RIGHT SIDE ASSEMBLY

DATE	REVISION	DATE FILM
9-12-13	ISSUED AS STANDARD DRAWING	
6-15-05	ISSUED	

ARKANSAS STATE HIGHWAY COMMISSION

CONTROLLER CABINET UTILITY DRAWER

STANDARD DRAWING SD-5

CONDUIT ENTRY TO EXISTING POLE BASE

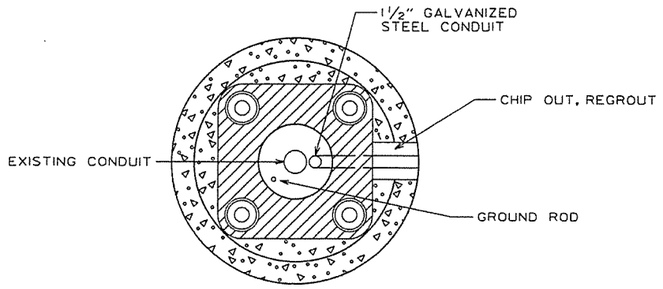

ANCHOR BASE

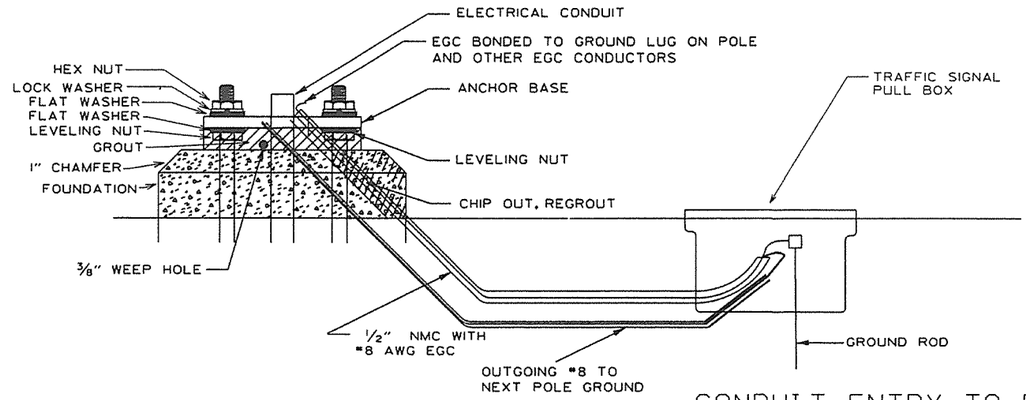

CONDUIT ENTRY TO EXISTING CONTROLLER CABINET

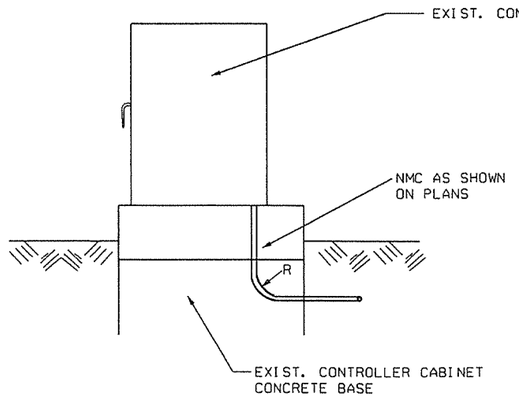

NOTE: ENTRY TO CABINET SHALL BE THROUGH A CUT IN THE BASE SUFFICIENT TO PROVIDE ADEQUATE CONDUIT RADIUS FOR ITEM.

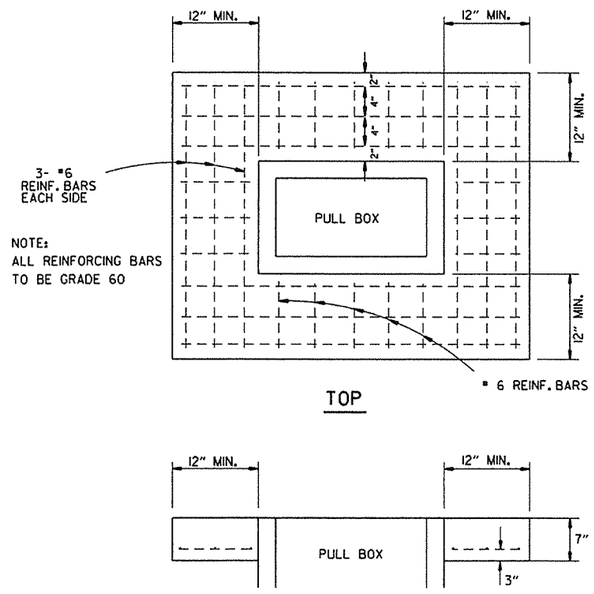

TOP

ELEVATION

TYPE "HD" CONCRETE PULL BOX DETAIL

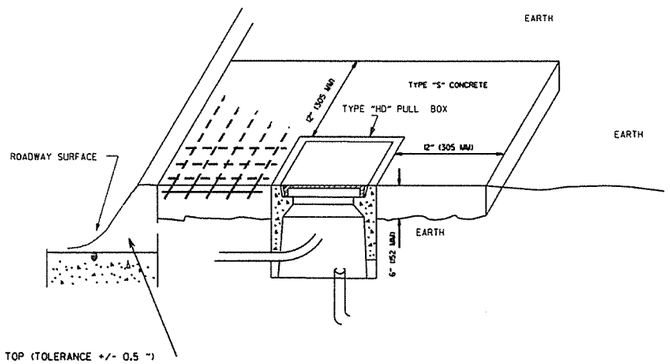

NOTE: ALL TYPE 1 AND TYPE 2 HD PULL BOXES ARE INSTALLED WITH AN APRON OF CONCRETE 12" (305 MM) WIDE AND 7" (178 MM) IN DEPTH. ALL PAYMENT SHALL BE INCLUDED IN THE PRICE OF THE TYPE HD PULL BOX. PULL BOX SHALL BE INSTALLED FLUSH TO SURROUNDING GRADE UNLESS OTHERWISE INSTRUCTED BY THE ENGINEER. THE CONCRETE SHALL BE CLASS "S." THREE #6 REINFORCING BARS IN THE APRON ON ALL SIDES OF THE PULL BOX IS REQUIRED IN CONCRETE.

DATE	REVISION	DATE FILM
9-2-15	REVISED PULL BOX DEPTH	
9-12-13	ISSUED AS STANDARD DRAWING	
5-21-09	REVISED GROUNDING	
7-31-08	ADDED & REVISED CONDUIT ENTRY	
6-23-04	REVISED CLEARANCE AT CURB ENTRY	
1-4-02	ADDED REINFORCING TO BOX APRON	
7-2-01	REVISED	
12-27-99	REVISED NOTES	
11-18-98	ISSUED	

ARKANSAS STATE HIGHWAY COMMISSION

HEAVY DUTY PULL BOX

STANDARD DRAWING SD-6

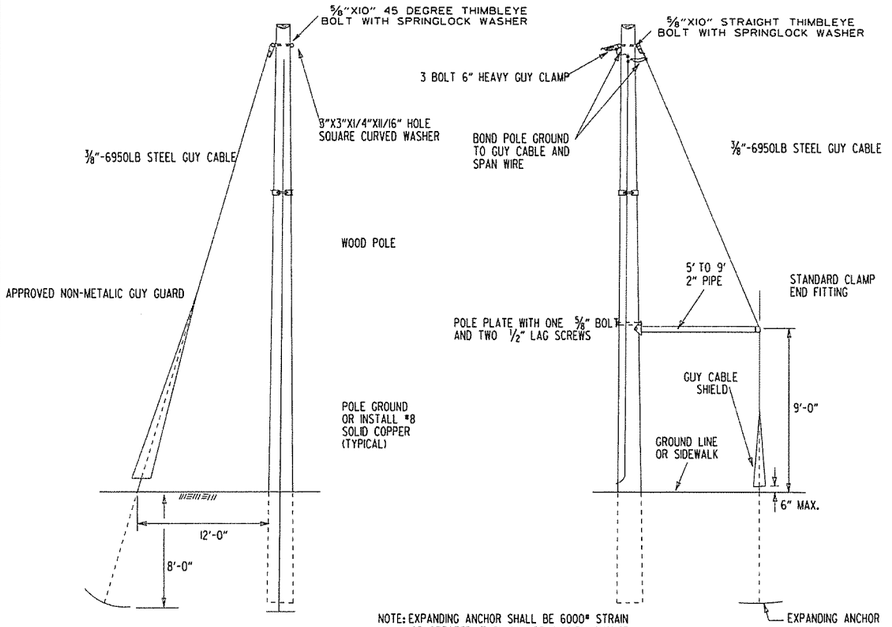

STANDARD GUY INSTALLATION

NOTE: EXPANDING ANCHOR SHALL BE 6000# STRAIN OR GREATER. IT SHALL BE A "NEW CHANCE 8-WAY EXPANDING ANCHOR", WITH A 5/8" MINIMUM GUY ROD.

SIDEWALK GUY INSTALLATION

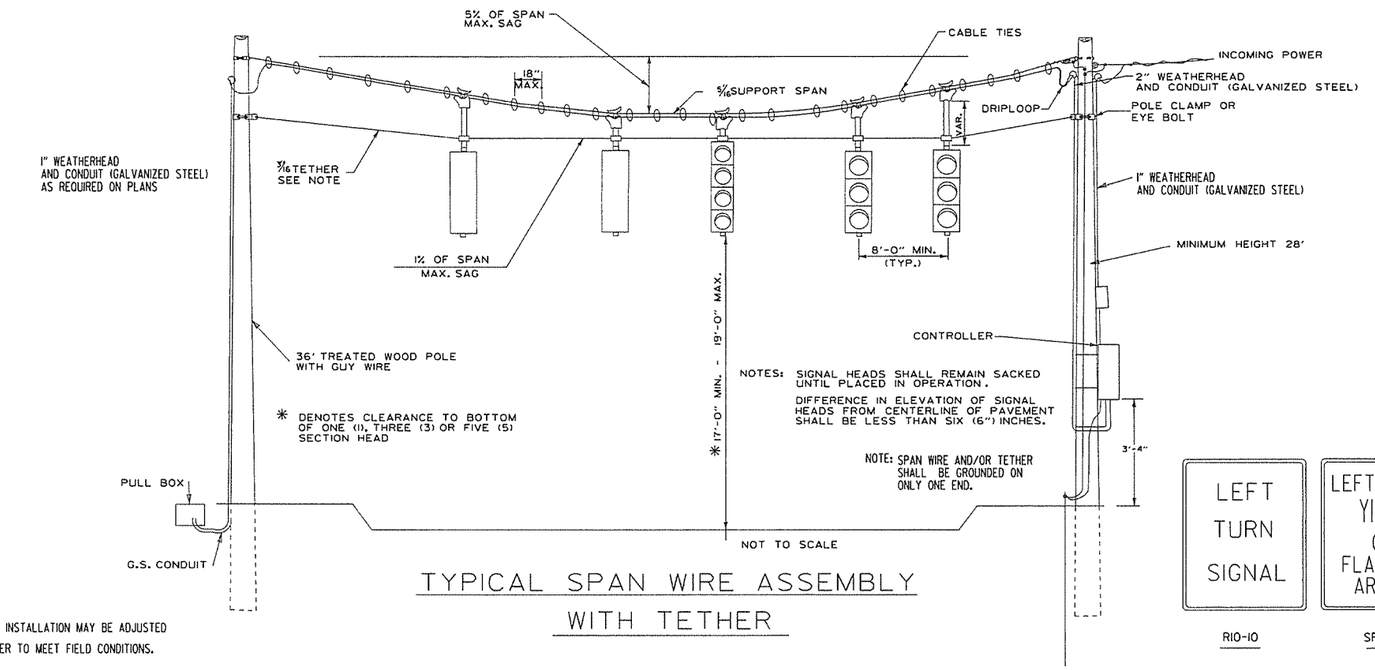

TYPICAL SPAN WIRE ASSEMBLY WITH TETHER

NOTE: CONDUIT INSTALLATION MAY BE ADJUSTED BY THE ENGINEER TO MEET FIELD CONDITIONS.

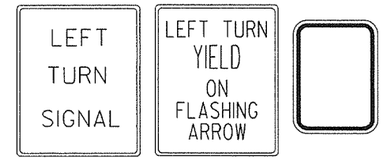

R10-10 | SPECIAL | R10-3E (SEE MUTCD)

NOTES: SPAN WIRE POLES SHALL BE MOUNTED A MINIMUM OF 4' BEHIND CURB OR SHOULDER.

SPAN WIRE ASSEMBLIES WILL REQUIRE TETHER UNLESS OTHERWISE NOTED ON PLAN SHEETS. CABLE TIES SHALL BE SUITABLE FOR OUTSIDE USE (BLACK).

THE CONTROLLER POWER SUPPLY GROUND BUSS SHALL BE BONDED TO THE GROUND ROD WITH A #8 AWG SOLID COPPER WIRE. ON EXISTING INSTALLATIONS WITH NO GROUND ROD, CONTRACTOR SHALL INSTALL A 10' X 5/8" COPPERWELD GROUND ROD.

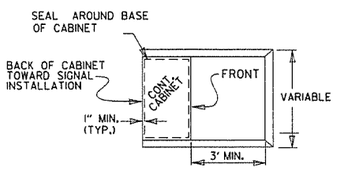

CONCRETE BASE MOUNTED CABINET DETAILS

UNLESS OTHERWISE DIRECTED BY THE ENGINEER, CABINET ORIENTATION SHALL BE SUCH THAT THE BACK OF THE CABINET IS PARALLEL TO THE STREET AND POSITIONED TO ALLOW VISIBILITY OF THE SIGNAL DISPLAY WHILE OBSERVING THE CONTROLLER FRONT PANEL.

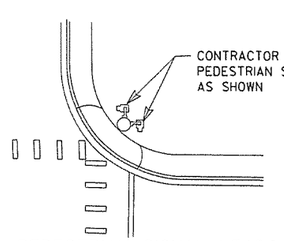

PEDESTRIAN SIGNAL HEADS

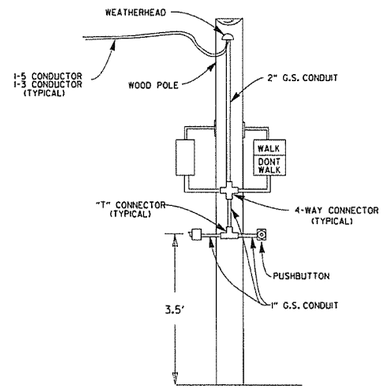

WOODEN POLE INSTALLATION OF PED HEADS

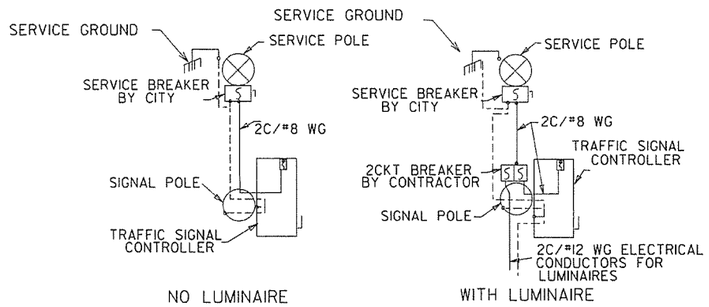

SERVICE DISCONNECT

NOTE: ELECTRICAL GROUND CONDUCTOR IS BONDED TO ALL METAL ENCLOSURES

NOTES:

EACH ITEM "TRAFFIC SIGNAL HEAD (4 SEC., 1-WAY)" SHALL INCLUDE A SPECIAL SIGN AS SHOWN, ATTACHED TO THE MAST ARM OR SPAN ASSEMBLY 12" TO THE RIGHT OF THE SIGNAL HEAD UNLESS REMOVED WITHIN SIGNAL PLAN NOTES.

SIGN BLANK SHALL BE CONSTRUCTED OF ALLUMINUM ALLOY (ASTM DESIGNATION B-209, ALLOY 5052-H38) WITH A THICKNESS OF 0.100 INCH.

SIGN FACE SHALL BE CONSTRUCTED OF HIGH INTENSITY SHEETING (TYPE III) WITH SILKSCREEN LEGEND AND BORDER.

EACH ITEM "TRAFFIC SIGNAL HEAD (3 SEC., 1-WAY)" TO BE USED AS A LEFT TURN INDICATION ONLY SHALL INCLUDE A SIGN (R10-10) AS SHOWN, ATTACHED TO THE MAST ARM OR SPAN ASSEMBLY 12" TO THE RIGHT OF THE SIGNAL HEAD.

SIGNAL OPERATION NOTES:

FLASHING OPERATION - PRIOR TO NORMAL OPERATION, SIGNAL SHALL BE FLASHED FOR A PERIOD OF 3 TO 5 WORKING DAYS. SIGNAL SHALL BE PLACED IN OPERATION ONLY ON A REGULAR WORK DAY, EXCEPT FRIDAY.

THE CONTRACTOR MAY BE REQUIRED TO ALTER THE FLASHING DISPLAY DURING THE TEMPORARY FLASH PERIOD. AT THE TIME THE INTERSECTION IS PLACED IN PERMANENT OPERATION, THE FLASH SEQUENCE SHALL THEN BE RETURNED TO THAT INDICATED ON THE PLAN SHEETS. NO ADDITIONAL COMPENSATION SHALL BE ALLOWED FOR THESE ALTERATIONS IN FLASH SEQUENCE.

DESIGN SPECIFICATIONS: AASHTO STANDARD SPECIFICATIONS FOR STRUCTURAL SUPPORTS FOR HIGHWAY SIGNS, LUMINAIRES AND TRAFFIC SIGNALS, 4TH EDITION (2001) WITH 2003 AND 2006 INTERIMS.

CONSTRUCTION SPECIFICATIONS: ARKANSAS STATE HIGHWAY AND TRANSPORTATION DEPARTMENT STANDARD SPECIFICATIONS FOR HIGHWAY CONSTRUCTION (CURRENT EDITION) WITH APPLICABLE SUPPLEMENTAL SPECIFICATIONS AND SPECIAL PROVISIONS.

BASE WIND SPEED: 90 MPH

STEEL MEMBERS CONSIDERED MAIN LOAD CARRYING MEMBERS WITH THICKNESS GREATER THAN 1/2" SHALL MEET THE LONGITUDINAL CHARPY V-NOTCH TEST SPECIFIED IN SUBSECTION 807.05 OF THE STANDARD SPECIFICATIONS.

DATE	REVISION	DATE FILM
2-27-14	REVISED NOTES.	
9-12-13	ISSUED AS STANDARD DRAWING	
7-21-11	REVISED PED SIGN, CABINET GROUNDING	
4-17-08	REVISED TO 2001 AASHTO STANDARDS	
10-12-04	REV. CABINET ORIENT. & SIGNAL OPER.	
5-22-02	REV. TYP. SPAN WIRE ASSEMBLY	
12-27-99	REVISED	
11-18-98	REVISED NOTES	
11-21-95	ISSUED	

ARKANSAS STATE HIGHWAY COMMISSION

SPAN WIRE ASSEMBLY WOOD POLE

STANDARD DRAWING SD-7

(A)

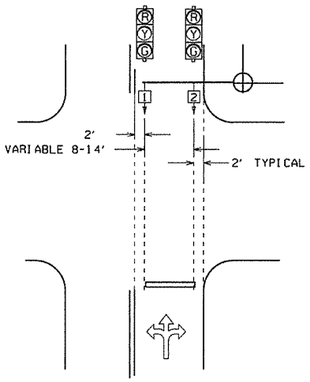

(B)

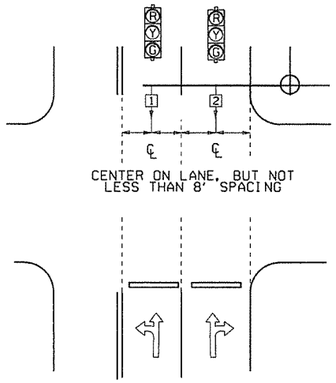

(C)

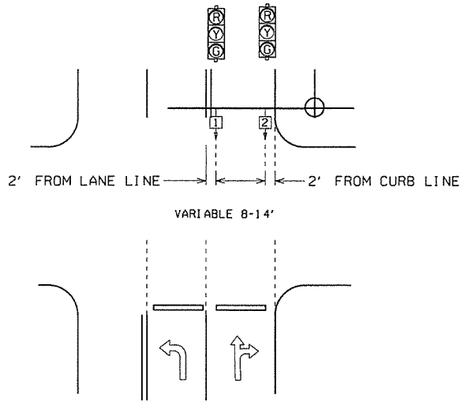

(C2)

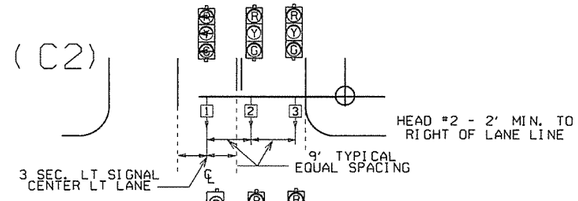

(C1)

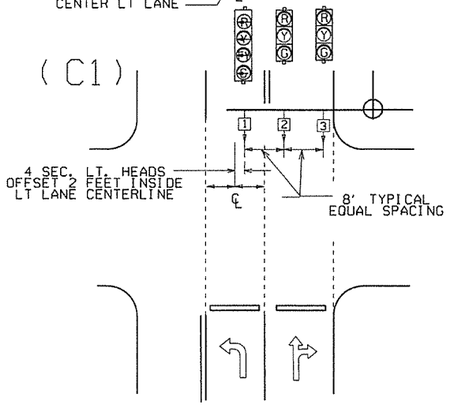

(C3)

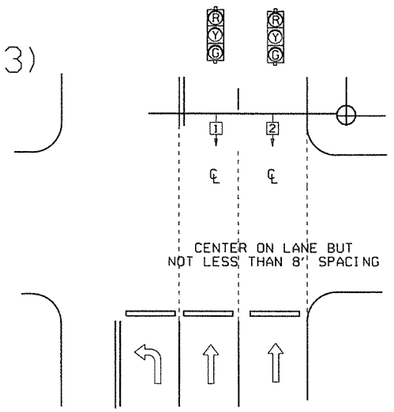

(D2)

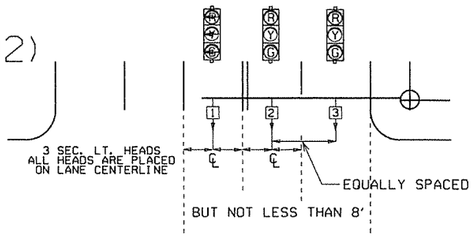

(D1)

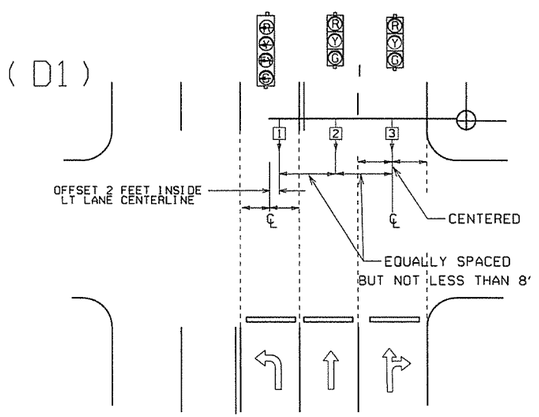

NOTE: WHERE LEFT TURN HEAD (HEAD 1 ON D1 AND D2) IS NOT CALLED FOR ON PLANS, MAST ARM LENGTH MAY STILL BE ALLOWED FOR FUTURE INSTALLATION. HEADS FOR THROUGH MOVEMENTS SHALL STILL BE ALIGNED WITH THROUGH LANES AS SHOWN ON DETAILS.

(E)

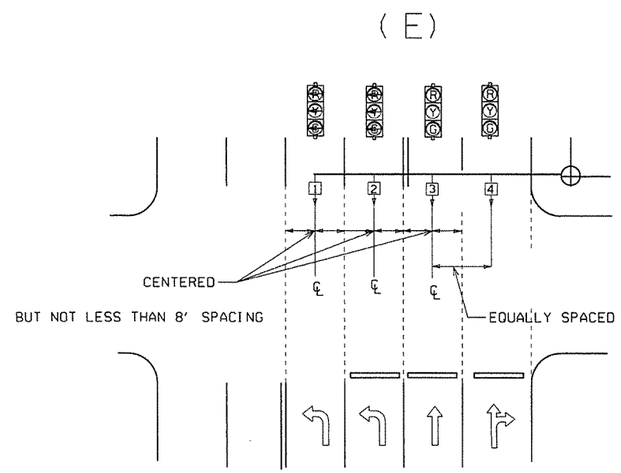

℄ = CENTER OF LANE FROM APPROACH SIDE

GENERAL NOTES:

1. FOUR SECTION 'PROTECTED/PERMISSIVE' LEFT TURN HEADS SHOULD BE PLACED A MINIMUM OF TWO (2') FEET TO THE RIGHT OF THE CENTERLINE OF THE APPROACHING LEFT TURN LANE.

2. THREE SECTION 'PROTECTED' LEFT TURN HEADS SHOULD BE PLACED ON THE CENTERLINE OF THE APPROACHING LEFT TURN LANE.

3. WHEN IT IS NECESSARY TO PLACE POLES OTHER THAN AS SHOWN ON PLAN SHEET(S) RESULTING IN MAST ARM EXTENDING MORE THAN TWO FEET PAST (TO THE LEFT OF) THE CENTERLINE OF THE APPROACHING LEFT TURN LANE, MAST ARM SHALL BE CUT TO APPROPRIATE LENGTH AS DETERMINED BY THE ENGINEER, AND A NEW END CAP PROVIDED. THE CONTRACTOR SHALL BE RESPONSIBLE FOR DETERMINING THIS PRIOR TO INSTALLING THE MAST ARM IF ADDITIONAL COMPENSATION IS REQUIRED.

4. SIGNAL HEAD SPACING SHALL, IN NO CASE, BE LESS THAN EIGHT (8') FEET BETWEEN HEADS ON CENTER, MEASURED HORIZONTALLY PERPENDICULAR TO THE APPROACH.

5. ALL SIGNAL HEADS SHOWN ON THIS DETAIL SHEET SHALL BE LOCATED ACCORDING TO THE DIMENSIONS SHOWN IN RELATION TO THE APPROACH SIDE OF THE INTERSECTION.

6. MAXIMUM MOUNTING HEIGHT OF SIGNAL FACES LOCATED BETWEEN 40 FEET AND 53 FEET FROM STOP BAR SHALL BE IN ACCORDANCE WITH FIGURE 4D-1 OF 2009 MUTCD.

9-12-13	ISSUED AS STANDARD DRAWING	
3-11-10	2009 MUTCD	
12-9-99	ISSUED	
DATE	REVISION	DATE FILM

ARKANSAS STATE HIGHWAY COMMISSION

SIGNAL HEAD PLACEMENT

STANDARD DRAWING SD-8

MAIN BREAKER NOT NEAR CONTROLLER CABINET SECONDARY REQUIRED

WITH POWER ISOLATION ASSEMBLY

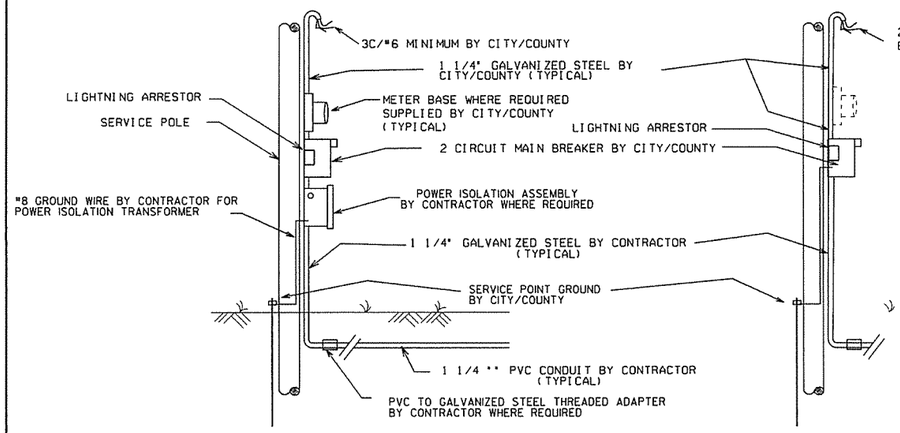

WITHOUT POWER ISOLATION ASSEMBLY

NOTES TO CONTRACTOR AND AGENCY RESPONSIBLE FOR MAINTENANCE OF THE INTERSECTION (CITY/COUNTY)

ELECTRICAL SERVICE TYPICALLY FALLS INTO TWO CATEGORIES: MAIN BREAKER NEAR CONTROLLER CABINET; AND MAIN BREAKER NOT NEAR CONTROLLER CABINET. THE CONTRACTOR'S AND THE CITY'S OR COUNTY'S RESPONSIBILITY VARIES ACCORDINGLY AS INDICATED ON THESE DETAILS.

1. ALL SITUATIONS: ELECTRICAL SERVICE SHALL BE PROVIDED BY THE CITY/COUNTY TO A SERVICE POLE WITH EXTERNAL RAINTIGHT BREAKER (MAIN BREAKER) AT A MUTUALLY ACCEPTABLE POINT WITHIN THE RIGHT-OF-WAY. SERVICE POINT INCLUDES GALVANIZED STEEL CONDUIT TO A POINT 18" BELOW GROUND LINE, TWO CIRCUIT MAIN BREAKER, LIGHTNING ARRESTOR, POWER ISOLATION ASSEMBLY WHERE REQUIRED, METER LOOP IF REQUIRED BY LOCAL UTILITY, ELECTRICAL CONDUCTORS AND WEATHERHEAD. WHERE STREET LIGHTING IS INCLUDED AS PART OF SIGNAL INSTALLATION, STREET LIGHTING CIRCUIT (2C/#12 AWG UF RATED, TYPICAL) SHALL BE KEPT SEPARATE FROM THE CIRCUIT SERVING TRAFFIC SIGNAL. SERVICE WIRE AND WIRING FROM THE CONTROLLER TO MAIN BREAKER IS PROVIDED BY THE CONTRACTOR AS A PART OF THIS CONTRACT. WIRE AND WIRING FROM MAIN BREAKER, AND CONNECTION TO THE UTILITY IS THE RESPONSIBILITY OF THE CITY/COUNTY.

2. MAIN BREAKER NOT NEAR CONTROLLER CABINET: THE MAIN BREAKER ASSEMBLY, GALVANIZED STEEL CONDUIT, WEATHERHEAD AND WIRE ABOVE MAIN BREAKER AND CONNECTION TO THE UTILITY SHALL BE PROVIDED BY CITY/COUNTY. CONTRACTOR SHALL PROVIDE AS PART OF CONTRACT SECONDARY BREAKER, CONDUIT, WIRE AND WIRING TO THE MAIN BREAKER.

3. MAIN BREAKER NEAR CONTROLLER CABINET: ALL COMPONENTS OF THE SERVICE POINT WITH THE EXCEPTION OF THE WIRE AND WIRING ABOVE THE MAIN BREAKER IS FURNISHED AND INSTALLED BY THE CONTRACTOR. WIRING FROM MAIN BREAKER INCLUDING CONNECTION TO THE UTILITY, IS THE RESPONSIBILITY OF THE CITY/COUNTY. IF METER LOOP IS REQUIRED, METER BASE AND HARDWARE IS PROVIDED BY THE CITY/COUNTY AND INSTALLED BY THE CONTRACTOR.

GROUND ROD-A 10' X ⅝" GROUND ROD SHALL BE INSTALLED IN THE PULL BOX FOR EACH POLE AND THE CONTROLLER. PAYMENT FOR THE GROUND ROD AND ½" NMC SHALL BE INCLUDED IN ITEM 701. THE PULL BOX AND CONDUCTOR BOX SHALL BE PAID FOR SEPARATELY.

SECONDARY BREAKER BY CONTRACTOR (SUBSIDIARY)

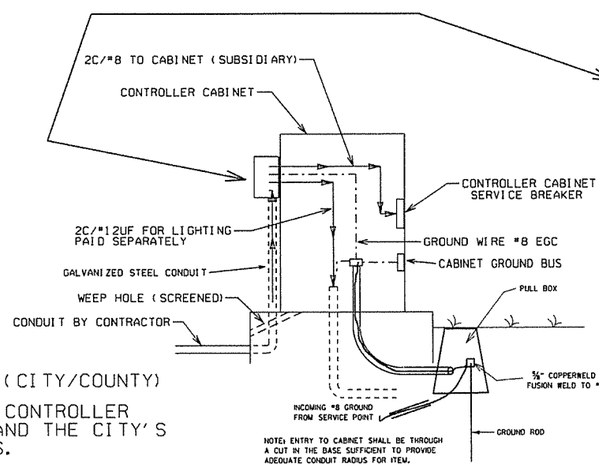

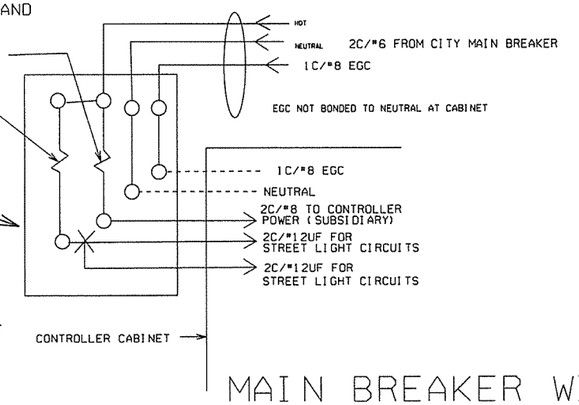

MAIN BREAKER WIRING (TYPICAL)

SERVICE GROUND IS TYPICALLY TIED TO NEUTRAL AT THE MAIN BREAKER. AS SUCH, CONTROLLER GROUND IS NOT TIED TO NEUTRAL AT SECONDARY BREAKER OR IN CONTROLLER CABINET.

WITH POWER ISOLATION ASSEMBLY
4 CIRCUIT MAIN BREAKER

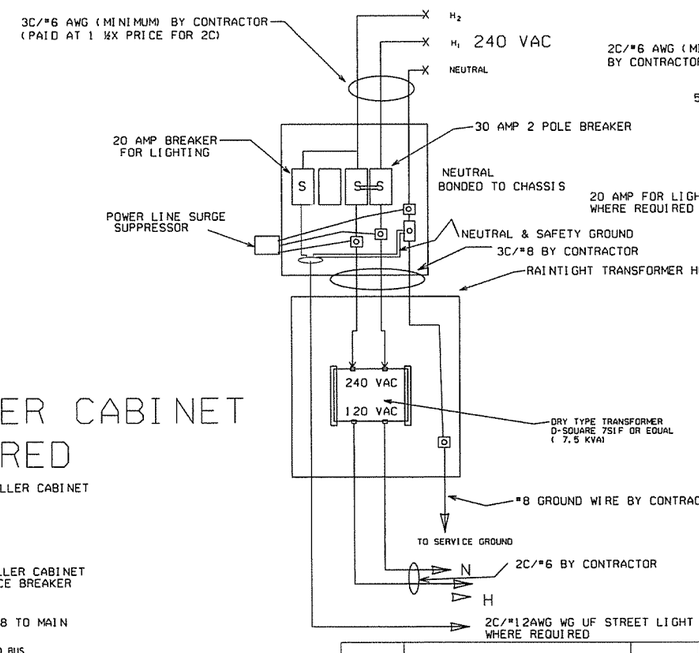

WITHOUT POWER ISOLATION ASSEMBLY
2 CIRCUIT MAIN BREAKER

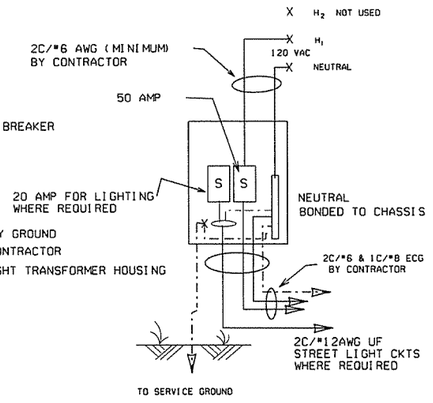

NOTE: ELECTRICAL GROUND CONDUCTOR (ECG) ADDED 3-3-2003, CONSISTING OF A 1C/#8AWG CU GREEN WIRE AS PER NATIONAL ELECT. CODES.

MAIN BREAKER NEAR CONTROLLER CABINET SECONDARY NOT REQUIRED

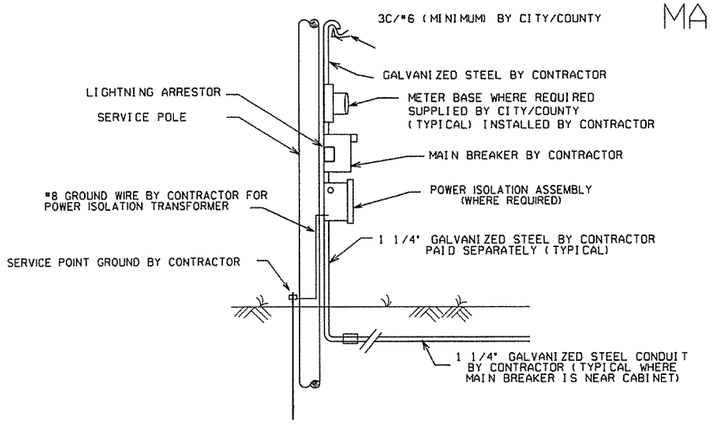

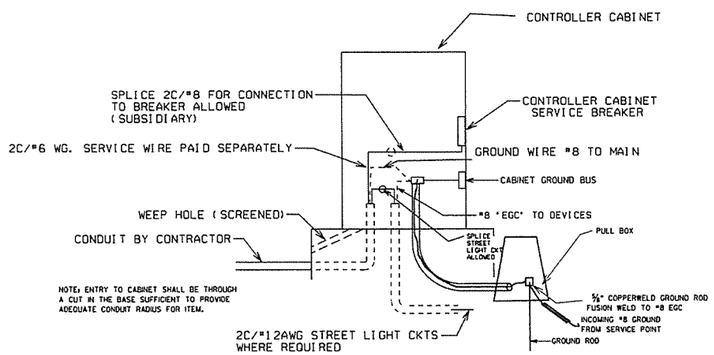

DATE	REVISION	DATE FILM
9-12-13	ISSUED AS STANDARD DRAWING	
4-18-13	ADDED LIGHTNING ARRESTOR	
5-21-09	REVISED GROUNDING	
7-31-08	REVISED GROUNDING	
3-3-03	ADDED EGC NOTE	
9-26-01	REVISED	
12-27-99	REVISED	
7-28-99	REVISED	
2-5-99	ISSUED	

ARKANSAS STATE HIGHWAY COMMISSION

SERVICE POINT

STANDARD DRAWING SD-9

NOTES, PED AND TRAFFIC SIGNAL HEAD SIGNS:
EACH ITEM "TRAFFIC SIGNAL HEAD (4 SEC., 1-WAY)" SHALL INCLUDE A SPECIAL SIGN AS SHOWN, ATTACHED TO THE MAST ARM OR SPAN ASSEMBLY 12" TO THE RIGHT OF THE SIGNAL HEAD UNLESS REMOVED WITHIN THE SIGNAL PLAN NOTES.

EACH ITEM "TRAFFIC SIGNAL HEAD (3 SEC., 1-WAY)" TO BE USED AS A LEFT TURN INDICATION ONLY SHALL INCLUDE A SIGN (R10-10) AS SHOWN, ATTACHED TO THE MAST ARM OR SPAN ASSEMBLY 12" TO THE RIGHT OF THE SIGNAL HEAD.

EACH PEDESTRIAN PUSHBUTTON SHALL HAVE ONE R10-3E SIGN ATTACHED TO THE POLE ABOVE THE BUTTON. ALL SIGN FACES SHALL BE CONSTRUCTED OF HIGH INTENSITY SHEETING (TYPE III) WITH SILKSCREEN LEGEND AND BORDER.

ALL SIGN BLANKS SHALL BE CONSTRUCTED OF ALUMINUM ALLOY (ASTM DESIGNATION B-209. ALLOY 5052-H38) WITH THICKNESS OF 0.100 INCH.

GENERAL NOTES:
1. MAST ARM POLES SHALL BE MOUNTED A MINIMUM OF 4 FT. BEHIND CURB OR SHOULDER.

2. OCTAGONAL POLES AND ARMS MEETING THE REQUIREMENTS OF THE PLANS AND SPECIFICATIONS CAN BE INSTALLED IN LIEU OF ROUND. ALL POLES AND ARMS IN A JOB MUST BE THE SAME SHAPE.

3. MINIMUM STRUCTURAL REQUIREMENTS:
DESIGN SPECIFICATIONS: AASHTO STANDARD SPECIFICATIONS FOR STRUCTURAL SUPPORTS FOR HIGHWAY SIGNS, LUMINAIRES AND TRAFFIC SIGNALS, 4TH EDITION (2001) WITH 2003 AND 2006 INTERIMS.

USE FATIGUE CATEGORY I FOR ALL STRUCTURES ON ROUTES WHERE THE SPEED LIMIT IS 65 MPH AND GREATER AT THE STRUCTURE LOCATION AND ON ROUTES WHERE SPEED LIMIT IS GREATER THAN 45 MPH WITH AN ARM 60' OR LONGER.

USE FATIGUE CATEGORY II FOR STRUCTURES ON ROUTES WITH A SPEED LIMIT LESS THAN 65 MPH AND GREATER THAN 45 MPH WITH ARMS LESS THAN 60' AND ROUTES WITH SPEED LIMITS OF 45 MPH AND LESS WITH AN ARM 60' OR LONGER.

USE FATIGUE CATEGORY III FOR ALL STRUCTURES WHERE SPEED LIMIT IS 45 MPH AND LESS AND ARMS LESS THAN 60'.

CONSTRUCTION SPECIFICATIONS: ARKANSAS STATE HIGHWAY AND TRANSPORTATION DEPARTMENT STANDARD SPECIFICATIONS FOR HIGHWAY CONSTRUCTION (CURRENT EDITION) WITH APPLICABLE SUPPLEMENTAL SPECIFICATIONS AND SPECIAL PROVISIONS.

BASE WIND SPEED: 90 MPH.

STEEL MEMBERS CONSIDERED MAIN LOAD CARRYING MEMBERS WITH A THICKNESS GREATER THAN 1/2" SHALL MEET THE LONGITUDINAL CHARPY V-NOTCH TEST SPECIFIED IN SUBSECTION 807.05 OF THE STANDARD SPECIFICATIONS.

DEAD LOAD: AS A MINIMUM, DESIGN SHALL BE BASED ON THE FIXED ATTACHMENTS SHOWN BELOW OR AS MODIFIED IN THE PLANS.

ALL SIGNAL HEADS TO BE ONE WAY, 12 INCH, AND HAVE 5 IN. BACK PLATES:

HEADS AT END OF ARM - ONE 4 SEC., 85 LB., 16.0 SQ. FT. ONE SIGN MOUNTED 3 FT. FROM SIGNAL = 2' X 0' X 2' = 6'; 20 LB. REMAINING HEADS SPACED A 8 FT. = 3 SEC., 56 LB., TWO 5 SEC):
14.4 SQ. FT. DESIGN TO ACCOMMODATE (INCLUDING
2 HEADS FOR ARMS 10 TO 16 FT.
2 HEADS FOR ARMS 10 TO 16 FT.; INCLUDING LB.
3 HEADS FOR 18 TO 24 FT. ARMS;
4 HEADS FOR OVER 26 FT. ARMS.

STREET NAME SIGN -- 72" X 18", 36 LB., MOUNTED SUCH THAT OUTSIDE EDGE IS NOT GREATER THAN 12 FT. FROM POLE. DEPENDING UPON POSITION OF SIGNAL HEAD ADJACENT TO POLE, SIGN MAY OVERLAP POLE SHAFT ROADWAY LUMINAIRES (WHERE REQUIRED ON PLAN SHEET) = VARIABLE ARM LENGTH (MAX.), 3.3 SQ. FT., 75 LB. PED SIGNALS -- TWO 2 SEC. 12 INCH MOUNTED 8 FT. FROM BASE OF POLE.
POST MOUNTED 3 SEC. SIGNAL HEAD AT 10 FT. ON SIDE OF POLE.

4. POLE/MAST ARM CAP -- POLE AND MAST ARMS CAPS SHALL BE PROVIDED, FABRICATED OF EITHER STEEL OR CAST ALUMINUM.

5. HAND HOLE -- HAND HOLES SHALL BE 4 X 6 INCHES FOR STANDARD, AND 3 X 5 INCHES FOR PED POLES, MINIMUM PLACED APPROXIMATELY 12 INCHES FROM BASE, AND SHALL BE FIXED WITH A BOLT DOWN COVER. A VACUUM FORMED ABS COVER IS AN ACCEPTABLE ALTERNATE TO STEEL. POLES GREATER THAN 21 FT. IN HEIGHT (FOR ROADWAY LUMINAIRE ATTACHMENT) SHALL INCLUDE A HAND HOLD WITHIN 12 INCHES OF MAST ARM(S) ATTACHMENT(S).

6. POLE/MAST ARM TAPER AND SLOPE - AVERAGE TAPER OF SIGNAL ARMS AND POLE SHALL BE 0.125 TO 0.15 INCHES PER FT.

MAST ARM CENTERLINE ANGLE AT ATTACHMENT POINT WITH POLE SHALL MAINTAIN NOT LESS THAN 0.5 DEGREES OR MORE THAN 4 DEGREES POSITIVE SLOPE WITH A LINE PERPENDICULAR TO THE POLE CENTERLINE. THE ARM SHALL MAINTAIN A POSITIVE AFTER IT IS PLACED UNDER LOAD.

7. NUT COVERS - EACH POLE SHALL INCLUDE A BOLT DOWN NUT COVER FOR EACH ANCHOR BOLT.

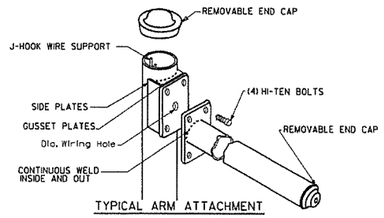

TYPICAL ARM ATTACHMENT

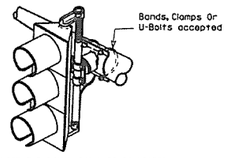

NOTE: THE SIGNAL SHALL BE CONNECTED TO THE MAST ARM BY BRACKETING AS DIRECTED BY THE ENGINEER.

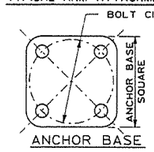

ANCHOR BASE

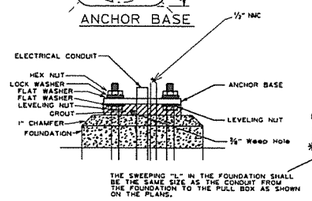

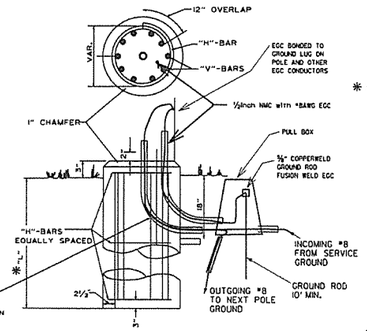

THE GROUND ROD SHALL BE FUSION WELDED TO A 1C/#8 A.W.G. SOLID COPPER GROUND WIRE. ATTACHMENT TO THE PRIMARY GROUND MAY BE BY AN APPROVED CLAMP. THE ROD IS TO BE LOCATED IN THE CONCRETE PULL BOX.

TYPICAL FOUNDATION DETAILS

POLE FOUNDATION MINIMUM DIMENSIONS AND STEEL REINFORCING. ALL REINFORCING STEEL SHALL BE GRADE 40 MIN.

ARM LENGTH	FDN. DIAMETER	DEPTH "L" *	STEEL VERT.	STEEL HORZ.	STEEL O/C.
PED	30"	7'-0"	12-#7 (6'-6")	10-#4	8.44"
2' to 12'	30"	10'-6"	12-#7 (10'-0")	15-#4	8.42"
over 12' to 20'	30"	11'-6"	12-#7 (11'-0")	16-#4	8.66"
over 20' to 35'	36"	12'-6"	13-#8 (12'-0")	17-#4	8.88"
over 35' to 50'	36"	13'-6"	13-#8 (13'-0")	19-#4	8.56"
over 50' to 72'	42"	14'-6"	18-#8 (14'-0")	20-#4	8.74"
Twins to 20'	30"	16'-0"	12-#6 (15'-6")	22-#4	8.76"
Twins over 20' to 44'	36"	16'-0"	13-#8 (15'-6")	22-#4	8.76"
Twins over 44' to 50'	42"	16'-0"	18-#8 (15'-6")	22-#4	8.76"
Twins over 50' to 72'	42"	16'-6"	18-#8 (16'-0")	23-#4	8.64"

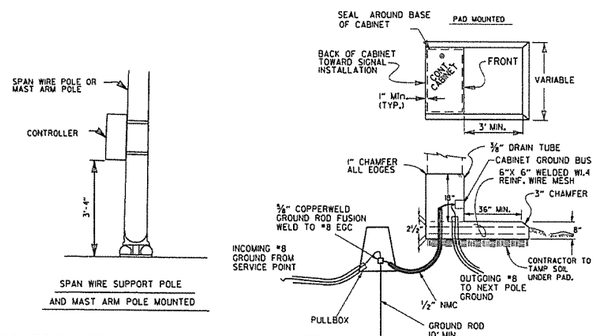

CONTROLLER CABINET MOUNTING DETAILS

UNLESS OTHERWISE DIRECTED BY THE ENGINEER, CABINET ORIENTATION SHALL BE SUCH THAT THE BACK OF THE CABINET IS PARALLEL TO THE STREET AND POSITIONED TO ALLOW VISIBILITY OF THE SIGNAL DISPLAY WHILE OBSERVING THE CONTROLLER FRONT PANEL.

8. GROUND ROD - A 10' X 5/8" GROUND ROD SHALL BE INSTALLED IN THE PULL BOX FOR EACH POLE AND THE CONTROLLER. PAYMENT FOR THE GROUND ROD AND 1/2" NMC SHALL BE INCLUDED IN ITEM 714 FOR SIGNAL POLES AND ITEM 701 FOR THE CONTROLLER. THE PULL BOX AND CONDUCTOR BOX SHALL BE PAID FOR SEPARATELY.

9. POLE BASE/FOUNDATION - ANCHOR BOLTS SHALL INCLUDE AS A MINIMUM, ONE LEVELING NUT, TWO FLAT WASHERS, ONE LOCK WASHER, AND ONE HEX. NUT. PERIMETER OF ANCHOR BASE SHALL BE GROUTED WITH A 1/4" WEEP HOLE. ALL CONCRETE SHALL BE CLASS "S" OR GREATER.

10. CONCRETE - ALL CONCRETE FOR CONTROLLER CABINET AND POLE FOUNDATIONS SHALL BE CLASS "S" OR GREATER.

11. PEDESTRIAN PHASES - PEDESTRIAN MOVEMENTS SHALL BE PUSH BUTTON ACTUATED AND CONCURRENTLY TIMED, UNLESS OTHERWISE INDICATED ON THE PLAN SHEET(S). FURNISHING AND INSTALLING PED PUSH SWITCH SHALL BE CONSIDERED SUBSIDIARY TO THE ITEM PEDESTRIAN SIGNAL HEAD.

SIGNAL OPERATION NOTES:

FLASHING OPERATION - PRIOR TO NORMAL OPERATION, SIGNAL SHALL BE FLASHED FOR A PERIOD OF 3 TO 5 WORK DAYS OR AS DIRECTED BY THE ENGINEER. SIGNAL SHALL BE PLACED IN OPERATION ONLY ON A REGULAR WORK DAY, EXCEPT FRIDAY.

THE CONTRACTOR MAY BE REQUIRED TO ALTER THE FLASHING DISPLAY DURING THE TEMPORARY FLASH PERIOD. AT THE TIME INTERSECTION IS PLACED IN PERMANENT OPERATION, THE FLASH SEQUENCE SHALL THEN BE RETURNED TO THAT INDICATED ON THE PLAN SHEETS. NO ADDITIONAL COMPENSATION SHALL BE ALLOWED FOR THESE ALTERATIONS IN FLASH SEQUENCE.

SPECIAL NOTE: 90 MPH WIND ZONE DESIGN, SEE NOTE 3. MINIMUM STRUCTURAL REQUIREMENTS.

* WHEN THE GROUND ELEVATION AT THE POLE IS LOWER THAN THE ROADWAY ELEVATION, THE LENGTH OF FOUNDATION ABOVE THE GROUND MAY BE INCREASED TO PROVIDE THE REQUIRED SIGNAL HEAD CLEARANCE ABOVE THE ROADWAY. WHEN THE REQUIRED LENGTH OF FOUNDATION ABOVE THE GROUND IS 18" OR LESS, NO INCREASE IN DEPTH "L" WILL BE REQUIRED. WHEN THE REQUIRED LENGTH OF FOUNDATION ABOVE THE GROUND IS 5'-6" OR LESS, INCREASE DEPTH "L" BY 1'-0". FOR LENGTHS GREATER THAN 5'-6", DEPTH "L" SHALL BE ADJUSTED AS DIRECTED BY THE ENGINEER. LONGITUDINAL REINFORCING, AS SHOWN IN THE TABLE, SHALL BE PROVIDED FOR THE LENGTH OF THE EXTENDED SHAFT AND #4 TIES SHALL BE PROVIDED AT A SPACING NOT TO EXCEED 9" ON CENTERS. PAYMENT WILL BE IN ACCORDANCE WITH SECTION 714 OF THE STANDARD SPECIFICATIONS.

** IN LIEU OF DESIGNING THE STRUCTURE TO RESIST PERIODIC GALLOPING, A VIBRATORY MITIGATION DEVICE MAY BE PROVIDED BY THE POLE MANUFACTURER. THE VIBRATORY MITIGATION DEVICE SHALL BE AN ANTI-GALLOPING PANEL CONSISTING OF A 60"X16"X0.125" SIGN BLANK MOUNTED NEAR THE END OF THE MAST ARM NOT TO EXCEED ONE QUARTER OF THE LENGTH OF THE MAST ARM FROM THE END OF THE MAST ARM WITH THE LONG AXIS OF THE PANEL COLLINEAR WITH THE LONG AXIS OF THE MAST ARM. THE PANEL SHOULD BE MOUNTED AT SUCH A HEIGHT AS TO PROVIDE AT LEAST 6" CLEAR FROM THE TOP OF ANY SIGNAL ASSEMBLY OR SIGN PANEL LOCATED ON THE MAST ARM WITHIN THE LENGTH OF THE ANTI-GALLOPING PANEL.

TRUCK-INDUCED GUST LOADS SHALL BE EXCLUDED FOR FATIGUE DESIGN FOR ALL STRUCTURES EXCEPT MAST ARMS MOUNTED OVER FACILITIES WITH POSTED SPEEDS OF 65 MPH OR GREATER AT THE LOCATION OF THE STRUCTURE.

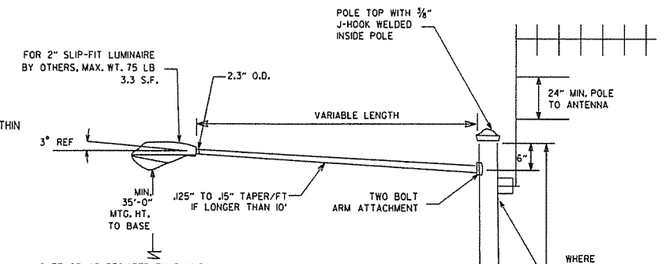

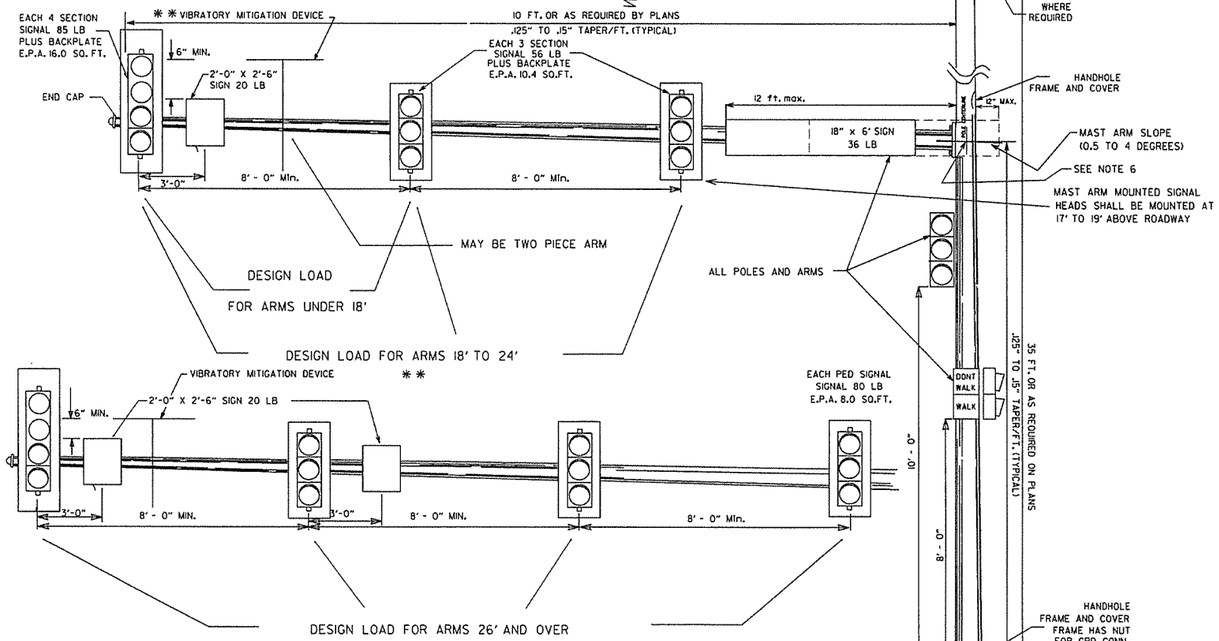

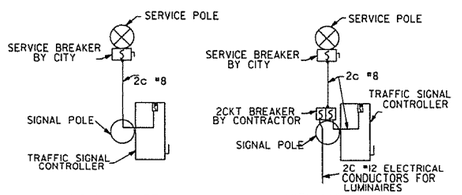

SERVICE DISCONNECT

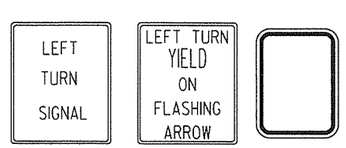

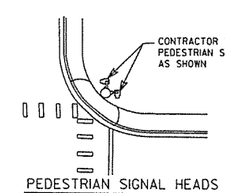

PEDESTRIAN SIGNAL HEADS

DATE	REVISION	DATE FILM
2-27-14	REVISED NOTES.	
9-12-13	ISSUED AS STANDARD DRAWING	
7-2-13	REVISED VMD, SIGNAL HEADS	
5-21-09	REVISED GROUNDING	
7-31-08	REVISED GROUNDING	
4-25-08	ADDED VIBRATORY MITIGATION DEVICE & NOTES	
4-18-08	REVISED AASHTO NOTES	
4-17-08	REVISED TO 2001 AASHTO STANDARDS	
10-12-04	REVISED CABINET ORIENTATION	
6-23-04	REVISED	
5-11-04	REV. NOTE 3/AASHTO REQUIREMENTS	
6-11-01	REV. NOTES & POLE MAST ARM SLOPE	
4-18-01	REVISED POLE TAPERS	
4-25-00	REV. NOTES & SIGNAL HEAD PLACEMENT	
11-22-99	REVISED FOUNDATION DETAILS	
11-17-98	REVISED DETAILS AND NOTES	
11-21-95	ISSUED	

ARKANSAS STATE HIGHWAY COMMISSION

STEEL POLE WITH MAST ARM

STANDARD DRAWING SD-11

SUPERELEVATION TABLE FOR ONE - WAY TRAFFIC

DEGREE OF CURVE	30 MPH e	30 MPH Ls (FT) MINIMUM	30 MPH Ls (FT) DESIRABLE	40 MPH e	40 MPH Ls (FT) MINIMUM	40 MPH Ls (FT) DESIRABLE	50 MPH e	50 MPH Ls (FT) MINIMUM	50 MPH Ls (FT) DESIRABLE	55 MPH e	55 MPH Ls (FT) MINIMUM	55 MPH Ls (FT) DESIRABLE	60 MPH e	60 MPH Ls (FT) MINIMUM	60 MPH Ls (FT) DESIRABLE	65 MPH e	65 MPH Ls (FT) MINIMUM	65 MPH Ls (FT) DESIRABLE	70 MPH e	70 MPH Ls (FT) MINIMUM	70 MPH Ls (FT) DESIRABLE
0° 15′	N. C.			N. C.			N. C.			N. C.			N. C.			N. C.			N. C.		
0° 30′	N. C.			N. C.			N. C.			N. C.			N. C.			N. C.			N. C.		
0° 45′	N. C.			N. C.			R. C.			0.022			0.023			0.025			0.028		
1° 00′	N. C.			N. C.			0.021			0.026			0.030			0.033	250	350	0.037	275	350
1° 15′	N. C.			R. C.			0.026			0.032			0.037	250	350	0.041			0.046		
1° 30′	N. C.			0.021			0.031	200		0.037	225	350	0.043			0.048			0.054		
1° 45′	N. C.			0.025	175		0.036			0.043			0.049			0.055			0.062		
2° 00′	R. C.			0.028			0.040			0.048			0.055			0.062			0.070		
2° 15′	R. C.			0.031			0.045		300	0.053			0.061			0.069	265		0.078	300	
2° 30′	0.021			0.034			0.049			0.058			0.067			0.075	280		0.085	315	400
2° 45′	0.023			0.037			0.053			0.063			0.072			0.081	300		0.091	335	
3° 00′	0.025			0.040		250	0.057			0.067	230		0.077	260		0.087	315	400	0.096	350	
3° 15′	0.027	150		0.043			0.061			0.072	245		0.082	275		0.090	325		0.098	360	450
3° 30′	0.029			0.046			0.065	205		0.076	255		0.086	285		0.095	340		0.100	360	
3° 45′	0.031		250	0.049			0.069	215		0.080	265		0.090	295		0.097	345				
4° 00′	0.033			0.051			0.072	225		0.083	270		0.093	305	400	0.099	350				
4° 30′	0.037			0.056			0.078	240		0.087	280		0.096	315							
5° 00′	0.040			0.061			0.083	250		0.091	295	400	0.098	320							
5° 30′	0.043			0.066	185		0.088	260		0.094	300										
6° 00′	0.046			0.070	190		0.092	270		0.096	305										
6° 30′	0.050			0.074	200		0.095	280	350	0.100	315										
7° 00′	0.053			0.078	210		0.098	285													
7° 30′	0.056			0.081	215		0.099	290													
8° 00′	0.058			0.084	220		0.100	290													
8° 30′	0.061			0.087	225	300															
9° 00′	0.063			0.089	230																
10° 00′	0.068	160		0.094	235																
11° 00′	0.072	170		0.097	250																
12° 00′	0.076	175		0.099	250																
13° 00′	0.080	180		0.100	250																
14° 00′	0.083	190																			
15° 00′	0.086	195																			
16° 00′	0.089	200																			
17° 00′	0.091	200																			
18° 00′	0.093	205																			
19° 00′	0.095	210																			
20° 00′	0.097	215	300																		
21° 00′	0.098	215																			
22° 00′	0.099	215																			
23° 00′	0.099	215																			
24° 00′	0.100	220																			

D MAX = 24° 45′ | D MAX = 13° 15′ | D MAX = 8° 15′ | D MAX = 6° 30′ | D MAX = 5° 15′ | D MAX = 4° 15′ | D MAX = 3° 30′

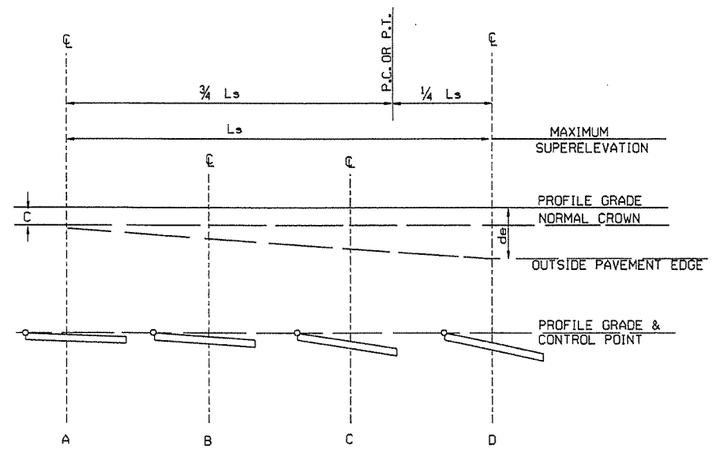

ONE-WAY TRAFFIC
INSIDE LANE

SUPERELEVATION FORMULA = $S = -\frac{L(de-C)}{Ls} - C$

ABBREVIATIONS

NC - NORMAL CROWN
RC - REVERSE CROWN, SUPERELEVATION AT NORMAL CROWN SLOPE
S - SUPERELEVATION
L - DISTANCE FROM BEGINNING OF SUPERELEVATION TRANSITION TO ANY POINT (FT.)
d - WIDTH OF PAVEMENT
e - MAXIMUM RATE OF SUPERELEVATION (FT. PER FT.)
Ls - LENGTH OF SUPERELEVATION TRANSITION (FT.)
C - NORMAL CROWN (FT.)

GENERAL NOTES

1. ON PAVEMENT WITH ONE-WAY TRAFFIC, THE SUPERELEVATION SHALL BE REVOLVED ON THE PROFILE GRADE POINT.
2. SUPERELEVATION VALUES SHOWN ON THE CROSS SECTIONS ARE VALUES (+) OR (-) TO BE ADDED OR SUBTRACTED FROM THE POINT OF CONTROL.
3. LENGTHS FOR L_s MAY BE ROUNDED IN MULTIPLES OF 25 FT. OR 50 FT. TO PERMIT SIMPLER CALCULATIONS.
4. MINIMUM L_s VALUES MAY BE USED FOR RAMPS; DESIRABLE VALUES SHALL APPLY TO MAIN LANES.
5. DIVIDED PAVEMENTS WIDER THAN 4 LANES SHALL HAVE ADDITIONAL TRANSITION LENGTHS AS FOLOWS:

6 LANE DIVIDED---------+20%
8 LANE DIVIDED---------+50%

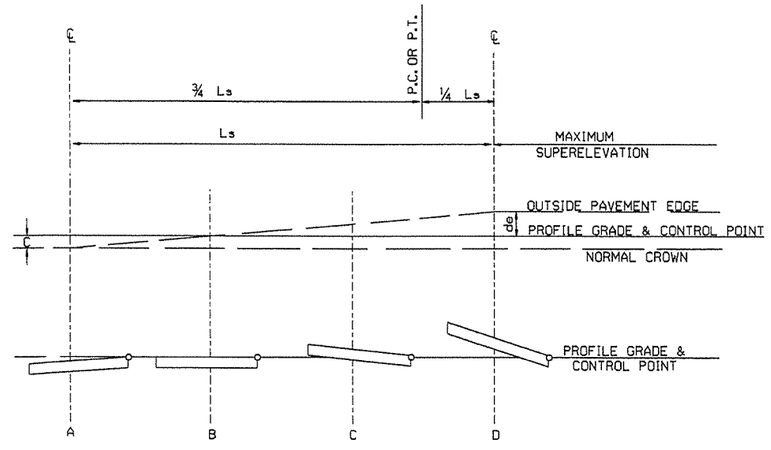

ONE-WAY TRAFFIC
OUTSIDE LANE

SUPERELEVATION FORMULA = $S = +\frac{L(de+C)}{Ls} - C$

DATE	REVISION	DATE FILMED
01-09-87	ISSUED	578-1-15-87

ARKANSAS STATE HIGHWAY COMMISSION

TABLES AND METHOD OF SUPERELEVATION FOR ONE-WAY TRAFFIC

STANDARD DRAWING SE-1

SUPERELEVATION TABLE FOR TWO - WAY TRAFFIC

DEGREE OF CURVE	30 MPH e	30 MPH Ls (FT) MINIMUM	30 MPH Ls (FT) DESIRABLE	40 MPH e	40 MPH Ls (FT) MINIMUM	40 MPH Ls (FT) DESIRABLE	50 MPH e	50 MPH Ls (FT) MINIMUM	50 MPH Ls (FT) DESIRABLE	55 MPH e	55 MPH Ls (FT) MINIMUM	55 MPH Ls (FT) DESIRABLE	60 MPH e	60 MPH Ls (FT) MINIMUM	60 MPH Ls (FT) DESIRABLE	70 MPH e	70 MPH Ls (FT) MINIMUM	70 MPH Ls (FT) DESIRABLE
0° 15'	N.C.			N.C.			N.C.			N.C.			N.C.			N.C.		
0° 30'	N.C.			N.C.			N.C.			N.C.			N.C.			N.C.		
0° 45'	N.C.			N.C.			R.C.			0.022			0.023			0.028		
1° 00'	N.C.			N.C.			0.021			0.026			0.030			0.037	275	300
1° 15'	N.C.			R.C.			0.026			0.032			0.037			0.046		
1° 30'	N.C.			0.021			0.031	200		0.037	225		0.043	250		0.054		
1° 45'	N.C.			0.026	175		0.036			0.043		300	0.049		300	0.062		
2° 00'	R.C.			0.028			0.040			0.048			0.055			0.070		
2° 15'	R.C.			0.031			0.045		250	0.053			0.061			0.078	300	350
2° 30'	0.021			0.034			0.049			0.058			0.067			0.085	315	
2° 45'	0.023			0.037			0.053			0.063			0.072			0.091	335	
3° 00'	0.025	150		0.040		200	0.057			0.067	230		0.077	260		0.096	350	400
3° 15'	0.027			0.043			0.061			0.072	245		0.082	275		0.098	360	
3° 30'	0.029			0.046			0.065	205		0.076	255		0.086	285		0.100	360	
3° 45'	0.031		200	0.049			0.069	215		0.080	265		0.090	295	350			
4° 00'	0.033			0.051			0.072	225		0.083	270		0.093	305				
4° 30'	0.037			0.056			0.078	240		0.087	280		0.096	315				
5° 00'	0.040			0.061			0.083	250		0.091	295	350	0.098	320				
5° 30'	0.043			0.066	185		0.088	260		0.094	300							
6° 00'	0.046			0.070	190		0.092	270	300	0.096	305							
6° 30'	0.050			0.074	200		0.095	280		0.100	315							
7° 00'	0.053			0.078	210		0.098	285										
7° 30'	0.056			0.081	215		0.099	290										
8° 00'	0.058			0.084	220		0.100	290										
8° 30'	0.061			0.087	225	250												
9° 00'	0.063			0.089	230													
10° 00'	0.068	160		0.094	235													
11° 00'	0.072	170		0.097	250													
12° 00'	0.076	175		0.099	250													
13° 00'	0.080	180		0.100	250													
14° 00'	0.083	190																
15° 00'	0.086	195																
16° 00'	0.089	200																
17° 00'	0.091	200																
18° 00'	0.093	205																
19° 00'	0.095	210																
20° 00'	0.097	215	250															
21° 00'	0.098	215																
22° 00'	0.099	215																
23° 00'	0.099	215																
24° 00'	0.100	220																
	D MAX = 24° 45'			D MAX = 13° 15'			D MAX = 8° 15'			D MAX = 6° 30'			D MAX = 5° 15'			D MAX = 3° 30'		

ABBREVIATIONS

NC - NORMAL CROWN
RC - REVERSE CROWN, SUPERELEVATION AT NORMAL CROWN SLOPE
e - RATE OF SUPERELEVATION (FT. PER FT.)
Ls - LENGTH OF SUPERELEVATION TRANSITION (FT.)
L - DISTANCE FROM BEGINNING OF SUPERELEVATION TRANSITION TO ANY POINT (FT.)
d - WIDTH OF PAVEMENT (FT.) OR WIDTH OF SUBGRADE (FT.)
C - NORMAL CROWN (FT.)

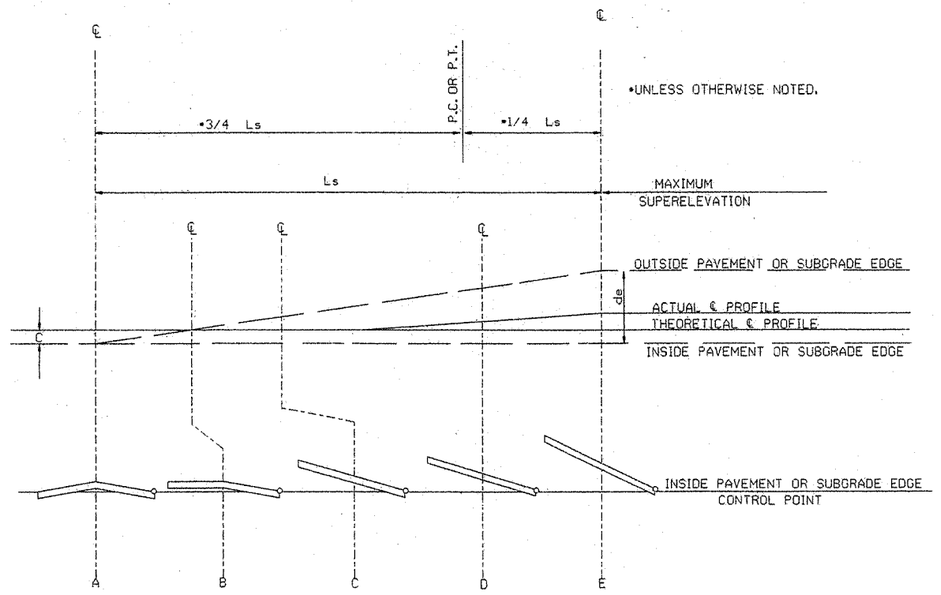

STANDARD METHOD WHEN SUPERELEVATION REVOLVES AROUND INNER SUBGRADE POINT OR INNER PAVEMENT EDGE

NOTE: MAINTAIN NORMAL CROWN ON INSIDE UNTIL SUPERELEVATION EXCEEDS 2C.

GENERAL NOTES

1. ON PAVEMENT WITH TWO-WAY TRAFFIC, THE SUPERELEVATION SHALL BE REVOLVED ON THE INSIDE PAVEMENT EDGE UNLESS OTHERWISE NOTED ON THE PLANS
2. SUPERELEVATION VALUES SHOWN ON THE CROSS SECTIONS ARE VALUES (+) OR (-) TO BE ADDED TO OR SUBTRACTED FROM THE POINT OF CONTROL.
3. LENGTHS FOR L MAY BE ROUNDED IN MULTIPLES OF 25 FT. OR 50 FT. TO PERMIT SIMPLER CALCULATIONS.
4. PAVEMENTS WIDER THAN 2 LANES SHALL HAVE ADDITIONAL TRANSITION LENGTHS AS FOLLOWS:

3 LANE UNDIVIDED - - - - - +20%
4 LANE UNDIVIDED - - - - - +50%
5 LANE UNDIVIDED - - - - - +80%
6 LANE UNDIVIDED - - - - - +100%

NOTE: MAINTAIN NORMAL CROWN ON INSIDE UNTIL SUPERELEVATION EXCEEDS 2C.

RATE OF SUPERELEVATION SHALL BE COMPUTED ON STRAIGHT LINE METHOD USING APPLICABLE Ls.

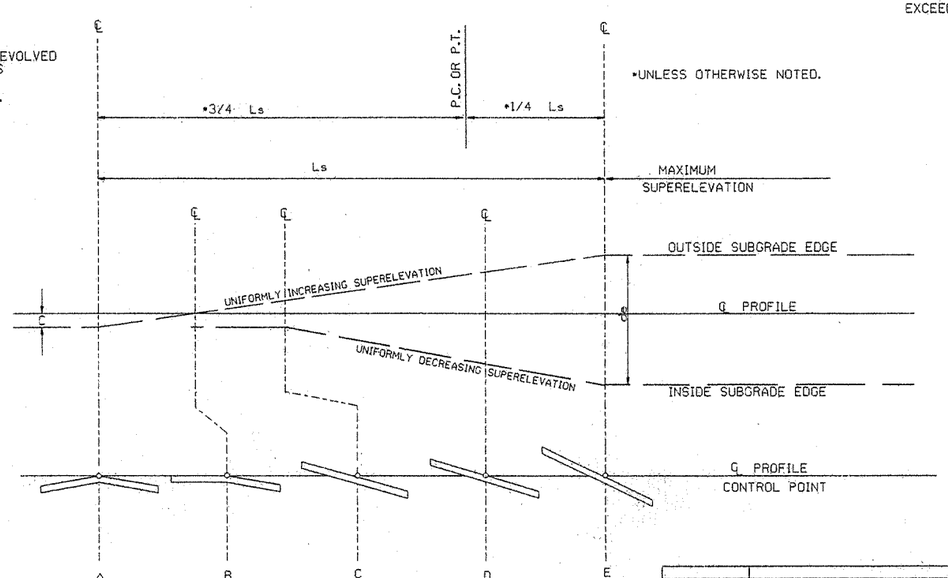

STANDARD METHOD WHEN SUPERELEVATION REVOLVES AROUND CENTER LINE

SUPERELEVATION FORMULA = $\frac{Lde}{Ls}$

DATE	REVISION	DATE FILMED
10-18-96	ADDED FORMULA	10-18-96
01-09-87	ISSUED	534-1-9-87

ARKANSAS STATE HIGHWAY COMMISSION

TABLES AND METHOD OF SUPERELEVATION FOR TWO-WAY TRAFFIC

STANDARD DRAWING SE-2

FILE STDSE2.DGN

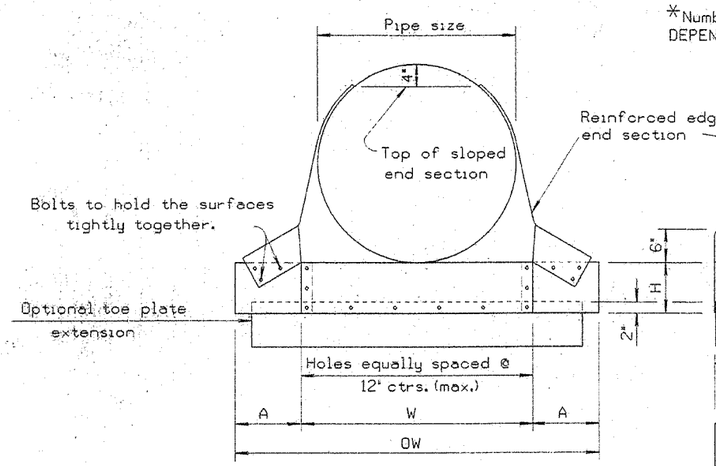

FRONT VIEW CIRCULAR PIPE

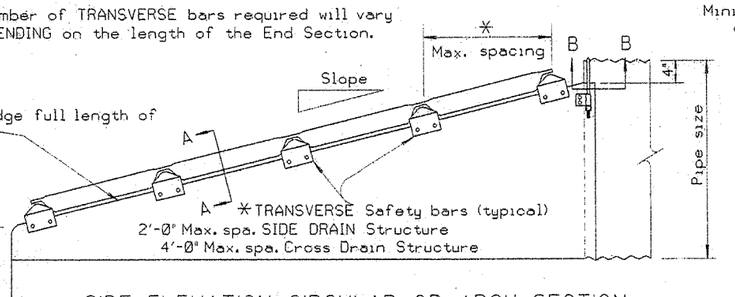

SIDE ELEVATION CIRCULAR OR ARCH SECTION

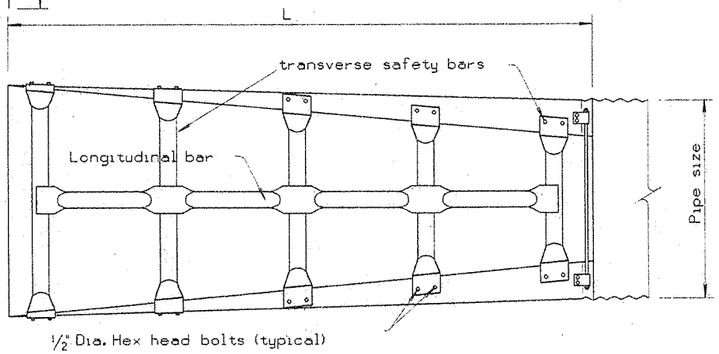

TOP VIEW CIRCULAR OR ARCH SECTION

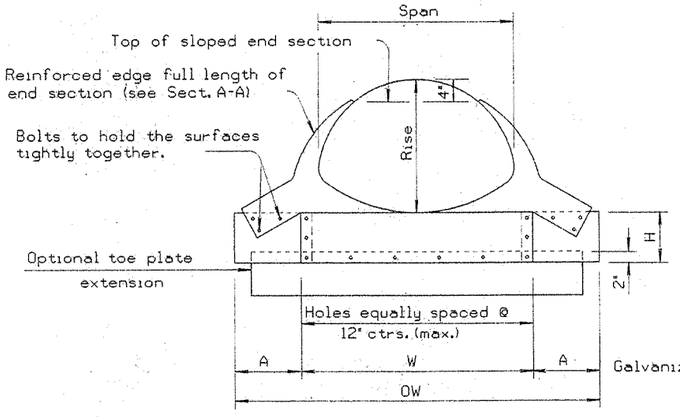

FRONT VIEW ARCH PIPE

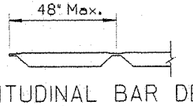

LONGITUDINAL BAR DETAIL

Note: Bars shown are for Cross Drain Structures.

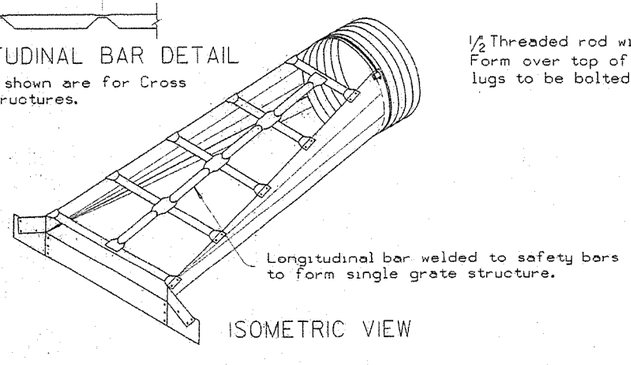

ISOMETRIC VIEW

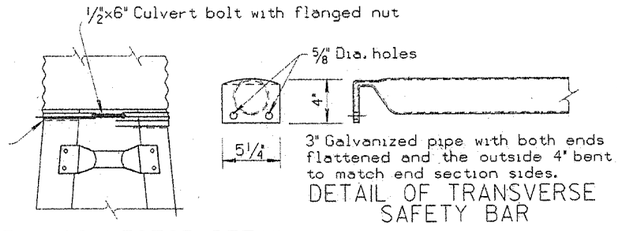

TYPE #1 CONNECTOR DETAIL

For 15" thru 24" pipe

DETAIL OF TRANSVERSE SAFETY BAR

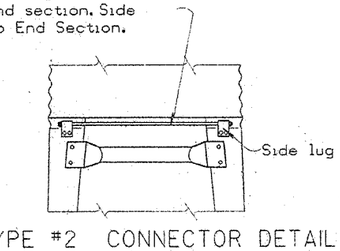

TYPE #2 CONNECTOR DETAIL

For 30" and larger round pipes & 21"x15" thru 64"x43" arch pipes

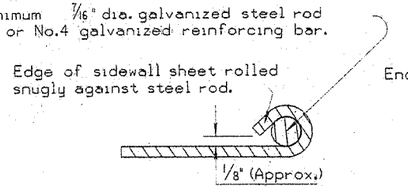

SECTION A-A

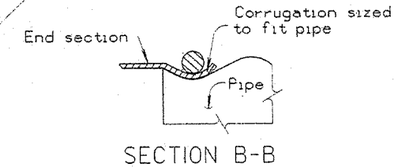

SECTION B-B

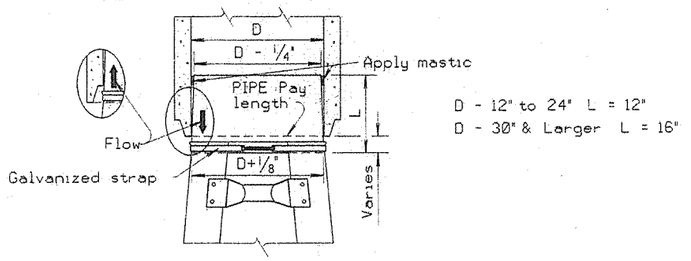

Note: Metal end section to be firmly wedged INTO PIPE END BEFORE BACKFILLING PIPE.

(Tapered sleeve to be 12 Ga. smooth galvanized steel in accordance with AASHTO M 218.)

STEEL END SECTION FOR CONCRETE PIPE
(Alternate for Concrete End Section)

GENERAL NOTES

End sections shall be fabricated from galvanized steel meeting the requirements of SUBSECTION 606.02(c)(1) OF THE STANDARD SPECIFICATIONS.
When specified optional toe plate extension shall be punched and bolted to end section apron lip with ⅜" diameter galvanized bolts. Steel for toe plate extension shall be same gauge as end section.
Dimensions shall be overall width less 6" by 8" high.
Attachment to circular pipes 15" through 24" diameter shall be made with Type #1 straps. All other sizes shall be attached with Type #2 rods and lugs.
Safety bars shall be fabricated from steel pipe meeting the requirements of ASTM A-53 Schedule 40 Specifications. Safety bars shall be hot dipped galvanized after fabrication.
All work and materials required for construction and installation of safety end section shall be included in the PRICE BID EACH FOR SAFETY END SECTIONS FOR PIPE CULVERTS.
Longitudinal and transverse bars will be required for cross drain structures when span is greater than 30", no safety bars will be REQUIRED FOR 30" SPAN OR LESS WHEN USED ON CROSS DRAIN STRUCTURES.
Transverse bars will be required for all sizes of side drain structures.
Class 1 safety end sections shall be end sections with a 4:1 slope.
Class 2 safety end sections shall be end sections with a 6:1 slope.

SAFETY END SECTIONS FOR ARCH PIPES													SAFETY END SECTIONS FOR CIRCULAR PIPES								
Equv. Dia.	Nom. W.W. Area Sq Ft	Pipe Arch Span (In.)	Pipe Arch Rise (In.)	Min. Gauge End Sect.	Dimensions in Inches A	H	W	OW	Slope	L (In)	Slope	L (In)	Pipe Dia.	Min. Gauge Ends	Dimensions in Inches A 1"Tol	H 1"Tol	W 2"Tol	OW	L Dimensions in Inches Slope	L	Slope	L
18"	1.6	21	15	16	8	5	27	43	4:1	20	6:1	30	15"	16	8	6	21	37	4:1	20	6:1	30
21"	2.2	24	18	16	8	6	30	46	4:1	32	6:1	48	18"	16	8	6	24	40	4:1	32	6:1	48
24"	2.9	28	20	16	8	6	34	50	4:1	40	6:1	60	21"	16	8	6	27	43	4:1	44	6:1	66
30"	4.5	35	24	14	12	9	41	65	4:1	56	6:1	84	24"	16	8	6	30	46	4:1	56	6:1	84
36"	6.5	42	29	12	12	9	48	72	4:1	76	6:1	114	30"	12	12	9	36	60	4:1	80	6:1	120
42"	8.9	49	33	12	16	12	55	87	4:1	92	6:1	138	36"	12	12	9	42	66	4:1	104	6:1	156
48"	11.6	57	38	12	16	12	63	95	4:1	112	6:1	168	42"	12	16	12	48	80	4:1	128	6:1	192
54"	14.7	64	43	12	16	12	70	102	4:1	132	6:1	198	48"	12	16	12	54	86	4:1	152	6:1	228
60"	18.1	71	47	12	16	12	77	109	4:1	148	6:1	222	54"	12	16	12	60	92	4:1	176	6:1	264
72"	26.0	83	57	12	16	12	89	121	4:1	188	6:1	282	60"	12	16	12	66	98	4:1	200	6:1	300

DATE	REVISION	DATE FILMED
10-18-96	REVISED ASTM REF. TO AASHTO	10-18-96
8-15-91	DRAWN & ISSUED	

ARKANSAS STATE HIGHWAY COMMISSION

SAFETY END SECTION FOR CIRCULAR AND ARCH PIPES

STANDARD DRAWING SES-1

R1-1
30"X30"

W1-3
30"X30"
(LT. OR RT.)

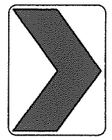

W1-8
18"X24"

W2-5
30"X30"

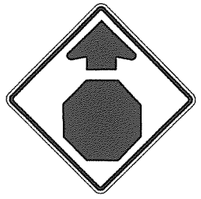

W3-1
36"X36"

W5-1
36"X36"

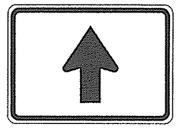

M6-3
21"X15"

R1-2
36"X36"X36"

W1-4
30"X30"
(LT. or RT.)

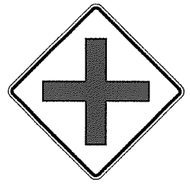

W2-1
30"X30"

S1-1
36"X36"

W3-2
36"X36"

County
Route Marker
M1-6
24"X24"

NOTE: REFLECTORIZED YELLOW LEGEND (COUNTY NAME, ROUTE LETTER & NUMBER) & BORDER ON A BLUE BACKGROUND.

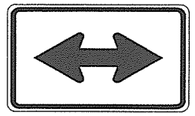

M6-4
21"X15"

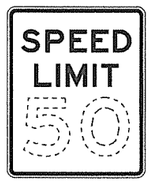

R2-1
24"X30"

W1-5
30"X30"
(LT. or RT.)

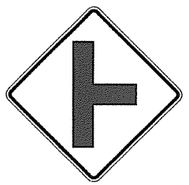

W2-2
30"X30"

W5-2
36"X36"

W8-3
36"X36"

R1-3P
18"X6"

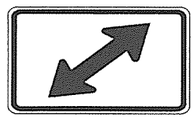

M6-5
21"X15"

W1-1
30"X30"
(LT. or RT.)

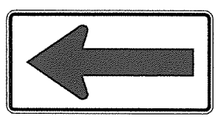

W1-6
48"X24"

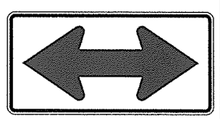

W1-7
48"X24"

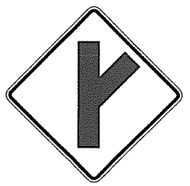

W2-3
30"X30"
(LT. or RT.)

W5-3
36"X36"

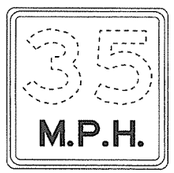

W13-1P
18"X18"

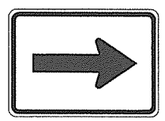

M6-1
21"X15"

NOTE: ALL M6 SIGNS TO BE MADE WITH REFLECTORIZED YELLOW ARROW & BORDER WITH BLUE BACKGROUND.

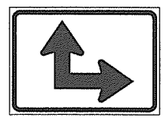

M6-6
21"X15"

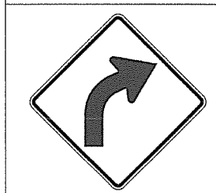

W1-2
30"X30"
(LT. or RT.)

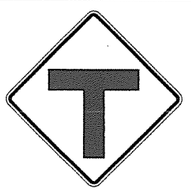

W2-4
30"X30"

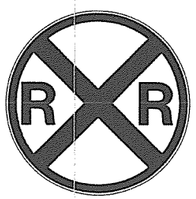

W10-1
36" DIAMETER

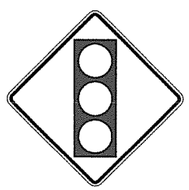

W3-3
36"X36"

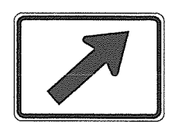

M6-2
21"X15"

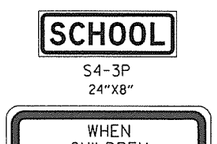

S4-3P
24"X8"

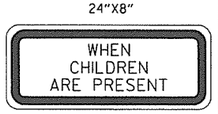

S4-2P
24"X10"

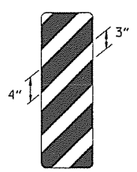

OM-3
12"X36"
(LT. or RT.)

MINIMUM DIMENSIONS SHOWN

SUPPORT SECTION

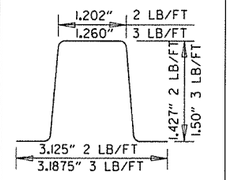

(U-CHANNEL)
STANDARD SUPPORT
ASSEMBLIES

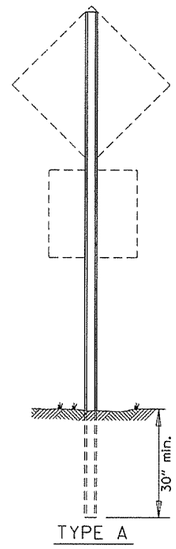

TYPE A

NOTE: LENGTH OF SIGN POSTS SHALL BE DETERMINED SO AS TO PROVIDE FOR MINIMUM VERTICAL CLEARANCES AS CALLED FOR IN THE SPECIFICATIONS PLUS A MINIMUM VERTICAL PENETRATION OF 30" IN THE SOIL.

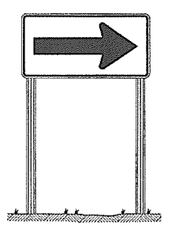

TYPE B

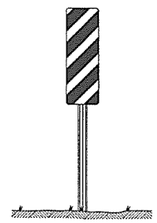

TYPE C

MINIMUM WEIGHT

TYPE A & B = 3 LBS./FT.
TYPE C = 2 LBS./FT.

STANDARD HIGHWAY SIGNS

DATE	REVISION	DATE FILMED
9-12-13	DELETED JOB NO. BLOCK; REVISED R1-3 TO R1-3P	
4-17-08	REVISED SIGN DESIGNATION - W3-1& W3-2	
4-10-03	REVISED W5-2, W8-3, OM-3; ADDED W1-8	
1-5-81	REDRAWN	960-1-15-81
9-15-78	ADDED W14-3	877-9-15-78
9-2-76	POST WT.	623-9-3-76
5-3-76	STEEL POST WT. FROM 2#-3#; ADDED S4-2 & S4-3	504-5-5-76
8-12-74	REV. HT. TYPE "C" ASSEMBLY	500-8-21-74
12-21-72	ADDED M6-2,3,4,5,6	500-12-21-72
12-1-72	ISSUED	562-12-1-72

SUPPORT ASSEMBLIES

ARKANSAS STATE HIGHWAY COMMISSION

STANDARD HIGHWAY SIGNS AND SUPPORT ASSEMBLIES

STANDARD DRAWING SHS-1

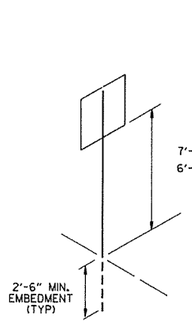

U-1

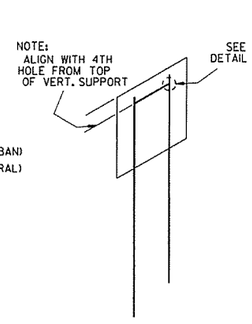

U-2

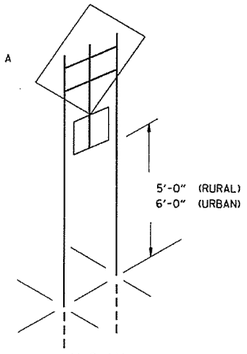

U-2 (A)

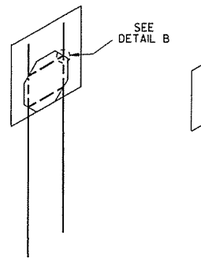

U-2 (B)

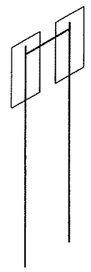

U-2 (1)

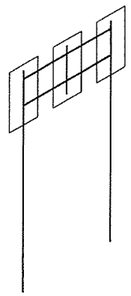

U-2 (2)

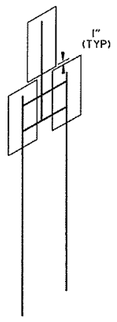

U-2 (3)

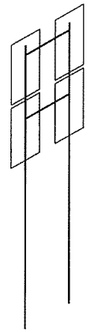

U-2 (4)

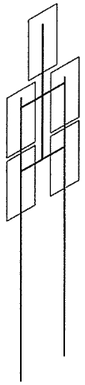

U-2 (5)

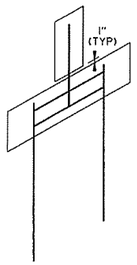

U-2 (6)

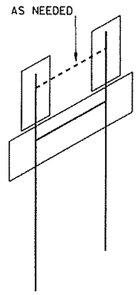

U-2 (7)

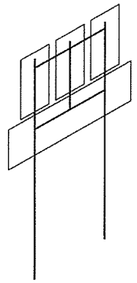

U-2 (8)

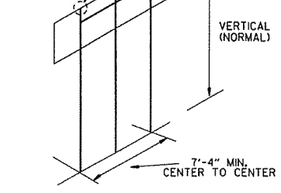

U-3

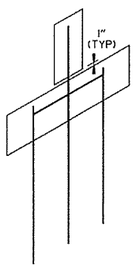

U-3 (1)

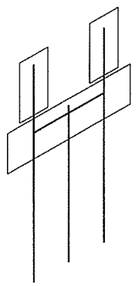

U-3 (2)

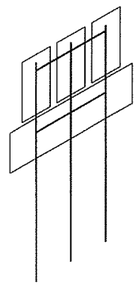

U-3 (3)

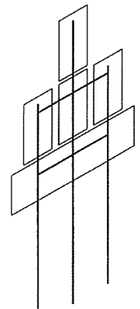

U-3 (4)

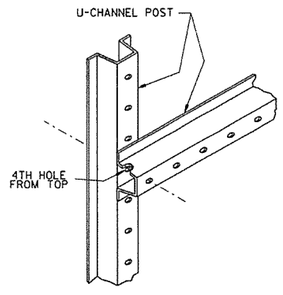

DETAIL A

SHOWING HORIZONTAL BRACE

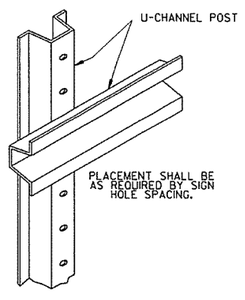

DETAIL B

SHOWING BACK-TO-BACK INSTALLATION

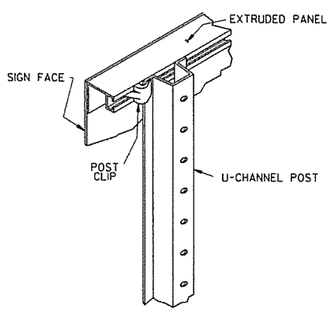

DETAIL C

SHOWING GUIDE SIGN MOUNTING WITH EXTRUDED PANELS

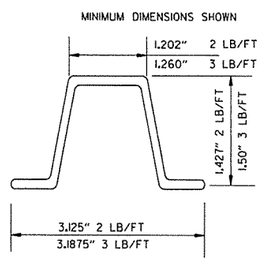

DETAIL C

U-CHANNEL POST

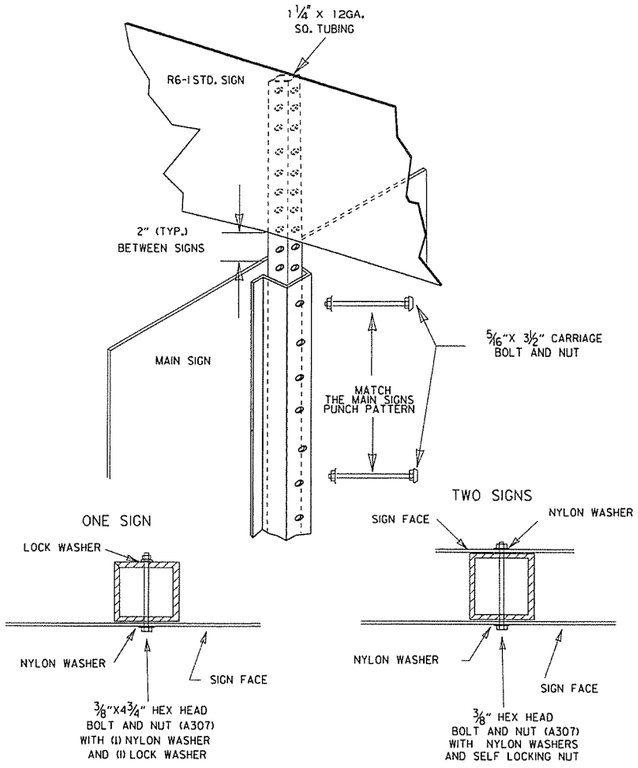

DETAIL E

R6-1 EXTENSION FOR U-CHANNEL POST

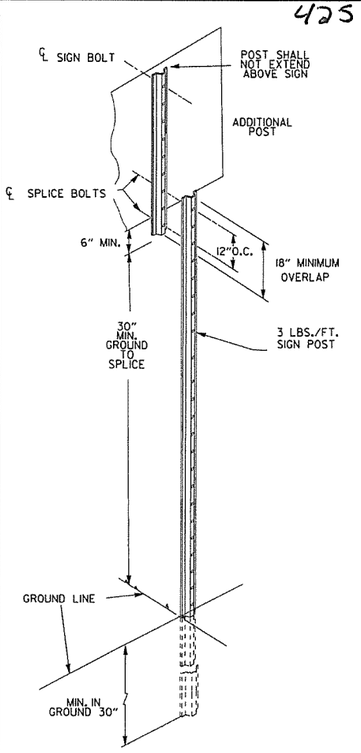

DETAIL F

DETAIL OF SPLICES

NOTES:

SIGNS AT LEAST 8' IN LENGTH MAY BE INSTALLED ON THREE 3 LB. POST. IN NO CASE SHALL THERE BE MORE THAN TWO 3 LB. POSTS WITHIN A 7' PATH.

SPLICES NECESSARY TO ATTAIN PROPER MOUNTING HEIGHT SHALL BE AS SHOWN IN DETAIL (F).

NORMAL INSTALLATIONS WILL REQUIRE 5/16 " DIA. CARRIAGE BOLTS TO MOUNT SIGNS TO POST AND TO ASSEMBLE THE VARIOUS POST SUPPORTS.

ALL SIGN POSTS SHALL BE PLUMB.

THE POST FOR "TYPE U" SUPPORTS SHALL BE HOT DIP GALVANIZED.

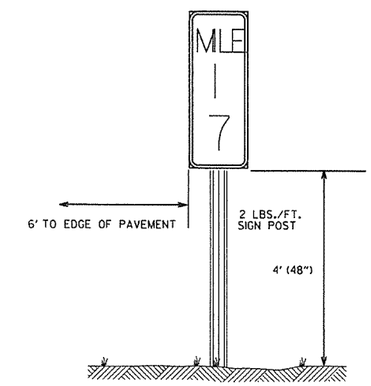

TYPICAL MILE MARKER INSTALLATION

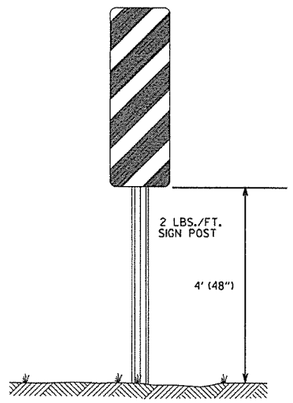

TYPICAL OM-3 INSTALLATION AT EDGE OF OBSTRUCTION

DATE	REVISION	FILMED
9-12-13	REVISED U-2(3), U-2(6), U-3(1), DETAIL D; ADDED DETAILS E & F; ADDED TYPICAL MARKERS	
10-9-03	REMOVED ROUND POST & REVISED SPACING	
10-12-95	MOVED UPPER SPLICE	
6-8-95	REVISED SPLICE DETAIL	6-8-95
2-2-95	REDRAWN	2-2-95

ARKANSAS STATE HIGHWAY COMMISSION

U-CHANNEL POST ASSEMBLIES

STANDARD DRAWING SHS-2

POST SIZE	BASE CONNECTION DATA										FUSE PLATE DATA										
	BOLT SIZE	BOLT TORQUE (INCH/LBS)	A	B	C	D	E	t_1	t_2	W	R	F	G	J	K	M	d_1	d_2	t_3	BOLT SIZE	WT. OF EACH FUSE PLATE LBS.
W 6X9												4 1/4"	2"	4"	2 1/4"	1"	9/16"	3/4"	1/4"	1/2" x 1 1/2"	1.01
W 6X12	5/8" x 2 3/4"	450"-600"	5"	2"	1 1/4"	2 3/4"	1 1/8"	3/4"	1/2"	1/4"	11/32"										
W 6X15												5"	2 1/2"	6"	3 1/2"	1 1/2"	11/16"	1 1/4"	3/8"	5/8" x 2 1/4"	2.51
W 8X18												5"	2 1/2"	5 1/4"	2 3/4"	1 1/4"	13/16"	1 1/16"	3/8"	3/4" x 2 1/4"	2.26
W 8X21												5 1/2"	2 1/2"	5 1/4"	2 3/4"	1 1/4"	13/16"	1"	1/2"	3/4" x 2 1/4"	3.35
W 10X22	3/4" x 3 1/2"	750"-1050"	6"	2 1/4"	1 3/8"	3 1/2"	1 1/4"	1"	3/4"	5/16"	13/32"	6"	3"	5 3/4"	2 3/4"	1 3/8"	1 1/8"	1 1/8"	1/2"	3/4" x 2 1/4"	4.03
W 10X26																					
W 12X26												6"	3"	6 1/2"	3 1/2"	1 5/8"	1 1/16"	1 5/16"	1/2"	3/4" x 2 1/4"	4.47

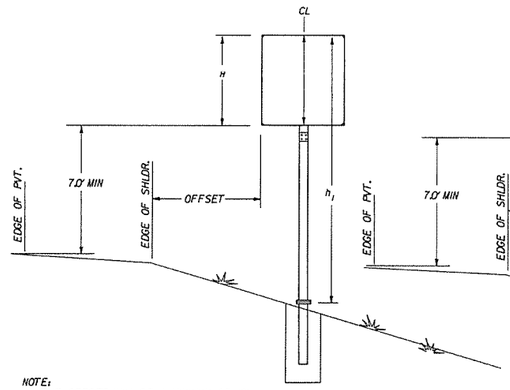

NOTE:
THE OFFSET WILL BE A MINIMUM OF 10' FROM THE EDGE OF PAVED SURFACE OR AS DIRECTED BY THE ENGINEER

G-1

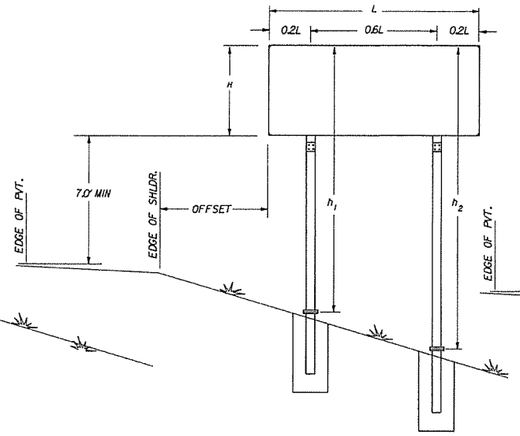

G-2

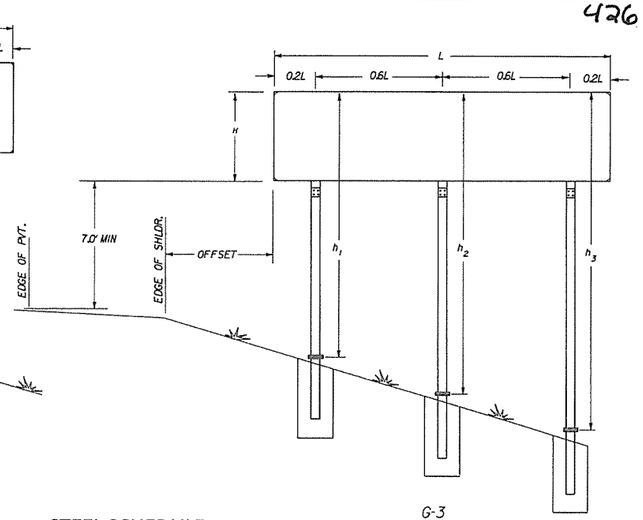

G-3

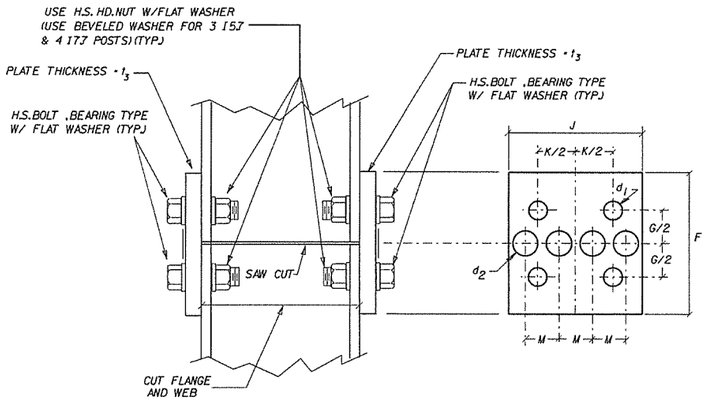

NOTE: USE H.S. HEX HEAD BOLTS, HEX HEAD NUTS AND BEVEL OR FLAT WASHERS (WHERE REQ) UNDER NUTS. ALL HOLES SHALL BE DRILLED. ALL PLATE CUTS SHALL PREFERABLY BE SAW CUTS, HOWEVER FLAME CUTTING WILL BE PERMITTED PROVIDED ALL EDGES ARE GROUND. METAL PROJECTING BEYOND THE PLANE OF THE PLATE FACE WILL NOT BE PERMITTED. STEEL FUSE PLATES SHALL CONFORM TO THE REQUIREMENTS OF ASTM-A36, ASTM-A441, ASTM-572 GRADE 50, OR ASTM-A588 MAY BE SUBSTITUTED FOR A36 AT THE OPTION OF THE FABRICATOR. STEEL USED SHALL HAVE AN ULTIMATE TENSILE STRENGTH NOT TO EXCEED 80 KSI.

NOTE: SECTIONS SHOWN ARE FOR INSTALLATION ON THE RIGHT SHOULDER AND IN THE GORE. BOLT HOLES IN BASE PLATE ARE SLOTTED AND BEVELED AS SHOWN. USE H.S. BOLTS WITH HEX HD., HEX NUT AND THREE FLAT WASHERS FOR EACH BOLT. SEE TABLE FOR BOLT DIA. AND TORQUE.
NOTE: ASSEMBLE SIGN POST TO STUB POST USING THE BOLTS SPEC. IN THE TABLE AND AS SHOWN IN THE ELEVATION DETAILS. THERE SHALL BE THREE FLAT WASHERS ON EACH BOLT LOCATED AS SHOWN IN THE ELEVATIONS. USE A SHIM TO PLUMB THE SIGN POST. THEN TIGHTEN THE BOLTS USING A 12" TO 15" WRENCH UNTIL THE WASHERS AND SHIMS ARE SEATED AND THE BOLT THREADS ARE CLEAR, THEN LOOSEN EACH BOLT IN TURN AND RETIGHTEN IN A SYSTEMATIC ORDER TO THE PRESCRIBED TORQUE (SEE TABLE). THE BURR THREADS ADJACENT TO THE BACK SIDE OF THE NUT TO PREVENT LOOSENING.

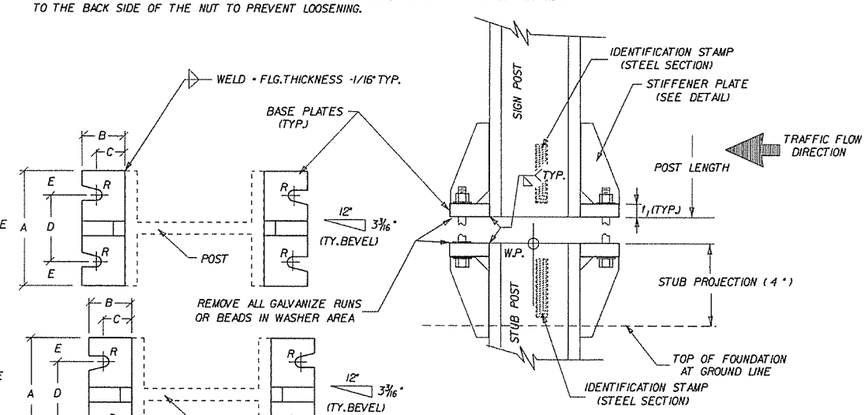

NOTE: BOLT HOLES, USED IN THE MOUNTING OF STANDARD SIGNS SHALL BE LOCATED IN THE FLANGE ADJACENT TO THE NEAR EDGE OF PAVEMENT FOR SINGLE POST ASSEMBLIES AND IN THE OUTSIDE FLANGES FOR MULTIPLE POST ASSEMBLIES.

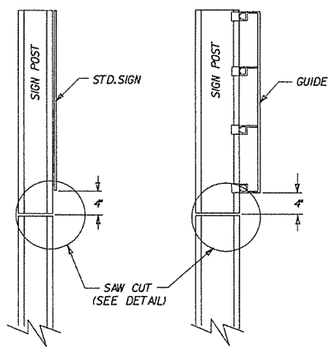

NOTE: POST SHALL BE SAW CUT AFTER GALVANIZING AND THE CUT SURFACE TREATED, AFTER PLATE IS INSTALLED AND ALL BOLTS FULLY TIGHTENED, WITH AN APPROVED ZINC SOLDER MEETING THE FEDERAL SPEC. O-G-93 (STICK ONLY).

STANDARD SIGNS GUIDE SIGNS

FUSE PLATE DETAILS

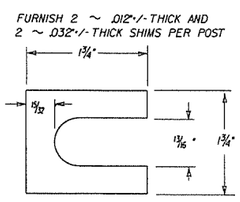

SHIM DETAIL

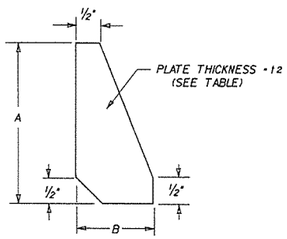

STIFFENER PLATE DETAIL

STEEL SCHEDULE

FOOTING DIAMETER	#3 TIE BARS DIAMETER	BAR LENGTH	POUNDS
INCHES	INCHES	FEET	
18	12	4.39	1.65
24	18	5.96	2.24
30	24	7.53	2.83
36	30	9.1	3.42

FOOTINIG DEPTH	#6 STRAIGHT BARS BAR LENGTH	NUMBER REQ'D.	POUNDS
FEET	FEET		
2.50	2.00	8	24.03
3.00	2.50	8	30.04
3.50	3.00	8	36.05
4.00	3.50	8	42.06
4.50	4.00	8	48.06
5.00	4.50	8	54.07
5.50	5.00	8	60.08
6.00	5.50	8	66.09
6.50	6.00	8	72.10
7.00	6.50	8	78.10
7.50	7.00	8	84.11
8.00	7.50	8	90.12

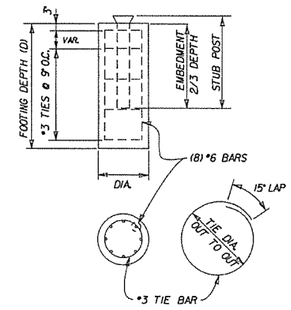

FOOTING QUANTITIES

FOOTING DEPTH	NUMBER TIE BARS REQ'D	18" DIAMETER CLASS S CONCRETE	18" DIAMETER REINF STEEL	24" DIAMETER CLASS S CONCRETE	24" DIAMETER REINF STEEL	30" DIAMETER CLASS S CONCRETE	30" DIAMETER REINF STEEL	36" DIAMETER CLASS S CONCRETE	36" DIAMETER REINF STEEL
FEET		CU. YD.	(GRADE 60)	CU. YD.	(GRADE 60)	CU. YD.	(GRADE 60)	CU. YD.	(GRADE 60)
2.50	4	0.16	31						
3.00	4	0.20	37						
3.50	5	0.23	44						
4.00	6	0.26	52	0.47	56				
4.50	6	0.29	58	0.52	62				
5.00	7	0.33	66	0.58	70	0.91	74		
5.50	8			0.64	78	1.00	83		
6.00	8			0.70	84	1.09	89	1.57	93
6.50	9					1.18	98	1.70	103
7.00	10					1.27	106	1.83	112
7.50	10							1.96	118
8.00	11							2.09	128

GENERAL NOTES

TIGHTEN THE HIGH STRENGTH BOLTS IN THE BASE CONNECTION ONLY TO THE TORQUE SHOWN. DO NOT OVERTIGHTEN.

BASE PLATES AND STIFFENER PLATES SHALL BE OF THE SAME MATERIAL AS THE PRIMARY SUPPORT POSTS WHICH THEY ARE WELDED.

REFER TO THE PLANS FOR FOOTING DIMENSIONS.

EACH STUB POST AND SIGN POST SHALL HAVE A PERMANENT IDENTIFYING STAMP WHICH SPECIFIES THE STEEL SECTION USED. IF THE CONTRACTOR ELECTS TO SHIP THE STUB POST SEPARATE FROM THE SIGN POST A MATCH MARK SYSTEM WILL BE REQUIRED.

SIGN POST AND STUB POST

DATE	REVISION	FILMED
9-12-13	ISSUED	

ARKANSAS STATE HIGHWAY COMMISSION

DETAIL OF BREAKAWAY SIGN SUPPORTS FOR GUIDE SIGNS

STANDARD DRAWING SHS-3

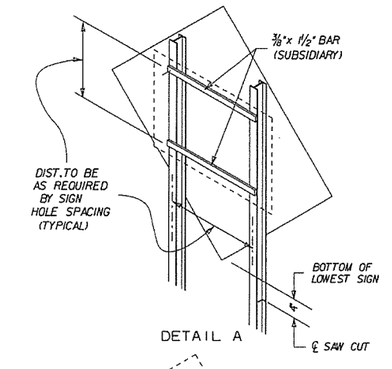

DETAIL A

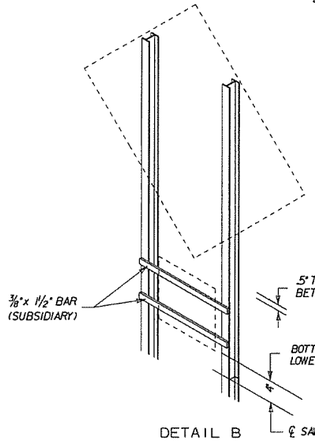

DETAIL B

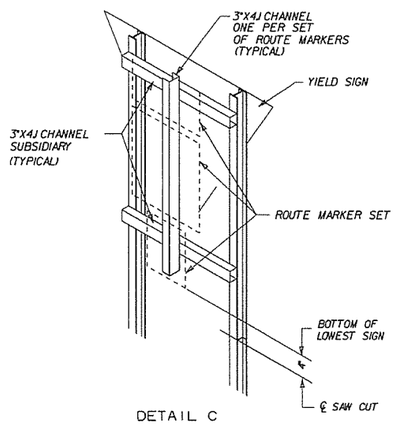

DETAIL C

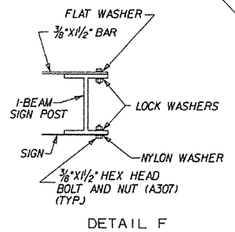

DETAIL F

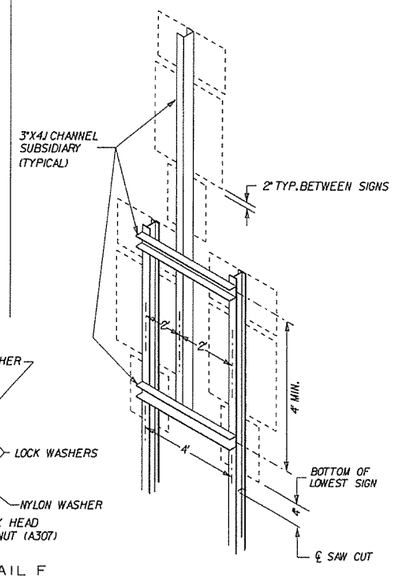

DETAIL D

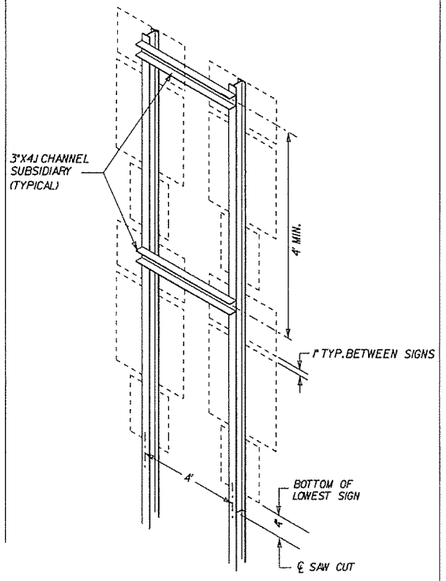

DETAIL E

NOTE

ALL ADDITIONAL MOUNTING HARDWARE, BOLTS, NUTS, CHANNELS AND BAR STRAPS REQUIRED TO MOUNT SECONDARY SIGNS WILL BE CONSIDERED TO BE SUPPLEMENTAL TO THE MAIN SIGN SUPPORT SPECIFIED. PAYMENT WILL BE CONSIDERED SUBSIDIARY TO THE MAIN SUPPORT.

THE GALVANIZED STEEL CHANNEL AND BAR SUPPORTS MAY BE ASTM A-36.

REFER TO THE P.C. RUTLEDGE FORMULA ON PAGE 58 OF THE AASHTO PUBLICATION "STANDARD SPECIFICATIONS FOR STRUCTURAL SUPPORTS FOR HIGHWAY SIGNS, LUMINAIRES, AND TRAFFIC SIGNALS.

ALL BOLT HOLES SHALL BE 1/8" DIA. UNLESS OTHERWISE SHOWN.

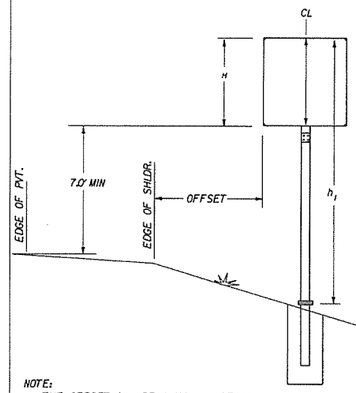

NOTE:
THE OFFSET WILL BE A MINIMUM OF 10' FROM THE EDGE OF PAVED SURFACE OR AS DIRECTED BY THE ENGINEER.

G-1

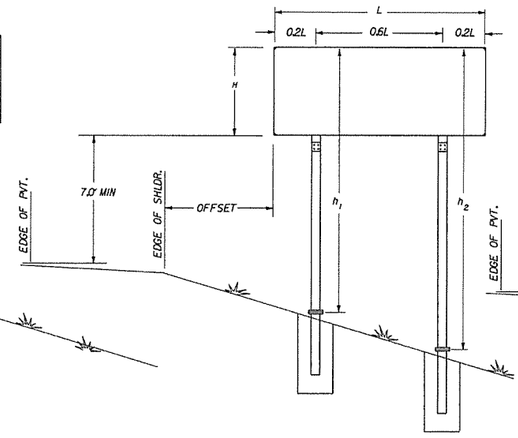

G-2

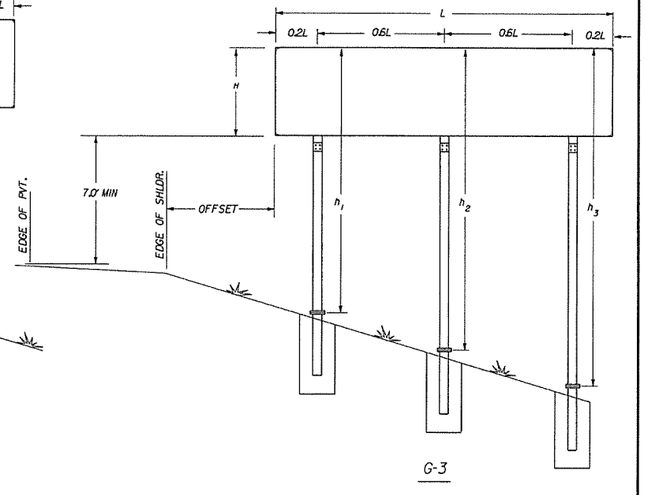

G-3

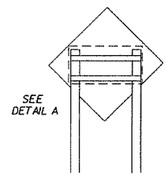

G2-1

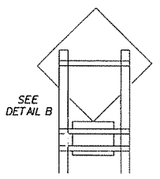

G2-2

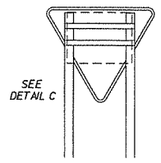

G2-3

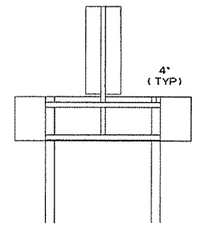

G2-4

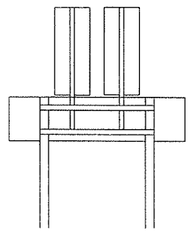

G2-5

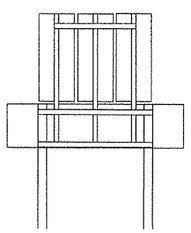

G2-6

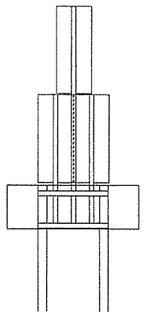

G2-7

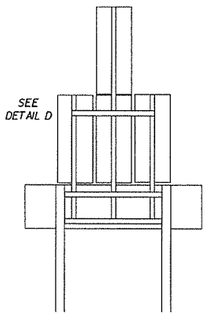

G2-8

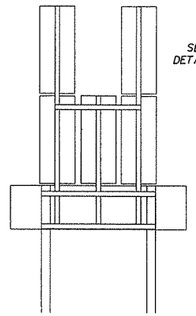

G2-9

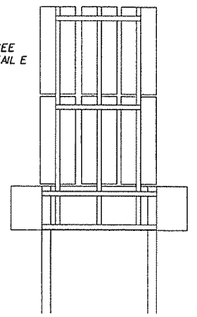

G2-10

			ARKANSAS STATE HIGHWAY COMMISSION
			DETAIL OF BREAKAWAY SIGN SUPPORTS FOR STANDARD SIGNS
9-12-13	ISSUED		STANDARD DRAWING SHS-4
DATE	REVISION	FILMED	

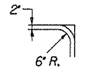

TYPICAL DETAIL

TYPE A

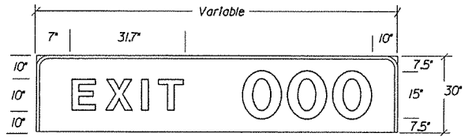

EXIT WITH 1 DIGIT 84"X30"=17.50 SF
EXIT WITH 2 DIGITS 96"X30"=20.0 SF
EXIT WITH 3 DIGITS 114"X30"=23.57 SF

TYPE B

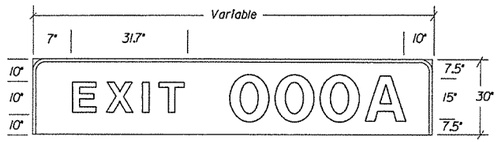

EXIT WITH 1 DIGIT PLUS "A"OR"B" 96"X30"=20.0 SF
EXIT WITH 2 DIGITS PLUS "A"OR"B" 114"X30"=23.57 SF
EXIT WITH 3 DIGITS PLUS "A"OR"B" 126"X30"=26.25 SF

TYPE C

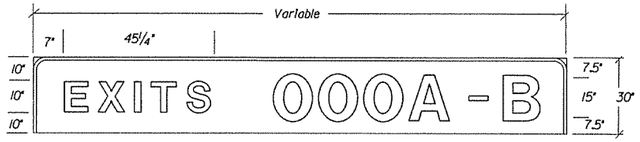

EXITS WITH 1 DIGIT PLUS "A"&"B" 132"X30"=27.50 SF
EXITS WITH 2 DIGITS PLUS "A"&"B" 150"X30"=31.25 SF
EXITS WITH 3 DIGITS PLUS "A"&"B" 168"X30"=35.00 SF

TYPE D

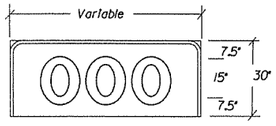

1 DIGIT 24"X30" =5.0 SF
2 DIGITS 42"X30" =8.75 SF
3 DIGITS 60"X30" =12.50 SF

TYPE E

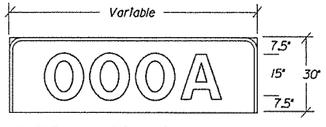

1 DIGIT PLUS "A"OR"B" 42"X30"=8.75 SF
2 DIGITS PLUS "A"OR"B" 60"X30"=12.50 SF
3 DIGITS PLUS "A"OR"B" 78"X30"=16.25 SF

EXIT PANEL DETAILS

NOTE: EXIT NUMBER PANELS SHALL HAVE WHITE LEGENDS AND BORDERS. THE BACK GROUND COLOR WILL BE AS USE SPECIFIES. SHEETING TYPE WILL BE THE SAME AS THE GUIDE SIGN WHICH THE EXIT PANEL IS ATTACHED OR AS SPECIFIED IN THE PLANS. PAYMENT FOR ALL POST CLIPS, BOLTS, AND ANGLES SHALL BE SUBSIDIARY TO THE ITEM "EXIT NUMBER PANEL".

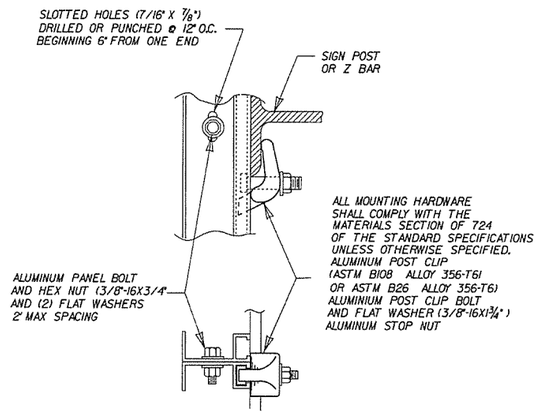

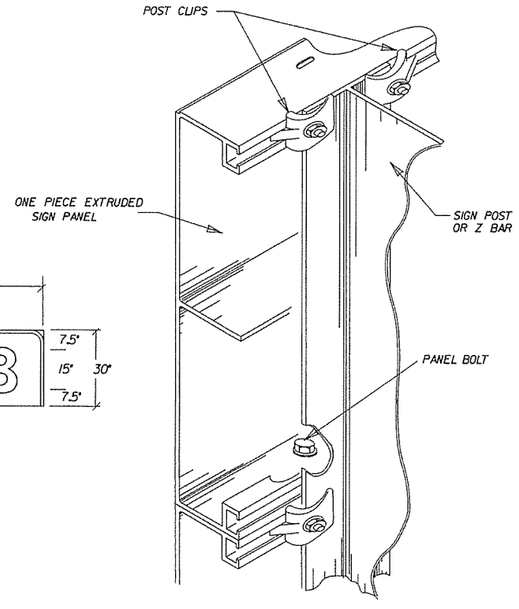

MOUNTING HARDWARE

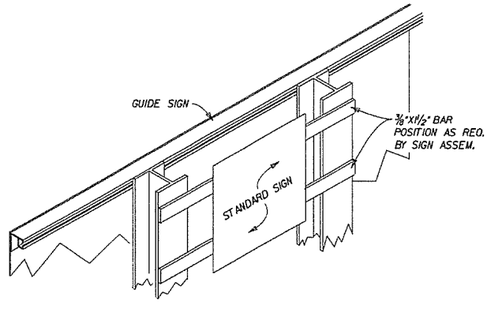

SECONDARY SIGN INSTALLATION ON BACKSIDE OF GUIDE SIGN

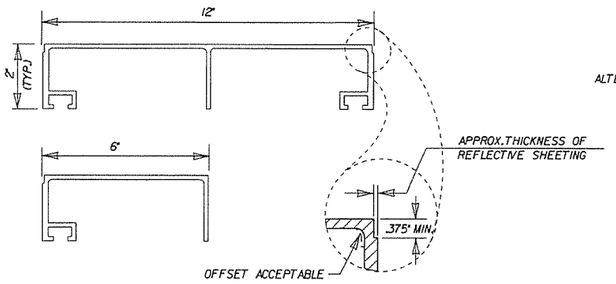

ONE PIECE EXTRUDED SIGN PANELS

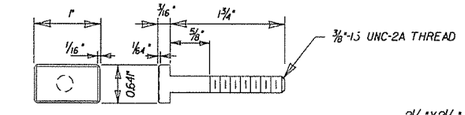

POST CLIP BOLT

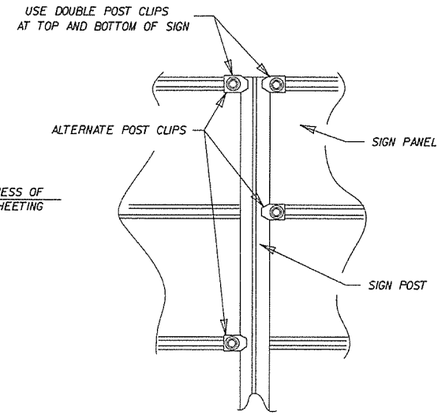

POST CLIP PLACEMENT

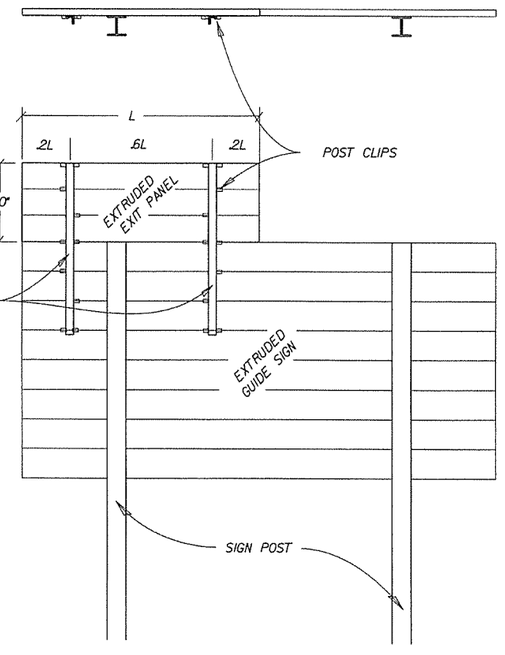

			ARKANSAS STATE HIGHWAY COMMISSION
			DETAILS OF GUIDE SIGN PANELS
9-12-13	ISSUED		STANDARD DRAWING SHS-5
DATE	REVISION	FILMED	

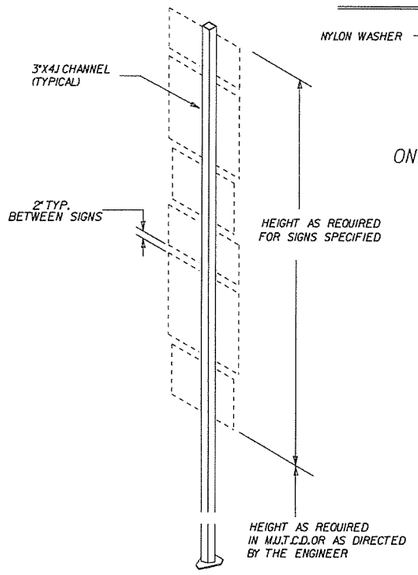

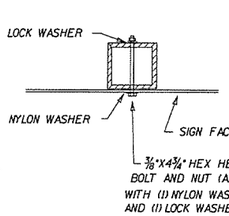

ONE SIGN

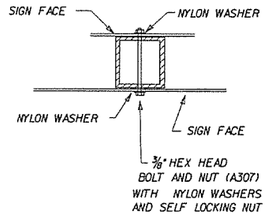

TWO SIGNS

CHANNEL SHALL BE FULL LENGTH OF RECTANGULAR AND SQUARE SIGNS AND SHALL EXTEND 1½" BEYOND BOLT HOLES ON DIAMOND OR IRREGULAR SHAPED SIGNS.

MOUNTING HARDWARE

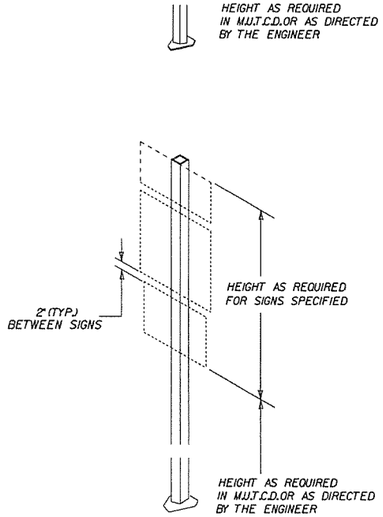

TYPE-1

BASIS OF ESTIMATE
APPROX. 100 lbs STEEL

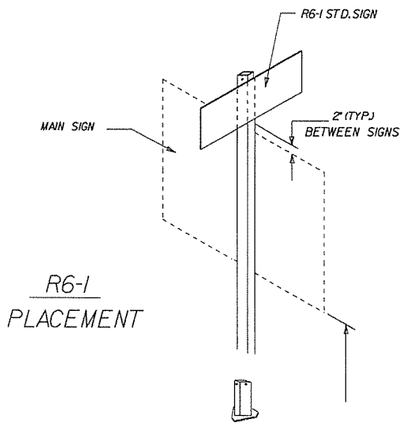

R6-1 PLACEMENT

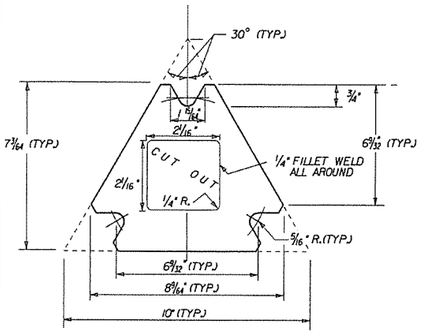

TOP PLATE

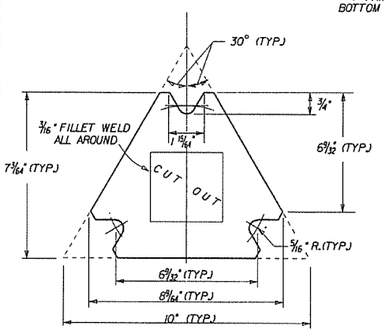

BOTTOM PLATE

GENERAL NOTES:

THE TOP PLATE OF TRIANGULAR SLIP BASES SHALL HAVE THE SAME EXTERIOR DIMENSIONS AS THE BOTTOM PLATE.

INSIDE DIAMETER OF THE SIGN POST SHALL BE CUT THROUGH THE CENTER OF THE TOP PLATE WITH THE HOLE EDGE BEVELED AS SHOWN. THE BEVEL END SHALL BE TANGENT TO THE BOLT HOLE. ANY MISALIGNMENT SHALL BE REMOVED BY GRINDING. FACE OF BEVEL SHALL BE FINISHED TO A MINIMUM SMOOTHNESS OF f-500.

OTHER MASH COMPLIANT BREAKAWAY SIGN SUPPORTS THAT HAVE THE SAME TOP PLATE DIMENSIONS AND SUPPORT 2" X 2" SQUARE TUBE SIGN POSTS MAY BE SUBSTITUTED AS APPROVED BY THE ENGINEER.

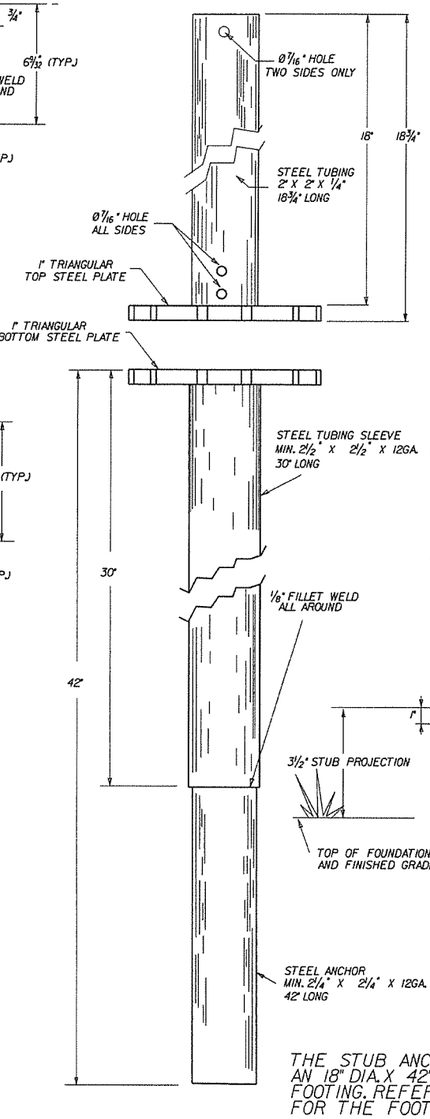

THE STUB ANCHOR SHALL BE SET IN AN 18" DIA. X 42" DEEP CONCRETE FOOTING. REFER TO STD. DRWG. SHS-3 FOR THE FOOTING DETAILS.

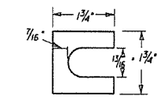

FURNISH (2) .012" THICK AND (2) .032" THICK SHIMS PER POST

SHIM DETAIL

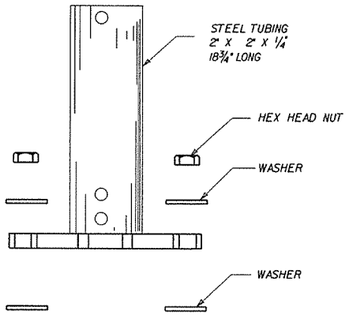

			ARKANSAS STATE HIGHWAY COMMISSION
			DETAIL OF OMNI-DIRECTIONAL BREAKAWAY SIGN SUPPORTS
9-12-13 DATE	ISSUED REVISION	FILMED	STANDARD DRAWING SHS-7

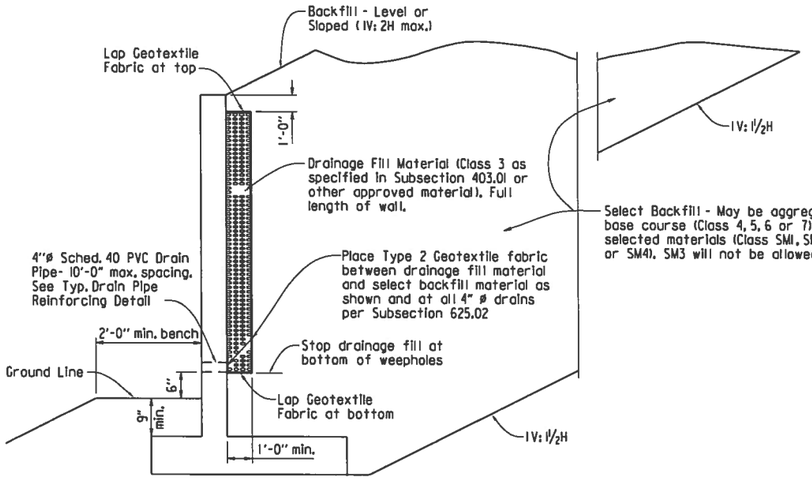

TYPICAL DRAINAGE & BACKFILL DETAILS

N.T.S

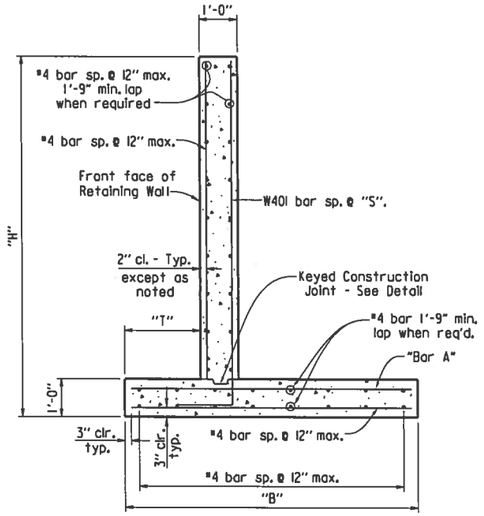

TYPICAL SECTION

N.T.S

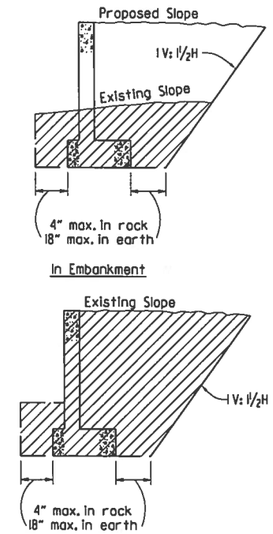

NOTE: Hatched area denotes maximum limits of pay excavation.

DETAILS OF EXCAVATION

N.T.S

GENERAL NOTES

CONSTRUCTION SPECIFICATIONS: Arkansas state Highway and Transportation Department Standard Specifications for Highway Construction (Current Edition) with applicable supplemental specifications and special provisions. Unless otherwise noted in the plans, Section and Subsection refer to the Standard Construction Specifications.

DESIGN SPECIFICATIONS: AASHTO LRFD Bridge Design Specifications, Sixth Edition (2012).

LIVE LOAD: Live Load Surcharge is not included in the design of these walls. Vehicular Live Load shall not be allowed within a distance equal to one-half the height of the wall.

CONCRETE: Concrete shall be poured in the dry and all exposed corners to be chamfered ½". All concrete shall be Class S with a minimum 28 day compressive strength f'c = 3,500 psi. A Class 2 Surface finish shall be used on all surfaces of the concrete unless otherwise noted.

REINFORCING STEEL: All reinforcing steel shall conform to AASHTO M31 orM53, Grade 60.

Foundations for footings shall be prepared in accordance with subsection 801.04. Backfill for retaining walls shall be in accordance with subsection 801.08.

Waterproof Membrane (Type C), waterstops, preformed joints, weep holes & geotextile fabric shall not be paid for directly, but shall be considered subsidiary to Class S Concrete.

Drainage fill material (Class 3) and select backfill shall be measured and paid for as Compacted Embankment.

These details are not intended for use along streams or ditches without consideration for scour.

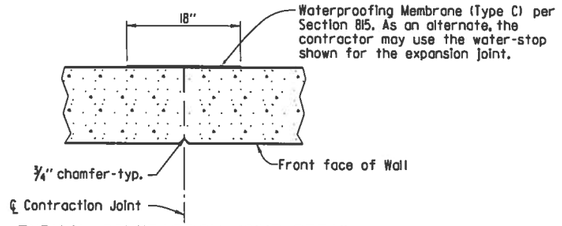

TYPICAL CONTRACTION JOINT DETAIL

N.T.S.

Note: 20'-0" Max. Spacing between Contraction Joints. Horizontal reinforcement shall be continuous through Contraction joints.

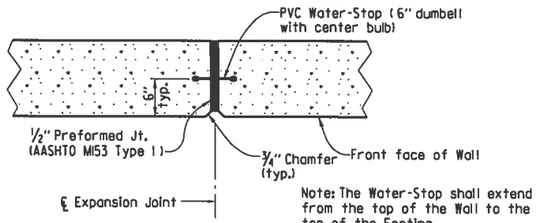

Note: The Water-Stop shall extend from the top of the Wall to the top of the Footing.

TYPICAL EXPANSION JOINT DETAIL

N.T.S.

Note: 60'-0" Max. Spacing between Expansion Joints. Horizontal reinforcing shall stop 2" from ℄ Expansion Joint.

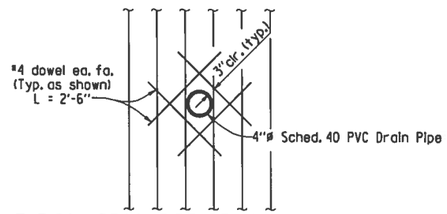

TYPICAL DRAIN PIPE REINFORCING DETAIL

N.T.S

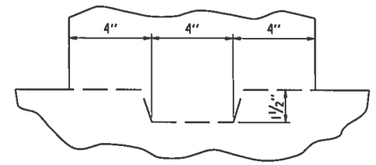

KEYED CONSTRUCTION JOINT DETAIL

N.T.S

SEISMIC ZONE: These walls have been designed for the following site adjusted peak ground accelerations (A_S):
Level Backfill - $A_S \leq .40g$
Sloped Backfill (1V: 2H max.) - $A_S \leq .30g$

TABLE OF RETAINING WALL VARIABLES (LEVEL BACKFILL)

"H"	"T"	"B"	"S"	"Bar A" Size @ Spacing
3'-0"	9"	2'-6"	12"	#4 @ 12"
4'-0"	9"	3'-6"	12"	#4 @ 12"
5'-0"	9"	4'-0"	12"	#4 @ 12"
6'-0"	9"	4'-6"	12"	#4 @ 12"
7'-0"	9"	5'-6"	12"	#4 @ 10"
8'-0"	9"	6'-0"	12"	#5 @ 10"
9'-0"	1'-0"	7'-0"	12"	#5 @ 6½"

TABLE OF RETAINING WALL VARIABLES (SLOPED BACKFILL) (1V: 2H MAX.)

"H"	"T"	"B"	"S"	"Bar A" Size @ Spacing
3'-0"	9"	2'-6"	12"	#4 @ 12"
4'-0"	9"	3'-6"	12"	#4 @ 12"
5'-0"	9"	4'-6"	12"	#4 @ 12"
6'-0"	9"	5'-6"	12"	#4 @ 6"
7'-0"	9"	6'-6"	12"	#5 @ 6½"
8'-0"	1'-6"	8'-0"	7½"	#6 @ 6"
9'-0"	1'-11"	9'-6"	5"	#8 @ 6"

BENDING DIAGRAMS

MARK	A	B	P.D.
W401	8"	"H" - 6"	3"
F401	1'-6"	1'-10"	2½"

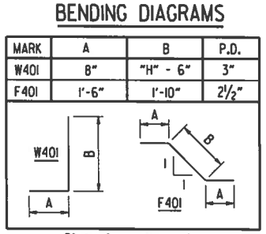

Dimensions are out to out of bars.

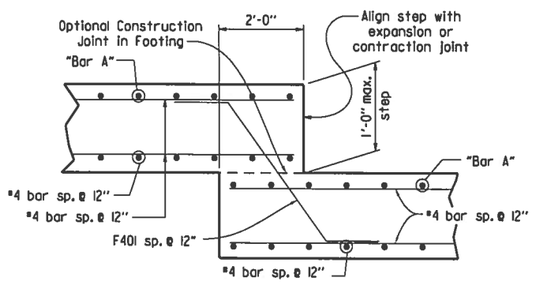

FOOTING STEP DETAIL

N.T.S.

DATE	REVISION	DATE FILMED
5-12-16	REVISED SLOPES FOR SELECT BACKFILL	
2-27-14	REVISED GENERAL NOTES	
7-26-12	DRAWING ISSUED	

ARKANSAS STATE HIGHWAY COMMISSION

REINFORCED CONCRETE RETAINING WALL (WITHOUT LIVE LOAD SURCHARGE)

STANDARD DRAWING SI - 2

R1-1

STANDARD 30"X30"
EXPRESSWAY 36"X36"
SPECIAL 48"X48"

R1-2

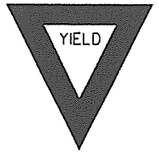

STD. 36"X36"X36"
EXPWY. 48"X48"X48"
FWY. 60"X60"X60"

R2-1

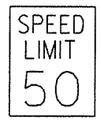

STD. 24"X30"
EXPWY. 36"X48"
FWY. 48"X60"

W3-5

STD. 36"X36"
EXPWY. 48"X48"
FWY. 48"X48"

W3-5a

STD. 36"X36"
EXPWY. 48"X48"
FWY. 48"X48"

R4-1

STD. 24"X30"
EXPWY. 36"X48"
FWY. 48"X60"

R4-2

STD. 24"X30"
EXPWY. 36"X48"
FWY. 48"X60"

R5-1

STD. 30"X30"
EXPWY. 36"X36"
SPECIAL 48"X48"

RII-2

48"X30"

RII-3A

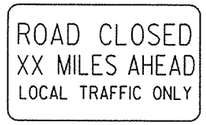

60"X30"

RII-4

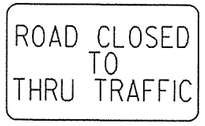

60"X30"

RSP-1

48"X30"

WI-1

STD. 36"X36"
FWY. 48"X48"

WI-2

STD. 36"X36"
FWY. 48"X48"

WI-3

STD. 48"X48"

WI-4

STD. 48"X48"

WI-6

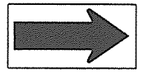

STD. 48"X24"
SPECIAL 60"X30"

WI-8

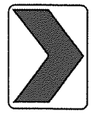

STD. 18"X24"
SPECIAL 24"X30"
EXPWY. 30"X36"
FWY. 36"X48"

W3-1

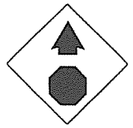

STD. 36"X36"
SPECIAL 48"X48"

W3-2

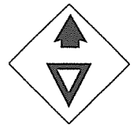

STD. 36"X36"
SPECIAL 48"X48"

W4-2

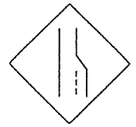

STD. 36"X36"
FWY. 48"X48"

W5-1

STD. 36"X36"
SPECIAL 48"X48"

W6-3

EXPWY. 36"X36"
SPECIAL 48"X48"

W8-7

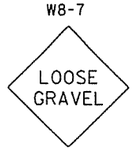

EXPWY. 36"X36"
FWY. 48"X48"

W9-2

STD. 36"X36"
FWY. 48"X48"

WI3-1

STD. 24"X24"

W20-1

STD. 48"X48"

W20-2

STD. 48"X48"

W20-3

STD. 48"X48"

W20-4

STD. 48"X48"

W20-5

STD. 48"X48"

W20-7a

STD. 36"X36"
FWY. 48"X48"

W21-2

STD. 30"X30"
SPECIAL 36"X36"

W21-5

STD. 30"X30"
SPECIAL 36"X36"

W24-1

STD. 36"X36"

WI-4b

STD. 48"X48"

R56-1

STD. 18"X18"

W8-11

STD. 36"X36"
FWY. 48"X48"

W8-9

STD. 36"X36"
FWY. 48"X48"

G20-1

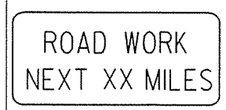

60"X24"

G20-2

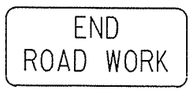

48"X24"

OM-3L OM-3R

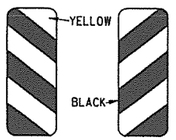

12"X36"

M4-9

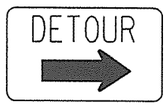

STD. 30"X24"
SPECIAL 48"X36"
SPECIAL 60"X48"

M4-10

48"X18"

R55-1

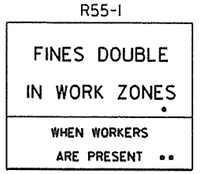

36"X60"
• USE 6" C LETTERS
•• USE 4" D LETTERS

ADVANCE DISTANCES
(XXXX)

500 FT	½ MILE
1000 FT	¾ MILE
1500 FT	1 MILE
	AHEAD

GENERAL NOTES:

1. ALL TRAFFIC CONTROL DEVICES USED ON ROAD CONSTRUCTION SHALL CONFORM TO THE MANUAL ON UNIFORM TRAFFIC CONTROL DEVICES, LATEST EDITION, AND TO THE STANDARD HIGHWAY SIGNS, LATEST EDITION, OR AS APPROVED BY THE FEDERAL HIGHWAY ADMINISTRATION.

2. TRAFFIC CONTROL DEVICES SHALL BE SET UP JUST BEFORE THE START OF CONSTRUCTION OPERATIONS AND SHALL BE PROPERLY MAINTAINED DURING THE TIME SUCH CONDITIONS EXIST. THEY SHALL REMAIN IN PLACE ONLY AS LONG AS NEEDED AND REMOVED THEREAFTER.

3. EXISTING SIGNS AND CONSTRUCTION SIGNS SHALL BE KEPT IN PROPER POSITION, AND BE CLEAN AND LEGIBLE AT ALL TIMES. SIGNS THAT DO NOT APPLY TO EXISTING CONDITIONS SHALL BE REMOVED. SIGNS THAT ARE DAMAGED, DEFACED, OR THAT ACCUMULATE DIRT DURING CONSTRUCTION SHALL BE CLEANED, REPAIRED, OR REPLACED.

• 4. SIGNS ARE USUALLY MOUNTED ON A SINGLE POST, ALTHOUGH THOSE WIDER THAN 36" OR LARGER THAN 10 SQ. FT. SHALL BE MOUNTED ON TWO POSTS OR ABOVE A TYPE III BARRICADE.

• 5. SIGN POSTS DIRECT BURIED IN SOIL SHALL BE 2 LB. MINIMUM CHANNEL POST OR 4"x4" WOOD POSTS. CHANNEL POSTS SHALL BE PAINTED GREEN. WOOD POSTS SHALL BE PAINTED WHITE. ALL POSTS SHALL BE NEATLY CONSTRUCTED, AND SHALL BE REPLUMBED, CLEANED, OR REPAIRED AS NEEDED FOR THE DURATION OF THE JOB. THERE SHALL NOT BE MORE THAN 2 POSTS IN A 7' PATH FOR WOOD OR CHANNEL POSTS. ANY CHANNEL POST SPLICE SHALL BE IN ACCORDANCE WITH STANDARD DRAWING TC-3.

6. POST MOUNTED SIGNS IN RURAL AREAS SHALL BE CONSTRUCTED WITH THE NEAR EDGE OF THE SIGN FROM 6 TO 12 FEET FROM THE PAVEMENT EDGE. SIGNS IN URBAN AREAS AND BARRICADE MOUNTED SIGNS SHALL BE MOUNTED A MINIMUM OF 2 FEET FROM THE PAVEMENT EDGE.

7. ALL POST AND BARRICADE MOUNTED SIGNS MOUNTED IN URBAN AREAS SHALL BE MOUNTED A MINIMUM DISTANCE OF 7' FROM THE BOTTOM OF THE SIGN TO THE ROADWAY SURFACE. ALL POST AND BARRICADE MOUNTED SIGNS MOUNTED IN RURAL AREAS SHALL BE MOUNTED A MINIMUM DISTANCE OF 7' FROM THE BOTTOM OF THE SIGN TO THE ROADWAY SURFACE, EXCEPT A MINIMUM OF 6' SHALL BE USED WHEN MOUNTING AN ADVISORY SIGN BELOW A WARNING SIGN. TEMPORARY SIGNS MAY BE MOUNTED ON PORTABLE SUPPORTS FOR INTERMEDIATE TERM STATIONARY WORK CONDITIONS. THE SIGNS MINIMUM MOUNTING HEIGHT SHALL BE 5'. RETROREFLECTIVE DEVICES SHALL BE USED. TEMPORARY SIGNS MAY BE MOUNTED ON PORTABLE SUPPORTS FOR SHORT-TERM, SHORT DURATION, AND MOBILE CONDITIONS. THEY SHALL BE NO LESS THAN ONE (1) FOOT ABOVE THE TRAVELED WAY. LONG-TERM STATIONARY SIGNS SHALL BE DIRECT BURIED IN SOIL, UNLESS CONDITIONS NECESSITATE THE USE OF PORTABLE SIGNS, OR AS APPROVED BY THE ENGINEER. CONCRETE PADS, CONCRETE OR ROCK BALLAST, OR OTHER SOLID MATERIALS SHALL NOT BE UTILIZED WITH PORTABLE SIGN SUPPORTS.

8. FLAGGERS SHALL USE REFLECTORIZED STOP-SLOW PADDLES. FLAGS MAY BE USED ONLY FOR EMERGENCY SITUATIONS.

9. MOST OF THE SIGNS SHOWN ARE ORIENTED TO THE RIGHT, HOWEVER, THIS DOES NOT PRECLUDE THE USE OF MIRROR IMAGES OF THESE SIGNS WHERE THE REVERSE ORIENTATION MIGHT BETTER CONVEY TO MOTORISTS THE PROPER DIRECTION OF MOVEMENT.

10. R55-1 SIGNS SHALL BE PLACED AT LEAST 1500' BUT NOT MORE THAN 1 MILE IN ADVANCE OF THE WORK ZONE. IF A SPEED LIMIT REDUCTION IS IN EFFECT, THE SIGN SHALL BE PLACED A MINIMUM OF 500' IN ADVANCE OF THE "REDUCED SPEED AHEAD" SIGN.

• NOTE: SUPPORTS FOR SIGNS, BARRICADES, AND VERTICAL PANELS THAT ARE DIFFERENT FROM THE REQUIREMENTS SHOWN IN NOTES 4 & 5, BUT MEET THE REQUIREMENTS OF NCHRP-350 OR MANUAL FOR ASSESSING SAFETY HARDWARE (MASH), WILL BE ACCEPTED. COMPLIANCE WITH THE REQUIREMENTS OF NCHRP-350 OR MANUAL FOR ASSESSING SAFETY HARDWARE (MASH) IS REQUIRED FOR ALL PROJECTS.

DATE	REVISION	FILMED
9-2-15	REVISED REDUCED SPEED LIMIT AHEAD SIGNS REVISED ROAD WORK NEXT XX MILES	
12-15-11	REVISED W24-1	
11-17-10	DELETED W8-9a & ADDED W8-9	
10-15-09	ADDED REFERENCE TO MASH & ADDED SIGN W24-1	
4-17-08	REVISED SIGN DESIGNATIONS	
11-18-04	REVISED NOTES	
10-9-03	REVISED NOTE 1	
11-16-01	REVISED NOTE 7	
9-28-00	REVISED NOTE	
11-18-98	ADDED NOTE	
6-26-97	REVISED NOTE 5	
4-03-97	REVISED NOTE 5	
10-18-96	ADDED CONTROLLED ACCESS HWY. SIGN & TO NOTE 7	
10-12-95	ADDED R55-1	
6-8-95	REVISED TO CORRECT SIGN ILLUSTRATIONS	6-8-95
2-2-95	REVISED PER PART VI, MUTCD SEPT. 3, 1993	
8-15-58	DRAWN AND PLACED IN USE	

ARKANSAS STATE HIGHWAY COMMISSION

STANDARD TRAFFIC CONTROLS FOR HIGHWAY CONSTRUCTION

STANDARD DRAWING TC-1

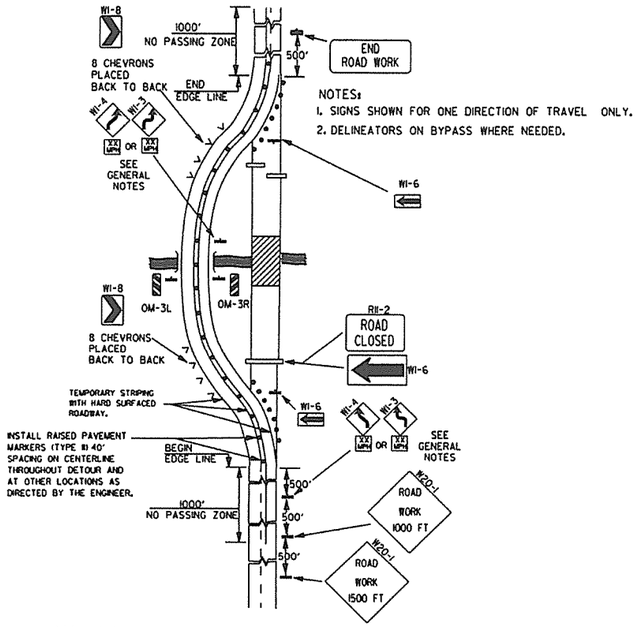

NOTES:
1. SIGNS SHOWN FOR ONE DIRECTION OF TRAVEL ONLY.
2. DELINEATORS ON BYPASS WHERE NEEDED.

(A) TYPICAL APPLICATION OF TRAFFIC CONTROL DEVICES ON A 2-LANE HIGHWAY WHERE THE ENTIRE ROADWAY IS CLOSED AND A BYPASS DETOUR IS PROVIDED.

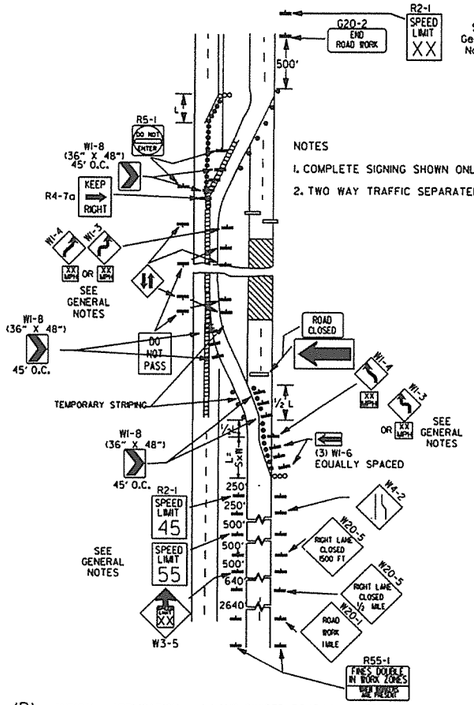

NOTES
1. COMPLETE SIGNING SHOWN ONLY IN CROSSOVER DIRECTION.
2. TWO WAY TRAFFIC SEPARATED WITH POSITIVE BARRIER.

(B) TYPICAL APPLICATION - 4-LANE DIVIDED ROADWAY WHERE ONE ROADWAY IS CLOSED.

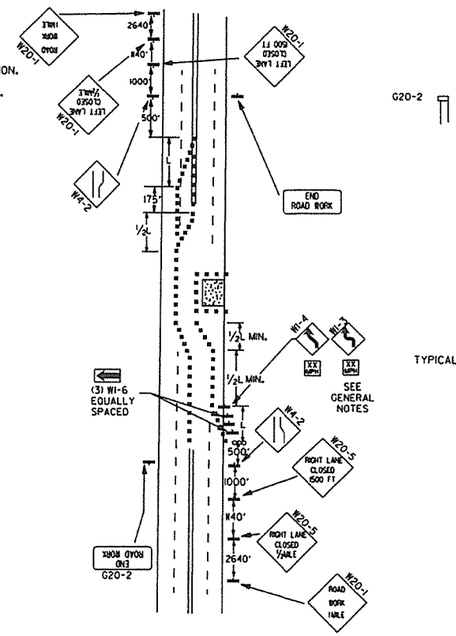

(C) TYPICAL APPLICATION - 4-LANE UNDIVIDED ROADWAY WHERE HALF OF THE ROADWAY IS CLOSED.

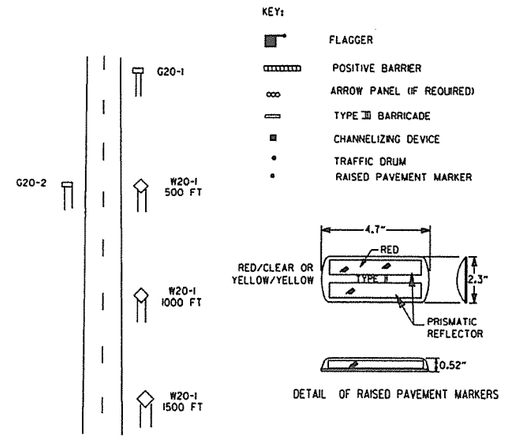

TYPICAL ADVANCE WARNING SIGN PLACEMENT

TAPER FORMULAE:

L=SXW FOR SPEEDS OF 45MPH OR MORE.

$L = \frac{WS^2}{60}$ FOR SPEEDS OF 40MPH OR LESS.

WHERE:
L= MINIMUM LENGTH OF TAPER.
S= NUMERICAL VALUE OF POSTED SPEED LIMIT PRIOR TO WORK OR 85TH PERCENTILE SPEED.
W= WIDTH OF OFFSET.

GENERAL NOTES:

1. ADVISORY SPEED POSTED ON W1-3 OR W1-4 CURVE WARNING SIGNS TO BE DETERMINED AT SITE. USE W1-4 WHEN SPEED IS GREATER THAN 30MPH AND W1-3 WHEN 30MPH OR LESS.
2. WHEN THE EXISTING SPEED LIMIT IS 55MPH AND THE PLANS REQUIRE A SPEED LIMIT OF 45MPH, THE R2-1(55) SHALL BE OMITTED AND THE W3-5 SHALL BE INSTALLED AT THAT LOCATION. ADDITIONAL R2-1 45MPH SPEED LIMIT SIGNS SHALL BE INSTALLED AT A MAXIMUM OF 1MILE INTERVALS. AT THE END OF THE WORK AREA A R2-1(XX) SHALL BE INSTALLED TO MATCH ORIGINAL SPEED LIMIT.
3. WHEN THE EXISTING SPEED LIMIT IS 65MPH AND THE PLANS REQUIRE A SPEED LIMIT OF 55MPH, THE R2-1(45) SHALL BE OMITTED. ADDITIONAL R2-1 55MPH SPEED LIMIT SIGNS SHALL BE INSTALLED AT A MAXIMUM OF 1MILE INTERVALS. AT THE END OF THE WORK AREA A R2-1(XX) SHALL BE INSTALLED TO MATCH ORIGINAL SPEED LIMIT.
4. THE MAXIMUM SPACING BETWEEN CHANNELIZING DEVICES IN A TAPER SHOULD BE APPROXIMATELY EQUAL IN FEET TO THE SPEED LIMIT. BEYOND THE TAPER, MAXIMUM SPACING SHALL BE TWO TIMES THE SPEED LIMIT, OR AS DIRECTED BY THE ENGINEER.
5. WARNING LIGHTS AND/OR FLAGS MAY BE MOUNTED TO SIGNS OR CHANNELIZING DEVICES AT NIGHT AS NEEDED.
6. PAVEMENT MARKINGS NO LONGER APPLICABLE WHICH MIGHT CREATE CONFUSION IN THE MINDS OF VEHICLE OPERATORS SHALL BE REMOVED OR OBLITERATED AS SOON AS PRACTICABLE.
7. TRAILER MOUNTED DEVICES SUCH AS ARROW PANELS AND PORTABLE CHANGEABLE MESSAGE SIGNS SHALL BE DELINEATED BY AFFIXING CONSPICUITY MATERIAL IN A CONTINUOUS LINE ON THE FACE OF THE TRAILER. WHEN PLACED ON OR ADJACENT TO THE SHOULDER AND NOT BEHIND A POSITIVE BARRIER, THESE DEVICES SHALL BE DELINEATED BY PLACING FIVE (5) TRAFFIC DRUMS, EQUALLY SPACED ALONG THE TRAFFIC SIDE OF THE DEVICE.
8. DIMENSIONS SHOWN FOR RAISED PAVEMENT MARKERS ARE TYPICAL. THE CONTRACTOR MAY SUBSTITUTE SIMILAR MARKERS WITH THE APPROVAL OF THE ENGINEER. REQUESTING APPROVAL FOR SIMILAR MARKERS MAY BE MADE BY REFERRING TO THE AHTD QUALIFIED PRODUCTS LIST.

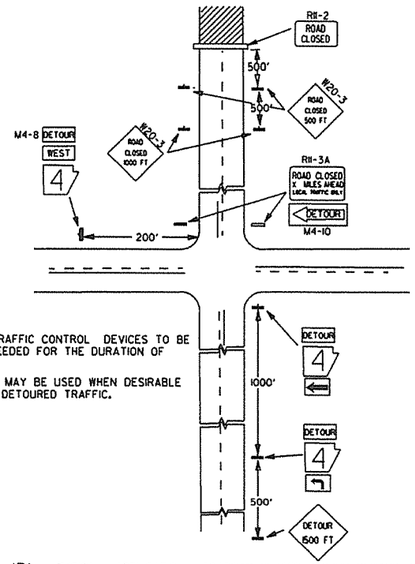

NOTES:
1. REGULATORY TRAFFIC CONTROL DEVICES TO BE MODIFIED AS NEEDED FOR THE DURATION OF THE DETOUR.
2. STREET NAMES MAY BE USED WHEN DESIRABLE FOR DIRECTING DETOURED TRAFFIC.

(D) TYPICAL APPLICATION - ROADWAY CLOSED BEYOND DETOUR POINT.

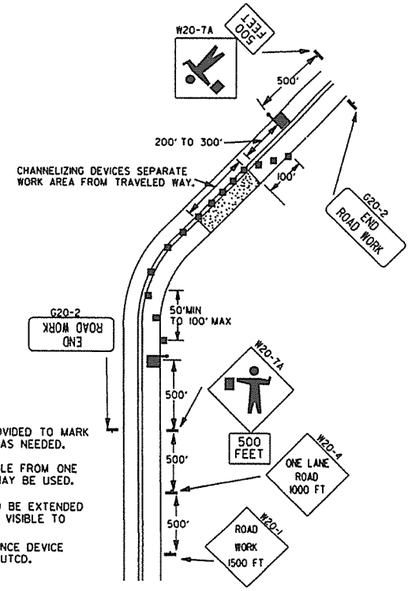

NOTES:
1. FLOOD LIGHTS SHOULD BE PROVIDED TO MARK FLAGGER STATIONS AT NIGHT AS NEEDED.
2. IF ENTIRE WORK AREA IS VISIBLE FROM ONE STATION, A SINGLE FLAGGER MAY BE USED.
3. CHANNELIZING DEVICES ARE TO BE EXTENDED TO A POINT WHERE THEY ARE VISIBLE TO APPROACHING TRAFFIC.
4. AUTOMATED FLAGGER ASSISTANCE DEVICE (AFAD) OPTIONAL. REFER TO MUTCD.

(E) TYPICAL APPLICATION OF TRAFFIC CONTROL DEVICES ON 2-LANE HIGHWAY WHERE ONE LANE IS CLOSED AND FLAGGING IS PROVIDED.

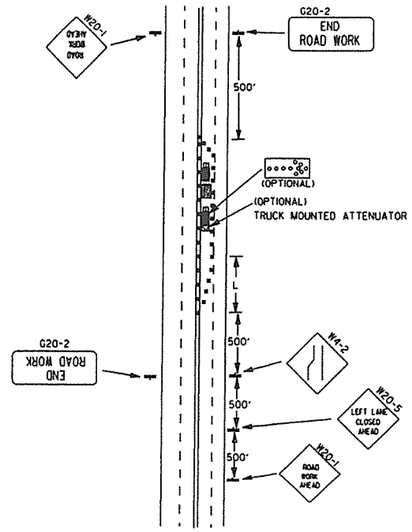

(F) TYPICAL APPLICATION - 4-LANE UNDIVIDED ROADWAY WITH INSIDE LANE CLOSED.

DATE	REVISION	FILMED
9-2-15	REVISED NOTE 2, ADDED NOTE 8, REVISED DRAWING (A) & REPLACED R2-5A WITH W3-5	
9-12-13	REVISED DETAIL OF RAISED PAVEMENT MARKERS	
3-11-10	ADDED (AFAD)	
11-20-08	REVISED SIGN DESIGNATIONS	
11-18-04	ADDED GENERAL NOTE	
10-18-96	ADDED R55-1	
4-26-96	CORRECTED (G) BEHIND G20-2	
6-8-95	CORRECTED SIGN IDENT. ON W1-4A	6-8-95
2-2-95	REVISED PER PART VI, MUTCD, SEPT. 3, 1993	
8-15-91	DRAWN AND PLACED IN USE	

ARKANSAS STATE HIGHWAY COMMISSION

STANDARD TRAFFIC CONTROLS FOR HIGHWAY CONSTRUCTION

STANDARD DRAWING TC-2

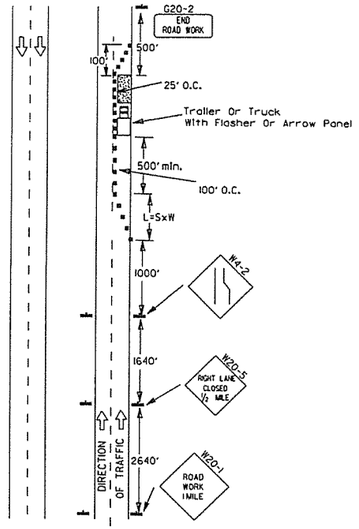

(A) Typical application - daytime maintenance operations of short duration on a 4-lane divided roadway where half of the roadway is closed.

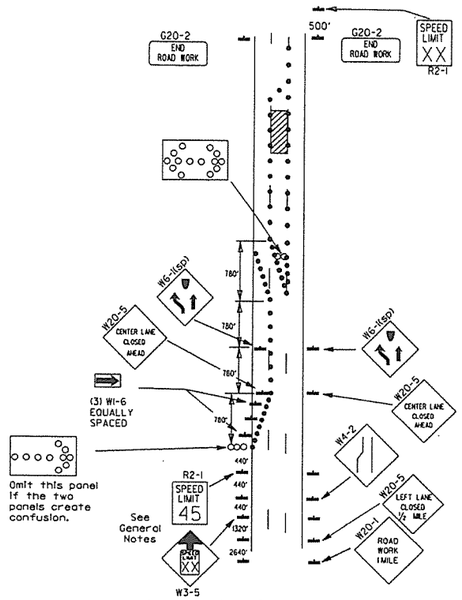

(B) Typical application - 3-lane oneway roadway where center lane is closed.

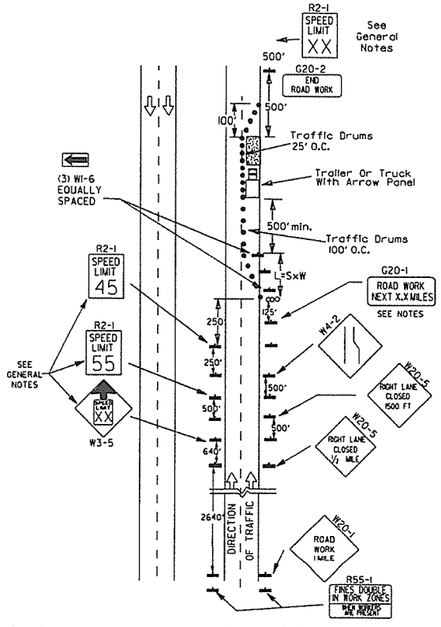

(C) Typical application - construction operations of intermediate to long term duration on a 4-lane divided roadway where half of the roadway is closed.

KEY:

- ○○○ Arrow Panel (If Required)
- ■ Channelizing Device
- ● Traffic drum

GENERAL NOTES:

1. A speed limit reduction may be implemented ONLY when designated in the plan or when recommended by the Roadway Design Division.
2. When the existing speed limit is 55mph and the plans require a speed limit of 45mph, the R2-1(55) shall be omitted and the W3-5 shall be installed at that location. Additional R2-1 45mph speed limit signs shall be installed at a maximum of 1 mile intervals. At the end of the work area a R2-1(XX) shall be installed to match original speed limit.
3. When the existing speed limit is 65mph and the plans require a speed limit of 55mph, the R2-1(45) shall be omitted. Additional R2-1 55mph speed limit signs shall be installed at a maximum of 1 mile intervals. At the end of the work area a R2-1(XX) shall be installed to match original speed limit.
4. The maximum spacing between channelizing devices in a taper should be approximately equal in feet to the speed limit. Beyond the taper, maximum spacing shall be two times the speed limit or as directed by the Engineer.
5. Warning lights and/or flags may be mounted to signs or channelizing devices at night as needed.
6. Pavement markings no longer applicable which might create confusion in the minds of vehicle operators shall be removed or obliterated as soon as practicable.
7. The G20-1 sign will be required on jobs of over two miles in length. When the lane closure is not at the beginning of the project, the G20-1 sign shall be erected 125' in advance of the job limit. Additional W20-1 (1 MILE) signs are not required in advance of lane closures that begin inside the project limits.
8. Flaggers shall use STOP/SLOW paddles for controlling traffic through work zones. Flags may be used only for emergency situations.
9. All plastic drums and cones shall meet the requirements of NCHRP-350 or Manual For Assessing Safety Hardware (MASH).
10. Trailer mounted devices such as arrow panels and portable changeable message signs shall be delineated by affixing conspicuity material in a continuous line on the face of the trailer. When placed on or adjacent to the shoulder and not behind a positive barrier, these devices shall be delineated by placing five (5) traffic drums, equally spaced along the traffic side of the device.

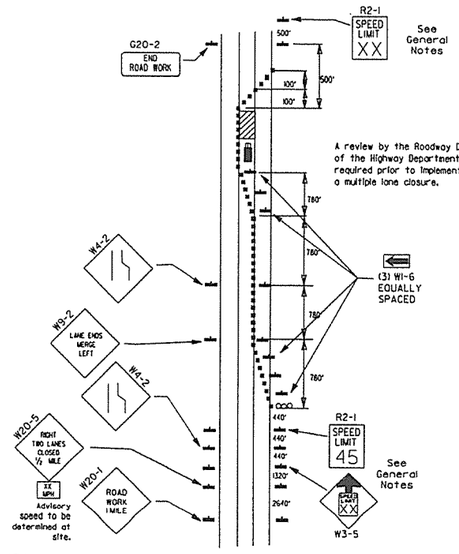

(D) Typical application - closing multiple lanes of a multilane highway.

Channelizing devices

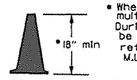

CONES

* When cones are used on freeways and multi-lane highways, they shall be 28" min. During hours of darkness, 28" cones shall be used on all roadways, and shall be reflectorized in accordance with the M.U.T.C.D.

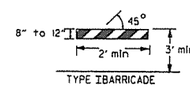

TYPE I BARRICADE

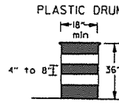

PLASTIC DRUM

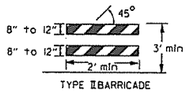

TYPE II BARRICADE

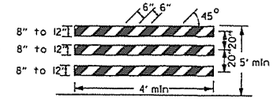

TYPE III BARRICADE

NOTE:
For all road closures, the Type III barricades shall be of sufficient length to extend across entire roadway.

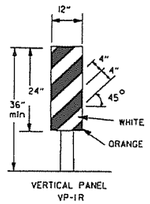

VERTICAL PANEL
VP-1R

TRAFFIC CONTROL DEVICES FOR VERTICAL PAVEMENT DIFFERENTIALS

VERTICAL DIFFERENTIAL	LOCATIONS	TRAFFIC CONTROL
1" to 3"	Centerline, lane lines	W8-11
1" to 3"	Edge of shoulder	W8-9
Greater than 3"	Lane lines	Standard lane closure required
Greater than 3"	Edge of traveled lane	*RSP-1 and vertical panels, drums or concrete barrier
Greater than 3"	Edge of shoulder	*Vertical panels, drums or concrete barrier

* When shown on the plans concrete barrier will be used.

When the shoulder area is used as part of the traveled lane and there is insufficient width to place drums on the remaining shoulder width, then vertical panels shall be used.

FLAG

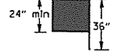

Flag shall be of good grade red material

STOP SLOW PADDLE

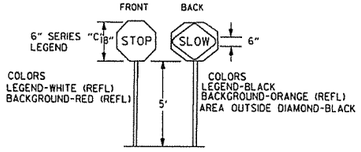

VERTICAL PANEL PLACEMENT

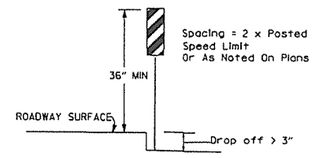

DETAIL OF SPLICES

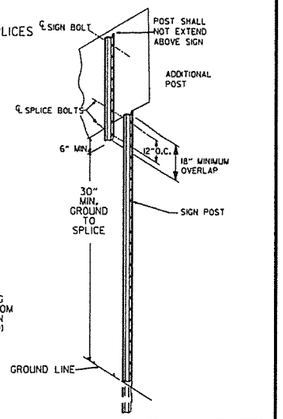

NOTES: USE SPLICES ONLY WHEN NECESSARY FOR INSTALLATION. TYPICAL INSTALLATION SHOULD HAVE NO SPLICES (SEE STD. DRAWING NO. SHS-2)

NORMAL INSTALLATIONS WILL REQUIRE 1/4" DIA. BOLTS TO MOUNT SIGNS TO POST AND 5/16" DIA. BOLTS TO ASSEMBLE THE VARIOUS POST SUPPORTS. EACH OF THESE BOLTS SHALL BE CARRIAGE BOLTS.

SIGN POSTS SHALL BE PAINTED GREEN; SIGNS SHALL NOT BE PAINTED, AND ALL SIGN POSTS SHALL BE PLUMB.

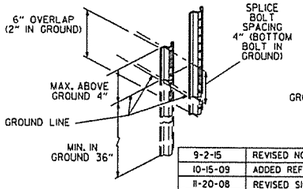

DATE	REVISION	FILMED
9-2-15	REVISED NOTE 2 & REPLACED R2-5A WITH W3-5	
10-15-09	ADDED REFERENCE TO MASH	
11-20-08	REVISED SIGN DESIGNATIONS	
11-18-04	ADDED NOTE	
10-1-98	ADDED NOTE	
4-03-97	ADDED (SP) TO W6-1 & REVISED TRAFFIC CONTROL DEVICES NOTE	
10-18-96	ADDED R55-1	
10-12-95	MOVED UPPER SPLICE	
6-8-95	REVISED SPLICE DETAIL, TEXT	6-8-95
2-2-95	REVISED PER PART VI, MUTCD, SEPT. 3, 1993	
8-15-91	DRAWN AND PLACED IN USE	

ARKANSAS STATE HIGHWAY COMMISSION

STANDARD TRAFFIC CONTROLS FOR HIGHWAY CONSTRUCTION

STANDARD DRAWING TC-3

REINFORCING BAR TABLE PER BARRIER UNIT

MARK	LOCATION	BAR SIZE	(NO. BARS)	SKETCH
H-1	HORIZONTAL IN BARRIER TIED INSIDE V-1 BARS	#5	(6)	19'-3"
H-2	CENTERED ABOVE DRAIN SLOTS LONG. & TRANSVERSELY	#5	(6)	6'-6"
H-3	TIED ABOVE H-1 BARS TO SUPPORT H-2, TIED TO V-1	#4	(2)	1'-6"
S-1	OVER LIFT HOLES	#4	(2)	2'-5", LIFTING HOLE, 90°, 3 3/8" R
S-2	HORIZ. AROUND SLOTS BETWEEN V-1'S @ DRAIN SLOTS	#4	(2)	1 1/2" R, SLOTS, 7", 1'-6", 1" MIN. CLEAR TO BAR; 5'-1" BAR W/(4) 1 1/2" R BENDS & MIN. 1'-0" OVERLAP
V-1	VERTICAL IN BARRIER(3) EACH END & (2) AT EACH DRAIN SLOTS	#5	(16)	TOTAL LENGTH 4'-9", 2 3/16" R, 12°, 9 1/2", 2'-1 3/8", 4 3/8"

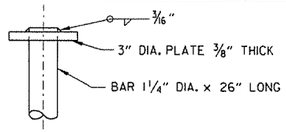

CONNECTING PIN

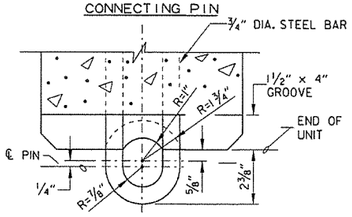

SECTION E-E

CONNECTION DETAILS

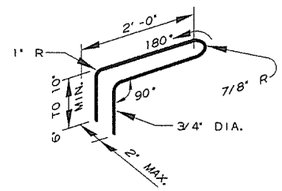

CONNECTION LOOP

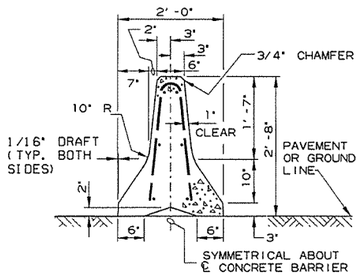

SECTION A-A

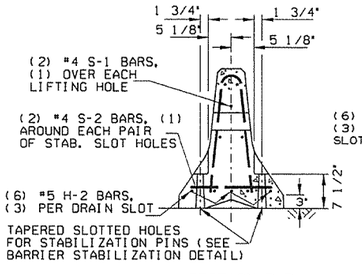

SECTION B-B

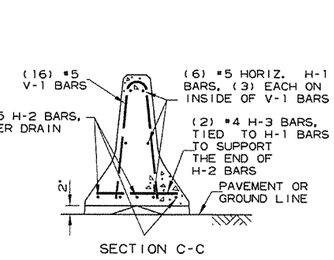

SECTION C-C

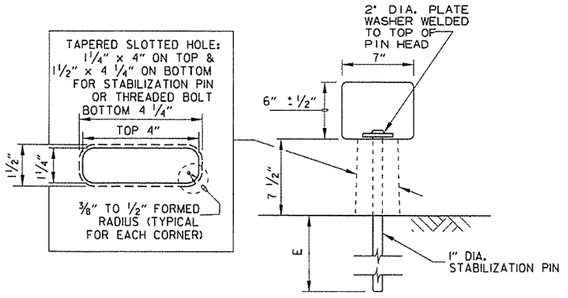

BARRIER STABILIZATION DETAIL

ROADWAY SECTION

(E) 4" - Concrete Pavement
8" - Asphalt Pavement
12" - Shoulder Areas

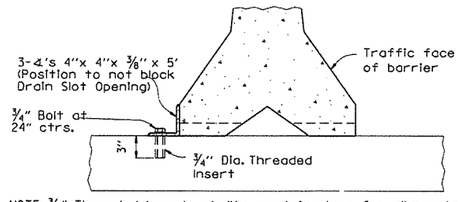

NOTE: 3/4" Threaded Inserts shall be cast in place for all new bridge decks and drilled and grouted for existing bridge decks. Inserts shall have a minimum ultimate load capacity of 8000 lbs. in tension. After removal of barrier, bolts, and angles, the Inserts shall be filled with approved non-shrink epoxy.

BARRIER STABILIZATION DETAIL

BRIDGE DECKS

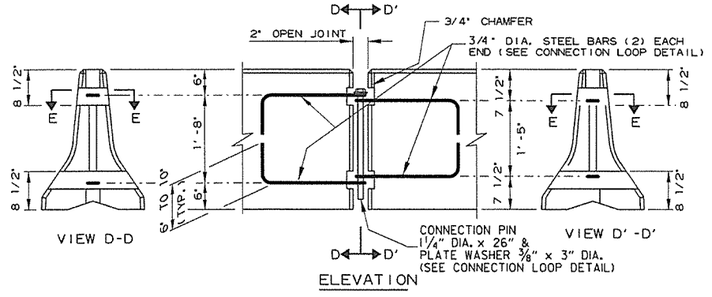

VIEW D-D

VIEW D'-D'

ELEVATION

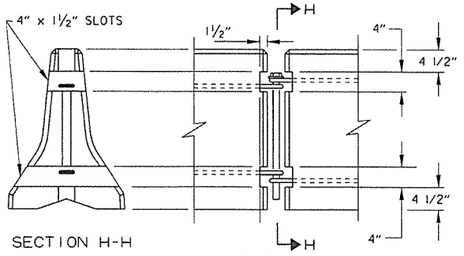

SECTION H-H

ELEVATION

BARRIER REMOVAL SLOT DETAILS

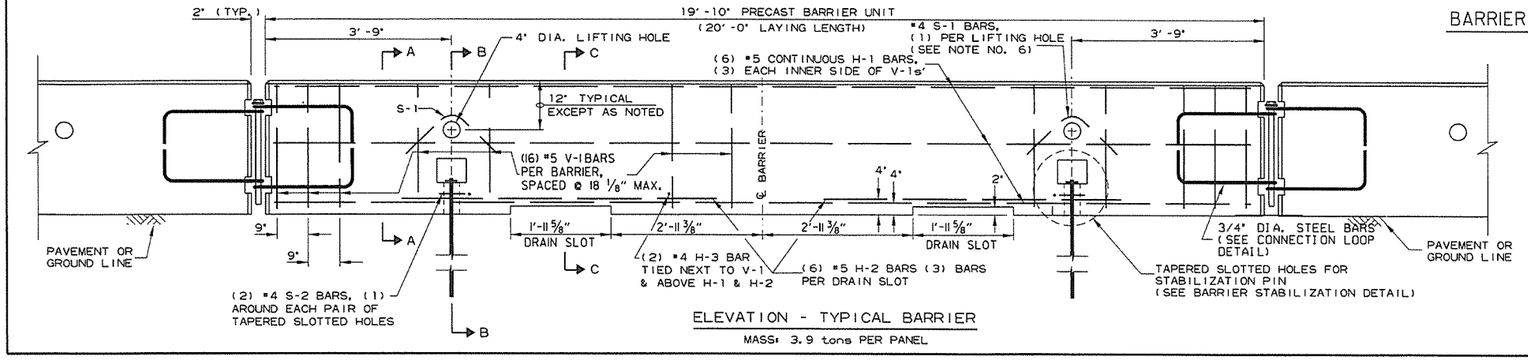

ELEVATION - TYPICAL BARRIER

MASS: 3.9 tons PER PANEL

General Notes

(1) The contractor shall furnish the Precast Concrete Barrier Units and shall be responsible for the manufacture, shipment, storage, placement and removal. At the completion of the project, the precast units will remain the property of the contractor.

(2) Materials shall meet the following minimum requirements;
Concrete: 2500 psi compressive strength at 28 days.
Reinforcing Steel: AASHTO M 31 or M 53, Grade 60
Structural Steel: AASHTO-M270 Grade 36 shall be used for the Connection Pin, Connection Loops, and Stabilization Pins. A One Piece Pin with a 3" rounded top may be used in place of the detailed Connection Pin.
Delineators: Delineators shall be mounted at 10' spacing on top of precast barrier.

In applications where barrier wall is within 6 feet of a traffic lane, additional delineators shall be placed on the barrier at 10' spacing approximately one (1) foot from the top of the barrier. Delineators shall be on the AHTD Qualified Products List for Construction Concrete Barrier Markers.
Delineator color shall be in accordance with the Manual on Uniform Traffic Control Devices.
Payment for delineators shall be considered included in the price bid per Lin. Ft. for "Furnishing and Installing Precast Concrete Barrier". The contractor shall certify to the Engineer that the material and the design used in the precast barrier units meets the requirements as shown on this standard drawing.

(3) Other Precast Concrete Barriers that have been crash tested and approved by the Federal Highway Administration to meet the requirements of NCHRP-350 test level 3 or Manual For Assessing Safety Hardware (MASH) will be accepted in lieu of the barrier shown. Drain slots shall be provided as needed or as directed by the Engineer. The Contractor shall furnish a certification of NCHRP Report 350 or Manual For Assessing Safety Hardware (MASH) compliance for any other types of precast barrier to be used. The certification shall state that the precast concrete barrier meets the requirements of NCHRP Report 350 or Manual For Assessing Safety Hardware (MASH) and include a copy of the Federal Highway Administration's (FHWA) approval letter with all attachments. Precast concrete barrier units shall be fabricated and installed in accordance with crash testing and documentation provided in the FHWA approval letter. Mixing of shapes will not be allowed in a continuous line of units.

(4) Dowel holes in pavement or bridge slabs that are to remain in place shall be filled. Holes in concrete pavement and bridge slabs shall be filled with an approved non-shrink epoxy grout. Holes in asphalt pavement shall be filled with an approved asphalt joint filler. Payment for drilling and filling holes to be included in the price for various barrier items.

(5) Attach Units To Roadway Surface with Stabilization Pins and to Deck Slabs using bolts when required.

(6) A 4" White PVC Sleeve may be used to form the Lifting Hole and if used the Sleeve is to be left in place.

DATE	REVISION	FILMED
2-27-14	REVISED BARRIER STABILIZATION DETAIL	
10-15-09	ADDED REFERENCE TO MASH	
8-5-09	REV. NOTE 3 CONCERNING DRAIN SLOTS	
11-29-07	REVISED NOTE 3	
5-25-06	DELETED GENERAL NOTE 7	
11-18-04	REVISED BARRIER STABILIZATION DETAIL BRIDGE DECKS	
4-10-03	REVISED GENERAL NOTE 2	
8-22-02	ISSUED NEW DRAWING	

ARKANSAS STATE HIGHWAY COMMISSION

STANDARD TRAFFIC CONTROLS FOR HIGHWAY CONSTRUCTION - TEMPORARY PRECAST BARRIER

STANDARD DRAWING TC-4

Ⓐ 4 feet or greater preferred. If less than 4 feet, Precast Units shall be connected to slab (SEE BARRIER STABILIZATION DETAIL-BRIDGE DECKS STD. DRWG. TC-4)

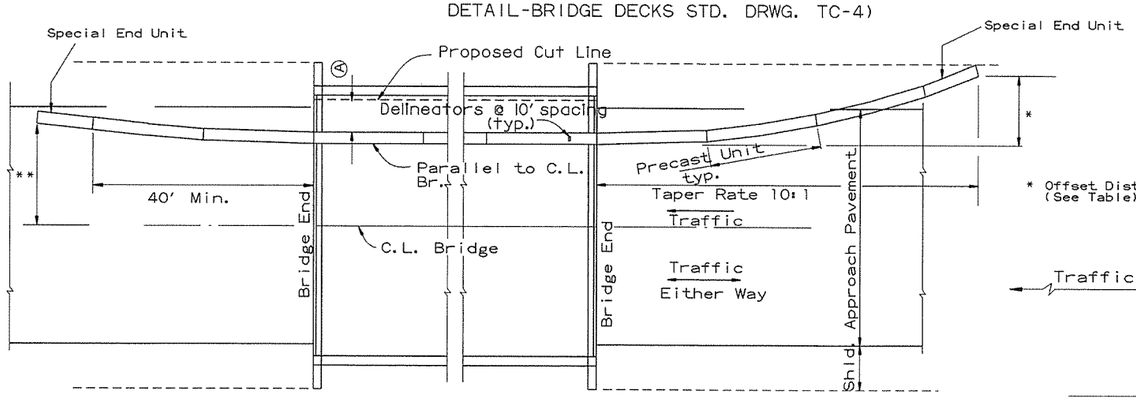

BARRIER PLACEMENT ALONG BRIDGE WITH OFFSET

No Scale

* Offset Distance (See Table)

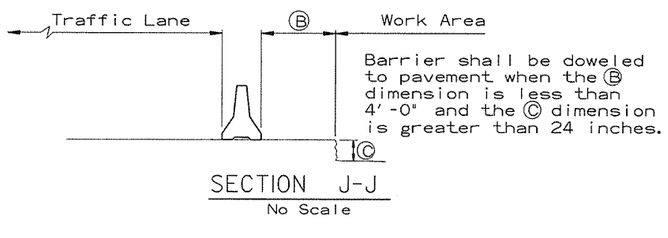

Barrier shall be doweled to pavement when the Ⓑ dimension is less than 4'-0" and the Ⓒ dimension is greater than 24 inches.

SECTION J-J

No Scale

** Offset Distance for Two Way Traffic Only

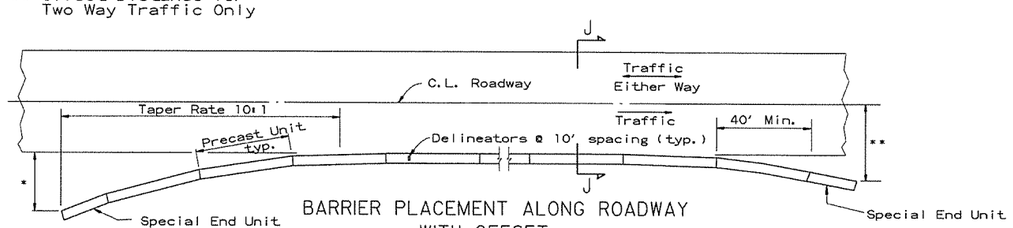

BARRIER PLACEMENT ALONG ROADWAY WITH OFFSET

No Scale

* Offset Distance (See Table)

** Offset Distance For Two Way Traffic Only

Offset Distance Table

Speed (MPH)	Offset Distance (FT.)
≤ 45	12
> 45	18

If offset distance is not attainable, then see 'Barrier Placement With Attenuator' Detail shown below.

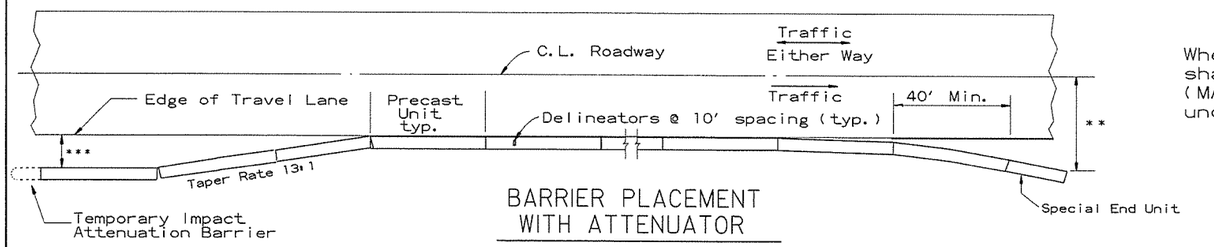

BARRIER PLACEMENT WITH ATTENUATOR

No Scale

** Offset Distance For Two Way Traffic Only

*** Min. 3'-0" From Edge of Travel Lane to Nearest Edge of Attenuator

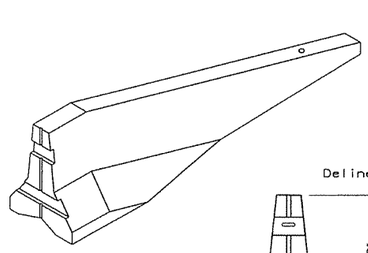

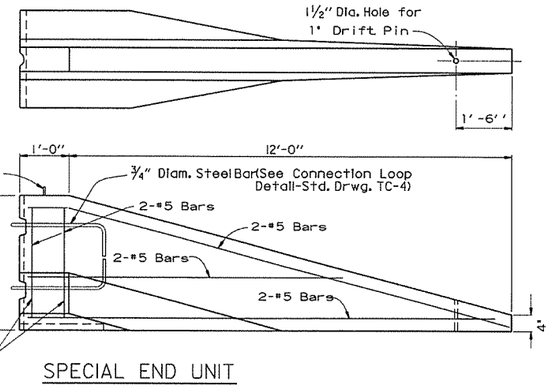

SPECIAL END UNIT

No Scale

General Notes

When shown on the Plans, the ends of the Temporary Precast Concrete Barrier shall be protected with an NCHRP-350 or Manual For Assessing Safety Hardware (MASH) approved Crash Cushion. Payment for Crash Cushions shall be made under the item of "Temporary Impact Attenuation Barrier."

DATE	REVISION	FILMED
10-15-09	ADDED REFERENCE TO MASH	
5-25-06	REVISED BARRIER PLACEMENT	
8-22-02	ISSUED NEW DRAWING	

ARKANSAS STATE HIGHWAY COMMISSION

STANDARD TRAFFIC CONTROLS FOR HIGHWAY CONSTRUCTION - TEMPORARY PRECAST BARRIER

STANDARD DRAWING TC-5

GENERAL NOTES

INSTALL A MINIMUM OF 2 UPSLOPE STAKES AND 4 DOWNSLOPE STAKES AT AN ANGLE TO WEDGE WATTLE TO BOTTOM OF DITCH.

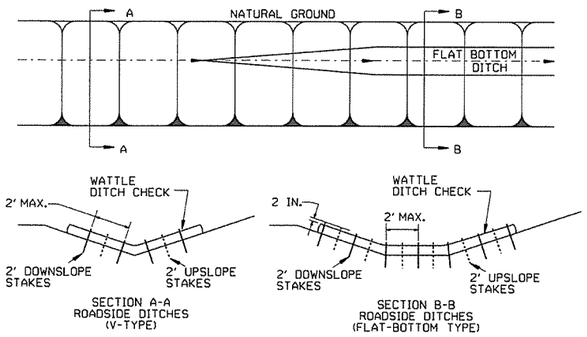

WATTLE DITCH CHECK (E-1)

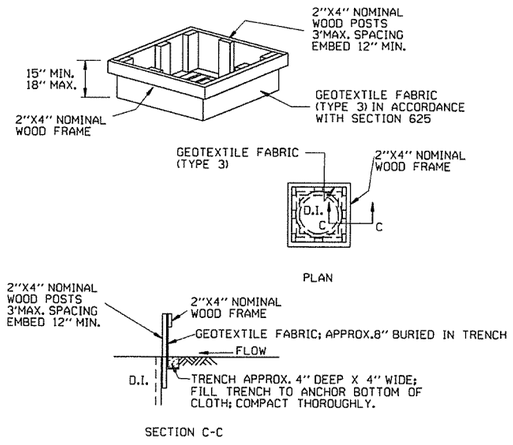

DROP INLET SILT FENCE (E-7)

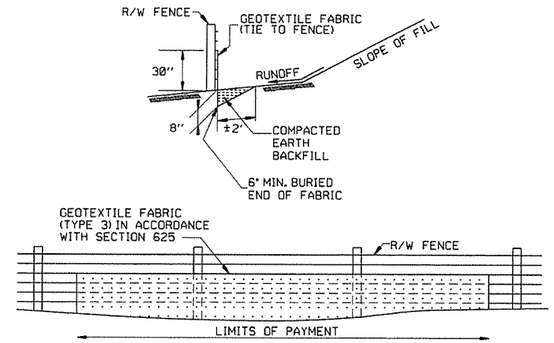

SILT FENCE ON R/W FENCE (E-4)

GENERAL NOTES

GEOTEXTILE FABRIC SHALL BE SPLICED TOGETHER WITH A SEWN SEAM ONLY AT A SUPPORT POST, OR TWO SECTIONS OF FENCE MAY BE OVERLAPPED INSTEAD. PAYMENT OF ADDITIONAL MATERIAL FOR OVERLAP WILL NOT BE MADE.

GENERAL NOTES

1. STRAW BALES SHALL BE INSTALLED SO THAT THE BINDINGS ARE ORIENTED AROUND THE SIDES RATHER THAN ALONG THE TOPS AND BOTTOMS OF THE BALES. THE BALES SHALL BE A MINIMUM OF 30 INCHES IN LENGTH.

2. NO GAPS SHALL BE LEFT BETWEEN BALES.

3. BALED STRAW FILTER BARRIERS COMPLETED AND ACCEPTED WILL BE MEASURED BY THE BALE IN PLACE AS AUTHORIZED BY THE ENGINEER AND WILL BE PAID FOR AT THE CONTRACT UNIT PRICE BID PER BALE FOR BALED STRAW DITCH CHECKS.

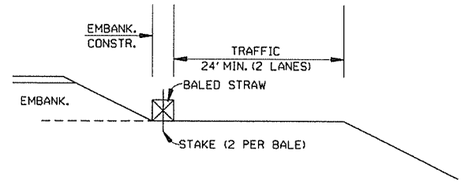

BALED STRAW FILTER BARRIER (E-2)

NUMBER OF SAND BAGS AND ARRANGEMENT VARIABLE WITH ON-SITE CONDITIONS.

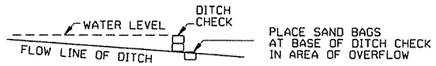

PLACE SAND BAGS AT BASE OF DITCH CHECK IN AREA OF OVERFLOW

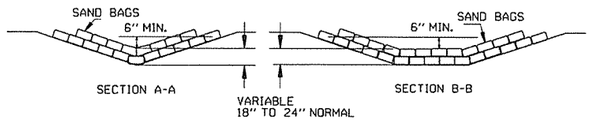

SAND BAG DITCH CHECK (E-5)

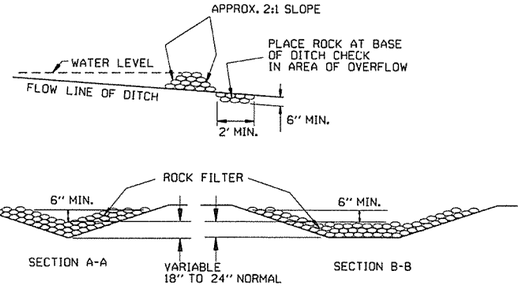

ROCK DITCH CHECK (E-6)

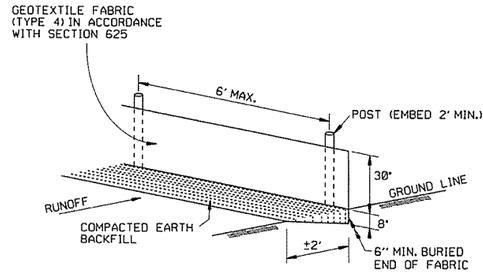

SILT FENCE (E-11)

GENERAL NOTES

GEOTEXTILE FABRIC SHALL BE SPLICED TOGETHER WITH A SEWN SEAM ONLY AT A SUPPORT POST OR TWO SECTIONS OF FENCE MAY BE OVERLAPPED INSTEAD. PAYMENT OF ADDITIONAL MATERIAL FOR OVERLAP WILL NOT BE MADE.

DATE	REVISION	FILMED
12-15-11	DELETED BALED STRAW DITCH CHECK & ADDED WATTLE DITCH CHECK	
11-18-98	ADDED NOTES	
7-02-98	ADDED BALED STRAW FILTER BARRIER (E-2)	
7-20-95	REVISED SILT FENCE E-4 AND E-11	7-20-95
7-15-94	REV. E-4 & E-11 MIN. 13" BURIED END OF FABRIC	
6-2-94	REVISED E-1,4,7 & 11; DELETED E-2 & 3	6-2-94
4-1-93	REDRAWN	
10-1-92	REDRAWN	
8-2-76	ISSUED R.D.M.	298-7-28-76

ARKANSAS STATE HIGHWAY COMMISSION

TEMPORARY EROSION CONTROL DEVICES

STANDARD DRAWING TEC-1

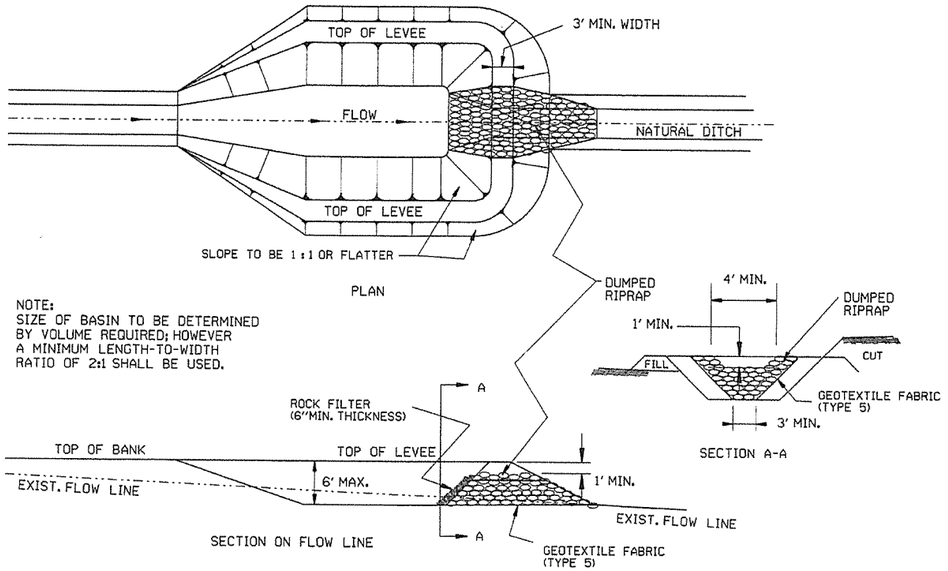

SEDIMENT BASIN WITH RIPRAP OUTLET (E-9)

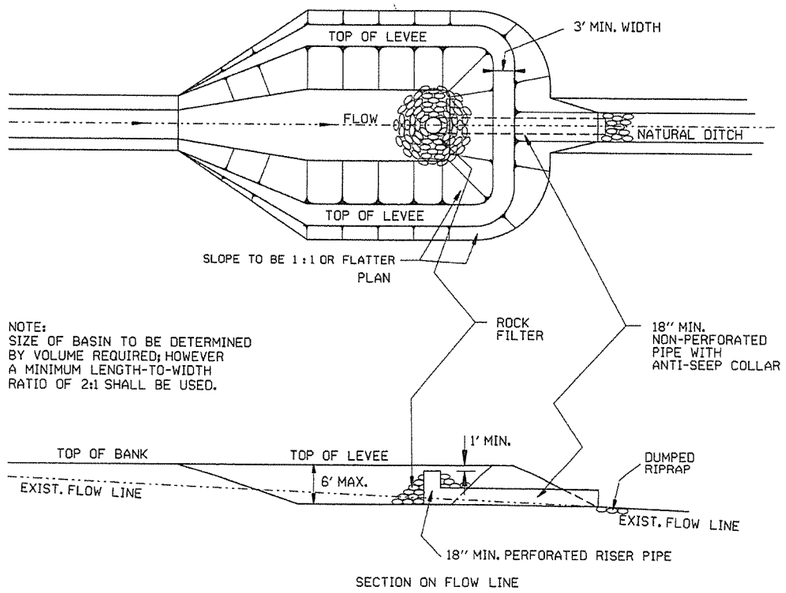

SEDIMENT BASIN WITH PIPE OUTLET (E-10)

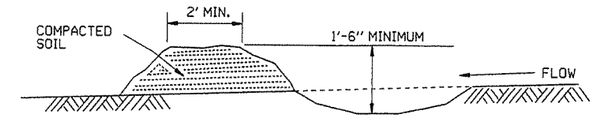

DIVERSION DITCH (E-8)

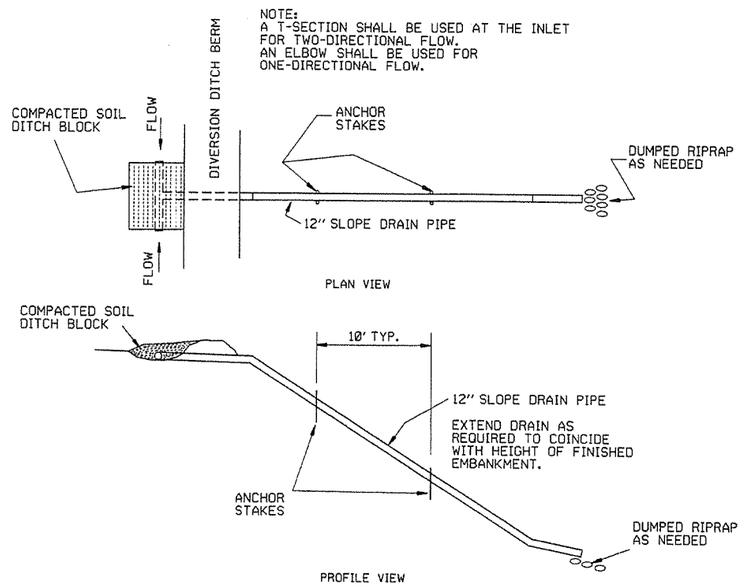

SLOPE DRAIN (E-12)

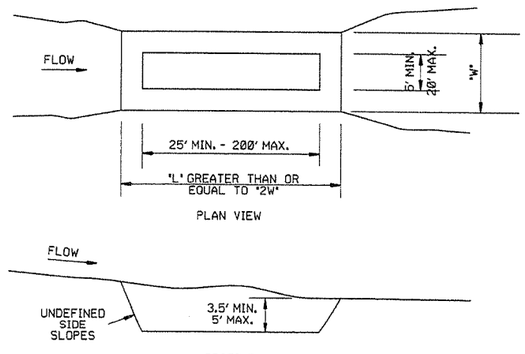

SEDIMENT BASIN (E-14)

DATE	REVISION	FILMED
6-2-94	Revised E-8 & E-12; Added E-14 & Deleted E-13	
4-1-93	ISSUED	

ARKANSAS STATE HIGHWAY COMMISSION

TEMPORARY EROSION CONTROL DEVICES

STANDARD DRAWING TEC-2

CLEARING AND GRUBBING

CONSTRUCTION SEQUENCE

1. PLACE PERIMETER CONTROLS (I.E. SILT FENCES , DIVERSION DITCHES, SEDIMENT BASINS, ETC.)
2. PERFORM CLEARING AND GRUBBING OPERATION.

EXCAVATION

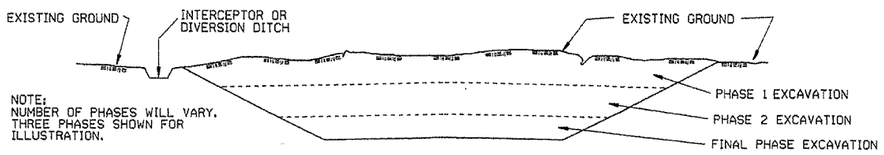

GENERAL NOTE

ALL CUT SLOPES SHALL BE DRESSED, PREPARED, SEEDED, AND MULCHED AS THE WORK PROGRESSES. SLOPES SHALL BE EXCAVATED AND STABILIZED IN EQUAL INCREMENTS NOT TO EXCEED 25 FEET, MEASURED VERTICALLY.

CONSTRUCTION SEQUENCE

1. EXCAVATE AND STABILIZE INTERCEPTOR AND/OR DIVERSION DITCHES.
2. PERFORM PHASE 1 EXCAVATION. PLACE PERMANENT OR TEMPORARY SEEDING.
3. PERFORM PHASE 2 EXCAVATION. PLACE PERMANENT OR TEMPORARY SEEDING.
4. PERFORM FINAL PHASE OF EXCAVATION. PLACE PERMANENT OR TEMPORARY SEEDING. STABILIZE DITCHES. CONSTRUCT DITCH CHECKS, DIVERSION DITCHES, SEDIMENT BASINS, OR OTHER EROSION CONTROL DEVICES AS REQUIRED.

EMBANKMENT

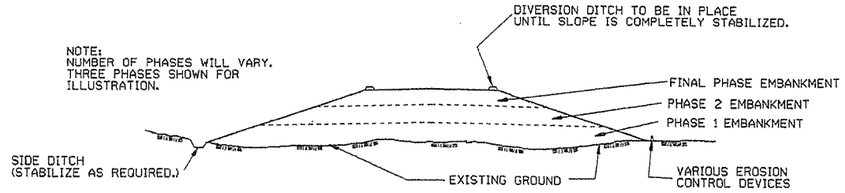

GENERAL NOTE

ALL EMBANKMENT SLOPES SHALL BE DRESSED, PREPARED, SEEDED, AND MULCHED AS THE WORK PROGRESSES. SLOPES SHALL BE CONSTRUCTED AND STABILIZED IN EQUAL INCREMENTS NOT TO EXCEED 25 FEET, MEASURED VERTICALLY.

CONSTRUCTION SEQUENCE

1. CONSTRUCT DIVERSION DITCHES, DITCH CHECKS, SEDIMENT BASINS, SILT FENCES, OR OTHER EROSION CONTROL DEVICES AS SPECIFIED.
2. PLACE PHASE 1 EMBANKMENT WITH PERMANENT OR TEMPORARY SEEDING. PROVIDE DIVERSION DITCHES AND SLOPE DRAINS IF EMBANKMENT CONSTRUCTION IS TO BE TEMPORARILY ABANDONED FOR A PERIOD OF GREATER THAN 21 DAYS.
3. PLACE PHASE 2 EMBANKMENT WITH PERMANENT OR TEMPORARY SEEDING. PROVIDE DIVERSION DITCHES AND SLOPE DRAINS IF EMBANKMENT CONSTRUCTION IS TO BE TEMPORARILY ABANDONED FOR A PERIOD OF GREATER THAN 21 DAYS.
4. PLACE FINAL PHASE OF EMBANKMENT WITH PERMANENT OR TEMPORARY SEEDING. PLACE DIVERSION DITCHES AND SLOPE DRAINS AND MAINTAIN UNTIL ENTIRE SLOPE IS STABILIZED.

DATE	REVISION	FILMED
11-03-94	CORRECTED SPELLING	
6-2-94	Drawn & Issued	6-2-94

ARKANSAS STATE HIGHWAY COMMISSION

TEMPORARY EROSION CONTROL DEVICES

STANDARD DRAWING TEC-3

stdtec3.dgn

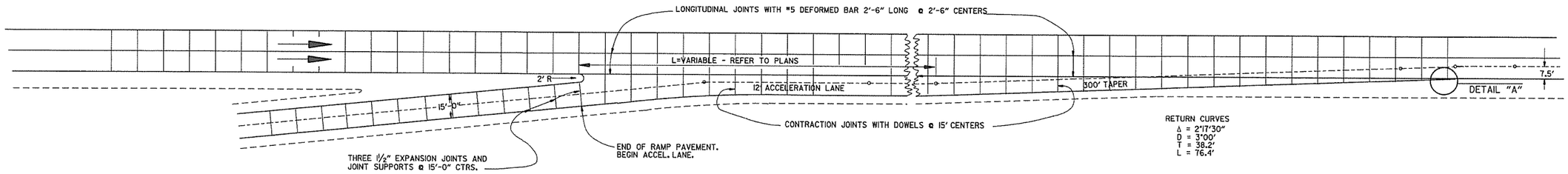

ENTRANCE RAMP

NOTE: JOINT SPACING ON THE MAIN LANES SHALL BE ADJUSTED AS NECESSARY TO CONFORM TO THESE JOINT LAYOUTS. THE MAIN LANE JOINT SPACING MAY BE REDUCED TO A 12' MINIMUM.

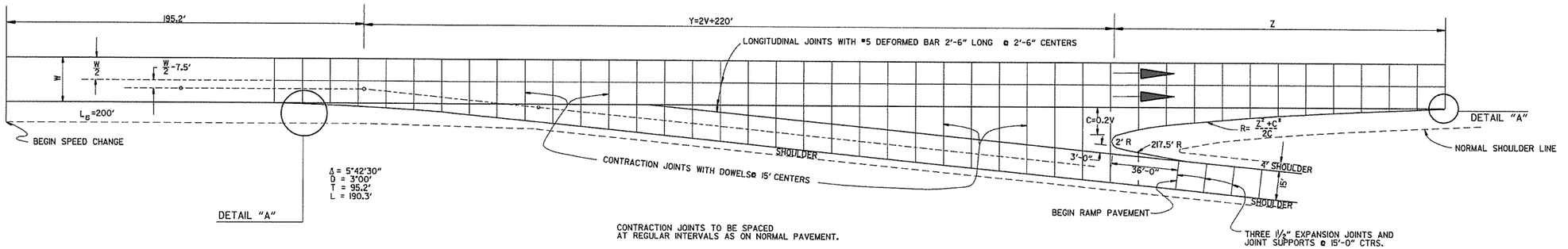

EXIT RAMP

EXIT RAMP

DESIGN SPEED V	Y	NOSE OFFSET C	LENGTH NOSE TAPER Z	RETURN RADIUS R	ADDITIONAL SURFACING SQ. YDS.
40	300.0	8.0	96.0	580.0	602.43
50	320.0	10.0	120.0	725.0	687.29
60	340.0	12.0	168.0	1182.0	790.55
70	360.0	14.0	210.0	1582.0	902.27

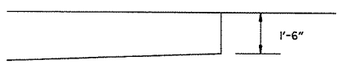

DETAIL "A"

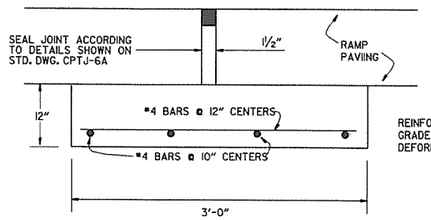

DETAIL OF EXPANSION JOINT & JOINT SUPPORT

NOTE: THE EXPANSION JOINTS SHALL BE MEASURED AND PAID FOR AS P.C.C. PAVEMENT (RAMP THICKNESS). WHEN RAMP PAVING IS ASPHALT, EXPANSION JOINT IS NOT REQUIRED.
THE JOINT SUPPORT MAY BE CONSTRUCTED WITH CLASS "A", "S", OR PAVING CONCRETE. PAYMENT FOR THE JOINT SUPPORT SHALL BE FOR THE CONTRACT UNIT PRICE BID FOR THE CLASS OF CONCRETE USED. ALL OTHER WORK AND MATERIALS REQUIRED FOR THE CONSTRUCTION OF THE JOINT SUPPORT SHALL BE INCLUDED IN THE PRICE BID FOR THE ABOVE ITEMS.

DATE	REVISION	DATE FILM'D
8-22-02	DELETED NOTE	
11-16-01	CORRECTED SPELLING ON ENTRANCE RAMP NOTE	
5-13-99	ADDED, EDITED AND DELETED NOTES	
11-03-94	ADDED NOTE RE: REINF. BARS	
10-1-92	ADDED DETAIL A & OTHER MINOR CHANGES	10-1-92
1-25-90	REVISED EXPANSION JOINT	1-25-90
7-15-88	CONFORM'D TO 1988 SPECIFICATIONS	65C-7-15-88
3-2-81	ISSUED	511-10-2-72

ARKANSAS STATE HIGHWAY COMMISSION

DETAILS OF STANDARD TURNOUT FOR ENTRANCE & EXIT RAMPS (NON-REINFORCED)

STANDARD DRAWING TR-1A

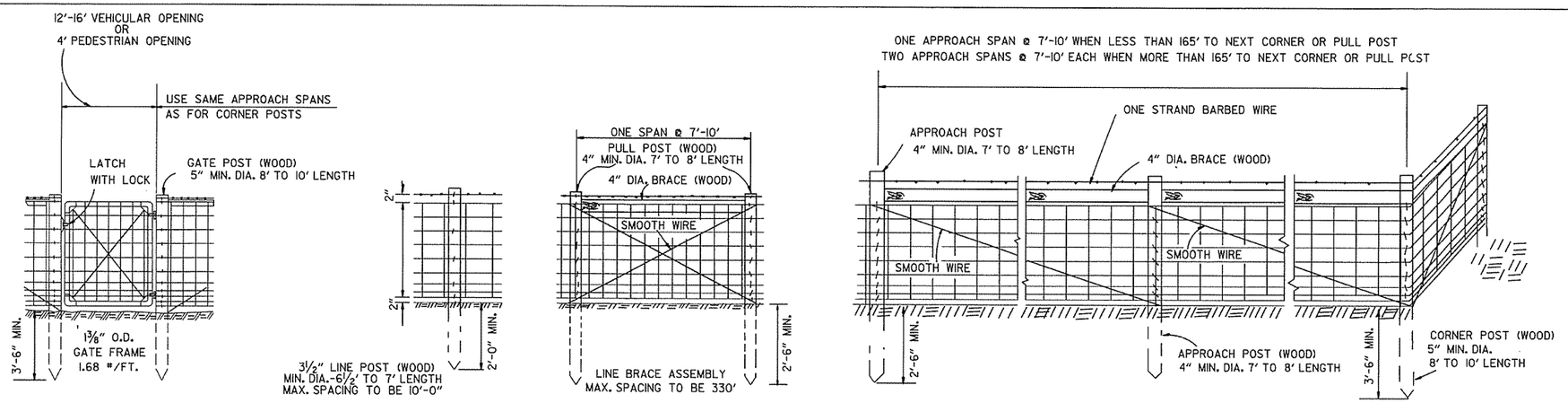

NOTE: STAPLE AT LEAST TOP, BOTTOM AND ALTERNATE WIRES OF WOVEN FABRIC FOR WOOD LINE POSTS.

TYPE A FENCE (WOOD POSTS)

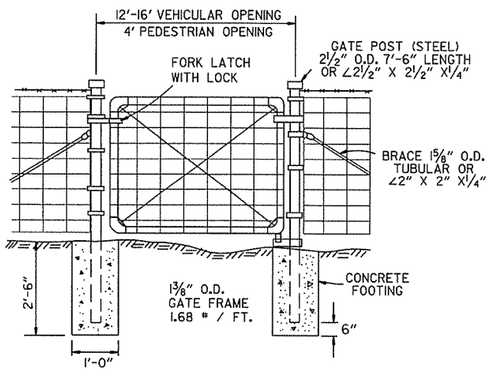

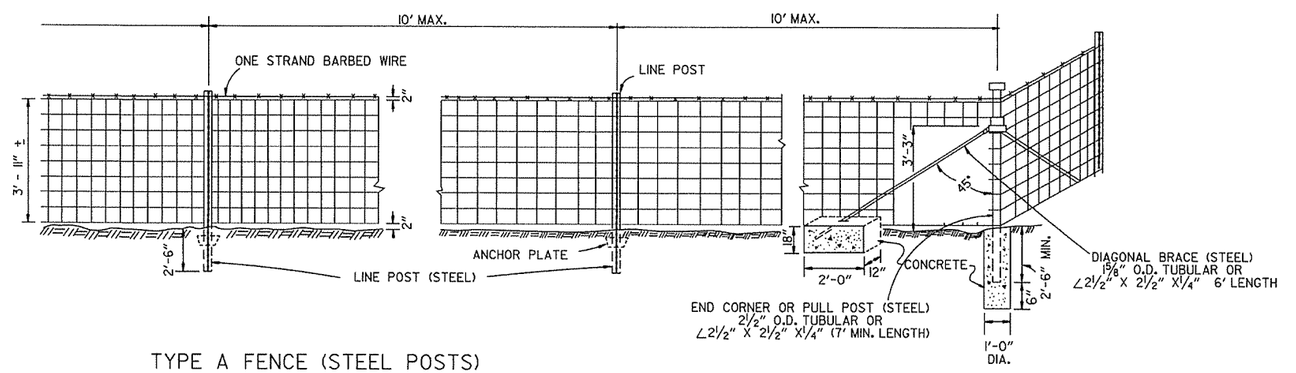

TYPE A FENCE (STEEL POSTS)

GENERAL NOTES:

STEEL LINE POSTS SHALL BE GALVANIZED, 7 FT. IN LENGTH.

TUBULAR END, CORNER, PULL, OR DIAGONAL BRACES MUST CONFORM TO THE DIMENSIONS AND WEIGHTS SPECIFIED ON STANDARD DRAWING WF-3 (CHAIN LINK).

THE CONTRACTOR SHALL FURNISH AT LEAST 25% OF WOOD LINE POSTS OF 7' LENGTHS IN ORDER TO PROVIDE SUFFICIENT SET IN SOFT GROUND OR SMALL DEPRESSIONS.

GATE HINGES AND LATCHES WITH LOCKS TO BE OF A TYPE APPROVED BY THE ENGINEER. DRIVEWAY GATES, EITHER SINGLE 12' OR 16' OR DOUBLE 6' TO 8' OPENINGS OF THE SAME TYPE AS THE PEDESTRIAN GATE, SHALL BE INSTALLED ON THE RIGHT SIDE OF EACH THROUGH LANE ROAD AT LARGE CULVERTS OR BRIDGE CROSS FENCE FOR USE BY MAINTENANCE EQUIPMENT. LOCATION OF GATES TO BE SHOWN ON THE PLANS OR AS DESIGNATED BY THE ENGINEER.

AT STREAM CROSSINGS THE FENCE SHALL NOT BE CONSTRUCTED ACROSS LARGE STREAMS. WHERE CLEARANCE IS SUFFICIENT FROM THE TOP OF BANK TO THE BRIDGE STRUCTURE, A CROSS CONNECTION SHALL BE CONSTRUCTED BETWEEN THE FENCE ON EACH SIDE OF THE ROAD. WHERE THE CLEARANCE IS NOT SUFFIEICNT, THE FENCE SHALL BE TERMINATED WITH CROSS CONNECTIONS AND END POSTS ADJACENT TO THE BRIDGE ABUTMENTS OR CULVERT WINGWALLS.

SPLICE FOR WOVEN WIRE BETWEEN PULL POST SHALL BE BY THE "WESTERN UNION METHOD" AS DESCRIBED AS FOLLOWS: THE VERTICAL WIRES FOR EACH END OF THE FENCE FABRIC SHALL BE PLACED SIDE BY SIDE AND THE PROJECTING HORIZONTAL WIRES SHALL BE WRAPPED A MINIMUM OF 4 TIMES AROUND THE HORIZONTAL WIRES OF THE FIRST WEB.

SPLICE FOR BARBED WIRE BETWEEN PULL POST ASSEMBLY SHALL BE BY THE "EYE METHOD": AS DESCRIBED AS FOLLOWS: THE ENDS OF THE BARBED WIRE SHALL BE BENT TO FORM A LOOP. THE LOOPS SHALL BE CONNECTED. AFTER THE LOOPS ARE CONNECTED THE ENDS OF THE WIRE SHALL BE WRAPPED AROUND THE PROJECTING WIRE A MINIMUM OF 4 TIMES FOR EACH WIRE LOOP.

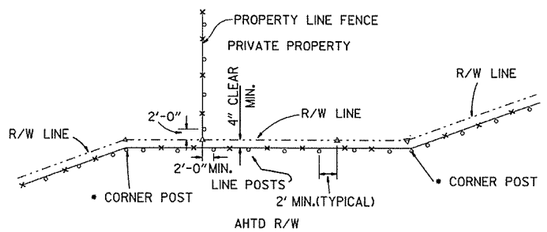

•NOTE: RIGHT-OF-WAY MONUMENTS SHALL NOT BE DISTURBED BY FENCE CONSTRUCTION. CORNER POSTS SHALL BE CONSTRUCTED 2' FROM THE RIGHT-OF-WAY MONUMENT OR AS DIRECTED BY THE ENGINEER.

△ - R/W MONUMENTS
○ - FENCE POSTS

RIGHT-OF-WAY FENCE LOCATION

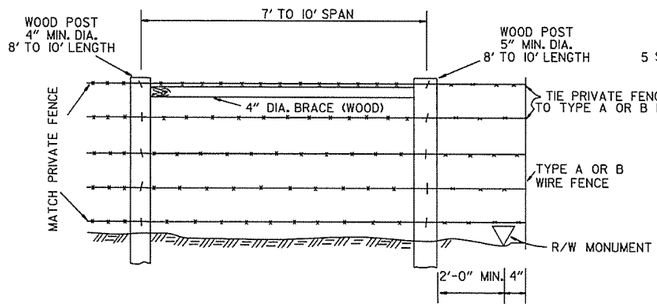

WHERE EXISTING PRIVATE FENCE CONSISTS OF STEEL POSTS, USE END POST ASSEMBLY AS SHOWN WITH TYPE A FENCE OR OTHER END POST ASSEMBLY AS APPROVED BY THE ENGINEER.

PRIVATE FENCE TERMINAL INSTALLATION

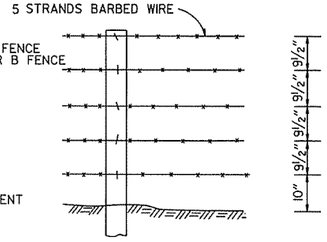

SPACING AND SIZE OF POSTS FOR TYPE B FENCE SHALL BE THE SAME AS TYPE A FENCE.

TYPE B FENCE

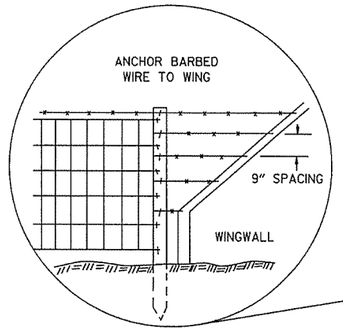

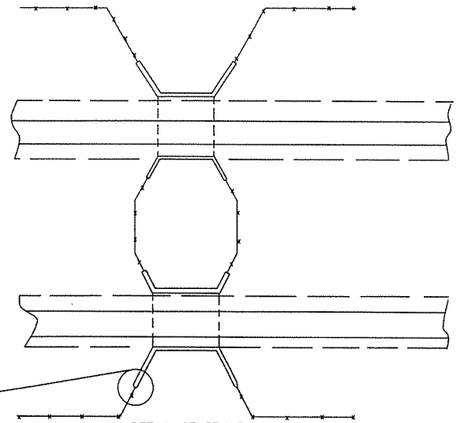

DETAIL OF FENCE CONSTRUCTION AT LARGE CULVERTS (5' IN HEIGHT AND OVER)

DATE	REVISION	DATE FILMED
8-22-02	REVISED GENERAL NOTES	
10-18-96	REVISED ASTM REF. TO AASHTO	
11-22-95	REVISED R-O-W LOCATION DETAIL	
6-2-94	ADDED CORNER POST NOTE	6-2-94
8-5-93	REVISED R-O-W LOCATION DETAIL	8-5-93
10-1-92	ADDED STAPLE NOTE	
8-2-90	REV'D PULL POST LENGTH	
11-30-89	DELETED CLASS CONC.	
7-15-88	ADDED SPLICE NOTES	
7-15-88	ADDED HEIGHT DIMENSION	
4-3-87	REVISED VARIOUS NOTES AND GENERAL NOTES	
11-1-84	MAX. POST SPACING	
1-4-83	MIN. DIA. LINE POST	
10-2-72	REVISED & REDRAWN	

ARKANSAS STATE HIGHWAY COMMISSION

WIRE FENCE
TYPE A AND B

STANDARD DRAWING WF-1

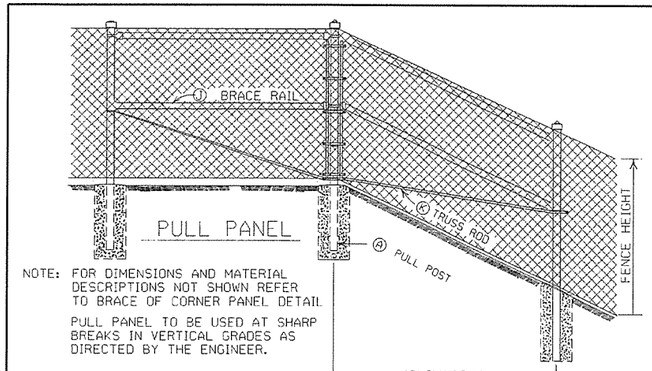

NOTE: FOR DIMENSIONS AND MATERIAL DESCRIPTIONS NOT SHOWN REFER TO BRACE OF CORNER PANEL DETAIL.

PULL PANEL TO BE USED AT SHARP BREAKS IN VERTICAL GRADES AS DIRECTED BY THE ENGINEER.

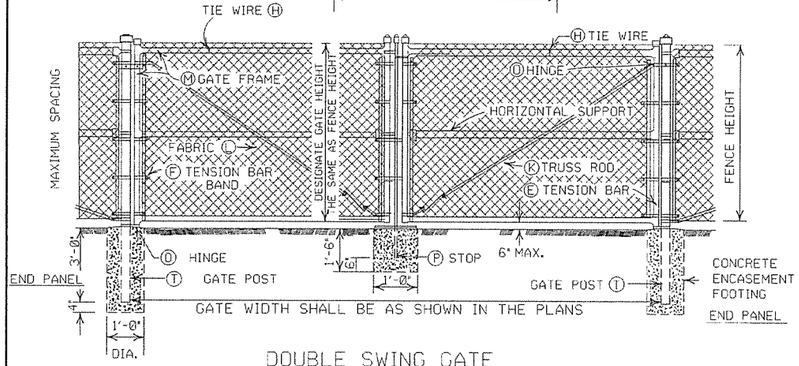

DOUBLE SWING GATE

POST SPACING DETAIL

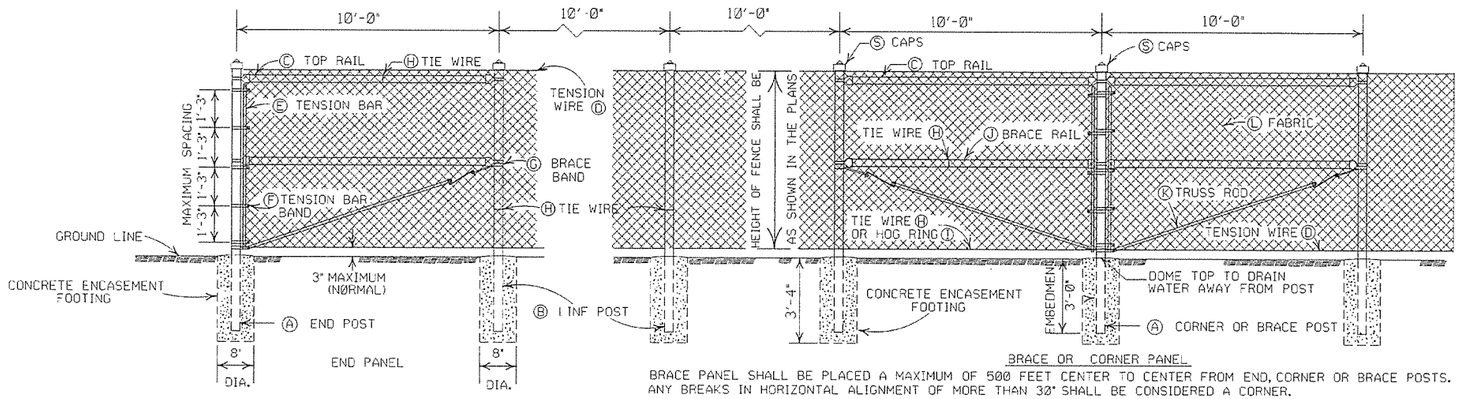

BRACE OR CORNER PANEL

BRACE PANEL SHALL BE PLACED A MAXIMUM OF 500 FEET CENTER TO CENTER FROM END, CORNER OR BRACE POSTS. ANY BREAKS IN HORIZONTAL ALIGNMENT OF MORE THAN 30° SHALL BE CONSIDERED A CORNER.

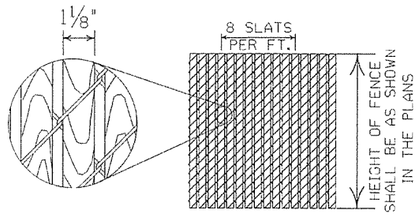

1⅛" X ¼" REDWOOD SLATS (LENGTH TO MATCH HEIGHT OF FENCE)

DETAIL OF REDWOOD SLAT INSTALLATION

(WHERE APPLICABLE)

GENERAL NOTES:

(C) CHAIN LINK FENCE BEING PLACED ON PRIVATE PROPERTY SHALL INCLUDE A TOP RAIL. ALL LABOR, MATERIALS, EQUIPMENT, TOOLS, AND INCIDENTALS NECESSARY TO COMPLETE THE WORK WILL BE PAID FOR AT THE CONTRACT UNIT PRICE BID PER LIN. FT. OF CHAIN LINK FENCE.

(D) TENSION WIRE: SHALL BE SECURED TO ALL TERMINAL, PULL, BRACE OR CORNER POSTS WITH TENSION BAR BANDS.

(J) BRACE RAIL: BRACE RAILS SHALL BE PROVIDED AT ALL TERMINAL, PULL, BRACE OR CORNER POSTS HALFWAY BETWEEN THE TOP RAIL AND GROUND LEVEL WHEN TOPRAIL IS SPECIFIED AND TWELVE INCHES (12") DOWN FROM TOP OF FABRIC WHEN TOP TENSION WIRE IS SPECIFIED. BRACE RAIL SHALL EXTEND FROM SUCH POST TO THE FIRST ADJACENT LINE POST.

(L) FABRIC: SHALL CONFORM TO THE SPECIFICATIONS.

(M) GATE FRAMES: SHALL BE CONSTRUCTED OF TUBULAR MEMBERS ASSEMBLED BY USE OF HEAVY PRESSED STEEL, MALLEABLE FITTINGS OR BY WELDING. ALL GATES SHALL HAVE ONE HORIZONTAL SUPPORT EXTENDING THE WIDTH OF THE GATE AT THE MIDPOINTS OF VERTICAL FRAME MEMBERS. THE COMPLETE FRAME SHALL BE RIGID AND HAVE AMPLE STRENGTH TO BE FREE FROM SAG AND TWIST.

(O) HINGES: SHALL BE OF HEAVY PATTERN, OF ADEQUATE STRENGTH FOR GATE, AND WITH LARGE BEARING SURFACES FOR CLAMPING IN POSITION. THE HINGE SHALL BE OF THE PROPER TYPE TO ALLOW FOR THE DESIGNATED DEGREE OF SWING. THE HINGE SHALL NOT TWIST OR TURN UNDER THE ACTION OF THE GATE. THE GATES SHALL BE CAPABLE OF BEING OPENED AND CLOSED EASILY BY ONE PERSON.

(P) LATCHES AND STOPS: SHALL BE PROVIDED FOR ALL GATES. GATES SHALL HAVE A DROP BAR LATCH. LATCHES SHALL BE ARRANGED FOR LOCKING. THE STOP FOR DROP BAR LATCHES SHALL BE SET IN CONCRETE AND ENGAGE THE PLUNGER OF THE BAR LATCH.

(S) CAPS: ALL POSTS, EXCEPT ROLL FORMED POSTS AND "T" POSTS SHALL BE CAPPED OVER THE EXTERIOR OF THE POST, AND SHALL CONFORM TO ASTM F626.

CONCRETE REQUIRED FOR THE EMBEDMENT OF ALL POSTS SHALL NOT BE PAID FOR DIRECTLY BUT SHALL BE INCLUDED IN THE CONTRACT UNIT PRICE BID FOR CHAIN LINK FENCE.

POSTS SHALL BE SPACED EQUIDISTANT ON A MAXIMUM OF 10' CENTERS.

EXCAVATION FOR POSTS: IN OTHER THAN ROCK SHALL BE OF THE DIMENSIONS INDICATED. IF ROCK IS ENCOUNTERED BEFORE REACHING THE REQUIRED DEPTH, THE EXCAVATION SHALL BE CONTINUED TO THE DEPTH INDICATED OR 1'-6" INTO THE ROCK, WHICHEVER IS LESS, AND SHALL BE A MINIMUM OF 8 INCHES IN DIAMETER.

HEIGHT OF FENCE FABRIC	(A) END, PULL CORNER OR BRACE POST	(B) LINE POSTS SIZE	(B) LINE POSTS TIE SPACING	(C) TOP RAIL SIZE	(C) TOP RAIL TIE SPACING	(C) TOP RAIL MIN. LENGTH	(D) TENSION WIRE SIZE	(D) TENSION WIRE TIE SPACING	(E) TENSION BAR SIZE	(E) TENSION BAR LENGTH
6' AND LESS	2½" O.D.	2" O.D.	1 TIE EVERY 1'-2" OF FABRIC HEIGHT	1⅝" O.D.	1 TIE EVERY 2'-0"	10'-0"	7 GAUGE COIL SPRING WIRE	1 TIE EVERY 1'-0"	MIN. OF ⅜" X ¾"	MIN. OF 2" LESS THAN FABRIC HEIGHT
OVER 6' TO 12' INCL.	3" O.D.	2½" O.D.								

HEIGHT OF FENCE FABRIC	(F) TENSION BAR BAND SIZE	(F) TENSION BAR BAND BOLT SIZE	(F) TENSION BAR BAND SPACING	(G) BRACE BAND SIZE	(G) BRACE BAND BOLT SIZE
6' AND LESS	MIN. OF ¾" X 0.074	⅝" X 1¼"	1 BAND AT TOP AND BOTTOM 15" MAX. INTERVAL BETWEEN BANDS	MIN. OF ¾" X 0.105	⅝" X 1¼"
OVER 6' TO 12' INCL.					

HEIGHT OF FENCE FABRIC	(H) TIE WIRE	(I) HOG RING	(J) BRACE RAIL SIZE	(J) BRACE RAIL TIE SPACING	(K) TRUSS ROD	(L) FABRIC SIZE	(L) FABRIC MESH	(L) FABRIC SELVAGE
6' AND LESS	MIN. OF 12 GA. STEEL OR 9 GA. ALUM.	SAME GAUGE AS FABRIC	1⅝" O.D.	1 TIE EVERY 2'-0"	MIN. OF ⅝" ROUND WITH TIGHTNERS AND FITTINGS	9 GA.	2"	KNUCK -ING AND/OR TWIST -ING
OVER 6' TO 12' INCL.								

HEIGHT OF FENCE FABRIC	(M) GATE FRAME SIZE	(M) GATE FRAME TIE SPACING	(N) HORIZONTAL SUPPORT SIZE	(N) HORIZONTAL SUPPORT TIE SPACING	(O) HINGE TYPE 180° SWING	(T) GATE POST GATE WIDTH 12' AND LESS	(T) GATE POST GATE WIDTH OVER 12' TO 24' INCL.
6' AND LESS	2" O.D.	1 TIE EVERY 1'-0"	2" O.D.	1 TIE EVERY 1'-0"	OFFSET	3" O.D.	4" O.D.
OVER 6' TO 12' INCL.						4" O.D.	

NOTE: POST SIZES SHOWN ARE FOR STEEL. WHERE ALUMINUM IS PROVIDED, LINE POSTS SHALL HAVE AN OUT SIDE DIAMETER OF 2½" FOR FENCE HEIGHT OF 6' AND LESS, AN OUTSIDE DIAMETER OF 3" FOR FENCE HEIGHT OF 6' TO 12'. END, PULL, CORNER OR BRACE POSTS SHALL HAVE AN OUTSIDE DIAMETER OF 3" FOR FENCE HEIGHT OF 6' AND LESS; AN OUTSIDE DIAMETER OF 3½" FOR FENCE HEIGHTS OF 6' TO 12'. GATE POSTS WHERE GATE WIDTH IS 12' AND LESS SHALL HAVE AN OUTSIDE DIAMETER OF 3½" FOR FENCE HEIGHT OF 6' AND LESS. ALUMINUM TENSION WIRE SHALL BE 0.192" IN DIAMETER. MINIMUM THICKNESS OF MATERIAL FROM WHICH EXPANSION SLEEVES SHALL BE MADE WILL BE 0.078". POSTS AND RAILS MAY HAVE ANY CROSS-SECTIONAL SHAPE THAT WILL MEET THE SPECIFICATIONS.

OTHER DETAILS APPLY TO BOTH STEEL AND ALUMINUM FENCE.

ALL MISCELLANEOUS FITTINGS AND HARDWARE SHALL MEET THE REQUIREMENTS AND PRODUCTION TOLERANCES AS SET FORTH IN THE SPECIFICATIONS.
9 GAUGE ALUMINUM WIRE SHALL BE ACCEPTABLE FOR TIEING FABRIC TO TUBULAR AND ROLL FORMED MEMBERS OF STEEL FENCE.

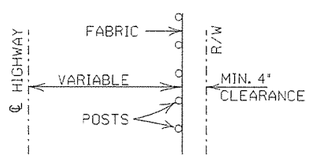

INSTALLATION MAY BE MODIFIED AS SHOWN IN THE PLANS

TYPICAL INSTALLATION DIAGRAM

POSTS AND RAILS

SIZE O.D.	GRADE 1 AND ALUMINUM ALLOY O.D. INCHES	WALL THICKNESS	LBS. PER LINEAR FT. STEEL	LBS. PER LINEAR FT. ALUMINUM	GRADE 2 O.D. INCHES	WALL THICKNESS	LBS. PER LINEAR FT.
1⅝	1.660	0.140	2.27	0.786	1.660	0.111	1.84
2	1.900	0.145	2.72	0.940	1.900	0.120	2.28
2½	2.375	0.154	3.65	1.264	2.375	0.130	3.11
3	2.875	0.203	5.79	2.004	2.875	0.160	4.64
3½	3.500	0.216	7.58	2.621	3.500	0.160	5.71
4	4.000	0.226	9.11	3.151	4.000	0.160	6.56

TOLERANCES ON DIMENSIONS AND WEIGHTS ACCORDING TO AASHTO M 181

DATE	REVISION	FILMED
11-17-10	REVISED TRUSS ROD	
12-10-09	REVISED POSTS & RAILS TABLE	
5-21-09	ADDED TABLE & GEN. NOTE (C)	
8-22-02	REVISED NOTES, REMOVED TABLE, & REMOVED FENCE ALTERNATE	
4-3-97	REVISED BRACE RAIL NOTE	
10-18-96	REVISED AASHTO & ASTM REF.	
11-3-94	REVISED NOTE (L)	
10-1-92	DELETED ALTERNATE POST	10-1-92
8-15-91	DELETED ROLL FORMED POST DETAIL & ADDED NOTE	8-15-91 8-15-91
11-30-89	DELETED CLASS CONCRETE	11-30 89
11-17-88	REVISED O.D. SIZES	668-11-17-88
10-30-87	GENERAL REVISIONS	548-10-30-87
4-20-79	REVISED TOP RAIL & TENSION WIRE	695-4-20-79
10-2-72	REVISED AND REDRAWN	530-10-2-72

ARKANSAS STATE HIGHWAY COMMISSION

CHAIN LINK FENCE

STANDARD DRAWING WF-3

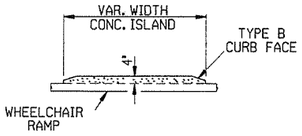

CONCRETE ISLAND DETAIL

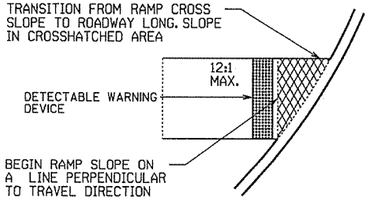

SLOPE TRANSITION DETAILS

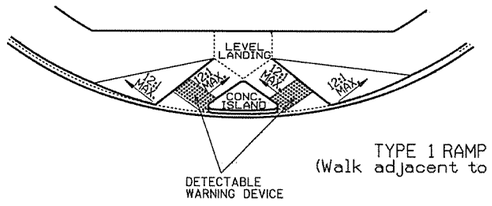

TYPE 1 RAMP
(Walk adjacent to curb)

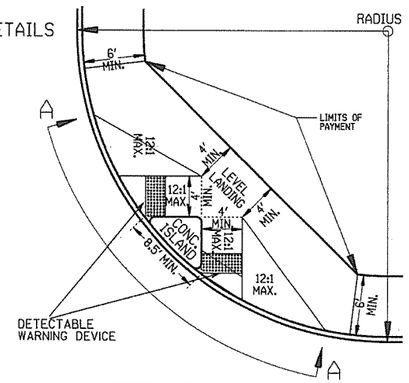

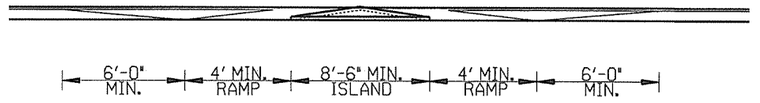

SECTION A-A

TYPE 1 RAMP DIMENSIONS AND QUANTITIES

RADIUS "R"	DISTANCE "X"	DISTANCE "Y"	LENGTH "L"	RAMP AREA "A"
FEET	FEET	FEET	FEET	SQ. YD.
15	11.67	18.82	32.18	26.21
20	11.52	22.28	35.46	30.07
25	11.43	26.60	38.77	33.80
30	11.37	30.26	40.93	36.90
35	11.33	33.51	43.11	39.77
40	11.30	36.45	45.26	42.45
45	11.27	39.16	47.34	44.97
50	11.25	41.69	49.36	47.35
55	11.24	44.07	51.31	49.63
60	11.22	46.33	53.21	51.80

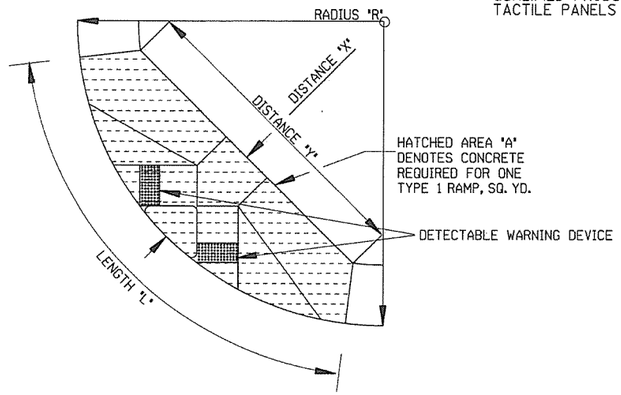

GENERAL NOTES FOR DETECTABLE WARNING DEVICES

THE DETECTABLE WARNING DEVICE SHALL BE LOCATED SO THAT THE NEAREST EDGE OF THE DEVICE IS 6 TO 8 INCHES FROM THE FACE OF THE CURB.
TRUNCATED DOMES IN THE DETECTABLE WARNING SURFACE SHALL MEET THE REQUIREMENTS OF THE GEOMETRIC CONFIGURATION SHOWN.
DOMES SHALL BE ALIGNED ON A SQUARE GRID IN THE PREDOMINANT DIRECTION OF TRAVEL TO PERMIT WHEELS TO ROLL BETWEEN DOMES.
DETECTABLE WARNING DEVICE SHALL BE 24 INCHES IN THE DIRECTION OF TRAVEL AND EXTEND THE FULL WIDTH OF THE CURB RAMP OR FLUSH SURFACE.
DETECTABLE WARNING DEVICE SHALL BE ON THE AHTD QUALIFIED PRODUCTS LIST FOR CAST-IN-PLACE TACTILE PANELS (ADA DETECTABLE WARNING).

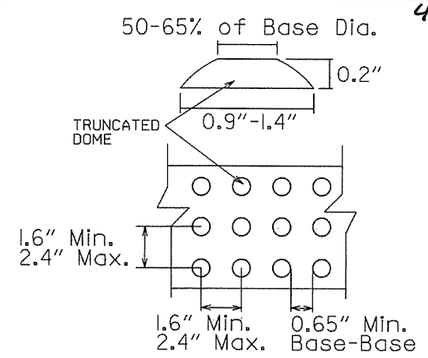

DETECTABLE WARNING DEVICE DETAIL

GENERAL NOTES:

IN NEW CONSTRUCTION, UNLESS OTHERWISE INDICATED ON THE PLANS, WHEELCHAIR RAMPS ARE TO BE PROVIDED AT ALL CORNERS OF CURBED STREET INTERSECTIONS AND MID-BLOCK CROSSWALK LOCATIONS.
IN ALTERATIONS WHEELCHAIR RAMPS ARE TO BE PROVIDED AT CURBED STREET INTERSECTIONS WITH PEDESTRIAN TRAFFIC AND MID-BLOCK CROSSWALK LOCATIONS.
THE LENGTH OF THE RAMP SHALL BE SUCH THAT THE SLOPE DOES NOT EXCEED 12:1. THE SURFACE TEXTURE OF THE RAMP SHALL CONFORM TO A CLASS 6 FINISH ACCORDING TO SECTION 802.19.
THE NORMAL GUTTER GRADE SHALL BE MAINTAINED THROUGH THE AREA OF THE RAMP.
ALL PAVEMENT MARKINGS SHALL BE IN ACCORDANCE WITH THE LATEST EDITION OF THE MANUAL OF UNIFORM TRAFFIC CONTROL DEVICES PUBLISHED BY THE FEDERAL HIGHWAY ADMINISTRATION.
THE MINIMUM THICKNESS OF THE RAMP, WALK, & LANDING SHALL BE 4".
THE MINIMUM WIDTH OF THE RAMPS SHALL BE THE WALK WIDTH OR 36", WHICHEVER IS GREATER.
RAMPS SHALL BE MODIFIED AS NECESSARY TO INSURE THAT THEY ARE PARALLEL TO A LINE DRAWN FROM THE CENTER OF ONE RAMP TO THE CENTER OF THE RAMP ON THE OPPOSITE SIDE OF THE INTERSECTION.
THE DIMENSIONS AND QUANTITIES SHOWN ON THIS DRAWING ARE FOR A 90° INTERSECTION ONLY. DIMENSIONS AND QUANTITIES FOR SKEWED INTERSECTIONS WILL VARY, AND ARE TO BE DETERMINED BY THE ENGINEER.

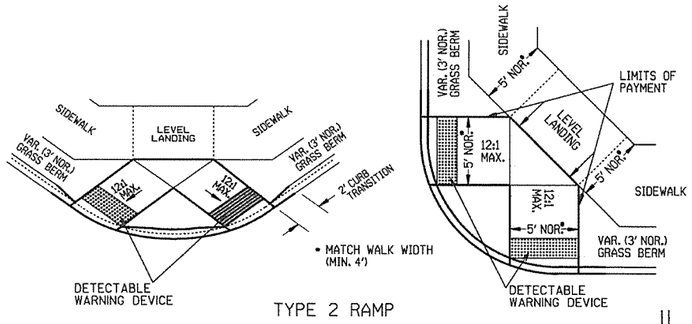

TYPE 2 RAMP

NOTE:
THE CROSS SLOPE OF THE RAMPS, LEVEL LANDINGS, AND SIDEWALKS SHALL NOT EXCEED 2.0% UNLESS REQUIRED TO MATCH STREET LONGTITUDINAL GRADE.

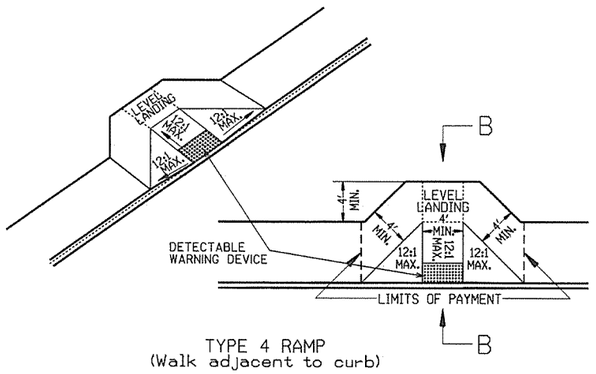

TYPE 4 RAMP
(Walk adjacent to curb)

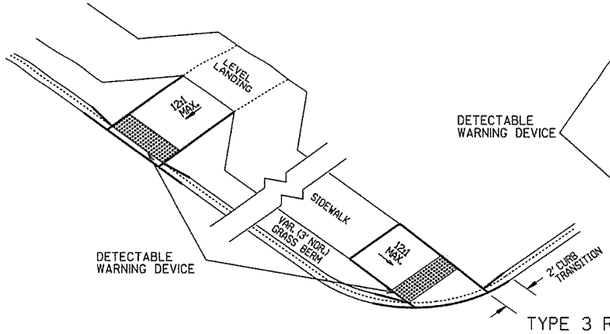

TYPE 3 RAMP

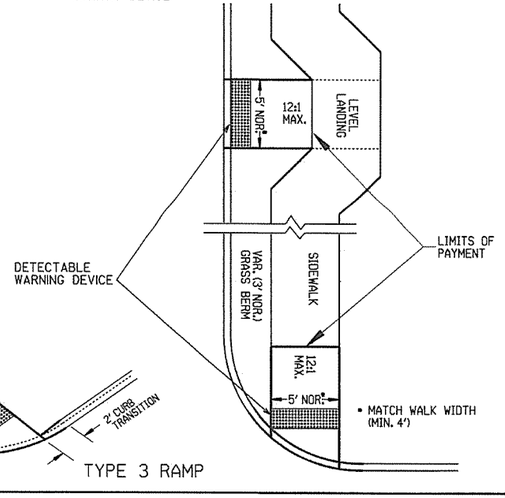

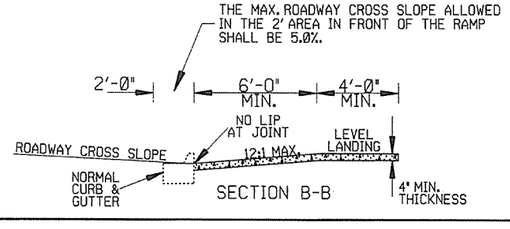

SECTION B-B

RAMP SELECTION CRITERIA

FIRST CHOICE	TYPE 1	CORNER LOCATIONS WITH THE WALK ADJACENT TO THE CURB (BOTH NEW CONSTRUCTION AND ALTERATIONS).
	TYPE 2	CORNER LOCATIONS WITH THE WALK OFFSET FROM THE CURB A DISTANCE INSUFFICIENT TO ALLOW THE REQUIRED RAMP SLOPE (BOTH NEW CONSTRUCTION AND ALTERATIONS).
	TYPE 3	CORNER LOCATIONS WITH THE WALK OFFSET FROM THE CURB A DISTANCE SUFFICIENT TO ALLOW THE REQUIRED RAMP SLOPE (BOTH NEW CONSTRUCTION AND ALTERATIONS).
	TYPE 4	TANGENT LOCATIONS (BOTH NEW CONSTRUCTION AND ALTERATIONS).
SECOND CHOICE	TYPE 5	TANGENT LOCATIONS (ALTERATIONS ONLY).
THIRD CHOICE	TYPE 6	CORNER LOCATIONS (ALTERATIONS ONLY). THIS RAMP MAY BE USED ONLY IF THE TYPE 5 RAMPS CANNOT BE PLACED AT THE ENDS OF THE RADIUS.
FOURTH CHOICE		IF SITE CONSTRAINTS PREVENT THE CONSTRUCTION OF ANY OF THE TYPES LISTED, THEN AND ONLY THEN CAN THE 12:1 MAX. SLOPE ON THE RAMP BE EXCEEDED TO PROVIDE ACCESS TO THE STREET LEVEL (ALTERATIONS ONLY). THE SLOPE CAN BE STEEPENED TO A 10:1 MAX. FOR A MAX. LENGTH OF 5' OR A 8:1 MAX. FOR A MAX. LENGTH OF 2'. SLOPES STEEPER THAN 8:1 ARE NOT ALLOWED UNDER ANY CIRCUMSTANCES.

NOTE: IN ALTERATIONS, THE SELECTION OF THE TYPE OF WHEELCHAIR RAMP TO BE CONSTRUCTED SHALL BE BASED ON THE AMOUNT OF RIGHT-OF-WAY AVAILABLE, AND ON THE PRESENCE OF OTHER SITE CONSTRAINTS (UTILITIES, BUILDINGS, ETC.). THE TABLE ABOVE LISTS THE ORDER IN WHICH THE RAMPS ARE TO BE CONSIDERED.
AN ALTERATION IS DEFINED AS A PROJECT THAT CHANGES OR AFFECTS THE USE OF A PEDESTRIAN PATHWAY (OVERLAYS, SIGNALIZATION PROJECTS, ETC.) BUT DOES NOT REQUIRE THE PURCHASE OF ADDITIONAL RIGHT-OF-WAY. ALL PROJECTS THAT REQUIRE THE PURCHASE OF ADDITIONAL RIGHT-OF-WAY WILL USUALLY BE CONSIDERED NEW CONSTRUCTION FOR THE PURPOSES OF THE CHART ABOVE.

DATE	REVISION	DATE FILM
11-10-05	REVISED TO NEW SIDEWALK POLICY	
10-9-03	REVISED GEN. NOTES & ADDED NOTE	
4-10-03	REV. DETECTABLE WARNING DEVICES	
8-22-02	ADD DETECTABLE WARNING DEVICES	
3-30-00	ADD.SLOPE TRANS. & REV. ISL. DIMS.	
11-18-98	REVISED NOTES	
6-12-98	REVISED TEXTURE	
7-02-98	REDRAWN & REISSUED	
10-18-96	CORRECTED DIMENSIONS	10-18-96
5-24-90	FROM BITOI2:1MAX. SLOPES	5-24-90
7-15-88	ADJUSTED MAX. SLOPE	652-7-15-88
7-14-88	INCLUD. "CONC. ISLD." IN PAY ITEM	~~~~~~
6-02-76	ISSUED-P.H.D.	299-7-28-76

ARKANSAS STATE HIGHWAY COMMISSION

WHEELCHAIR RAMPS
NEW CONSTRUCTION
AND ALTERATIONS

STANDARD DRAWING WR-1

Reshot 3-8-93   385

FED. ROAD No.	STATE	FED. AID PROJECT	FISCAL YEAR	SHEET No.	TOTAL SHEETS
6	ARK.			443	
JOB No.					

BAR LIST FOR BARREL SECTION 60'-0" IN LENGTH

"a" bars: STRAIGHT – In Top and Bottom Slab of Barrel. "b" bars: BENT – See Diagram below. In Bottom of Top Slab bent up over Division Wall - hooked. Alternate with "a" and "c" bars.

D	S	H	a Size	a Spacing	a No. Req'd	a Length	b Size	b Spacing	b No. Req'd	b Length	b X	b Y	b Z
0'-0" TO 5'-0" MAXIMUM	2 @ 4'	2'	#5	12"	120	9'-9"	#5	12"	59	10'-10"	0'-3"	2'-3½"	3'-5½"
		3'			120	9'-9"			59	10'-10"	"	2'-3½"	3'-5½"
		4'			120	9'-9"			59	10'-10"	"	2'-3½"	3'-5½"
		5'			120	9'-9"			59	10'-10"	"	2'-3½"	3'-5½"
		6'			120	10'-0"			59	11'-1"	0'-3"	2'-4½"	3'-6½"
	2 @ 5'	3'	#6	12"	120	11'-10"	#5	12"	59	12'-11"	0'-3½"	2'-8"	4'-3"
		4'			120	11'-10"			59	12'-11"	"	2'-8"	4'-3"
		5'			120	11'-10"			59	12'-11"	"	2'-8"	4'-3"
		6'			120	12'-1"			59	13'-2"	"	2'-9"	4'-4"
		7'			120	12'-3"			59	13'-4"	0'-3½"	2'-10"	4'-4½"
	2 @ 6'	3'	#6	11"	132	13'-11"	#5	11"	65	15'-0"	0'-4"	3'-2"	5'-0"
		4'			132	13'-11"			65	15'-0"	"	3'-2"	5'-0"
		5'			132	13'-11"			65	15'-0"	"	3'-2"	5'-0"
		6'			132	14'-2"			65	15'-3"	"	3'-3"	5'-1"
		7'			132	14'-4"			65	15'-5"	"	3'-4"	5'-1½"
		8'			132	14'-5"			65	15'-6"	0'-4"	3'-4"	5'-2"
	2 @ 7'	4'	#6	12"	120	15'-11"	#6	12"	59	17'-3"	0'-4½"	3'-7"	5'-9"
		5'			120	15'-11"			59	17'-3"	"	3'-7"	5'-9"
		6'			120	16'-2"			59	17'-6"	"	3'-8"	5'-10"
		7'			120	16'-4"			59	17'-8"	"	3'-9"	5'-10½"
		8'			120	16'-5"			59	17'-9"	"	3'-9"	5'-11"
		9'			120	16'-8"			59	18'-0"	0'-4½"	3'-10"	6'-0"
	2 @ 8'	4'	#6	11"	132	18'-0"	#6	11"	65	19'-5"	0'-5"	4'-0"	6'-6½"
		5'			132	18'-3"			65	19'-8"	"	4'-1"	6'-7½"
		6'			132	18'-3"			65	19'-8"	"	4'-1"	6'-7½"
		7'			132	18'-5"			65	19'-10"	"	4'-2"	6'-8"
		8'			132	18'-6"			65	19'-11"	"	4'-2"	6'-8½"
		9'			132	18'-9"			65	20'-2"	"	4'-3"	6'-9½"
		10'			132	19'-0"			65	20'-5"	0'-5"	4'-4"	6'-10½"
	2 @ 9'	5'	#6	11"	132	20'-4"	#6	11"	65	21'-9"	0'-5½"	4'-6"	7'-5"
		6'			132	20'-6"			65	21'-11"	"	4'-7"	7'-5½"
		7'			132	20'-6"			65	21'-11"	"	4'-7"	7'-5½"
		8'			132	20'-7"			65	22'-0"	"	4'-7"	7'-6"
		9'			132	20'-10"			65	22'-3"	"	4'-8"	7'-7"
		10'			132	21'-1"			65	22'-6"	"	4'-9"	7'-8"
		11'			132	21'-3"			65	22'-8"	0'-5½"	4'-9"	7'-9"
	2 @ 10'	5'	#7	12"	120	22'-5"	#6	12"	59	23'-11"	0'-6"	5'-0"	8'-2"
		6'			120	22'-7"			59	24'-1"	"	5'-1"	8'-2½"
		7'			120	22'-7"			59	24'-1"	"	5'-1"	8'-2½"
		8'			120	22'-8"			59	24'-2"	"	5'-1"	8'-3"
		9'			120	22'-11"			59	24'-5"	"	5'-2"	8'-4"
		10'			120	23'-2"			59	24'-8"	"	5'-3"	8'-5"
		11'			120	23'-4"			59	24'-10"	"	5'-3"	8'-6"
		12'			120	23'-6"			59	25'-0"	0'-6"	5'-3"	8'-7"
	2 @ 11'	6'	#7	12"	120	24'-9"	#6	12"	59	26'-3"	0'-6½"	5'-5"	9'-1"
		7'			120	24'-9"			59	26'-3"	"	5'-5"	9'-1"
		8'			120	24'-9"			59	26'-3"	"	5'-5"	9'-1"
		9'			120	25'-0"			59	26'-6"	"	5'-6"	9'-2"
		10'			120	25'-3"			59	26'-9"	"	5'-7"	9'-3"
		11'			120	25'-5"			59	26'-11"	"	5'-7"	9'-4"
		12'			120	25'-7"			59	27'-1"	0'-6½"	5'-7"	9'-5"
	2 @ 12'	6'	#7	11"	132	26'-10"	#6	11"	65	28'-4"	0'-7"	5'-11"	9'-10"
		7'			132	26'-10"			65	28'-4"	"	5'-11"	9'-10"
		8'			132	26'-10"			65	28'-4"	"	5'-11"	9'-10"
		9'			132	27'-1"			65	28'-7"	"	6'-0"	9'-11"
		10'			132	27'-4"			65	28'-10"	"	6'-1"	10'-0"
		11'			132	27'-6"			65	29'-0"	"	6'-1"	10'-1"
		12'			132	27'-8"			65	29'-2"	0'-7"	6'-1"	10'-2"

"b2" bars: BENT – See Diagram below. In Top of Bottom Slab bent down under Division Wall - hooked. Alternate with "a" and "c" bars. "c" bars: STRAIGHT – In Top and Bottom Slab of Barrel. Alt. with "b" and "b2" bars.

S	H	b2 Size	b2 Spacing	b2 No. Req'd	b2 Length	b2 X	b2 Y	b2 Z	c Size	c Spacing	c No. Req'd	c Length
2 @ 4'	2'	#5	12"	59	10'-10"	0'-2½"	2'-4½"	3'-5½"	#5	12"	120	4'-10"
	3'			59	10'-10"	"	2'-4½"	3'-5½"			120	4'-10"
	4'			59	10'-10"	"	2'-4½"	3'-5½"			120	4'-10"
	5'			59	10'-10"	"	2'-4½"	3'-5½"			120	4'-10"
	6'			59	11'-1"	0'-2½"	2'-5½"	3'-6½"			120	4'-11"
2 @ 5'	3'	#5	12"	59	12'-11"	0'-3"	2'-9"	4'-3"	#6	12"	120	5'-10"
	4'			59	12'-11"	"	2'-9"	4'-3"			120	5'-10"
	5'			59	12'-11"	"	2'-9"	4'-3"			120	5'-10"
	6'			59	13'-2"	"	2'-10"	4'-4"			120	5'-11"
	7'			59	13'-4"	0'-3"	2'-11"	4'-4½"			120	6'-0"
2 @ 6'	3'	#5	11"	65	15'-0"	0'-4"	3'-2"	5'-0"	#6	11"	132	6'-11"
	4'			65	15'-0"	"	3'-2"	5'-0"			132	6'-11"
	5'			65	15'-0"	"	3'-2"	5'-0"			132	6'-11"
	6'			65	15'-3"	"	3'-3"	5'-1"			132	7'-0"
	7'			65	15'-5"	"	3'-4"	5'-1½"			132	7'-1"
	8'			65	15'-6"	0'-4"	3'-4"	5'-2"			132	7'-1"
2 @ 7'	4'	#6	12"	59	17'-3"	0'-4½"	3'-7"	5'-9"	#6	12"	120	7'-11"
	5'			59	17'-3"	"	3'-7"	5'-9"			120	7'-11"
	6'			59	17'-6"	"	3'-8"	5'-10"			120	8'-0"
	7'			59	17'-8"	"	3'-9"	5'-10½"			120	8'-1"
	8'			59	17'-9"	"	3'-9"	5'-11"			120	8'-1"
	9'			59	18'-0"	0'-4½"	3'-10"	6'-0"			120	8'-2"
2 @ 8'	4'	#6	11"	65	19'-5"	0'-5"	4'-0"	6'-6½"	#6	11"	132	9'-0"
	5'			65	19'-8"	"	4'-1"	6'-7½"			132	9'-0"
	6'			65	19'-8"	"	4'-1"	6'-7½"			132	9'-0"
	7'			65	19'-10"	"	4'-2"	6'-8"			132	9'-2"
	8'			65	19'-11"	"	4'-2"	6'-8½"			132	9'-2"
	9'			65	20'-2"	"	4'-3"	6'-9½"			132	9'-3"
	10'			65	20'-5"	0'-5"	4'-4"	6'-10½"			132	9'-4"
2 @ 9'	5'	#6	11"	65	21'-9"	0'-5½"	4'-5½"	7'-5"	#6	11"	132	10'-1"
	6'			65	21'-11"	"	4'-6½"	7'-5½"			132	10'-2"
	7'			65	21'-11"	"	4'-6½"	7'-5½"			132	10'-2"
	8'			65	22'-0"	"	4'-6½"	7'-6"			132	10'-2"
	9'			65	22'-3"	"	4'-7½"	7'-7"			132	10'-3"
	10'			65	22'-6"	"	4'-8½"	7'-8"			132	10'-4"
	11'			65	22'-8"	0'-5½"	4'-8½"	7'-9"			132	10'-4"
2 @ 10'	5'	#6	12"	59	23'-11"	0'-6½"	4'-11"	8'-2"	#7	12"	120	11'-2"
	6'			59	24'-1"	"	5'-0"	8'-2½"			120	11'-3"
	7'			59	24'-1"	"	5'-0"	8'-2½"			120	11'-3"
	8'			59	24'-2"	"	5'-0"	8'-3"			120	11'-3"
	9'			59	24'-5"	"	5'-1"	8'-4"			120	11'-4"
	10'			59	24'-8"	"	5'-2"	8'-5"			120	11'-5"
	11'			59	24'-10"	"	5'-2"	8'-6"			120	11'-5"
	12'			59	25'-0"	0'-6½"	5'-2"	8'-7"			120	11'-5"
2 @ 11'	6'	#6	12"	59	26'-4"	0'-7½"	5'-3"	9'-1"	#7	12"	120	12'-3"
	7'			59	26'-4"	"	5'-3"	9'-1"			120	12'-3"
	8'			59	26'-4"	"	5'-3"	9'-1"			120	12'-3"
	9'			59	26'-7"	"	5'-4"	9'-2"			120	12'-4"
	10'			59	26'-10"	"	5'-5"	9'-3"			120	12'-5"
	11'			59	27'-0"	"	5'-5"	9'-4"			120	12'-5"
	12'			59	27'-2"	0'-7½"	5'-5"	9'-5"			120	12'-5"
2 @ 12'	6'	#6	11"	65	28'-6"	0'-8½"	5'-8"	9'-10"	#7	11"	132	13'-3"
	7'			65	28'-6"	"	5'-8"	9'-10"			132	13'-3"
	8'			65	28'-6"	"	5'-8"	9'-10"			132	13'-3"
	9'			65	28'-9"	"	5'-9"	9'-11"			132	13'-4"
	10'			65	29'-0"	"	5'-10"	10'-0"			132	13'-6"
	11'			65	29'-2"	"	5'-10"	10'-1"			132	13'-6"
	12'			65	29'-4"	0'-8½"	5'-10"	10'-2"			132	13'-6"

"d" bars: STRAIGHT – Longitudinal in Top Slab of Barrel. "d1" bars: Longitudinal in Sidewalls and Division Wall. "e" bars: Longitudinal in Bottom Slab of Barrel. "f" bars: STRAIGHT – Verticals in Sidewalls and Division Wall. "k" bars: STRAIGHT – 2 in Top of Headwalls and Aprons - Each.

S	H	d Size	d Spacing	d No. Req'd	d Length	d1 Size	d1 Spacing	d1 No. Req'd	d1 Length	e Size	e Spacing	e No. Req'd	e Length	f Size	f Spacing	f No. Req'd	f Length	k Size	k No. Req'd	k Length
2 @ 4'	2'	#5	12"	14	2 @ 30'-8" for 60'-0" Length Barrel (1'-8" Lap)	#4	12"	8	2 @ 30'-6" for 60'-0" Length Barrel (1'-3" Lap)	#4	12"	14	2 @ 31'-6" for 60'-0" Length Barrel (1'-3" Lap)	#4	12"	240	2'-10"	#5	8	10'-3"
	3'			14				12				14				240	3'-10"		8	"
	4'			14				16				14				240	4'-10"		8	"
	5'			14				20				14				240	5'-10"		8	"
	6'			14				24				14				240	6'-10"		8	10'-6"
2 @ 5'	3'	#5	11½"	16		#4	12"	12		#4	12"	16		#4	12"	240	3'-11"	#6	8	12'-4"
	4'			16				16				16				240	4'-11"		8	"
	5'			16				20				16				240	5'-11"		8	"
	6'			16				24				16				240	6'-11"		8	12'-7"
	7'			16				28				16				240	7'-11"		8	12'-9"
2 @ 6'	3'	#5	11½"	18		#4	12"	12		#4	12"	18		#4	12"	240	4'-0"	#6	8	14'-5"
	4'			18				16				18				240	5'-0"		8	"
	5'			18				20				18				240	6'-0"		8	"
	6'			18				24				18				240	7'-0"		8	14'-8"
	7'			18				28				18				240	8'-0"		8	14'-10"
	8'			18				32				18			10"	288	9'-0"		8	14'-11"
2 @ 7'	4'	#5	11½"	20		#4	12"	16		#4	12"	20		#4	12"	240	5'-1"	#6	8	16'-6"
	5'			20				20				20				240	6'-1"		8	"
	6'			20				24				20				240	7'-1"		8	16'-9"
	7'			20				28				20				240	8'-1"		8	16'-11"
	8'			20				32				20			10"	288	9'-1"		8	17'-0"
	9'			20				36				20		#5	12"	240	10'-1"		8	17'-3"
2 @ 8'	4'	#5	11½"	23		#4	12"	16		#4	12"	22		#4	12"	240	5'-2"	#6	8	18'-7"
	5'			23				20				22				240	6'-2"		8	18'-10"
	6'			23				24				22				240	7'-2"		8	"
	7'			23				28				22				240	8'-2"		8	19'-0"
	8'			23				32				22			10"	288	9'-2"		8	19'-1"
	9'			23				36				22		#5	12"	240	10'-2"		8	19'-4"
	10'			23				40				22			11"	264	11'-2"		8	19'-7"
2 @ 9'	5'	#5	11½"	26		#4	12"	20		#4	12"	25		#4	12"	240	6'-3"	#6	8	20'-11"
	6'			26				24				25				240	7'-3"		8	21'-1"
	7'			26				28				25				240	8'-3"		8	"
	8'			26				32				25			10"	288	9'-3"		8	21'-2"
	9'			26				36				25		#5	12"	240	10'-3"		8	21'-5"
	10'			26				40				25			11"	264	11'-3"		8	21'-8"
	11'			26				44				25			10"	288	12'-3"		8	21'-10"
2 @ 10'	5'	#5	11½"	28		#4	12"	20		#4	12"	27		#4	12"	240	6'-4"	#7	8	22'-11"
	6'			28				24				27				240	7'-4"		8	23'-1"
	7'			28				28				27				240	8'-4"		8	"
	8'			28				32				27			10"	288	9'-4"		8	23'-2"
	9'			28				36				27		#5	12"	240	10'-4"		8	23'-6"
	10'			28				40				27			11"	264	11'-4"		8	23'-9"
	11'			28				44				27			10"	288	12'-4"		8	23'-11"
	12'			28				48				27		#6	12"	240	13'-4"		8	24'-1"
2 @ 11'	6'	#5	11½"	30		#4	12"	24		#4	12"	29		#4	12"	240	7'-6"	#7	8	25'-3"
	7'			30				28				29				240	8'-6"		8	"
	8'			30				32				29			10"	288	9'-6"		8	"
	9'			30				36				29		#5	12"	240	10'-6"		8	25'-6"
	10'			30				40				29			11"	264	11'-6"		8	25'-10"
	11'			30				44				29			10"	288	12'-6"		8	26'-0"
	12'			30				48				29		#6	12"	240	13'-6"		8	26'-2"
2 @ 12'	6'	#5	11½"	32		#4	12"	24		#4	12"	31		#4	12"	240	7'-7"	#7	8	27'-4"
	7'			32				28				31				240	8'-7"		8	"
	8'			32				32				31			10"	288	9'-7"		8	"
	9'			32				36				31		#5	12"	240	10'-7"		8	27'-7"
	10'			32				40				31			11"	264	11'-7"		8	27'-10"
	11'			32				44				31			10"	288	12'-7"		8	28'-0"
	12'			32				48				31		#6	12	240	13'-7"		8	28'-5"

NOTE:- The "a", "b", "b2", and "c" bars are to be placed parallel with the headwalls, spacing to be parallel with barrel.

DIMENSIONS / QUANTITIES

Max. Design Depth of Cover D	Clear Span S	Clear Height H	Sq. Ft. Opening A	Overall Width OW	Thickness of Top Slab T	Thickness of Sidewalls C	Thickness of Division Wall M	Thickness of Bottom Slab B	Overall Height OH	Roadway Length RL	Length of Headwall K	Class S Conc. per Lin. Ft. of Barrel Cu.Yd.	Reinf. Steel per Lin. Ft. of Barrel Lb.	Additional per Lap Lb.	Additional Two Headwalls & Aprons Lb.
5'-0"	2 @ 4'	2'	16	9'-8"	6½"	6"	8"	6"	3'-0½"	10'-0"	10'-6½"	0.496	89.89	42.71	136.52
		3'	24	9'-8"		6"	8"		4'-0½"	"	"	0.558	95.23	46.05	136.52
		4'	32	9'-8"		6"	8"		5'-0½"	"	"	0.620	100.58	49.39	136.52
		5'	40	9'-8"		6"	8"		6'-0½"	"	"	0.682	105.92	52.73	136.52
		6'	48	9'-11"		7"	9"		7'-0½"	10'-3⅛"	10'-9⅝"	0.809	112.98	56.07	138.60
	2 @ 5'	3'	30	11'-8"	7"	6"	8"	6½"	4'-1½"	12'-1"	12'-7½"	0.671	125.87	51.19	209.65
		4'	40	11'-8"		6"	8"		5'-1½"	"	"	0.733	131.22	54.53	209.65
		5'	50	11'-8"		6"	8"		6'-1½"	"	"	0.795	136.56	57.87	209.65
		6'	60	11'-11"		7"	9"		7'-1½"	12'-4"	12'-10⅝"	0.922	143.43	61.21	212.66
		7'	70	12'-1"		7½"	10"		8'-1½"	12'-6⅛"	13'-0⅝"	1.044	149.87	64.55	214.66
	2 @ 6'	3'	36	13'-8"	7½"	6"	8"	7½"	4'-3"	14'-1⅞"	14'-8⅝"	0.818	151.91	56.34	245.60
		4'	48	13'-8"		6"	8"		5'-3"	"	"	0.880	157.25	59.68	245.60
		5'	60	13'-8"		6"	8"		6'-3"	"	"	0.941	162.60	63.02	245.60
		6'	72	13'-11"		7"	9"		7'-3"	14'-5"	14'-11½"	1.070	169.60	66.36	248.60
		7'	84	14'-1"		7½"	10"		8'-3"	14'-7"	15'-1½"	1.192	176.15	69.70	250.61
		8'	96	14'-2"		8"	10"		9'-3"	14'-8"	15'-2⅛"	1.298	186.76	73.04	251.61
	2 @ 7'	4'	56	15'-8"	8"	6"	8"	8"	5'-4"	16'-2⅜"	16'-9"	1.021	181.91	64.83	281.99
		5'	70	15'-8"		6"	8"		6'-4"	"	"	1.082	187.25	68.17	281.99
		6'	84	15'-11"		7"	9"		7'-4"	16'-5⅜"	17'-0⅛"	1.212	194.35	71.51	284.99
		7'	98	16'-1"		7½"	10"		8'-4"	16'-7⅜"	17'-2¼"	1.334	200.94	74.85	286.99
		8'	112	16'-2"		8"	10"		9'-4"	16'-8⅜"	17'-3¼"	1.440	211.64	78.19	288.00
		9'	126	16'-5"		9"	11"		10'-4"	17'-0"	17'-6¼"	1.616	229.01	81.53	291.00
	2 @ 8'	4'	64	17'-8"	8½"	6"	8"	8½"	5'-5"	18'-3⅜"	18'-10"	1.174	215.29	71.71	322.50
		5'	80	17'-11"		7"	9"		6'-5"	18'-6⅝"	19'-1"	1.295	222.27	75.05	325.50
		6'	96	17'-11"		7"	9"		7'-5"	"	"	1.366	227.62	78.39	325.50
		7'	112	18'-1"		7½"	10"		8'-5"	18'-8⅝"	19'-3"	1.489	234.60	81.73	327.50
		8'	128	18'-2"		8"	10"		9'-5"	18'-9⅝"	19'-4½"	1.595	245.39	85.07	328.50
		9'	144	18'-5"		9"	11"		10'-5"	19'-0⅝"	19'-7¼"	1.772	263.00	88.41	331.51
		10'	160	18'-8"		10"	12"		11'-5"	19'-3⅝"	19'-10⅝"	1.967	275.99	91.75	334.51
	2 @ 9'	5'	90	19'-11"	9"	7"	9"	9¼"	6'-6¼"	20'-7⅝"	21'-2"	1.477	244.83	82.77	364.23
		6'	108	20'-1"		7½"	10"		7'-6¼"	20'-9⅝"	21'-4"	1.594	251.54	86.11	366.23
		7'	126	20'-1"		7½"	10"		8'-6¼"	"	"	1.671	256.89	89.45	366.23
		8'	144	20'-2"		8"	10"		9'-6¼"	20'-10⅝"	21'-5"	1.778	267.72	92.79	367.23
		9'	162	20'-5"		9"	11"		10'-6¼"	21'-1⅝"	21'-8¼"	1.956	285.41	96.13	370.24
		10'	180	20'-8"		10"	12"		11'-6¼"	21'-4⅜"	21'-11¼"	2.152	298.43	99.47	373.24
		11'	198	20'-10"		11"	12"		12'-6¼"	21'-6⅜"	22'-1½"	2.328	312.32	102.81	375.24
	2 @ 10'	5'	100	21'-11"	9½"	7"	9"	10"	6'-7½"	22'-8⅜"	23'-2¾"	1.674	286.66	87.92	500.43
		6'	120	22'-1"		7½"	10"		7'-7½"	22'-10⅜"	23'-4¾"	1.792	293.52	91.26	503.15
		7'	140	22'-1"		7½"	10"		8'-7½"	"	"	1.869	298.87	94.60	503.15
		8'	160	22'-2"		8"	10"		9'-7½"	22'-11⅜"	23'-5¾"	1.976	309.79	97.94	504.52
		9'	180	22'-5"		9"	11"		10'-7½"	23'-2⅜"	23'-9"	2.155	327.76	101.28	509.97
		10'	200	22'-8"		10"	12"		11'-7½"	23'-5⅜"	24'-0"	2.352	341.02	104.62	514.06
		11'	220	22'-10"		11"	12"		12'-7½"	23'-7⅜"	24'-2"	2.529	355.04	107.96	516.78
		12'	240	23'-0"		12"	12"		13'-7½"	23'-9⅜"	24'-4½"	2.718	377.25	111.30	519.51
	2 @ 11'	6'	132	24'-2"	10"	8"	10"	11"	7'-9"	25'-0⅝"	25'-6¾"	2.048	316.97	96.41	551.83
		7'	154	24'-2"		8"	10"		8'-9"	"	"	2.128	322.31	99.75	551.83
		8'	176	24'-2"		8"	10"		9'-9"	"	"	2.208	332.74	103.09	551.83
		9'	198	24'-5"		9"	11"		10'-9"	25'-3⅝"	25'-9⅜"	2.388	350.87	106.43	555.92
		10'	220	24'-8"		10"	12"		11'-9"	25'-6⅝"	26'-1"	2.586	364.19	109.77	561.37
		11'	242	24'-10"		11"	12"		12'-9"	25'-8⅝"	26'-3"	2.769	378.28	113.11	564.10
		12'	264	25'-0"		12"	12"		13'-9"	25'-10⅝"	26'-5"	2.954	400.66	116.45	566.82
	2 @ 12'	6'	144	26'-2"	10½"	8"	10"	12"	7'-10½"	27'-1"	27'-7⅝"	2.299	362.26	101.55	599.59
		7'	168	26'-2"		8"	10"		8'-10½"	"	"	2.379	367.60	104.89	599.59
		8'	192	26'-2"		8"	10"		9'-10½"	"	"	2.459	378.07	108.23	599.59
		9'	216	26'-5"		9"	11"		10'-10½"	27'-4⅝"	27'-10⅜"	2.670	396.97	111.57	603.68
		10'	240	26'-8"		10"	12"		11'-10½"	27'-7⅝"	28'-1⅜"	2.840	410.39	114.91	607.77
		11'	264	26'-10"		11"	12"		12'-10½"	27'-9⅝"	28'-3⅜"	3.018	424.63	118.25	610.49
		12'	288	27'-0"		12"	12"		13'-10½"	27'-11⅜"	28'-6"	3.208	447.20	121.59	614.58

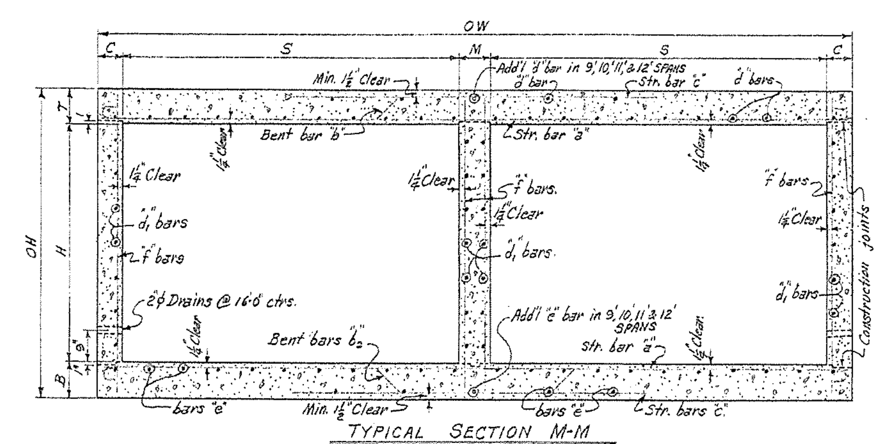

TYPICAL SECTION M-M

NOTE:- For details of wings and bar lists, see Drawing Nos. W-X152-1 or W-X152-2; W-X153-1 or W-X153-2 and W-X154-1 or W-X154-2. Also W-X15.

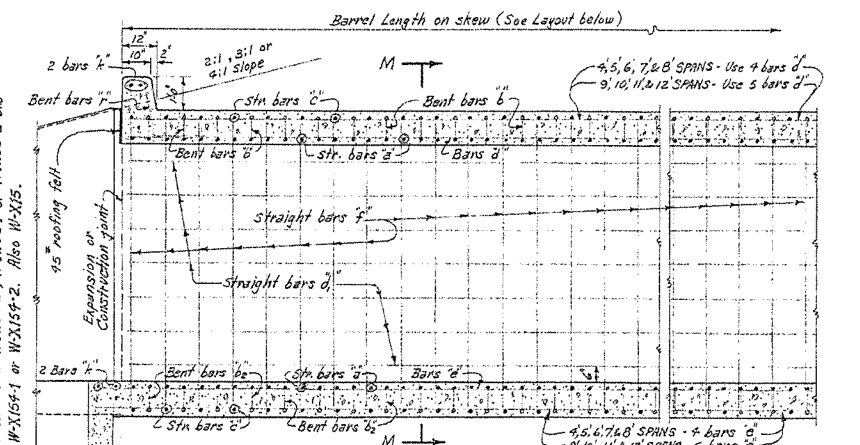

PART LONGITUDINAL SECTION N-N

BAR SIZE	PIN DIAM.	K	ADD FOR 2 HOOKS
#5	2½"	4½"	0'-11½"
#6	3"	5"	1'-2"

BENDING DIAGRAM FOR BARS "b" and "b2"

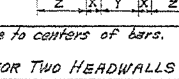

NOTE:- Dimensions are to centers of bars.

DOWEL BARS FOR TWO HEADWALLS

2 Spans @	Size	Spacing	No. Req'd	Length	X
4'	#4	12"±	20	2'-5"	1'-2½"
5'	#4	12"±	24	2'-6"	1'-3"
6'	#4	12"±	28	2'-7"	1'-3½"
7'	#4	12"±	32	2'-8"	1'-4"
8'	#4	12"±	38	2'-9"	1'-4½"
9'	#4	12"±	42	2'-10"	1'-5"
10'	#4	12"±	46	2'-11"	1'-5½"
11'	#4	12"±	50	3'-0"	1'-6"
12'	#4	12"±	54	3'-1"	1'-6½"

Bars "r" – Dowel bars in Headwalls

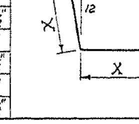

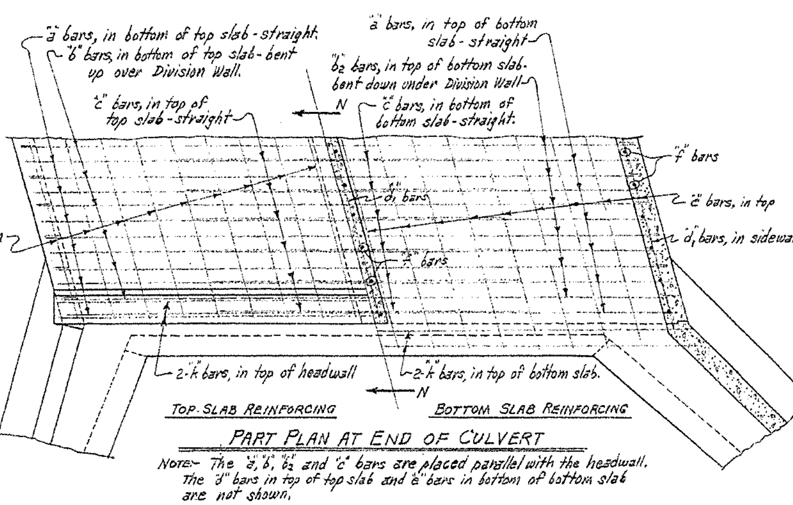

PART PLAN AT END OF CULVERT

NOTE:- The "a", "b", "b2" and "c" bars are placed parallel with the headwall. The "d" bars in top of top slab and "e" bars in bottom of bottom slab are not shown.

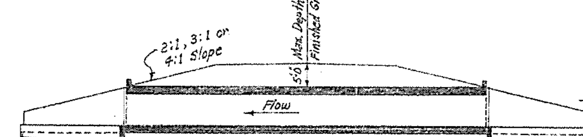

LONGITUDINAL SECTION N-N

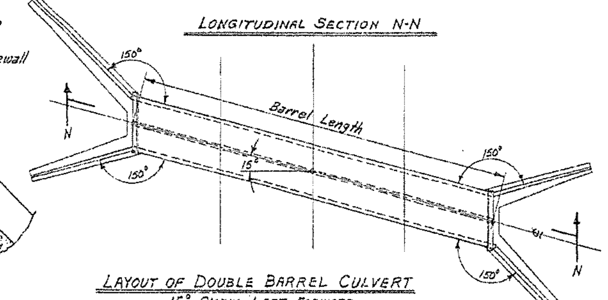

LAYOUT OF DOUBLE BARREL CULVERT

15° SKEW LEFT FORWARD

15° Skew Right Forward is reversed.

DESIGN LIVE LOAD

H20-S16 LOADING A.A.S.H.O. 1961

AND

SPECIAL MILITARY LOADING

Two 24000 Lb. Axles @ 4'-0" ctrs.

UNIT STRESSES:-

Class S Concrete (n=10) 1200#/□"

Reinforcing Steel 20,000#/□"

GENERAL NOTES:-

CONCRETE:- All concrete to be Class S, and shall be poured in the dry. All exposed corners to have ¾" chamfers.

REINFORCING STEEL:- Reinforcing to be deformed bars of intermediate or hard grade.

BAR LAP:- In computing the quantities of steel from the tables add one lap for each additional 33'-0" length of barrel over 32'-0". Lap longitudinal bars 30 diameters.

CONSTRUCTION JOINTS:- Construction joints between wingwalls, side walls, division walls and slabs shall be only where shown on plans.

SPECIFICATIONS:- Arkansas State Highway Commission Standard Specifications for Highway Construction and applicable Special Provisions.

NOTE:- This drawing to be used in conjunction with Standard Wing Drawing Nos. W-X152-1 or W-X152-2, W-X153-1 or W-X153-2, and W-X154-1 or W-X154-2. Also W-X15.

Designed by:- W.C.H. 1-17-63. Checked by:- R.H.S. - 5-14-63
Drawn by:- W.C.H. 8-23-63. Checked by:- R.H.S. 10-7-63
Quantities by:- W.C.H. 8-26-63. Checked by:- R.G. - 12-16-63

CLASS S CONCRETE

ARKANSAS STATE HIGHWAY COMMISSION

DETAILS OF STANDARD BARREL SECTIONS FOR REINFORCED CONCRETE BOX CULVERTS

15° SKEW

4', 5', 6', 7', 8', 9', 10', 11' & 12' SPANS   2:1, 3:1 OR 4:1 SLOPES
DOUBLES   UNDER 5'-0" COVER

STANDARD DRAWING NO. R-215X-0

Reshot 3-9-93 452

FED. ROAD No.	STATE	FED. AID PROJECT	FISCAL YEAR	SHEET No.	TOTAL SHEETS
6	ARK.			449	
JOB No.					

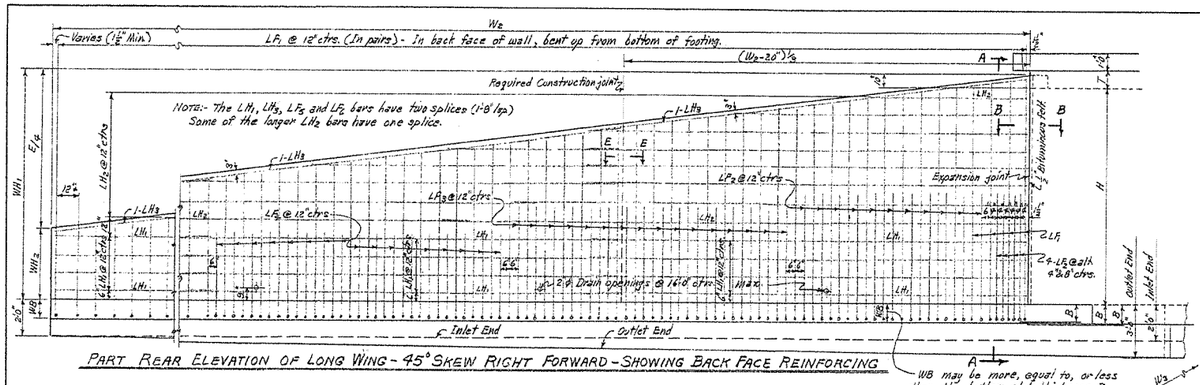

PART REAR ELEVATION OF LONG WING - 45° SKEW RIGHT FORWARD - SHOWING BACK FACE REINFORCING

W6 may be more, equal to, or less than the bottom slab thickness B.

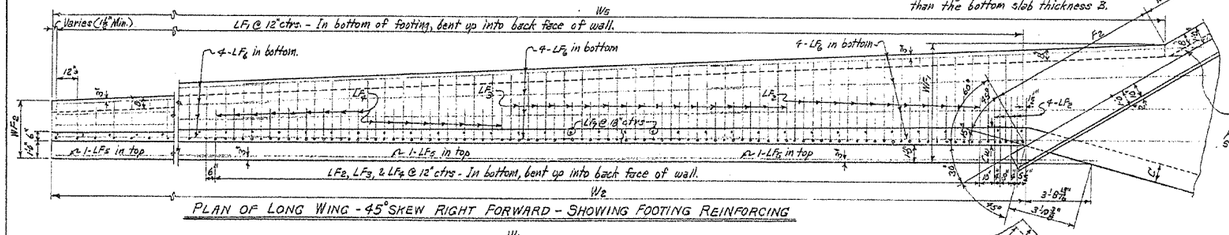

PLAN OF LONG WING - 45° SKEW RIGHT FORWARD - SHOWING FOOTING REINFORCING

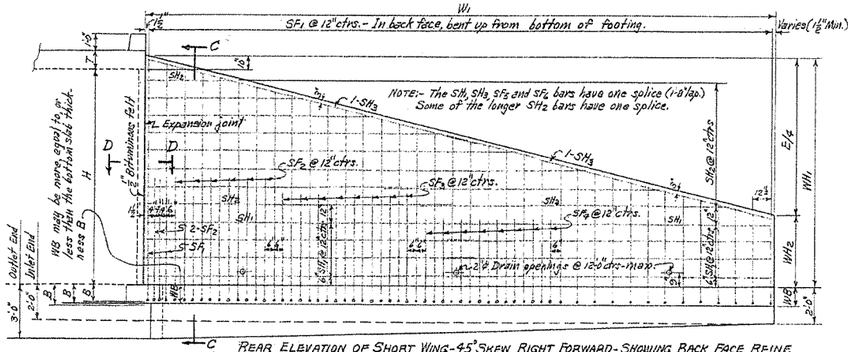

REAR ELEVATION OF SHORT WING - 45° SKEW RIGHT FORWARD - SHOWING BACK FACE REINF.

When B is more than WB, the shaded portion of the apron shall be made the same thickness as the bottom slab B.

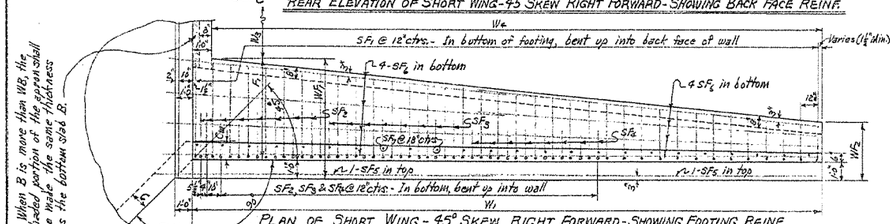

PLAN OF SHORT WING - 45° SKEW RIGHT FORWARD - SHOWING FOOTING REINF.

When B is more than WB, the shaded portion of the apron shall be made the same thickness as the bottom slab B.

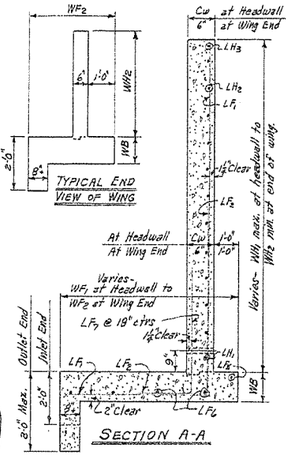

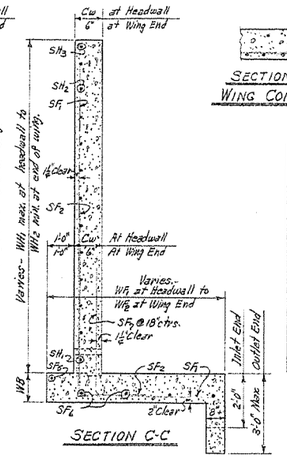

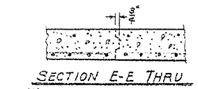

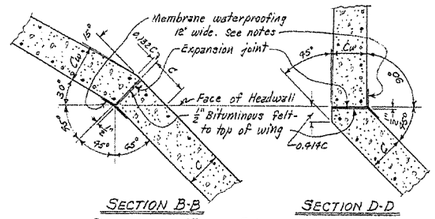

SECTIONS THRU EXPANSION JOINTS

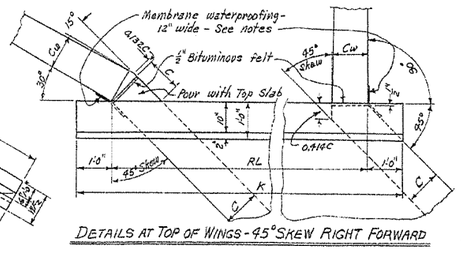

DETAILS AT TOP OF WINGS - 45° SKEW RIGHT FORWARD

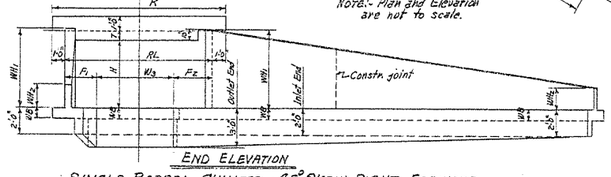

Note:- Plan and Elevation are not to scale.

SINGLE BARREL CULVERT - 45° SKEW RIGHT FORWARD

Details of Culvert with 45° Skew Left Forward is reversed, see Drawing No. W-X45.

TYPICAL WING DETAILS

REGULAR WING DIMENSIONS - 4:1 SLOPES

CLEAR HEIGHT OF BOX	THICKNESS OF WING FOOTING	THICKNESS OF WING AT H/2 = C	WINGWALL HEIGHTS AT HEADWALL	WINGWALL HEIGHTS AT END OF WING	WIDTHS OF WING FOOTINGS AT HEADWALL	WIDTHS OF WING FOOTINGS AT END OF WING	FOOTING DIMENSION PARALLEL WITH HEADWALL	PERPENDICULAR DIST. FROM HEAD TO END OF WING	LENGTHS OF WINGWALLS		INSIDE FOOTING DIMENSIONS		* QUANTITY PER WING CLASS S CONCRETE INLET END		OUTLET END	
													SHORT WING	LONG WING	SHORT WING	LONG WING
H	WB	Cw	WH1	WH2	WF1	WF2	F1	F2	E	W1	W2	W4	W5	CU.YD.	CU.YD.	CU.YD.	CU.YD.
9'	10"	9"	3'-10"	3'-0"	5'-2"	2'-10½"	9'-2"	6'-7½"	27'-4"	27'-4"	54'-8"	24'-8"	53'-10½"	8.911	17.363	8.753	18.107
10'	11"	10"	10'-10"	3'-9"	5'-8"	3'-0"	9'-8"	7'-1½"	30'-0"	30'-0"	60'-0"	29'-0"	66'-1"	10.728	22.133	11.104	22.954
11'	12"	11"	11'-10"	3'-8"	6'-2"	3'-1½"	5'-8"	8'-7½"	32'-8"	32'-8"	65'-4"	31'-8"	72'-3½"	13.953	27.237	13.861	28.635
12'	13"	12"	12'-10"	4'-0"	6'-8"	3'-3"	5'-8"	9'-7½"	35'-4"	70'-8"	34'-4"	78'-3½"	16.618	34.246	17.060	35.220

* Quantity per wing does not include headwall or that portion of apron or toewall for the length W3.

QUANTITIES

CLEAR SPAN	CLEAR HEIGHT	THICKNESS OF WING AT HEADWALL	THICKNESS OF WING FOOTING	REINFORCING STEEL - FOR 4 WINGS ⊖	CLASS S CONCRETE - 4 WINGS HEADWALLS, WINGWALLS, FOOTINGS, TOEWALLS AND APRONS				
					SINGLE BARREL CULVERT	DOUBLE BARREL CULVERT	TRIPLE BARREL CULVERT	QUADRUPLE BARREL CULVERT	QUINTUPLE BARREL CULVERT
S	H	Cw	WB	LB.	CU.YD.	CU.YD.	CU.YD.	CU.YD.	CU.YD.
7'	9"	9"	10"	3761	53.74	56.12	58.48	60.86	63.22
8'	9"	9"	10"	3761	54.06	56.73	59.40	62.07	64.73
	10"	10"	11"	4695	68.17	70.89	73.60	76.33	79.04
9'	9"	9"	10"	3761	54.37	57.33	60.31	63.27	66.24
	10"	10"	11"	4695	68.48	71.51	74.53	77.56	80.56
	11"	11"	12"	5677	85.07	88.18	91.12	94.21	97.27
10'	9"	9"	10"	3761	54.69	58.01	61.25	64.48	67.75
	10"	10"	11"	4695	68.80	72.14	75.44	78.76	82.09
	11"	11"	12"	5677	85.39	88.75	92.10	95.44	98.80
	12"	12"	13"	7154	109.67	113.06	111.44	114.81	118.21
11'	9"	9"	10"	3761	54.99	58.66	62.21	65.76	——
	10"	10"	11"	4695	69.10	72.80	76.38	79.98	——
	11"	11"	12"	5677	85.69	89.39	93.02	96.68	——
	12"	12"	13"	7154	109.97	113.69	112.37	116.06	——
12'	9"	9"	10"	3761	55.31	59.38	63.19	67.07	——
	10"	10"	11"	4695	69.42	73.47	77.34	81.27	——
	11"	11"	12"	5677	86.01	90.06	93.95	97.92	——
	12"	12"	13"	7154	105.29	109.34	113.31	117.31	——

⊖ For reinforcing steel in Headwalls and Aprons, see Drawing Nos. of Barrel Sections listed at left below.

GENERAL NOTES:-

CONCRETE:- All concrete to be Class S, and shall be poured in the dry. All exposed corners to have ¾ chamfers.

REINFORCING STEEL:- Reinforcing steel to be deformed bars of intermediate or hard grade.

CONSTRUCTION JOINTS:- Construction joints between wingwalls, footings and sidewalls shall be only where shown on plans.

MEMBRANE:- A membrane waterproofing 12" wide, consisting of three moppings of waterproofing asphalt and two alternate layers of treated cotton fabric shall be applied to the back face of wing to cover the expansion joints.

Payment for the membrane waterproofing and bituminous felt shall be included in unit price bid for Class S Concrete.

SPECIFICATIONS:- Arkansas State Highway Commission Standard Specifications for Highway Construction and applicable Special Provisions.

UNIT STRESSES:-

Class S Concrete (n=10) 1200 #/in²

Reinforcing Steel 20,000 #/in²

NOTE:- This drawing to be used in conjunction with Standard Barrel Sections, Drawing Nos.

SINGLES	DOUBLES	TRIPLES	QUADRUPLES	QUINTUPLES
R-145X-0	R-245X-01	R-345X-01	R-445X-01	R-545X-01
	R-245X-02	R-345X-02	R-445X-02	R-545X-02
R-145X-1	R-245X-1	R-345X-1	R-445X-1	
	R-245X-2	R-345X-2		

NOTE:- For remainder of General Plans and Elevations of Single, Double, Triple, Quadruple and Quintuple Span Culverts, see Std. Drawing No. W-X45. For values of RL, K and W3 for each box, see above Std. also.

BAR LIST FOR ONE SHORT AND ONE LONG WING - 2 EACH REQUIRED

CLEAR HEIGHT	WING LOCATION	SF1 & LF1 BENT: In bottom of footing, bent up into back face of wing. One bar (or two bars) of each length. SIZE	SPACING	NO./REQD	LENGTHS VARY MIN.	LENGTHS VARY MAX.	X MIN.	X MAX.	Y MIN.	Y MAX.
9'	Short	#5	12"	28	9'-11"	14'-0"	1'-6"	3'-10"	3'-6"	10'-3"
	Long	#5	12"	55	9'-11"	13'-10"	1'-6"	3'-8"	3'-6"	10'-3"
10'	Short	#5	12"	31	5'-5"	15'-7"	1'-8"	4'-4"	3'-10"	11'-9"
	Long	#5	12"	61	5'-5"	15'-4"	1'-8"	4'-1"	3'-10"	11'-9"
11'	Short	#5	12"	33	6'-1"	17'-3"	1'-8"	4'-10"	4'-5"	12'-5"
	Long	#5	12"	66	6'-1"	16'-11"	1'-8"	4'-7"	4'-3"	12'-5"
12'	Short	#5	12"	36	6'-7"	18'-3"	1'-11"	5'-1"	4'-9"	13'-1"
	Long	#5	12"	71	6'-7"	18'-5"	1'-11"	5'-0"	4'-9"	13'-1"

SF2 & LF2 BENT: In bottom of footing, bent up into back face of wing. Alt. with F1 bars. SIZE	SPACING	NO./REQD	LENGTH	X	Y
#5	12"	4	7'-6"	2'-1"	5'-6"
#5	12"	7	7'-6"	2'-1"	5'-6"
#6	12"	4	8'-6"	2'-4"	6'-3"
#6	12"	7	8'-6"	2'-4"	6'-3"
#6	12"	8	8'-6"	2'-4"	6'-3"
#6	12"	15	8'-6"	2'-5"	6'-3"
#7	12"	8	9'-6"	2'-7"	7'-0"
#7	12"	15	9'-6"	2'-7"	7'-0"

SF3 & LF3 BENT: In bottom of footing, bent up into back face of wing. Alt. with F1 bars. SIZE	SPACING	NO./REQD	LENGTH	X	Y
#5	12"	8	6'-6"	1'-10"	4'-9"
#5	12"	4	7'-6"	2'-1"	5'-6"
#5	12"	8	7'-6"	2'-1"	5'-6"
#6	12"	8	8'-6"	2'-4"	6'-3"
#6	12"	16	8'-6"	2'-4"	6'-3"
#7	12"	8	9'-6"	2'-7"	7'-0"
#6	12"	16	8'-6"	2'-4"	6'-3"
#7	12"	16	9'-6"	2'-7"	7'-0"

SF4 & LF4 BENT: In bottom of footing, bent up into back face of wing. Alt. with F1 bars. SIZE	SPACING	NO./REQD	LENGTH	X	Y
—	—	—	—	—	—
—	—	—	—	—	—
#5	12"	8	6'-5"	1'-10"	4'-9"
#5	12"	16	6'-5"	1'-10"	4'-9"
#6	12"	16	6'-6"	1'-10"	4'-9"
#6	12"	16	6'-6"	1'-10"	4'-9"
#7	12"	8	6'-6"	1'-10"	4'-9"
#7	12"	16	6'-6"	1'-10"	4'-9"

SF5 & LF5 STRAIGHT: Longitudinal in top of wing footing heel. SIZE	NO./REQD	LENGTH
#4	2	15'-5"
#4	3	20'-10"
#4	2	16'-9"
#4	3	22'-8"
#4	2	19'-1"
#4	3	26'-4"
#4	2	19'-5"
#4	3	26'-4"

SF6 & LF6 STRAIGHT: Longitudinal in bottom of wing footing toe. SIZE	NO./REQD	LENGTH
#4	8	15'-6"
#4	12	21'-3"
#4	8	16'-3"
#4	12	23'-10"
#4	8	19'-0"
#4	12	25'-11"
#4	8	19'-3"
#4	12	29'-0"

SF7 & LF7 BENT: Footing dowels extending up into front face of wing. SIZE	SPACING	NO./REQD	LENGTH	X
#4	18"	19	4'-0"	3'-6"
#4	18"	20	4'-9"	3'-10"
#4	18"	40	4'-9"	3'-10"
#4	18"	22	4'-8"	4'-2"
#4	18"	44	4'-8"	4'-2"
#4	13"	24	5'-0"	4'-6"
#4	13"	48	5'-0"	4'-6"

SH1 & LH1 Horizontal in back face of wing. SIZE	SPACING	NO./REQD	LENGTH
#4	12"	6	16'-5"
#4	12"	9	19'-3"
#4	12"	9	21'-0"
#4	12"	12	22'-10"
#4	12"	8	17'-0"
#4	12"	12	22'-10"
#4	12"	8	18'-9"
#4	12"	12"	24'-9"

SH2 & LH2 STRAIGHT: Horizontal in back face of wing One bar of each length. * SIZE	SPACING	NO./REQD	LENGTHS VARY MAX.	LENGTHS VARY MIN.
#4	12"	6	24'-8"	9'-5"
#4	12"	6	*48'-9"	9'-9"
#4	12"	9	19'-3"	9'-9"
#4	12"	9	21'-0"	9'-9"
#4	12"	9	*56'-9"	9'-9"
#4	12"	7	*56'-9"	9'-5"
#4	12"	7	*28'-8"	9'-5"
#4	12"	7	*28'-8"	9'-9"
#4	12"	8	17'-0"	
#4	12"	7	22'-10"	
#4	12"	7	*56'-8"	9'-5"
#4	12"	8	*32'-8"	9'-5"
#4	12"	8	*48'-8"	9'-8"

SH3 & LH3 In back face of wing at top - on slope. SIZE	NO./REQD	LENGTH
#4	2	16'-1"
#4	3	19'-6"
#4	2	16'-3"
#4	3	21'-3"
#4	2	17'-7"
#4	3	23'-5"
#4	2	19'-0"
#4	3	24'-9"

BAR BENDING DIAGRAMS

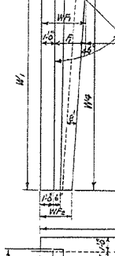

QUANTITY REINFORCING STEEL PER WING - LBS. SHORT WING	LONG WING
630.8	1256.0
782.9	1559.8
949.0	1889.5
1200.8	2376.1

NOTE:- Bars for short wing to be marked with prefix letter 'S', while those for long wing shall be marked with letter 'L'.

© Except as shown at headwall.

* Lengths without splice. Bars over 20'-0" length may be spliced. (1'-8" lap) Quantities include laps for SH2 & LH2 bars over 29'-3" length.

CLASS S CONCRETE

ARKANSAS STATE HIGHWAY COMMISSION

DETAILS OF STANDARD WINGS FOR REINFORCED CONCRETE BOX CULVERTS 45° SKEW

7', 8', 9', 10', 11' & 12' SPANS — 4:1 SLOPES

SINGLES, DOUBLES, TRIPLES, QUADRUPLES & QUINTUPLES — ALL DEPTHS OF COVER FOR H = 9'-0" & OVER

STANDARD DRAWING NO. W-X454-2

Designed By:- W.C.H. 5-16-63 Checked By:- J.E.M. 7-18-64
Drawn By:- W.C.H. 6-11-64 Checked By:- J.E.M. 7-13-64
Quantities By:- W.C.H. 7-9-64

DATE	DATE FILMED	DATE REVISED	DATE FILMED	FED.RD. DIST.NO.	STATE	FED.AID PROJ.NO.	SHEET NO.	TOTAL SHEETS
				6	ARK.			
				JOB NO.		CA0902	445	581

(2) I-49 CROSS SECTIONS

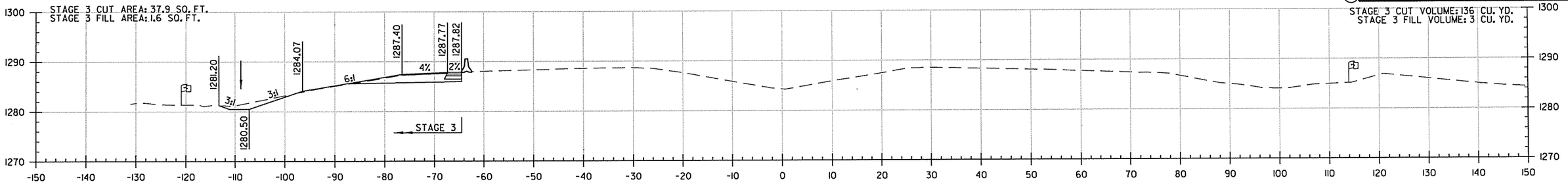

STA. 1258+00

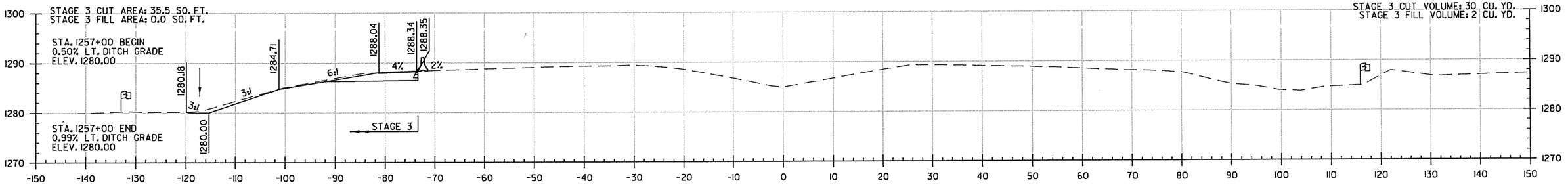

STA. 1257+00

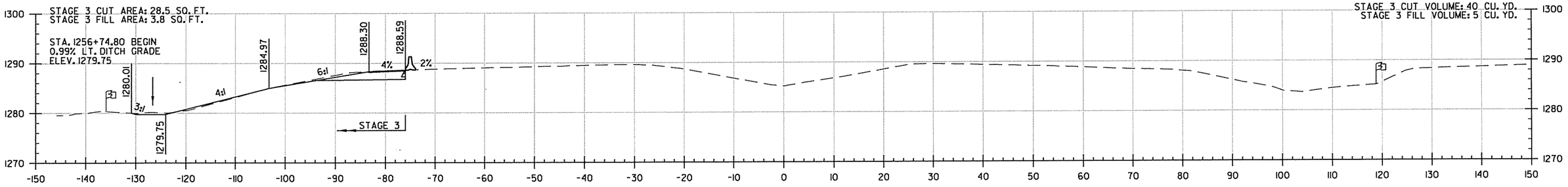

BEGIN JOB CA0902
STA. 1256+75
LOG MILE 84.56

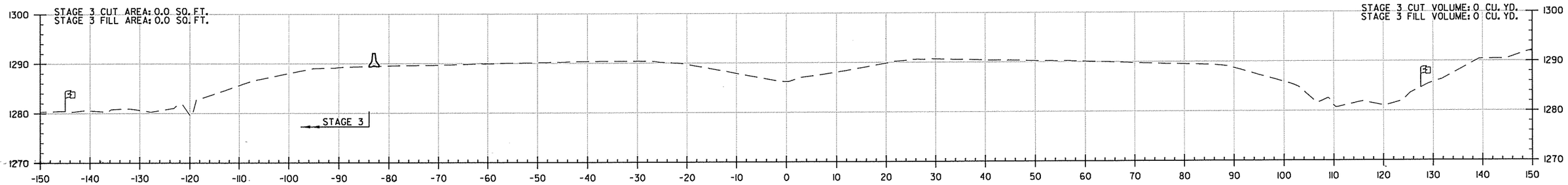

STA. 1256+00

I-49 STA. 1256+00 TO STA. 1258+00

4/28/2016
6:35:06 PM
\CX\CA0902_CX_HWY540_01.dgn

DATE	DATE FILMED	DATE REVISED	DATE FILMED	FED.RD. DIST.NO.	STATE	FED.AID PROJ.NO.	SHEET NO.	TOTAL SHEETS
				6	ARK.			
				JOB NO.		CA0902	446	581

(2) I-49 CROSS SECTIONS

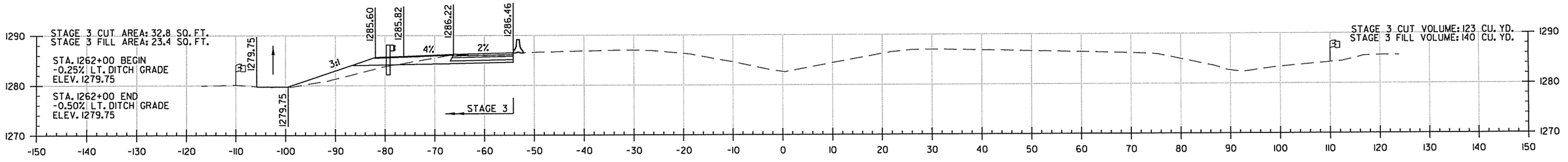

STA. 1262+00

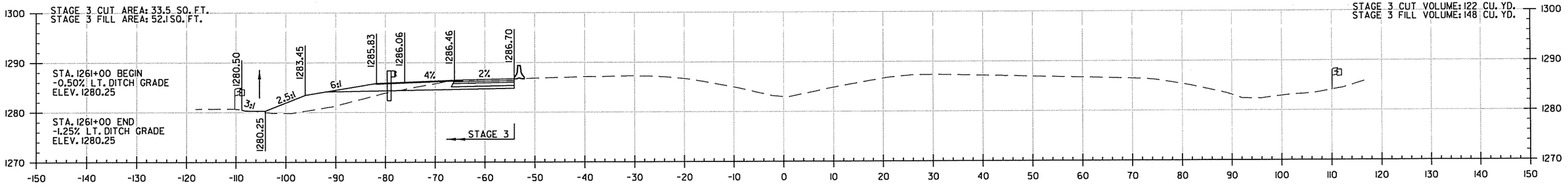

STA. 1261+00

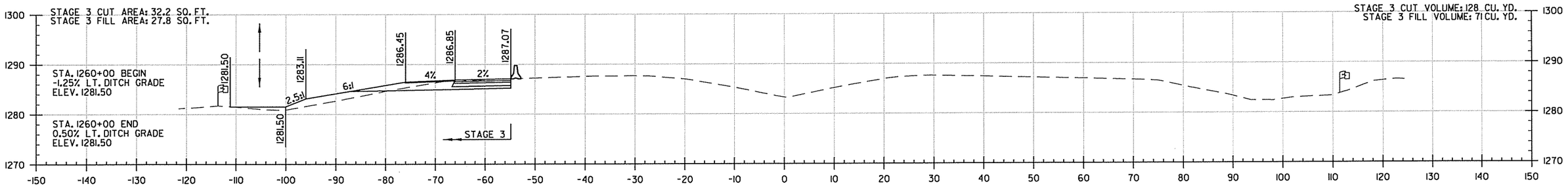

STA. 1260+00

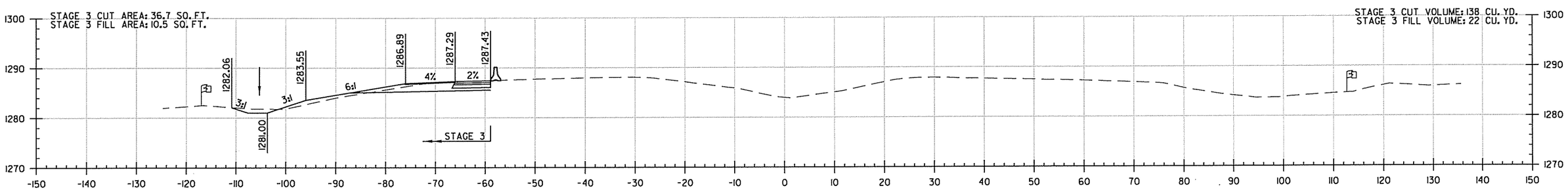

STA. 1259+00

I-49 STA. 1259+00 TO STA. 1262+00

4/28/2016
6:35:06 PM
\\CX\CA0902_CX_HWY540_01.dgn

DATE	DATE FILMED	DATE REVISED	DATE FILMED	FED.RD. DIST.NO.	STATE	FED.AID PROJ.NO.	SHEET NO.	TOTAL SHEETS
				6	ARK.			
				JOB NO.		CA0902	447	581

2 I-49 CROSS SECTIONS

STA. 1266+50 END
-0.77% RT. DITCH GRADE
ELEV. 1279.85

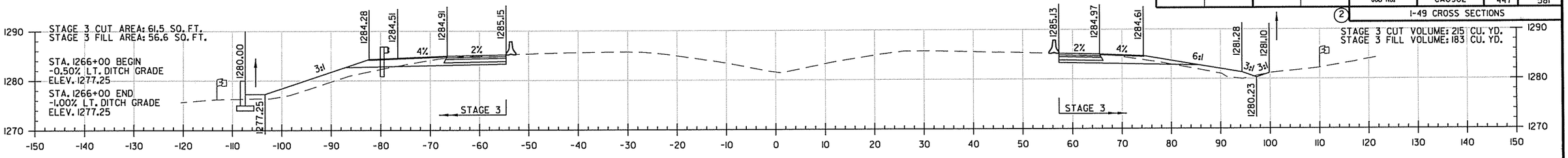

STA. 1266+00

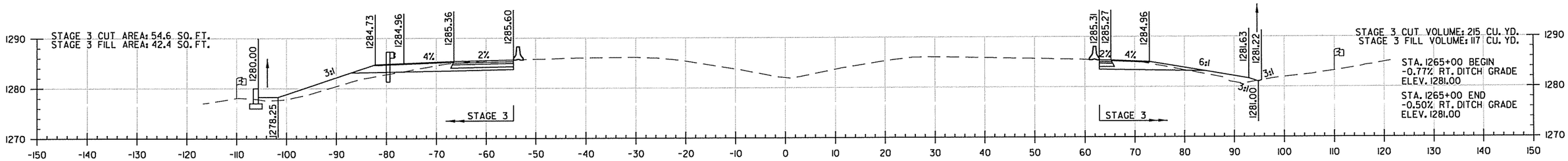

STA. 1265+00

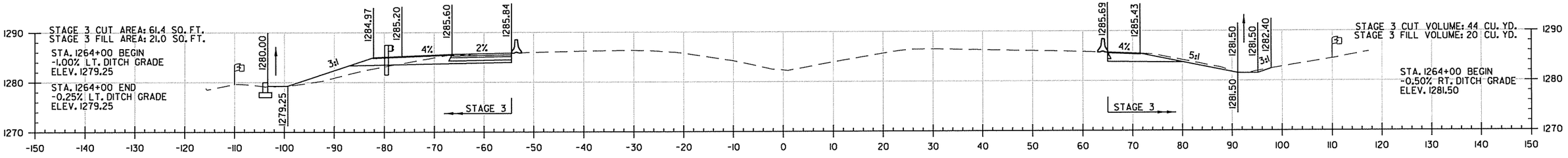

STA. 1264+00

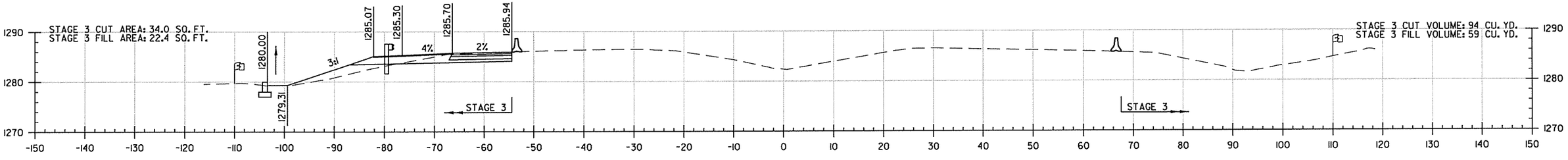

STA. 1263+75

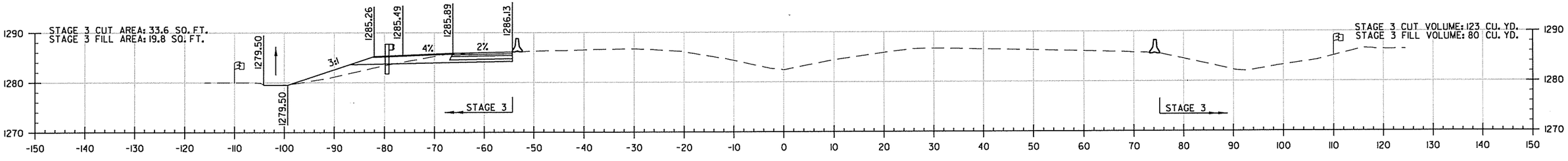

STA. 1263+00

I-49 STA. 1263+00 TO STA. 1266+00

4/28/2016
6:35:07 PM
\\CX\r\CA0902_CX_HWY540_01.dgn

DATE	DATE FILMED	DATE REVISED	DATE FILMED

FED.RD. DIST.NO.	STATE	FED.AID PROJ.NO.	SHEET NO.	TOTAL SHEETS
6	ARK.			
JOB NO.		CA0902	448	581
(2)	I-49 CROSS SECTIONS			

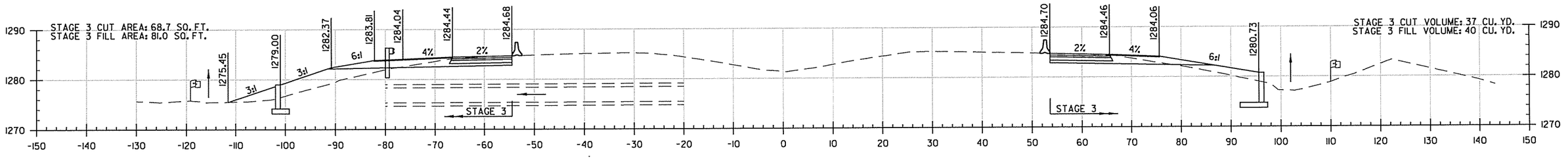

STA. 1267+80

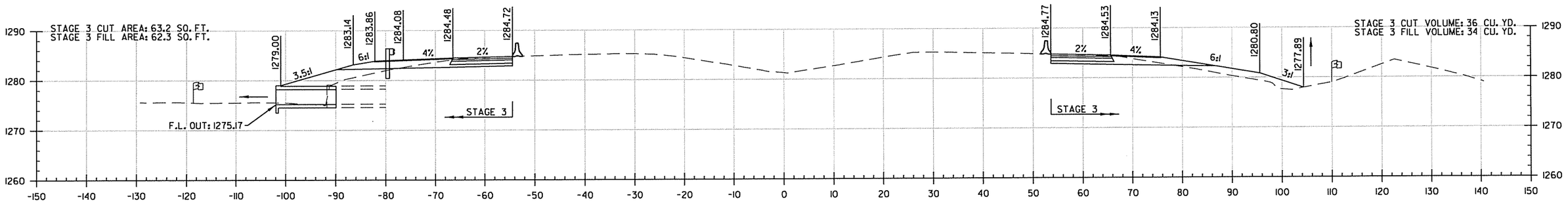

STA. 1267+65

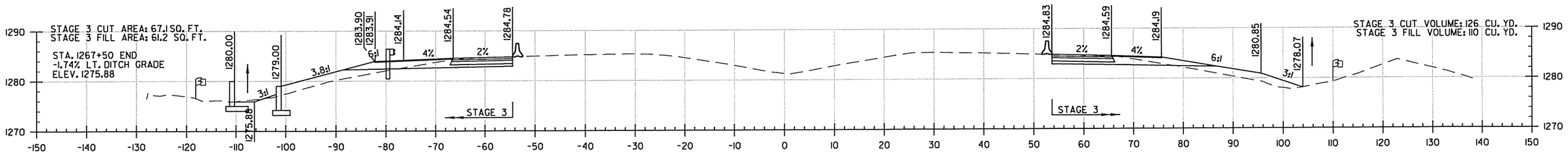

STA. 1267+50

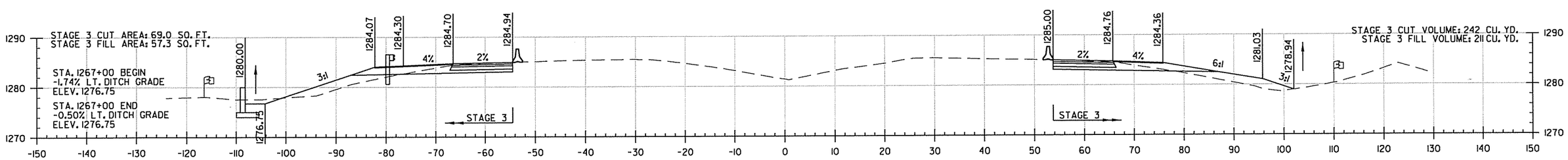

STA. 1267+00

I-49 STA. 1267+00 TO STA. 1267+80

4/28/2016
6:55:07 PM
\\XX\CA0902_CX_HWY540_01.dgn

DATE	DATE FILMED	DATE REVISED	DATE FILMED	FED.RD. DIST.NO.	STATE	FED.AID PROJ.NO.	SHEET NO.	TOTAL SHEETS
				6	ARK.			
				JOB NO.		CA0902	449	581

(2) I-49 CROSS SECTIONS

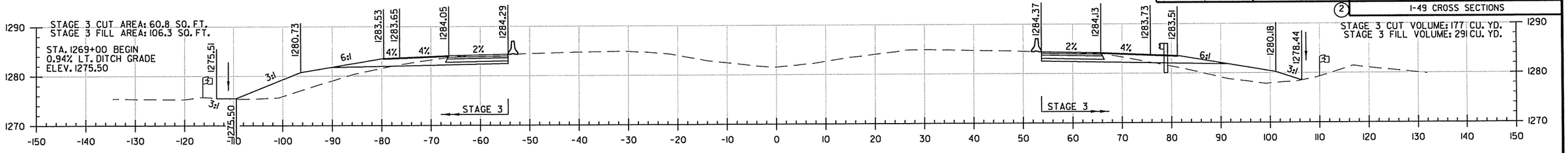

STA. 1269+00

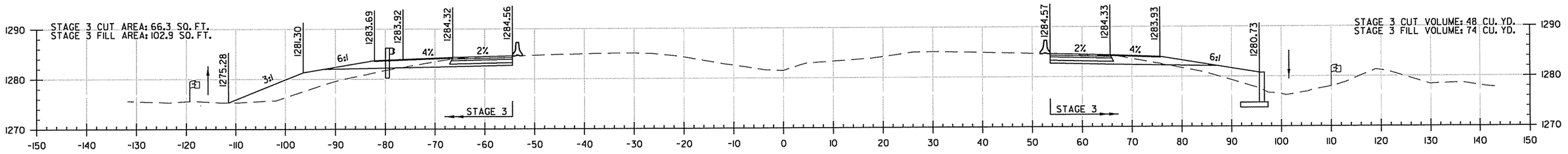

STA. 1268+25

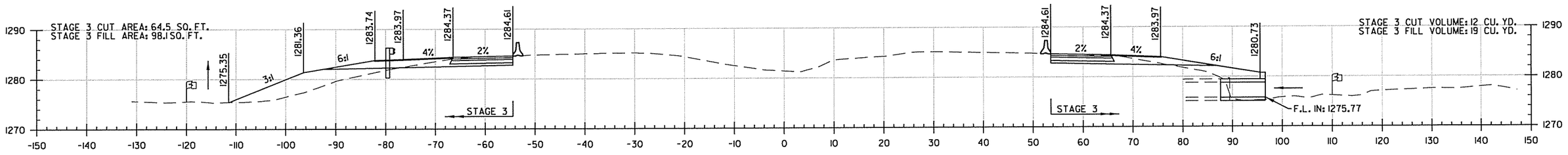

STA. 1268+05

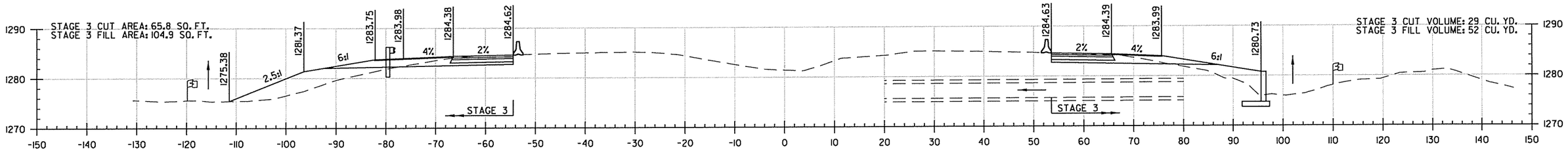

STA. 1268+00

STA. 1267+87.00 IN PLACE
DBL. 4' X 3' X 185' R.C. BOX CULVERT
WITH 12" RT. FWD. SKEW
WITH 3:1 WINGS LT. & RT.
RETAIN & EXTEND 12' LT. & 9' RT.
Q50 = 137 CFS D.A. = 95 ACRES

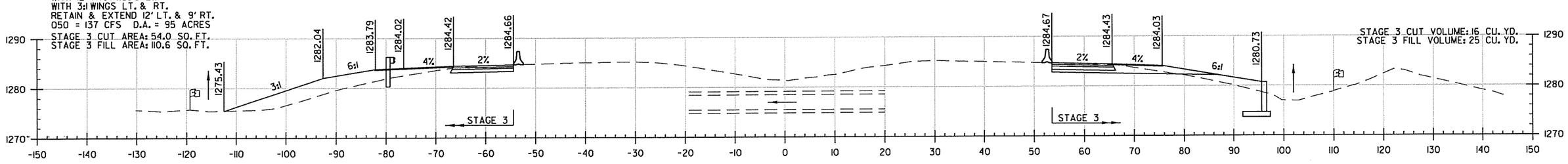

STA. 1267+87

I-49 STA. 1267+87 TO STA. 1269+00

4/28/2016
6:35:07 PM
\\CX\CA0902_CX_HWY540_01.dgn

DATE	DATE FILMED	DATE REVISED	DATE FILMED	FED.RD. DIST.NO.	STATE	FED.AID PROJ.NO.	SHEET NO.	TOTAL SHEETS
				6	ARK.			
				JOB NO.		CA0902	450	581

(2) I-49 CROSS SECTIONS

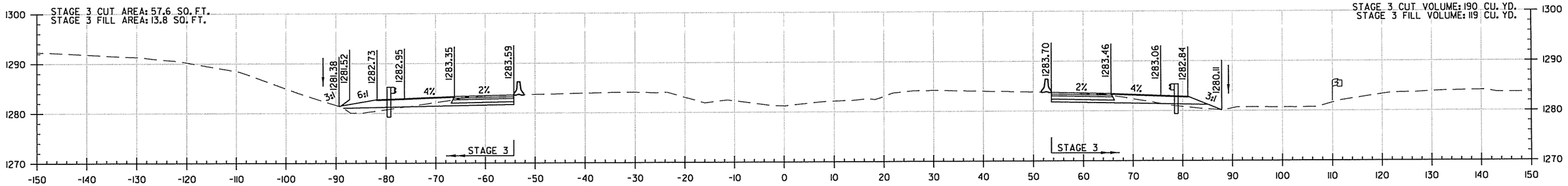

I-49 STA. 1270+00 TO STA. 1271+00

4/28/2016
6:35:08 PM
\\CX\rCA0902_CX_HWY540_01.dgn

DATE	DATE FILMED	DATE REVISED	DATE FILMED	FED.RD. DIST.NO.	STATE	FED.AID PROJ.NO.	SHEET NO.	TOTAL SHEETS
				6	ARK.			
				JOB NO.		CA0902	451	581
				(2)	I-49 CROSS SECTIONS			

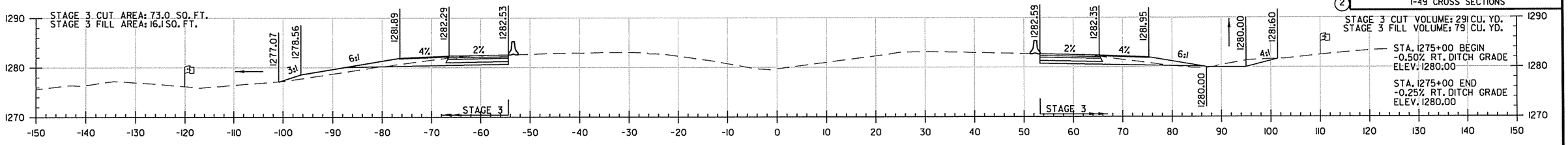

STA. 1275+00

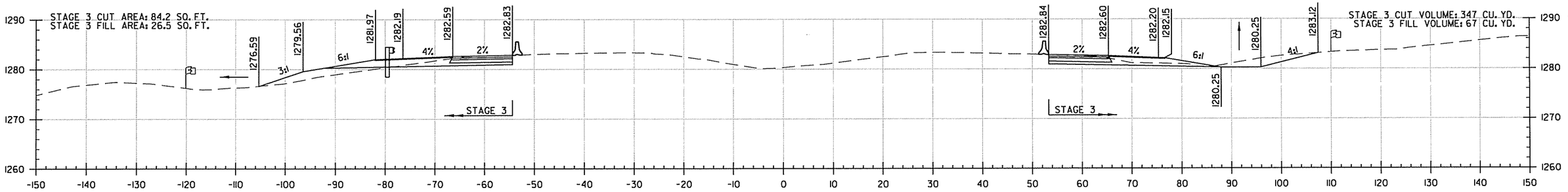

STA. 1274+00

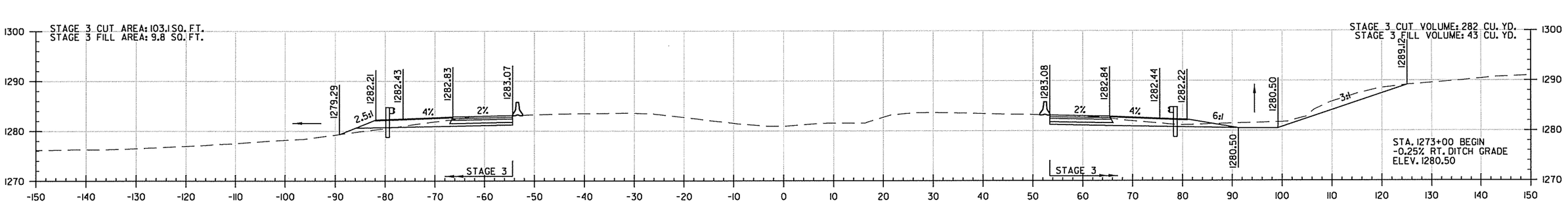

STA. 1273+00

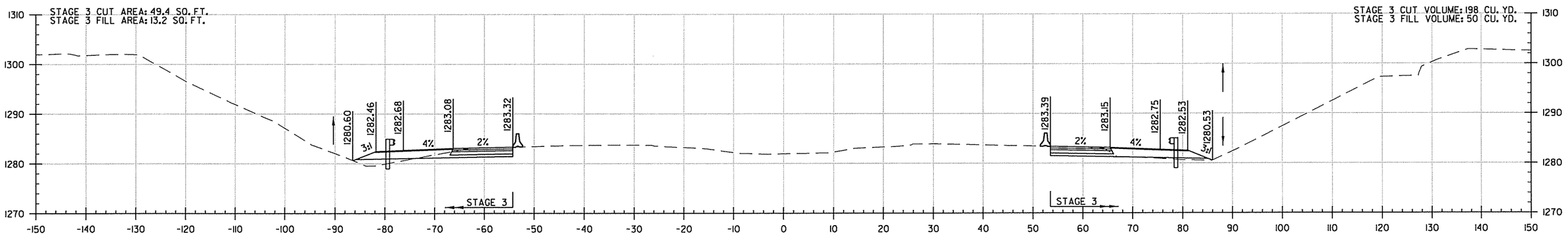

STA. 1272+00

I-49 STA. 1272+00 TO STA. 1275+00

4/28/2016
6:35:08 PM
I:\CAD\CA0902_CX_HWY540_01.dgn

DATE	DATE FILMED	DATE REVISED	DATE FILMED	FED.RD. DIST.NO.	STATE	FED.AID PROJ.NO.	SHEET NO.	TOTAL SHEETS
				6	ARK.			
				JOB NO.		CA0902	452	581

(2) I-49 CROSS SECTIONS

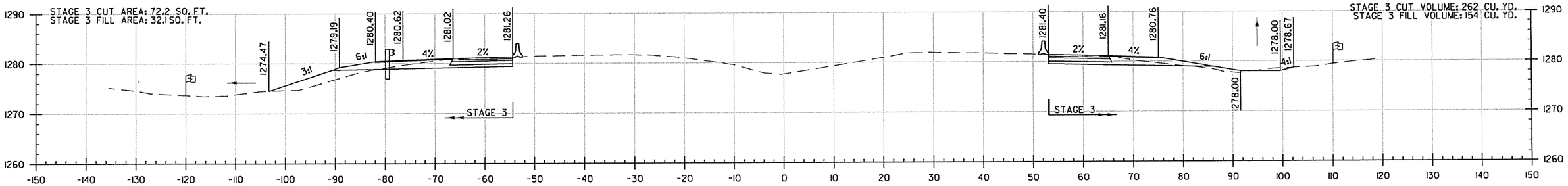

STA. 1279+00

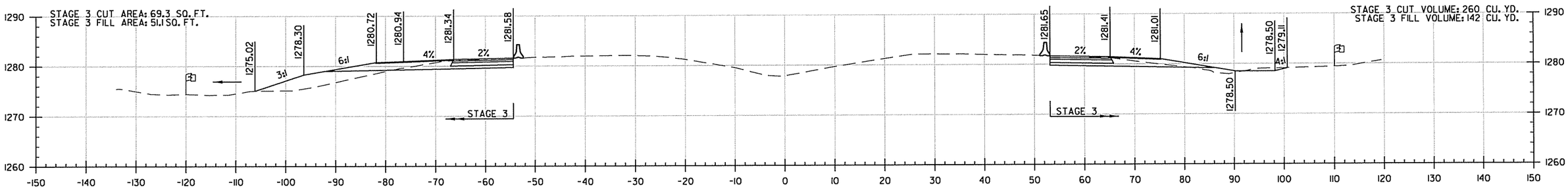

STA. 1278+00

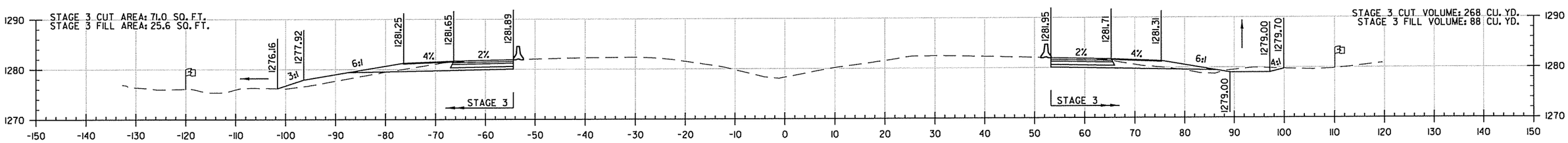

STA. 1277+00

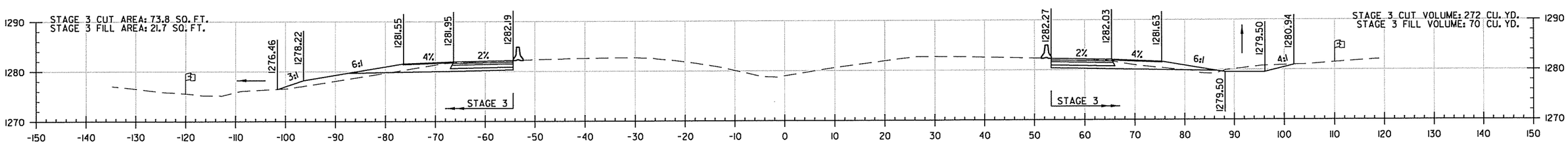

STA. 1276+00

I-49 STA. 1276+00 TO STA. 1279+00

4/28/2016
6:35:08 PM
...\CX\CA0902_CX_HWY540_01.dgn

DATE	DATE FILMED	DATE REVISED	DATE FILMED	FED.RD. DIST.NO.	STATE	FED.AID PROJ.NO.	SHEET NO.	TOTAL SHEETS
				6	ARK.			
				JOB NO.		CA0902	453	581

(2) I-49 CROSS SECTIONS

STA. 1282+68.00 - IN PLACE
18" X 92' R.C. PIPE CULVERT WITH FES LT.
REMOVE FES LT. & EXTEND R.C. PIPE 8' LT.
(CLASS III) (TYPE 3 BEDDING) WITH FES LT.
18" R.C. PIPE = 8 LIN. FT.
18" FES = 1 EA.

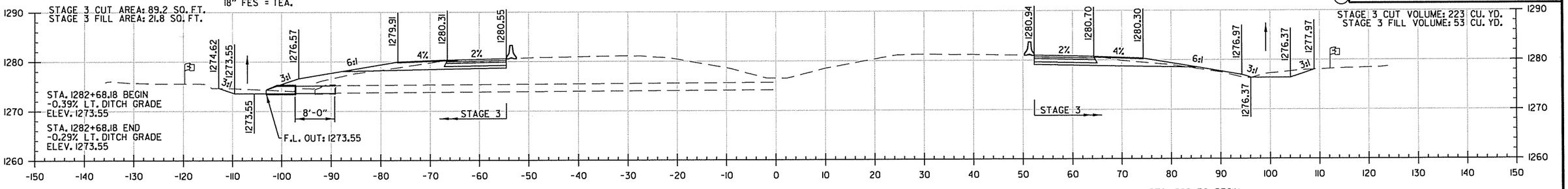

STA. 1282+68

STA. 1282+50 BEGIN
-0.45% RT. DITCH GRADE
ELEV. 1276.45
STA. 1282+50 END
-0.50% RT. DITCH GRADE
ELEV. 1276.45

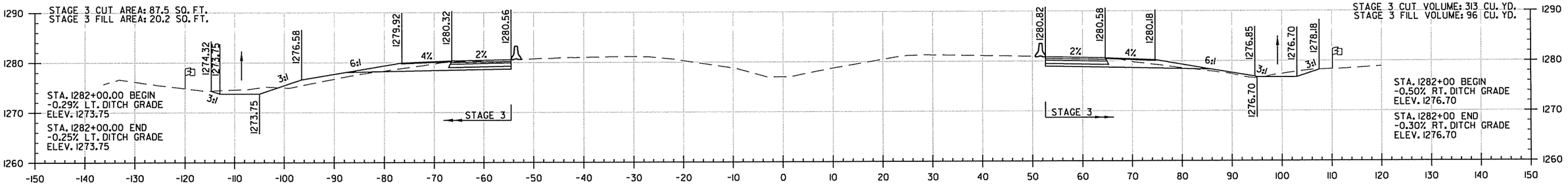

STA. 1282+00

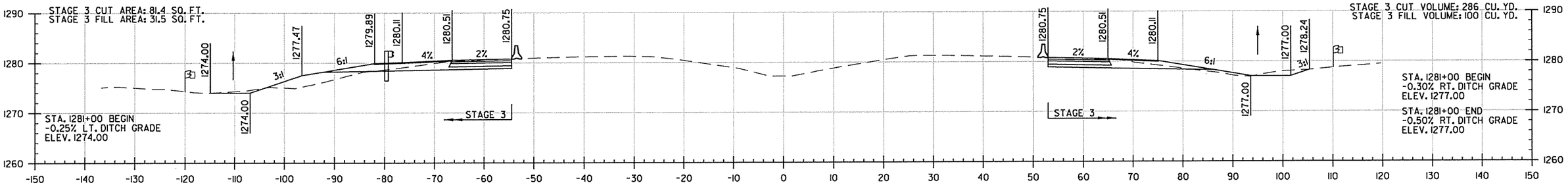

STA. 1281+00

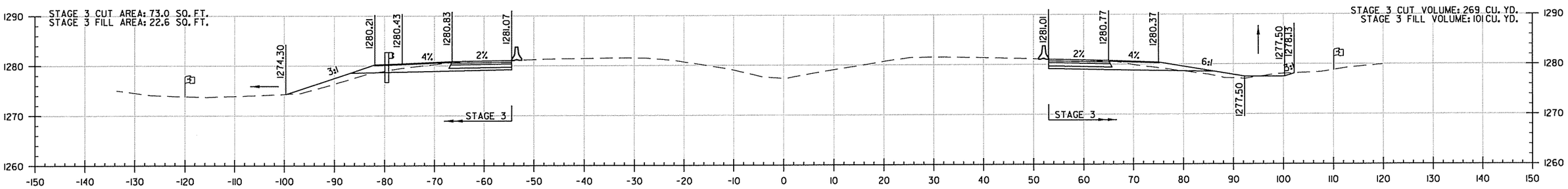

STA. 1280+00

I-49 STA. 1280+00 TO STA. 1282+68

4/28/2016
6:35:09 PM
\\CX\r-CA0902_CX_HWY540_01.dgn

DATE	DATE FILMED	DATE REVISED	DATE FILMED	FED.RD. DIST.NO.	STATE	FED.AID PROJ.NO.	SHEET NO.	TOTAL SHEETS
				6	ARK.			
				JOB NO.		CA0902	454	581
				(2)	I-49 CROSS SECTIONS			

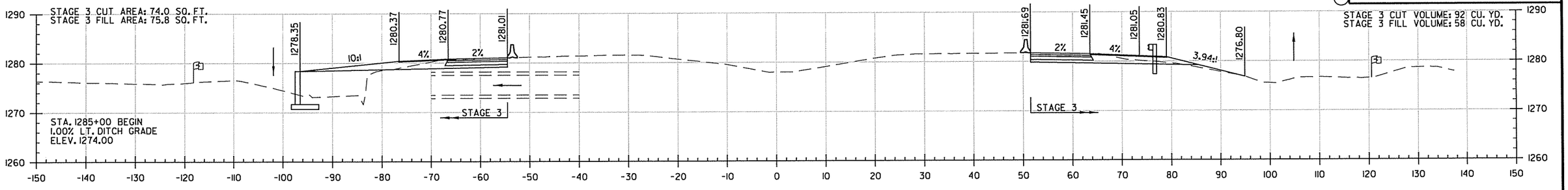

STA. 1285+00

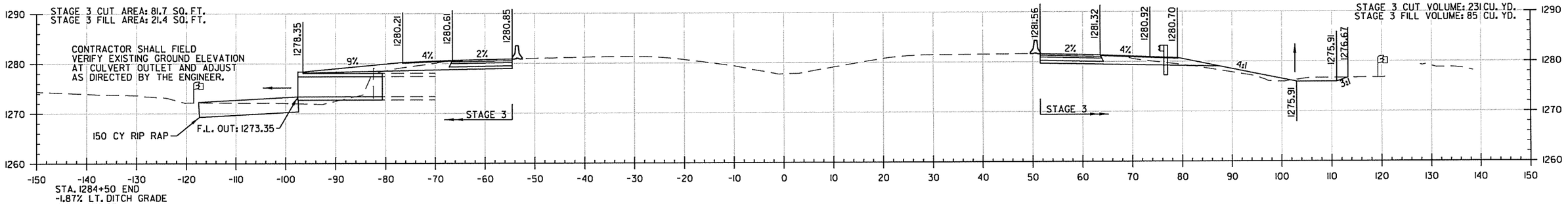

STA. 1284+68

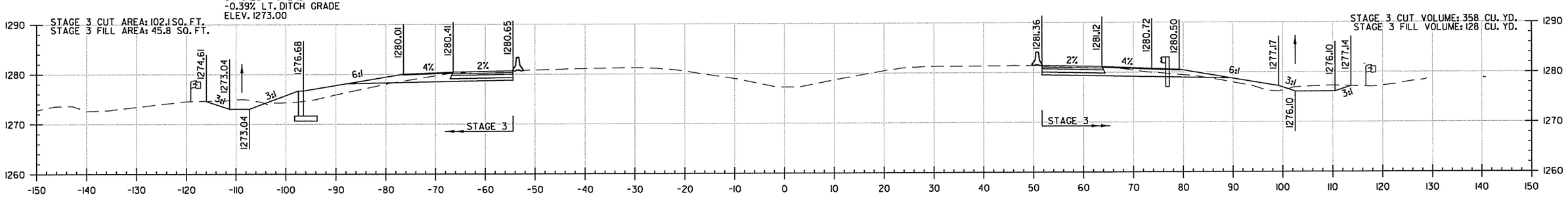

STA. 1284+00

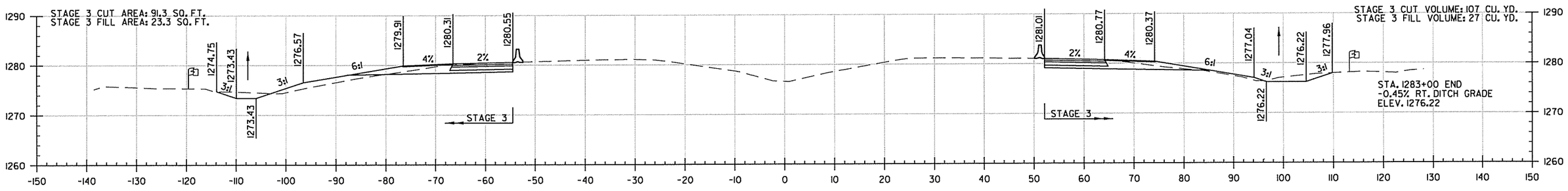

STA. 1283+00

I-49 STA. 1283+00 TO STA. 1285+00

4/28/2016
6:52:03 PM
I:\DWG\CA0902_CX_HWY540_01.dgn

DATE	DATE FILMED	DATE REVISED	DATE FILMED	FED.RD. DIST.NO.	STATE	FED.AID PROJ.NO.	SHEET NO.	TOTAL SHEETS
				6	ARK.			
				JOB NO.		CA0902	455	581

2 I-49 CROSS SECTIONS

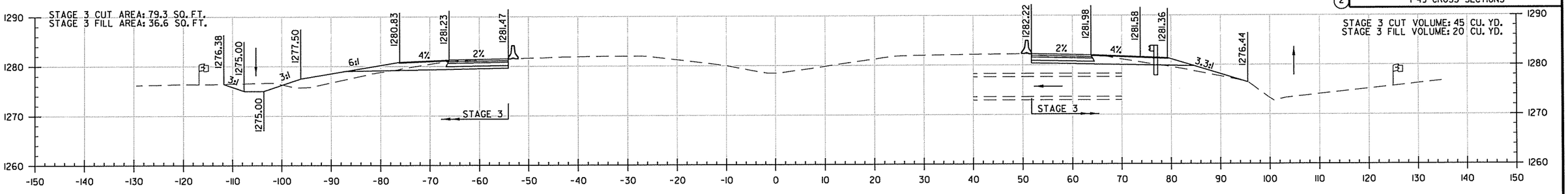

STA. 1286+00

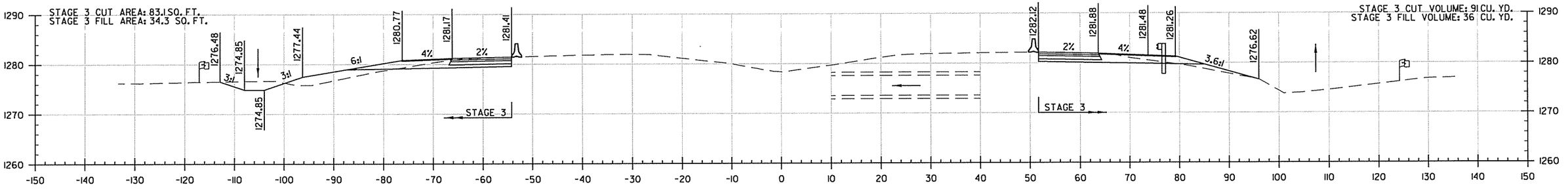

STA. 1285+85

STA. 1285+56 - IN PLACE
QUINT. 8' X 4' X 241' R.C. BOX CULVERT
WITH 45° RT. FWD. SKEW
WITH 3:1 WINGS LT. & RT.
RETAIN & EXTEND 21' LT. & 14' RT.
Q50= 1200 CFS D.A.= 700 ACRES
SPAN= 60.00'

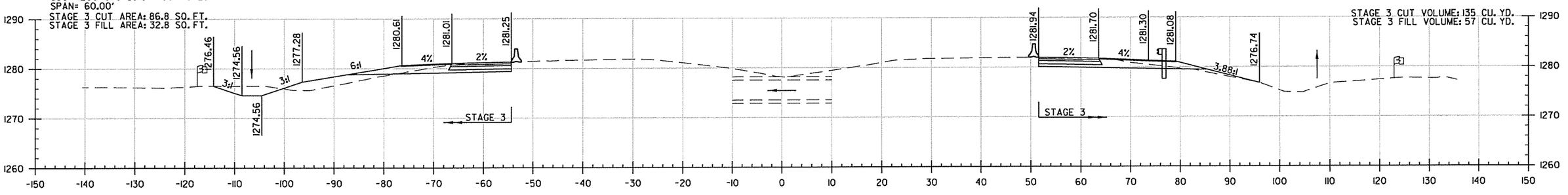

STA. 1285+56

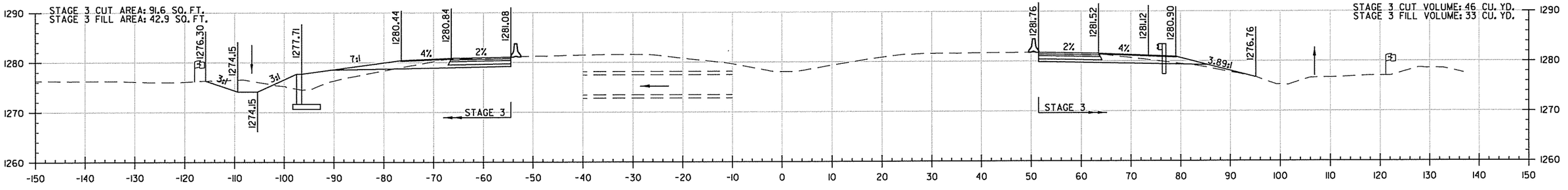

STA. 1285+15

I-49 STA. 1285+15 TO STA. 1286+00

4/28/2016
6:55:09 PM
\\ARKTC\CA0902_CX_HWY540_01.dgn

DATE	DATE FILMED	DATE REVISED	DATE FILMED

FED.RD. DIST.NO.	STATE	FED.AID PROJ.NO.	SHEET NO.	TOTAL SHEETS
6	ARK.			
JOB NO.		CA0902	456	581

(2) I-49 CROSS SECTIONS

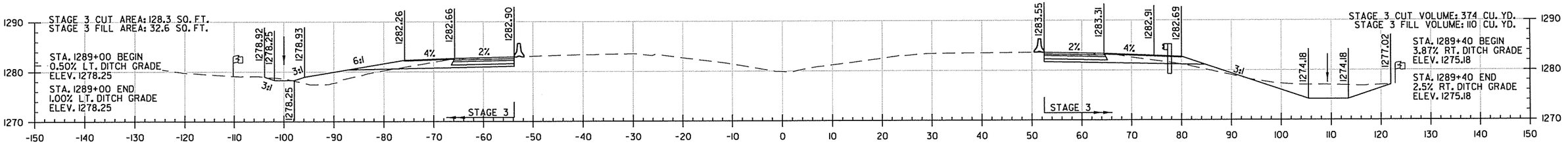

STA. 1289+00

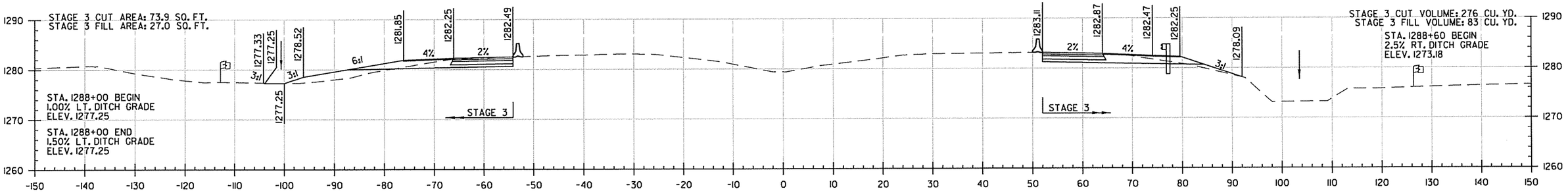

STA. 1287+50 BEGIN
1.50% LT. DITCH GRADE
ELEV. 1276.50
STA. 1287+50 END
1.00% LT. DITCH GRADE
ELEV. 1276.50

STA. 1288+00

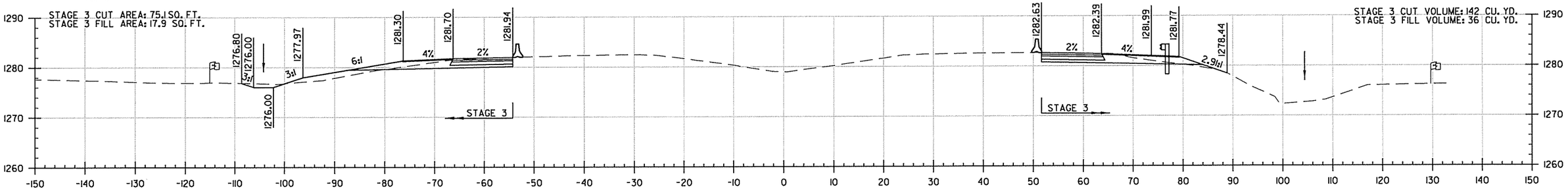

STA. 1287+00

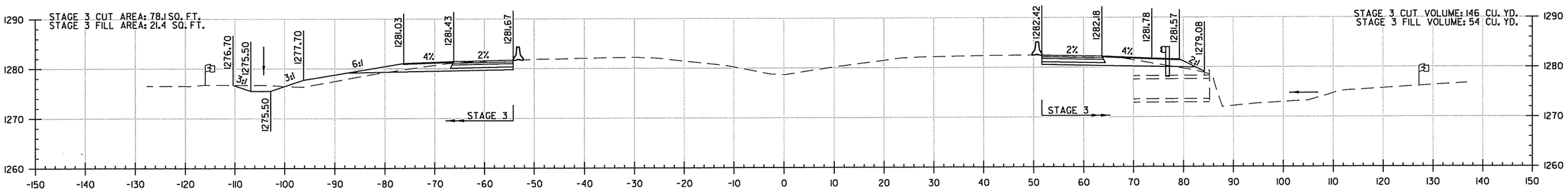

STA. 1286+50

I-49 STA. 1286+50 TO STA. 1289+00

4/28/2016
6:35:10 PM
\\XX\CA0902_CX_HWY540_01.dgn

DATE	DATE FILMED	DATE REVISED	DATE FILMED	FED.RD. DIST.NO.	STATE	FED.AID PROJ.NO.	SHEET NO.	TOTAL SHEETS
				6	ARK.			
				JOB NO.		CA0902	457	581

(2) I-49 CROSS SECTIONS

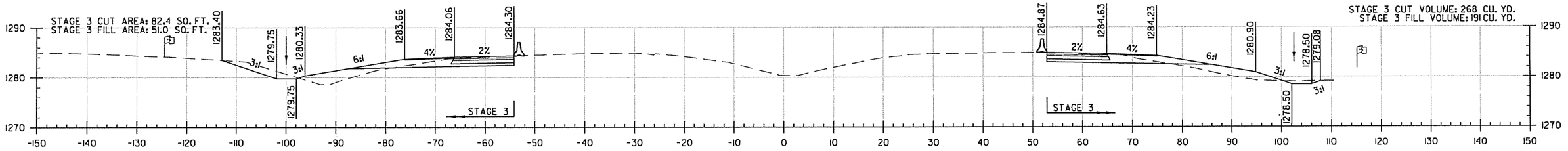

STA. 1292+00

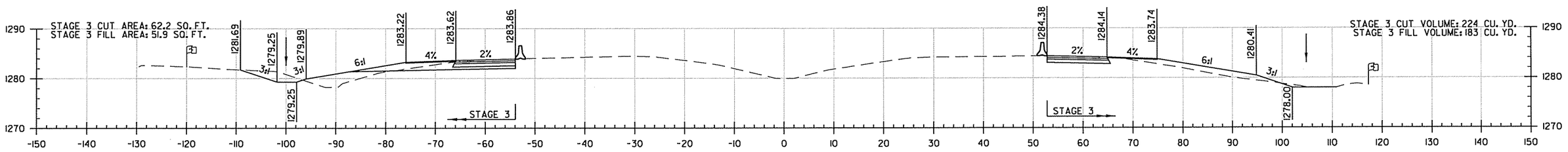

STA. 1291+00

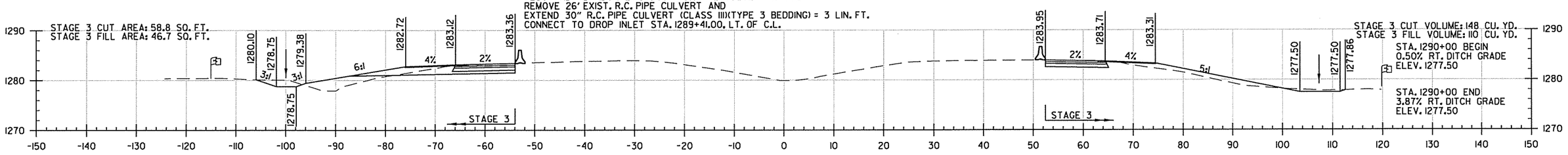

STA. 1290+00

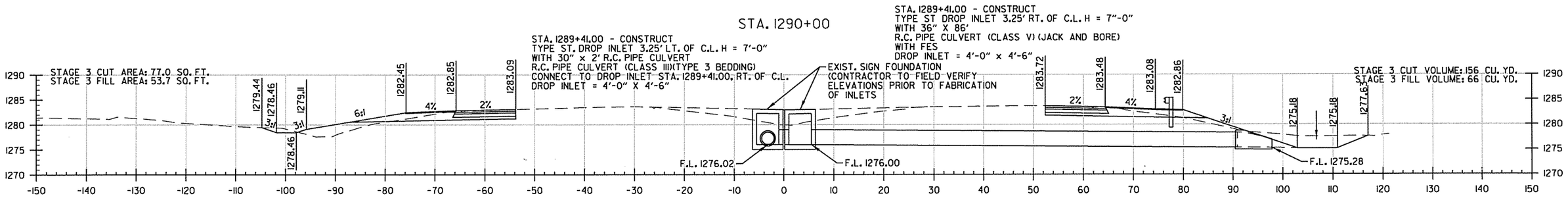

1289+41

I-49 STA. 1289+41 TO STA. 1292+00

4/28/2016
6:35:10 PM
...\CX\CA0902_CX_HWY540_01.dgn

DATE	DATE FILMED	DATE REVISED	DATE FILMED	FED.RD. DIST.NO.	STATE	FED.AID PROJ.NO.	SHEET NO.	TOTAL SHEETS
				6	ARK.			
				JOB NO.		CA0902	458	581

(2) I-49 CROSS SECTIONS

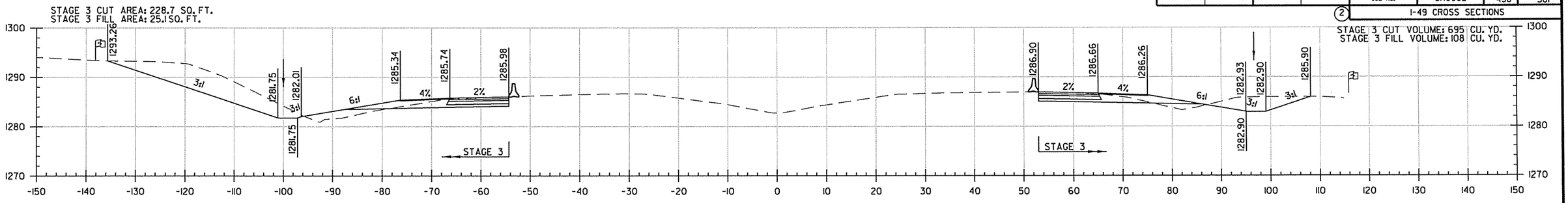

STA. 1296+00

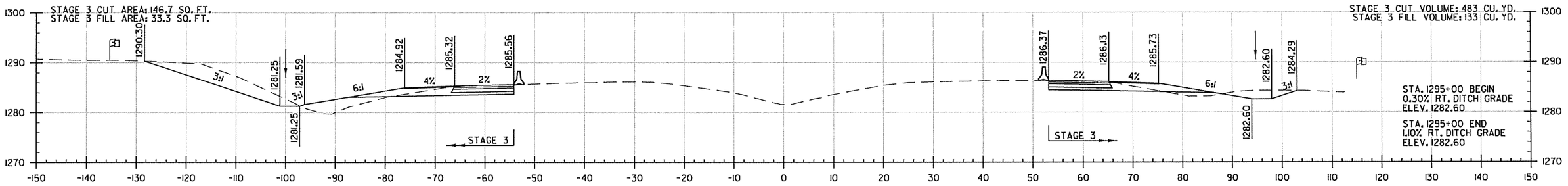

STA. 1295+00

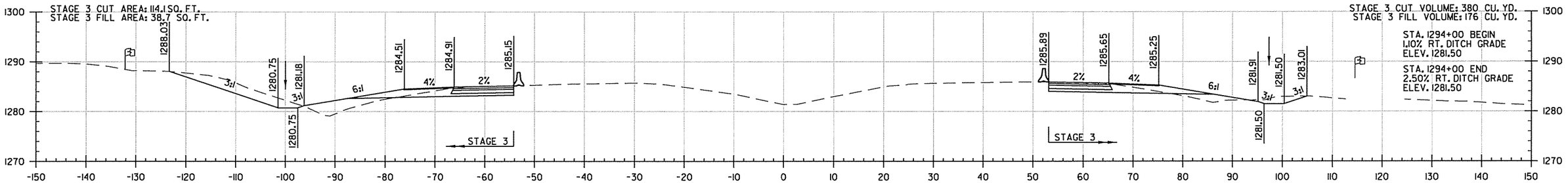

STA. 1294+00

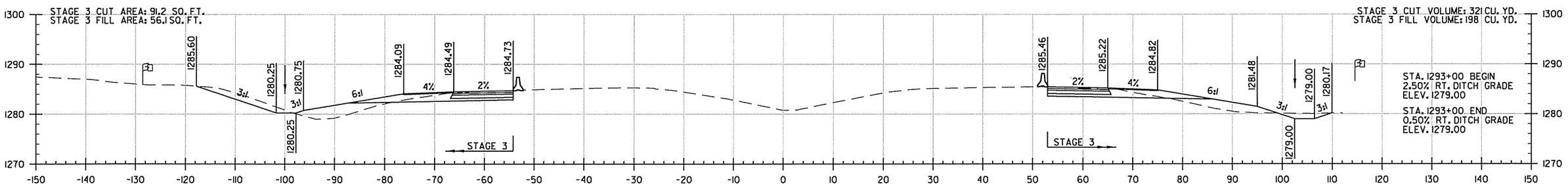

STA. 1293+00

I-49 STA. 1293+00 TO STA. 1296+00

4/28/2016
6:35:10 PM
...\CX\CA0902_CX_HWY540_01.dgn

DATE	DATE FILMED	DATE REVISED	DATE FILMED

FED.RD. DIST.NO.	STATE	FED.AID PROJ.NO.	SHEET NO.	TOTAL SHEETS
6	ARK.			
JOB NO.		CA0902	459	581
(2)	I-49 CROSS SECTIONS			

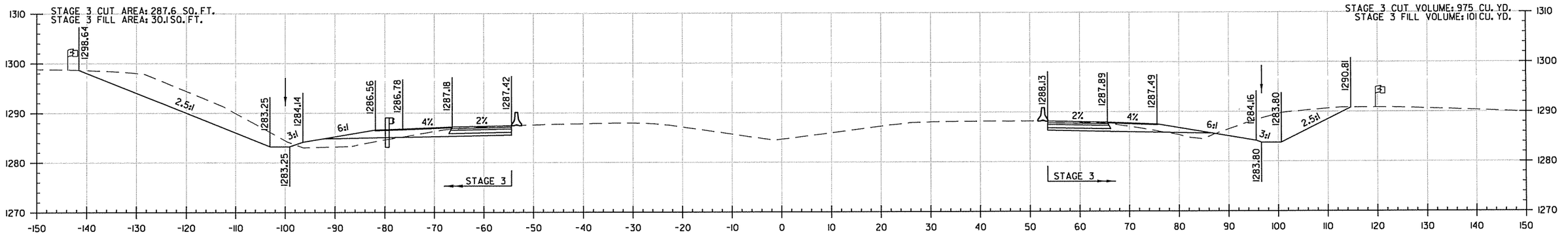

STA. 1299+00

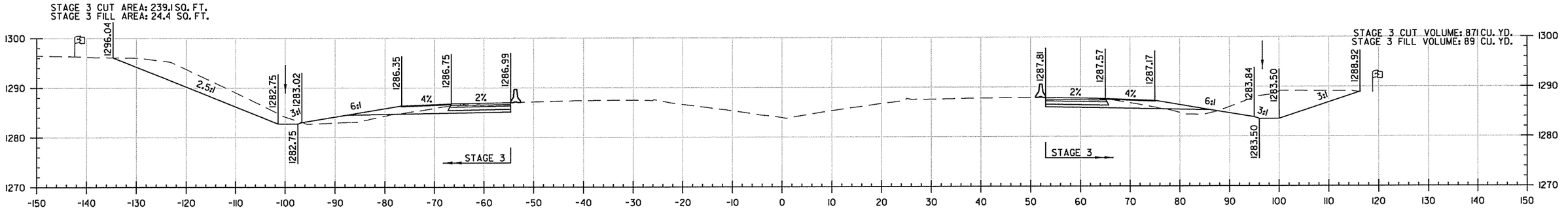

STA. 1298+00

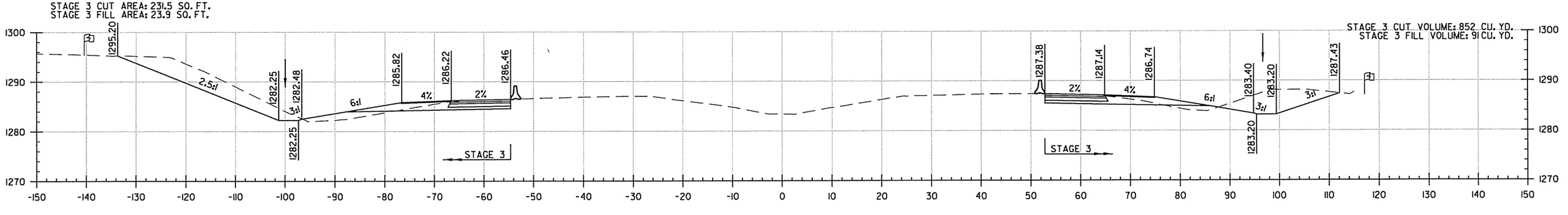

STA. 1297+00

I-49 STA. 1297+00 TO STA. 1299+00

4/28/2016
6:35:11 PM
\\DATA\CA0902_CX_HWY540_01.dgn

DATE	DATE FILMED	DATE REVISED	DATE FILMED	FED.RD. DIST.NO.	STATE	FED.AID PROJ.NO.	SHEET NO.	TOTAL SHEETS
				6	ARK.			
				JOB NO.		CA0902	460	581
				(2)	I-49 CROSS SECTIONS			

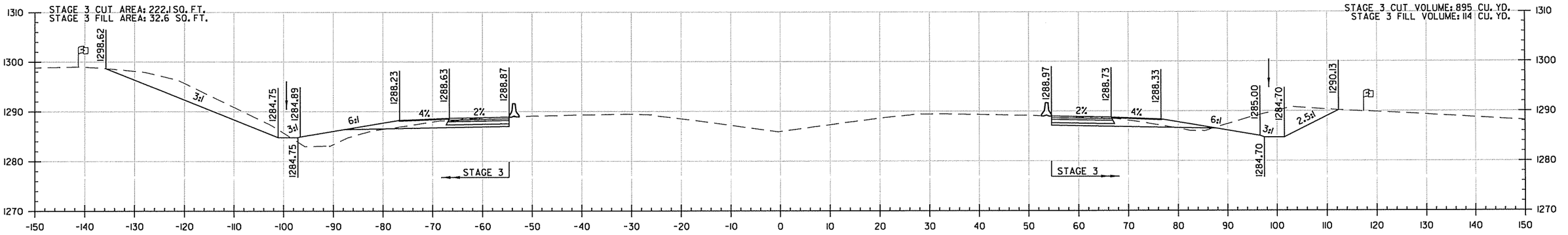

STA. 1302+00

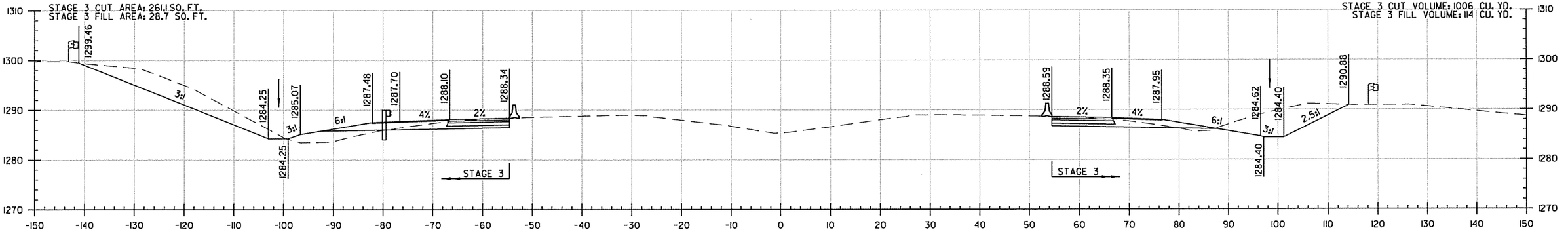

STA. 1301+00

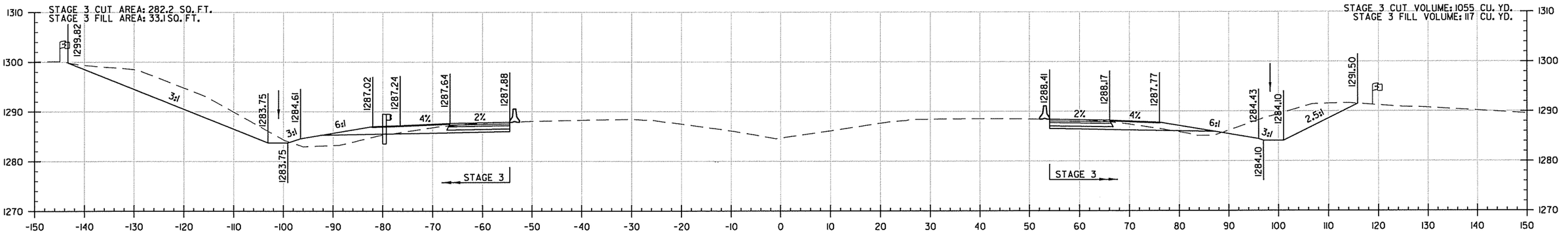

STA. 1300+00

I-49 STA. 1300+00 TO STA. 1302+00

4/28/2016
6:15:11 PM
\\XX\CA0902_CX_HWY540_01.dgn

DATE	DATE FILMED	DATE REVISED	DATE FILMED	FED.RD. DIST.NO.	STATE	FED.AID PROJ.NO.	SHEET NO.	TOTAL SHEETS
				6	ARK.			
				JOB NO.		CA0902	461	581

2 I-49 CROSS SECTIONS

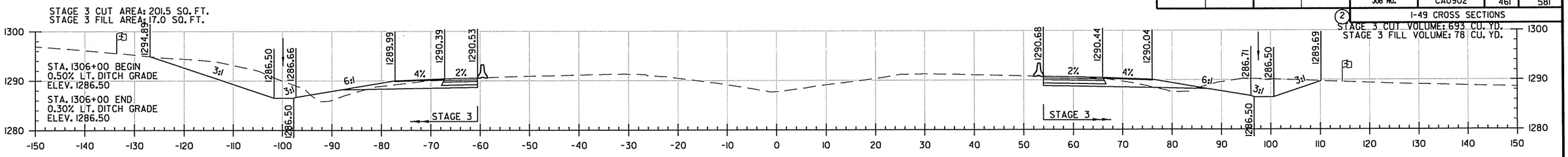

STA. 1306+00

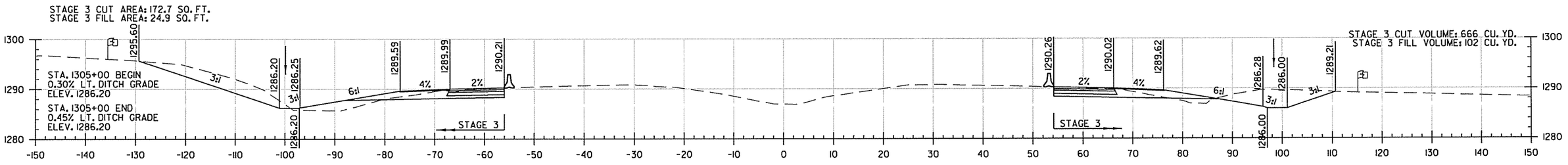

STA. 1305+00

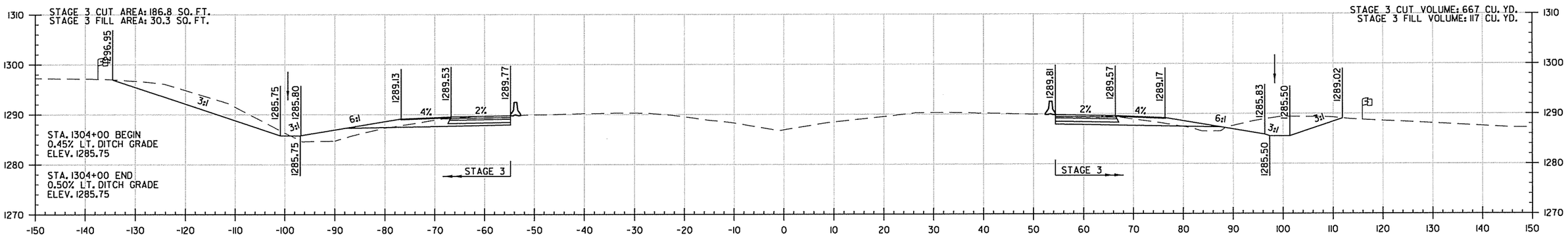

STA. 1304+00

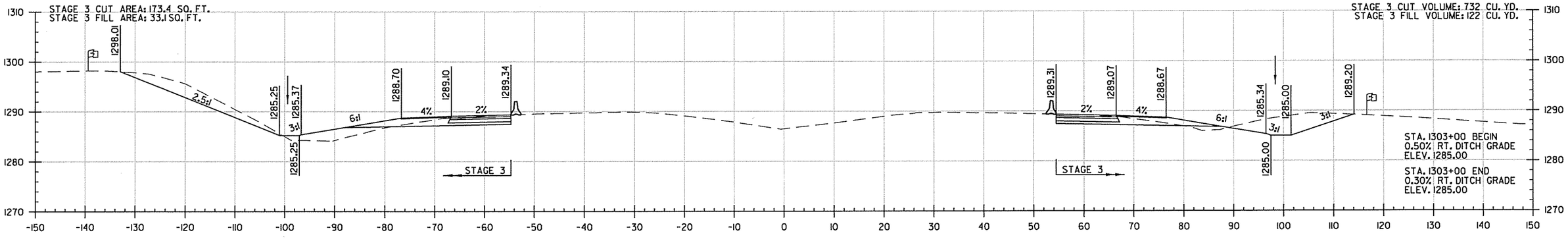

STA. 1303+00

I-49 STA. 1303+00 TO STA. 1306+00

4/28/2016
6:55:11 PM
\\XX\CA0902_CX_HWY540_01.dgn

DATE	DATE FILMED	DATE REVISED	DATE FILMED	FED.RD. DIST.NO.	STATE	FED.AID PROJ.NO.	SHEET NO.	TOTAL SHEETS
				6	ARK.			
				JOB NO.		CA0902	462	581

(2) I-49 CROSS SECTIONS

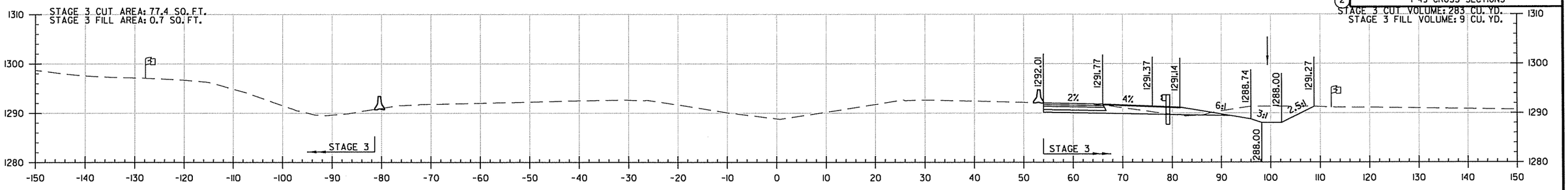

STA. 1309+00

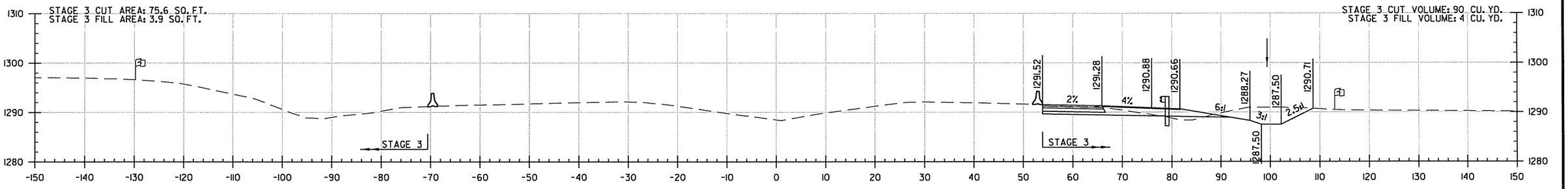

STA. 1308+00

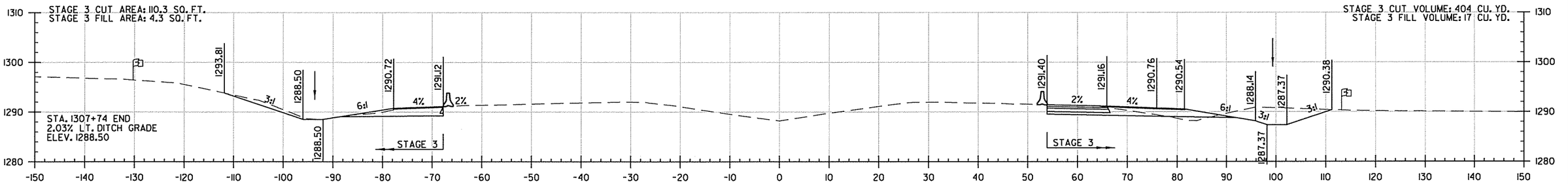

STA. 1307+74

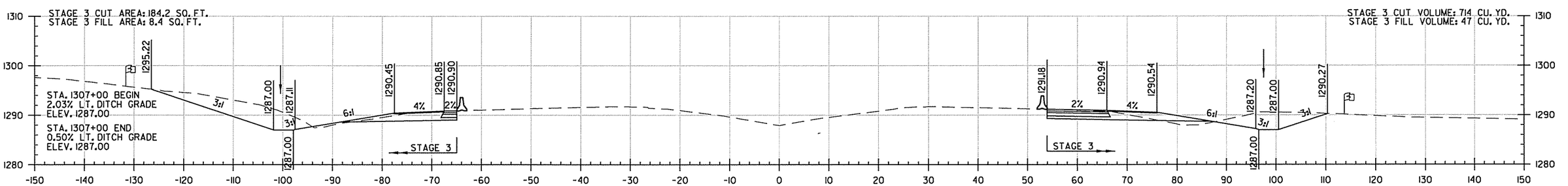

STA. 1307+00

I-49 STA. 1307+00 TO STA. 1309+00

4/28/2016
6:35:11 PM
\\CX\r\CA0902_CX_HWY540_01.dgn

DATE	DATE FILMED	DATE REVISED	DATE FILMED	FED.RD. DIST.NO.	STATE	FED.AID PROJ.NO.	SHEET NO.	TOTAL SHEETS
				6	ARK.			
				JOB NO.		CA0902	463	581

2 I-49 CROSS SECTIONS

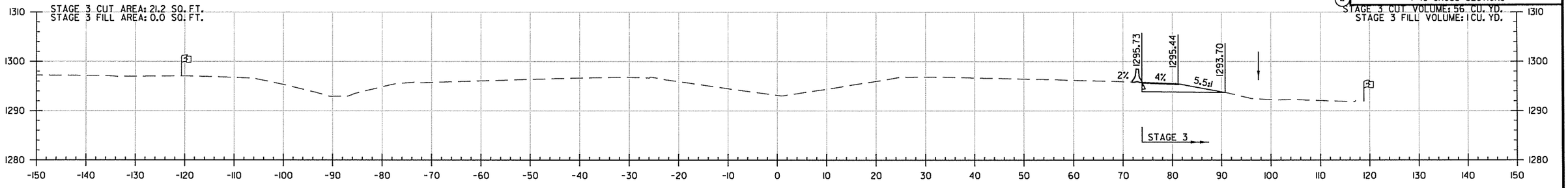

STA. 1312+73

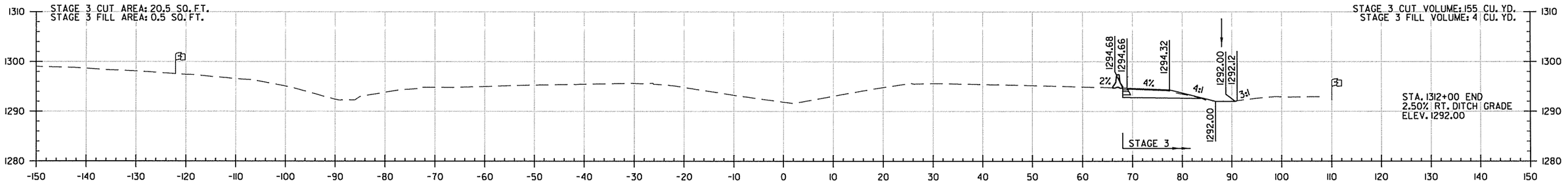

STA. 1312+00

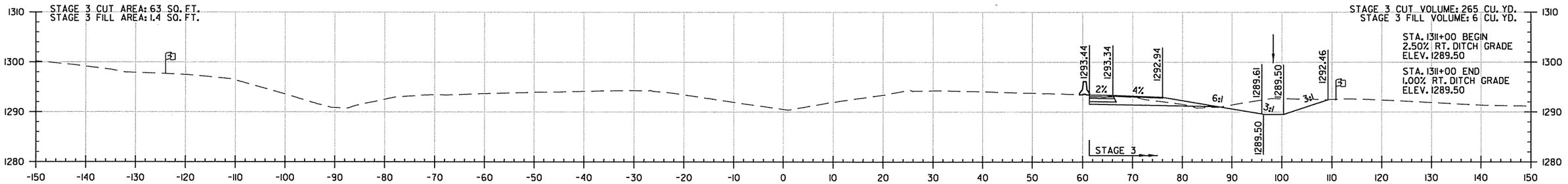

STA. 1311+00

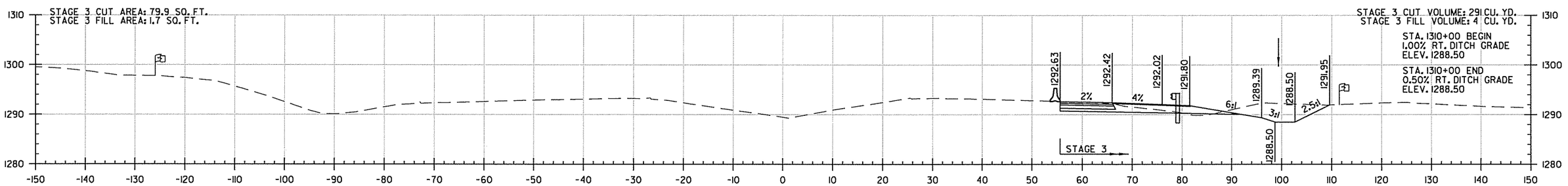

STA. 1310+00

I-49 STA. 1310+00 TO STA. 1312+73

4/28/2016
6:35:12 PM
\\CX\CA0902_CX_HWY540_01.dgn

DATE	DATE FILMED	DATE REVISED	DATE FILMED	FED.RD. DIST.NO.	STATE	FED.AID PROJ.NO.	SHEET NO.	TOTAL SHEETS
				6	ARK.			
				JOB NO.		CA0902	464	581
				(2)	I-49 CROSS SECTIONS			

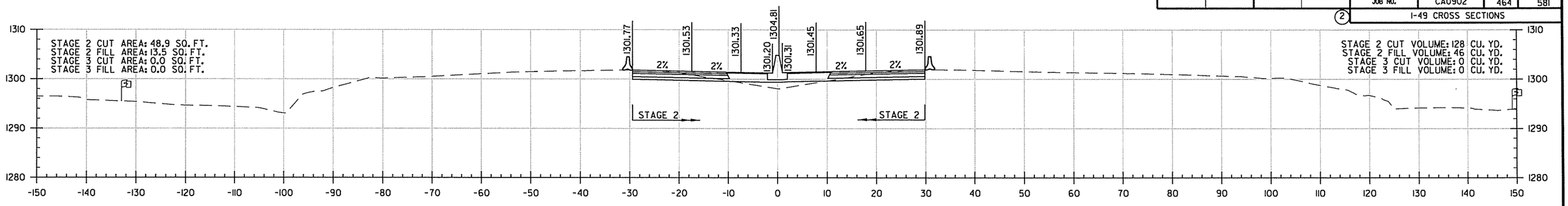

STA. 1315+00

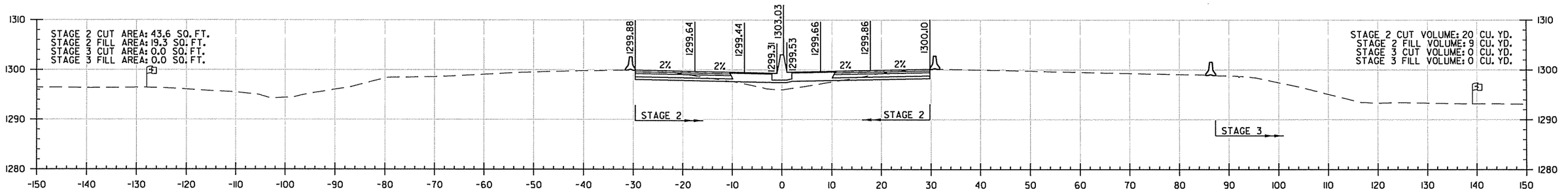

STA. 1314+25
BEGIN INSIDE WIDENING
MATCH EXISTING LANES & MEDIAN BARRIER

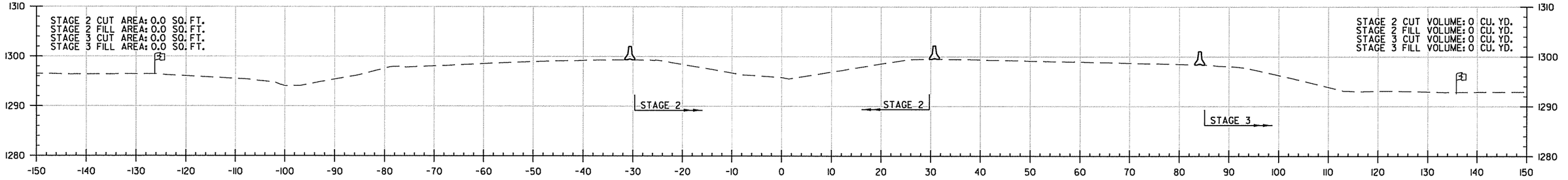

STA. 1314+00

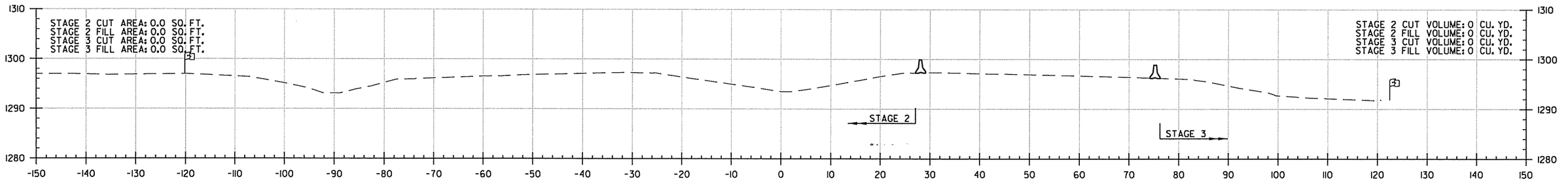

STA. 1313+00

I-49 STA. 1313+00 TO STA. 1315+00

4/28/2016
6:55:16 PM
...\CA0902_CX_HWY540_01.dgn

DATE	DATE FILMED	DATE REVISED	DATE FILMED	FED.RD. DIST.NO.	STATE	FED.AID PROJ.NO.	SHEET NO.	TOTAL SHEETS
				6	ARK.			
				JOB NO.		CA0902	465	581

(2) I-49 CROSS SECTIONS

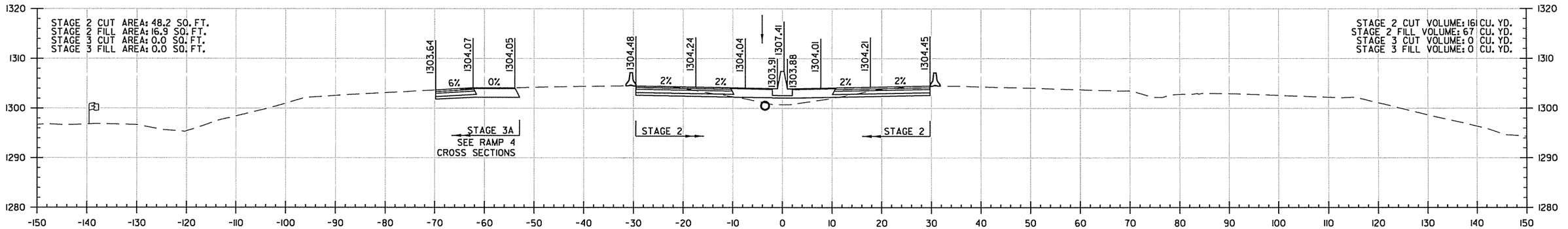

STA. 1316+00

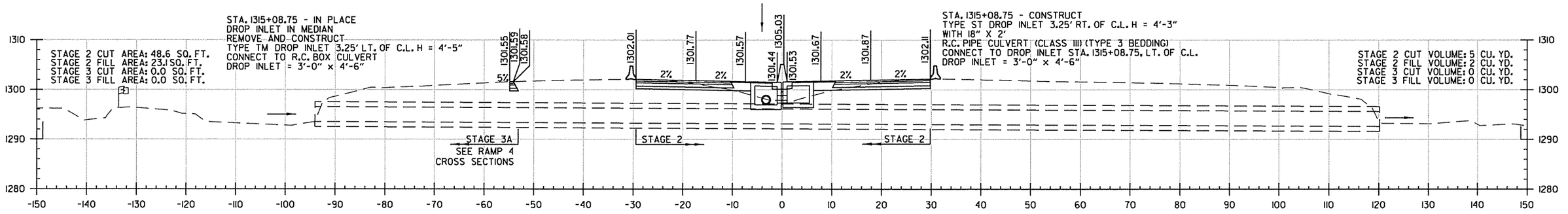

STA. 1315+08.75

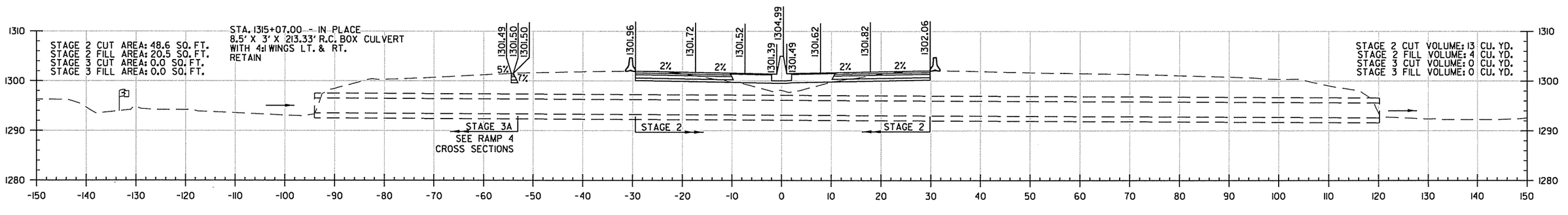

STA. 1315+07

I-49 STA. 1315+07 TO STA. 1316+00

4/28/2016
6:35:12 PM
\\CX\r\CA0902_CX_HWY540_01.dgn

DATE	DATE FILMED	DATE REVISED	DATE FILMED	FED.RD. DIST.NO.	STATE	FED.AID PROJ.NO.	SHEET NO.	TOTAL SHEETS
				6	ARK.			
				JOB NO.		CA0902	466	581
				(2)	I-49 CROSS SECTIONS			

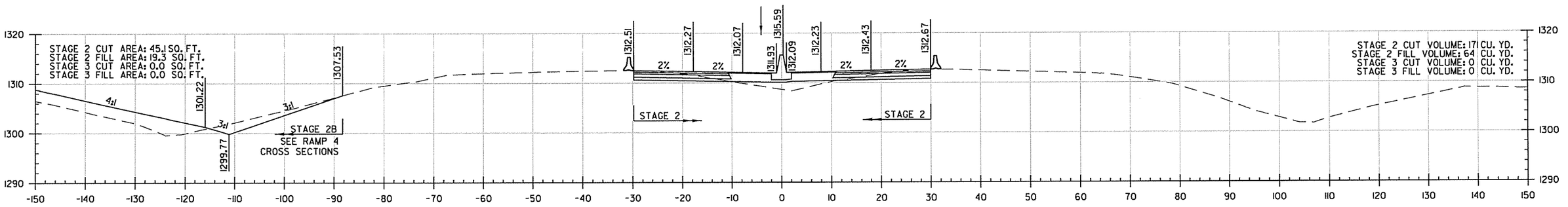

STA. 1319+00

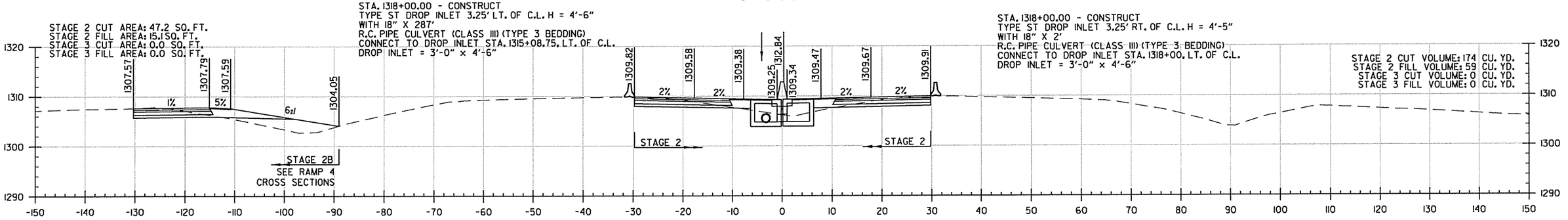

STA. 1318+00

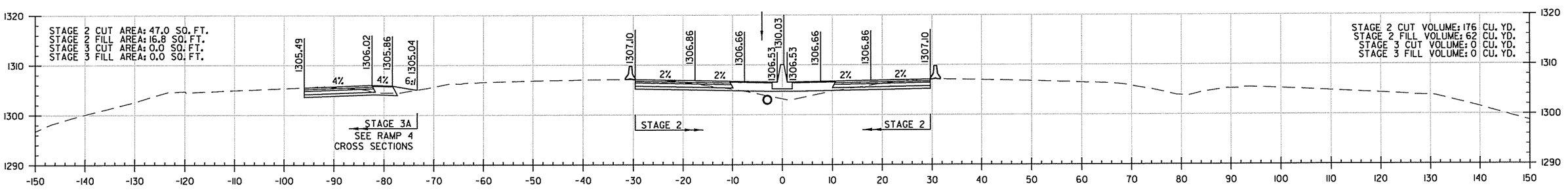

STA. 1317+00

I-49 STA. 1317+00 TO STA. 1319+00

4/28/2016
6:35:12 PM
\\XA\CA0902_CX_HWY540_01.dgn

DATE	DATE FILMED	DATE REVISED	DATE FILMED	FED.RD. DIST.NO.	STATE	FED.AID PROJ.NO.	SHEET NO.	TOTAL SHEETS
				6	ARK.			
				JOB NO.		CA0902	467	581

(2) I-49 CROSS SECTIONS

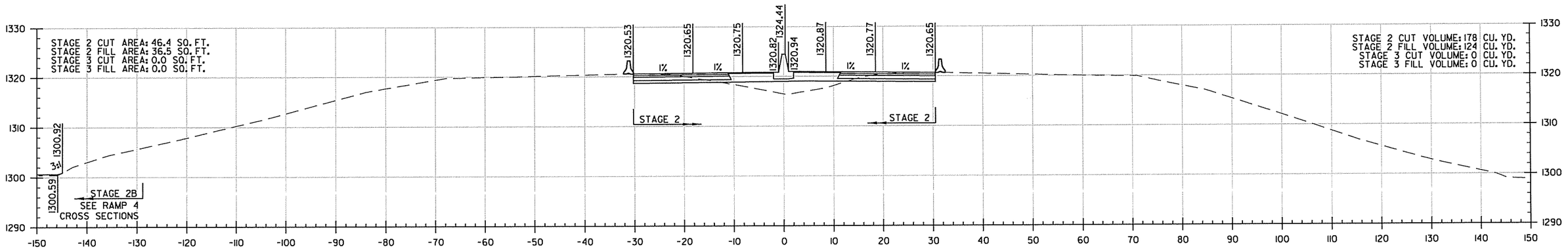

STA. 1322+00

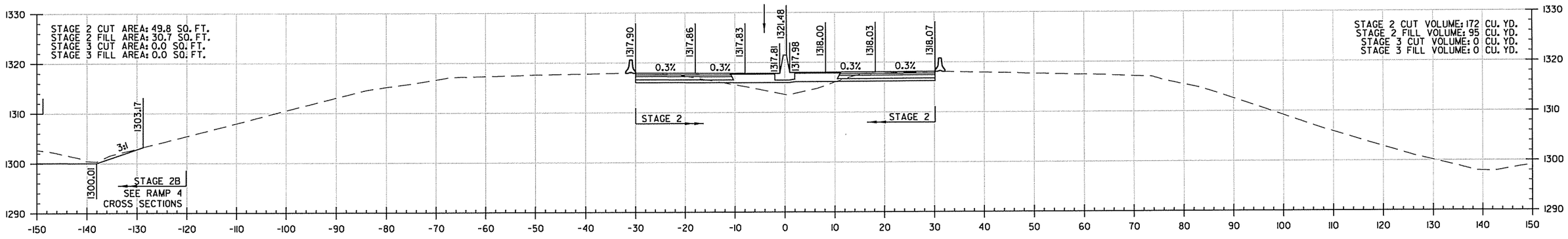

STA. 1321+00

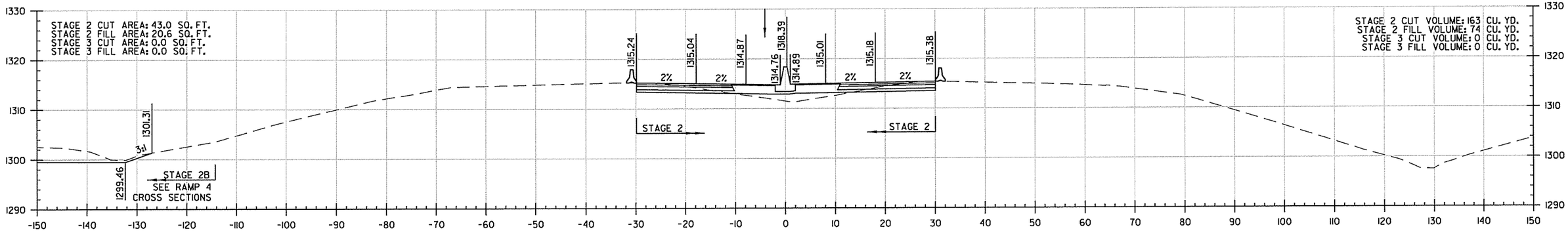

STA. 1320+00

I-49 STA. 1320+00 TO STA. 1322+00

4/28/2016
6:35:13 PM
...\CX\r-CA0902_CX_HWY540_01.dgn

DATE	DATE FILMED	DATE REVISED	DATE FILMED	FED.RD. DIST.NO.	STATE	FED.AID PROJ.NO.	SHEET NO.	TOTAL SHEETS
				6	ARK.			
				JOB NO.		CA0902	468	581

(2) I-49 CROSS SECTIONS

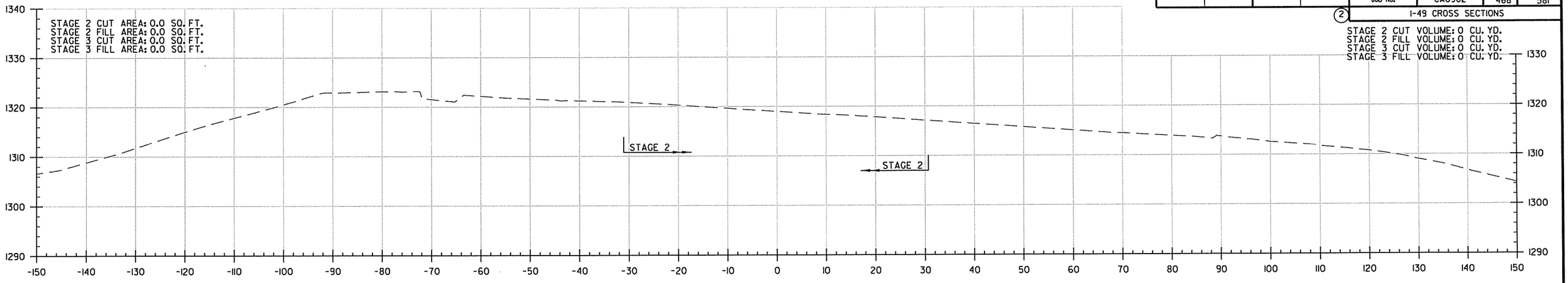

STA. 1325+00
173

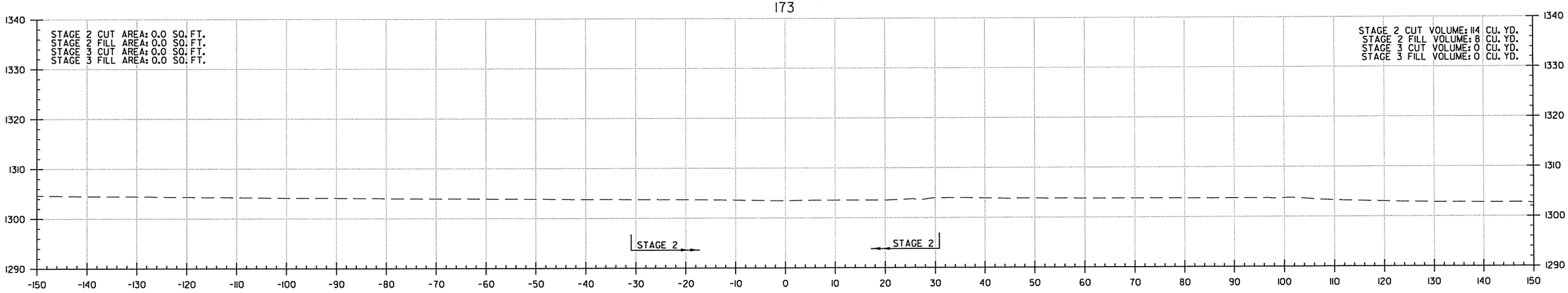

STA. 1324+00
173

STA. 1323+00

I-49 STA. 1323+00 TO STA. 1325+00

4/28/2016
6:35:12 PM
\\XX\CA0902_CX_HWY540_01.dgn

DATE	DATE FILMED	DATE REVISED	DATE FILMED	FED.RD. DIST.NO.	STATE	FED.AID PROJ.NO.	SHEET NO.	TOTAL SHEETS
				6	ARK.			
				JOB NO.		CA0902	469	581

(2) I-49 CROSS SECTIONS

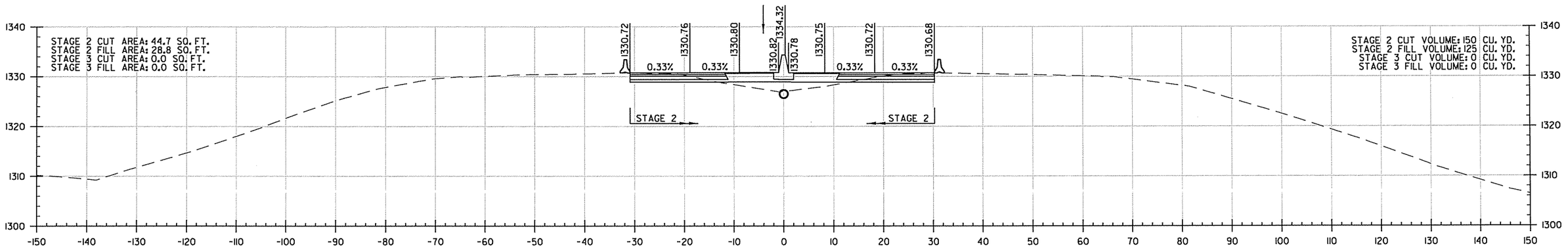

STA. 1327+00

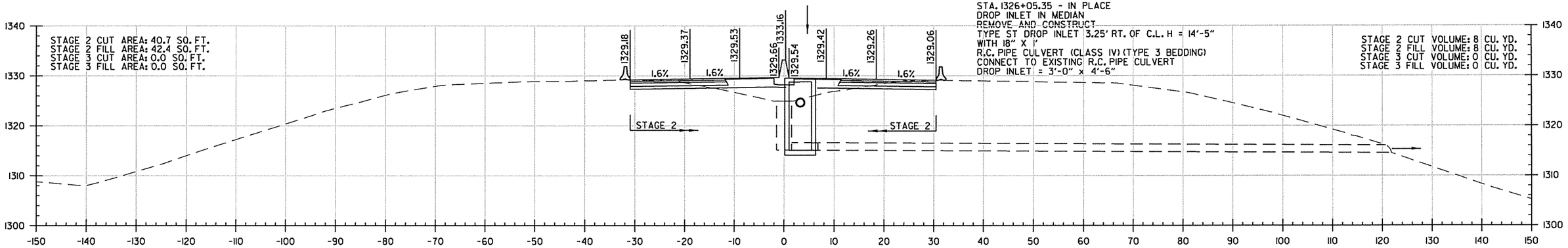

STA. 1326+05.35

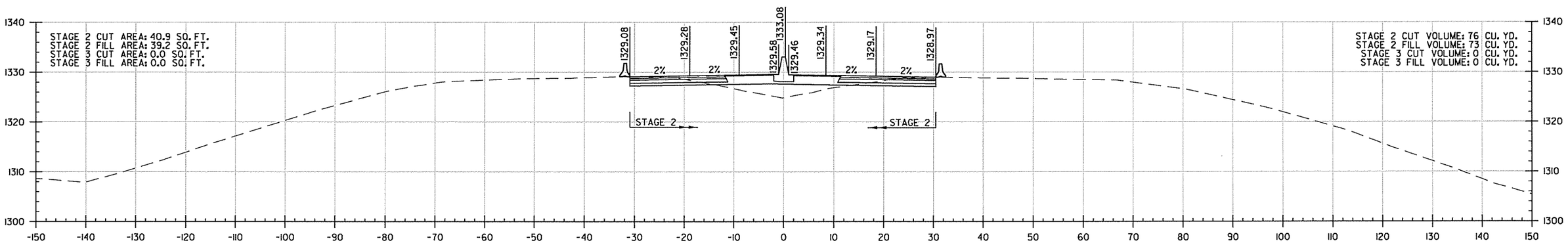

STA. 1326+00

I-49 STA. 1326+00 TO STA. 1327+00

4/28/2016
6:35:14 PM
...\CX\CA0902_CX_HWY540_01.dgn

DATE	DATE FILMED	DATE REVISED	DATE FILMED	FED.RD. DIST.NO.	STATE	FED.AID PROJ.NO.	SHEET NO.	TOTAL SHEETS
				6	ARK.			
				JOB NO.		CA0902	470	581
				(2)	I-49 CROSS SECTIONS			

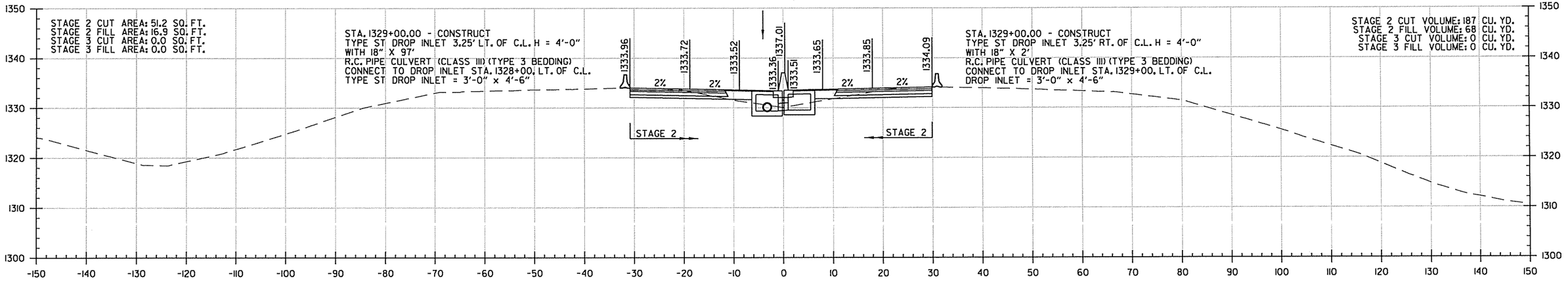

STA. 1329+00

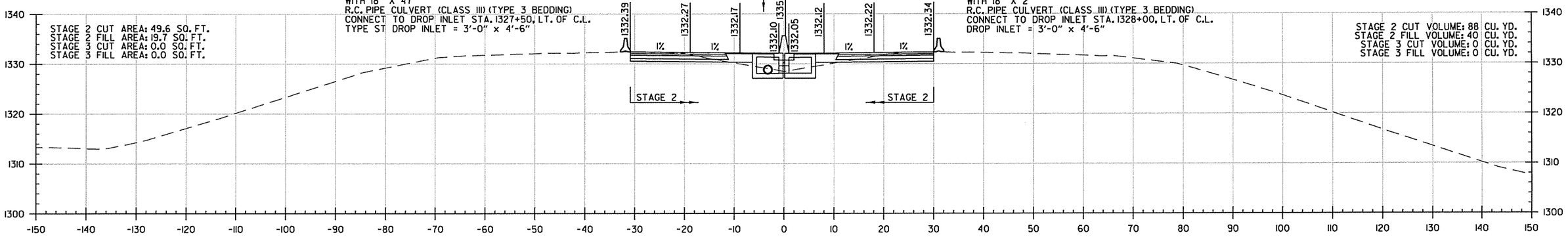

STA. 1328+00

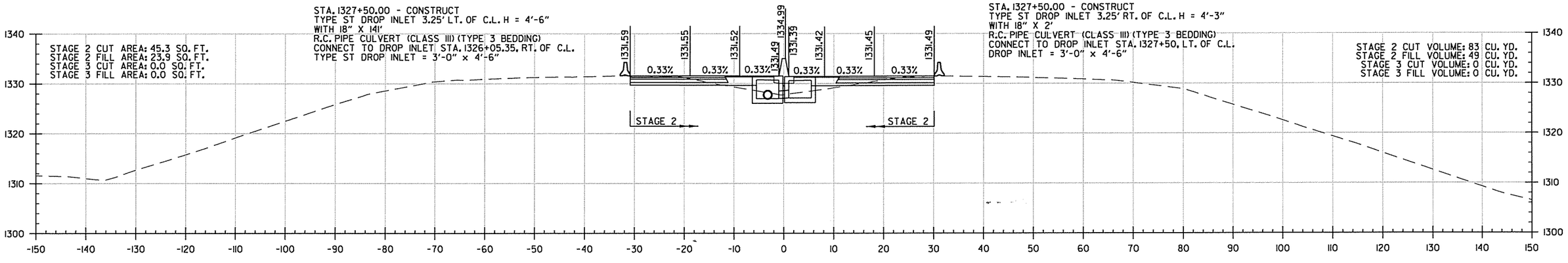

STA. 1327+50

I-49 STA. 1327+50 TO STA. 1329+00

4/28/2016
6:55:47 PM
\\CAV-CA0902_CX_HWY540_01.dgn

DATE	DATE FILMED	DATE REVISED	DATE FILMED	FED.RD. DIST.NO.	STATE	FED.AID PROJ.NO.	SHEET NO.	TOTAL SHEETS
				6	ARK.			
				JOB NO.		CA0902	471	581

(2) I-49 CROSS SECTIONS

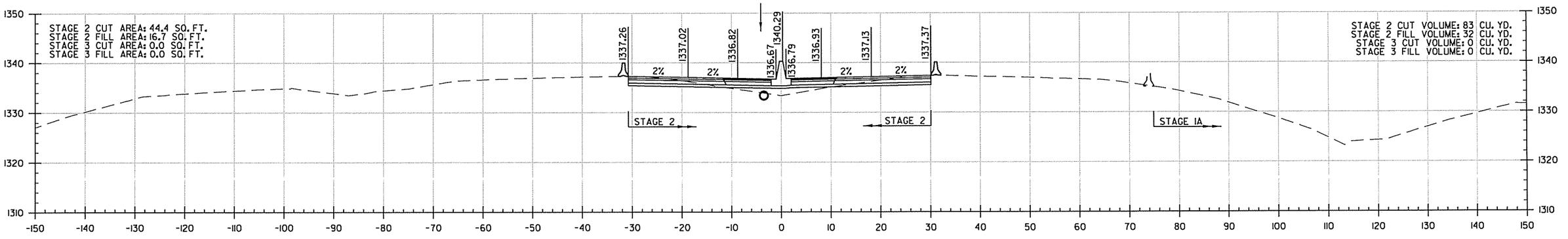

STA. 1331+00

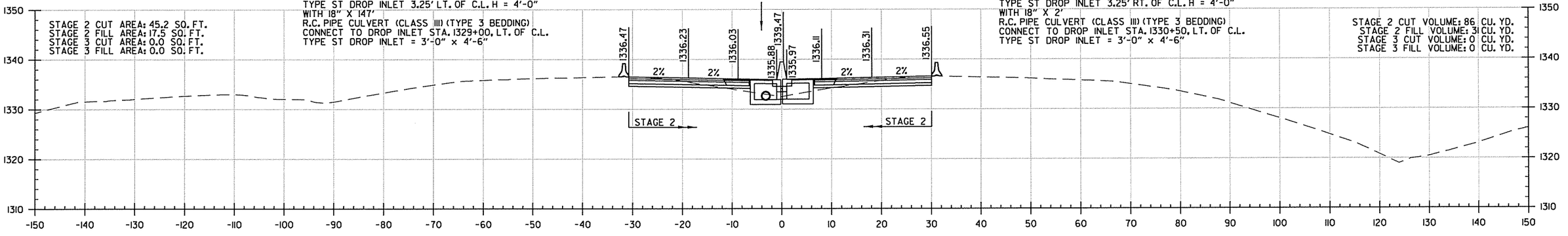

STA. 1330+50

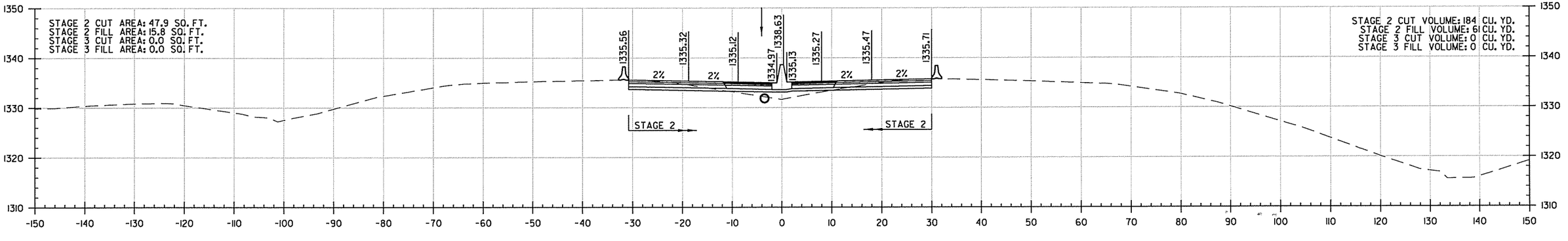

STA. 1330+00

I-49 STA. 1330+00 TO STA. 1331+00

4/28/2016
6:35:14 PM
...\CX\CA0902_CX_HWY540_01.dgn

DATE	DATE FILMED	DATE REVISED	DATE FILMED	FED.RD. DIST.NO.	STATE	FED.AID PROJ.NO.	SHEET NO.	TOTAL SHEETS
				6	ARK.			
				JOB NO.		CA0902	472	581

(2) I-49 CROSS SECTIONS

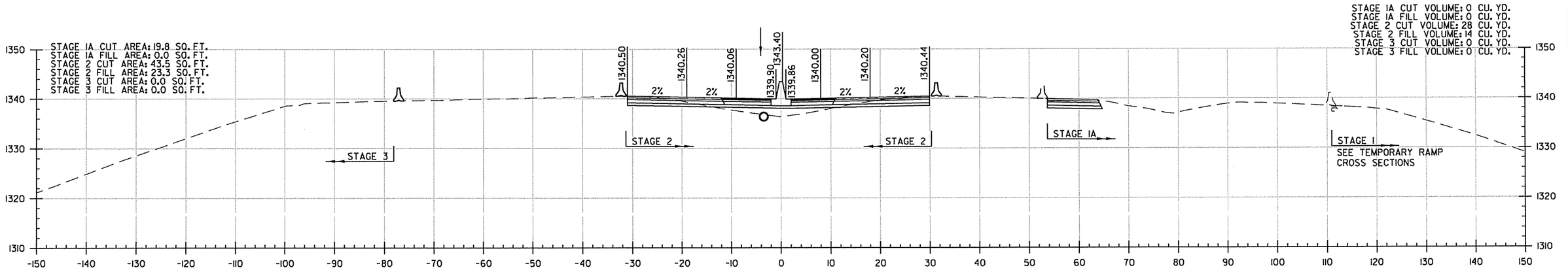

STA. 1333+00

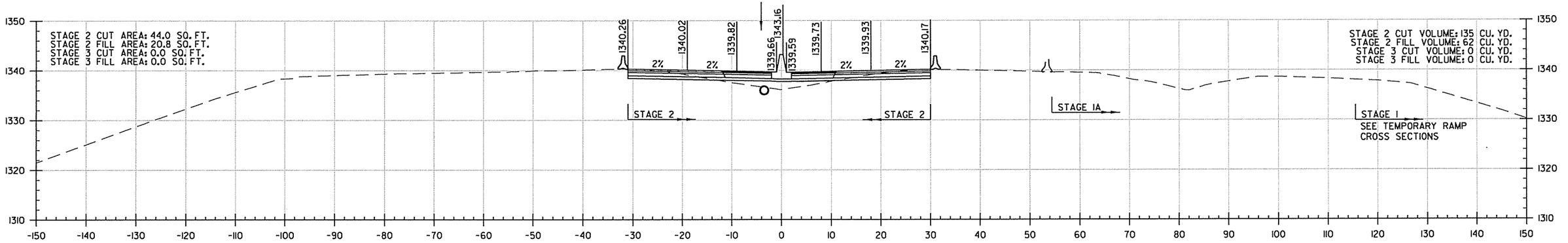

STA. 1332+83

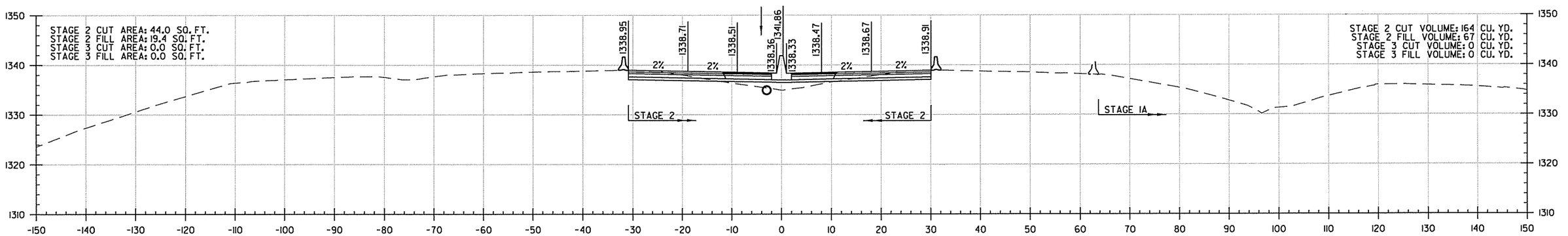

STA. 1332+00

I-49 STA. 1332+00 TO STA. 1333+00

4/28/2016
6:35:15 PM
...\CX\r-CA0902_CX_HWY540_01.dgn

DATE	DATE FILMED	DATE REVISED	DATE FILMED	FED.RD. DIST.NO.	STATE	FED.AID PROJ.NO.	SHEET NO.	TOTAL SHEETS
				6	ARK.			
				JOB NO.		CA0902	473	581
				(2)	I-49 CROSS SECTIONS			

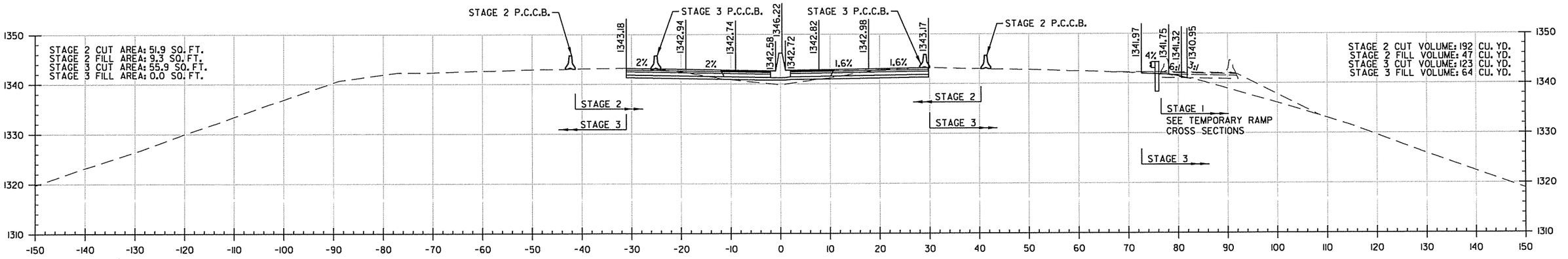

STA. 1336+00

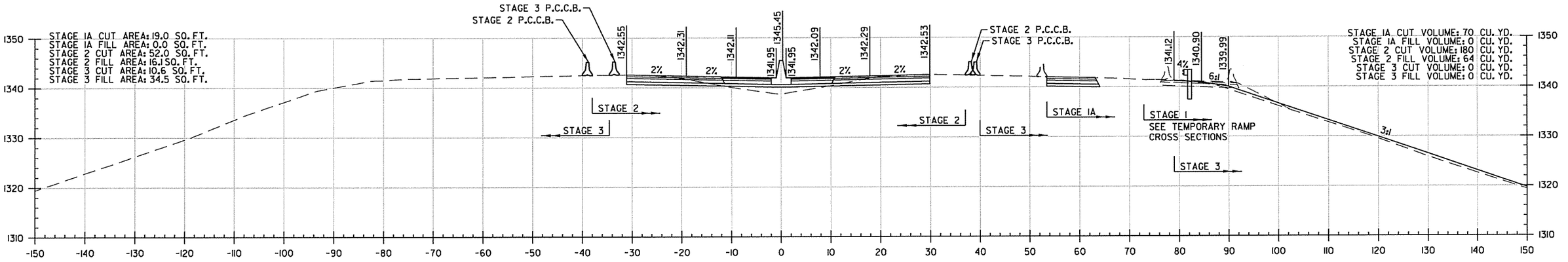

STA. 1335+00

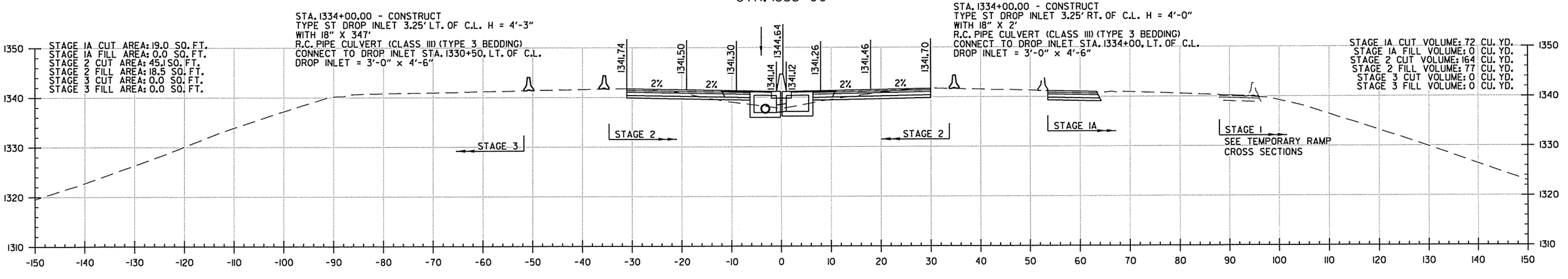

STA. 1334+00

I-49 STA. 1334+00 TO STA. 1336+00

4/28/2016
6:35:15 PM
\\ARA\CA0902_CX_HWY540_01.dgn

DATE	DATE FILMED	DATE REVISED	DATE FILMED	FED.RD. DIST.NO.	STATE	FED.AID PROJ.NO.	SHEET NO.	TOTAL SHEETS
				6	ARK.			
				JOB NO.		CA0902	474	581
				2	I-49 CROSS SECTIONS			

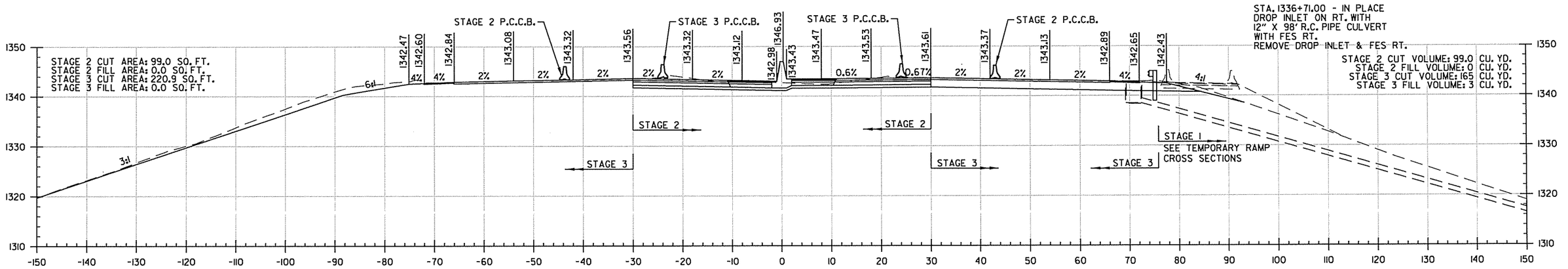

STA. 1336+71

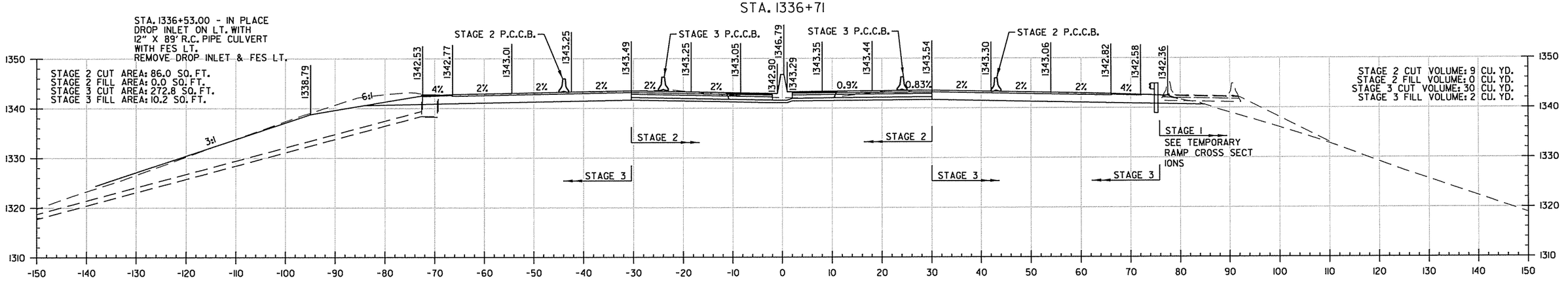

STA. 1336+53

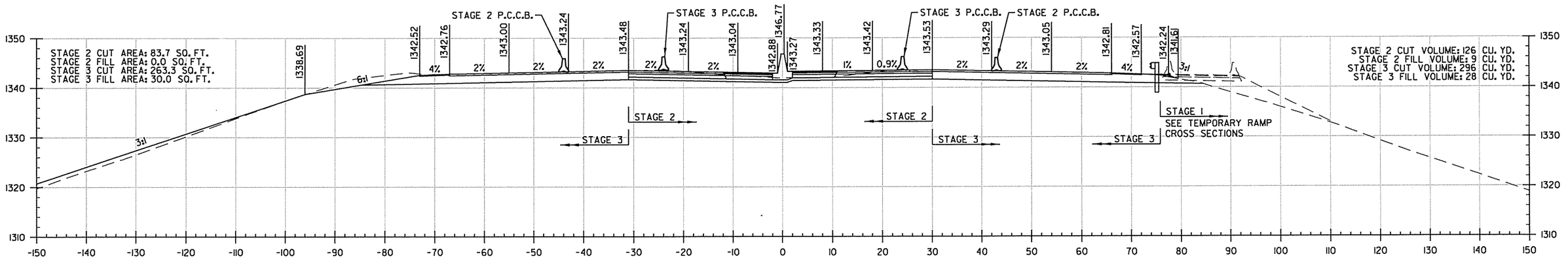

STA. 1336+50

I-49 STA. 1336+50 TO STA. 1336+71

4/28/2016
6:35:15 PM
\\DATA\PCA0902_CX_HWY540_01.dgn

DATE	DATE FILMED	DATE REVISED	DATE FILMED	FED.RD. DIST.NO.	STATE	FED.AID PROJ.NO.	SHEET NO.	TOTAL SHEETS
				6	ARK.			
				JOB NO.		CA0902	475	581

(2) I-49 CROSS SECTIONS

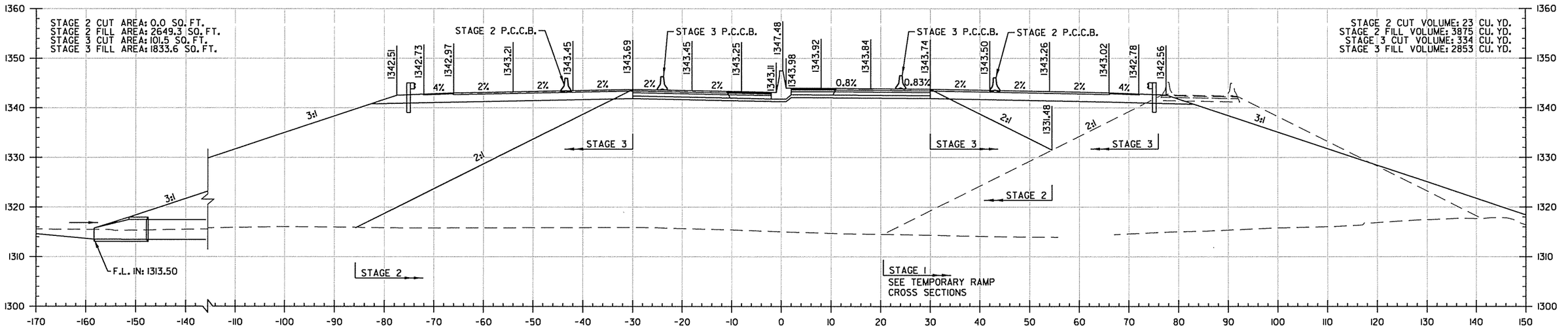

STA. 1337+77

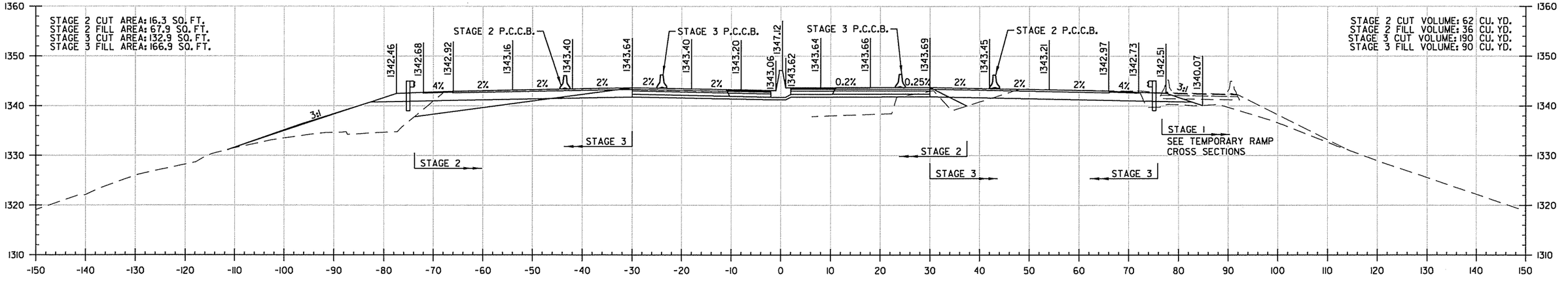

STA. 1337+00

I-49 STA. 1337+00 TO STA. 1337+77

4/28/2016
6:35:16 PM
\\CX\r-CA0902_CX_HWY540_01.dgn

DATE	DATE FILMED	DATE REVISED	DATE FILMED	FED.RD. DIST.NO.	STATE	FED.AID PROJ.NO.	SHEET NO.	TOTAL SHEETS
				6	ARK.			
				JOB NO.		CA0902	476	581
				(2)	I-49 CROSS SECTIONS			

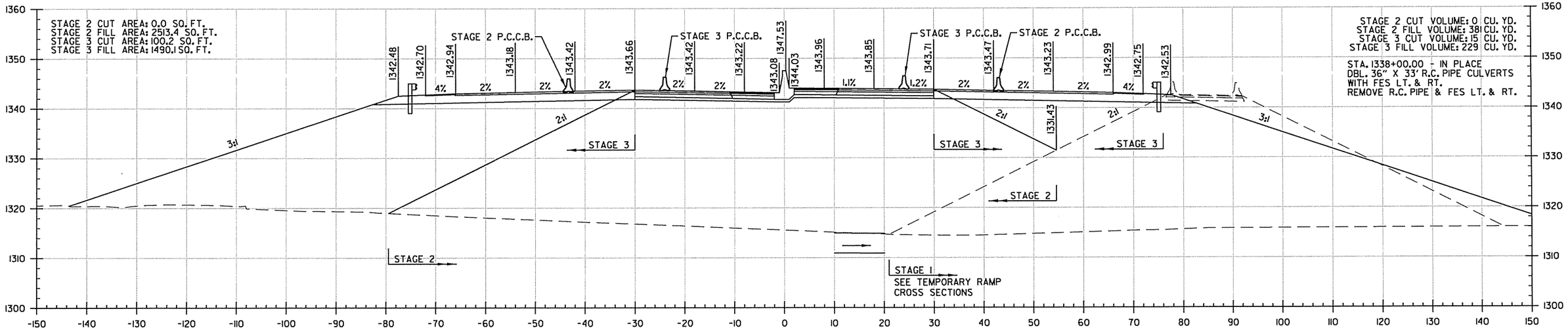

STA. 1338+00

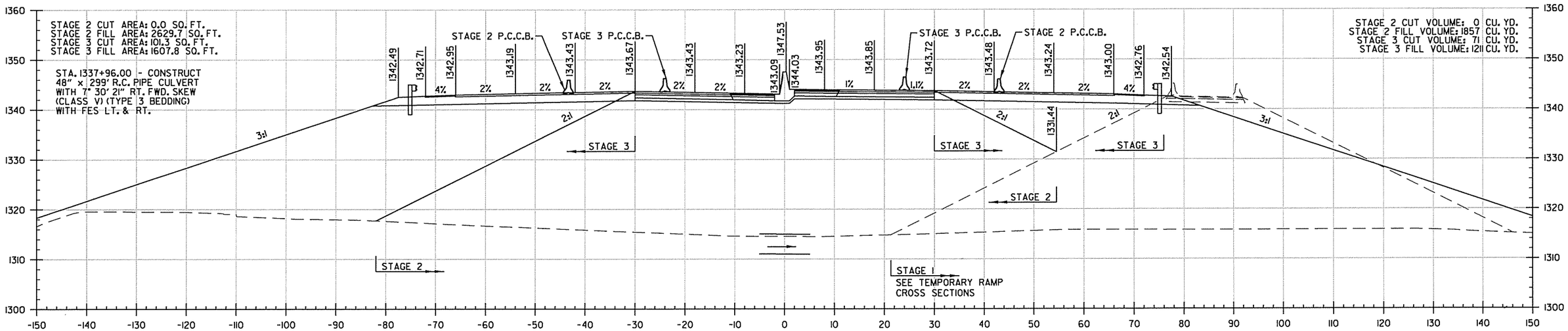

STA. 1337+96

I-49 STA. 1337+96 TO STA. 1338+00

4/28/2016
6:25:46 PM
\\XA\CA0902_CX_HWY540_01.dgn

DATE	DATE FILMED	DATE REVISED	DATE FILMED

FED.RD. DIST.NO.	STATE	FED.AID PROJ.NO.	SHEET NO.	TOTAL SHEETS
6	ARK.			
JOB NO.		CA0902	477	581
(2)	I-49 CROSS SECTIONS			

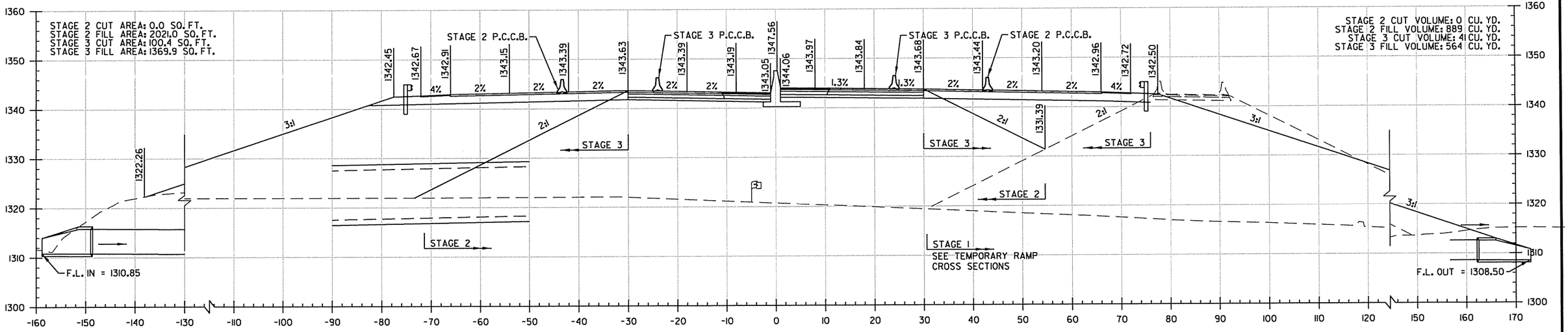

STA. 1338+16

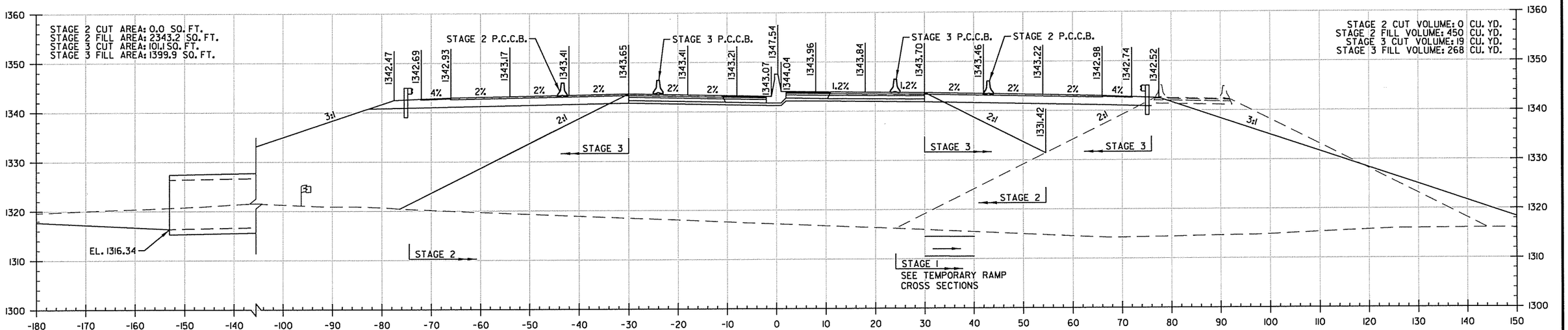

STA. 1338+05

I-49 STA. 1338+05 TO STA. 1338+16

4/28/2016
6:35:16 PM
\\XA\CA0902_CX_HWY540_01.dgn

DATE	DATE FILMED	DATE REVISED	DATE FILMED

FED.RD. DIST.NO.	STATE	FED.AID PROJ.NO.	SHEET NO.	TOTAL SHEETS
6	ARK.			
JOB NO.		CA0902	478	581

(2) I-49 CROSS SECTIONS

STAGE 2 CUT AREA: 0.0 SQ. FT.
STAGE 2 FILL AREA: 1061.4 SQ. FT.
STAGE 3 CUT AREA: 57.7 SQ. FT.
STAGE 3 FILL AREA: 678.3 SQ. FT.

STAGE 2 CUT VOLUME: 0 CU. YD.
STAGE 2 FILL VOLUME: 259 CU. YD.
STAGE 3 CUT VOLUME: 14 CU. YD.
STAGE 3 FILL VOLUME: 158 CU. YD.

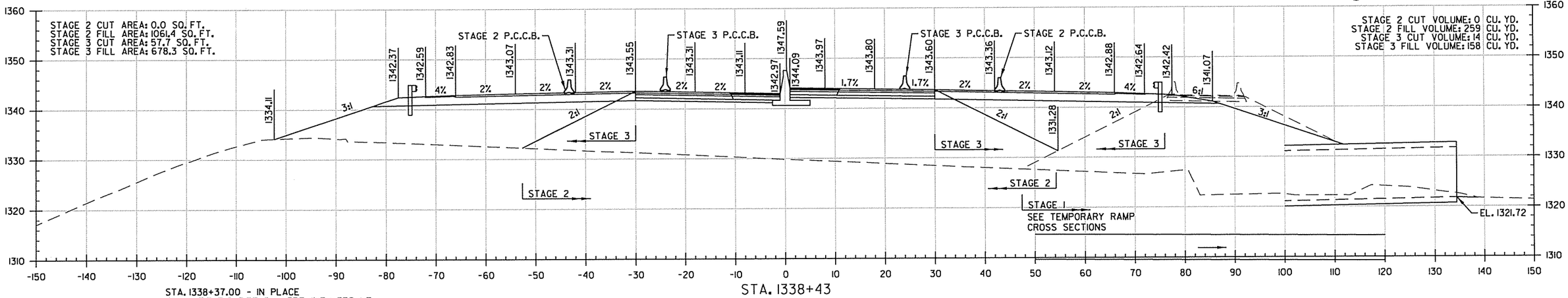

STA. 1338+43

STA. 1338+37.00 - IN PLACE
48" X 317' R.C. PIPE CULVERT WITH FES LT.
REMOVE R.C. PIPE AND FES LT. AND INSTALL
48" X 321' R.C. PIPE CULVERT
(CLASS V) (TYPE 3 BEDDING) WITH FES LT.
48" R.C. PIPE= 321 LIN. FT.
48" FES = 1EA.

STAGE 2 CUT AREA: 0.0 SQ. FT.
STAGE 2 FILL AREA: 1272.7 SQ. FT.
STAGE 3 CUT AREA: 66.2 SQ. FT.
STAGE 3 FILL AREA: 742.4 SQ. FT.

STAGE 2 CUT VOLUME: 0 CU. YD.
STAGE 2 FILL VOLUME: 693 CU. YD.
STAGE 3 CUT VOLUME: 35 CU. YD.
STAGE 3 FILL VOLUME: 406 CU. YD.

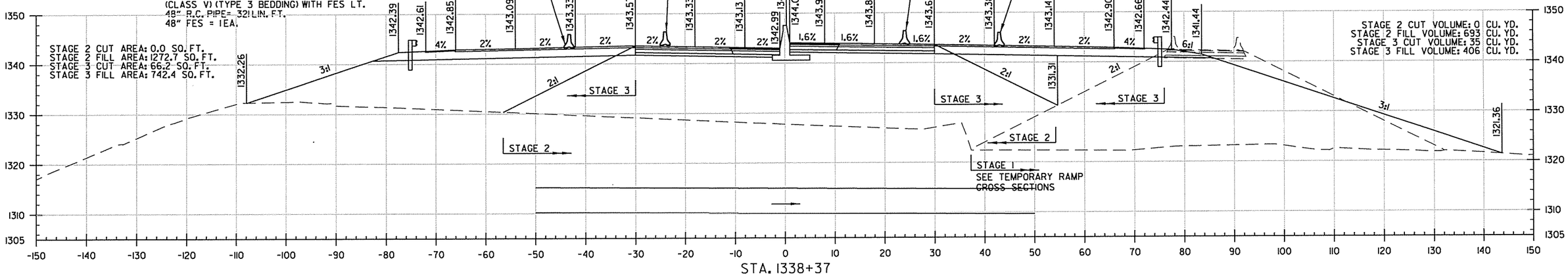

STA. 1338+37

STA. 1338+25.00 - CONSTRUCT
12' X 10' X 287'-6" R.C. BOX CULVERT
WITH 7°30'21" RT. FWD. SKEW

STAGE 2 CUT AREA: 0.0 SQ. FT.
STAGE 2 FILL AREA: 1845.0 SQ. FT.
STAGE 3 CUT AREA: 89.6 SQ. FT.
STAGE 3 FILL AREA: 1084.7 SQ. FT.

STAGE 2 CUT VOLUME: 0 CU. YD.
STAGE 2 FILL VOLUME: 644 CU. YD.
STAGE 3 CUT VOLUME: 32 CU. YD.
STAGE 3 FILL VOLUME: 409 CU. YD.

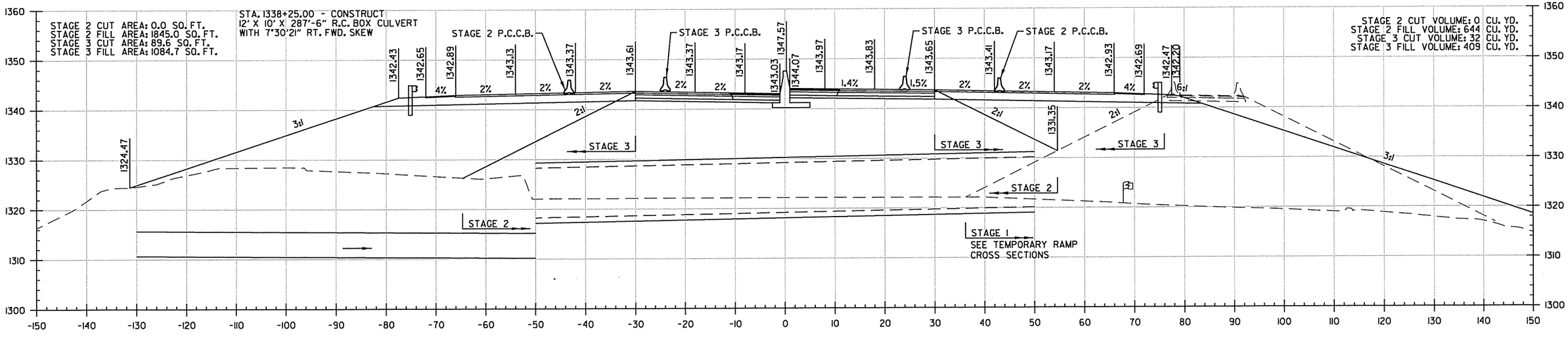

STA. 1338+25

I-49 STA. 1338+25 TO STA. 1338+43

4/28/2016
6:35:17 PM
\\XA\CA0902_CX_HWY540_01.dgn

DATE	DATE FILMED	DATE REVISED	DATE FILMED	FED.RD. DIST.NO.	STATE	FED.AID PROJ.NO.	SHEET NO.	TOTAL SHEETS
				6	ARK.			
				JOB NO.		CA0902	479	581

(2) I-49 CROSS SECTIONS

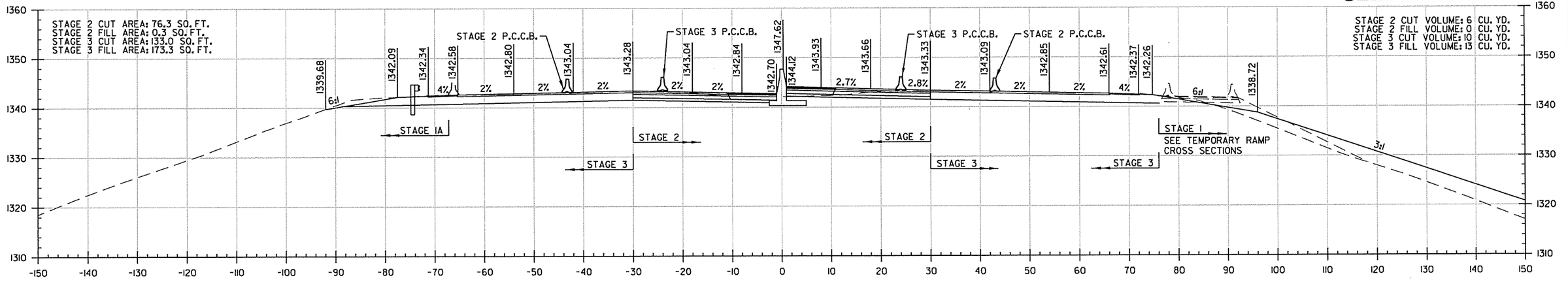

STA. 1339+00

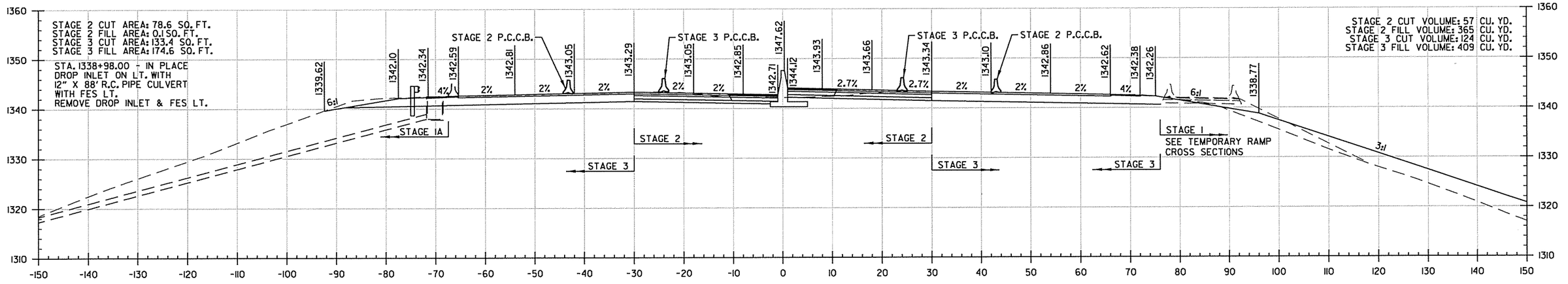

STA. 1338+98

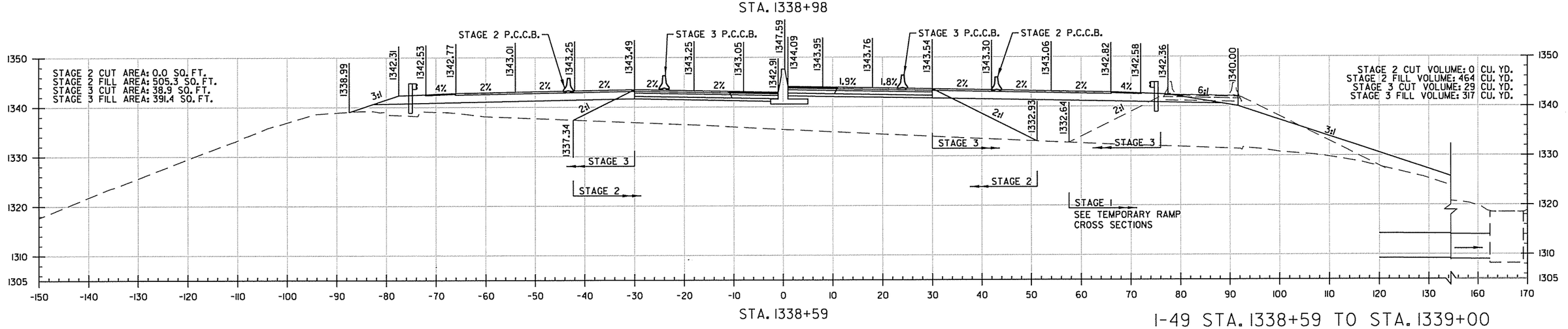

STA. 1338+59

I-49 STA. 1338+59 TO STA. 1339+00

4/28/2016
6:35:17 PM
\\CX\rCA0902_CX_HWY540_01.dgn

DATE	DATE FILMED	DATE REVISED	DATE FILMED

FED.RD. DIST.NO.	STATE	FED.AID PROJ.NO.	SHEET NO.	TOTAL SHEETS
6	ARK.			
JOB NO.		CA0902	480	581
(2)	I-49 CROSS SECTIONS			

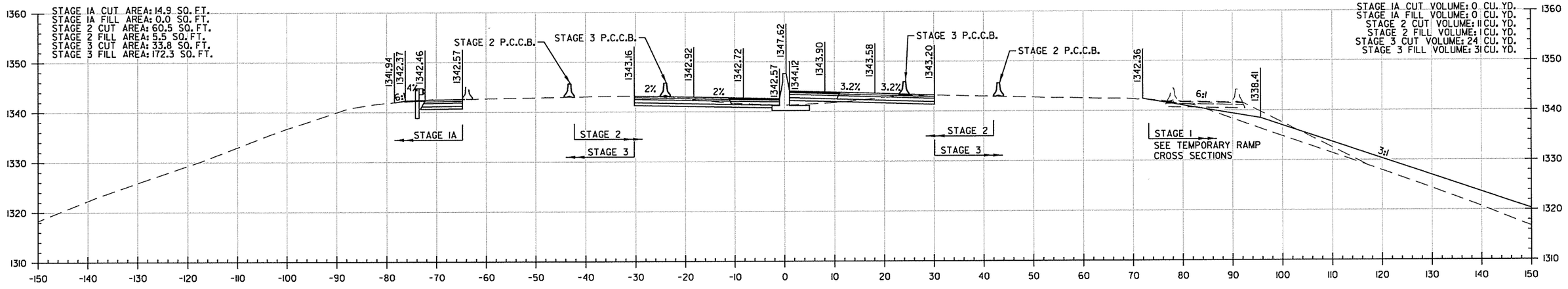

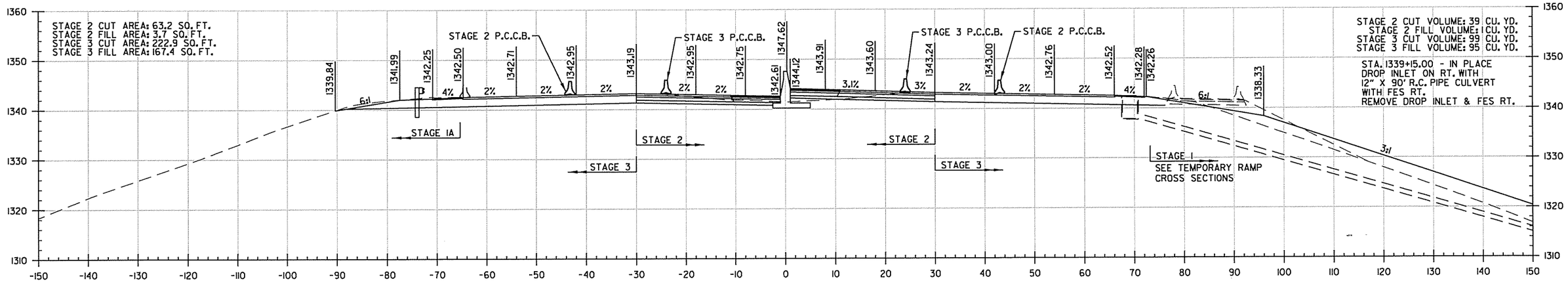

I-49 STA. 1339+15 TO STA. 1339+20

4/28/2016
6:35:17 PM
M:\CAD\CA0902_CX_HWY540_01.dgn

DATE	DATE FILMED	DATE REVISED	DATE FILMED	FED.RD. DIST.NO.	STATE	FED.AID PROJ.NO.	SHEET NO.	TOTAL SHEETS
				6	ARK.			
				JOB NO.		CA0902	481	581

(2) I-49 CROSS SECTIONS

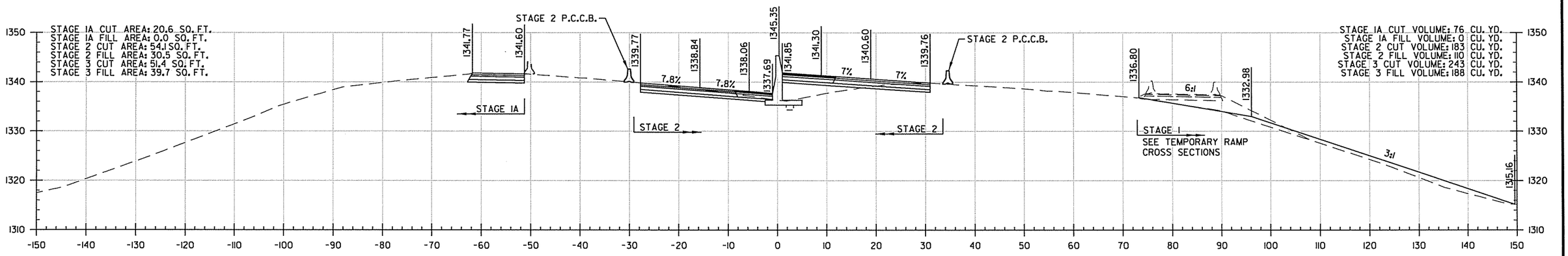

STA. 1342+00

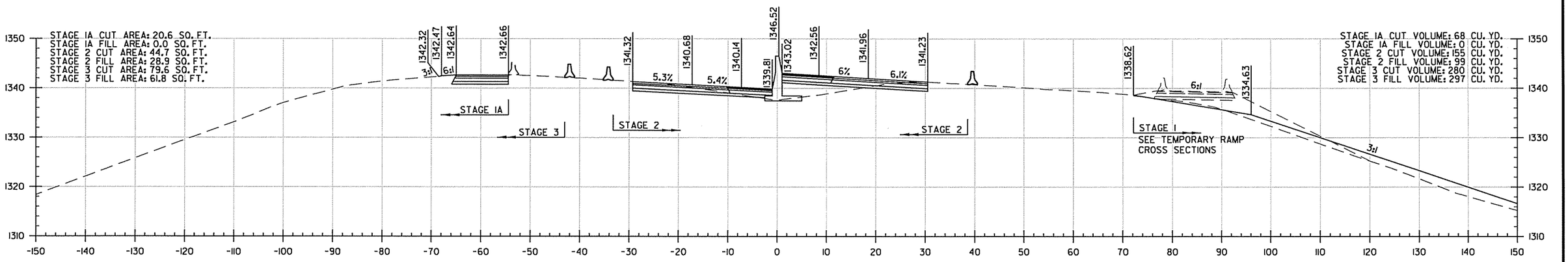

STA. 1341+00

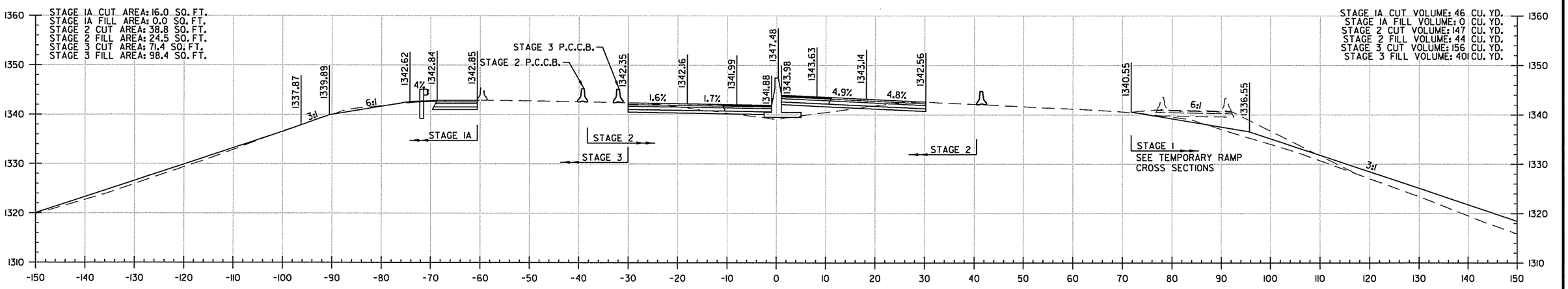

STA. 1340+00

I-49 STA. 1340+00 TO STA. 1342+00

4/28/2016
6:35:18 PM
\\CX\CA0902_CX_HWY540_01.dgn

DATE	DATE FILMED	DATE REVISED	DATE FILMED	FED.RD. DIST.NO.	STATE	FED.AID PROJ.NO.	SHEET NO.	TOTAL SHEETS
				6	ARK.			
				JOB NO.		CA0902	482	581

(2) I-49 CROSS SECTIONS

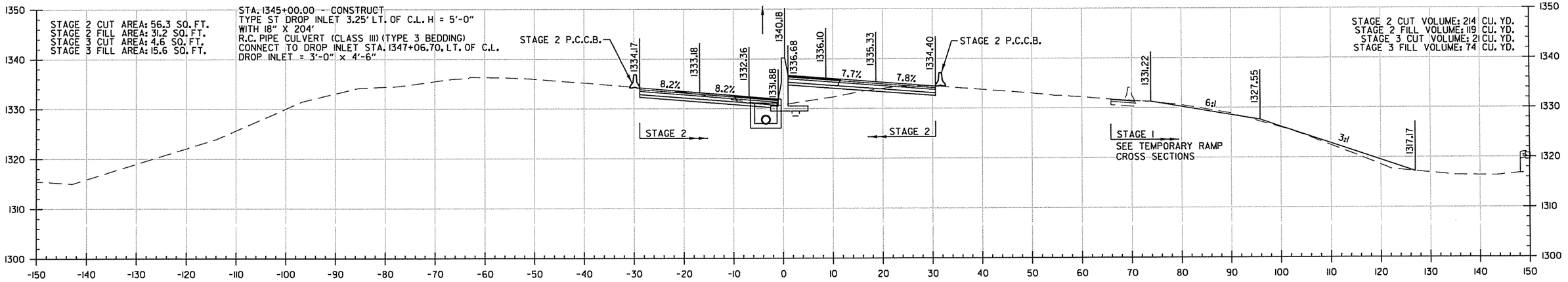

STA. 1345+00

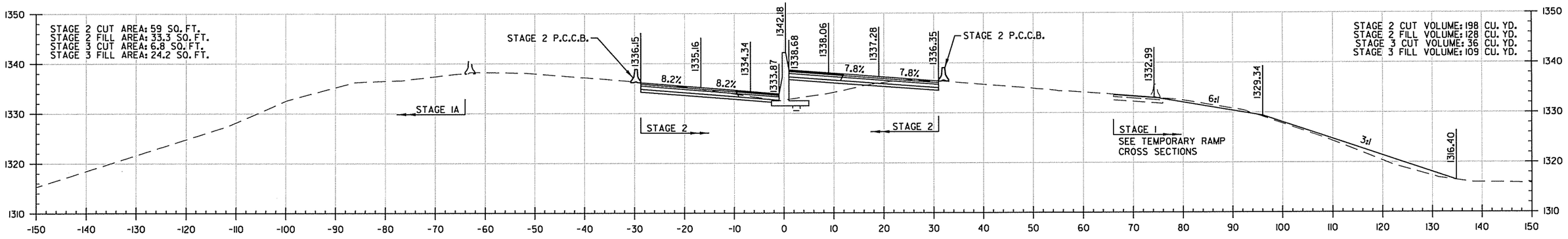

STA. 1344+00

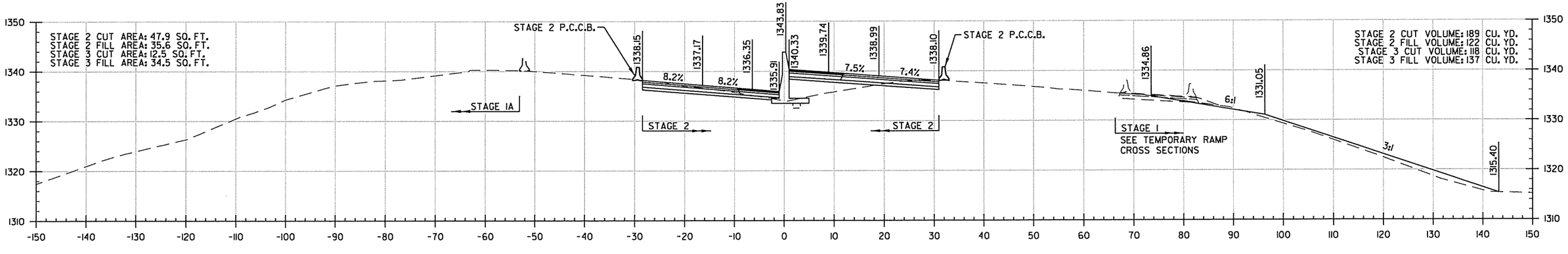

STA. 1343+00

I-49 STA. 1343+00 TO STA. 1345+00

4/28/2016
6:35:18 PM
...\CX\CA0902_CX_HWY540_01.dgn

DATE	DATE FILMED	DATE REVISED	DATE FILMED	FED.RD. DIST.NO.	STATE	FED.AID PROJ.NO.	SHEET NO.	TOTAL SHEETS
				6	ARK.			
				JOB NO.		CA0902	483	581

(2) I-49 CROSS SECTIONS

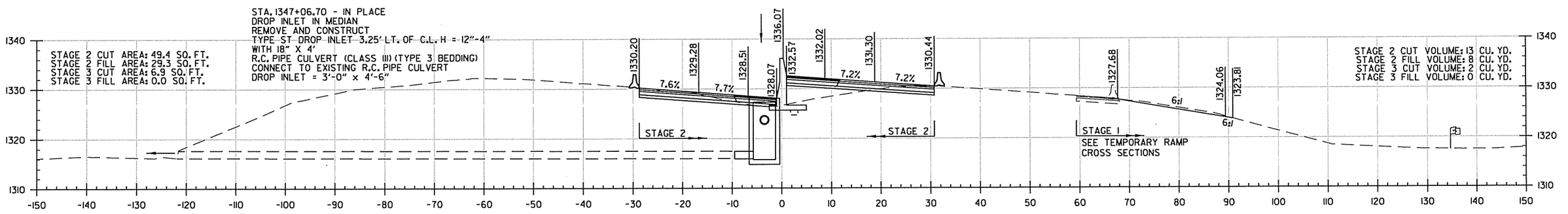

STA. 1347+06.70

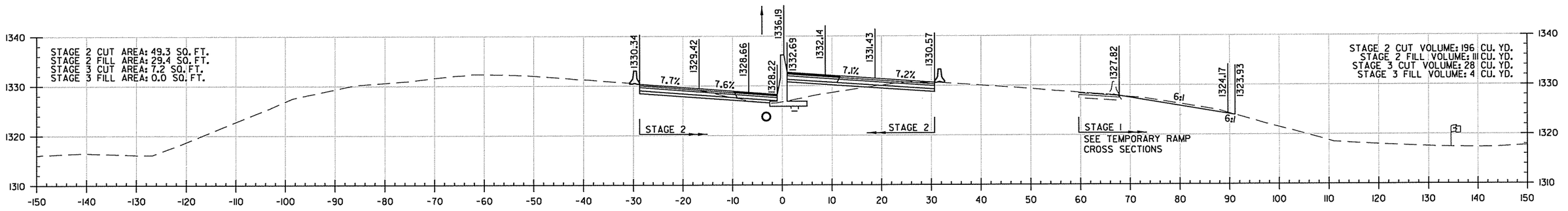

STA. 1347+00

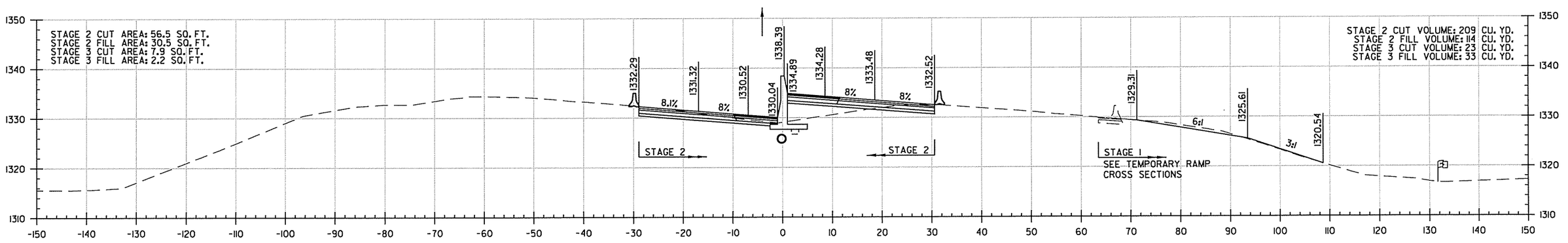

STA. 1346+00

I-49 STA. 1346+00 TO STA. 1347+07

4/28/2016
6:35:18 PM
\\CX\CA0902_CX_HWY540_01.dgn

DATE	DATE FILMED	DATE REVISED	DATE FILMED

FED.RD. DIST.NO.	STATE	FED.AID PROJ.NO.	SHEET NO.	TOTAL SHEETS
6	ARK.			
JOB NO.		CA0902	484	581
(2)	I-49 CROSS SECTIONS			

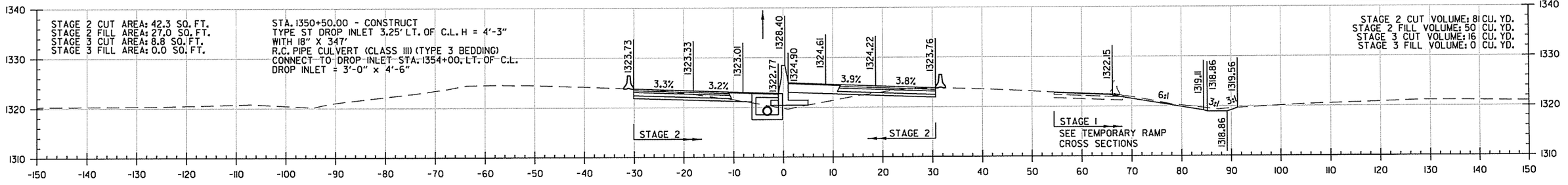

STA. 1350+50

STA. 1350+20 BEGIN
-1.78% RT. DITCH GRADE
ELEV. 1319.40

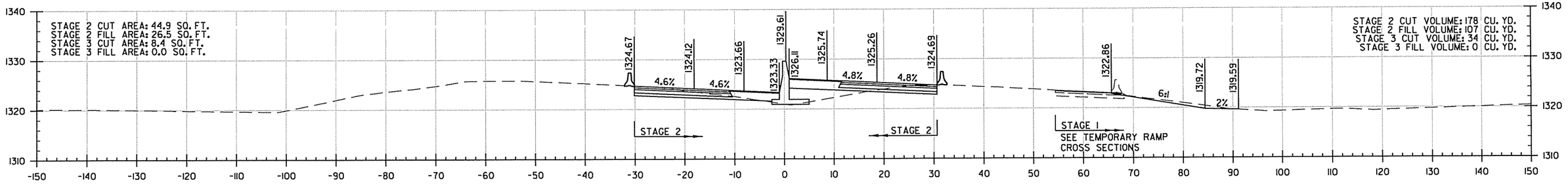

STA. 1350+00

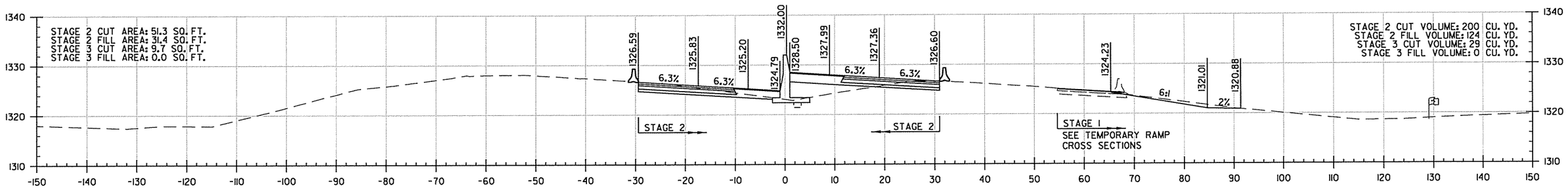

STA. 1349+00

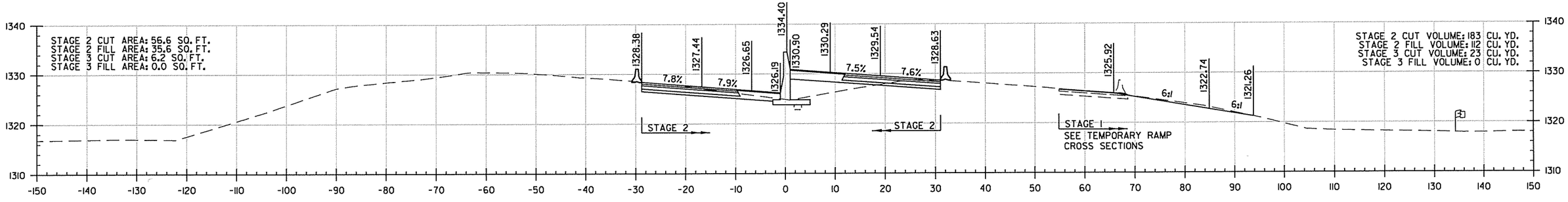

STA. 1348+00

I-49 STA. 1348+00 TO STA. 1350+50

4/28/2016
6:53:49 PM
\\CA\CA0902_CX_HWY540_01.dgn

DATE	DATE FILMED	DATE REVISED	DATE FILMED	FED.RD. DIST.NO.	STATE	FED.AID PROJ.NO.	SHEET NO.	TOTAL SHEETS
				6	ARK.			
				JOB NO.		CA0902	485	581
				(2)	I-49 CROSS SECTIONS			

STA. 1354+00.00 - CONSTRUCT
TYPE ST DROP INLET 3.25' LT. OF C.L. H = 4'-0"
WITH 18" X 403'
R.C. PIPE CULVERT (CLASS III) (TYPE 3 BEDDING)
CONNECT TO DROP INLET STA. 1358+06.27, LT. OF C.L.
DROP INLET = 3'-0" x 4'-6"

STA. 1354+00.00 - CONSTRUCT
TYPE ST DROP INLET 3.25' RT. OF C.L. H = 4'-0"
WITH 18" X 2'
R.C. PIPE CULVERT (CLASS III) (TYPE 3 BEDDING)
CONNECT TO DROP INLET STA. 1354+00, LT. OF C.L.
DROP INLET = 3'-0" x 4'-6"

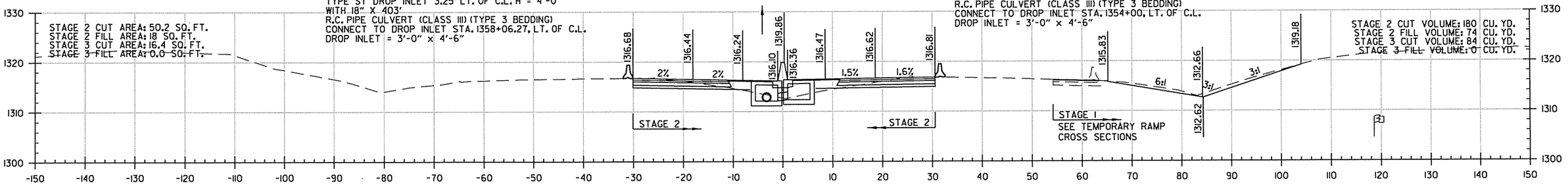

STA. 1354+00

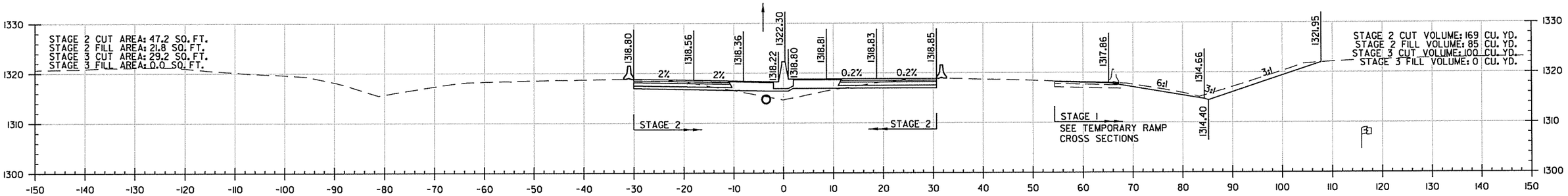

STA. 1353+00

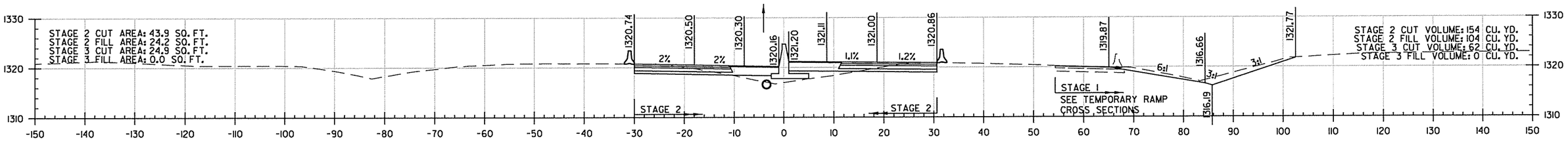

STA. 1352+00

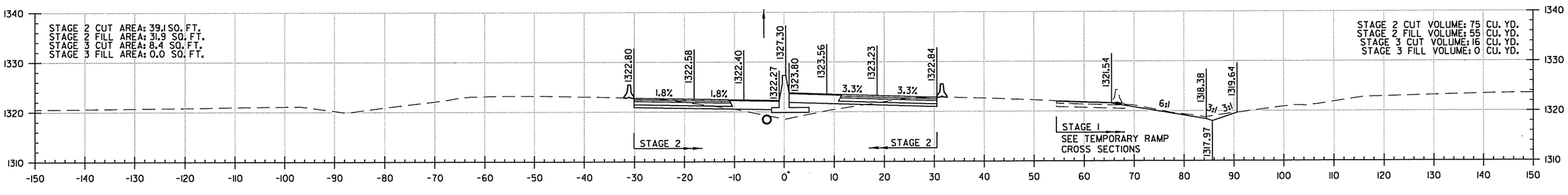

STA. 1351+00

I-49 STA. 1351+00 TO STA. 1354+00

4/28/2016
6:35:19 PM
\\ARS-CA0902_CX_HWY540_01.dgn

DATE	DATE FILMED	DATE REVISED	DATE FILMED	FED.RD. DIST.NO.	STATE	FED.AID PROJ.NO.	SHEET NO.	TOTAL SHEETS
				6	ARK.			
				JOB NO.		CA0902	486	581

(2) I-49 CROSS SECTIONS

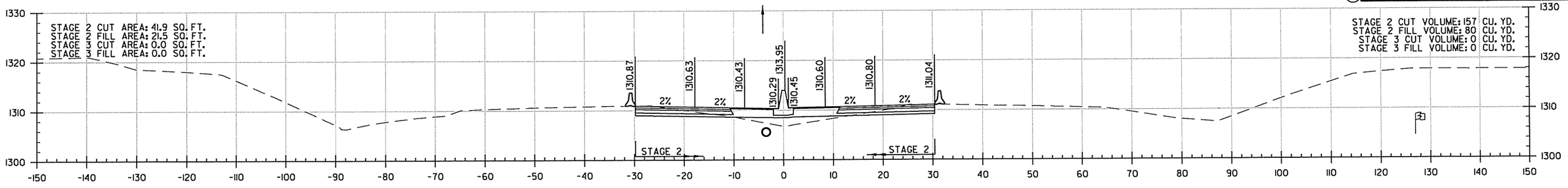

STA. 1357+00

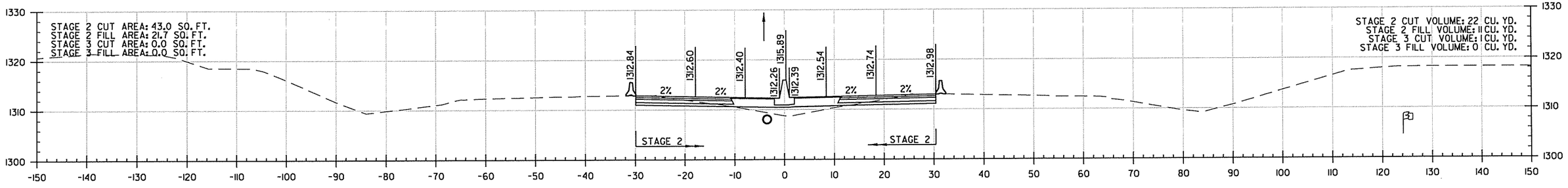

STA. 1356+00

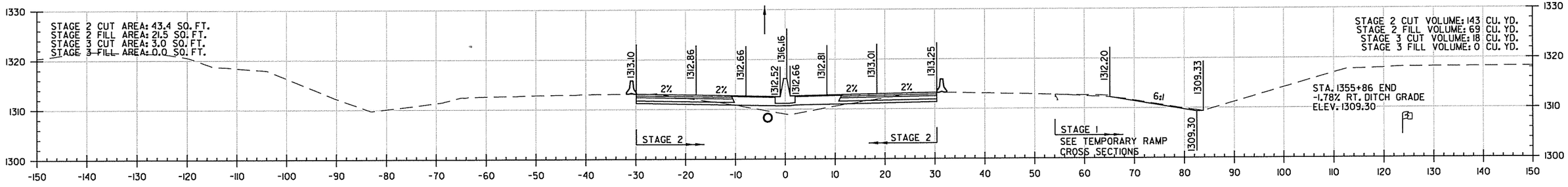

STA. 1355+86

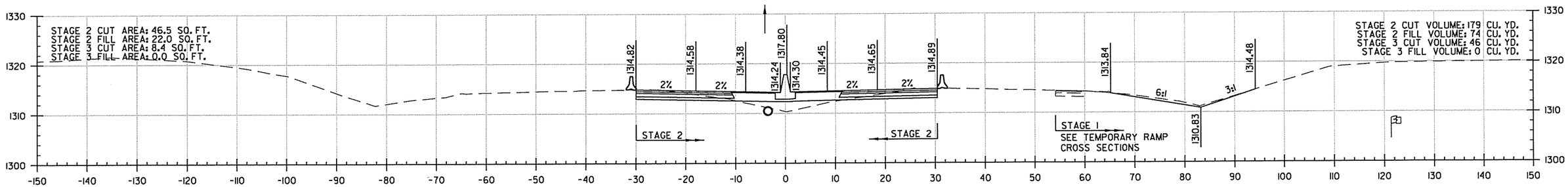

STA. 1355+00

I-49 STA. 1355+00 TO STA. 1357+00

4/28/2016
6:35:49 PM
\\ARK\CA0902_CX_HWY540_01.dgn

DATE	DATE FILMED	DATE REVISED	DATE FILMED	FED.RD. DIST.NO.	STATE	FED.AID PROJ.NO.	SHEET NO.	TOTAL SHEETS
				6	ARK.			
				JOB NO.		CA0902	487	581

(2) I-49 CROSS SECTIONS

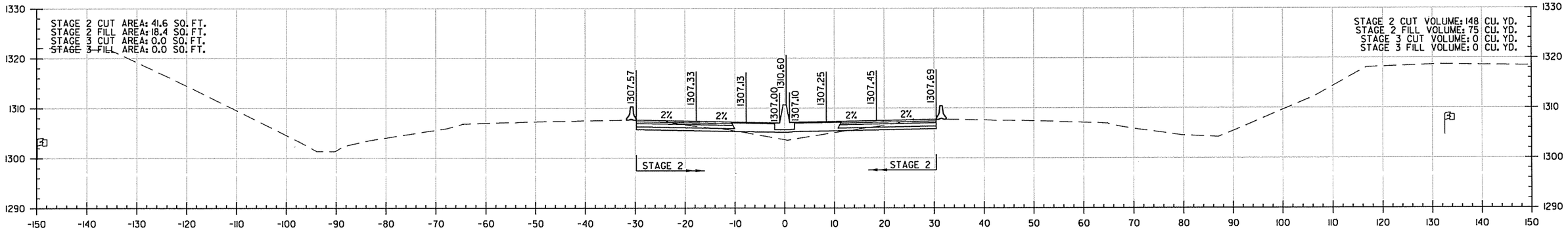

STA. 1359+00

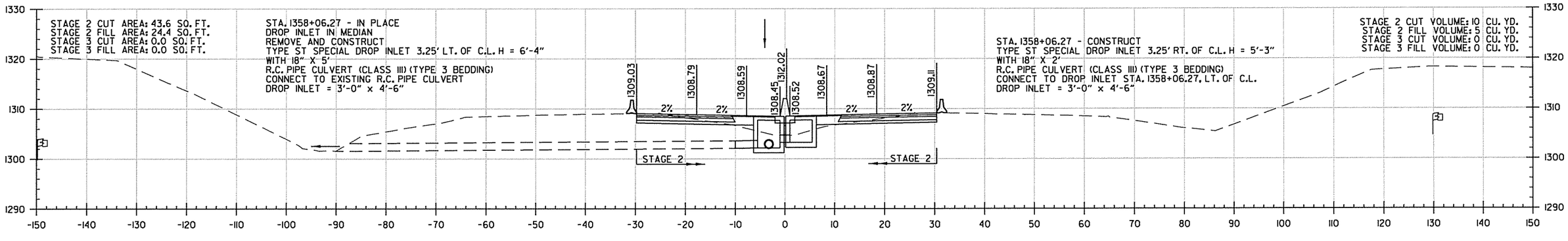

STA. 1358+06.27

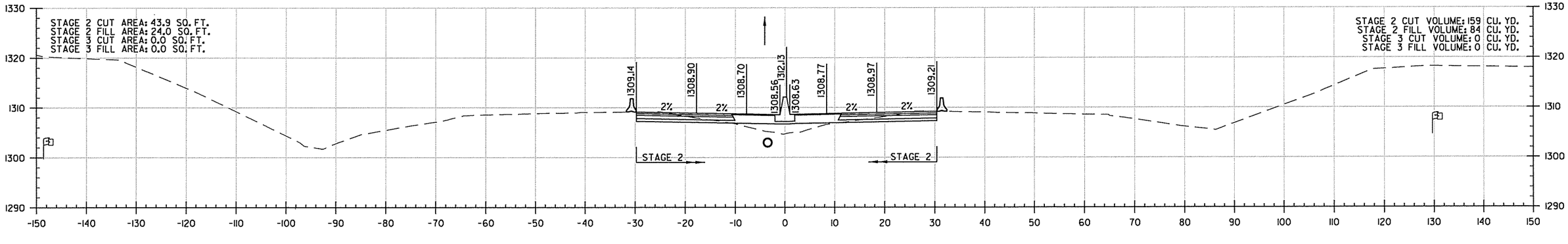

STA. 1358+00

I-49 STA. 1358+00 TO STA. 1359+00

4/28/2016
6:35:20 PM
...\CX\CA0902_CX_HWY540_01.dgn

DATE	DATE FILMED	DATE REVISED	DATE FILMED	FED.RD. DIST.NO.	STATE	FED.AID PROJ.NO.	SHEET NO.	TOTAL SHEETS
				6	ARK.			
				JOB NO.		CA0902	488	581

(2) I-49 CROSS SECTIONS

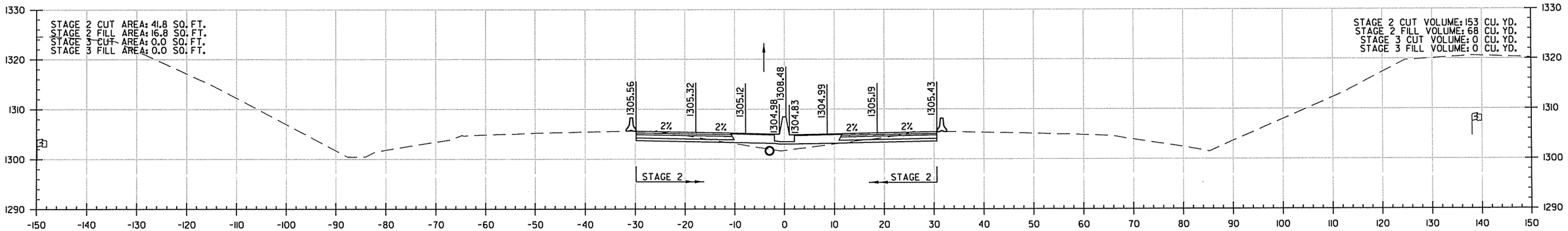

STA. 1361+00

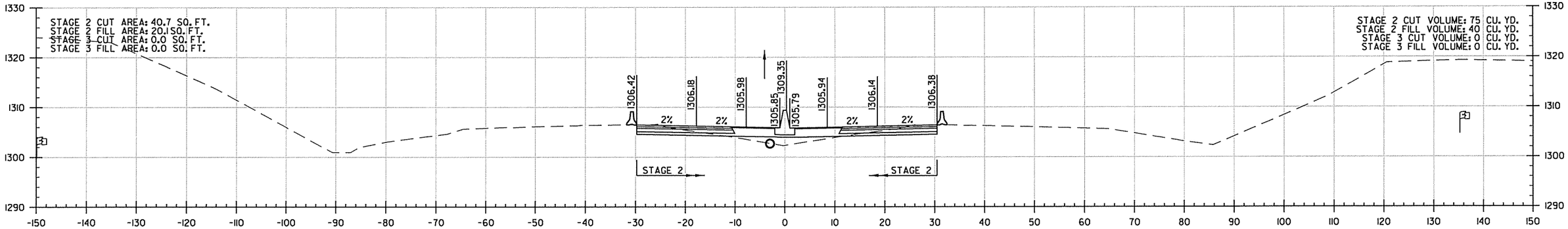

STA. 1360+00

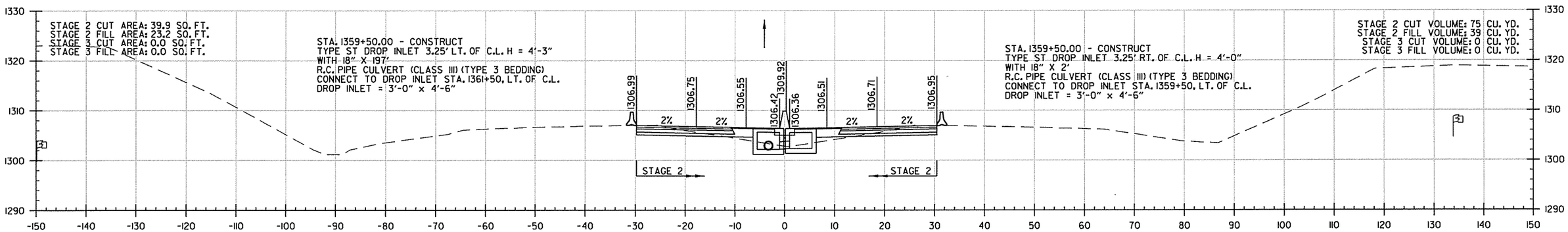

STA. 1359+50

I-49 STA. 1359+50 TO STA. 1361+00

4/28/2016
6:35:20 PM
...\CX\CA0902_CX_HWY540_01.dgn

DATE	DATE FILMED	DATE REVISED	DATE FILMED	FED.RD. DIST.NO.	STATE	FED.AID PROJ.NO.	SHEET NO.	TOTAL SHEETS
				6	ARK.			
				JOB NO.		CA0902	489	581

(2) I-49 CROSS SECTIONS

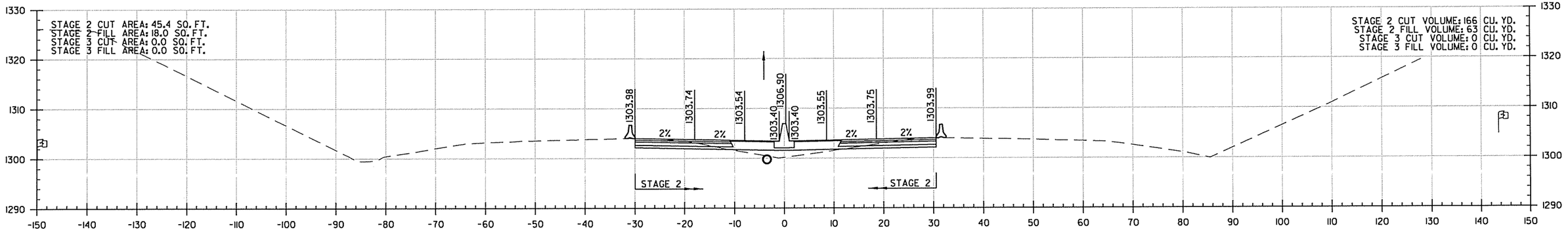

STA. 1363+00

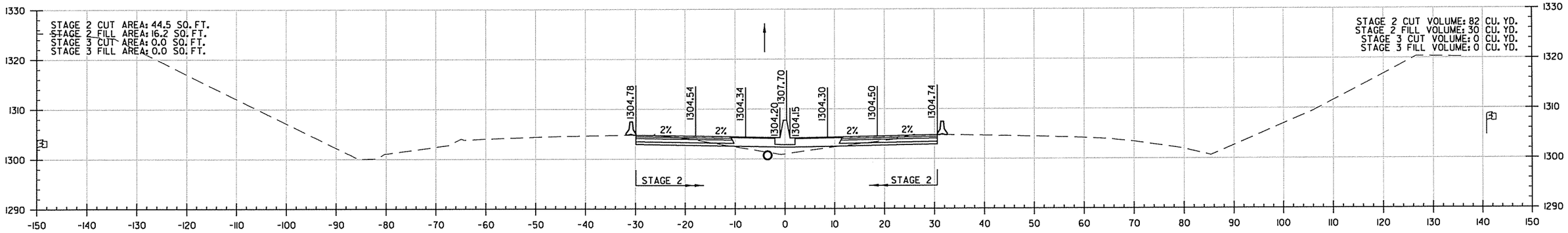

STA. 1362+00

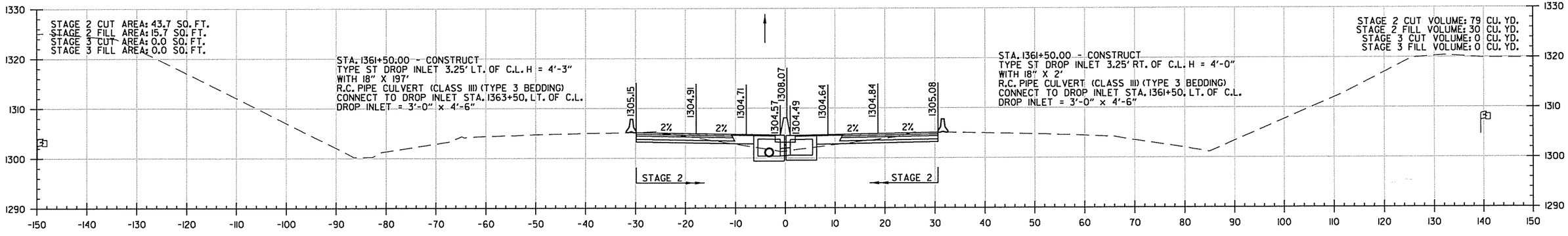

STA. 1361+50

I-49 STA. 1361+50 TO STA. 1363+00

4/28/2016
6:35:20 PM
...\CX\CA0902_CX_HWY540_01.dgn

DATE	DATE FILMED	DATE REVISED	DATE FILMED	FED.RD. DIST.NO.	STATE	FED.AID PROJ.NO.	SHEET NO.	TOTAL SHEETS
				6	ARK.			
				JOB NO.		CA0902	490	581

(2) I-49 CROSS SECTIONS

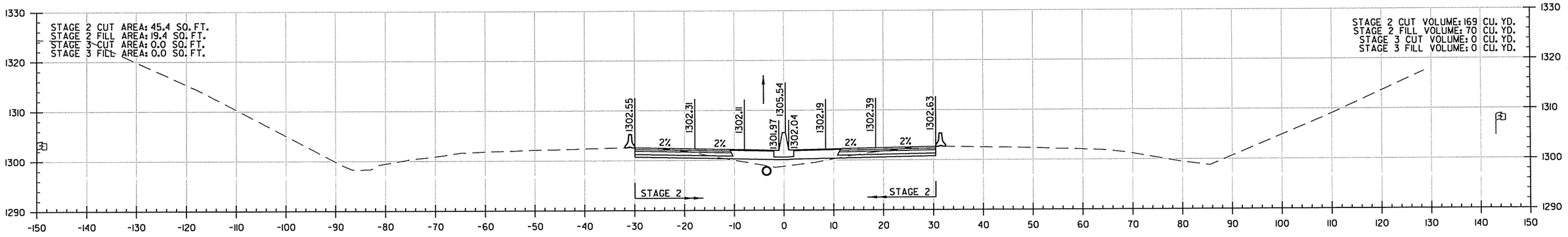

STA. 1365+00

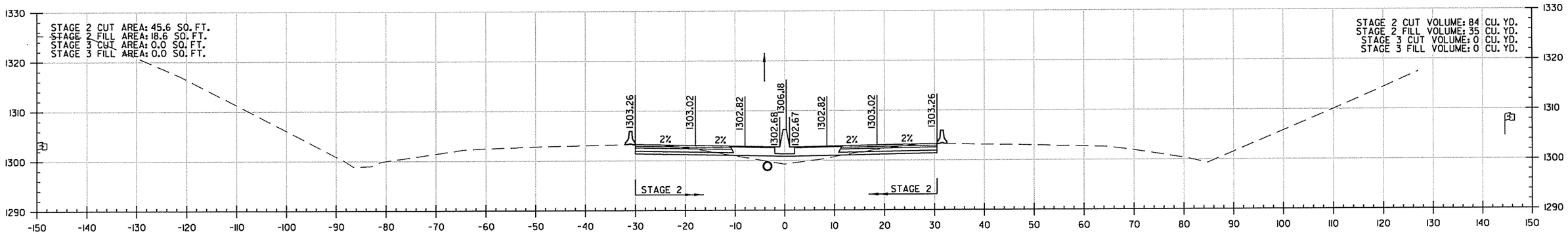

STA. 1364+00

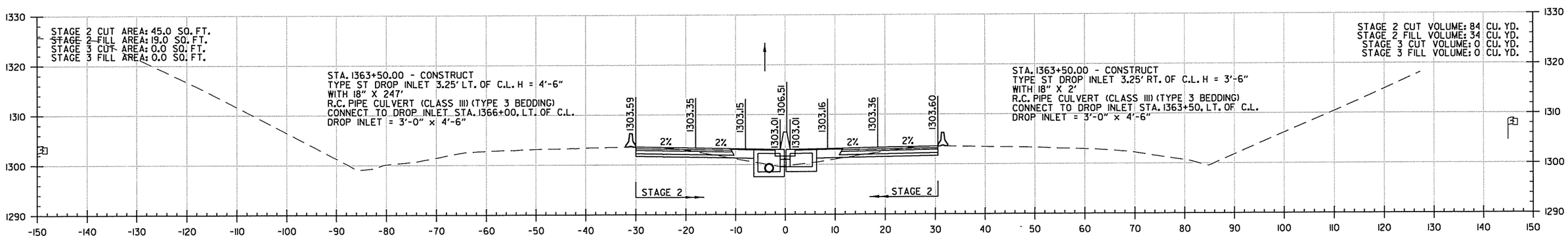

STA. 1363+50

I-49 STA. 1363+50 TO STA. 1365+00

4/28/2016
6:35:20 PM
\\CX\r CA0902_CX_HWY540_01.dgn

DATE	DATE FILMED	DATE REVISED	DATE FILMED	FED.RD. DIST.NO.	STATE	FED.AID PROJ.NO.	SHEET NO.	TOTAL SHEETS
				6	ARK.			
				JOB NO.		CA0902	491	581
				(2)	I-49 CROSS SECTIONS			

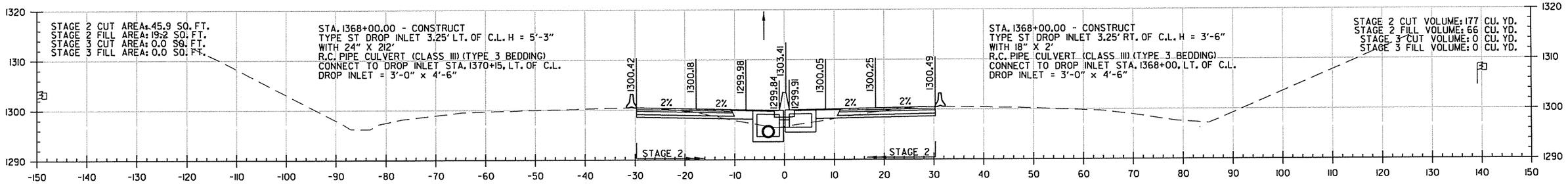

STA. 1368+00

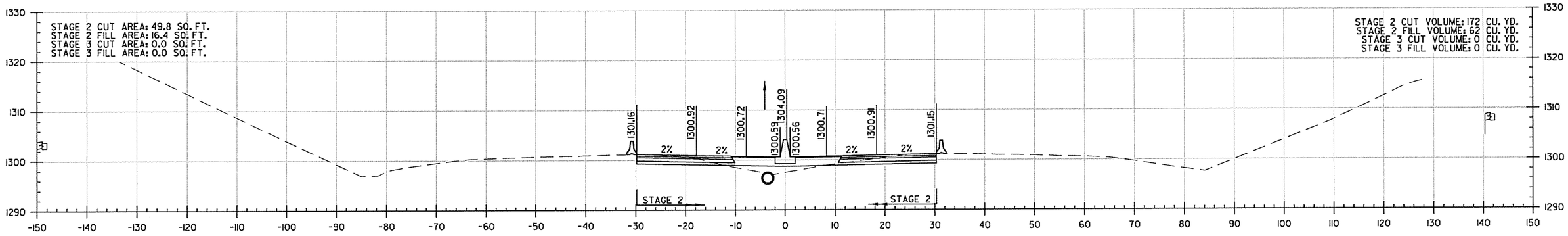

STA. 1367+00

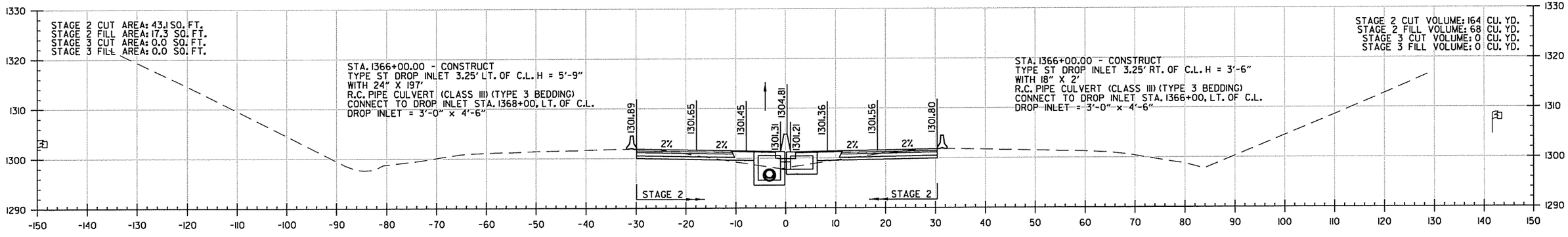

STA. 1366+00

I-49 STA. 1366+00 TO STA. 1368+00

4/28/2016
6:35:21 PM
\\ARA\CA0902_CX_HWY540_01.dgn

DATE	DATE FILMED	DATE REVISED	DATE FILMED	FED.RD. DIST.NO.	STATE	FED.AID PROJ.NO.	SHEET NO.	TOTAL SHEETS
				6	ARK.			
				JOB NO.		CA0902	492	581
				(2)	I-49 CROSS SECTIONS			

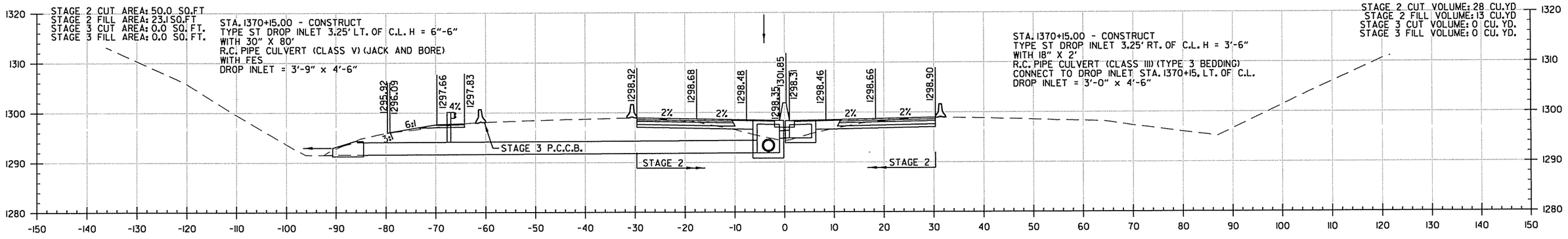

STA. 1370+15

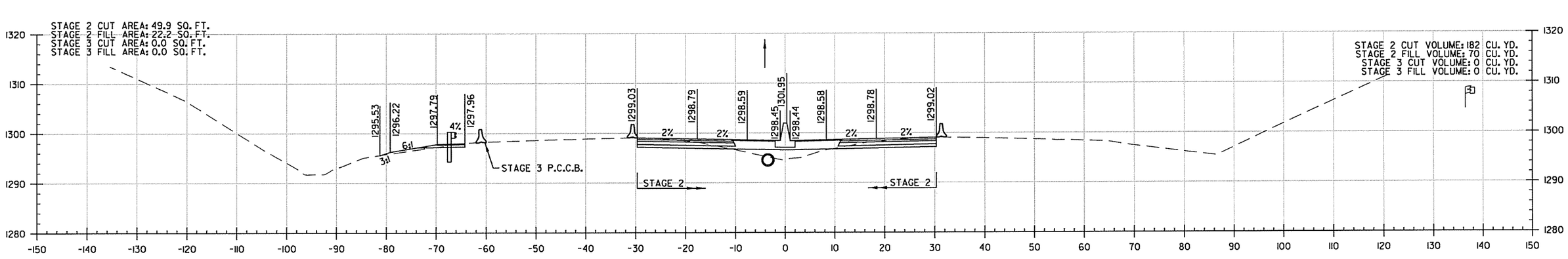

STA. 1370+00

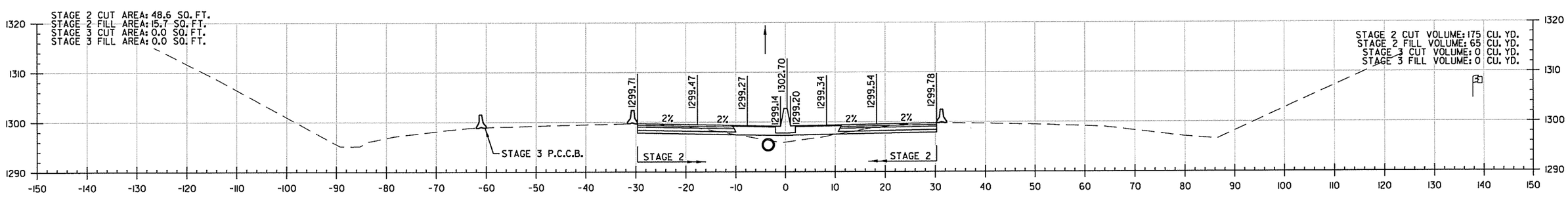

STA. 1369+00

I-49 STA. 1369+00 TO STA. 1370+15

4/28/2016
6:35:21 PM
\\DATA\CA0902_CX_HWY540_01.dgn

DATE	DATE FILMED	DATE REVISED	DATE FILMED	FED.RD. DIST.NO.	STATE	FED.AID PROJ.NO.	SHEET NO.	TOTAL SHEETS
				6	ARK.			
				JOB NO.		CA0902	493	581

(2) I-49 CROSS SECTIONS

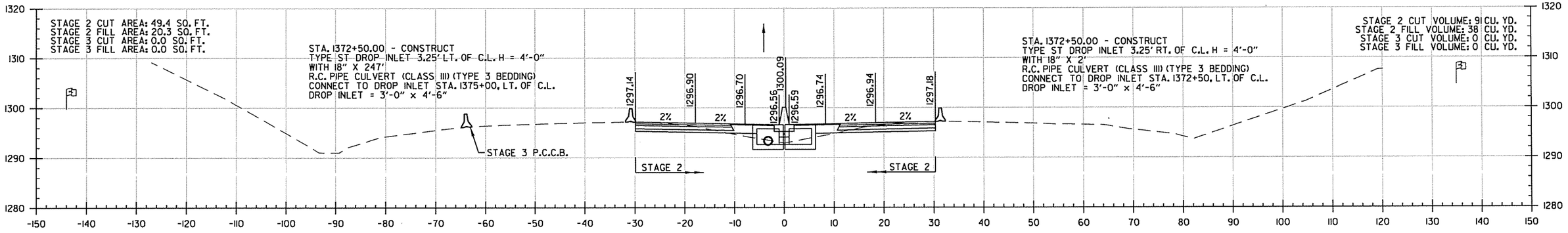

STA. 1372+50

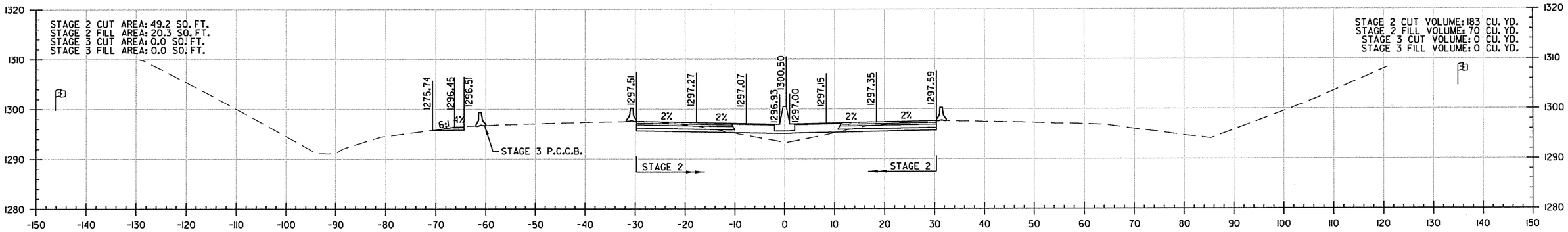

STA. 1372+00

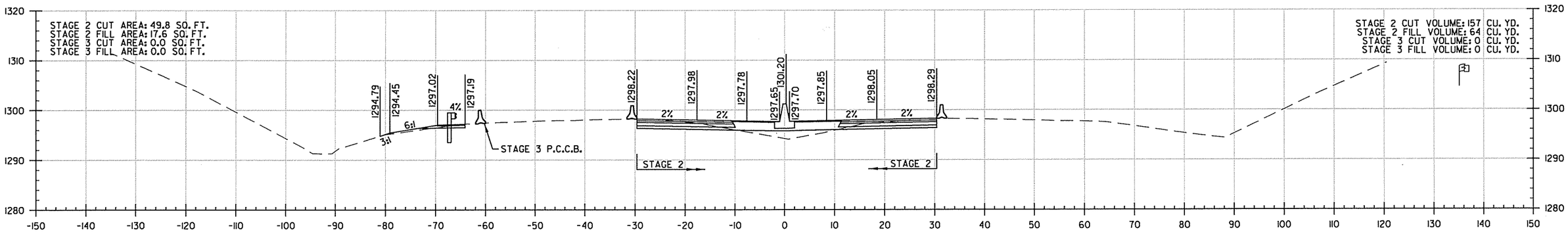

STA. 1371+00

I-49 STA. 1371+00 TO STA. 1372+50

4/28/2016
6:35:21 PM
\\CX\CA0902_CX_HWY540_01.dgn

DATE	DATE FILMED	DATE REVISED	DATE FILMED	FED.RD. DIST.NO.	STATE	FED.AID PROJ.NO.	SHEET NO.	TOTAL SHEETS
				6	ARK.			
				JOB NO.		CA0902	494	581

(2) I-49 CROSS SECTIONS

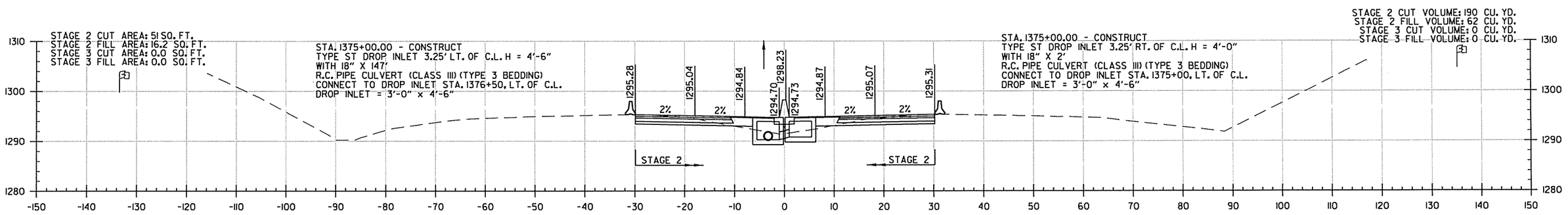

STA. 1375+00

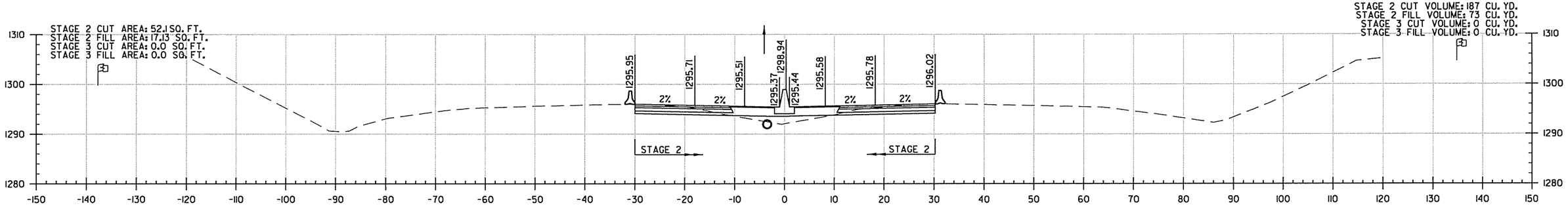

STA. 1374+00

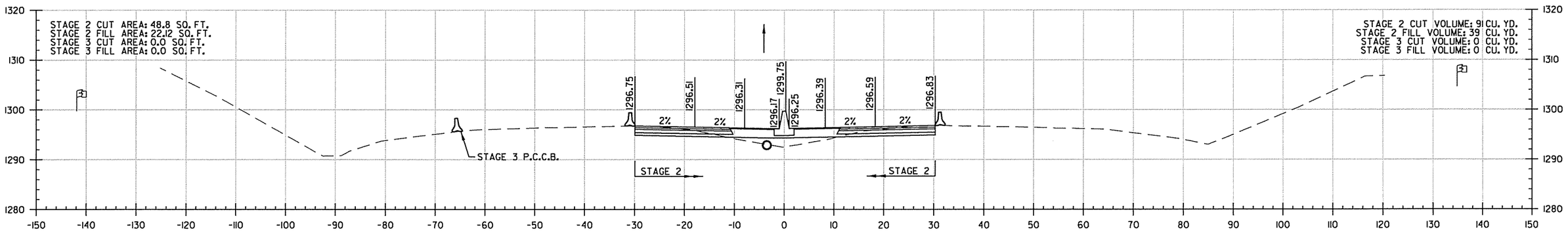

STA. 1373+00

I-49 STA. 1373+00 TO STA. 1375+00

4/28/2016
6:35:22 PM
\\CX\CA0902_CX_HWY540_01.dgn

DATE	DATE FILMED	DATE REVISED	DATE FILMED	FED.RD. DIST.NO.	STATE	FED.AID PROJ.NO.	SHEET NO.	TOTAL SHEETS
				6	ARK.			
				JOB NO.		CA0902	495	581

(2) I-49 CROSS SECTIONS

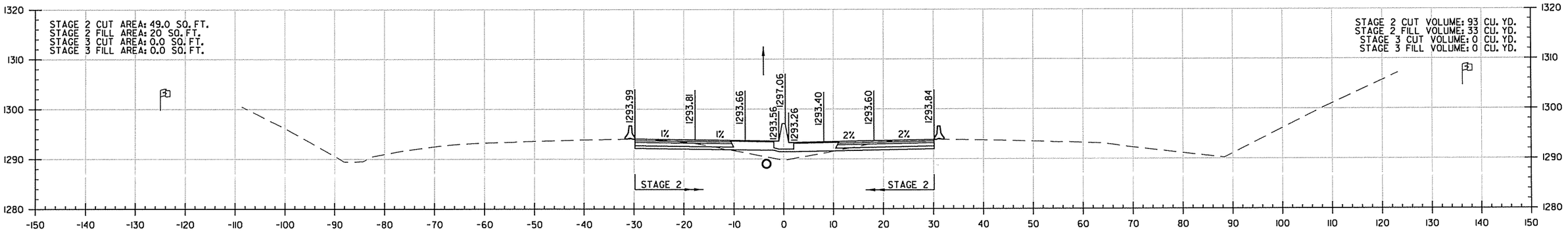

STA. 1377+00

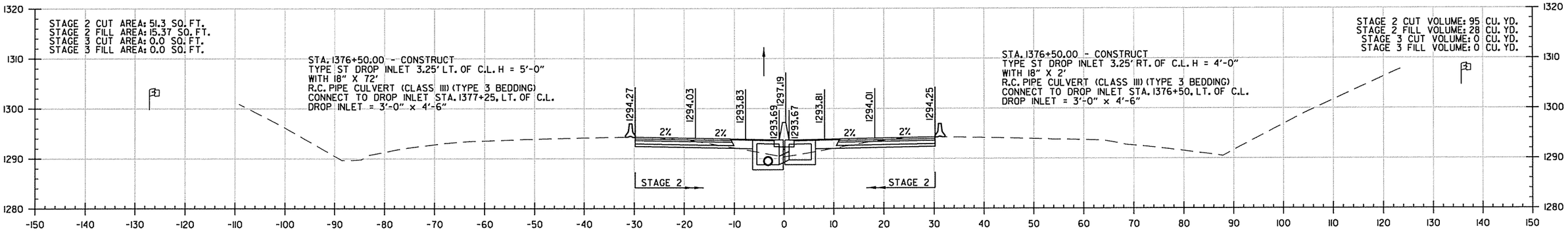

STA. 1376+50

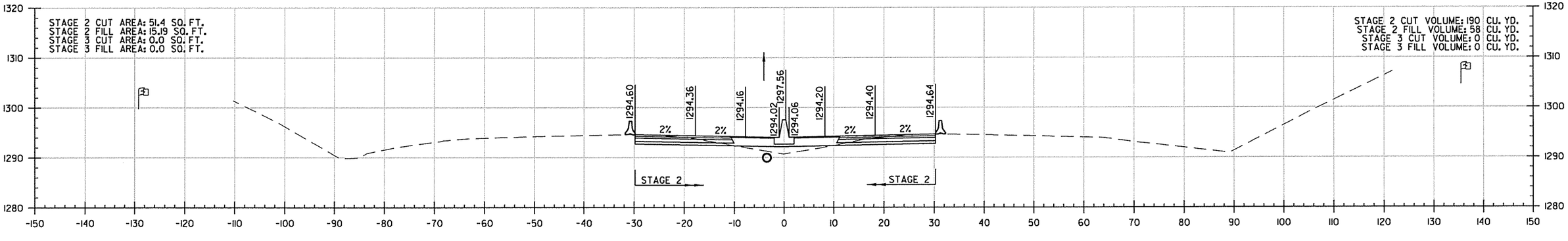

STA. 1376+00

I-49 STA. 1376+00 TO STA. 1377+00

4/28/2016
6:35:39 PM
...\CX\CA0902_CX_HWY540_01.dgn

DATE	DATE FILMED	DATE REVISED	DATE FILMED	FED.RD. DIST.NO.	STATE	FED.AID PROJ.NO.	SHEET NO.	TOTAL SHEETS
				6	ARK.			
				JOB NO.		CA0902	496	581

(2) I-49 CROSS SECTIONS

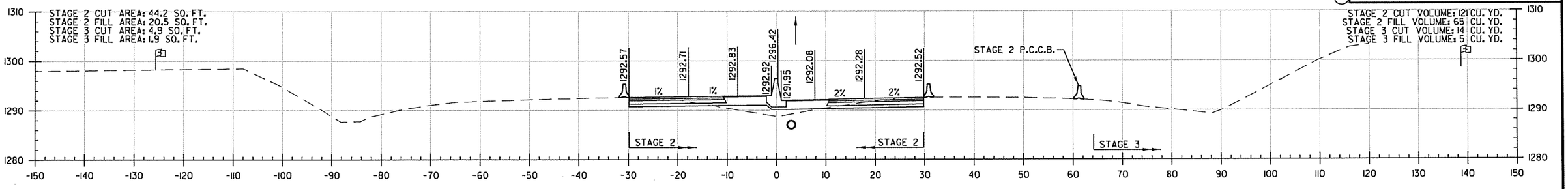

STA. 1379+00

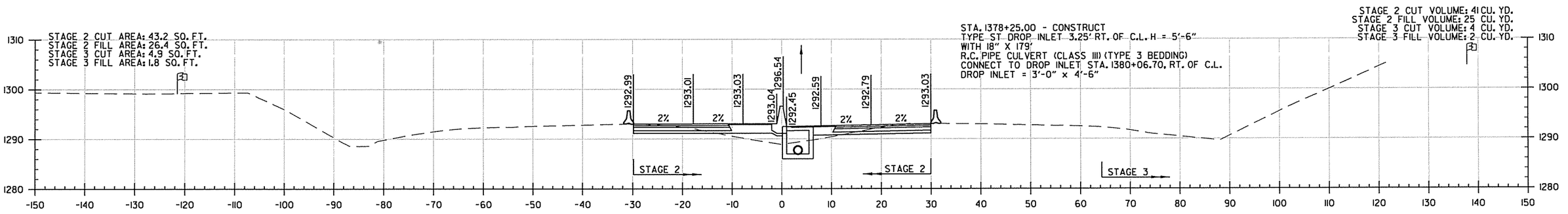

STA. 1378+25

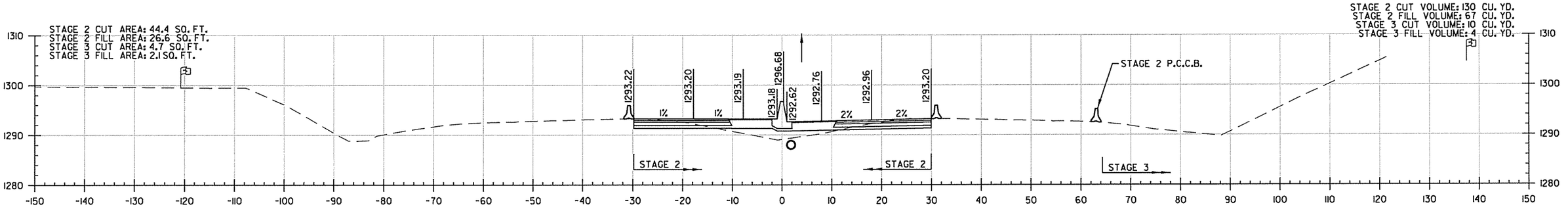

STA. 1378+00

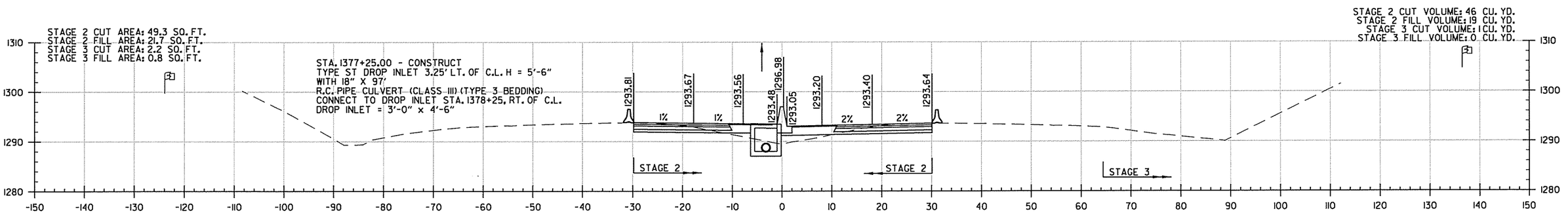

STA. 1377+25

I-49 STA. 1377+25 TO STA. 1379+00

4/28/2016
6:15:39 PM
\\XX\CA0902_CX_HWY540_01.dgn

DATE	DATE FILMED	DATE REVISED	DATE FILMED	FED.RD. DIST.NO.	STATE	FED.AID PROJ.NO.	SHEET NO.	TOTAL SHEETS
				6	ARK.			
				JOB NO.		CA0902	497	581

(2) I-49 CROSS SECTIONS

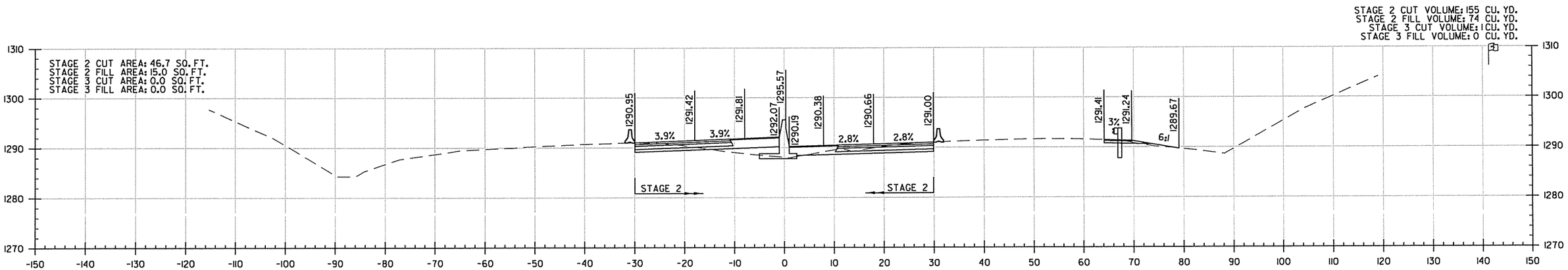

STA. 1381+00

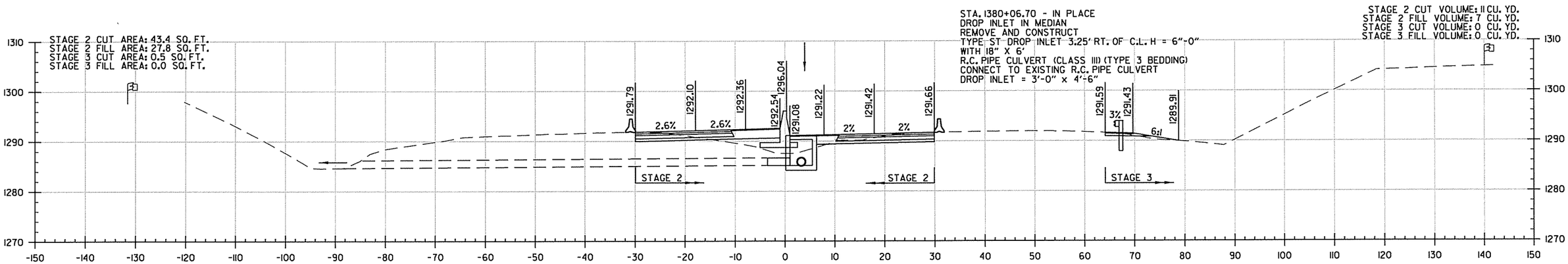

STA. 1380+06.70

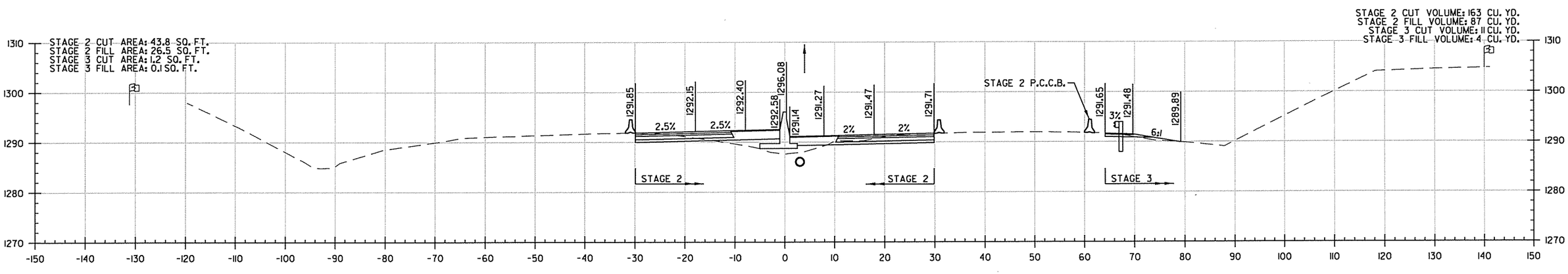

STA. 1380+00

I-49 STA. 1380+00 TO STA. 1381+00

4/28/2016
6:35:40 PM
\CX\CA0902_CX_HWY540_01.dgn

DATE	DATE FILMED	DATE REVISED	DATE FILMED	FED.RD. DIST.NO.	STATE	FED.AID PROJ.NO.	SHEET NO.	TOTAL SHEETS
				6	ARK.			
				JOB NO.		CA0902	498	581

(2) I-49 CROSS SECTIONS

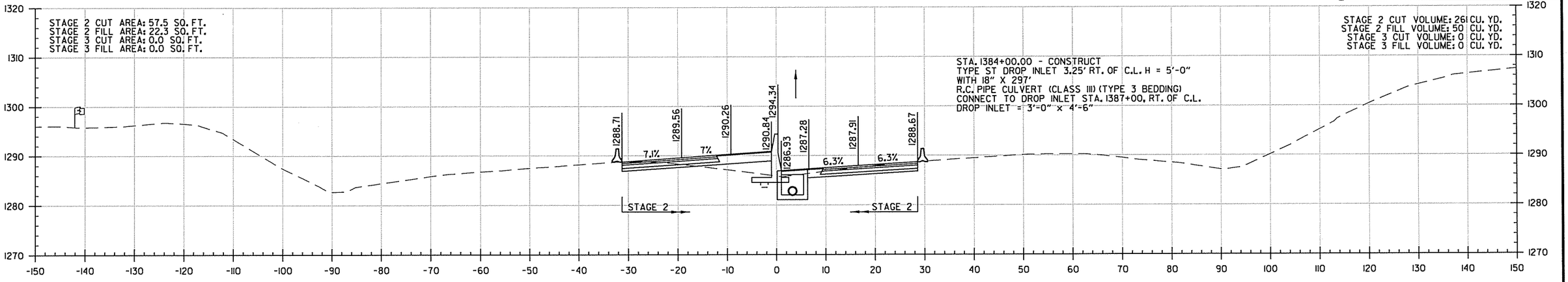

STA. 1384+00

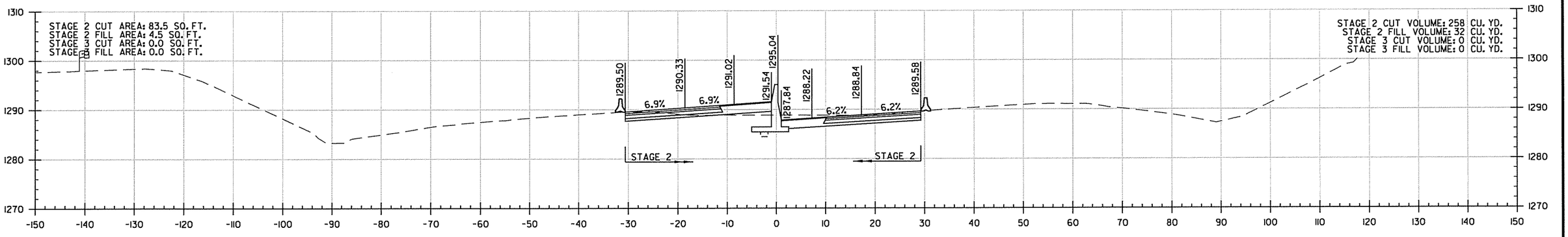

STA. 1383+00

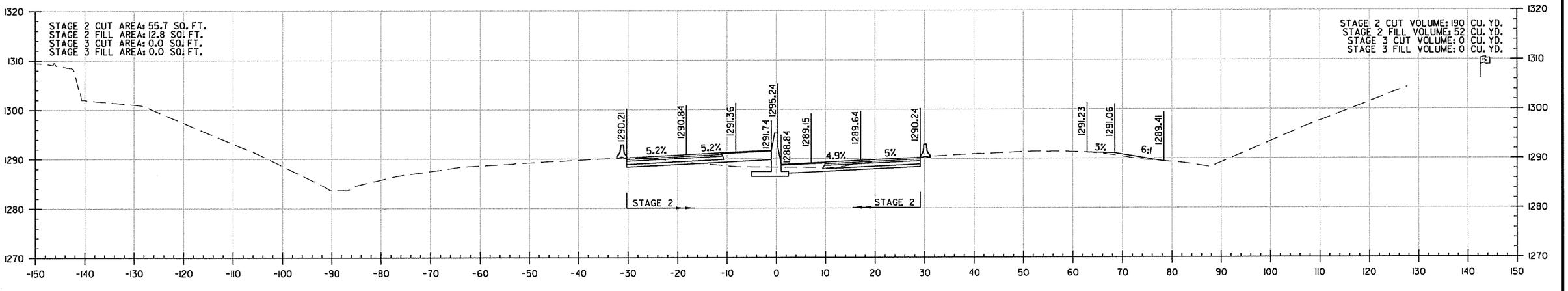

STA. 1382+00

I-49 STA. 1382+00 TO STA. 1384+00

4/28/2016
6:35:40 PM
...\CX\r-CA0902_CX_HWY540_01.dgn

DATE	DATE FILMED	DATE REVISED	DATE FILMED	FED.RD. DIST.NO.	STATE	FED.AID PROJ.NO.	SHEET NO.	TOTAL SHEETS
				6	ARK.			
				JOB NO.		CA0902	499	581

(2) I-49 CROSS SECTIONS

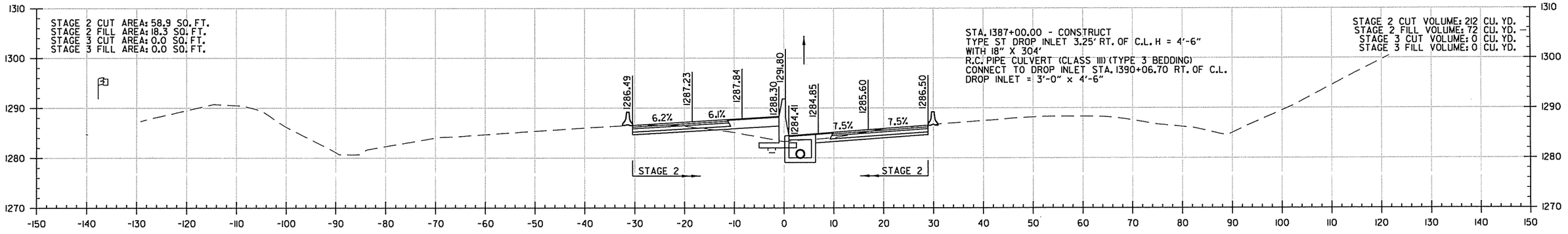

STA. 1387+00

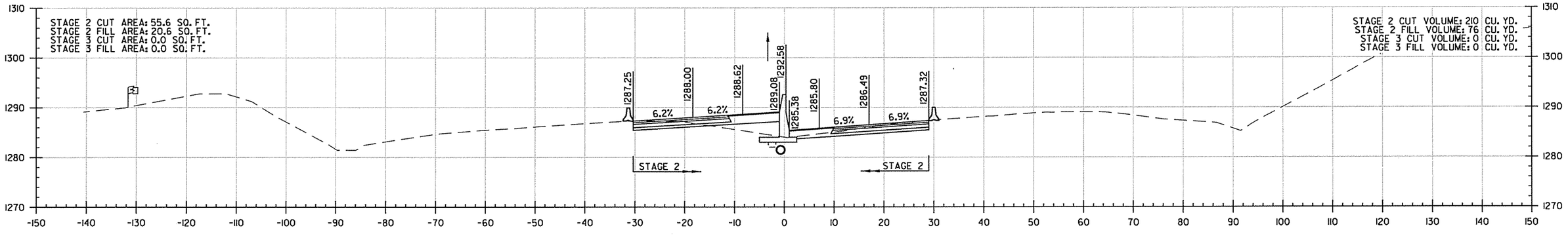

STA. 1386+00

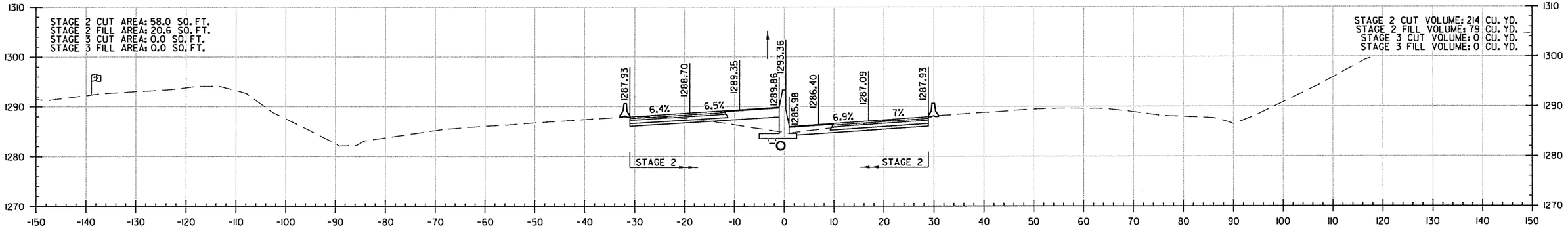

STA. 1385+00

I-49 STA. 1385+00 TO STA. 1387+00

4/28/2016
6:35:40 PM
...\CX\CA0902_CX_HWY540_01.dgn

DATE	DATE FILMED	DATE REVISED	DATE FILMED	FED.RD. DIST.NO.	STATE	FED.AID PROJ.NO.	SHEET NO.	TOTAL SHEETS
				6	ARK.			
				JOB NO.		CA0902	500	581

(2) I-49 CROSS SECTIONS

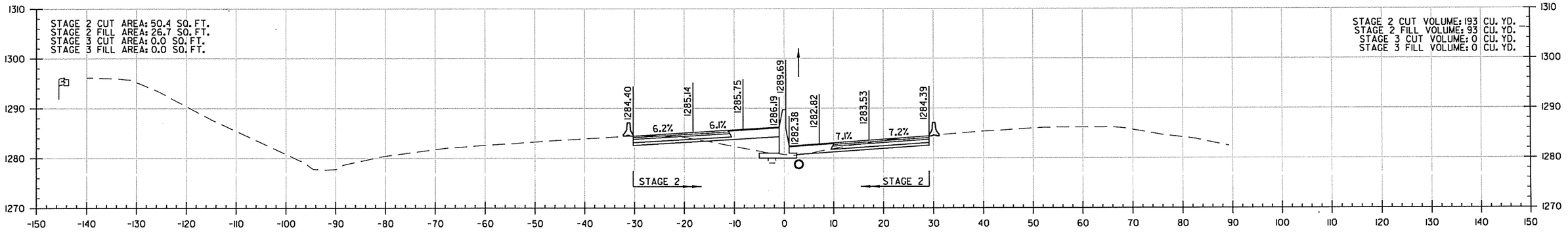

STA. 1390+00

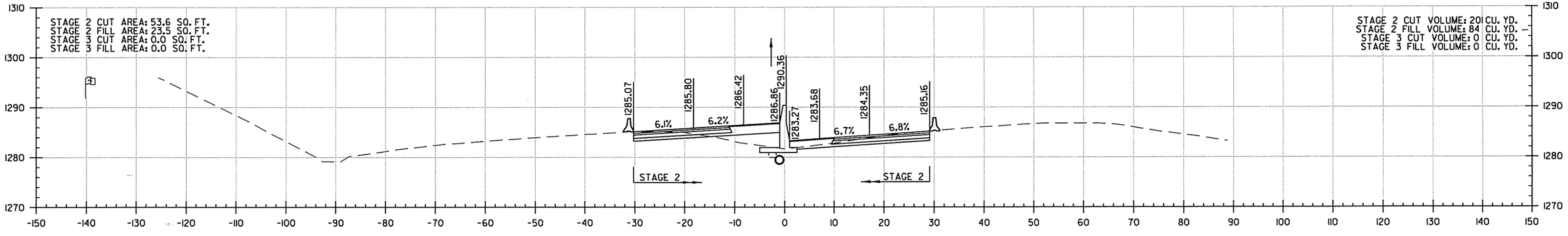

STA. 1389+00

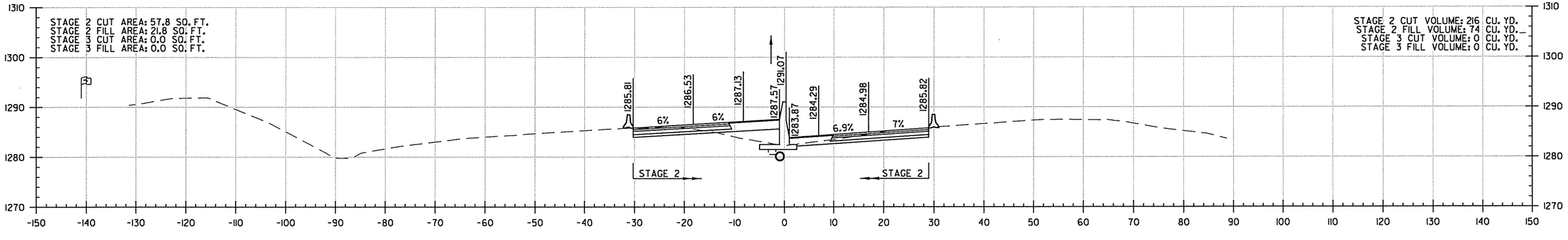

STA. 1388+00

I-49 STA. 1388+00 TO STA. 1390+00

4/28/2016
6:35:41 PM
...\CX\CA0902_CX_HWY540_01.dgn

DATE	DATE FILMED	DATE REVISED	DATE FILMED	FED.RD. DIST.NO.	STATE	FED.AID PROJ.NO.	SHEET NO.	TOTAL SHEETS
				6	ARK.			
				JOB NO.		CA0902	501	581

(2) I-49 CROSS SECTIONS

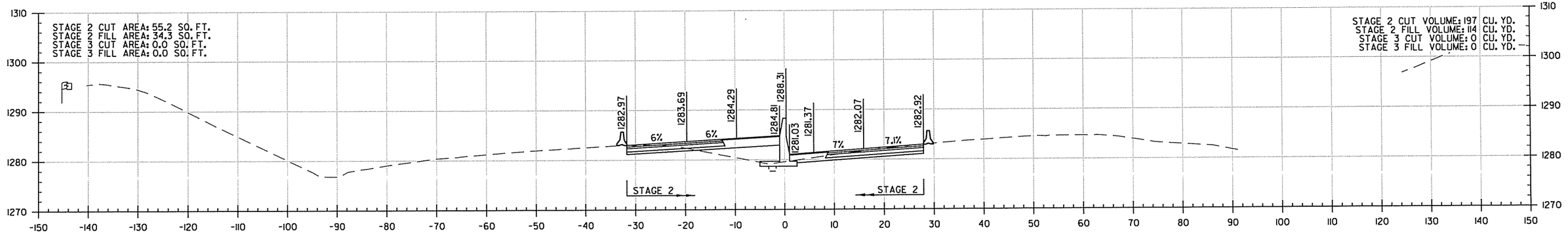

STA. 1392+00

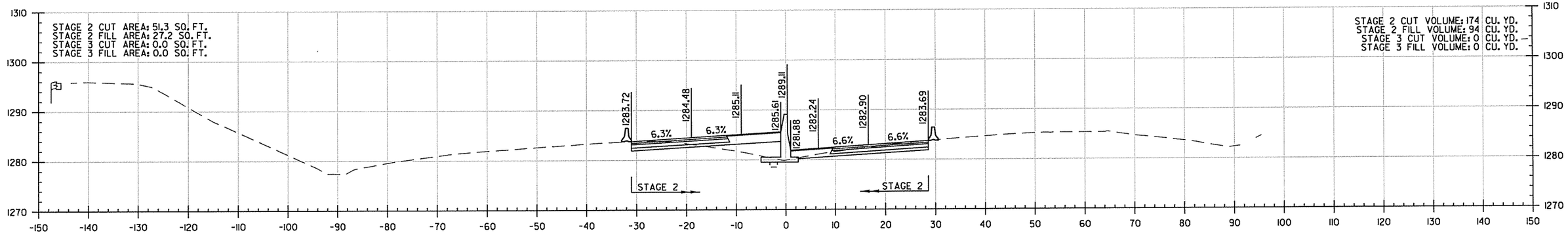

STA. 1391+00

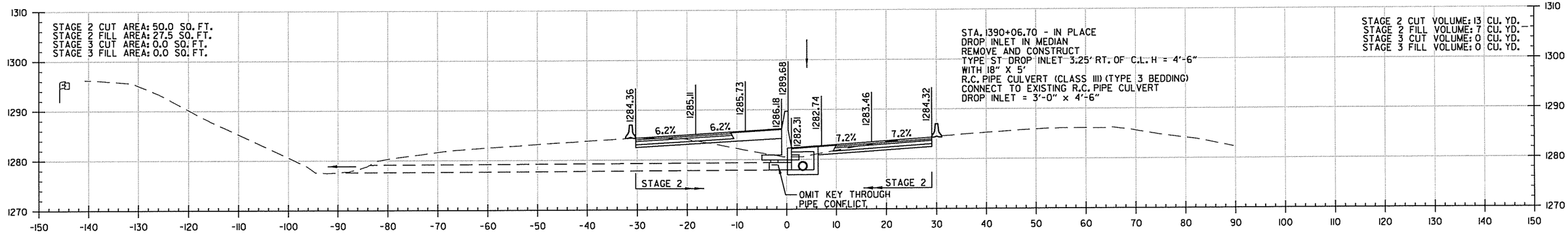

STA. 1390+06.70

I-49 STA. 1390+07 TO STA. 1392+00

4/28/2016
6:35:41 PM
...\CX\CA0902_CX_HWY540_01.dgn

DATE	DATE FILMED	DATE REVISED	DATE FILMED

FED.RD. DIST.NO.	STATE	FED.AID PROJ.NO.	SHEET NO.	TOTAL SHEETS
6	ARK.			
JOB NO.		CA0902	502	581

(2) I-49 CROSS SECTIONS

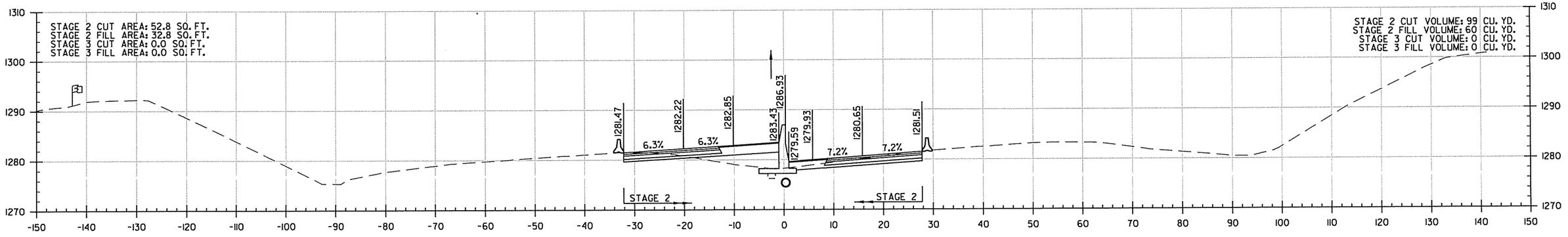

STA. 1394+00

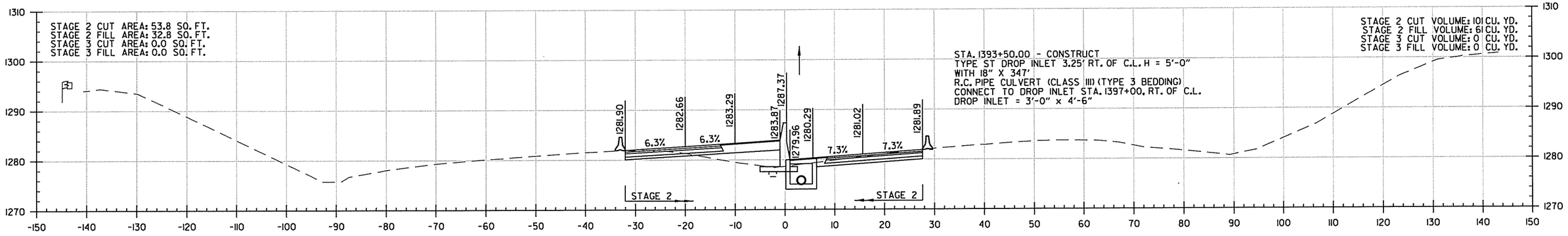

STA. 1393+50

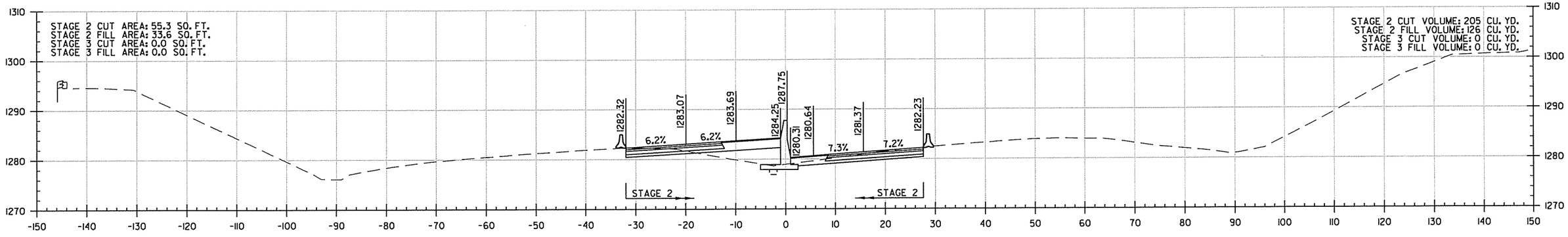

STA. 1393+00

I-49 STA. 1393+00 TO STA. 1394+00

4/28/2016
6:35:41 PM
...\CA0902_CX_HWY540_01.dgn

DATE	DATE FILMED	DATE REVISED	DATE FILMED	FED.RD. DIST.NO.	STATE	FED.AID PROJ.NO.	SHEET NO.	TOTAL SHEETS
				6	ARK.			
				JOB NO.		CA0902	503	581
				(2)	I-49 CROSS SECTIONS			

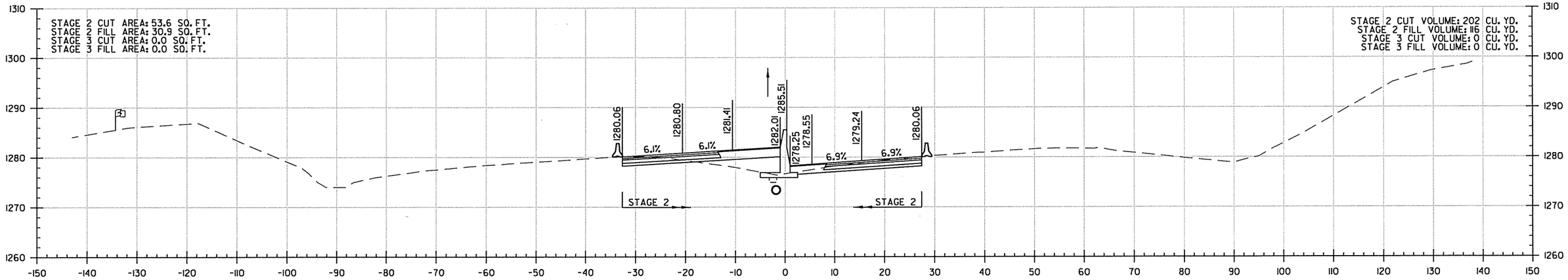

STA. 1396+00

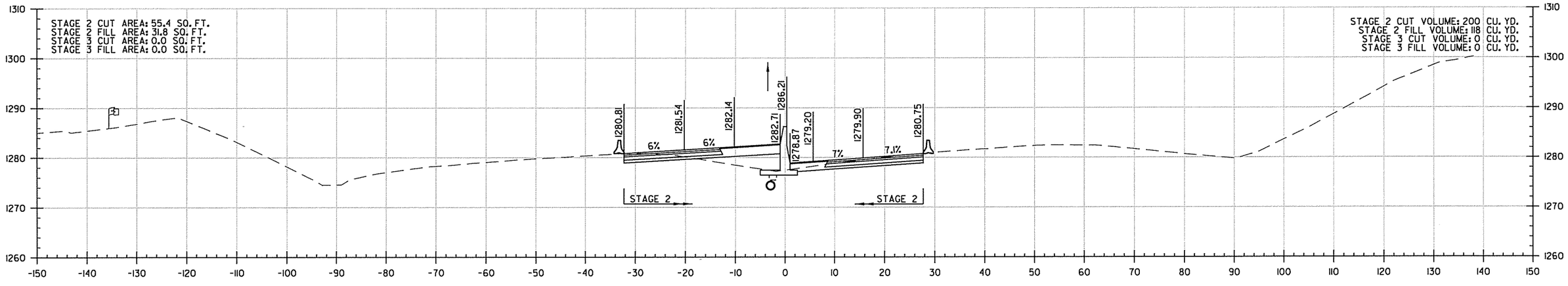

STA. 1395+00

I-49 STA. 1395+00 TO STA. 1396+00

4/28/2016
6:55:41 PM
\\DATA\CA0902_CX_HWY540_01.dgn

DATE	DATE FILMED	DATE REVISED	DATE FILMED	FED.RD. DIST.NO.	STATE	FED.AID PROJ.NO.	SHEET NO.	TOTAL SHEETS
				6	ARK.			
				JOB NO.		CA0902	504	581

(2) I-49 CROSS SECTIONS

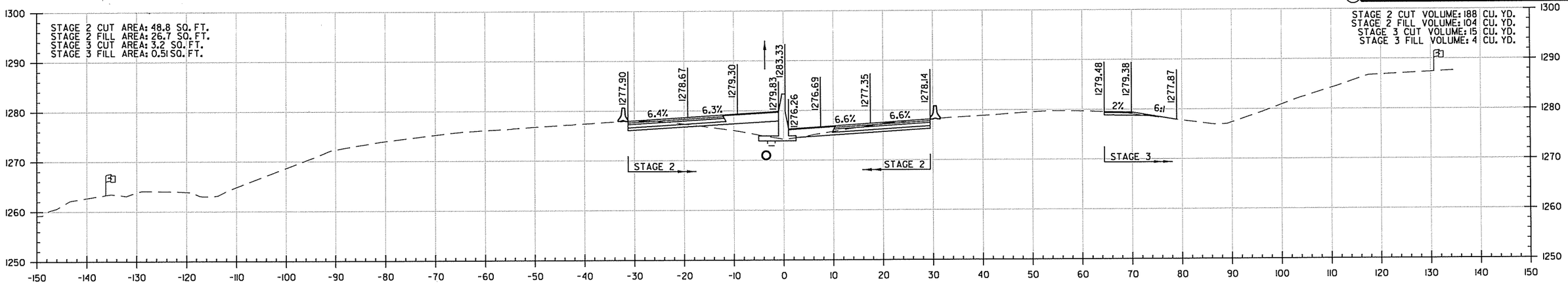

STA. 1399+00

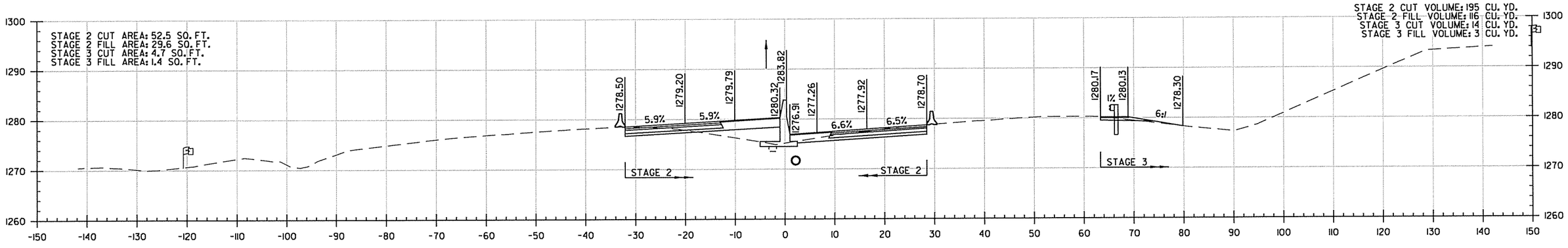

STA. 1398+00

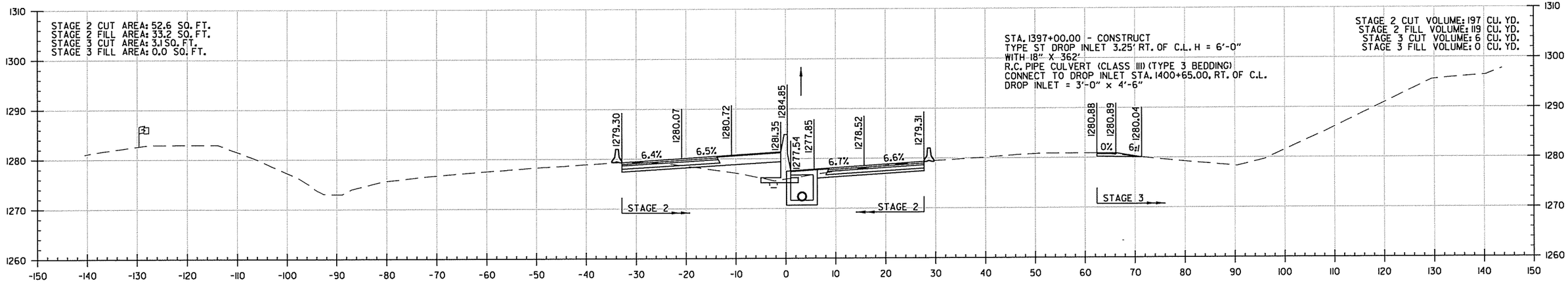

STA. 1397+00

I-49 STA. 1397+00 TO STA. 1399+00

4/28/2016
6:35:42 PM
u:\CX\r-CA0902_CX_HWY540_01.dgn

DATE	DATE FILMED	DATE REVISED	DATE FILMED	FED.RD. DIST.NO.	STATE	FED.AID PROJ.NO.	SHEET NO.	TOTAL SHEETS
				6	ARK.			
				JOB NO.		CA0902	505	581
				(2)	I-49 CROSS SECTIONS			

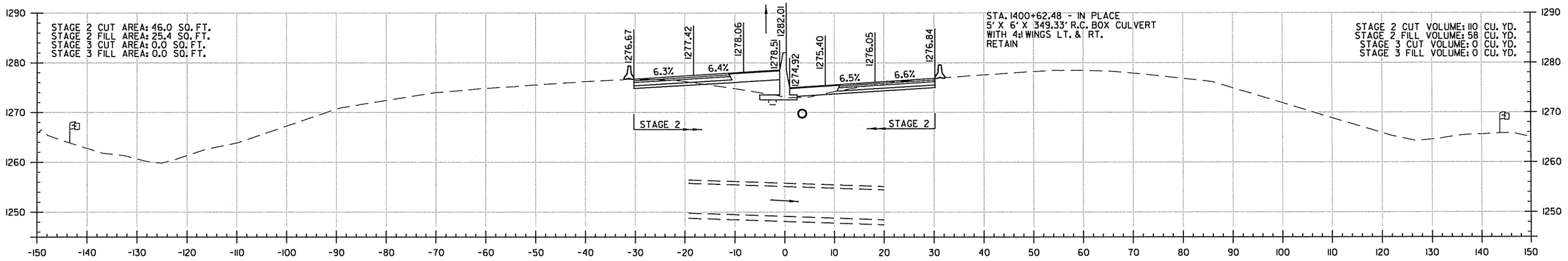

STA. 1400+62

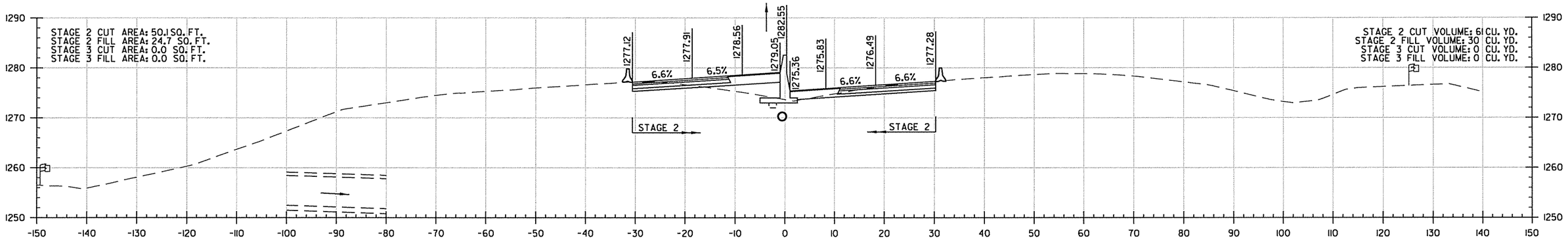

STA. 1400+00

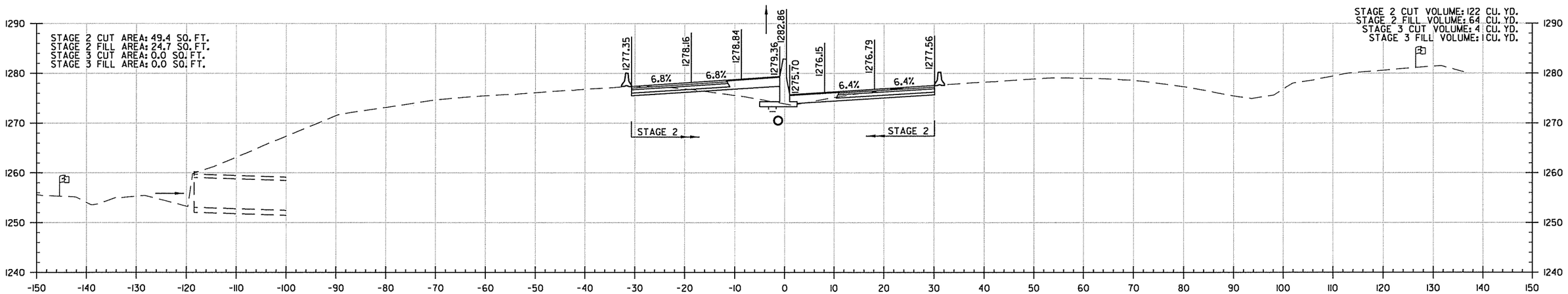

STA. 1399+67

I-49 STA. 1399+67 TO STA. 1400+62

4/28/2016
6:55:42 PM
...\CA0902_CX_HWY540_01.dgn

DATE	DATE FILMED	DATE REVISED	DATE FILMED	FED.RD. DIST.NO.	STATE	FED.AID PROJ.NO.	SHEET NO.	TOTAL SHEETS
				6	ARK.			
				JOB NO.		CA0902	506	581

(2) I-49 CROSS SECTIONS

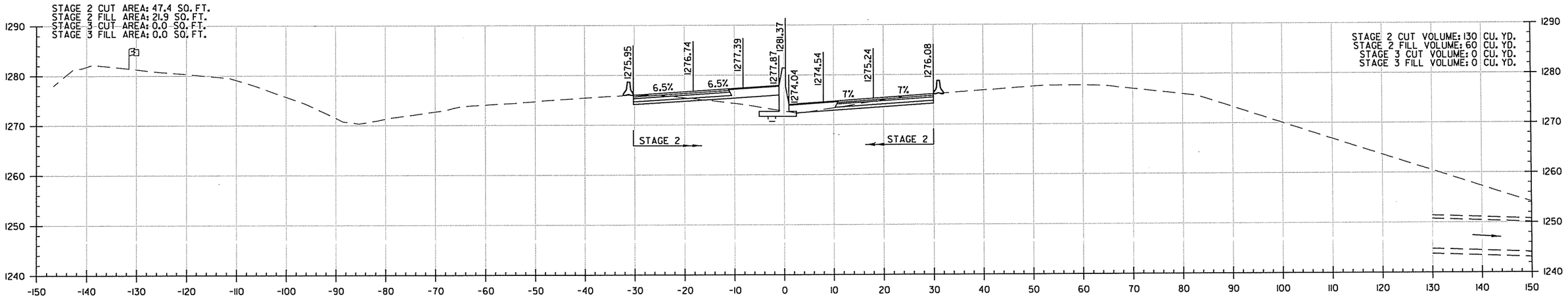

STA. 1401+73

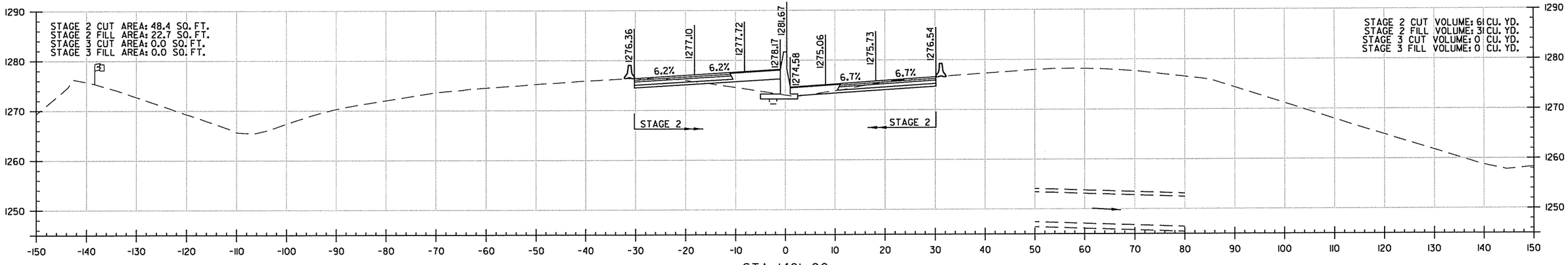

STA. 1401+00

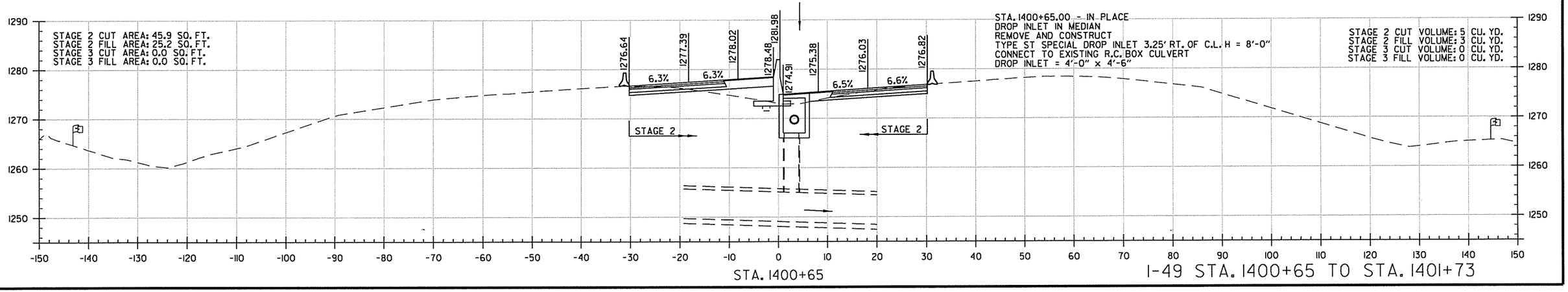

STA. 1400+65

I-49 STA. 1400+65 TO STA. 1401+73

4/28/2016
6:35:42 PM
\\CX\CA0902_CX_HWY540_01.dgn

DATE	DATE FILMED	DATE REVISED	DATE FILMED	FED.RD. DIST.NO.	STATE	FED.AID PROJ.NO.	SHEET NO.	TOTAL SHEETS
				6	ARK.			
				JOB NO.		CA0902	507	581

(2) I-49 CROSS SECTIONS

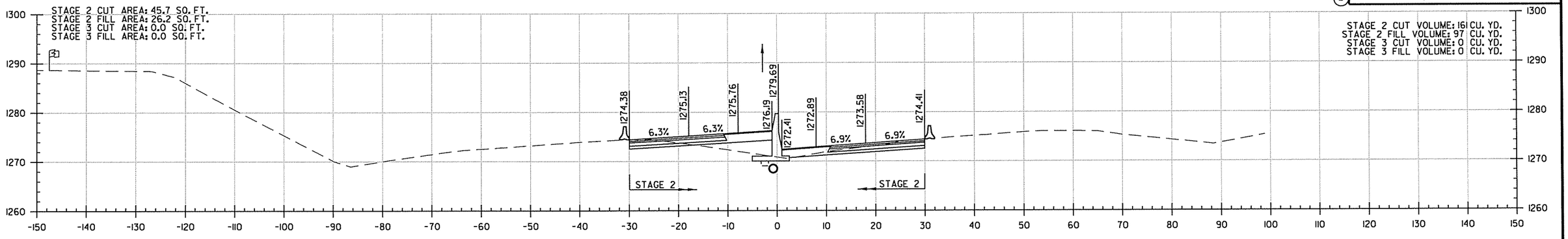

STA. 1404+00

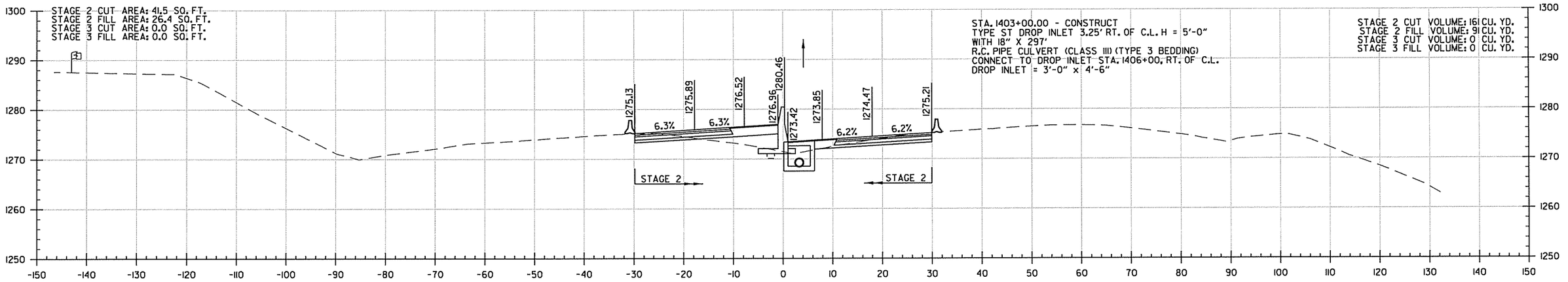

STA. 1403+00

STA. 1402+00

I-49 STA. 1402+00 TO STA. 1404+00

4/28/2016
6:35:43 PM
...\CX\CA0902_CX_HWY540_01.dgn

DATE	DATE FILMED	DATE REVISED	DATE FILMED	FED.RD. DIST.NO.	STATE	FED.AID PROJ.NO.	SHEET NO.	TOTAL SHEETS
				6	ARK.			
				JOB NO.		CA0902	508	581

(2) I-49 CROSS SECTIONS

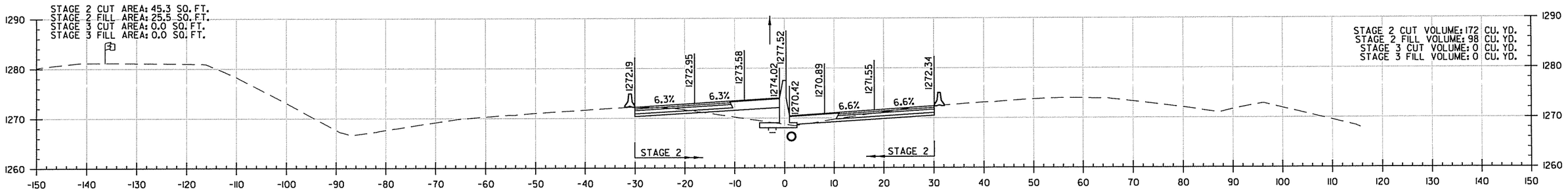

STA. 1407+00

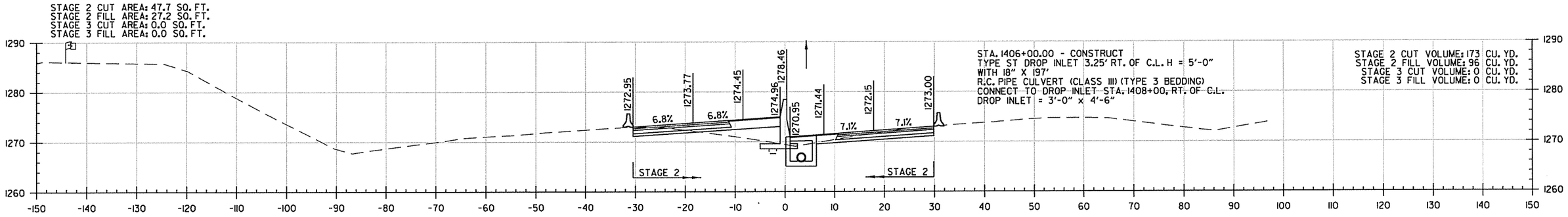

STA. 1406+00

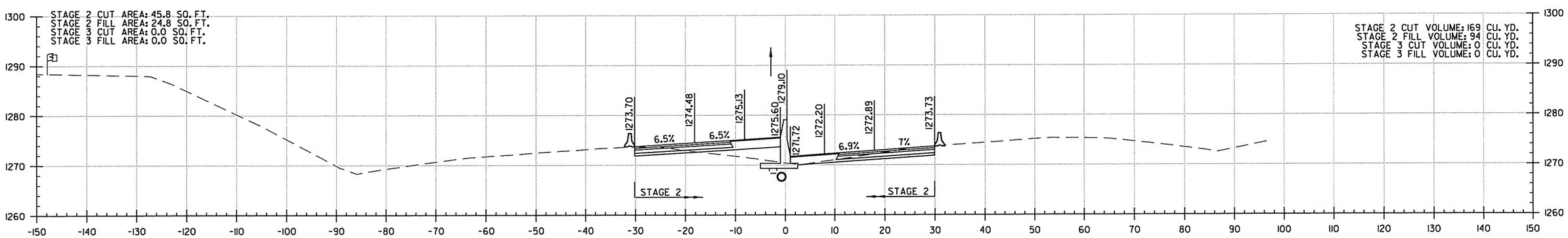

STA. 1405+00

I-49 STA. 1405+00 TO STA. 1407+00

4/28/2016
6:35:43 PM
...\CX\CA0902_CX_HWY540_01.dgn

DATE	DATE FILMED	DATE REVISED	DATE FILMED

FED.RD. DIST.NO.	STATE	FED.AID PROJ.NO.	SHEET NO.	TOTAL SHEETS
6	ARK.			
JOB NO.		CA0902	509	581

(2) I-49 CROSS SECTIONS

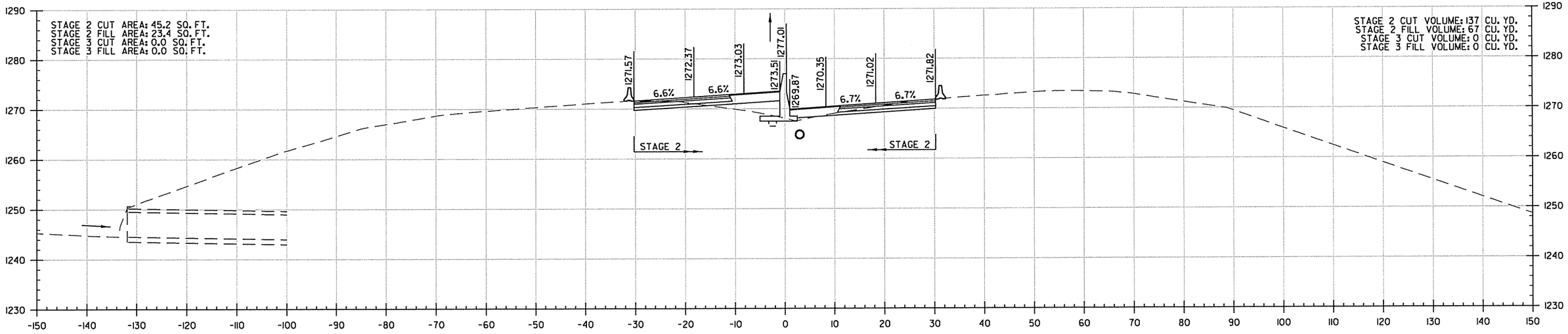

STA. 1408+79

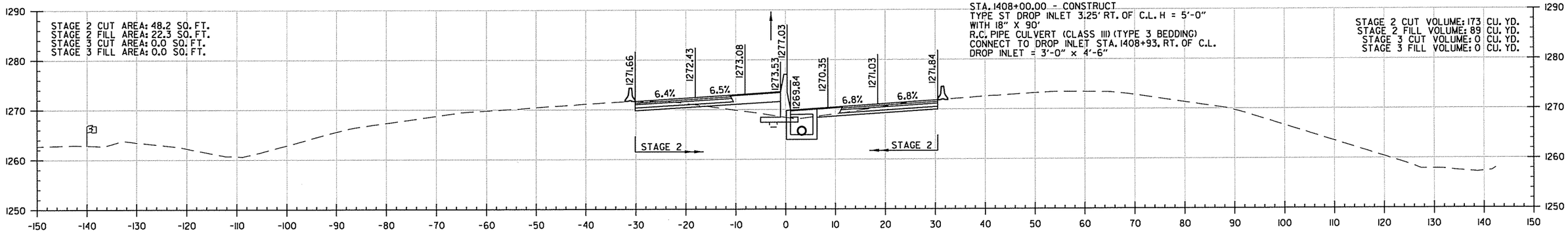

STA. 1408+00

I-49 STA. 1408+00 TO STA. 1408+79

4/28/2016
6:35:43 PM
\\XRT\CA0902_CX_HWY540_01.dgn

DATE	DATE FILMED	DATE REVISED	DATE FILMED	FED.RD. DIST.NO.	STATE	FED.AID PROJ.NO.	SHEET NO.	TOTAL SHEETS
				6	ARK.			
				JOB NO.		CA0902	510	581

(2) I-49 CROSS SECTIONS

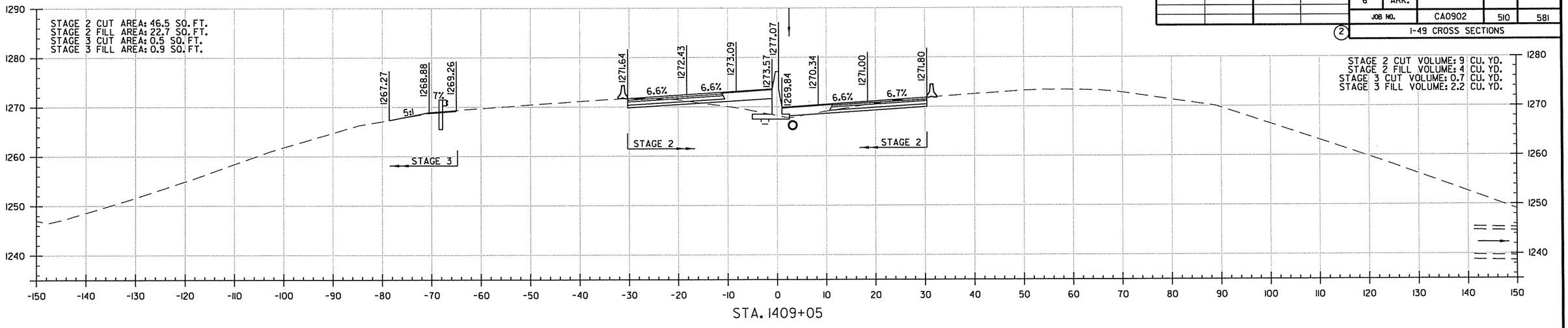

STA. 1409+05

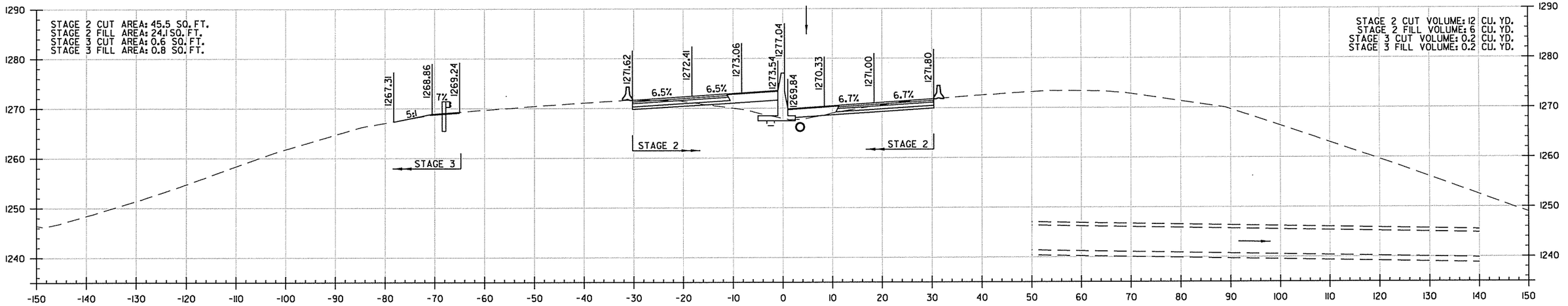

STA. 1409+00

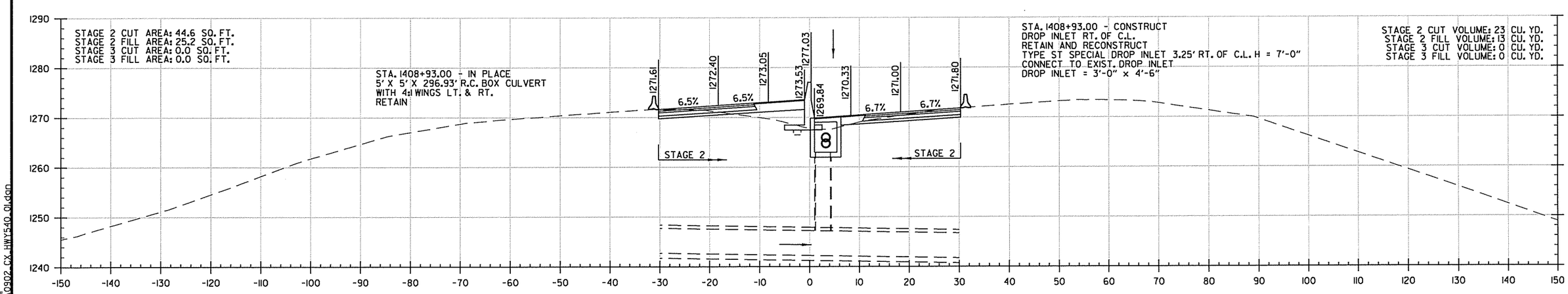

STA. 1408+93

I-49 STA. 1408+93 TO STA. 1409+05

4/28/2016
6:35:44 PM
...\CX\rCA0902_CX_HWY540_01.dgn

DATE	DATE FILMED	DATE REVISED	DATE FILMED	FED.RD. DIST.NO.	STATE	FED.AID PROJ.NO.	SHEET NO.	TOTAL SHEETS
				6	ARK.			
				JOB NO.		CA0902	511	581

(2) I-49 CROSS SECTIONS

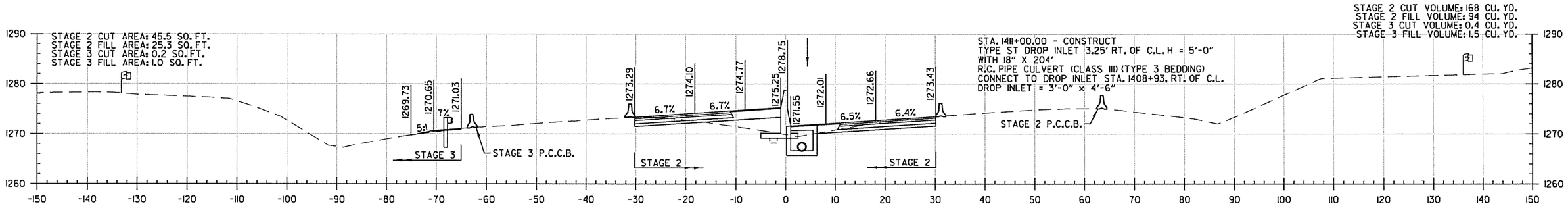

STA. 1411+00

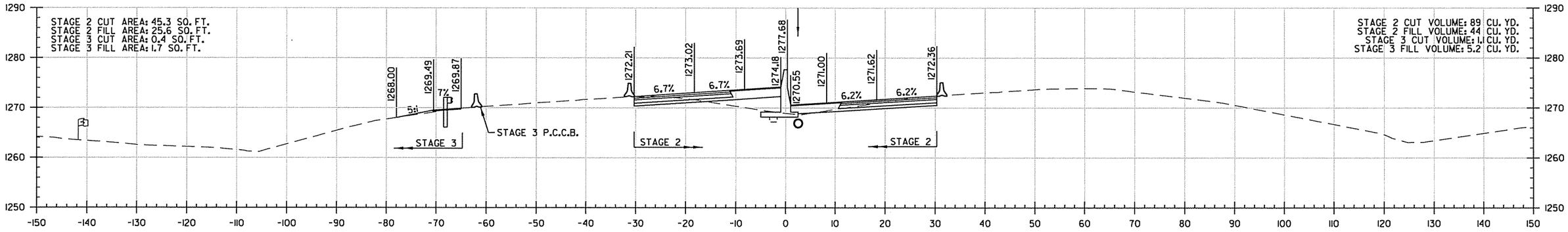

STA. 1410+00

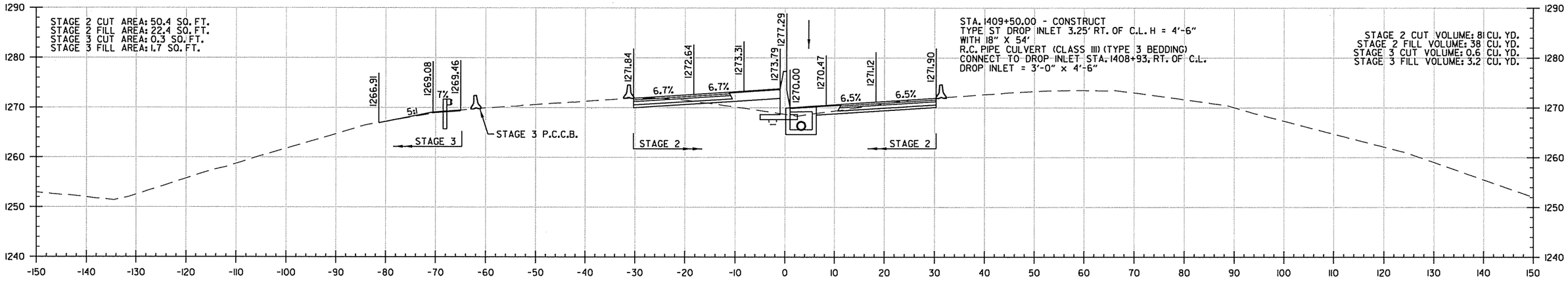

STA. 1409+50

I-49 STA. 1409+50 TO STA. 1411+00

4/28/2016
6:35:44 PM
...\CX\CA0902_CX_HWY540_01.dgn

DATE	DATE FILMED	DATE REVISED	DATE FILMED	FED.RD. DIST.NO.	STATE	FED.AID PROJ.NO.	SHEET NO.	TOTAL SHEETS
				6	ARK.			
				JOB NO.		CA0902	512	581

(2) I-49 CROSS SECTIONS

STA. 1415+00.00 - CONSTRUCT
TYPE ST DROP INLET 3.25' RT. OF C.L. H = 4'-9"
WITH 18" X 397'
R.C. PIPE CULVERT (CLASS III) (TYPE 3 BEDDING)
CONNECT TO DROP INLET STA. 1411+00, RT. OF C.L.
DROP INLET = 3'-0" x 4'-6"

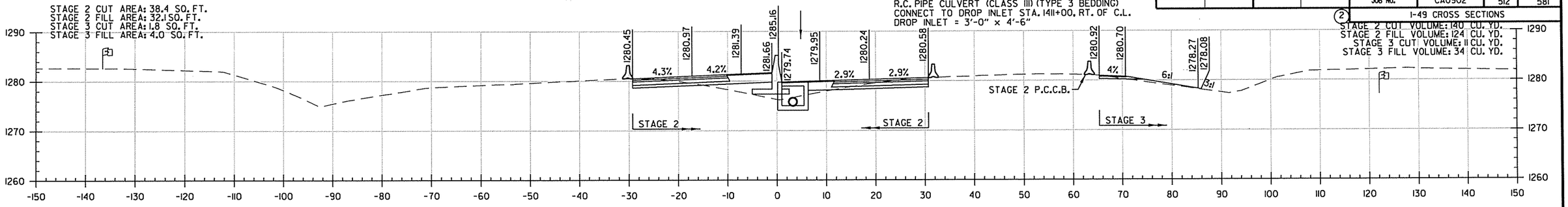

STA. 1415+00

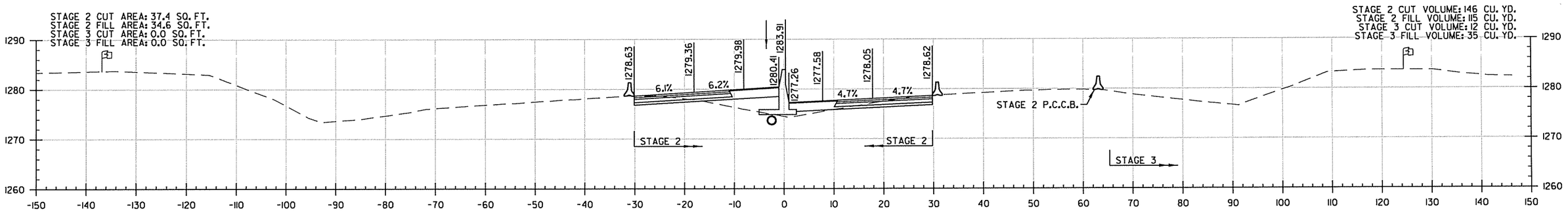

STA. 1414+00

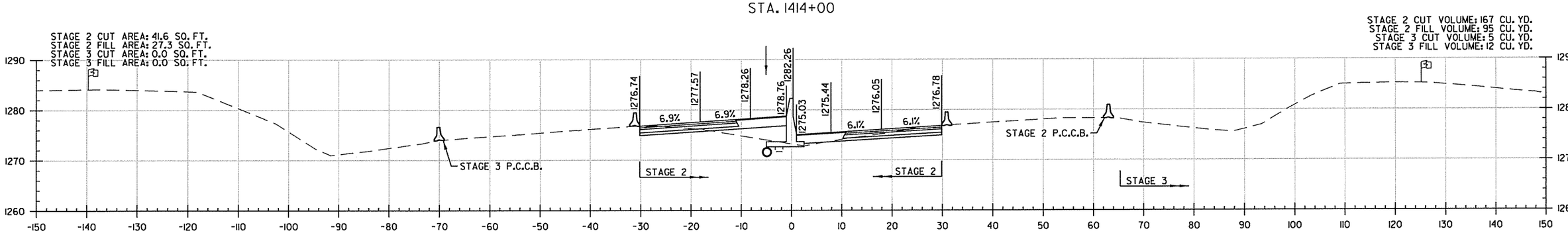

STA. 1413+00

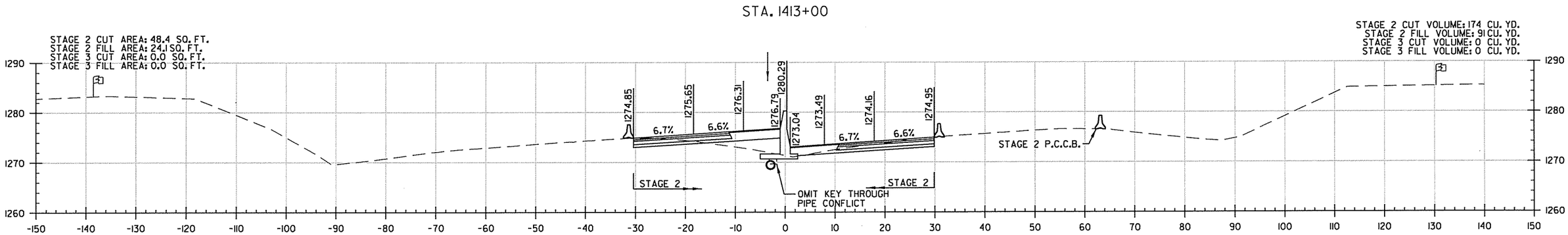

STA. 1412+00

I-49 STA. 1412+00 TO STA. 1415+00

4/28/2016
6:35:44 PM
...\CX\CA0902_CX_HWY540_01.dgn

DATE	DATE FILMED	DATE REVISED	DATE FILMED	FED.RD. DIST.NO.	STATE	FED.AID PROJ.NO.	SHEET NO.	TOTAL SHEETS
				6	ARK.			
				JOB NO.		CA0902	513	581

(2) I-49 CROSS SECTIONS

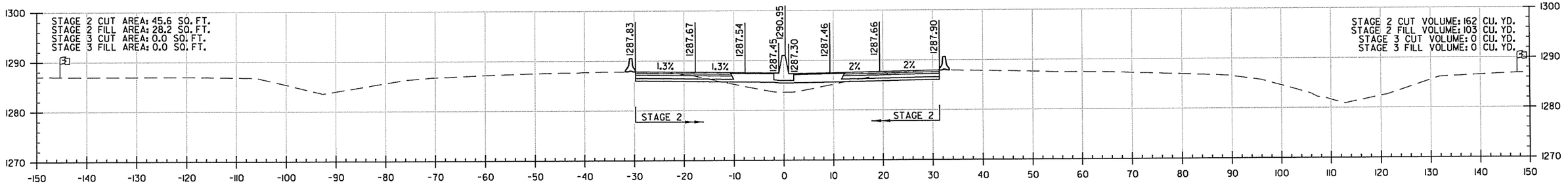

STA. 1419+00

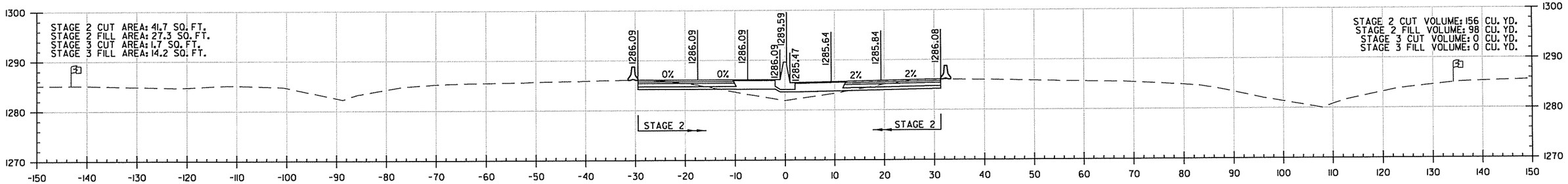

STA. 1418+00

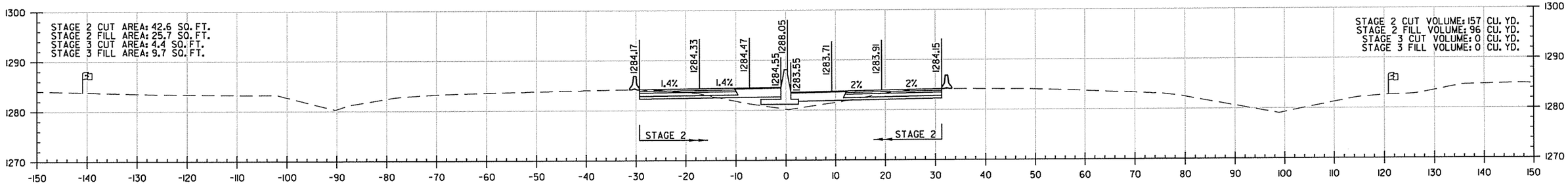

STA. 1417+00

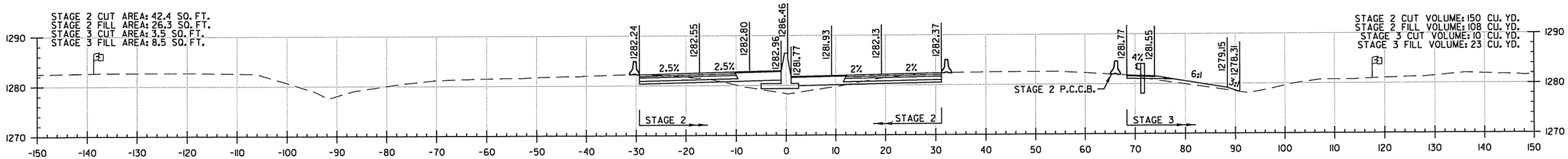

STA. 1416+00

I-49 STA. 1416+00 TO STA. 1419+00

4/28/2016
6:35:45 PM
...\CX\r-CA0902_CX_HWY540_01.dgn

DATE	DATE FILMED	DATE REVISED	DATE FILMED	FED.RD. DIST.NO.	STATE	FED.AID PROJ.NO.	SHEET NO.	TOTAL SHEETS
				6	ARK.			
				JOB NO.		CA0902	514	581

(2) I-49 CROSS SECTIONS

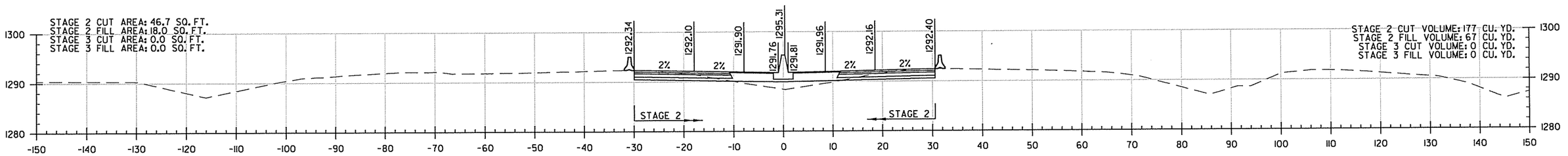

STA. 1422+00

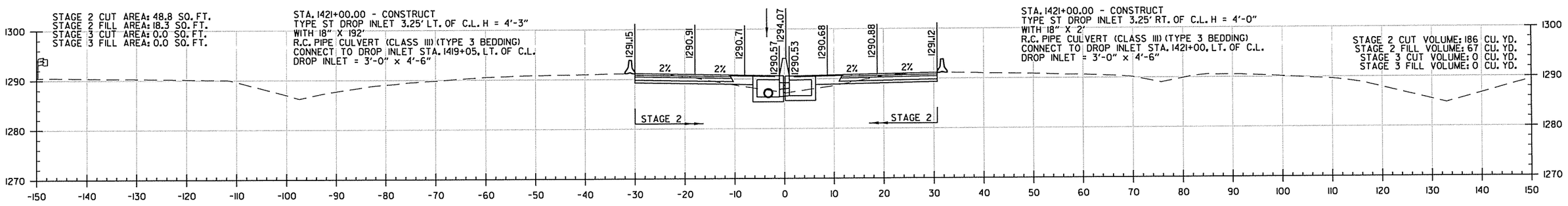

STA. 1421+00

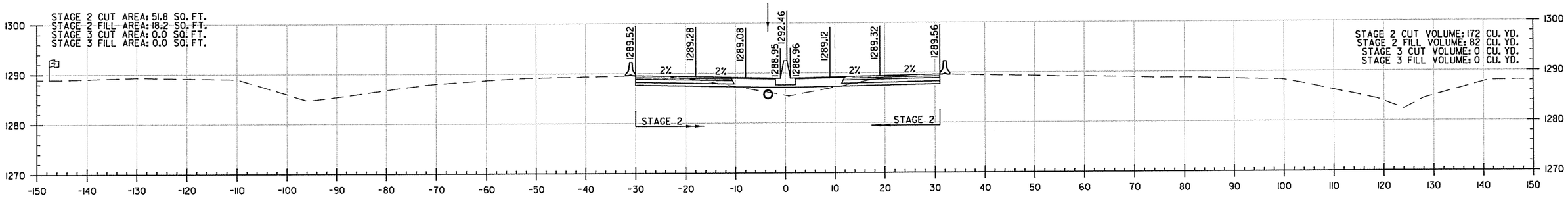

STA. 1420+00

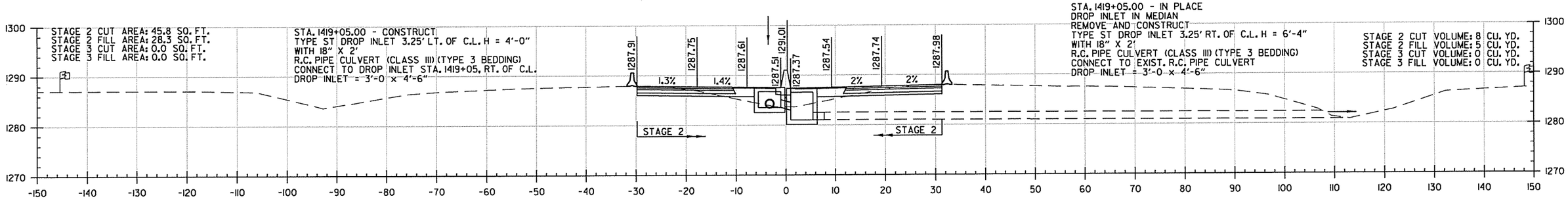

STA. 1419+05

I-49 STA. 1419+05 TO STA. 1422+00

4/28/2016
6:35:45 PM
\\CX\rCA0902_CX_HWY540_01.dgn

DATE	DATE FILMED	DATE REVISED	DATE FILMED

FED.RD. DIST.NO.	STATE	FED.AID PROJ.NO.	SHEET NO.	TOTAL SHEETS
6	ARK.			
JOB NO.		CA0902	515	581
(2)	I-49 CROSS SECTIONS			

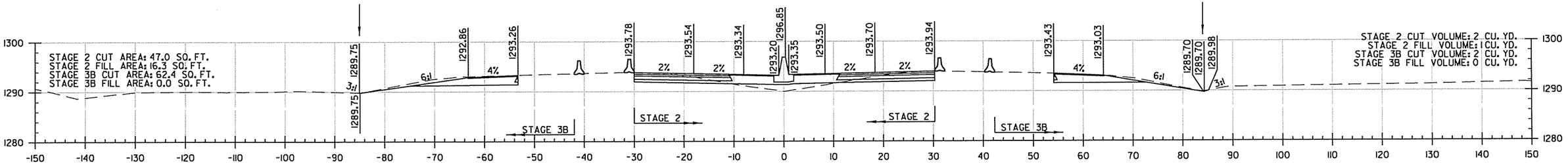

STA. 1424+12

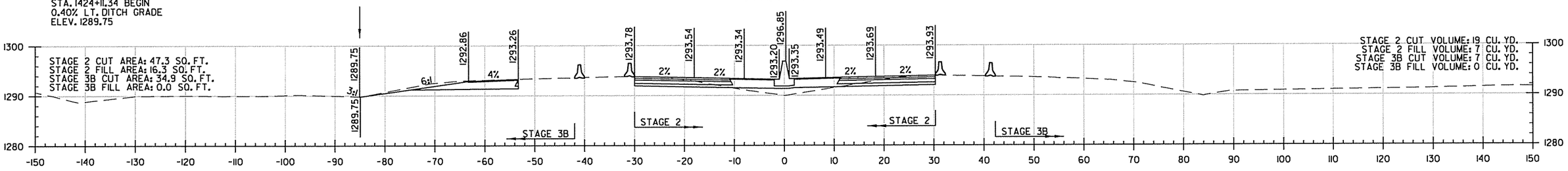

STA. 1424+11

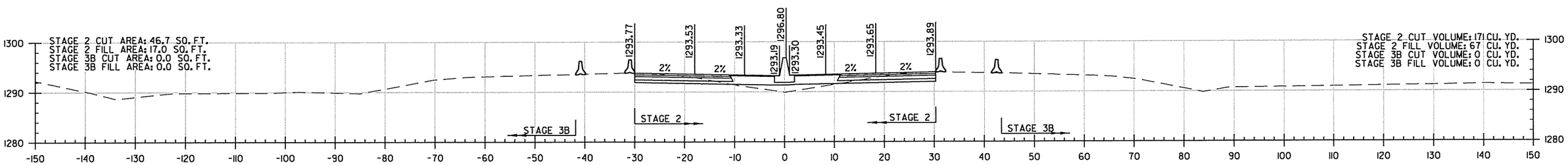

STA. 1424+00

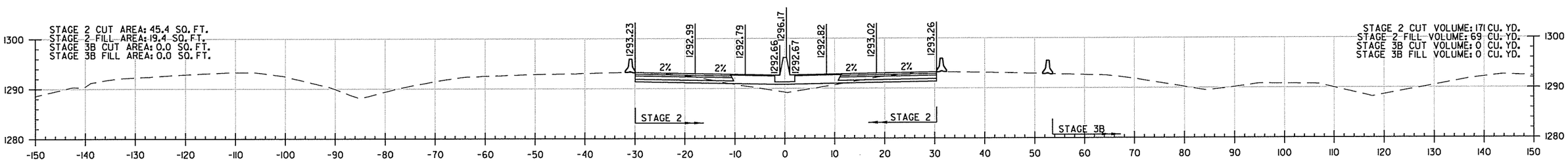

STA. 1423+00

I-49 STA. 1423+00 TO STA. 1424+12

4/28/2016
6:35:45 PM
\\DATA\CA0902_CX_HWY540_01.dgn

DATE	DATE FILMED	DATE REVISED	DATE FILMED	FED.RD. DIST.NO.	STATE	FED.AID PROJ.NO.	SHEET NO.	TOTAL SHEETS
				6	ARK.			
				JOB NO.		CA0902	516	581
				(2)	I-49 CROSS SECTIONS			

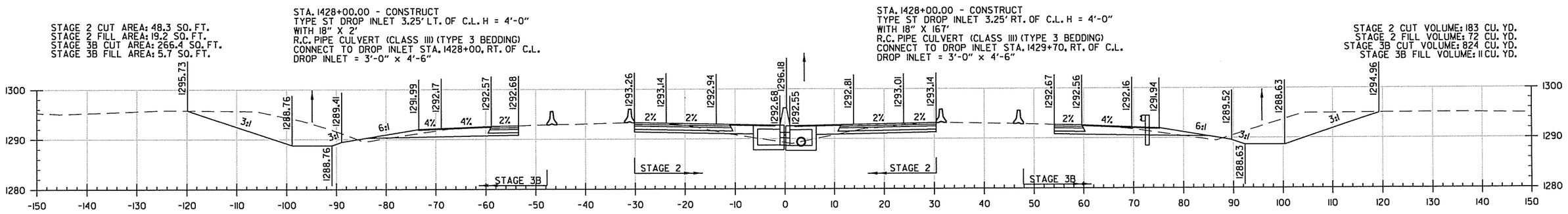

STA. 1428+00

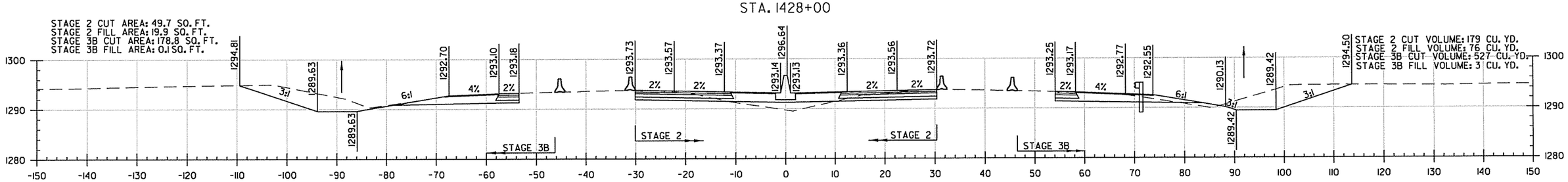

STA. 1427+00

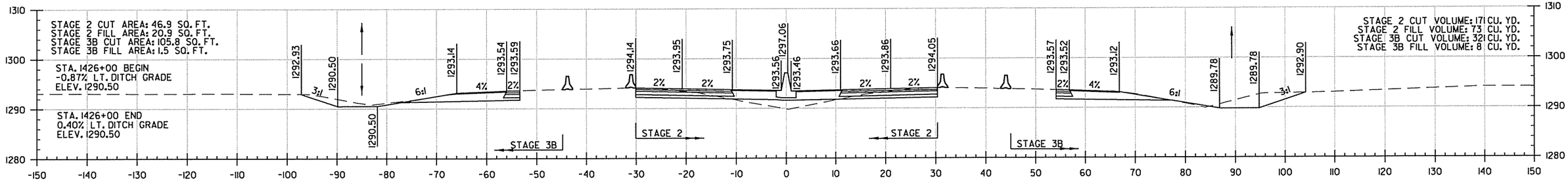

STA. 1426+00

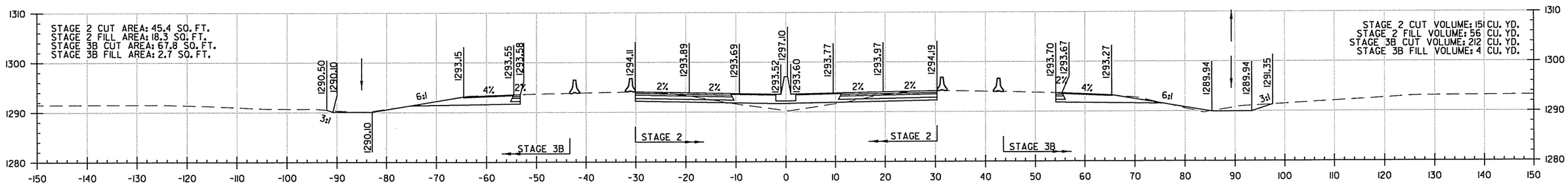

STA. 1425+00

I-49 STA. 1425+00 TO STA. 1428+00

4/28/2016
6:35:46 PM
LWX:r:CA0902_CX_HWY540_01.dgn

DATE	DATE FILMED	DATE REVISED	DATE FILMED	FED.RD. DIST.NO.	STATE	FED.AID PROJ.NO.	SHEET NO.	TOTAL SHEETS
				6	ARK.			
				JOB NO.		CA0902	517	581
				(2)	I-49 CROSS SECTIONS			

STAGE 2 CUT AREA: 51.0 SQ. FT.
STAGE 2 FILL AREA: 0.3 SQ. FT.
STAGE 3B CUT AREA: 64.4 SQ. FT.
STAGE 3B FILL AREA: 8.7 SQ. FT.

STAGE 2 CUT VOLUME: 55 CU. YD.
STAGE 2 FILL VOLUME: 6 CU. YD.
STAGE 3B CUT VOLUME: 72 CU. YD.
STAGE 3B FILL VOLUME: 8 CU. YD.

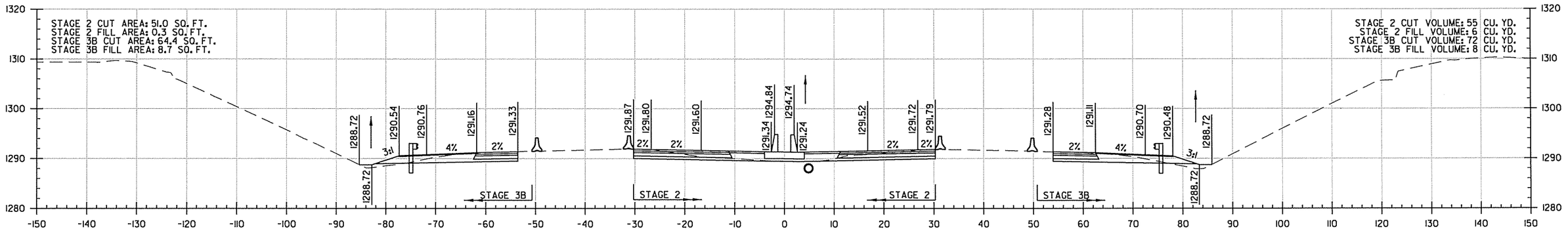

STA. 1430+00

STA. 1429+70.00 - CONSTRUCT
TYPE ST DROP INLET 4.75' LT. OF C.L. H = 4'-0"
WITH 18" X 5'
R.C. PIPE CULVERT (CLASS III) (TYPE 3 BEDDING)
CONNECT TO DROP INLET STA. 1429+70, RT. OF C.L.
DROP INLET = 3'-0" x 4'-6"

STA. 1429+70.00 - IN PLACE
DROP INLET IN MEDIAN
WITH 18" X 173' R.C. PIPE CULVERT
WITH FES
REMOVE DROP INLET AND FES AND
PLUG AND ABANDON PIPE

STA. 1429+70.00 - CONSTRUCT
TYPE ST DROP INLET 4.75' RT. OF C.L. H = 4'-0"
WITH 18" X 111'
R.C. PIPE CULVERT (CLASS III) (TYPE 3 BEDDING)
CONNECT TO DROP INLET STA. 1430+84, RT. OF C.L.
DROP INLET = 3'-0" x 4'-6"

STAGE 2 CUT AREA: 48.8 SQ. FT.
STAGE 2 FILL AREA: 9.8 SQ. FT.
STAGE 3B CUT AREA: 65.7 SQ. FT.
STAGE 3B FILL AREA: 5.9 SQ. FT.

STAGE 2 CUT VOLUME: 46 CU. YD.
STAGE 2 FILL VOLUME: 12 CU. YD.
STAGE 3B CUT VOLUME: 154 CU. YD.
STAGE 3B FILL VOLUME: 5 CU. YD.

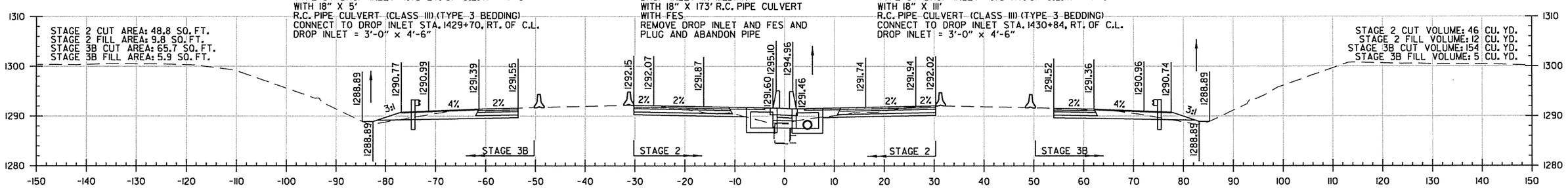

STA. 1429+70

STAGE 2 CUT AREA: 51.0 SQ. FT.
STAGE 2 FILL AREA: 16.0 SQ. FT.
STAGE 3B CUT AREA: 266.0 SQ. FT.
STAGE 3B FILL AREA: 3.9 SQ. FT.

STA. 1429+50 BEGIN
-0.56% LT. DITCH GRADE
ELEV. 1289.00

STA. 1429+50 BEGIN
-0.56% RT. DITCH GRADE
ELEV. 1289.00

STAGE 2 CUT VOLUME: 85 CU. YD.
STAGE 2 FILL VOLUME: 27 CU. YD.
STAGE 3B CUT VOLUME: 455 CU. YD.
STAGE 3B FILL VOLUME: 6 CU. YD.

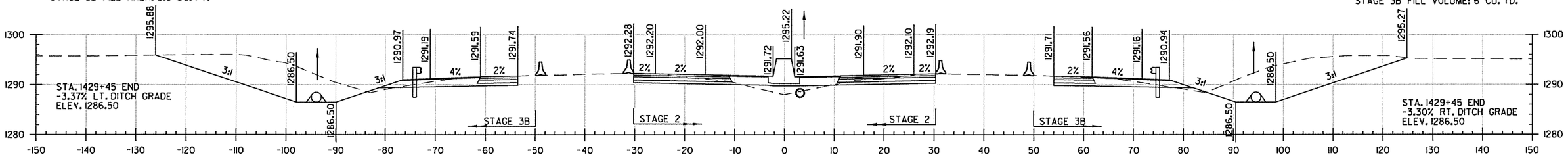

STA. 1429+45

STAGE 2 CUT AREA: 50.7 SQ. FT.
STAGE 2 FILL AREA: 16.1 SQ. FT.
STAGE 3B CUT AREA: 280.2 SQ. FT.
STAGE 3B FILL AREA: 2.7 SQ. FT.

STA. 1429+05 BEGIN
-3.37% LT. DITCH GRADE
ELEV. 1287.85

STA. 1429+05 END
-0.87% LT. DITCH GRADE
ELEV. 1287.85

STA. 1429+05 BEGIN
-3.30% RT. DITCH GRADE
ELEV. 1287.82

STA. 1429+05 END
-0.78% RT. DITCH GRADE
ELEV. 1287.82

STAGE 2 CUT VOLUME: 183 CU. YD.
STAGE 2 FILL VOLUME: 65 CU. YD.
STAGE 3B CUT VOLUME: 1012 CU. YD.
STAGE 3B FILL VOLUME: 16 CU. YD.

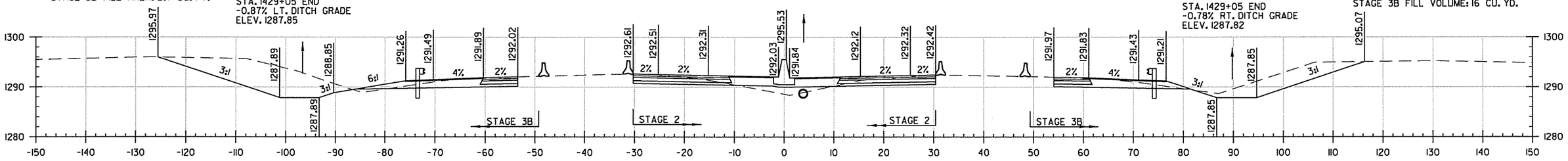

STA. 1429+00

I-49 STA. 1429+00 TO STA. 1430+00

4/28/2016
6:52:45 PM
M:\MW\CA0902_CX_HW7540_01.dgn

DATE	DATE FILMED	DATE REVISED	DATE FILMED	FED.RD. DIST.NO.	STATE	FED.AID PROJ.NO.	SHEET NO.	TOTAL SHEETS
				6	ARK.			
				JOB NO.		CA0902	518	581

(2) I-49 CROSS SECTIONS

STAGE 2 CUT AREA: 48.4 SQ. FT.
STAGE 2 FILL AREA: 17.1 SQ. FT.
STAGE 3B CUT AREA: 393.0 SQ. FT.
STAGE 3B FILL AREA: 9.9 SQ. FT.

STA. 1432+00.00 - CONSTRUCT
TYPE ST DROP INLET 3.25' LT. OF C.L. H = 3'-10"
WITH 18" X 2'
R.C. PIPE CULVERT (CLASS III) (TYPE 3 BEDDING)
CONNECT TO DROP INLET STA. 1432+00, RT. OF C.L.
DROP INLET = 3'-0" x 4'-6"

STA. 1432+00.00 - CONSTRUCT
TYPE ST DROP INLET 3.25' RT. OF C.L. H = 4'-0"
WITH 18" X 29'
R.C. PIPE CULVERT (CLASS III) (TYPE 3 BEDDING)
CONNECT TO SAFETY END SECTION, RT. OF C.L.
DROP INLET = 3'-0" x 4'-6"

STAGE 2 CUT VOLUME: 110 CU. YD.
STAGE 2 FILL VOLUME: 31 CU. YD.
STAGE 3B CUT VOLUME: 774 CU. YD.
STAGE 3B FILL VOLUME: 23 CU. YD.

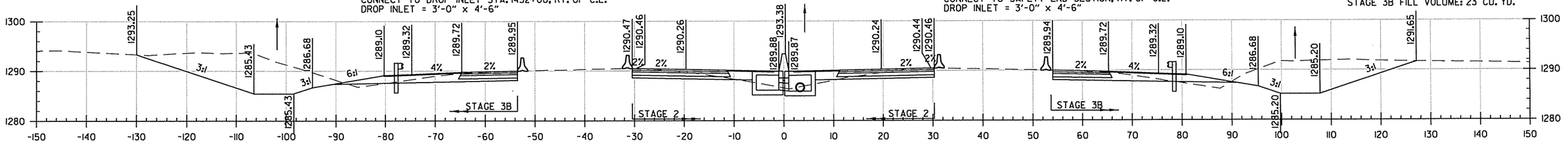

STA. 1432+00

STAGE 2 CUT AREA: 50.5 SQ. FT.
STAGE 2 FILL AREA: 10.6 SQ. FT.
STAGE 3B CUT AREA: 303.4 SQ. FT.
STAGE 3B FILL AREA: 11.1 SQ. FT.

STAGE 2 CUT VOLUME: 74 CU. YD.
STAGE 2 FILL VOLUME: 13 CU. YD.
STAGE 3B CUT VOLUME: 271 CU. YD.
STAGE 3B FILL VOLUME: 12 CU. YD.

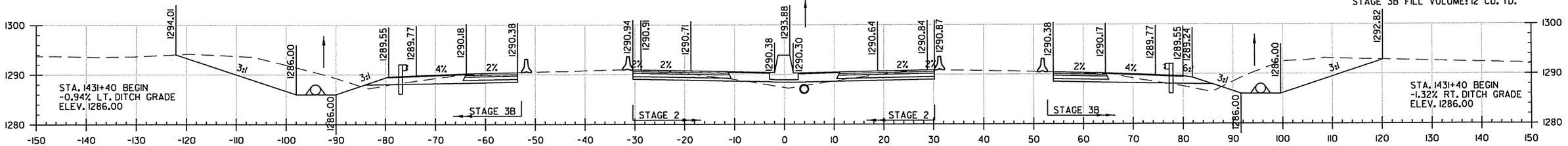

STA. 1431+40

STA. 1431+30 END
-0.56% LT. DITCH GRADE
ELEV. 1288.00

STA. 1431+30 END
-0.56% RT. DITCH GRADE
ELEV. 1288.00

STAGE 2 CUT AREA: 48.8 SQ. FT.
STAGE 2 FILL AREA: 6.5 SQ. FT.
STAGE 3B CUT AREA: 62.7 SQ. FT.
STAGE 3B FILL AREA: 5.7 SQ. FT.

STAGE 2 CUT VOLUME: 29 CU. YD.
STAGE 2 FILL VOLUME: 3 CU. YD.
STAGE 3B CUT VOLUME: 37 CU. YD.
STAGE 3B FILL VOLUME: 4 CU. YD.

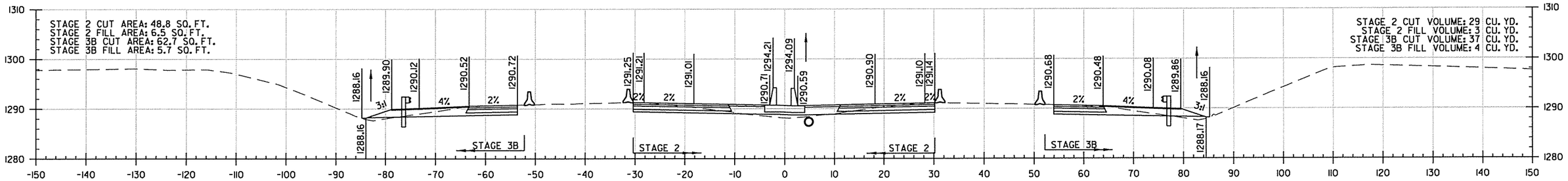

STA. 1431+00

STAGE 2 CUT AREA: 47.7 SQ. FT.
STAGE 2 FILL AREA: 3.0 SQ. FT.
STAGE 3B CUT AREA: 61.9 SQ. FT.
STAGE 3B FILL AREA: 7.8 SQ. FT.

STA. 1430+84.00 - CONSTRUCT
TYPE ST DROP INLET 4.5' RT. OF C.L. H = 4'-0"
WITH 18" X 113'
R.C. PIPE CULVERT (CLASS III) (TYPE 3 BEDDING)
CONNECT TO DROP INLET STA. 1432+00, RT. OF C.L.
DROP INLET = 3'-0" x 4'-6"

STAGE 2 CUT VOLUME: 154 CU. YD.
STAGE 2 FILL VOLUME: 5 CU. YD.
STAGE 3B CUT VOLUME: 196 CU. YD.
STAGE 3B FILL VOLUME: 26 CU. YD.

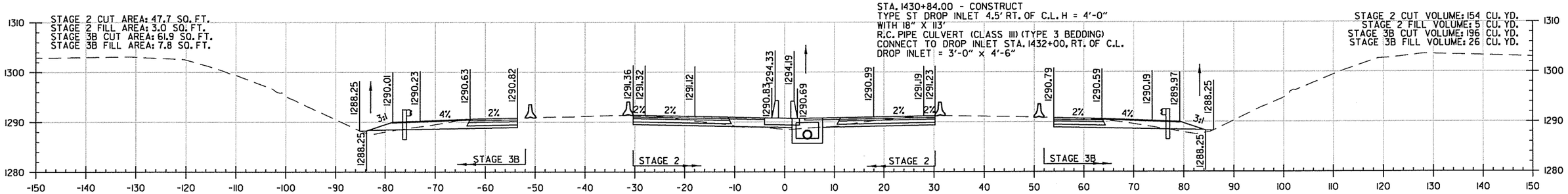

STA. 1430+84

I-49 STA. 1430+84 TO STA. 1432+00

4/28/2016
6:52:47 PM
C:\x\r\CA0902_CX_HWY540_01.dgn

DATE	DATE FILMED	DATE REVISED	DATE FILMED	FED.RD. DIST.NO.	STATE	FED.AID PROJ.NO.	SHEET NO.	TOTAL SHEETS
				6	ARK.			
				JOB NO.		CA0902	519	581

(2) I-49 CROSS SECTIONS

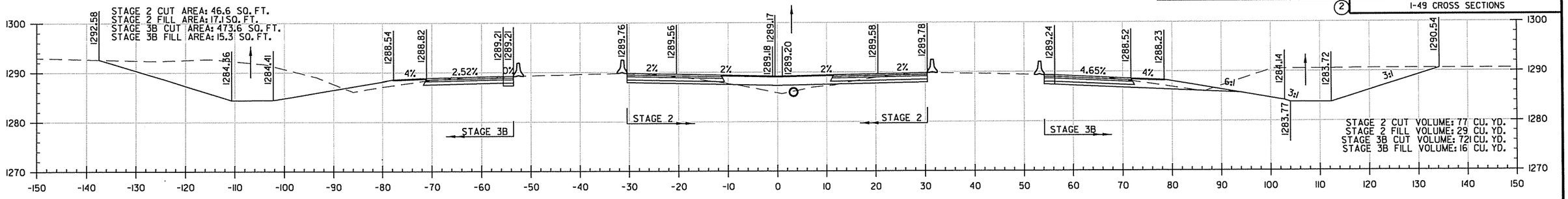

STA. 1432+96

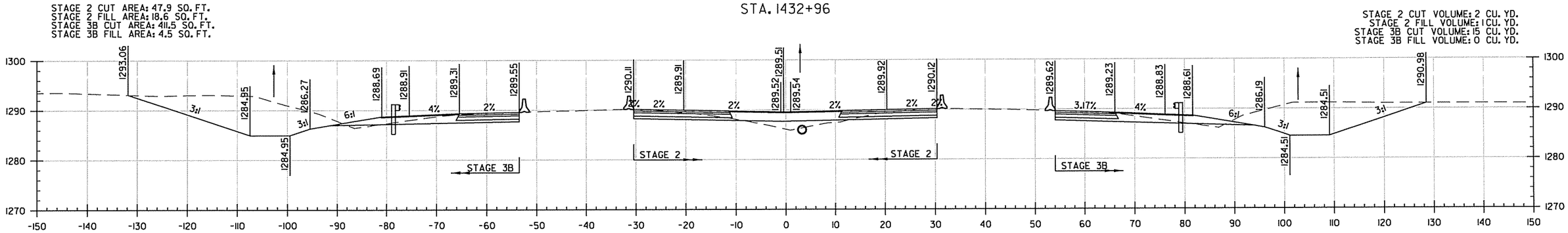

STA. 1432+52

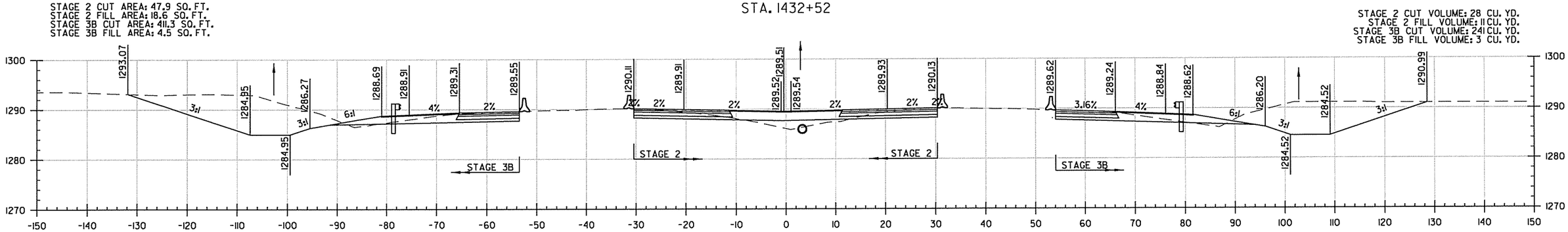

STA. 1432+51

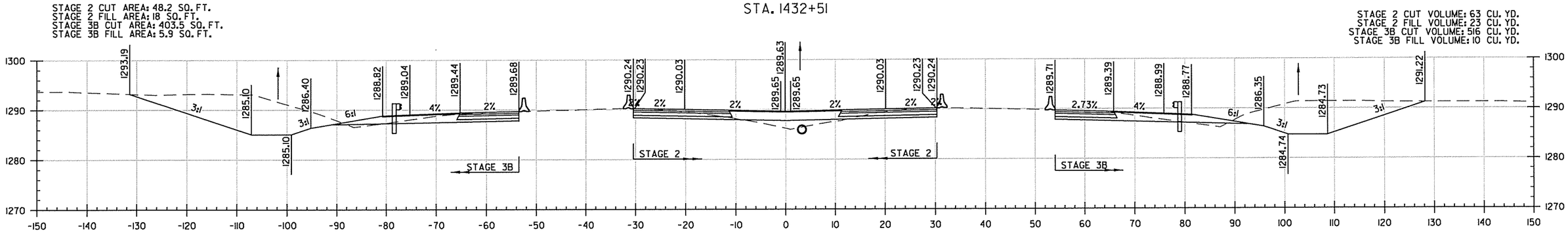

STA. 1432+35

I-49 STA. 1432+35 TO STA. 1432+96

4/28/2016
6:35:47 PM
...\CX\CA0902_CX_HWY540_01.dgn

DATE	DATE FILMED	DATE REVISED	DATE FILMED	FED.RD. DIST.NO.	STATE	FED.AID PROJ.NO.	SHEET NO.	TOTAL SHEETS
				6	ARK.			
				JOB NO.		CA0902	520	581

(2) I-49 CROSS SECTIONS

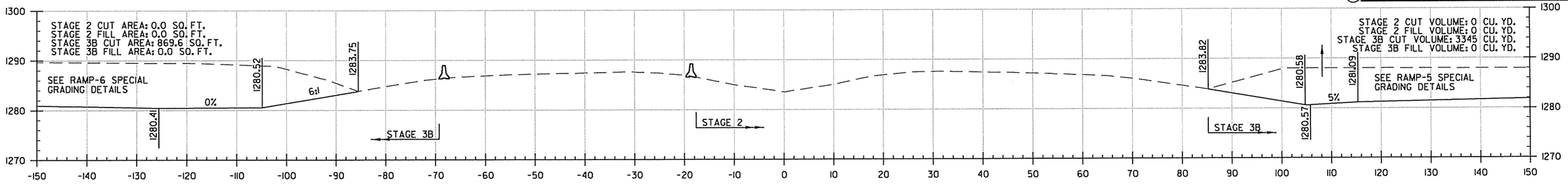

STA. 1436+00

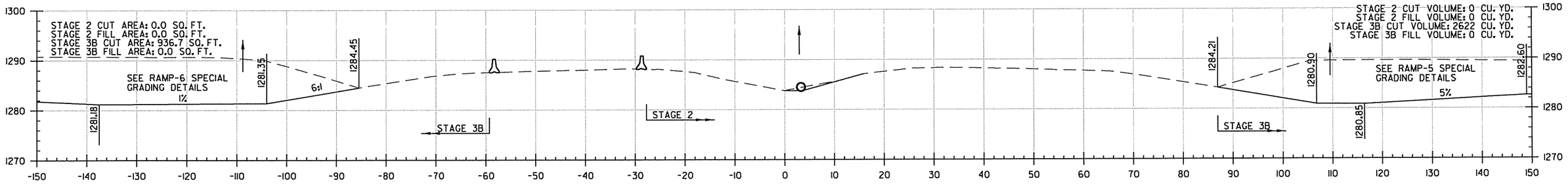

STA. 1435+00

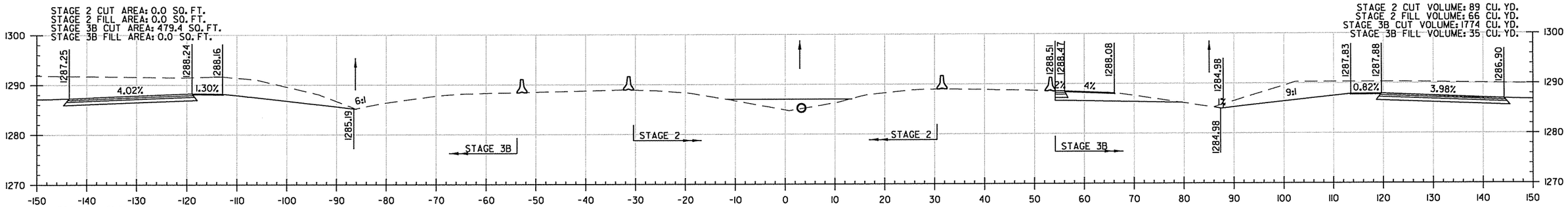

STA. 1433+01.94 END
-0.94% LT. DITCH GRADE
ELEV. 1284.48

STA. 1434+00

STA. 1433+32.62 END
-1.32% RT. DITCH GRADE
ELEV. 1283.45

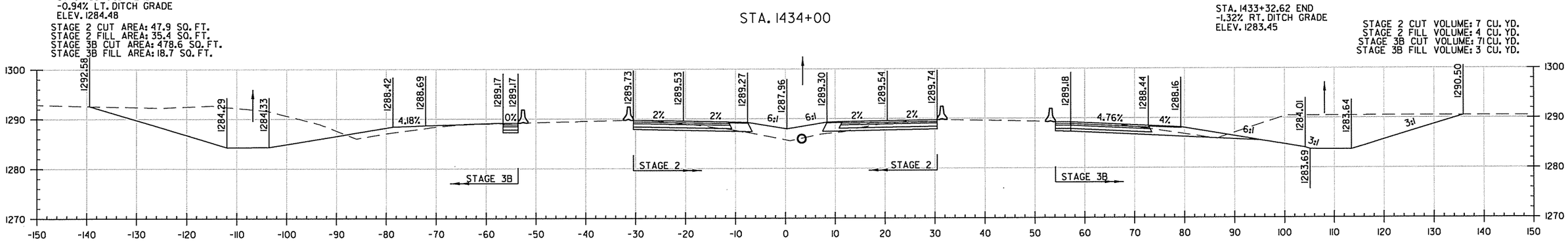

STA. 1433+00

I-49 STA. 1433+00 TO STA. 1436+00

4/28/2016
6:35:48 PM
\\CX\rCA0902_CX_HWY540_01.dgn

DATE	DATE FILMED	DATE REVISED	DATE FILMED	FED.RD. DIST.NO.	STATE	FED.AID PROJ.NO.	SHEET NO.	TOTAL SHEETS
				6	ARK.			
				JOB NO.		CA0902	521	581
				2	I-49 CROSS SECTIONS			

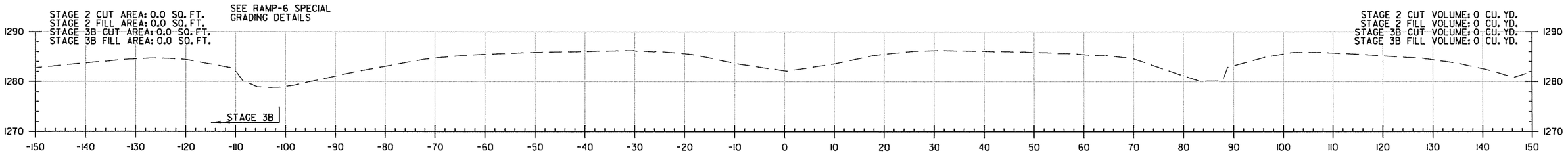

STA. 1438+04

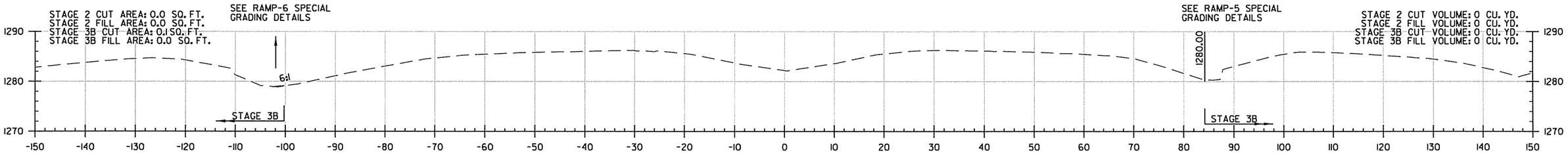

STA. 1438+02

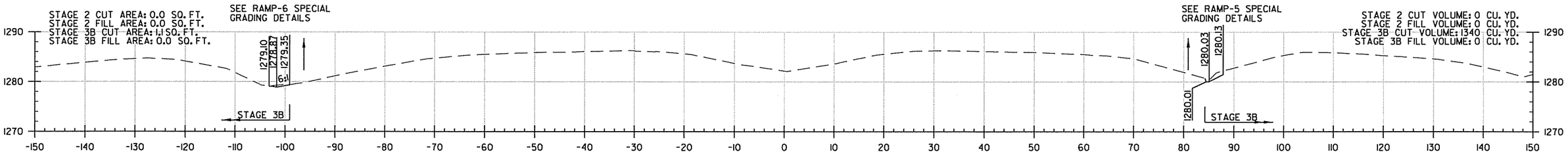

END JOB CA0902
STA. 1438+00.00
LOG MILE 87.99

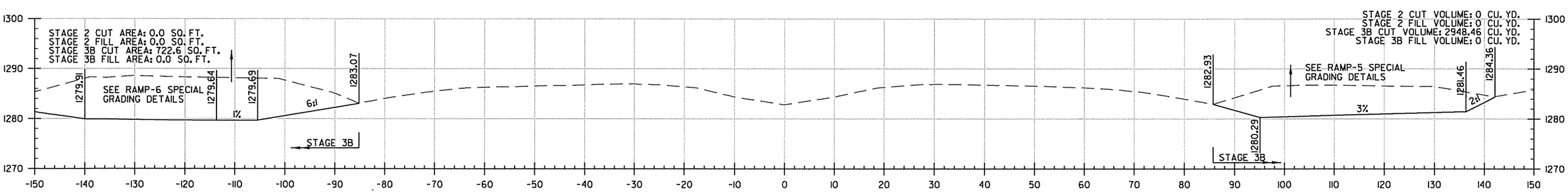

STA. 1437+00

I-49 STA. 1437+00 TO STA. 1438+04

4/28/2016
6:35:48 PM
...\CX\CA0902_CX_HWY540_01.dgn

DATE	DATE FILMED	DATE REVISED	DATE FILMED	FED.RD. DIST.NO.	STATE	FED.AID PROJ.NO.	SHEET NO.	TOTAL SHEETS
				6	ARK.			
				JOB NO.		CA0902	522	581

(2) TEMPORARY RAMP CROSS SECTIONS

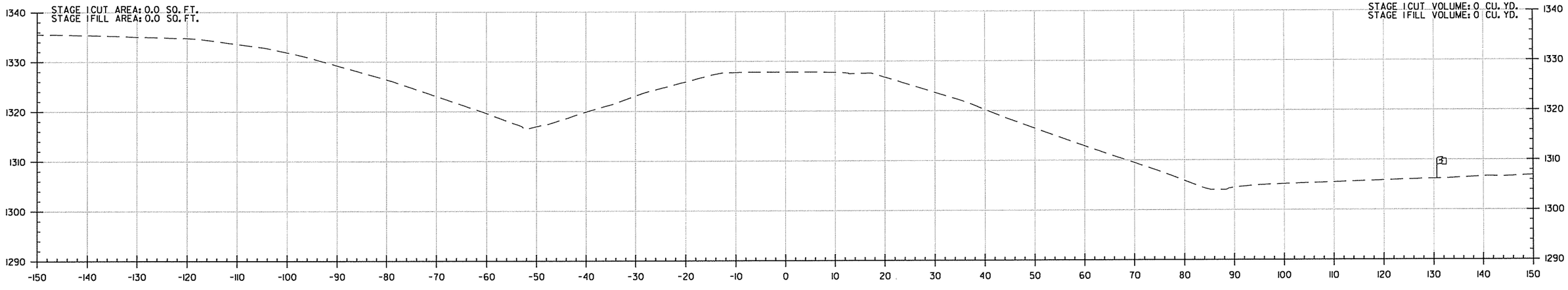

STA. 101+00

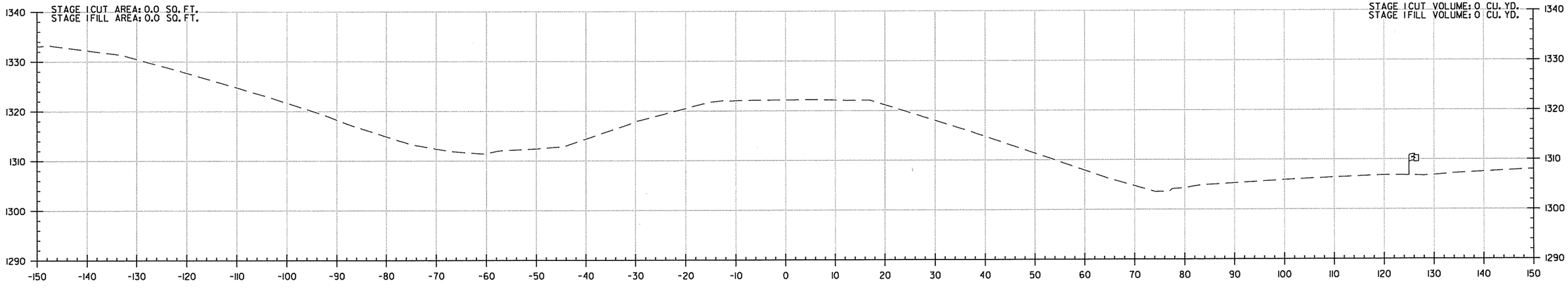

STA. 100+00

TEMPORARY RAMP 2 STA. 100+00 TO STA. 101+00

4/28/2016
6:35:49 PM
...\CX\CA0902_CX_HWY540_01.dgn

DATE	DATE FILMED	DATE REVISED	DATE FILMED	FED.RD. DIST.NO.	STATE	FED.AID PROJ.NO.	SHEET NO.	TOTAL SHEETS
				6	ARK.			
				JOB NO.		CA0902	523	581

(2) TEMPORARY RAMP CROSS SECTIONS

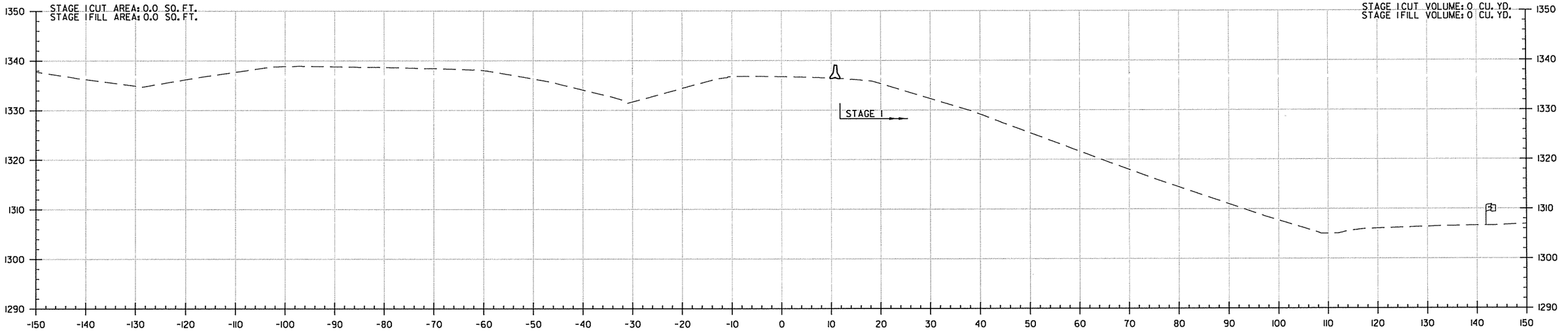

STA. 103+00

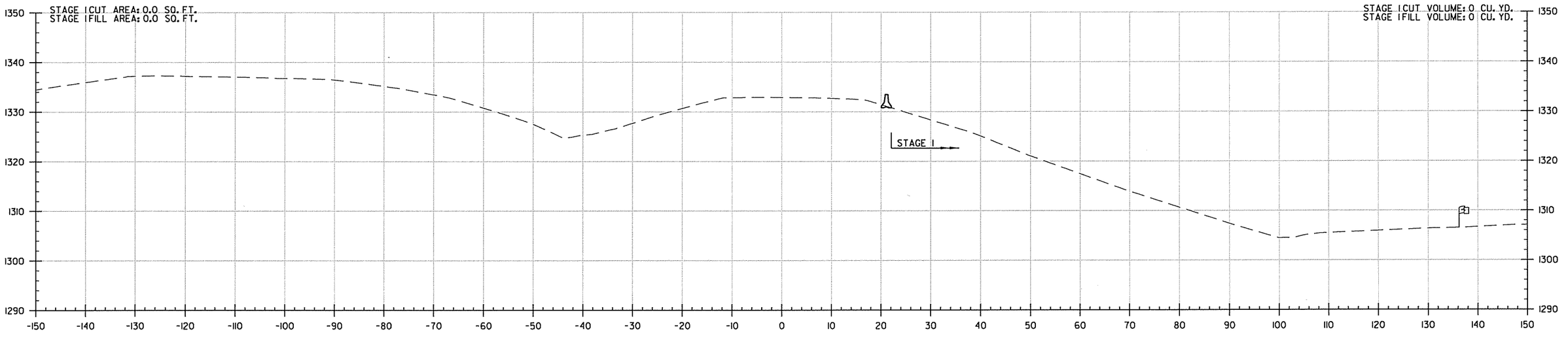

STA. 102+00

TEMPORARY RAMP 2 STA. 102+00 TO STA. 103+00

4/28/2016
6:35:49 PM
...\CX\CA0902_CX_HWY540_01.dgn

DATE	DATE FILMED	DATE REVISED	DATE FILMED

FED.RD. DIST.NO.	STATE	FED.AID PROJ.NO.	SHEET NO.	TOTAL SHEETS
6	ARK.			
JOB NO.		CA0902	524	581

(2) TEMPORARY RAMP CROSS SECTIONS

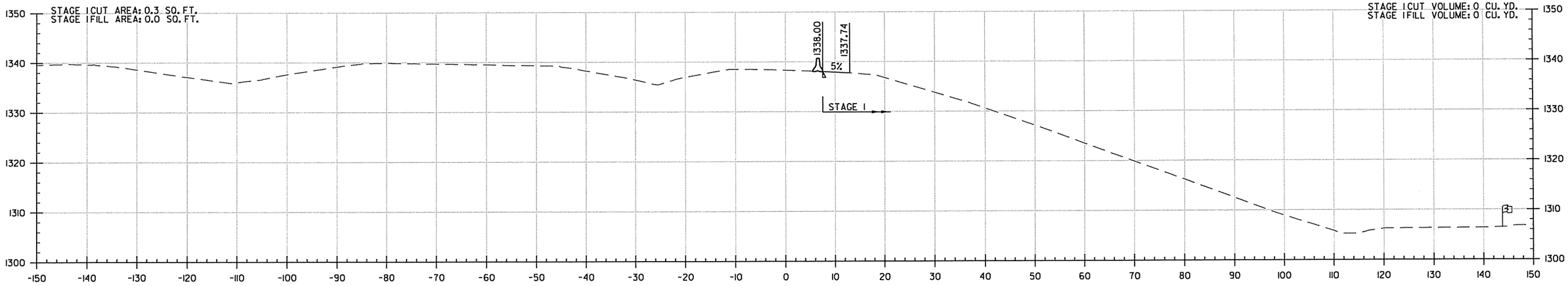

STA. 103+59

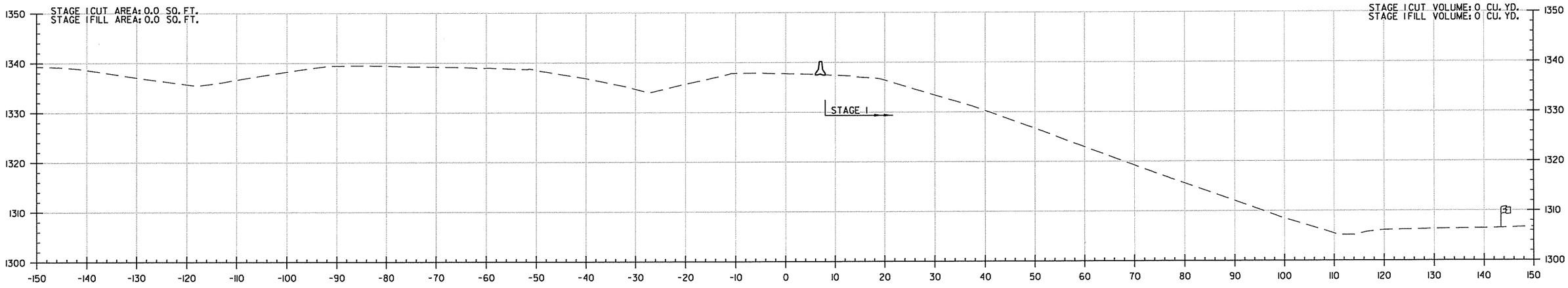

STA. 103+35

TEMPORARY RAMP 2 STA. 103+35 TO STA. 103+59

4/28/2016
6:35:49 PM
\\XRef\CA0902_CX_HWY540_01.dgn

DATE	DATE FILMED	DATE REVISED	DATE FILMED

FED.RD. DIST.NO.	STATE	FED.AID PROJ.NO.	SHEET NO.	TOTAL SHEETS
6	ARK.			
JOB NO.		CA0902	525	581

(2) TEMPORARY RAMP CROSS SECTIONS

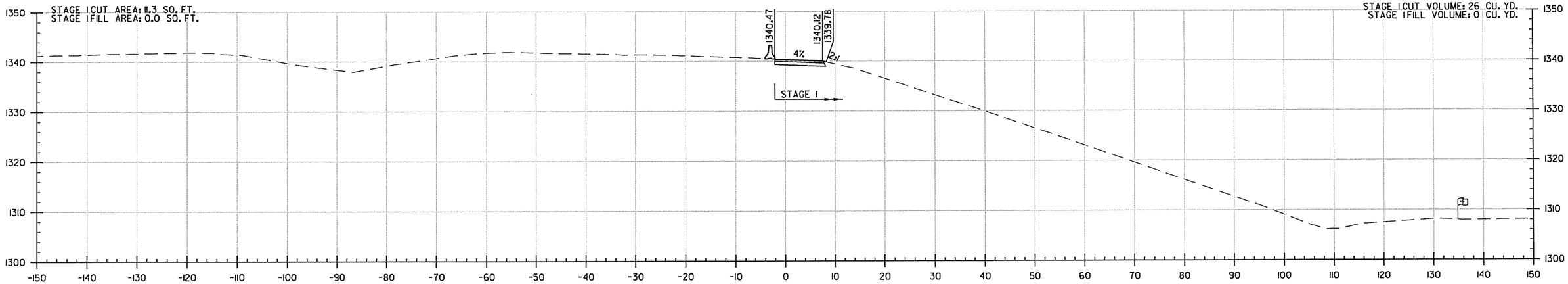

STA. 105+00

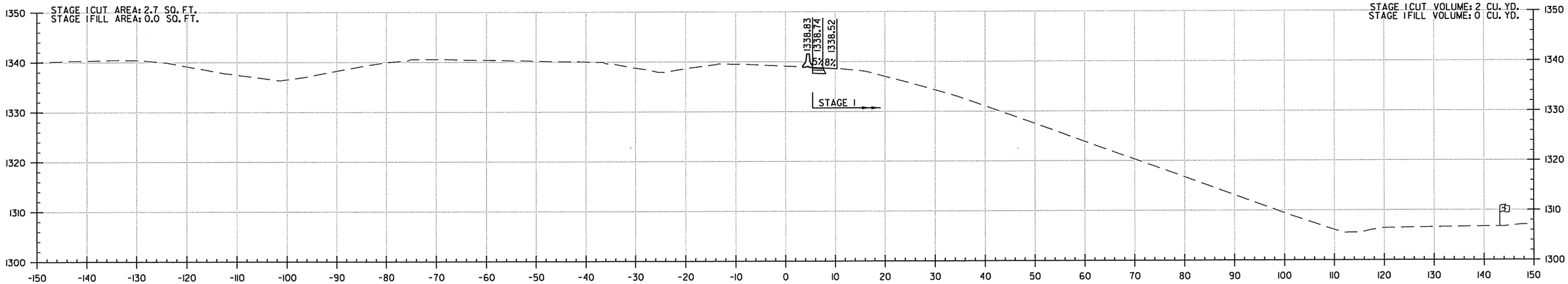

STA. 104+00

TEMPORARY RAMP 2 STA. 104+00 TO STA. 105+00

4/28/2016
6:35:20 PM
\\XAT\CA0902_CX_HWY540_01.dgn

DATE	DATE FILMED	DATE REVISED	DATE FILMED	FED.RD. DIST.NO.	STATE	FED.AID PROJ.NO.	SHEET NO.	TOTAL SHEETS
				6	ARK.			
				JOB NO.		CA0902	526	581

(2) TEMPORARY RAMP CROSS SECTIONS

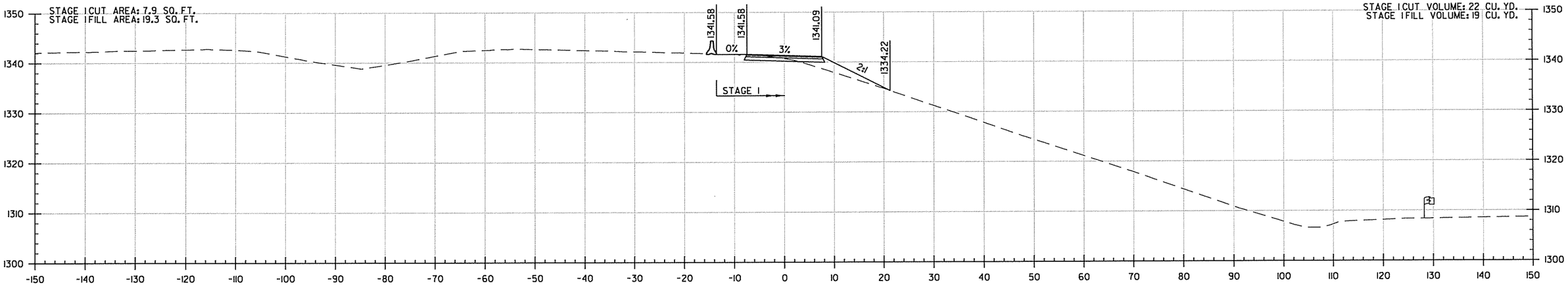

STA. 106+00

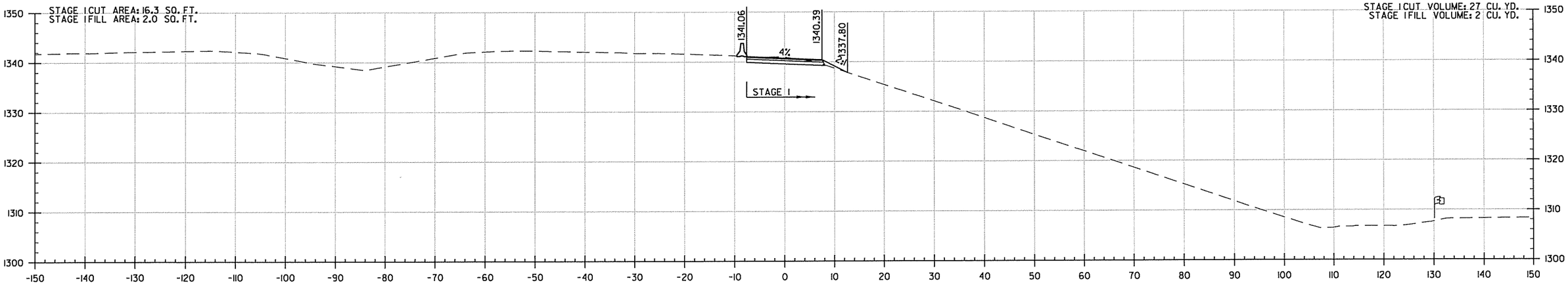

STA. 105+52

TEMPORARY RAMP 2 STA. 105+52 TO STA. 106+00

4/28/2016
6:35:50 PM
\\CX\rCA0902_CX_HWY540_01.dgn

DATE	DATE FILMED	DATE REVISED	DATE FILMED	FED.RD. DIST.NO.	STATE	FED.AID PROJ.NO.	SHEET NO.	TOTAL SHEETS
				6	ARK.			
				JOB NO.		CA0902	527	581

(2) TEMPORARY RAMP CROSS SECTIONS

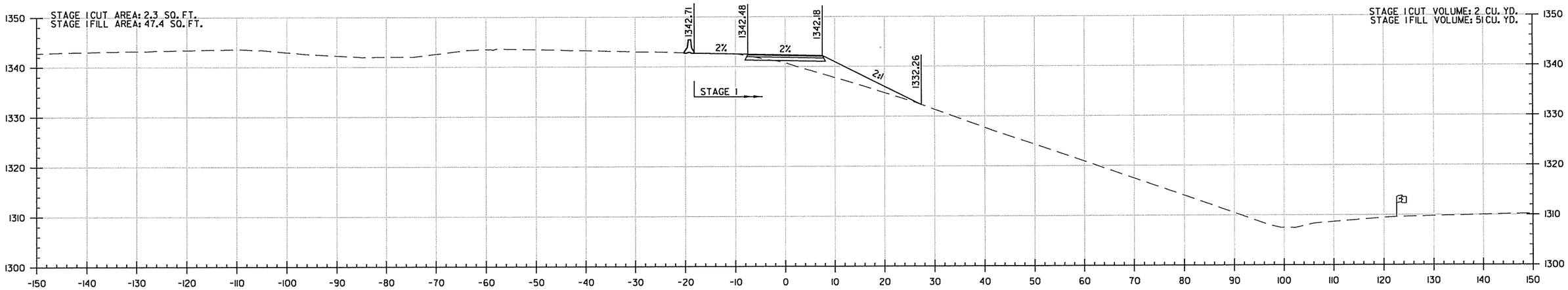

STA. 107+29

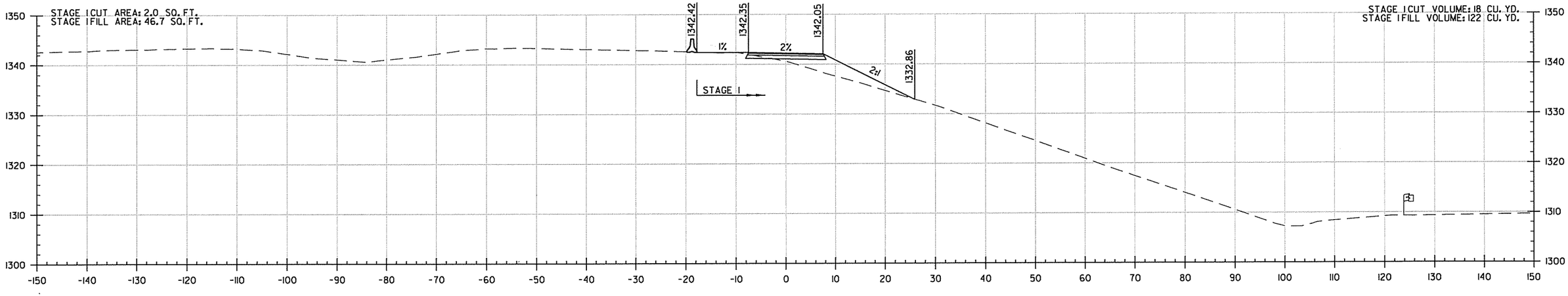

STA. 107+00

TEMPORARY RAMP 2 STA. 107+00 TO STA. 107+29

4/28/2016
6:55:50 PM
\\XX\CA0902_CX_HWY540_01.dgn

DATE	DATE FILMED	DATE REVISED	DATE FILMED	FED.RD. DIST.NO.	STATE	FED.AID PROJ.NO.	SHEET NO.	TOTAL SHEETS
				6	ARK.			
				JOB NO.		CA0902	528	581
				(2)	TEMPORARY RAMP CROSS SECTIONS			

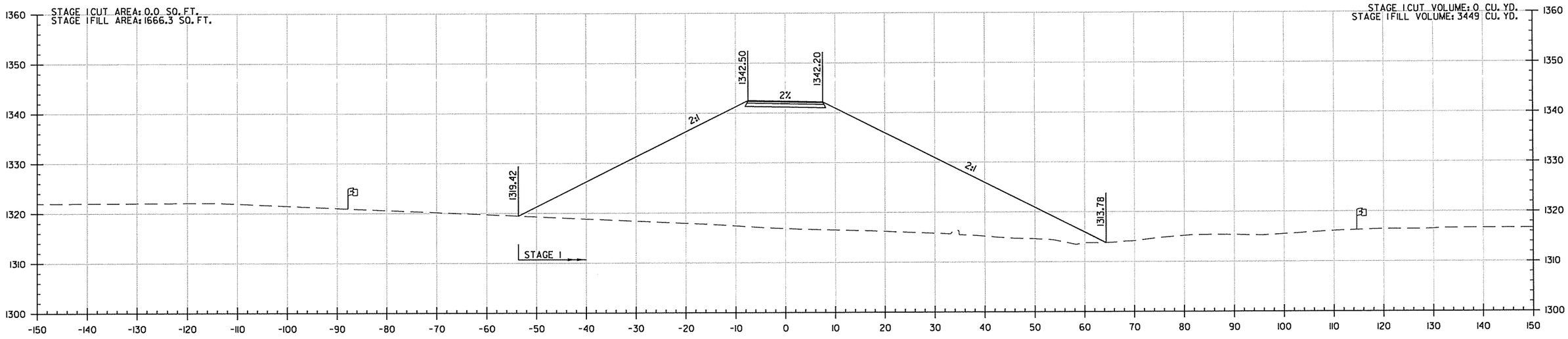

STA. 108+95

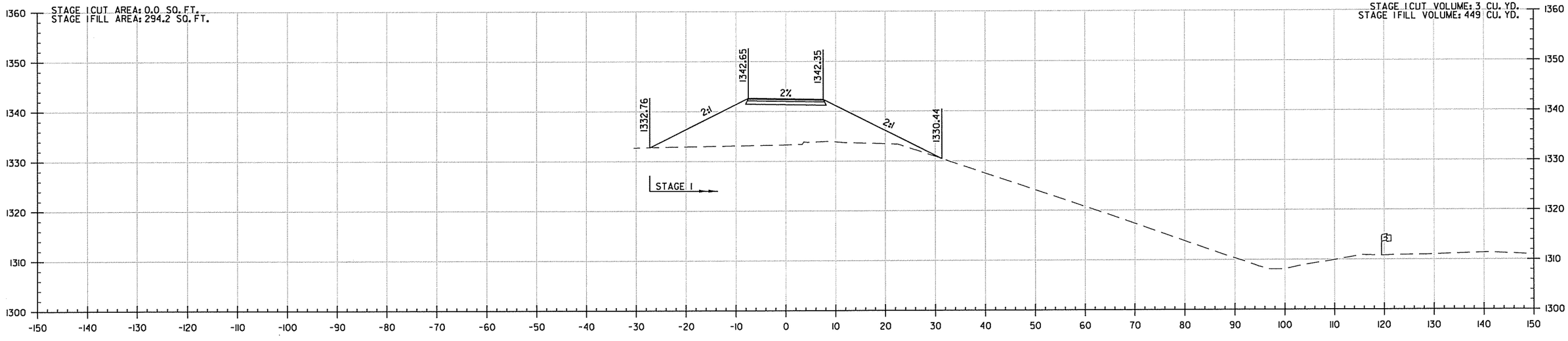

STA. 108+00

TEMPORARY RAMP 2 STA. 108+00 TO STA. 108+95

4/28/2016
6:35:25 PM
\\DATA\CA0902_CX_HWY540_01.dgn

DATE	DATE FILMED	DATE REVISED	DATE FILMED

FED.RD. DIST.NO.	STATE	FED.AID PROJ.NO.	SHEET NO.	TOTAL SHEETS
6	ARK.			
JOB NO.		CA0902	529	581
(2) TEMPORARY RAMP CROSS SECTIONS				

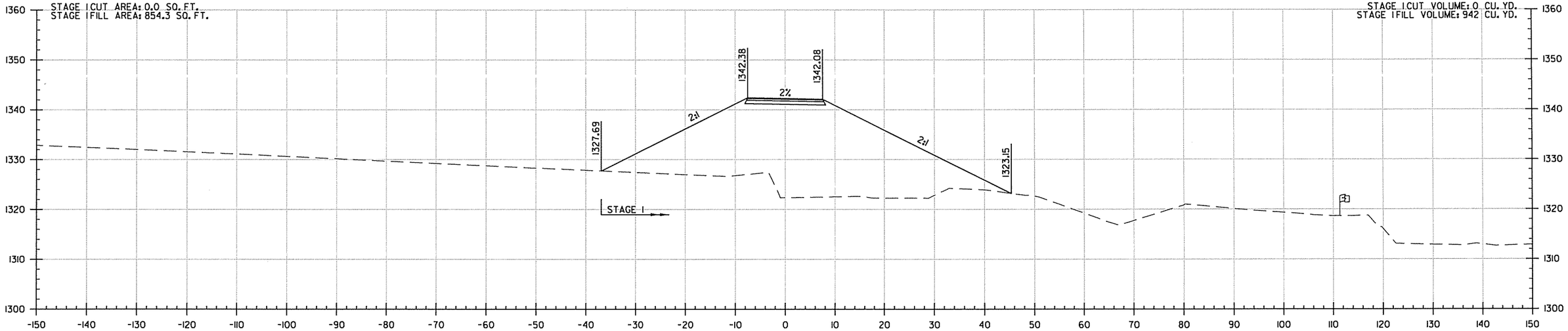

STA. 109+22

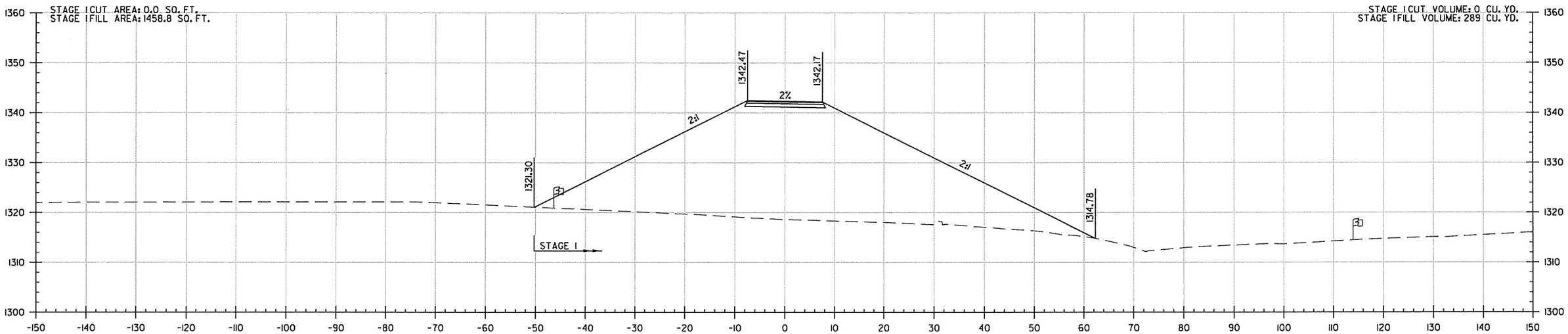

STA. 109+00

TEMPORARY RAMP 2 STA. 109+00 TO STA. 109+22

4/28/2016
6:55:51 PM
...\CA0902_CX_HWY540_01.dgn

DATE	DATE FILMED	DATE REVISED	DATE FILMED	FED.RD. DIST.NO.	STATE	FED.AID PROJ.NO.	SHEET NO.	TOTAL SHEETS
				6	ARK.			
				JOB NO.		CA0902	530	581

(2) TEMPORARY RAMP CROSS SECTIONS

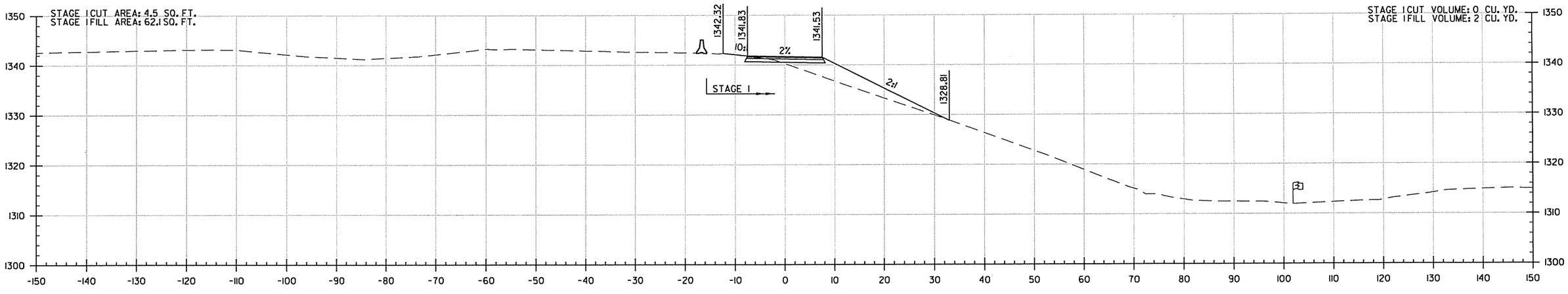

STA. 110+00

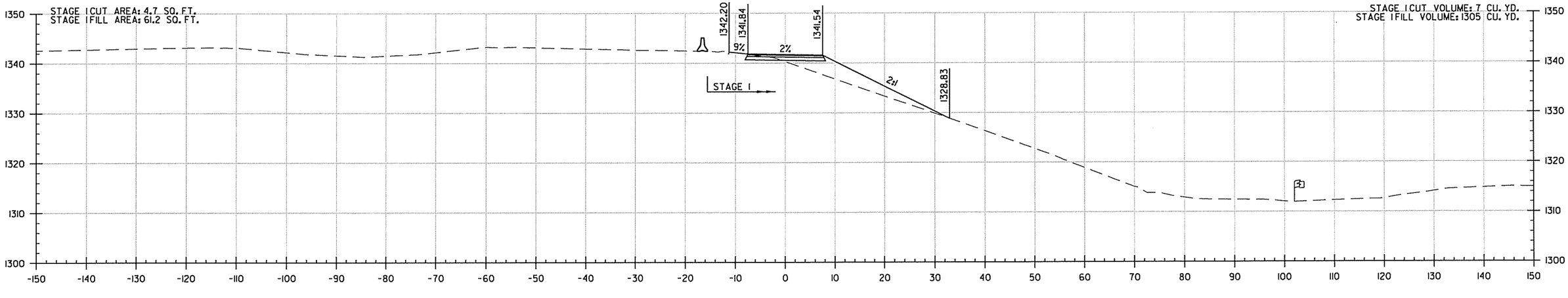

STA. 109+99

TEMPORARY RAMP 2 STA. 109+99 TO STA. 110+00

4/28/2016
6:35:51 PM
...\CX\CA0902_CX_HWY540_01.dgn

DATE	DATE FILMED	DATE REVISED	DATE FILMED	FED.RD. DIST.NO.	STATE	FED.AID PROJ.NO.	SHEET NO.	TOTAL SHEETS
				6	ARK.			
				JOB NO.		CA0902	531	581

(2) TEMPORARY RAMP CROSS SECTIONS

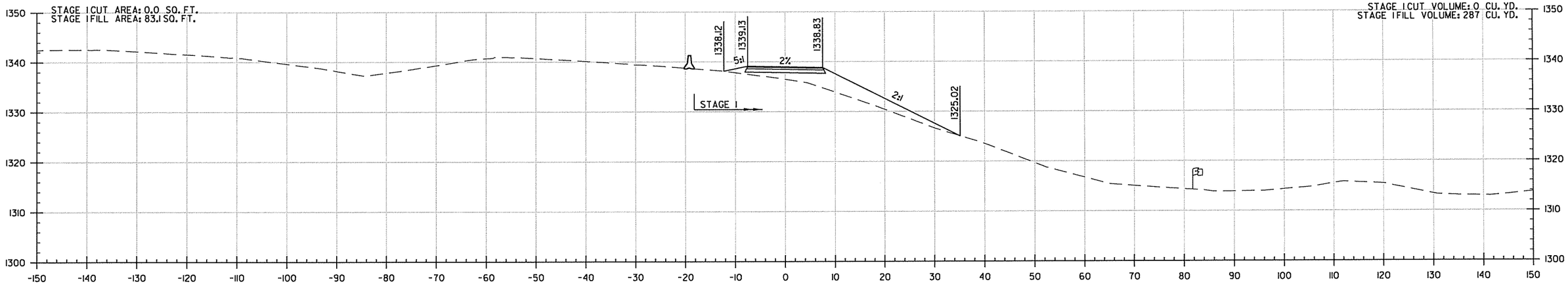

STA. 112+00

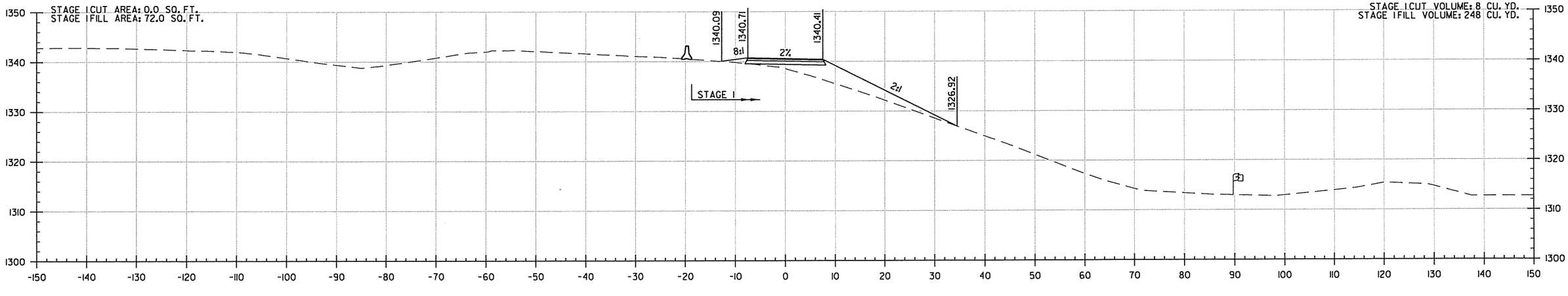

STA. 111+00

TEMPORARY RAMP 2 STA. 111+00 TO STA. 112+00

4/28/2016
6:35:52 PM
\\ARKCA0902_CX_HWY540_01.dgn

DATE	DATE FILMED	DATE REVISED	DATE FILMED	FED.RD. DIST.NO.	STATE	FED.AID PROJ.NO.	SHEET NO.	TOTAL SHEETS
				6	ARK.			
				JOB NO.		CA0902	532	581

(2) TEMPORARY RAMP CROSS SECTIONS

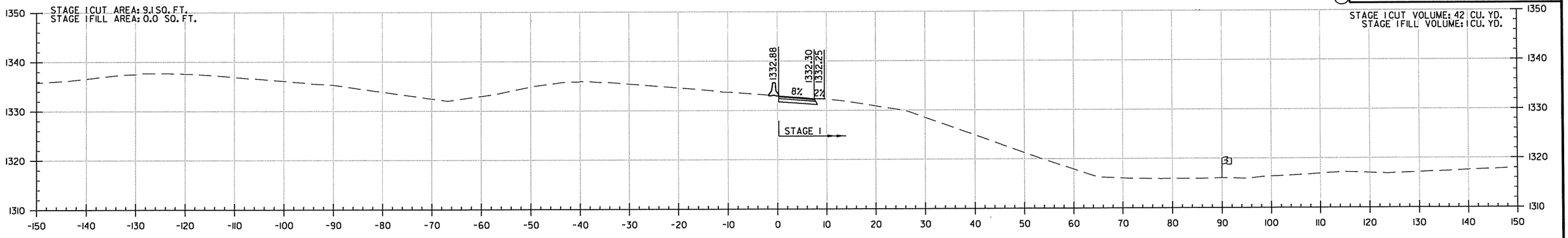

STA. 115+00

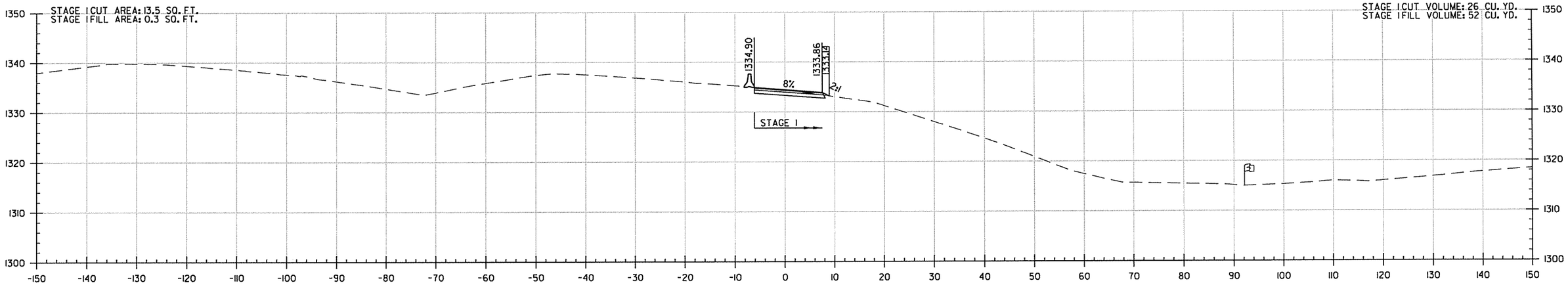

STA. 114+00

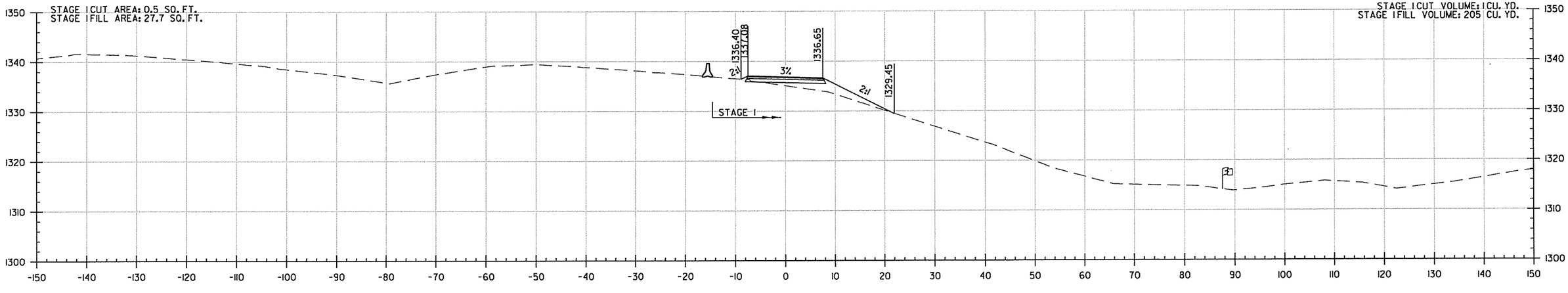

STA. 113+00

TEMPORARY RAMP 2 STA. 113+00 TO STA. 115+00

4/28/2016
6:35:52 PM
\\DATA\CA0902_CX_HWY540_01.dgn

DATE	DATE FILMED	DATE REVISED	DATE FILMED

FED.RD. DIST.NO.	STATE	FED.AID PROJ.NO.	SHEET NO.	TOTAL SHEETS
6	ARK.			
JOB NO.		CA0902	533	581

(2) TEMPORARY RAMP CROSS SECTIONS

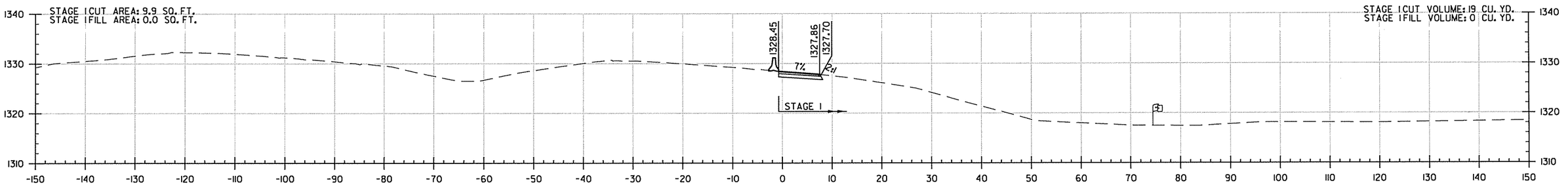

TEMPORARY RAMP STA. 117+61.03 =
I-49 STA. 1347+03.70

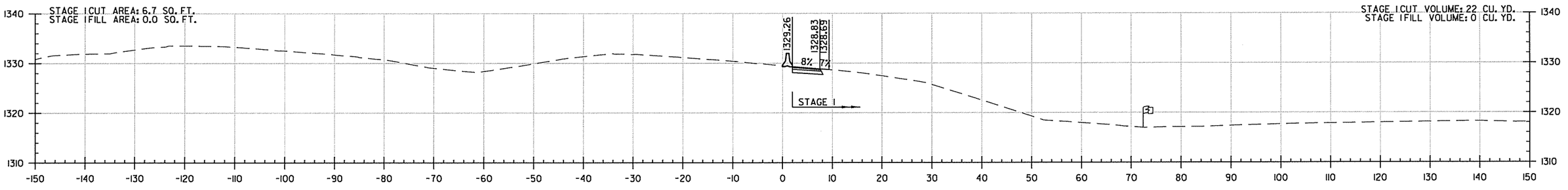

STA. 117+00

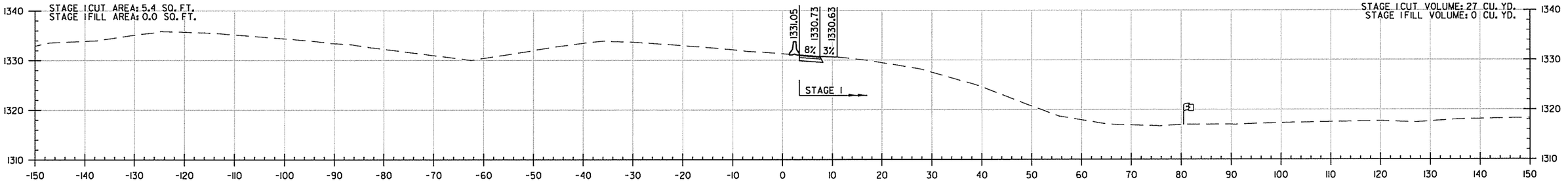

STA. 116+00

TEMPORARY RAMP 2 STA. 116+00 TO STA. 117+61

4/28/2016
6:35:52 PM
M:\DATA\CA0902_CX_HWY540_01.dgn

DATE	DATE FILMED	DATE REVISED	DATE FILMED	FED.RD. DIST.NO.	STATE	FED.AID PROJ.NO.	SHEET NO.	TOTAL SHEETS
				6	ARK.			
				JOB NO.		CA0902	534	581

(2) TEMPORARY RAMP CROSS SECTIONS

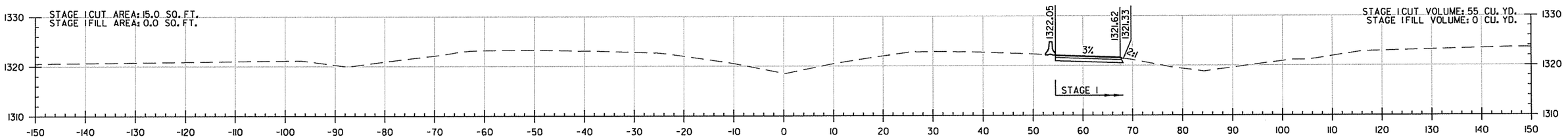

STA. 1351+00

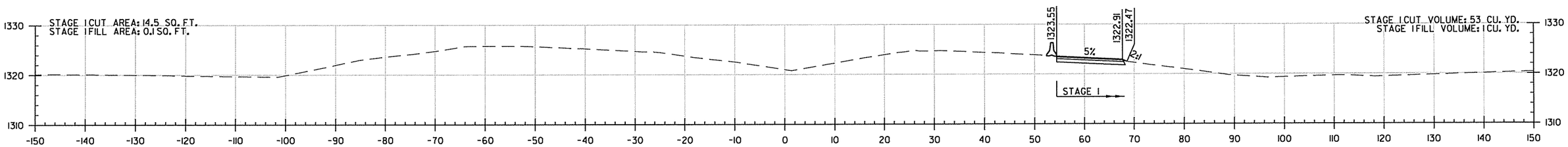

STA. 1350+00

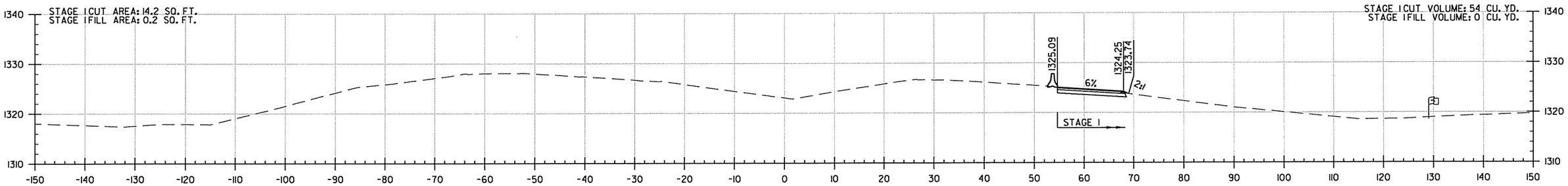

STA. 1349+00

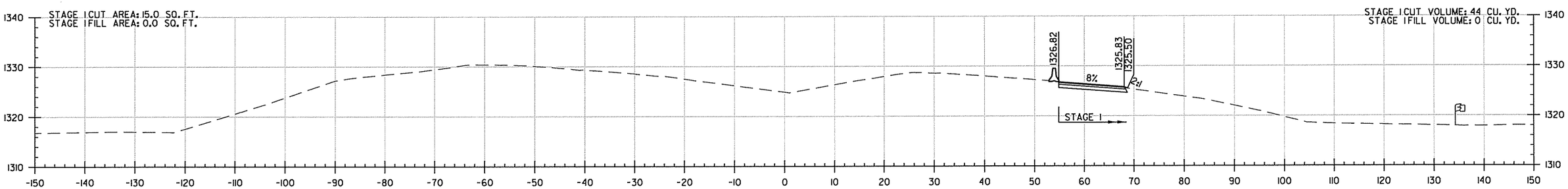

STA. 1348+00

I-49 STA. 1348+00 TO STA. 1351+00

4/28/2016
6:35:53 PM
\\CX\r-CA0902_CX_HWY540_01.dgn

DATE	DATE FILMED	DATE REVISED	DATE FILMED	FED.RD. DIST.NO.	STATE	FED.AID PROJ.NO.	SHEET NO.	TOTAL SHEETS
				6	ARK.			
				JOB NO.		CA0902	535	581

(2) TEMPORARY RAMP CROSS SECTIONS

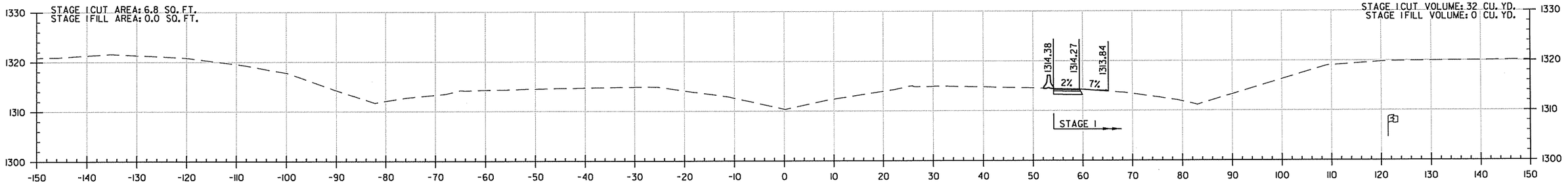

STA. 1355+00

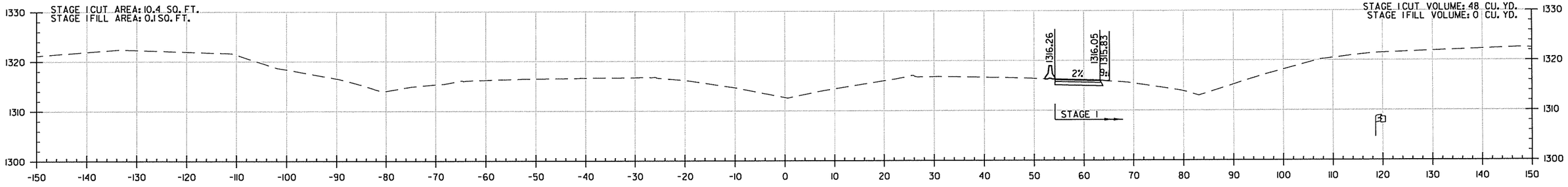

STA. 1354+00

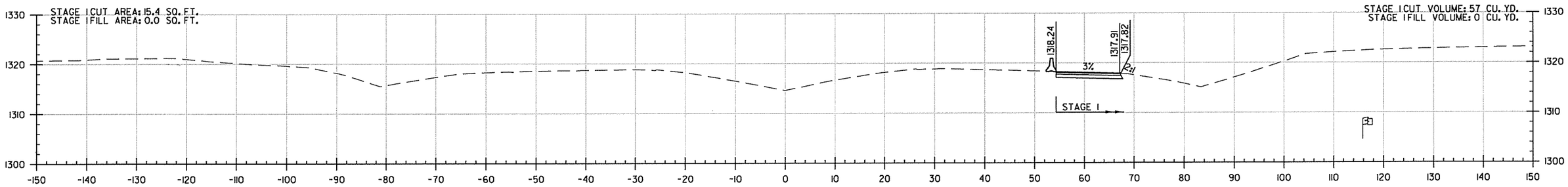

STA. 1353+00

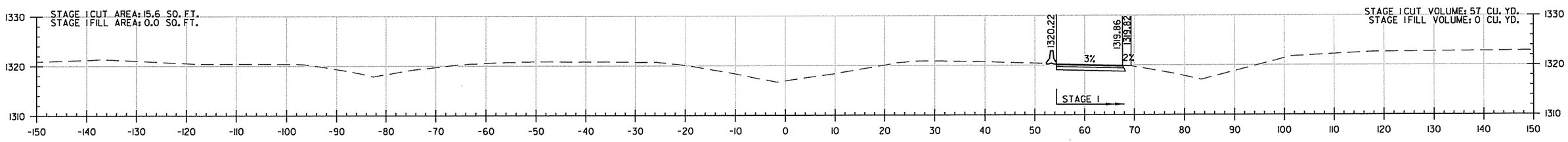

STA. 1352+00

I-49 STA. 1352+00 TO STA. 1355+00

4/28/2016
6:35:53 PM
...\CX\CA0902_CX_HWY540_01.dgn

DATE	DATE FILMED	DATE REVISED	DATE FILMED	FED.RD. DIST.NO.	STATE	FED.AID PROJ.NO.	SHEET NO.	TOTAL SHEETS
				6	ARK.			
				JOB NO.		CA0902	536	581

(2) TEMPORARY RAMP CROSS SECTIONS

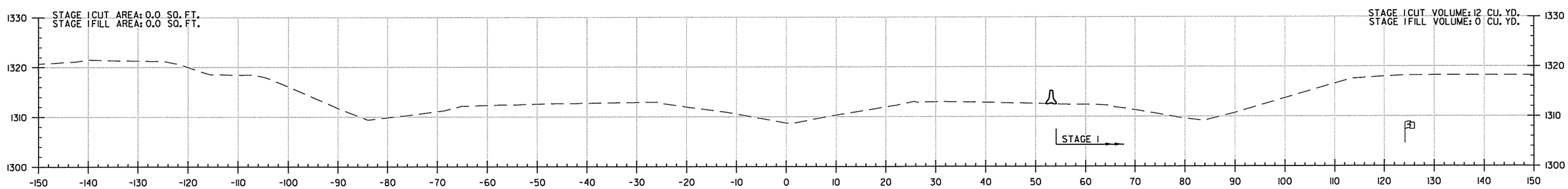

STA. 1355+99

I-49 STA. 1355+99 TO STA. 1355+99

4/28/2016
6:35:54 PM
\\CX\r-CA0902_CX_HWY540_01.dgn

DATE	DATE FILMED	DATE REVISED	DATE FILMED	FED.RD. DIST.NO.	STATE	FED.AID PROJ.NO.	SHEET NO.	TOTAL SHEETS
				6	ARK.			
				JOB NO.		CA0902	537	581

(2) I-49/HWY. 102 RAMP 4 CROSS SECTIONS

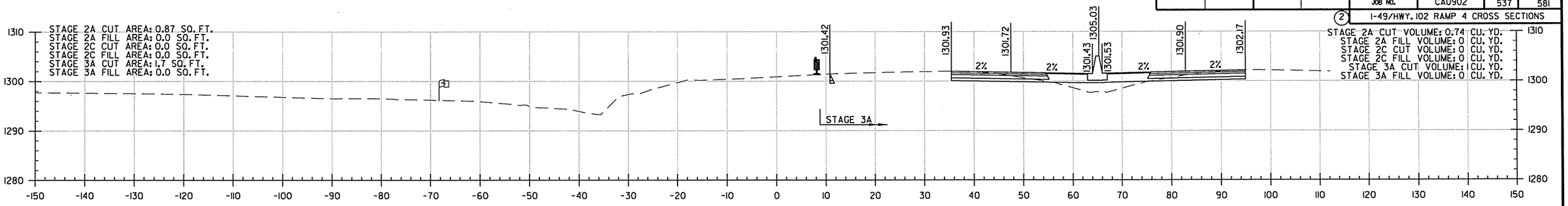

STA. 1021+95.92
BEGIN RAMP 4 CONSTRUCTION

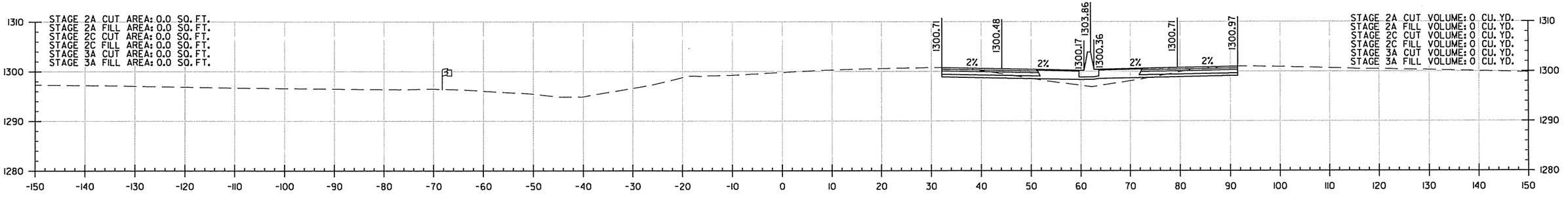

STA. 1021+50

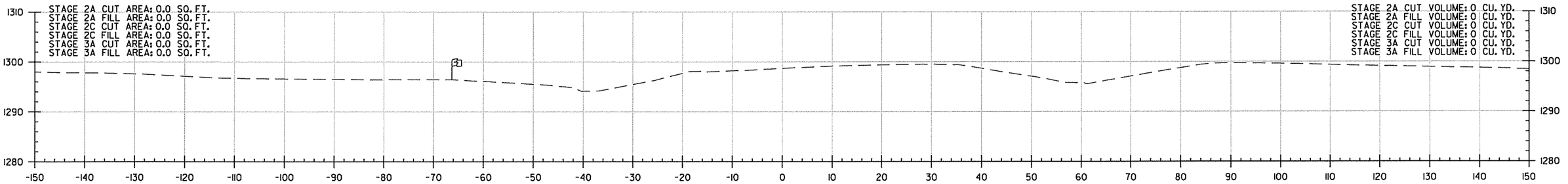

STA. 1021+00

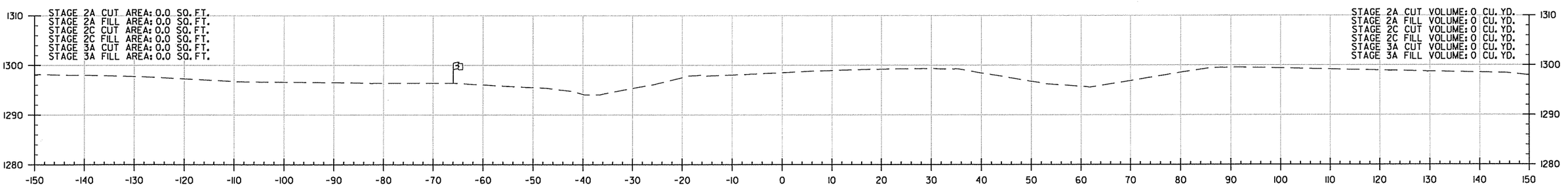

STA. 1020+93

I-49/HWY. 102 RAMP 4 STA. 1020+93 TO STA. 1021+96

4/28/2016
6:35:54 PM
\\CAVS\...\CA0902_CX_HWY540_01.dgn

DATE	DATE FILMED	DATE REVISED	DATE FILMED	FED.RD. DIST.NO.	STATE	FED.AID PROJ.NO.	SHEET NO.	TOTAL SHEETS
				6	ARK.			
				JOB NO.		CA0902	538	581

(2) I-49/HWY. 102 RAMP 4 CROSS SECTIONS

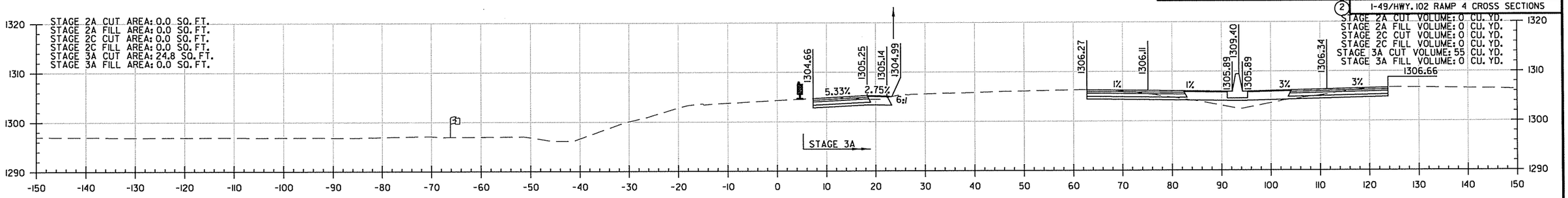

STA. 1023+50

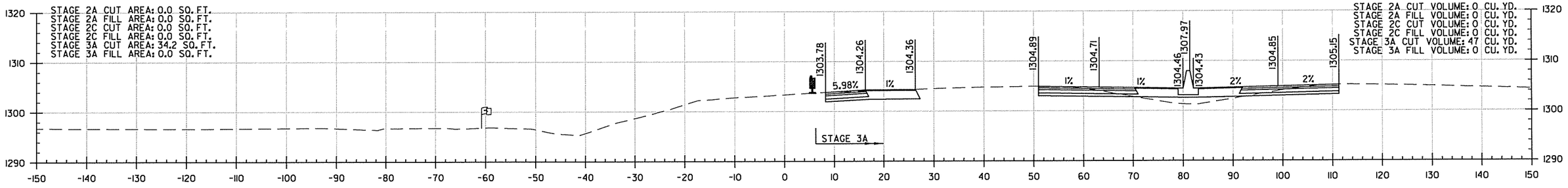

STA. 1023+00

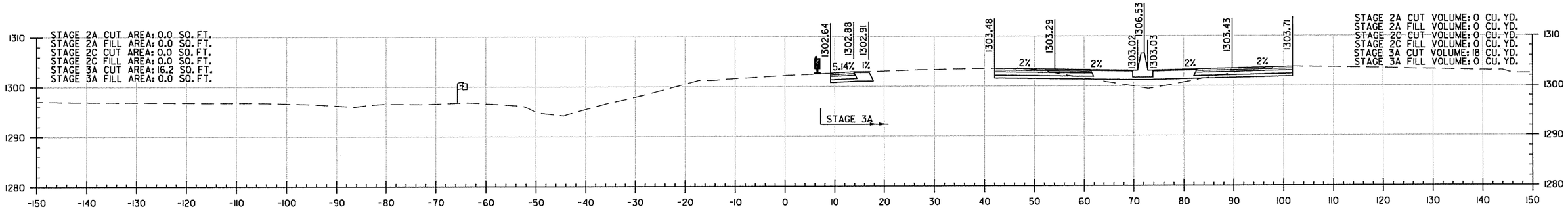

STA. 1022+50

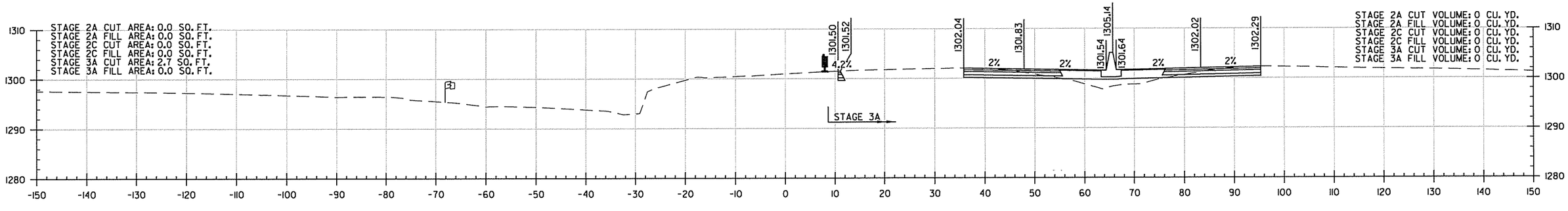

STA. 1022+00

I-49/HWY. 102 RAMP 4 STA. 1022+00 TO STA. 1023+50

4/28/2016
6:35:54 PM
...\CX\r-CA0902_CX_HWY540_01.dgn

DATE	DATE FILMED	DATE REVISED	DATE FILMED	FED.RD. DIST.NO.	STATE	FED.AID PROJ.NO.	SHEET NO.	TOTAL SHEETS
				6	ARK.			
				JOB NO.		CA0902	539	581

(2) I-49/HWY. 102 RAMP 4 CROSS SECTIONS

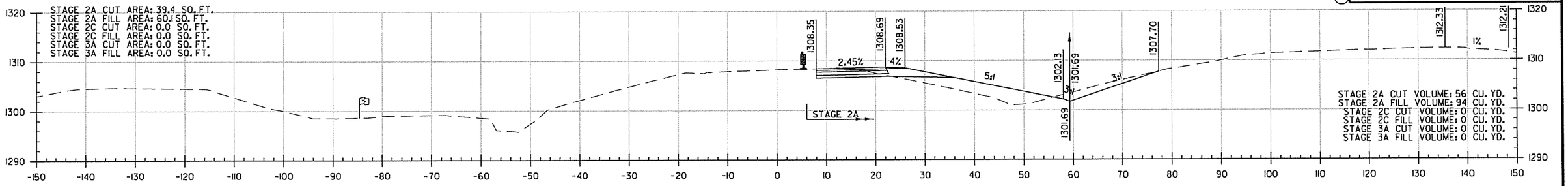

STA. 1025+50

STA. 1025+16 BEGIN
-5.29% RT. DITCH GRADE
ELEV. 1303.50

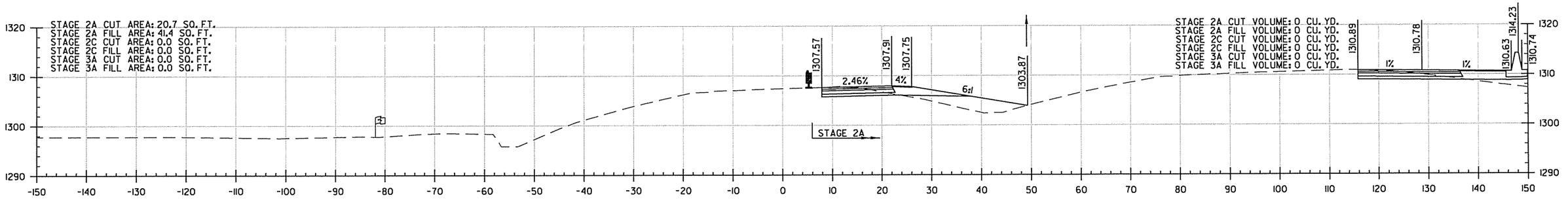

STA. 1025+00

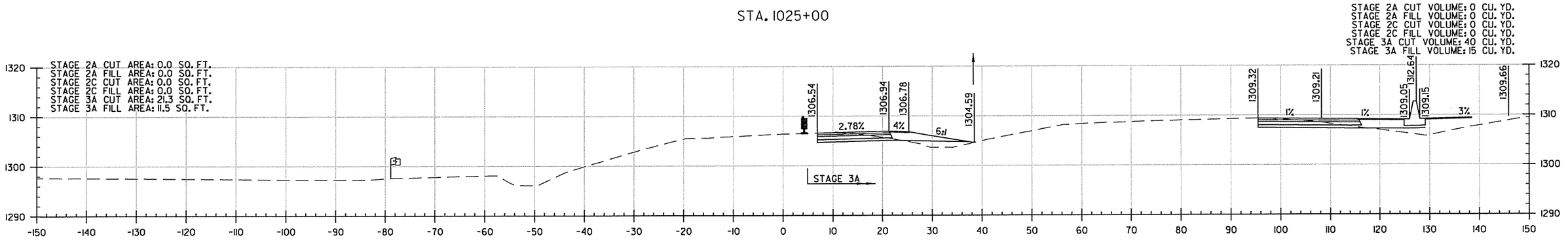

STA. 1024+50

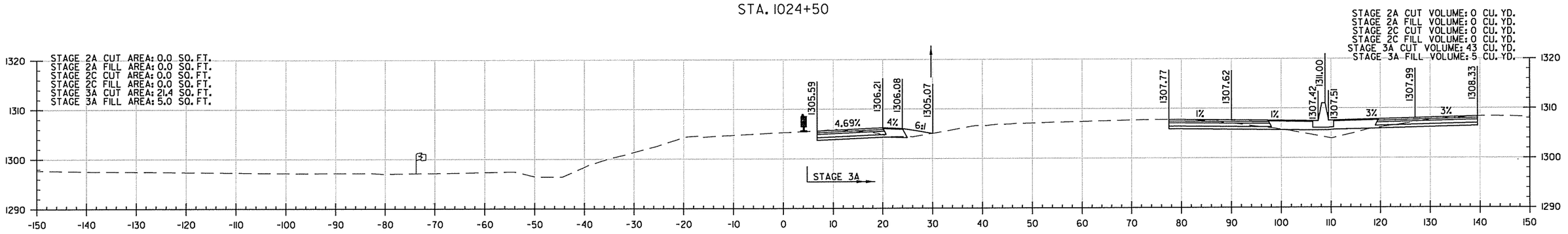

STA. 1024+00

I-49/HWY. 102 RAMP 4 STA. 1024+00 TO STA. 1025+50

4/28/2016
6:35:55 PM
...\CX\CA0902_CX_HWY540_01.dgn

DATE	DATE FILMED	DATE REVISED	DATE FILMED	FED.RD. DIST.NO.	STATE	FED.AID PROJ.NO.	SHEET NO.	TOTAL SHEETS
				6	ARK.			
				JOB NO.		CA0902	540	581

(2) I-49/HWY. 102 RAMP 4 CROSS SECTIONS

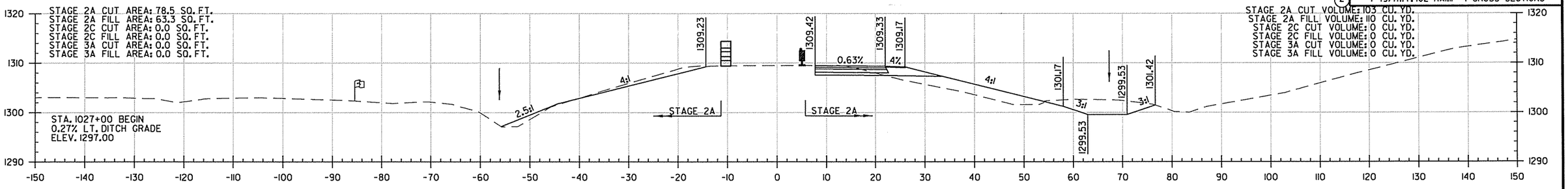

STA. 1027+00

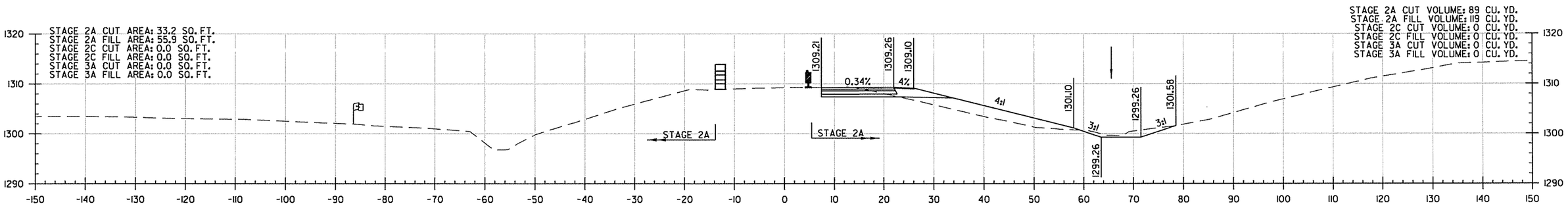

STA. 1026+50

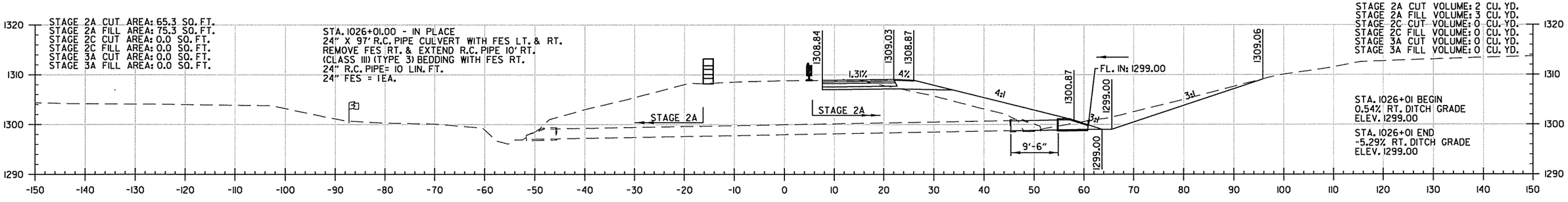

STA. 1026+01

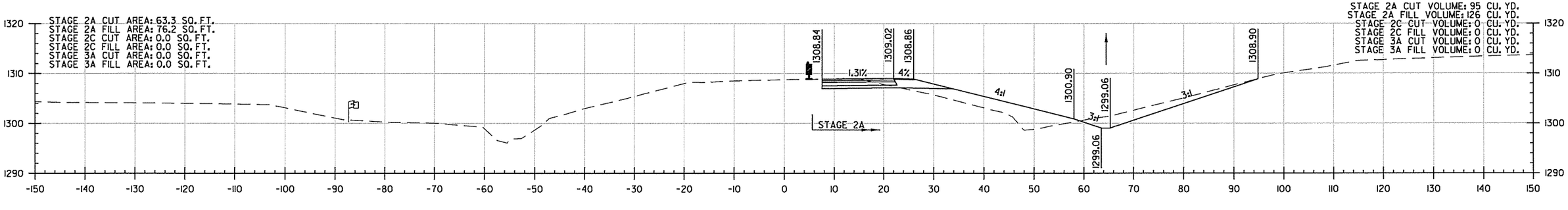

STA. 1026+00

I-49/HWY. 102 RAMP 4 STA. 1026+00 TO STA. 1027+00

4/28/2016
6:35:55 PM
\\CX\r-CA0902_CX_HWY540_01.dgn

DATE	DATE FILMED	DATE REVISED	DATE FILMED	FED.RD. DIST.NO.	STATE	FED.AID PROJ.NO.	SHEET NO.	TOTAL SHEETS
				6	ARK.			
				JOB NO.		CA0902	541	581

(2) I-49/HWY. 102 RAMP 4 CROSS SECTIONS

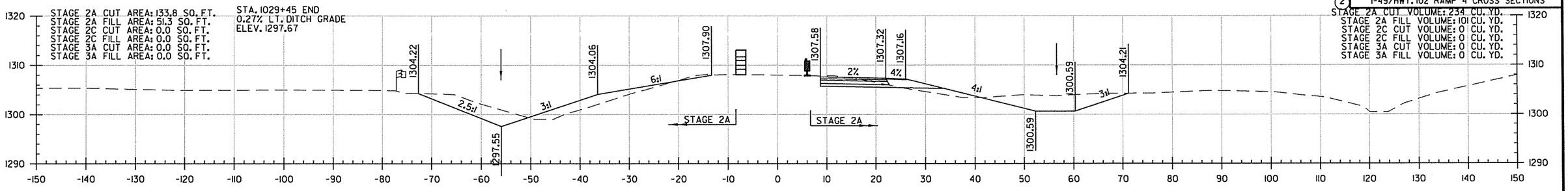

STA. 1029+00

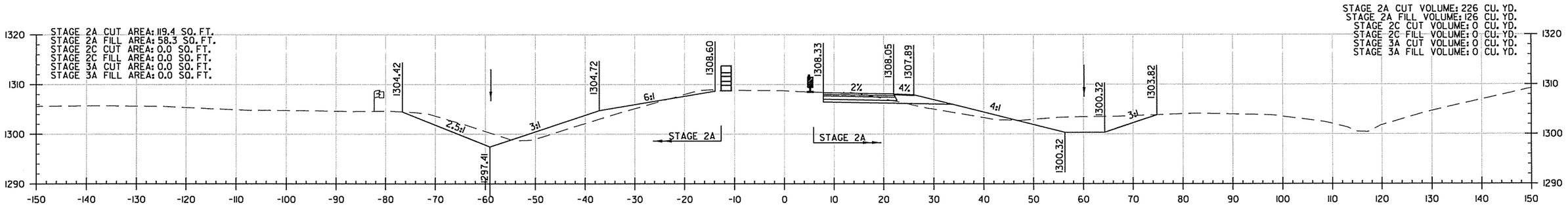

STA. 1028+50

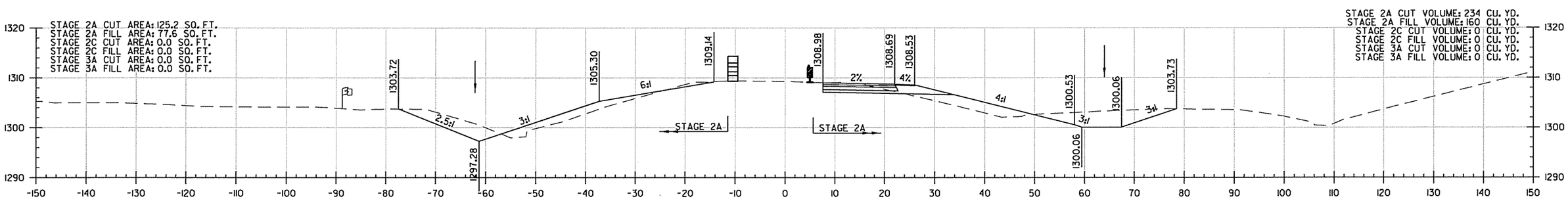

STA. 1028+00

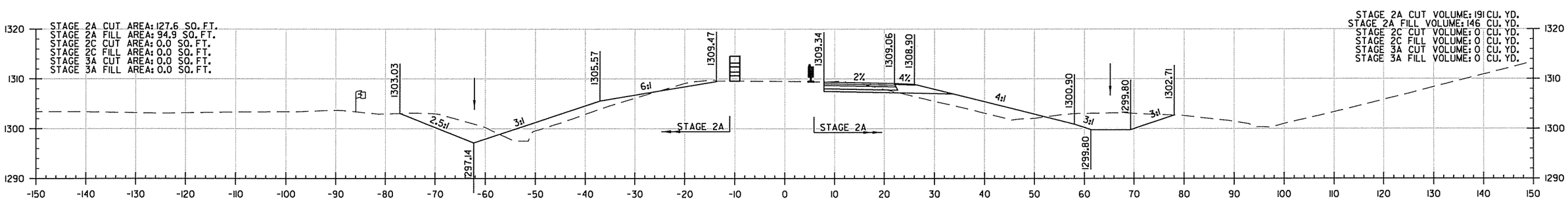

STA. 1027+50

I-49/HWY. 102 RAMP 4 STA. 1027+50 TO STA. 1029+00

4/28/2016
6:35:56 PM
...\CX\r-CA0902_CX_HWY540_01.dgn

DATE	DATE FILMED	DATE REVISED	DATE FILMED	FED.RD. DIST.NO.	STATE	FED.AID PROJ.NO.	SHEET NO.	TOTAL SHEETS
				6	ARK.			
				JOB NO.		CA0902	542	581

(2) I-49/HWY. 102 RAMP 4 CROSS SECTIONS

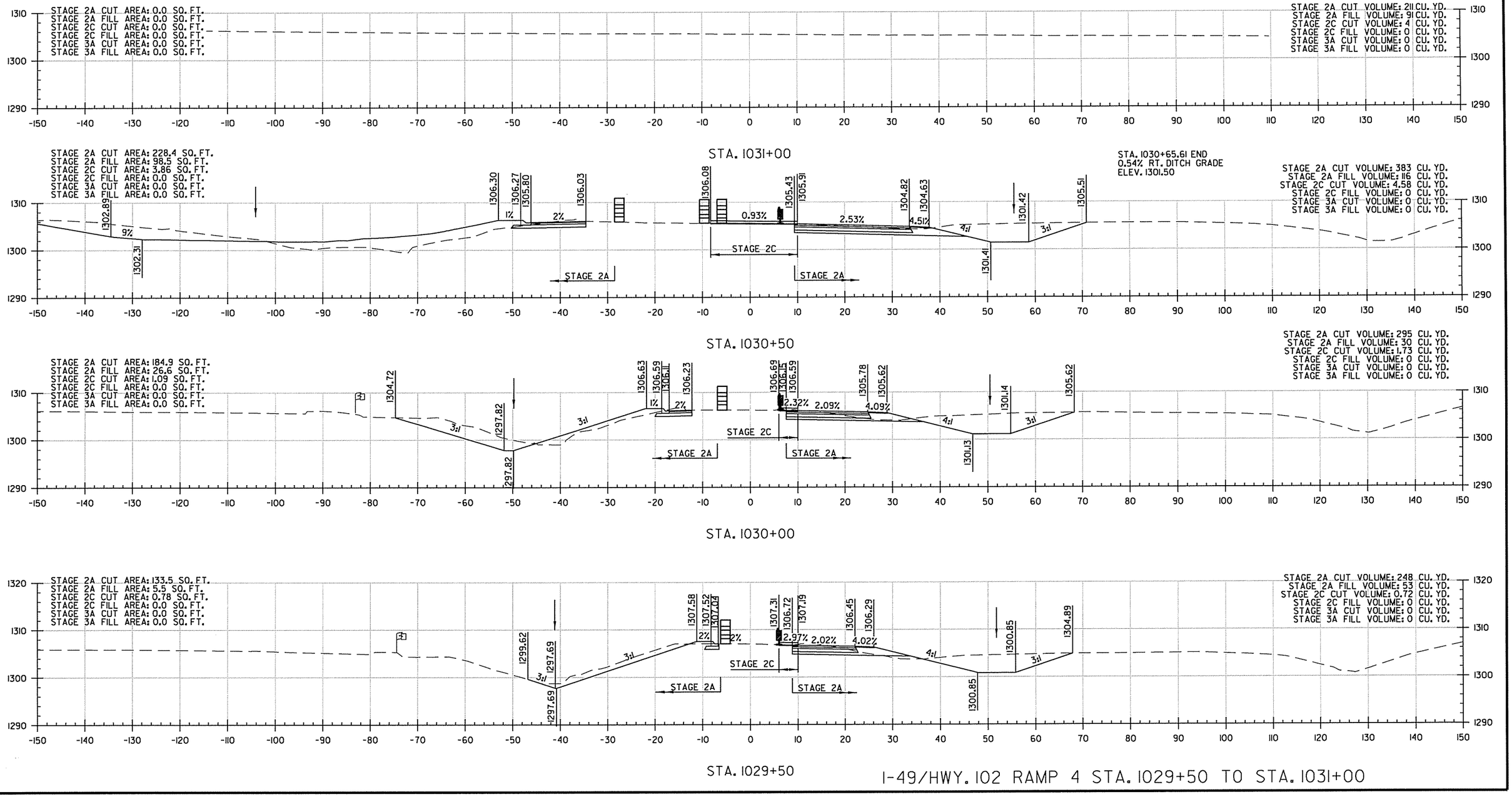

I-49/HWY. 102 RAMP 4 STA. 1029+50 TO STA. 1031+00

4/28/2016
6:35:56 PM
u:\CX\CA0902_CX_HWY540_01.dgn

DATE	DATE FILMED	DATE REVISED	DATE FILMED	FED.RD. DIST.NO.	STATE	FED.AID PROJ.NO.	SHEET NO.	TOTAL SHEETS
				6	ARK.			
				JOB NO.		CA0902	543	581
				(2)	I-49/HWY. 102 RAMP 4 CROSS SECTIONS			

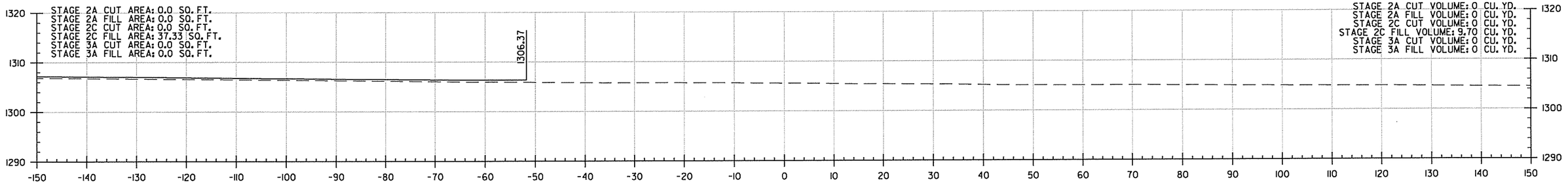

STA. 1031+14
END RAMP 4 CONSTRUCTION

I-49/HWY. 102 RAMP 4 STA. 1031+14 TO STA. 1031+14

4/28/2016
6:35:26 PM
\\XA\C\CA0902_CX_HWY540_01.dgn

DATE	DATE FILMED	DATE REVISED	DATE FILMED	FED.RD. DIST.NO.	STATE	FED.AID PROJ.NO.	SHEET NO.	TOTAL SHEETS
				6	ARK.			
				JOB NO.		CA0902	544	581

(2) I-49/HWY. 72 RAMP 5 CROSS SECTIONS

STA. 1434+30 BEGIN
-2.70% RT. DITCH GRADE
ELEV. 1282.29

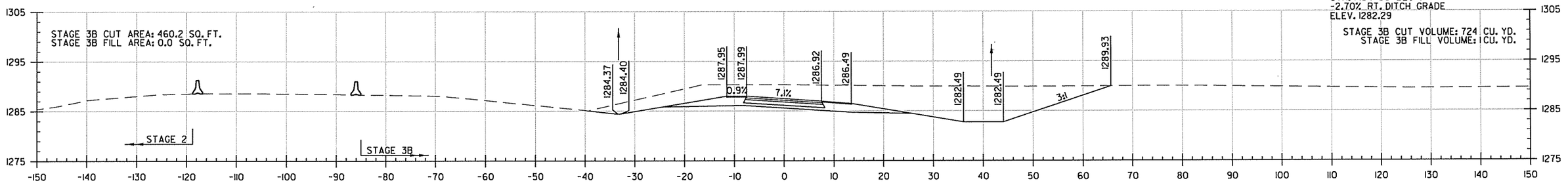

1434+00

STA. 1433+90 BEGIN
-8.38% LT. DITCH GRADE
ELEV. 1285.25

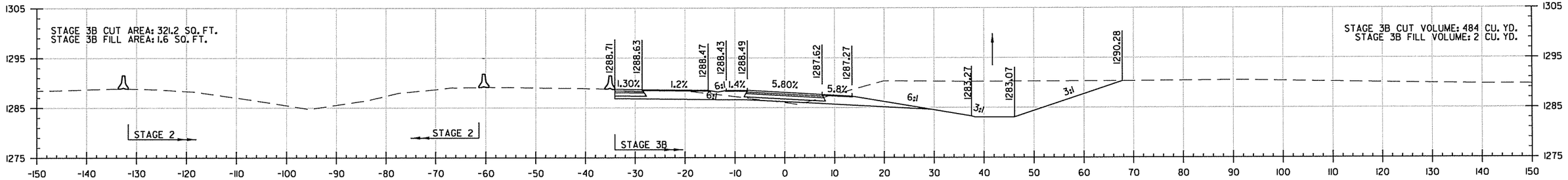

1433+50

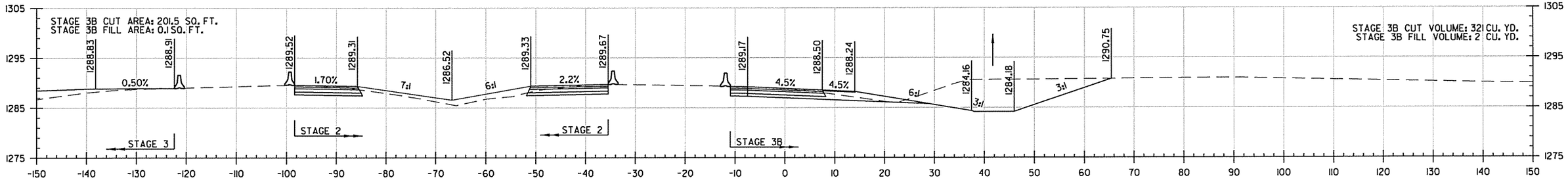

1433+00

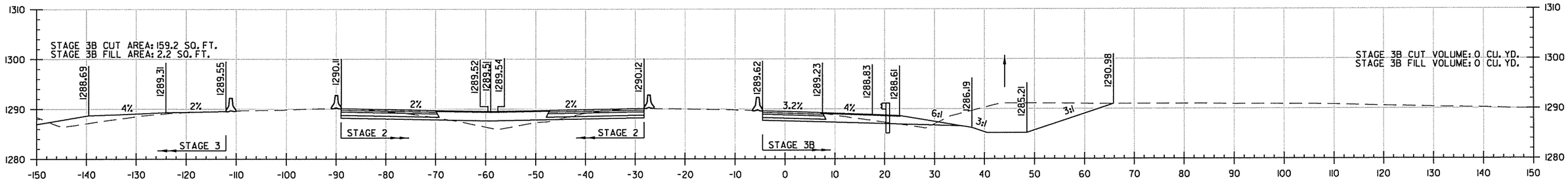

RAMP 5 STA. 1432+52.00 =
I-49 STA. 1432+51.65

RAMP-5 STA. 1432+52 TO STA. 1434+00

4/28/2016
6:35:57 PM
...\CX\CA0902_CX_HWY540_01.dgn

DATE	DATE FILMED	DATE REVISED	DATE FILMED	FED.RD. DIST.NO.	STATE	FED.AID PROJ.NO.	SHEET NO.	TOTAL SHEETS
				6	ARK.			
				JOB NO.		CA0902	545	581

(2) I-49/HWY. 72 RAMP 5 CROSS SECTIONS

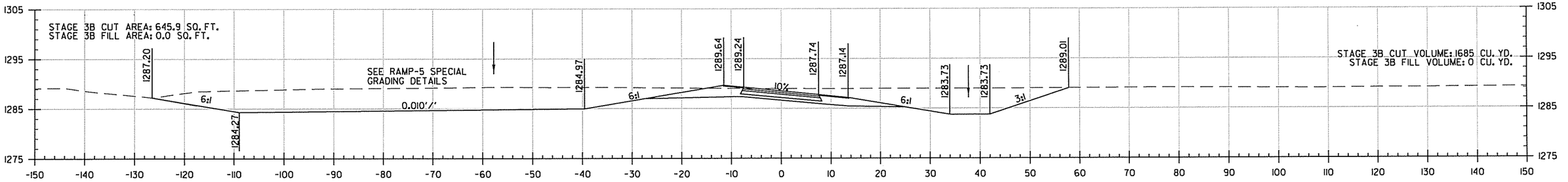

1435+50

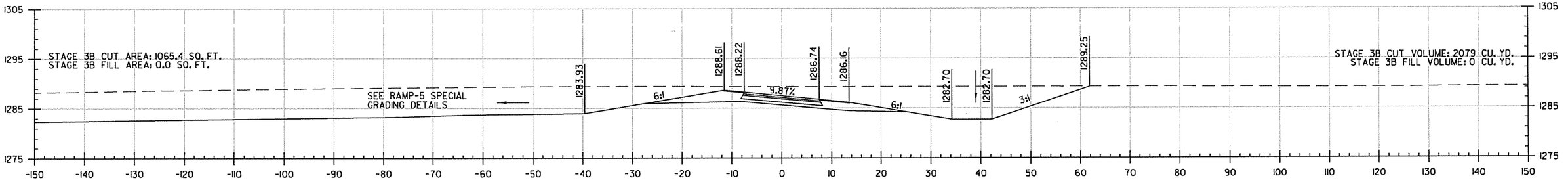

1435+00

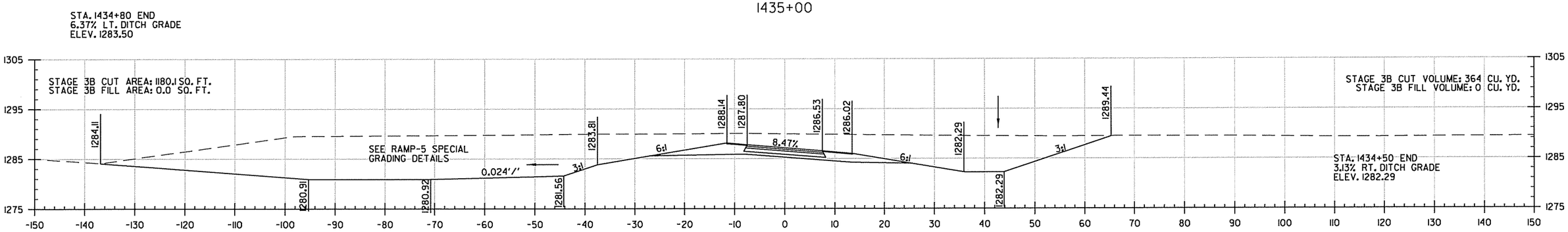

1434+50

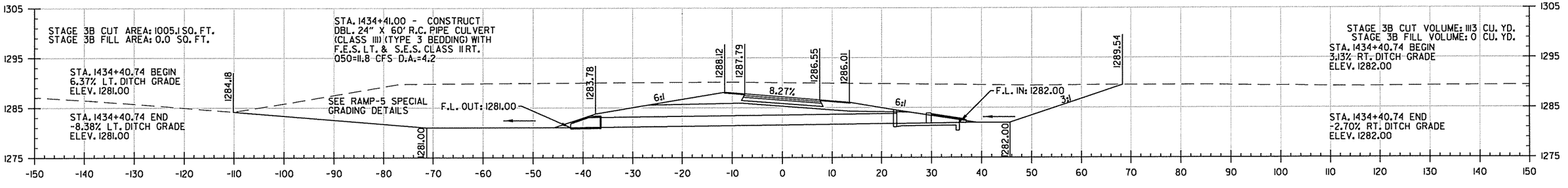

1434+41

RAMP-5 STA. 1434+41 TO STA. 1435+50

4/28/2016
6:35:57 PM
\\CX\rCA0902_CX_HWY540_01.dgn

DATE	DATE FILMED	DATE REVISED	DATE FILMED	FED.RD. DIST.NO.	STATE	FED.AID PROJ.NO.	SHEET NO.	TOTAL SHEETS
				6	ARK.			
				JOB NO.		CA0902	546	581

(2) I-49/HWY. 72 RAMP 5 CROSS SECTIONS

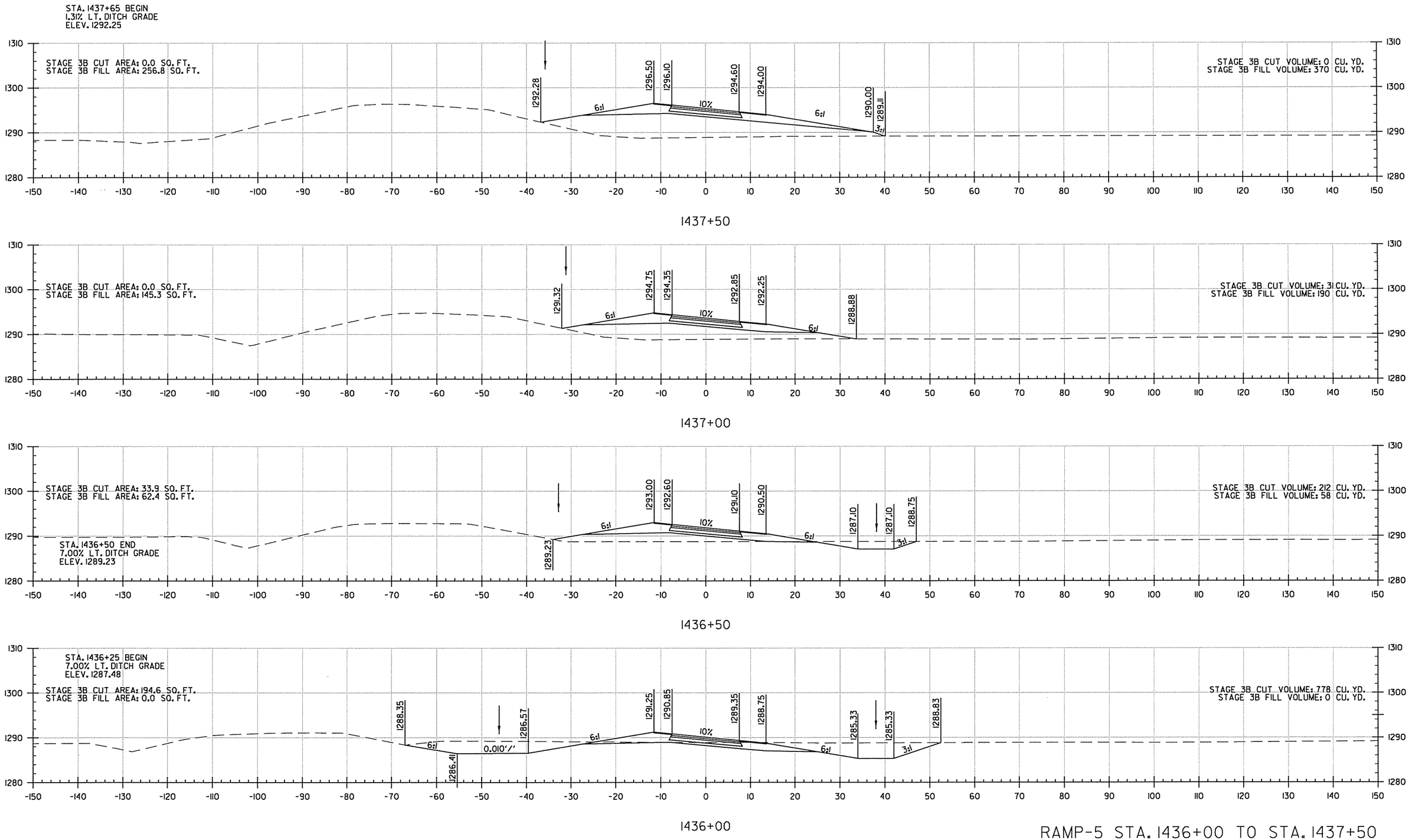

RAMP-5 STA. 1436+00 TO STA. 1437+50

4/28/2016
6:35:58 PM
...\CA0902_CX_HWY540_01.dgn

DATE	DATE FILMED	DATE REVISED	DATE FILMED	FED.RD. DIST.NO.	STATE	FED.AID PROJ.NO.	SHEET NO.	TOTAL SHEETS
				6	ARK.			
				JOB NO.		CA0902	547	581

(2) I-49/HWY. 72 RAMP 5 CROSS SECTIONS

STA. 1439+75 END
0.95% LT. DITCH GRADE
ELEV. 1294.25

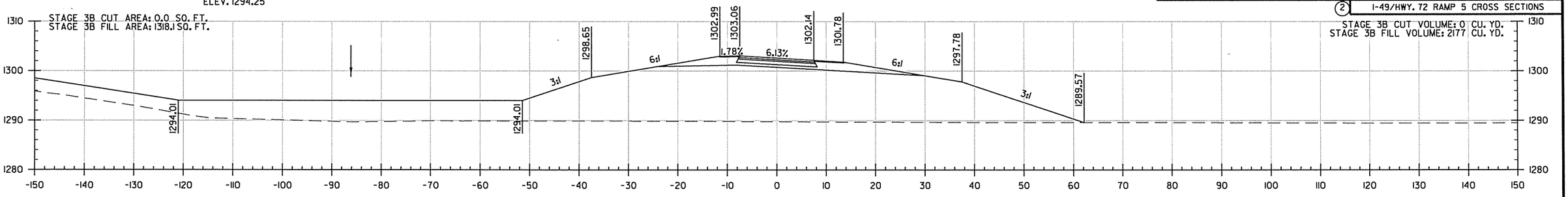

1439+50

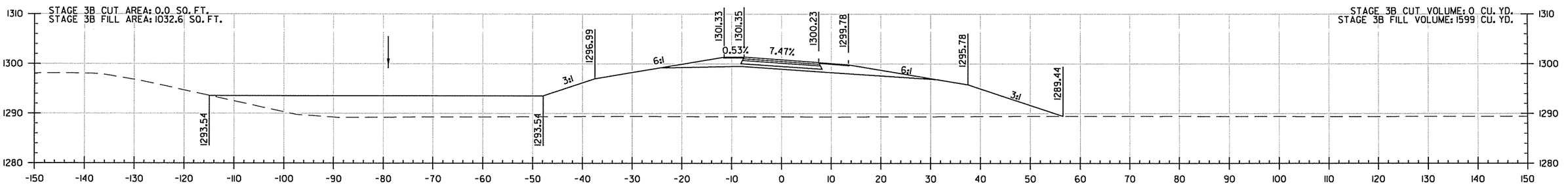

1439+00

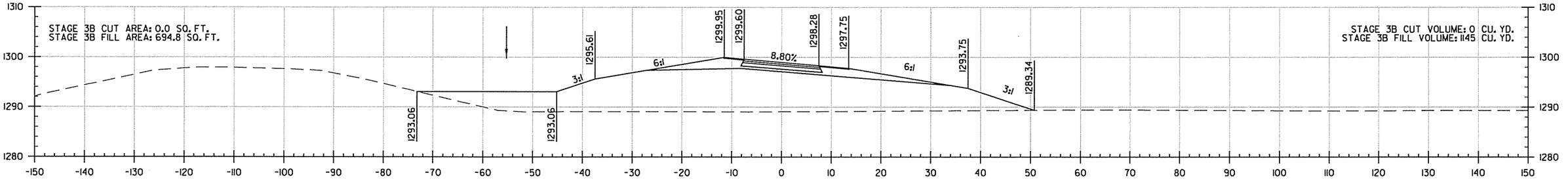

1438+50

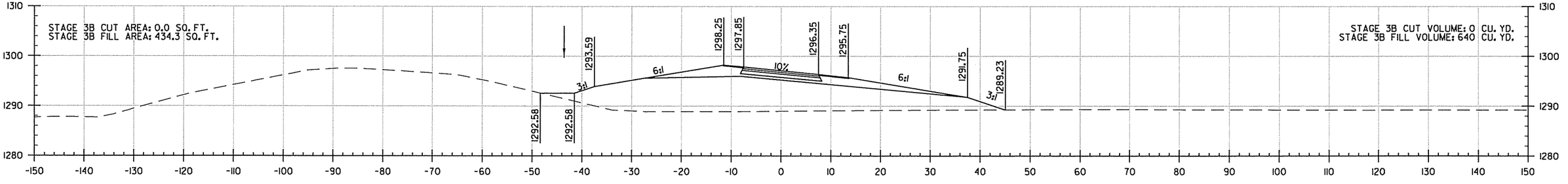

1438+00

RAMP-5 STA. 1438+00 TO STA. 1439+50

4/28/2016
6:35:58 PM
\\CX\CA0902_CX_HWY540_01.dgn

DATE	DATE FILMED	DATE REVISED	DATE FILMED	FED.RD. DIST.NO.	STATE	FED.AID PROJ.NO.	SHEET NO.	TOTAL SHEETS
				6	ARK.			
				JOB NO.		CA0902	548	581
				(2)	I-49/HWY. 72 RAMP 5 CROSS SECTIONS			

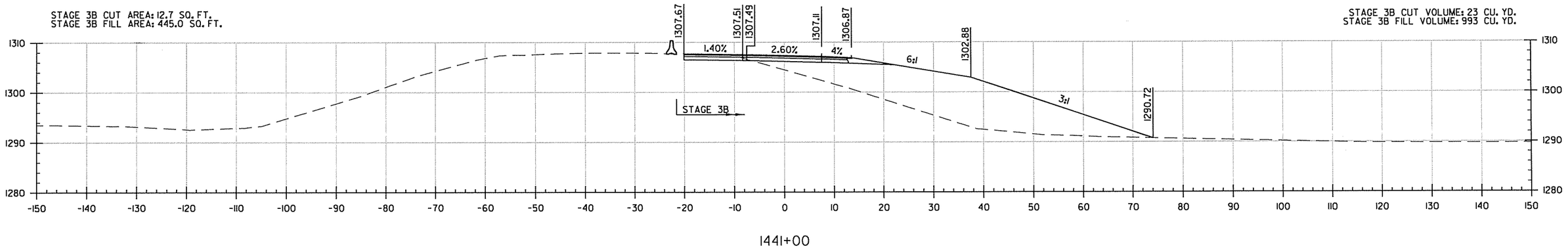

1441+00

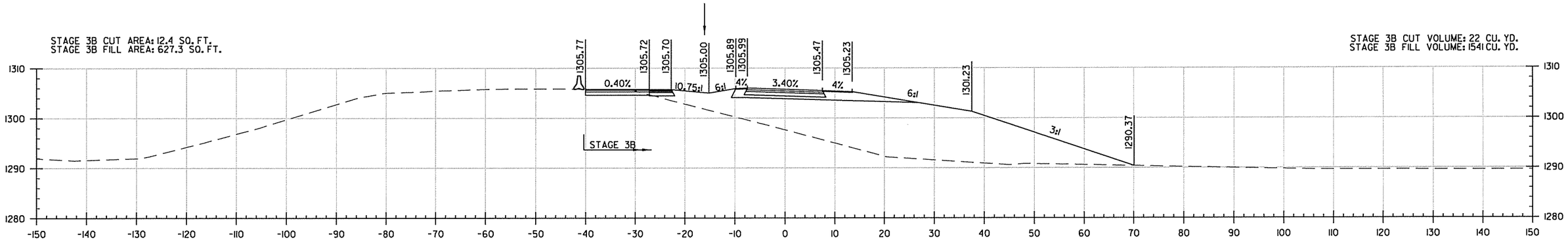

1440+50

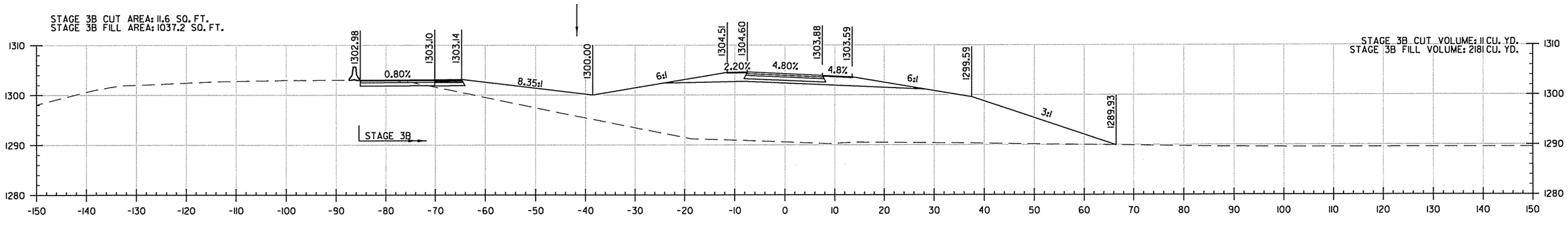

1440+00

RAMP-5 STA. 1440+00 TO STA. 1441+00

4/28/2016
6:35:28 PM
\\DATA\C-CA0902_CX_HWY540_01.dgn

DATE	DATE FILMED	DATE REVISED	DATE FILMED

FED.RD. DIST.NO.	STATE	FED.AID PROJ.NO.	SHEET NO.	TOTAL SHEETS
6	ARK.			
JOB NO.		CA0902	549	581

(2) I-49/HWY. 72 RAMP 5 CROSS SECTIONS

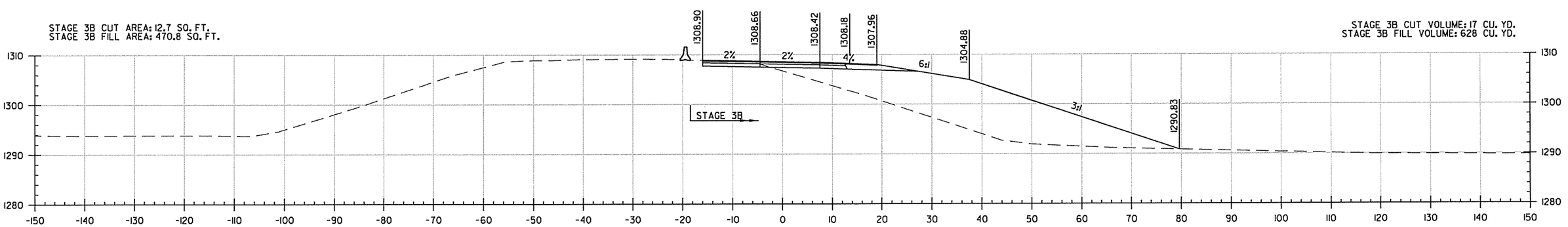

RAMP 5 STA. 1441+37.03 =
HWY. 72 STA. 196+82.51

RAMP-5 STA. 1441+37 TO STA. 1441+37

4/28/2016
6:35:29 PM
\\XAT\CA0902_CX_HWY540_01.dgn

DATE	DATE FILMED	DATE REVISED	DATE FILMED	FED.RD. DIST.NO.	STATE	FED.AID PROJ.NO.	SHEET NO.	TOTAL SHEETS
				6	ARK.			
				JOB NO.		CA0902	550	581

(2) I-49/HWY. 72 RAMP 6 CROSS SECTIONS

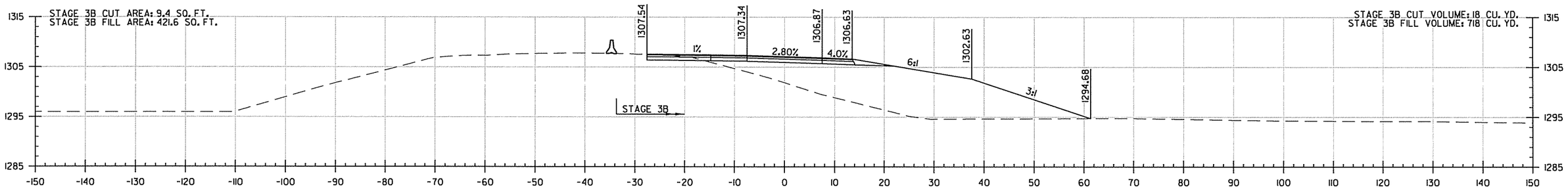

192+50

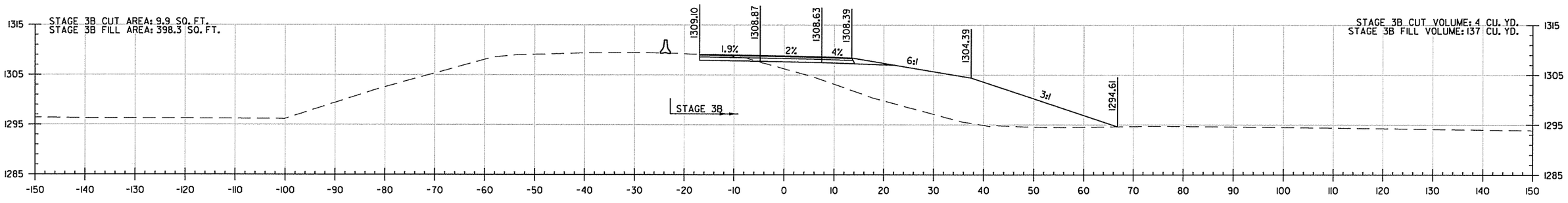

192+00

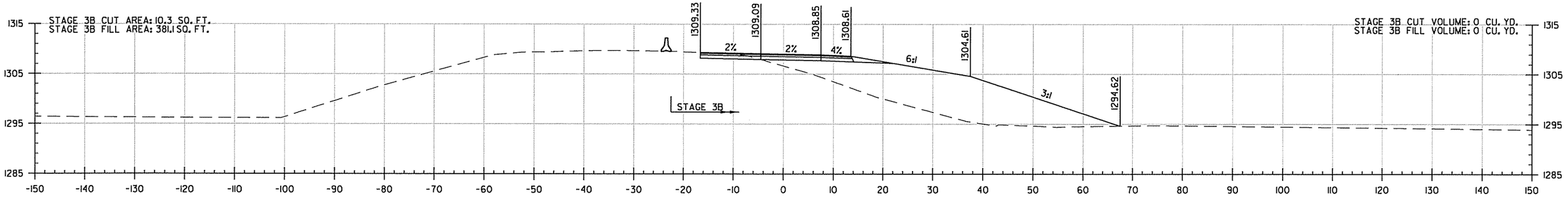

RAMP 6 STA. 191+90.00 =
E. CENTRAL AVE. STA. 191+90.27

RAMP-6 STA. 191+90 TO STA. 192+50

4/28/2016
6:35:59 PM
...\CX\CA0902_CX_HWY540_01.dgn

DATE	DATE FILMED	DATE REVISED	DATE FILMED	FED.RD. DIST.NO.	STATE	FED.AID PROJ.NO.	SHEET NO.	TOTAL SHEETS
				6	ARK.			
				JOB NO.		CA0902	551	581

(2) I-49/HWY. 72 RAMP 6 CROSS SECTIONS

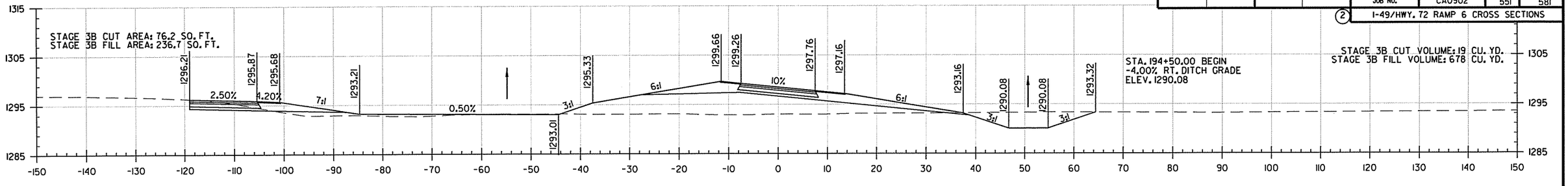

194+50

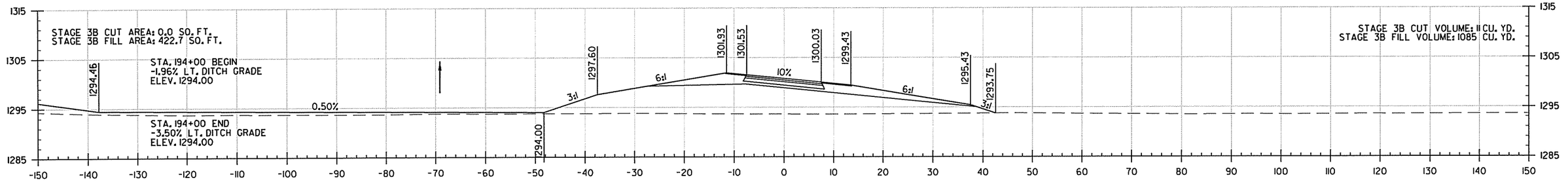

194+00

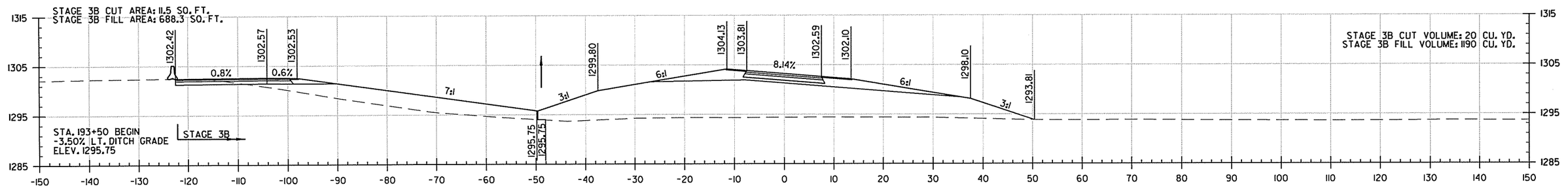

193+50

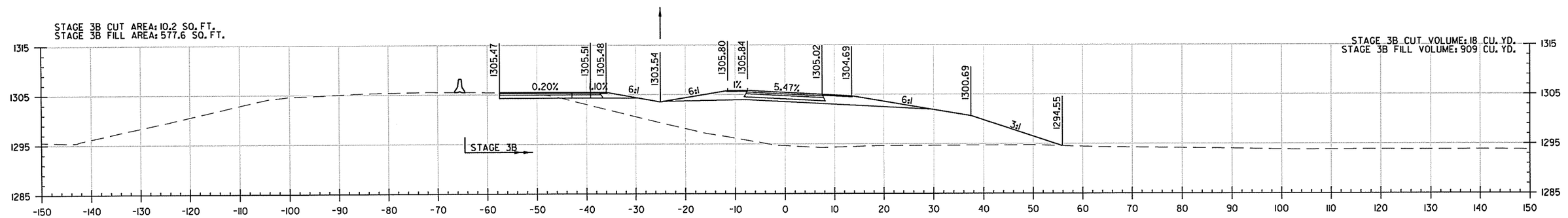

193+00

RAMP-6 STA. 193+00 TO STA. 194+50

5/19/2016
5:22:06 PM
\\CX\CA0902 CX HWY540 01.dgn

DATE	DATE FILMED	DATE REVISED	DATE FILMED	FED.RD. DIST.NO.	STATE	FED.AID PROJ.NO.	SHEET NO.	TOTAL SHEETS
				6	ARK.			
				JOB NO.		CA0902	552	581

(2) I-49/HWY. 72 RAMP 6 CROSS SECTIONS

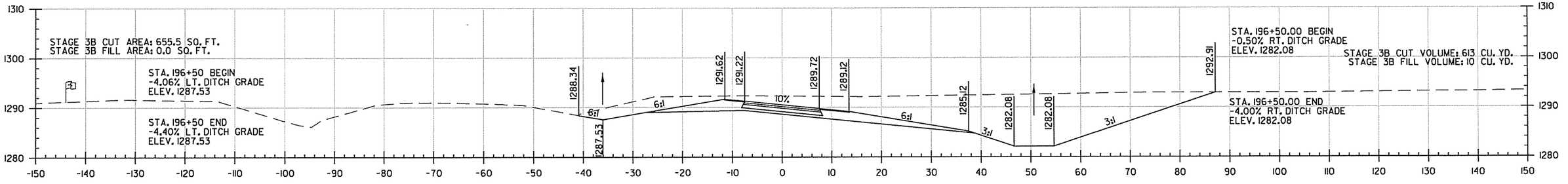

196+50

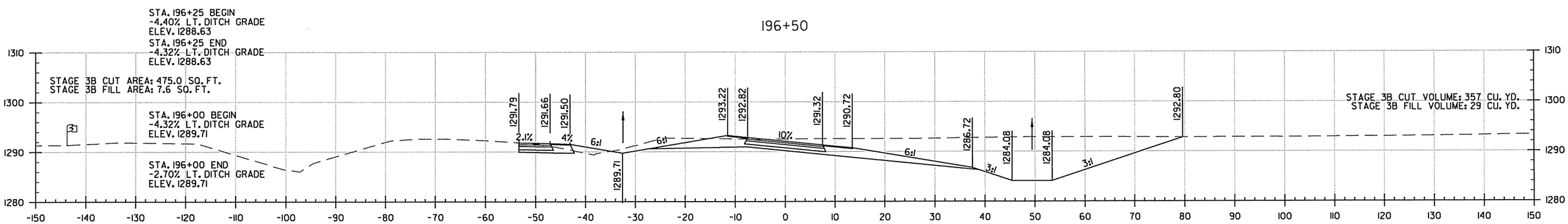

196+00

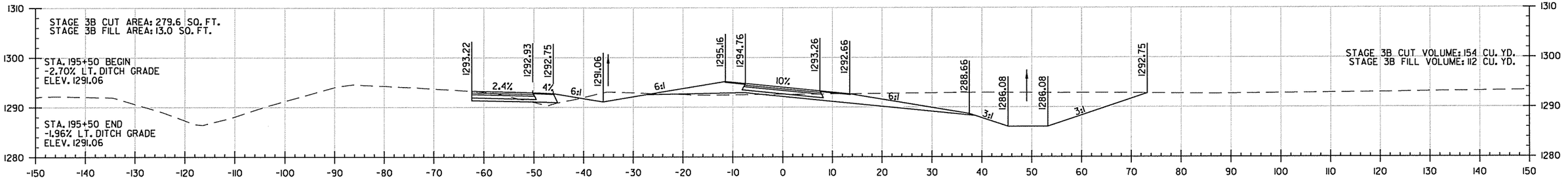

195+50

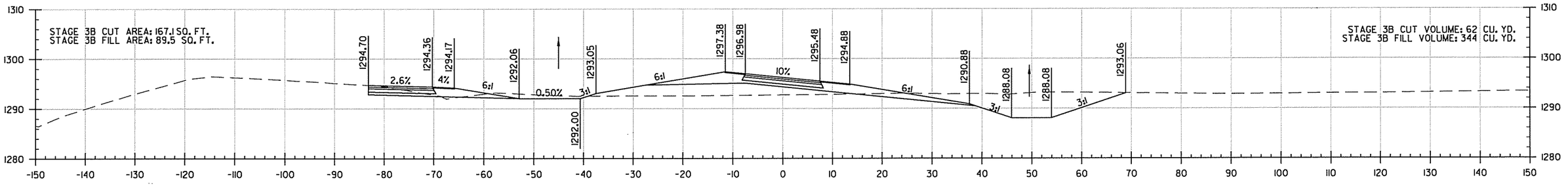

195+00

RAMP-6 STA. 195+00 TO STA. 196+50

4/28/2016
6:36:00 PM
\\CX\CA0902_CX_HWY540_01.dgn

DATE	DATE FILMED	DATE REVISED	DATE FILMED	FED.RD. DIST.NO.	STATE	FED.AID PROJ.NO.	SHEET NO.	TOTAL SHEETS
				6	ARK.			
				JOB NO.		CA0902	553	581

(2) I-49/HWY. 72 RAMP 6 CROSS SECTIONS

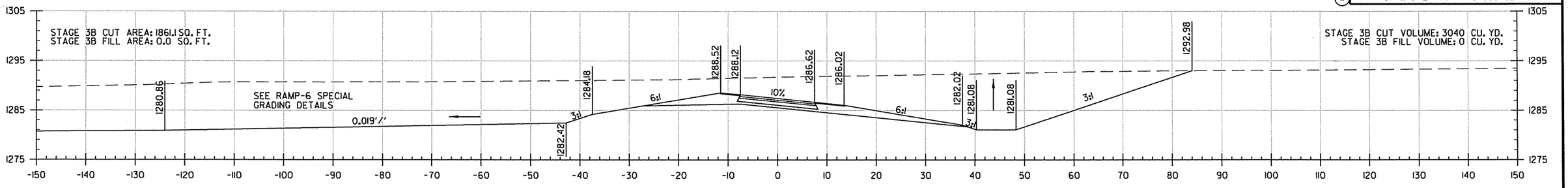

198+50

STA. 198+26.68 BEGIN
-5.58% LT. DITCH GRADE
ELEV. 1283.75

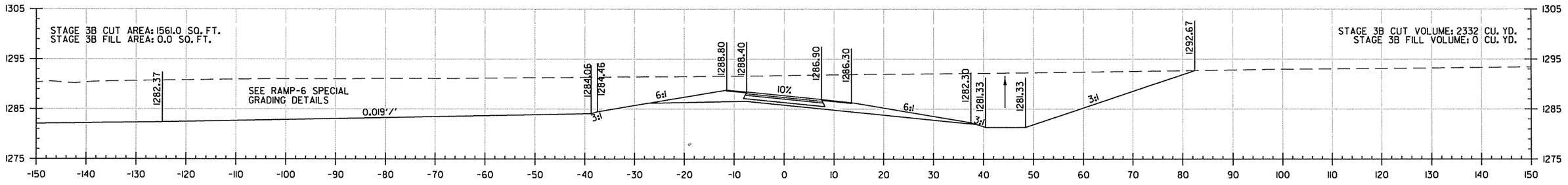

198+00

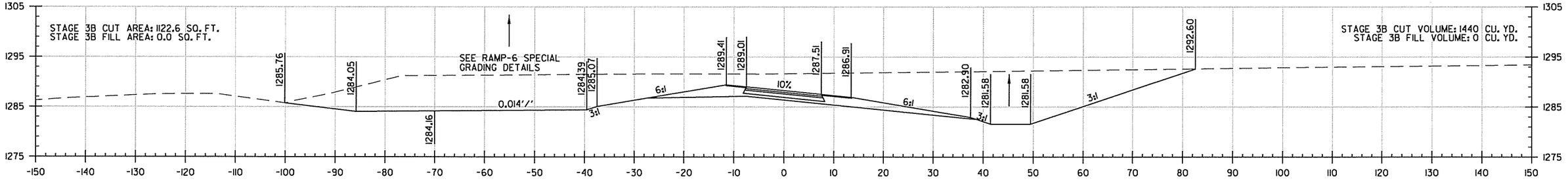

197+50

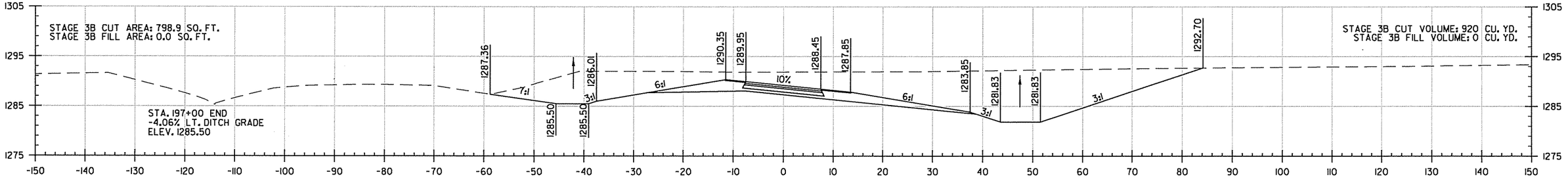

197+00

RAMP-6 STA. 197+00 TO STA. 198+50

4/28/2016
6:36:00 PM
C:\CAD\C-CA0902_CX_HWY540_01.dgn

DATE	DATE FILMED	DATE REVISED	DATE FILMED	FED.RD. DIST.NO.	STATE	FED.AID PROJ.NO.	SHEET NO.	TOTAL SHEETS
				6	ARK.			
				JOB NO.		CA0902	554	581

(2) I-49/HWY. 72 RAMP 6 CROSS SECTIONS

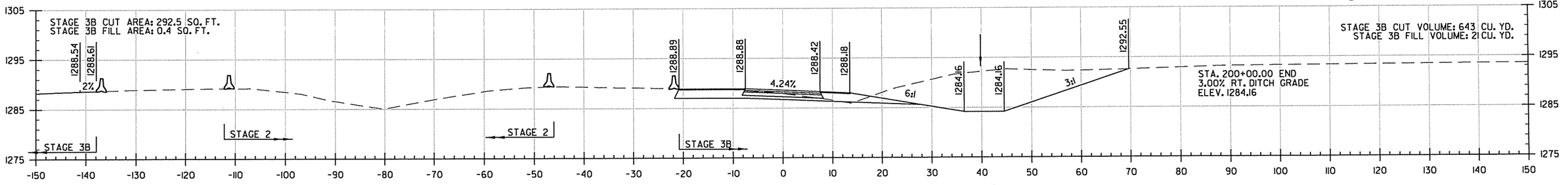

200+00

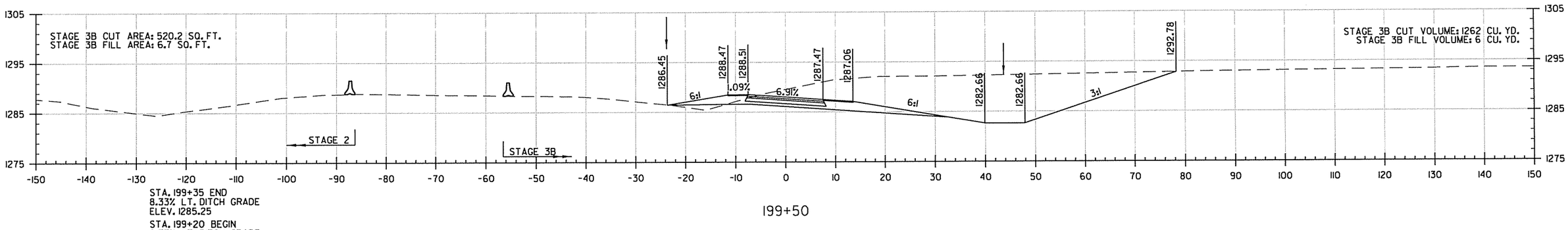

199+50

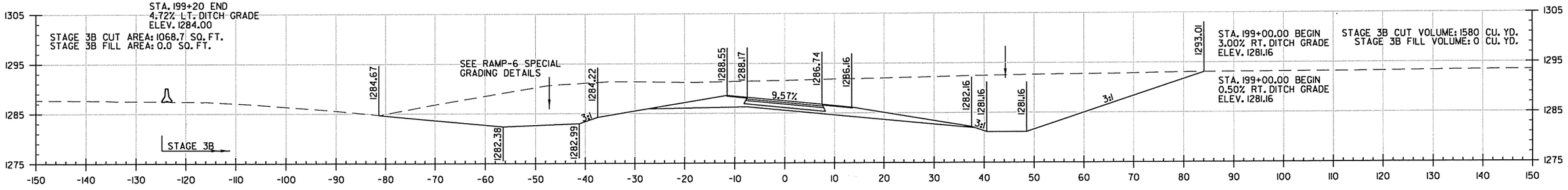

199+00

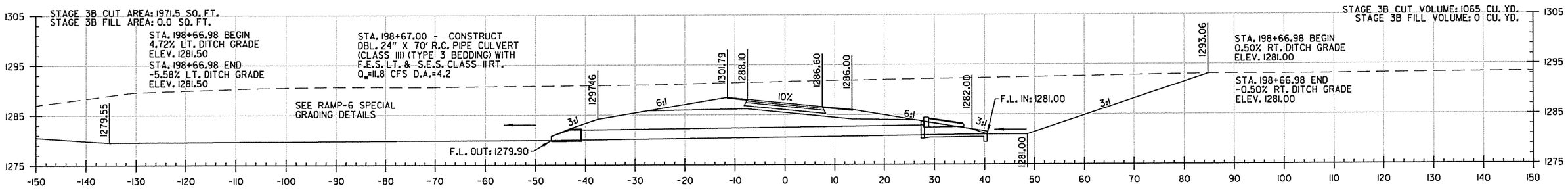

198+67

RAMP-6 STA. 198+67 TO STA. 200+00

4/28/2016
6:36:01 PM
\\CX\CA0902_CX_HWY540_01.dgn

DATE	DATE FILMED	DATE REVISED	DATE FILMED

FED.RD. DIST.NO.	STATE	FED.AID PROJ.NO.	SHEET NO.	TOTAL SHEETS
6	ARK.			
JOB NO.		CA0902	555	581

(2) I-49/HWY. 72 RAMP 6 CROSS SECTIONS

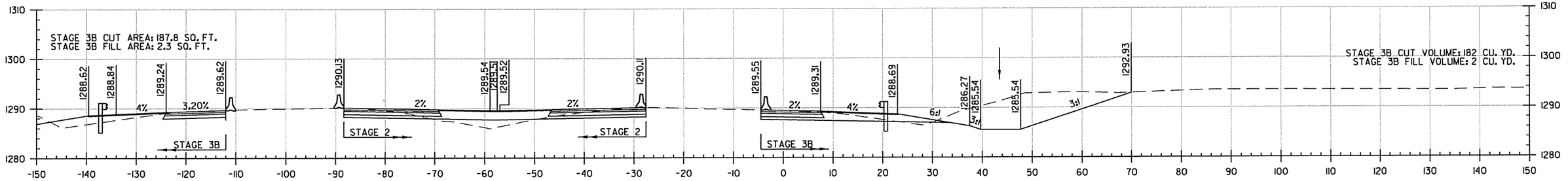

RAMP 6 STA. 200+75.36 =
I-49 STA. 14312+51.34

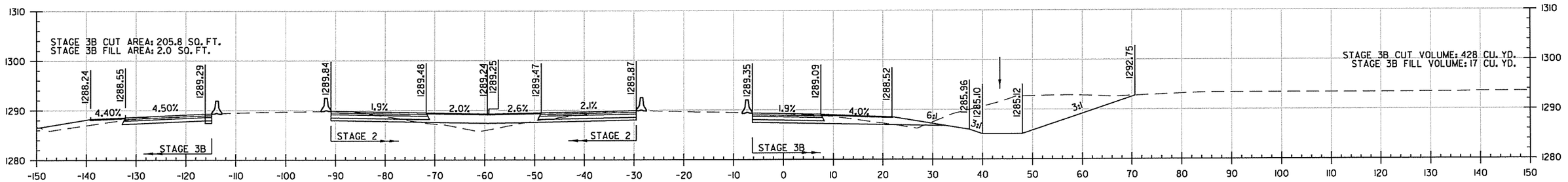

200+50

RAMP-6 STA. 200+50 TO STA. 200+75

4/28/2016
6:56:01 PM
J:\CAD\CA0902_CX_HWY540_01.dgn

DATE	DATE FILMED	DATE REVISED	DATE FILMED	FED.RD. DIST.NO.	STATE	FED.AID PROJ.NO.	SHEET NO.	TOTAL SHEETS
				6	ARK.			
				JOB NO.		CA0902	556	581

(2) HWY. 102 CROSS SECTIONS

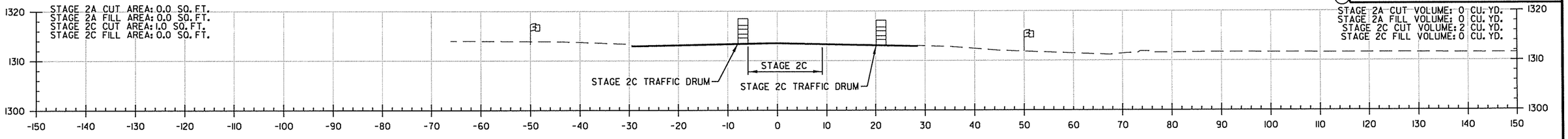

STA. 5+94

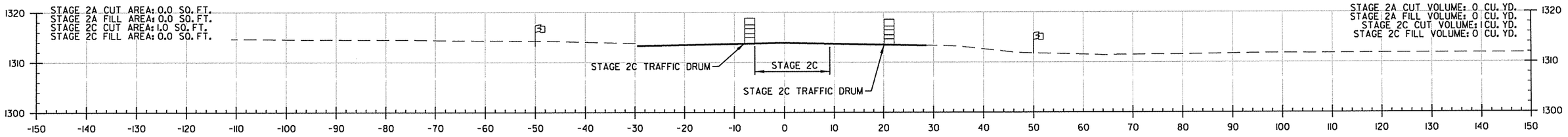

STA. 5+40

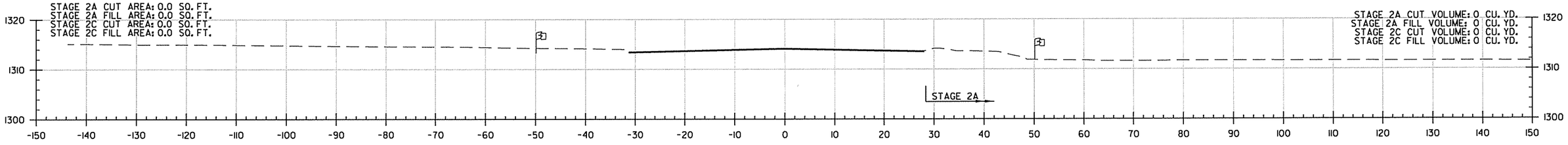

STA. 5+00

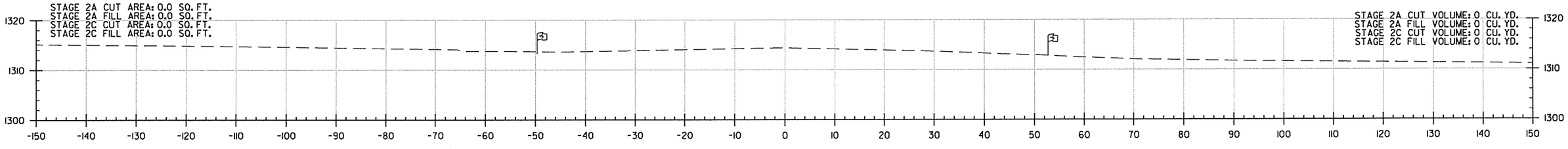

STA. 4+65.50
BEGIN CONSTRUCTION

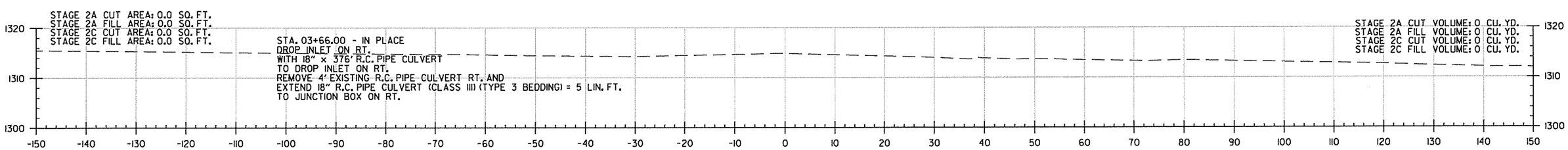

STA. 4+00

HWY. 102 STA. 4+00 TO STA. 5+94

4/28/2016
6:36:02 PM
...\CX\CA0902_CX_HWY540_01.dgn

DATE	DATE FILMED	DATE REVISED	DATE FILMED	FED.RD. DIST.NO.	STATE	FED.AID PROJ.NO.	SHEET NO.	TOTAL SHEETS
				6	ARK.			
				JOB NO.		CA0902	557	581

(2) HWY. 102 CROSS SECTIONS

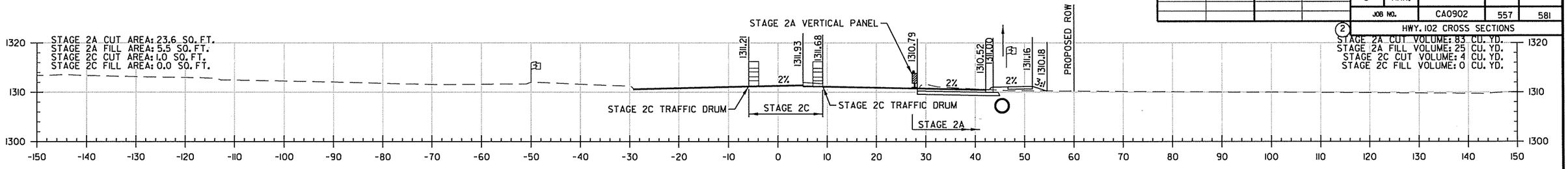

STA. 9+00

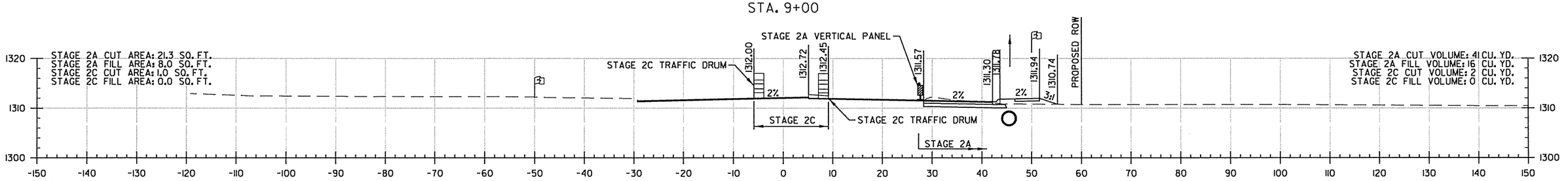

STA. 8+00

STA. 07+47.00 - IN PLACE
DROP INLET ON LT.
WITH 18" x 60' R.C. PIPE CULVERT
TO DROP INLET ON RT.
REMOVE 4' OF R.C. PIPE CULVERT RT. AND
EXTEND 18" R.C. PIPE CULVERT (CLASS III) (TYPE 3 BEDDING) = 5 LIN. FT.
TO JUNCTION BOX ON RT.

STA. 07+46.00 - CONSTRUCT
DROP INLET ON RT. H = 5'-3"
WITH 4' EXTENSION AND 30" x 30'
PIPE CULVERT TO DROP INLET ON RT.
AND WITH 12" x 5' R.C. CULVERT EXTENSION
TO PIPE COLLAR ON RT.
TYPE MO DROP INLET = 5' DIA.
TYPE C DROP INLET = 4' x 3'-2"
30" R.C. PIPE (CLASS III) (TYPE 3 BEDDING) = 30' LIN. FT.
12" R.C. PIPE (CLASS III) (TYPE 3 BEDDING) = 5' LIN. FT.
30" SLPPMCCS PIPE (TYPE 2 BEDDING) = 30' LIN. FT.

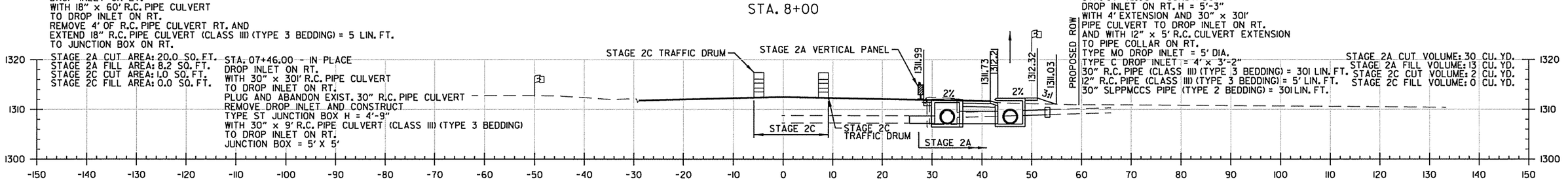

STA. 7+46

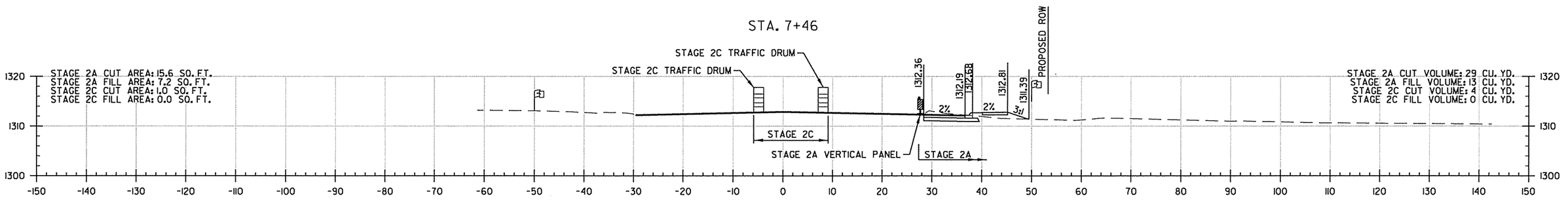

STA. 7+00

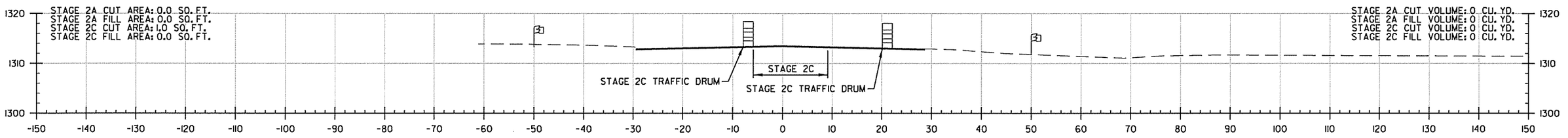

STA. 6+00

HWY. 102 STA. 6+00 TO STA. 9+00

4/28/2016
6:56:02 PM
\\ARKX-CA0902_CX_HWY540_01.dgn

DATE	DATE FILMED	DATE REVISED	DATE FILMED	FED.RD. DIST.NO.	STATE	FED.AID PROJ.NO.	SHEET NO.	TOTAL SHEETS
				6	ARK.			
				JOB NO.		CA0902	558	581

HWY. 102 CROSS SECTIONS

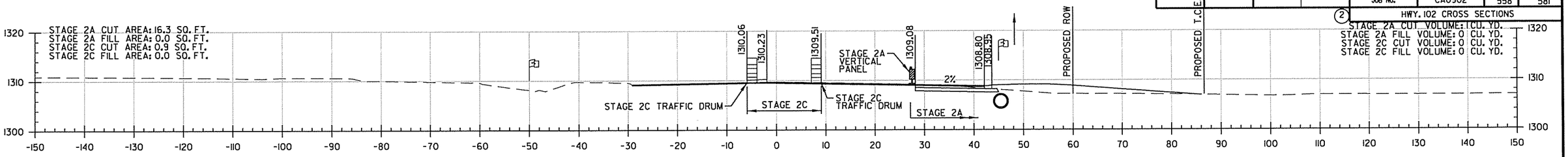

STA. 11+00

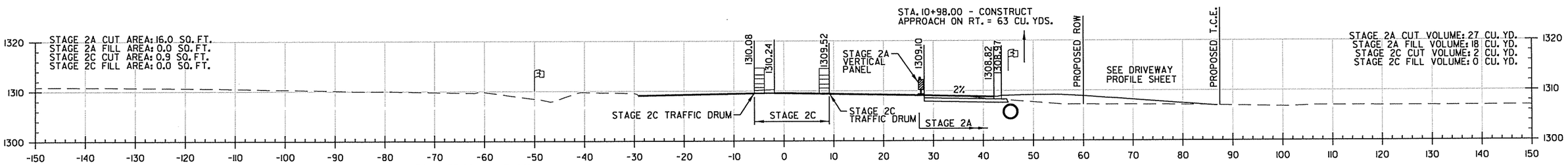

STA. 10+55.00 - IN PLACE
DROP INLET ON LT.
WITH 18" x 60' R.C. PIPE CULVERT
TO DROP INLET ON RT.
REMOVE 4' OF R.C. PIPE CULVERT RT. AND
EXTEND 18" R.C. PIPE CULVERT (CLASS III) (TYPE 3 BEDDING) = 18 LIN. FT.
TO DROP INLET ON RT.

STA. 10+55.00 - IN PLACE
DROP INLET ON RT.
WITH 30" x 240' R.C. PIPE CULVERT
TO DROP INLET ON RT.
REMOVE DROP INLET AND
PLUG AND ABANDON 30" R.C. PIPE CULVERT

STA. 10+98

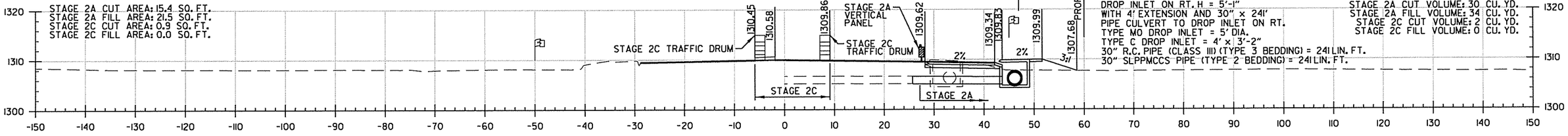

STA. 10+52

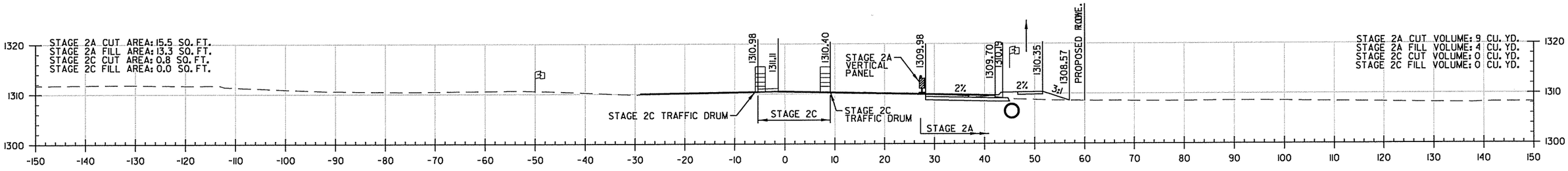

STA. 10+00

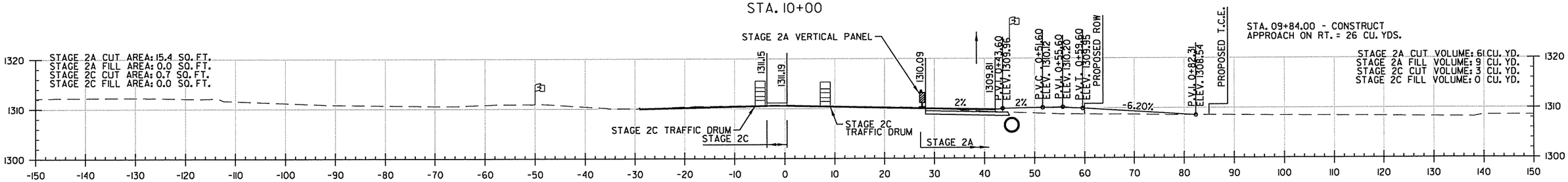

STA. 9+84

HWY. 102 STA. 9+84 TO STA. 11+00

4/28/2016
6:36:02 PM
I:\PW\TEA\0902_CX_HWY540_01.dgn

DATE	DATE FILMED	DATE REVISED	DATE FILMED	FED.RD. DIST.NO.	STATE	FED.AID PROJ.NO.	SHEET NO.	TOTAL SHEETS
				6	ARK.			
				JOB NO.		CA0902	559	581
				(2)	HWY. 102 CROSS SECTIONS			

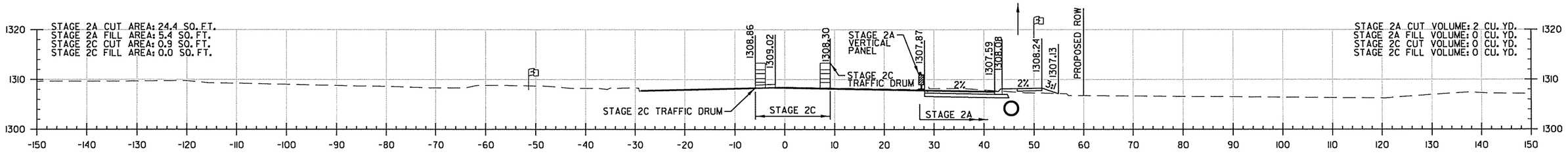

STA. 13+00

STA. 12+99.00 - IN PLACE
DROP INLET ON LT.
WITH 18" x 60' R.C. PIPE CULVERT
TO DROP INLET ON RT.
REMOVE 4' OF R.C. PIPE CULVERT RT. AND
EXTEND 18" R.C. PIPE CULVERT (CLASS III) (TYPE 3 BEDDING) = 18 LIN. FT.
TO DROP INLET ON RT.

STA. 12+98.00 - IN PLACE
DROP INLET ON RT.
WITH 30" X 293' R.C. PIPE CULVERT
TO DROP INLET ON RT.
REMOVE DROP INLET AND
PLUG AND ABANDON 30" R.C. PIPE CULVERT

STA. 12+98.00 - CONSTRUCT
DROP INLET ON RT. H = 5'-3"
WITH 4' EXTENSION AND 30" x 293'
PIPE CULVERT TO DROP INLET ON RT.
TYPE MO DROP INLET = 5' DIA.
TYPE C DROP INLET = 4' x 3'-2"
30" R.C. PIPE (CLASS III) (TYPE 3 BEDDING) = 293 LIN. FT.
30" SLPPMCCS PIPE (TYPE 2 BEDDING) = 293 LIN. FT.

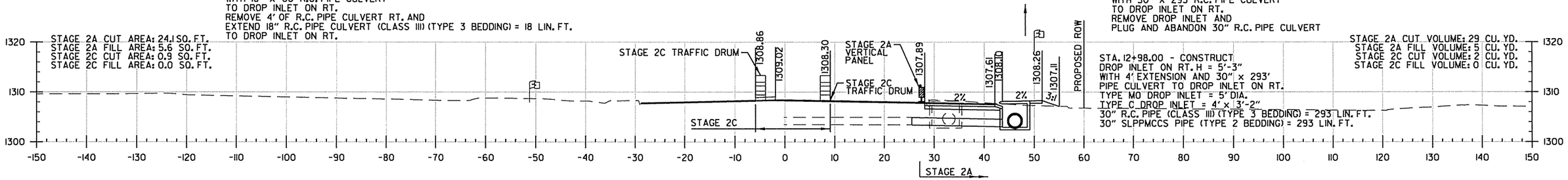

STA. 12+98

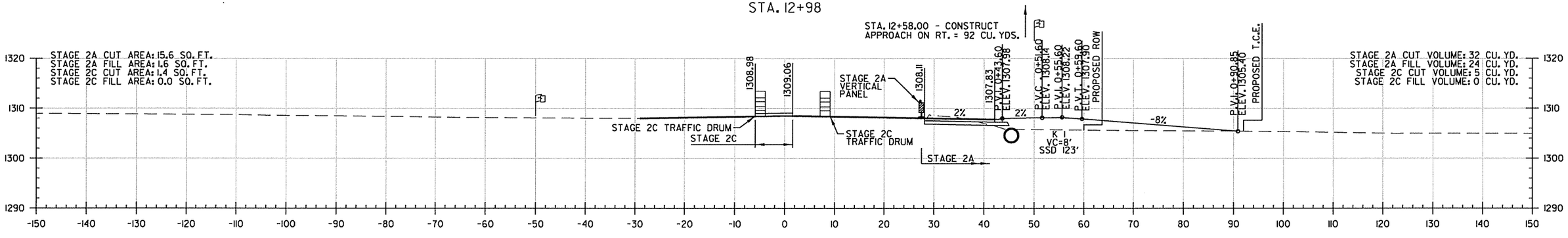

STA. 12+58

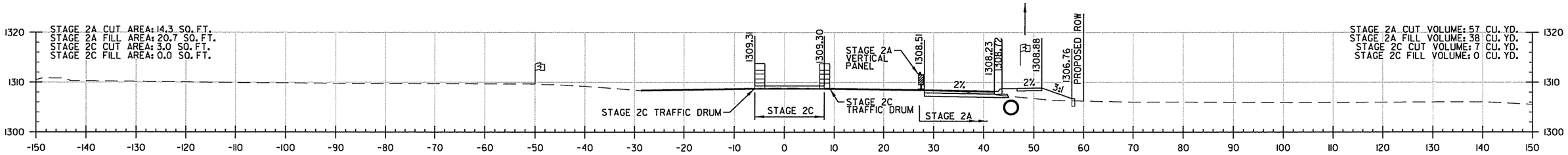

STA. 12+00

HWY. 102 STA. 12+00 TO STA. 13+00

4/28/2016
6:45:03 AM
L:\ARKANSAS\CA0902_CX_HWY540_01.dgn

DATE	DATE FILMED	DATE REVISED	DATE FILMED	FED.RD. DIST.NO.	STATE	FED.AID PROJ.NO.	SHEET NO.	TOTAL SHEETS
				6	ARK.			
				JOB NO.		CA0902	560	581

(2) HWY. 102 CROSS SECTIONS

STA. 15+27.18 BEGIN
-8.68% RT. DITCH GRADE
ELEV. 1306.25

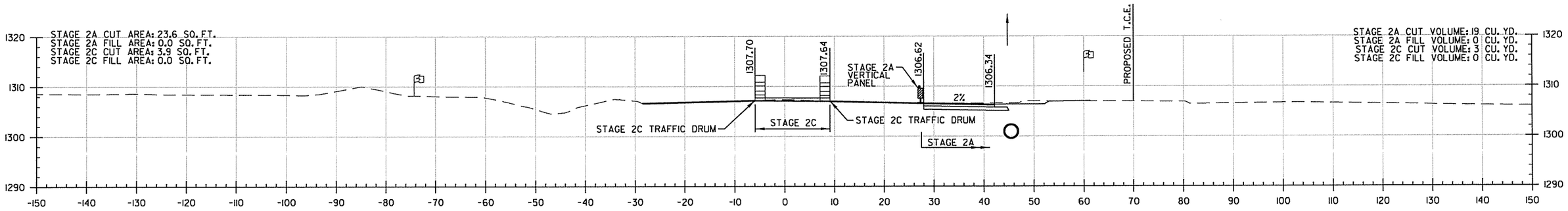

STA. 15+00

STA. 14+80.00 - CONSTRUCT
APPROACH ON RT. = 13 CU. YDS.

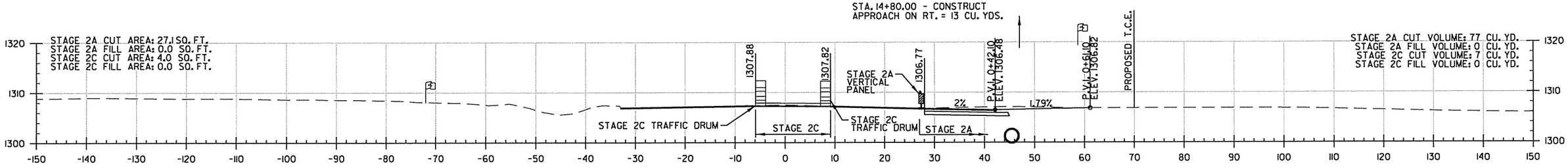

STA. 14+80

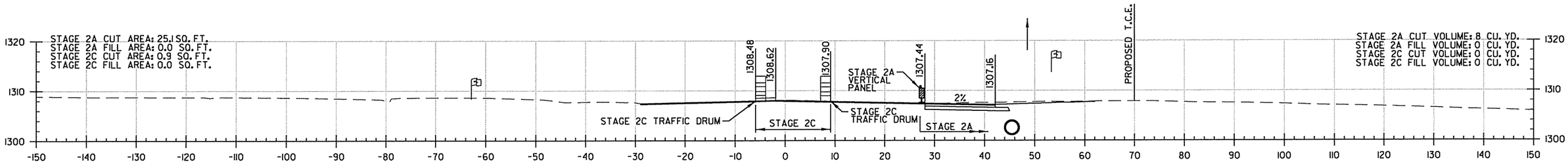

STA. 14+00

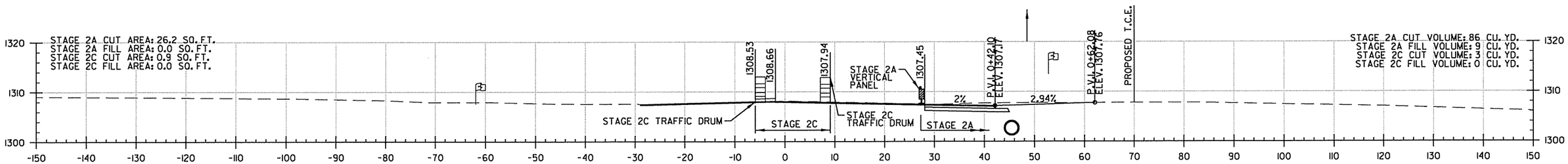

STA. 13+92

HWY. 102 STA. 13+92 TO STA. 15+00

4/28/2016
6:36:03 PM
...\CA0902_CX_HWY540_01.dgn

DATE	DATE FILMED	DATE REVISED	DATE FILMED	FED.RD. DIST.NO.	STATE	FED.AID PROJ.NO.	SHEET NO.	TOTAL SHEETS
				6	ARK.			
				JOB NO.		CA0902	561	581

(2) HWY. 102 CROSS SECTIONS

STA. 16+12.37 END
-8.68% RT. DITCH GRADE
ELEV. 1298.00

STA. 16+12.37 BEGIN
-0.21% RT. DITCH GRADE
ELEV. 1298.00

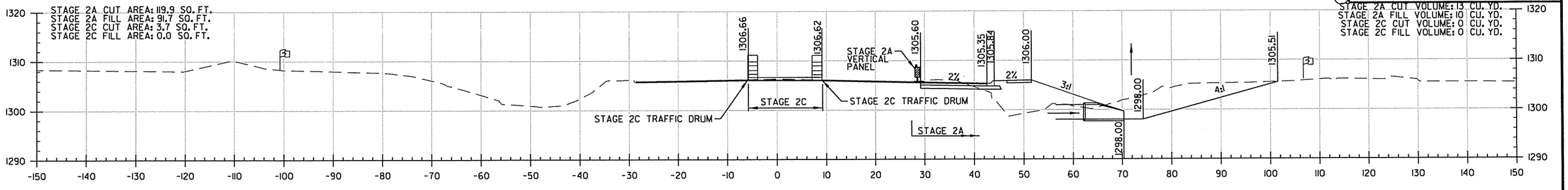

STA. 16+07

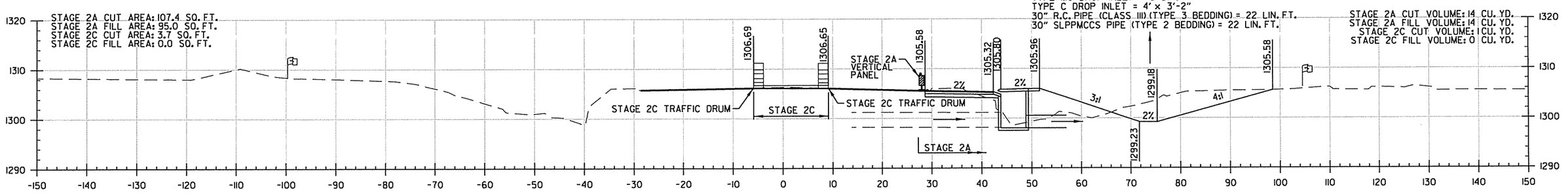

STA. 16+04

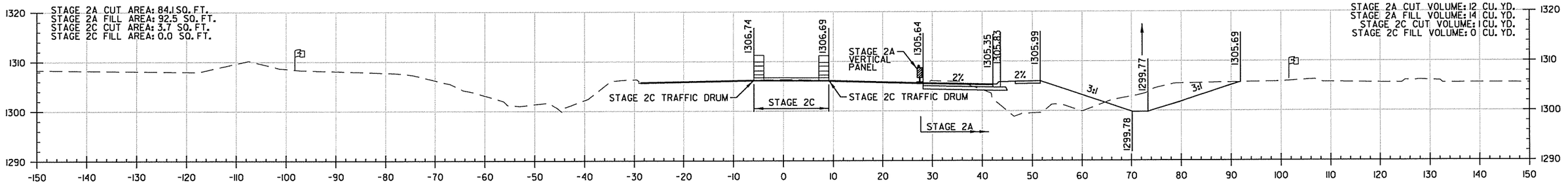

STA. 16+00

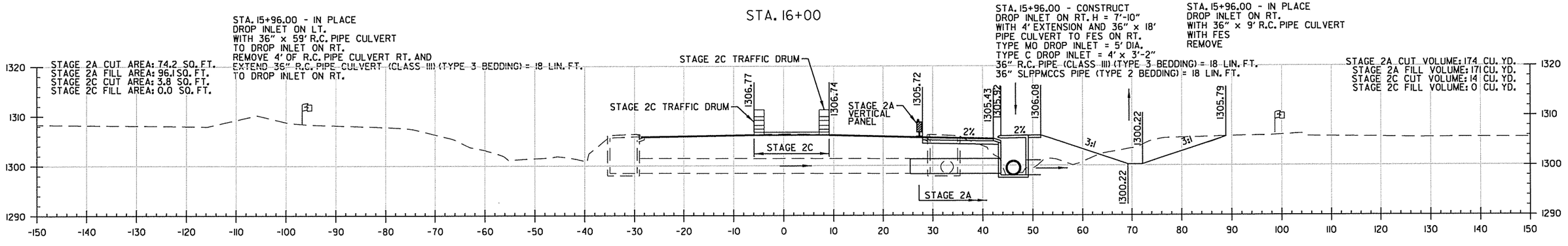

STA. 15+96

HWY. 102 STA. 15+96 TO STA. 16+07

4/28/2016
6:35:04 PM
\\AXIS\CA0902_CX_HWY540_01.dgn

DATE	DATE FILMED	DATE REVISED	DATE FILMED

FED.RD. DIST.NO.	STATE	FED.AID PROJ.NO.	SHEET NO.	TOTAL SHEETS
6	ARK.			
JOB NO.		CA0902	562	581
(2)	HWY. 102 CROSS SECTIONS			

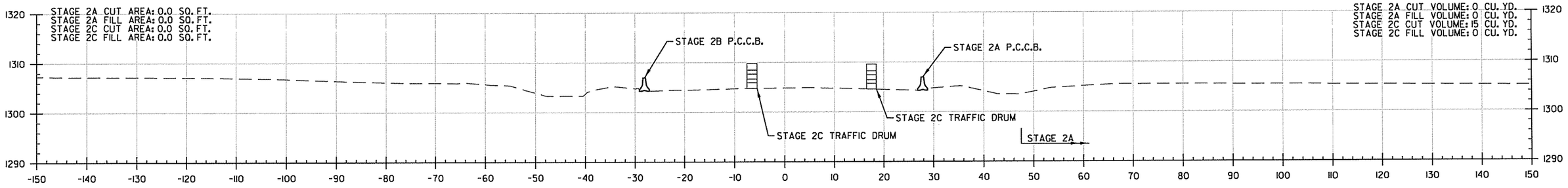

STA. 18+00
END CONSTRUCTION

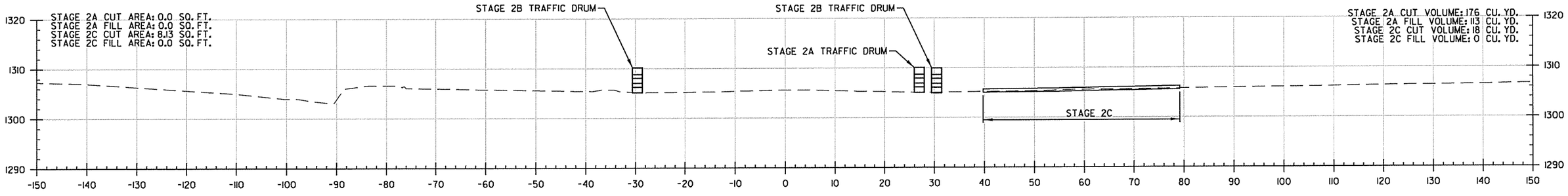

STA. 17+00

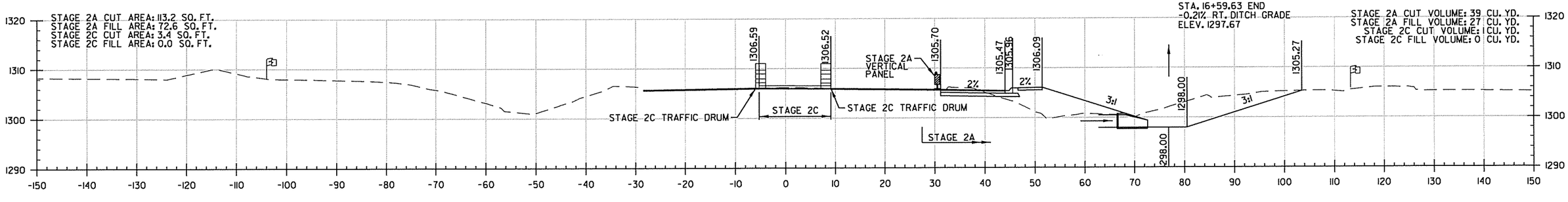

STA. 16+16

HWY. 102 STA. 16+16 TO STA. 18+00

4/28/2016
6:56:04 PM
C:\DATA\CA0902_CX_HWY540_01.dgn

DATE	DATE FILMED	DATE REVISED	DATE FILMED

FED.RD. DIST.NO.	STATE	FED.AID PROJ.NO.	SHEET NO.	TOTAL SHEETS
6	ARK.			
JOB NO.		CA0902	563	581

(2) HWY. 72 CROSS SECTIONS

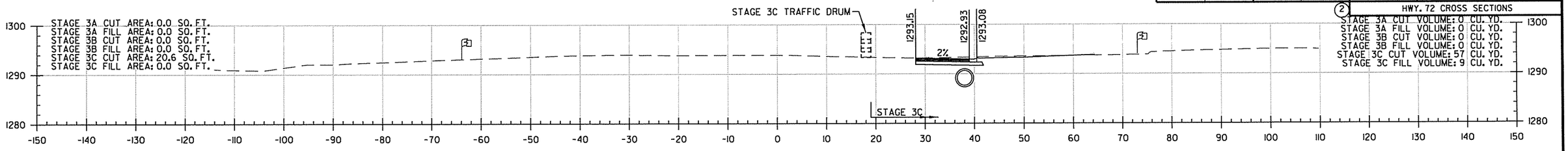

STA. 185+00

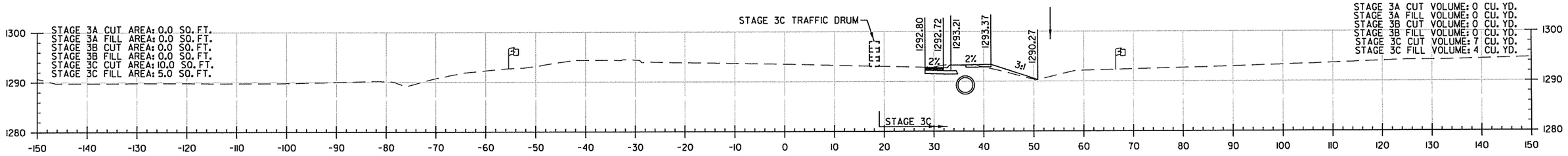

STA. 184+00

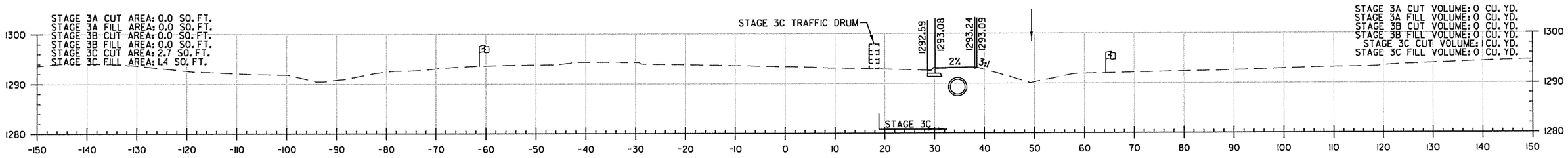

STA. 183+69

STA. 183+59.00 IN PLACE
DROP INLET 30.0' RT. OF C.L.
WITH 36" x 273' R.C. PIPE CULVERT
TO EXISTING DROP INLET ON RT.
REMOVE R.C. PIPE AND INSTALL
36" x 275' R.C. PIPE CULVERT
TO PROPOSED TYPE MO DROP INLET ON RT.
36" R.C. PIPE (CLASS III) (TYPE 3 BEDDING) = 275 LIN. FT.
36" SLPMCCS PIPE (TYPE 2 BEDDING) = 275 LIN. FT.

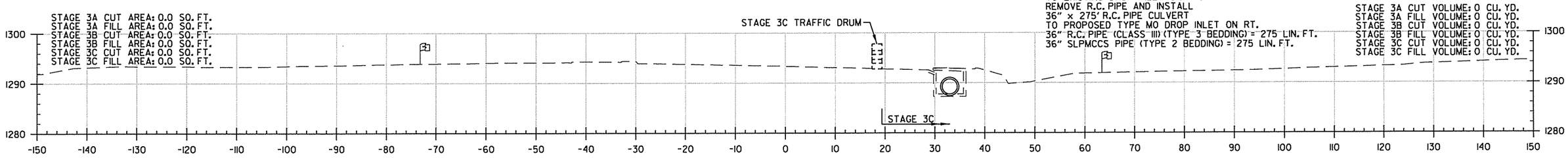

STA. 183+59
BEGIN CONSTRUCTION

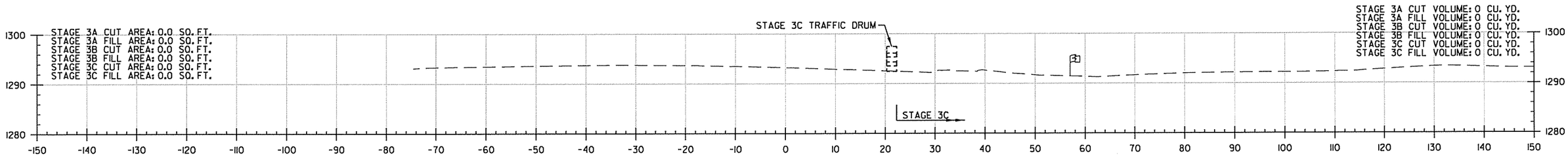

STA. 183+00

HWY. 72 STA. 183+00 TO STA. 185+00

4/28/2016
6:56:05 PM
\\DATA\CA0902_CX_HWY540_01.dgn

DATE	DATE FILMED	DATE REVISED	DATE FILMED

FED.RD. DIST.NO.	STATE	FED.AID PROJ.NO.	SHEET NO.	TOTAL SHEETS
6	ARK.			
JOB NO.		CA0902	564	581

(2) HWY. 72 CROSS SECTIONS

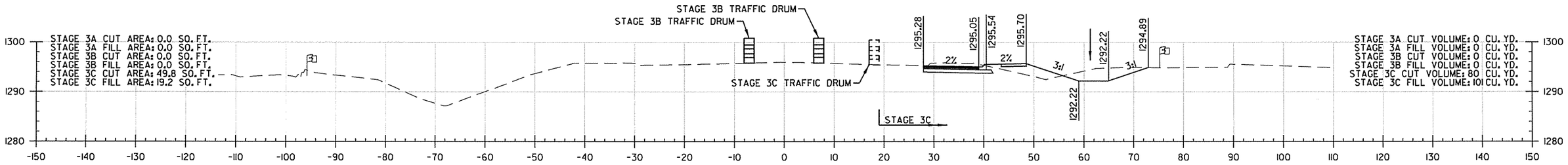

STA. 187+00

STA. 186+37.00 - IN PLACE
DROP INLET 29.5' RT. OF C.L.
WITH 42" x 60' R.C. PIPE CULVERT
TO EXISTING DROP INLET ON LT.
AND 30" x 16' R.C. PIPE CULVERT
TO EXISTING FES ON RT.
REMOVE DROP INLET AND
REMOVE 30" x 16' R.C. PIPE CULVERT WITH FES
AND INSTALL PIPE COLLAR ON 42" R.C. PIPE CULVERT

STA. 186+37.00 - CONSTRUCT
DROP INLET 40' RT. OF C.L. H = 7'-0"
WITH 42" x 12'
R.C. PIPE CULVERT (CLASS III) (TYPE 3 BEDDING)
TO PIPE COLLAR ON RT.
TYPE MO DROP INLET = 6' DIA.
TYPE C DROP INLET = 4' X 4'-4"

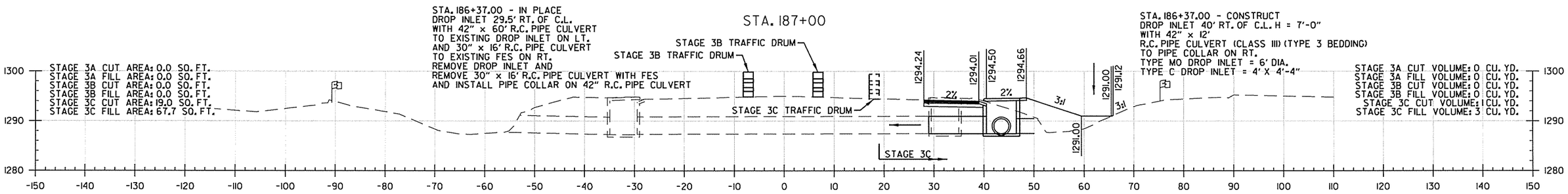

STA. 186+37

STA. 186+36.00 - CONSTRUCT
DROP INLET 62.5' RT. OF C.L. H = 4'-8"
WITH 36" x 14' PIPE CULVERT
TO DROP INLET ON RT.
DROP INLETS (TYPE SPECIAL) = 5' x 5'
36" R.C. PIPE (CLASS III) (TYPE 3 BEDDING) = 14 LIN. FT.
36" SLPMCCS PIPE (TYPE 2 BEDDING) = 14 LIN. FT.

STA. 186+36.00 - IN PLACE
DROP INLET 86.75' RT. OF C.L.
WITH 24" x 26' R.C. PIPE CULVERT
WITH FES 61' RT. OF C.L.
REMOVE FES AND
EXTEND 24" x 1' R.C. PIPE CULVERT (CLASS III) (TYPE 3 BEDDING)
TO PROPOSED SPECIAL AREA DROP INLET ON RT.

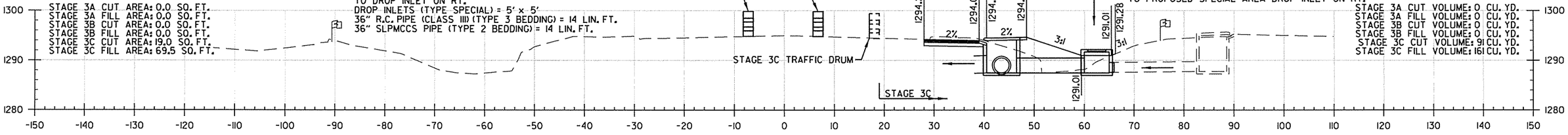

STA. 186+36

STA. 186+35.92 END
-1.72% RT. DITCH GRADE
ELEV. 1291.00

STA. 186+35.92 BEGIN
1.93% RT. DITCH GRADE
ELEV. 1291.00

STA. 185+48.88 BEGIN
-1.72% RT. DITCH GRADE
ELEV. 1292.50

STA. 185+11.00 CONSTRUCT
APPROACH ON RT. = 6 CU. YDS.

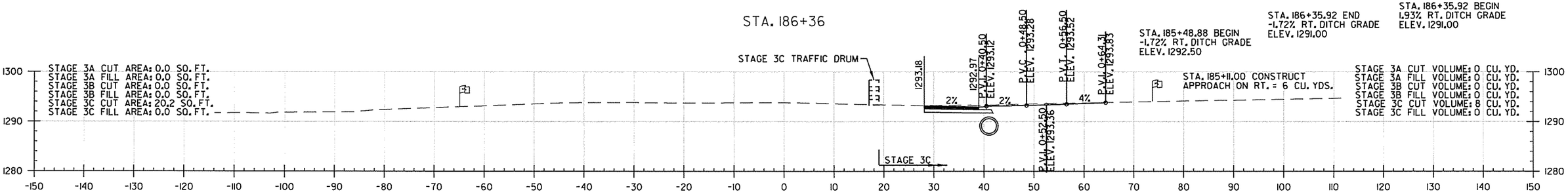

STA. 185+11

HWY. 72 STA. 185+11 TO STA. 187+00

5/16/2016
3:27:31 PM
C:\...\CA0902_CX_HWY340_01.dgn

DATE	DATE FILMED	DATE REVISED	DATE FILMED	FED.RD. DIST.NO.	STATE	FED.AID PROJ.NO.	SHEET NO.	TOTAL SHEETS
				6	ARK.			
				JOB NO.		CA0902	565	581

(2) HWY. 72 CROSS SECTIONS

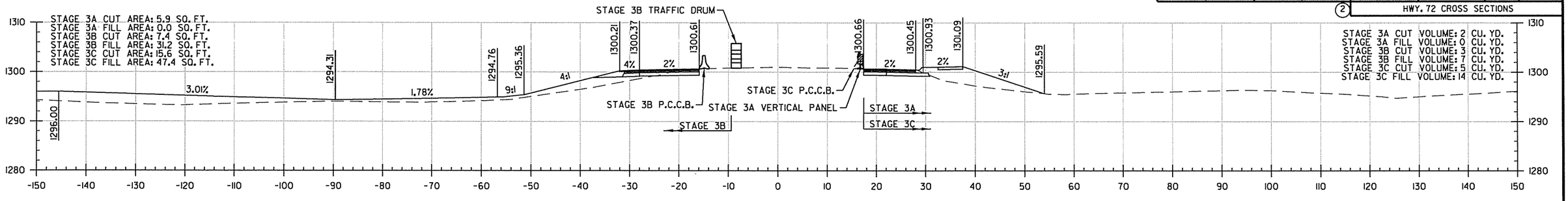

STA. 189+00

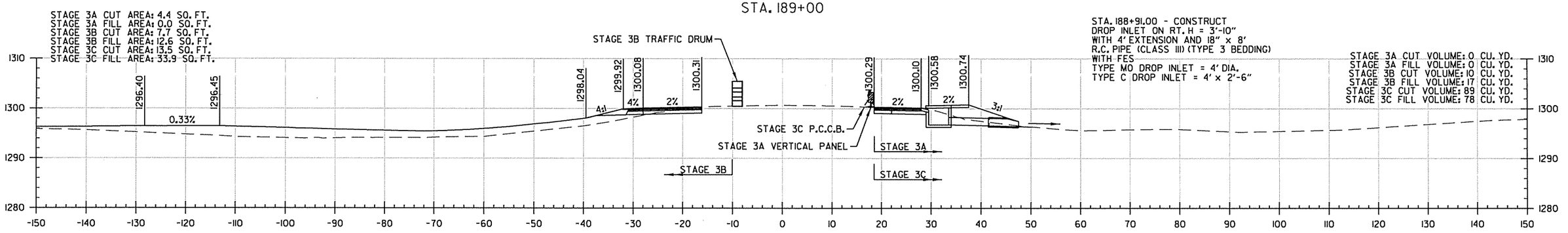

STA. 188+91

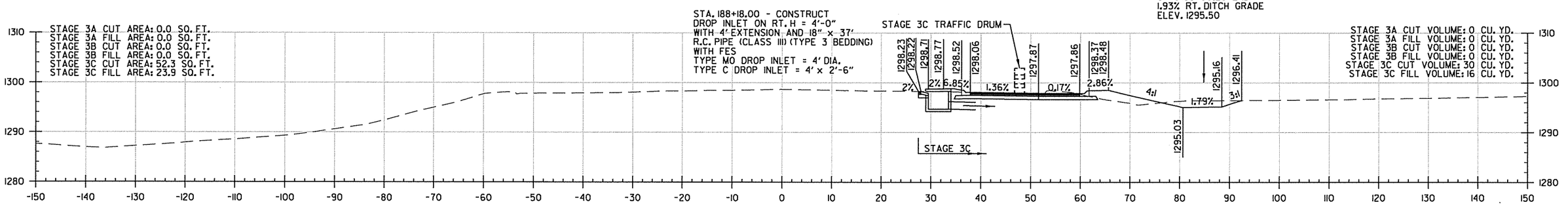

STA. 188+18

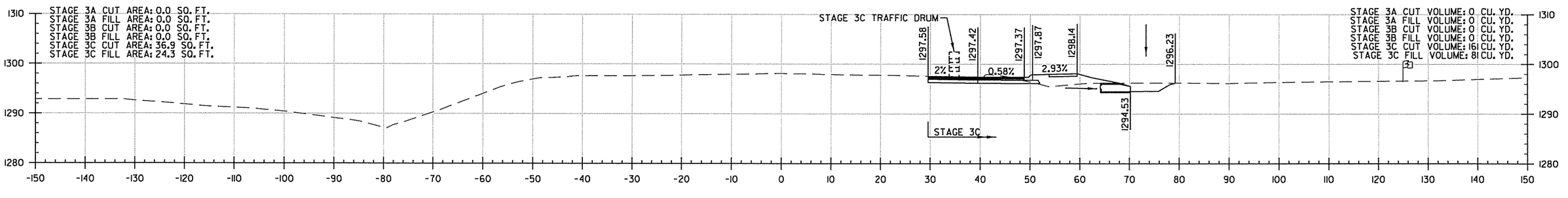

STA. 188+00

HWY. 72 STA. 188+00 TO STA. 189+00

4/28/2016
6:46:05 PM
J:\CAD\CA0902_CX_HWY540_01.dgn

DATE	DATE FILMED	DATE REVISED	DATE FILMED	FED.RD. DIST.NO.	STATE	FED.AID PROJ.NO.	SHEET NO.	TOTAL SHEETS
				6	ARK.			
				JOB NO.		CA0902	566	581

(2) HWY. 72 CROSS SECTIONS

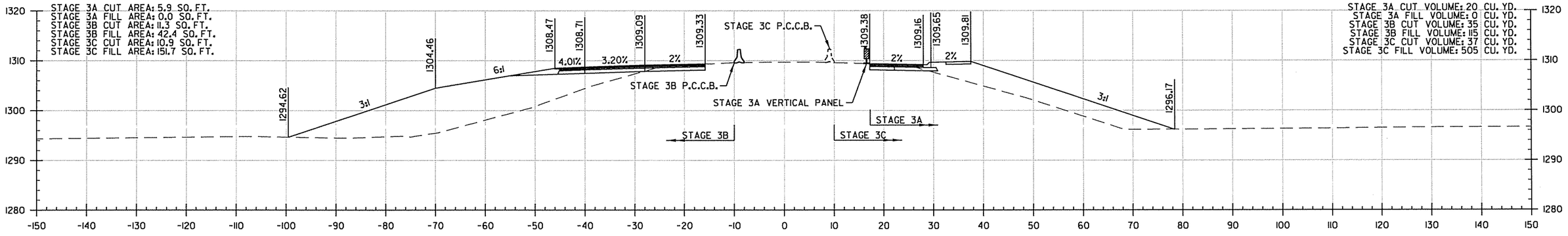

STA. 191+90

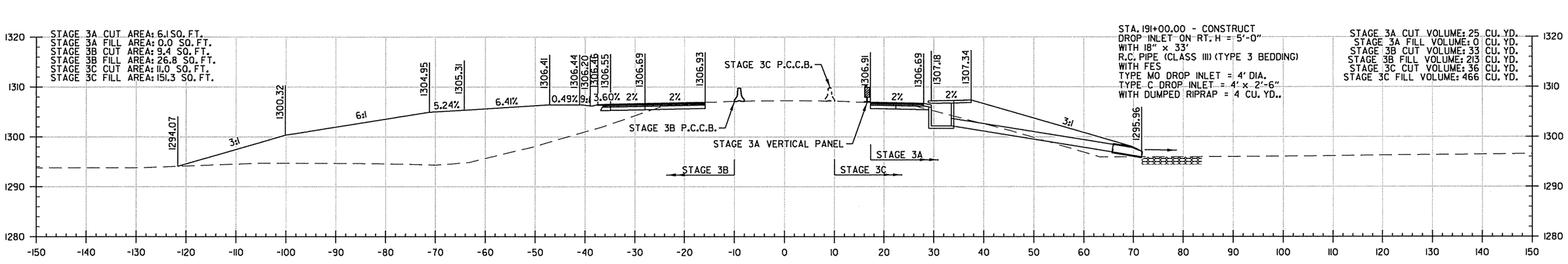

STA. 191+00

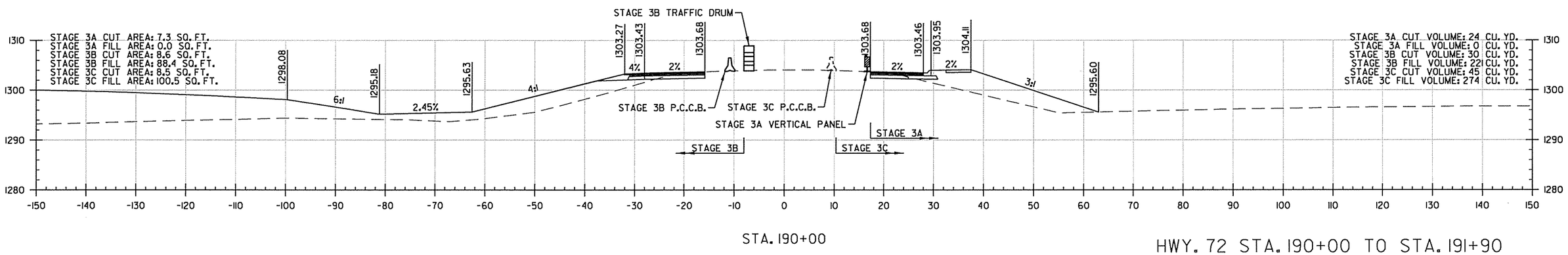

STA. 190+00

HWY. 72 STA. 190+00 TO STA. 191+90

4/28/2016
6:36:06 PM
...\CA0902_CX_HWY540_01.dgn

DATE	DATE FILMED	DATE REVISED	DATE FILMED	FED.RD. DIST.NO.	STATE	FED.AID PROJ.NO.	SHEET NO.	TOTAL SHEETS
				6	ARK.			
				JOB NO.		CA0902	567	581
				(2)	HWY. 72 CROSS SECTIONS			

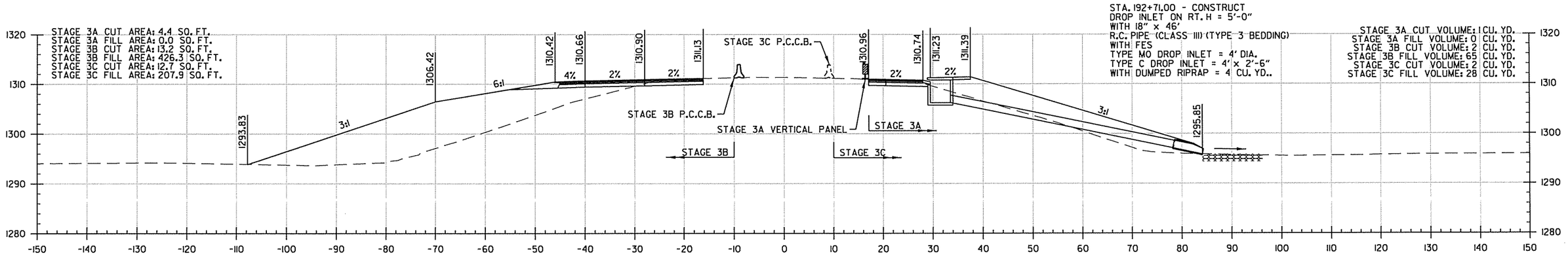

STA. 192+71

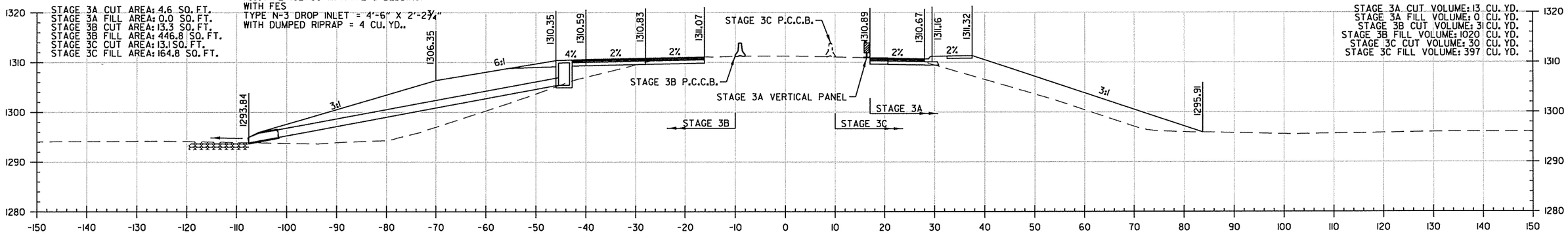

STA. 192+67

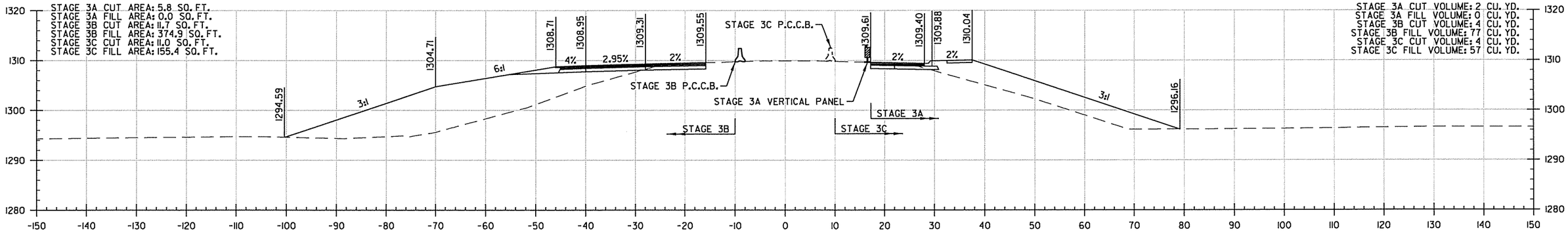

STA. 192+00

HWY. 72 STA. 192+00 TO STA. 192+71

4/28/2016
6:36:05 PM
\\DATA\C\CA0902_CX_HWY540_01.dgn

DATE	DATE FILMED	DATE REVISED	DATE FILMED	FED.RD. DIST.NO.	STATE	FED.AID PROJ.NO.	SHEET NO.	TOTAL SHEETS
				6	ARK.			
				JOB NO.		CA0902	568	581

(2) HWY. 72 CROSS SECTIONS

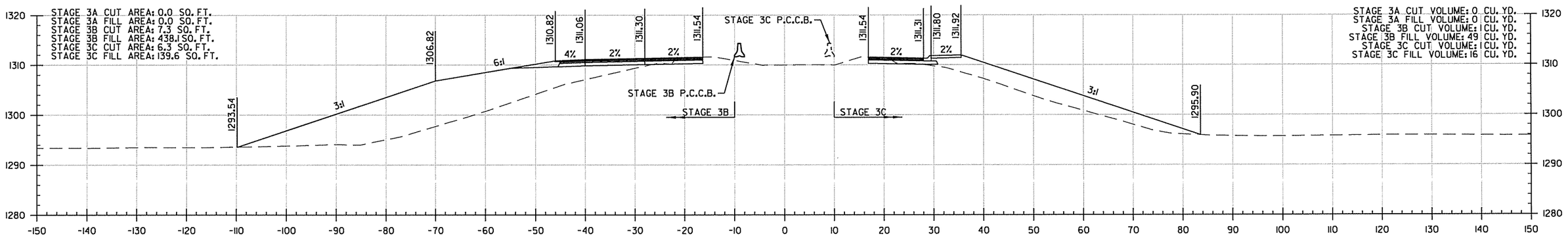

STA. 193+03

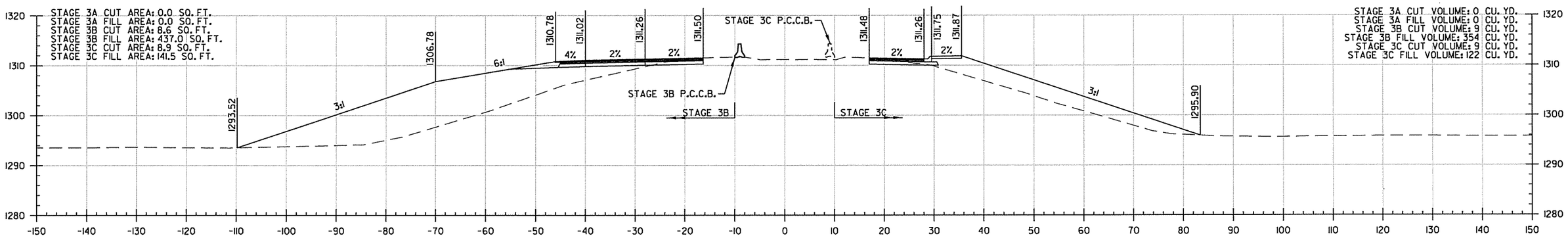

STA. 193+00

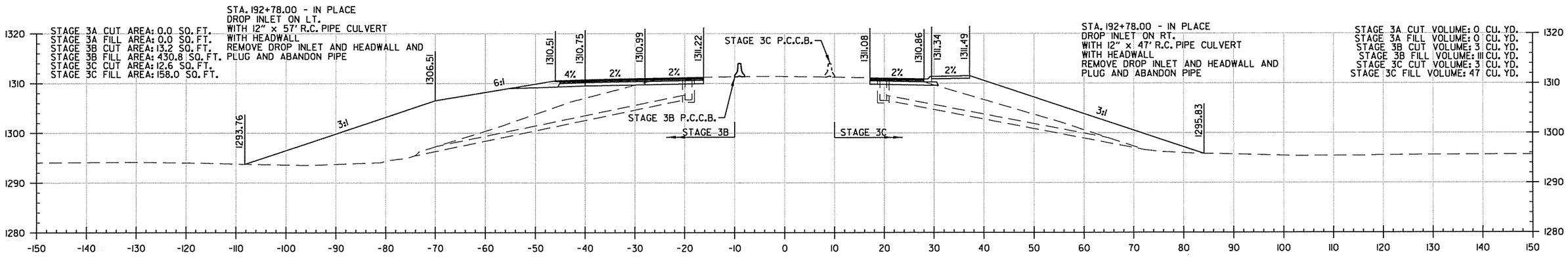

STA. 192+78

HWY. 72 STA. 192+78 TO STA. 193+03

4/28/2016
6:36:07 PM
...\CX\CA0902_CX_HWY540_01.dgn

DATE	DATE FILMED	DATE REVISED	DATE FILMED	FED.RD. DIST.NO.	STATE	FED.AID PROJ.NO.	SHEET NO.	TOTAL SHEETS
				6	ARK.			
				JOB NO.		CA0902	569	581

(2) HWY. 72 CROSS SECTIONS

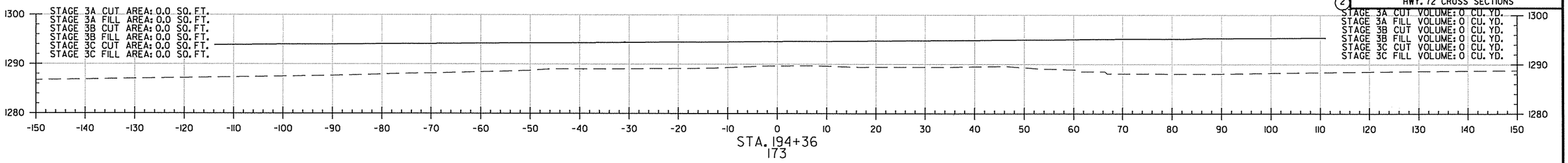

STA. 194+36
173

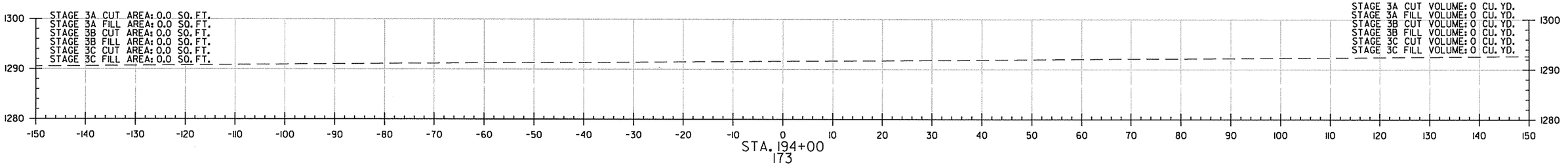

STA. 194+00
173

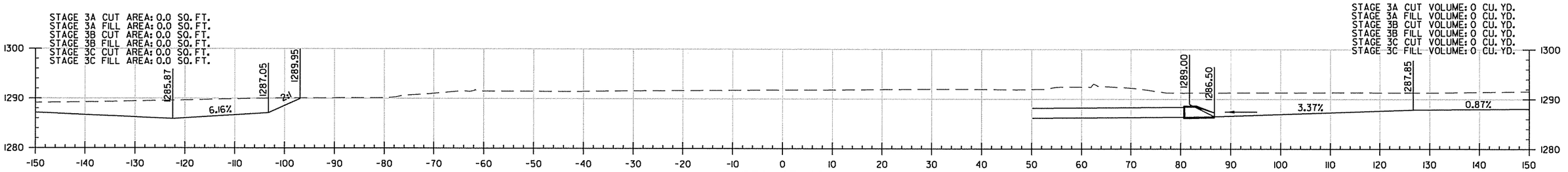

STA. 193+44
173

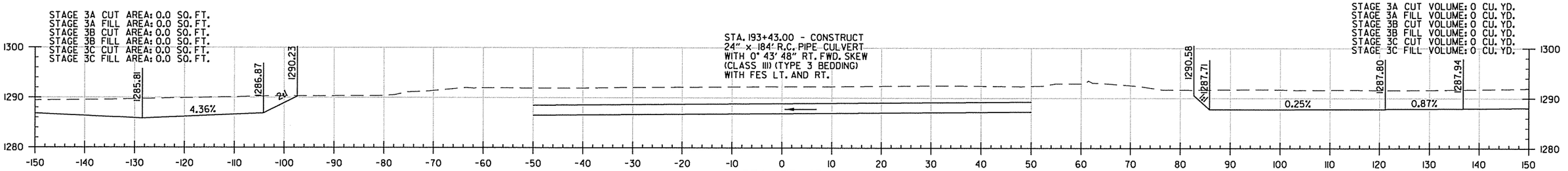

STA. 193+43
173

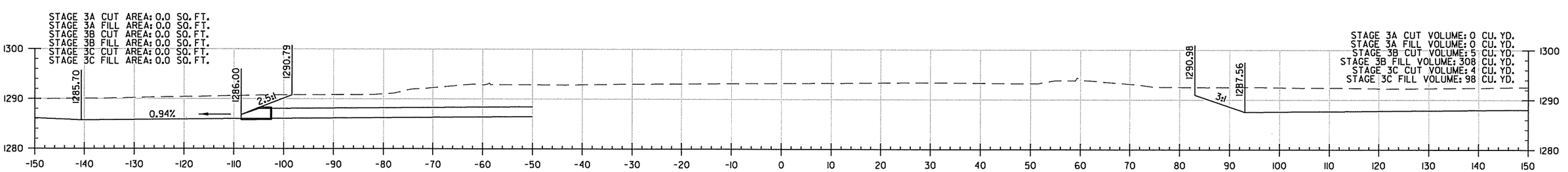

STA. 193+41
173

HWY. 72 STA. 193+41 TO STA. 194+36

4/28/2016
6:36:01 PM
\\GAX1-FCA0902_CX_HWY540_01.dgn

DATE	DATE FILMED	DATE REVISED	DATE FILMED	FED.RD. DIST.NO.	STATE	FED.AID PROJ.NO.	SHEET NO.	TOTAL SHEETS
				6	ARK.			
				JOB NO.		CA0902	570	581
				(2)	HWY. 72 CROSS SECTIONS			

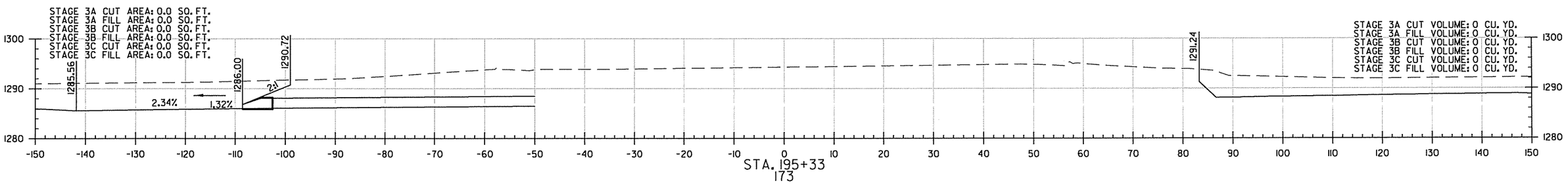

STA. 195+33
173

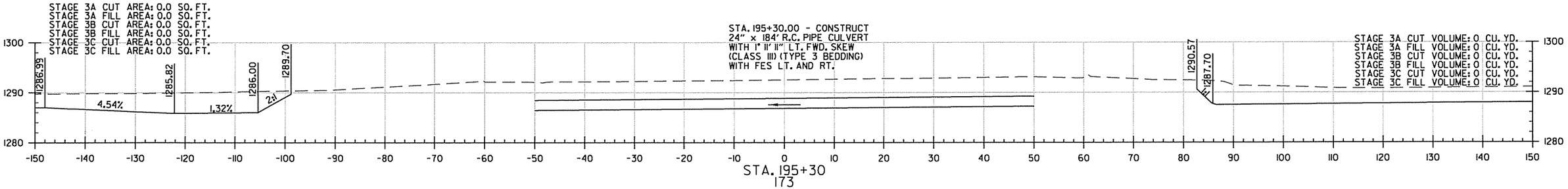

STA. 195+30
173

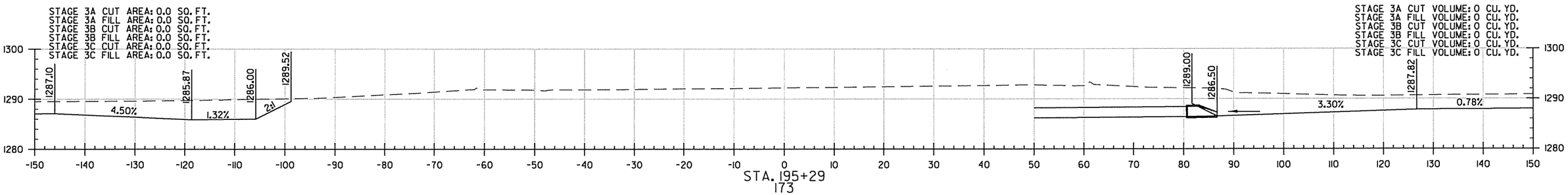

STA. 195+29
173

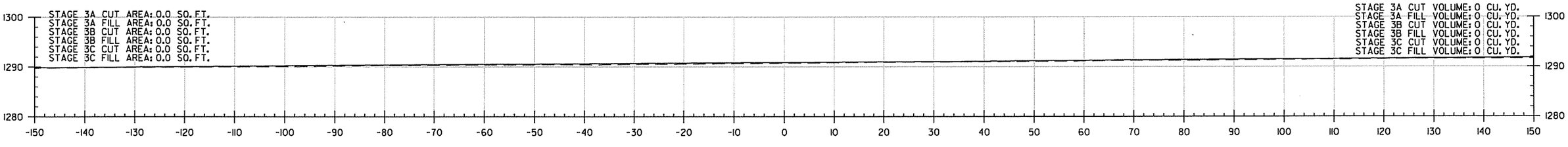

STA. 195+00
173

HWY. 72 STA. 195+00 TO STA. 195+33

4/28/2016
6:36:07 PM
\\DATA\C-CA0902_CX_HWY540_01.dgn

DATE	DATE FILMED	DATE REVISED	DATE FILMED	FED.RD. DIST.NO.	STATE	FED.AID PROJ.NO.	SHEET NO.	TOTAL SHEETS
				6	ARK.			
				JOB NO.		CA0902	571	581

(2) HWY. 72 CROSS SECTIONS

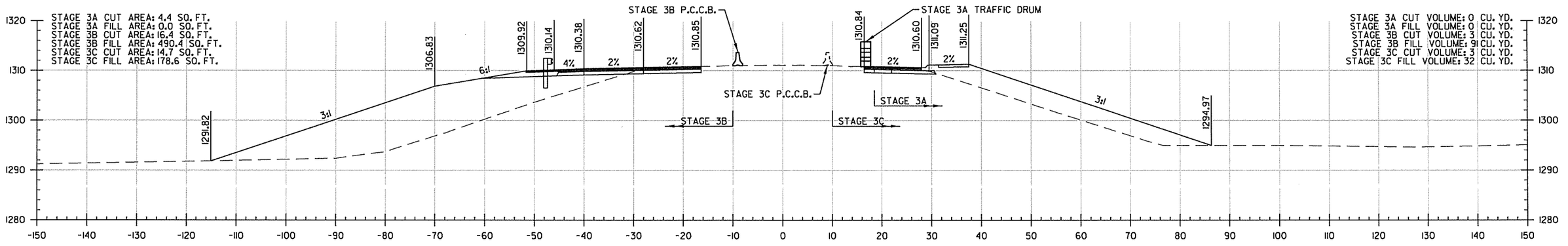

STA. 196+00

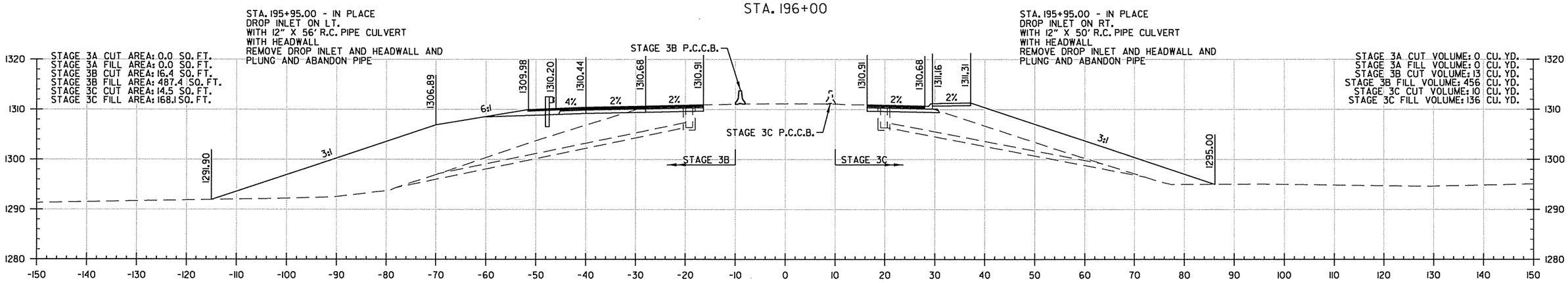

STA. 195+95

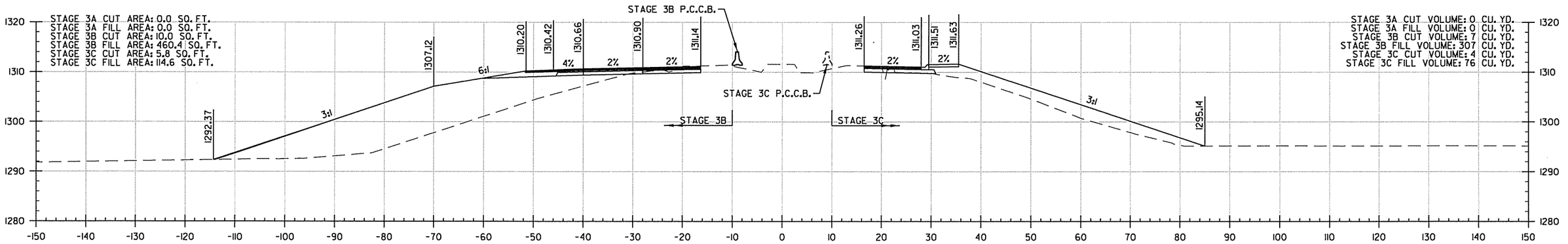

STA. 195+69

HWY. 72 STA. 195+69 TO STA. 196+00

4/28/2016
6:36:08 PM
\\CX\CA0902_CX_HWY540_01.dgn

DATE	DATE FILMED	DATE REVISED	DATE FILMED	FED.RD. DIST.NO.	STATE	FED.AID PROJ.NO.	SHEET NO.	TOTAL SHEETS
				6	ARK.			
				JOB NO.		CA0902	572	581

(2) HWY. 72 CROSS SECTIONS

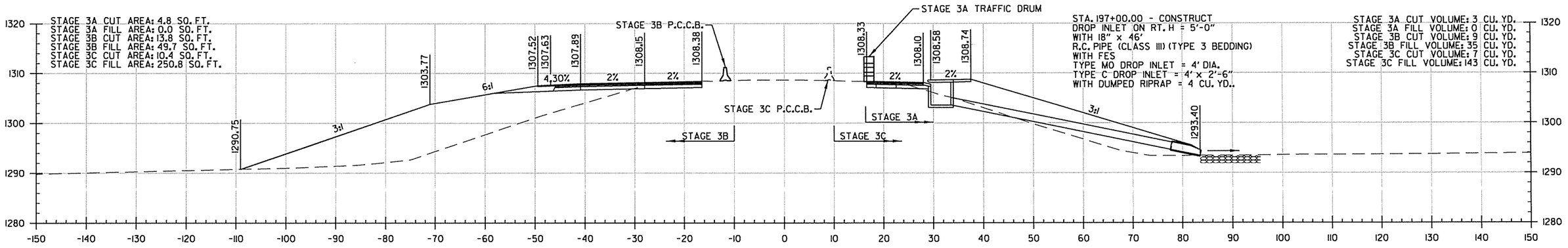

STA. 197+00

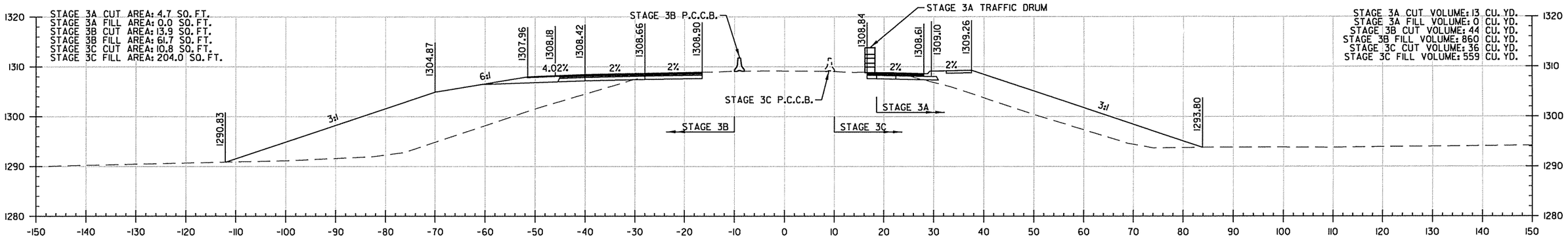

STA. 196+83

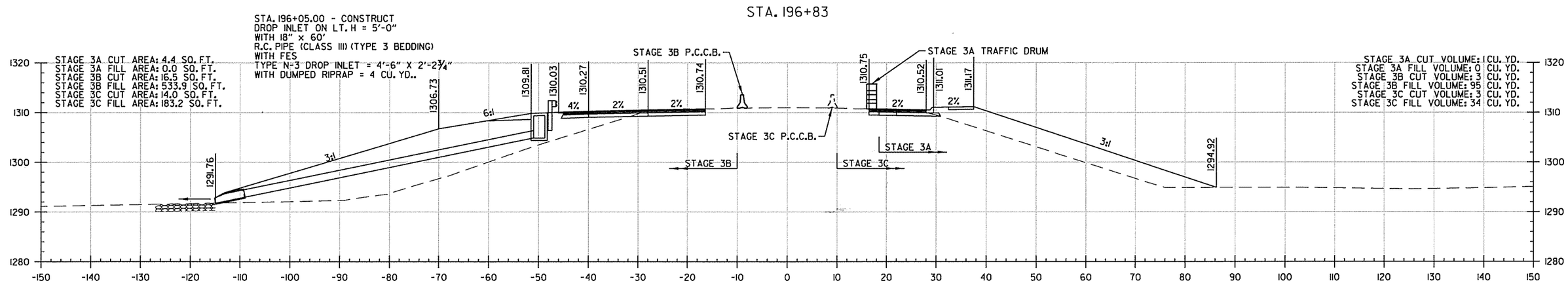

STA. 196+05

HWY. 72 STA. 196+05 TO STA. 197+00

4/28/2016
6:36:08 PM
\\CX\FCA0902_CX_HWY540_01.dgn

DATE	DATE FILMED	DATE REVISED	DATE FILMED	FED.RD. DIST.NO.	STATE	FED.AID PROJ.NO.	SHEET NO.	TOTAL SHEETS
				6	ARK.			
				JOB NO.		CA0902	573	581

(2) HWY. 72 CROSS SECTIONS

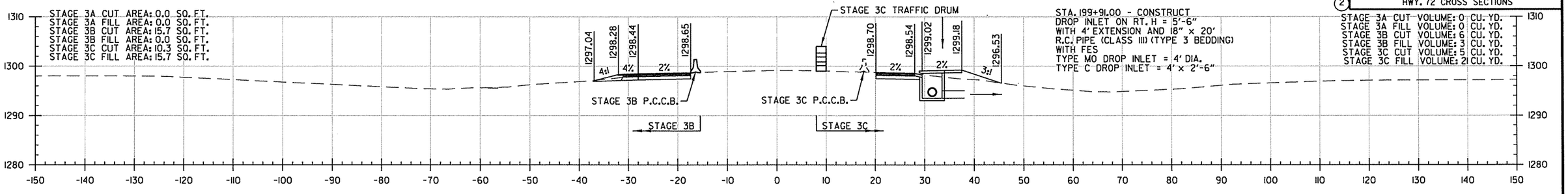

STA. 199+91

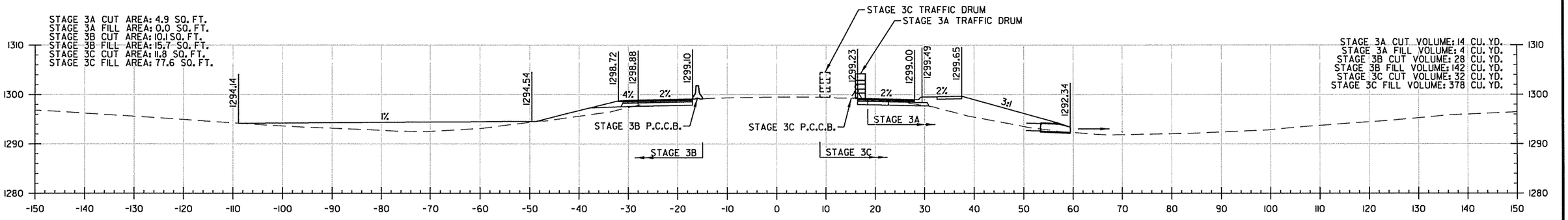

STA. 199+79

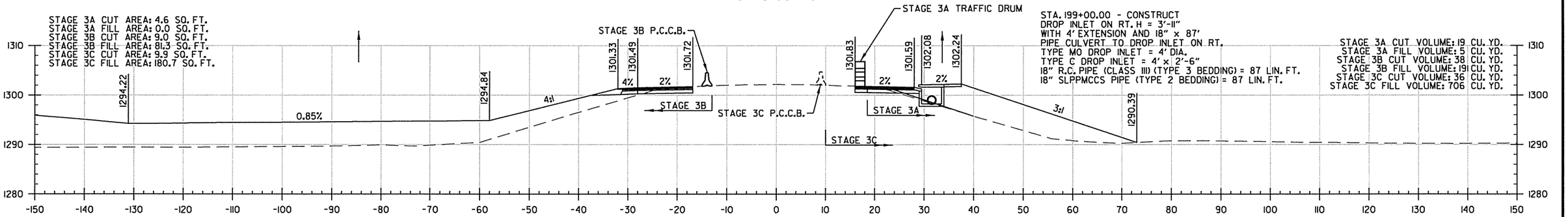

STA. 199+00

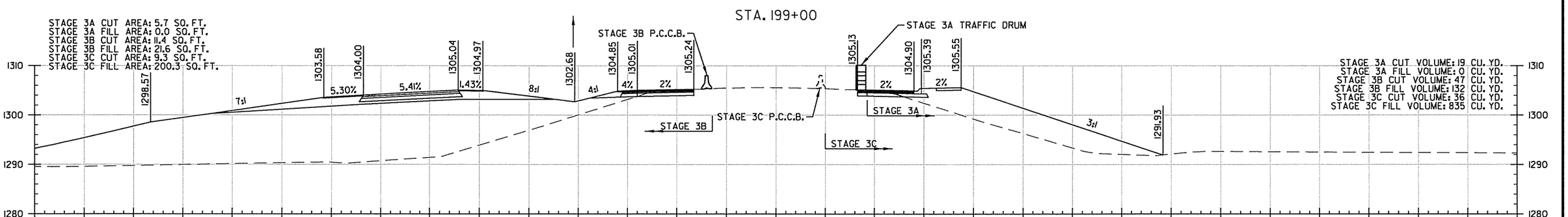

STA. 198+00

HWY. 72 STA. 198+00 TO STA. 199+91

4/28/2016
6:56:09 PM
\\ARKCA0902_CX_HWY540_01.dgn

DATE	DATE FILMED	DATE REVISED	DATE FILMED	FED.RD. DIST.NO.	STATE	FED.AID PROJ.NO.	SHEET NO.	TOTAL SHEETS
				6	ARK.			
				JOB NO.		CA0902	574	581
				(2)	HWY. 72 CROSS SECTIONS			

STA. 202+93.36 END
-2.24% LT. DITCH GRADE
ELEV. 1285.00

STAGE 3A CUT AREA: 0.0 SQ. FT.
STAGE 3A FILL AREA: 0.0 SQ. FT.
STAGE 3B CUT AREA: 12.8 SQ. FT.
STAGE 3B FILL AREA: 34.9 SQ. FT.
STAGE 3C CUT AREA: 10.5 SQ. FT.
STAGE 3C FILL AREA: 38.8 SQ. FT.

STAGE 3A CUT VOLUME: 0 CU. YD.
STAGE 3A FILL VOLUME: 0 CU. YD.
STAGE 3B CUT VOLUME: 47 CU. YD.
STAGE 3B FILL VOLUME: 77 CU. YD.
STAGE 3C CUT VOLUME: 46 CU. YD.
STAGE 3C FILL VOLUME: 171 CU. YD.

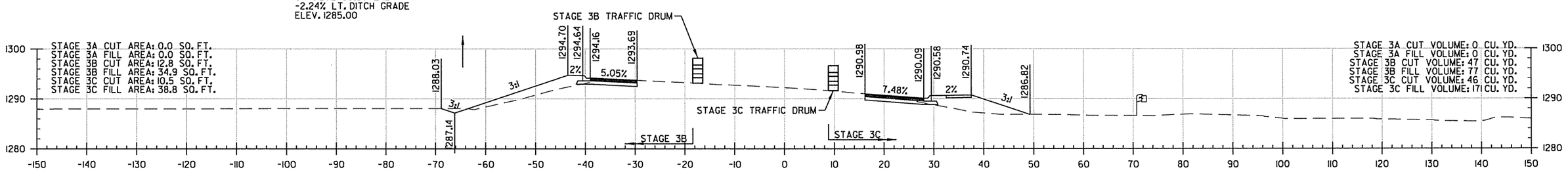

STA. 201+37.01 BEGIN
-2.24% LT. DITCH GRADE
ELEV. 1288.50

STAGE 3A CUT AREA: 0.0 SQ. FT.
STAGE 3A FILL AREA: 0.0 SQ. FT.
STAGE 3B CUT AREA: 12.4 SQ. FT.
STAGE 3B FILL AREA: 6.7 SQ. FT.
STAGE 3C CUT AREA: 14.4 SQ. FT.
STAGE 3C FILL AREA: 53.8 SQ. FT.

STAGE 3A CUT VOLUME: 0 CU. YD.
STAGE 3A FILL VOLUME: 0 CU. YD.
STAGE 3B CUT VOLUME: 30 CU. YD.
STAGE 3B FILL VOLUME: 18 CU. YD.
STAGE 3C CUT VOLUME: 43 CU. YD.
STAGE 3C FILL VOLUME: 79 CU. YD.

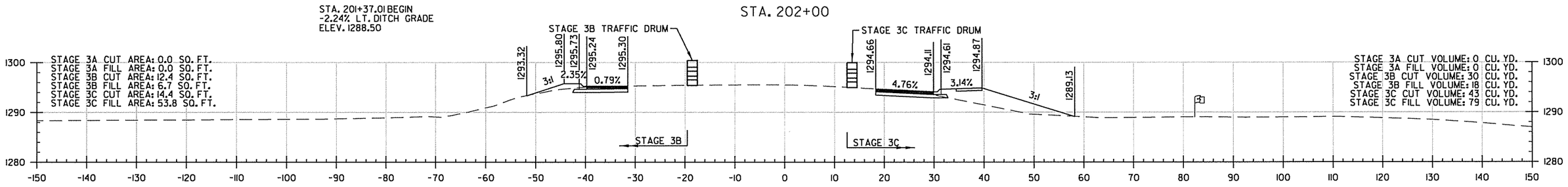

STAGE 3A CUT AREA: 0.0 SQ. FT.
STAGE 3A FILL AREA: 0.0 SQ. FT.
STAGE 3B CUT AREA: 12.1 SQ. FT.
STAGE 3B FILL AREA: 8.0 SQ. FT.
STAGE 3C CUT AREA: 20.5 SQ. FT.
STAGE 3C FILL AREA: 9.6 SQ. FT.

STAGE 3A CUT VOLUME: 0 CU. YD.
STAGE 3A FILL VOLUME: 0 CU. YD.
STAGE 3B CUT VOLUME: 16 CU. YD.
STAGE 3B FILL VOLUME: 5 CU. YD.
STAGE 3C CUT VOLUME: 16 CU. YD.
STAGE 3C FILL VOLUME: 9 CU. YD.

STA. 200+33.00 - CONSTRUCT
DROP INLET ON RT. H = 3'-11"
WITH 4' EXTENSION AND 18" x 38'
PIPE CULVERT TO DROP INLET ON RT.
TYPE MO DROP INLET = 4' DIA.
TYPE C DROP INLET = 4' x 2'-6"
18" R.C. PIPE (CLASS III) (TYPE 3 BEDDING) = 38 LIN. FT.
18" SLPPMCCS PIPE (TYPE 2 BEDDING) = 38 LIN. FT.

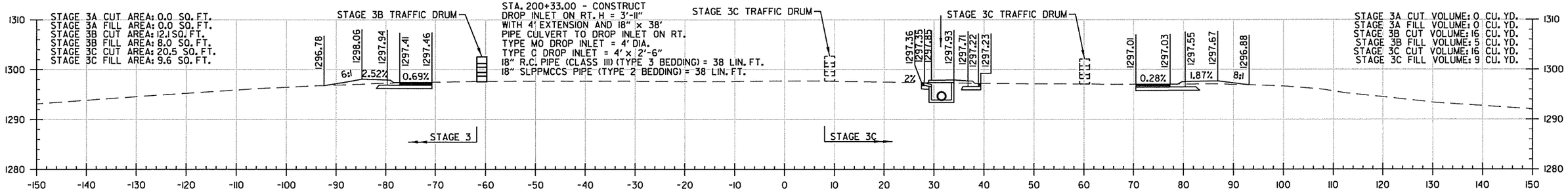

STAGE 3A CUT AREA: 0.0 SQ. FT.
STAGE 3A FILL AREA: 0.0 SQ. FT.
STAGE 3B CUT AREA: 14.1 SQ. FT.
STAGE 3B FILL AREA: 0.0 SQ. FT.
STAGE 3C CUT AREA: 5.8 SQ. FT.
STAGE 3C FILL AREA: 5.5 SQ. FT.

STAGE 3A CUT VOLUME: 0 CU. YD.
STAGE 3A FILL VOLUME: 0 CU. YD.
STAGE 3B CUT VOLUME: 5 CU. YD.
STAGE 3B FILL VOLUME: 0 CU. YD.
STAGE 3C CUT VOLUME: 3 CU. YD.
STAGE 3C FILL VOLUME: 4 CU. YD.

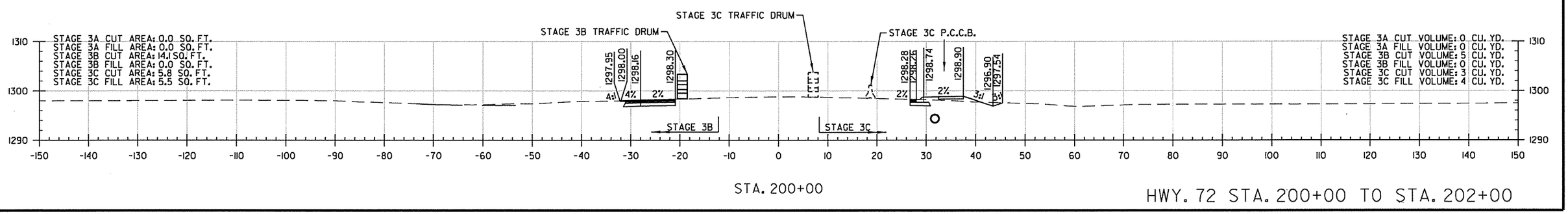

HWY. 72 STA. 200+00 TO STA. 202+00

4/28/2016
6:56:03 PM
\\GAX1\CA0902_CX_HWY540_01.dgn

DATE	DATE FILMED	DATE REVISED	DATE FILMED	FED.RD. DIST.NO.	STATE	FED.AID PROJ.NO.	SHEET NO.	TOTAL SHEETS
				6	ARK.			
				JOB NO.		CA0902	575	581
				(2)	HWY. 72 CROSS SECTIONS			

STA. 204+50.84 BEGIN
-1.33% LT. DITCH GRADE
ELEV. 1281.50

STA. 204+50.84 END
-9.72% LT. DITCH GRADE
ELEV. 1281.50

STA. 204+41.80 BEGIN
-9.72% LT. DITCH GRADE
ELEV. 1283.25

STA. 204+35.00 - IN PLACE
18" x 53' R.C. PIPE CULVERT
WITH FES ON LT.
REMOVE FES AND EXTEND R.C. PIPE CULVERT 21' LT.
(CLASS III) (TYPE 3 BEDDING)
WITH FES ON LT.

STAGE 3A CUT AREA: 0.0 SQ. FT.
STAGE 3A FILL AREA: 0.0 SQ. FT.
STAGE 3B CUT AREA: 9.6 SQ. FT.
STAGE 3B FILL AREA: 21.1 SQ. FT.
STAGE 3C CUT AREA: 0.0 SQ. FT.
STAGE 3C FILL AREA: 0.0 SQ. FT.

1285.75 1285.35 1285.39 0.43%

STAGE 3C TRAFFIC DRUM

PROPOSED T.C.E.

STAGE 3C

STAGE 3A CUT VOLUME: 0 CU. YD.
STAGE 3A FILL VOLUME: 0 CU. YD.
STAGE 3B CUT VOLUME: 6 CU. YD.
STAGE 3B FILL VOLUME: 14 CU. YD.
STAGE 3C CUT VOLUME: 9 CU. YD.
STAGE 3C FILL VOLUME: 11 CU. YD.

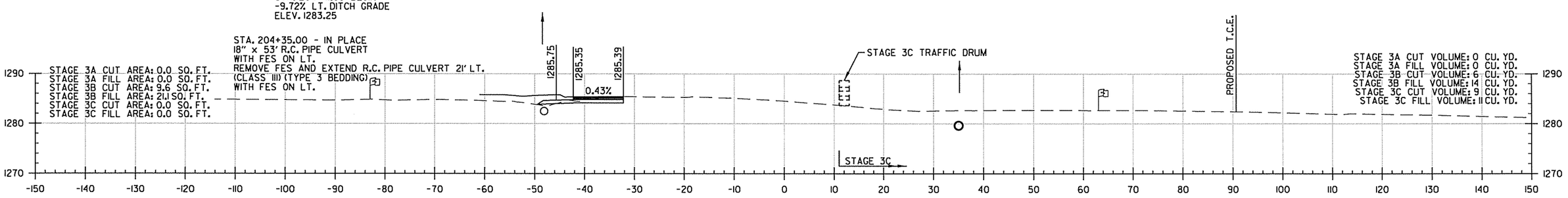

STA. 204+35

STAGE 3A CUT AREA: 0.0 SQ. FT.
STAGE 3A FILL AREA: 0.0 SQ. FT.
STAGE 3B CUT AREA: 0.0 SQ. FT.
STAGE 3B FILL AREA: 0.0 SQ. FT.
STAGE 3C CUT AREA: 14.6 SQ. FT.
STAGE 3C FILL AREA: 16.3 SQ. FT.

STAGE 3C TRAFFIC DRUM

1284.08 1282.95 1283.40 1283.41 1283.56
9.31% 0.11% 2.31%

PROPOSED ROW

STAGE 3C

STAGE 3A CUT VOLUME: 0 CU. YD.
STAGE 3A FILL VOLUME: 0 CU. YD.
STAGE 3B CUT VOLUME: 1 CU. YD.
STAGE 3B FILL VOLUME: 5 CU. YD.
STAGE 3C CUT VOLUME: 6 CU. YD.
STAGE 3C FILL VOLUME: 11 CU. YD.

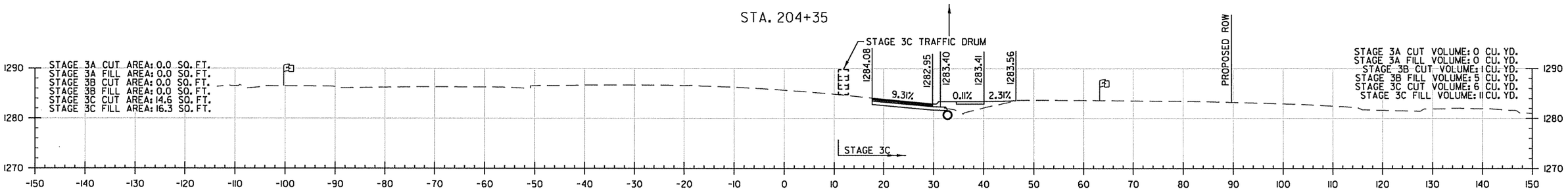

STA. 204+00

STA. 203+86.00 - CONSTRUCT
DROP INLET ON RT. H = 3'-10"
WITH 4' EXTENSION AND 18" x 132'
PIPE CULVERT TO DROP INLET ON RT.
TYPE MO DROP INLET = 4' DIA.
TYPE C DROP INLET = 4' X 2'-6"
18" R.C. PIPE (CLASS III) (TYPE 3 BEDDING) = 132 LIN. FT.

STAGE 3A CUT AREA: 0.0 SQ. FT.
STAGE 3A FILL AREA: 0.0 SQ. FT.
STAGE 3B CUT AREA: 5.6 SQ. FT.
STAGE 3B FILL AREA: 18.6 SQ. FT.
STAGE 3C CUT AREA: 10.2 SQ. FT.
STAGE 3C FILL AREA: 26.6 SQ. FT.

STAGE 3C TRAFFIC DRUM
STAGE 3B TRAFFIC DRUM

1287.29 1287.38 1286.93 1286.97 1.40% 3.42%
1284.57 1283.67 1284.15 1284.31 1284.18 8.62% 2% 1.58%

PROPOSED ROW

STAGE 3B
STAGE 3C

STAGE 3A CUT VOLUME: 0 CU. YD.
STAGE 3A FILL VOLUME: 0 CU. YD.
STAGE 3B CUT VOLUME: 23 CU. YD.
STAGE 3B FILL VOLUME: 40 CU. YD.
STAGE 3C CUT VOLUME: 32 CU. YD.
STAGE 3C FILL VOLUME: 80 CU. YD.

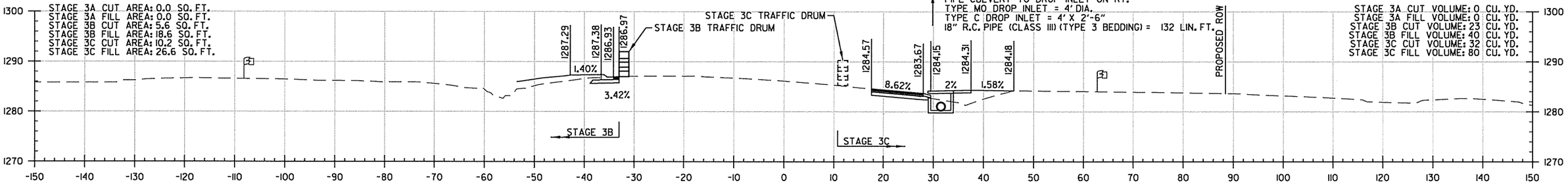

STA. 203+86

STAGE 3A CUT AREA: 0.0 SQ. FT.
STAGE 3A FILL AREA: 0.0 SQ. FT.
STAGE 3B CUT AREA: 8.7 SQ. FT.
STAGE 3B FILL AREA: 6.8 SQ. FT.
STAGE 3C CUT AREA: 9.6 SQ. FT.
STAGE 3C FILL AREA: 23.8 SQ. FT.

STAGE 3B TRAFFIC DRUM
STAGE 3C TRAFFIC DRUM

1288.06 1290.46 1290.51 1290.07 1290.04 3:1 1.53% 0.67%
1287.52 1286.56 1287.05 1287.21 1286.40 8.55% 2% 5.19%

PROPOSED ROW

STAGE 3B
STAGE 3C

STAGE 3A CUT VOLUME: 0 CU. YD.
STAGE 3A FILL VOLUME: 0 CU. YD.
STAGE 3B CUT VOLUME: 40 CU. YD.
STAGE 3B FILL VOLUME: 77 CU. YD.
STAGE 3C CUT VOLUME: 37 CU. YD.
STAGE 3C FILL VOLUME: 116 CU. YD.

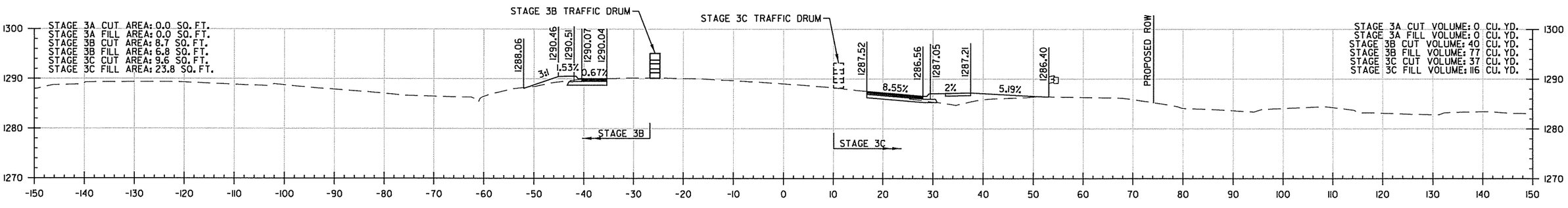

STA. 203+00

HWY. 72 STA. 203+00 TO STA. 204+35

4/28/2016
6:36:01 PM
\\ARK\CA0902_CX_HWY540_01.dgn

DATE	DATE FILMED	DATE REVISED	DATE FILMED	FED.RD. DIST.NO.	STATE	FED.AID PROJ.NO.	SHEET NO.	TOTAL SHEETS
				6	ARK.			
				JOB NO.		CA0902	576	581
				(2)	HWY. 72 CROSS SECTIONS			

STA. 205+45.00 - IN PLACE
FES ON LT.
WITH 18" x 77' R.C. PIPE CULVERT
TO FES ON LT.
REMOVE FES AND CONSTRUCT
DROP INLET ON LT. H = 2'-8"
WITH 18" x 4' R.C. PIPE CULVERT (CLASS III) (TYPE 3 BEDDING)
TYPE E DROP INLET = 3' X 3'

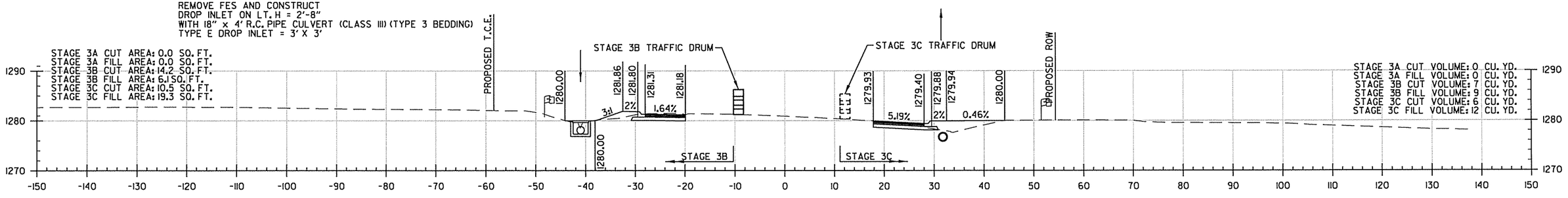

STA. 205+45

STA. 205+44.32 END
-1.33% LT. DITCH GRADE
ELEV. 1280.00

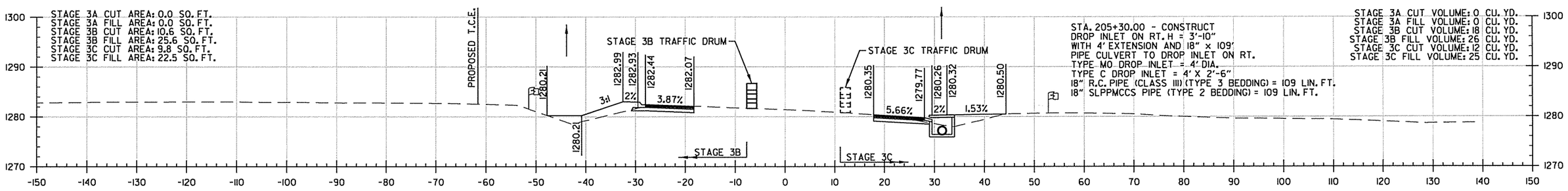

STA. 205+30

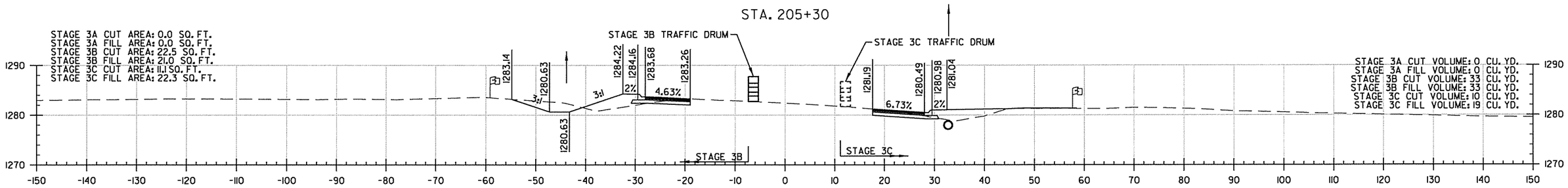

STA. 205+00

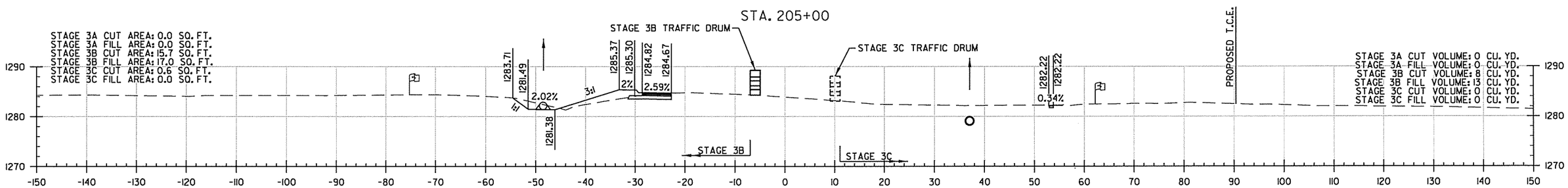

STA. 204+53

HWY. 72 STA. 204+53 TO STA. 205+45

4/28/2016
6:56:10 PM
M:\PW\CA0902_CX_HWY540_01.dgn

DATE	DATE FILMED	DATE REVISED	DATE FILMED	FED.RD. DIST.NO.	STATE	FED.AID PROJ.NO.	SHEET NO.	TOTAL SHEETS
				6	ARK.			
				JOB NO.		CA0902	577	581
				(2)	HWY. 72 CROSS SECTIONS			

STA. 207+66.50 END
-1.10% RT. DITCH GRADE
ELEV. 1272.75

STA. 207+66.50 BEGIN
1.23% RT. DITCH GRADE
ELEV. 1272.75

STAGE 3A CUT AREA: 8.4 SQ. FT.
STAGE 3A FILL AREA: 6.8 SQ. FT.
STAGE 3B CUT AREA: 7.4 SQ. FT.
STAGE 3B FILL AREA: 15.0 SQ. FT.
STAGE 3C CUT AREA: 12.3 SQ. FT.
STAGE 3C FILL AREA: 35.2 SQ. FT.

STAGE 3A CUT VOLUME: 4 CU. YD.
STAGE 3A FILL VOLUME: 2 CU. YD.
STAGE 3B CUT VOLUME: 8 CU. YD.
STAGE 3B FILL VOLUME: 5 CU. YD.
STAGE 3C CUT VOLUME: 7 CU. YD.
STAGE 3C FILL VOLUME: 18 CU. YD.

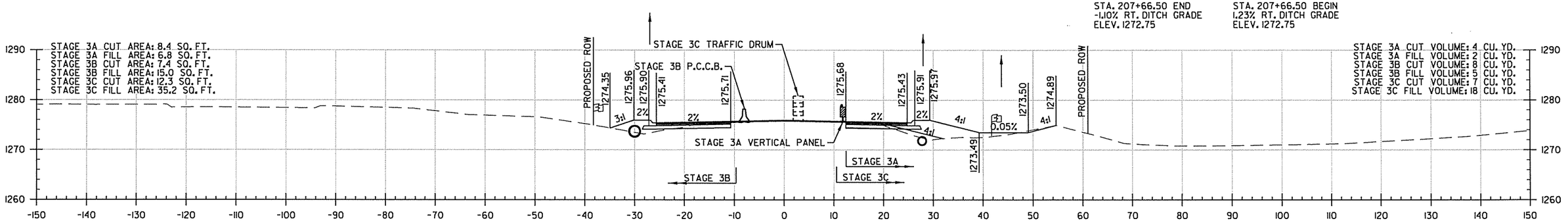

STA. 207+00

STA. 206+99.59 BEGIN
-1.10% RT. DITCH GRADE
ELEV. 1273.50

STA. 206+99.59 END
-4.36% RT. DITCH GRADE
ELEV. 1273.50

STA. 206+85.00 - IN PLACE
FES ON LT.
WITH 24"x 67' R.C. PIPE CULVERT
TO FES ON LT.
REMOVE FES AND EXTEND
R.C. PIPE CULVERT 123' LT.
TO DROP INLET ON LT.
24" R.C. PIPE (CLASS III) (TYPE 3 BEDDING) = 123 LIN. FT.
24" SLPPMCCS PIPE (TYPE 2 BEDDING) = 123 LIN. FT.

STAGE 3A CUT AREA: 7.3 SQ. FT.
STAGE 3A FILL AREA: 0.1 SQ. FT.
STAGE 3B CUT AREA: 20.6 SQ. FT.
STAGE 3B FILL AREA: 2.2 SQ. FT.
STAGE 3C CUT AREA: 11.5 SQ. FT.
STAGE 3C FILL AREA: 28.8 SQ. FT.

STAGE 3A CUT VOLUME: 8 CU. YD.
STAGE 3A FILL VOLUME: 0 CU. YD.
STAGE 3B CUT VOLUME: 32 CU. YD.
STAGE 3B FILL VOLUME: 1 CU. YD.
STAGE 3C CUT VOLUME: 23 CU. YD.
STAGE 3C FILL VOLUME: 33 CU. YD.

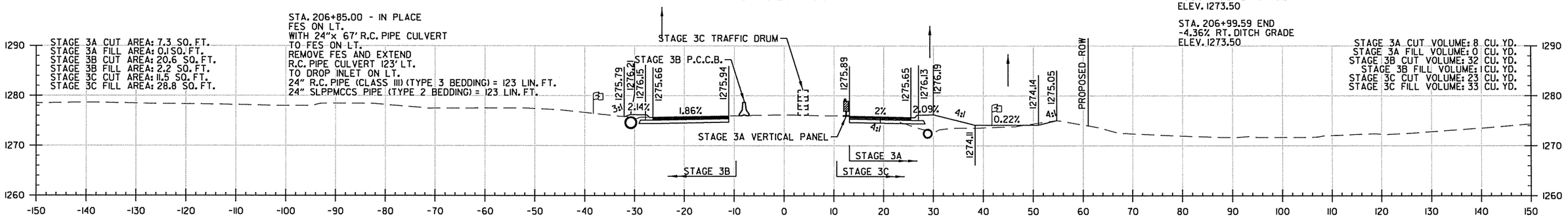

STA. 206+85

STA. 206+59.79 END
-2.86% RT. DITCH GRADE
ELEV. 1275.25

STA. 206+59.79 BEGIN
-4.36% RT. DITCH GRADE
ELEV. 1275.25

STAGE 3A CUT AREA: 5.2 SQ. FT.
STAGE 3A FILL AREA: 0.0 SQ. FT.
STAGE 3B CUT AREA: 28.1 SQ. FT.
STAGE 3B FILL AREA: 0.0 SQ. FT.
STAGE 3C CUT AREA: 23.4 SQ. FT.
STAGE 3C FILL AREA: 20.3 SQ. FT.

STAGE 3A CUT VOLUME: 5 CU. YD.
STAGE 3A FILL VOLUME: 0 CU. YD.
STAGE 3B CUT VOLUME: 25 CU. YD.
STAGE 3B FILL VOLUME: 0 CU. YD.
STAGE 3C CUT VOLUME: 31 CU. YD.
STAGE 3C FILL VOLUME: 35 CU. YD.

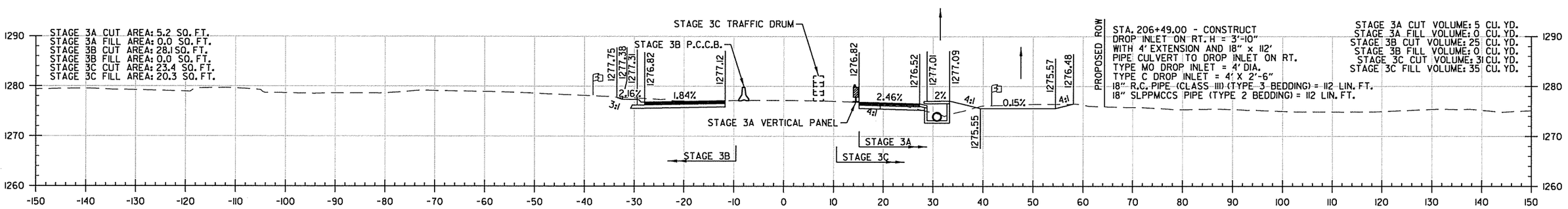

STA. 206+49.00 - CONSTRUCT
DROP INLET ON RT. H = 3'-10"
WITH 4' EXTENSION AND 18" x 112'
PIPE CULVERT TO DROP INLET ON RT.
TYPE MO DROP INLET = 4' DIA.
TYPE C DROP INLET = 4' X 2'-6"
18" R.C. PIPE (CLASS III) (TYPE 3 BEDDING) = 112 LIN. FT.
18" SLPPMCCS PIPE (TYPE 2 BEDDING) = 112 LIN. FT.

STA. 206+49

STA. 206+06.46 BEGIN
-2.86% RT. DITCH GRADE
ELEV. 1276.75

STAGE 3A CUT AREA: 0.0 SQ. FT.
STAGE 3A FILL AREA: 0.0 SQ. FT.
STAGE 3B CUT AREA: 0.0 SQ. FT.
STAGE 3B FILL AREA: 0.0 SQ. FT.
STAGE 3C CUT AREA: 10.7 SQ. FT.
STAGE 3C FILL AREA: 18.3 SQ. FT.

STAGE 3A CUT VOLUME: 0 CU. YD.
STAGE 3A FILL VOLUME: 0 CU. YD.
STAGE 3B CUT VOLUME: 14 CU. YD.
STAGE 3B FILL VOLUME: 6 CU. YD.
STAGE 3C CUT VOLUME: 22 CU. YD.
STAGE 3C FILL VOLUME: 38 CU. YD.

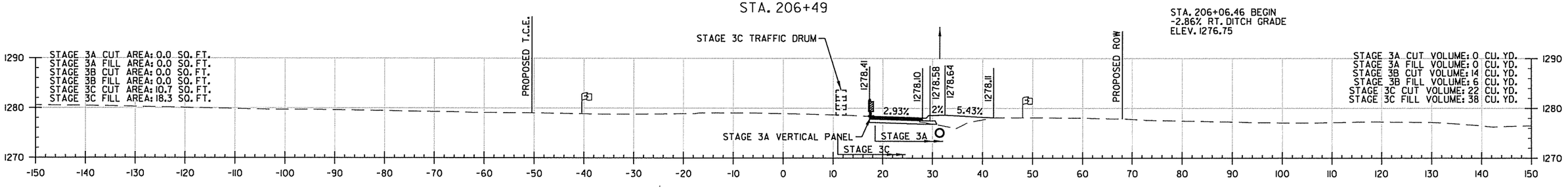

STA. 206+00

HWY. 72 STA. 206+00 TO STA. 207+00

4/28/2016
6:36:11 PM
\\CX\TCA0902_CX_HWY540_01.dgn

DATE	DATE FILMED	DATE REVISED	DATE FILMED	FED.RD. DIST.NO.	STATE	FED.AID PROJ.NO.	SHEET NO.	TOTAL SHEETS
				6	ARK.			
				JOB NO.		CA0902	578	581

(2) HWY. 72 CROSS SECTIONS

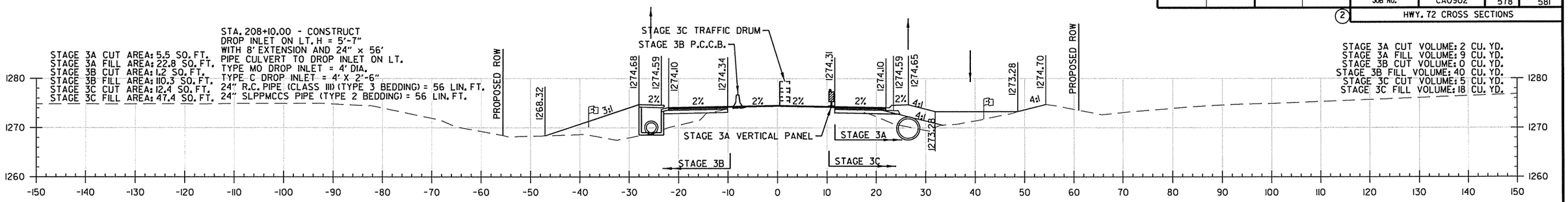

STA. 208+10

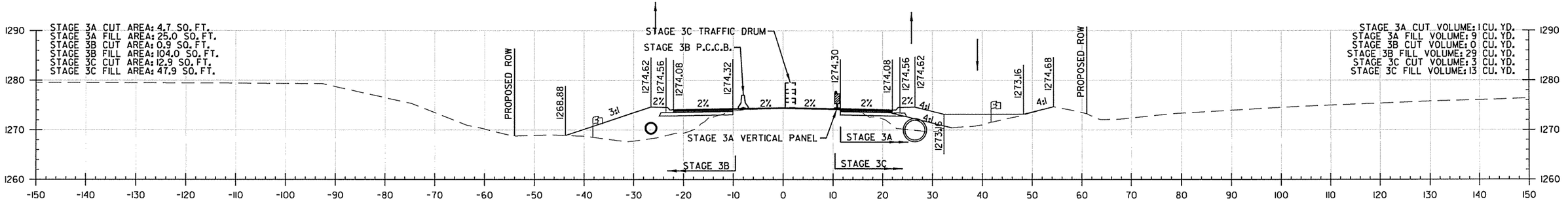

STA. 208+00

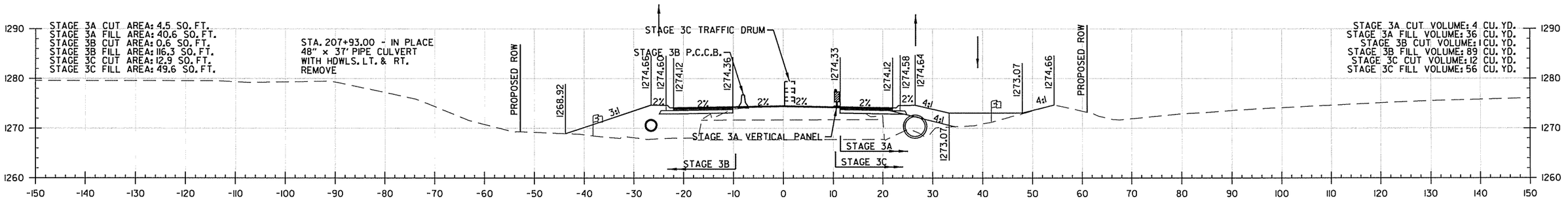

STA. 207+93

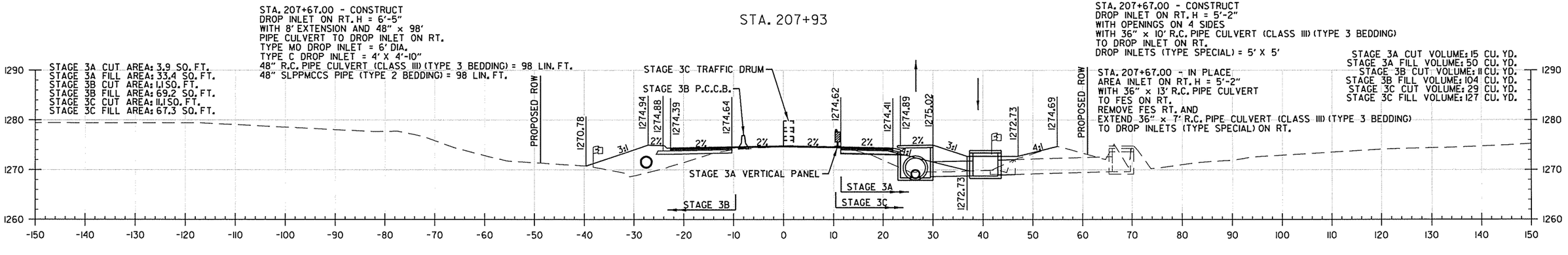

STA. 207+67

HWY. 72 STA. 207+67 TO STA. 208+10

5/16/2016
3:27:09 PM
C:\CAD\CA0902_CX_HWY540_01.dgn

DATE	DATE FILMED	DATE REVISED	DATE FILMED	FED.RD. DIST.NO.	STATE	FED.AID PROJ.NO.	SHEET NO.	TOTAL SHEETS
				6	ARK.			
				JOB NO.		CA0902	579	581

(2) HWY. 72 CROSS SECTIONS

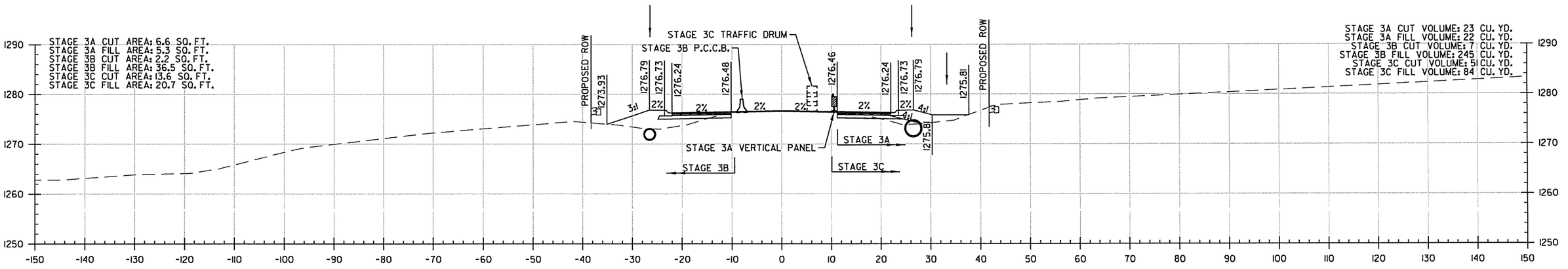

STA. 210+00

STA. 209+50.00 BEGIN
1.68% RT. DITCH GRADE
ELEV. 1275.00

STA. 209+50.00 END
1.23% RT. DITCH GRADE
ELEV. 1275.00

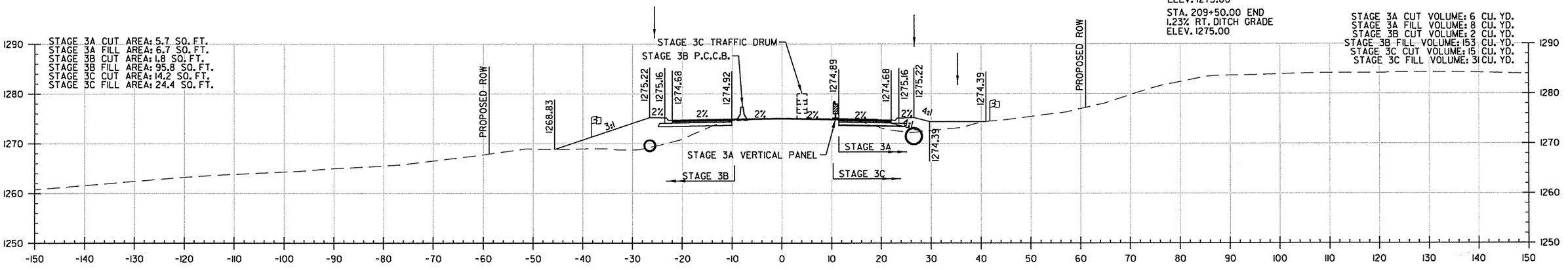

STA. 209+00

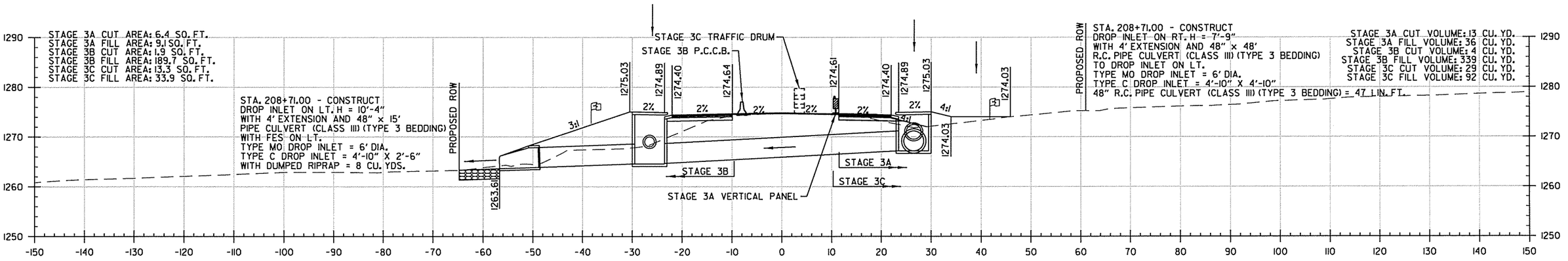

STA. 208+71

HWY. 72 STA. 208+71 TO STA. 210+00

4/28/2016
6:36:12 PM
...\CX\CA0902_CX_HWY540_01.dgn

DATE	DATE FILMED	DATE REVISED	DATE FILMED	FED.RD. DIST.NO.	STATE	FED.AID PROJ.NO.	SHEET NO.	TOTAL SHEETS
				6	ARK.			
				JOB NO.		CA0902	580	581
				(2)	HWY. 72 CROSS SECTIONS			

STA. 212+48.07 END
1.68% RT. DITCH GRADE
ELEV. 1280.00

STAGE 3A CUT AREA: 7.1 SQ. FT.
STAGE 3A FILL AREA: 1.6 SQ. FT.
STAGE 3B CUT AREA: 1.6 SQ. FT.
STAGE 3B FILL AREA: 36.1 SQ. FT.
STAGE 3C CUT AREA: 13.6 SQ. FT.
STAGE 3C FILL AREA: 19.7 SQ. FT.

STAGE 3B P.C.C.B.
STAGE 3C TRAFFIC DRUM
STAGE 3A VERTICAL PANEL
STAGE 3B
STAGE 3A
STAGE 3C

STA. 212+10.00 - IN PLACE
12" X 32' C.M. PIPE CULVERT ON RT.
INSTALL PIPE COLLAR AND 12" x 9'
R.C. PIPE CULVERT TO DROP INLET ON RT.
12" R.C. PIPE CULVERT (CLASS III) (TYPE 3 BEDDING) = 9 LIN. FT.
12" SLPPMCCS PIPE (TYPE 2 BEDDING) = 9 LIN. FT.

STAGE 3A CUT VOLUME: 0 CU. YD.
STAGE 3A FILL VOLUME: 0 CU. YD.
STAGE 3B CUT VOLUME: 0 CU. YD.
STAGE 3B FILL VOLUME: 1 CU. YD.
STAGE 3C CUT VOLUME: 1 CU. YD.
STAGE 3C FILL VOLUME: 1 CU. YD.

STA. 212+10

STAGE 3A CUT AREA: 6.7 SQ. FT.
STAGE 3A FILL AREA: 2.6 SQ. FT.
STAGE 3B CUT AREA: 1.6 SQ. FT.
STAGE 3B FILL AREA: 36.1 SQ. FT.
STAGE 3C CUT AREA: 13.7 SQ. FT.
STAGE 3C FILL AREA: 25.0 SQ. FT.

STAGE 3B P.C.C.B.
STAGE 3C TRAFFIC DRUM
STAGE 3A VERTICAL PANEL
STAGE 3B
STAGE 3A
STAGE 3C

STA. 212+09.00 - CONSTRUCT
DROP INLET ON RT. H = 5'-9"
WITH 4' EXTENSION AND 36" X 333' PIPE CULVERT
TO DROP INLET RT.
TYPE MO DROP INLET = 5' DIA.
TYPE C DROP INLET = 4' X 3'-8"
36" R.C. PIPE (CLASS III) (TYPE 3 BEDDING) = 333 LIN. FT.
36" SLPPMCCS PIPE (TYPE 2 BEDDING) = 333 LIN. FT.

STAGE 3A CUT VOLUME: 2 CU. YD.
STAGE 3A FILL VOLUME: 1 CU. YD.
STAGE 3B CUT VOLUME: 1 CU. YD.
STAGE 3B FILL VOLUME: 13 CU. YD.
STAGE 3C CUT VOLUME: 5 CU. YD.
STAGE 3C FILL VOLUME: 8 CU. YD.

STA. 212+09

STAGE 3A CUT AREA: 5.5 SQ. FT.
STAGE 3A FILL AREA: 6.3 SQ. FT.
STAGE 3B CUT AREA: 1.7 SQ. FT.
STAGE 3B FILL AREA: 39.3 SQ. FT.
STAGE 3C CUT AREA: 13.9 SQ. FT.
STAGE 3C FILL AREA: 23.4 SQ. FT.

STAGE 3B P.C.C.B.
STAGE 3C TRAFFIC DRUM
STAGE 3A VERTICAL PANEL
STAGE 3B
STAGE 3A
STAGE 3C

STAGE 3A CUT VOLUME: 24 CU. YD.
STAGE 3A FILL VOLUME: 20 CU. YD.
STAGE 3B CUT VOLUME: 7 CU. YD.
STAGE 3B FILL VOLUME: 157 CU. YD.
STAGE 3C CUT VOLUME: 53 CU. YD.
STAGE 3C FILL VOLUME: 86 CU. YD.

STA. 212+00

STAGE 3A CUT AREA: 7.6 SQ. FT.
STAGE 3A FILL AREA: 4.5 SQ. FT.
STAGE 3B CUT AREA: 1.9 SQ. FT.
STAGE 3B FILL AREA: 45.6 SQ. FT.
STAGE 3C CUT AREA: 14.7 SQ. FT.
STAGE 3C FILL AREA: 22.8 SQ. FT.

STA. 211+00.00 - CONSTRUCT
DROP INLET ON LT. H = 5'-5"
WITH 4' EXTENSION AND 24" x 224'
PIPE CULVERT TO DROP INLET ON LT.
TYPE MO DROP INLET = 4' DIA.
TYPE C DROP INLET = 4' X 2'-6"
24" R.C. PIPE CULVERT (CLASS III) (TYPE 3 BEDDING) = 224 LIN. FT.
24" SLPPMCCS PIPE (TYPE 2 BEDDING) = 224 LIN. FT.

STAGE 3B P.C.C.B.
STAGE 3C TRAFFIC DRUM
STAGE 3A VERTICAL PANEL
STAGE 3B
STAGE 3A
STAGE 3C

STAGE 3A CUT VOLUME: 26 CU. YD.
STAGE 3A FILL VOLUME: 18 CU. YD.
STAGE 3B CUT VOLUME: 8 CU. YD.
STAGE 3B FILL VOLUME: 152 CU. YD.
STAGE 3C CUT VOLUME: 52 CU. YD.
STAGE 3C FILL VOLUME: 81 CU. YD.

STA. 211+00

HWY. 72 STA. 211+00 TO STA. 212+10

4/28/2016
5:51:12 PM
S:\CVX\rCA0902_CX_HWY540_01.dgn

DATE	DATE FILMED	DATE REVISED	DATE FILMED	FED.RD. DIST.NO.	STATE	FED.AID PROJ.NO.	SHEET NO.	TOTAL SHEETS
				6	ARK.			
				JOB NO.		CA0902	581	581
				(2)	HWY. 72 CROSS SECTIONS			

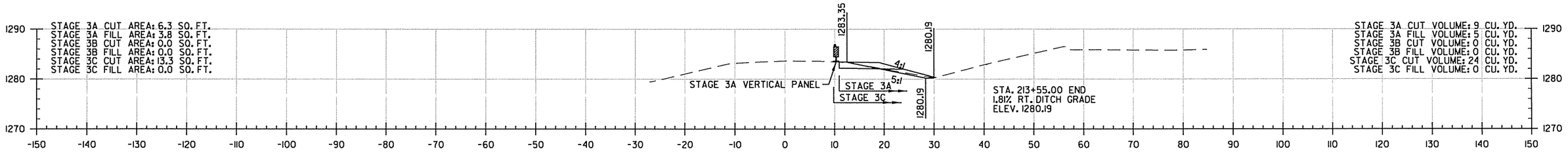

STA. 213+55
END CONSTRUCTION

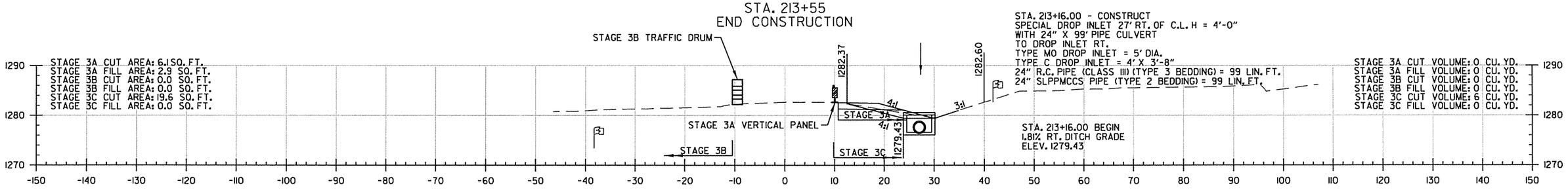

STA. 213+16

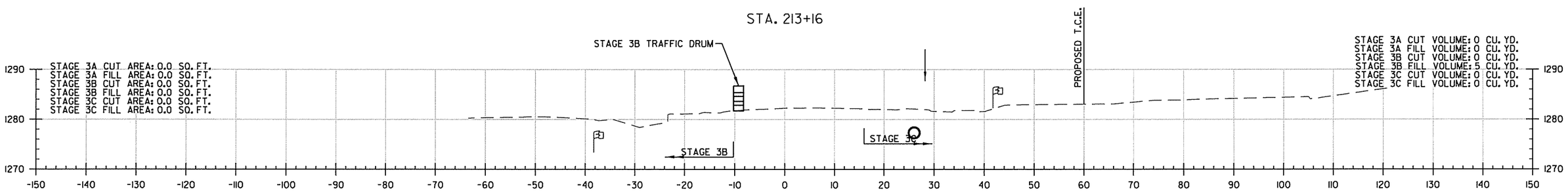

STA. 213+00

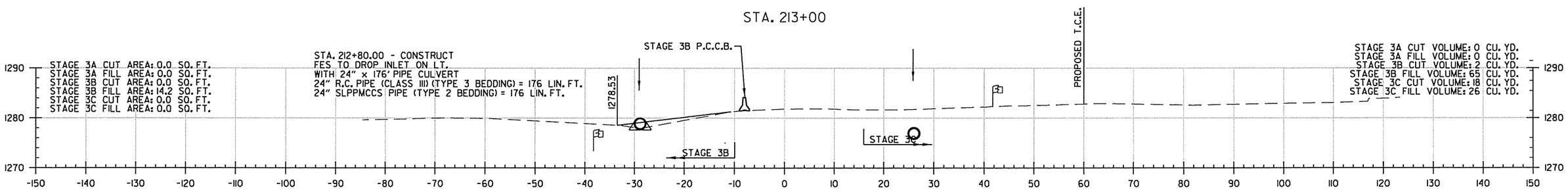

STA. 212+80

HWY. 72 STA. 212+80 TO STA. 213+55

4/28/2016
6:31:12 PM
C:\CX\CA0902_CX_HWY540_01.dgn