DATE REVISED	DATE FILMED	DATE REVISED	DATE FILMED	FED.RD. DIST.NO.	STATE	FED.AID PROJ.NO.	SHEET NO.	TOTAL SHEETS
				6	ARK.			
				JOB NO.		CA0609	1	693
				(2) HWY.365-I-430 (WIDENING) & I-430 INTCHNG. MOD. (F)				

"A FULLY CONTROLLED ACCESS FACILITY"

ARKANSAS STATE HIGHWAY AND TRANSPORTATION DEPARTMENT

CONSTRUCTION PLANS FOR STATE HIGHWAY

HWY. 365-I-430 (WIDENING) & I-430 INTCHNG. MOD. (F)

PULASKI COUNTY

ROUTE 40 & 430 SECTION 33 & 21

FEDERAL AID PROJECT STPF-EBS-EBE-IMD-CM-HSIP-430-2(267)13

JOB CA0609

PROJECT LOCATION

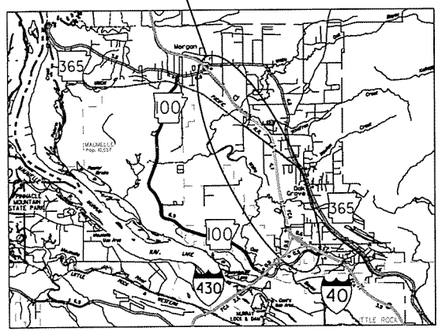

VICINITY MAP

BRIDGE DATA

(1) I-40 LT. LANES STA. 8033+86.29 BR. END A
I-40 RT. LANES STA. 8033+84.05 BR. END B
BRIDGE NO. A3230 & B3230
IN PLACE
150'-0" R.C. DECK GIRDER
56'-0" CLEAR ROADWAY
I-40 LT. LANES STA. 8035+36.29 BR. END A
I-40 RT. LANES STA. 8035+34.05 BR. END B
RETAIN

(2) STA. 12+77.69 BRIDGE END
BRIDGE NO. 07317 OVER INTERSTATE 40
388'-0" CONT. COMP. PLATE GIRDER UNIT
34'-0" CLEAR ROADWAY
36°00'00" LT. FORWARD SKEW
390'-7½" BRIDGE LENGTH
STA. 16+68.31 BRIDGE END

(3) I-40 LT. LANES STA. 8106+41.75 BR. END A
I-40 RT. LANES STA. 8102+59.40 BR. END B
BRIDGE NO. A3232 & B3232
IN PLACE
423'-2⅛" CONT. COMP. W-BEAM
56'-0" CLEAR ROADWAY
I-40 LT. LANES STA. 8110+64.93 BR. END A
I-40 RT. LANES STA. 8106+82.58 BR. END B
RETAIN

(4) I-40 LT. LANES STA. 8181+04.49 BR. END A
I-40 RT. LANES STA. 8179+71.92 BR. END B
BRIDGE NO. A3233 & B3233
IN PLACE
90'-0" R.C. DECK GIRDER
56'-0" CLEAR ROADWAY
I-40 LT. LANES STA. 8181+94.49 BR. END A
I-40 RT. LANES STA. 8180+61.92 BR. END B
RETAIN

(5) STA. 18+57.71 BRIDGE END
BRIDGE NO. 07318 OVER INTERSTATE 40
278'-0" CONT. COMP. PLATE GIRDER UNIT
24'-0" CLEAR ROADWAY
5°00'00" LT. FORWARD SKEW
280'-2⅝" BRIDGE LENGTH
STA. 21+37.93 BRIDGE END

(6) STA. 8199+48.81 BRIDGE END
BRIDGE NO. 05324 OVER INTERSTATE 40
398'-7" CONT. COMP. PLATE GIRDER UNIT &
354'-7" CONT. COMP. PLATE GIRDER UNIT
42'-0" CLEAR ROADWAY
755'-4" BRIDGE LENGTH
STA. 8207+02.76 BRIDGE END

PROJECT COORDINATES

	BEGIN	MID-POINT	END
LATITUDE	N 34°53'09"	N 34°51'29"	N 34°49'21"
LONGITUDE	W 92°22'48"	W 92°21'04"	W 92°20'31"
STATION	7963+00.00	8097+84.39	8232+68.78

STA. 7963+00.00
BEGIN JOB CA0609
L.M. 142.35

NOT TO SCALE

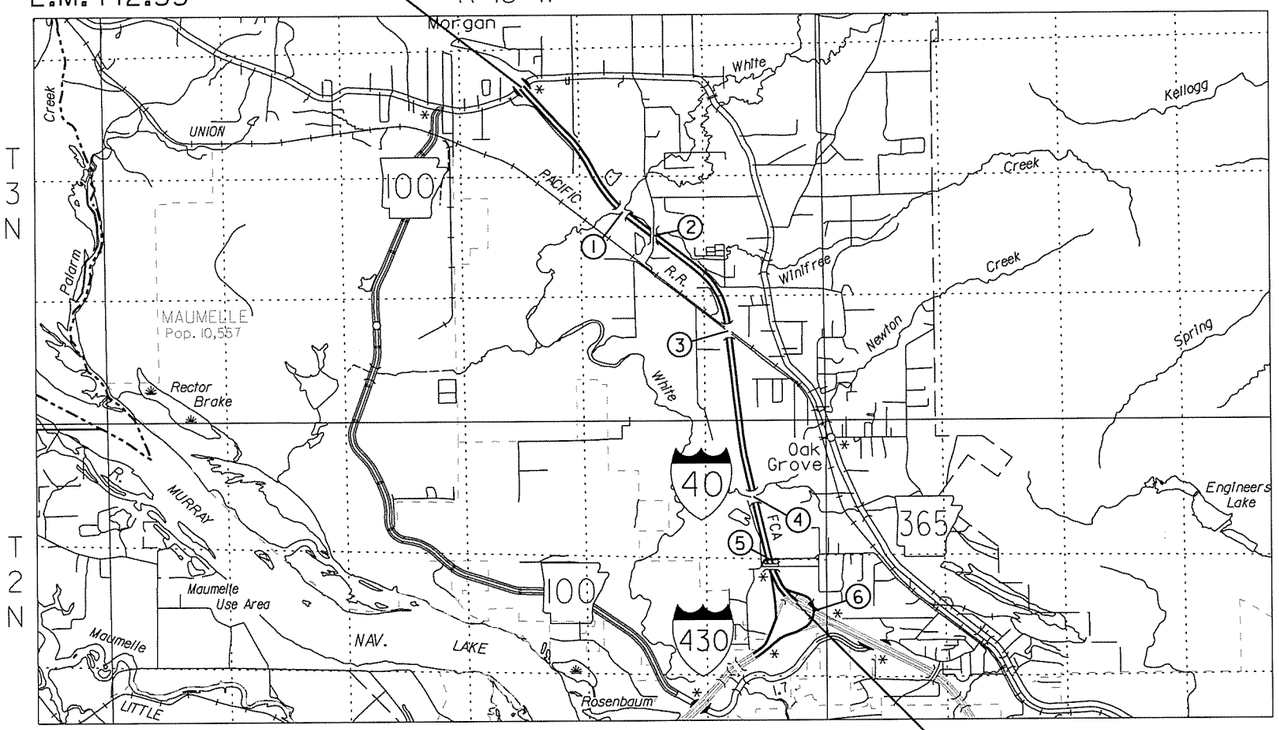

STA. 8232+68.78
END JOB CA0609
L.M. 147.46

LENGTH COMPUTED ALONG C.L. MEDIAN I-40

GROSS LENGTH OF PROJECT	26968.78 FEET	OR	5.108 MILES
NET LENGTH OF ROADWAY	26305.60 FEET	OR	4.982 MILES
NET LENGTH OF BRIDGES	663.18 FEET	OR	0.126 MILES
NET LENGTH OF PROJECT	26968.78 FEET	OR	5.108 MILES

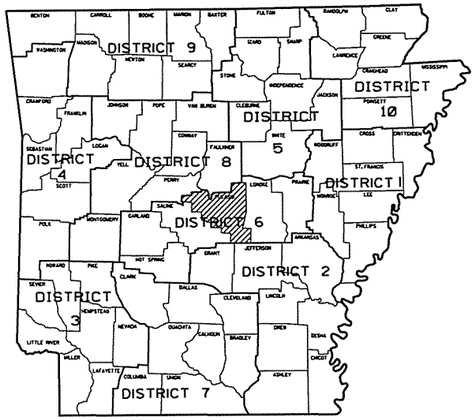

ARKANSAS HIGHWAY DISTRICT 6

· DESIGN TRAFFIC DATA · I-40

DESIGN YEAR	2034
2014 ADT	63,000
2034 ADT	89,000
2034 DHV	9,790
DIRECTIONAL DISTRIBUTION	0.60
TRUCKS	20%
DESIGN SPEED	70 MPH

N

GARVER LLC No. 766 CERTIFICATE OF AUTHORIZATION ARKANSAS ENGINEER

STATE OF ARKANSAS LICENSED PROFESSIONAL ENGINEER No.13422 JOHN F. CANTABERY 8-15-14

P.E. JOB 061367 & CA0603

JFCantabery 8/15/2014 1:45:08 PM
WORKSPACE: AHTD
\\garverinc\11projects\2011\107709 - I-40 at I-430 Interchange Modifications\Drawings\RCA0609_CO_ALL.dgn
REVISED DATE:

DATE REVISED	DATE FILMED	DATE REVISED	DATE FILMED	FED.RD. DIST.NO.	STATE	FED.AID PROJ.NO.	SHEET NO.	TOTAL SHEETS
				6	ARK.			
				JOB NO.		CA0609	2	693
				(2)	INDEX OF SHEETS			

SHEET NO.	TITLE	BRIDGE NO.	DRAWING NO.	DATE
1	TITLE SHEET			
2	INDEX OF SHEETS			
3	INDEX OF SHEETS, GOVERNING SPECIFICATIONS, AND GENERAL NOTES			
4-31	TYPICAL SECTIONS OF IMPROVEMENT			
32-51	SPECIAL DETAILS			
52-91	TEMPORARY EROSION CONTROL DETAILS			
92-113	MAINTENANCE OF TRAFFIC DETAILS			
114-124	PERMANENT PAVEMENT MARKING DETAILS			
125-170	SIGN PLACEMENT SHEETS			
171-172	SIGNING QUANTITIES			
173	SOIL BORING LOGS			
174-190	QUANTITIES			
191	SCHEDULE OF BRIDGE QUANTITIES (SHEET 1 OF 2)	07317, A & B 3230	55692	
192	SCHEDULE OF BRIDGE QUANTITIES (SHEET 2 OF 2)	05324, 07318	55693	
193-194	SUMMARY OF QUANTITIES AND REVISIONS			
195-213	SURVEY CONTROL DETAILS			
214-232	PLAN AND PROFILE - I-40			
233-234	PLAN AND PROFILE - I-430 RT. LANES			
235-236	PLAN AND PROFILE - I-430 LT. LANES			
237	INTERCHANGE LAYOUT - I-40 @ I-430			
238-239	PLAN AND PROFILE - RAMP 1			
240-241	PLAN AND PROFILE - RAMP 3			
242-244	PLAN AND PROFILE - RAMP 4			
245-246	PLAN AND PROFILE - MARCHE ROAD			
247	PLAN AND PROFILE - NORMAN ROAD			
248	PLAN AND PROFILE - NEVA ROAD AND DRIVEWAY 1			
249	LAYOUT OF RETAINING WALL NO.1	07317	55694	
250	LAYOUT OF RETAINING WALL NO.2	07317	55695	
251	DETAILS OF MECHANICALLY STABILIZED EARTH WALLS (SHEET 1 OF 2)	07317	55696	
252	DETAILS OF MECHANICALLY STABILIZED EARTH WALLS (SHEET 2 OF 2)	07317	55697	
253	LAYOUT OF MARCHE SEPARATION (SHEET 1 OF 2)	07317	55698	
254	LAYOUT OF MARCHE SEPARATION (SHEET 2 OF 2)	07317	55699	
255	END BENT DETAILS (SHEET 1 OF 4)	07317	55700	
256	END BENT DETAILS (SHEET 2 OF 4)	07317	55701	
257	END BENT DETAILS (SHEET 3 OF 4)	07317	55702	
258	END BENT DETAILS (SHEET 4 OF 4)	07317	55703	
259	DETAILS OF INTERMEDIATE BENT 2	07317	55704	
260	DETAILS OF INTERMEDIATE BENT 3	07317	55705	
261	DETAILS OF 388'-0" COMPOSITE PLATE GIRDER UNIT (SHEET 1 OF 9)	07317	55706	
262	DETAILS OF 388'-0" COMPOSITE PLATE GIRDER UNIT (SHEET 2 OF 9)	07317	55707	
263	DETAILS OF 388'-0" COMPOSITE PLATE GIRDER UNIT (SHEET 3 OF 9)	07317	55708	
264	DETAILS OF 388'-0" COMPOSITE PLATE GIRDER UNIT (SHEET 4 OF 9)	07317	55709	
265	DETAILS OF 388'-0" COMPOSITE PLATE GIRDER UNIT (SHEET 5 OF 9)	07317	55710	
266	DETAILS OF 388'-0" COMPOSITE PLATE GIRDER UNIT (SHEET 6 OF 9)	07317	55711	
267	DETAILS OF 388'-0" COMPOSITE PLATE GIRDER UNIT (SHEET 7 OF 9)	07317	55712	
268	DETAILS OF 388'-0" COMPOSITE PLATE GIRDER UNIT (SHEET 8 OF 9)	07317	55713	
269	DETAILS OF 388'-0" COMPOSITE PLATE GIRDER UNIT (SHEET 9 OF 9)	07317	55714	
270	DETAILS OF ELASTOMERIC BEARINGS (SHEET 1 OF 2)	07317	55715	
271	DETAILS OF ELASTOMERIC BEARINGS (SHEET 2 OF 2)	07317	55716	
272	DETAILS OF BRIDGE MOUNTED SIGN STRUCTURE (SHEET 1 OF 3)	BM-040-60-42	55717	
273	DETAILS OF BRIDGE MOUNTED SIGN STRUCTURE (SHEET 2 OF 3)	BM-040-60-42	55718	
274	DETAILS OF BRIDGE MOUNTED SIGN STRUCTURE (SHEET 3 OF 3)	BM-040-60-42	55719	
275	REMODELING DETAILS FOR BRIDGES OVER WHITE OAK BAYOU	A & B 3230	55720	
276	DETAILS FOR APPROACH GUTTER (TYPE SPECIAL)	A & B 3230	55721	
277	LAYOUT OF BRIDGE NORMAN ROAD OVER I-40 (SHEET 1 OF 5)	07318	55722	
278	LAYOUT OF BRIDGE NORMAN ROAD OVER I-40 (SHEET 2 OF 5)	07318	55723	
279	LAYOUT OF BRIDGE NORMAN ROAD OVER I-40 (SHEET 3 OF 5)	07318	55724	
280	LAYOUT OF BRIDGE NORMAN ROAD OVER I-40 (SHEET 4 OF 5)	07318	55725	
281	LAYOUT OF BRIDGE NORMAN ROAD OVER I-40 (SHEET 5 OF 5)	07318	55726	
282	DETAILS OF END BENTS NORMAN ROAD OVER I-40 (SHEET 1 OF 4)	07318	55727	
283	DETAILS OF END BENTS NORMAN ROAD OVER I-40 (SHEET 2 OF 4)	07318	55728	
284	DETAILS OF END BENTS NORMAN ROAD OVER I-40 (SHEET 3 OF 4)	07318	55729	
285	DETAILS OF END BENTS NORMAN ROAD OVER I-40 (SHEET 4 OF 4)	07318	55730	
286	DETAILS OF INTERMEDIATE BENT NORMAN ROAD OVER I-40 (SHEET 1 OF 2)	07318	55731	
287	DETAILS OF INTERMEDIATE BENT NORMAN ROAD OVER I-40 (SHEET 2 OF 2)	07318	55732	
288	DETAILS OF 278'-0" CONTINUOUS COMPOSITE PLATE GIRDER UNIT (SHEET 1 OF 10)	07318	55733	
289	DETAILS OF 278'-0" CONTINUOUS COMPOSITE PLATE GIRDER UNIT (SHEET 2 OF 10)	07318	55734	
290	DETAILS OF 278'-0" CONTINUOUS COMPOSITE PLATE GIRDER UNIT (SHEET 3 OF 10)	07318	55735	
291	DETAILS OF 278'-0" CONTINUOUS COMPOSITE PLATE GIRDER UNIT (SHEET 4 OF 10)	07318	55736	
292	DETAILS OF 278'-0" CONTINUOUS COMPOSITE PLATE GIRDER UNIT (SHEET 5 OF 10)	07318	55737	
293	DETAILS OF 278'-0" CONTINUOUS COMPOSITE PLATE GIRDER UNIT (SHEET 6 OF 10)	07318	55738	

SHEET NO.	TITLE	BRIDGE NO.	DRAWING NO.	DATE
294	DETAILS OF 278'-0" CONTINUOUS COMPOSITE PLATE GIRDER UNIT (SHEET 7 OF 10)	07318	55739	
295	DETAILS OF 278'-0" CONTINUOUS COMPOSITE PLATE GIRDER UNIT (SHEET 8 OF 10)	07318	55740	
296	DETAILS OF 278'-0" CONTINUOUS COMPOSITE PLATE GIRDER UNIT (SHEET 9 OF 10)	07318	55741	
297	DETAILS OF 278'-0" CONTINUOUS COMPOSITE PLATE GIRDER UNIT (SHEET 10 OF 10)	07318	55742	
298	DETAILS OF ELASTOMERIC BEARINGS	07318	55743	
299	DETAILS OF BRIDGE MOUNTED SIGN STRUCTURE (SHEET 1 OF 3)	BM-040-60-45	55744	
300	DETAILS OF BRIDGE MOUNTED SIGN STRUCTURE (SHEET 2 OF 3)	BM-040-60-45	55745	
301	DETAILS OF BRIDGE MOUNTED SIGN STRUCTURE (SHEET 3 OF 3)	BM-040-60-45	55746	
302	LAYOUT OF BRIDGE RAMP 4 OVER I-40 (SHEET 1 OF 3)	05324	55747	
303	LAYOUT OF BRIDGE RAMP 4 OVER I-40 (SHEET 2 OF 3)	05324	55748	
304	LAYOUT OF BRIDGE RAMP 4 OVER I-40 (SHEET 3 OF 3)	05324	55749	
305	DETAILS OF STAGE CONSTRUCTION (SHEET 1 OF 5)	05324	55750	
306	DETAILS OF STAGE CONSTRUCTION (SHEET 2 OF 5)	05324	55751	
307	DETAILS OF STAGE CONSTRUCTION (SHEET 3 OF 5)	05324	55752	
308	DETAILS OF STAGE CONSTRUCTION (SHEET 4 OF 5)	05324	55753	
309	DETAILS OF STAGE CONSTRUCTION (SHEET 5 OF 5)	05324	55754	
310	DETAILS OF ABUTMENTS RAMP 4 OVER I-40 (SHEET 1 OF 4)	05324	55755	
311	DETAILS OF ABUTMENTS RAMP 4 OVER I-40 (SHEET 2 OF 4)	05324	55756	
312	DETAILS OF ABUTMENTS RAMP 4 OVER I-40 (SHEET 3 OF 4)	05324	55757	
313	DETAILS OF ABUTMENTS RAMP 4 OVER I-40 (SHEET 4 OF 4)	05324	55758	
314	DETAILS OF PIERS RAMP 4 OVER I-40 (SHEET 1 OF 3)	05324	55759	
315	DETAILS OF PIERS RAMP 4 OVER I-40 (SHEET 2 OF 3)	05324	55760	
316	DETAILS OF PIERS RAMP 4 OVER I-40 (SHEET 3 OF 3)	05324	55761	
317	DETAILS OF 398'-7" CONTINUOUS COMPOSITE PLATE GIRDER UNIT (SHEET 1 OF 15)	05324	55762	
318	DETAILS OF 398'-7" CONTINUOUS COMPOSITE PLATE GIRDER UNIT (SHEET 2 OF 15)	05324	55763	
319	DETAILS OF 398'-7" CONTINUOUS COMPOSITE PLATE GIRDER UNIT (SHEET 3 OF 15)	05324	55764	
320	DETAILS OF 398'-7" CONTINUOUS COMPOSITE PLATE GIRDER UNIT (SHEET 4 OF 15)	05324	55765	
321	DETAILS OF 398'-7" CONTINUOUS COMPOSITE PLATE GIRDER UNIT (SHEET 5 OF 15)	05324	55766	
322	DETAILS OF 398'-7" CONTINUOUS COMPOSITE PLATE GIRDER UNIT (SHEET 6 OF 15)	05324	55767	
323	DETAILS OF 398'-7" CONTINUOUS COMPOSITE PLATE GIRDER UNIT (SHEET 7 OF 15)	05324	55768	
324	DETAILS OF 398'-7" CONTINUOUS COMPOSITE PLATE GIRDER UNIT (SHEET 8 OF 15)	05324	55769	
325	DETAILS OF 398'-7" CONTINUOUS COMPOSITE PLATE GIRDER UNIT (SHEET 9 OF 15)	05324	55770	
326	DETAILS OF 398'-7" CONTINUOUS COMPOSITE PLATE GIRDER UNIT (SHEET 10 OF 15)	05324	55771	
327	DETAILS OF 398'-7" CONTINUOUS COMPOSITE PLATE GIRDER UNIT (SHEET 11 OF 15)	05324	55772	
328	DETAILS OF 398'-7" CONTINUOUS COMPOSITE PLATE GIRDER UNIT (SHEET 12 OF 15)	05324	55773	
329	DETAILS OF 398'-7" CONTINUOUS COMPOSITE PLATE GIRDER UNIT (SHEET 13 OF 15)	05324	55774	
330	DETAILS OF 398'-7" CONTINUOUS COMPOSITE PLATE GIRDER UNIT (SHEET 14 OF 15)	05324	55775	
331	DETAILS OF 398'-7" CONTINUOUS COMPOSITE PLATE GIRDER UNIT (SHEET 15 OF 15)	05324	55776	
332	GENERAL NOTES FOR 398'-7" AND 354'-7" CONTINUOUS COMPOSITE PLATE GIRDER UNITS	05324	55777	
333	DETAILS OF 354'-7" CONTINUOUS COMPOSITE PLATE GIRDER UNIT (SHEET 1 OF 14)	05324	55778	
334	DETAILS OF 354'-7" CONTINUOUS COMPOSITE PLATE GIRDER UNIT (SHEET 2 OF 14)	05324	55779	
335	DETAILS OF 354'-7" CONTINUOUS COMPOSITE PLATE GIRDER UNIT (SHEET 3 OF 14)	05324	55780	
336	DETAILS OF 354'-7" CONTINUOUS COMPOSITE PLATE GIRDER UNIT (SHEET 4 OF 14)	05324	55781	
337	DETAILS OF 354'-7" CONTINUOUS COMPOSITE PLATE GIRDER UNIT (SHEET 5 OF 14)	05324	55782	
338	DETAILS OF 354'-7" CONTINUOUS COMPOSITE PLATE GIRDER UNIT (SHEET 6 OF 14)	05324	55783	
339	DETAILS OF 354'-7" CONTINUOUS COMPOSITE PLATE GIRDER UNIT (SHEET 7 OF 14)	05324	55784	
340	DETAILS OF 354'-7" CONTINUOUS COMPOSITE PLATE GIRDER UNIT (SHEET 8 OF 14)	05324	55785	
341	DETAILS OF 354'-7" CONTINUOUS COMPOSITE PLATE GIRDER UNIT (SHEET 9 OF 14)	05324	55786	
342	DETAILS OF 354'-7" CONTINUOUS COMPOSITE PLATE GIRDER UNIT (SHEET 10 OF 14)	05324	55787	
343	DETAILS OF 354'-7" CONTINUOUS COMPOSITE PLATE GIRDER UNIT (SHEET 11 OF 14)	05324	55788	
344	DETAILS OF 354'-7" CONTINUOUS COMPOSITE PLATE GIRDER UNIT (SHEET 12 OF 14)	05324	55789	
345	DETAILS OF 354'-7" CONTINUOUS COMPOSITE PLATE GIRDER UNIT (SHEET 13 OF 14)	05324	55790	
346	DETAILS OF 354'-7" CONTINUOUS COMPOSITE PLATE GIRDER UNIT (SHEET 14 OF 14)	05324	55791	
347	DETAILS OF STRIP SEAL JOINT (SHEET 1 OF 2)	05324	55792	
348	DETAILS OF STRIP SEAL JOINT (SHEET 2 OF 2)	05324	55793	
349	DETAILS OF ELASTOMERIC BEARINGS (SHEET 1 OF 2)	05324	55794	
350	DETAILS OF ELASTOMERIC BEARINGS (SHEET 2 OF 2)	05324	55795	
351	DETAILS OF BRIDGE MOUNTED SIGN STRUCTURE (SHEET 1 OF 3)	BM-040-60-47	55796	
352	DETAILS OF BRIDGE MOUNTED SIGN STRUCTURE (SHEET 2 OF 3)	BM-040-60-47	55797	
353	DETAILS OF BRIDGE MOUNTED SIGN STRUCTURE (SHEET 3 OF 3)	BM-040-60-47	55798	
354	DETAILS OF TYPE SPECIAL APPROACH SLABS (SHEET 1 OF 2)	05324	55799	
355	DETAILS OF TYPE SPECIAL APPROACH SLABS (SHEET 2 OF 2)	05324	55800	
356	DETAILS OF TYPE SPECIAL APPROACH GUTTERS (SHEET 1 OF 3)	05324	55801	
357	DETAILS OF TYPE SPECIAL APPROACH GUTTERS (SHEET 2 OF 3)	05324	55802	
358	DETAILS OF TYPE SPECIAL APPROACH GUTTERS (SHEET 3 OF 3)	05324	55803	
359	DETAILS FOR 60' TO 85' STEEL OVERHEAD SIGN STRUCTURES (SHEET 1 OF 5)	*	55804	
360	DETAILS FOR 60' TO 85' STEEL OVERHEAD SIGN STRUCTURES (SHEET 2 OF 5)	*	55805	
361	DETAILS FOR 60' TO 85' STEEL OVERHEAD SIGN STRUCTURES (SHEET 3 OF 5)	*	55806	
362	DETAILS FOR 60' TO 85' STEEL OVERHEAD SIGN STRUCTURES (SHEET 4 OF 5)	*	55807	
363	DETAILS FOR 60' TO 85' STEEL OVERHEAD SIGN STRUCTURES (SHEET 5 OF 5)	*	55807a	

INDEX OF SHEETS CONTINUED ON NEXT SHEET

STATE OF ARKANSAS
LICENSED PROFESSIONAL ENGINEER
No.13422
JOHN F. CANTABERY
7-18-14

* OH-40-60-01, OH-40-60-02, OH-40-60-17, OH-40-60-18, OH-40-60-41, OH-40-60-43, OH-40-60-44, OH-430-60-13, OH-430-60-35, OH-430-60-36, OH-430-60-38, OH-430-60-39

INDEX OF SHEETS

sadonaldson 7/18/2014 12:08:40 PM
WORKSPACE: AHTD
L:\2014\14017709 - I-40 at I-430 Interchange Modifications\Drawings\RCA0609_IDX_01.dgn
REVISED DATE:

DATE REVISED	DATE FILMED	DATE REVISED	DATE FILMED	FED.RD. DIST.NO.	STATE	FED.AID PROJ.NO.	SHEET NO.	TOTAL SHEETS
				6	ARK.			
				JOB NO.		CA0609	3	693

(2) INDEX OF SHEETS, GOV. SPECS., & GEN. NOTES

STATE OF ARKANSAS LICENSED PROFESSIONAL ENGINEER No. 13422 JOHN F. CANTABERY

8-18-14

INDEX OF SHEETS

SHEET NO.	TITLE	BRIDGE NO.	DRAWING NO.	DATE
364	DETAILS FOR 30' STEEL CANTILEVER SIGN STRUCTURE (SHEET 1 OF 5)	OC-430-60-37	55808	
365	DETAILS FOR 30' STEEL CANTILEVER SIGN STRUCTURE (SHEET 2 OF 5)	OC-430-60-37	55808a	
366	DETAILS FOR 30' STEEL CANTILEVER SIGN STRUCTURE (SHEET 3 OF 5)	OC-430-60-37	55808b	
367	DETAILS FOR 30' STEEL CANTILEVER SIGN STRUCTURE (SHEET 4 OF 5)	OC-430-60-37	55808c	
368	DETAILS FOR 30' STEEL CANTILEVER SIGN STRUCTURE (SHEET 5 OF 5)	OC-430-60-37	55808d	
369	STANDARD DETAILS FOR EMBANKMENT CONSTRUCTION AND BACKFILL AT BRIDGE ENDS		55000	2/27/2014
370	STANDARD DETAILS FOR CONCRETE RIPRAP		55002	2/27/2014
371	STANDARD DETAILS FOR PERMANENT STEEL BRIDGE DECK FORMS FOR STEEL & CONCRETE GIRDER SPANS		55005	2/27/2014
372	STANDARD DETAILS FOR TYPE D BRIDGE NAME PLATE		55010	2/27/2014
373	STANDARD DETAILS FOR STEEL H-PILES AND PILE ENCASEMENTS		55020	2/27/2014
374	STANDARD DETAILS FOR TYPE A APPROACH GUTTERS		55030A	2/27/2014
375	STANDARD DETAILS FOR TYPE 'AT' APPROACH GUTTERS (BRIDGES WITH 6" CURB WIDTH & TYPE A RAILING)		55036	2/27/2014
376	CONCRETE DITCH PAVING		CDP-1	11/17/2010
377	CONCRETE PAVEMENT DETAILS CONTINUOUSLY REINFORCED		CPCR-1	10/18/1996
378	DETAILS OF TERMINAL JOINTS FOR CONCRETE PAVEMENT CONTINUOUSLY REINFORCED		CPCR-3	10/18/1996
379	DETAILS OF ENTRANCE & EXIT RAMPS FOR CONCRETE PAVEMENT CONTINUOUSLY REINFORCED		CPCR-4	2/27/2014
380	DETAILS OF DRIVEWAYS AND ISLANDS		DR-1	2/27/2014
381	FLARED END SECTION		FES-1	10/18/1996
382	FLARED END SECTION		FES-2	10/18/1996
383	DETAILS OF DROP INLETS		FPC-9D	8/22/2002
384	DETAILS OF DROP INLETS AND SPILLWAY OUTLET		FPC-9N	7/2/1998
385	GUARD RAIL DETAILS (TYPE C) STREET/ROAD BARRICADE OR TEMPORARY INSTALLATION		GR-7	7/14/2010
386	GUARD RAIL DETAILS		GR-8	7/14/2010
387	GUARD RAIL DETAILS		GR-8A	7/14/2010
388	GUARD RAIL DETAILS		GR-9	4/17/2008
389	GUARD RAIL DETAILS		GR-9A	4/17/2008
390	GUARD RAIL DETAILS		GR-10	7/14/2010
391	GUARD RAIL DETAILS		GR-10A	7/14/2010
392	GUARD RAIL DETAILS		GRT-1	7/14/2010
393	MAILBOX DETAILS		MB-1	11/18/2004
394	CONCRETE PIPE CULVERT FILL HEIGHTS & BEDDING		PCC-1	2/27/2014
395	METAL PIPE CULVERT FILL HEIGHTS & BEDDING		PCM-1	2/27/2014
396	PAVEMENT MARKING DETAILS		PM-1	9/12/2013
397	PERMANENT PAVEMENT MARKING ON ACCESS CONTROLLED ROADWAYS		PM-2	9/12/2013
398	DETAILS OF PIPE UNDERDRAIN		PU-1	4/10/2003
399	REINFORCED CONCRETE BOX CULVERT DETAILS		RCB-1	7/26/2012
400	EXCAVATION PAY LIMITS, BACKFILL, & SOLID SODDING FOR BOX CULVERTS		RCB-2	11/20/2003
401	METHOD OF EXTENDING EXISTING R.C. BOX CULVERTS		RCB-3	10/12/1995
402	TABLES AND METHOD OF SUPERELEVATION FOR ONE-WAY TRAFFIC		SE-1	1/9/1987
403	TABLES AND METHOD OF SUPERELEVATION FOR TWO-WAY TRAFFIC		SE-2	10/18/1996
404	STANDARD HIGHWAY SIGNS AND SUPPORT ASSEMBLIES		SHS-1	9/12/2013
405	U-CHANNEL POST ASSEMBLIES		SHS-2	2/27/2014
406	DETAIL OF BREAKAWAY SIGN SUPPORTS FOR GUIDE SIGNS		SHS-3	9/12/2013
407	DETAIL OF BREAKAWAY SIGN SUPPORTS FOR STANDARD SIGNS		SHS-4	9/12/2013
408	DETAILS OF GUIDE SIGN PANELS		SHS-5	9/12/2013
409	DETAIL OF OMNI-DIRECTIONAL BREAKAWAY SIGN SUPPORTS		SHS-7	9/12/2013
410	TYPICAL DELINEATOR PLACEMENT ALONG THE INTERSTATE SYSTEM		SHS-8	9/12/2013
411	STANDARD TRAFFIC CONTROLS FOR HIGHWAY CONSTRUCTION		TC-1	12/15/2011
412	STANDARD TRAFFIC CONTROLS FOR HIGHWAY CONSTRUCTION		TC-2	9/12/2013
413	STANDARD TRAFFIC CONTROLS FOR HIGHWAY CONSTRUCTION		TC-3	10/15/2009
414	STANDARD TRAFFIC CONTROLS FOR HIGHWAY CONSTRUCTION-TEMPORARY PRECAST BARRIER		TC-4	2/27/2014
415	STANDARD TRAFFIC CONTROLS FOR HIGHWAY CONSTRUCTION-TEMPORARY PRECAST BARRIER		TC-5	10/15/2009
416	TEMPORARY EROSION CONTROL DEVICES		TEC-1	12/15/2011
417	TEMPORARY EROSION CONTROL DEVICES		TEC-2	6/2/1994
418	TEMPOPARY EROSION CONTROL DEVICES		TEC-3	11/3/1994
419	DETAILS OF STANDARD TURNOUT FOR ENTRANCE & EXIT RAMPS		TR-1	1/12/2000
420	DETAILS OF STANDARD TURNOUT FOR ENTRANCE & EXIT RAMPS (NON-REINFORCED)		TR-1A	8/22/2002
421	WIRE FENCE TYPE A AND B		WF-1	8/22/2002
422	WIRE FENCE WATER GAPS		WF-2	4/20/1979
423	DETAILS OF STANDARD BARREL SECTIONS FOR REINFORCED CONCRETE BOX CULVERTS		R-100X-X2	1/14/1963
424	DETAILS OF STANDARD WINGS FOR RENFORCED CONCRETE BOX CULVERTS		W-X30	7/15/1963
425	DETAILS OF STANDARD WINGS FOR RENFORCED CONCRETE BOX CULVERTS		W-X303-1	5/10/1966
426	DETAILS OF STANDARD BARREL SECTIONS FOR REINFORCED CONCRETE BOX CULVERTS		R-130X-0	2/24/1964
427	DETAILS OF STANDARD BARREL SECTIONS FOR REINFORCED CONCRETE BOX CULVERTS		R-130X-1	1/24/1964
428	DETAILS OF STANDARD BARREL SECTIONS FOR REINFORCED CONCRETE BOX CULVERTS		R-230X-01	2/26/1964
429-693	CROSS SECTIONS			

NOTE:
CROSS SECTIONS NOT NORMALLY INCLUDED IN PLANS SOLD TO PROSPECTIVE BIDDERS, BUT MAY BE HAD UPON REQUEST.

GOVERNING SPECIFICATIONS

ARKANSAS STATE HIGHWAY COMMISSION STANDARD SPECIFICATIONS FOR HIGHWAY CONSTRUCTION, EDITION OF 2014, AND THE FOLLOWING SPECIAL PROVISIONS AND SUPPLEMENTAL SPECIFICATIONS.

NUMBER	TITLE
ERRATA	ERRATA FOR THE BOOK OF STANDARD SPECIFICATIONS
FHWA-1273	REQUIRED CONTRACT PROVISIONS FEDERAL-AID CONSTRUCTION CONTRACTS
FHWA-1273	SUPPLEMENT - EQUAL EMPLOYMENT OPPORTUNITY - NOTICE TO CONTRACTORS
FHWA-1273	SUPPLEMENT - SPECIFIC EQUAL EMPLOYMENT OPPORTUNITY RESPONSIBILITIES (23 U.S.C. 140)
FHWA-1273	SUPPLEMENT - EQUAL EMPLOYMENT OPPORTUNITY - GOALS AND TIMETABLES
FHWA-1273	SUPPLEMENT - EQUAL EMPLOYMENT OPPORTUNITY - FEDERAL STANDARDS
FHWA-1273	SUPPLEMENT - TRAINING PROGRAM - JOB CA0609
FHWA-1273	SUPPLEMENT - POSTERS AND NOTICES REQUIRED FOR FEDERAL-AID PROJECTS
FHWA-1273	SUPPLEMENT - WAGE RATE DETERMINATION
108-1	LIQUIDATED DAMAGES
410-1	CONSTRUCTION REQUIREMENTS AND ACCEPTANCE OF ASPHALT CONCRETE PLANT MIX COURSES
620-1	MULCH COVER
JOB CA0609	AIRPORT CLEARANCE REQUIREMENTS
JOB CA0609	ANTENNA SUPPORT WITH CAMERA
JOB CA0609	ARCHITECTURAL FINISH
JOB CA0609	AUTOMATED WORK ZONE INFORMATION SYSTEM
JOB CA0609	BROADBAND INTERNET SERVICE FOR ASPHALT CONCRETE PLANT
JOB CA0609	BROADBAND INTERNET SERVICE FOR FIELD OFFICE
JOB CA0609	CALCIUM SULFONATE PAINT
JOB CA0609	CHANNEL POST SIGN SUPPORT
JOB CA0609	CLEANING AND PAINTING EXISTING STRUCTURAL STEEL
JOB CA0609	CONCRETE BARRIER WALL
JOB CA0609	CONCRETE DITCH PAVING
JOB CA0609	CONSTRUCTION IN SPECIAL FLOOD HAZARD AREAS
JOB CA0609	COORDINATION OF WORK
JOB CA0609	DELAY IN RIGHT OF WAY OCCUPANCY
JOB CA0609	DRILLED SHAFT FOUNDATIONS
JOB CA0609	ELECTRONIC SUBMISSION OF ASPHALT CONCRETE HOT MIX ACCEPTANCE TEST RESULTS
JOB CA0609	EMPLOYMENT REPORTING
JOB CA0609	EXCAVATION AND EMBANKMENT
JOB CA0609	EXPLORATORY HOLES
JOB CA0609	EXTENSION FOR PIPE CULVERTS
JOB CA0609	GOALS FOR DISADVANTAGED BUSINESS ENTERPRISE PARTICIPATION
JOB CA0609	HIGH PERFORMANCE PAVEMENT MARKING
JOB CA0609	MAINTENANCE OF TRAFFIC
JOB CA0609	MANDATORY USE OF INTERNET BIDDING
JOB CA0609	NESTING SITES OF MIGRATORY BIRDS
JOB CA0609	NONDESTRUCTIVE TESTING OF DRILLED SHAFTS
JOB CA0609	OMNI-DIRECTIONAL BREAKAWAY SIGN SUPPORT
JOB CA0609	OVERHEAD VARIABLE MESSAGE SIGN ASSEMBLY
JOB CA0609	PARTNERING REQUIREMENTS
JOB CA0609	PERCENT WITHIN LIMITS/PAVEMENT SMOOTHNESS
JOB CA0609	PLASTIC PIPE
JOB CA0609	PRECAST CONCRETE BARRIER
JOB CA0609	PROSECUTION AND PROGRESS
JOB CA0609	RAMMED AGGREGATE PIERS
JOB CA0609	REMOVAL AND DISPOSAL OF GUARDRAIL
JOB CA0609	REMOVAL AND DISPOSAL OF PLOWABLE PAVEMENT MARKER
JOB CA0609	REMOVAL AND DISPOSAL OF WIRE ROPE SAFETY FENCE (WRSF)
JOB CA0609	RETAINING WALLS
JOB CA0609	SECTION 404 NATIONWIDE 14 PERMIT REQUIREMENTS
JOB CA0609	SEQUENCE OF CONSTRUCTION
JOB CA0609	SHORING
JOB CA0609	SIGN PANEL MATERIALS AND FABRICATION
JOB CA0609	SITE USE (A+C METHOD)
JOB CA0609	SOIL STABILIZATION
JOB CA0609	SPECIAL SAFETY REQUIREMENTS FOR BRIDGES
JOB CA0609	SPECIAL SAFETY REQUIREMENTS FOR OVERHEAD SIGNS
JOB CA0609	SPLICING REINFORCING STEEL
JOB CA0609	STEEL SIGN STRUCTURES
JOB CA0609	STORM WATER POLLUTION PREVENTION PLAN
JOB CA0609	SUBMISSION OF CONTRACTOR MATERIALS TEST RESULTS
JOB CA0609	TEMPORARY PORTABLE RUMBLE STRIPS
JOB CA0609	TEMPORARY RETAINING WALLS
JOB CA0609	TEXTURED COATING FINISH
JOB CA0609	TRAFFIC CONTROL DEVICES IN CONSTRUCTION ZONES
JOB CA0609	UTILITY ADJUSTMENTS
JOB CA0609	VALUE ENGINEERING
JOB CA0609	WARM MIX ASPHALT
JOB CA0609	WIRE ROPE SAFETY FENCE (WRSF) SPECIFICATIONS

GENERAL NOTES:

1. GRADE LINE DENOTES FINISHED GRADE WHERE SHOWN ON PLANS.
2. ALL PIPE LINES, POWER, TELEPHONE, AND TELEGRAPH LINES TO BE MOVED OR LOWERED BY THE RESPECTIVE OWNERS AS PER AGREEMENT WITH SUCH OWNERS.
3. ANY EQUIPMENT OR APPURTENANCE THAT INTERFERES WITH THE PROPOSED CONSTRUCTION AND WHICH MAY BE THE PROPERTY OF UTILITY SERVICE ORGANIZATIONS SHALL BE MOVED BY THE OWNERS UNLESS OTHERWISE PROVIDED.
4. THE CONTRACTOR SHALL BE RESPONSIBLE FOR MAINTAINING U.S. MAILBOXES WITHIN THE PROJECT LIMITS IN SUCH A MANNER THAT THE PUBLIC MAY RECEIVE CONTINUED MAIL SERVICE. PAYMENT WILL BE CONSIDERED INCLUDED IN THE PRICE BID FOR THE VARIOUS BID ITEMS.
5. ALL LAND MONUMENTS LOCATED WITHIN THE CONSTRUCTION AREA SHALL BE PROTECTED IN ACCORDANCE WITH SECTION 107.12 OF THE STANDARD SPECIFICATIONS.
6. ALL TREES THAT DO NOT DIRECTLY INTERFERE WITH THE PROPOSED CONSTRUCTION SHALL BE SPARED AS DIRECTED BY THE ENGINEER. CARE AND DISCRETION SHALL BE USED TO INSURE THAT ALL TREES NOT TO BE REMOVED SHALL BE HARMED AS LITTLE AS POSSIBLE DURING THE CONSTRUCTION OPERATIONS.
7. THE EXISTING ASPHALT PAVEMENT TO BE REMOVED FROM THE REMAINING PAVEMENT SHALL BE SEPARATED BY SAWING ALONG A NEAT LINE. AFTER SAWING, THE PAVEMENT TO BE REMOVED SHALL BE CAREFULLY REMOVED IN A MANNER THAT WILL NOT DAMAGE THE PAVEMENT THAT IS TO REMAIN. ANY DAMAGE OF THE ASPHALT PAVEMENT THAT IS TO REMAIN IN PLACE SHALL BE REPAIRED AT THE CONTRACTOR'S EXPENSE.
8. ALL FLEXIBLE BASE AND ASPHALTIC PAVEMENT REMOVED SHALL BE PAID FOR UNDER PAY ITEM 210 - EXCAVATION AND EMBANKMENT, UNLESS OTHERWISE NOTED.

INDEX OF SHEETS, GOVERNING SPECIFICATIONS, & GENERAL NOTES

JFCantabery 8/18/2014 9:07:36 AM
WORKSPACE: AHTD
\\garverinc\lltprojects\2011\11017709 - I-40 at I-430 Interchange Modifications\Drawings\RCA0609_IDX_01.dgn
REVISED DATE:

DATE REVISED	DATE FILMED	DATE REVISED	DATE FILMED	FED.RD. DIST.NO.	STATE	FED.AID PROJ.NO.	SHEET NO.	TOTAL SHEETS
				6	ARK.			
				JOB NO.		CA0609	4	693

(2) TYPICAL SECTIONS OF IMPROVEMENT

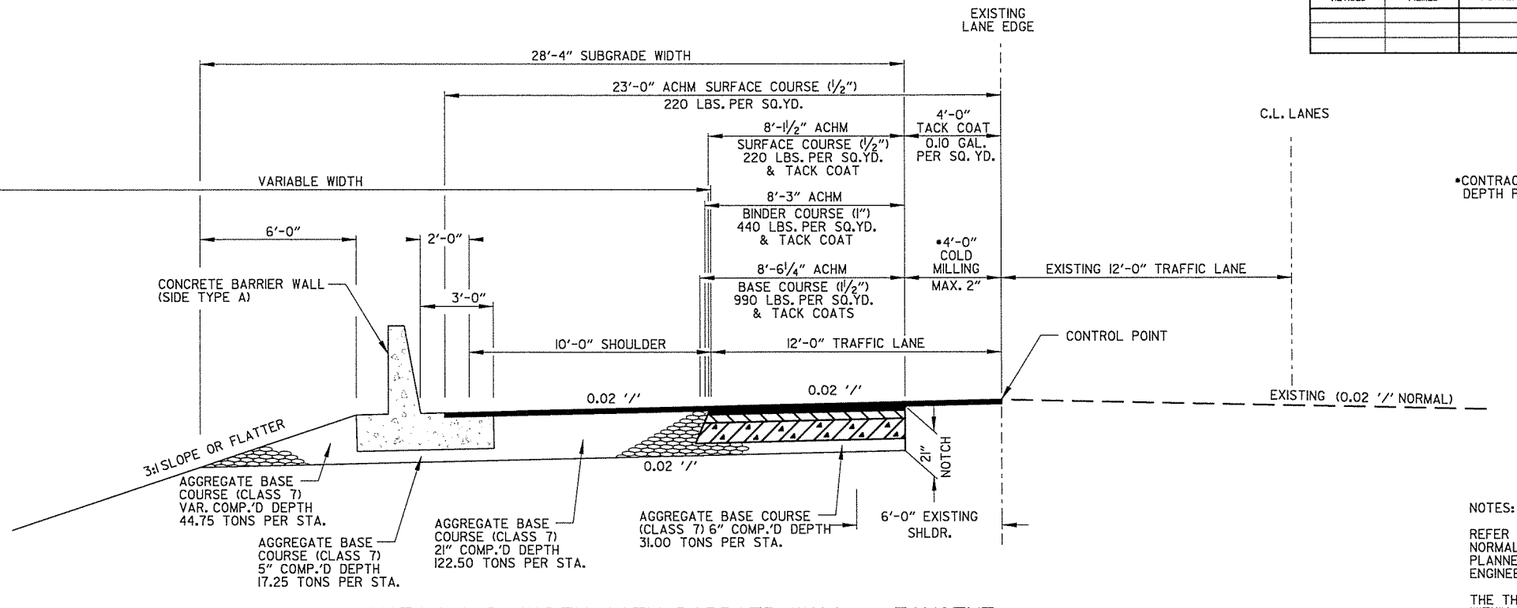

•CONTRACTOR SHALL VERIFY FULL DEPTH PAVEMENT WIDTH

STATE OF ARKANSAS
REGISTERED PROFESSIONAL ENGINEER
No. 11427
KEVIN G. TOBLESEY
7/17/14

I-40 NOTCH AND WIDEN WITH BARRIER WALL - TANGENT

(SHOWN IN DIRECTION OF TRAVEL)
I-40 LT. LANES STA. 8043+25.06 TO STA. 8051+31.00
I-40 RT. LANES STA. 8043+94.63 TO STA. 8050+00.00

NOTES:

REFER TO CROSS SECTIONS FOR DEVIATION FROM THE NORMAL SLOPES. NO CHANGES SHALL BE MADE FROM THE PLANNED SLOPES WITHOUT THE APPROVAL OF THE ENGINEER.

THE THICKNESS OF AGGREGATE BASE COURSE SHALL BE WITHIN PLUS OR MINUS ONE INCH OF THE PLAN THICKNESS SHOWN. THE CONTRACTOR WILL CORRECT ANY DEFICIENT THICKNESS THAT DOES NOT MEET TOLERANCE INDICATED. PAYMENT WILL NOT BE MADE FOR MATERIAL PLACED IN EXCESS OF THE TOLERANCE INDICATED.

THE FINAL 2" OF SURFACE COURSE IS TO BE PLACED AFTER ALL OTHER COURSES HAVE BEEN LAID. LONGITUDINAL JOINTS SHALL BE AT THE LANE LINES.

WITH THE APPROVAL OF THE ENGINEER, THE CONTRACTOR WILL BE ALLOWED TO SUBSTITUTE, AT NO ADDITIONAL COST TO THE DEPARTMENT, THE FIRST LIFT OF ACHM SURFACE COURSE (½") IN LIEU OF AGGREGATE BASE COURSE ON THE SHOULDERS.

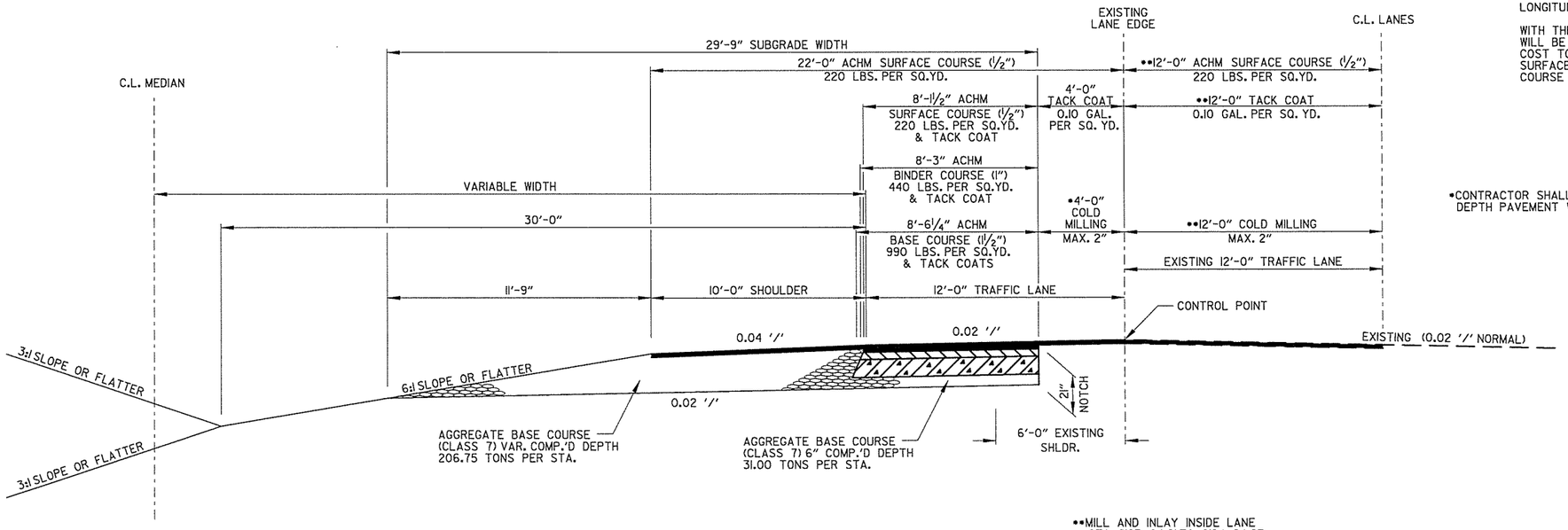

•CONTRACTOR SHALL VERIFY FULL DEPTH PAVEMENT WIDTH

••MILL AND INLAY INSIDE LANE STA. 8123+64.21 TO 8124+84.93

I-40 NOTCH AND WIDEN

(SHOWN IN DIRECTION OF TRAVEL)
I-40 LT. LANES STA. 7963+00.00 TO STA. 7990+65.23
I-40 LT. LANES STA. 8008+66.65 TO STA. 8013+90.68
I-40 LT. LANES STA. 8051+91.00 TO STA. 8074+25.91
**I-40 LT. LANES STA. 8123+64.21 TO STA. 8155+14.06
I-40 LT. LANES STA. 8169+23.60 TO STA. 8173+60.00
I-40 RT. LANES STA. 7963+00.00 TO STA. 8015+84.70
I-40 RT. LANES STA. 8050+00.00 TO STA. 8073+24.80
I-40 RT. LANES STA. 8114+57.09 TO STA. 8173+76.23

TYPICAL SECTIONS OF IMPROVEMENT

7/16/2014 1:22:46 PM ...\3-TypicalSections of Improvement-pavementdesign.dgn
D:\cadd files\777 roadway files\drawings\3-TypicalSections of Improvement-pavementdesign.dgn cadd files\700 cadd cop ca0603\650ghtd

...\3-Typical Sections of Improvement-pavement-design.dgn 7/16/2014 1:22:46 PM c:\603\700 cadd files\777 roadway files\drawings\3-Typical Sections of Improvement-pavement-design.dgn

DATE REVISED	DATE FILMED	DATE REVISED	DATE FILMED	FED.RD. DIST.NO.	STATE	FED.AID PROJ.NO.	SHEET NO.	TOTAL SHEETS
				6	ARK.			
				JOB NO.		CA0609	5	693

(2) TYPICAL SECTIONS OF IMPROVEMENT

STATE OF ARKANSAS REGISTERED PROFESSIONAL ENGINEER No. 11427 KEVIN G. TOBLESKY 7/17/14

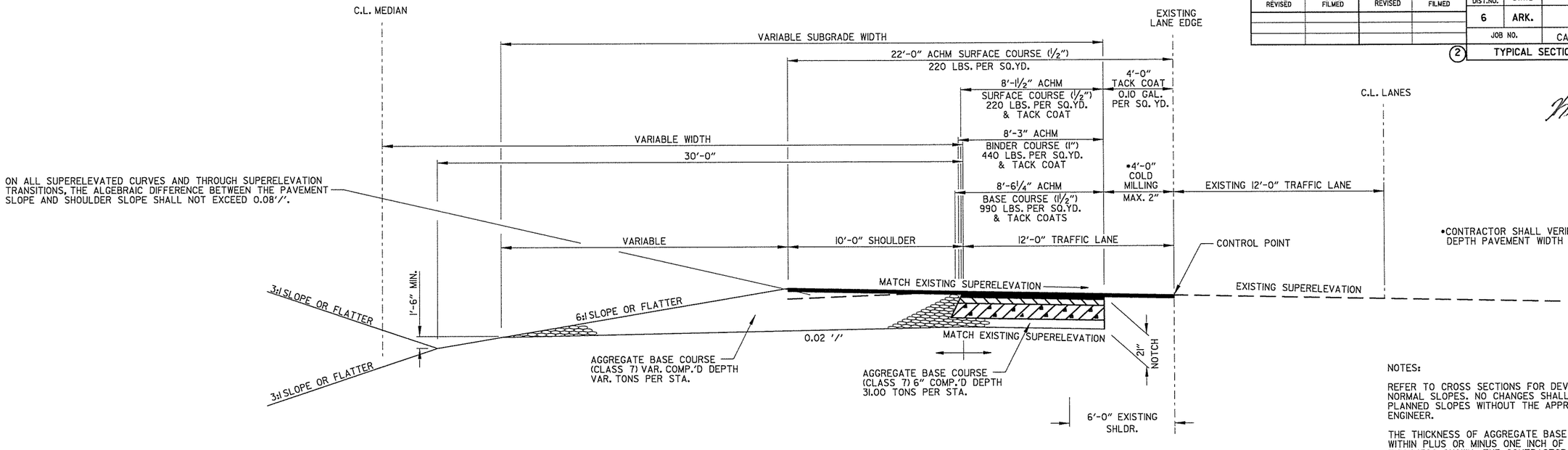

I-40 NOTCH AND WIDEN - SUPERELEVATED CURVE TO RIGHT

(SHOWN IN DIRECTION OF TRAVEL)
I-40 LT. LANES STA. 8013+90.68 TO STA. 8016+00.00
I-40 LT. LANES STA. 8155+14.06 TO STA. 8169+23.60
I-40 RT. LANES STA. 8073+24.80 TO STA. 8091+15.65

NOTES:

REFER TO CROSS SECTIONS FOR DEVIATION FROM THE NORMAL SLOPES. NO CHANGES SHALL BE MADE FROM THE PLANNED SLOPES WITHOUT THE APPROVAL OF THE ENGINEER.

THE THICKNESS OF AGGREGATE BASE COURSE SHALL BE WITHIN PLUS OR MINUS ONE INCH OF THE PLAN THICKNESS SHOWN. THE CONTRACTOR WILL CORRECT ANY DEFICIENT THICKNESS THAT DOES NOT MEET TOLERANCE INDICATED. PAYMENT WILL NOT BE MADE FOR MATERIAL PLACED IN EXCESS OF THE TOLERANCE INDICATED.

THE FINAL 2" OF SURFACE COURSE IS TO BE PLACED AFTER ALL OTHER COURSES HAVE BEEN LAID. LONGITUDINAL JOINTS SHALL BE AT THE LANE LINES.

WITH THE APPROVAL OF THE ENGINEER, THE CONTRACTOR WILL BE ALLOWED TO SUBSTITUTE, AT NO ADDITIONAL COST TO THE DEPARTMENT, THE FIRST LIFT OF ACHM SURFACE COURSE (½") IN LIEU OF AGGREGATE BASE COURSE ON THE SHOULDERS.

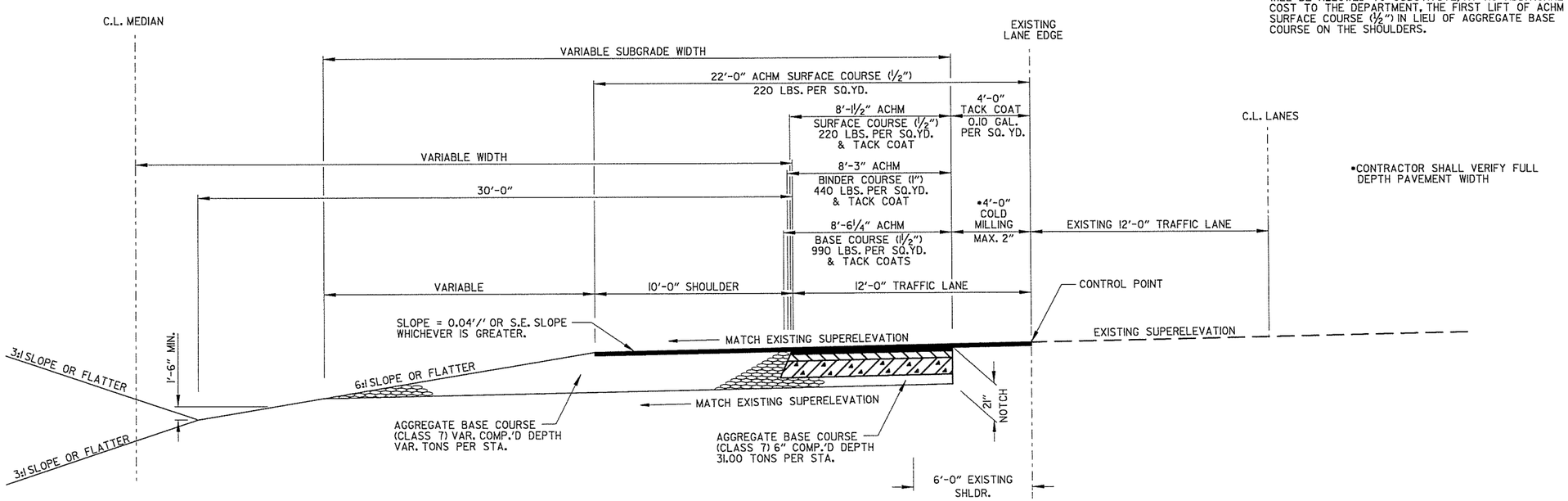

I-40 NOTCH & WIDEN - SUPERELEVATED CURVE TO LEFT

(SHOWN IN DIRECTION OF TRAVEL)
I-40 LT. LANES STA. 7990+65.23 TO STA. 8008+66.65
I-40 LT. LANES STA. 8074+25.91 TO STA. 8099+42.83
I-40 RT. LANES STA. 8015+84.70 TO STA. 8016+00.00

TYPICAL SECTIONS OF IMPROVEMENT

DATE REVISED	DATE FILMED	DATE REVISED	DATE FILMED	FED.RD. DIST.NO.	STATE	FED.AID PROJ.NO.	SHEET NO.	TOTAL SHEETS
				6	ARK.			
				JOB NO.		CA0609	6	693

(2) TYPICAL SECTIONS OF IMPROVEMENT

STATE OF ARKANSAS REGISTERED PROFESSIONAL ENGINEER No. 11427 KEVIN G. TOBLESKY 7/16/14

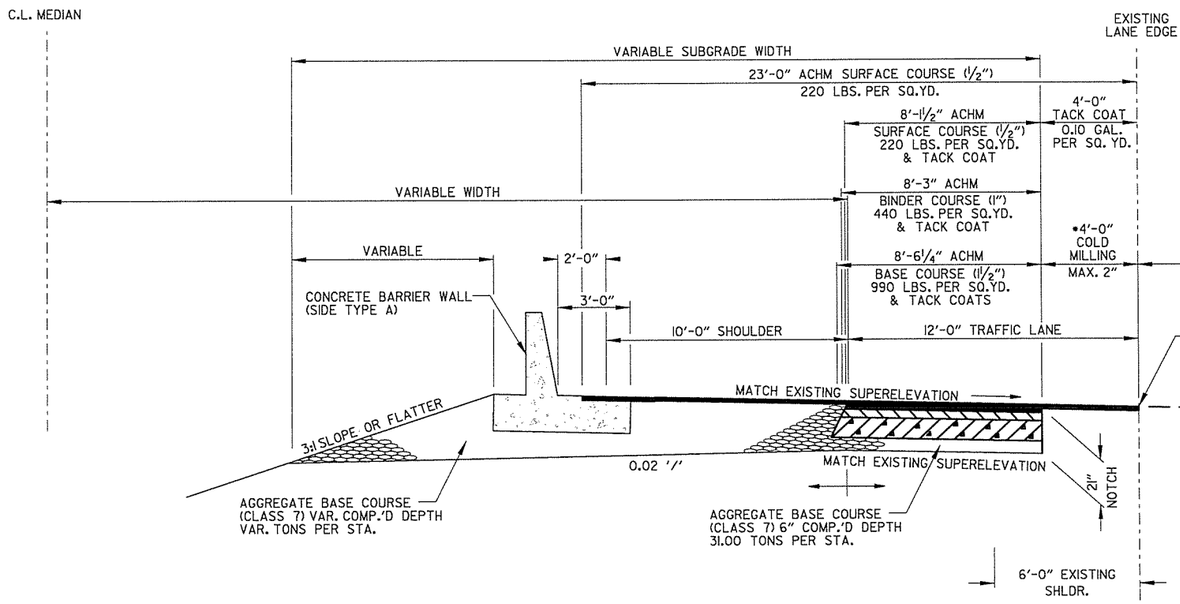

*CONTRACTOR SHALL VERIFY FULL DEPTH PAVEMENT WIDTH

I-40 NOTCH AND WIDEN WITH BARRIER WALL - SUPERELEVATED CURVE TO RIGHT

(SHOWN IN DIRECTION OF TRAVEL)
I-40 LT. LANES STA. 8016+00.00 TO STA. 8025+77.75

NOTES:

REFER TO CROSS SECTIONS FOR DEVIATION FROM THE NORMAL SLOPES. NO CHANGES SHALL BE MADE FROM THE PLANNED SLOPES WITHOUT THE APPROVAL OF THE ENGINEER.

THE THICKNESS OF AGGREGATE BASE COURSE SHALL BE WITHIN PLUS OR MINUS ONE INCH OF THE PLAN THICKNESS SHOWN. THE CONTRACTOR WILL CORRECT ANY DEFICIENT THICKNESS THAT DOES NOT MEET TOLERANCE INDICATED. PAYMENT WILL NOT BE MADE FOR MATERIAL PLACED IN EXCESS OF THE TOLERANCE INDICATED.

THE FINAL 2" OF SURFACE COURSE IS TO BE PLACED AFTER ALL OTHER COURSES HAVE BEEN LAID. LONGITUDINAL JOINTS SHALL BE AT THE LANE LINES.

WITH THE APPROVAL OF THE ENGINEER, THE CONTRACTOR WILL BE ALLOWED TO SUBSTITUTE, AT NO ADDITIONAL COST TO THE DEPARTMENT, THE FIRST LIFT OF ACHM SURFACE COURSE (1/2") IN LIEU OF AGGREGATE BASE COURSE ON THE SHOULDERS.

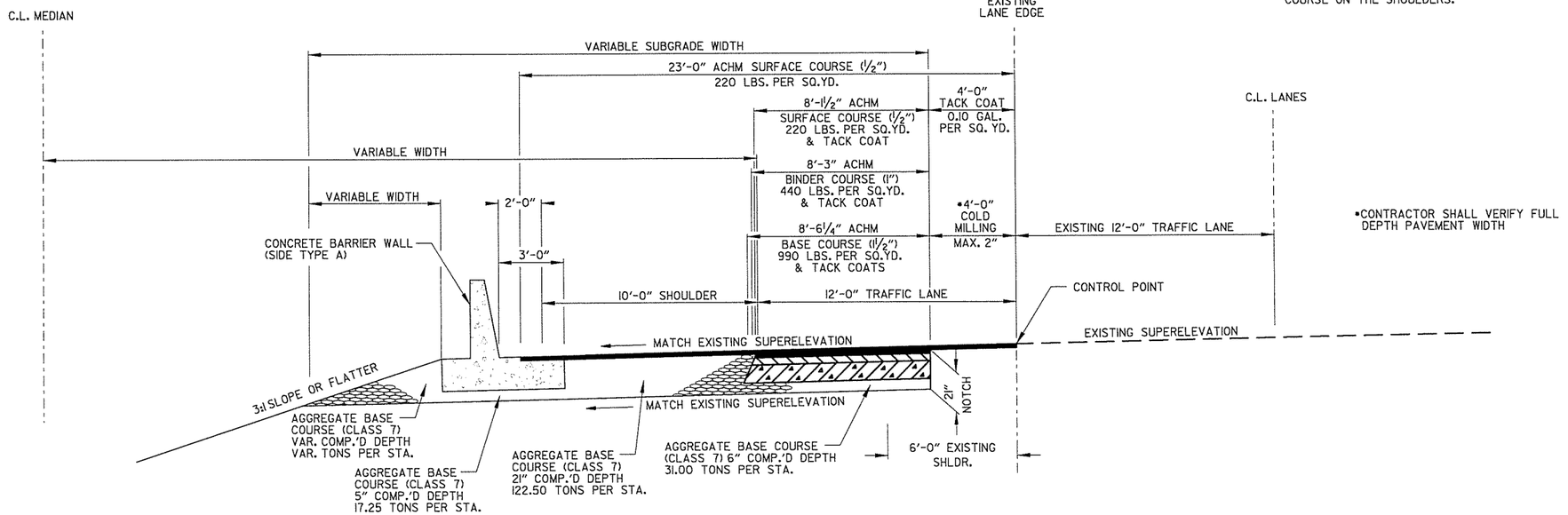

*CONTRACTOR SHALL VERIFY FULL DEPTH PAVEMENT WIDTH

I-40 NOTCH & WIDEN WITH BARRIER WALL - SUPERELEVATED CURVE TO LEFT

(SHOWN IN DIRECTION OF TRAVEL)
I-40 RT. LANES STA. 8016+00.00 TO STA. 8025+55.55

TYPICAL SECTIONS OF IMPROVEMENT

7/16/2014 1:22:46 PM ...\3-Typical Sections of Improvement-pavement design.dgn ca0603\700 cadd files\777 roadway files\drawings\3-Typical Sections of Improvement-pavement design.dgn

DATE REVISED	DATE FILMED	DATE REVISED	DATE FILMED	FED.RD. DIST.NO.	STATE	FED.AID PROJ.NO.	SHEET NO.	TOTAL SHEETS
				6	ARK.			
				JOB NO.		CA0609	7	693

(2) TYPICAL SECTIONS OF IMPROVEMENT

EXISTING BRIDGE - L.M.L.
STA. 8106+05.25 TO STA. 8111+01.43

EXISTING BRIDGE - R.M.L.
STA. 8102+22.90 TO STA. 8107+19.08

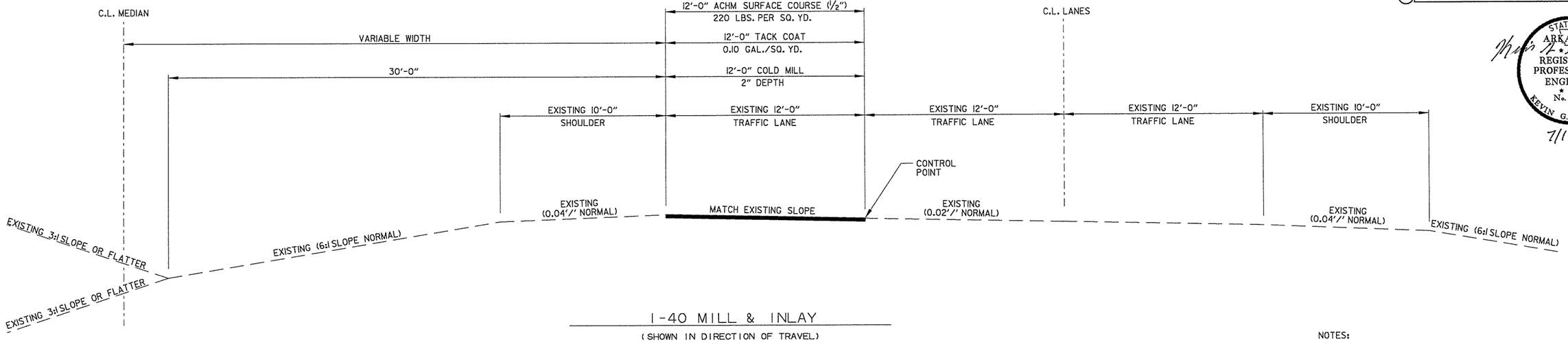

I-40 MILL & INLAY

(SHOWN IN DIRECTION OF TRAVEL)
I-40 LT. LANES STA. 8102+63.09 TO STA. 8106+05.25
I-40 LT. LANES STA. 8111+01.43 TO STA. 8114+96.78
I-40 LT. LANES STA. 8178+85.81 TO STA. 8180+67.99
I-40 RT. LANES STA. 8098+73.40 TO STA. 8102+22.90
I-40 RT. LANES STA. 8107+19.08 TO STA. 8111+38.45
I-40 RT. LANES STA. 8176+39.51 TO STA. 8179+35.42

NOTES:

REFER TO CROSS SECTIONS FOR DEVIATION FROM THE NORMAL SLOPES. NO CHANGES SHALL BE MADE FROM THE PLANNED SLOPES WITHOUT THE APPROVAL OF THE ENGINEER.

THE THICKNESS OF AGGREGATE BASE COURSE SHALL BE WITHIN PLUS OR MINUS ONE INCH OF THE PLAN THICKNESS SHOWN. THE CONTRACTOR WILL CORRECT ANY DEFICIENT THICKNESS THAT DOES NOT MEET TOLERANCE INDICATED. PAYMENT WILL NOT BE MADE FOR MATERIAL PLACED IN EXCESS OF THE TOLERANCE INDICATED.

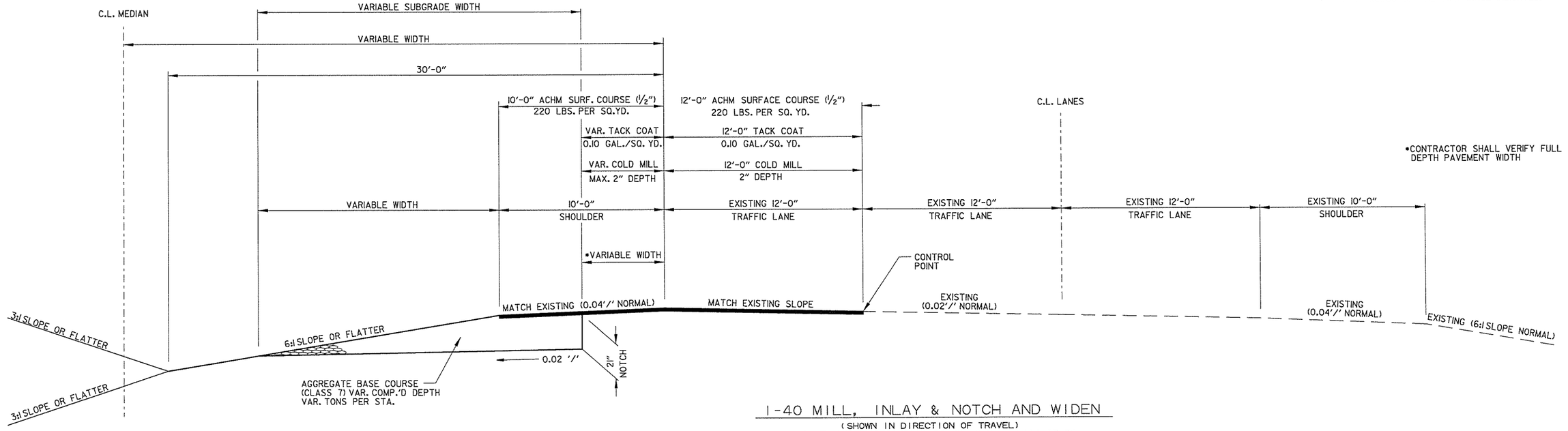

I-40 MILL, INLAY & NOTCH AND WIDEN

(SHOWN IN DIRECTION OF TRAVEL)
I-40 LT. LANES STA. 8114+96.78 TO STA. 8116+95.56
I-40 LT. LANES STA. 8176+52.87 TO STA. 8178+85.81
I-40 RT. LANES STA. 8111+38.45 TO STA. 8113+26.24
I-40 RT. LANES STA. 8175+36.52 TO STA. 8176+39.51

STATE OF ARKANSAS
REGISTERED PROFESSIONAL ENGINEER
No. 11427
KEVIN G. TOBLESKY
7/17/14

TYPICAL SECTIONS OF IMPROVEMENT

7/16/2014 1:22:47 PM ...\3-TypicalSections of Improvement-pavementdesign.dgn
...\700 cadd files\777 roadway files\drawings\3-TypicalSections of Improvement-pavementdesign.dgn

DATE REVISED	DATE FILMED	DATE REVISED	DATE FILMED	FED.RD. DIST.NO.	STATE	FED.AID PROJ.NO.	SHEET NO.	TOTAL SHEETS
				6	ARK.			
				JOB NO.		CA0609	8	693

(2) TYPICAL SECTIONS OF IMPROVEMENT

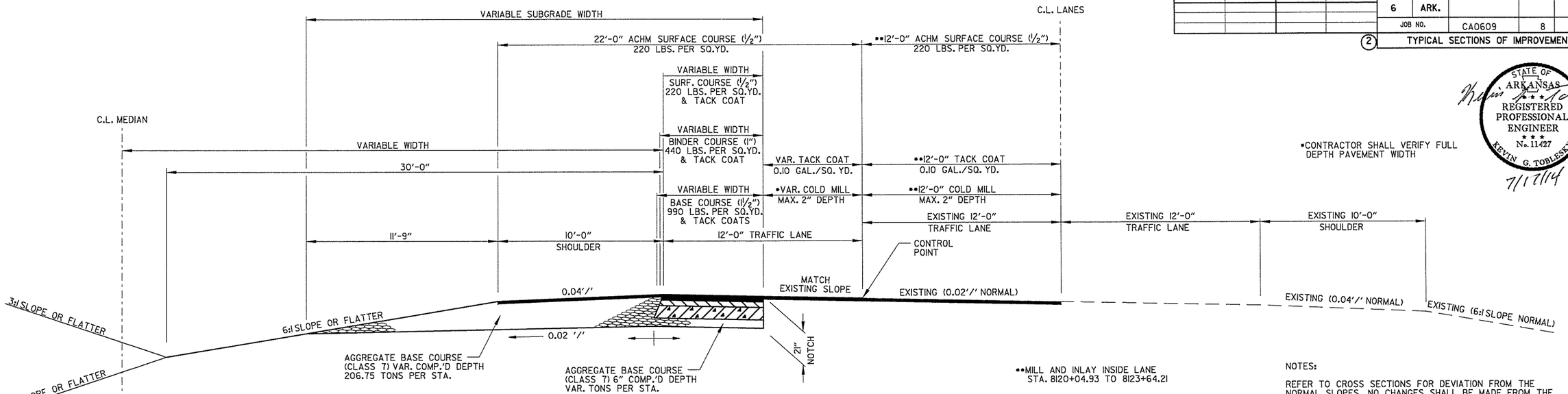

•CONTRACTOR SHALL VERIFY FULL DEPTH PAVEMENT WIDTH

**MILL AND INLAY INSIDE LANE
STA. 8120+04.93 TO 8123+64.21

I-40 MILL, INLAY & NOTCH AND WIDEN

(SHOWN IN DIRECTION OF TRAVEL)
**I-40 LT. LANES STA. 8116+95.56 TO STA. 8123+64.21
I-40 LT. LANES STA. 8173+60.00 TO STA. 8176+52.87
I-40 RT. LANES STA. 8113+26.24 TO STA. 8114+57.09
I-40 RT. LANES STA. 8173+76.23 TO STA. 8175+36.52

NOTES:

REFER TO CROSS SECTIONS FOR DEVIATION FROM THE NORMAL SLOPES. NO CHANGES SHALL BE MADE FROM THE PLANNED SLOPES WITHOUT THE APPROVAL OF THE ENGINEER.

THE THICKNESS OF AGGREGATE BASE COURSE SHALL BE WITHIN PLUS OR MINUS ONE INCH OF THE PLAN THICKNESS SHOWN. THE CONTRACTOR WILL CORRECT ANY DEFICIENT THICKNESS THAT DOES NOT MEET TOLERANCE INDICATED. PAYMENT WILL NOT BE MADE FOR MATERIAL PLACED IN EXCESS OF THE TOLERANCE INDICATED.

THE FINAL 2" OF SURFACE COURSE IS TO BE PLACED AFTER ALL OTHER COURSES HAVE BEEN LAID. LONGITUDINAL JOINTS SHALL BE AT THE LANE LINES.

WITH THE APPROVAL OF THE ENGINEER, THE CONTRACTOR WILL BE ALLOWED TO SUBSTITUTE, AT NO ADDITIONAL COST TO THE DEPARTMENT, THE FIRST LIFT OF ACHM SURFACE COURSE (½") IN LIEU OF AGGREGATE BASE COURSE ON THE SHOULDERS.

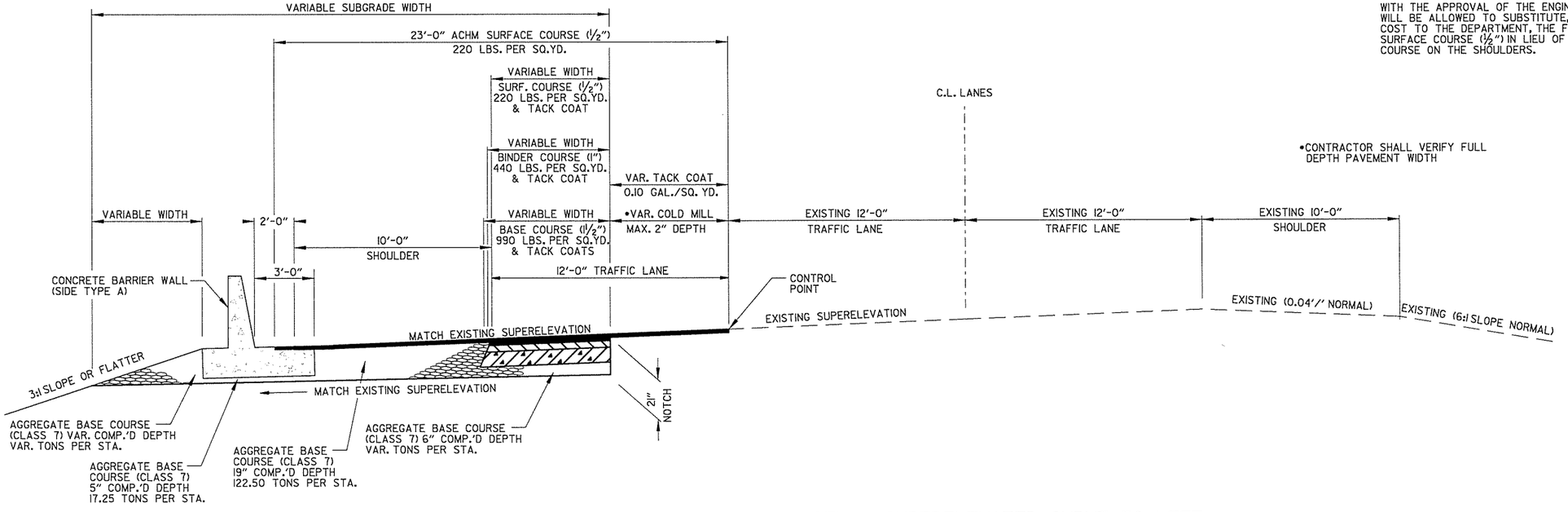

•CONTRACTOR SHALL VERIFY FULL DEPTH PAVEMENT WIDTH

I-40 MILL, INLAY, & NOTCH AND WIDEN - SUPERELEVATED CURVE TO LEFT

(SHOWN IN DIRECTION OF TRAVEL)
I-40 RT. LANES STA. 8027+55.55 TO STA. 8029+65.18

STATE OF ARKANSAS
REGISTERED PROFESSIONAL ENGINEER
No. 11427
KEVIN G. TOBLESSY
7/17/14

TYPICAL SECTIONS OF IMPROVEMENT

7/16/2014 1:22:47 PM ...\3-Typical Sections of Improvement-pat:\hatch\de\sf02560ghtd cap ca0603\700 cadd files\777 roadway files\drawings\3-Typical Sections of Improvement-povementdesign.dgn

DATE REVISED	DATE FILMED	DATE REVISED	DATE FILMED	FED.RD. DIST.NO.	STATE	FED.AID PROJ.NO.	SHEET NO.	TOTAL SHEETS
				6	ARK.			
				JOB NO.		CA0609	9	693

(2) TYPICAL SECTIONS OF IMPROVEMENT

EXISTING BRIDGE - R.M.L.
STA. 8033+47.55 TO STA. 8035+70.55

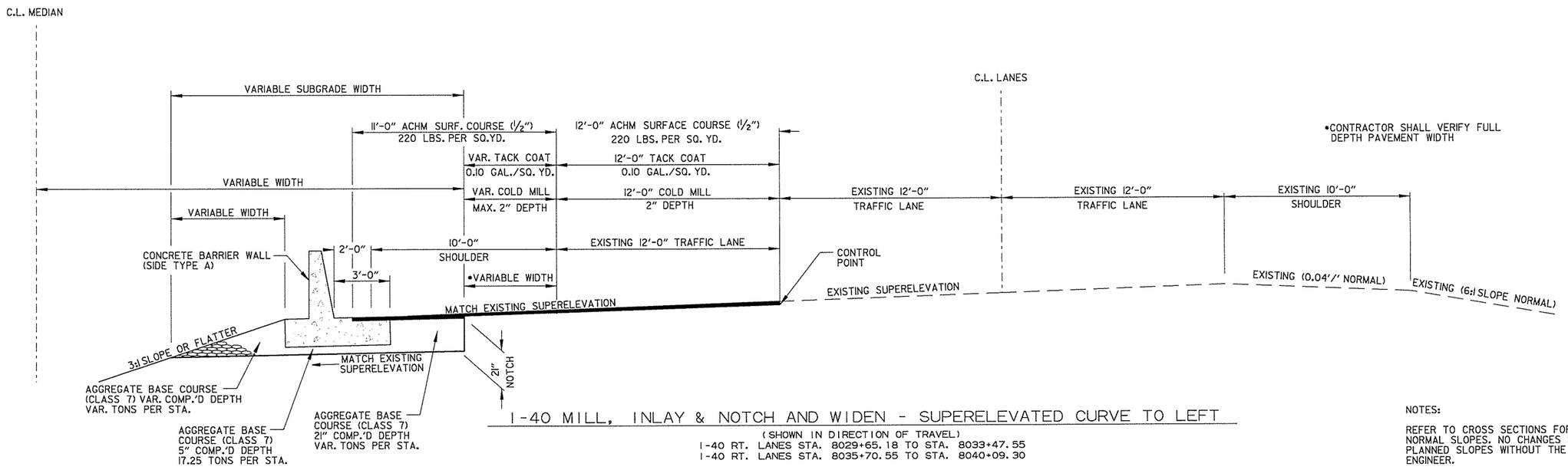

I-40 MILL, INLAY & NOTCH AND WIDEN - SUPERELEVATED CURVE TO LEFT

(SHOWN IN DIRECTION OF TRAVEL)
I-40 RT. LANES STA. 8029+65.18 TO STA. 8033+47.55
I-40 RT. LANES STA. 8035+70.55 TO STA. 8040+09.30

NOTES:

REFER TO CROSS SECTIONS FOR DEVIATION FROM THE NORMAL SLOPES. NO CHANGES SHALL BE MADE FROM THE PLANNED SLOPES WITHOUT THE APPROVAL OF THE ENGINEER.

THE THICKNESS OF AGGREGATE BASE COURSE SHALL BE WITHIN PLUS OR MINUS ONE INCH OF THE PLAN THICKNESS SHOWN. THE CONTRACTOR WILL CORRECT ANY DEFICIENT THICKNESS THAT DOES NOT MEET TOLERANCE INDICATED. PAYMENT WILL NOT BE MADE FOR MATERIAL PLACED IN EXCESS OF THE TOLERANCE INDICATED.

STATE OF ARKANSAS
REGISTERED PROFESSIONAL ENGINEER
No. 11427
KEVIN G. TOBLESKY
7/17/14

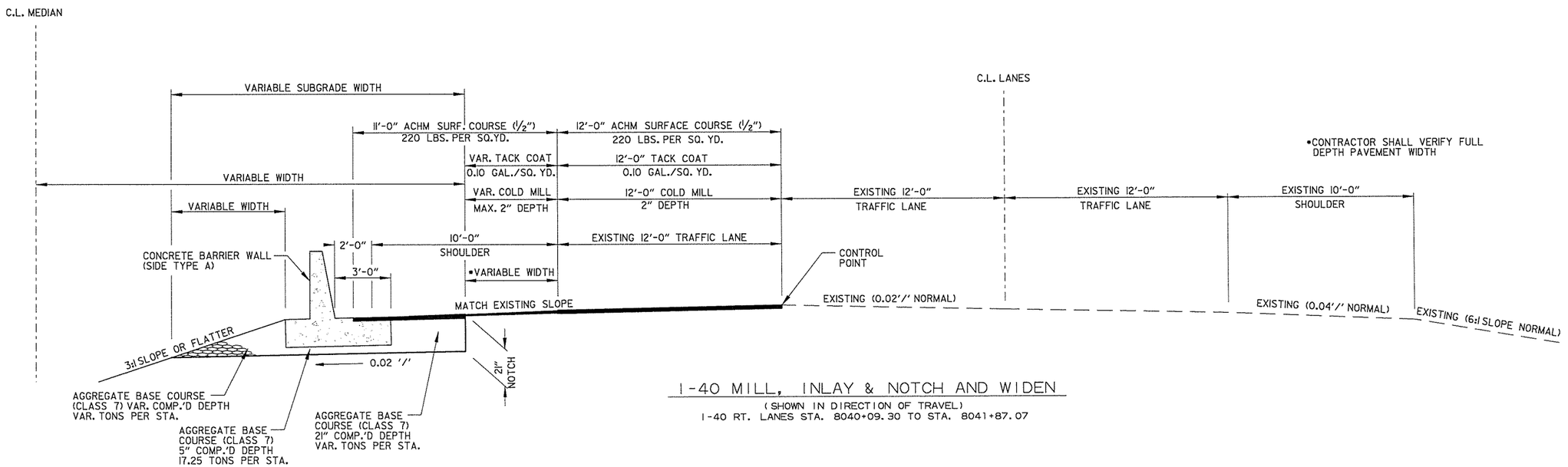

I-40 MILL, INLAY & NOTCH AND WIDEN

(SHOWN IN DIRECTION OF TRAVEL)
I-40 RT. LANES STA. 8040+09.30 TO STA. 8041+87.07

TYPICAL SECTIONS OF IMPROVEMENT

7/16/2014 1:22:47 PM ...\3-Typical Sections of Improvement-pavementdesign.dgn
...\603\700 cadd files\777 roadway files\drawings\3-TypicalSections of Improvement-pavementdesign.dgn

DATE REVISED	DATE FILMED	DATE REVISED	DATE FILMED	FED.RD. DIST.NO.	STATE	FED.AID PROJ.NO.	SHEET NO.	TOTAL SHEETS
				6	ARK.			
				JOB NO.		CA0609	10	693

(2) TYPICAL SECTIONS OF IMPROVEMENT

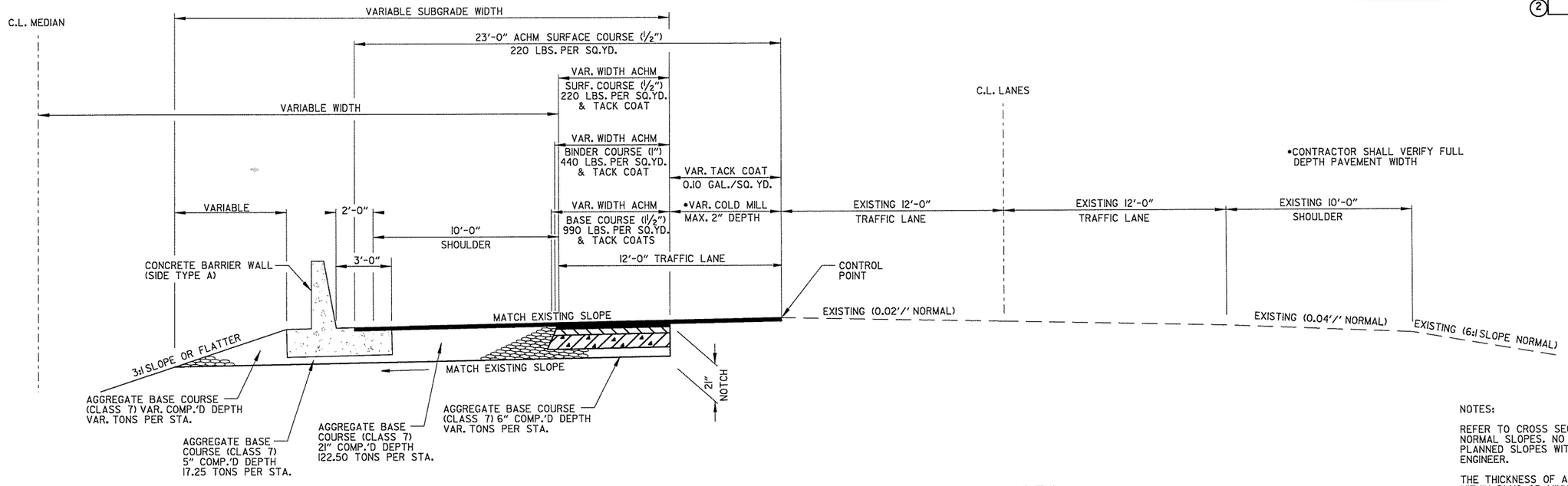

I-40 MILL, INLAY & NOTCH AND WIDEN

(SHOWN IN DIRECTION OF TRAVEL)
I-40 RT. LANES STA. 8041+87.07 TO STA. 8043+94.63

NOTES:

REFER TO CROSS SECTIONS FOR DEVIATION FROM THE NORMAL SLOPES. NO CHANGES SHALL BE MADE FROM THE PLANNED SLOPES WITHOUT THE APPROVAL OF THE ENGINEER.

THE THICKNESS OF AGGREGATE BASE COURSE SHALL BE WITHIN PLUS OR MINUS ONE INCH OF THE PLAN THICKNESS SHOWN. THE CONTRACTOR WILL CORRECT ANY DEFICIENT THICKNESS THAT DOES NOT MEET TOLERANCE INDICATED. PAYMENT WILL NOT BE MADE FOR MATERIAL PLACED IN EXCESS OF THE TOLERANCE INDICATED.

THE FINAL 2" OF SURFACE COURSE IS TO BE PLACED AFTER ALL OTHER COURSES HAVE BEEN LAID. LONGITUDINAL JOINTS SHALL BE AT THE LANE LINES.

WITH THE APPROVAL OF THE ENGINEER, THE CONTRACTOR WILL BE ALLOWED TO SUBSTITUTE, AT NO ADDITIONAL COST TO THE DEPARTMENT, THE FIRST LIFT OF ACHM SURFACE COURSE (1/2") IN LIEU OF AGGREGATE BASE COURSE ON THE SHOULDERS.

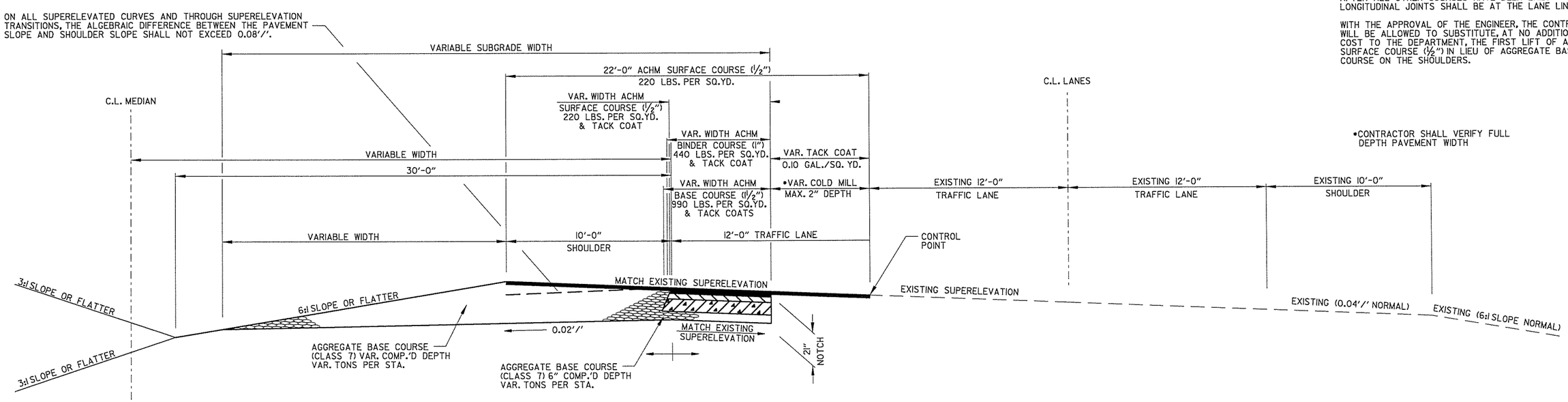

I-40 MILL, INLAY & NOTCH AND WIDEN - SUPERELEVATED CURVE TO RIGHT

(SHOWN IN DIRECTION OF TRAVEL)
I-40 RT. LANES STA. 8091+15.65 TO STA. 8095+75.63

TYPICAL SECTIONS OF IMPROVEMENT

STATE OF ARKANSAS
REGISTERED PROFESSIONAL ENGINEER
No. 11427
KEVIN G. TOBLESKY
7/17/14

7/16/2014 11:22:47 PM ...\3-TypicalSections of Improvement-pdf\Attachments\265dgnhrd cap ca0603\700 cadd files\777 roadway files\drawings\3-TypicalSections of Improvement-pavement-design.dgn

DATE REVISED	DATE FILMED	DATE REVISED	DATE FILMED	FED.RD. DIST.NO.	STATE	FED.AID PROJ.NO.	SHEET NO.	TOTAL SHEETS
				6	ARK.			
				JOB NO.		CA0609	11	693

(2) TYPICAL SECTIONS OF IMPROVEMENT

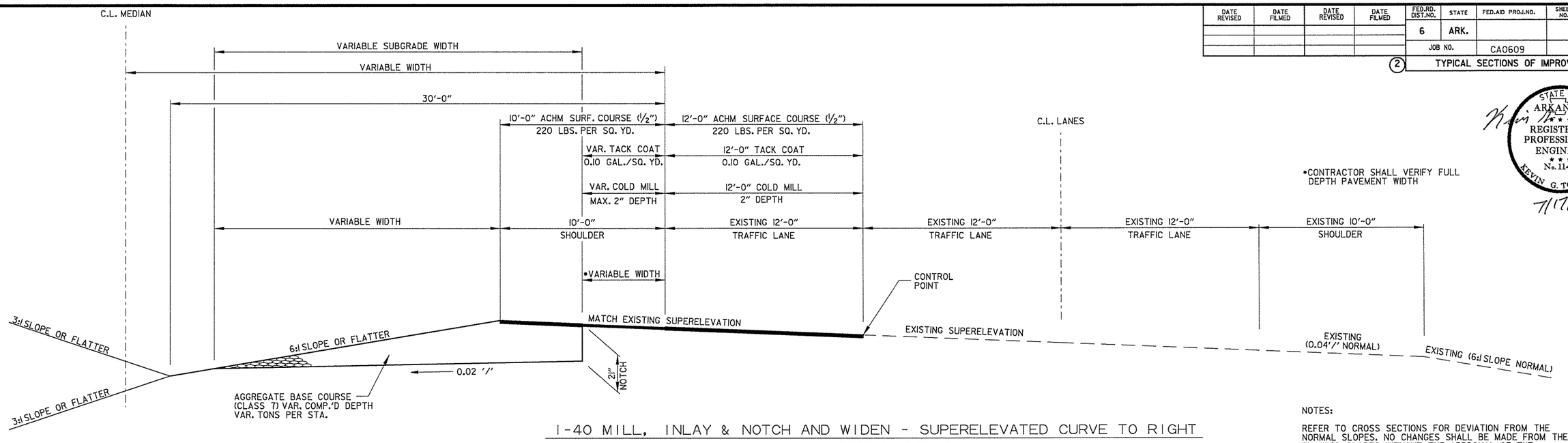

I-40 MILL, INLAY & NOTCH AND WIDEN - SUPERELEVATED CURVE TO RIGHT

(SHOWN IN DIRECTION OF TRAVEL)
I-40 RT. LANES STA. 8095+75.63 TO STA. 8098+73.40

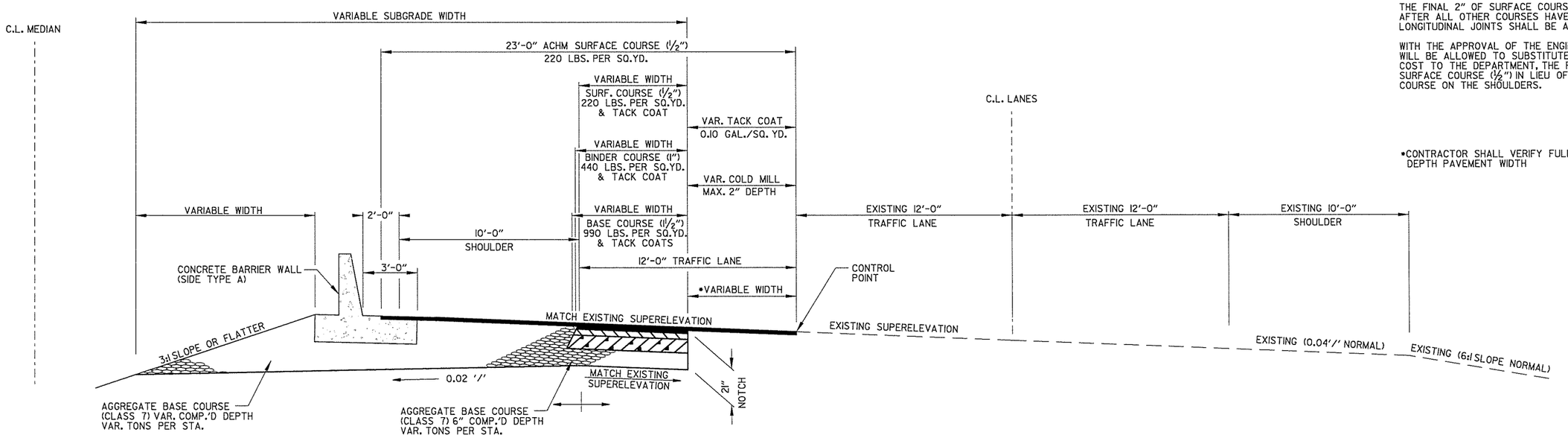

I-40 MILL, INLAY & NOTCH AND WIDEN - SUPERELEVATED CURVE TO RIGHT

(SHOWN IN DIRECTION OF TRAVEL)
I-40 LT. LANES STA. 8025+77.75 TO STA. 8028+81.45
I-40 LT. LANES STA. 8041+38.29 TO STA. 8042+11.90

NOTES:

REFER TO CROSS SECTIONS FOR DEVIATION FROM THE NORMAL SLOPES. NO CHANGES SHALL BE MADE FROM THE PLANNED SLOPES WITHOUT THE APPROVAL OF THE ENGINEER.

THE THICKNESS OF AGGREGATE BASE COURSE SHALL BE WITHIN PLUS OR MINUS ONE INCH OF THE PLAN THICKNESS SHOWN. THE CONTRACTOR WILL CORRECT ANY DEFICIENT THICKNESS THAT DOES NOT MEET TOLERANCE INDICATED. PAYMENT WILL NOT BE MADE FOR MATERIAL PLACED IN EXCESS OF THE TOLERANCE INDICATED.

THE FINAL 2" OF SURFACE COURSE IS TO BE PLACED AFTER ALL OTHER COURSES HAVE BEEN LAID. LONGITUDINAL JOINTS SHALL BE AT THE LANE LINES.

WITH THE APPROVAL OF THE ENGINEER, THE CONTRACTOR WILL BE ALLOWED TO SUBSTITUTE, AT NO ADDITIONAL COST TO THE DEPARTMENT, THE FIRST LIFT OF ACHM SURFACE COURSE (1/2") IN LIEU OF AGGREGATE BASE COURSE ON THE SHOULDERS.

STATE OF ARKANSAS
REGISTERED PROFESSIONAL ENGINEER
No. 11427
KEVIN G. TOBLESKY
7/17/14

TYPICAL SECTIONS OF IMPROVEMENT

...\3-Typical Sections of Improvement-pavementdesign.dgn 7/16/2014 1:22:47 PM ...\3-Typical Sections of Improvement-pavementdesign.dgn ca0603700 cadd files\777 roadway files\drawings\3-TypicalSections of Improvement-pavementdesign.dgn

DATE REVISED	DATE FILMED	DATE REVISED	DATE FILMED	FED.RD. DIST.NO.	STATE	FED.AID PROJ.NO.	SHEET NO.	TOTAL SHEETS
				6	ARK.			
				JOB NO.		CA0609	12	693

(2) TYPICAL SECTIONS OF IMPROVEMENT

EXISTING BRIDGE - L.M.L.
STA. 8033+49.79 TO STA. 8035+72.79

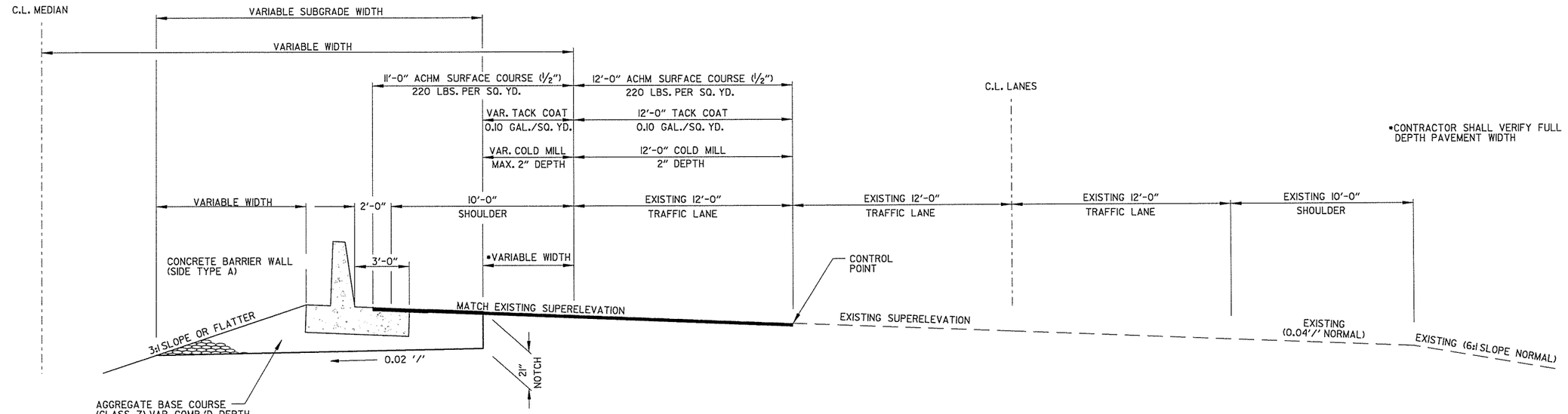

I-40 MILL, INLAY & NOTCH AND WIDEN - SUPERELEVATED CURVE TO RIGHT

(SHOWN IN DIRECTION OF TRAVEL)
I-40 LT. LANES STA. 8028+81.45 TO STA. 8033+49.79
I-40 LT. LANES STA. 8035+72.79 TO STA. 8041+38.29

NOTES:

REFER TO CROSS SECTIONS FOR DEVIATION FROM THE NORMAL SLOPES. NO CHANGES SHALL BE MADE FROM THE PLANNED SLOPES WITHOUT THE APPROVAL OF THE ENGINEER.

THE THICKNESS OF AGGREGATE BASE COURSE SHALL BE WITHIN PLUS OR MINUS ONE INCH OF THE PLAN THICKNESS SHOWN. THE CONTRACTOR WILL CORRECT ANY DEFICIENT THICKNESS THAT DOES NOT MEET TOLERANCE INDICATED. PAYMENT WILL NOT BE MADE FOR MATERIAL PLACED IN EXCESS OF THE TOLERANCE INDICATED.

THE FINAL 2" OF SURFACE COURSE IS TO BE PLACED AFTER ALL OTHER COURSES HAVE BEEN LAID. LONGITUDINAL JOINTS SHALL BE AT THE LANE LINES.

WITH THE APPROVAL OF THE ENGINEER, THE CONTRACTOR WILL BE ALLOWED TO SUBSTITUTE, AT NO ADDITIONAL COST TO THE DEPARTMENT, THE FIRST LIFT OF ACHM SURFACE COURSE (1/2") IN LIEU OF AGGREGATE BASE COURSE ON THE SHOULDERS.

STATE OF ARKANSAS
REGISTERED PROFESSIONAL ENGINEER
No. 11427
KEVIN G. TOBLESEY
7/17/14

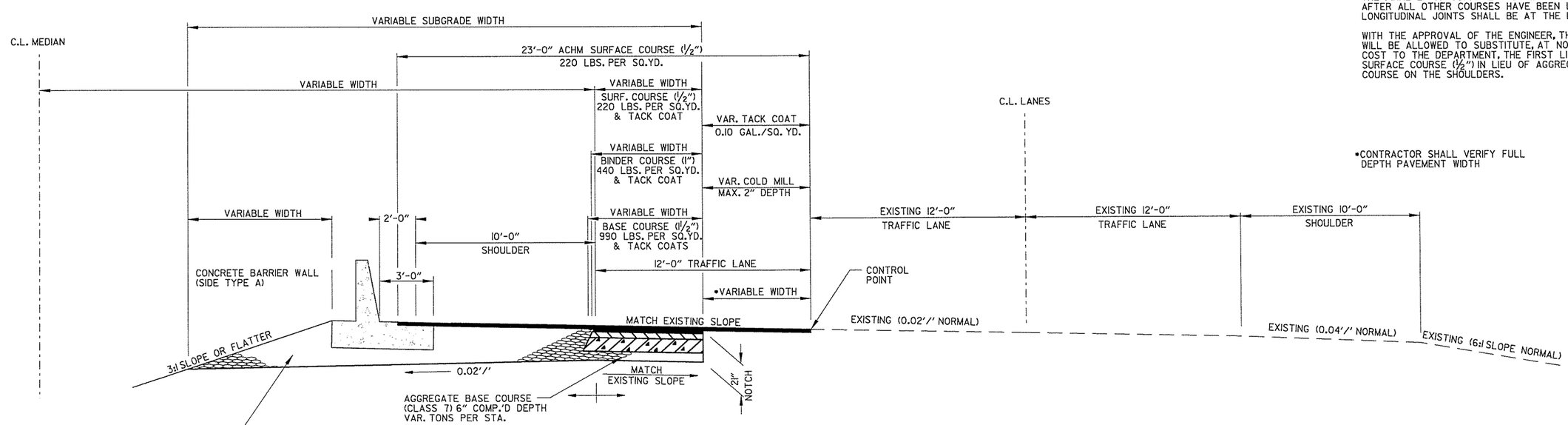

I-40 MILL, INLAY & NOTCH AND WIDEN

(SHOWN IN DIRECTION OF TRAVEL)
I-40 LT. LANES STA. 8042+11.90 TO STA. 8043+25.06

TYPICAL SECTIONS OF IMPROVEMENT

7/16/2014 1:22:47 PM ...\3-TypicalSections of Improvement-pavementdesign.dgn
...\cad0603\700 cadd files\777 roadway files\drawings\3-TypicalSections of Improvement-pavementdesign.dgn

DATE REVISED	DATE FILMED	DATE REVISED	DATE FILMED	FED.RD. DIST.NO.	STATE	FED.AID PROJ.NO.	SHEET NO.	TOTAL SHEETS
				6	ARK.			
				JOB NO.		CA0609	13	693

(2) TYPICAL SECTIONS OF IMPROVEMENT

STATE OF ARKANSAS REGISTERED PROFESSIONAL ENGINEER No. 11427 KEVIN G. TOBLESKY 7/17/14

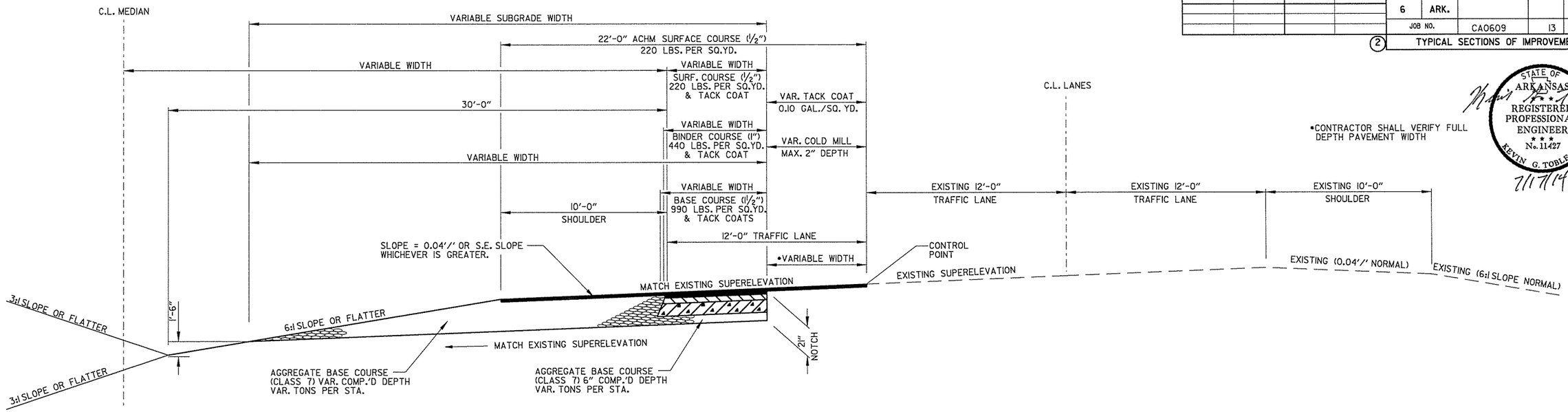

I-40 MILL, INLAY & NOTCH AND WIDEN - SUPERELEVATED CURVE TO LEFT

(SHOWN IN DIRECTION OF TRAVEL)
I-40 LT. LANES STA. 8099+42.83 TO STA. 8100+57.62

NOTES:

REFER TO CROSS SECTIONS FOR DEVIATION FROM THE NORMAL SLOPES. NO CHANGES SHALL BE MADE FROM THE PLANNED SLOPES WITHOUT THE APPROVAL OF THE ENGINEER.

THE THICKNESS OF AGGREGATE BASE COURSE SHALL BE WITHIN PLUS OR MINUS ONE INCH OF THE PLAN THICKNESS SHOWN. THE CONTRACTOR WILL CORRECT ANY DEFICIENT THICKNESS THAT DOES NOT MEET TOLERANCE INDICATED. PAYMENT WILL NOT BE MADE FOR MATERIAL PLACED IN EXCESS OF THE TOLERANCE INDICATED.

THE FINAL 2" OF SURFACE COURSE IS TO BE PLACED AFTER ALL OTHER COURSES HAVE BEEN LAID. LONGITUDINAL JOINTS SHALL BE AT THE LANE LINES.

WITH THE APPROVAL OF THE ENGINEER, THE CONTRACTOR WILL BE ALLOWED TO SUBSTITUTE, AT NO ADDITIONAL COST TO THE DEPARTMENT, THE FIRST LIFT OF ACHM SURFACE COURSE (1/2") IN LIEU OF AGGREGATE BASE COURSE ON THE SHOULDERS.

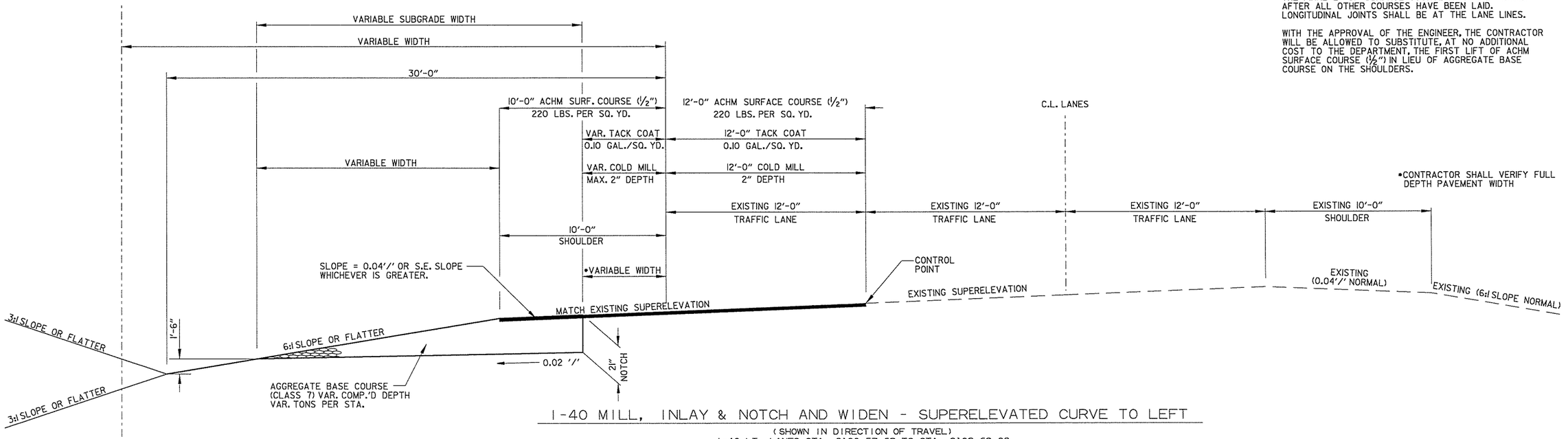

I-40 MILL, INLAY & NOTCH AND WIDEN - SUPERELEVATED CURVE TO LEFT

(SHOWN IN DIRECTION OF TRAVEL)
I-40 LT. LANES STA. 8100+57.62 TO STA. 8102+63.09

TYPICAL SECTIONS OF IMPROVEMENT

7/16/2014 1:22:47 PM ...\3-TypicalSections of Improvement-pavementdesign.dgn cap ca0603.700 cadd files\777 roadway files\drawings\3-TypicalSections of Improvement-pavementdesign.dgn

DATE REVISED	DATE FILMED	DATE REVISED	DATE FILMED	FED.RD. DIST.NO.	STATE	FED.AID PROJ.NO.	SHEET NO.	TOTAL SHEETS
				6	ARK.			
				JOB NO.		CA0609	14	693

(2) TYPICAL SECTIONS OF IMPROVEMENT

STATE OF ARKANSAS
LICENSED PROFESSIONAL ENGINEER
No. 13422
JOHN F. CANTABERY
7-18-14

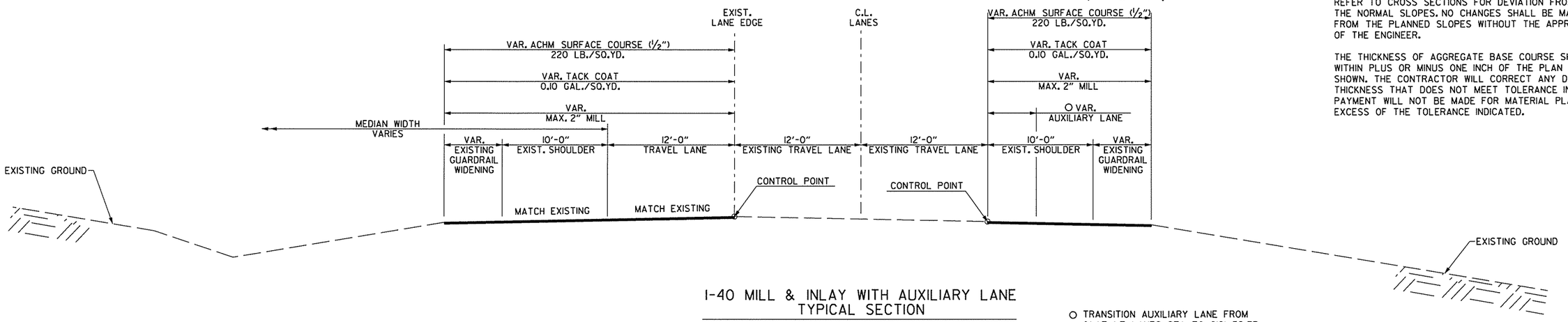

I-40 MILL & INLAY WITH AUXILIARY LANE TYPICAL SECTION

(SHOWN IN DIRECTION OF TRAVEL)
I-40 LT. LANES STA. 8181+51.11 TO STA. 8184+82.27

O TRANSITION AUXILIARY LANE FROM 0' AT LT. LANES STA. TO 8181+59.33 4.61' AT LT. LANES STA. 8184+82.27

NOTES:

THE FINAL 2" OF SURFACE COURSE IS TO BE PLACED AFTER ALL OTHER COURSES HAVE BEEN LAID. LONGITUDINAL JOINTS SHALL BE AT LANE LINES.

REFER TO CROSS SECTIONS FOR DEVIATION FROM THE NORMAL SLOPES. NO CHANGES SHALL BE MADE FROM THE PLANNED SLOPES WITHOUT THE APPROVAL OF THE ENGINEER.

THE THICKNESS OF AGGREGATE BASE COURSE SHALL BE WITHIN PLUS OR MINUS ONE INCH OF THE PLAN THICKNESS SHOWN. THE CONTRACTOR WILL CORRECT ANY DEFICIENT THICKNESS THAT DOES NOT MEET TOLERANCE INDICATED. PAYMENT WILL NOT BE MADE FOR MATERIAL PLACED IN EXCESS OF THE TOLERANCE INDICATED.

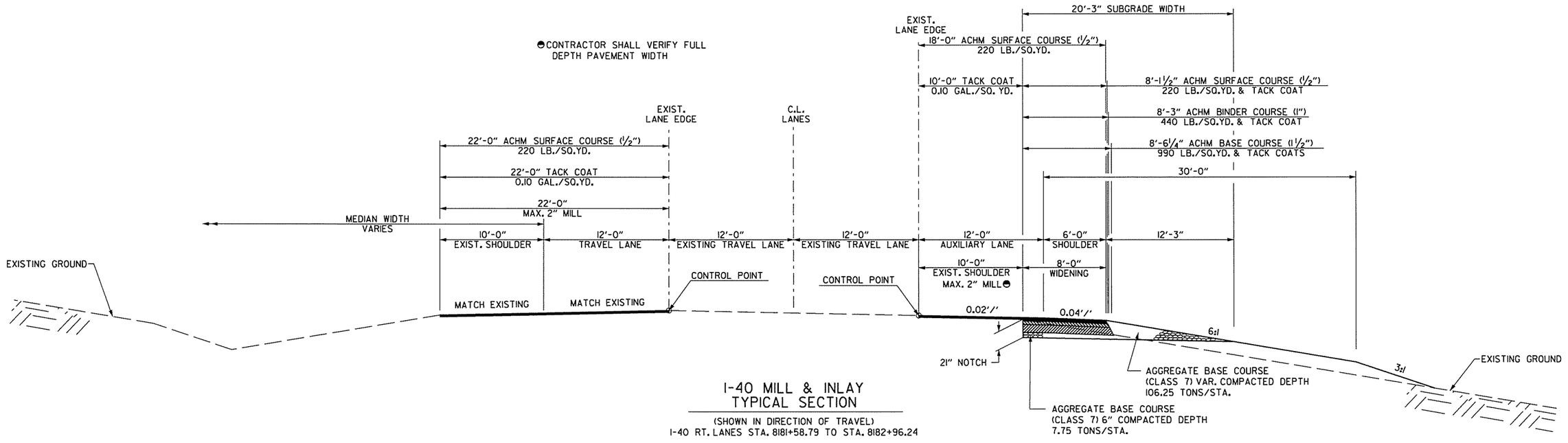

I-40 MILL & INLAY TYPICAL SECTION

(SHOWN IN DIRECTION OF TRAVEL)
I-40 RT. LANES STA. 8181+58.79 TO STA. 8182+96.24

TYPICAL SECTIONS OF IMPROVEMENT

cgger-vasinl 7/17/2014 7:42:48 PM
WORKSPACE: AHTD
L:\20IN\10I1709 - I-40 at I-430 Interchange Modifications\Drawings\RCA0609_TYP_ALL.dgn
REVISED DATE:

DATE REVISED	DATE FILMED	DATE REVISED	DATE FILMED	FED.RD. DIST.NO.	STATE	FED.AID PROJ.NO.	SHEET NO.	TOTAL SHEETS
				6	ARK.			
				JOB NO.		CA0609	15	693

(2) TYPICAL SECTIONS OF IMPROVEMENT

STATE OF ARKANSAS
LICENSED PROFESSIONAL ENGINEER
No.13422
JOHN F. CANTABERY

7-18-14

NOTES:

THE FINAL 2" OF SURFACE COURSE IS TO BE PLACED AFTER ALL OTHER COURSES HAVE BEEN LAID. LONGITUDINAL JOINTS SHALL BE AT LANE LINES.

REFER TO CROSS SECTIONS FOR DEVIATION FROM THE NORMAL SLOPES. NO CHANGES SHALL BE MADE FROM THE PLANNED SLOPES WITHOUT THE APPROVAL OF THE ENGINEER.

THE THICKNESS OF AGGREGATE BASE COURSE SHALL BE WITHIN PLUS OR MINUS ONE INCH OF THE PLAN THICKNESS SHOWN. THE CONTRACTOR WILL CORRECT ANY DEFICIENT THICKNESS THAT DOES NOT MEET TOLERANCE INDICATED. PAYMENT WILL NOT BE MADE FOR MATERIAL PLACED IN EXCESS OF THE TOLERANCE INDICATED.

WITH THE APPROVAL OF THE ENGINEER, THE CONTRACTOR WILL BE ALLOWED TO SUBSTITUTE, AT NO ADDITIONAL COST TO THE DEPARTMENT, THE FIRST LIFT OF ACHM SURFACE COURSE (1/2") IN LIEU OF AGGREGATE BASE COURSE ON THE SHOULDERS.

◓ CONTRACTOR SHALL VERIFY FULL DEPTH PAVEMENT WIDTH

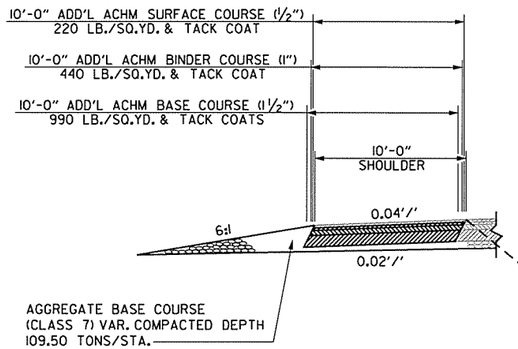

FULL DEPTH SHOULDER DETAIL

I-40 RT. LANES STA. 8204+68.58 TO STA. 8211+68.58

I-40 NOTCH & WIDEN WITH AUXILIARY LANE
TYPICAL SECTION

(SHOWN IN DIRECTION OF TRAVEL)
I-40 RT. LANES STA. 8182+96.24 TO STA. 8211+68.58
I-40 LT. LANES STA. 8184+82.27 TO STA. 8206+67.21

△ TRANSITION AUXILIARY LANE FROM 4.61' AT LT. LANES STA. 8184+82.27 TO 12' AT LT. LANES STA. 8189+99.33

TYPICAL SECTIONS OF IMPROVEMENT

cggervasini 7/17/2014 7:42:48 PM
WORKSPACE: AHTD
L:\20II\II0I7709 - I-40 at I-430 Interchange Modifications\Drawings\RCA0609_TYP_ALL.dgn
REVISED DATE:

DATE REVISED	DATE FILMED	DATE REVISED	DATE FILMED	FED.RD. DIST.NO.	STATE	FED.AID PROJ.NO.	SHEET NO.	TOTAL SHEETS
				6	ARK.			
				JOB NO.		CA0609	16	693

(2) TYPICAL SECTIONS OF IMPROVEMENT

NOTE:
ON ALL SUPERELEVATED CURVES AND THROUGH SUPERELEVATION TRANSITIONS, THE ALGEBRAIC DIFFERENCE BETWEEN PAVEMENT SLOPE AND SHOULDER SLOPE SHALL NOT EXCEED 0.08'/'.

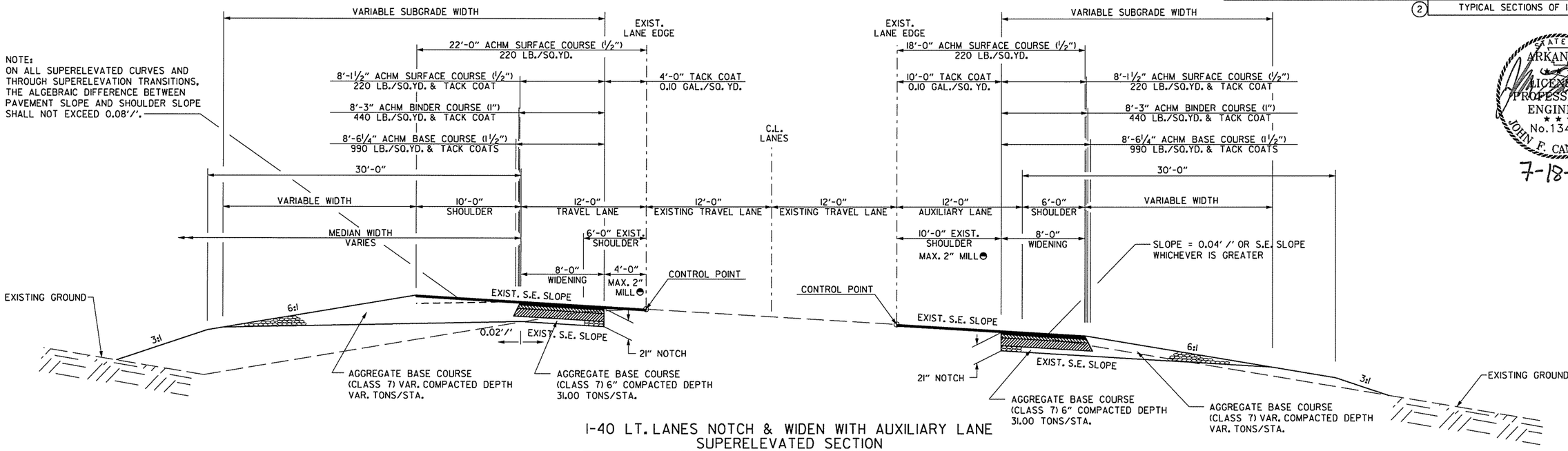

I-40 LT. LANES NOTCH & WIDEN WITH AUXILIARY LANE SUPERELEVATED SECTION

(SHOWN IN DIRECTION OF TRAVEL)
I-40 LT. LANES STA. 8206+67.21 TO STA. 8215+59.33

◓CONTRACTOR SHALL VERIFY FULL DEPTH PAVEMENT WIDTH

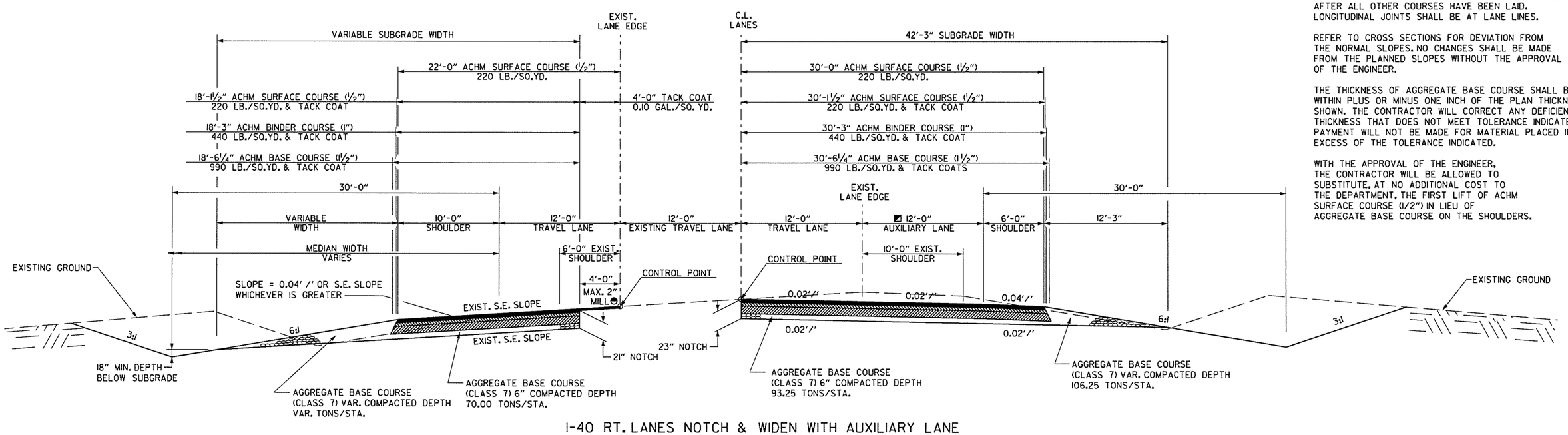

◩ AUXILIARY LANE VARIES FROM:
STA. 8213+68.18 TO 8216+71.79

I-40 RT. LANES NOTCH & WIDEN WITH AUXILIARY LANE TYPICAL SECTION

(SHOWN IN DIRECTION OF TRAVEL)
I-40 RT. LANES STA. 8211+68.58 TO STA. 8216+71.79

NOTES:

THE FINAL 2" OF SURFACE COURSE IS TO BE PLACED AFTER ALL OTHER COURSES HAVE BEEN LAID. LONGITUDINAL JOINTS SHALL BE AT LANE LINES.

REFER TO CROSS SECTIONS FOR DEVIATION FROM THE NORMAL SLOPES. NO CHANGES SHALL BE MADE FROM THE PLANNED SLOPES WITHOUT THE APPROVAL OF THE ENGINEER.

THE THICKNESS OF AGGREGATE BASE COURSE SHALL BE WITHIN PLUS OR MINUS ONE INCH OF THE PLAN THICKNESS SHOWN. THE CONTRACTOR WILL CORRECT ANY DEFICIENT THICKNESS THAT DOES NOT MEET TOLERANCE INDICATED. PAYMENT WILL NOT BE MADE FOR MATERIAL PLACED IN EXCESS OF THE TOLERANCE INDICATED.

WITH THE APPROVAL OF THE ENGINEER, THE CONTRACTOR WILL BE ALLOWED TO SUBSTITUTE, AT NO ADDITIONAL COST TO THE DEPARTMENT, THE FIRST LIFT OF ACHM SURFACE COURSE (1/2") IN LIEU OF AGGREGATE BASE COURSE ON THE SHOULDERS.

STATE OF ARKANSAS
LICENSED PROFESSIONAL ENGINEER
No. 13422
JOHN F. CANTABERY
7-18-14

TYPICAL SECTIONS OF IMPROVEMENT

cggervasini 7/17/2014 7:42:49 PM
WORKSPACE: AHTD
L:\ROW\101709 - I-40 at I-430 Interchange Modifications\Drawings\RCA0609_TYP_ALL.dgn
REVISED DATE:

DATE REVISED	DATE FILMED	DATE REVISED	DATE FILMED	FED.RD. DIST.NO.	STATE	FED.AID PROJ.NO.	SHEET NO.	TOTAL SHEETS
				6	ARK.			
				JOB NO.		CA0609	17	693

(2) TYPICAL SECTIONS OF IMPROVEMENT

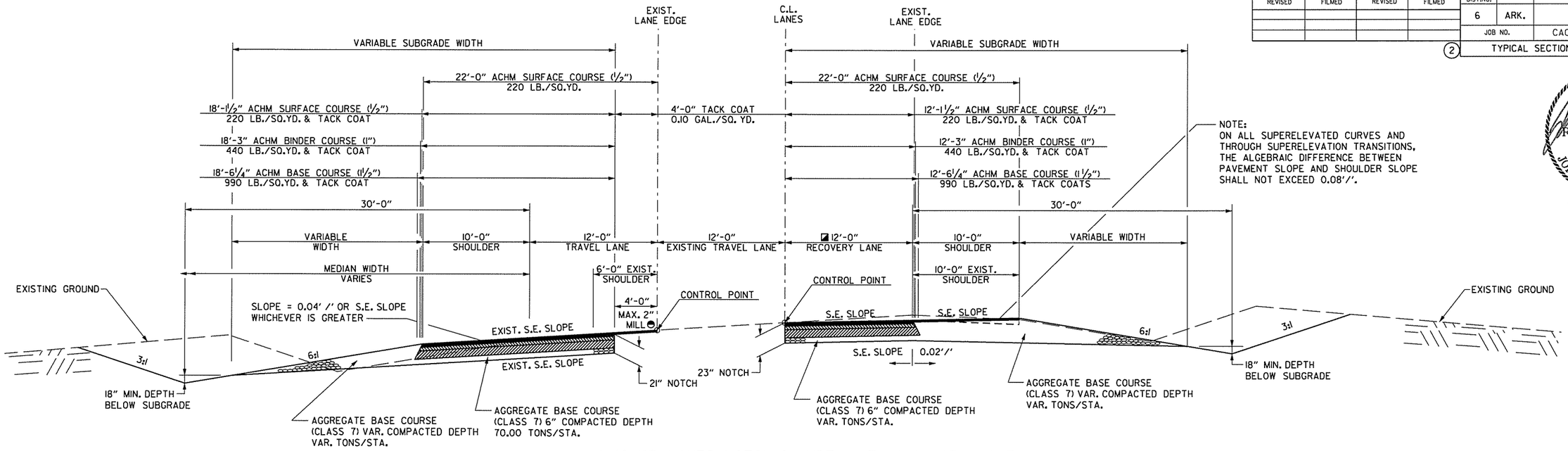

NOTE:
ON ALL SUPERELEVATED CURVES AND THROUGH SUPERELEVATION TRANSITIONS, THE ALGEBRAIC DIFFERENCE BETWEEN PAVEMENT SLOPE AND SHOULDER SLOPE SHALL NOT EXCEED 0.08'/'.

◪ AUXILIARY LANE VARIES FROM:
STA. 8216+71.79 TO 8218+37.48

I-40 RT. LANES NOTCH & WIDEN WITH AUXILIARY LANE TYPICAL SECTION

(SHOWN IN DIRECTION OF TRAVEL)
I-40 RT. LANES STA. 8216+71.79 TO STA. 8218+37.48

◓ CONTRACTOR SHALL VERIFY FULL DEPTH PAVEMENT WIDTH

NOTES:

THE FINAL 2" OF SURFACE COURSE IS TO BE PLACED AFTER ALL OTHER COURSES HAVE BEEN LAID. LONGITUDINAL JOINTS SHALL BE AT LANE LINES.

REFER TO CROSS SECTIONS FOR DEVIATION FROM THE NORMAL SLOPES. NO CHANGES SHALL BE MADE FROM THE PLANNED SLOPES WITHOUT THE APPROVAL OF THE ENGINEER.

THE THICKNESS OF AGGREGATE BASE COURSE SHALL BE WITHIN PLUS OR MINUS ONE INCH OF THE PLAN THICKNESS SHOWN. THE CONTRACTOR WILL CORRECT ANY DEFICIENT THICKNESS THAT DOES NOT MEET TOLERANCE INDICATED. PAYMENT WILL NOT BE MADE FOR MATERIAL PLACED IN EXCESS OF THE TOLERANCE INDICATED.

WITH THE APPROVAL OF THE ENGINEER, THE CONTRACTOR WILL BE ALLOWED TO SUBSTITUTE, AT NO ADDITIONAL COST TO THE DEPARTMENT, THE FIRST LIFT OF ACHM SURFACE COURSE (1/2") IN LIEU OF AGGREGATE BASE COURSE ON THE SHOULDERS.

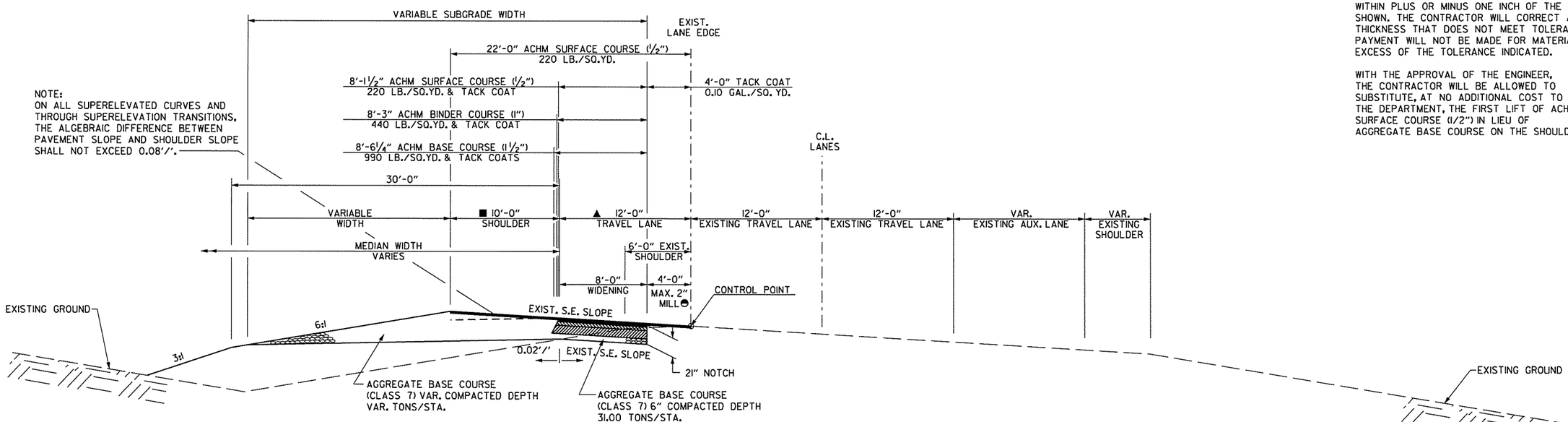

NOTE:
ON ALL SUPERELEVATED CURVES AND THROUGH SUPERELEVATION TRANSITIONS, THE ALGEBRAIC DIFFERENCE BETWEEN PAVEMENT SLOPE AND SHOULDER SLOPE SHALL NOT EXCEED 0.08'/'.

▲ TRANSITION TRAVEL LANE FROM
12' AT STA. 8223+57.95 TO
0' AT STA. 8231+97.95

■ TRANSITION SHOULDER FROM
10' AT STA. 8230+97.95 TO
6' AT STA. 8231+97.95

I-40 LT. LANES NOTCH & WIDEN SUPERELEVATED SECTION

(SHOWN IN DIRECTION OF TRAVEL)
I-40 LT. LANES STA. 8215+59.33 TO STA. 8231+97.95

TYPICAL SECTIONS OF IMPROVEMENT

STATE OF ARKANSAS
LICENSED PROFESSIONAL ENGINEER
No. 13422
JOHN F. CANTABERY
7-18-14

cggervasini 7/17/2014 7:42:49 PM
WORKSPACE: AHTD
L:\I-30\I-30TT09 - I-40 at I-430 Interchange Modifications\Drawings\RCA0609_TYP_ALL.dgn
REVISED DATE:

DATE REVISED	DATE FILMED	DATE REVISED	DATE FILMED	FED.RD. DIST.NO.	STATE	FED.AID PROJ.NO.	SHEET NO.	TOTAL SHEETS
				6	ARK.			
				JOB NO.		CA0609	18	693

(2) TYPICAL SECTIONS OF IMPROVEMENT

STATE OF ARKANSAS
LICENSED PROFESSIONAL ENGINEER
No. 13422
JOHN F. CANTABERY
7-18-14

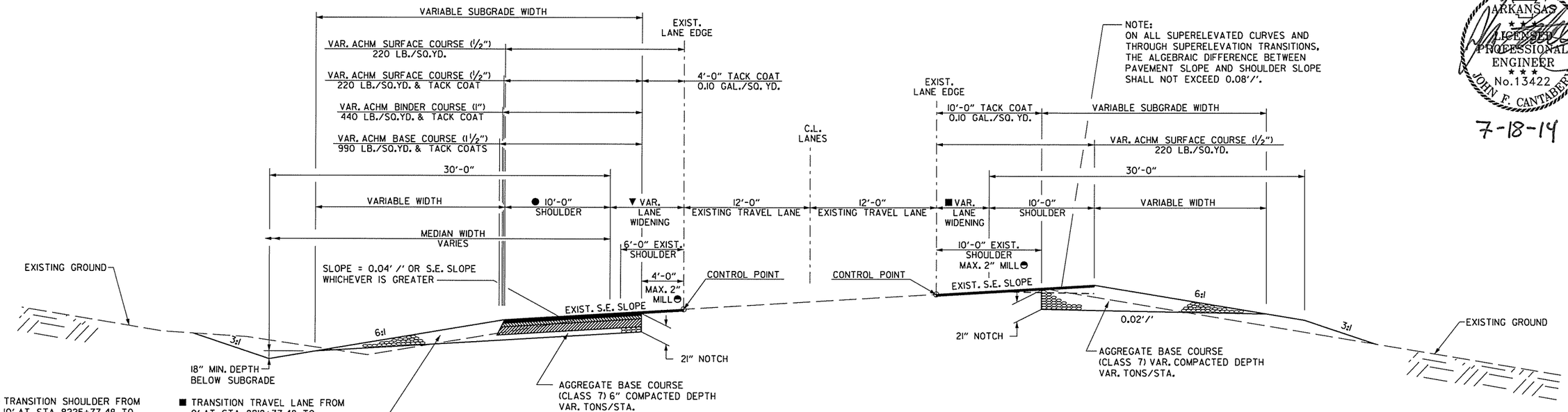

● TRANSITION SHOULDER FROM 10' AT STA. 8225+77.48 TO 6' AT STA. 8226+77.48

▼ TRANSITION TRAVEL LANE FROM 12' AT STA. 8218+37.48 TO 0' AT STA. 8226+77.48

■ TRANSITION TRAVEL LANE FROM 0' AT STA. 8218+37.48 TO 7.63' AT STA. 8223+71.79
TRANSITION TRAVEL LANE FROM 7.63' AT STA. 8223+71.79 TO 0' AT STA. 8226+71.79

I-40 RT. LANES NOTCH & WIDEN TRANSITION SUPERELEVATED SECTION

(SHOWN IN DIRECTION OF TRAVEL)
I-40 RT. LANES STA. 8218+37.48 TO STA. 8226+77.48

NOTES:

THE FINAL 2" OF SURFACE COURSE IS TO BE PLACED AFTER ALL OTHER COURSES HAVE BEEN LAID. LONGITUDINAL JOINTS SHALL BE AT LANE LINES.

REFER TO CROSS SECTIONS FOR DEVIATION FROM THE NORMAL SLOPES. NO CHANGES SHALL BE MADE FROM THE PLANNED SLOPES WITHOUT THE APPROVAL OF THE ENGINEER.

THE THICKNESS OF AGGREGATE BASE COURSE SHALL BE WITHIN PLUS OR MINUS ONE INCH OF THE PLAN THICKNESS SHOWN. THE CONTRACTOR WILL CORRECT ANY DEFICIENT THICKNESS THAT DOES NOT MEET TOLERANCE INDICATED. PAYMENT WILL NOT BE MADE FOR MATERIAL PLACED IN EXCESS OF THE TOLERANCE INDICATED.

WITH THE APPROVAL OF THE ENGINEER, THE CONTRACTOR WILL BE ALLOWED TO SUBSTITUTE, AT NO ADDITIONAL COST TO THE DEPARTMENT, THE FIRST LIFT OF ACHM SURFACE COURSE (1/2") IN LIEU OF AGGREGATE BASE COURSE ON THE SHOULDERS.

◓ CONTRACTOR SHALL VERIFY FULL DEPTH PAVEMENT WIDTH

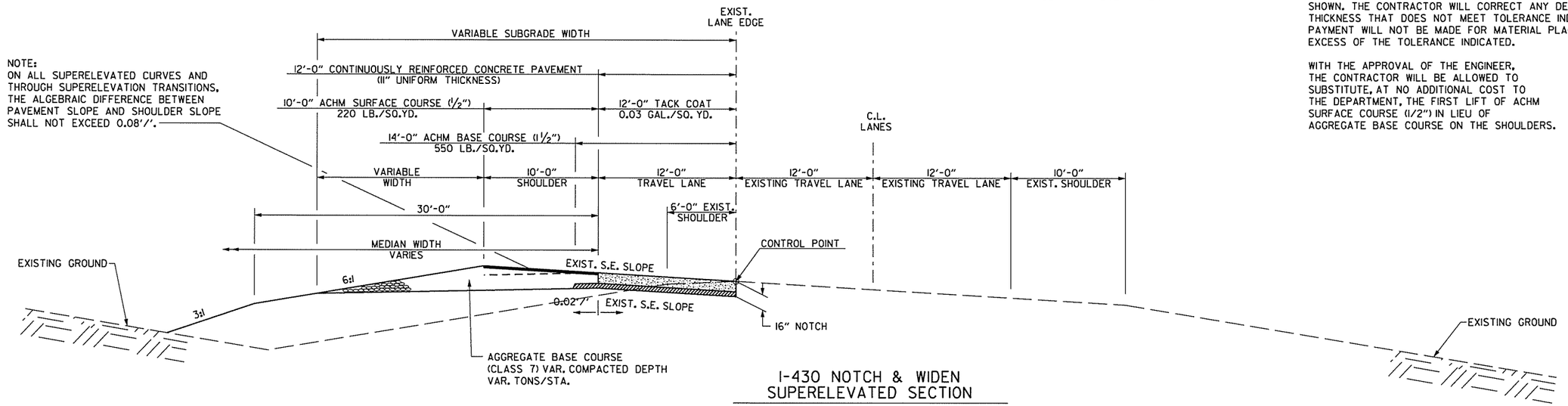

I-430 NOTCH & WIDEN SUPERELEVATED SECTION

(SHOWN IN DIRECTION OF TRAVEL)
I-430 RT. LANES STA. 684+62.62 TO STA. 692+23.45
I-430 LT. LANES STA. 672+16.66 TO STA. 686+47.83

TYPICAL SECTIONS OF IMPROVEMENT

cggervasini 7/17/2014 7:42:49 PM
WORKSPACE: AHTD
L:\ZOIN\001709 - I-40 at I-430 Interchange Modifications\Drawings\RCA0609_TYP_ALL.dgn
REVISED DATE:

DATE REVISED	DATE FILMED	DATE REVISED	DATE FILMED	FED.RD. DIST.NO.	STATE	FED.AID PROJ.NO.	SHEET NO.	TOTAL SHEETS
				6	ARK.			
				JOB NO.		CA0609	19	693

(2) TYPICAL SECTIONS OF IMPROVEMENT

STATE OF ARKANSAS
LICENSED PROFESSIONAL ENGINEER
No. 13422
JOHN F. CANTABERRY
7-18-14

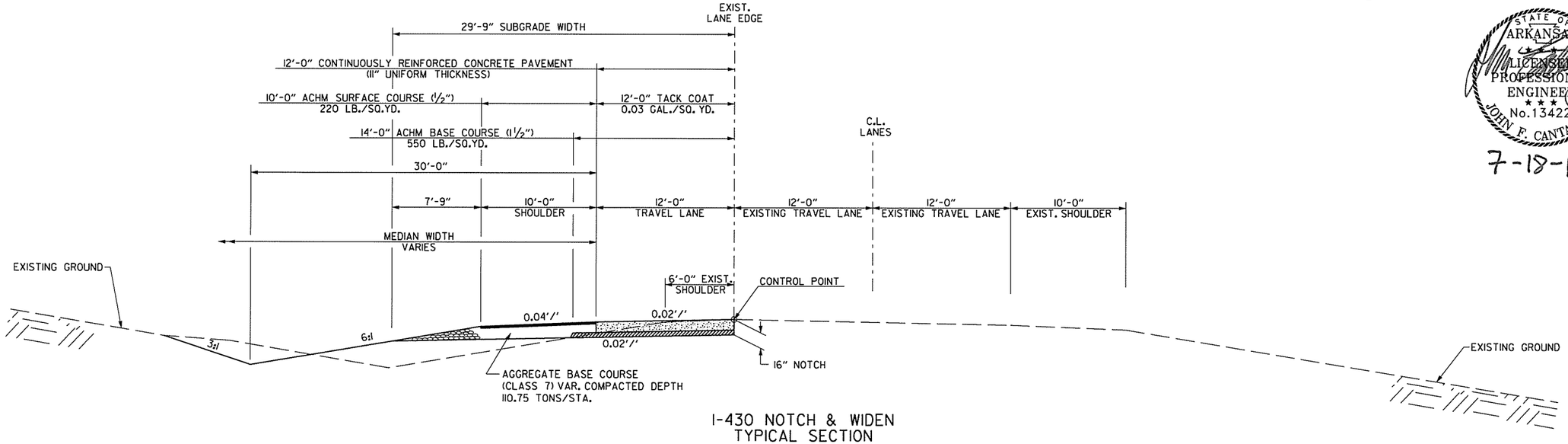

I-430 NOTCH & WIDEN TYPICAL SECTION

(SHOWN IN DIRECTION OF TRAVEL)
I-430 RT. LANES STA. 672+16.66 TO STA. 676+00.00

NOTES:

REFER TO CROSS SECTIONS FOR DEVIATION FROM THE NORMAL SLOPES. NO CHANGES SHALL BE MADE FROM THE PLANNED SLOPES WITHOUT THE APPROVAL OF THE ENGINEER.

THE THICKNESS OF AGGREGATE BASE COURSE SHALL BE WITHIN PLUS OR MINUS ONE INCH OF THE PLAN THICKNESS SHOWN. THE CONTRACTOR WILL CORRECT ANY DEFICIENT THICKNESS THAT DOES NOT MEET TOLERANCE INDICATED. PAYMENT WILL NOT BE MADE FOR MATERIAL PLACED IN EXCESS OF THE TOLERANCE INDICATED.

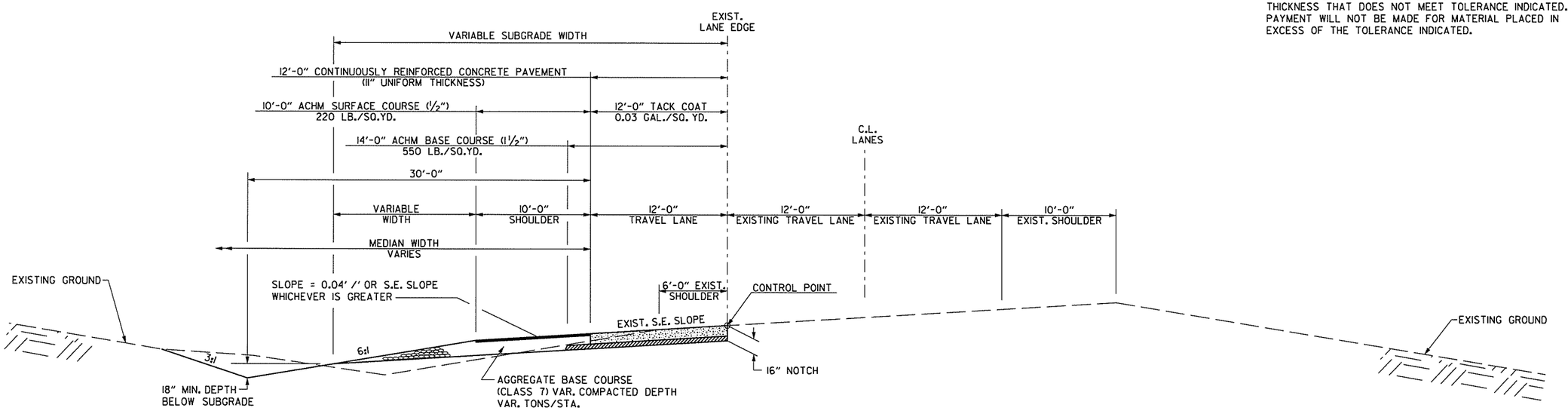

I-430 NOTCH & WIDEN SUPERELEVATED SECTION

(SHOWN IN DIRECTION OF TRAVEL)
I-430 RT. LANES STA. 676+00.00 TO STA. 684+62.62

TYPICAL SECTIONS OF IMPROVEMENT

cggervasini 7/17/2014 7:42:49 PM
WORKSPACE: AHTD
L:\ROW\NDT709 - I-40 at I-430 Interchange Modifications\Drawings\RCA0609_TYP_ALL.dgn
REVISED DATE:

DATE REVISED	DATE FILMED	DATE REVISED	DATE FILMED	FED.RD. DIST.NO.	STATE	FED.AID PROJ.NO.	SHEET NO.	TOTAL SHEETS
				6	ARK.			
				JOB NO.		CA0609	20	693

(2) TYPICAL SECTIONS OF IMPROVEMENT

STATE OF ARKANSAS
LICENSED PROFESSIONAL ENGINEER
No. 13422
JOHN F. CANTABERY
7-18-14

NOTE:
ON ALL SUPERELEVATED CURVES AND THROUGH SUPERELEVATION TRANSITIONS, THE ALGEBRAIC DIFFERENCE BETWEEN PAVEMENT SLOPE AND SHOULDER SLOPE SHALL NOT EXCEED 0.08'/'.

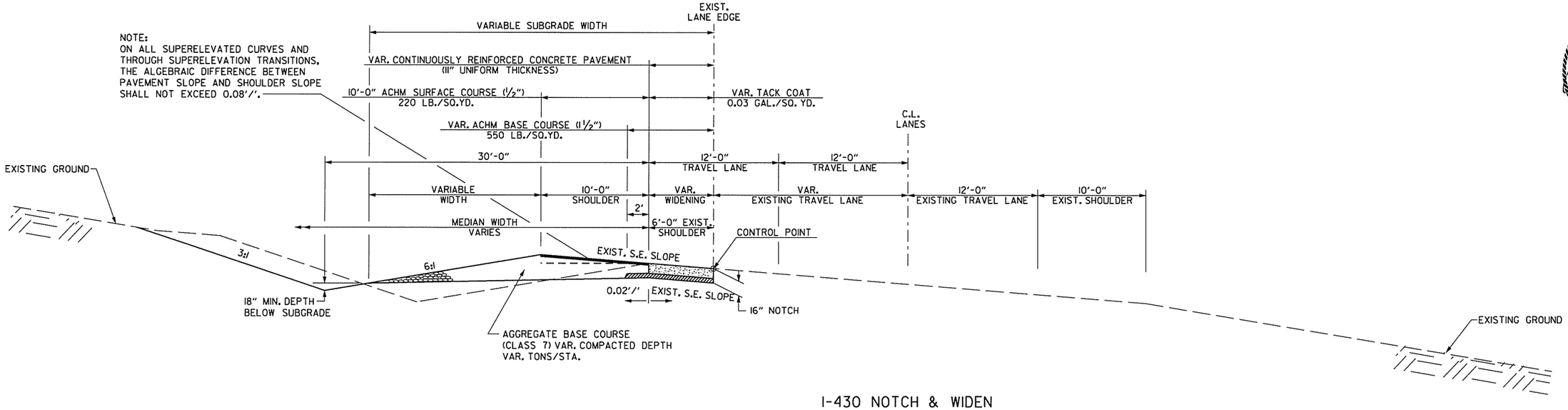

I-430 NOTCH & WIDEN SUPERELEVATED SECTION

(SHOWN IN DIRECTION OF TRAVEL)
I-430 LT. LANES STA. 686+47.83 TO STA. 688+96.95

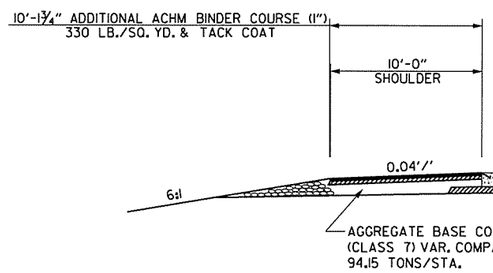

SHOULDER DETAIL

I-430 LT. LANES STA. 689+40.00 TO STA. 691+59.66

NOTES:

REFER TO CROSS SECTIONS FOR DEVIATION FROM THE NORMAL SLOPES. NO CHANGES SHALL BE MADE FROM THE PLANNED SLOPES WITHOUT THE APPROVAL OF THE ENGINEER.

THE THICKNESS OF AGGREGATE BASE COURSE SHALL BE WITHIN PLUS OR MINUS ONE INCH OF THE PLAN THICKNESS SHOWN. THE CONTRACTOR WILL CORRECT ANY DEFICIENT THICKNESS THAT DOES NOT MEET TOLERANCE INDICATED. PAYMENT WILL NOT BE MADE FOR MATERIAL PLACED IN EXCESS OF THE TOLERANCE INDICATED.

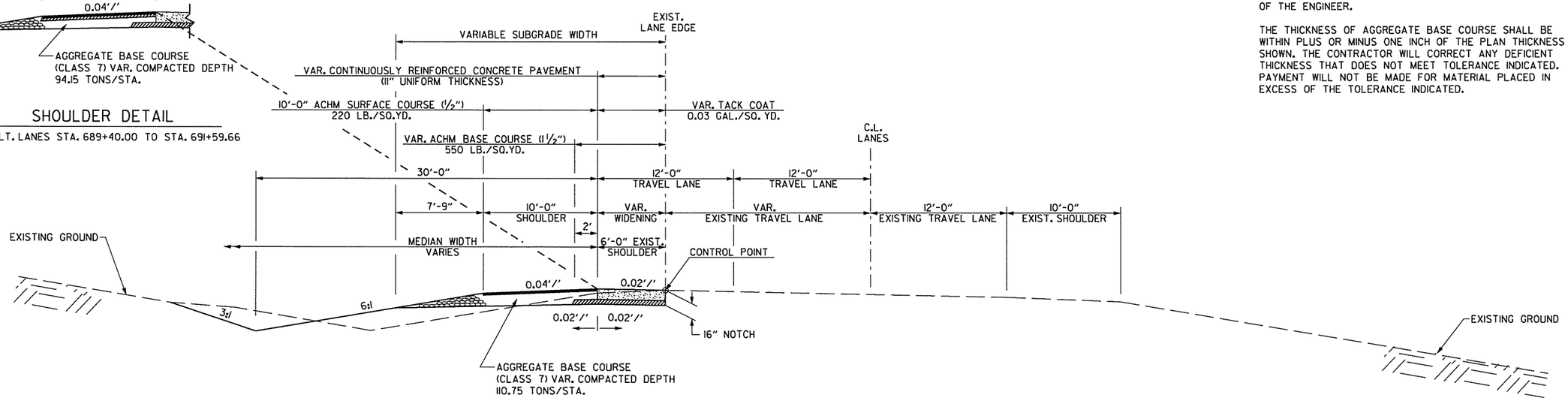

I-430 NOTCH & WIDEN TYPICAL SECTION

(SHOWN IN DIRECTION OF TRAVEL)
I-430 LT. LANES STA. 688+96.95 TO STA. 691+59.66

TYPICAL SECTIONS OF IMPROVEMENT

cggervasini 7/17/2014 7:42:50 PM
WORKSPACE: AHTD
L:\2011\1017709 - I-40 at I-430 Interchange Modifications\Drawings\RCA0609_TYP_ALL.dgn
REVISED DATE:

DATE REVISED	DATE FILMED	DATE REVISED	DATE FILMED	FED.RD. DIST.NO.	STATE	FED.AID PROJ.NO.	SHEET NO.	TOTAL SHEETS
				6	ARK.			
				JOB NO.		CA0609	21	693

(2) TYPICAL SECTIONS OF IMPROVEMENT

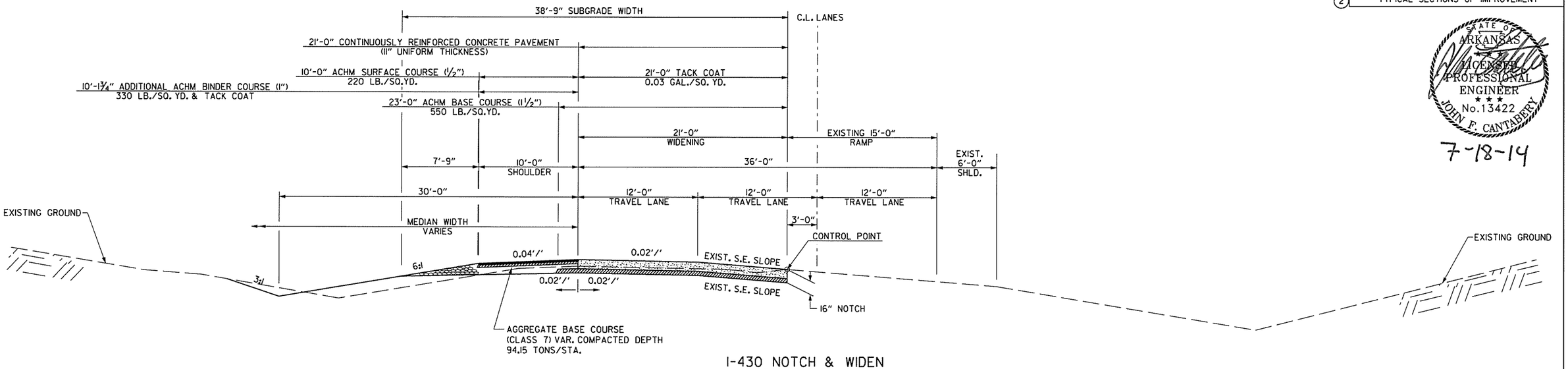

I-430 NOTCH & WIDEN TYPICAL SECTION

(SHOWN IN DIRECTION OF TRAVEL)
I-430 LT. LANES STA. 691+59.66 TO STA. 693+17.76

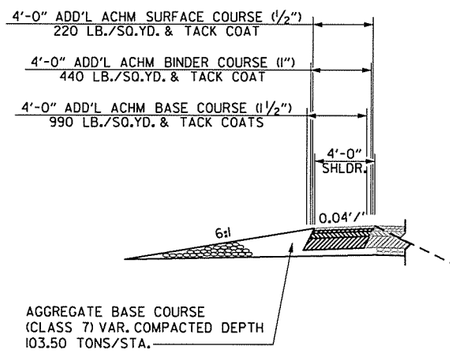

FULL DEPTH SHOULDER DETAIL

RAMP I STA. 8216+74.66 TO STA. 8218+74.66

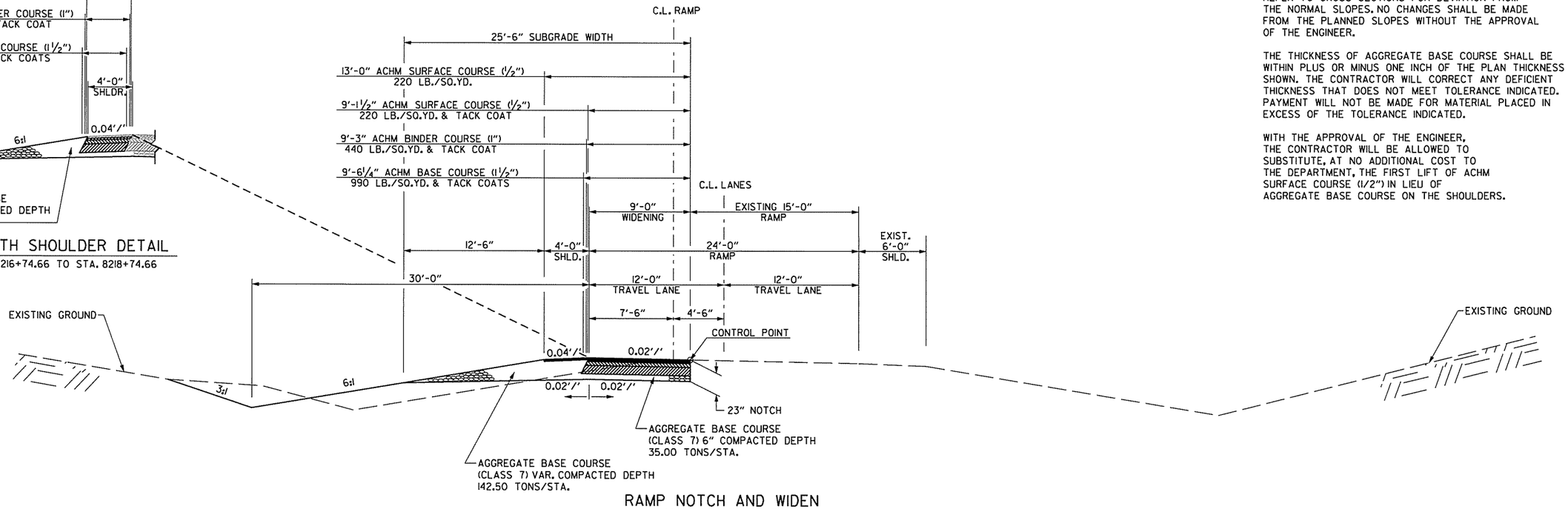

RAMP NOTCH AND WIDEN TYPICAL SECTION

(SHOWN IN DIRECTION OF TRAVEL)
RAMP I STA. 8216+74.66 TO STA. 8220+78.25

NOTES:

THE FINAL 2" OF SURFACE COURSE IS TO BE PLACED AFTER ALL OTHER COURSES HAVE BEEN LAID. LONGITUDINAL JOINTS SHALL BE AT LANE LINES.

REFER TO CROSS SECTIONS FOR DEVIATION FROM THE NORMAL SLOPES. NO CHANGES SHALL BE MADE FROM THE PLANNED SLOPES WITHOUT THE APPROVAL OF THE ENGINEER.

THE THICKNESS OF AGGREGATE BASE COURSE SHALL BE WITHIN PLUS OR MINUS ONE INCH OF THE PLAN THICKNESS SHOWN. THE CONTRACTOR WILL CORRECT ANY DEFICIENT THICKNESS THAT DOES NOT MEET TOLERANCE INDICATED. PAYMENT WILL NOT BE MADE FOR MATERIAL PLACED IN EXCESS OF THE TOLERANCE INDICATED.

WITH THE APPROVAL OF THE ENGINEER, THE CONTRACTOR WILL BE ALLOWED TO SUBSTITUTE, AT NO ADDITIONAL COST TO THE DEPARTMENT, THE FIRST LIFT OF ACHM SURFACE COURSE (1/2") IN LIEU OF AGGREGATE BASE COURSE ON THE SHOULDERS.

STATE OF ARKANSAS
LICENSED PROFESSIONAL ENGINEER
No.13422
JOHN F. CANTABERRY
7-18-14

TYPICAL SECTIONS OF IMPROVEMENT

cggervasini 7/17/2014 7:42:50 PM
WORKSPACE: AHTD
L:\ROW\NO17709 - I-40 at I-430 Interchange Modifications\Drawings\RDA0609_TYP_ALL.dgn
REVISED DATE:

DATE REVISED	DATE FILMED	DATE REVISED	DATE FILMED	FED.RD. DIST.NO.	STATE	FED.AID PROJ.NO.	SHEET NO.	TOTAL SHEETS
				6	ARK.			
				JOB NO.		CA0609	22	693

(2) TYPICAL SECTIONS OF IMPROVEMENT

STATE OF ARKANSAS
LICENSED PROFESSIONAL ENGINEER
No. 13422
JOHN F. CANTABERY
7-18-14

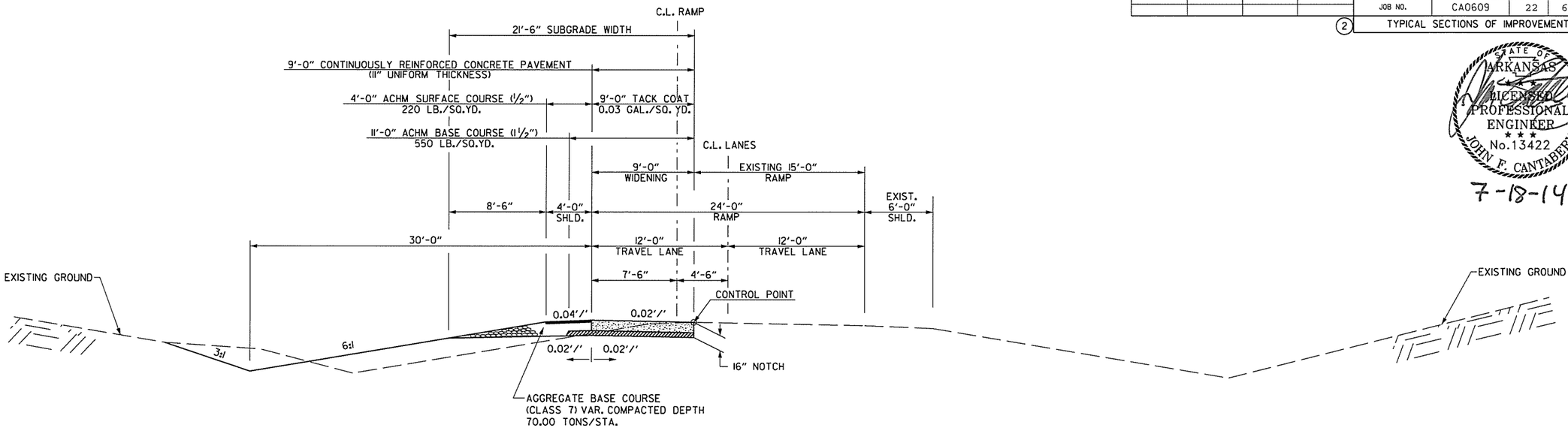

RAMP NOTCH AND WIDEN TYPICAL SECTION

(SHOWN IN DIRECTION OF TRAVEL)
RAMP 1 STA. 8220+78.25 TO STA. 8226+30.24
RAMP 4 STA. 8187+62.91 TO STA. 8190+84.89

NOTES:

THE FINAL 2" OF SURFACE COURSE IS TO BE PLACED AFTER ALL OTHER COURSES HAVE BEEN LAID. LONGITUDINAL JOINTS SHALL BE AT LANE LINES.

REFER TO CROSS SECTIONS FOR DEVIATION FROM THE NORMAL SLOPES. NO CHANGES SHALL BE MADE FROM THE PLANNED SLOPES WITHOUT THE APPROVAL OF THE ENGINEER.

THE THICKNESS OF AGGREGATE BASE COURSE SHALL BE WITHIN PLUS OR MINUS ONE INCH OF THE PLAN THICKNESS SHOWN. THE CONTRACTOR WILL CORRECT ANY DEFICIENT THICKNESS THAT DOES NOT MEET TOLERANCE INDICATED. PAYMENT WILL NOT BE MADE FOR MATERIAL PLACED IN EXCESS OF THE TOLERANCE INDICATED.

WITH THE APPROVAL OF THE ENGINEER, THE CONTRACTOR WILL BE ALLOWED TO SUBSTITUTE, AT NO ADDITIONAL COST TO THE DEPARTMENT, THE FIRST LIFT OF ACHM SURFACE COURSE (1/2") IN LIEU OF AGGREGATE BASE COURSE ON THE SHOULDERS.

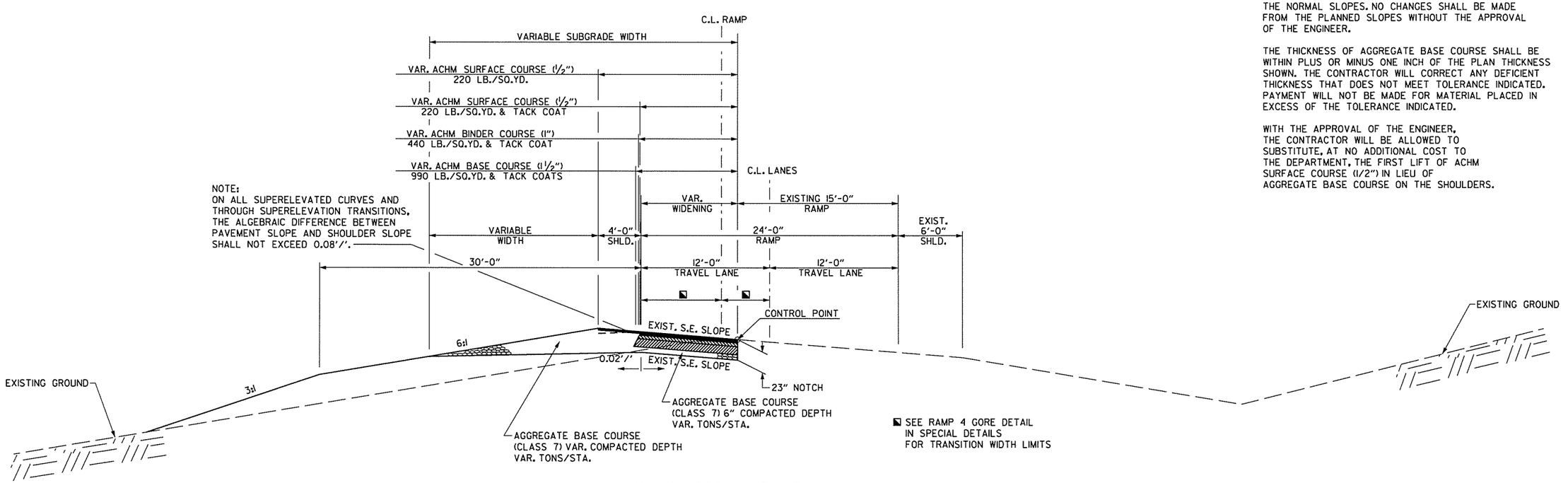

RAMP NOTCH AND WIDEN SUPERELEVATED SECTION

(SHOWN IN DIRECTION OF TRAVEL)
RAMP 4 STA. 8216+86.38 TO STA. 8220+91.64

TYPICAL SECTIONS OF IMPROVEMENT

cggervasini 7/17/2014 7:42:50 PM
WORKSPACE: AHTD
L:\ZOIN\I0I7109 - I-40 at I-430 Interchange Modifications\Drawings\RCA0609_TYP_ALL.dgn
REVISED DATE:

DATE REVISED	DATE FILMED	DATE REVISED	DATE FILMED	FED.RD. DIST.NO.	STATE	FED.AID PROJ.NO.	SHEET NO.	TOTAL SHEETS
				6	ARK.			
				JOB NO.		CA0609	23	693

(2) TYPICAL SECTIONS OF IMPROVEMENT

STATE OF ARKANSAS LICENSED PROFESSIONAL ENGINEER No.13422 JOHN F. CANTABERY

7-18-14

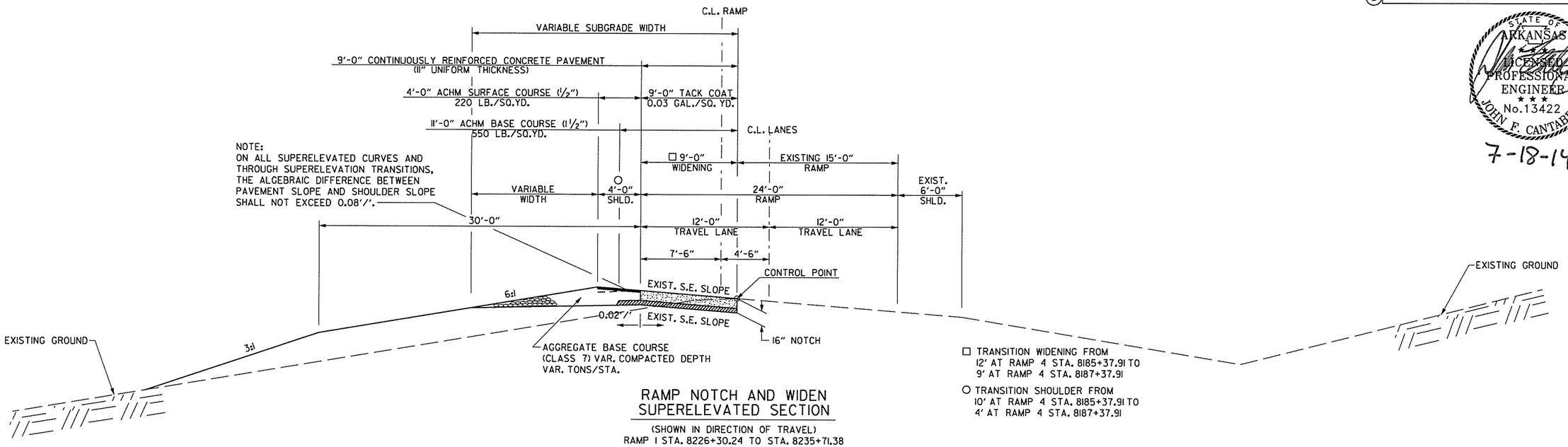

□ TRANSITION WIDENING FROM 12' AT RAMP 4 STA. 8185+37.91 TO 9' AT RAMP 4 STA. 8187+37.91

○ TRANSITION SHOULDER FROM 10' AT RAMP 4 STA. 8185+37.91 TO 4' AT RAMP 4 STA. 8187+37.91

RAMP NOTCH AND WIDEN SUPERELEVATED SECTION

(SHOWN IN DIRECTION OF TRAVEL)
RAMP 1 STA. 8226+30.24 TO STA. 8235+71.38
RAMP 4 STA. 8185+37.91 TO STA. 8187+62.91
RAMP 4 STA. 8214+70.32 TO STA. 8216+86.38

NOTES:

REFER TO CROSS SECTIONS FOR DEVIATION FROM THE NORMAL SLOPES. NO CHANGES SHALL BE MADE FROM THE PLANNED SLOPES WITHOUT THE APPROVAL OF THE ENGINEER.

THE THICKNESS OF AGGREGATE BASE COURSE SHALL BE WITHIN PLUS OR MINUS ONE INCH OF THE PLAN THICKNESS SHOWN. THE CONTRACTOR WILL CORRECT ANY DEFICIENT THICKNESS THAT DOES NOT MEET TOLERANCE INDICATED. PAYMENT WILL NOT BE MADE FOR MATERIAL PLACED IN EXCESS OF THE TOLERANCE INDICATED.

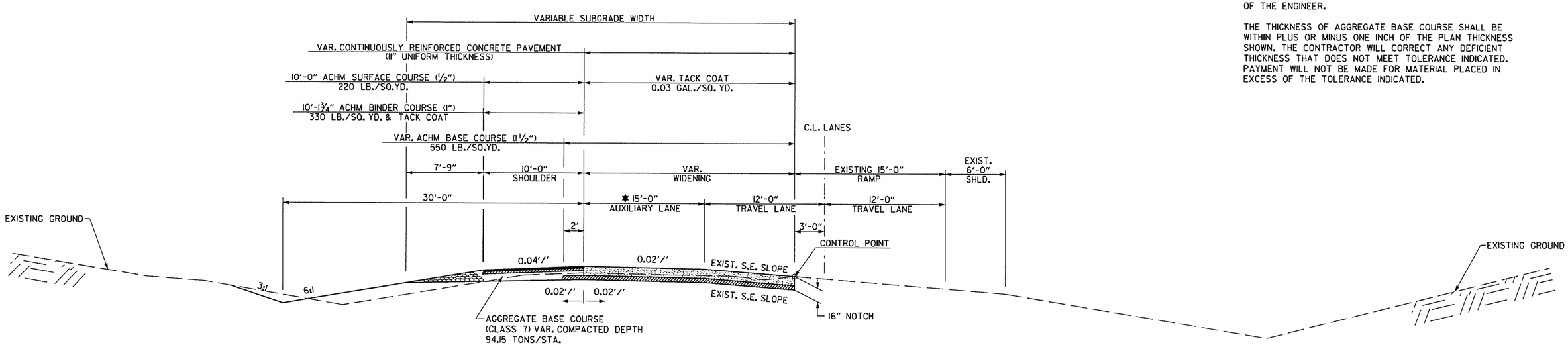

✱ AUXILIARY LANE VARIES FROM: STA. 8236+21.68 TO 8236+92.93

RAMP 1 NOTCH & WIDEN WITH AUXILIARY LANE TYPICAL SECTION

(SHOWN IN DIRECTION OF TRAVEL)
RAMP 1 STA. 8235+71.38 TO STA. 8236+92.93

TYPICAL SECTIONS OF IMPROVEMENT

cggervasini 7/17/2014 7:42:50 PM
WORKSPACE: AHTD
L:\2011\11017709 - I-40 at I-430 Interchange Modifications\Drawings\RCA0609_TYP_ALL.dgn
REVISED DATE:

DATE REVISED	DATE FILMED	DATE REVISED	DATE FILMED	FED.RD. DIST.NO.	STATE	FED.AID PROJ.NO.	SHEET NO.	TOTAL SHEETS
				6	ARK.			
				JOB NO.		CA0609	24	693

(2) TYPICAL SECTIONS OF IMPROVEMENT

STATE OF ARKANSAS
LICENSED PROFESSIONAL ENGINEER
No. 13422
JOHN F. CANTABERY
7-18-14

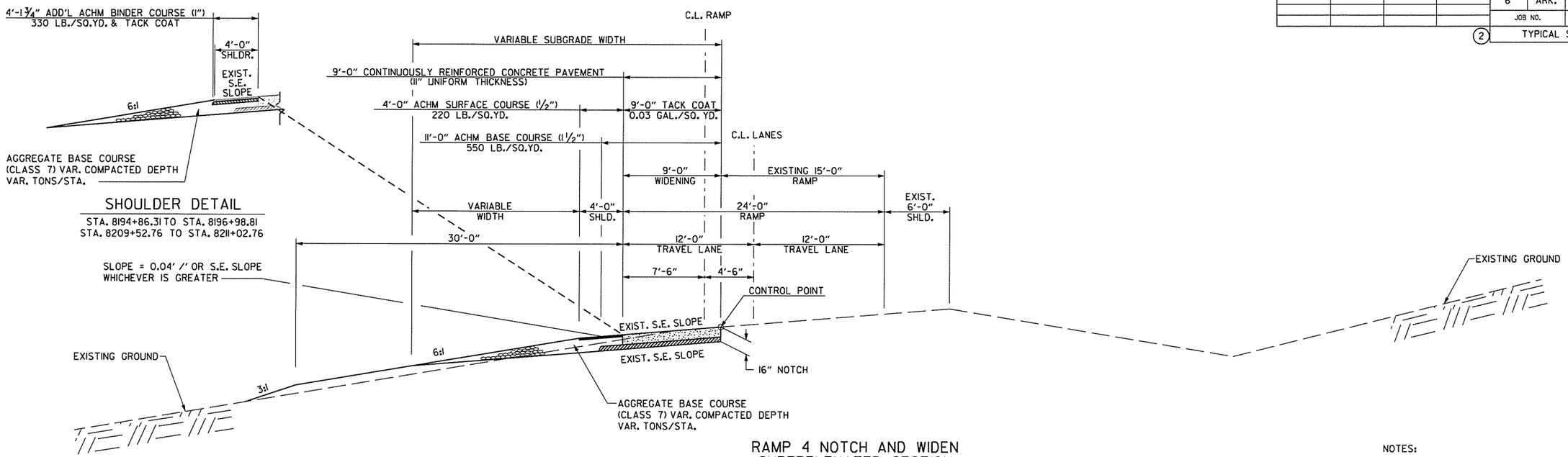

SHOULDER DETAIL

STA. 8194+86.31 TO STA. 8196+98.81
STA. 8209+52.76 TO STA. 8211+02.76

RAMP 4 NOTCH AND WIDEN SUPERELEVATED SECTION

(SHOWN IN DIRECTION OF TRAVEL)
STA. 8190+84.89 TO STA. 8196+98.81
STA. 8209+52.76 TO STA. 8214+70.32

NOTES:

REFER TO CROSS SECTIONS FOR DEVIATION FROM THE NORMAL SLOPES. NO CHANGES SHALL BE MADE FROM THE PLANNED SLOPES WITHOUT THE APPROVAL OF THE ENGINEER.

THE THICKNESS OF AGGREGATE BASE COURSE SHALL BE WITHIN PLUS OR MINUS ONE INCH OF THE PLAN THICKNESS SHOWN. THE CONTRACTOR WILL CORRECT ANY DEFICIENT THICKNESS THAT DOES NOT MEET TOLERANCE INDICATED. PAYMENT WILL NOT BE MADE FOR MATERIAL PLACED IN EXCESS OF THE TOLERANCE INDICATED.

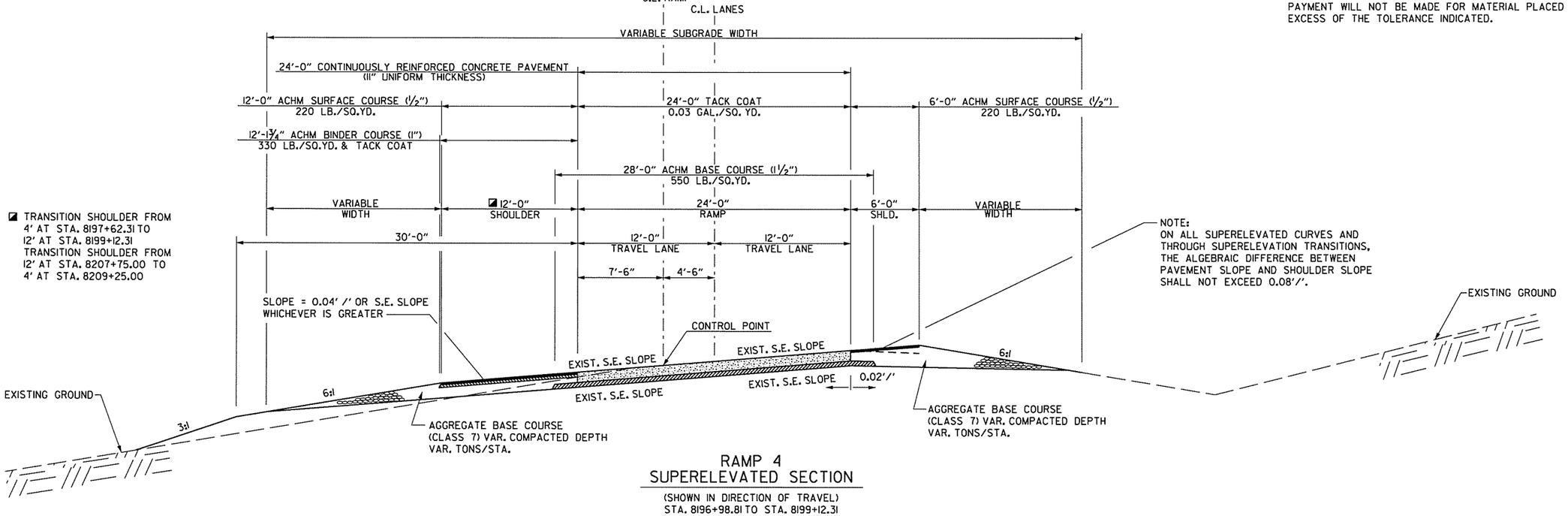

◪ TRANSITION SHOULDER FROM 4' AT STA. 8197+62.31 TO 12' AT STA. 8199+12.31
TRANSITION SHOULDER FROM 12' AT STA. 8207+75.00 TO 4' AT STA. 8209+25.00

NOTE:
ON ALL SUPERELEVATED CURVES AND THROUGH SUPERELEVATION TRANSITIONS, THE ALGEBRAIC DIFFERENCE BETWEEN PAVEMENT SLOPE AND SHOULDER SLOPE SHALL NOT EXCEED 0.08'/'.

RAMP 4 SUPERELEVATED SECTION

(SHOWN IN DIRECTION OF TRAVEL)
STA. 8196+98.81 TO STA. 8199+12.31
STA. 8207+75.00 TO STA. 8209+52.76

TYPICAL SECTIONS OF IMPROVEMENT

cggervasini 7/17/2014 7:42:51 PM
WORKSPACE: AHTD
L:\2011\1017709 - I-40 at I-430 Interchange Modifications\Drawings\RCA0609_TYP_ALL.dgn
REVISED DATE:

DATE REVISED	DATE FILMED	DATE REVISED	DATE FILMED	FED.RD. DIST.NO.	STATE	FED.AID PROJ.NO.	SHEET NO.	TOTAL SHEETS
				6	ARK.			
				JOB NO.		CA0609	25	693

(2) TYPICAL SECTIONS OF IMPROVEMENT

STATE OF ARKANSAS
LICENSED PROFESSIONAL ENGINEER
No. 13422
JOHN F. CANTABERY
7-18-14

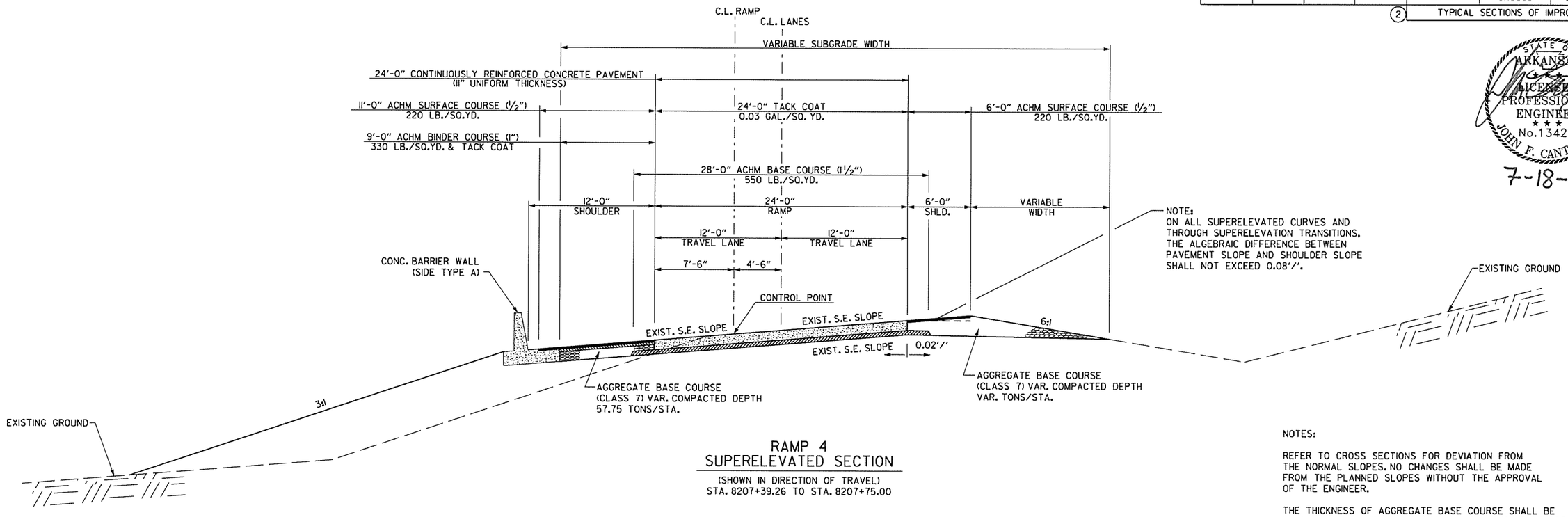

RAMP 4
SUPERELEVATED SECTION

(SHOWN IN DIRECTION OF TRAVEL)
STA. 8207+39.26 TO STA. 8207+75.00

NOTES:

REFER TO CROSS SECTIONS FOR DEVIATION FROM THE NORMAL SLOPES. NO CHANGES SHALL BE MADE FROM THE PLANNED SLOPES WITHOUT THE APPROVAL OF THE ENGINEER.

THE THICKNESS OF AGGREGATE BASE COURSE SHALL BE WITHIN PLUS OR MINUS ONE INCH OF THE PLAN THICKNESS SHOWN. THE CONTRACTOR WILL CORRECT ANY DEFICIENT THICKNESS THAT DOES NOT MEET TOLERANCE INDICATED. PAYMENT WILL NOT BE MADE FOR MATERIAL PLACED IN EXCESS OF THE TOLERANCE INDICATED.

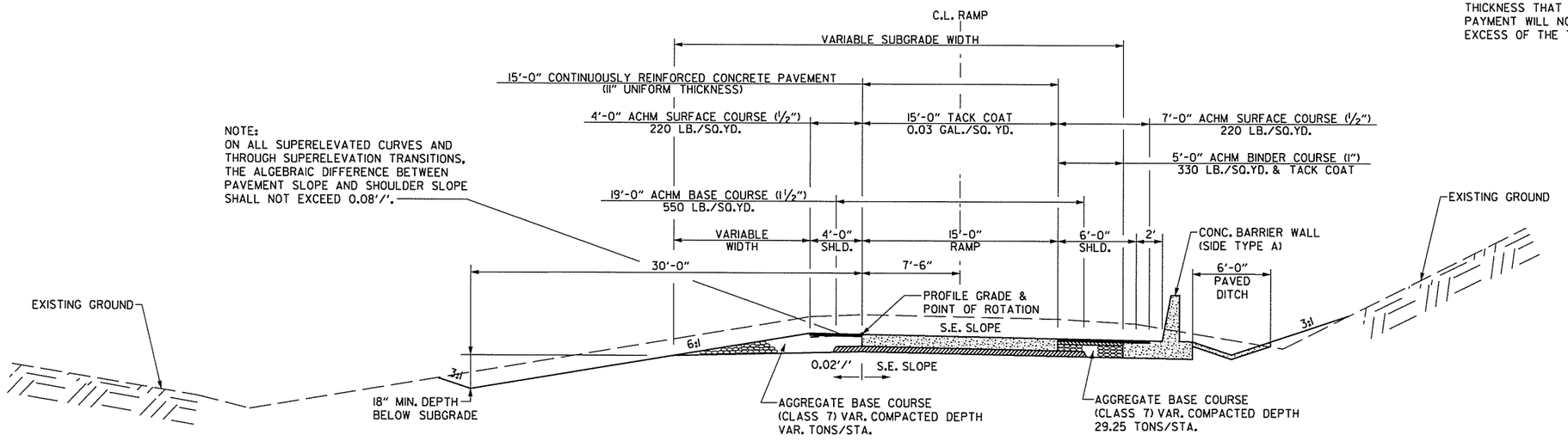

RAMP 3 WITH BARRIER
SUPERELEVATED SECTION

(SHOWN IN DIRECTION OF TRAVEL)
STA. 665+27.81 TO STA. 671+00.00

TYPICAL SECTIONS OF IMPROVEMENT

cggervasini 7/17/2014 1:42:51 PM
WORKSPACE: AHTD
L:\2014\14017709 - I-40 at I-430 Interchange Modifications\Drawings\RCA0609_TYP_ALL.dgn
REVISED DATE:

DATE REVISED	DATE FILMED	DATE REVISED	DATE FILMED	FED.RD. DIST.NO.	STATE	FED.AID PROJ.NO.	SHEET NO.	TOTAL SHEETS
				6	ARK.			
				JOB NO.		CA0609	26	693

(2) TYPICAL SECTIONS OF IMPROVEMENT

STATE OF ARKANSAS
LICENSED PROFESSIONAL ENGINEER
No. 13422
JOHN F. CANTABERY
7-18-14

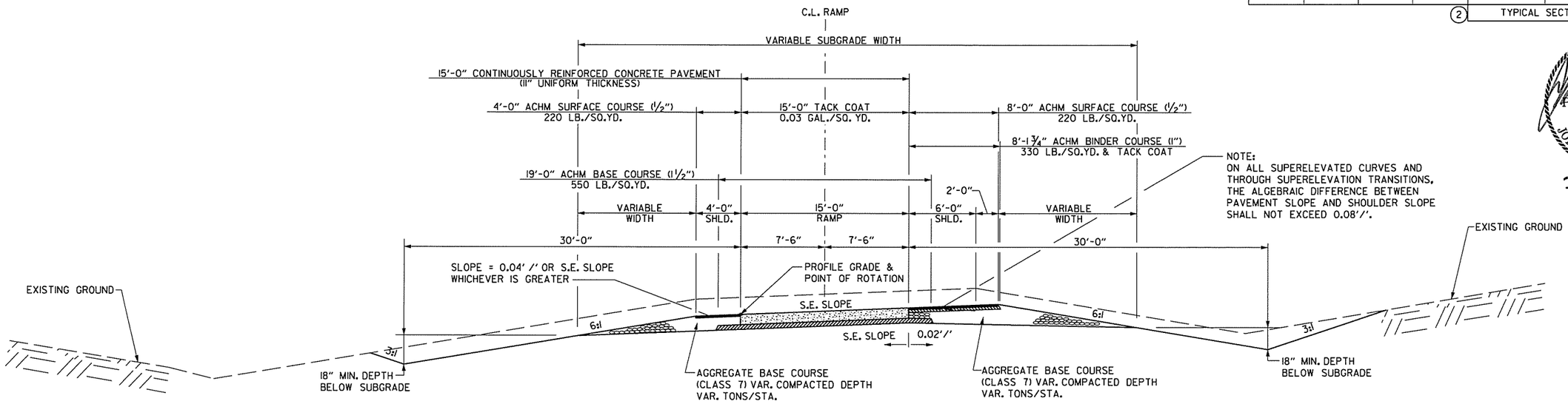

RAMP 3
SUPERELEVATED SECTION

(SHOWN IN DIRECTION OF TRAVEL)
STA. 671+00.00 TO STA. 672+00.00

NOTES:

REFER TO CROSS SECTIONS FOR DEVIATION FROM THE NORMAL SLOPES. NO CHANGES SHALL BE MADE FROM THE PLANNED SLOPES WITHOUT THE APPROVAL OF THE ENGINEER.

THE THICKNESS OF AGGREGATE BASE COURSE SHALL BE WITHIN PLUS OR MINUS ONE INCH OF THE PLAN THICKNESS SHOWN. THE CONTRACTOR WILL CORRECT ANY DEFICIENT THICKNESS THAT DOES NOT MEET TOLERANCE INDICATED. PAYMENT WILL NOT BE MADE FOR MATERIAL PLACED IN EXCESS OF THE TOLERANCE INDICATED.

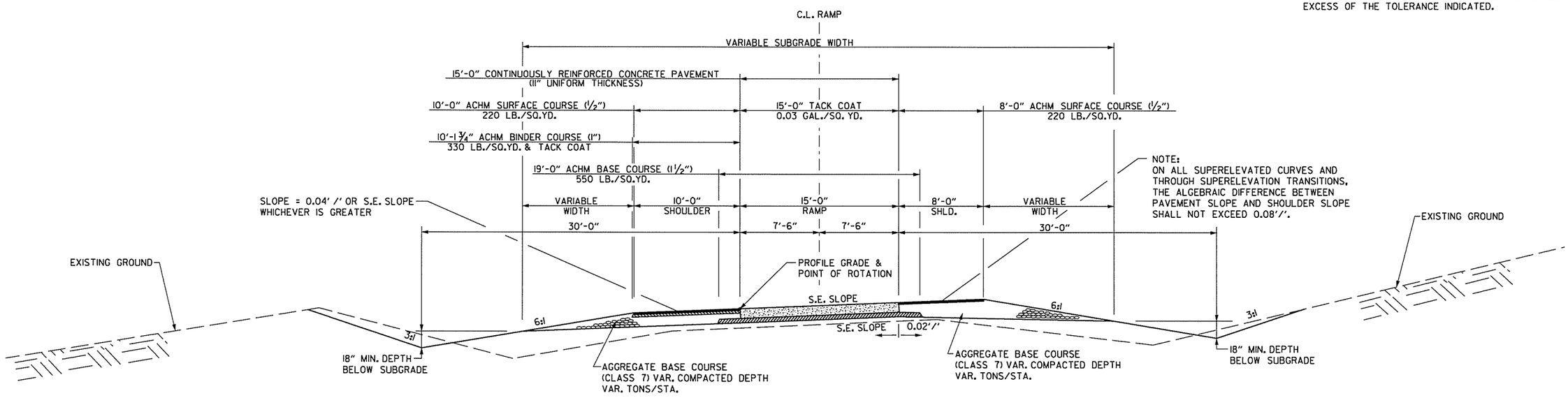

RAMP 3
SUPERELEVATED SECTION

(SHOWN IN DIRECTION OF TRAVEL)
STA. 688+50.00 TO STA. 690+21.65

TYPICAL SECTIONS OF IMPROVEMENT

cggervasini 7/17/2014 7:42:51 PM
WORKSPACE1 AHTD
L:\ROW\601709 - I-40 at I-430 Interchange Modifications\Drawings\RC\CA0609_TYP_ALL.dgn
REVISED DATE:

DATE REVISED	DATE FILMED	DATE REVISED	DATE FILMED	FED.RD. DIST.NO.	STATE	FED.AID PROJ.NO.	SHEET NO.	TOTAL SHEETS
				6	ARK.			
				JOB NO.		CA0609	27	693
				(2)	TYPICAL SECTIONS OF IMPROVEMENT			

STATE OF ARKANSAS
LICENSED PROFESSIONAL ENGINEER
No. 13422
JOHN F. CANTABERY

7-18-14

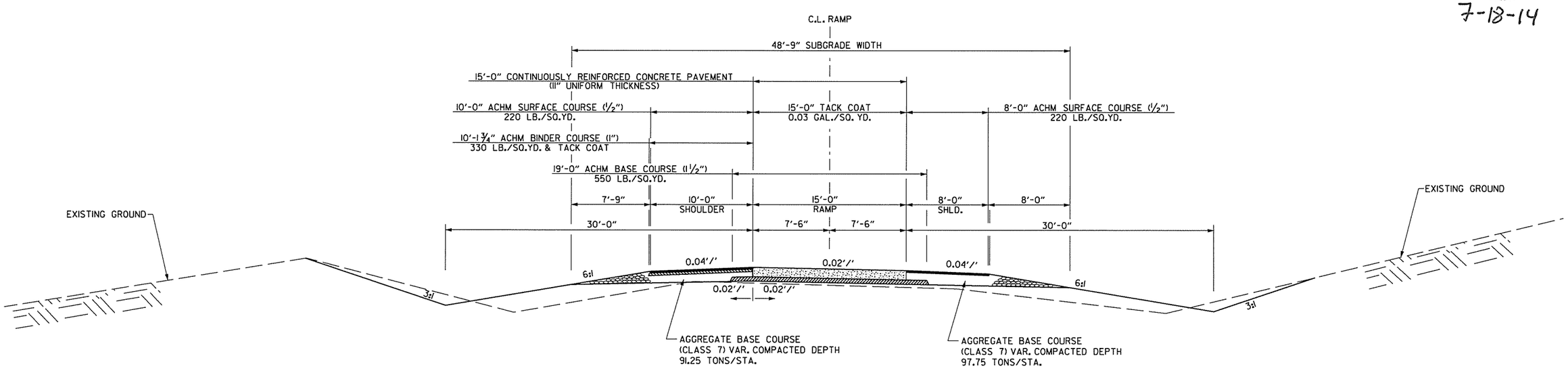

RAMP 3
TYPICAL SECTION

(SHOWN IN DIRECTION OF TRAVEL)
STA. 690+21.65 TO STA. 691+51.05

NOTES:

REFER TO CROSS SECTIONS FOR DEVIATION FROM THE NORMAL SLOPES. NO CHANGES SHALL BE MADE FROM THE PLANNED SLOPES WITHOUT THE APPROVAL OF THE ENGINEER.

THE THICKNESS OF AGGREGATE BASE COURSE SHALL BE WITHIN PLUS OR MINUS ONE INCH OF THE PLAN THICKNESS SHOWN. THE CONTRACTOR WILL CORRECT ANY DEFICIENT THICKNESS THAT DOES NOT MEET TOLERANCE INDICATED. PAYMENT WILL NOT BE MADE FOR MATERIAL PLACED IN EXCESS OF THE TOLERANCE INDICATED.

TYPICAL SECTIONS OF IMPROVEMENT

cggervasini 7/17/2014 7:42:52 PM
WORKSPACE: AHTD
L:\CONWO1709 - I-40 at I-430 Interchange Modifications\Drawings\RCA0609_TYP_ALL.dgn
REVISED DATE:

DATE REVISED	DATE FILMED	DATE REVISED	DATE FILMED	FED.RD. DIST.NO.	STATE	FED.AID PROJ.NO.	SHEET NO.	TOTAL SHEETS
				6	ARK.			
				JOB NO.		CA0609	28	693

(2) TYPICAL SECTIONS OF IMPROVEMENT

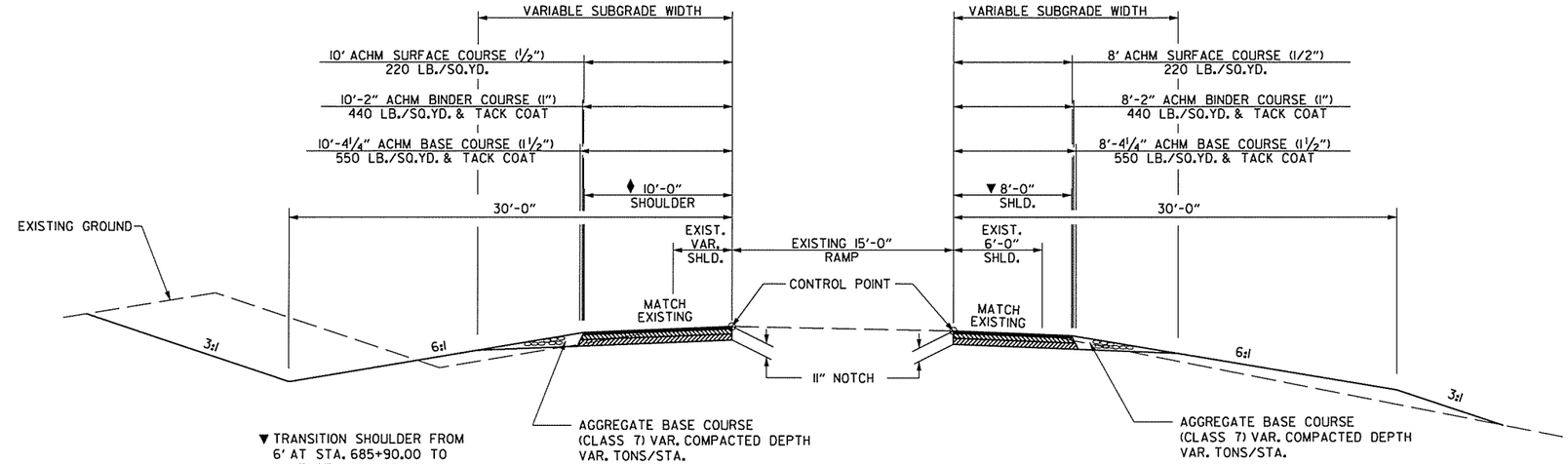

▼ TRANSITION SHOULDER FROM 6' AT STA. 685+90.00 TO 8' AT STA. 686+90.00

♦ TRANSITION SHOULDER FROM 4' AT STA. 685+90.00 TO 10' AT STA. 686+90.00

SHOULDER RECONSTRUCTION
TYPICAL SECTION FOR MAINTENANCE OF TRAFFIC

RAMP 3 STA. 685+90.00 TO STA. 688+50.00

NOTES:

THE FINAL 2" OF SURFACE COURSE IS TO BE PLACED AFTER ALL OTHER COURSES HAVE BEEN LAID. LONGITUDINAL JOINTS SHALL BE AT LANE LINES.

REFER TO CROSS SECTIONS FOR DEVIATION FROM THE NORMAL SLOPES. NO CHANGES SHALL BE MADE FROM THE PLANNED SLOPES WITHOUT THE APPROVAL OF THE ENGINEER.

THE THICKNESS OF AGGREGATE BASE COURSE SHALL BE WITHIN PLUS OR MINUS ONE INCH OF THE PLAN THICKNESS SHOWN. THE CONTRACTOR WILL CORRECT ANY DEFICIENT THICKNESS THAT DOES NOT MEET TOLERANCE INDICATED. PAYMENT WILL NOT BE MADE FOR MATERIAL PLACED IN EXCESS OF THE TOLERANCE INDICATED.

STATE OF ARKANSAS
LICENSED PROFESSIONAL ENGINEER
No.13422
JOHN F. CANTABERY
7-18-14

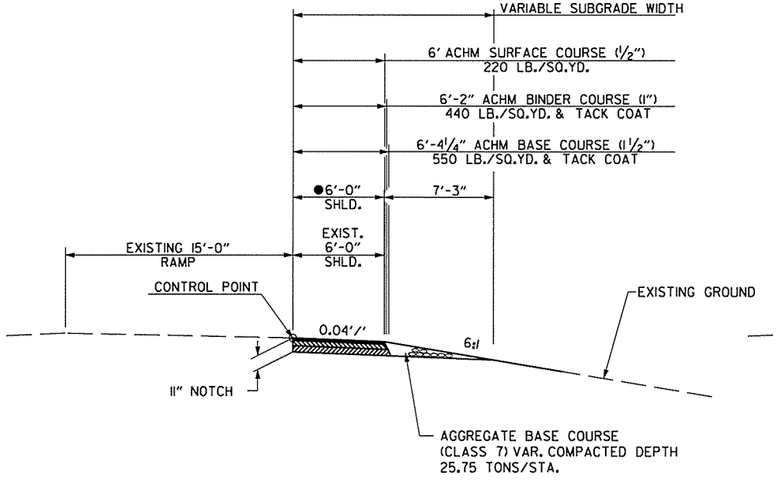

SHOULDER RECONSTRUCTION
TYPICAL SECTION FOR MAINTENANCE OF TRAFFIC

(SHOWN IN DIRECTION OF TRAVEL)
RAMP 1 STA. 8216+74.66 TO STA. 8218+74.66
RAMP 3 STA. 663+54.20 TO STA. 665+27.81
RAMP 3 STA. 672+00.00 TO 674+40.00

● TRANSITION SHOULDER FROM 6' AT RAMP 3 STA. 664+07.81 TO 8' AT RAMP 3 STA. 665+27.81

TRANSITION SHOULDER FROM 8' AT RAMP 3 STA. 672+00.00 TO 6' AT RAMP 3 STA. 674+40.00

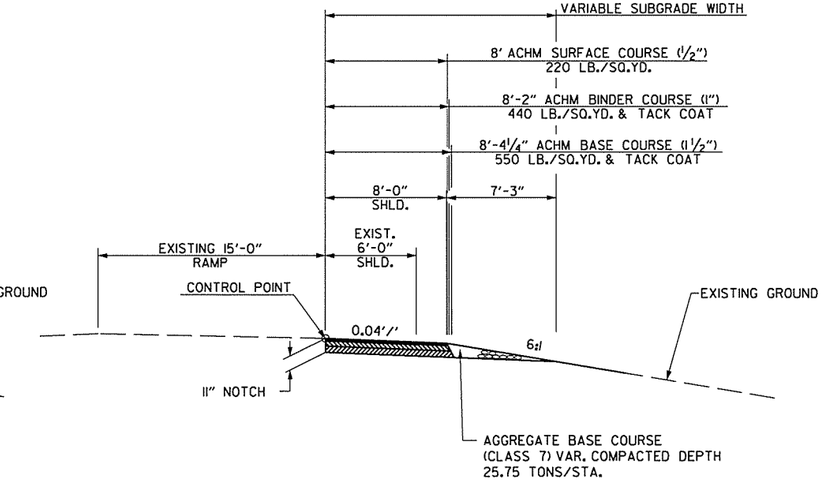

SHOULDER RECONSTRUCTION
TYPICAL SECTION FOR MAINTENANCE OF TRAFFIC

(SHOWN IN DIRECTION OF TRAVEL)
RAMP 3 STA. 688+50.00 TO 692+30.00

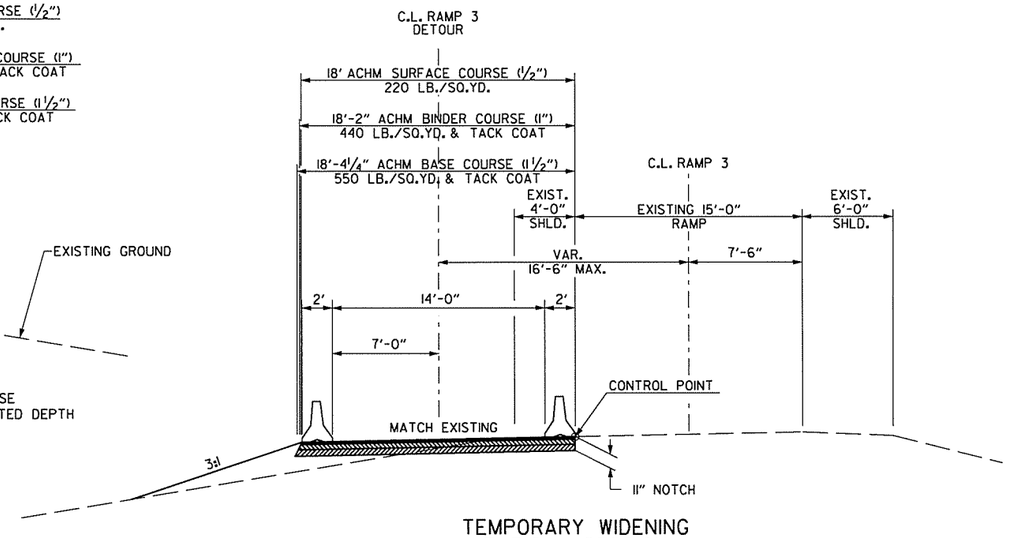

TEMPORARY WIDENING
TYPICAL SECTION

C.L. RAMP 3 DETOUR STA. 12+25.67 TO STA. 19+62.13

TYPICAL SECTIONS OF IMPROVEMENT

cggervasini 7/17/2014 1:42:52 PM
WORKSPACE: AHTD
L:\ROW\100709 - I-40 at I-430 Interchange Modifications\Drawings\RCA0609_TYP_ALL.dgn
REVISED DATE:

...\3-Typical Sections of Improvement-pdx\drawings\2655dgnlib\d cap cad0603\700 cadd files\777 roadway files\drawings\3-Typical Sections of Improvement-pavement design.dgn
7/16/2014 12:47 PM

DATE REVISED	DATE FILMED	DATE REVISED	DATE FILMED	FED.RD. DIST.NO.	STATE	FED.AID PROJ.NO.	SHEET NO.	TOTAL SHEETS
				6	ARK.			
				JOB NO.		CA0609	29	693

(2) TYPICAL SECTIONS OF IMPROVEMENT

STATE OF ARKANSAS
REGISTERED PROFESSIONAL ENGINEER
No. 11427
KEVIN G. TOBLESSY
7/17/14

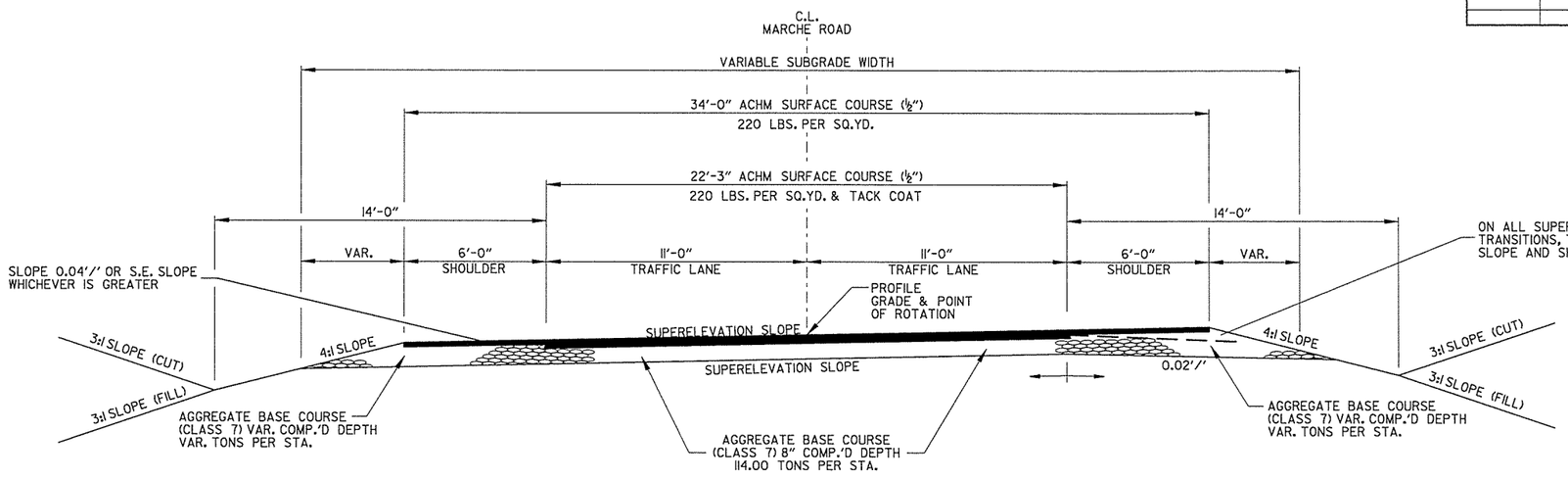

ON ALL SUPERELEVATED CURVES AND THROUGH SUPERELEVATION TRANSITIONS, THE ALGEBRAIC DIFFERENCE BETWEEN THE PAVEMENT SLOPE AND SHOULDER SLOPE SHALL NOT EXCEED 0.08'/'.

MARCHE ROAD FULL DEPTH CONSTRUCTION
SUPERELEVATED CURVE TO LEFT

STA. 7+35.35 TO STA. 9+34.18

NOTES:

REFER TO CROSS SECTIONS FOR DEVIATION FROM THE NORMAL SLOPES. NO CHANGES SHALL BE MADE FROM THE PLANNED SLOPES WITHOUT THE APPROVAL OF THE ENGINEER.

THE THICKNESS OF AGGREGATE BASE COURSE SHALL BE WITHIN PLUS OR MINUS ONE INCH OF THE PLAN THICKNESS SHOWN. THE CONTRACTOR WILL CORRECT ANY DEFICIENT THICKNESS THAT DOES NOT MEET TOLERANCE INDICATED. PAYMENT WILL NOT BE MADE FOR MATERIAL PLACED IN EXCESS OF THE TOLERANCE INDICATED.

THE FINAL 2" OF SURFACE COURSE IS TO BE PLACED AFTER ALL OTHER COURSES HAVE BEEN LAID. LONGITUDINAL JOINTS SHALL BE AT THE LANE LINES.

WITH THE APPROVAL OF THE ENGINEER, THE CONTRACTOR WILL BE ALLOWED TO SUBSTITUTE, AT NO ADDITIONAL COST TO THE DEPARTMENT, THE FIRST LIFT OF ACHM SURFACE COURSE (½") IN LIEU OF AGGREGATE BASE COURSE ON THE SHOULDERS.

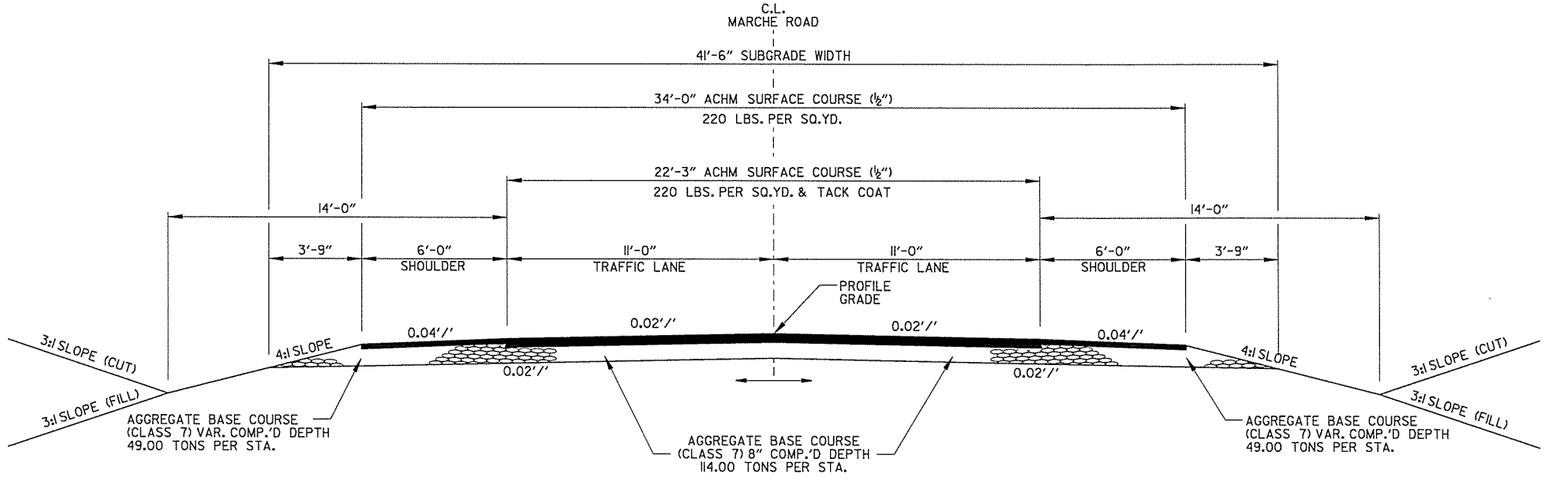

MARCHE ROAD FULL DEPTH CONSTRUCTION

STA. 9+34.18 TO STA. 12+77.69
STA. 16+68.31 TO STA. 22+13.96

TYPICAL SECTIONS OF IMPROVEMENT

DATE REVISED	DATE FILMED	DATE REVISED	DATE FILMED	FED.RD. DIST.NO.	STATE	FED.AID PROJ.NO.	SHEET NO.	TOTAL SHEETS
				6	ARK.			
				JOB NO.		CA0609	30	693

(2) TYPICAL SECTIONS OF IMPROVEMENT

STATE OF ARKANSAS
REGISTERED PROFESSIONAL ENGINEER
No. 11427
KEVIN G. TOBLESKY
7/17/14

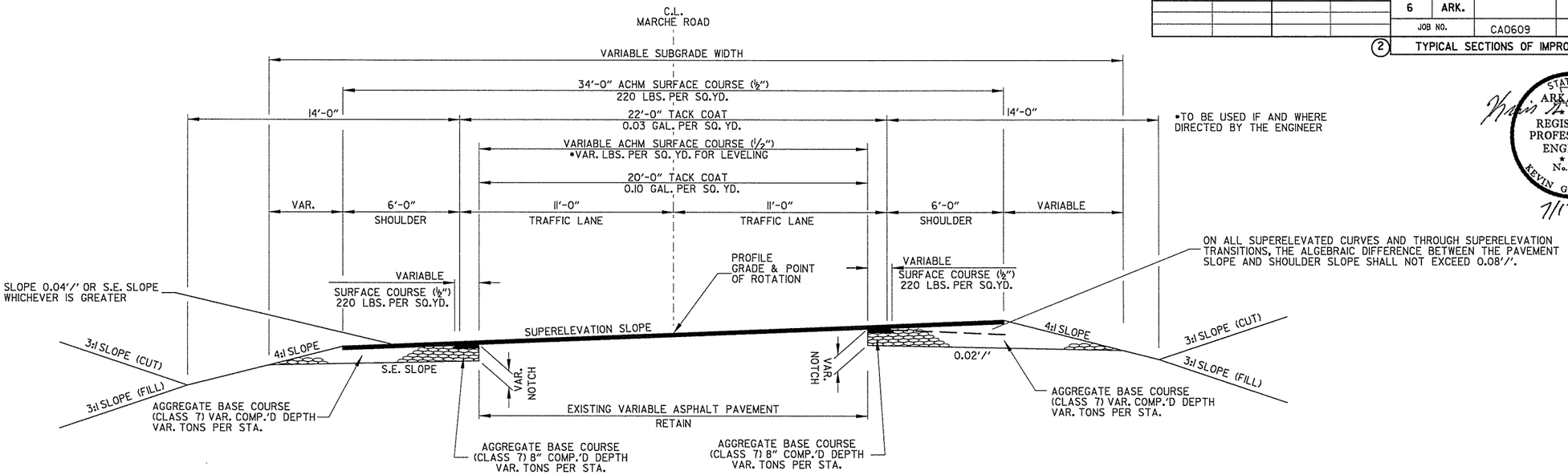

MARCHE ROAD NOTCH AND WIDEN — SUPERELEVATED CURVE TO LEFT

STA. 4+78.20 TO STA. 7+35.35
STA. 22+56.07 TO STA. 25+14.65

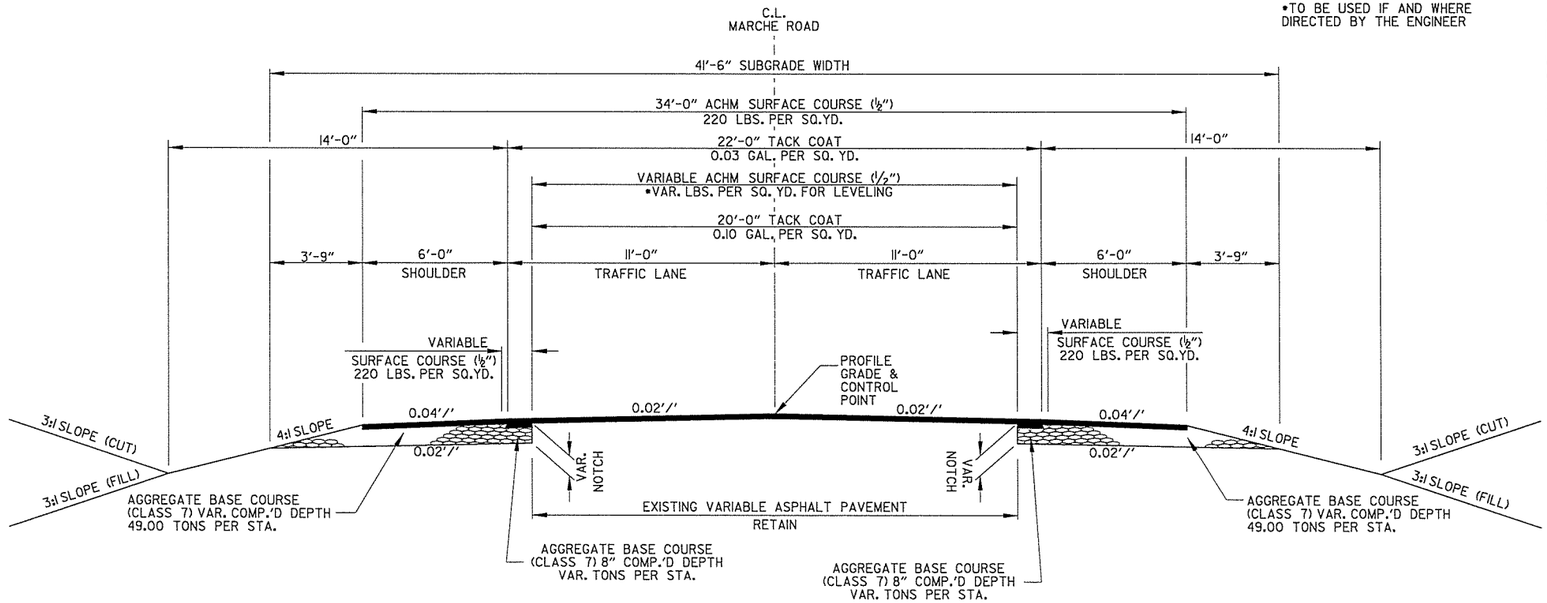

•TO BE USED IF AND WHERE DIRECTED BY THE ENGINEER

MARCHE ROAD NOTCH AND WIDEN

STA. 22+13.96 TO STA. 22+56.07

NOTES:

REFER TO CROSS SECTIONS FOR DEVIATION FROM THE NORMAL SLOPES. NO CHANGES SHALL BE MADE FROM THE PLANNED SLOPES WITHOUT THE APPROVAL OF THE ENGINEER.

THE THICKNESS OF AGGREGATE BASE COURSE SHALL BE WITHIN PLUS OR MINUS ONE INCH OF THE PLAN THICKNESS SHOWN. THE CONTRACTOR WILL CORRECT ANY DEFICIENT THICKNESS THAT DOES NOT MEET TOLERANCE INDICATED. PAYMENT WILL NOT BE MADE FOR MATERIAL PLACED IN EXCESS OF THE TOLERANCE INDICATED.

THE FINAL 2" OF SURFACE COURSE IS TO BE PLACED AFTER ALL OTHER COURSES HAVE BEEN LAID. LONGITUDINAL JOINTS SHALL BE AT THE LANE LINES.

WITH THE APPROVAL OF THE ENGINEER, THE CONTRACTOR WILL BE ALLOWED TO SUBSTITUTE, AT NO ADDITIONAL COST TO THE DEPARTMENT, THE FIRST LIFT OF ACHM SURFACE COURSE (") IN LIEU OF AGGREGATE BASE COURSE ON THE SHOULDERS.

ASPHALT FOR LEVELING OF EXISTING PAVEMENT SHALL BE PLACED ONLY IF AND WHERE DIRECTED BY THE ENGINEER. CALCULATIONS FOR THE AMOUNT OF LEVELING AND/OR LEVELING OPERATIONS SHALL BE PERFORMED BEFORE CONSTRUCTING NOTCH AND WIDENING. CALCULATIONS WILL NOT BE PAID DIRECTLY BUT PAYMENT WILL BE CONSIDERED INCLUDED IN THE VARIOUS PAY ITEMS.

TYPICAL SECTIONS OF IMPROVEMENT

7/16/2014 1:22:48 PM ...\3-Typical Sections of Improvement-pavementdesign.dgn
...\700 cadd files\777 roadway files\drawings\3-Typical Sections of Improvement-pavementdesign.dgn

DATE REVISED	DATE FILMED	DATE REVISED	DATE FILMED	FED.RD. DIST.NO.	STATE	FED.AID PROJ.NO.	SHEET NO.	TOTAL SHEETS
				6	ARK.			
				JOB NO.		CA0609	31	693
				(2)	TYPICAL SECTIONS OF IMPROVEMENT			

STATE OF ARKANSAS
LICENSED PROFESSIONAL ENGINEER
No.13422
JOHN F. CANTABERY
7-18-14

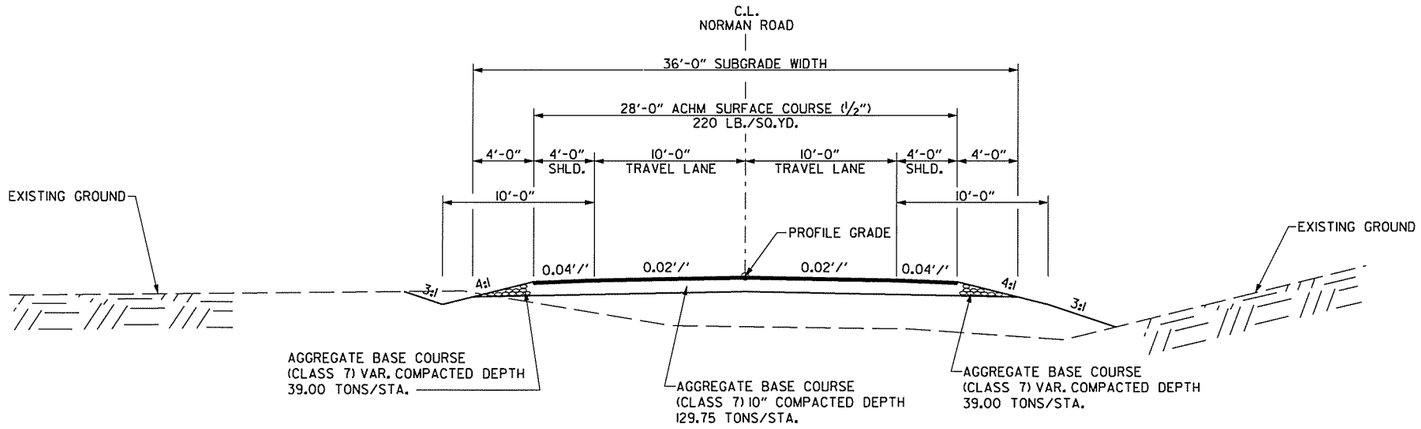

LOCAL ROAD TYPICAL SECTION

NORMAN ROAD STA. 15+00.00 TO STA. 18+57.71
NORMAN ROAD STA. 21+37.93 TO STA. 24+20.00
NEVA ROAD STA. 9+70.00 TO STA. 9+90.00

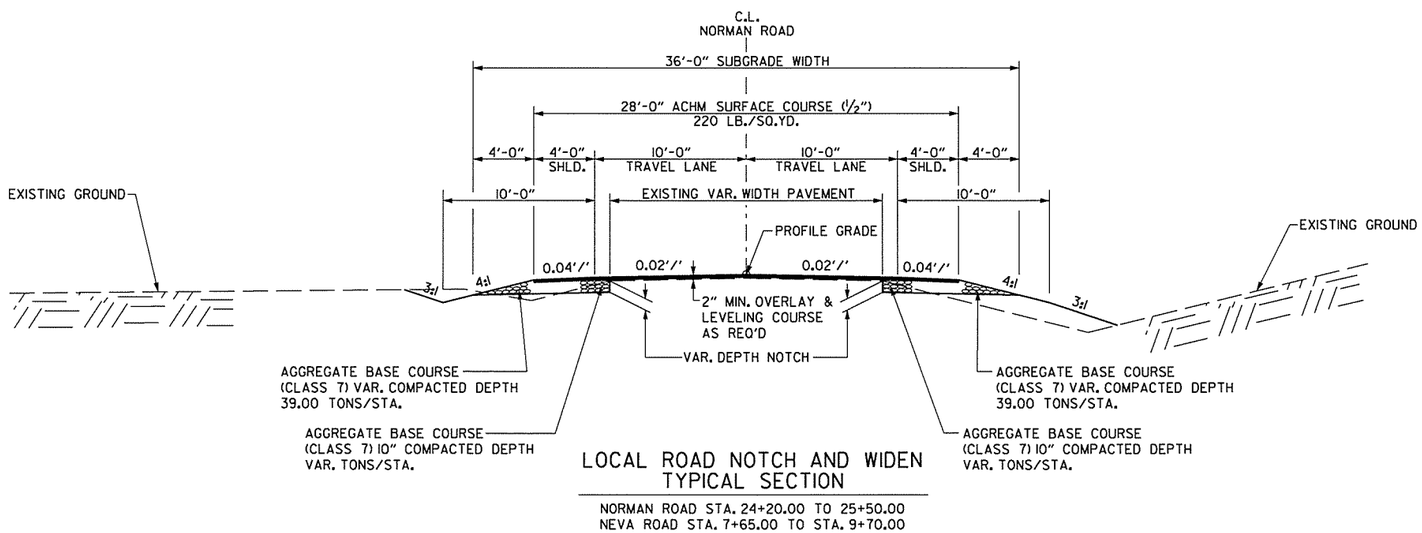

LOCAL ROAD NOTCH AND WIDEN TYPICAL SECTION

NORMAN ROAD STA. 24+20.00 TO 25+50.00
NEVA ROAD STA. 7+65.00 TO STA. 9+70.00

NOTES:

THE FINAL 2" OF SURFACE COURSE IS TO BE PLACED AFTER ALL OTHER COURSES HAVE BEEN LAID. LONGITUDINAL JOINTS SHALL BE AT LANE LINES.

REFER TO CROSS SECTIONS FOR DEVIATION FROM THE NORMAL SLOPES. NO CHANGES SHALL BE MADE FROM THE PLANNED SLOPES WITHOUT THE APPROVAL OF THE ENGINEER.

ASPHALT FOR LEVELING OF EXISTING PAVEMENT SHALL BE PLACED ONLY IF AND WHERE DIRECTED BY THE ENGINEER. CALCULATIONS FOR THE AMOUNT OF LEVELING AND/OR LEVELING OPERATIONS SHALL BE PERFORMED BEFORE CONSTRUCTING NOTCH AND WIDENING. CALCULATIONS WILL NOT BE PAID FOR DIRECTLY, BUT PAYMENTS WILL BE CONSIDERED INCLUDED IN THE VARIOUS ITEMS.

THE THICKNESS OF AGGREGATE BASE COURSE SHALL BE WITHIN PLUS OR MINUS ONE INCH OF THE PLAN THICKNESS SHOWN. THE CONTRACTOR WILL CORRECT ANY DEFICIENT THICKNESS THAT DOES NOT MEET TOLERANCE INDICATED. PAYMENT WILL NOT BE MADE FOR MATERIAL PLACED IN EXCESS OF THE TOLERANCE INDICATED.

WITH THE APPROVAL OF THE ENGINEER, THE CONTRACTOR WILL BE ALLOWED TO SUBSTITUTE, AT NO ADDITIONAL COST TO THE DEPARTMENT, THE FIRST LIFT OF ACHM SURFACE COURSE (1/2") IN LIEU OF AGGREGATE BASE COURSE ON THE SHOULDERS.

cggervasini 7/17/2014 7:42:52 PM
WORKSPACE: AHTD
L:\2014\14017709 - I-40 at I-430 Interchange Modifications\Drawings\RCA0609_TYP_ALL.dgn
REVISED DATE:

DATE REVISED	DATE FILMED	DATE REVISED	DATE FILMED	FED.RD. DIST.NO.	STATE	FED.AID PROJ.NO.	SHEET NO.	TOTAL SHEETS
				6	ARK.			
				JOB NO.		CA0609	32	693
				(2)	SPECIAL DETAILS			

STATE OF ARKANSAS
REGISTERED PROFESSIONAL ENGINEER
No. 11427
KEVIN G. TOBLESEY
7/17/14

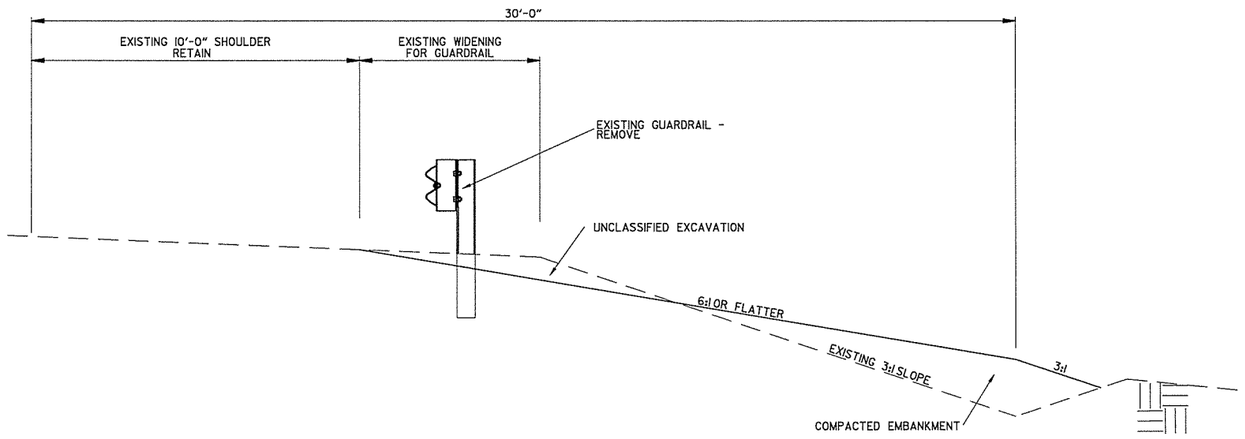

SECTION DETAIL FOR REMOVAL OF GUARDRAIL

(SHOWN IN DIRECTION OF TRAFFIC)

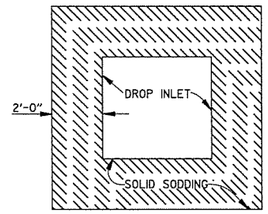

PLAN

DETAIL OF SOLID SODDING AROUND DROP INLET

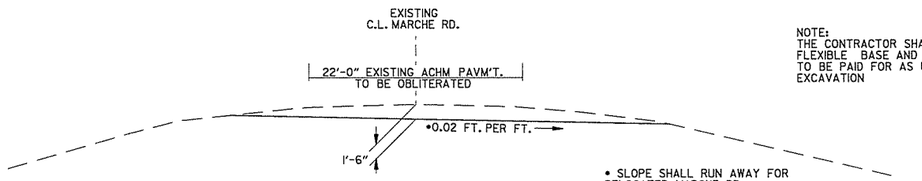

NOTE:
THE CONTRACTOR SHALL REMOVE ALL FLEXIBLE BASE AND ASPHALTIC PAVMENT. TO BE PAID FOR AS UNCLASSIFIED EXCAVATION

OBLITERATION OF MARCHE ROAD

7/16/2014 1:24:41 PM ...\drawings\4-SpecialDetails.dgn t:\job\wixm2650 dhtd cap ca0603\700 cadd files\777 roadway files\drawings\4-SpecialDetails.dgn

DATE REVISED	DATE FILMED	DATE REVISED	DATE FILMED	FED.RD. DIST.NO.	STATE	FED.AID PROJ.NO.	SHEET NO.	TOTAL SHEETS
				6	ARK.			
				JOB NO.		CA0609	33	693

(2) SPECIAL DETAILS

STATE OF ARKANSAS
REGISTERED PROFESSIONAL ENGINEER
No. 11427
KEVIN G. TOBLESEY
7/17/14

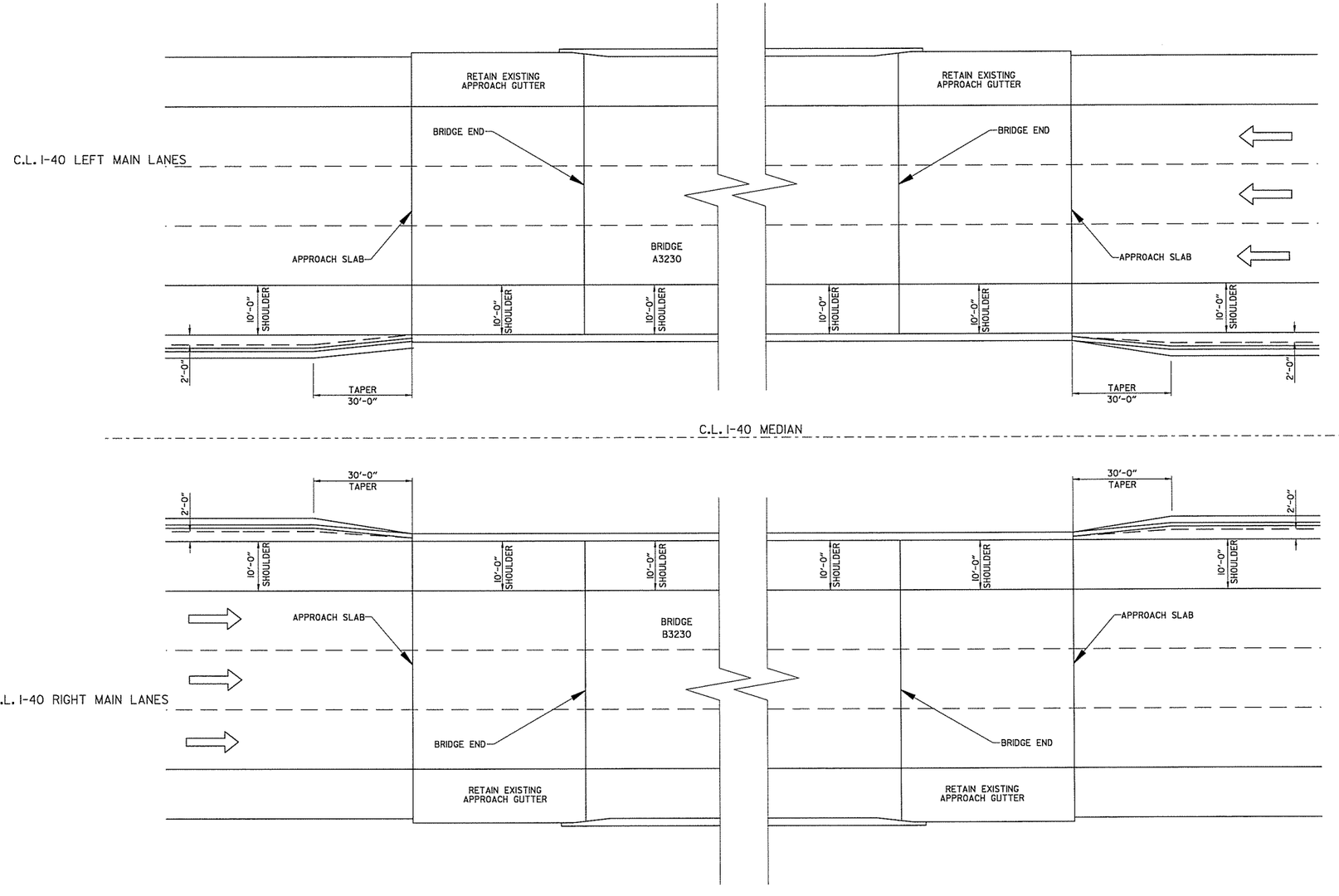

NOTE:
BARRIER TRANSITION LOCATED ON APPROACH GUTTER. FOR ADDITIONAL INFORMATION REFER TO WHITE OAK BAYOU APPROACH GUTTER DETAIL.

CONCRETE BARRIER WALL TRANSITION AT
WHITE OAK BAYOU APPROACH GUTTER

7/16/2014 1:24:41 PM ...\drawings\4-SpecialDetails.dgn t:\lob\wixm2650 ahtd cap ca0603\700 cadd files\777 roadway files\drawings\4-SpecialDetails.dgn

DATE REVISED	DATE FILMED	DATE REVISED	DATE FILMED	FED.RD. DIST.NO.	STATE	FED.AID PROJ.NO.	SHEET NO.	TOTAL SHEETS
				6	ARK.			
				JOB NO.		CA0609	34	693

(2) SPECIAL DETAILS

STATE OF ARKANSAS
REGISTERED PROFESSIONAL ENGINEER
No. 11427
KEVIN G. TOBLESEY
7/17/14

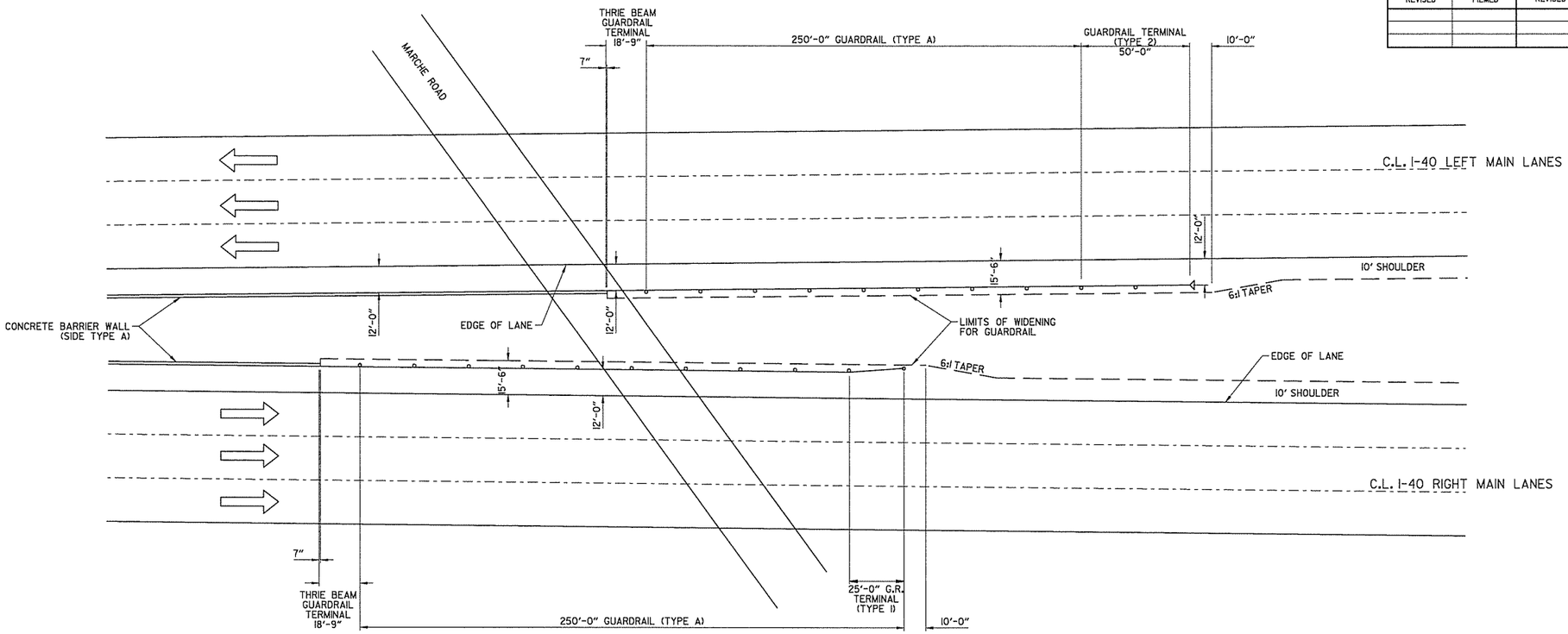

LAYOUT OF GUARDRAIL - AT MARCHE RD.
LT. MAIN LANES STA. 8051+30.40 TO STA. 8054+49.15
RT. MAIN LANES STA. 8049+99.40 TO STA. 8052+68.15

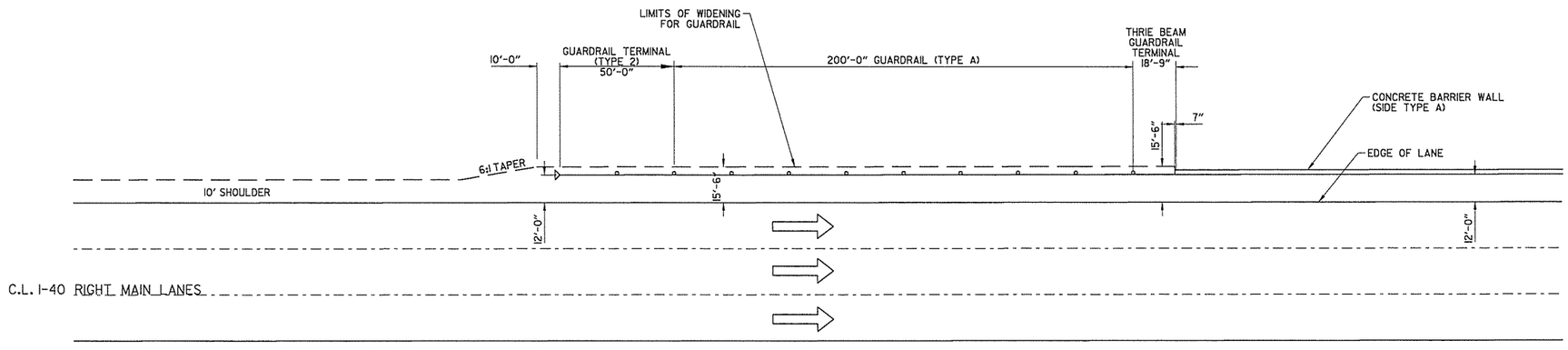

LAYOUT OF GUARDRAIL-RT. MAIN LANES
STA. 8013+31.85 - STA. 8016+00.60

7/16/2014 1:24:41 PM ...\drawings\4-SpecialDetails.dgn t:\lob\wlkm2650 ahtd cap ca0603\700 cadd files\777 roadway files\drawings\4-SpecialDetails.dgn

DATE REVISED	DATE FILMED	DATE REVISED	DATE FILMED	FED.RD. DIST.NO.	STATE	FED.AID PROJ.NO.	SHEET NO.	TOTAL SHEETS
				6	ARK.			
				JOB NO.		CA0609	35	693

(2) SPECIAL DETAILS

STATE OF ARKANSAS
REGISTERED PROFESSIONAL ENGINEER
No. 11427
KEVIN G. TOBLESKY

7/17/14

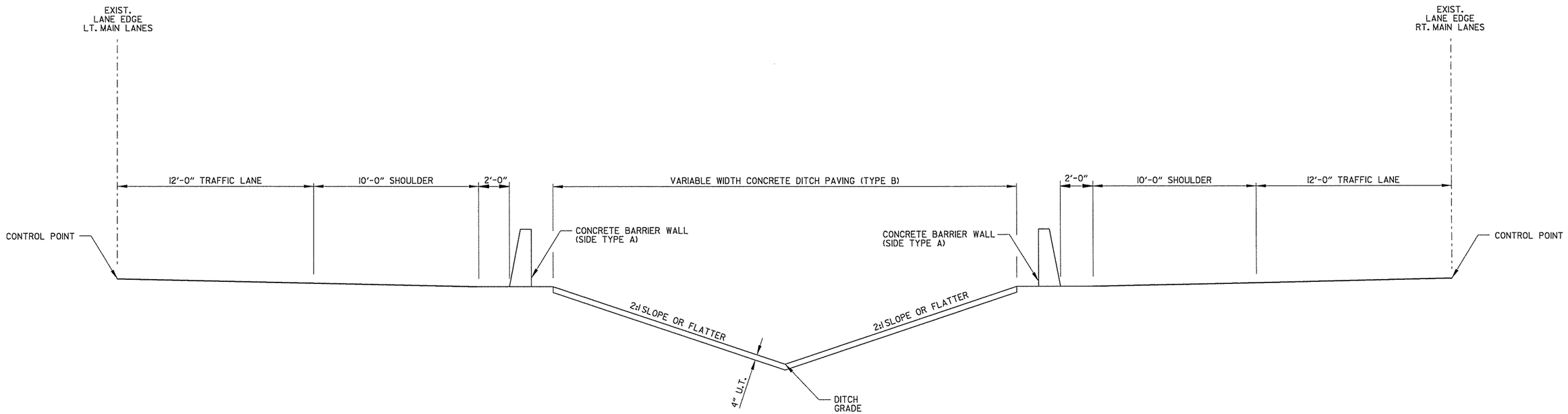

CONCRETE DITCH PAVING DETAIL
STA. 8020+00 TO STA. 8033+72
STA. 8035+34 TO STA. 8046+88

7/16/2014 1:24:42 PM ...\drawings\4-SpecialDetails.dgn t:\job\wlxm2650 ahtd cap ca0603\700 cadd files\777 roadway files\drawings\4-SpecialDetails.dgn

DATE REVISED	DATE FILMED	DATE REVISED	DATE FILMED	FED.RD. DIST.NO.	STATE	FED.AID PROJ.NO.	SHEET NO.	TOTAL SHEETS
				6	ARK.			
				JOB NO.		CA0609	36	693
				(2)		SPECIAL DETAILS		

STATE OF ARKANSAS
REGISTERED PROFESSIONAL ENGINEER
No. 11427
KEVIN G. TOBLESEY
7/17/14

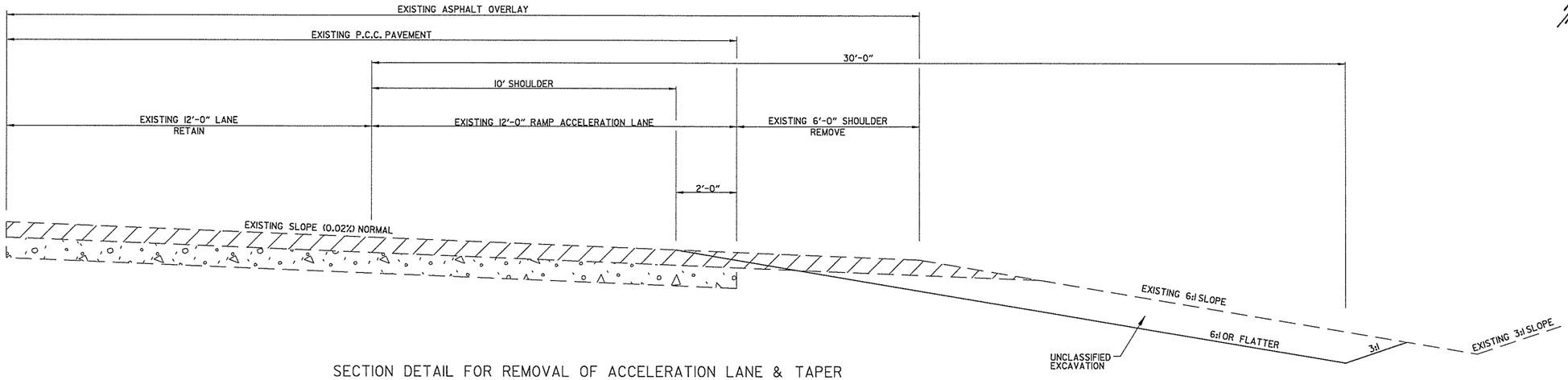

SECTION DETAIL FOR REMOVAL OF ACCELERATION LANE & TAPER
(SHOWN IN DIRECTION OF TRAFFIC)
I-40 RT. MAIN LANES STA. 8146+87 TO STA. 8153+15

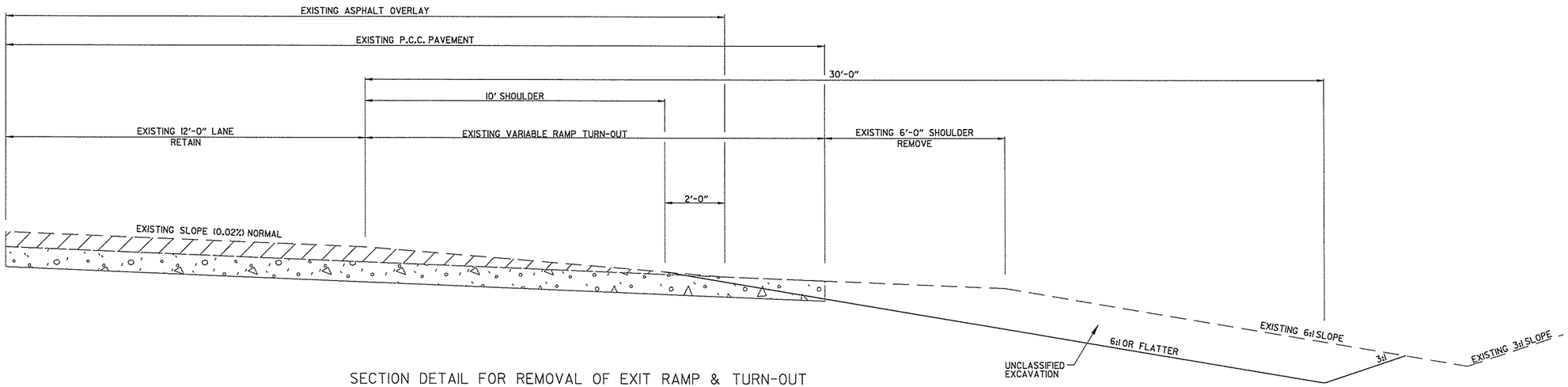

SECTION DETAIL FOR REMOVAL OF EXIT RAMP & TURN-OUT
(SHOWN IN DIRECTION OF TRAFFIC)
I-40 RT. MAIN LANES STA. 8165+90 TO STA. 8171+10

7/16/2014 1:24:42 PM ...\drawings\4-Special Details.dgn T:\Job\wixm2650 dntd cap ca0603\700 cadd files\777 roadway files\drawings\4-Special Details.dgn

DATE REVISED	DATE FILMED	DATE REVISED	DATE FILMED	FED.RD. DIST.NO.	STATE	FED.AID PROJ.NO.	SHEET NO.	TOTAL SHEETS
				6	ARK.			
				JOB NO.		CA0609	37	693
				(2)	SPECIAL DETAILS			

STATE OF ARKANSAS
LICENSED
PROFESSIONAL
ENGINEER
No.13422
JOHN F. CANTABERY

7-18-14

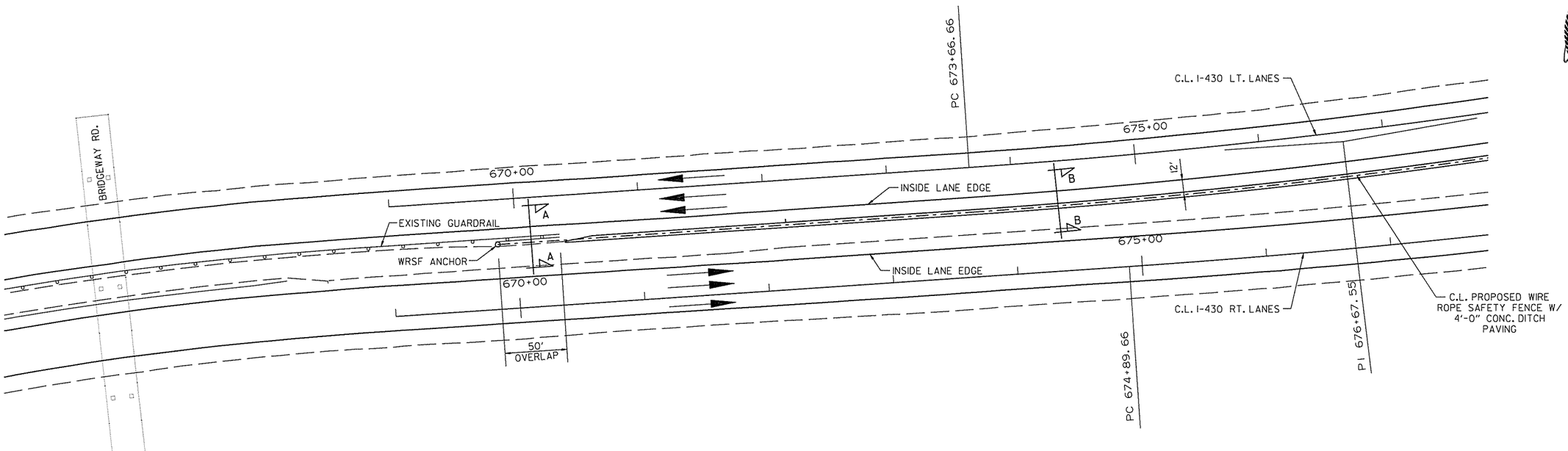

WRSF AND GUARDRAIL TERMINAL

I-430 LT. LANES

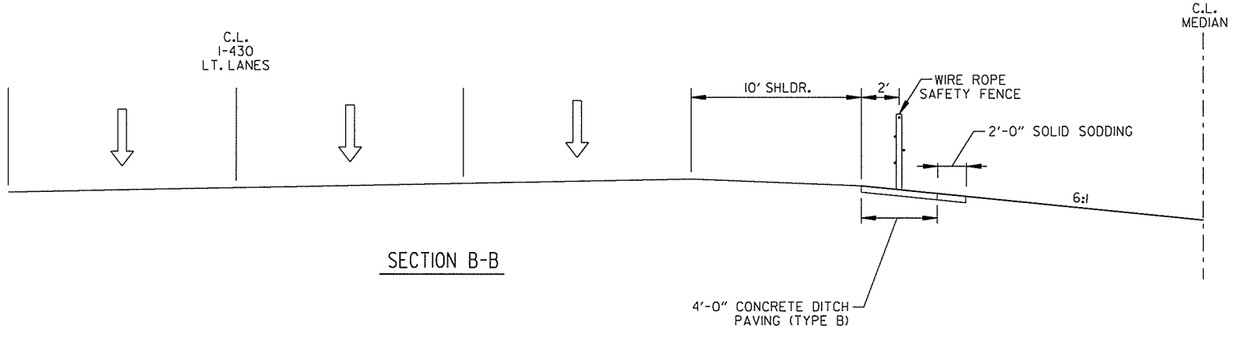

SECTION B-B

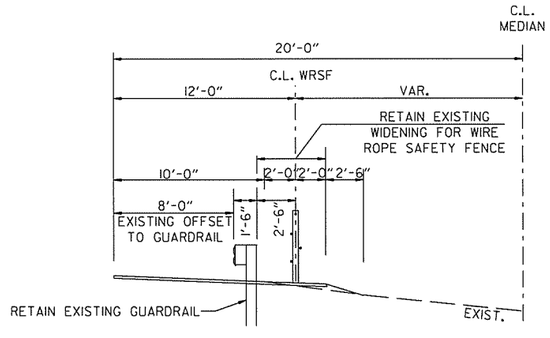

SECTION A-A

DETAILS OF SHOULDER WIDENING FOR GUARDRAIL AND OVERLAPS WITH ENDS OF WIRE ROPE SAFETY FENCE

cggervasini 7/17/2014 7:42:52 PM
WORKSPACE: AHTD
L:\20IN\101709 - I-40 at I-430 Interchange Modifications\Drawings\RCA0609_SD_ALL_01.dgn
REVISED DATE:

DATE REVISED	DATE FILMED	DATE REVISED	DATE FILMED	FED.RD. DIST.NO.	STATE	FED.AID PROJ.NO.	SHEET NO.	TOTAL SHEETS
				6	ARK.			
				JOB NO.		CA0609	38	693
				(2)		SPECIAL DETAILS		

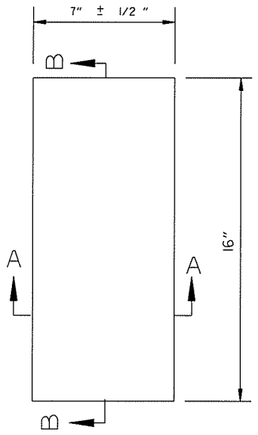

PLAN

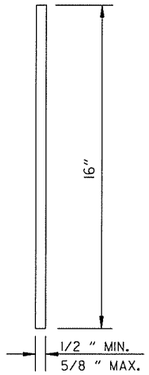

SECTION B-B

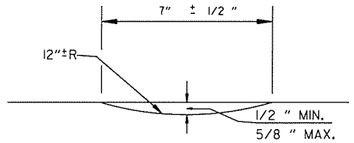

SECTION A-A

DETAILS OF RUMBLE STRIPS

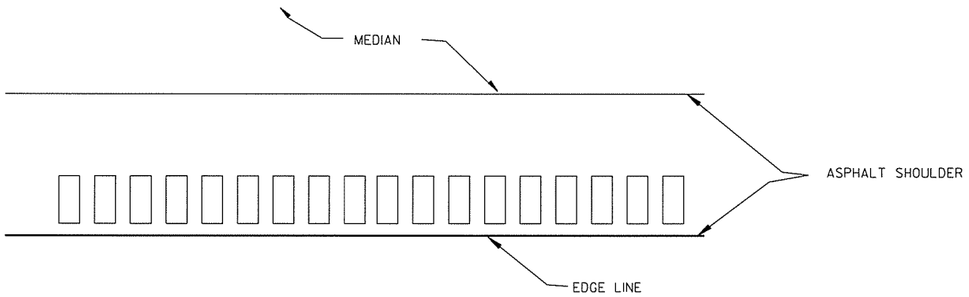

TRAVEL LANES

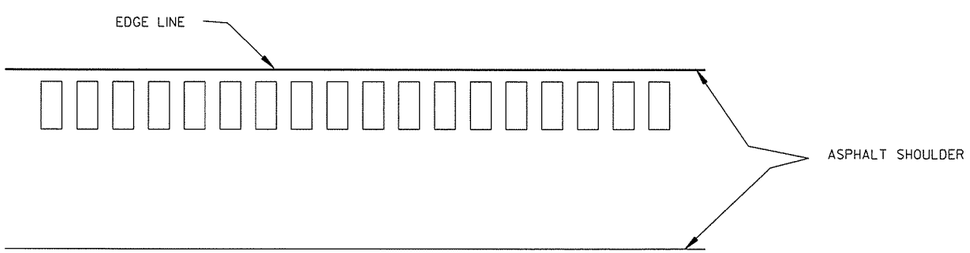

PLAN VIEW

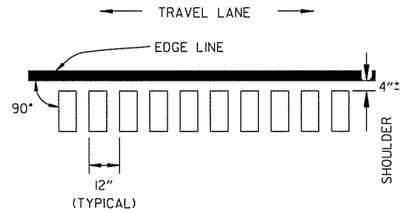

LOCATION PLAN OF RUMBLE STRIPS LEFT OR RIGHT SHOULDER

NOTES:

1. ALIGNMENT OF RUMBLE STRIPS SHALL GENERALLY BE STRAIGHT AND OFFSET APPROXIMATELY 4" FROM THE OUTER EDGE OF THE EDGE LINE. THIS OFFSET MAY BE ADJUSTED TO ACCOMMODATE VARIATIONS IN THE EDGE LINE AS WELL AS TO AVOID EXISTING LONGITUDINAL JOINTS.
2. THE 1/2" DEPTH SHALL GENERALLY APPLY FOR THE ENTIRE 16" LENGTH. SOME VARIATION TO SUIT SHOULDER SLOPE BREAKS MAY BE NECESSARY.
3. RUMBLE STRIPS SHALL NOT BE INSTALLED ON BRIDGE DECKS, APPROACH SLABS, OR ACROSS TRANSVERSE JOINTS OF CONCRETE SHOULDERS.

STATE OF ARKANSAS
LICENSED PROFESSIONAL ENGINEER
No.13422
JOHN F. CANTABERY
7-18-14

cggervasini 7/17/2014 7:42:53 PM
WORKSPACE: AHTD
L:\20IN\I001709 - I-40 at I-430 Interchange Modifications\Drawings\RCA0609_SD_ALL_01.dgn
REVISED DATE:

DATE REVISED	DATE FILMED	DATE REVISED	DATE FILMED	FED.RD. DIST.NO.	STATE	FED.AID PROJ.NO.	SHEET NO.	TOTAL SHEETS
				6	ARK.			
				JOB NO.		CA0609	39	693

(2) SPECIAL DETAILS

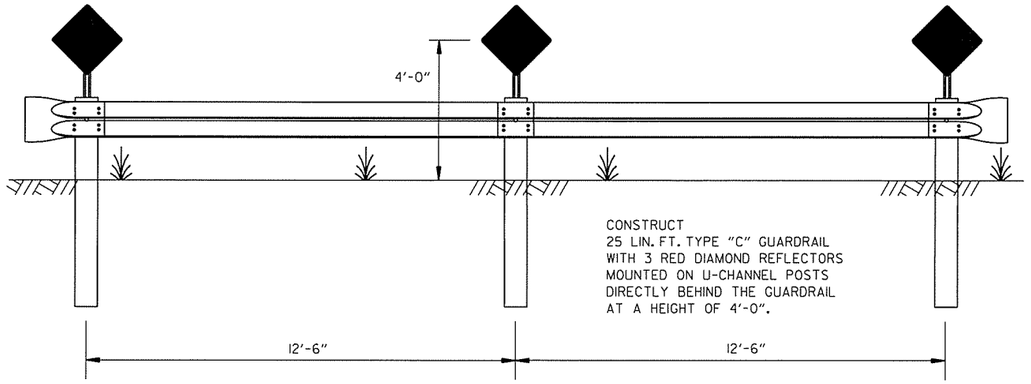

ROAD CLOSED DETAIL

NOTE: TO BE USED WHERE A SECTION OF NORMAN ROAD WILL BE PERMANENTLY CLOSED. SEE NEVA ROAD PLAN AND PROFILE SHEET FOR LOCATION. SEE STD. DWG. GR-7 FOR MORE DETAILS.

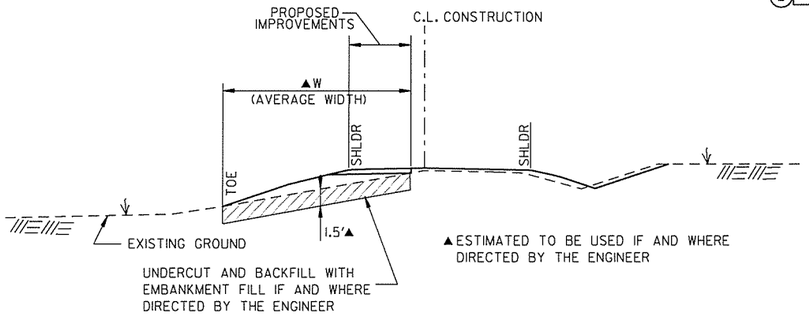

DETAIL OF UNDERCUT

I-40 LT. LANES	W = 60'
I-40 RT. LANES	W = 64'
I-430 LT. LANES	W = 42'
I-430 RT. LANES	W = 40'
NORMAN ROAD	W = 43'
NEVA ROAD	W = 42'
RAMP 1	W = 40'
RAMP 3	W = 28'
RAMP 4	W = 74'

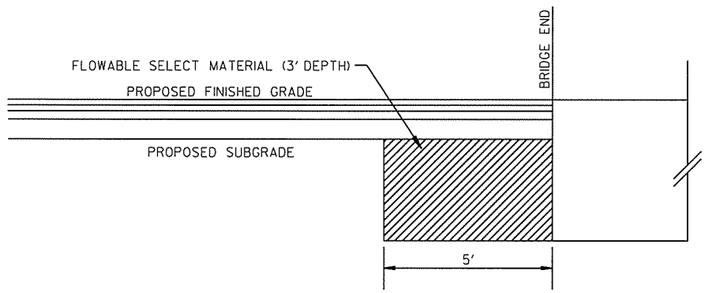

FLOWABLE SELECT MATERIAL AT PROPOSED BRIDGE ENDS

NOTE: EXCAVATION FOR PLACING FLOWABLE SELECT MATERIAL WILL NOT BE PAID FOR DIRECTLY BUT PAYMENT SHALL BE CONSIDERED TO BE INCLUDED IN THE VARIOUS BID ITEMS.

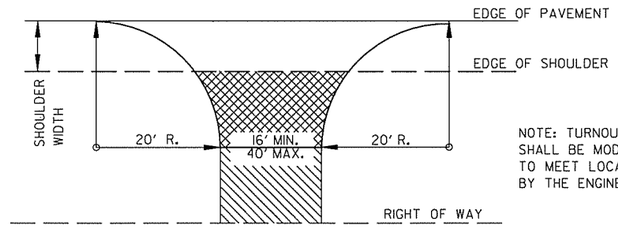

NOTE: TURNOUTS AND PRIVATE DRIVES SHALL BE MODIFIED WHERE NECESSARY TO MEET LOCAL CONDITIONS AS DIRECTED BY THE ENGINEER.

ASPHALT CONCRETE HOT MIX SURFACE COURSE (½") (220 LBS. PER SQ. YD.) AND AGGREGATE BASE COURSE (CLASS 7) 7" COMP. DEPTH IF ASPHALT DRIVE EXISTS; OR 6" CONCRETE IF CONCRETE DRIVE EXISTS.

AGGREGATE BASE COURSE (CLASS 7) 9" COMP. DEPTH OR CONFORM TO EXISTING DRIVEWAY.

DETAIL FOR DRIVEWAY TURNOUTS

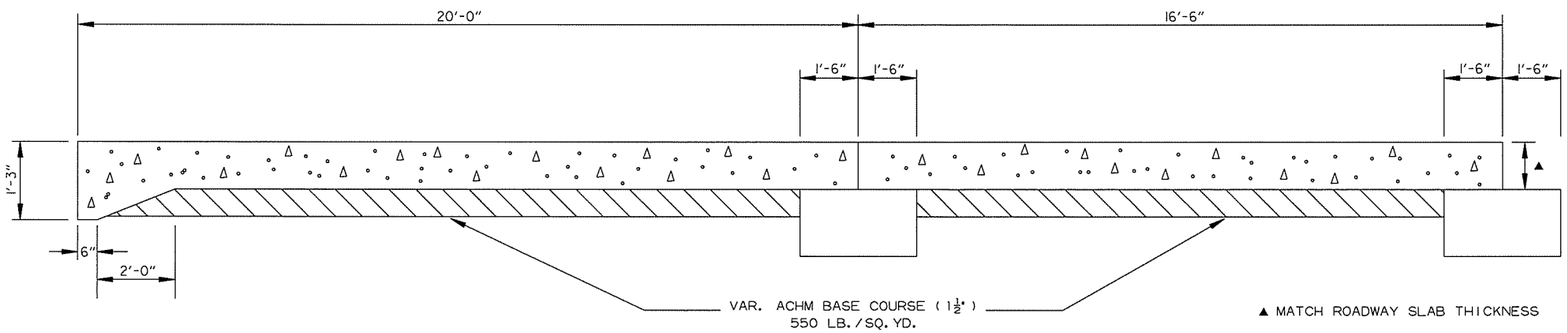

SECTION OF APPROACH SLAB

STATE OF ARKANSAS
LICENSED PROFESSIONAL ENGINEER
No.13422
JOHN F. CANTABERY
7-18-14

cggervasini 7/17/2014 7:42:53 PM
WORKSPACE: AHTD
L:\2014\14017109 - I-40 at I-430 Interchange Modifications\Drawings\RCA0609_SD_ALL_01.dgn
REVISED DATE:

DATE REVISED	DATE FILMED	DATE REVISED	DATE FILMED	FED.RD. DIST.NO.	STATE	FED.AID PROJ.NO.	SHEET NO.	TOTAL SHEETS
				6	ARK.			
				JOB NO.		CA0609	40	693
				(2)	SPECIAL DETAILS			

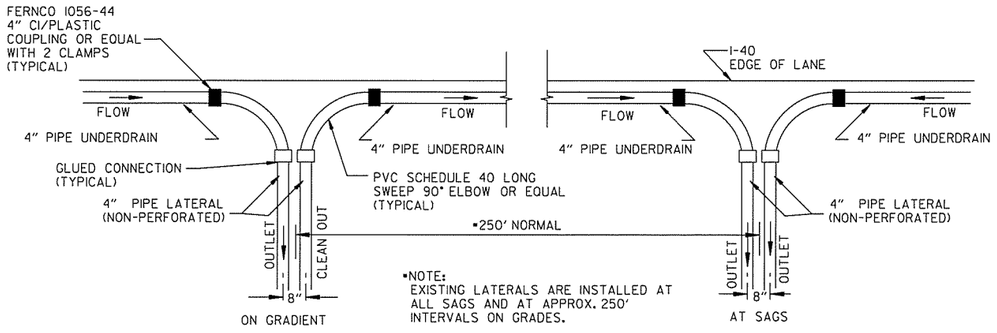

NOTE:
PVC PIPE FOR LATERALS SHALL MEET THE REQUIREMENTS OF ASTM D 1785 (LATEST REVISION) FOR SCHEDULE 40 PIPE.

PLAN DETAIL OF EXISTING PIPE UNDERDRAIN LATERAL TO BE RETAINED AND EXTENDED

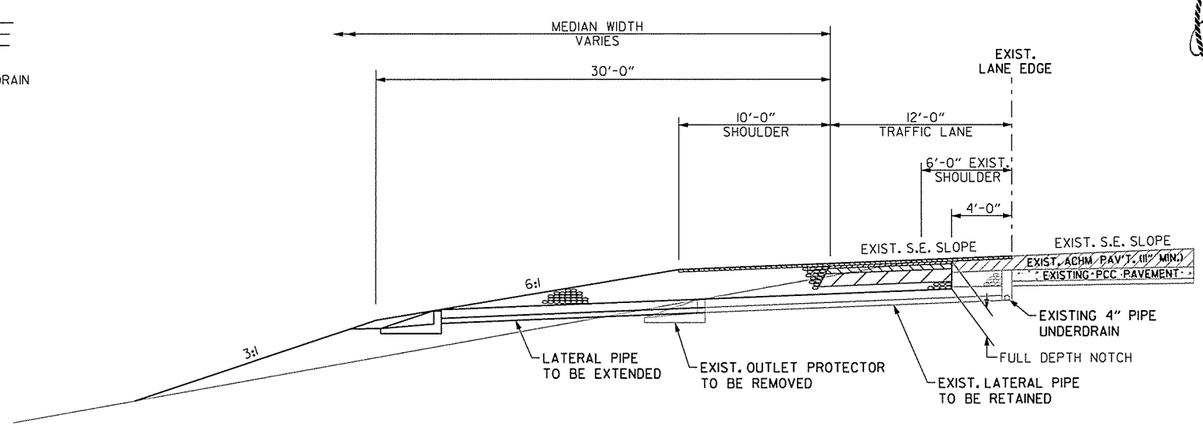

TYPICAL SECTION OF EXISTING PIPE UNDERDRAINS TO BE RETAINED AND EXTENDED

NOTES:

1. EXISTING 4" PIPE UNDERDRAIN LATERALS SHALL BE EXTENDED WHERE SHOWN ON THE PLANS OR WHERE DIRECTED BY THE ENGINEER. EXISTING OUTLET PROTECTORS SHOULD BE REMOVED AND RECONSTRUCTED. PAYMENT SHALL BE CONSIDERED INCLUDED IN THE PRICE BID FOR 4" PIPE UNDERDRAINS.
2. ANY PIPE UNDERDRAIN OR LATERAL TO REMAIN IN PLACE THAT IS DAMAGED BY THE CONTRACTOR SHALL BE REPAIRED AS DIRECTED BY THE ENGINEER AT THE CONTRACTOR'S EXPENSE.
3. THE LOCATION OF ALL LATERALS SHALL BE MARKED WITH 4" X 12" PERMANENT PAVEMENT MARKING TAPE (TYPE III WHITE) AT THE OUTSIDE EDGE OF THE SHOULDER, PLACED TRANSVERSE TO TRAFFIC. PAYMENT FOR THIS WORK SHALL BE INCLUDED IN THE PRICE BID FOR THE VARIOUS CONTRACT ITEMS.

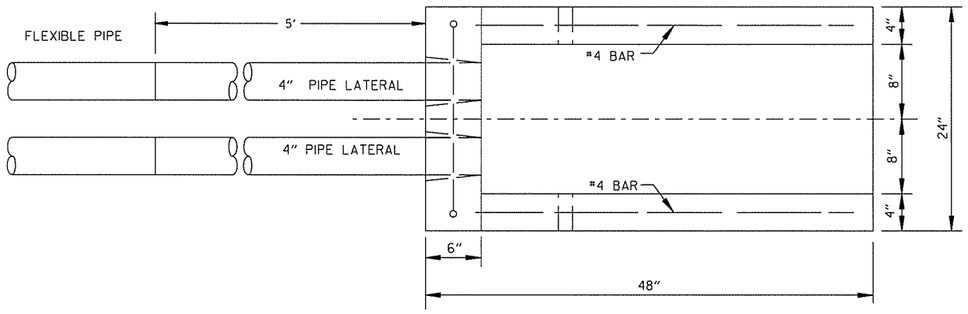

4" NON-PERFORATED SCHEDULE 40 PVC PIPE LATERALS WITH OUTLET PROTECTORS SHALL BE INSTALLED AS SHOWN HEREON OR AS ON STD. DWG. PU-1. LATERALS WILL BE MEASURED AND PAID FOR AS "4" PIPE UNDERDRAINS." UNDERDRAIN OUTLET PROTECTORS WILL BE MEASURED AND PAID FOR BY THE UNIT IN ACCORDANCE WITH SECTION 611 OF THE STANDARD SPECIFICATIONS.

PLAN VIEW

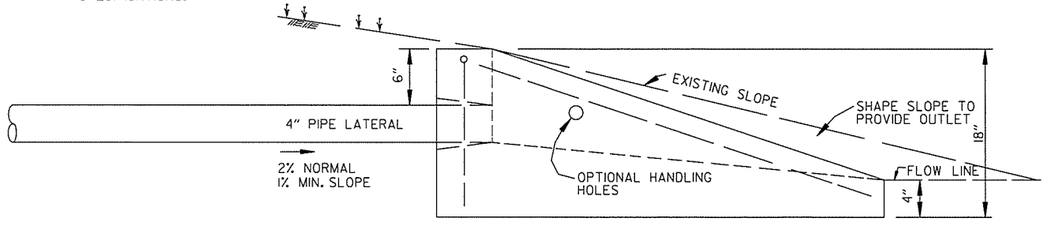

SIDE VIEW

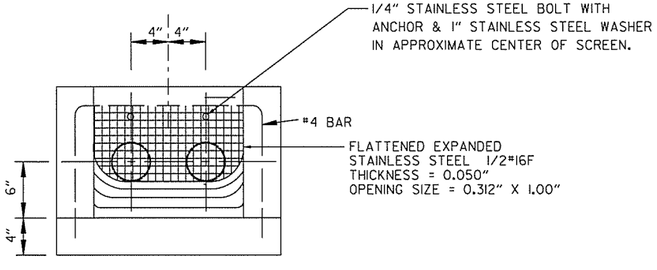

FRONT VIEW

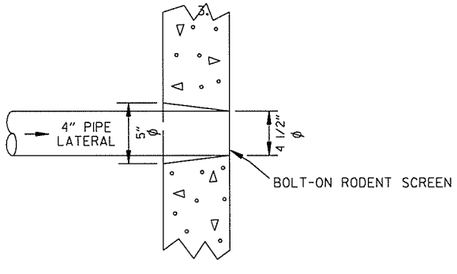

DETAIL OF HOLE FOR 4" PIPE

UNDERDRAIN OUTLET PROTECTORS

STATE OF ARKANSAS
LICENSED PROFESSIONAL ENGINEER
No. 13422
JOHN F. CANTABERY
7-18-14

cggervasini 7/17/2014 7:42:53 PM
WORKSPACE: AHTD
L:\20IN\00T709 - I-40 at I-430 Interchange Modifications\Drawings\RCA0609_SD_ALL_01.dgn
REVISED DATE:

DATE REVISED	DATE FILMED	DATE REVISED	DATE FILMED	FED.RD. DIST.NO.	STATE	FED.AID PROJ.NO.	SHEET NO.	TOTAL SHEETS
				6	ARK.			
				JOB NO.		CA0609	41	693
				(2)	SPECIAL DETAILS			

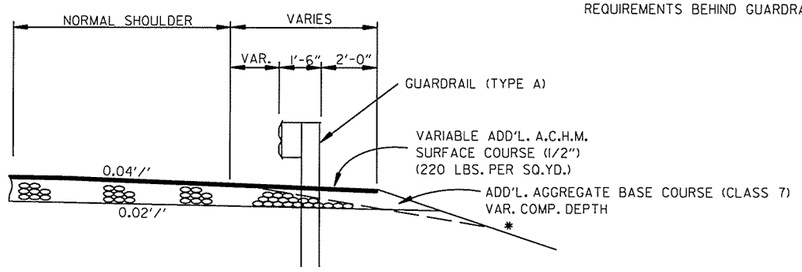

*NOTE:
REFER TO STD. DWG. GR-9A AND CROSS SECTIONS FOR SLOPE REQUIREMENTS BEHIND GUARDRAIL.

WIDENING FOR GUARDRAIL AT PROPOSED SHOULDER EDGE

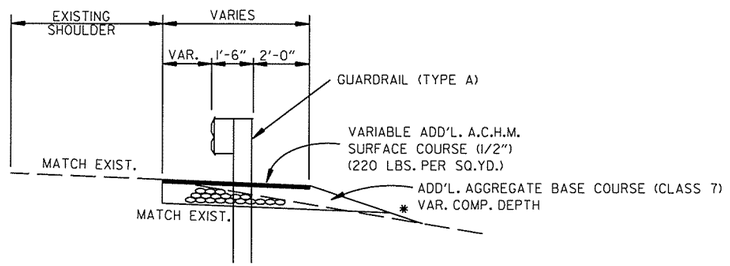

WIDENING FOR GUARDRAIL AT EXISTING SHOULDER EDGE

STATE OF ARKANSAS
LICENSED PROFESSIONAL ENGINEER
No.13422
JOHN F. CANTABERY
7-18-14

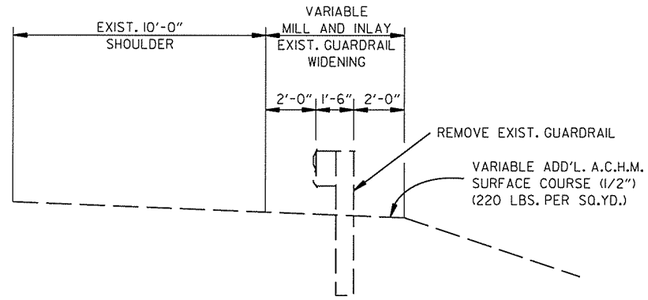

DETAILS OF RETAINING GUARDRAIL WIDENING I-40

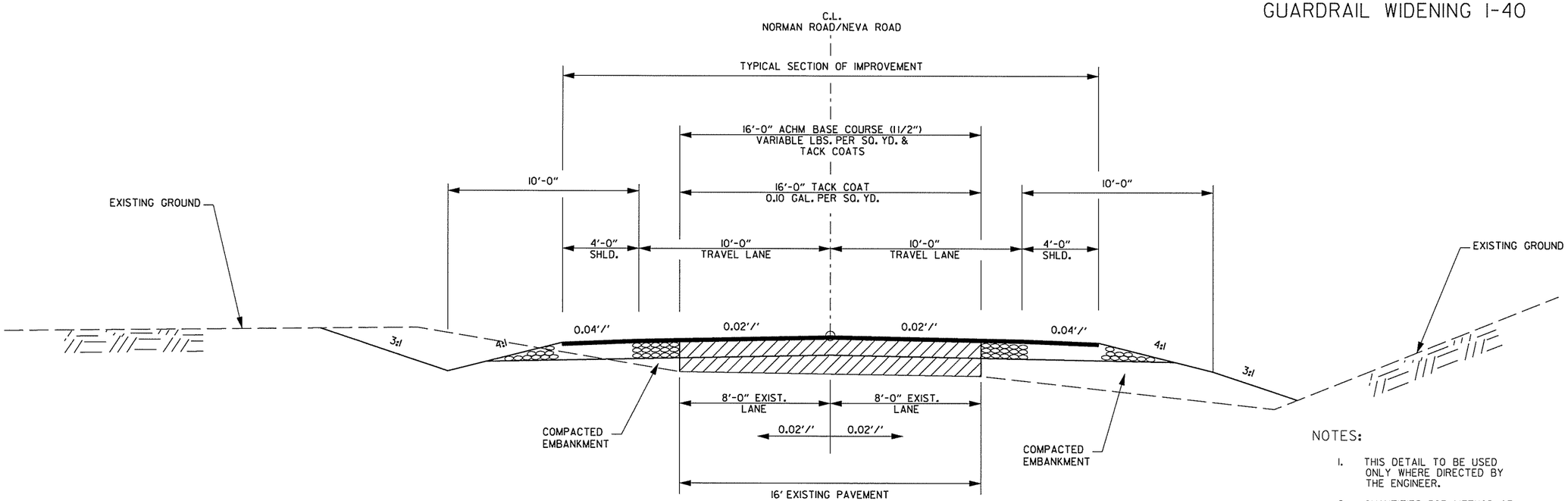

METHOD OF RAISING GRADE NORMAN AND NEVA RD.

NOTES:

1. THIS DETAIL TO BE USED ONLY WHERE DIRECTED BY THE ENGINEER.
2. QUANTITIES FOR METHOD OF GRADE RAISE USING ASPHALT WERE CALCULATED ON THIS PROJECT AT LOCATIONS WHERE THE DISTANCE BETWEEN THE EXISTING ASPHALT ROADWAY AND THE PROPOSED SUBGRADE WAS ONE FOOT OR LESS.

SPECIAL DETAILS

oggervasinl 7/17/2014 7:42:53 PM
WORKSPACE: AHTD
L:\ROW\601709 I-40 at I-430 Interchange Modifications\Drawings\RCA0609_SD_ALL_01.dgn
REVISED DATE:

DATE REVISED	DATE FILMED	DATE REVISED	DATE FILMED	FED.RD. DIST.NO.	STATE	FED.AID PROJ.NO.	SHEET NO.	TOTAL SHEETS
				6	ARK.			
				JOB NO.		CA0609	42	693
				(2)	SPECIAL DETAILS			

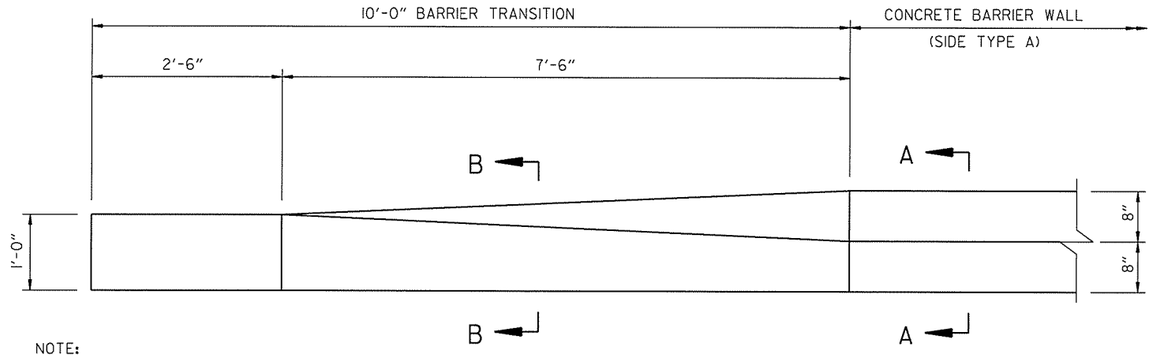

NOTE:
FOOTING NOT SHOWN FOR CLARITY.

CONCRETE BARRIER TRANSITION - PLAN

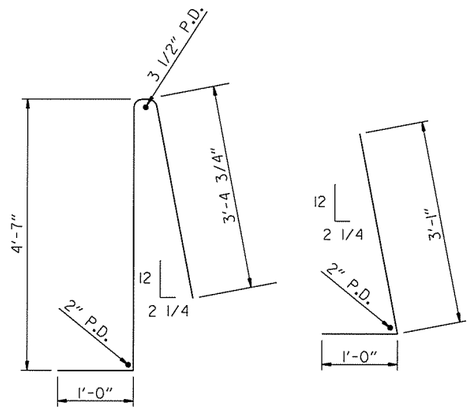

SECTION A-A #4 TIE BARS

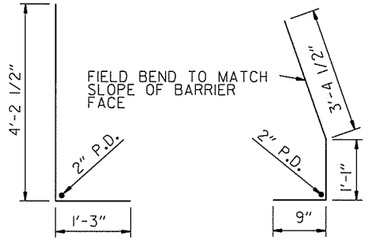

SECTION B-B #4 TIE BARS

STATE OF ARKANSAS
LICENSED PROFESSIONAL ENGINEER
No.13422
JOHN F. CANTABERY
7-18-14

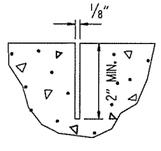

CONTRACTION JOINT DETAIL

GENERAL NOTES FOR CONCRETE BARRIER WALL

1. ALL BARRIER WALLS SHALL BE CONSTRUCTED IN ACCORDANCE WITH SECTION 631 OF THE STANDARD SPECIFICATIONS, 2014 EDITION.
2. CONTRACTION JOINTS REQUIRED @ 15'-0" MAXIMUM SPACING FOR BARRIER SIDE TYPE A.
3. ALL CONTRACTION JOINTS TO BE FORMED IN FRESH CONCRETE ON TOP AND IN SIDES OF BARRIER WALL.
4. ALL EXPOSED EDGES OF CONCRETE BARRIER WALL SHALL HAVE A 3/4" CHAMFER.
5. SPACING BETWEEN EXPANSION JOINTS SHALL BE A MINIMUM OF 30 FT. AND SHALL NOT EXCEED 400 FT. FOR BARRIER SIDE TYPE A. EXPANSION JOINTS SHALL BE FORMED USING 1" PREFORMED JOINT FILLER. CONTINUOUS REINFORCEMENT SHALL BE CUT 2" CLEAR OF EXPANSION JOINTS.
6. DRAINAGE OPENINGS TO BE CONSTRUCTED EVERY 100' O.C. AND AT SAGS. DOWEL BARS SHALL NOT BE PLACED WITHIN 3" OF DRAINAGE OPENING.

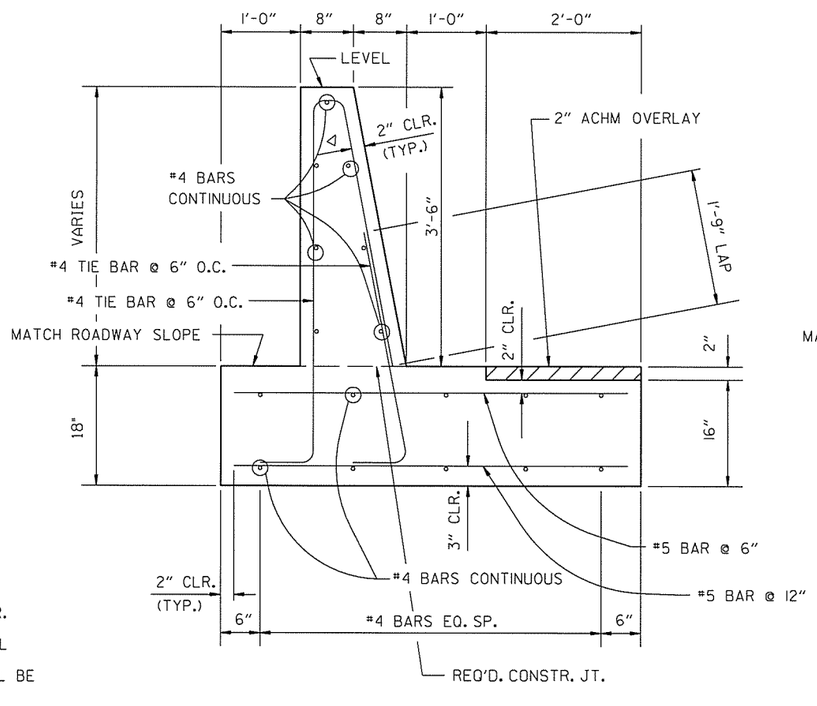

SECTION A-A
CONCRETE BARRIER WALL (SIDE TYPE A)

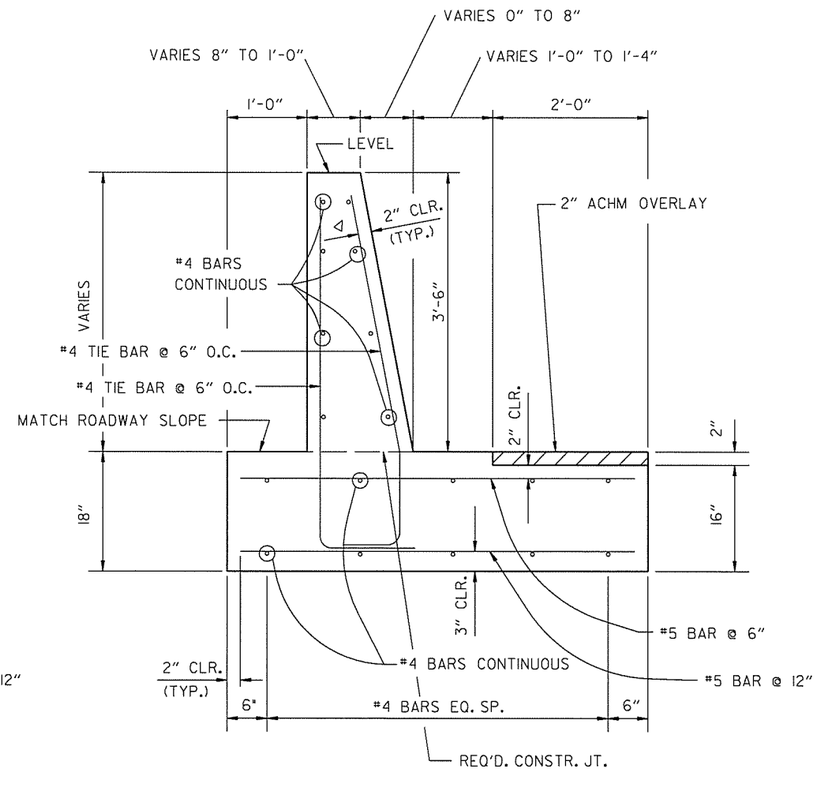

SECTION B-B

cggervasini 7/17/2014 7:42:53 PM
WORKSPACE: AHTD
L:\ROW\NOT709 - I-40 at I-430 Interchange Modifications\Drawings\RCA0609_SD_ALL_01.dgn
REVISED DATE:

DATE REVISED	DATE FILMED	DATE REVISED	DATE FILMED	FED.RD. DIST.NO.	STATE	FED.AID PROJ.NO.	SHEET NO.	TOTAL SHEETS
				6	ARK.			
				JOB NO.		CA0609	43	693
				(2)		SPECIAL DETAILS		

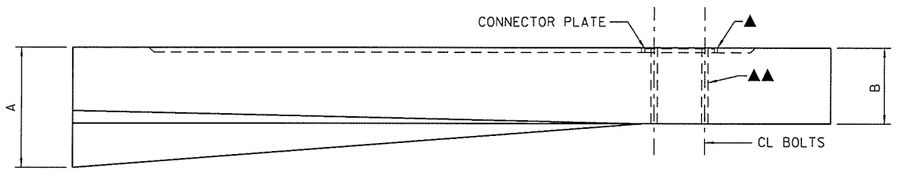

PLAN OF GUARDRAIL CONNECTION AT BRIDGE END
FOR I-40 MAIN LANE BRIDGES

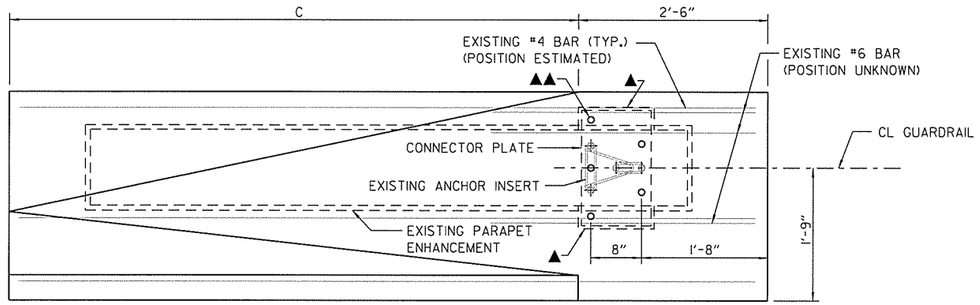

ELEVATION OF GUARDRAIL CONNECTION AT BRIDGE END
FOR I-40 MAIN LANE BRIDGES

▲ SAW CUT, CHIP OUT CONCRETE & GROUT AS NEEDED TO MAKE CONNECTOR PLATE FLUSH WITH ENHANCEMENT FACE.

▲▲ DRILL 5 - 1" Ø HOLES IN EXISTING RAIL TO ACCOMMODATE NEW THRIE BEAM CONNECTION.

DIMENSION	BRIDGES	
	A3230 & B3230 A3233 & B3233	A3232 & B3232
A	1'-5"	1'-7"
B	10"	1'-0"
C	5'-6"	7'-6"

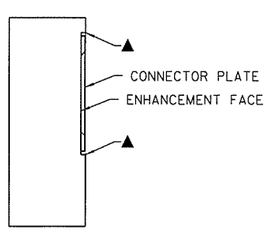

END VIEW
(SHOWN @ CONNECTOR PLATE)

NOTE:
ALL WORK ASSOCIATED WITH NEW THRIE BEAM CONNECTIONS WILL BE SUBSIDIARY TO THRIE BEAM GUARDRAIL TERMINAL.

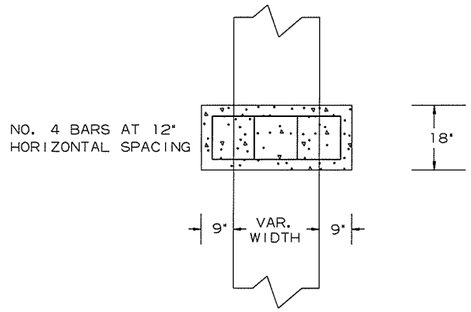

TOP VIEW

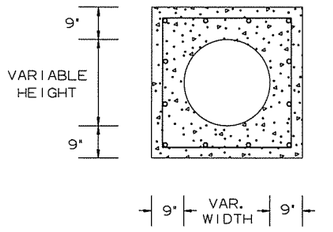

FRONT VIEW

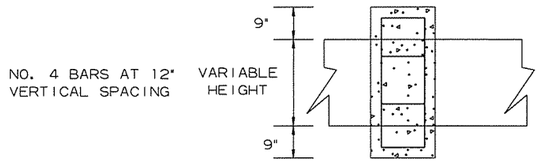

SIDE VIEW

PIPE EXTENSION
REINFORCED CONCRETE COLLAR DETAIL

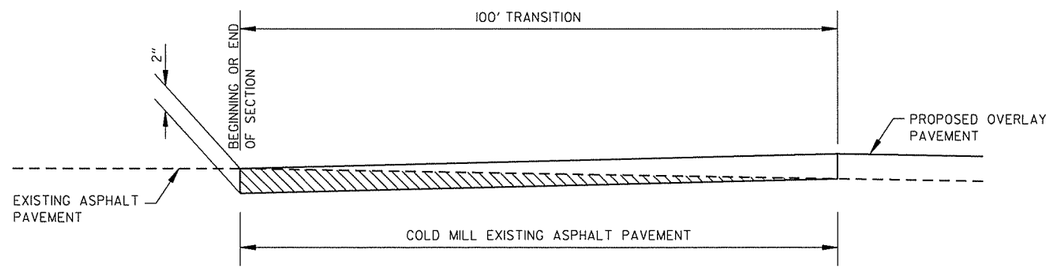

DETAIL FOR TRANSITIONS
(MARCHE ROAD)

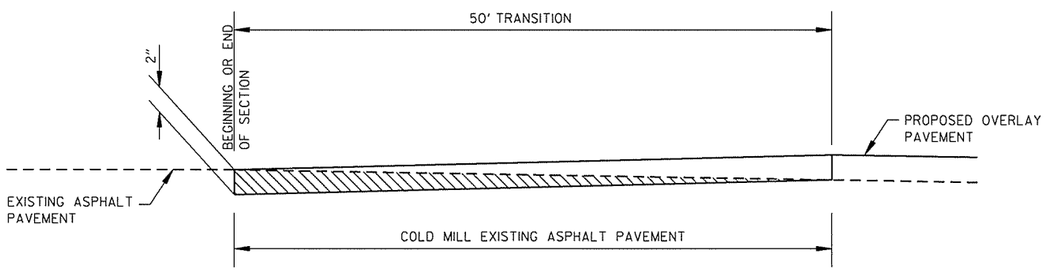

DETAIL FOR TRANSITIONS
(NORMAN ROAD AND NEVA ROAD)

SPECIAL DETAILS

STATE OF ARKANSAS
LICENSED
PROFESSIONAL
ENGINEER
No.13422
JOHN F. CANTABERY
7-18-14

cgger-vasinl 7/17/2014 7:42:54 PM
WORKSPACE: AHTD
L:\CON\DOT709 - I-40 at I-430 Interchange Modifications\Drawings\RCA0609_SD_ALL_01.dgn
REVISED DATE:

DATE REVISED	DATE FILMED	DATE REVISED	DATE FILMED	FED.RD. DIST.NO.	STATE	FED.AID PROJ.NO.	SHEET NO.	TOTAL SHEETS
				6	ARK.			
				JOB NO.		CA0609	44	693
				(2)	SPECIAL DETAILS			

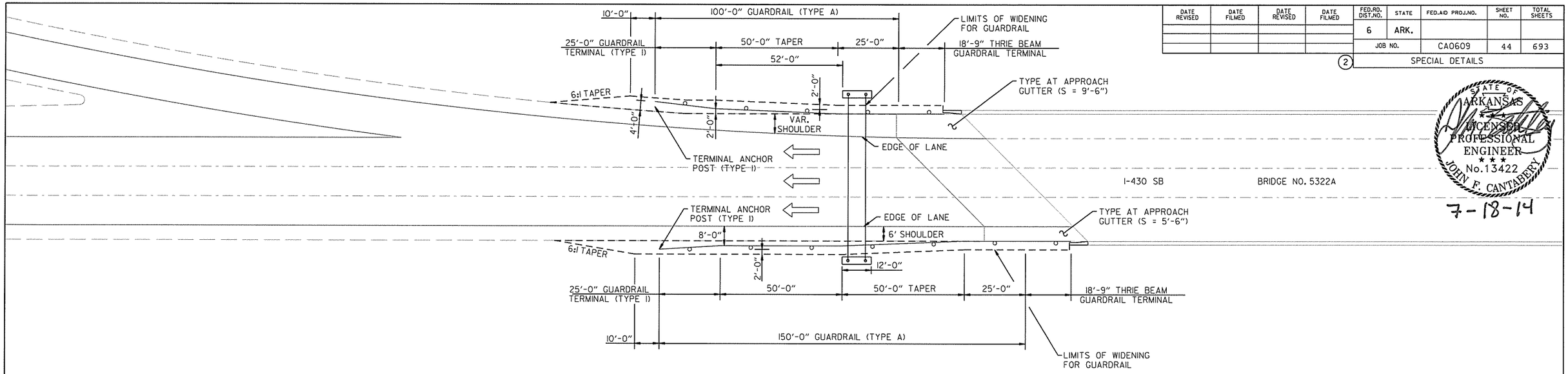

STATE OF ARKANSAS
LICENSED PROFESSIONAL ENGINEER
No. 13422
JOHN F. CANTABERY
7-18-14

GUARDRAIL FOR OVERHEAD SIGN STRUCTURE - I-430 AT HWY. 100 (EXIT 12)

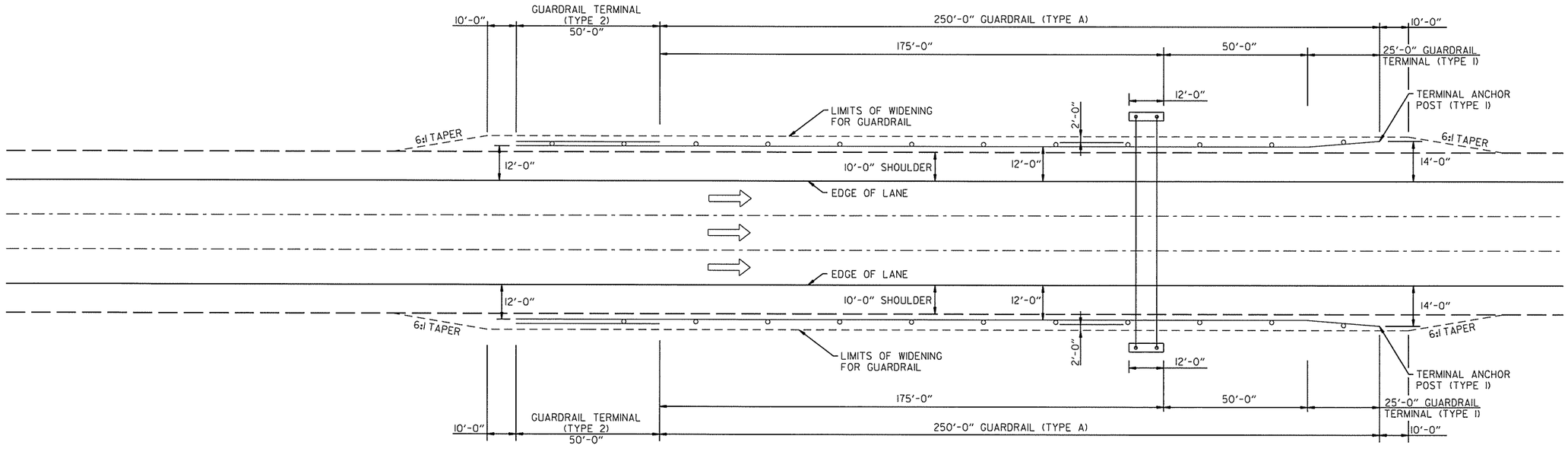

GUARDRAIL FOR OVERHEAD SIGN STRUCTURES - I-430

NOTE:
EXISTING GUARDRAIL LOCATED ON THE INSIDE SHOULDER OF I-430 NB SHOULD BE MAINTAINED AND UTILIZED TO PROTECT OVERHEAD SIGN OH-430-60-13. GUARDRAIL ON RIGHT SHOULDER SHOULD BE CONSTRUCTED ACCORDING TO THE DETAIL SHOWN ABOVE.

SPECIAL DETAILS

cggervasini 7/17/2014 7:42:54 PM
WORKSPACE: AHTD
L:\20IN\I00709 - I-40 at I-430 Interchange Modifications\Drawings\RCA0609_SD_GR_01.dgn
REVISED DATE:

DATE REVISED	DATE FILMED	DATE REVISED	DATE FILMED	FED.RD. DIST.NO.	STATE	FED.AID PROJ.NO.	SHEET NO.	TOTAL SHEETS
				6	ARK.			
				JOB NO.		CA0609	45	693
				(2)	SPECIAL DETAILS			

REMOVAL AND DISPOSAL OF GUARDRAIL	
LOCATION	UNIT
RT. OF I-430 NB (IN DIRECTION OF TRAVEL)	200 LIN. FT.

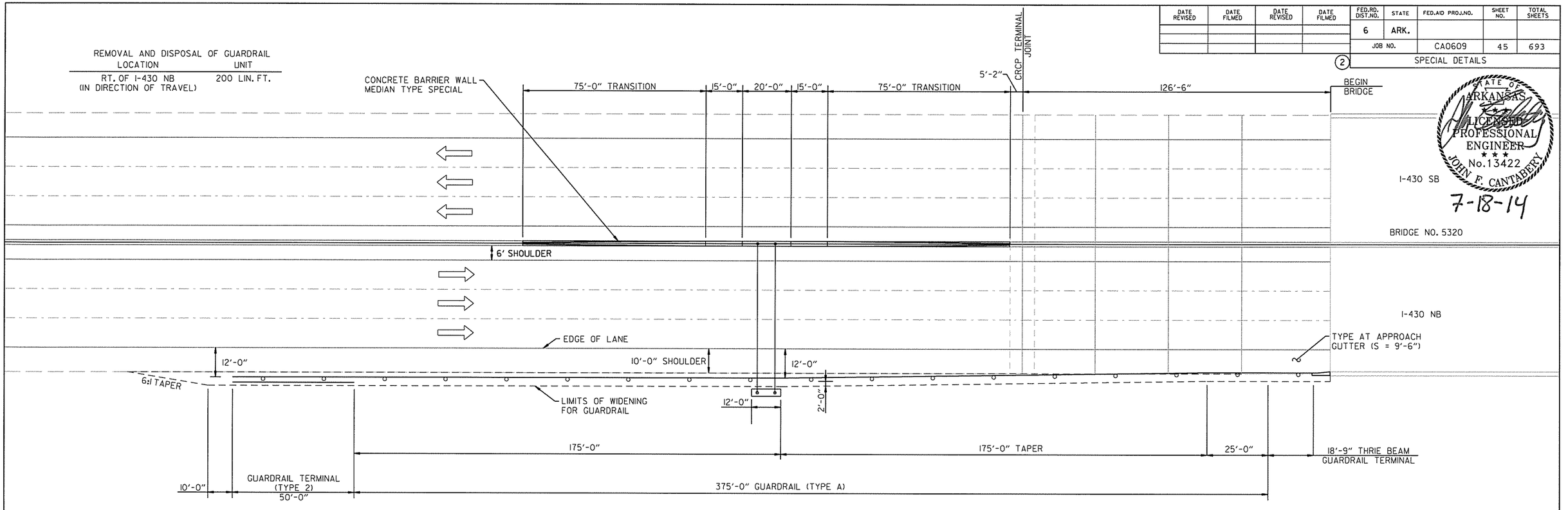

STATE OF ARKANSAS
LICENSED PROFESSIONAL ENGINEER
No.13422
JOHN F. CANTABERY
7-18-14

GUARDRAIL FOR OVERHEAD SIGN STRUCTURE - I-430 AT ARKANSAS RIVER BRIDGE

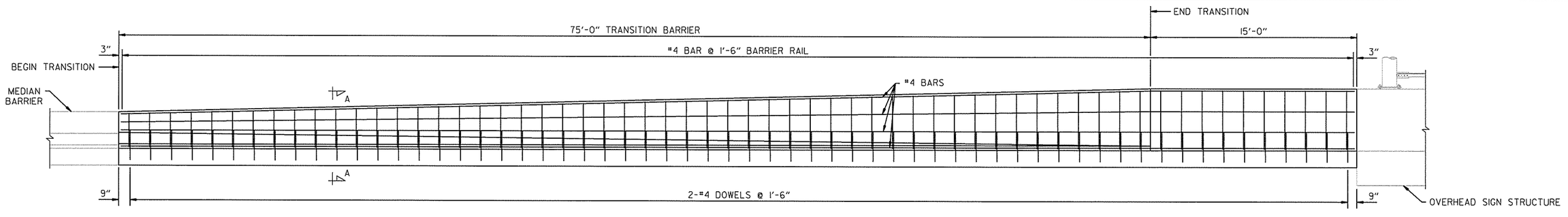

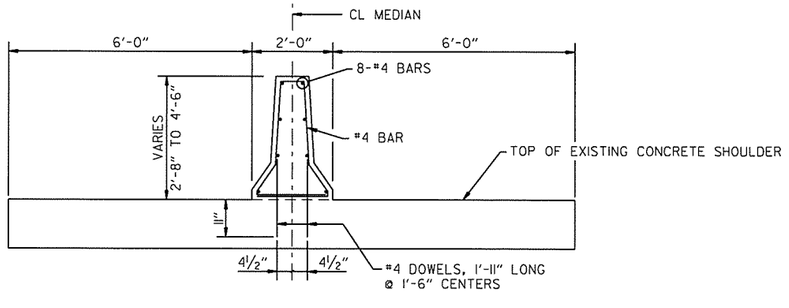

SECTION A-A
MEDIAN TYPE SPECIAL

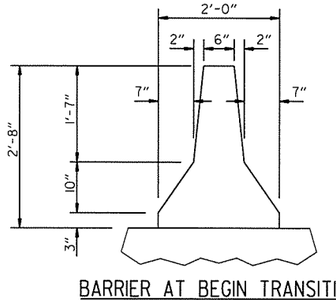

BARRIER AT BEGIN TRANSITION

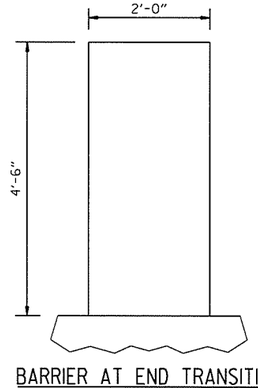

BARRIER AT END TRANSITION

SPECIAL DETAILS

cggervasini 7/17/2014 7:42:55 PM
WORKSPACE: AHTD
L:\ZOIN\001709 - I-40 at I-430 Interchange Modifications\Drawings\RCA0609_SD_GR_02.dgn
REVISED DATE:

DATE REVISED	DATE FILMED	DATE REVISED	DATE FILMED	FED.RD. DIST.NO.	STATE	FED.AID PROJ.NO.	SHEET NO.	TOTAL SHEETS
				6	ARK.			
				JOB NO.		CA0609	46	693
				(2)	SPECIAL DETAILS			

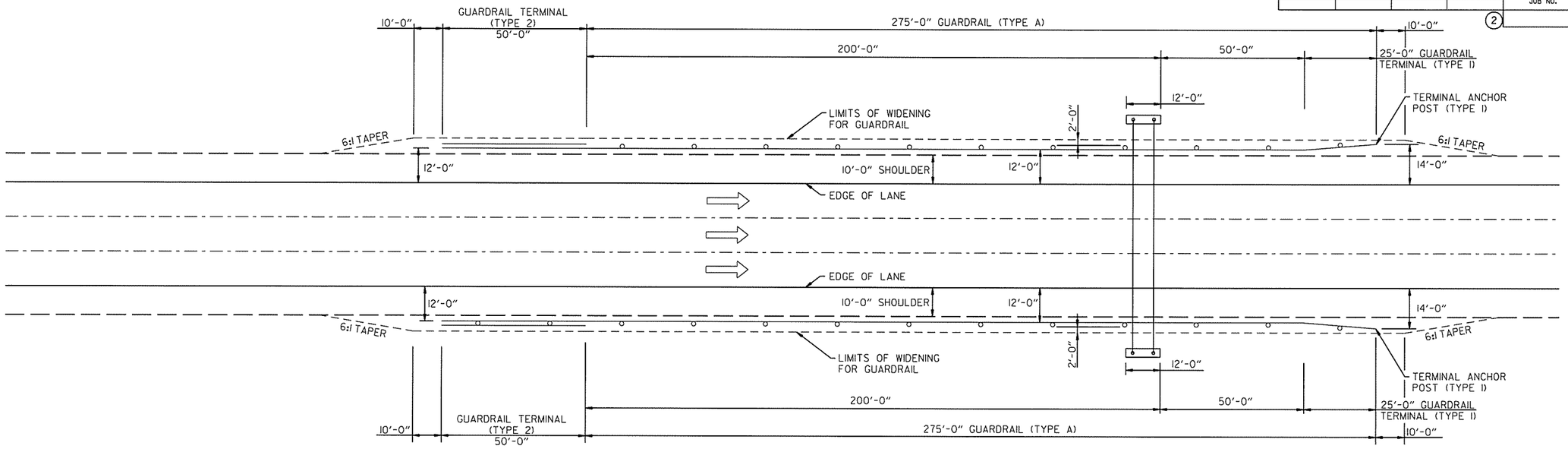

GUARDRAIL FOR OVERHEAD SIGN STRUCTURES - I-40

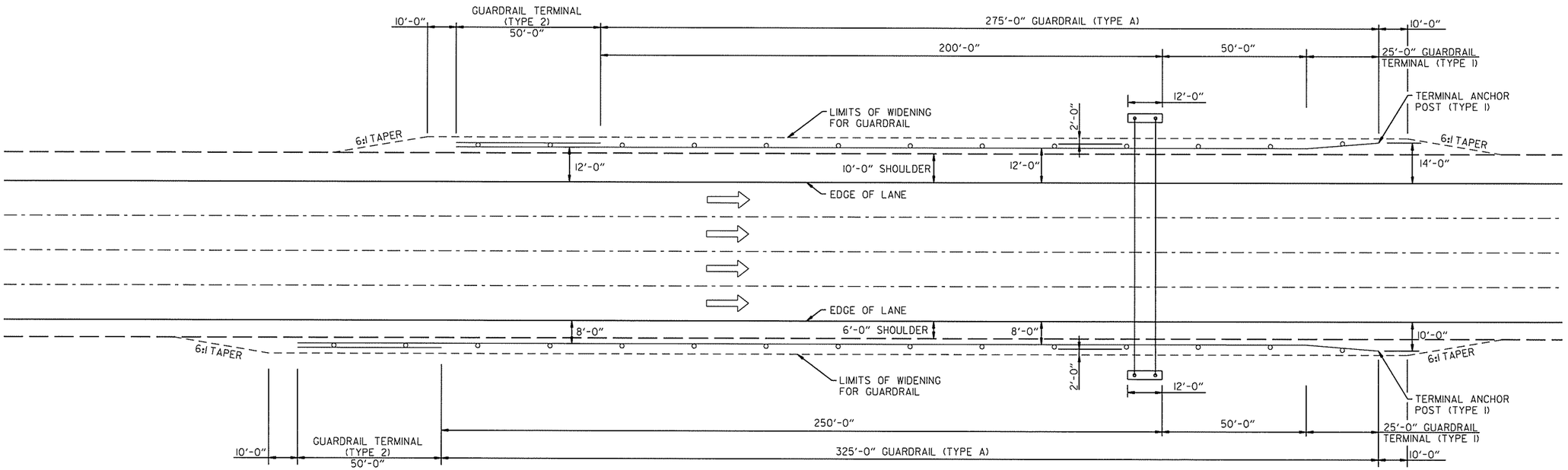

GUARDRAIL FOR OVERHEAD SIGN STRUCTURES - I-40 WITH AUXILIARY LANE

STATE OF ARKANSAS
LICENSED PROFESSIONAL ENGINEER
No.13422
JOHN F. CANTABERRY
7-18-14

cggervasini 7/17/2014 7:42:55 PM
WORKSPACE: AHTD
L:\ROW\MOT709 - I-40 at I-430 Interchange Modifications\Drawings\RCA0609_SD_GR_03.dgn
REVISED DATE:

DATE REVISED	DATE FILMED	DATE REVISED	DATE FILMED	FED.RD. DIST.NO.	STATE	FED.AID PROJ.NO.	SHEET NO.	TOTAL SHEETS
				6	ARK.			
				JOB NO.		CA0609	47	693
				(2)	SPECIAL DETAILS			

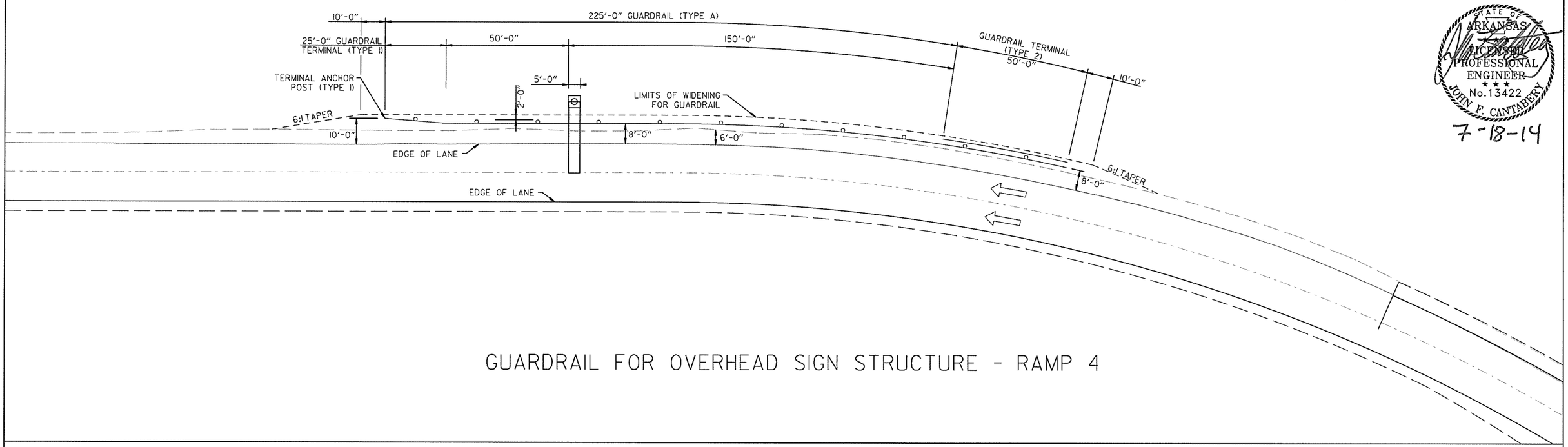

GUARDRAIL FOR OVERHEAD SIGN STRUCTURE - RAMP 4

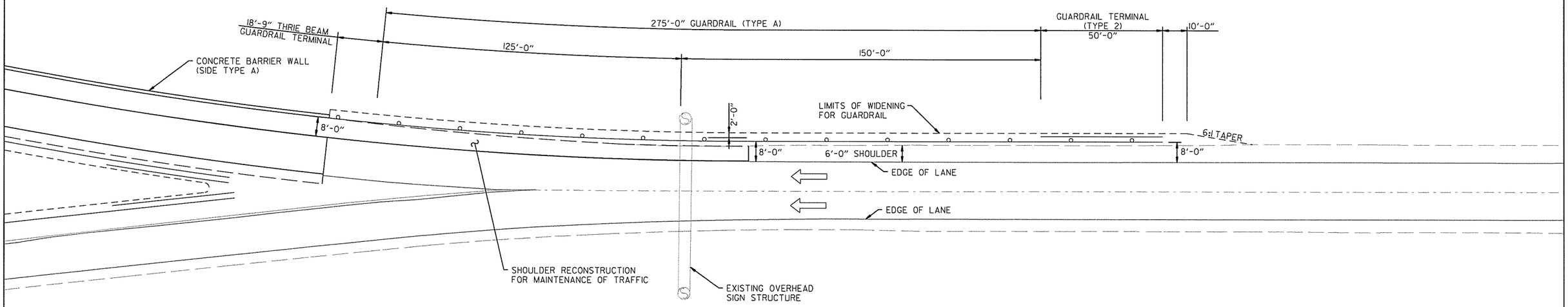

GUARDRAIL FOR EXISTING OVERHEAD SIGN STRUCTURE - RAMP 3/C-D ROAD

STATE OF ARKANSAS
LICENSED PROFESSIONAL ENGINEER
No.13422
JOHN F. CANTABERY
7-18-14

SPECIAL DETAILS

cgarvosini 7/17/2014 7:42:56 PM
WORKSPACE: AHTD
L:\20IN\I00709 - I-40 at I-430 Interchange Modifications\Drawings\RCA0609_SD_GR_04.dgn
REVISED DATE:

DATE REVISED	DATE FILMED	DATE REVISED	DATE FILMED	FED.RD. DIST.NO.	STATE	FED.AID PROJ.NO.	SHEET NO.	TOTAL SHEETS
				6	ARK.			
				JOB NO.		CA0609	48	693
				(2)		SPECIAL DETAILS		

STATE OF ARKANSAS
LICENSED PROFESSIONAL ENGINEER
No.13422
JOHN F. CANTABERY
7-18-14

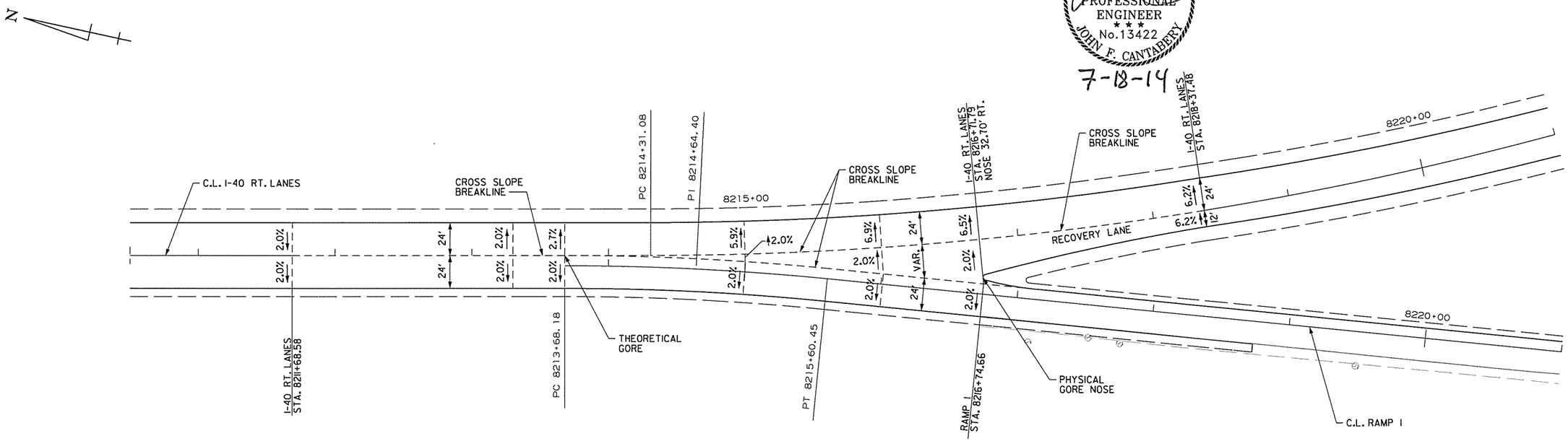

GORE DETAIL
I-40 RT. LANES AND RAMP I

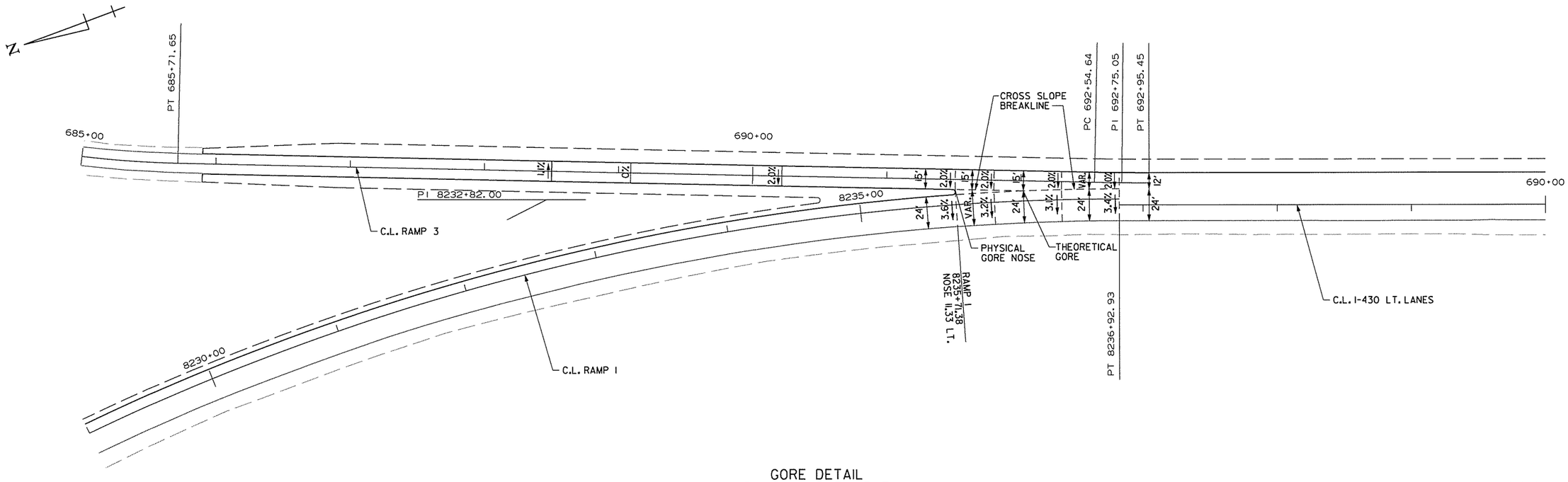

GORE DETAIL
RAMP I AND RAMP 3

SPECIAL DETAILS

cggervasini 7/17/2014 7:42:56 PM
WORKSPACE: AHTD
L:\ROW\NO17709 - I-40 at I-430 Interchange Modifications\Drawings\RCA0609_SD_GD_01.dgn
REVISED DATE:

DATE REVISED	DATE FILMED	DATE REVISED	DATE FILMED	FED.RD. DIST.NO.	STATE	FED.AID PROJ.NO.	SHEET NO.	TOTAL SHEETS
				6	ARK.			
				JOB NO.		CA0609	49	693
				(2)	SPECIAL DETAILS			

STATE OF ARKANSAS
LICENSED PROFESSIONAL ENGINEER
No.13422
JOHN F. CANTABERRY

7-18-14

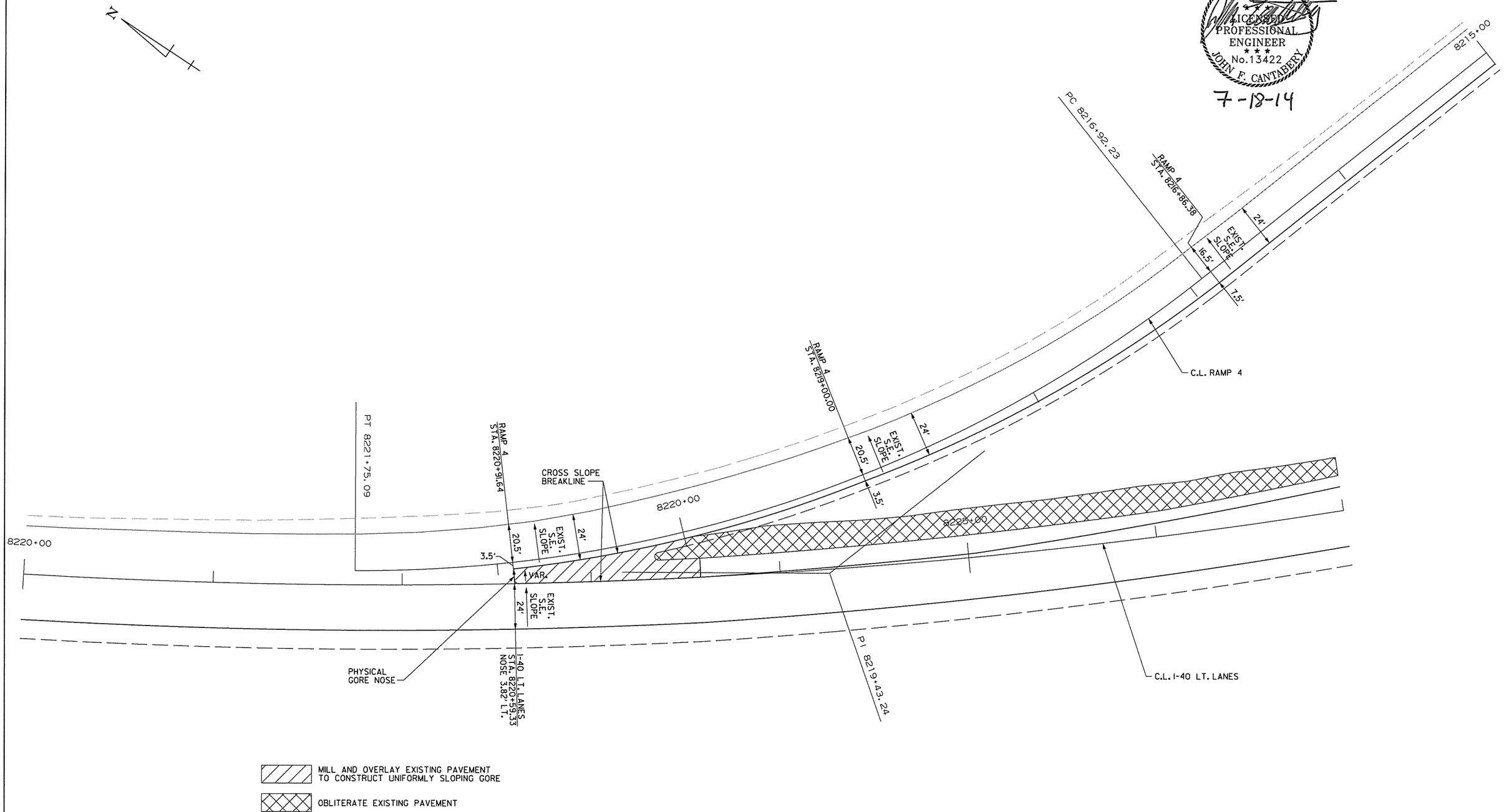

GORE DETAIL
I-40 LT. LANES AND RAMP 4

cggervasini 7/17/2014 7:42:56 PM
WORKSPACE: AHTD
L:\20IN\I0I709 - I-40 at I-430 Interchange Modifications\Drawings\RCA0609_SD_GD_02.dgn
REVISED DATE:

DATE REVISED	DATE FILMED	DATE REVISED	DATE FILMED	FED.RD. DIST.NO.	STATE	FED.AID PROJ.NO.	SHEET NO.	TOTAL SHEETS
				6	ARK.			
				JOB NO.		CA0609	50	693

(2) SPECIAL DETAILS

SLIDE REPAIR DETAILS

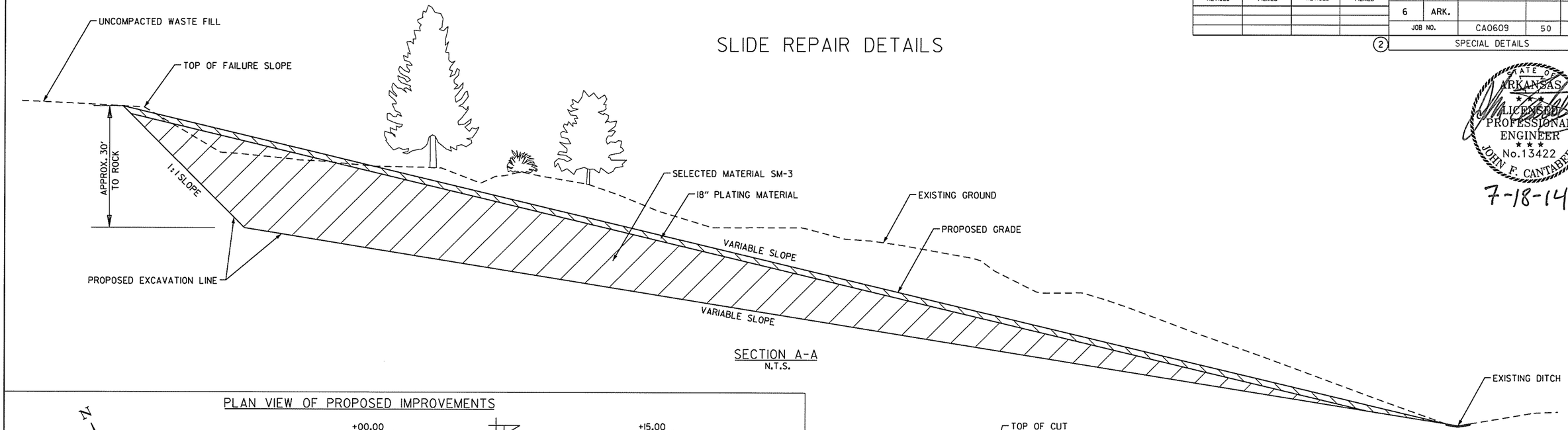

SECTION A-A
N.T.S.

STATE OF ARKANSAS
LICENSED PROFESSIONAL ENGINEER
No. 13422
JOHN F. CANTABERY
7-18-14

PLAN VIEW OF PROPOSED IMPROVEMENTS

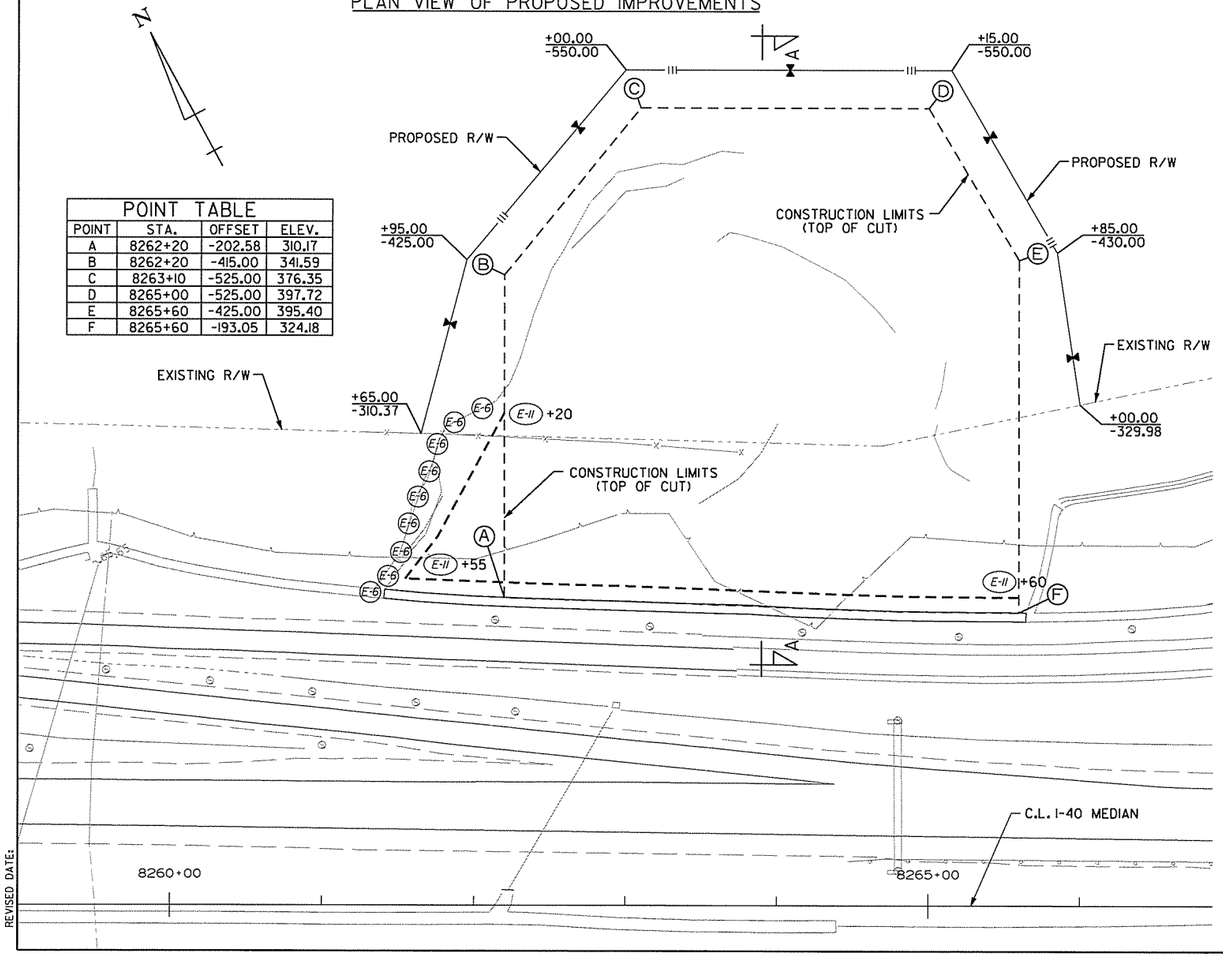

POINT TABLE			
POINT	STA.	OFFSET	ELEV.
A	8262+20	-202.58	310.17
B	8262+20	-415.00	341.59
C	8263+10	-525.00	376.35
D	8265+00	-525.00	397.72
E	8265+60	-425.00	395.40
F	8265+60	-193.05	324.18

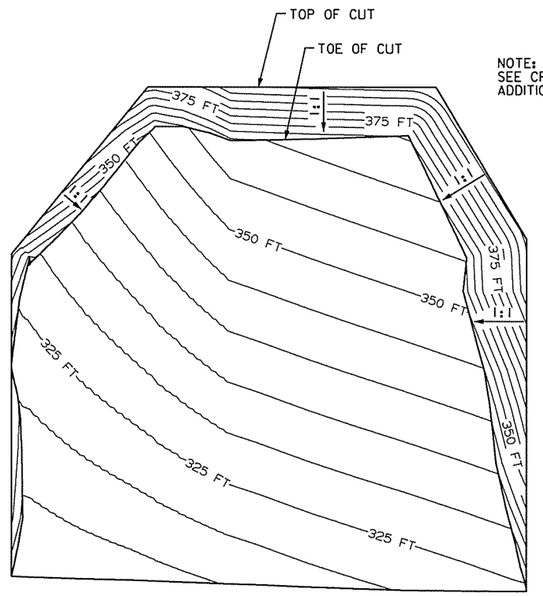

NOTE:
SEE CROSS SECTIONS FOR ADDITIONAL INFORMATION

EXCAVATION GRADING DETAIL

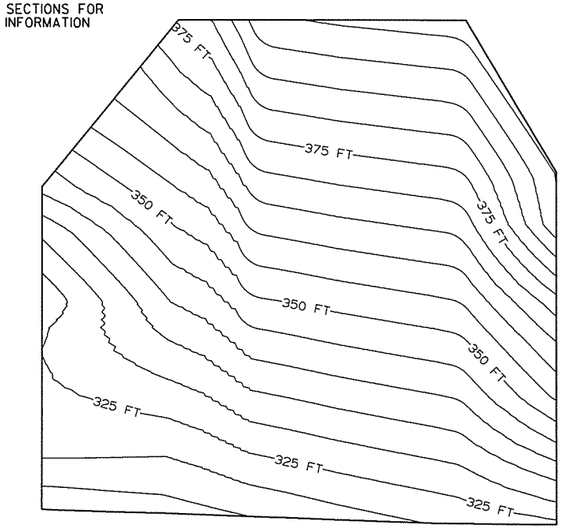

PROPOSED TOP SURFACE GRADING DETAIL

I-40 MEDIAN

SILT FENCE	(E-11)	LIN. FT.
STA. 8262+20 TO 8265+60	LT.	580

ROCK DITCH CHECK	(E-6)	INSTALLATION
STA. 8261+30 TO 8262+05	LT.	9

CONCRETE DITCH PAVING (TYPE B) I-40 MEDIAN

STA.	STA.	SIDE	"W"	SQ. YDS.
8261+41	8265+65	LT. = 424 LIN. FT.	6'-0"	283

SPECIAL DETAILS

WORKSPACE: AHTD
L:\2011\11017709 - I-40 at I-430 Interchange Modifications\Drawings\RCA0609_SD_SLD_01.dgn
REVISED DATE: 7/17/2014 7:43:02 PM

DATE REVISED	DATE FILMED	DATE REVISED	DATE FILMED	FED.RD. DIST.NO.	STATE	FED.AID PROJ.NO.	SHEET NO.	TOTAL SHEETS
				6	ARK.			
				JOB NO.		CA0609	51	693

(2) SPECIAL DETAILS

STATE OF ARKANSAS
LICENSED PROFESSIONAL ENGINEER
No.13422
JOHN F. CANTABERY

7-18-14

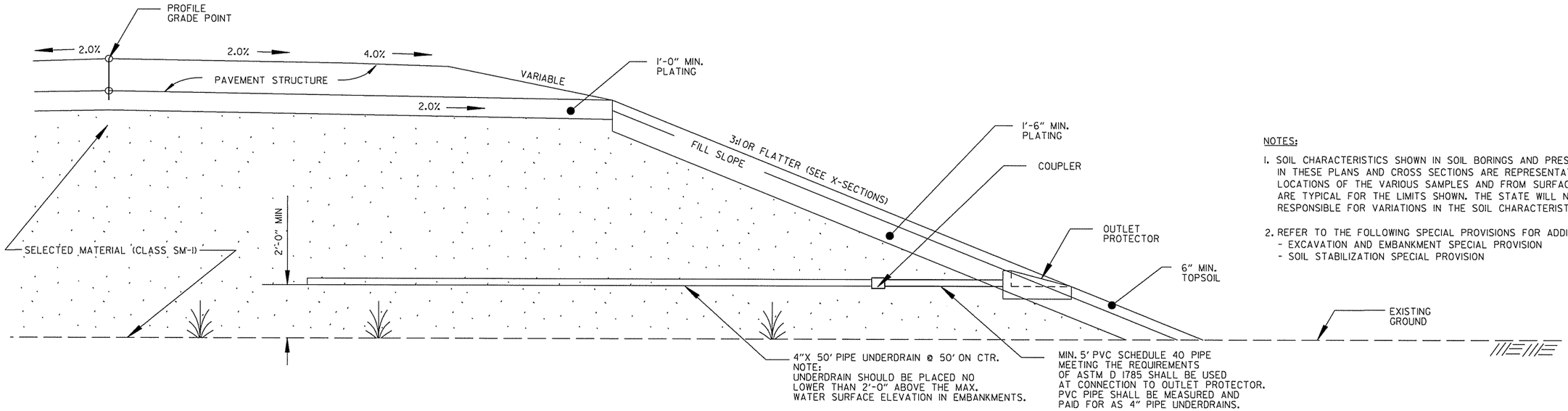

NOTES:

1. SOIL CHARACTERISTICS SHOWN IN SOIL BORINGS AND PRESENTED IN THESE PLANS AND CROSS SECTIONS ARE REPRESENTATIVE AT THE LOCATIONS OF THE VARIOUS SAMPLES AND FROM SURFACE INDICATIONS ARE TYPICAL FOR THE LIMITS SHOWN. THE STATE WILL NOT BE RESPONSIBLE FOR VARIATIONS IN THE SOIL CHARACTERISTICS.
2. REFER TO THE FOLLOWING SPECIAL PROVISIONS FOR ADDITIONAL INFORMATION
   - EXCAVATION AND EMBANKMENT SPECIAL PROVISION
   - SOIL STABILIZATION SPECIAL PROVISION

HALF-SECTION OF BRIDGE END EMBANKMENTS
(SEE SPECIAL PROVISION - EXCAVATION AND EMBANKMENT)

NOTES:
1. ALL EMBANKMENTS CONSTRUCTED OUT OF GRANULAR MATERIAL SHALL BE PLATED AS SHOWN.
2. THIS DETAIL SHALL BE USED FOR ALL EMBANKMENTS CONSTRUCTED OUT OF GRANULAR MATERIAL, HOWEVER, AT LOCATIONS OTHER THAN THOSE SHOWN ABOVE OR ON THE PLANS AND CONSTRUCTED WITH GRANULAR MATERIAL, INTERNAL DRAINAGE SHALL BE PROVIDED AS SHOWN AT NO COST TO THE DEPARTMENT AS DIRECTED BY THE ENGINEER.

cggervasini 7/17/2014 7:43:02 PM
WORKSPACE: AHTD
L:\2011\101709 - I-40 at I-430 Interchange Modifications\Drawings\RCA0609_SD_ALL_01.dgn
REVISED DATE:

DATE REVISED	DATE FILMED	DATE REVISED	DATE FILMED	FED.RD. DIST.NO.	STATE	FED.AID PROJ.NO.	SHEET NO.	TOTAL SHEETS
				6	ARK.			
				JOB NO.		CA0609	52	693

(2) TEMPORARY EROSION CONTROL DETAILS

STATE OF ARKANSAS
REGISTERED PROFESSIONAL ENGINEER
No. 11427
KEVIN G. TOBLESEY
7/17/14

0 50 100 FEET

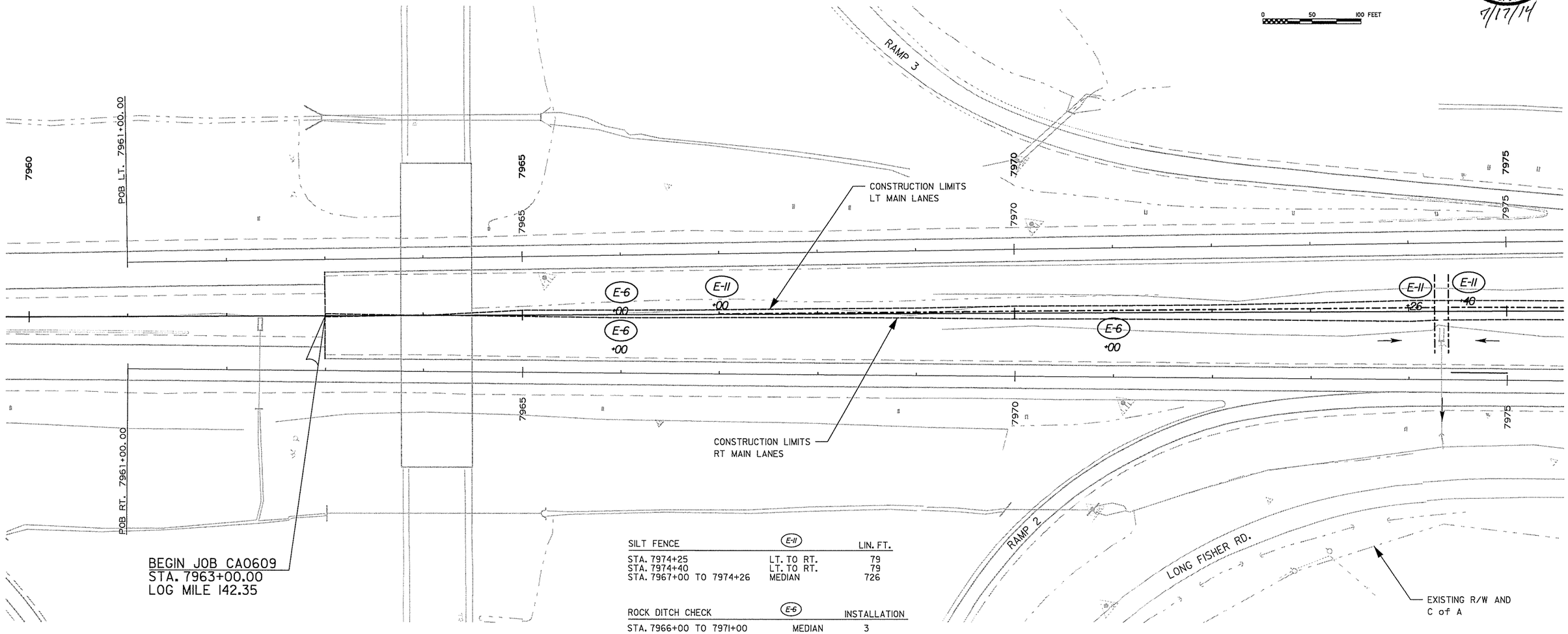

SILT FENCE (E-11)		LIN. FT.
STA. 7974+25	LT. TO RT.	79
STA. 7974+40	LT. TO RT.	79
STA. 7967+00 TO 7974+26	MEDIAN	726

ROCK DITCH CHECK (E-6)		INSTALLATION
STA. 7966+00 TO 7971+00	MEDIAN	3

NOTE:
STATIONING OF EROSION CONTROL DEVICES TAKEN ALONG I-40 CL MEDIAN.

EROSION CONTROL MEASURES TO BE PLACED DURING APPROPRIATE STAGES. THESE DEVICES SHALL BE LEFT IN PLACE AS LONG AS REQUIRED TO CONTROL EROSION.

REVISIONS

DATE	REVISION

LEGEND

(E-6) = ROCK DITCH CHECK
(E-7) = DROP INLET SILT FENCE
(E-11) = SILT FENCE

TEMPORARY EROSION CONTROL DETAILS
CLEARING AND GRUBBING AND STAGE I

7/16/2014 1:19:24 PM ...\5-Temporary Erosion Control.dgn t:\job\wlkm2650 dhtd cap ca0603\700 cadd files\777 roadway files\drawings\5-Temporary Erosion Control.dgn

DATE REVISED	DATE FILMED	DATE REVISED	DATE FILMED	FED.RD. DIST.NO.	STATE	FED.AID PROJ.NO.	SHEET NO.	TOTAL SHEETS
				6	ARK.			
				JOB NO.		CA0609	53	693

(2) TEMPORARY EROSION CONTROL DETAILS

STATE OF ARKANSAS
REGISTERED PROFESSIONAL ENGINEER
No. 11427
KEVIN G. TOBLESKY
7/17/14

0 50 100 FEET

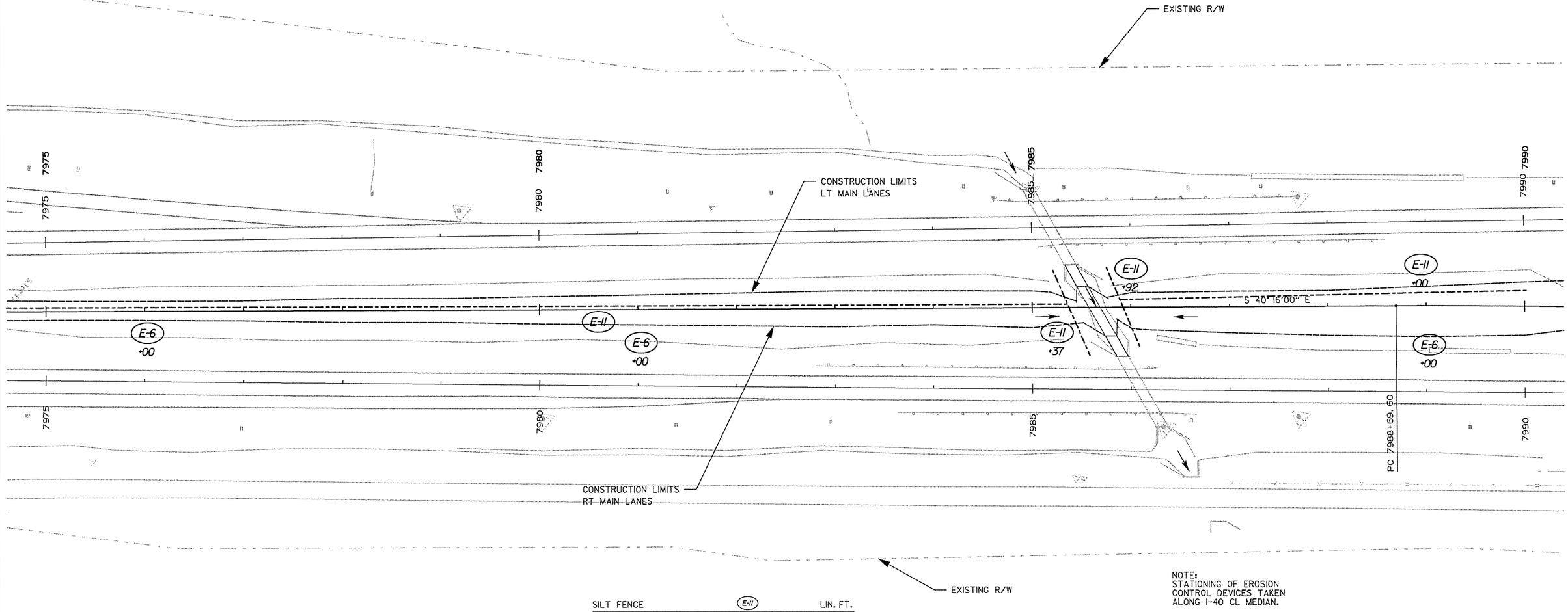

SILT FENCE	(E-11)	LIN. FT.
STA. 7974+40 TO 7985+37	MEDIAN	1100
STA. 7985+37	LT. TO RT.	94
STA. 7985+92	LT. TO RT.	87
STA. 7985+92 TO 7990+00	MEDIAN	408

ROCK DITCH CHECK	(E-6)	INSTALLATION
STA. 7975+00 TO 7990+00	MEDIAN	3

NOTE:
STATIONING OF EROSION CONTROL DEVICES TAKEN ALONG I-40 CL MEDIAN.

EROSION CONTROL MEASURES TO BE PLACED DURING APPROPRIATE STAGES. THESE DEVICES SHALL BE LEFT IN PLACE AS LONG AS REQUIRED TO CONTROL EROSION.

REVISIONS

DATE	REVISION

LEGEND

(E-6) = ROCK DITCH CHECK
(E-7) = DROP INLET SILT FENCE
(E-11) = SILT FENCE

TEMPORARY EROSION CONTROL DETAILS
CLEARING AND GRUBBING AND STAGE I

t:\job\wlxm2650 ahtd cap ca0603\700 cadd files\717 roadway files\drawings\5-Temporary Erosion Control.dgn
...\5-Temporary Erosion Control.dgn
7/16/2014 11:9:25 PM

DATE REVISED	DATE FILMED	DATE REVISED	DATE FILMED

FED.RD. DIST.NO.	STATE	FED.AID PROJ.NO.	SHEET NO.	TOTAL SHEETS
6	ARK.			
JOB NO.		CA0609	54	693

(2) TEMPORARY EROSION CONTROL DETAILS

STATE OF ARKANSAS
REGISTERED PROFESSIONAL ENGINEER
No. 11427
KEVIN G. TOBLESEY
7/17/14

0 50 100 FEET

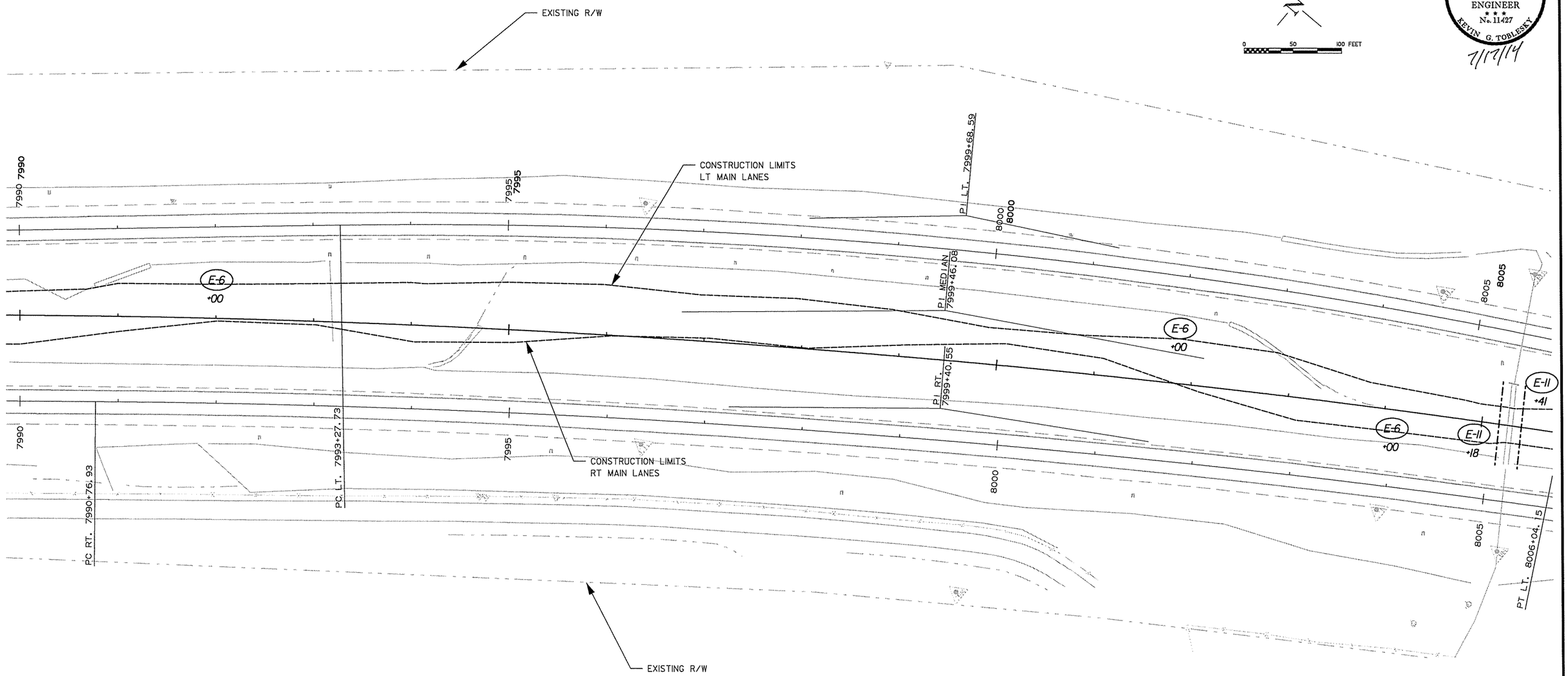

REVISIONS

DATE	REVISION

LEGEND

(E-6) = ROCK DITCH CHECK
(E-7) = DROP INLET SILT FENCE
(E-11) = SILT FENCE

SILT FENCE (E-11)		LIN. FT.
STA. 8005+18	LT. TO RT.	85
STA. 8005+41	LT. TO RT.	85

ROCK DITCH CHECK (E-6)		INSTALLATION
STA. 7990+00 TO 8005+00	MEDIAN	3

NOTE:
STATIONING OF EROSION CONTROL DEVICES TAKEN ALONG I-40 CL MEDIAN.

EROSION CONTROL MEASURES TO BE PLACED DURING APPROPRIATE STAGES. THESE DEVICES SHALL BE LEFT IN PLACE AS LONG AS REQUIRED TO CONTROL EROSION.

TEMPORARY EROSION CONTROL DETAILS
CLEARING AND GRUBBING AND STAGE I

7/16/2014 1:19:25 PM ...\5-Temporary Erosion Control.dgn t:\lob\wixm2650 ahtd cap ca0603\700 cadd files\777 roadway files\drawings\5-Temporary Erosion Control.dgn

DATE REVISED	DATE FILMED	DATE REVISED	DATE FILMED	FED.RD. DIST.NO.	STATE	FED.AID PROJ.NO.	SHEET NO.	TOTAL SHEETS
				6	ARK.			
				JOB NO.		CA0609	55	693

(2) TEMPORARY EROSION CONTROL DETAILS

STATE OF ARKANSAS
REGISTERED PROFESSIONAL ENGINEER
No. 11427
KEVIN G. TOBLESSY
7/17/14

N

0 50 100 FEET

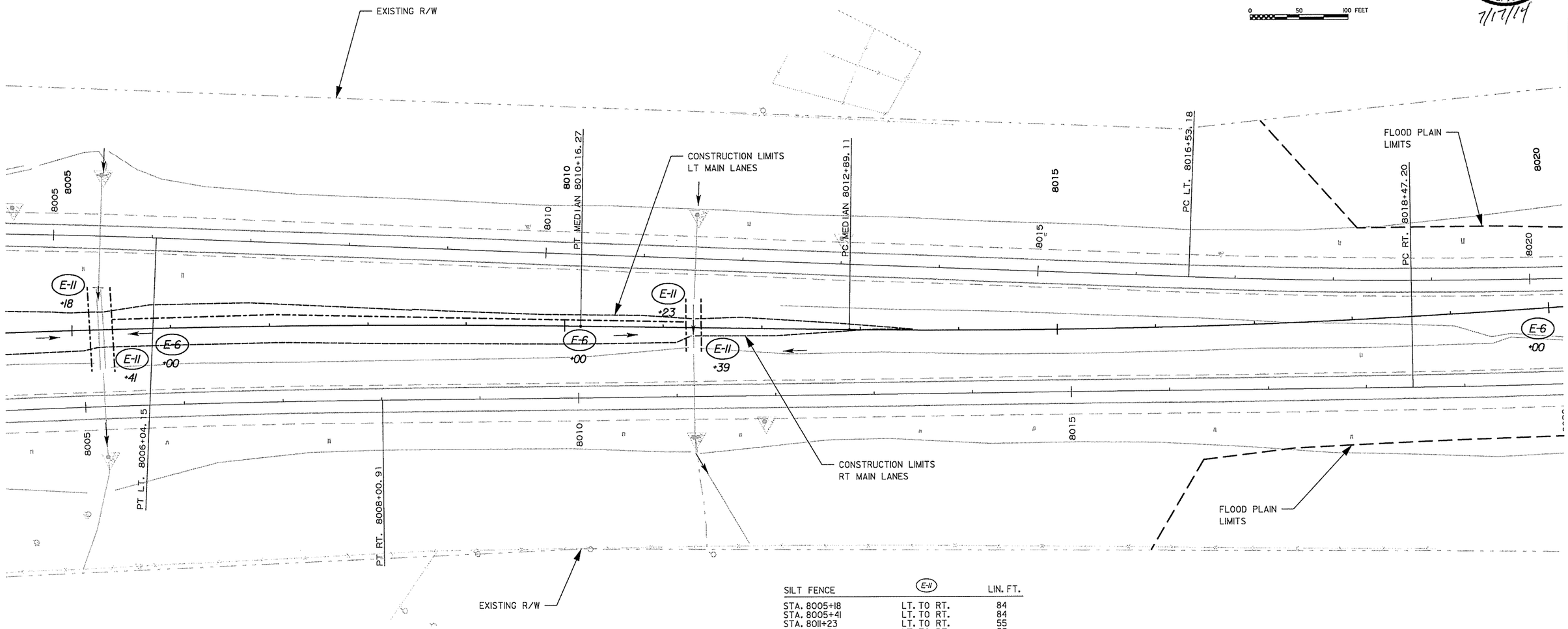

SILT FENCE (E-11)		LIN. FT.
STA. 8005+18	LT. TO RT.	84
STA. 8005+41	LT. TO RT.	84
STA. 8011+23	LT. TO RT.	55
STA. 8011+39	LT. TO RT.	55
STA. 8005+41 TO 8011+23	MEDIAN	582

ROCK DITCH CHECK (E-6)		INSTALLATION
STA. 8005+00 TO 8020+00	MEDIAN	3

NOTE:
STATIONING OF EROSION CONTROL DEVICES TAKEN ALONG I-40 CL MEDIAN.

EROSION CONTROL MEASURES TO BE PLACED DURING APPROPRIATE STAGES. THESE DEVICES SHALL BE LEFT IN PLACE AS LONG AS REQUIRED TO CONTROL EROSION.

REVISIONS

DATE	REVISION

LEGEND

(E-6) = ROCK DITCH CHECK
(E-7) = DROP INLET SILT FENCE
(E-11) = SILT FENCE

TEMPORARY EROSION CONTROL DETAILS CLEARING AND GRUBBING AND STAGE I

...\5-Temporary Erosion Control.dgn t:\lob\wkm2650 dhtd cap ca0603\700 cadd files\777 roadway files\drawings\5-Temporary Erosion Control.dgn 7/16/2014 1:19:25 PM

DATE REVISED	DATE FILMED	DATE REVISED	DATE FILMED	FED.RD. DIST.NO.	STATE	FED.AID PROJ.NO.	SHEET NO.	TOTAL SHEETS
				6	ARK.			
				JOB NO.		CA0609	56	693

(2) TEMPORARY EROSION CONTROL DETAILS

STATE OF ARKANSAS
REGISTERED PROFESSIONAL ENGINEER
No. 11427
KEVIN G. TOBLESKY
7/17/14

0 50 100 FEET

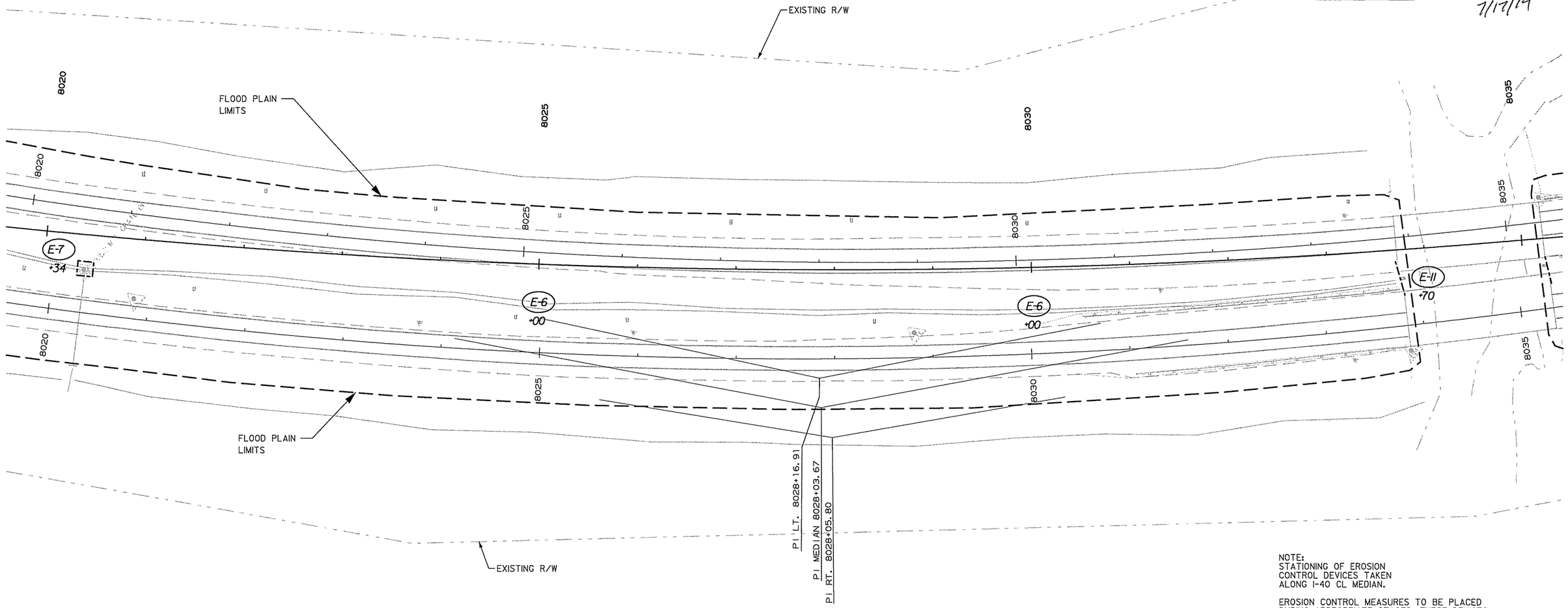

NOTE:
STATIONING OF EROSION CONTROL DEVICES TAKEN ALONG I-40 CL MEDIAN.

EROSION CONTROL MEASURES TO BE PLACED DURING APPROPRIATE STAGES. THESE DEVICES SHALL BE LEFT IN PLACE AS LONG AS REQUIRED TO CONTROL EROSION.

DROP INLET SILT FENCE	(E-7)	LIN. FT.
STA. 8020+34	RT.	16

SILT FENCE	(E-11)	LIN. FT.
STA. 8033+70	RT.	35

ROCK DITCH CHECK	(E-6)	INSTALLATION
STA. 8020+00 TO 8035+00	MEDIAN	2

REVISIONS

DATE	REVISION

LEGEND

(E-6) = ROCK DITCH CHECK
(E-7) = DROP INLET SILT FENCE
(E-11) = SILT FENCE

TEMPORARY EROSION CONTROL DETAILS CLEARING AND GRUBBING AND STAGE I

...\5-Temporary Erosion Control.dgn t:\lab\wixm2650 ahtd cap ca0603\700 cadd files\777 roadway files\drawings\5-Temporary Erosion Control.dgn
7/16/2014 19:25 PM

DATE REVISED	DATE FILMED	DATE REVISED	DATE FILMED	FED.RD. DIST.NO.	STATE	FED.AID PROJ.NO.	SHEET NO.	TOTAL SHEETS
				6	ARK.			
				JOB NO.		CA0609	57	693

(2) TEMPORARY EROSION CONTROL DETAILS

STATE OF ARKANSAS
REGISTERED PROFESSIONAL ENGINEER
No. 11427
KEVIN G. TOBLESKY
7/17/14

0 50 100 FEET

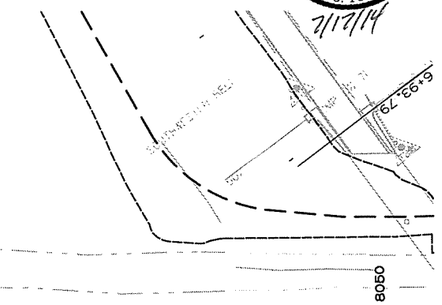

DROP INLET SILT FENCE (E-7)		LIN. FT.
STA. 8045+38	RT.	16

SILT FENCE (E-11)		LIN. FT.
STA. 8035+22	RT.	27

ROCK DITCH CHECK (E-6)		INSTALLATION
STA. 8035+00 TO 8050+00	MEDIAN	2

NOTE:
STATIONING OF EROSION CONTROL DEVICES TAKEN ALONG I-40 CL MEDIAN.

EROSION CONTROL MEASURES TO BE PLACED DURING APPROPRIATE STAGES. THESE DEVICES SHALL BE LEFT IN PLACE AS LONG AS REQUIRED TO CONTROL EROSION.

REVISIONS

DATE	REVISION

LEGEND

(E-6) = ROCK DITCH CHECK
(E-7) = DROP INLET SILT FENCE
(E-11) = SILT FENCE

TEMPORARY EROSION CONTROL DETAILS
CLEARING AND GRUBBING AND STAGE I

7/16/2014 1:19:26 PM t:\lob\wlkm2650 ahtd cap ca0603\700 cadd files\777 roadway files\drawings\5-Temporary Erosion Control.dgn
...\5-Temporary Erosion Control.dgn

DATE REVISED	DATE FILMED	DATE REVISED	DATE FILMED

FED.RD. DIST.NO.	STATE	FED.AID PROJ.NO.	SHEET NO.	TOTAL SHEETS
6	ARK.			
JOB NO.		CA0609	58	693

(2) TEMPORARY EROSION CONTROL DETAILS

STATE OF ARKANSAS
REGISTERED PROFESSIONAL ENGINEER
No. 11427
KEVIN G. TOBLESEY
7/17/14

N

0 50 100 FEET

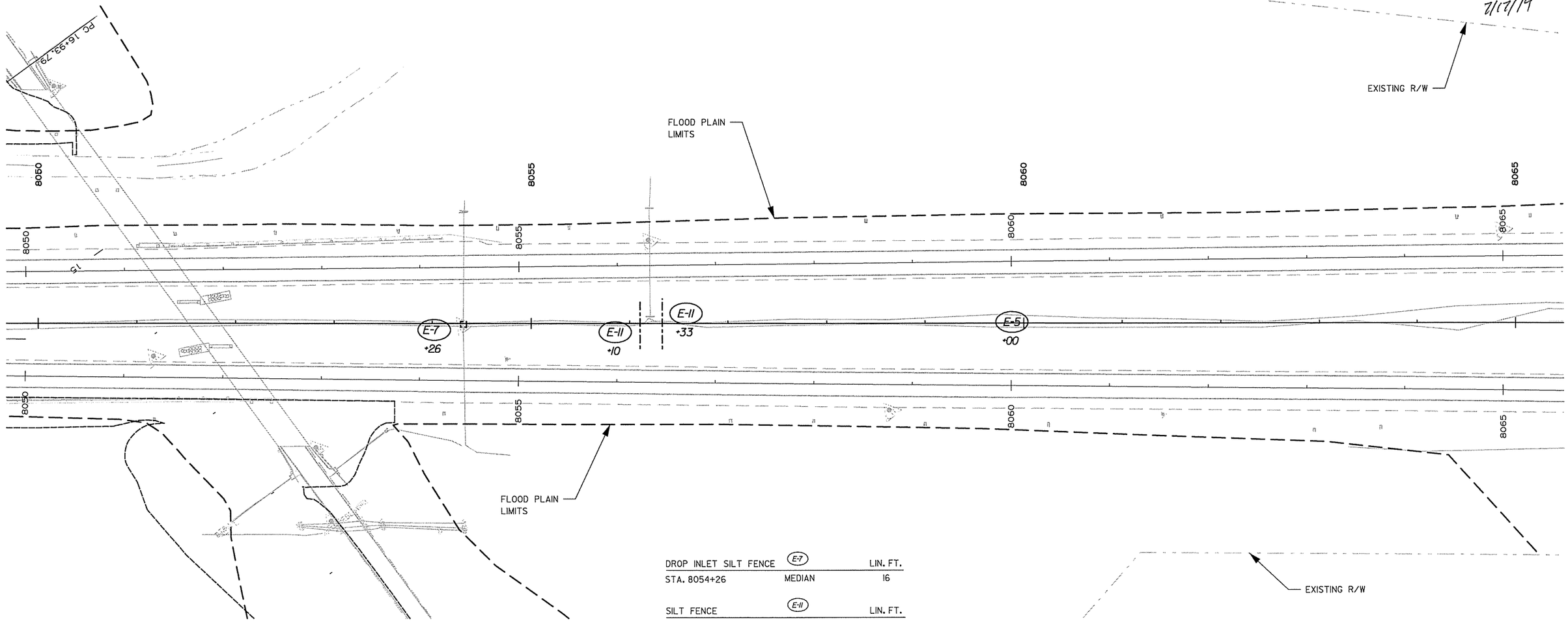

DROP INLET SILT FENCE	(E-7)	LIN. FT.
STA. 8054+26	MEDIAN	16

SILT FENCE	(E-11)	LIN. FT.
STA. 8056+10	LT. TO RT.	50
STA. 8056+33	LT. TO RT.	50

ROCK DITCH CHECK	(E-6)	INSTALLATION
STA. 8050+00 TO 8065+00	MEDIAN	1

NOTE:
STATIONING OF EROSION CONTROL DEVICES TAKEN ALONG I-40 CL MEDIAN.

EROSION CONTROL MEASURES TO BE PLACED DURING APPROPRIATE STAGES. THESE DEVICES SHALL BE LEFT IN PLACE AS LONG AS REQUIRED TO CONTROL EROSION.

REVISIONS

DATE	REVISION

LEGEND

(E-6) = ROCK DITCH CHECK
(E-7) = DROP INLET SILT FENCE
(E-11) = SILT FENCE

TEMPORARY EROSION CONTROL DETAILS CLEARING AND GRUBBING AND STAGE 1

...\5-Temporary Erosion Control.dgn t:\job\wlxm2650 dhtd cap ca0603\700 cadd files\777 roadway files\drawings\5-Temporary Erosion Control.dgn 7/16/2014 1:19:26 PM

DATE REVISED	DATE FILMED	DATE REVISED	DATE FILMED

FED.RD. DIST.NO.	STATE	FED.AID PROJ.NO.	SHEET NO.	TOTAL SHEETS
6	ARK.			
JOB NO.		CA0609	59	693

(2) TEMPORARY EROSION CONTROL DETAILS

STATE OF ARKANSAS
REGISTERED PROFESSIONAL ENGINEER
No. 11427
KEVIN G. TOBLESEY
7/17/14

0 50 100 FEET

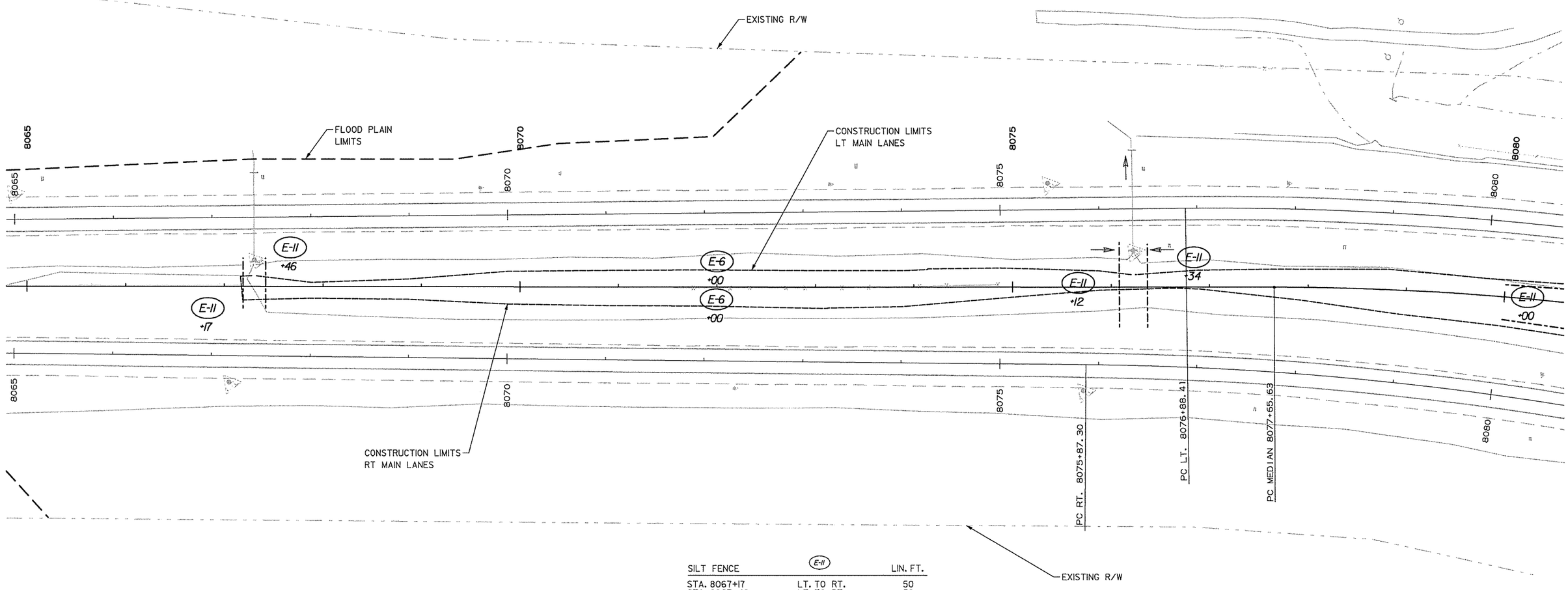

SILT FENCE (E-11)		LIN. FT.
STA. 8067+17	LT. TO RT.	50
STA. 8067+46	LT. TO RT.	50
STA. 8076+12	LT. TO RT.	85
STA. 8076+34	LT. TO RT.	84

ROCK DITCH CHECK (E-6)		INSTALLATION
STA. 8065+00 TO 8080+00	MEDIAN	2

NOTE:
STATIONING OF EROSION CONTROL DEVICES TAKEN ALONG I-40 CL MEDIAN.

EROSION CONTROL MEASURES TO BE PLACED DURING APPROPRIATE STAGES. THESE DEVICES SHALL BE LEFT IN PLACE AS LONG AS REQUIRED TO CONTROL EROSION.

REVISIONS

DATE	REVISION

LEGEND

(E-6) = ROCK DITCH CHECK
(E-7) = DROP INLET SILT FENCE
(E-11) = SILT FENCE

TEMPORARY EROSION CONTROL DETAILS
CLEARING AND GRUBBING AND STAGE I

7/16/2014 1:19:26 PM t:\job\wlxm2650 ahtd cap ca0603\700 cadd files\777 roadway files\drawings\5-Temporary Erosion Control.dgn ...\5-Temporary Erosion Control.dgn

DATE REVISED	DATE FILMED	DATE REVISED	DATE FILMED	FED.RD. DIST.NO.	STATE	FED.AID PROJ.NO.	SHEET NO.	TOTAL SHEETS
				6	ARK.			
				JOB NO.		CA0609	60	693

(2) TEMPORARY EROSION CONTROL DETAILS

STATE OF ARKANSAS
REGISTERED PROFESSIONAL ENGINEER
No. 11427
KEVIN G. TOBLESEY
7/17/14

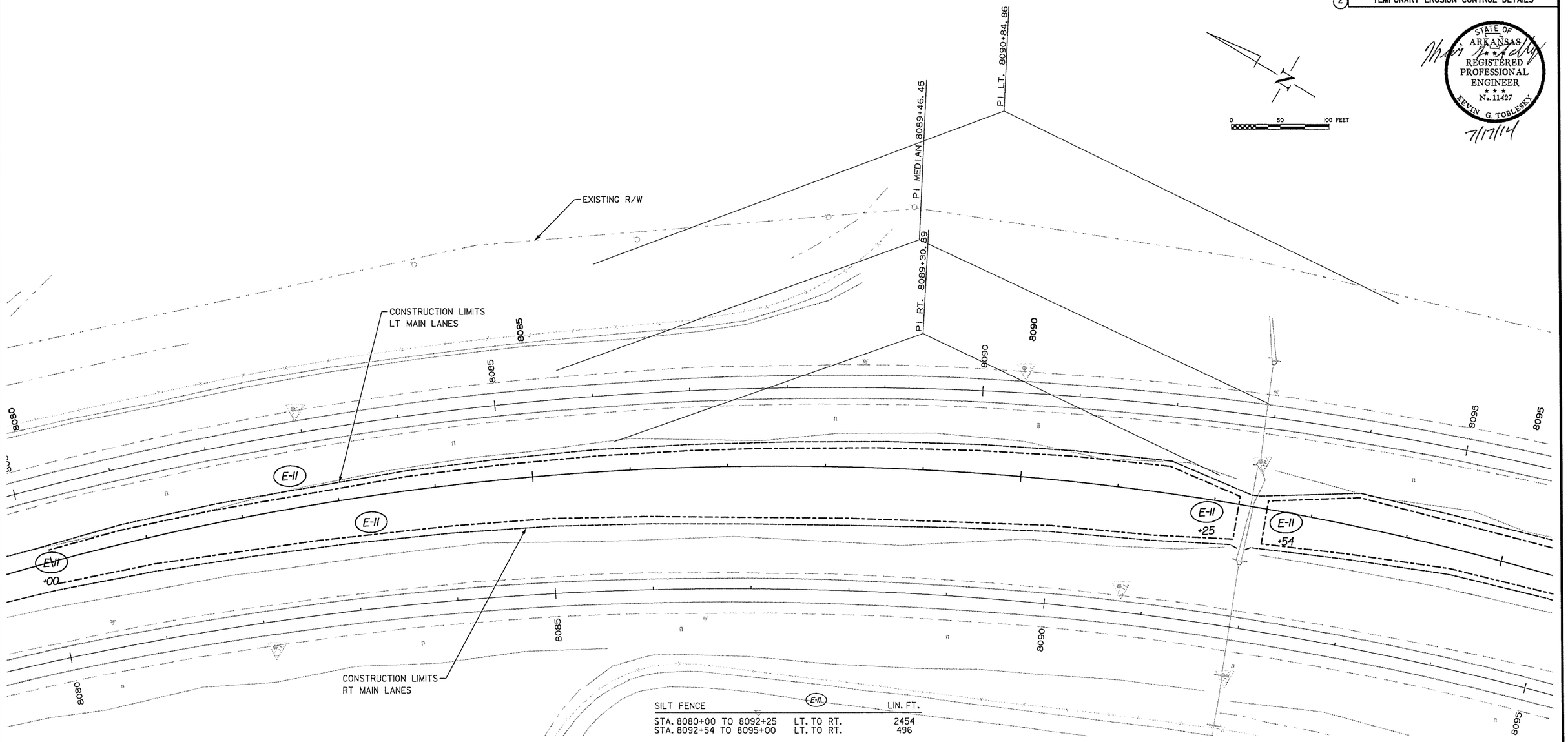

SILT FENCE (E-11)		LIN. FT.
STA. 8080+00 TO 8092+25	LT. TO RT.	2454
STA. 8092+54 TO 8095+00	LT. TO RT.	496

NOTE:
STATIONING OF EROSION CONTROL DEVICES TAKEN ALONG I-40 CL MEDIAN.

EROSION CONTROL MEASURES TO BE PLACED DURING APPROPRIATE STAGES. THESE DEVICES SHALL BE LEFT IN PLACE AS LONG AS REQUIRED TO CONTROL EROSION.

REVISIONS

DATE	REVISION

LEGEND

- (E-6) = ROCK DITCH CHECK
- (E-7) = DROP INLET SILT FENCE
- (E-11) = SILT FENCE

TEMPORARY EROSION CONTROL DETAILS
CLEARING AND GRUBBING AND STAGE I

t:\job\wxm2650 ahtd cap ca0603\700 cadd files\777 roadway files\drawings\5-Temporary Erosion Control.dgn
...\5-Temporary Erosion Control.dgn
7/16/2014 1:19:26 PM

DATE REVISED	DATE FILMED	DATE REVISED	DATE FILMED	FED.RD. DIST.NO.	STATE	FED.AID PROJ.NO.	SHEET NO.	TOTAL SHEETS
				6	ARK.			
				JOB NO.		CA0609	61	693

(2) TEMPORARY EROSION CONTROL DETAILS

STATE OF ARKANSAS
REGISTERED PROFESSIONAL ENGINEER
No. 11427
KEVIN G. TOBLESEY
7/17/14

0 50 100 FEET

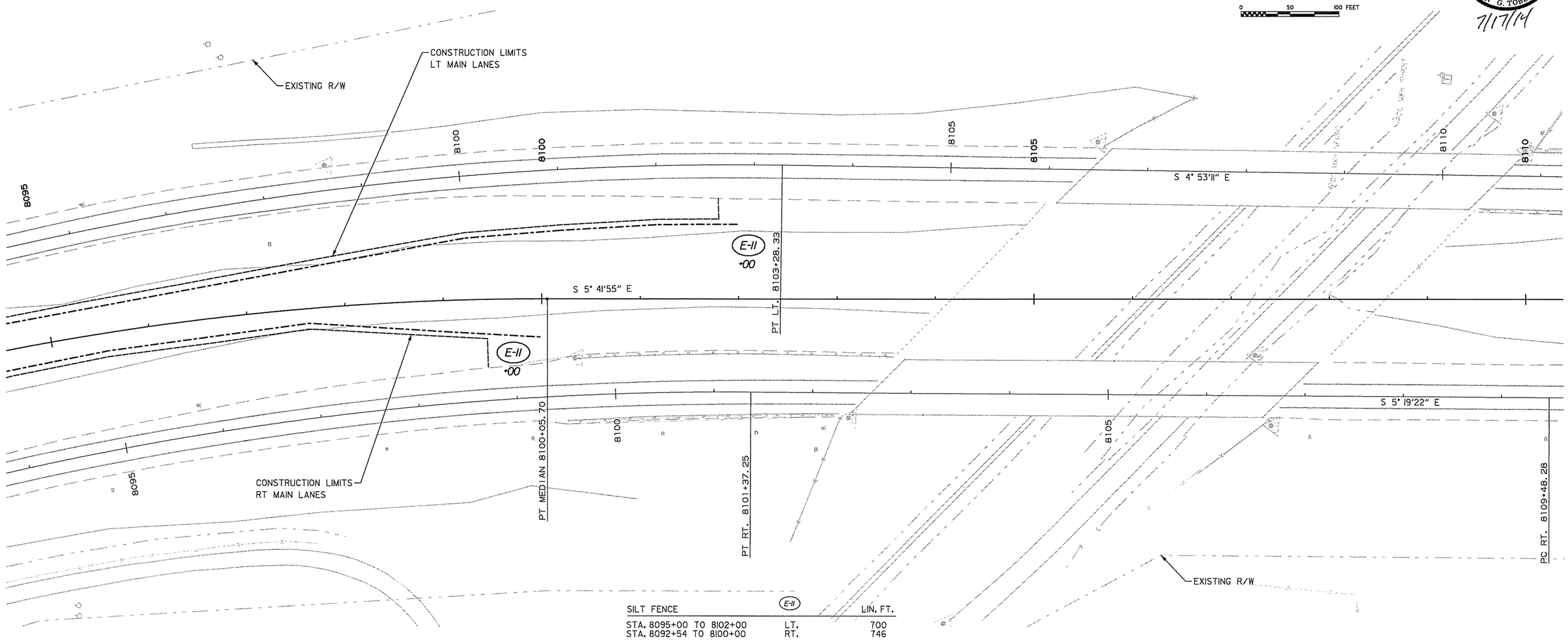

SILT FENCE	E-11	LIN. FT.
STA. 8095+00 TO 8102+00	LT.	700
STA. 8092+54 TO 8100+00	RT.	746

NOTE:
STATIONING OF EROSION CONTROL DEVICES TAKEN ALONG I-40 CL MEDIAN.

EROSION CONTROL MEASURES TO BE PLACED DURING APPROPRIATE STAGES. THESE DEVICES SHALL BE LEFT IN PLACE AS LONG AS REQUIRED TO CONTROL EROSION.

REVISIONS

DATE	REVISION

LEGEND

- (E-6) = ROCK DITCH CHECK
- (E-7) = DROP INLET SILT FENCE
- (E-11) = SILT FENCE

TEMPORARY EROSION CONTROL DETAILS CLEARING AND GRUBBING AND STAGE I

...\5-Temporary Erosion Control.dgn t:\lob\wlxm2650 ahtd cap ca0603\700 cadd files\777 roadway files\drawings\5-Temporary Erosion Control.dgn
7/16/2014 1:49:27 PM

DATE REVISED	DATE FILMED	DATE REVISED	DATE FILMED	FED.RD. DIST.NO.	STATE	FED.AID PROJ.NO.	SHEET NO.	TOTAL SHEETS
				6	ARK.			
				JOB NO.		CA0609	62	693

(2) TEMPORARY EROSION CONTROL DETAILS

STATE OF ARKANSAS
REGISTERED PROFESSIONAL ENGINEER
No. 11427
KEVIN G. TOBLESEY
7/17/14

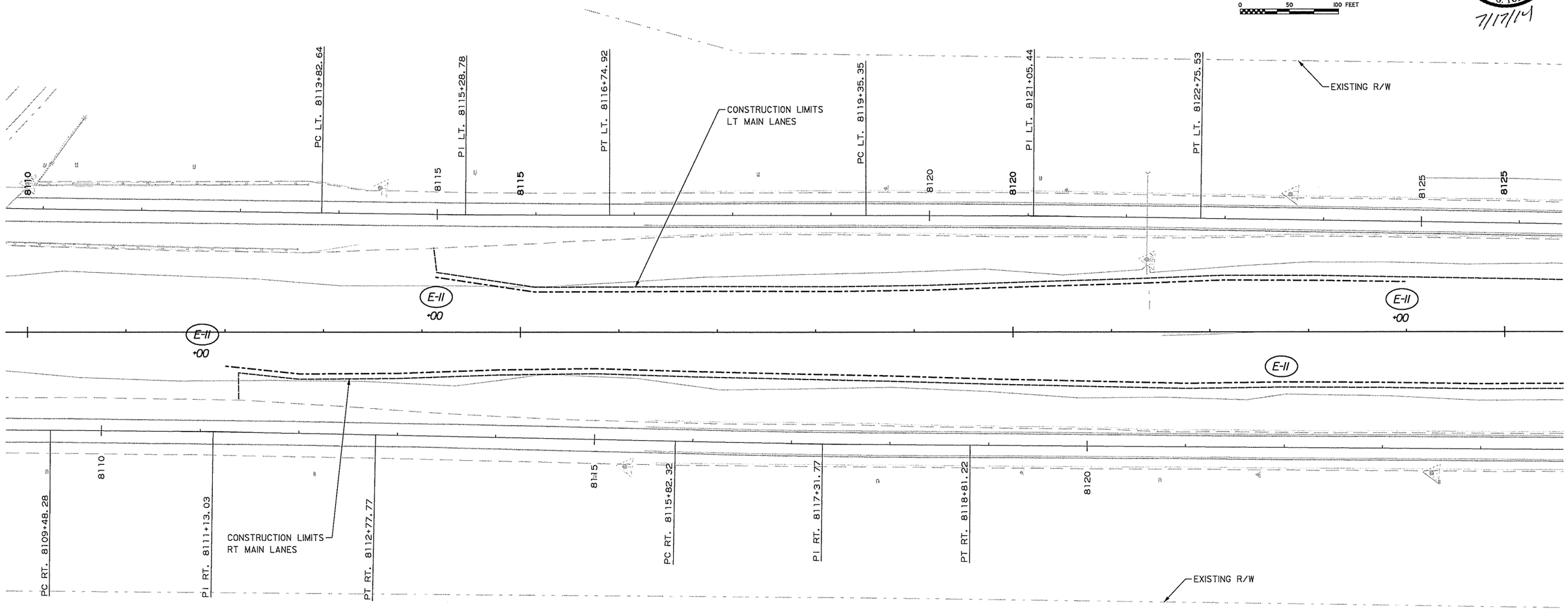

SILT FENCE	(E-11)	LIN. FT.
STA. 8114+00 TO 8124+00	LT.	1000
STA. 8112+00 TO 8125+00	RT.	1300

REVISIONS

DATE	REVISION

LEGEND

(E-6) = ROCK DITCH CHECK
(E-7) = DROP INLET SILT FENCE
(E-11) = SILT FENCE

NOTE:
STATIONING OF EROSION CONTROL DEVICES TAKEN ALONG I-40 CL MEDIAN.

EROSION CONTROL MEASURES TO BE PLACED DURING APPROPRIATE STAGES. THESE DEVICES SHALL BE LEFT IN PLACE AS LONG AS REQUIRED TO CONTROL EROSION.

TEMPORARY EROSION CONTROL DETAILS CLEARING AND GRUBBING AND STAGE I

...\5-Temporary Erosion Control.dgn t:\job\wixm2650 ahtd cap ca0603\700 cadd files\777 roadway files\drawings\5-Temporary Erosion Control.dgn
7/16/2014 1:19:27 PM

DATE REVISED	DATE FILMED	DATE REVISED	DATE FILMED	FED.RD. DIST.NO.	STATE	FED.AID PROJ.NO.	SHEET NO.	TOTAL SHEETS
				6	ARK.			
				JOB NO.		CA0609	63	693
				(2)	TEMPORARY EROSION CONTROL DETAILS			

STATE OF ARKANSAS
REGISTERED PROFESSIONAL ENGINEER
No. 11427
KEVIN G. TOBLESEY
7/17/14

0 50 100 FEET

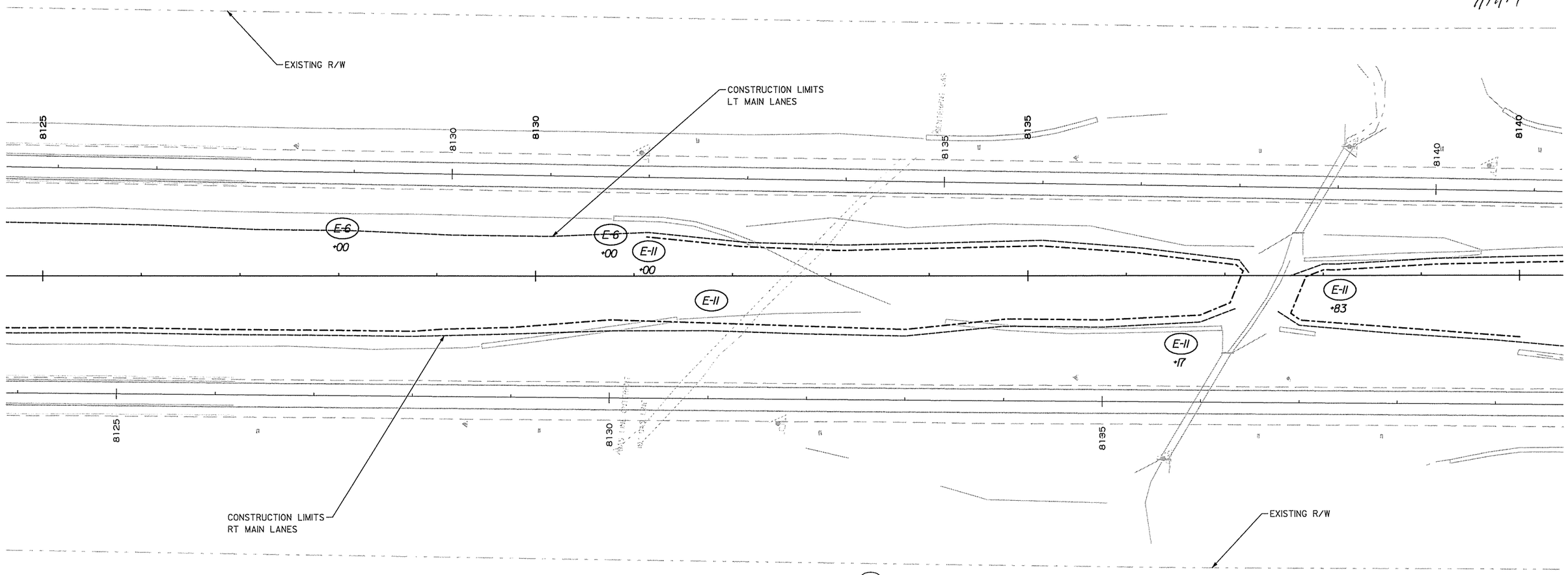

SILT FENCE	(E-11)	LIN. FT.
STA. 8131+00 TO 8137+17	LT.	617
STA. 8125+00 TO 8137+17	RT.	1217
STA. 8137+83 TO 8140+00	LT. TO RT.	495

ROCK DITCH CHECK	(E-6)	INSTALLATION
STA. 8125+00 TO 8140+00	LT.	2

NOTE:
STATIONING OF EROSION CONTROL DEVICES TAKEN ALONG I-40 CL MEDIAN.

EROSION CONTROL MEASURES TO BE PLACED DURING APPROPRIATE STAGES. THESE DEVICES SHALL BE LEFT IN PLACE AS LONG AS REQUIRED TO CONTROL EROSION.

REVISIONS

DATE	REVISION

LEGEND

(E-6) = ROCK DITCH CHECK
(E-7) = DROP INLET SILT FENCE
(E-11) = SILT FENCE

TEMPORARY EROSION CONTROL DETAILS CLEARING AND GRUBBING AND STAGE I

...\5-Temporary Erosion Control.dgn t:\lob\wkm2650 ahtd cap ca0603\700 cadd files\777 roadway files\drawings\5-Temporary Erosion Control.dgn
7/16/2014 1:19:27 PM

DATE REVISED	DATE FILMED	DATE REVISED	DATE FILMED	FED.RD. DIST.NO.	STATE	FED.AID PROJ.NO.	SHEET NO.	TOTAL SHEETS
				6	ARK.			
				JOB NO.		CA0609	64	693
				(2)	TEMPORARY EROSION CONTROL DETAILS			

STATE OF ARKANSAS
REGISTERED PROFESSIONAL ENGINEER
No. 11427
KEVIN G. TOBLESKY
7/17/14

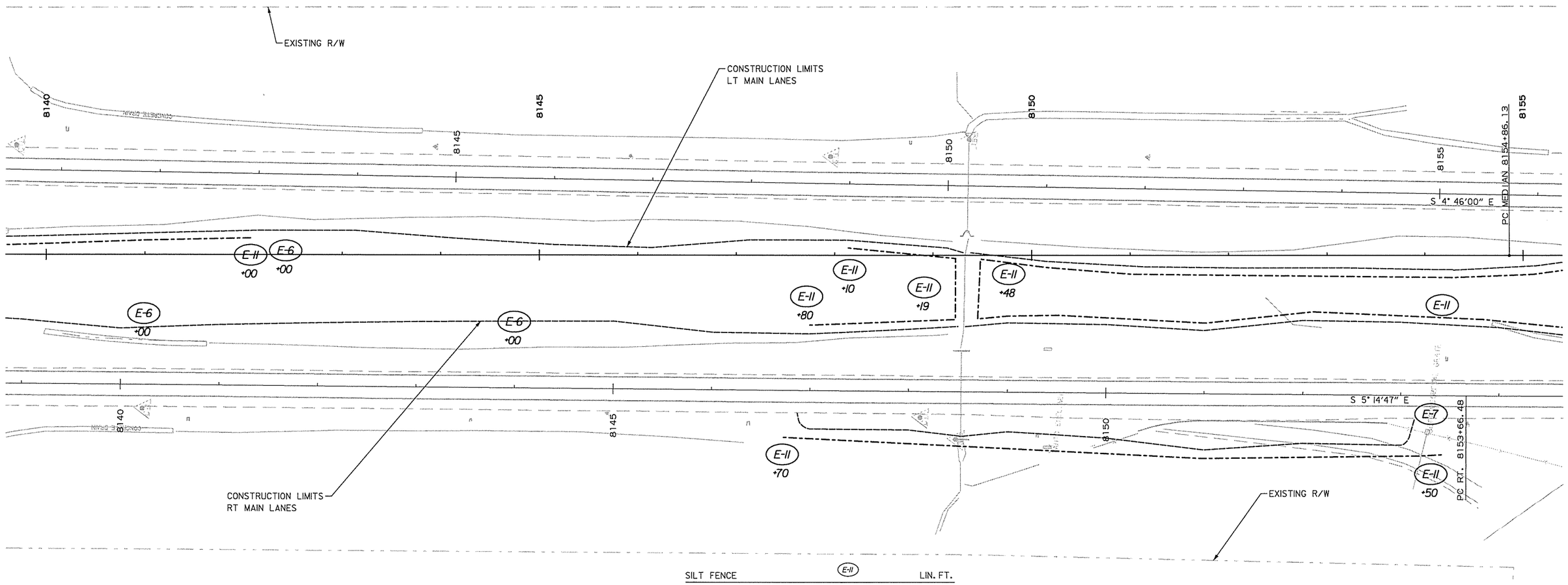

SILT FENCE	(E-11)	LIN. FT.
STA. 8140+00 TO 8142+00	LT.	200
STA. 8147+80 TO 8149+19	LT. TO RT.	320
STA. 8149+48 TO 8155+00	LT. TO RT.	1170
STA. 8146+70 TO 8153+50	RT.	680

ROCK DITCH CHECK	(E-6)	INSTALLATION
STA. 8005+00 TO 8020+00	MEDIAN	3

DROP INLET SILT FENCE	(E-7)	INSTALLATION
STA. 8153+27	RT. OF R.M.L.	1

NOTE:
STATIONING OF EROSION CONTROL DEVICES TAKEN ALONG I-40 CL MEDIAN.

EROSION CONTROL MEASURES TO BE PLACED DURING APPROPRIATE STAGES. THESE DEVICES SHALL BE LEFT IN PLACE AS LONG AS REQUIRED TO CONTROL EROSION.

REVISIONS

DATE	REVISION

LEGEND

(E-6) = ROCK DITCH CHECK
(E-7) = DROP INLET SILT FENCE
(E-11) = SILT FENCE

TEMPORARY EROSION CONTROL DETAILS
CLEARING AND GRUBBING AND STAGE I

...\5-Temporary Erosion Control.dgn t:\lob\wxm2650 ahtd cap ca0603\700 cadd files\777 roadway files\drawings\5-Temporary Erosion Control.dgn 7/16/2014 1:19:28 PM

DATE REVISED	DATE FILMED	DATE REVISED	DATE FILMED	FED.RD. DIST.NO.	STATE	FED.AID PROJ.NO.	SHEET NO.	TOTAL SHEETS
				6	ARK.			
				JOB NO.		CA0609	65	693

(2) TEMPORARY EROSION CONTROL DETAILS

STATE OF ARKANSAS
REGISTERED PROFESSIONAL ENGINEER
No. 11427
KEVIN G. TOBLESKY
7/17/14

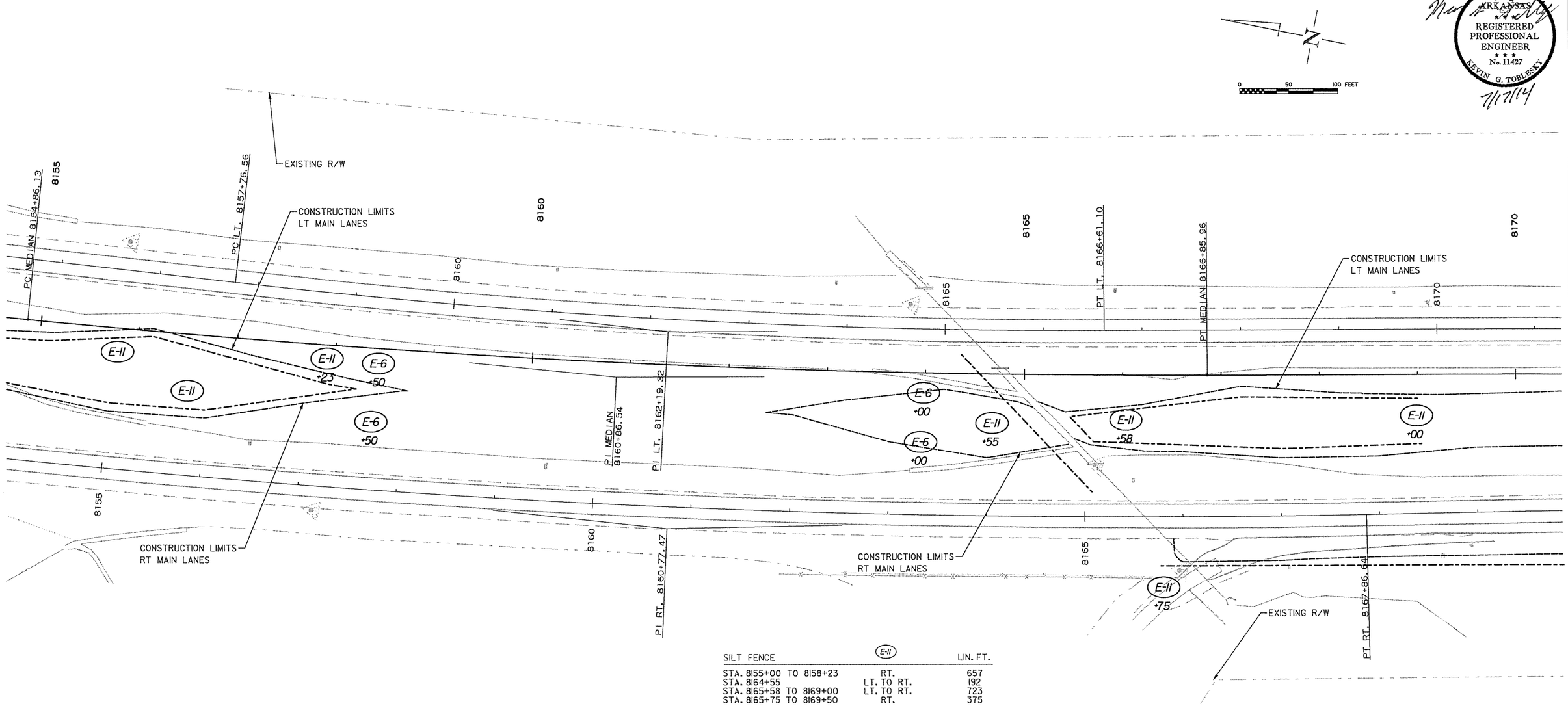

SILT FENCE	(E-11)	LIN. FT.
STA. 8155+00 TO 8158+23	RT.	657
STA. 8164+55	LT. TO RT.	192
STA. 8165+58 TO 8169+00	LT. TO RT.	723
STA. 8165+75 TO 8169+50	RT.	375

ROCK DITCH CHECK	(E-6)	INSTALLATION
STA. 8155+00 TO 8170+00	MEDIAN	4

NOTE:
STATIONING OF EROSION CONTROL DEVICES TAKEN ALONG I-40 CL MEDIAN.

EROSION CONTROL MEASURES TO BE PLACED DURING APPROPRIATE STAGES. THESE DEVICES SHALL BE LEFT IN PLACE AS LONG AS REQUIRED TO CONTROL EROSION.

REVISIONS

DATE	REVISION

LEGEND

(E-6) = ROCK DITCH CHECK
(E-7) = DROP INLET SILT FENCE
(E-11) = SILT FENCE

TEMPORARY EROSION CONTROL DETAILS CLEARING AND GRUBBING AND STAGE I

...\5-Temporary Erosion Control.dgn t:\job\wlxm2650 ahtd cap ca0603\700 cadd files\777 roadway files\drawings\5-Temporary Erosion Control.dgn
7/16/2014 1:19:28 PM

DATE REVISED	DATE FILMED	DATE REVISED	DATE FILMED	FED.RD. DIST.NO.	STATE	FED.AID PROJ.NO.	SHEET NO.	TOTAL SHEETS
				6	ARK.			
				JOB NO.		CA0609	66	693

(2) TEMPORARY EROSION CONTROL DETAILS

STATE OF ARKANSAS
REGISTERED PROFESSIONAL ENGINEER
No. 11427
KEVIN G. TOBLESEY
7/17/14

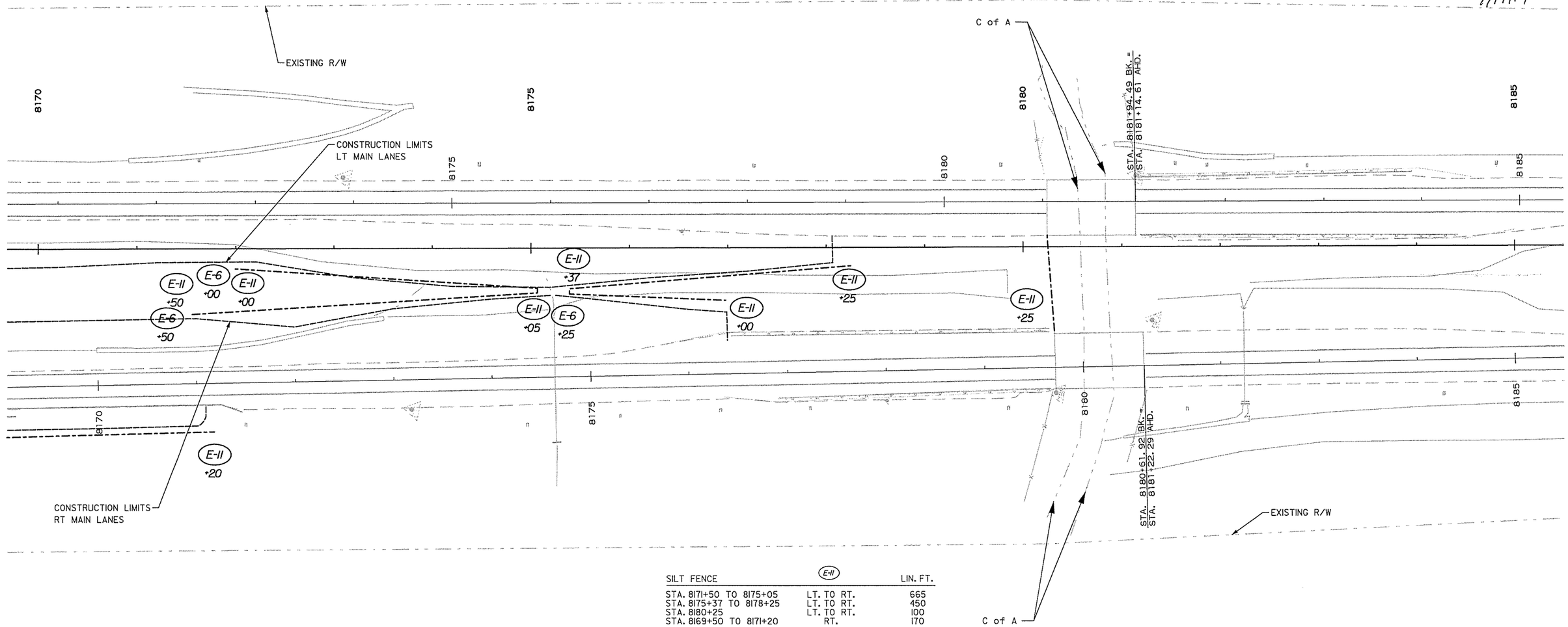

SILT FENCE	(E-II)	LIN. FT.
STA. 8171+50 TO 8175+05	LT. TO RT.	665
STA. 8175+37 TO 8178+25	LT. TO RT.	450
STA. 8180+25	LT. TO RT.	100
STA. 8169+50 TO 8171+20	RT.	170

ROCK DITCH CHECK	(E-6)	INSTALLATION
STA. 8170+00 TO 8185+00	MEDIAN	3

NOTE:
STATIONING OF EROSION CONTROL DEVICES TAKEN ALONG I-40 CL MEDIAN.

EROSION CONTROL MEASURES TO BE PLACED DURING APPROPRIATE STAGES. THESE DEVICES SHALL BE LEFT IN PLACE AS LONG AS REQUIRED TO CONTROL EROSION.

REVISIONS

DATE	REVISION

LEGEND

(E-6) = ROCK DITCH CHECK
(E-7) = DROP INLET SILT FENCE
(E-II) = SILT FENCE

TEMPORARY EROSION CONTROL DETAILS CLEARING AND GRUBBING AND STAGE I

7/16/2014 1:19:28 PM ...\5-Temporary Erosion Control.dgn t:\lob\wkm2650 ahtd cap ca0603\700 cadd files\777 roadway files\drawings\5-Temporary Erosion Control.dgn

DATE REVISED	DATE FILMED	DATE REVISED	DATE FILMED	FED.RD. DIST.NO.	STATE	FED.AID PROJ.NO.	SHEET NO.	TOTAL SHEETS
				6	ARK.			
				JOB NO.		CA0609	67	693

(2) TEMPORARY EROSION CONTROL DETAILS

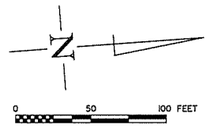



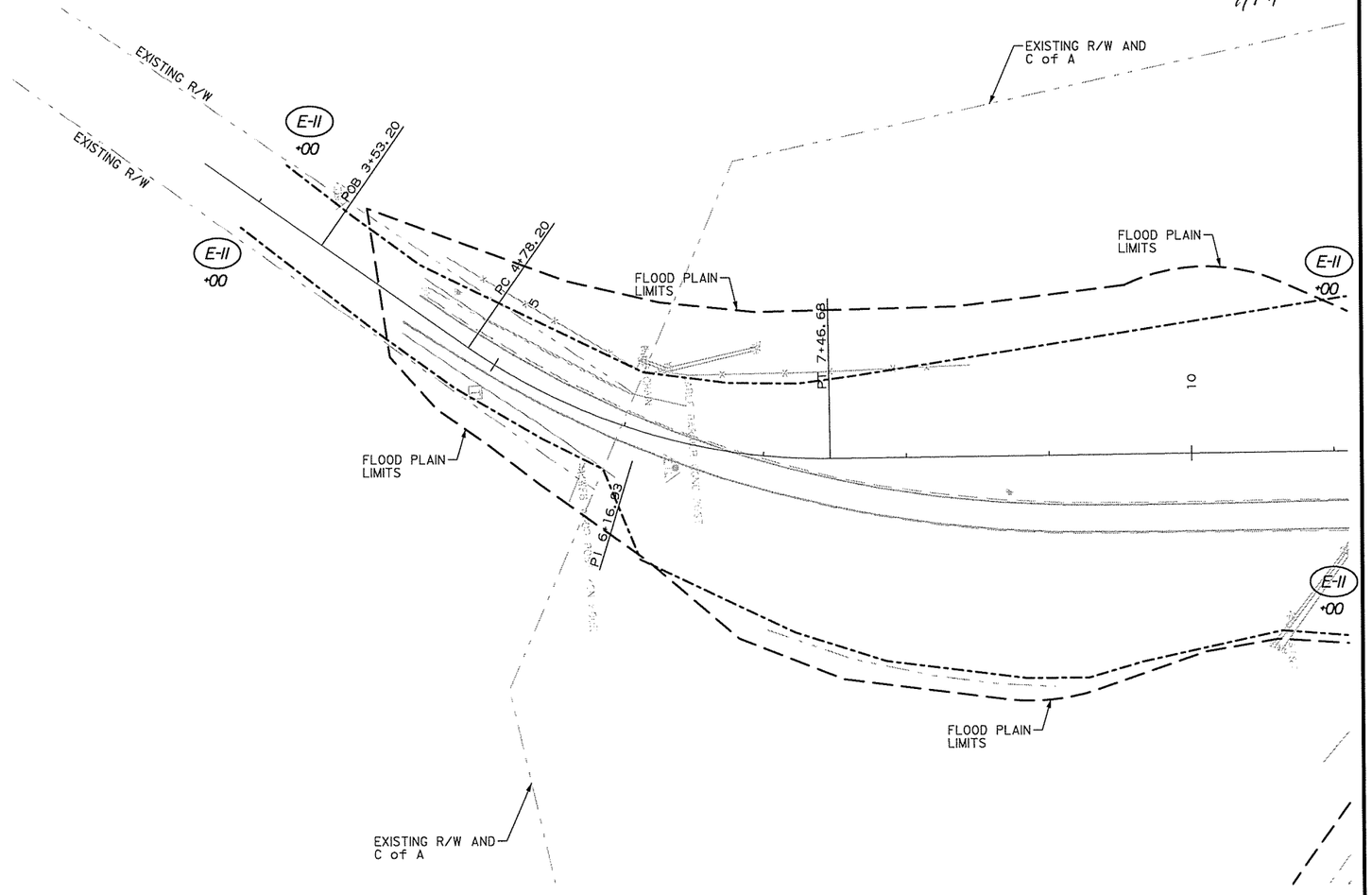

NOTE:
STATIONING OF EROSION CONTROL DEVICES TAKEN ALONG MARCHE RD.

EROSION CONTROL MEASURES TO BE PLACED DURING APPROPRIATE STAGES. THESE DEVICES SHALL BE LEFT IN PLACE AS LONG AS REQUIRED TO CONTROL EROSION.

SILT FENCE	(E-11)	LIN. FT.
STA. 3+00 TO 11+00	LT. SIDE	850
STA. 3+00 TO 11+00	RT. SIDE	950

REVISIONS

DATE	REVISION

LEGEND

(E-6) = ROCK DITCH CHECK

(E-11) = SILT FENCE

TEMPORARY EROSION CONTROL DETAILS
CLEARING AND GRUBBING

7/16/2014 11:9:32 PM ...\5-Temporary Erosion Control.dgn t:\job\wixm2650 dhtd cap ca0603\700 cadd files\777 roadway files\drawings\5-Temporary Erosion Control.dgn

DATE REVISED	DATE FILMED	DATE REVISED	DATE FILMED	FED.RD. DIST.NO.	STATE	FED.AID PROJ.NO.	SHEET NO.	TOTAL SHEETS
				6	ARK.			
				JOB NO.		CA0609	68	693

(2) TEMPORARY EROSION CONTROL DETAILS

STATE OF ARKANSAS
REGISTERED PROFESSIONAL ENGINEER
No. 11427
KEVIN G. TOBLESKY
7/17/14

0 50 100 FEET

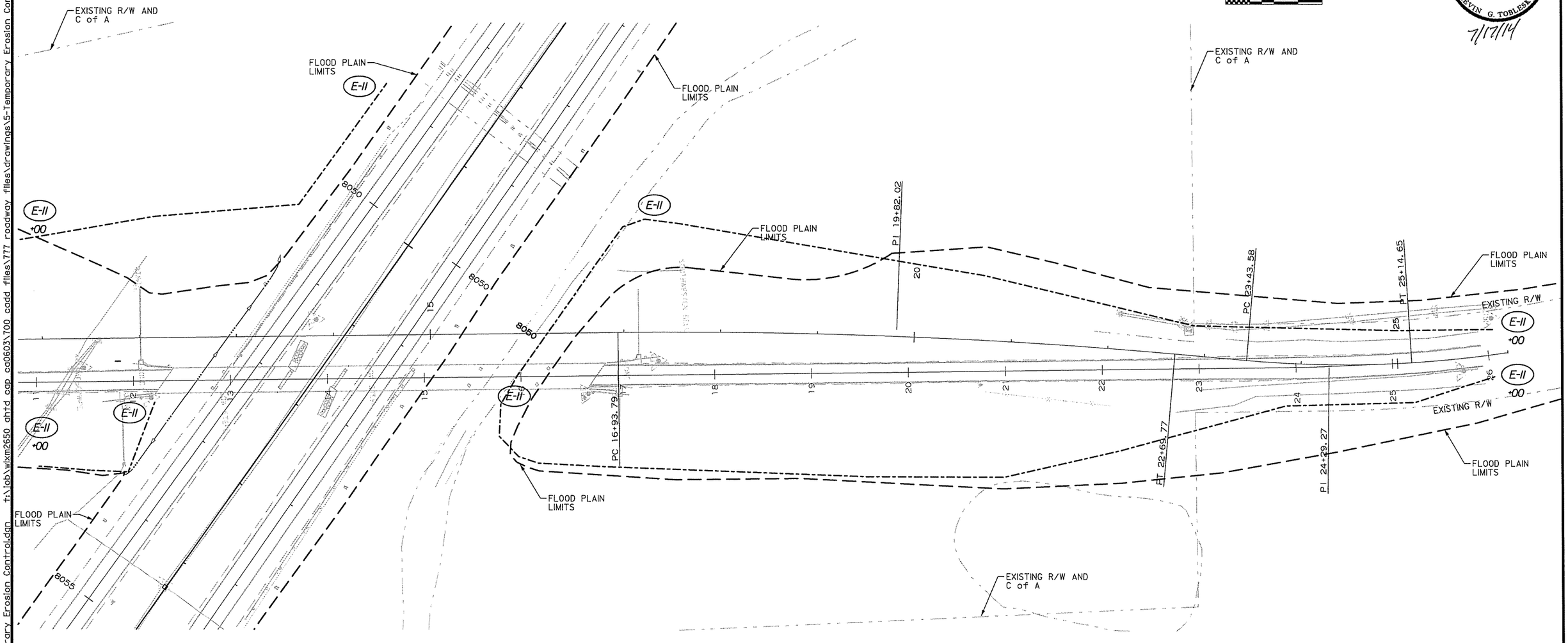

NOTE:
STATIONING OF EROSION CONTROL DEVICES TAKEN ALONG MARCHE RD.

EROSION CONTROL MEASURES TO BE PLACED DURING APPROPRIATE STAGES. THESE DEVICES SHALL BE LEFT IN PLACE AS LONG AS REQUIRED TO CONTROL EROSION.

REVISIONS

DATE	REVISION

LEGEND

E-6 = ROCK DITCH CHECK
E-11 = SILT FENCE

SILT FENCE	E-11	LIN. FT.
STA. 11+00 TO 14+60	LT. SIDE	440
STA. 11+00 TO 12+25	RT. SIDE	170
STA. 17+00 TO 26+00	LT. SIDE	910
STA. 16+10 TO 26+00	RT. SIDE	1120
STA. 16+10 TO 17+00	RT. TO LT.	190

TEMPORARY EROSION CONTROL DETAILS
CLEARING AND GRUBBING

7/16/2014 1:19:32 PM t:\job\wlkm2650 ahtd cap ca0603\700 cadd files\777 roadway files\drawings\5-Temporary Erosion Control.dgn ...\5-Temporary Erosion Control.dgn

I-40 LANES			
SILT FENCE	(E-II)		LIN. FT.
STA. 8181+29 TO 8181+66	LT.		80
STA. 8181+29 TO 8181+56	RT.		120
STA. 8182+50 TO 8185+20	MED.		155
STA. 8182+45 TO 8185+15	MED.		305
STA. 8189+90 TO 8191+55	MED.		165
STA. 8189+80 TO 8191+55	MED.		175
STA. 8191+90 TO 8196+40	LT.		450
STA. 8189+49 TO 8191+99	RT.		255

I-40 LANES			
SILT FENCE	(E-II)		LIN. FT.
STA. 8192+02 TO 8194+10	RT.		212
STA. 8192+37 TO 8192+75	MED.		75
STA. 8192+83 TO 8193+17	MED.		75
STA. 8198+40 TO 8200+70	RT.		242
STA. 8201+00 TO 8205+60	RT.		484
STA. 8200+40 TO 8202+11	LT.		186
STA. 8202+42 TO 8208+60	LT.		627
STA. 8201+25 TO 8201+46	MED.		51
STA. 8201+70 TO 8201+88	MED.		52

STATE OF ARKANSAS
LICENSED PROFESSIONAL ENGINEER
No. 13422
JOHN F. CANTABERY
7-18-14

DATE REVISED	DATE FILMED	DATE REVISED	DATE FILMED	FED.RD. DIST.NO.	STATE	FED.AID PROJ.NO.	SHEET NO.	TOTAL SHEETS
				6	ARK.			
				JOB NO.		CA0609	69	693

(2) TEMPORARY EROSION CONTROL DETAILS

N

BK. 8181+94.49
AHD. 8181+14.61

BK. 8180+61.92
AHD. 8181+22.29

C.L. I-40 LT. LANES
C.L. I-40 RT. LANES
C.L. I-40 MEDIAN

8180+00
8185+00
8190+00
8195+00
8200+00
8205+00

(E-II) +66, +29, +50, +20, +15, +45, +29, +56, +90, +75, +17, +55, +55, +37, +83, +49, +99, +02, +40, +40, +11, +42, +46, +88, +25, +70, +70, +00, +10, +40, +60

CONCRETE DRAIN

LEGEND

(E-II) = SILT FENCE

CLEARING AND GRUBBING EROSION CONTROL MEASURES TO BE PLACED BEFORE ANY CONSTRUCTION. THESE DEVICES SHALL BE LEFT IN PLACE AS LONG AS REQUIRED TO CONTROL EROSION.

REVISIONS

DATE	REVISION

I-40

TEMPORARY EROSION CONTROL DETAILS CLEARING AND GRUBBING STAGE

cggervasini 7/17/2014 7:43:03 PM
WORKSPACE: AHTD
L:\20IN\NOI709 - I-40 at I-430 Interchange Modifications\Drawings\RCA0609_EC_MNL_01_CG.dgn
REVISED DATE:

DATE REVISED	DATE FILMED	DATE REVISED	DATE FILMED	FED.RD. DIST.NO.	STATE	FED.AID PROJ.NO.	SHEET NO.	TOTAL SHEETS
				6	ARK.			
				JOB NO.		CA0609	70	693

(2) TEMPORARY EROSION CONTROL DETAILS

STATE OF ARKANSAS
LICENSED PROFESSIONAL ENGINEER
No. 13422
JOHN F. CANTABERY
7-18-14

I-40 LANES

SILT FENCE	(E-II)	LIN. FT.
STA. 8212+90 TO 8222+20	MED.	1190
STA. 8219+45 TO 8221+60	RT.	235
STA. 8226+20 TO 8226+45	MED.	800
STA. 8223+40 TO 8226+20	RT.	305

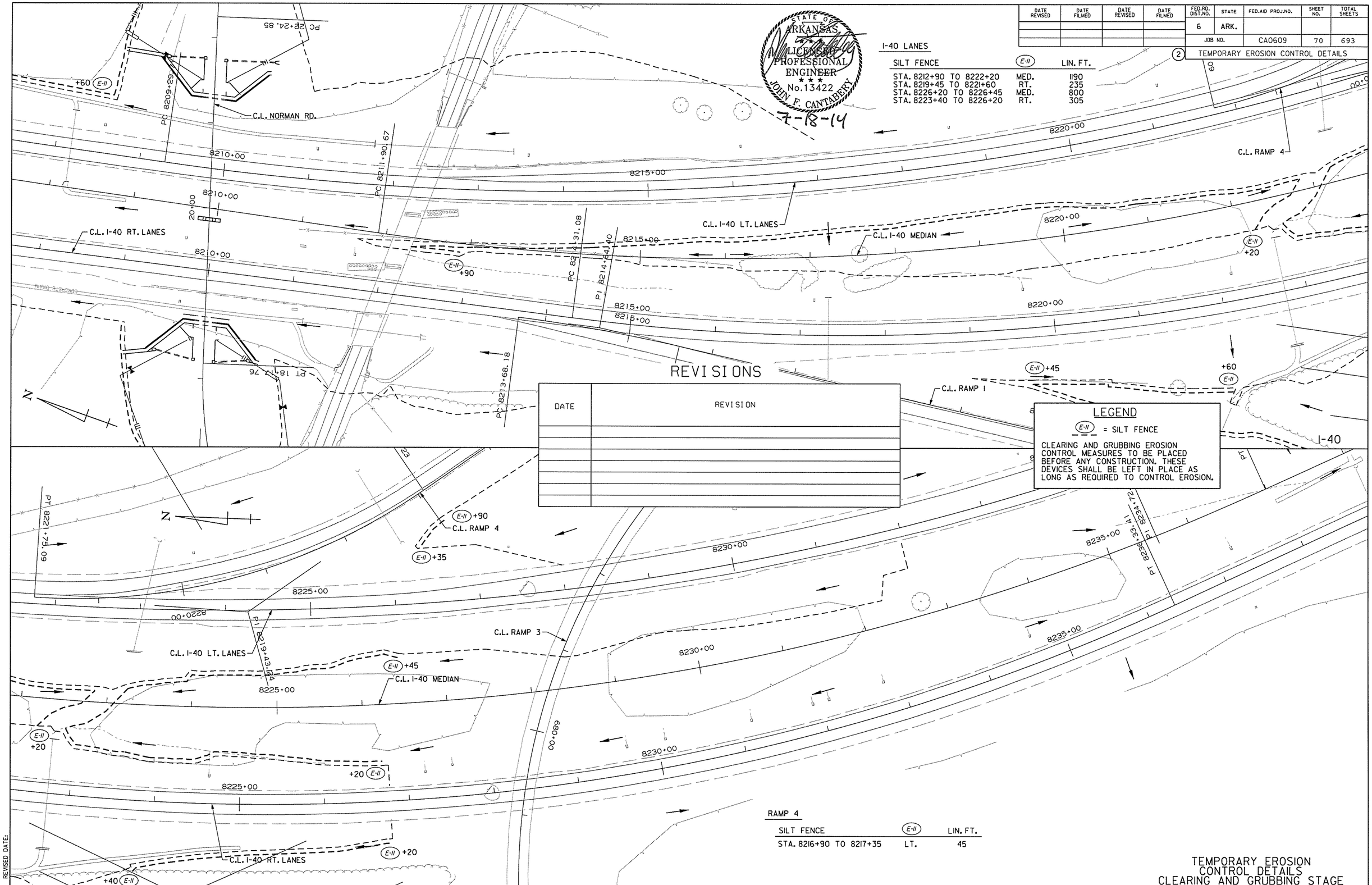

REVISIONS

DATE	REVISION

LEGEND

(E-II) = SILT FENCE

CLEARING AND GRUBBING EROSION CONTROL MEASURES TO BE PLACED BEFORE ANY CONSTRUCTION. THESE DEVICES SHALL BE LEFT IN PLACE AS LONG AS REQUIRED TO CONTROL EROSION.

RAMP 4

SILT FENCE	(E-II)	LIN. FT.
STA. 8216+90 TO 8217+35	LT.	45

TEMPORARY EROSION CONTROL DETAILS
CLEARING AND GRUBBING STAGE

cggervasini 7/17/2014 7:43:03 PM
WORKSPACE: AHTD
L:\2011\11017709 - I-40 at I-430 Interchange Modifications\Drawings\RCA0609_EC_MNL_02 _CG.dgn
REVISED DATE:

DATE REVISED	DATE FILMED	DATE REVISED	DATE FILMED	FED.RD. DIST.NO.	STATE	FED.AID PROJ.NO.	SHEET NO.	TOTAL SHEETS
				6	ARK.			
				JOB NO.		CA0609	71	693

(2) TEMPORARY EROSION CONTROL DETAILS

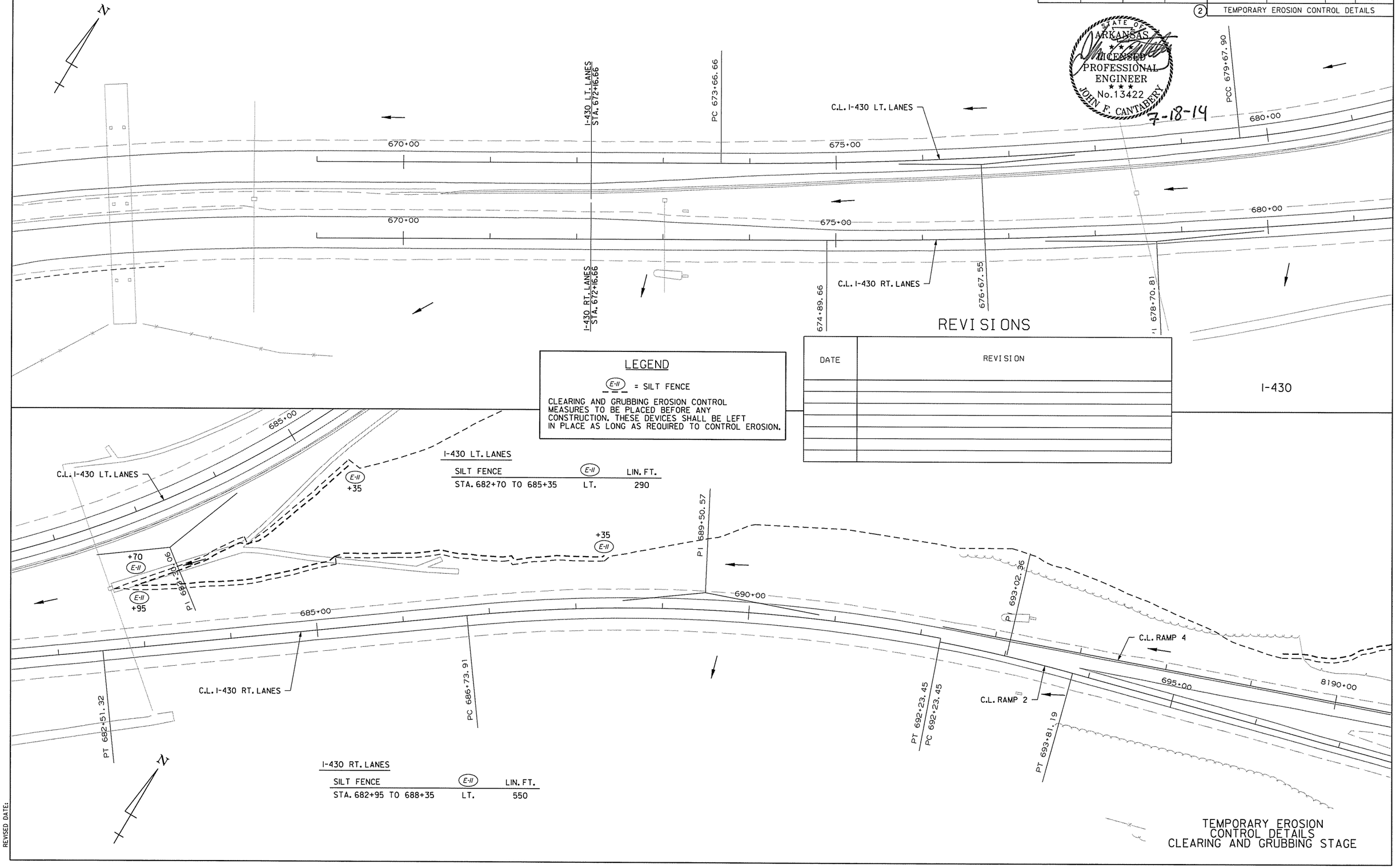

LEGEND

(E-II) = SILT FENCE

CLEARING AND GRUBBING EROSION CONTROL MEASURES TO BE PLACED BEFORE ANY CONSTRUCTION. THESE DEVICES SHALL BE LEFT IN PLACE AS LONG AS REQUIRED TO CONTROL EROSION.

REVISIONS

DATE	REVISION

I-430 LT. LANES

SILT FENCE	(E-II)	LIN. FT.
STA. 682+70 TO 685+35	LT.	290

I-430 RT. LANES

SILT FENCE	(E-II)	LIN. FT.
STA. 682+95 TO 688+35	LT.	550

STATE OF ARKANSAS LICENSED PROFESSIONAL ENGINEER No. 13422 JOHN F. CANTABERY

7-18-14

TEMPORARY EROSION CONTROL DETAILS CLEARING AND GRUBBING STAGE

cggervasini 7/17/2014 7:43:04 PM
WORKSPACE: AHTD
L:\2011\11017709 - I-40 at I-430 Interchange Modifications\Drawings\RCA0609_EC_430_01_CG.dgn
REVISED DATE:

DATE REVISED	DATE FILMED	DATE REVISED	DATE FILMED	FED.RD. DIST.NO.	STATE	FED.AID PROJ.NO.	SHEET NO.	TOTAL SHEETS
				6	ARK.			
				JOB NO.		CA0609	72	693
				(2)	TEMPORARY EROSION CONTROL DETAILS			

STATE OF ARKANSAS
LICENSED
PROFESSIONAL
ENGINEER
No.13422
JOHN F. CANTABERY
7-18-14

N

679+

580+00

685+00

PT 686+71.95

690+00

PT 8236+92.93

C.L. RAMP 1

8235+00

00+069

C.L. RAMP 3

C.L. I-430 LT. LANES

PI 682+30.06

PT 682+51.32

C.L. I-430 RT. LANES

685+00

E-II +80

PT 692+95.45

PI 692+75.05

PC 692+54.64

RAMP 3

SILT FENCE	E-II	LIN. FT.
STA. 688+90 TO 694+80	LT.	590

REVISIONS

DATE	REVISION

LEGEND

E-II = SILT FENCE

CLEARING AND GRUBBING EROSION CONTROL MEASURES TO BE PLACED BEFORE ANY CONSTRUCTION. THESE DEVICES SHALL BE LEFT IN PLACE AS LONG AS REQUIRED TO CONTROL EROSION.

I-430

RAMP 1

C.L. I-40 LT. LANES

8215+00

8220+00

PC 8214+31.08

PI 8214+64.40

C.L. I-40 MEDIAN

C.L. I-40 RT. LANES

PI 8224+50.59

PI 8225+31.67

PI 8226+06.44

+75 E-II

C.L. RAMP 1

8220+00

8225+00

E-II +85

E-II +80

PC 8213+68.18

PT 8215+60.45

PC 8228+55.24

RAMP 1

SILT FENCE	E-II	LIN. FT.
STA. 8215+80 TO 8216+85	RT.	140
STA. 8219+75 TO 8230+15	RT.	1040

TEMPORARY EROSION CONTROL DETAILS
CLEARING AND GRUBBING STAGE

coggervasinl 7/17/2014 7:43:04 PM
WORKSPACE: AHTD
L:\CON\0017709 - I-40 at I-430 Interchange Modifications\Drawings\RCA0609_EC_430_02_CC.dgn
REVISED DATE:

DATE REVISED	DATE FILMED	DATE REVISED	DATE FILMED	FED.RD. DIST.NO.	STATE	FED.AID PROJ.NO.	SHEET NO.	TOTAL SHEETS
				6	ARK.			
				JOB NO.		CA0609	73	693
				(2)	TEMPORARY EROSION CONTROL DETAILS			

RAMP 3

SILT FENCE	(E-II)	LIN. FT.
STA. 685+85 TO 685+85	RT.	75
STA. 685+85 TO 687+00	LT.	150

REVISIONS

DATE	REVISION

STATE OF ARKANSAS
LICENSED PROFESSIONAL ENGINEER
No.13422
JOHN F. CANTABERY
7-18-14

LEGEND

(E-II) = SILT FENCE

CLEARING AND GRUBBING EROSION CONTROL MEASURES TO BE PLACED BEFORE ANY CONSTRUCTION. THESE DEVICES SHALL BE LEFT IN PLACE AS LONG AS REQUIRED TO CONTROL EROSION.

RAMP I/RAMP 3

TEMPORARY EROSION CONTROL DETAILS
CLEARING & GRUBBING STAGE

cggervasini 7/17/2014 7:43:04 PM
WORKSPACE: AHTD
L:\2011\011709 - I-40 at I-430 Interchange Modifications\Drawings\RCA0609_EC_RPL01_CG.dgn
REVISED DATE:

DATE REVISED	DATE FILMED	DATE REVISED	DATE FILMED	FED.RD. DIST.NO.	STATE	FED.AID PROJ.NO.	SHEET NO.	TOTAL SHEETS
				6	ARK.			
				JOB NO.		CA0609	74	693

(2) TEMPORARY EROSION CONTROL DETAILS

STATE OF ARKANSAS
LICENSED PROFESSIONAL ENGINEER
No. 13422
JOHN F. CANTABERY

7-18-14

RAMP 4

SILT FENCE	(E-II)	LIN. FT.
STA. 8189+30 TO 8197+00	LT.	720
STA. 8207+95 TO 8208+80	LT.	90

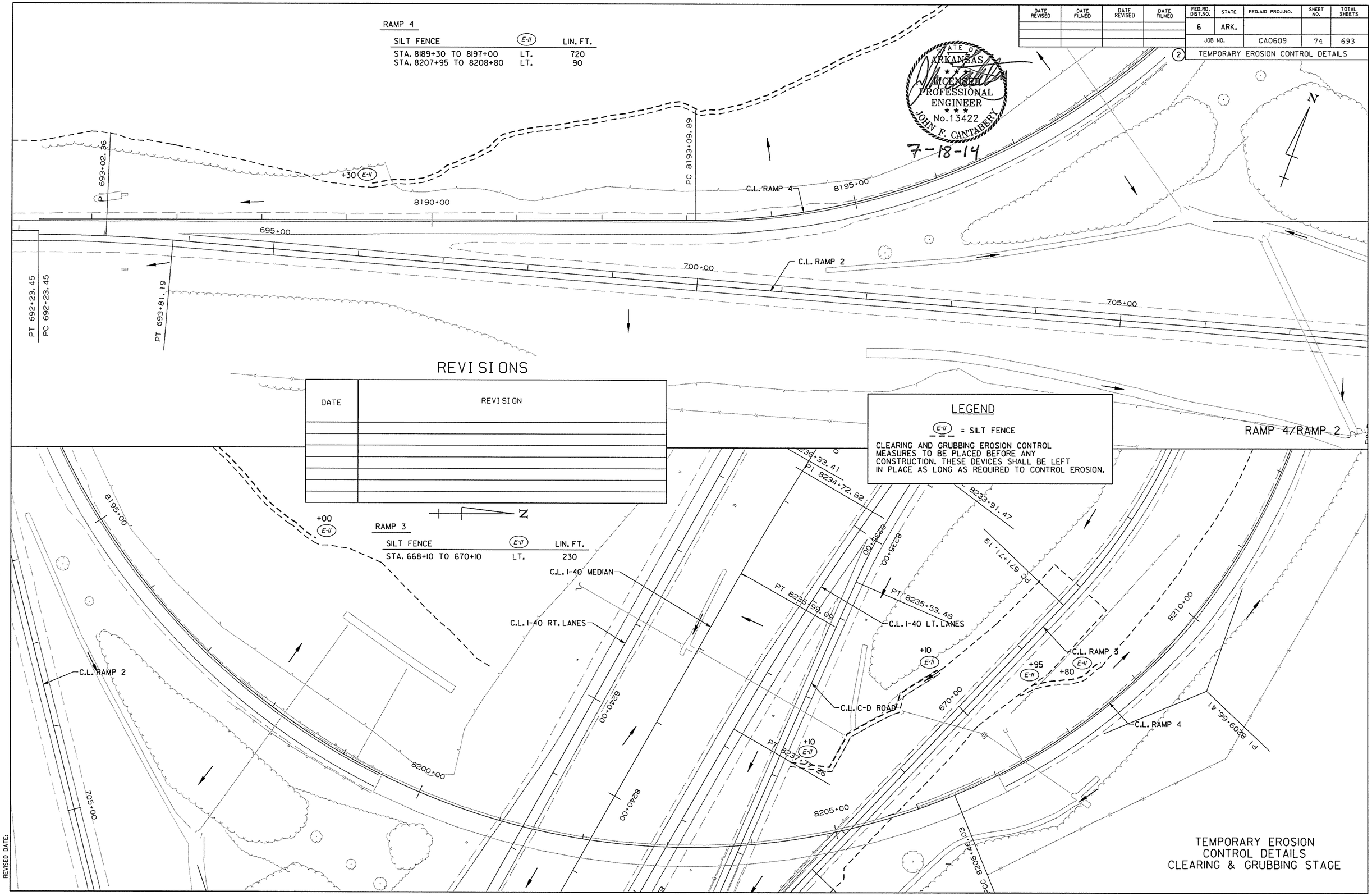

REVISIONS

DATE	REVISION

LEGEND

(E-II) = SILT FENCE

CLEARING AND GRUBBING EROSION CONTROL MEASURES TO BE PLACED BEFORE ANY CONSTRUCTION. THESE DEVICES SHALL BE LEFT IN PLACE AS LONG AS REQUIRED TO CONTROL EROSION.

TEMPORARY EROSION CONTROL DETAILS
CLEARING & GRUBBING STAGE

cggervasini 7/17/2014 7:43:05 PM
WORKSPACE: AHTD
L:\2011\1017709 - I-40 at I-430 Interchange Modifications\Drawings\RCA0609_EC_RP4_01_CG.dgn
REVISED DATE:

DATE REVISED	DATE FILMED	DATE REVISED	DATE FILMED	FED.RD. DIST.NO.	STATE	FED.AID PROJ.NO.	SHEET NO.	TOTAL SHEETS
				6	ARK.			
				JOB NO.		CA0609	75	693

(2) TEMPORARY EROSION CONTROL DETAILS

REVISIONS

DATE	REVISION

LEGEND

(E-II) = SILT FENCE

CLEARING AND GRUBBING EROSION CONTROL MEASURES TO BE PLACED BEFORE ANY CONSTRUCTION. THESE DEVICES SHALL BE LEFT IN PLACE AS LONG AS REQUIRED TO CONTROL EROSION.

NORMAN RD.

SILT FENCE	(E-II)	LIN. FT.
STA. 15+40 TO 16+10	LT.	115
STA. 16+25 TO 18+60	LT.	325
STA. 21+30 TO 26+05	LT.	570

NEVA RD.

SILT FENCE	(E-II)	LIN. FT.
STA. 7+15 TO 9+35	RT.	270

RAMP 4, NORMAN RD., NEVA RD.

TEMPORARY EROSION CONTROL DETAILS
CLEARING AND GRUBBING STAGE

STATE OF ARKANSAS
LICENSED PROFESSIONAL ENGINEER
No.13422
JOHN F. CANTABERY
7-18-14

cggervasini 7/17/2014 7:43:05 PM
WORKSPACE: AHTD
L:\20IN\I40IT709 - I-40 at I-430 Interchange Modifications\Drawings\RCA0609_EC_RP4_02_CC.dgn
REVISED DATE:

DATE REVISED	DATE FILMED	DATE REVISED	DATE FILMED	FED.RD. DIST.NO.	STATE	FED.AID PROJ.NO.	SHEET NO.	TOTAL SHEETS
				6	ARK.			
				JOB NO.		CA0609	76	693

(2) TEMPORARY EROSION CONTROL DETAILS

STATE OF ARKANSAS
LICENSED PROFESSIONAL ENGINEER
No.13422
JOHN F. CANTABERY
7-18-14

N

I-40 RT. LANES

SAND BAG DITCH CHECK	(E-5)	INSTALLATION
STA. 8185+30 TO 8190+65	LT.	4

ROCK DITCH CHECK	(E-6)	INSTALLATION
STA. 8185+30 TO 8190+65	LT.	3
STA. 8192+00 TO 8192+50	LT.	2

I-40 LT. LANES

SAND BAG DITCH CHECK	(E-5)	INSTALLATION
STA. 8185+30 TO 8190+65	RT.	4

ROCK DITCH CHECK	(E-6)	INSTALLATION
STA. 8185+30 TO 8190+65	RT.	4

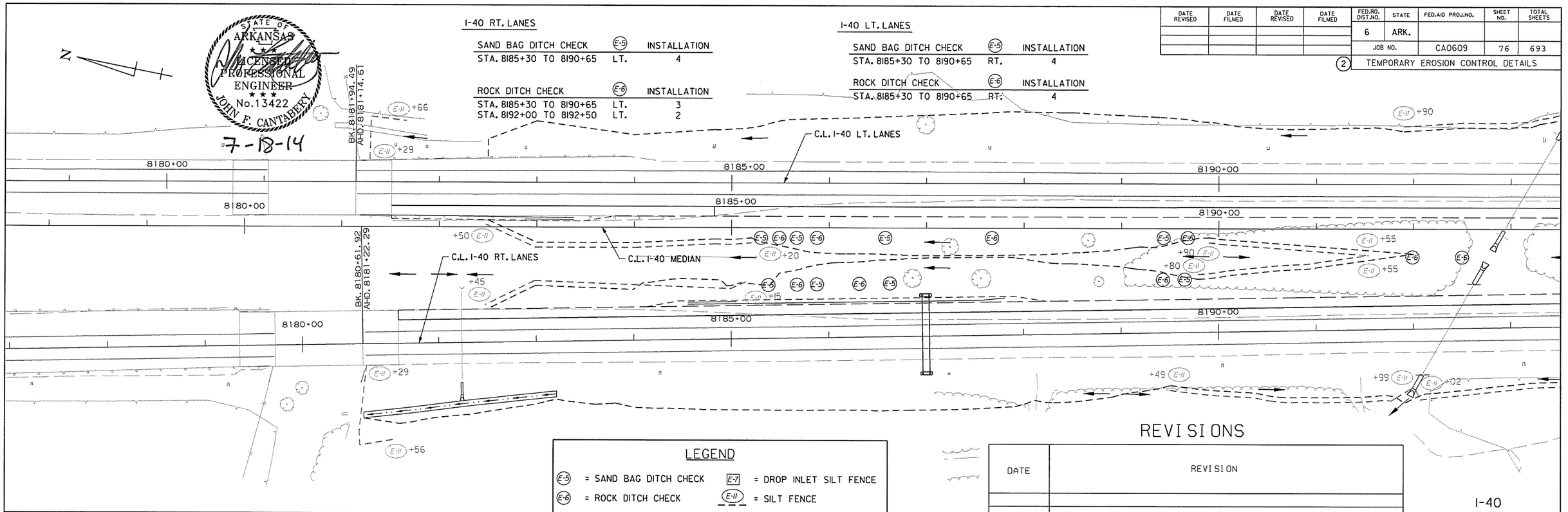

LEGEND

(E-5) = SAND BAG DITCH CHECK
(E-6) = ROCK DITCH CHECK
(E-7) = DROP INLET SILT FENCE
(E-11) = SILT FENCE

EROSION CONTROL MEASURES TO BE PLACED DURING APPROPRIATE STAGES. THESE DEVICES SHALL BE LEFT IN PLACE AS LONG AS REQUIRED TO CONTROL EROSION.

REVISIONS

DATE	REVISION

I-40

I-40 LANES

SILT FENCE	(E-11)	LIN. FT.
STA. 8181+29 TO 8181+66	LT.	RETAIN
STA. 8181+29 TO 8181+56	RT.	RETAIN
STA. 8182+50 TO 8185+20	MED.	RETAIN
STA. 8182+45 TO 8185+15	MED.	RETAIN
STA. 8189+90 TO 8191+55	MED.	RETAIN
STA. 8189+80 TO 8191+55	MED.	RETAIN
STA. 8191+90 TO 8196+40	LT.	RETAIN
STA. 8189+49 TO 8191+99	RT.	RETAIN

I-40 LANES

SILT FENCE	(E-11)	LIN. FT.
STA. 8192+02 TO 8194+10	RT.	RETAIN
STA. 8198+40 TO 8200+70	RT.	RETAIN
STA. 8201+00 TO 8205+60	RT.	RETAIN
STA. 8200+40 TO 8202+11	LT.	RETAIN
STA. 8202+42 TO 8208+60	LT.	RETAIN

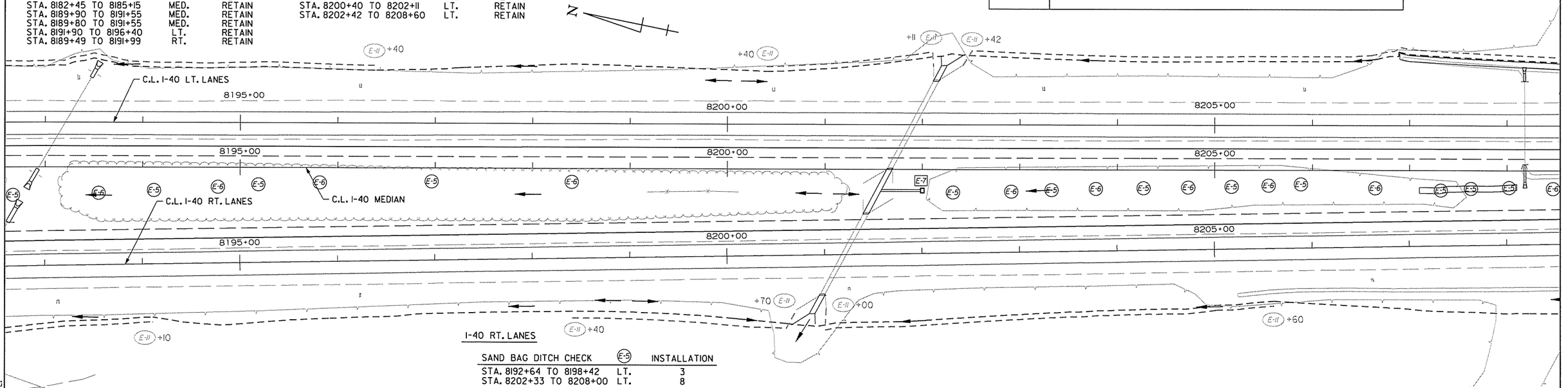

I-40 RT. LANES

DROP INLET SILT FENCE	(E-7)	LIN. FT.
STA. 8202+00	LT.	20

I-40 RT. LANES

SAND BAG DITCH CHECK	(E-5)	INSTALLATION
STA. 8192+64 TO 8198+42	LT.	3
STA. 8202+33 TO 8208+00	LT.	8

ROCK DITCH CHECK	(E-6)	INSTALLATION
STA. 8192+64 TO 8198+42	LT.	4
STA. 8202+33 TO 8208+00	LT.	4

TEMPORARY EROSION CONTROL DETAILS STAGE I

cggervasini 7/17/2014 7:43:06 PM
W:\KSPACE_AHTD_L:\CAD\R\0IT709 - I-40 at I-430 Interchange Modifications\Drawings\RCA0609_EC_MNL_01_STG1.dgn
REVISED DATE:

DATE REVISED	DATE FILMED	DATE REVISED	DATE FILMED	FED.RD. DIST.NO.	STATE	FED.AID PROJ.NO.	SHEET NO.	TOTAL SHEETS
				6	ARK.			
				JOB NO.		CA0609	77	693

(2) TEMPORARY EROSION CONTROL DETAILS

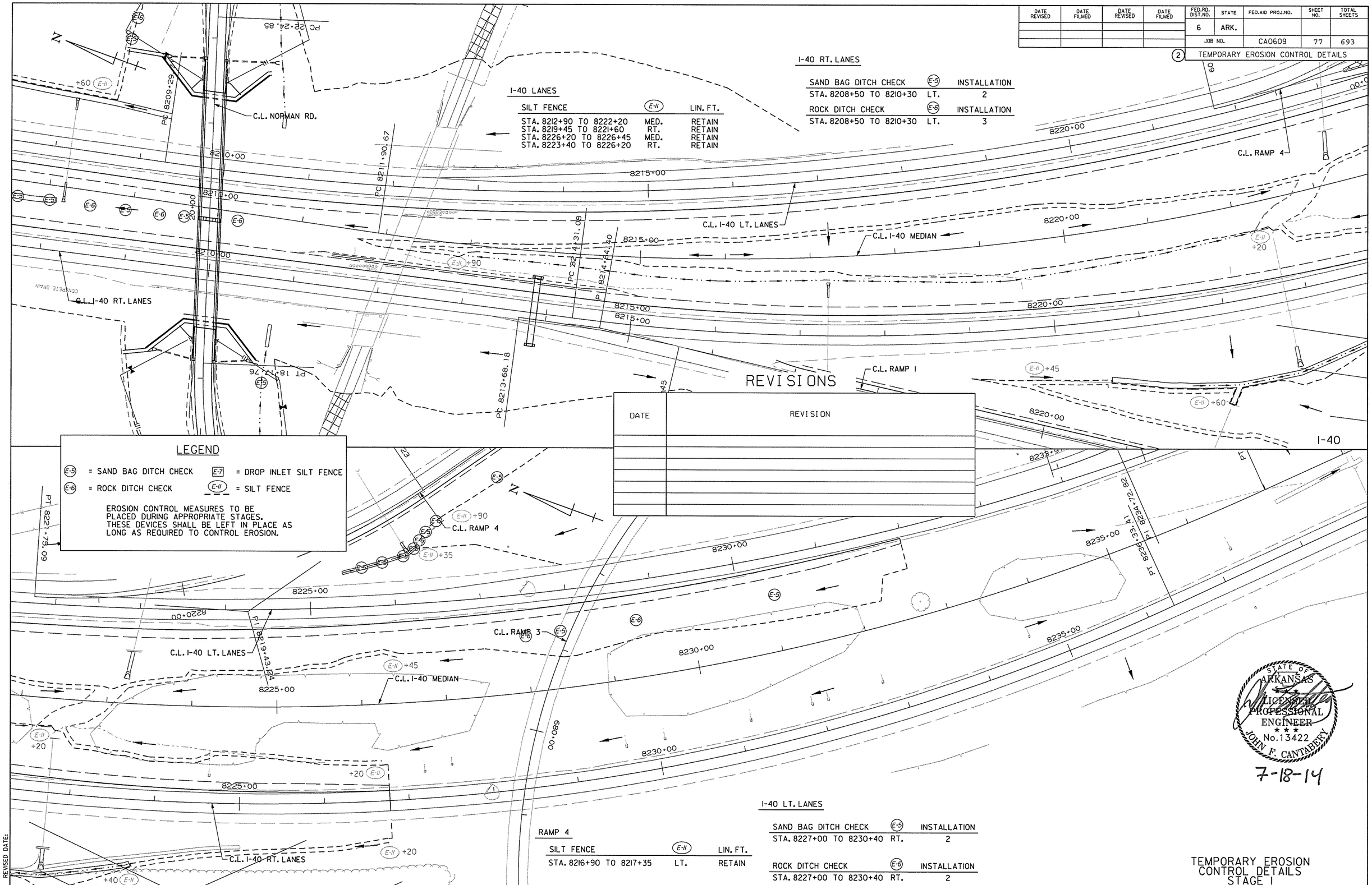

I-40 LANES

SILT FENCE	(E-11)	LIN. FT.
STA. 8212+90 TO 8222+20	MED.	RETAIN
STA. 8219+45 TO 8221+60	RT.	RETAIN
STA. 8226+20 TO 8226+45	MED.	RETAIN
STA. 8223+40 TO 8226+20	RT.	RETAIN

I-40 RT. LANES

SAND BAG DITCH CHECK	(E-5)	INSTALLATION
STA. 8208+50 TO 8210+30	LT.	2

ROCK DITCH CHECK	(E-6)	INSTALLATION
STA. 8208+50 TO 8210+30	LT.	3

REVISIONS

DATE	REVISION

LEGEND

(E-5) = SAND BAG DITCH CHECK
(E-6) = ROCK DITCH CHECK
(E-7) = DROP INLET SILT FENCE
(E-11) = SILT FENCE

EROSION CONTROL MEASURES TO BE PLACED DURING APPROPRIATE STAGES. THESE DEVICES SHALL BE LEFT IN PLACE AS LONG AS REQUIRED TO CONTROL EROSION.

RAMP 4

SILT FENCE	(E-11)	LIN. FT.
STA. 8216+90 TO 8217+35	LT.	RETAIN

I-40 LT. LANES

SAND BAG DITCH CHECK	(E-5)	INSTALLATION
STA. 8227+00 TO 8230+40	RT.	2

ROCK DITCH CHECK	(E-6)	INSTALLATION
STA. 8227+00 TO 8230+40	RT.	2

STATE OF ARKANSAS
LICENSED PROFESSIONAL ENGINEER
No. 13422
JOHN F. CANTABERY
7-18-14

TEMPORARY EROSION CONTROL DETAILS STAGE I

cggervasini 7/17/2014 7:43:06 PM
WORKSPACE: AHTD
L:\2011\11017709 - I-40 at I-430 Interchange Modifications\Drawings\RCA0609_EC_MNL_02 _STG1.dgn
REVISED DATE:

DATE REVISED	DATE FILMED	DATE REVISED	DATE FILMED	FED.RD. DIST.NO.	STATE	FED.AID PROJ.NO.	SHEET NO.	TOTAL SHEETS
				6	ARK.			
				JOB NO.		CA0609	78	693

(2) TEMPORARY EROSION CONTROL DETAILS

STATE OF ARKANSAS
LICENSED PROFESSIONAL ENGINEER
No.13422
JOHN F. CANTABERY
7-18-14

I-430 LT. LANES

ROCK DITCH CHECK	(E-6)	INSTALLATION
STA. 672+64 TO 681+00	RT.	7

SAND BAG DITCH CHECK	(E-5)	INSTALLATION
STA. 672+64 TO 681+00	RT.	8

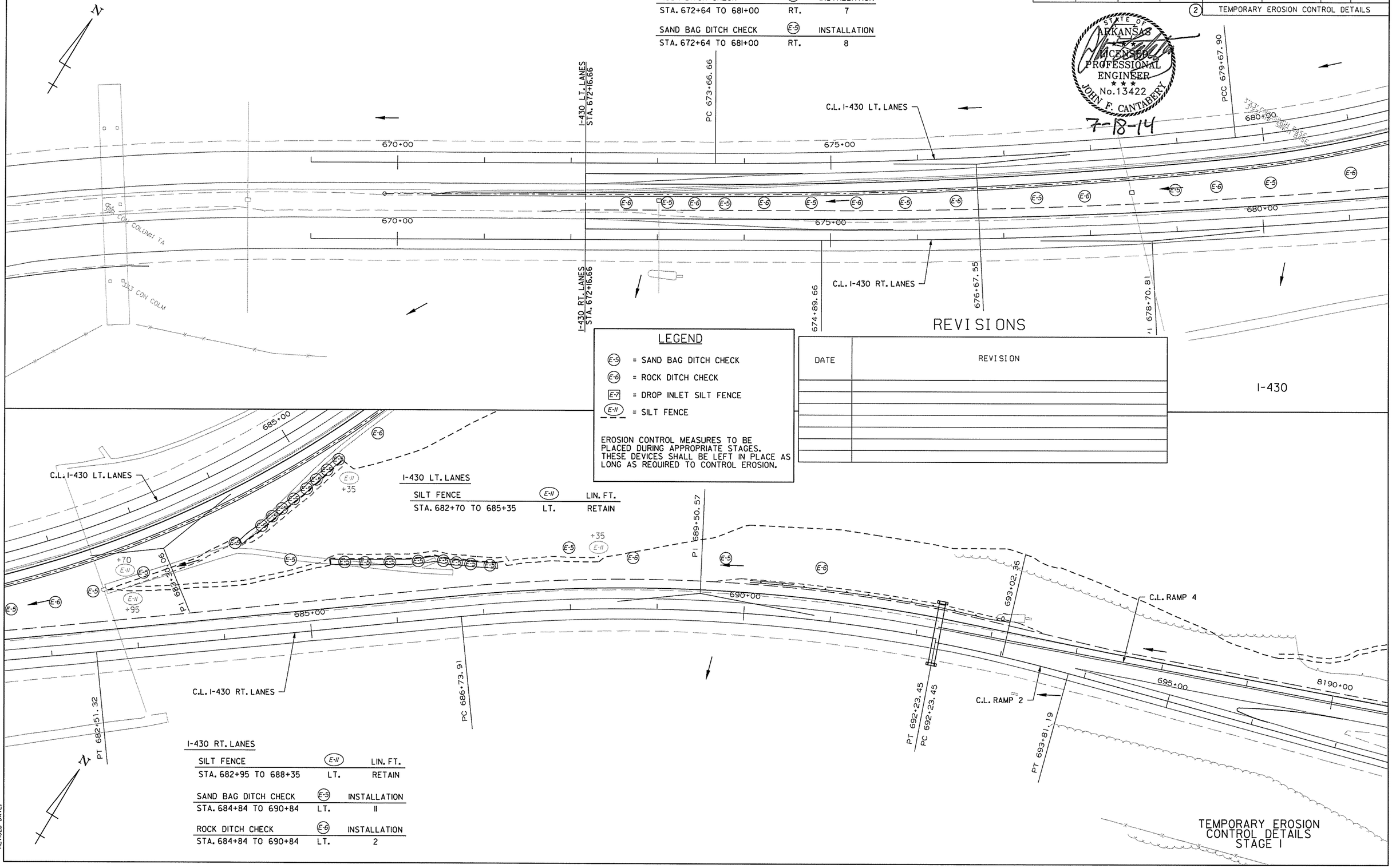

LEGEND

- (E-5) = SAND BAG DITCH CHECK
- (E-6) = ROCK DITCH CHECK
- E-7 = DROP INLET SILT FENCE
- (E-11) = SILT FENCE

EROSION CONTROL MEASURES TO BE PLACED DURING APPROPRIATE STAGES. THESE DEVICES SHALL BE LEFT IN PLACE AS LONG AS REQUIRED TO CONTROL EROSION.

REVISIONS

DATE	REVISION

I-430

I-430 LT. LANES

SILT FENCE	(E-11)	LIN. FT.
STA. 682+70 TO 685+35	LT.	RETAIN

I-430 RT. LANES

SILT FENCE	(E-11)	LIN. FT.
STA. 682+95 TO 688+35	LT.	RETAIN

SAND BAG DITCH CHECK	(E-5)	INSTALLATION
STA. 684+84 TO 690+84	LT.	11

ROCK DITCH CHECK	(E-6)	INSTALLATION
STA. 684+84 TO 690+84	LT.	2

TEMPORARY EROSION CONTROL DETAILS STAGE 1

cggervasini 7/17/2014 7:43:06 PM
WORKSPACE: AHTD
L:\ROW\NDI709 - I-40 at I-430 Interchange Modifications\Drawings\RCA0609_EC_430_01_STG1.dgn
REVISED DATE:

DATE REVISED	DATE FILMED	DATE REVISED	DATE FILMED	FED.RD. DIST.NO.	STATE	FED.AID PROJ.NO.	SHEET NO.	TOTAL SHEETS
				6	ARK.			
				JOB NO.		CA0609	79	693

(2) TEMPORARY EROSION CONTROL DETAILS

RAMP 3

SILT FENCE	(E-11)	LIN. FT.
STA. 688+90 TO 694+80	LT.	RETAIN

I-430 LT. LANES

SAND BAG DITCH CHECK	(E-5)	INSTALLATION
STA. 681+40 TO 692+24	RT.	16

ROCK DITCH CHECK	(E-6)	INSTALLATION
STA. 681+40 TO 692+24	RT.	7

STATE OF ARKANSAS
LICENSED PROFESSIONAL ENGINEER
* * *
No. 13422
JOHN F. CANTABERY
7-18-14

REVISIONS

DATE	REVISION

LEGEND

- (E-5) = SAND BAG DITCH CHECK
- (E-6) = ROCK DITCH CHECK
- [E-7] = DROP INLET SILT FENCE
- (E-11) = SILT FENCE

EROSION CONTROL MEASURES TO BE PLACED DURING APPROPRIATE STAGES. THESE DEVICES SHALL BE LEFT IN PLACE AS LONG AS REQUIRED TO CONTROL EROSION.

I-430

RAMP I

RAMP I

SILT FENCE	(E-11)	LIN. FT.
STA. 8215+80 TO 8216+85	RT.	RETAIN
STA. 8219+75 TO 8230+15	RT.	RETAIN

TEMPORARY EROSION CONTROL DETAILS STAGE I

cgervasini 7/17/2014 7:43:07 PM
WORKSPACE: AHTD
L:\ROW\NOT709 - I-40 at I-430 Interchange Modifications\Drawings\RCA0609_EC_430_02_STG1.dgn
REVISED DATE:

DATE REVISED	DATE FILMED	DATE REVISED	DATE FILMED	FED.RD. DIST.NO.	STATE	FED.AID PROJ.NO.	SHEET NO.	TOTAL SHEETS
				6	ARK.			
				JOB NO.		CA0609	80	693

(2) TEMPORARY EROSION CONTROL DETAILS

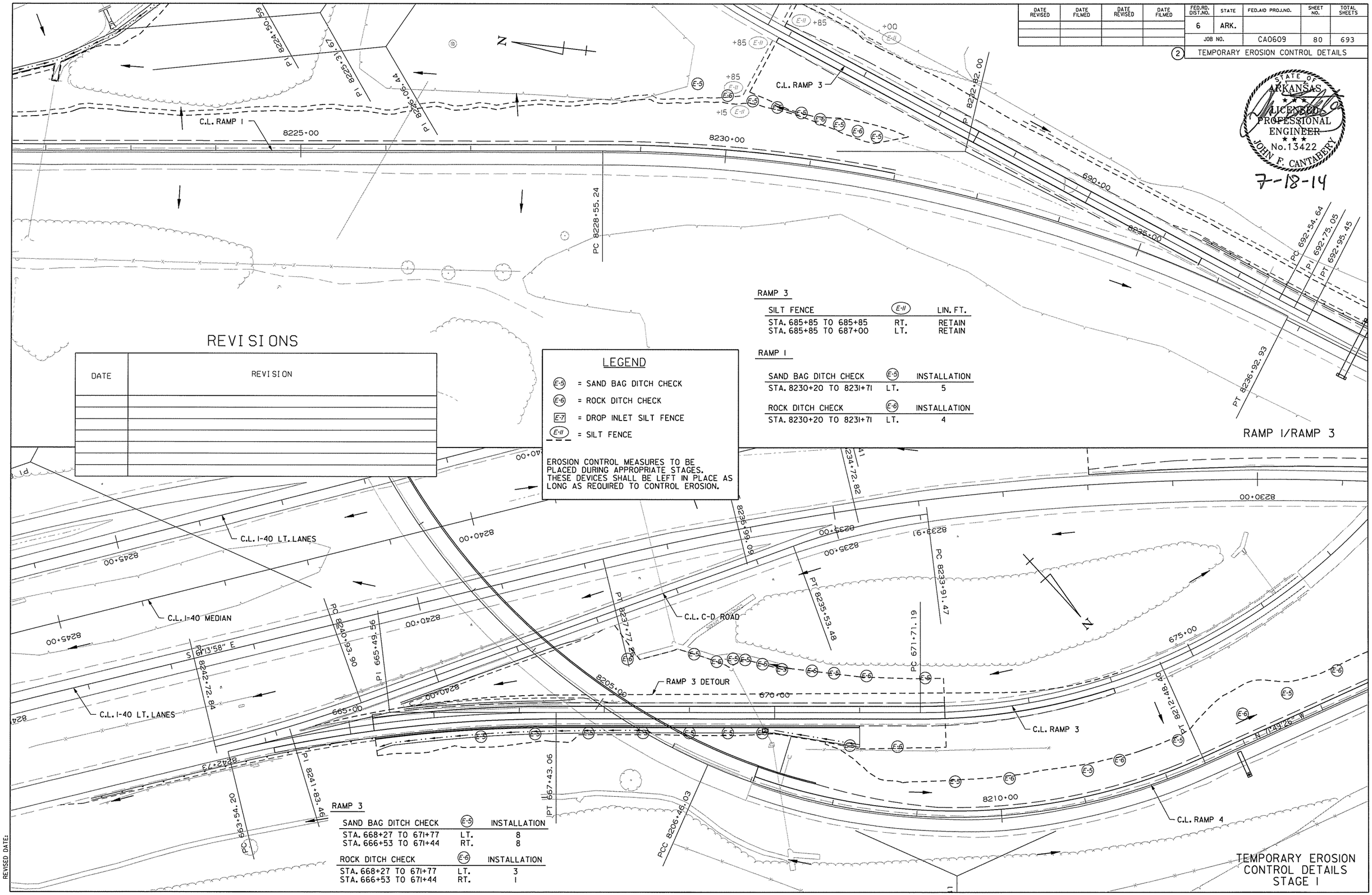

RAMP 1/RAMP 3

RAMP 3

SILT FENCE	(E-11)	LIN. FT.
STA. 685+85 TO 685+85	RT.	RETAIN
STA. 685+85 TO 687+00	LT.	RETAIN

RAMP 1

SAND BAG DITCH CHECK	(E-5)	INSTALLATION
STA. 8230+20 TO 8231+71	LT.	5

ROCK DITCH CHECK	(E-6)	INSTALLATION
STA. 8230+20 TO 8231+71	LT.	4

RAMP 3

SAND BAG DITCH CHECK	(E-5)	INSTALLATION
STA. 668+27 TO 671+77	LT.	8
STA. 666+53 TO 671+44	RT.	8

ROCK DITCH CHECK	(E-6)	INSTALLATION
STA. 668+27 TO 671+77	LT.	3
STA. 666+53 TO 671+44	RT.	1

LEGEND

(E-5) = SAND BAG DITCH CHECK
(E-6) = ROCK DITCH CHECK
[E-7] = DROP INLET SILT FENCE
(E-11) = SILT FENCE

EROSION CONTROL MEASURES TO BE PLACED DURING APPROPRIATE STAGES. THESE DEVICES SHALL BE LEFT IN PLACE AS LONG AS REQUIRED TO CONTROL EROSION.

REVISIONS

DATE	REVISION

STATE OF ARKANSAS
LICENSED PROFESSIONAL ENGINEER
No. 13422
JOHN F. CANTABERY
7-18-14

TEMPORARY EROSION CONTROL DETAILS STAGE 1

cggervasini 7/17/2014 7:43:07 PM
WORKSPACE: AHTD
L:\2011\11017709 - I-40 at I-430 Interchange Modifications\Drawings\RCA0609_EC_RPI_01_STG1.dgn
REVISED DATE:

DATE REVISED	DATE FILMED	DATE REVISED	DATE FILMED	FED.RD. DIST.NO.	STATE	FED.AID PROJ.NO.	SHEET NO.	TOTAL SHEETS
				6	ARK.			
				JOB NO.		CA0609	81	693

(2) TEMPORARY EROSION CONTROL DETAILS

STATE OF ARKANSAS
LICENSED PROFESSIONAL ENGINEER
No. 13422
JOHN F. CANTABERY
7-18-14

RAMP 4

SILT FENCE	(E-11)	LIN. FT.
STA. 8189+30 TO 8197+00	LT.	RETAIN
STA. 8207+95 TO 8208+80	LT.	RETAIN

SAND BAG DITCH CHECK	(E-5)	INSTALLATION
8188+88	LT.	1

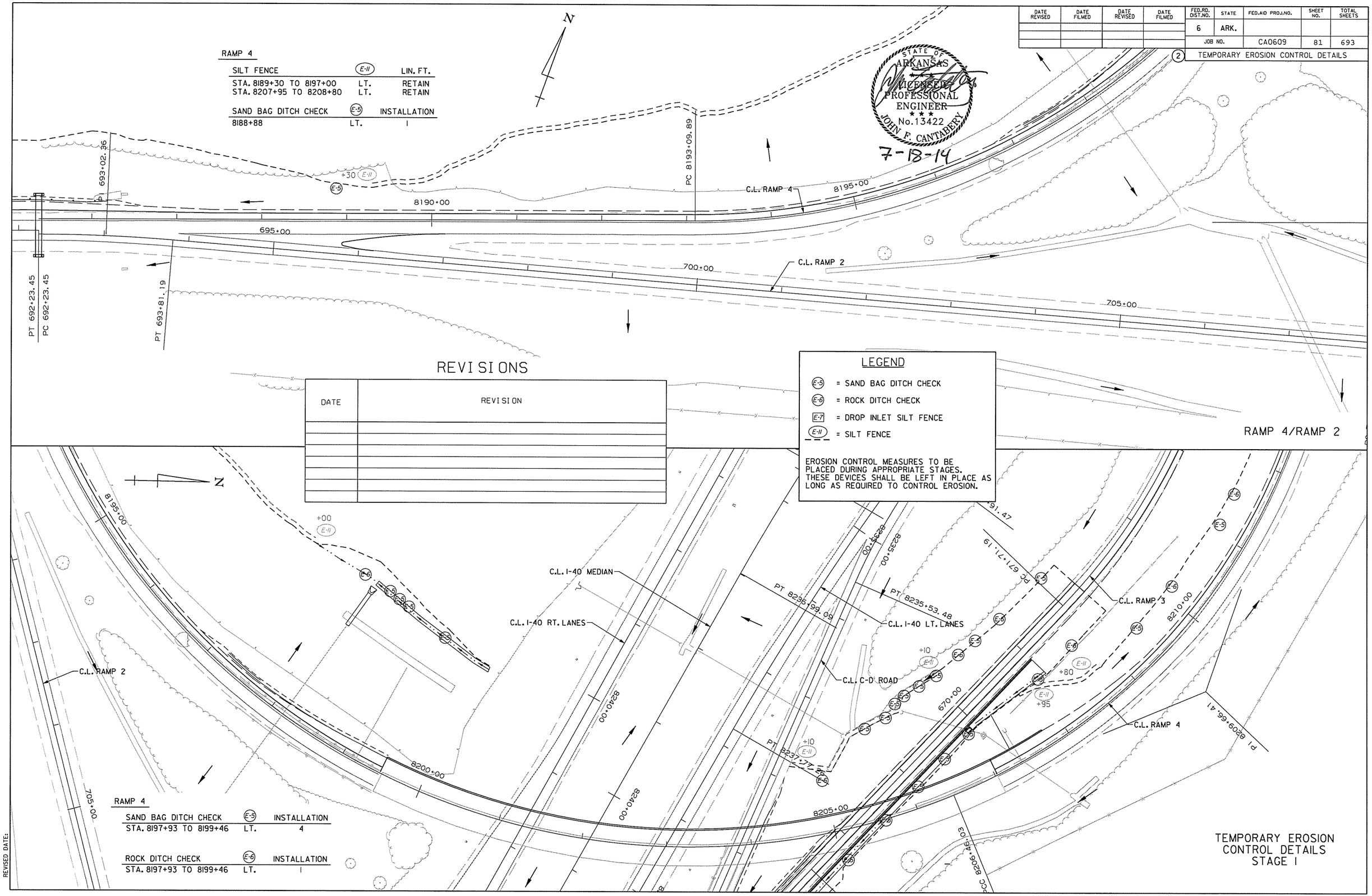

REVISIONS

DATE	REVISION

LEGEND

- (E-5) = SAND BAG DITCH CHECK
- (E-6) = ROCK DITCH CHECK
- [E-7] = DROP INLET SILT FENCE
- (E-11) = SILT FENCE

EROSION CONTROL MEASURES TO BE PLACED DURING APPROPRIATE STAGES. THESE DEVICES SHALL BE LEFT IN PLACE AS LONG AS REQUIRED TO CONTROL EROSION.

RAMP 4

SAND BAG DITCH CHECK	(E-5)	INSTALLATION
STA. 8197+93 TO 8199+46	LT.	4

ROCK DITCH CHECK	(E-6)	INSTALLATION
STA. 8197+93 TO 8199+46	LT.	1

TEMPORARY EROSION CONTROL DETAILS STAGE 1

cggervasini 7/17/2014 7:43:07 PM
WORKSPACE: AHTD
L:\2011\1017709 - I-40 at I-430 Interchange Modifications\Drawings\RCA0609_EC_RP4_01_STG1.dgn
REVISED DATE:

DATE REVISED	DATE FILMED	DATE REVISED	DATE FILMED	FED.RD. DIST.NO.	STATE	FED.AID PROJ.NO.	SHEET NO.	TOTAL SHEETS
				6	ARK.			
				JOB NO.		CA0609	82	693

(2) TEMPORARY EROSION CONTROL DETAILS

REVISIONS

DATE	REVISION

RAMP 4

SAND BAG DITCH CHECK	(E-5)	INSTALLATION
STA. 8209+45 TO 8217+99	LT.	11

ROCK DITCH CHECK	(E-6)	INSTALLATION
STA. 8209+45 TO 8217+99	LT.	6

STATE OF ARKANSAS
LICENSED PROFESSIONAL ENGINEER
No. 13422
JOHN F. CANTABERY
7-18-14

LEGEND

- (E-5) = SAND BAG DITCH CHECK
- (E-6) = ROCK DITCH CHECK
- E-7 = DROP INLET SILT FENCE
- (E-11) = SILT FENCE

EROSION CONTROL MEASURES TO BE PLACED DURING APPROPRIATE STAGES. THESE DEVICES SHALL BE LEFT IN PLACE AS LONG AS REQUIRED TO CONTROL EROSION.

RAMP 4, NORMAN RD., NEVA RD.

NORMAN RD.

SILT FENCE	(E-11)	LIN. FT.
STA. 15+40 TO 16+10	LT.	RETAIN
STA. 16+25 TO 18+60	LT.	RETAIN
STA. 21+30 TO 26+05	LT.	RETAIN

SAND BAG DITCH CHECK	(E-5)	INSTALLATION
STA. 16+76 TO 17+82	LT.	2
STA. 21+95 TO 25+68	LT.	6
STA. 17+94	RT.	1

ROCK DITCH CHECK	(E-6)	INSTALLATION
STA. 16+76 TO 17+82	LT.	2
STA. 21+95 TO 25+68	LT.	6

NEVA RD.

SILT FENCE	(E-11)	LIN. FT.
STA. 7+15 TO 9+35	RT.	RETAIN

SAND BAG DITCH CHECK	(E-5)	INSTALLATION
STA. 7+77 TO 9+26	LT.	7
STA. 7+76 TO 9+52	RT.	9

ROCK DITCH CHECK	(E-6)	INSTALLATION
STA. 7+77 TO 9+26	LT.	6

DRIVEWAY 1

SAND BAG DITCH CHECK	(E-5)	INSTALLATION
STA. 9+10 TO 9+53	RT.	2
STA. 9+16 TO 9+38	LT.	1

ROCK DITCH CHECK	(E-6)	INSTALLATION
STA. 9+10 TO 9+53	RT.	2
STA. 9+16 TO 9+38	LT.	1

TEMPORARY EROSION CONTROL DETAILS STAGE 1

cgarrvasini 7/17/2014 7:43:08 PM
WORKSPACE: AHTD
L:\20IN\I40TT09 - I-40 at I-430 Interchange Modifications\Drawings\RCA0609_EC_RP4_02_STG1.dgn
REVISED DATE:

DATE REVISED	DATE FILMED	DATE REVISED	DATE FILMED	FED.RD. DIST.NO.	STATE	FED.AID PROJ.NO.	SHEET NO.	TOTAL SHEETS
				6	ARK.			
				JOB NO.		CA0609	83	693

(2) TEMPORARY EROSION CONTROL DETAILS

STATE OF ARKANSAS
REGISTERED PROFESSIONAL ENGINEER
No. 11427
KEVIN G. TOBLESEY
7/17/14

0 50 100 FEET

DENOTES: PAVEMENT TO BE CONSTRUCTED.

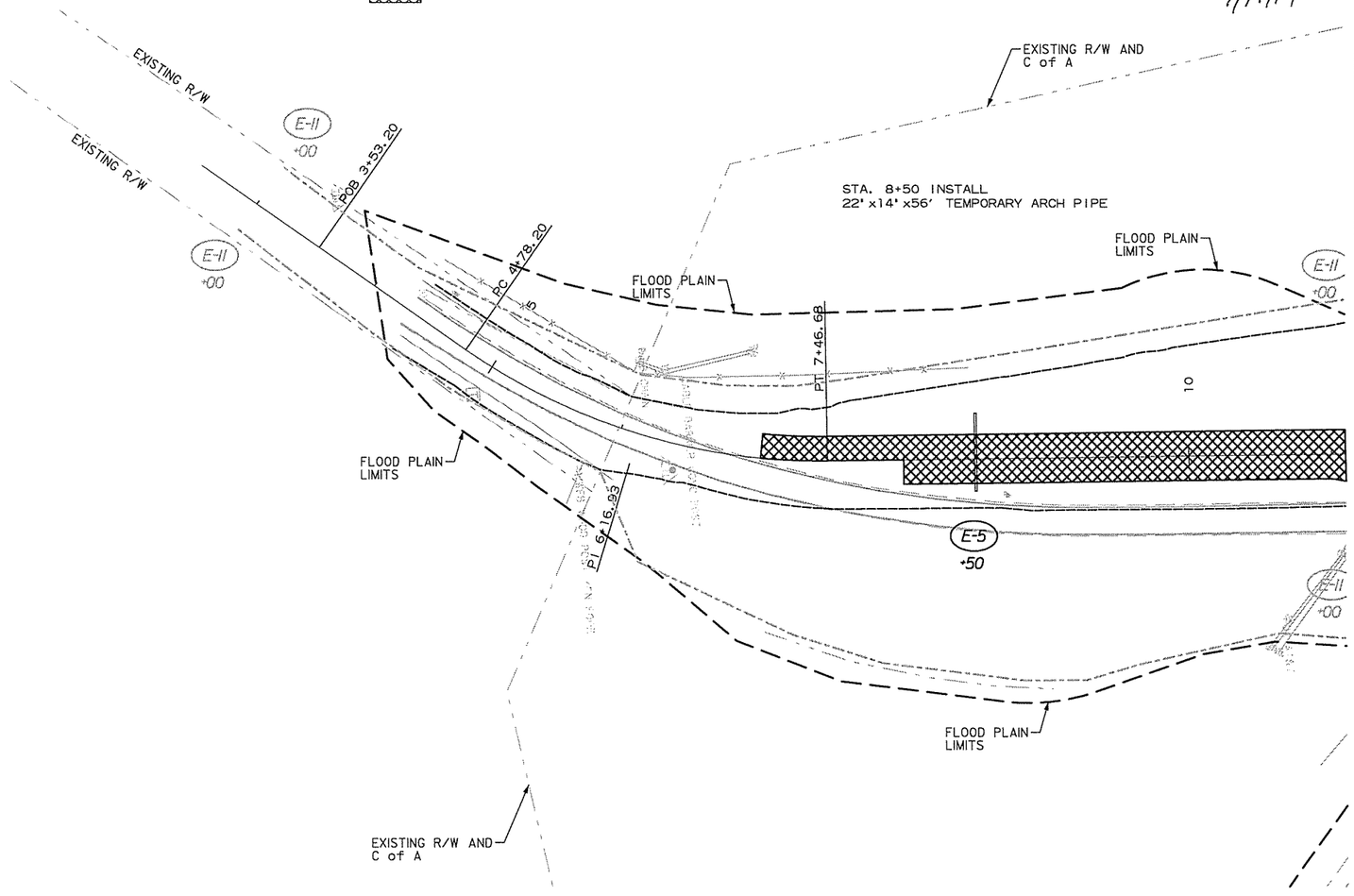

NOTE:
STATIONING OF EROSION CONTROL DEVICES TAKEN ALONG MARCHE RD.

EROSION CONTROL MEASURES TO BE PLACED DURING APPROPRIATE STAGES. THESE DEVICES SHALL BE LEFT IN PLACE AS LONG AS REQUIRED TO CONTROL EROSION.

SAND BAG DITCH CHECK	(E-5)	BAG
STA. 8+50	RT. SIDE	22

REVISIONS

DATE	REVISION

LEGEND

(E-5) = SAND BAG DITCH CHECK
(E-11) = SILT FENCE

TEMPORARY EROSION CONTROL DETAILS
STAGE IA

7/16/2014 1:19:32 PM ...\5-Temporary Erosion Control.dgn t:\lob\wlkm2650 ahtd cap ca0603\700 cadd files\777 roadway files\drawings\5-Temporary Erosion Control.dgn

DATE REVISED	DATE FILMED	DATE REVISED	DATE FILMED	FED.RD. DIST.NO.	STATE	FED.AID PROJ.NO.	SHEET NO.	TOTAL SHEETS
				6	ARK.			
				JOB NO.		CA0609	84	693

(2) TEMPORARY EROSION CONTROL DETAILS

STATE OF ARKANSAS
REGISTERED PROFESSIONAL ENGINEER
No. 11427
KEVIN G. TOBLESEY
7/17/14

0 50 100 FEET

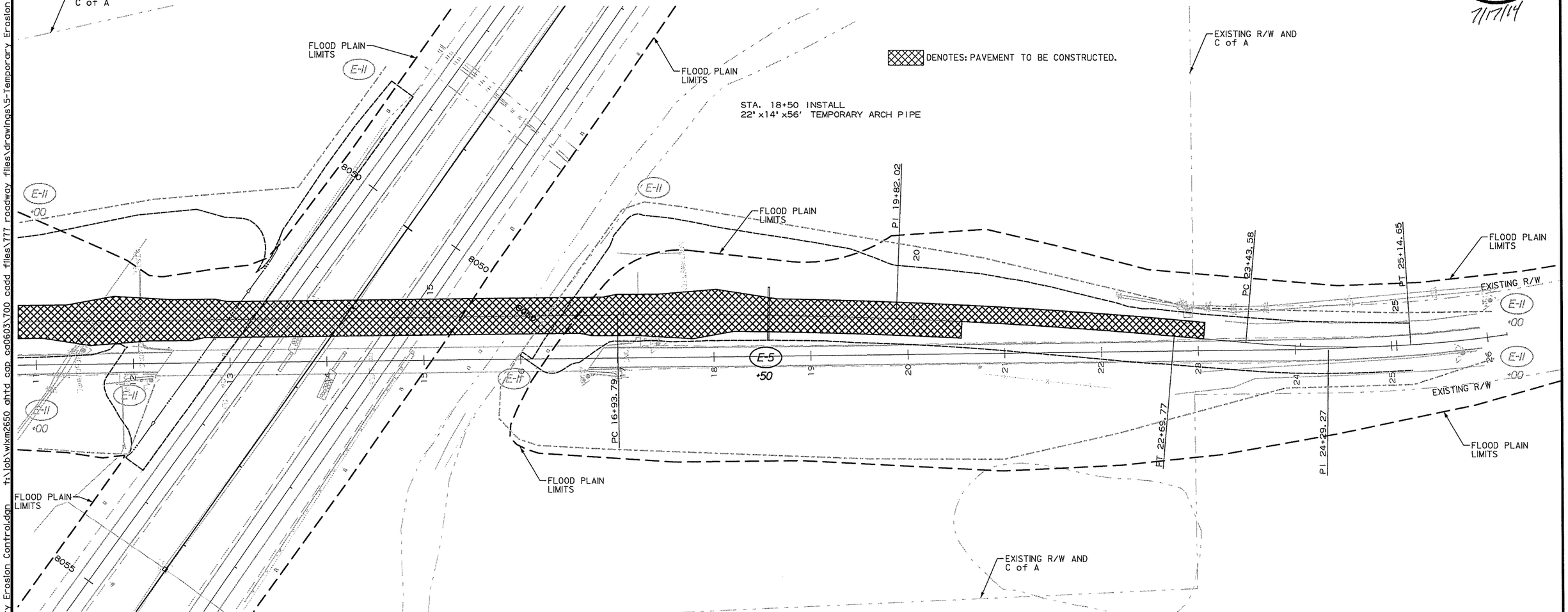

NOTE:
STATIONING OF EROSION CONTROL DEVICES TAKEN ALONG MARCHE RD.

EROSION CONTROL MEASURES TO BE PLACED DURING APPROPRIATE STAGES. THESE DEVICES SHALL BE LEFT IN PLACE AS LONG AS REQUIRED TO CONTROL EROSION.

SAND BAG DITCH CHECK	(E-5)	BAG
STA. 18+50	RT. SIDE	22

REVISIONS

DATE	REVISION

LEGEND

(E-5) = SAND BAG DITCH CHECK
(E-11) = SILT FENCE

TEMPORARY EROSION CONTROL DETAILS STAGE IA

t:\lob\wlxm2650 ahtd cap ca0603\700 cadd files\777 roadway files\drawings\5-Temporary Erosion Control.dgn
...\5-Temporary Erosion Control.dgn
7/16/2014 1:19:32 PM

DATE REVISED	DATE FILMED	DATE REVISED	DATE FILMED	FED.RD. DIST.NO.	STATE	FED.AID PROJ.NO.	SHEET NO.	TOTAL SHEETS
				6	ARK.			
				JOB NO.		CA0609	85	693

(2) TEMPORARY EROSION CONTROL DETAILS

STATE OF ARKANSAS
LICENSED PROFESSIONAL ENGINEER
No. 13422
JOHN F. CANTABERY
7-18-14

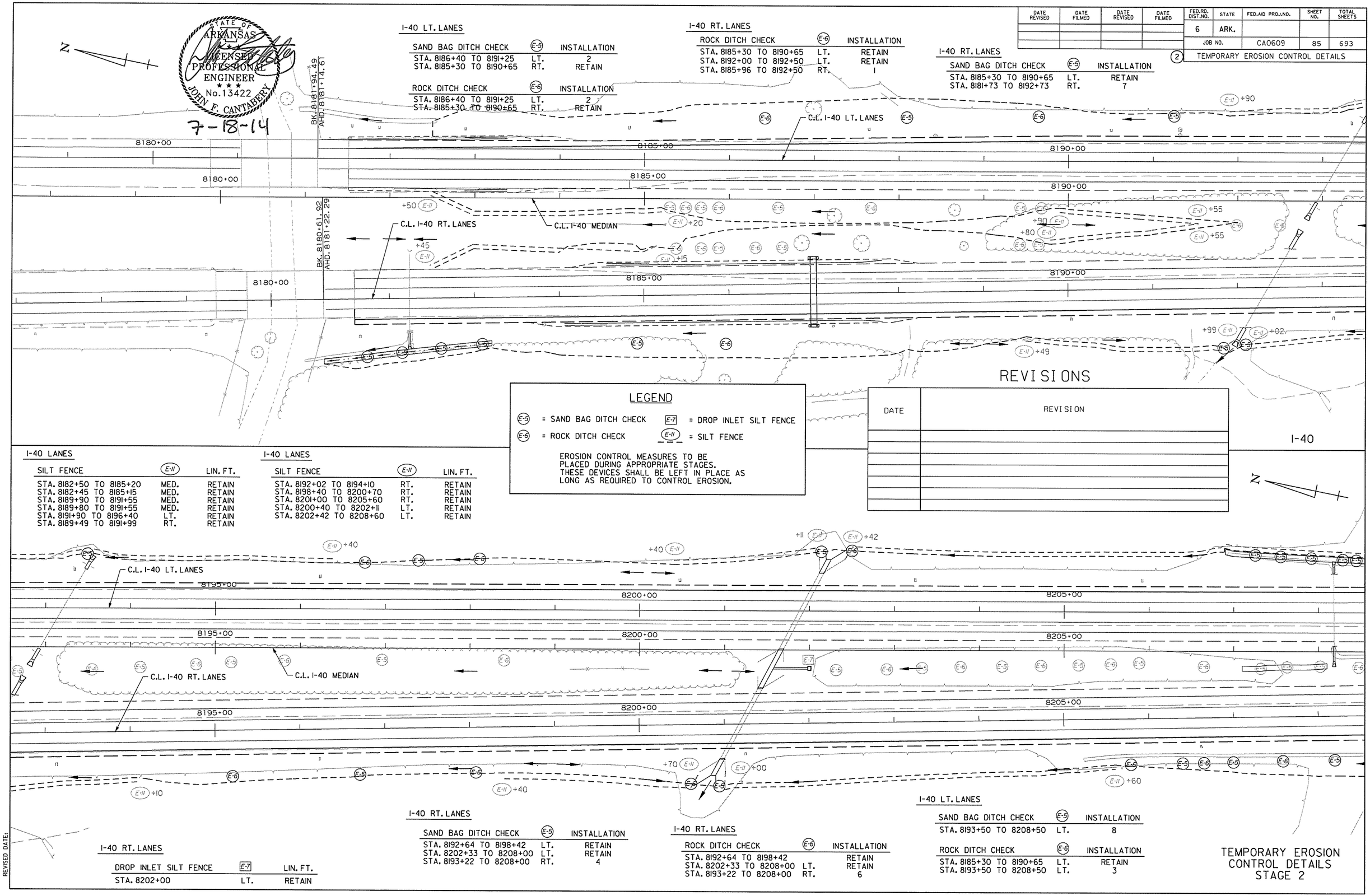

LEGEND

(E-5) = SAND BAG DITCH CHECK
(E-6) = ROCK DITCH CHECK
(E-7) = DROP INLET SILT FENCE
(E-11) = SILT FENCE

EROSION CONTROL MEASURES TO BE PLACED DURING APPROPRIATE STAGES. THESE DEVICES SHALL BE LEFT IN PLACE AS LONG AS REQUIRED TO CONTROL EROSION.

REVISIONS

DATE	REVISION

I-40 LT. LANES

SAND BAG DITCH CHECK	(E-5)	INSTALLATION
STA. 8186+40 TO 8191+25	LT.	2
STA. 8185+30 TO 8190+65	RT.	RETAIN

ROCK DITCH CHECK	(E-6)	INSTALLATION
STA. 8186+40 TO 8191+25	LT.	2
STA. 8185+30 TO 8190+65	RT.	RETAIN

I-40 RT. LANES

ROCK DITCH CHECK	(E-6)	INSTALLATION
STA. 8185+30 TO 8190+65	LT.	RETAIN
STA. 8192+00 TO 8192+50	LT.	RETAIN
STA. 8185+96 TO 8192+50	RT.	1

I-40 RT. LANES

SAND BAG DITCH CHECK	(E-5)	INSTALLATION
STA. 8185+30 TO 8190+65	LT.	RETAIN
STA. 8181+73 TO 8192+73	RT.	7

I-40 LANES

SILT FENCE	(E-11)	LIN. FT.
STA. 8182+50 TO 8185+20	MED.	RETAIN
STA. 8182+45 TO 8185+15	MED.	RETAIN
STA. 8189+90 TO 8191+55	MED.	RETAIN
STA. 8189+80 TO 8191+55	MED.	RETAIN
STA. 8191+90 TO 8196+40	LT.	RETAIN
STA. 8189+49 TO 8191+99	RT.	RETAIN

I-40 LANES

SILT FENCE	(E-11)	LIN. FT.
STA. 8192+02 TO 8194+10	RT.	RETAIN
STA. 8198+40 TO 8200+70	RT.	RETAIN
STA. 8201+00 TO 8205+60	RT.	RETAIN
STA. 8200+40 TO 8202+11	LT.	RETAIN
STA. 8202+42 TO 8208+60	LT.	RETAIN

I-40 RT. LANES

DROP INLET SILT FENCE	(E-7)	LIN. FT.
STA. 8202+00	LT.	RETAIN

I-40 RT. LANES

SAND BAG DITCH CHECK	(E-5)	INSTALLATION
STA. 8192+64 TO 8198+42	LT.	RETAIN
STA. 8202+33 TO 8208+00	LT.	RETAIN
STA. 8193+22 TO 8208+00	RT.	4

I-40 RT. LANES

ROCK DITCH CHECK	(E-6)	INSTALLATION
STA. 8192+64 TO 8198+42		RETAIN
STA. 8202+33 TO 8208+00	LT.	RETAIN
STA. 8193+22 TO 8208+00	RT.	6

I-40 LT. LANES

SAND BAG DITCH CHECK	(E-5)	INSTALLATION
STA. 8193+50 TO 8208+50	LT.	8

ROCK DITCH CHECK	(E-6)	INSTALLATION
STA. 8185+30 TO 8190+65	LT.	RETAIN
STA. 8193+50 TO 8208+50	LT.	3

TEMPORARY EROSION CONTROL DETAILS STAGE 2

cggervasini 7/17/2014 7:43:08 PM
WORKSPACE: AHTD
L:\2011\11017709 - I-40 at I-430 Interchange Modifications\Drawings\RCA0609_EC_MNL_01_STG2.dgn
REVISED DATE:

DATE REVISED	DATE FILMED	DATE REVISED	DATE FILMED	FED.RD. DIST.NO.	STATE	FED.AID PROJ.NO.	SHEET NO.	TOTAL SHEETS
				6	ARK.			
				JOB NO.		CA0609	86	693

(2) TEMPORARY EROSION CONTROL DETAILS

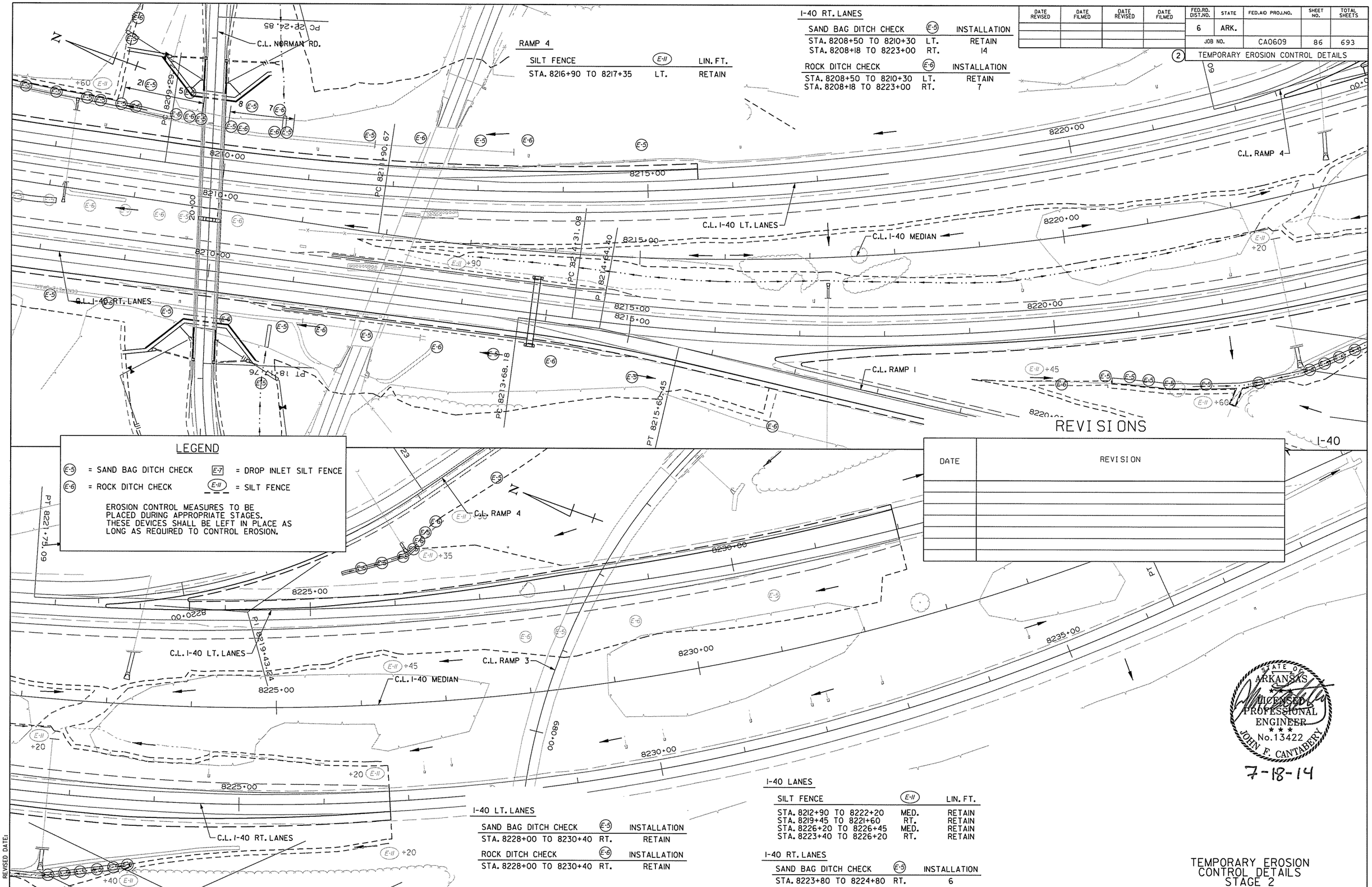

RAMP 4

SILT FENCE	(E-11)	LIN. FT.
STA. 8216+90 TO 8217+35	LT.	RETAIN

I-40 RT. LANES

SAND BAG DITCH CHECK	(E-5)	INSTALLATION
STA. 8208+50 TO 8210+30	LT.	RETAIN
STA. 8208+18 TO 8223+00	RT.	14

ROCK DITCH CHECK	(E-6)	INSTALLATION
STA. 8208+50 TO 8210+30	LT.	RETAIN
STA. 8208+18 TO 8223+00	RT.	7

LEGEND

(E-5) = SAND BAG DITCH CHECK
(E-6) = ROCK DITCH CHECK
(E-7) = DROP INLET SILT FENCE
(E-11) = SILT FENCE

EROSION CONTROL MEASURES TO BE PLACED DURING APPROPRIATE STAGES. THESE DEVICES SHALL BE LEFT IN PLACE AS LONG AS REQUIRED TO CONTROL EROSION.

REVISIONS

DATE	REVISION

I-40 LT. LANES

SAND BAG DITCH CHECK	(E-5)	INSTALLATION
STA. 8228+00 TO 8230+40	RT.	RETAIN

ROCK DITCH CHECK	(E-6)	INSTALLATION
STA. 8228+00 TO 8230+40	RT.	RETAIN

I-40 LANES

SILT FENCE	(E-11)	LIN. FT.
STA. 8212+90 TO 8222+20	MED.	RETAIN
STA. 8219+45 TO 8221+60	RT.	RETAIN
STA. 8226+20 TO 8226+45	MED.	RETAIN
STA. 8223+40 TO 8226+20	RT.	RETAIN

I-40 RT. LANES

SAND BAG DITCH CHECK	(E-5)	INSTALLATION
STA. 8223+80 TO 8224+80	RT.	6

STATE OF ARKANSAS
LICENSED PROFESSIONAL ENGINEER
No. 13422
JOHN F. CANTABERY

7-18-14

TEMPORARY EROSION CONTROL DETAILS STAGE 2

cggervasini 7/17/2014 7:43:09 PM
WORKSPACE: AHTD
L:\2011\11017709 - I-40 at I-430 Interchange Modifications\Drawings\RCA0609_EC_MNL_02 _STG2.dgn
REVISED DATE:

DATE REVISED	DATE FILMED	DATE REVISED	DATE FILMED	FED.RD. DIST.NO.	STATE	FED.AID PROJ.NO.	SHEET NO.	TOTAL SHEETS
				6	ARK.			
				JOB NO.		CA0609	87	693

(2) TEMPORARY EROSION CONTROL DETAILS

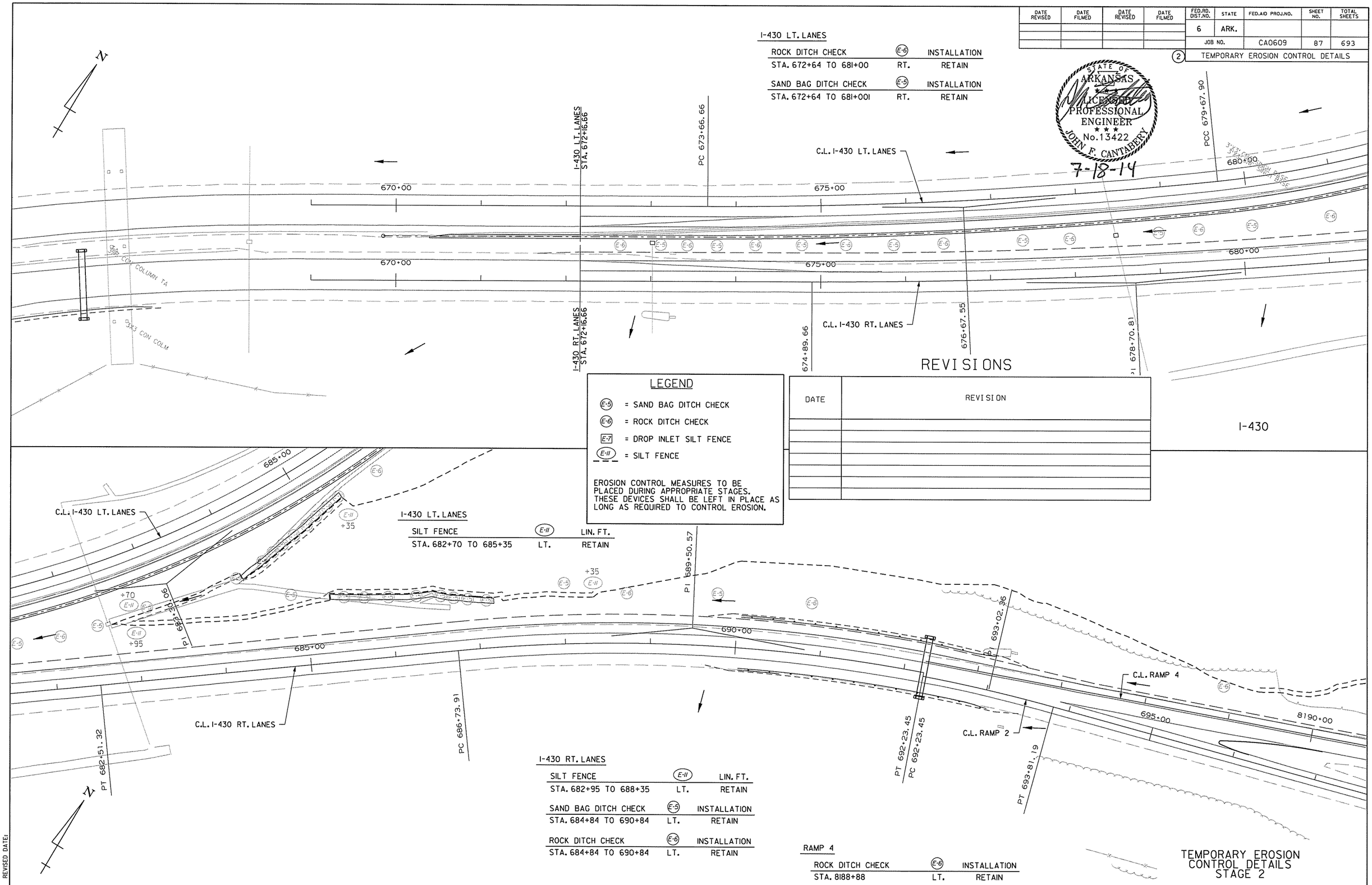

TEMPORARY EROSION CONTROL DETAILS STAGE 2

cggervasini 7/17/2014 7:43:09 PM
WORKSPACE: AHTD
L:\2011\1017709 - I-40 at I-430 Interchange Modifications\Drawings\RCA0609_EC_430_01_STG2.dgn
REVISED DATE:

DATE REVISED	DATE FILMED	DATE REVISED	DATE FILMED	FED.RD. DIST.NO.	STATE	FED.AID PROJ.NO.	SHEET NO.	TOTAL SHEETS
				6	ARK.			
				JOB NO.		CA0609	88	693

(2) TEMPORARY EROSION CONTROL DETAILS

STATE OF ARKANSAS
LICENSED PROFESSIONAL ENGINEER
No. 13422
JOHN F. CANTABERY
7-18-14

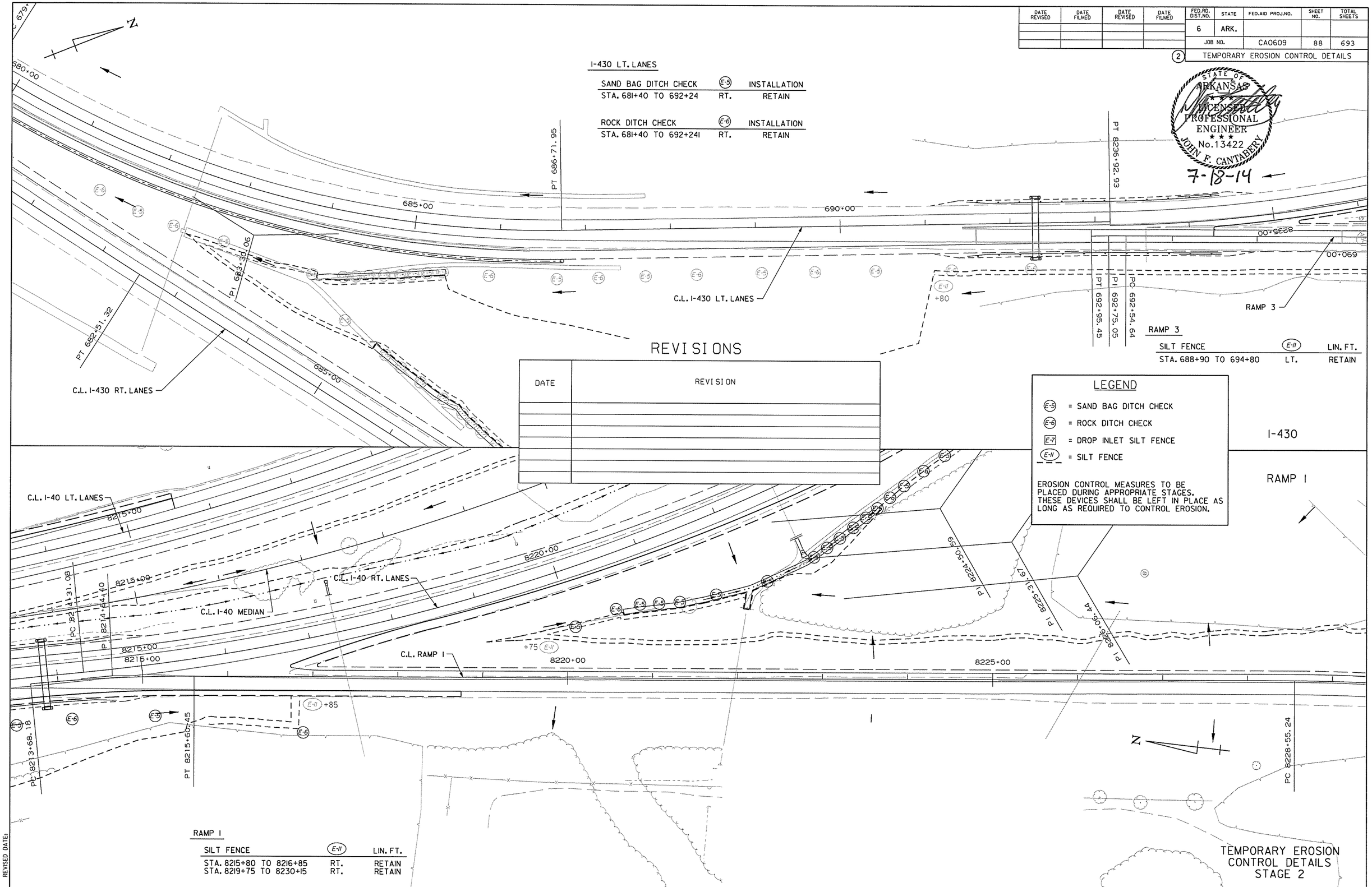

I-430 LT. LANES

SAND BAG DITCH CHECK	(E-5)	INSTALLATION
STA. 681+40 TO 692+24	RT.	RETAIN

ROCK DITCH CHECK	(E-6)	INSTALLATION
STA. 681+40 TO 692+241	RT.	RETAIN

RAMP 3

SILT FENCE	(E-11)	LIN. FT.
STA. 688+90 TO 694+80	LT.	RETAIN

REVISIONS

DATE	REVISION

LEGEND

(E-5) = SAND BAG DITCH CHECK
(E-6) = ROCK DITCH CHECK
(E-7) = DROP INLET SILT FENCE
(E-11) = SILT FENCE

EROSION CONTROL MEASURES TO BE PLACED DURING APPROPRIATE STAGES. THESE DEVICES SHALL BE LEFT IN PLACE AS LONG AS REQUIRED TO CONTROL EROSION.

RAMP I

SILT FENCE	(E-11)	LIN. FT.
STA. 8215+80 TO 8216+85	RT.	RETAIN
STA. 8219+75 TO 8230+15	RT.	RETAIN

TEMPORARY EROSION CONTROL DETAILS STAGE 2

cggervasini 7/17/2014 7:43:10 PM
WORKSPACE: AHTD
L:\2011\1017709 - I-40 at I-430 Interchange Modifications\Drawings\RCA0609_EC_430_02_STG2.dgn
REVISED DATE:

DATE REVISED	DATE FILMED	DATE REVISED	DATE FILMED

FED.RD. DIST.NO.	STATE	FED.AID PROJ.NO.	SHEET NO.	TOTAL SHEETS
6	ARK.			
JOB NO.		CA0609	89	693

(2) TEMPORARY EROSION CONTROL DETAILS

STATE OF ARKANSAS
LICENSED PROFESSIONAL ENGINEER
No. 13422
JOHN F. CANTABERY
7-18-14

REVISIONS

DATE	REVISION

LEGEND

- (E-5) = SAND BAG DITCH CHECK
- (E-6) = ROCK DITCH CHECK
- E-7 = DROP INLET SILT FENCE
- (E-11) = SILT FENCE

EROSION CONTROL MEASURES TO BE PLACED DURING APPROPRIATE STAGES. THESE DEVICES SHALL BE LEFT IN PLACE AS LONG AS REQUIRED TO CONTROL EROSION.

RAMP 3

SILT FENCE	(E-11)	LIN. FT.
STA. 685+85 TO 685+85	RT.	RETAIN
STA. 685+85 TO 687+00	LT.	RETAIN

RAMP 1

SAND BAG DITCH CHECK	(E-5)	INSTALLATION
STA. 8230+20 TO 8231+71	LT.	RETAIN

ROCK DITCH CHECK	(E-6)	INSTALLATION
STA. 8230+20 TO 8231+71	LT.	RETAIN

RAMP 3

SAND BAG DITCH CHECK	(E-5)	INSTALLATION
STA. 668+27 TO 671+77	LT.	RETAIN
STA. 666+53 TO 671+44	RT.	RETAIN

ROCK DITCH CHECK	(E-6)	INSTALLATION
STA. 668+27 TO 671+77	LT.	RETAIN
STA. 666+53 TO 671+44	RT.	RETAIN

RAMP 1/RAMP 3

TEMPORARY EROSION CONTROL DETAILS STAGE 2

cggervasini 7/11/2014 7:43:10 PM
WORKSPACE: MTD
L:\2600\1007109 - I-40 at I-430 Interchange Modifications\Drawings\RCA0609_EC_RPL01_STG2.dgn
REVISED DATE:

DATE REVISED	DATE FILMED	DATE REVISED	DATE FILMED	FED.RD. DIST.NO.	STATE	FED.AID PROJ.NO.	SHEET NO.	TOTAL SHEETS
				6	ARK.			
				JOB NO.		CA0609	90	693

(2) TEMPORARY EROSION CONTROL DETAILS

STATE OF ARKANSAS
LICENSED PROFESSIONAL ENGINEER
No. 13422
JOHN F. CANTABERY
7-18-14

RAMP 4

SILT FENCE	(E-11)	LIN. FT.
STA. 8189+30 TO 8197+00	LT.	RETAIN
STA. 8207+95 TO 8208+80	LT.	RETAIN

SAND BAG DITCH CHECK	(E-5)	INSTALLATION
8188+88	LT.	RETAIN

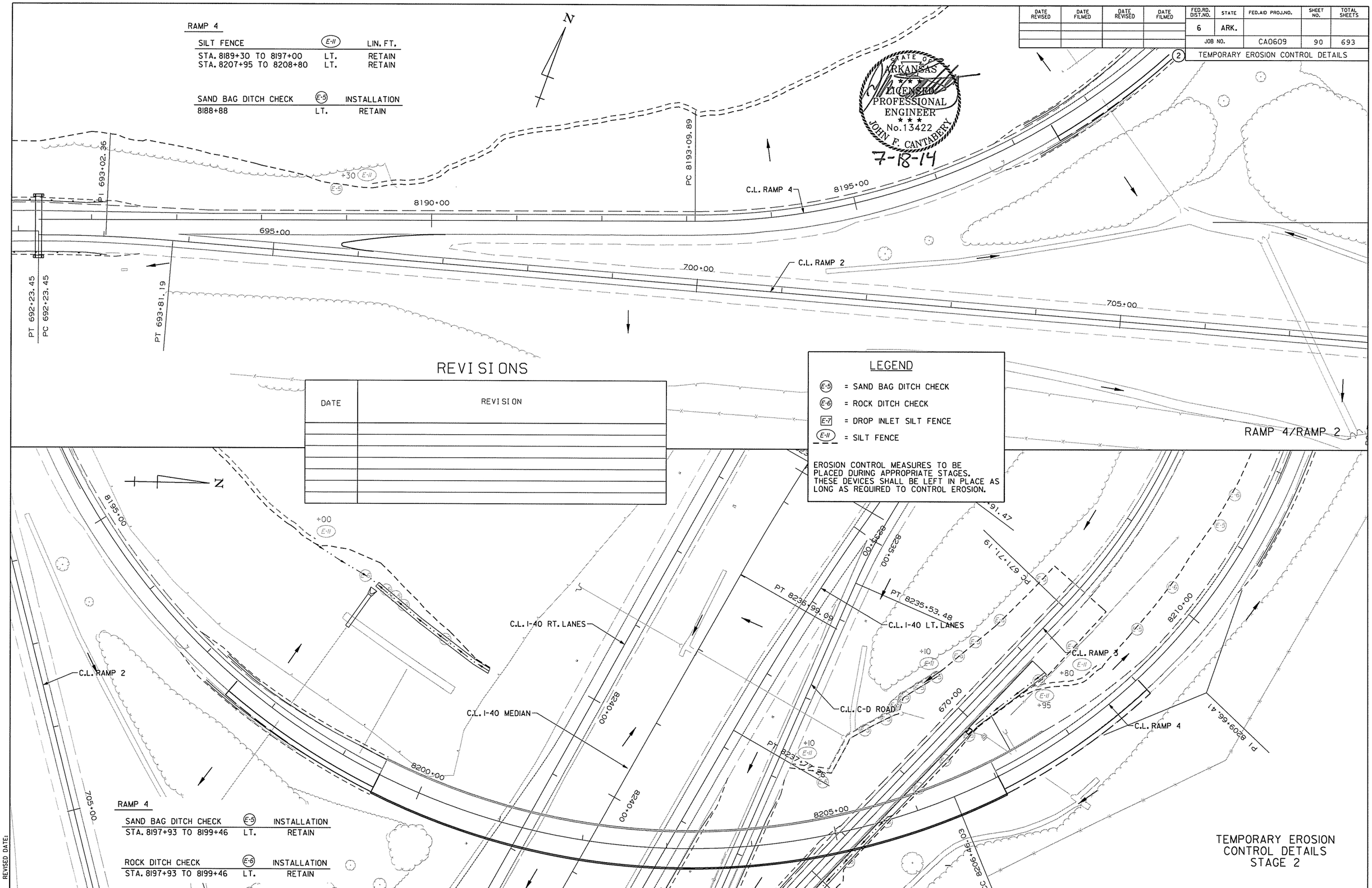

REVISIONS

DATE	REVISION

LEGEND

(E-5) = SAND BAG DITCH CHECK
(E-6) = ROCK DITCH CHECK
(E-7) = DROP INLET SILT FENCE
(E-11) = SILT FENCE

EROSION CONTROL MEASURES TO BE PLACED DURING APPROPRIATE STAGES. THESE DEVICES SHALL BE LEFT IN PLACE AS LONG AS REQUIRED TO CONTROL EROSION.

RAMP 4

SAND BAG DITCH CHECK	(E-5)	INSTALLATION
STA. 8197+93 TO 8199+46	LT.	RETAIN

ROCK DITCH CHECK	(E-6)	INSTALLATION
STA. 8197+93 TO 8199+46	LT.	RETAIN

TEMPORARY EROSION CONTROL DETAILS STAGE 2

cggervasini 7/17/2014 7:43:10 PM
WORKSPACE: AHTD
L:\2011\11017709 - I-40 at I-430 Interchange Modifications\Drawings\RCA0609_EC_RP4_01_STG2.dgn
REVISED DATE:

DATE REVISED	DATE FILMED	DATE REVISED	DATE FILMED	FED.RD. DIST.NO.	STATE	FED.AID PROJ.NO.	SHEET NO.	TOTAL SHEETS
				6	ARK.			
				JOB NO.		CA0609	91	693

(2) TEMPORARY EROSION CONTROL DETAILS

REVISIONS

DATE	REVISION

RAMP 4

SAND BAG DITCH CHECK	(E-5)	INSTALLATION
STA. 8209+45 TO 8217+99	LT.	RETAIN

ROCK DITCH CHECK	(E-6)	INSTALLATION
STA. 8209+45 TO 8217+99	LT.	RETAIN

STATE OF ARKANSAS
LICENSED PROFESSIONAL ENGINEER
JOHN F. CANTABERRY
No. 13422
7-18-14

LEGEND

- (E-5) = SAND BAG DITCH CHECK
- (E-6) = ROCK DITCH CHECK
- E-7 = DROP INLET SILT FENCE
- (E-11) = SILT FENCE

EROSION CONTROL MEASURES TO BE PLACED DURING APPROPRIATE STAGES. THESE DEVICES SHALL BE LEFT IN PLACE AS LONG AS REQUIRED TO CONTROL EROSION.

RAMP 4, NORMAN RD., NEVA RD.

DRIVEWAY 1

SAND BAG DITCH CHECK	(E-5)	INSTALLATION
STA. 9+10 TO 9+53	RT.	RETAIN
STA. 9+16 TO 9+38	LT.	RETAIN

ROCK DITCH CHECK	(E-6)	INSTALLATION
STA. 9+10 TO 9+53	RT.	RETAIN
STA. 9+16 TO 9+38	LT.	RETAIN

NORMAN RD.

SILT FENCE	(E-11)	LIN. FT.
STA. 15+40 TO 16+10	LT.	RETAIN
STA. 16+25 TO 18+60	LT.	RETAIN
STA. 21+30 TO 26+05	LT.	RETAIN

SAND BAG DITCH CHECK	(E-5)	INSTALLATION
STA. 16+76 TO 17+82	LT.	RETAIN
STA. 21+95 TO 25+68	LT.	RETAIN
STA. 17+94	RT.	RETAIN

ROCK DITCH CHECK	(E-6)	INSTALLATION
STA. 16+76 TO 17+82	LT.	RETAIN
STA. 21+95 TO 25+68	LT.	RETAIN

NEVA RD.

SILT FENCE	(E-11)	LIN. FT.
STA. 7+15 TO 9+35	RT.	RETAIN

SAND BAG DITCH CHECK	(E-5)	INSTALLATION
STA. 7+77 TO 9+26	LT.	RETAIN
STA. 7+76 TO 9+52	RT.	RETAIN

ROCK DITCH CHECK	(E-6)	INSTALLATION
STA. 7+77 TO 9+26	LT.	RETAIN

TEMPORARY EROSION CONTROL DETAILS STAGE 2

cggervasini 7/17/2014 7:43:11 PM
WORKSPACE: AHTD
L:\ZOIN\NOT709 - I-40 at I-430 Interchange Modifications\Drawings\RCA0609_EC_RP4_02_STG2.dgn
REVISED DATE:

DATE REVISED	DATE FILMED	DATE REVISED	DATE FILMED	FED.RD. DIST.NO.	STATE	FED.AID PROJ.NO.	SHEET NO.	TOTAL SHEETS
				6	ARK.			
				JOB NO.		CA0609	92	693
				(2)	MAINTENANCE OF TRAFFIC DETAILS			

STATE OF ARKANSAS
LICENSED PROFESSIONAL ENGINEER
No.13422
JOHN F. CANTABERY
7-18-14

NOTE :
W20-1(VARIOUS DISTANCE) ADVANCE SIGNS
TO BE REPLACED AS NEEDED BY EQUIVALENT W20-5 SIGNS
AS WORKING AREA SHIFTS.

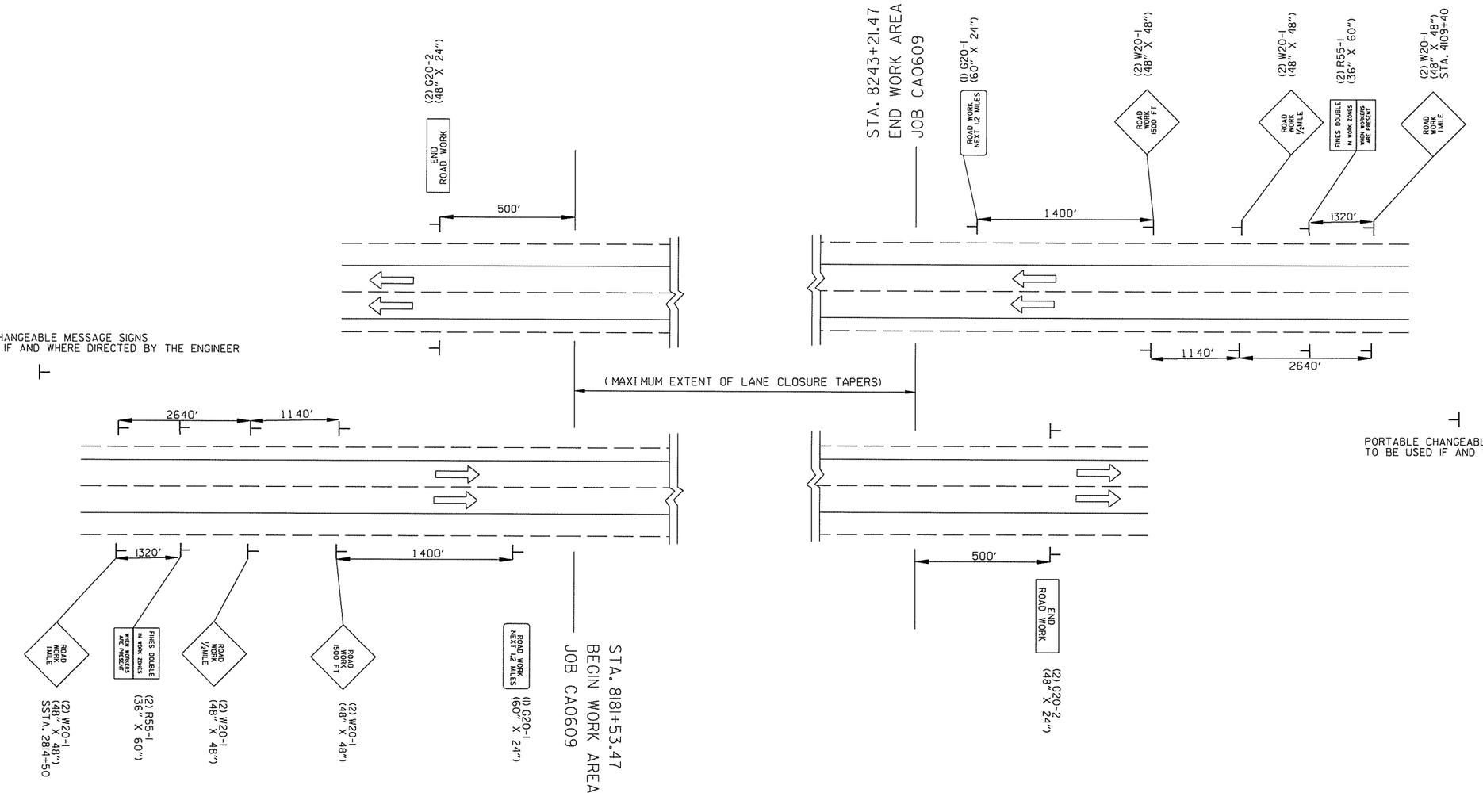

NOTE :
W20-1(VARIOUS DISTANCE) ADVANCE SIGNS
TO BE REPLACED AS NEEDED BY EQUIVALENT W20-5 SIGNS
AS WORKING AREA SHIFTS.

ADVANCE SIGNS AT BEGINNING AND END OF JOB ALL STAGES

MAINTENANCE OF TRAFFIC DETAILS
ADVANCE SIGNS AT JOB ENDS

cggervasini 7/17/2014 7:43:11PM
WORKSPACE: AHTD
L:\2011\11017709 - I-40 at I-430 Interchange Modifications\Drawings\RCA0609_MOT_SD_01.dgn
REVISED DATE:

DATE REVISED	DATE FILMED	DATE REVISED	DATE FILMED	FED.RD. DIST.NO.	STATE	FED.AID PROJ.NO.	SHEET NO.	TOTAL SHEETS
				6	ARK.			
				JOB NO.		CA0609	93	693

(2) MAINTENANCE OF TRAFFIC ADV. WARNING SIGNS

STATE OF ARKANSAS
REGISTERED PROFESSIONAL ENGINEER
No. 11427
KEVIN G. TOBLESEY
7/17/14

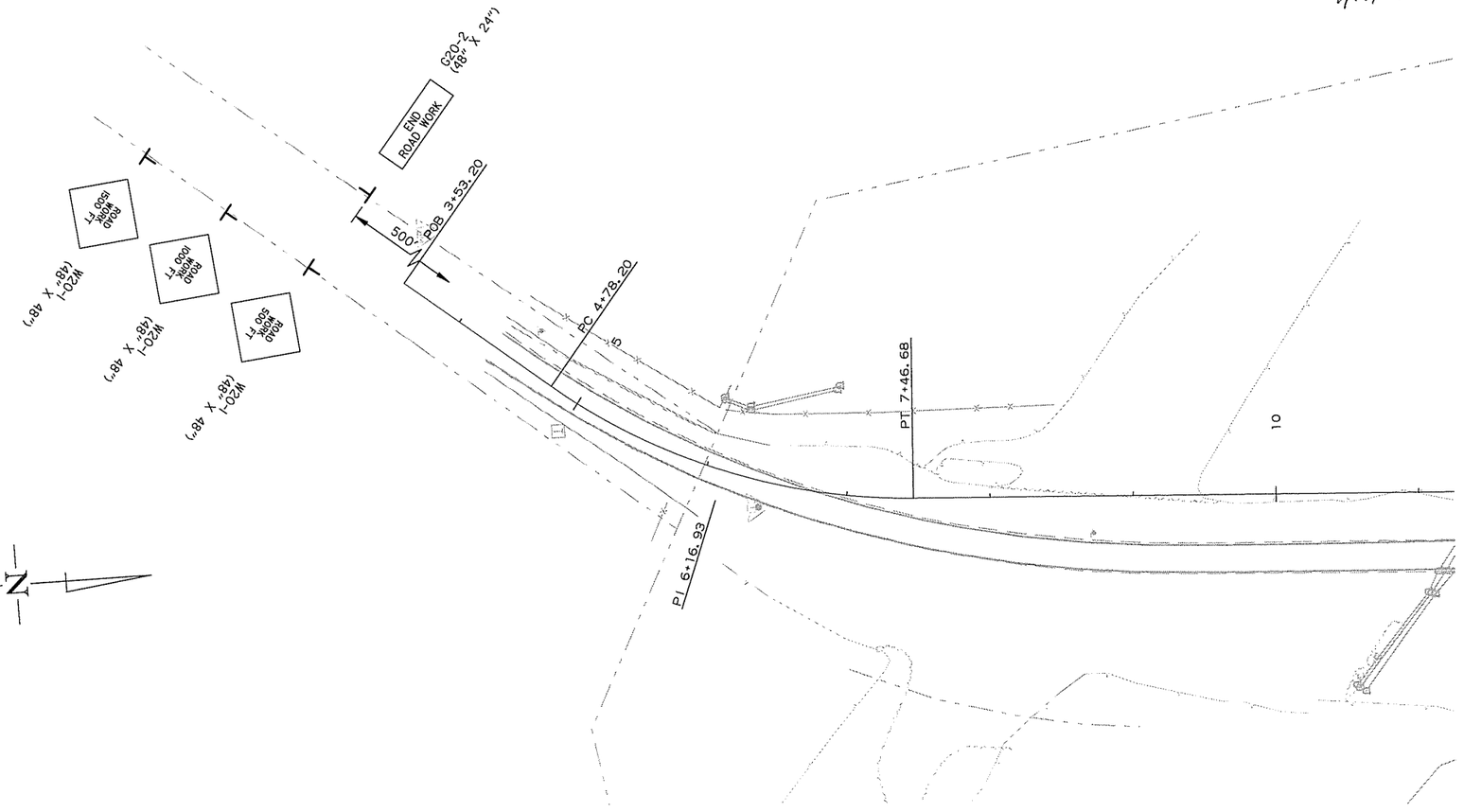

MAINTENANCE OF TRAFFIC
ADVANCE WARNING SIGNS
MARCHE RD.

7/16/2014 1:25:49 PM ...\7-Maintenance of Traffic.dgn T:\Job\wlkm2650 dhtd cap ca0603\700 cadd files\777 roadway files\drawings\7-Maintenance of Traffic.dgn

DATE REVISED	DATE FILMED	DATE REVISED	DATE FILMED

FED.RD. DIST.NO.	STATE	FED.AID PROJ.NO.	SHEET NO.	TOTAL SHEETS
6	ARK.			
JOB NO.		CA0609	94	693

(2) MAINTENANCE OF TRAFFIC ADV. WARNING SIGNS

STATE OF ARKANSAS
REGISTERED PROFESSIONAL ENGINEER
No. 11427
KEVIN G. TOBLESEY
7/17/14

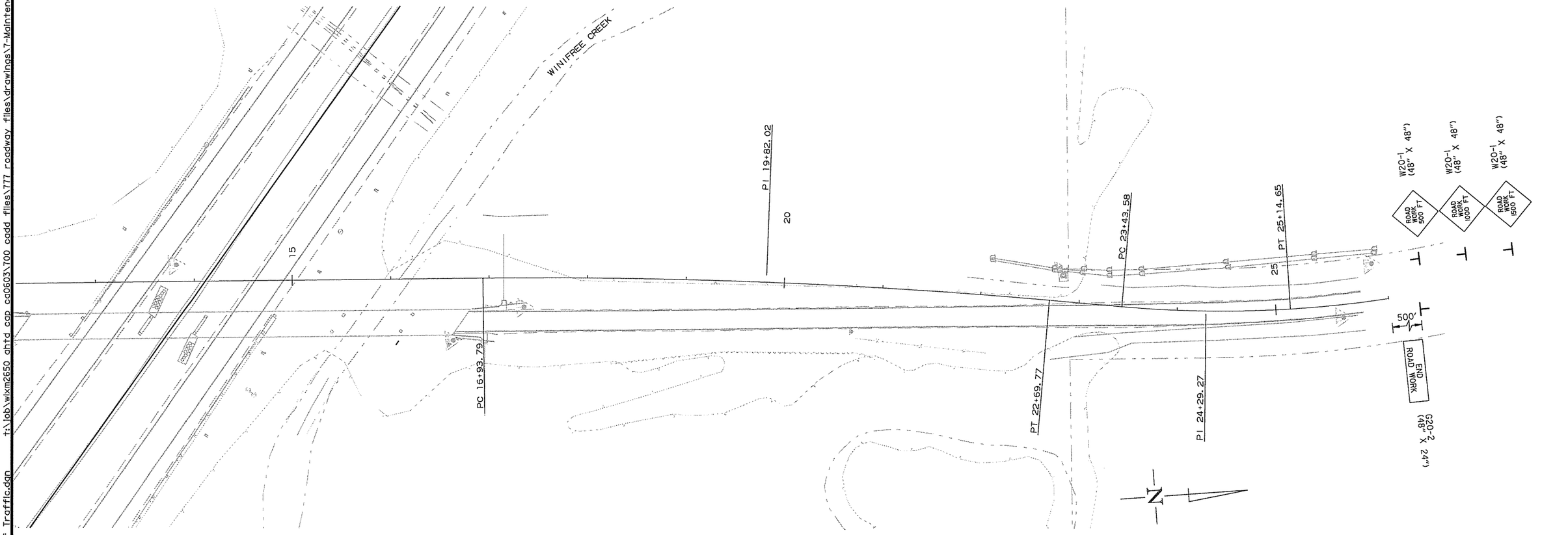

MAINTENANCE OF TRAFFIC
ADVANCE WARNING SIGNS
MARCHE RD.

7/16/2014 1:25:50 PM ...\7-Maintenance of Traffic.dgn t:\lob\wlxm2650 dhtd cap ca0603\700 cadd files\777 roadway files\drawings\7-Maintenance of Traffic.dgn

DATE REVISED	DATE FILMED	DATE REVISED	DATE FILMED	FED.RD. DIST.NO.	STATE	FED.AID PROJ.NO.	SHEET NO.	TOTAL SHEETS
				6	ARK.			
				JOB NO.		CA0609	95	693
				(2)	MAINTENANCE OF TRAFFIC DETAILS			

STATE OF ARKANSAS
LICENSED PROFESSIONAL ENGINEER
No.13422
JOHN F. CANTABERY
7-18-14

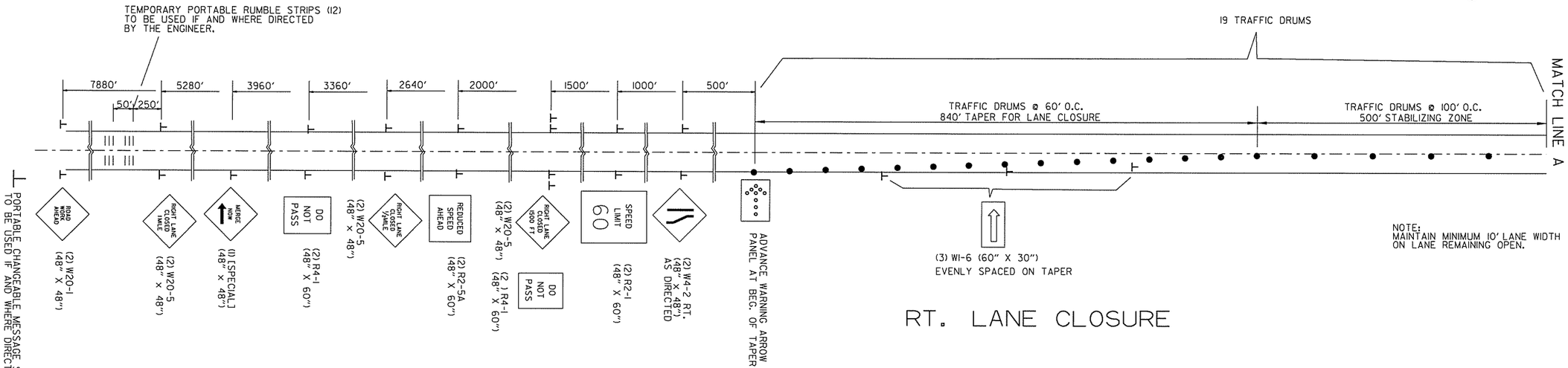

RT. LANE CLOSURE

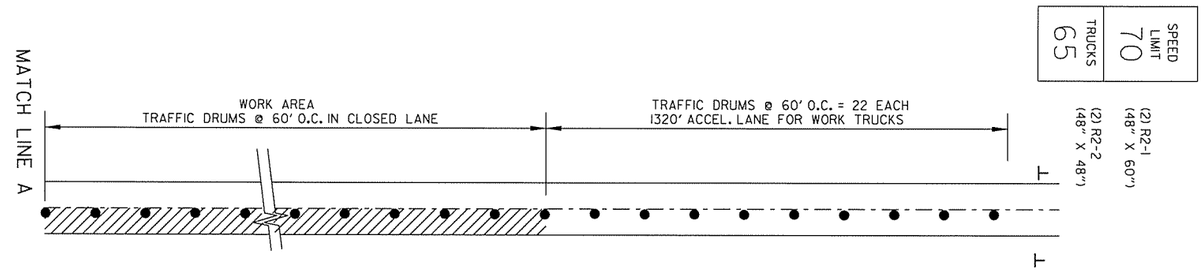

DIVERSION FOR RT. LANE WORK ZONE

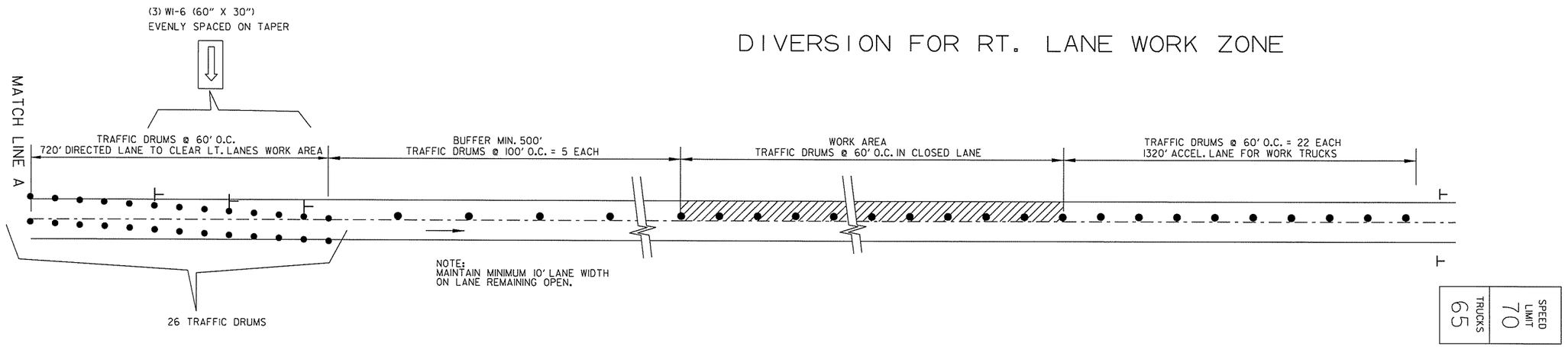

DIVERSION FOR LT. LANE WORK ZONE

MAINTENANCE OF TRAFFIC DETAILS
LANE CLOSURE

caggervasinl 7/17/2014 7:43:11 PM
WORKSPACE: AHTD
L:\ROW\NOI709 - I-40 at I-430 Interchange Modifications\Drawings\RCA0609.MOT.SD.01.dgn
REVISED DATE:

DATE REVISED	DATE FILMED	DATE REVISED	DATE FILMED	FED.RD. DIST.NO.	STATE	FED.AID PROJ.NO.	SHEET NO.	TOTAL SHEETS
				6	ARK.			
				JOB NO.		CA0609	96	693
				(2)	MAINTENANCE OF TRAFFIC DETAILS			

STATE OF ARKANSAS
LICENSED PROFESSIONAL ENGINEER
No.13422
JOHN F. CANTABERY
7-18-14

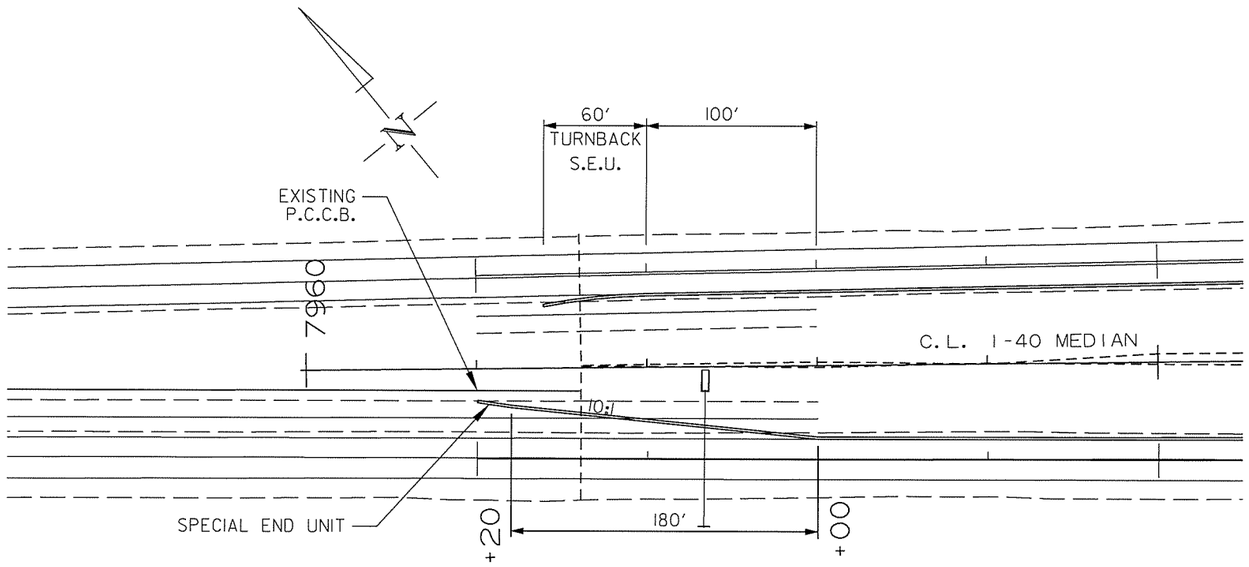

BEGINNING OF JOB

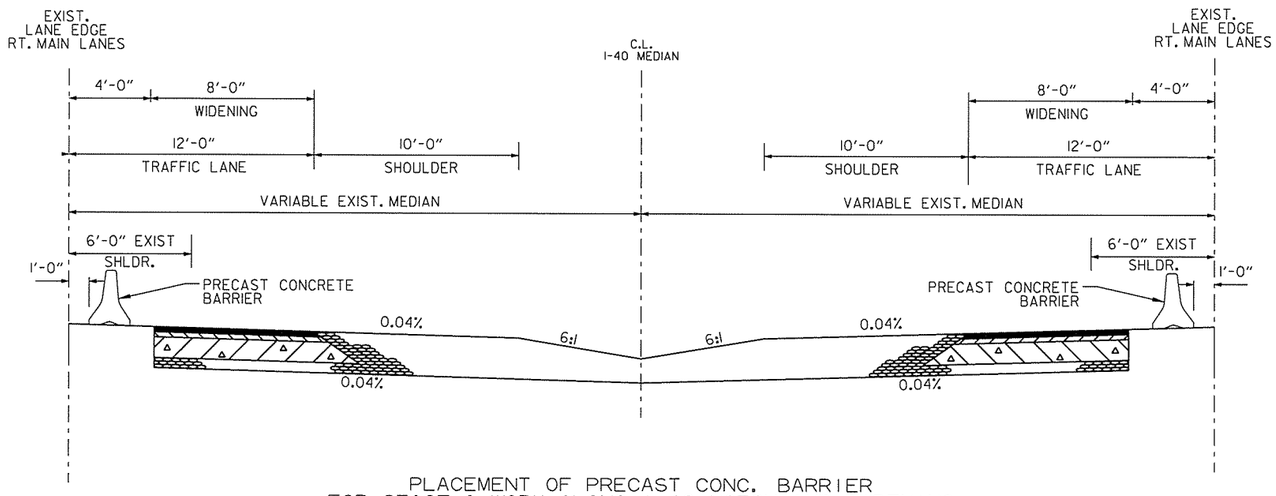

PLACEMENT OF PRECAST CONC. BARRIER
FOR STAGE 1 WORK ALONG I-40 NOTCH AND WIDENING
C.L. MEDIAN STA. 7963+00 TO STA. 8181+20

MAINTENANCE OF TRAFFIC DETAILS

cggervasini 7/17/2014 7:43:12 PM
WORKSPACE: AHTD
L:\2014\140709 - I-40 at I-430 Interchange Modifications\Drawings\RCA0609_MOT_SD_03.dgn
REVISED DATE:

DATE REVISED	DATE FILMED	DATE REVISED	DATE FILMED	FED.RD. DIST.NO.	STATE	FED.AID PROJ.NO.	SHEET NO.	TOTAL SHEETS
				6	ARK.			
				JOB NO.		CA0609	97	693
				(2)	MAINTENANCE OF TRAFFIC DETAILS			

STATE OF ARKANSAS
LICENSED PROFESSIONAL ENGINEER
No.13422
JOHN F. CANTABERY
7-18-14

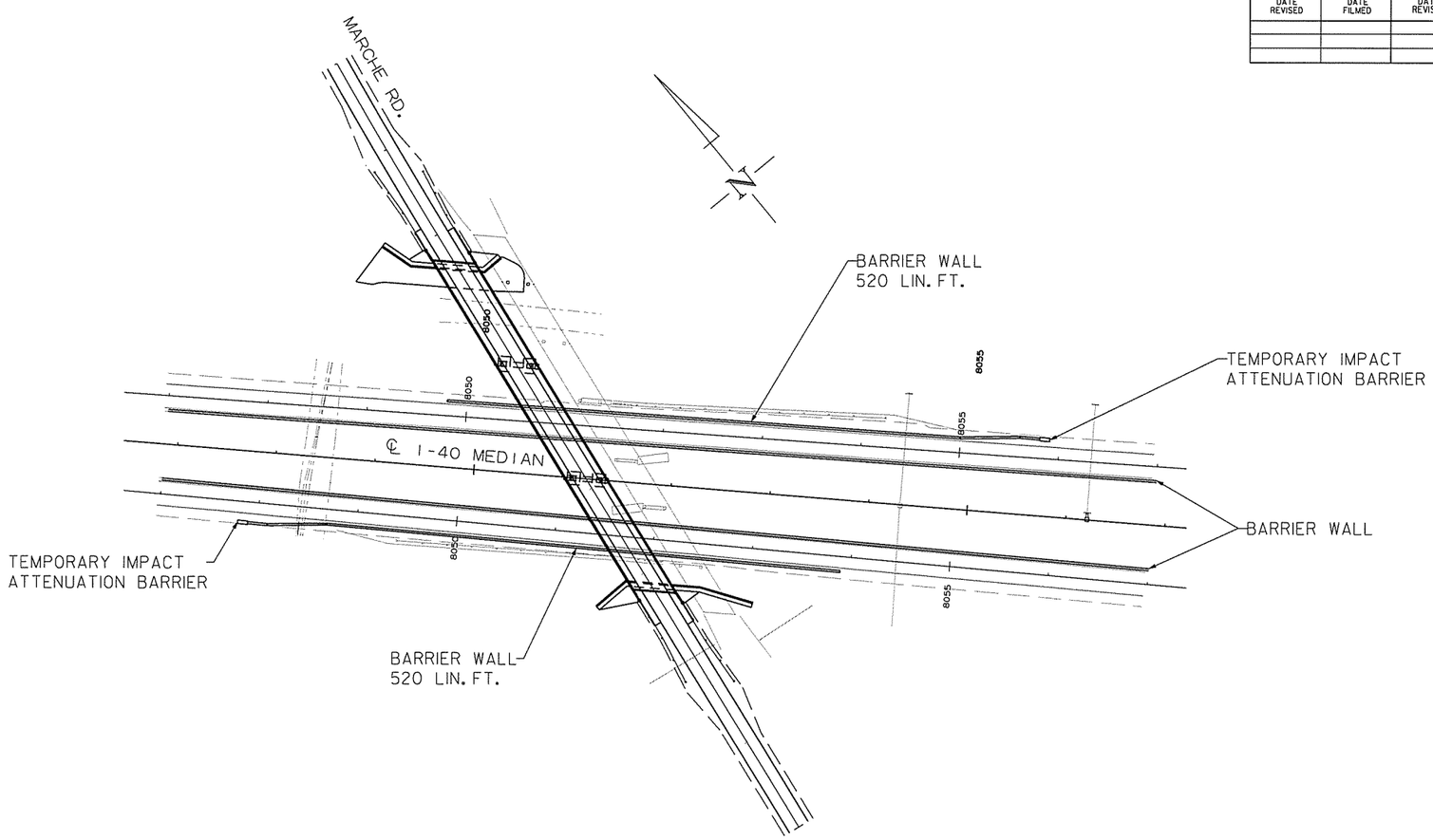

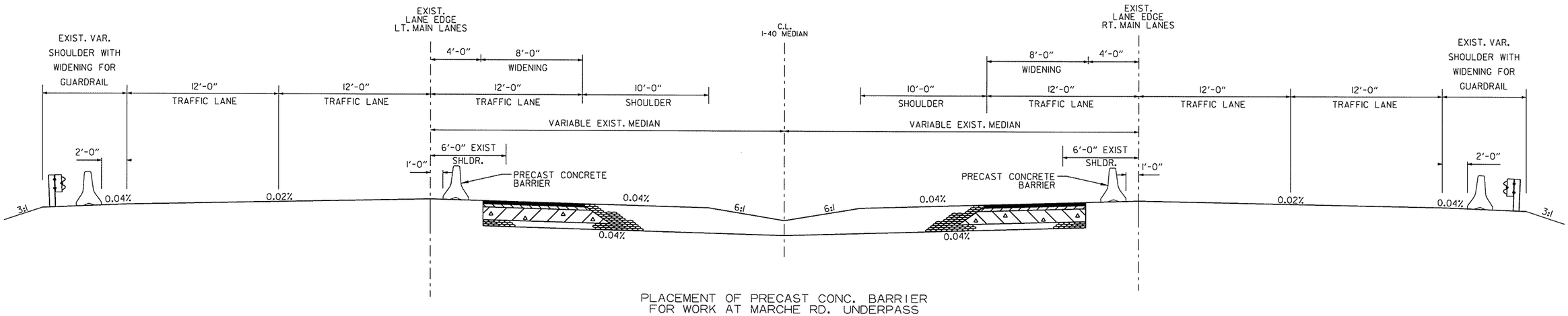

PLACEMENT OF PRECAST CONC. BARRIER
FOR WORK AT MARCHE RD. UNDERPASS

MAINTENANCE OF TRAFFIC DETAILS

cggervasini 7/17/2014 7:43:12 PM
WORKSPACE: AHTD
L:\20IN\I40T709 - I-40 at I-430 Interchange Modifications\Drawings\RCA0609_MOT_SD_04.dgn
REVISED DATE:

DATE REVISED	DATE FILMED	DATE REVISED	DATE FILMED	FED.RD. DIST.NO.	STATE	FED.AID PROJ.NO.	SHEET NO.	TOTAL SHEETS
				6	ARK.			
				JOB NO.		CA0609	98	693
				(2)	MAINTENANCE OF TRAFFIC DETAILS			

N

1" =250'

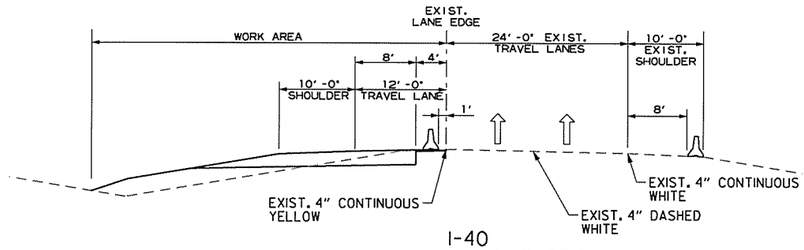

I-40
STAGE I TYPICAL SECTION
(SHOWN IN DIRECTION OF TRAFFIC)

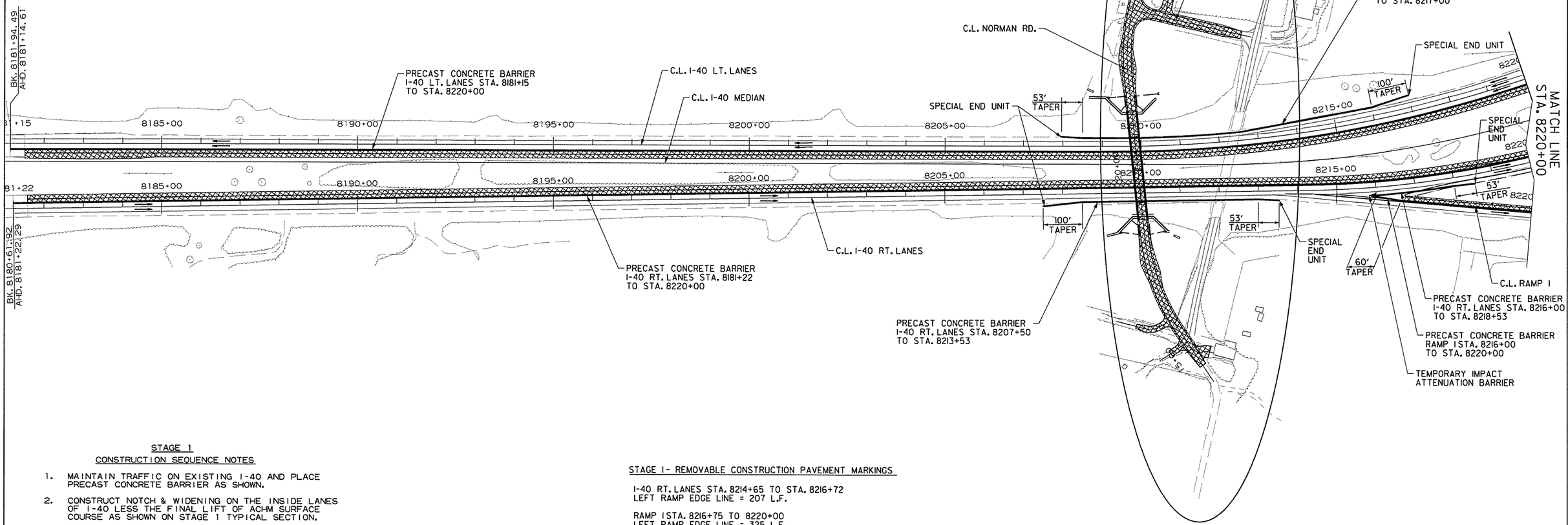

STATE OF ARKANSAS
LICENSED PROFESSIONAL ENGINEER
No. 13422
JOHN F. CANTABERY
7-18-14

STAGE 1
CONSTRUCTION SEQUENCE NOTES

1. MAINTAIN TRAFFIC ON EXISTING I-40 AND PLACE PRECAST CONCRETE BARRIER AS SHOWN.
2. CONSTRUCT NOTCH & WIDENING ON THE INSIDE LANES OF I-40 LESS THE FINAL LIFT OF ACHM SURFACE COURSE AS SHOWN ON STAGE 1 TYPICAL SECTION.
3. CONSTRUCT FOUNDATIONS AND GUARDRAIL ON INSIDE SHOULDER FOR NEW OVERHEAD SIGNS.
4. CONDUCT COLD MILLING OPERATION AND/OR FINAL LIFT OF ACHM SURFACE COURSE WITH AN INSIDE LANE CLOSURE AS SHOWN ON THE STANDARD LANE CLOSURE SHEET.

STAGE 1- REMOVABLE CONSTRUCTION PAVEMENT MARKINGS

I-40 RT. LANES STA. 8214+65 TO STA. 8216+72
LEFT RAMP EDGE LINE = 207 L.F.

RAMP I STA. 8216+75 TO 8220+00
LEFT RAMP EDGE LINE = 325 L.F.

STAGE I GRADING AND PAVING
TRAFFIC
TEMPORARY IMPACT ATTENUATION BARRIER

MAINTENANCE OF TRAFFIC DETAILS
I-40 - STAGE I

cggervasini 7/17/2014 7:43:3 PM
WORKSPACE: AHTD
L:\20\NIDIT709 - I-40 at I-430 Interchange Modifications\Drawings\RCA0609_MOT_STG1_01.dgn
REVISED DATE:

DATE REVISED	DATE FILMED	DATE REVISED	DATE FILMED	FED.RD. DIST.NO.	STATE	FED.AID PROJ.NO.	SHEET NO.	TOTAL SHEETS
				6	ARK.			
				JOB NO.		CA0609	99	693

(2) MAINTENANCE OF TRAFFIC DETAILS

N

1" =250'

STAGE I- REMOVABLE CONSTRUCTION PAVEMENT MARKINGS

RAMP I STA. 8220+00 TO STA. 8236+93
LEFT EDGE LINE = 1693 L.F.

I-430 LT. LANES STA. 670+64 TO 691+52
LEFT EDGE AND CENTER DASHED LINE = 4176 L.F.

I-430 LT. LANES STA. 691+52 TO STA. 693+18
LEFT AND RIGHT RAMP 3 EDGE LINE = 332 L.F.
LEFT RAMP 3 EDGE LINE = 166 L.F.

RAMP 3 STA. 684+90 TO 692+95
LEFT AND RIGHT RAMP EDGE LINE = 1610 L.F.

I-430 RT. LANES STA. 669+17 TO 692+23
LEFT EDGE AND CENTER DASHED LINE = 4612 L.F.

RAMP 4 STA. 8185+38 TO 8187+02
LEFT EDGE LINE AND CENTER DASHED LINE = 328 L.F.

RAMP 4 STA. 8187+02 TO 8198+49
LEFT EDGE LINE = 1147 L.F

RAMP 4 STA. 8198+49 TO 8208+03
LEFT AND RIGHT EDGE LINE = 1908 L.F

RAMP 4 STA. 8208+03 TO 8219+55
LEFT EDGE LINE = 1152 L.F

SEE RAMP 3 MAINTENANCE OF TRAFFIC DETAILS

100' LANE TAPER

SPECIAL END UNIT (TYP.)

C.L. RAMP 4

C.L. RAMP 2

170' TAPER

C.L. I-40 MEDIAN

C.L. I-40 RT. LANES

C.L. I-40 LT. LANES

PRECAST CONCRETE BARRIER
RAMP 4 STA. 8185+38
TO STA. 8218+53

PRECAST CONCRETE BARRIER
I-40 LT. LANES STA. 8220+00
TO STA. 8231+98

53' TAPER

SPECIAL END UNIT

C.L. RAMP

WORK AREA

7'-6" | 6'-0" SHLDR. | 9'-0" WIDENING | 3' | 13'-0" TRAVEL LANE | 6'-0" EXIST. SHLDR.

4" CONTINUOUS YELLOW

EXIST. 4" CONTINUOUS WHITE

RAMPS I & 4
STAGE I TYPICAL SECTION
(SHOWN IN DIRECTION OF TRAFFIC)

MATCH LINE STA. 8220+00

C.L. RAMP 3

SPECIAL END UNIT

200' TAPER

260' LANE TAPER

100' LANE TAPER

PRECAST CONCRETE BARRIER
I-40 RT. LANES STA. 8220+00
TO STA. 8227+30

PRECAST CONCRETE BARRIER
RAMP 3 STA. 685+29
TO STA. 692+73

SEE RAMP 3 MAINTENANCE OF TRAFFIC DETAILS

C.L. RAMP I

PRECAST CONCRETE BARRIER
RAMP I STA. 8220+00
TO STA. 8232+53

SPECIAL END UNIT

MATCH LINE A

MATCH LINE B

WORK AREA

10'-0" SHLDR. | 12'-0" WIDENING | 2' | 11'-0" TRAVEL LANE | 11'-0" TRAVEL LANE | 24'-0" EXIST. TRAVEL LANES | 10'-0" EXIST. SHLDR.

4" CONTINUOUS YELLOW

4" DASHED WHITE

EXIST. 4" CONTINUOUS WHITE

I-430
STAGE I TYPICAL SECTION
(SHOWN IN DIRECTION OF TRAFFIC)

MATCH LINE A

MATCH LINE B

C.L. I-430 LT. LANES

C.L. I-430 RT. LANES

PRECAST CONCRETE BARRIER

PRECAST CONCRETE BARRIER
I-430 RT. LANES STA. 668+37
TO STA. 692+23

STAGE 1
CONSTRUCTION SEQUENCE NOTES

1. MAINTAIN TRAFFIC ON EXISTING I-40, I-430, AND RAMPS, AND PLACE PRECAST CONCRETE BARRIER AS SHOWN.
2. CONSTRUCT NOTCH & WIDENING AS SHOWN.
3. DURING CONSTRUCTION OF RAMP 4 BRIDGE, IF NO WORK IS BEING PERFORMED ON ADJACENT ROADWAY SEGMENTS, THE ROADWAY AREAS SHALL HAVE THE CONCRETE BARRIER REMOVED, AND TAPERED TRANSITIONS SHALL BE PLACED AT THE ENDS OF THE BRIDGE.
4. CONSTRUCT FOUNDATIONS AND GUARDRAIL ON INSIDE SHOULDER FOR NEW OVERHEAD SIGNS.
5. SEE RAMP 3 MAINTENANCE OF TRAFFIC DETAILS FOR MORE INFORMATION.

STATE OF ARKANSAS
LICENSED PROFESSIONAL ENGINEER
No. 13422
JOHN F. CANTABERY
7-18-14

PRECAST CONCRETE BARRIER
I-430 LT. LANES STA. 671+64
TO STA. 693+18

53' TAPER

100' LANE TAPER

300' DROP TAPER

60' TAPER

SPECIAL END UNIT

TEMPORARY IMPACT ATTENUATION BARRIER

STAGE I GRADING AND PAVING
TRAFFIC
TEMPORARY IMPACT ATTENUATION BARRIER

MAINTENANCE OF TRAFFIC DETAILS
I-40 @ 430 - STAGE I

cggervasini 7/17/2014 7:43:13 PM
WORKSPACE: AHTD
L:\20N\00T709 - I-40 at I-430 Interchange Modifications\Drawings\RCA0609_MOT_STG1_02.dgn
REVISED DATE:

DATE REVISED	DATE FILMED	DATE REVISED	DATE FILMED	FED.RD. DIST.NO.	STATE	FED.AID PROJ.NO.	SHEET NO.	TOTAL SHEETS
				6	ARK.			
				JOB NO.		CA0609	100	693
				(2)	MAINTENANCE OF TRAFFIC DETAILS			

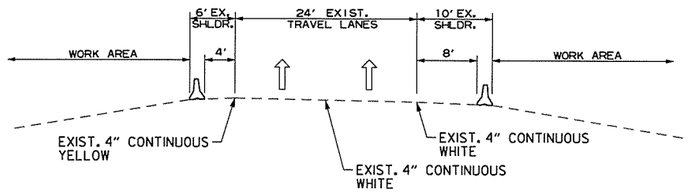

I-40
STAGE I TYPICAL SECTION
(SHOWN IN DIRECTION OF TRAFFIC)

BARRIER TO REMAIN THROUGH
STAGE 2 BRIDGE CONSTRUCTION

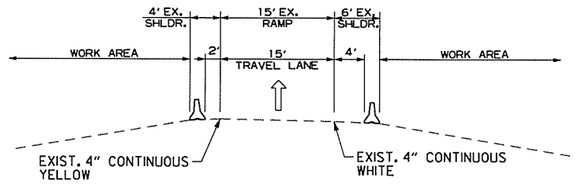

C-D ROAD
STAGE I TYPICAL SECTION
(SHOWN IN DIRECTION OF TRAFFIC)

BARRIER TO REMAIN THROUGH
STAGE 2 BRIDGE CONSTRUCTION

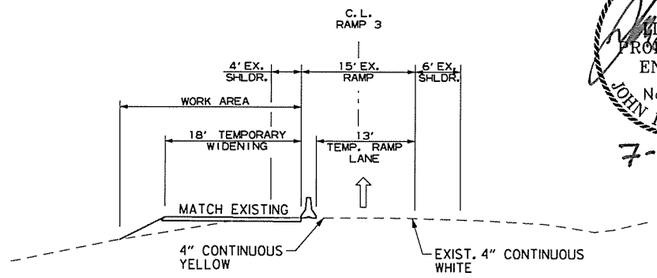

RAMP 3
STAGE IA TYPICAL SECTION
(SHOWN IN DIRECTION OF TRAFFIC)

STATE OF ARKANSAS
LICENSED PROFESSIONAL ENGINEER
No.13422
JOHN F. CANTABERY
7-18-14

STAGE 1A
CONSTRUCTION SEQUENCE NOTES

1. MAINTAIN TRAFFIC ON EXISTING RAMP 3 AND C-D ROAD.
2. INSTALL PRECAST CONC. BARRIER ON INSIDE LANE EDGE RAMP 3 AND OUTSIDE LANE EDGE C-D ROAD AS SHOWN.
3. CONSTRUCT RAMP 3 DETOUR.

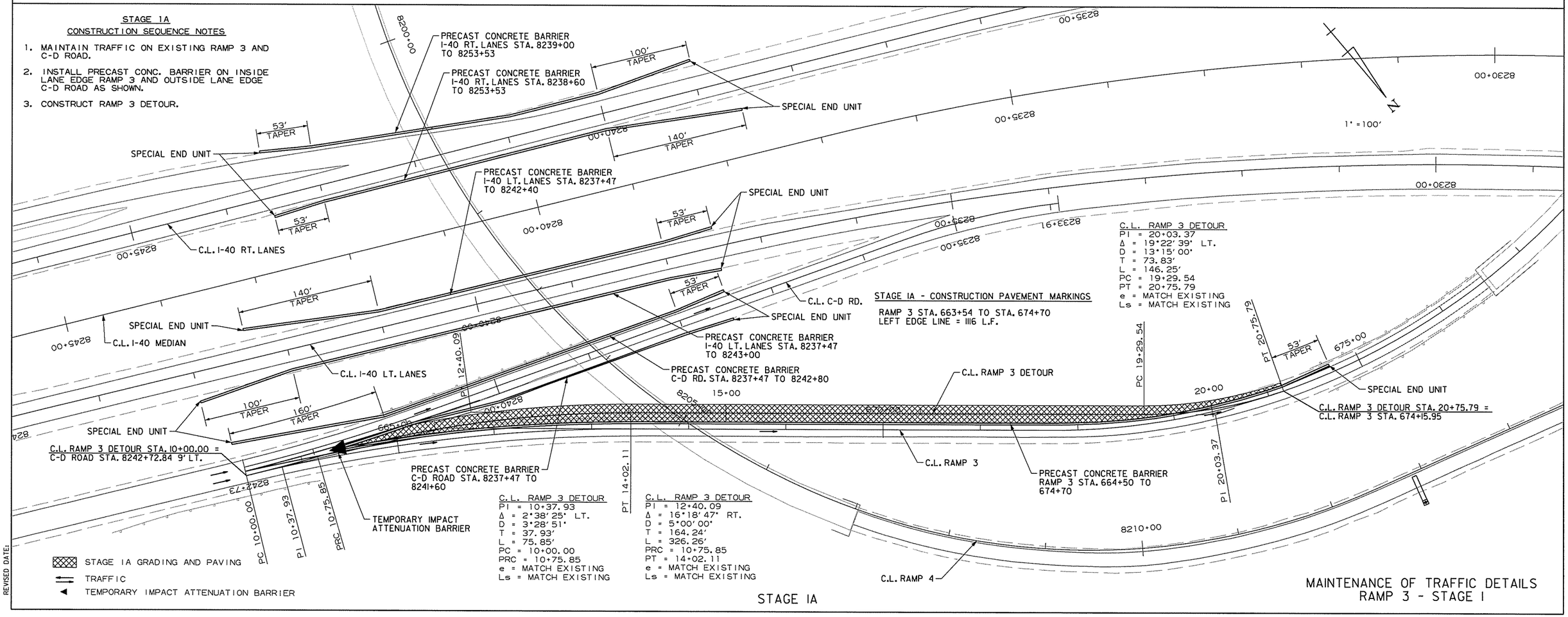

STAGE IA

MAINTENANCE OF TRAFFIC DETAILS
RAMP 3 - STAGE I

cggervasini 7/17/2014 7:43:14 PM
WORKSPACE: AHTD
L:\ROW\100709 - I-40 at I-430 Interchange Modifications\Drawings\RCA0609_MOT_STGI_RP3.01a.dgn
REVISED DATE:

DATE REVISED	DATE FILMED	DATE REVISED	DATE FILMED	FED.RD. DIST.NO.	STATE	FED.AID PROJ.NO.	SHEET NO.	TOTAL SHEETS
				6	ARK.			
				JOB NO.		CA0609	101	693

(2) MAINTENANCE OF TRAFFIC DETAILS

STATE OF ARKANSAS
LICENSED PROFESSIONAL ENGINEER
No. 13422
JOHN F. CANTABERY
7-18-14

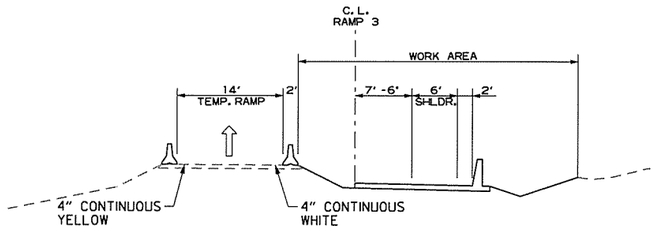

RAMP 3
STAGE IB TYPICAL SECTION
(SHOWN IN DIRECTION OF TRAFFIC)

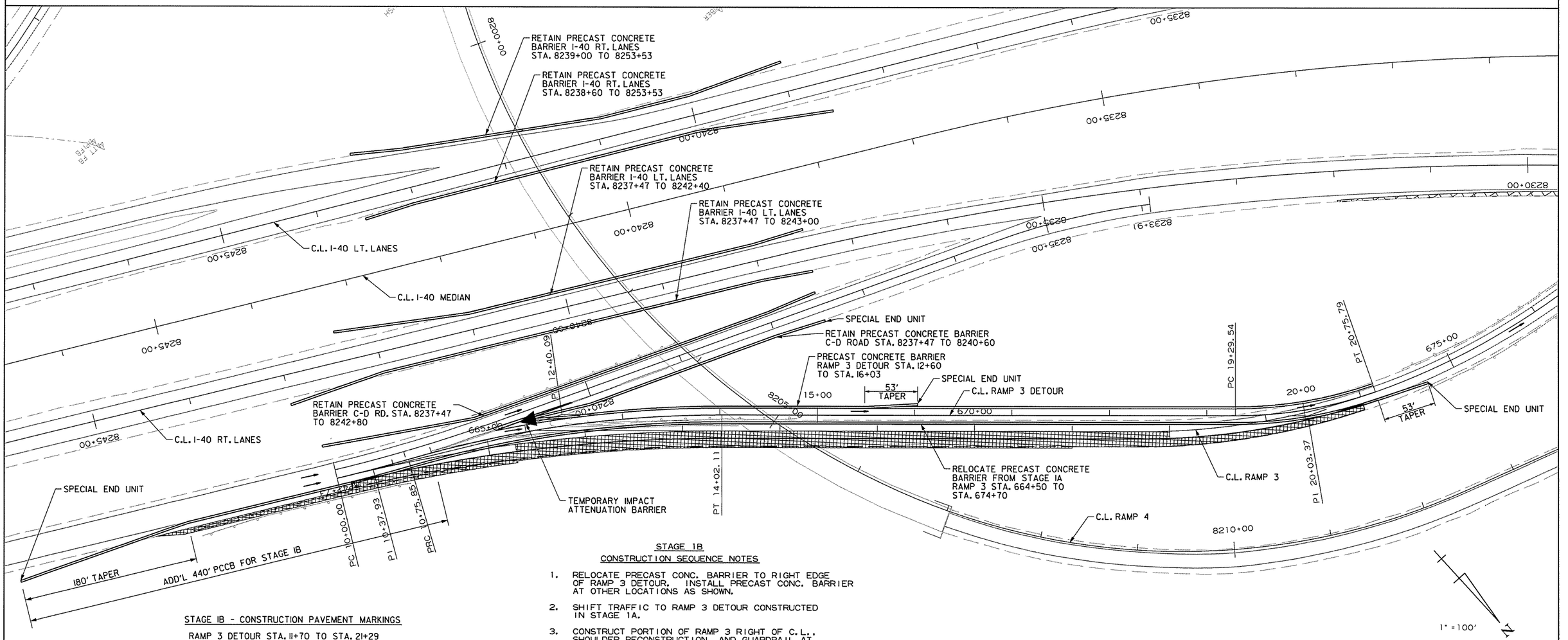

STAGE IB - CONSTRUCTION PAVEMENT MARKINGS

RAMP 3 DETOUR STA. 11+70 TO STA. 21+29
LEFT EDGE LINE = 959 L.F.

RAMP 3 DETOUR STA. 10+00 TO STA. 21+29
RIGHT EDGE LINE = 1129 L.F.

C-D RD. STA. 8240+20 TO STA. 8241+04
RIGHT EDGE LINE = 84 L.F.

STAGE IB
CONSTRUCTION SEQUENCE NOTES

1. RELOCATE PRECAST CONC. BARRIER TO RIGHT EDGE OF RAMP 3 DETOUR. INSTALL PRECAST CONC. BARRIER AT OTHER LOCATIONS AS SHOWN.
2. SHIFT TRAFFIC TO RAMP 3 DETOUR CONSTRUCTED IN STAGE 1A.
3. CONSTRUCT PORTION OF RAMP 3 RIGHT OF C.L., SHOULDER RECONSTRUCTION, AND GUARDRAIL AT EXISTING OVERHEAD SIGN STRUCTURE.

STAGE IB GRADING AND PAVING
TRAFFIC
TEMPORARY IMPACT ATTENUATION BARRIER

STAGE IB

MAINTENANCE OF TRAFFIC DETAILS
RAMP 3 - STAGE I

cggervasini 7/17/2014 7:43:14 PM
WORKSPACE: AHTD
L:\2011\11017709 - I-40 at I-430 Interchange Modifications\Drawings\RCA0609_MOT_STG1_RP3_01b.dgn
REVISED DATE:

DATE REVISED	DATE FILMED	DATE REVISED	DATE FILMED	FED.RD. DIST.NO.	STATE	FED.AID PROJ.NO.	SHEET NO.	TOTAL SHEETS
				6	ARK.			
				JOB NO.		CA0609	102	693
				(2)	MAINTENANCE OF TRAFFIC DETAILS			

NOTE:
TRAFFIC MUST BE SHIFTED OVER TO PORTION OF RAMP 3 CONSTRUCTED IN STAGE 1B PRIOR TO ERECTING RAMP 4 SUPERSTRUCTURE OVER RAMP 3.

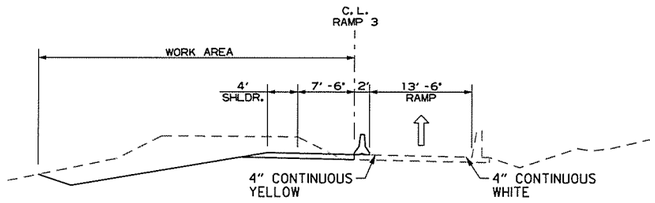

RAMP 3
STAGE IC TYPICAL SECTION
(SHOWN IN DIRECTION OF TRAFFIC)

STATE OF ARKANSAS
LICENSED PROFESSIONAL ENGINEER
No. 13422
JOHN F. CANTABERY
7-18-14

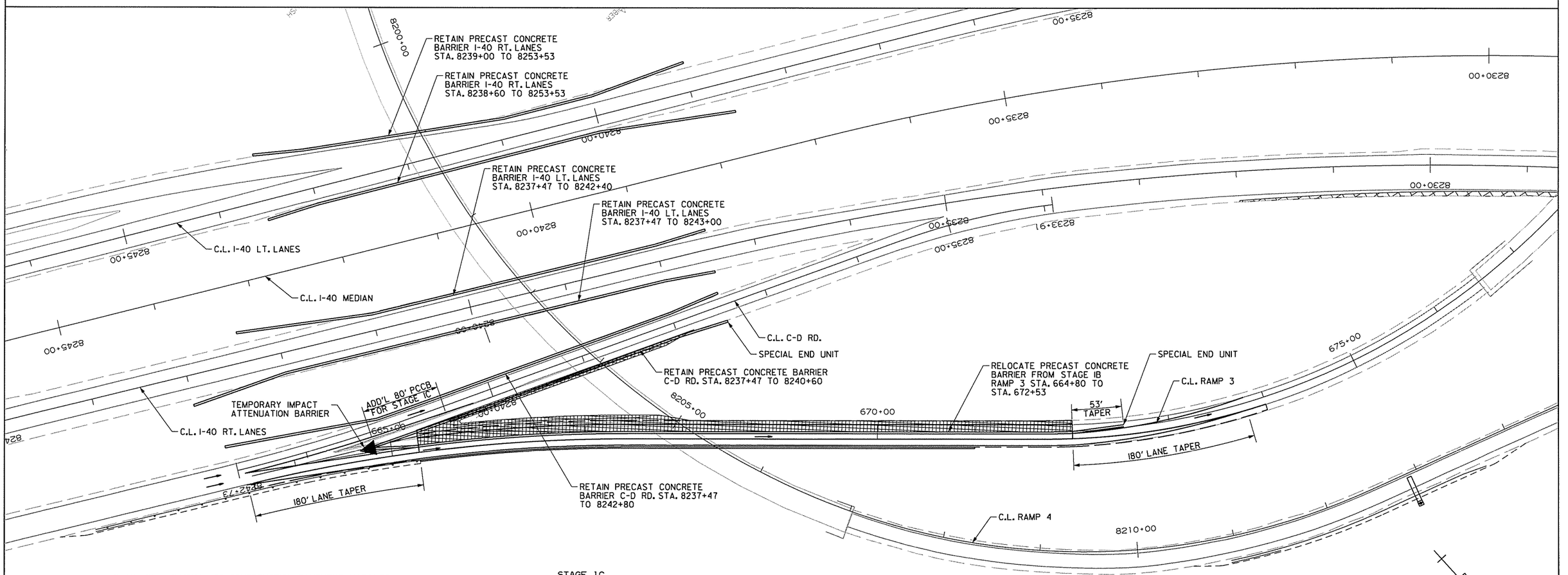

STAGE IC - REMOVAL OF CONSTRUCTION PAVEMENT MARKINGS

C-D RD. STA. 8240+20 TO STA. 8241+04
RIGHT EDGE LINE = 84 L.F.

STAGE IC - REMOVABLE CONSTRUCTION PAVEMENT MARKINGS

RAMP 3 STA. 663+54 TO STA. 673+80
LEFT AND RIGHT EDGE LINES =2052 L.F.

C-D RD. STA. 8240+20 TO STA. 8242+66
RIGHT EDGE LINE =246 L.F.

STAGE 1C
CONSTRUCTION SEQUENCE NOTES

1. RELOCATE PRECAST CONC. BARRIER TO LANE EDGE OF PORTION OF RAMP 3 CONSTRUCTED IN STAGE 1B.
2. SHIFT TRAFFIC TO PORTION OF RAMP 3 CONSTRUCTED IN STAGE 1B.
3. CONSTRUCT REMAINING PORTION OF RAMP 3, RAMP 3 GUARDRAIL, AND C-D ROAD GUARDRAIL.

STAGE IC

1" = 100'

STAGE IC GRADING AND PAVING
TRAFFIC
TEMPORARY IMPACT ATTENUATION BARRIER

MAINTENANCE OF TRAFFIC DETAILS
RAMP 3 - STAGE I

cggervasini 7/17/2014 7:43:4 PM
WORKSPACE: AHTD
L:\ROW\601709 - I-40 at I-430 Interchange Modifications\Drawings\RCA0609_MOT_STG1_RP3_01c.dgn
REVISED DATE:

DATE REVISED	DATE FILMED	DATE REVISED	DATE FILMED	FED.RD. DIST.NO.	STATE	FED.AID PROJ.NO.	SHEET NO.	TOTAL SHEETS
				6	ARK.			
				JOB NO.		CA0609	103	693

(2) MAINTENANCE OF TRAFFIC DETAILS

STATE OF ARKANSAS
LICENSED PROFESSIONAL ENGINEER
No. 13422
JOHN F. CANTABERY
7-18-14

STAGE IA - REMOVABLE CONSTRUCTION PAVEMENT MARKINGS

RAMP 3 STA. 684+90 TO STA. 692+83
RIGHT EDGE LINE = 793 L.F.

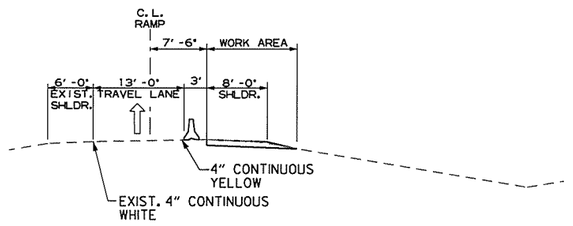

RAMP 3
STAGE IA TYPICAL SECTION
(SHOWN IN DIRECTION OF TRAFFIC)



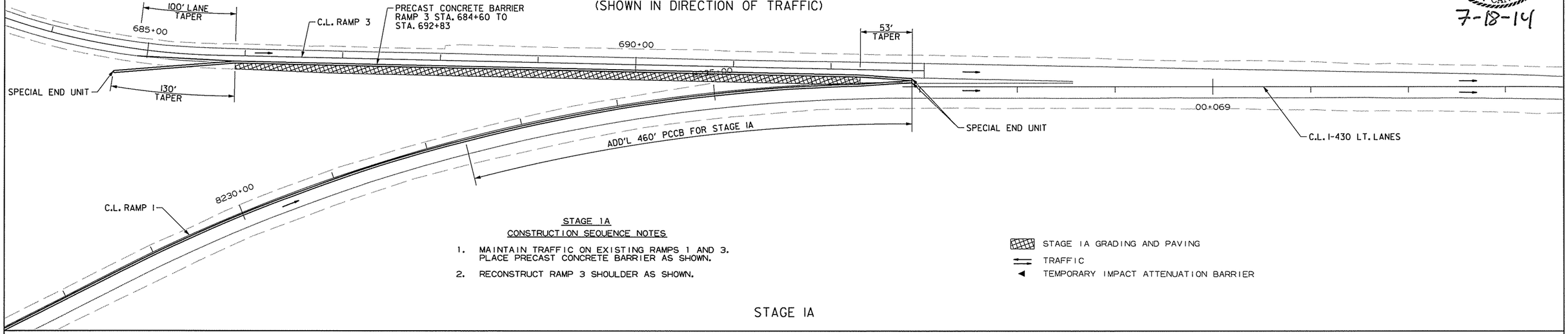

STAGE 1A
CONSTRUCTION SEQUENCE NOTES

1. MAINTAIN TRAFFIC ON EXISTING RAMPS 1 AND 3. PLACE PRECAST CONCRETE BARRIER AS SHOWN.
2. RECONSTRUCT RAMP 3 SHOULDER AS SHOWN.

STAGE 1A GRADING AND PAVING
TRAFFIC
TEMPORARY IMPACT ATTENUATION BARRIER

STAGE IA

NOTE: SEE I-40 @ I-430 SHEETS FOR CONSTRUCTION PAVEMENT MARKINGS.

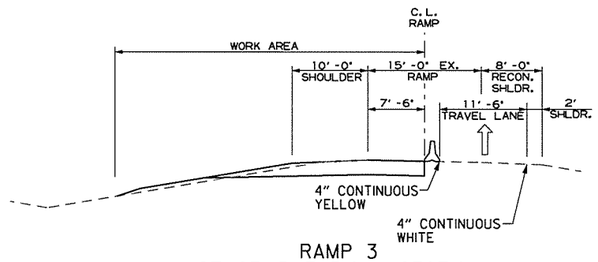

RAMP 3
STAGE IB TYPICAL SECTION
(SHOWN IN DIRECTION OF TRAFFIC)

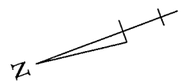

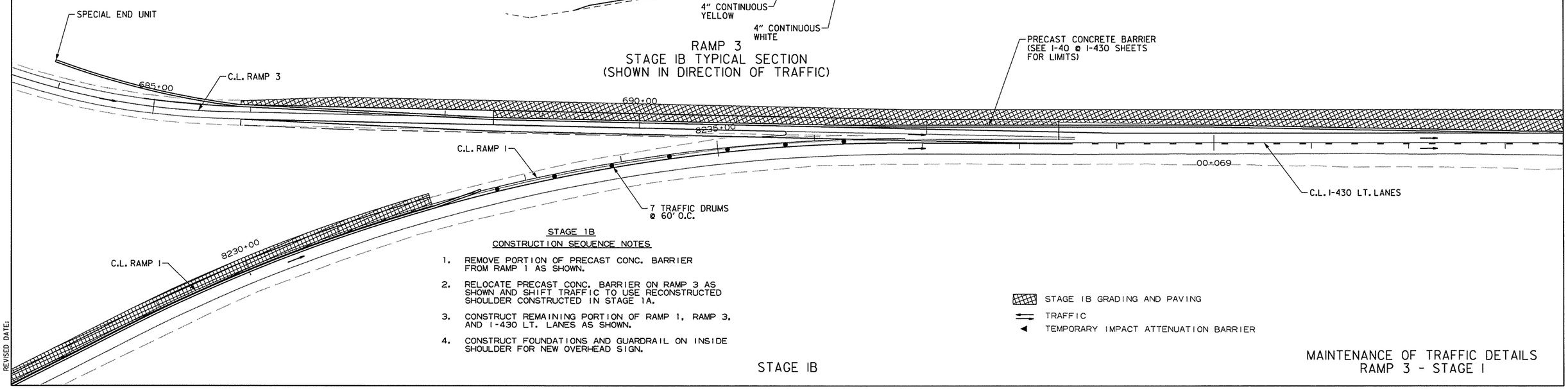

STAGE 1B
CONSTRUCTION SEQUENCE NOTES

1. REMOVE PORTION OF PRECAST CONC. BARRIER FROM RAMP 1 AS SHOWN.
2. RELOCATE PRECAST CONC. BARRIER ON RAMP 3 AS SHOWN AND SHIFT TRAFFIC TO USE RECONSTRUCTED SHOULDER CONSTRUCTED IN STAGE 1A.
3. CONSTRUCT REMAINING PORTION OF RAMP 1, RAMP 3, AND I-430 LT. LANES AS SHOWN.
4. CONSTRUCT FOUNDATIONS AND GUARDRAIL ON INSIDE SHOULDER FOR NEW OVERHEAD SIGN.

STAGE 1B GRADING AND PAVING
TRAFFIC
TEMPORARY IMPACT ATTENUATION BARRIER

STAGE IB

MAINTENANCE OF TRAFFIC DETAILS
RAMP 3 - STAGE I

cggervasini 7/17/2014 7:43:15 PM
WORKSPACE: AHTD
L:\ROW\NOT709 - I-40 at I-430 Interchange Modifications\Drawings\RCA0609_MOT_STGI_RP3_03.dgn
REVISED DATE:

DATE REVISED	DATE FILMED	DATE REVISED	DATE FILMED	FED.RD. DIST.NO.	STATE	FED.AID PROJ.NO.	SHEET NO.	TOTAL SHEETS
				6	ARK.			
				JOB NO.		CA0609	104	693

(2) MAINTENANCE OF TRAFFIC STAGE IA

SEQUENCE OF CONSTRUCTION

STAGE 1A
MAINTAIN TRAFFIC IN EXISTING LANES.
CONSTRUCT EMBANKMENT, BRIDGE, AND PAVEMENT.

STAGE 1B
CLOSE SB LANE AND UTILIZE FLAGGER.
ROUTE SB & NB TRAFFIC ONTO NB LANE.
CONSTRUCT THE REMAINING PORTIONS OF THE SB LANES.

STAGE 1C
ROUTE SB LANES ONTO CONSTRUCTED LANES.
CLOSE NB LANE AND UTILIZE FLAGGER.
ROUTE SB & NB TRAFFIC ONTO SB LANE.
CONSTRUCT THE REMAINING PORTIONS OF THE NB LANES.

STATE OF ARKANSAS
REGISTERED PROFESSIONAL ENGINEER
No. 11427
KEVIN G. TOBLESKY
7/17/14

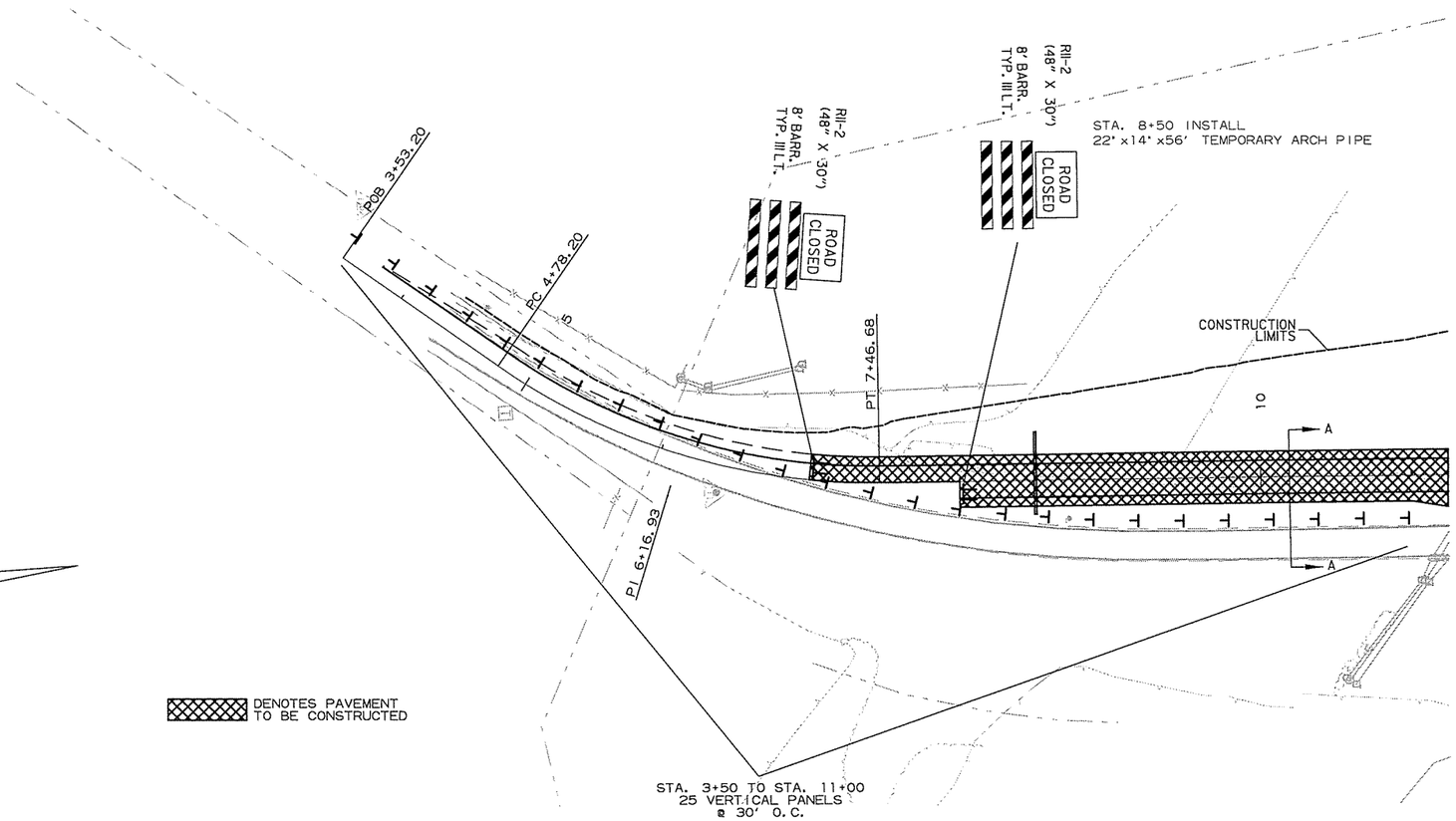

DENOTES PAVEMENT TO BE CONSTRUCTED

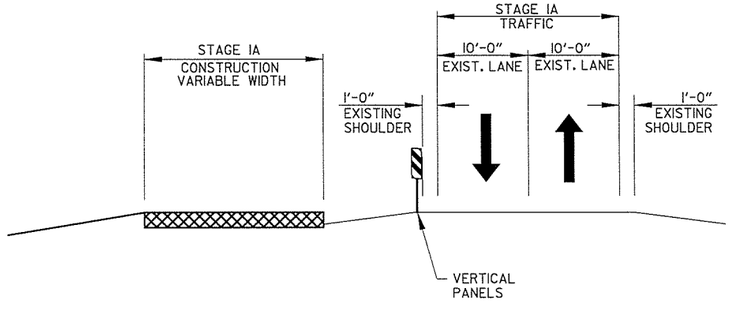

SECTION AA

MAINTENANCE OF TRAFFIC STAGE IA

7/16/2014 1:25:50 PM ...\7-Maintenance of Traffic.dgn t:\lob\wixm2650_ahtd_cap_ca0603\700_cadd files\777 roadway files\drawings\7-Maintenance of Traffic.dgn

DATE REVISED	DATE FILMED	DATE REVISED	DATE FILMED	FED.RD. DIST.NO.	STATE	FED.AID PROJ.NO.	SHEET NO.	TOTAL SHEETS
				6	ARK.			
				JOB NO.		CA0609	105	693

(2) MAINTENANCE OF TRAFFIC STAGE IA

SEQUENCE OF CONSTRUCTION

STAGE 1A
MAINTAIN TRAFFIC IN EXISTING LANES.
CONSTRUCT EMBANKMENT, BRIDGE, AND PAVEMENT.

STAGE 1B
CLOSE SB LANE AND UTILIZE FLAGGER.
ROUTE SB & NB TRAFFIC ONTO NB LANE.
CONSTRUCT THE REMAINING PORTIONS OF THE SB LANES.

STAGE 1C
ROUTE SB LANES ONTO CONSTRUCTED LANES.
CLOSE NB LANE AND UTILIZE FLAGGER.
ROUTE SB & NB TRAFFIC ONTO SB LANE.
CONSTRUCT THE REMAINING PORTIONS OF THE NB LANES.

STATE OF ARKANSAS
REGISTERED PROFESSIONAL ENGINEER
No. 11427
KEVIN G. TOBLESEY
7/17/14

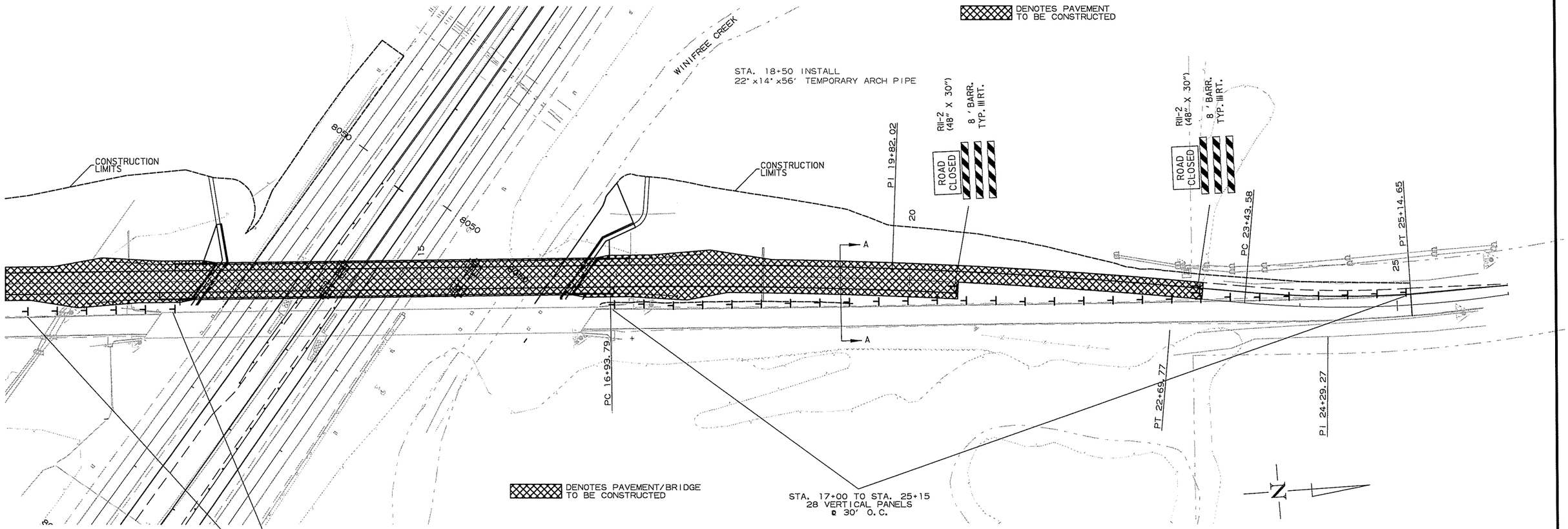

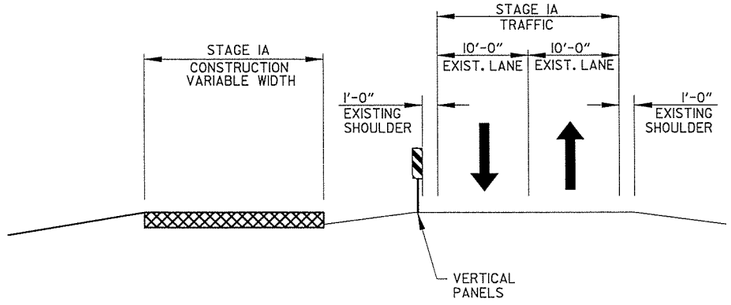

SECTION AA

MAINTENANCE OF TRAFFIC STAGE IA

7/16/2014 12:55:50 PM ...\7-Maintenance of Traffic.dgn t:\lob\wixm2650 dhtd cap ca0603\700 cadd files\777 roadway files\drawings\7-Maintenance of Traffic.dgn

DATE REVISED	DATE FILMED	DATE REVISED	DATE FILMED	FED.RD. DIST.NO.	STATE	FED.AID PROJ.NO.	SHEET NO.	TOTAL SHEETS
				6	ARK.			
				JOB NO.		CA0609	106	693

(2) MAINTENANCE OF TRAFFIC STAGE IB

SEQUENCE OF CONSTRUCTION

STAGE 1A
MAINTAIN TRAFFIC IN EXISTING LANES.
CONSTRUCT EMBANKMENT, BRIDGE, AND PAVEMENT.

STAGE 1B
CLOSE SB LANE AND UTILIZE FLAGGER.
ROUTE SB & NB TRAFFIC ONTO NB LANE.
CONSTRUCT THE REMAINING PORTIONS OF THE SB LANES.

STAGE 1C
ROUTE SB LANES ONTO CONSTRUCTED LANES.
CLOSE NB LANE AND UTILIZE FLAGGER.
ROUTE SB & NB TRAFFIC ONTO SB LANE.
CONSTRUCT THE REMAINING PORTIONS OF THE NB LANES.

STATE OF ARKANSAS
REGISTERED PROFESSIONAL ENGINEER
No. 11427
KEVIN G. TOBLESEY
7/17/14

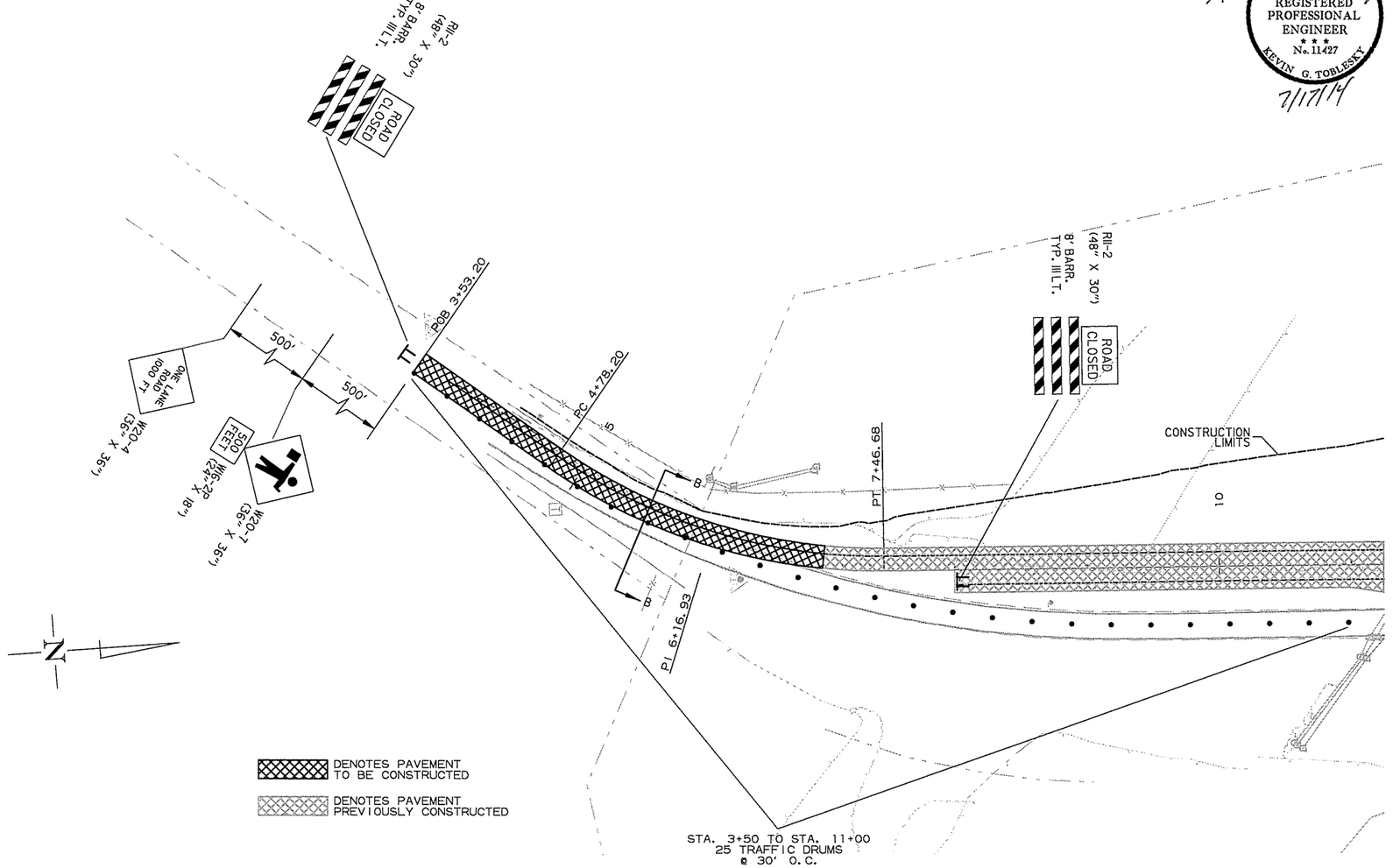

DENOTES PAVEMENT TO BE CONSTRUCTED

DENOTES PAVEMENT PREVIOUSLY CONSTRUCTED

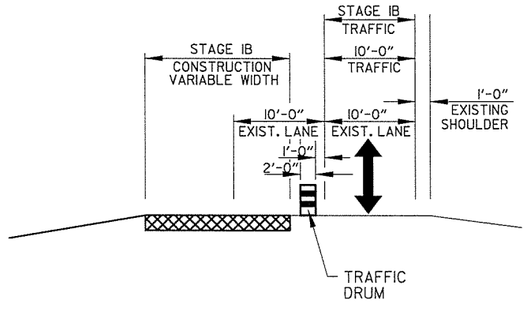

SECTION BB

MAINTENANCE OF TRAFFIC STAGE IB

7/16/2014 1:25:51 PM ...\7-Maintenance of Traffic.dgn t:\job\wkm2650 dhtd cap ca0603\700 cadd files\777 roadway files\drawings\7-Maintenance of Traffic.dgn

DATE REVISED	DATE FILMED	DATE REVISED	DATE FILMED	FED.RD. DIST.NO.	STATE	FED.AID PROJ.NO.	SHEET NO.	TOTAL SHEETS
				6	ARK.			
				JOB NO.		CA0609	107	693

(2) MAINTENANCE OF TRAFFIC STAGE IB

SEQUENCE OF CONSTRUCTION

STAGE 1A
MAINTAIN TRAFFIC IN EXISTING LANES.
CONSTRUCT EMBANKMENT, BRIDGE, AND PAVEMENT.

STAGE 1B
CLOSE SB LANE AND UTILIZE FLAGGER.
ROUTE SB & NB TRAFFIC ONTO NB LANE.
CONSTRUCT THE REMAINING PORTIONS OF THE SB LANES.

STAGE 1C
ROUTE SB LANES ONTO CONSTRUCTED LANES.
CLOSE NB LANE AND UTILIZE FLAGGER.
ROUTE SB & NB TRAFFIC ONTO SB LANE.
CONSTRUCT THE REMAINING PORTIONS OF THE NB LANES.

STATE OF ARKANSAS
REGISTERED PROFESSIONAL ENGINEER
No. 11427
KEVIN G. TOBLESEY
7/17/14

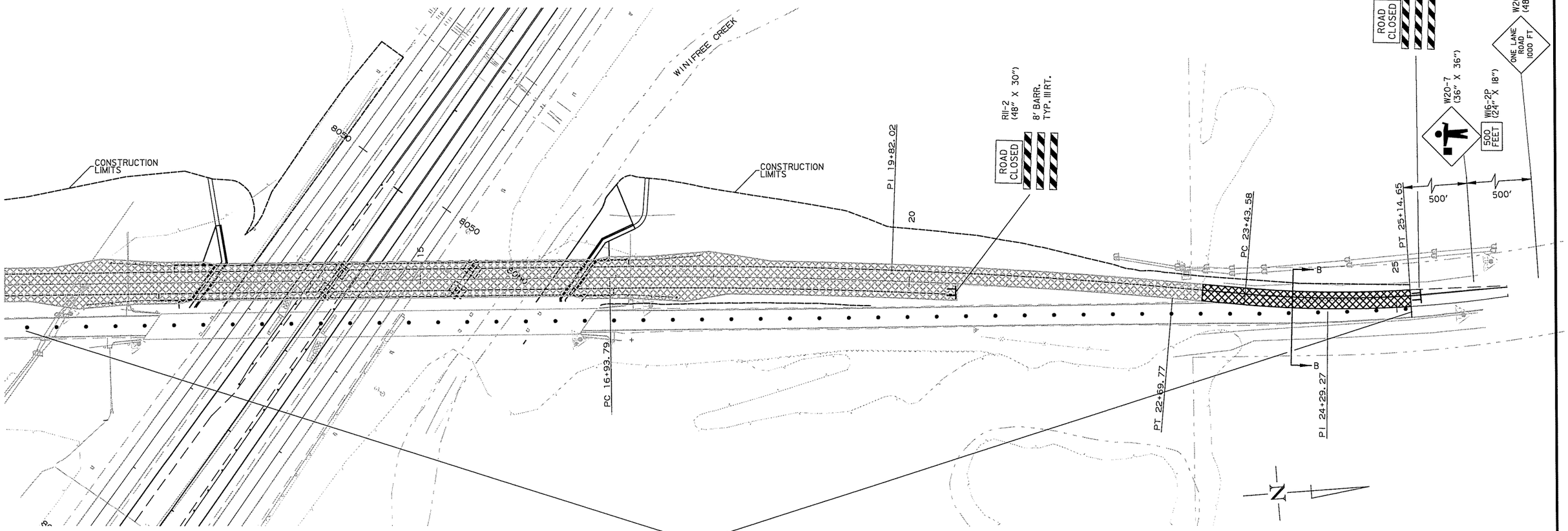

STA. 11+00 TO STA. 25+15
47 TRAFFIC DRUMS
@ 30' O.C.

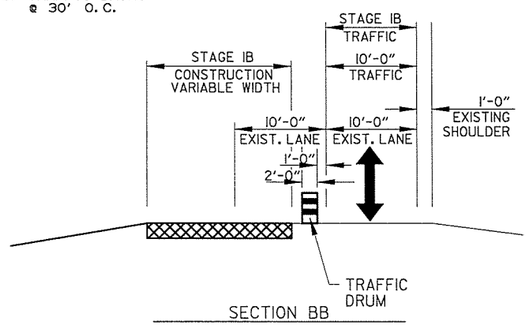

SECTION BB

DENOTES PAVEMENT/BRIDGE TO BE CONSTRUCTED

DENOTES PAVEMENT/BRIDGE PREVIOUSLY CONSTRUCTED

MAINTENANCE OF TRAFFIC STAGE IB

7/16/2014 12:55:51 PM ...\7-Maintenance of Traffic.dgn +:\lab\wlxm2650 dhtd cap ca0603\700 cadd files\777 roadway files\drawings\7-Maintenance of Traffic.dgn

DATE REVISED	DATE FILMED	DATE REVISED	DATE FILMED	FED.RD. DIST.NO.	STATE	FED.AID PROJ.NO.	SHEET NO.	TOTAL SHEETS
				6	ARK.			
				JOB NO.		CA0609	108	693

(2) MAINTENANCE OF TRAFFIC STAGE IC

SEQUENCE OF CONSTRUCTION

STAGE 1A
MAINTAIN TRAFFIC IN EXISTING LANES.
CONSTRUCT EMBANKMENT, BRIDGE, AND PAVEMENT.

STAGE 1B
CLOSE SB LANE AND UTILIZE FLAGGER.
ROUTE SB & NB TRAFFIC ONTO NB LANE.
CONSTRUCT THE REMAINING PORTIONS OF THE SB LANES.

STAGE 1C
ROUTE SB LANES ONTO CONSTRUCTED LANES.
CLOSE NB LANE AND UTILIZE FLAGGER.
ROUTE SB & NB TRAFFIC ONTO SB LANE.
CONSTRUCT THE REMAINING PORTIONS OF THE NB LANES.

STATE OF ARKANSAS
REGISTERED PROFESSIONAL ENGINEER
No. 11427
KEVIN G. TOBLESEY
7/17/14

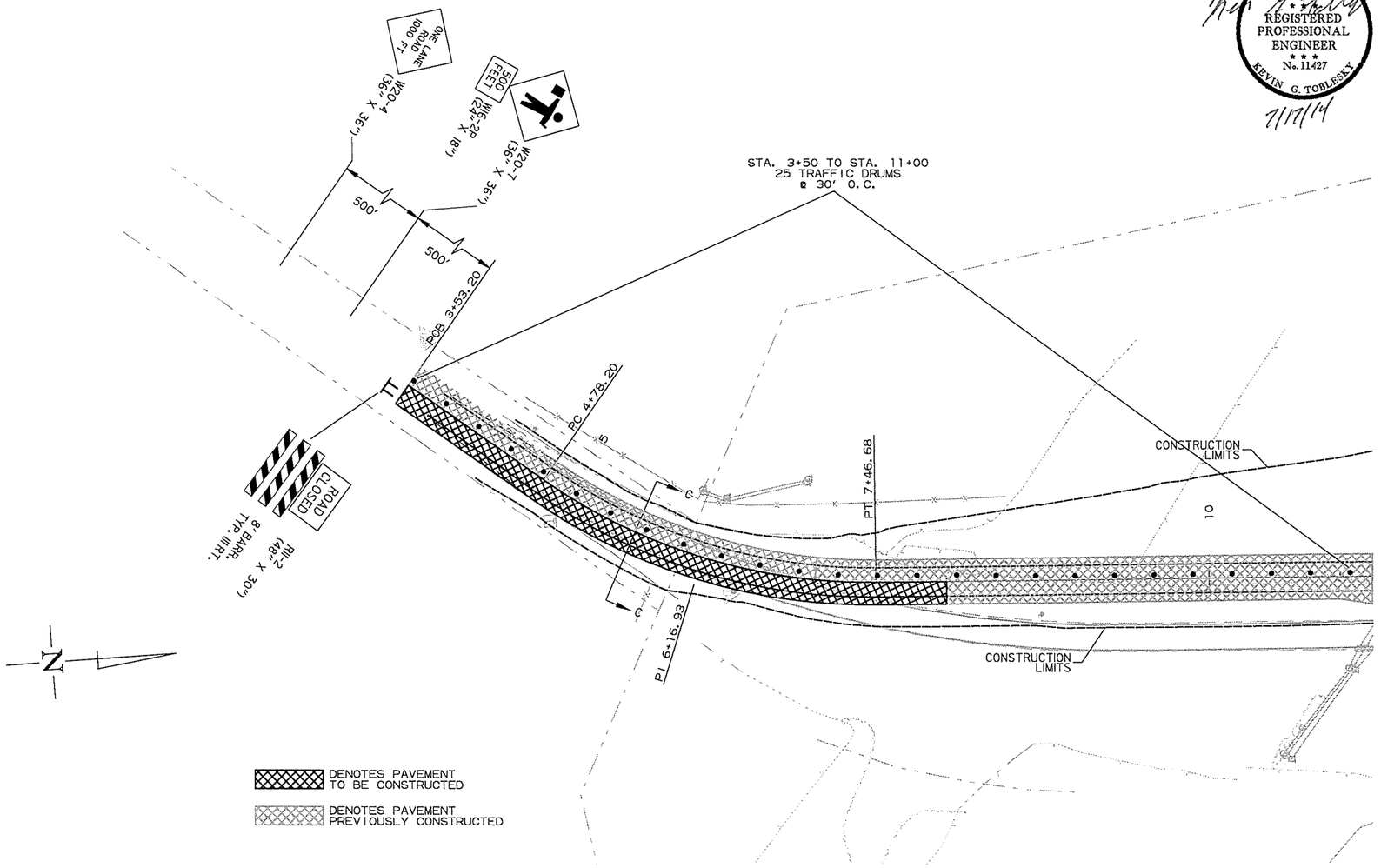

DENOTES PAVEMENT TO BE CONSTRUCTED

DENOTES PAVEMENT PREVIOUSLY CONSTRUCTED

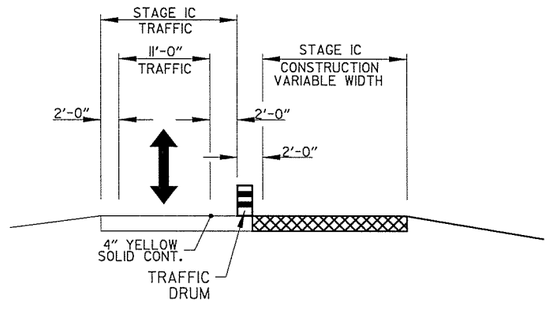

SECTION CC

STA. 3+58.20 TO STA. 25+14.65
CONSTRUCTION PAVEMENT MARKINGS
4" YELLOW CONTINUOUS = 2156 LIN. FT.

MAINTENANCE OF TRAFFIC STAGE IC

7/16/2014 1:25:51 PM ...\7-Maintenance of Traffic.dgn t:\job\wkm2650 ahtd cap ca0603\700 add files\777 roadway files\drawings\7-Maintenance of Traffic.dgn

DATE REVISED	DATE FILMED	DATE REVISED	DATE FILMED	FED.RD. DIST.NO.	STATE	FED.AID PROJ.NO.	SHEET NO.	TOTAL SHEETS
				6	ARK.			
				JOB NO.		CA0609	109	693
				(2)	MAINTENANCE OF TRAFFIC STAGE IC			

SEQUENCE OF CONSTRUCTION

STAGE 1A
MAINTAIN TRAFFIC IN EXISTING LANES.
CONSTRUCT EMBANKMENT, BRIDGE, AND PAVEMENT.

STAGE 1B
CLOSE SB LANE AND UTILIZE FLAGGER.
ROUTE SB & NB TRAFFIC ONTO NB LANE.
CONSTRUCT THE REMAINING PORTIONS OF THE SB LANES.

STAGE 1C
ROUTE SB LANES ONTO CONSTRUCTED LANES.
CLOSE NB LANE AND UTILIZE FLAGGER.
ROUTE SB & NB TRAFFIC ONTO SB LANE.
CONSTRUCT THE REMAINING PORTIONS OF THE NB LANES.

STATE OF ARKANSAS
REGISTERED PROFESSIONAL ENGINEER
No. 11427
KEVIN G. TOBLESEY
7/17/14

STA. 11+00 TO STA. 25+15
47 TRAFFIC DRUMS
@ 30' O.C.

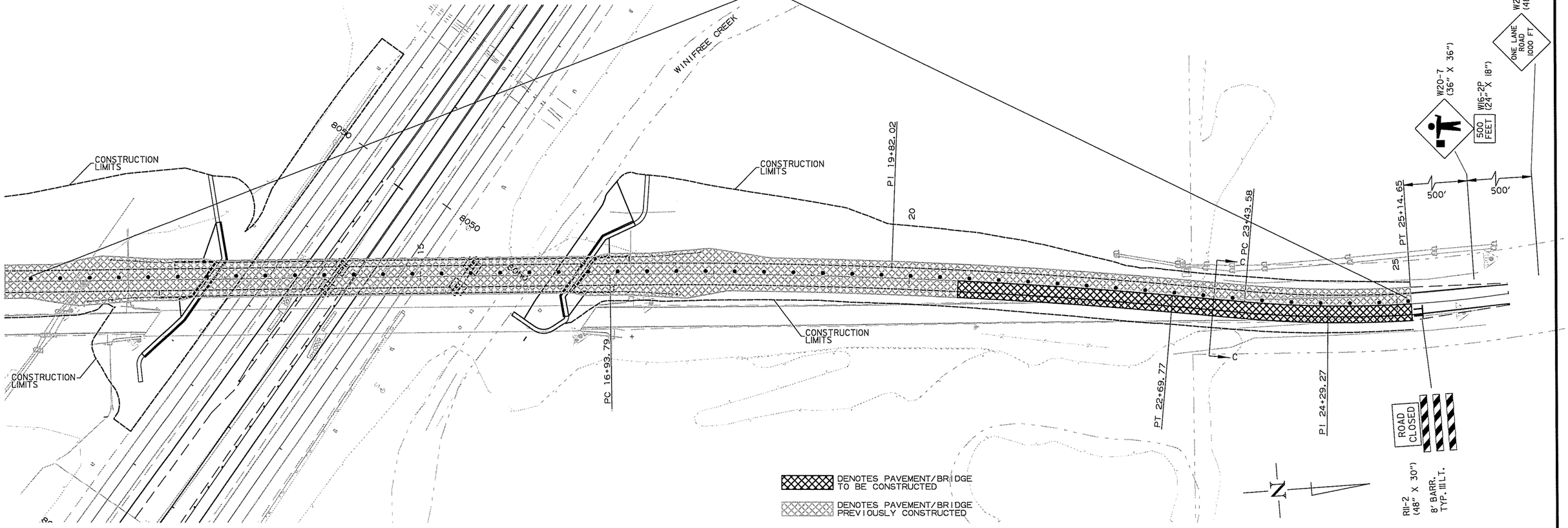

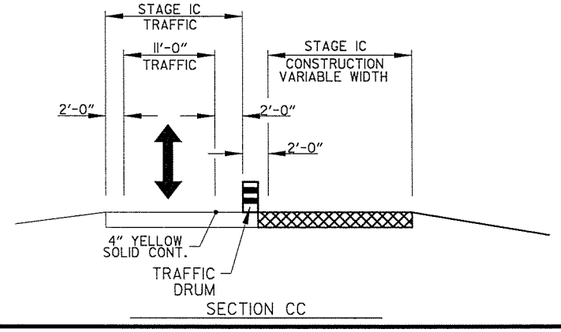

SECTION CC

MAINTENANCE OF TRAFFIC STAGE IC

7/16/2014 12:55:52 PM ...\7-Maintenance of Traffic.dgn t:\lob\wkm2650 ahtd cap ca0603\700 cadd files\777 roadway files\drawings\7-Maintenance of Traffic.dgn

DATE REVISED	DATE FILMED	DATE REVISED	DATE FILMED	FED.RD. DIST.NO.	STATE	FED.AID PROJ.NO.	SHEET NO.	TOTAL SHEETS
				6	ARK.			
				JOB NO.		CA0609	110	693

(2) MAINTENANCE OF TRAFFIC DETAILS

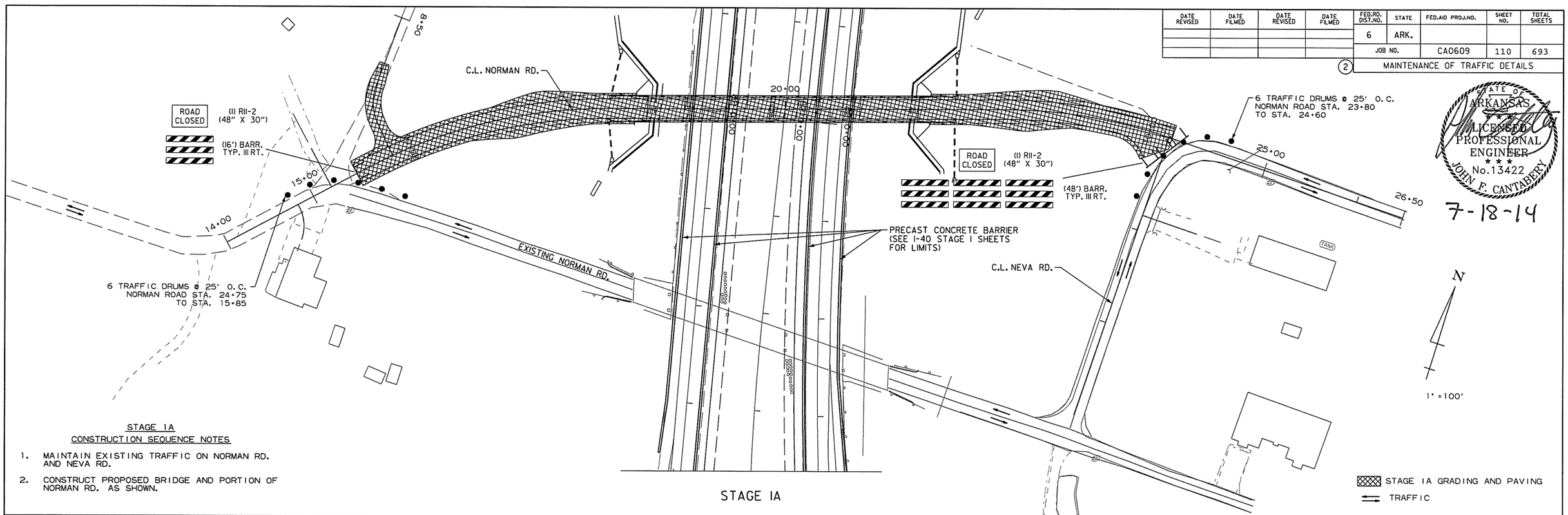

STAGE IA

STAGE 1A
CONSTRUCTION SEQUENCE NOTES

1. MAINTAIN EXISTING TRAFFIC ON NORMAN RD. AND NEVA RD.
2. CONSTRUCT PROPOSED BRIDGE AND PORTION OF NORMAN RD. AS SHOWN.

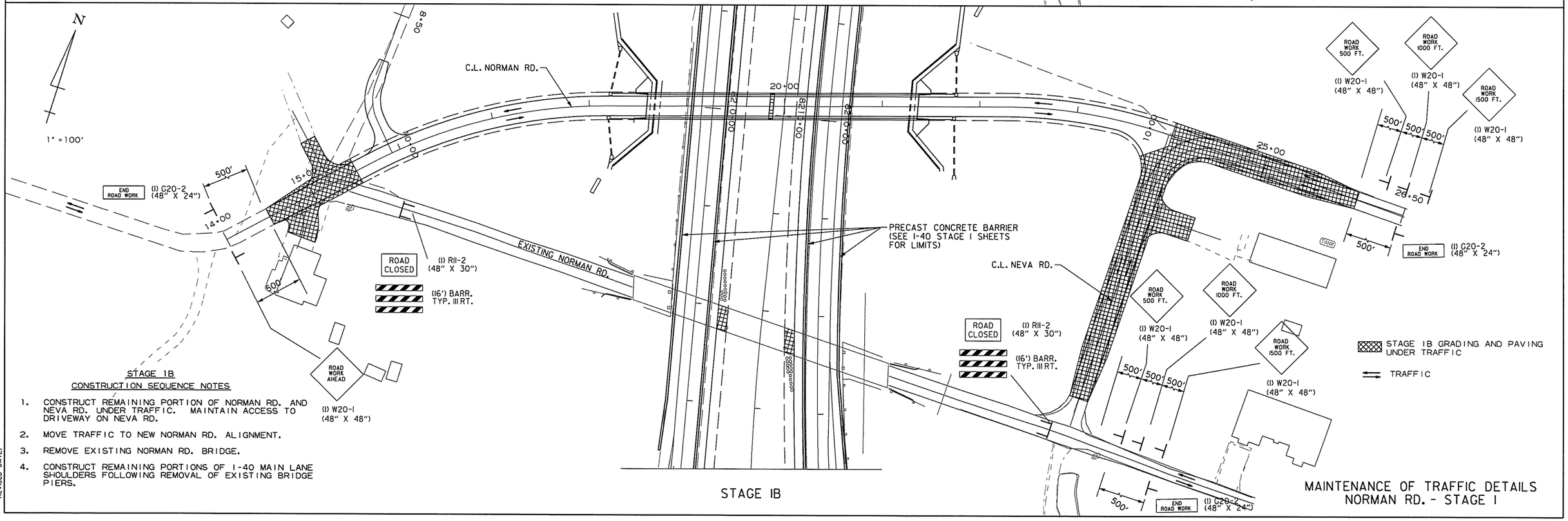

STAGE IB

STAGE 1B
CONSTRUCTION SEQUENCE NOTES

1. CONSTRUCT REMAINING PORTION OF NORMAN RD. AND NEVA RD. UNDER TRAFFIC. MAINTAIN ACCESS TO DRIVEWAY ON NEVA RD.
2. MOVE TRAFFIC TO NEW NORMAN RD. ALIGNMENT.
3. REMOVE EXISTING NORMAN RD. BRIDGE.
4. CONSTRUCT REMAINING PORTIONS OF I-40 MAIN LANE SHOULDERS FOLLOWING REMOVAL OF EXISTING BRIDGE PIERS.

MAINTENANCE OF TRAFFIC DETAILS
NORMAN RD. - STAGE I

STATE OF ARKANSAS
LICENSED PROFESSIONAL ENGINEER
No.13422
JOHN F. CANTABERY
7-18-14

rnfortner 7/18/2014 3:51:34 PM
WORKSPACE: AHTD
L:\2011\1017709 - I-40 at I-430 Interchange Modifications\Drawings\RCA0609_MOT_STG1_NRM_01.dgn
REVISED DATE:

DATE REVISED	DATE FILMED	DATE REVISED	DATE FILMED	FED.RD. DIST.NO.	STATE	FED.AID PROJ.NO.	SHEET NO.	TOTAL SHEETS
				6	ARK.			
				JOB NO.		CA0609	111	693
				(2)	MAINTENANCE OF TRAFFIC DETAILS			

N

1" =250'

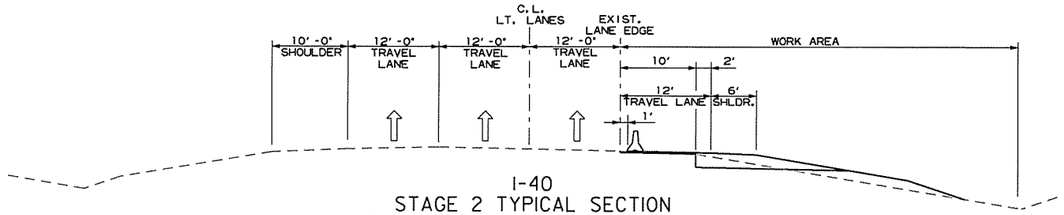

I-40
STAGE 2 TYPICAL SECTION
(SHOWN IN DIRECTION OF TRAFFIC)

STATE OF ARKANSAS
LICENSED PROFESSIONAL ENGINEER
No.13422
JOHN F. CANTARERY
7-18-14

STAGE 2 - REMOVABLE CONSTRUCTION PAVEMENT MARKINGS

I-40 RT. LANES STA. 8207+71 TO STA. 8212+90
RIGHT AND LEFT EDGE LINE AND TWO DASHED LINES = 2595 L.F.

I-40 RT. LANES STA. 8212+90 TO STA. 8220+00
RIGHT AND LEFT EDGE LINE AND CENTER DASHED LINE = 2130 L.F.

I-40 RT. LANES STA. 8212+90 TO STA. 8216+72
RIGHT AND LEFT RAMP EDGE LINE = 764 L.F.

RAMP I STA. 8216+75 TO 8218+25
RIGHT AND LEFT RAMP EDGE LINE = 300 L.F.

I-40 LT. LANES STA. 8216+42 TO STA. 8220+00
LEFT EDGE LINE = 358 L.F.

I-40 LT. LANES STA. 8216+42 TO STA. 8220+00
RIGHT AND LEFT RAMP EDGE LINE = 716 L.F.

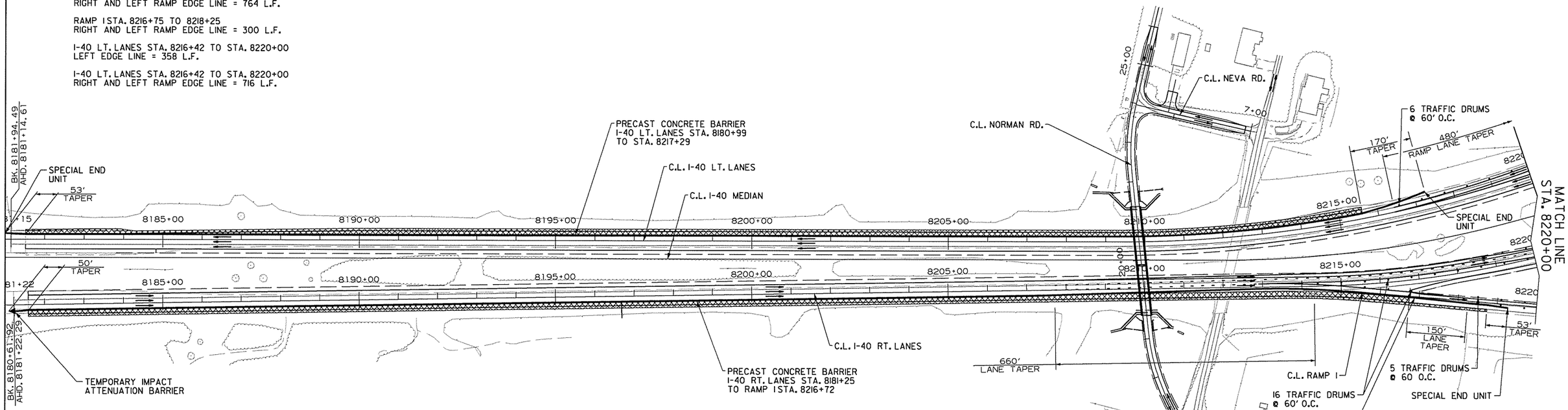

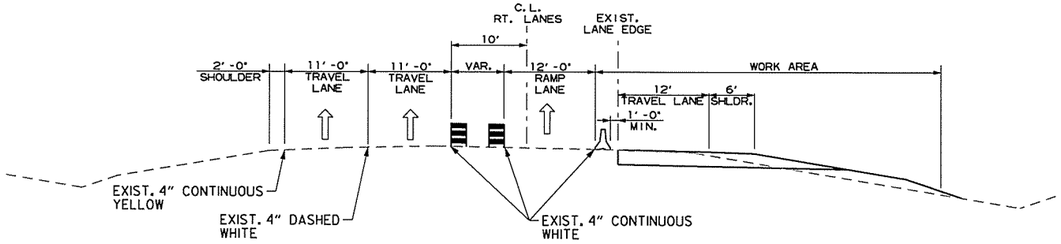

I-40 RT. LANES/RAMP I GORE
STAGE 2 TYPICAL SECTION
(SHOWN IN DIRECTION OF TRAFFIC)

STAGE 2
CONSTRUCTION SEQUENCE NOTES

1. RELOCATE PRECAST CONCRETE BARRIER AS SHOWN FROM STAGE 1. SHIFT TRAFFIC TO UTILIZE EXISTING PAVEMENT AND NEW WIDENING.
2. CONSTRUCT REMAINING PORTIONS OF I-40 LESS THE FINAL LIFT OF ACHM SURFACE COURSE AS SHOWN ON STAGE 2 TYPICAL SECTIONS.
3. CONSTRUCT REMAINING PORTIONS OF RAMP 1.
4. CONSTRUCT FOUNDATIONS AND GUARDRAIL ON OUTSIDE SHOULDER FOR NEW OVERHEAD SIGNS.
5. CONDUCT COLD MILLING OPERATION AND/OR FINAL LIFT OF ACHM SURFACE COURSE WITH AN OUTSIDE LANE CLOSURE AS SHOWN ON THE STANDARD LANE CLOSURE SHEET.

STAGE 1 GRADING AND PAVING
TRAFFIC
TEMPORARY IMPACT ATTENUATION BARRIER

MAINTENANCE OF TRAFFIC DETAILS
I-40 - STAGE 2

cggervasini 7/17/2014 7:43:15 PM
WORKSPACE: AHTD
L:\ROW\NO17709 - I-40 at I-430 Interchange Modifications\Drawings\RCA0609.MOT.STG2.01.dgn
REVISED DATE:

DATE REVISED	DATE FILMED	DATE REVISED	DATE FILMED	FED.RD. DIST.NO.	STATE	FED.AID PROJ.NO.	SHEET NO.	TOTAL SHEETS
				6	ARK.			
				JOB NO.		CA0609	112	693

(2) MAINTENANCE OF TRAFFIC DETAILS

STATE OF ARKANSAS
LICENSED PROFESSIONAL ENGINEER
No. 13422
JOHN F. CANTABERY
7-18-14

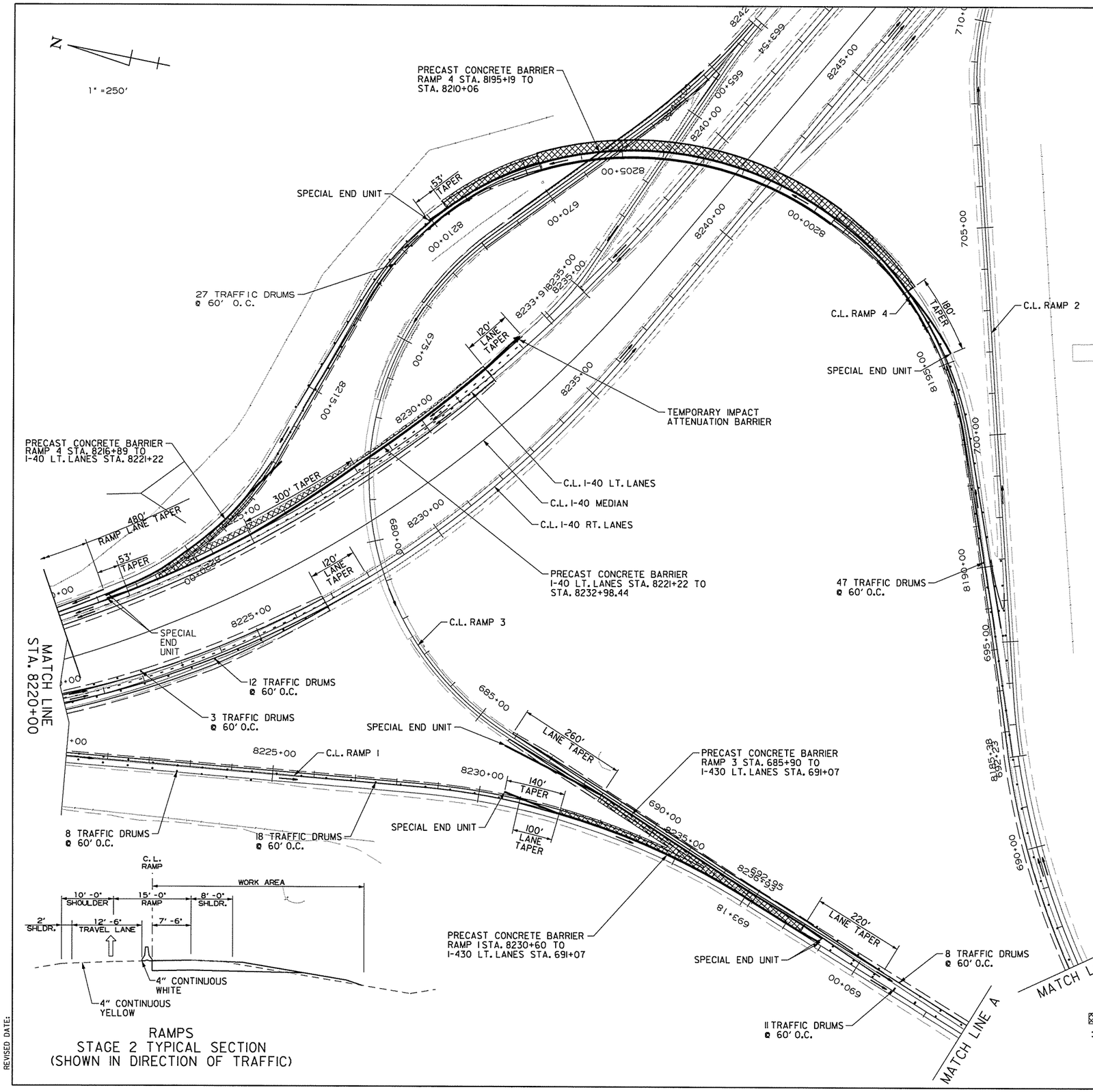

RAMPS
STAGE 2 TYPICAL SECTION
(SHOWN IN DIRECTION OF TRAFFIC)

STAGE 2 - REMOVABLE CONSTRUCTION PAVEMENT MARKINGS

I-40 LT. LANES STA. 8220+00 TO STA. 8221+75
LEFT AND RIGHT RAMP EDGE LINES = 350 L.F.

I-40 LT. LANES STA. 8220+00 TO STA. 8228+04
LEFT AND RIGHT EDGE LINES AND CENTER DASHED LINE = 2412 L.F.

I-40 LT. LANES STA. 8228+04 TO STA. 8231+97
LEFT AND RIGHT EDGE LINES AND CENTER DASHED LINES = 1572 L.F.

I-40 LT. LANES STA. 8231+97 TO STA. 8233+17
RIGHT EDGE LINE AND CENTER DASHED LINES = 360 L.F.

I-40 RT. LANES STA. 8226+77 TO STA. 8227+97
RIGHT EDGE LINE AND CENTER DASHED LINE = 240 L.F.

I-40 RT. LANES STA. 8220+00 TO STA. 8222+33
LEFT AND RIGHT EDGE LINES AND CENTER DASHED LINE = 699 L.F.

I-430 LT. LANES STA. 689+40 TO STA. 692+95
LEFT AND RIGHT EDGE LINES = 710 L.F.

RAMP 1 STA. 8231+00 TO STA. 8236+93
LEFT EDGE LINE = 593 L.F.

RAMP 3 STA. 685+90 TO STA. 692+95
LEFT AND RIGHT EDGE LINES = 1410 L.F.

RAMP 4 STA. 8221+75 TO STA. 8217+00
LEFT EDGE LINE = 475 L.F.

RAMP 4 STA. 8188+49 TO STA. 8215+53
LEFT AND RIGHT EDGE LINE = 5408 L.F.

STAGE 2
CONSTRUCTION SEQUENCE NOTES

1. RELOCATE PRECAST CONCRETE BARRIER AS SHOWN.
2. CONSTRUCT REMAINING PORTION OF BRIDGE OVER I-40 WITH APPROACHES.
3. CONSTRUCT REMAINING PORTION OF RAMP 4 GORE, RAMP 1 AND RAMP 3 GORES.

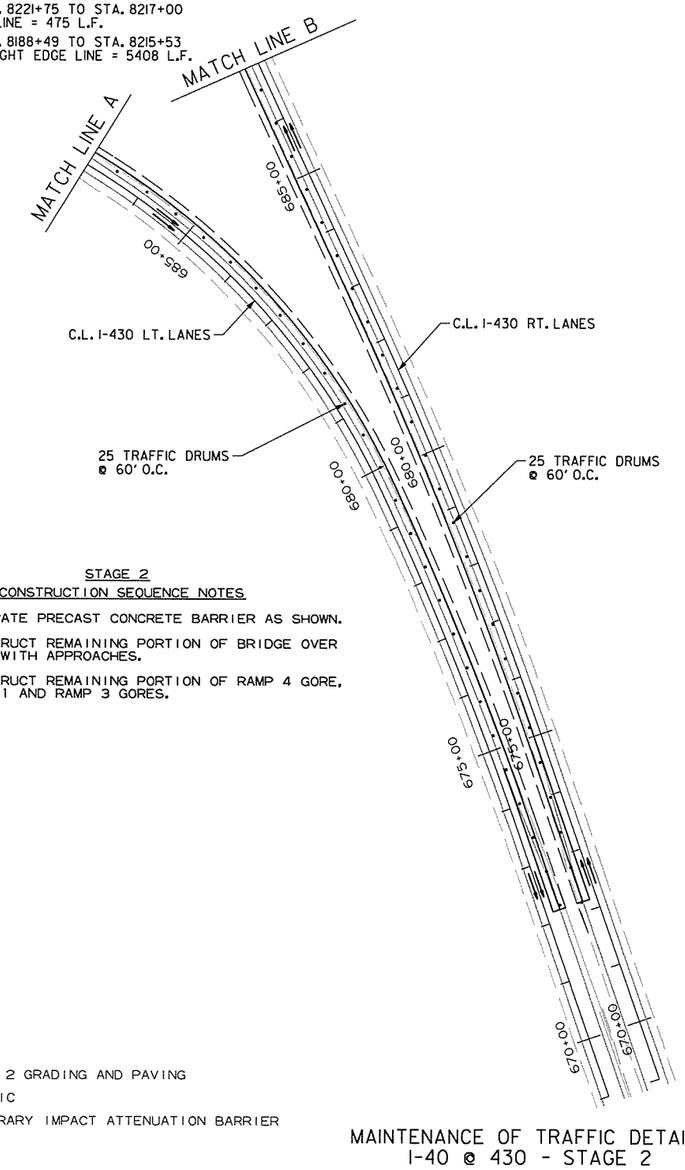

STAGE 2 GRADING AND PAVING
TRAFFIC
TEMPORARY IMPACT ATTENUATION BARRIER

MAINTENANCE OF TRAFFIC DETAILS
I-40 @ 430 - STAGE 2

cggervasini 7/17/2014 7:43:16 PM
WORKSPACE: AHTD
L:\2011\11017709 - I-40 at I-430 Interchange Modifications\Drawings\RCA0609_MOT_STG2_02.dgn
REVISED DATE:

DATE REVISED	DATE FILMED	DATE REVISED	DATE FILMED	FED.RD. DIST.NO.	STATE	FED.AID PROJ.NO.	SHEET NO.	TOTAL SHEETS
				6	ARK.			
				JOB NO.		CA0609	113	693
				(2)	MAINTENANCE OF TRAFFIC DETAILS			

STATE OF ARKANSAS
LICENSED PROFESSIONAL ENGINEER
No.13422
JOHN F. CANTABERRY
7-18-14

N

1" =250'

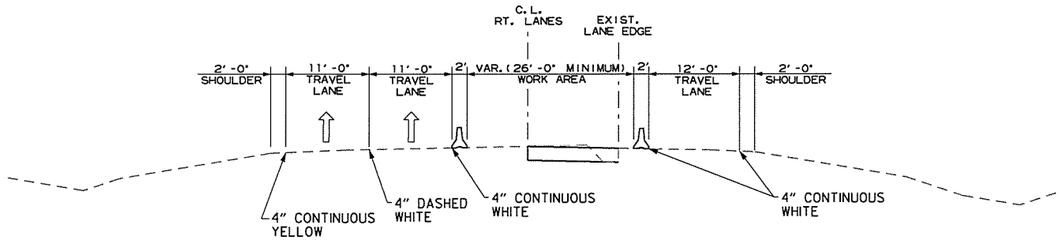

I-40 RT. LANES
STAGE 3 TYPICAL SECTION
(SHOWN IN DIRECTION OF TRAFFIC)

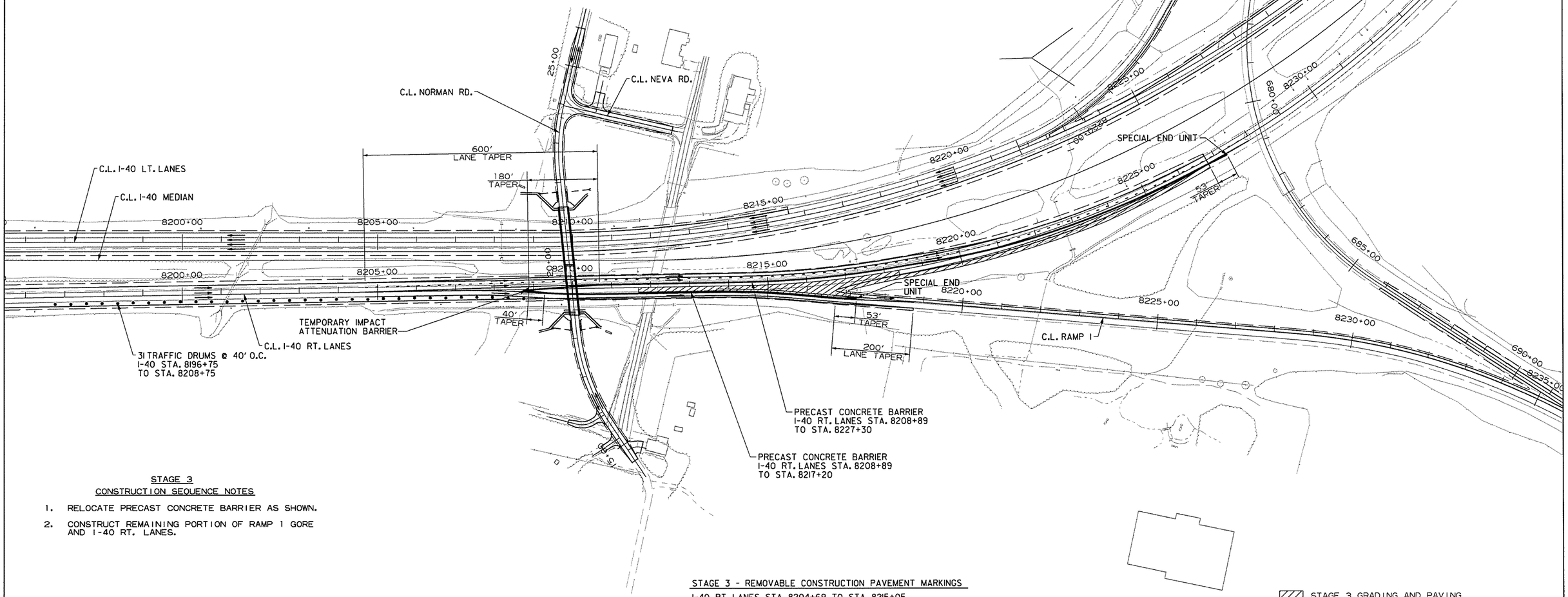

STAGE 3
CONSTRUCTION SEQUENCE NOTES

1. RELOCATE PRECAST CONCRETE BARRIER AS SHOWN.
2. CONSTRUCT REMAINING PORTION OF RAMP 1 GORE AND I-40 RT. LANES.

STAGE 3 - REMOVABLE CONSTRUCTION PAVEMENT MARKINGS

I-40 RT. LANES STA. 8204+69 TO STA. 8215+05
RIGHT AND LEFT EDGE LINES AND TWO SKIP LINES = 5180 L.F.

I-40 RT. LANES STA. 8215+05 TO STA. 8222+33
RIGHT AND LEFT EDGE LINES AND CENTERLINE = 2184 L.F.

I-40 RT. LANES STA. 8222+33 TO STA. 8227+97
RIGHT EDGE LINE AND CENTERLINE = 1128 L.F.

RAMP I STA. 8215+05 TO STA. 8218+75
RIGHT AND LEFT EDGE LINES = 740 L.F.

STAGE 3 GRADING AND PAVING
TRAFFIC
TEMPORARY IMPACT ATTENUATION BARRIER

MAINTENANCE OF TRAFFIC DETAILS
I-40 - STAGE 3

cggervasini 7/17/2014 7:43:16 PM
WORKSPACE: AHTD
L:\CON\601703 - I-40 at I-430 Interchange Modifications\Drawings\RCA0609_MOT_ST03_01.dgn
REVISED DATE:

DATE REVISED	DATE FILMED	DATE REVISED	DATE FILMED	FED.RD. DIST.NO.	STATE	FED.AID PROJ.NO.	SHEET NO.	TOTAL SHEETS
				6	ARK.			
				JOB NO.		CA0609	114	693

(2) PERMANENT PAVEMENT MARKING DETAILS

STATE OF ARKANSAS
REGISTERED PROFESSIONAL ENGINEER
No. 11427
KEVIN G. TOBLESKY
7/17/14

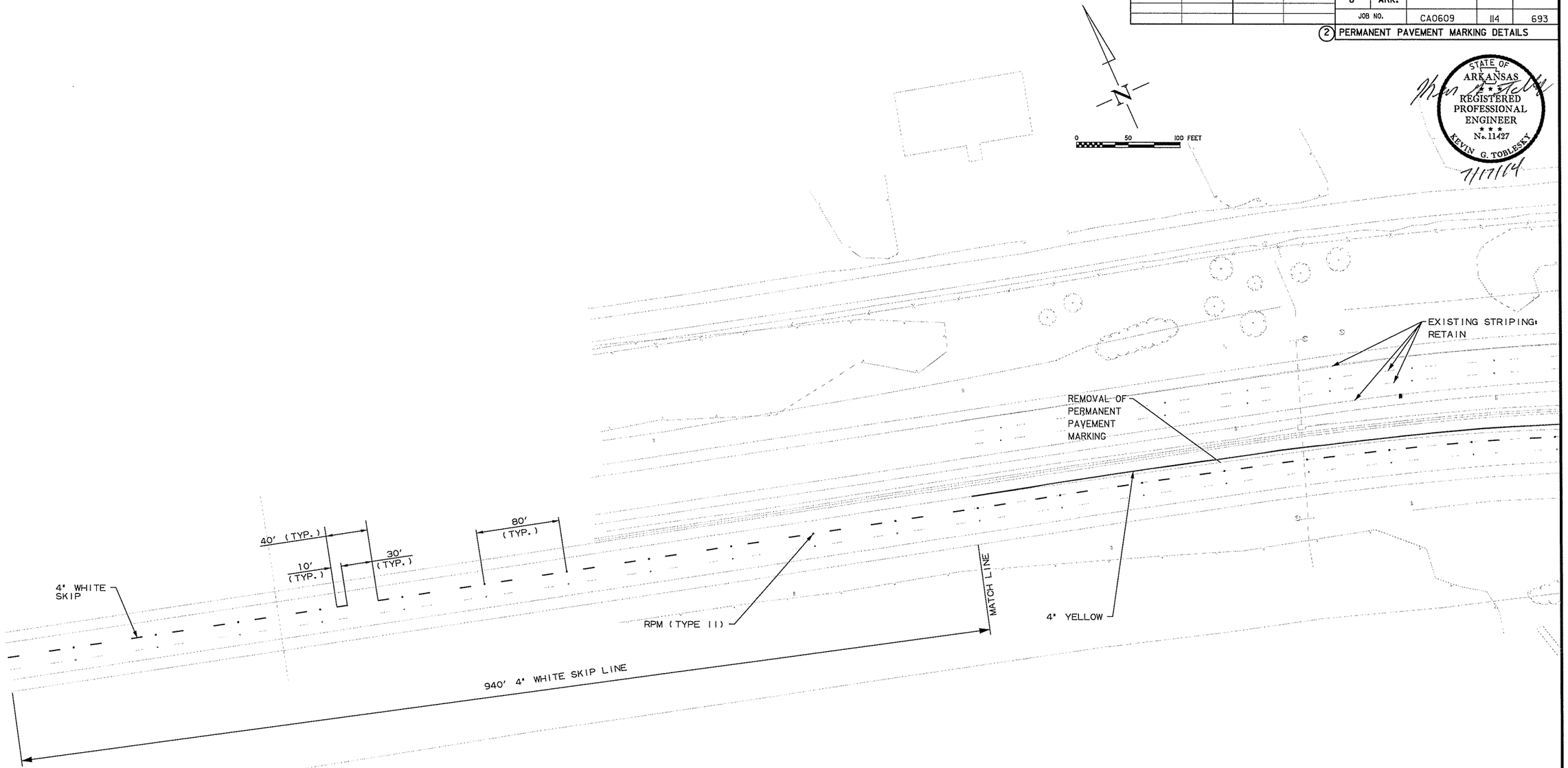

PERMANENT PAVEMENT MARKINGS
I-40 E.B. LANES STA. 7927+00 TO STA. 7937+00

	QUANTITY
4" WHITE SKIP	240 L.F.
RAISED PAVEMENT MARKERS (TYPE II) CLEAR/RED	12 EACH

CONNECTION TO STRIPING FROM JOB 012145

PERMANENT PAVEMENT MARKING DETAILS

7/16/2014 1:29:06 PM ...\8-Permanent Pavement Markings.dgn t:\job\wlxm2650 ahtd cap ca0603\700 cadd files\777 roadway files\drawings\8-Permanent Pavement Markings.dgn

DATE REVISED	DATE FILMED	DATE REVISED	DATE FILMED	FED.RD. DIST.NO.	STATE	FED.AID PROJ.NO.	SHEET NO.	TOTAL SHEETS
				6	ARK.			
				JOB NO.		CA0609	115	693

(2) PERMANENT PAVEMENT MARKING DETAILS

STATE OF ARKANSAS
REGISTERED PROFESSIONAL ENGINEER
No. 11427
KEVIN G. TOBLESKY
7/17/14

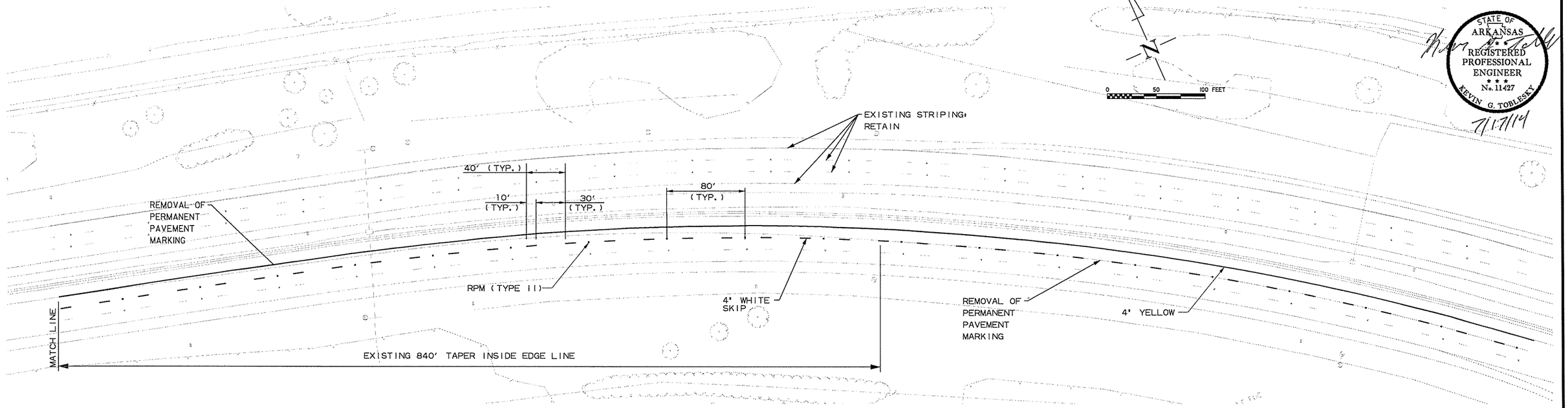

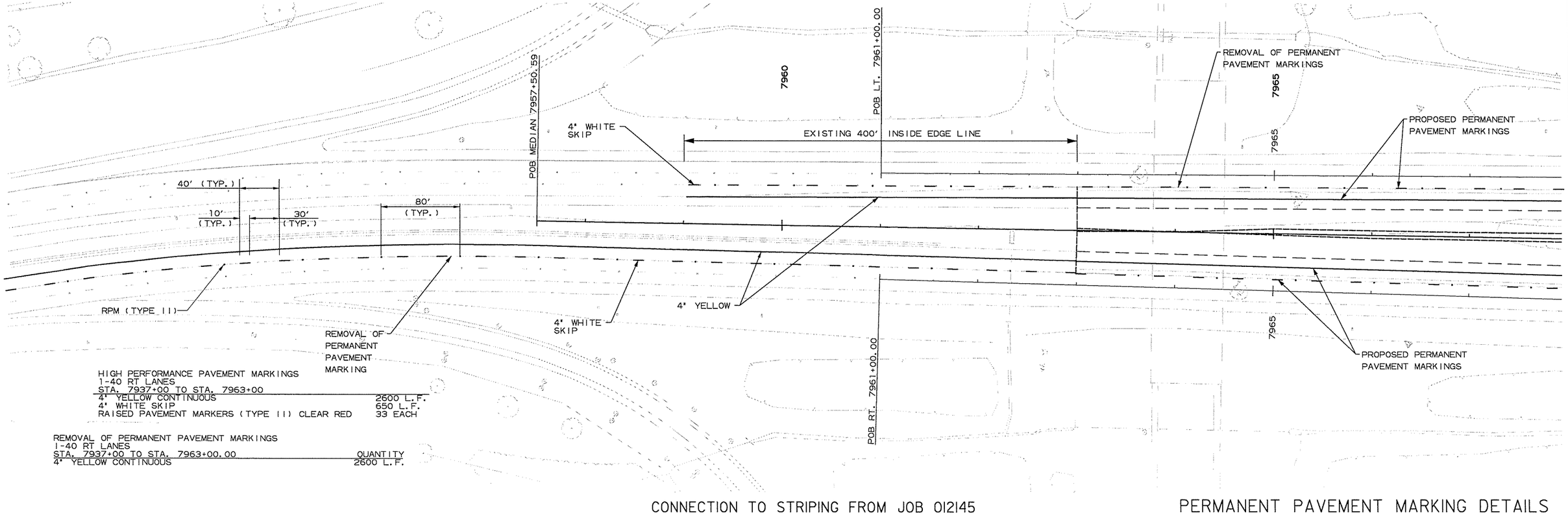

HIGH PERFORMANCE PAVEMENT MARKINGS
1-40 RT LANES
STA. 7937+00 TO STA. 7963+00

4" YELLOW CONTINUOUS	2600 L.F.
4" WHITE SKIP	650 L.F.
RAISED PAVEMENT MARKERS (TYPE II) CLEAR RED	33 EACH

REMOVAL OF PERMANENT PAVEMENT MARKINGS
1-40 RT LANES

STA. 7937+00 TO STA. 7963+00.00	QUANTITY
4" YELLOW CONTINUOUS	2600 L.F.

CONNECTION TO STRIPING FROM JOB 012145

PERMANENT PAVEMENT MARKING DETAILS

7/16/2014 12:29:06 PM ...\8-Permanent Pavement Markings.dgn t:\job\wixm2650 dhtd cap ca0603\700 cadd files\777 roadway files\drawings\8-Permanent Pavement Markings.dgn

DATE REVISED	DATE FILMED	DATE REVISED	DATE FILMED	FED.RD. DIST.NO.	STATE	FED.AID PROJ.NO.	SHEET NO.	TOTAL SHEETS
				6	ARK.			
				JOB NO.		CA0609	116	693

(2) PERMANENT PAVEMENT MARKING DETAILS

HIGH PERFORMANCE PAVEMENT MARKINGS
I-40 LT. MAIN LANES

STA. 7959+00.00 TO STA. 8182+30.99	QUANTITY
4" YELLOW CONTINUOUS	21896 L.F.
4" WHITE SKIP	*5260 L.F.
RAISED PAVEMENT MARKERS (TYPE II) CLEAR/RED	274 EACH

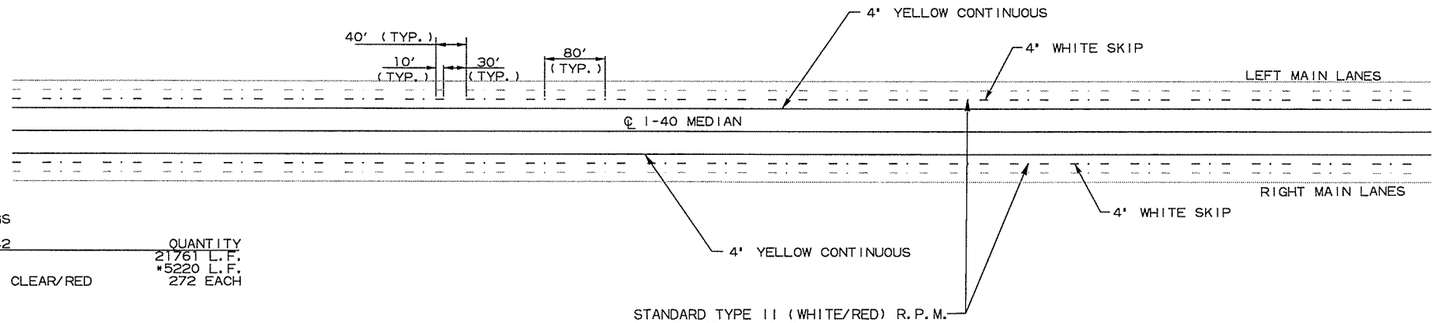

STANDARD TYPE II (WHITE/RED) R.P.M.
TYPICAL MAIN LANES

HIGH PERFORMANCE PAVEMENT MARKINGS
I-40 RT. MAIN LANES

STA. 7963+00.00 TO STA. 8180+98.42	QUANTITY
4" YELLOW CONTINUOUS	21761 L.F.
4" WHITE SKIP	*5220 L.F.
RAISED PAVEMENT MARKERS (TYPE II) CLEAR/RED	272 EACH

* TOTAL L.F. EXCLUDES HIGH PERFORMANCE CONTRAST PAVEMENT MARKINGS AT BRIDGES.

REMOVAL OF PERMANENT PAVEMENT MARKINGS - 4" YELLOW QUANTITIES

I-40 RT. MAINL LANES STA. 7959+00.00 TO STA. 8180+61.92	21761 LIN. FT.
I-40 LT. MAIN LANES STA. 7963+00.00 TO STA. 8181+94.49	21895 LIN. FT.

HIGH PERFORMANCE CONTRAST PAVEMENT MARKINGS - 4" WHITE SKIP
I-40 LT. MAIN LANES

	QUANTITY
BRIDGE NO. A3230 STA. 8033+49.79 TO STA. 8035+72.79	60 L.F.
BRIDGE NO. A3232 STA. 8106+05.25 TO STA. 8111+01.43	120 L.F.
BRIDGE NO. A3233 STA. 8180+67.99 TO STA. 8182+30.99	30 L.F.

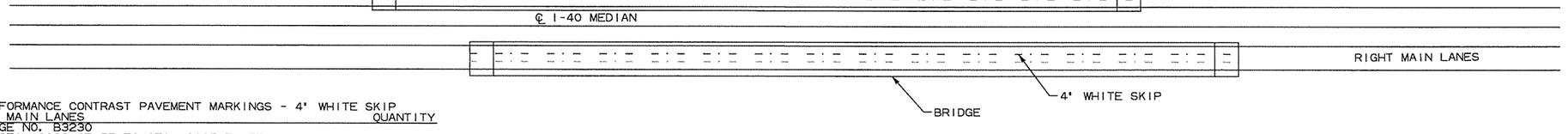

HIGH PERFORMANCE CONTRAST PAVEMENT MARKINGS - 4" WHITE SKIP
I-40 RT. MAIN LANES

	QUANTITY
BRIDGE NO. B3230 STA. 8033+47.55 TO STA. 8035+70.55	60 L.F.
BRIDGE NO. B3232 STA. 8102+22.90 TO STA. 8107+19.08	120 L.F.
BRIDGE NO. B3233 STA. 8179+35.42 TO STA. 8180+98.42	30 L.F.

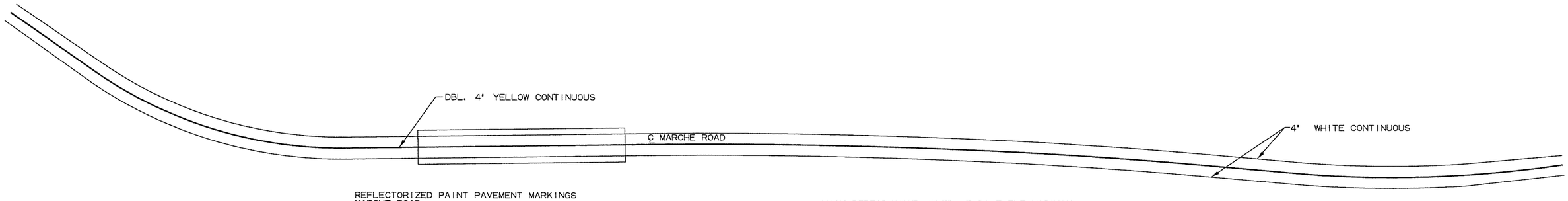

REFLECTORIZED PAINT PAVEMENT MARKINGS
MARCHE ROAD

STA. 3+78.20 TO STA. 26+14.65	
4" YELLOW CONTINUOUS	*3690 L.F.
4" WHITE CONTINUOUS	4472 L.F.

HIGH PERFORMANCE CONTRAST PAVEMENT MARKINGS
MARCHE ROAD

BRIDGE NO. A3230 - STA. 12+77.69 TO STA. 16+68.31	
4" YELLOW CONTINUOUS	782 L.F.

* TOTAL L.F. EXCLUDES HIGH PERFORMANCE CONTRAST PAVEMENT MARKINGS AT BRIDGE.

PERMANENT PAVEMENT MARKING DETAILS

STATE OF ARKANSAS
REGISTERED PROFESSIONAL ENGINEER
No. 11427
KEVIN G. TOBLESKY
7/17/14

7/16/2014 12:9:07 PM ...\8-Permanent Pavement Markings.dgn T:\Job\wixm2650 dhtd cap ca0603\700 cadd files\777 roadway files\drawings\8-Permanent Pavement Markings.dgn

DATE REVISED	DATE FILMED	DATE REVISED	DATE FILMED	FED.RD. DIST.NO.	STATE	FED.AID PROJ.NO.	SHEET NO.	TOTAL SHEETS
				6	ARK.			
				JOB NO.		CA0609	117	693

(2) PERMANENT PAVEMENT MARKING DETAILS

4" WHITE HIGH PERFORMANCE PAVEMENT MARKING

STA.	STA.	LOCATION	LIN. FT.
8181+14.61	8193+00.00	LT. LANES	1186
8181+58.79	8193+00.00	RT. LANES	1143

4" WHITE HIGH PERFORMANCE CONTRAST PAVEMENT MARKING

STA.	STA.	LOCATION	LIN. FT.
8181+14.61	8181+51.11	LT. LANES	19
8181+22.29	8181+58.79	RT. LANES	19

4" YELLOW HIGH PERFORMANCE PAVEMENT MARKING

STA.	STA.	LOCATION	LIN. FT.
8181+14.61	8193+00.00	LT. LANES	1186
8181+22.29	8193+00.00	RT. LANES	1180

8" SKIP WHITE HIGH PERFORMANCE PAVEMENT MARKING

STA.	STA.	LOCATION	LIN. FT.
8187+28.18	8193+00.00	RT. LANES	144

THERMOPLASTIC PAVEMENT MARKING (ARROW)

STA.	LOCATION	EACH
8190+36.00	LT. LANES	1

4" SKIP WHITE HIGH PERFORMANCE PAVEMENT MARKING

STA.	STA.	LOCATION	LIN. FT.
8181+51.11	8193+00.00	LT. LANES	574
8181+58.79	8193+00.00	RT. LANES	661

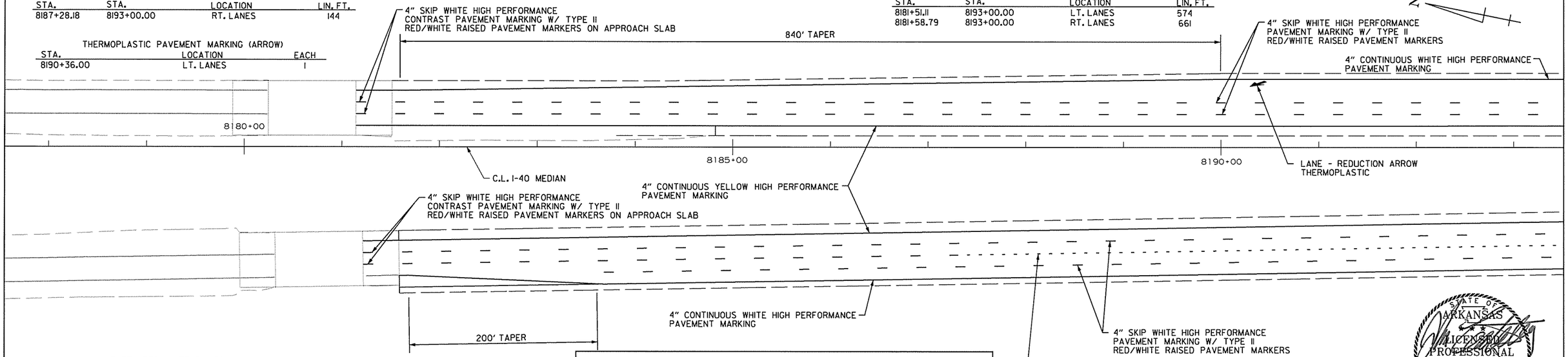

TYPE II RED/WHITE RAISED PAVEMENT MARKERS

STA.	STA.	LOCATION	EACH
8181+14.61	8193+00.00	LT. LANES	30
8181+22.29	8193+00.00	RT. LANES	50

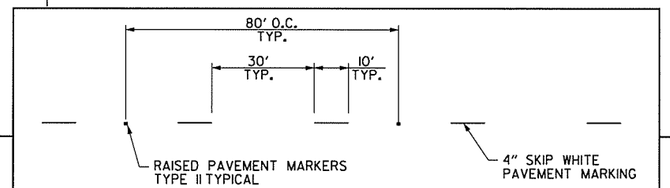

TYPICAL SKIP WHITE STRIPING

TYPE II RED/WHITE RAISED PAVEMENT MARKERS

STA.	STA.	LOCATION	EACH
8193+00.00	8208+00.00	LT. LANES	49
8193+00.00	8208+00.00	RT. LANES	80

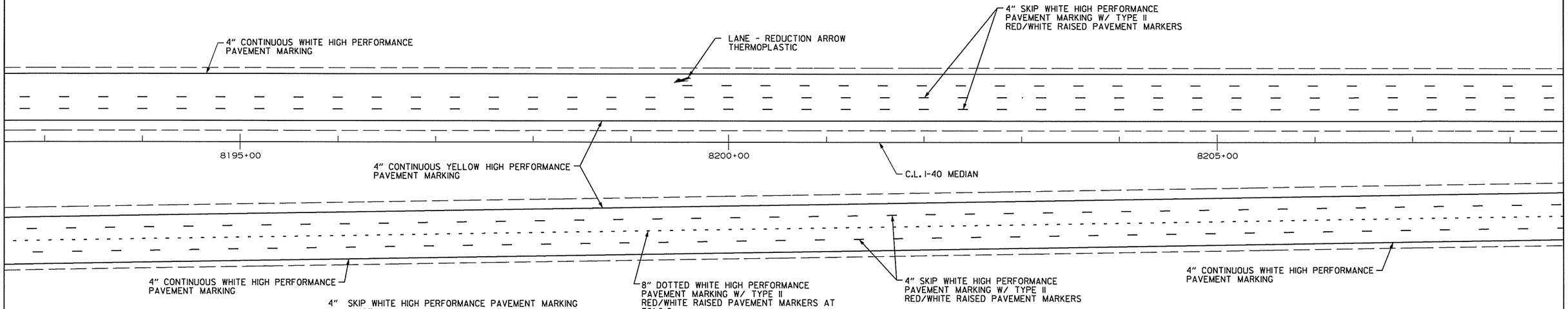

4" SKIP WHITE HIGH PERFORMANCE PAVEMENT MARKING

STA.	STA.	LOCATION	LIN. FT.
8193+00.00	8208+00.00	LT. LANES	966
8193+00.00	8208+00.00	RT. LANES	750

4" WHITE HIGH PERFORMANCE PAVEMENT MARKING

STA.	STA.	LOCATION	LIN. FT.
8193+00.00	8208+00.00	LT. LANES	1500
8193+00.00	8208+00.00	RT. LANES	1501

4" YELLOW HIGH PERFORMANCE PAVEMENT MARKING

STA.	STA.	LOCATION	LIN. FT.
8193+00.00	8208+00.00	LT. LANES	1500
8193+00.00	8208+00.00	RT. LANES	1501

THERMOPLASTIC PAVEMENT MARKING (ARROW)

STA.	LOCATION	EACH
8199+50.00	LT. LANES	1

8" SKIP WHITE HIGH PERFORMANCE PAVEMENT MARKING

STA.	STA.	LOCATION	LIN. FT.
8193+00.00	8208+00.00	RT. LANES	376

PERMANENT PAVEMENT MARKING DETAILS

STATE OF ARKANSAS
LICENSED PROFESSIONAL ENGINEER
No.13422
JOHN F. CANTABERRY
7-18-14

cggervasini 7/17/2014 7:43:17 PM
WORKSPACE: AHTD
L:\201\101709 - I-40 at I-430 Interchange Modifications\Drawings\RCA0609_PM_MNL_01.dgn
REVISED DATE:

DATE REVISED	DATE FILMED	DATE REVISED	DATE FILMED	FED.RD. DIST.NO.	STATE	FED.AID PROJ.NO.	SHEET NO.	TOTAL SHEETS
				6	ARK.			
				JOB NO.		CA0609	118	693

(2) PERMANENT PAVEMENT MARKING DETAILS

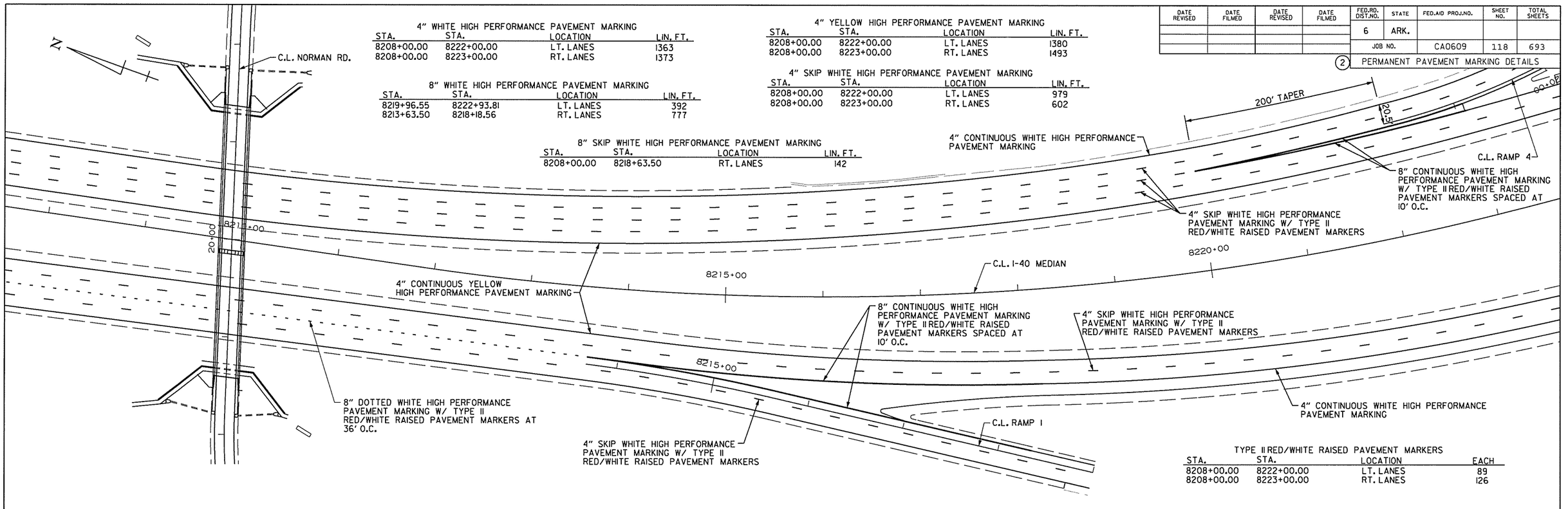

4" WHITE HIGH PERFORMANCE PAVEMENT MARKING

STA.	STA.	LOCATION	LIN. FT.
8208+00.00	8222+00.00	LT. LANES	1363
8208+00.00	8223+00.00	RT. LANES	1373

8" WHITE HIGH PERFORMANCE PAVEMENT MARKING

STA.	STA.	LOCATION	LIN. FT.
8219+96.55	8222+93.81	LT. LANES	392
8213+63.50	8218+18.56	RT. LANES	777

8" SKIP WHITE HIGH PERFORMANCE PAVEMENT MARKING

STA.	STA.	LOCATION	LIN. FT.
8208+00.00	8218+63.50	RT. LANES	142

4" YELLOW HIGH PERFORMANCE PAVEMENT MARKING

STA.	STA.	LOCATION	LIN. FT.
8208+00.00	8222+00.00	LT. LANES	1380
8208+00.00	8223+00.00	RT. LANES	1493

4" SKIP WHITE HIGH PERFORMANCE PAVEMENT MARKING

STA.	STA.	LOCATION	LIN. FT.
8208+00.00	8222+00.00	LT. LANES	979
8208+00.00	8223+00.00	RT. LANES	602

TYPE II RED/WHITE RAISED PAVEMENT MARKERS

STA.	STA.	LOCATION	EACH
8208+00.00	8222+00.00	LT. LANES	89
8208+00.00	8223+00.00	RT. LANES	126

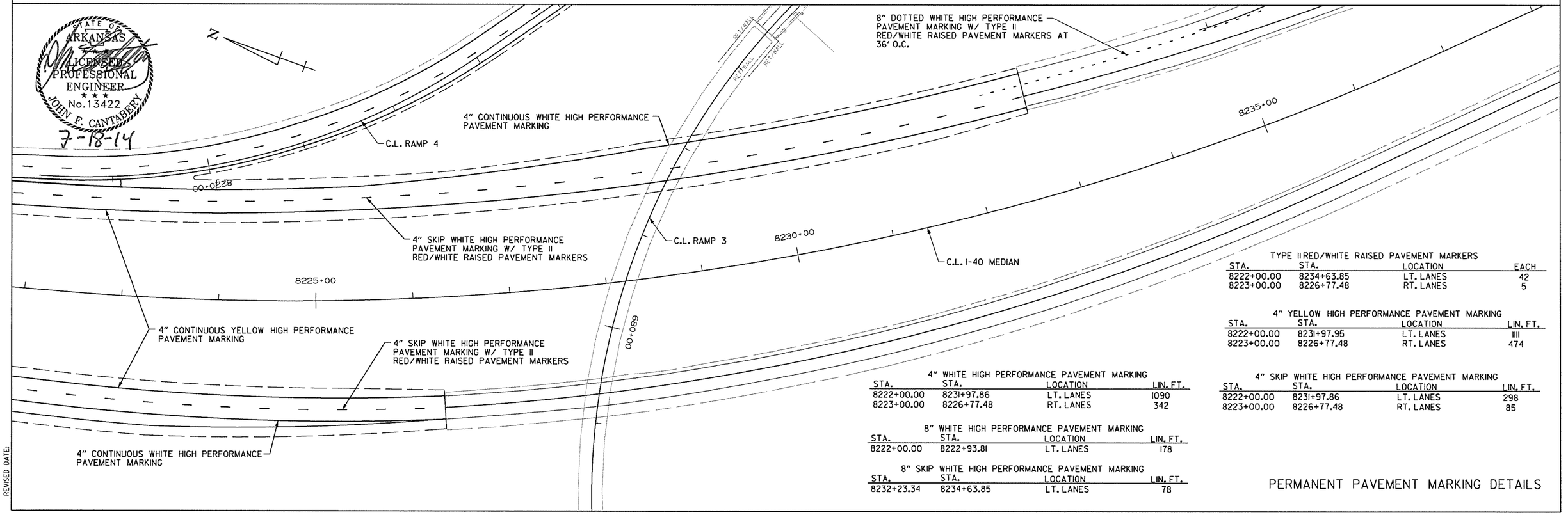

STATE OF ARKANSAS
LICENSED PROFESSIONAL ENGINEER
No. 13422
JOHN F. CANTABERY
7-18-14

TYPE II RED/WHITE RAISED PAVEMENT MARKERS

STA.	STA.	LOCATION	EACH
8222+00.00	8234+63.85	LT. LANES	42
8223+00.00	8226+77.48	RT. LANES	5

4" YELLOW HIGH PERFORMANCE PAVEMENT MARKING

STA.	STA.	LOCATION	LIN. FT.
8222+00.00	8231+97.95	LT. LANES	1111
8223+00.00	8226+77.48	RT. LANES	474

4" WHITE HIGH PERFORMANCE PAVEMENT MARKING

STA.	STA.	LOCATION	LIN. FT.
8222+00.00	8231+97.86	LT. LANES	1090
8223+00.00	8226+77.48	RT. LANES	342

4" SKIP WHITE HIGH PERFORMANCE PAVEMENT MARKING

STA.	STA.	LOCATION	LIN. FT.
8222+00.00	8231+97.86	LT. LANES	298
8223+00.00	8226+77.48	RT. LANES	85

8" WHITE HIGH PERFORMANCE PAVEMENT MARKING

STA.	STA.	LOCATION	LIN. FT.
8222+00.00	8222+93.81	LT. LANES	178

8" SKIP WHITE HIGH PERFORMANCE PAVEMENT MARKING

STA.	STA.	LOCATION	LIN. FT.
8232+23.34	8234+63.85	LT. LANES	78

PERMANENT PAVEMENT MARKING DETAILS

cggervasini 7/17/2014 7:43:17 PM
WORKSPACE: AHTD
L:\2014\14007709 - I-40 at I-430 Interchange Modifications\Drawings\RCA0609_PM_MNL_02.dgn
REVISED DATE:

DATE REVISED	DATE FILMED	DATE REVISED	DATE FILMED	FED.RD. DIST.NO.	STATE	FED.AID PROJ.NO.	SHEET NO.	TOTAL SHEETS
				6	ARK.			
				JOB NO.		CA0609	119	693

(2) PERMANENT PAVEMENT MARKING DETAILS

STATE OF ARKANSAS
LICENSED PROFESSIONAL ENGINEER
No. 13422
JOHN F. CANTABERY
7-18-14

4" WHITE HIGH PERFORMANCE PAVEMENT MARKING

STA.	STA.	LOCATION	LIN. FT.
672+16.66	681+00.00	LT. LANES	880
672+16.66	681+44.00	RT. LANES	929

4" YELLOW HIGH PERFORMANCE PAVEMENT MARKING

STA.	STA.	LOCATION	LIN. FT.
672+16.66	681+00.00	LT. LANES	889
672+16.66	681+47.00	RT. LANES	882

4" WHITE HIGH PERFORMANCE CONTRAST PAVEMENT MARKING

STA.	STA.	LOCATION	LIN. FT.
672+16.66	681+00.00	LT. LANES	443
665+56.66	681+46.00	RT. LANES	752

8" WHITE HIGH PERFORMANCE CONTRAST PAVEMENT MARKING

STA.	STA.	LOCATION	LIN. FT.
667+26	681+46.00	RT. LANES	355

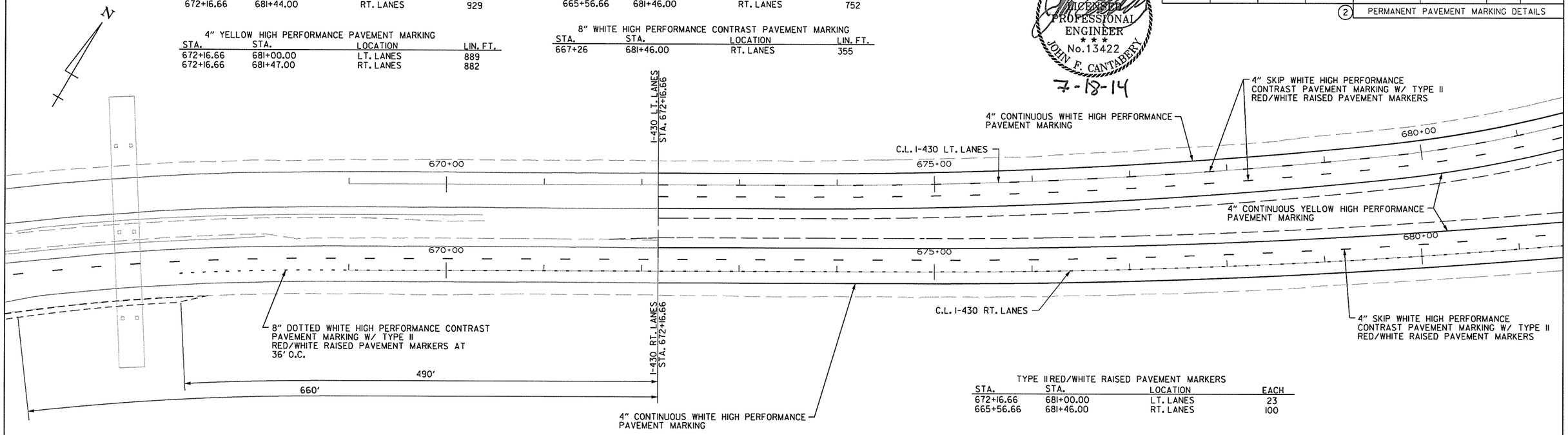

TYPE II RED/WHITE RAISED PAVEMENT MARKERS

STA.	STA.	LOCATION	EACH
672+16.66	681+00.00	LT. LANES	23
665+56.66	681+46.00	RT. LANES	100

4" WHITE HIGH PERFORMANCE PAVEMENT MARKING

STA.	STA.	LOCATION	LIN. FT.
681+44.00	692+23.45	RT. LANES	1077

4" YELLOW HIGH PERFORMANCE PAVEMENT MARKING

STA.	STA.	LOCATION	LIN. FT.
681+47.00	692+23.45	RT. LANES	1120

4" WHITE HIGH PERFORMANCE CONTRAST PAVEMENT MARKING

STA.	STA.	LOCATION	LIN. FT.
681+45.00	692+23.45	RT. LANES	540

8" WHITE HIGH PERFORMANCE CONTRAST PAVEMENT MARKING

STA.	STA.	LOCATION	LIN. FT.
681+46.00	8186+77.99	RT. LANES/ RAMP 4	305

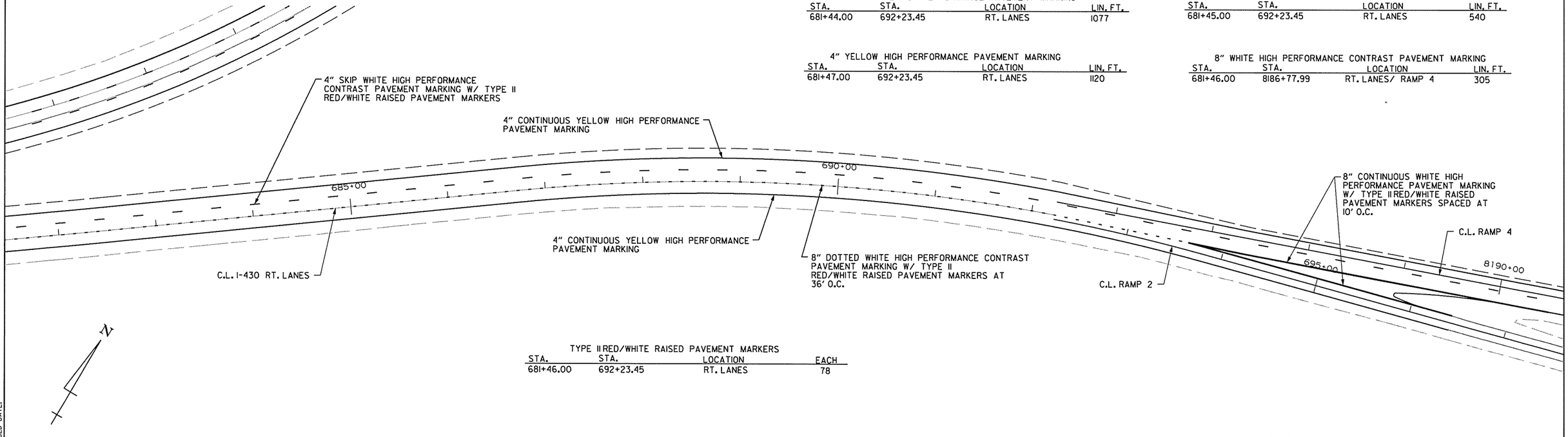

TYPE II RED/WHITE RAISED PAVEMENT MARKERS

STA.	STA.	LOCATION	EACH
681+46.00	692+23.45	RT. LANES	78

PERMANENT PAVEMENT MARKING DETAILS

cggervasini 7/17/2014 7:43:18 PM
WORKSPACE: AHTD
L:\CDR\101709 - I-40 at I-430 Interchange Modifications\Drawings\RCA0609_PM_430_01.dgn
REVISED DATE:

DATE REVISED	DATE FILMED	DATE REVISED	DATE FILMED	FED.RD. DIST.NO.	STATE	FED.AID PROJ.NO.	SHEET NO.	TOTAL SHEETS
				6	ARK.			
				JOB NO.		CA0609	120	693

(2) PERMANENT PAVEMENT MARKING DETAILS

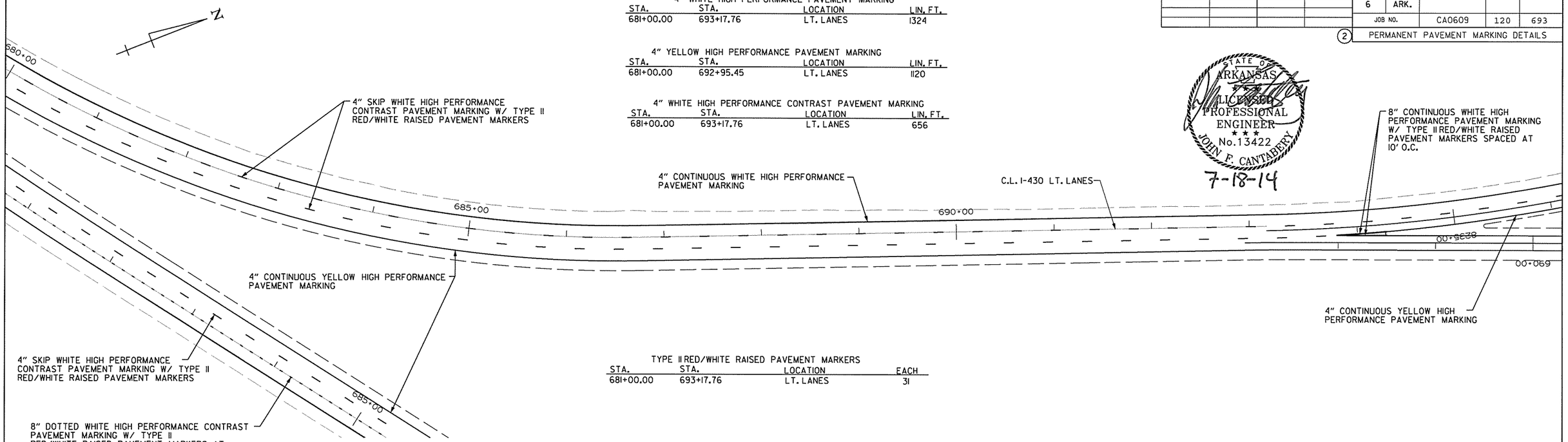

4" WHITE HIGH PERFORMANCE PAVEMENT MARKING

STA.	STA.	LOCATION	LIN. FT.
681+00.00	693+17.76	LT. LANES	1324

4" YELLOW HIGH PERFORMANCE PAVEMENT MARKING

STA.	STA.	LOCATION	LIN. FT.
681+00.00	692+95.45	LT. LANES	1120

4" WHITE HIGH PERFORMANCE CONTRAST PAVEMENT MARKING

STA.	STA.	LOCATION	LIN. FT.
681+00.00	693+17.76	LT. LANES	656

TYPE II RED/WHITE RAISED PAVEMENT MARKERS

STA.	STA.	LOCATION	EACH
681+00.00	693+17.76	LT. LANES	31

STATE OF ARKANSAS
LICENSED PROFESSIONAL ENGINEER
No. 13422
JOHN F. CANTABERRY
7-18-14

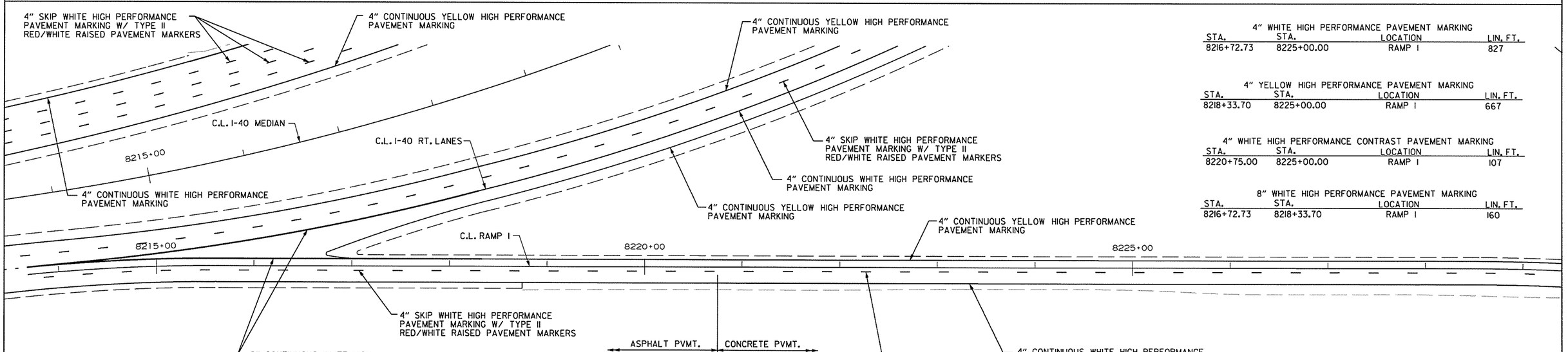

4" WHITE HIGH PERFORMANCE PAVEMENT MARKING

STA.	STA.	LOCATION	LIN. FT.
8216+72.73	8225+00.00	RAMP I	827

4" YELLOW HIGH PERFORMANCE PAVEMENT MARKING

STA.	STA.	LOCATION	LIN. FT.
8218+33.70	8225+00.00	RAMP I	667

4" WHITE HIGH PERFORMANCE CONTRAST PAVEMENT MARKING

STA.	STA.	LOCATION	LIN. FT.
8220+75.00	8225+00.00	RAMP I	107

8" WHITE HIGH PERFORMANCE PAVEMENT MARKING

STA.	STA.	LOCATION	LIN. FT.
8216+72.73	8218+33.70	RAMP I	160

4" SKIP WHITE HIGH PERFORMANCE PAVEMENT MARKING

STA.	STA.	LOCATION	LIN. FT.
8216+72.73	8220+75.00	RAMP I	100

TYPE II RED/WHITE RAISED PAVEMENT MARKERS

STA.	STA.	LOCATION	EACH
8216+72.73	8225+00.00	RAMP I	27

PERMANENT PAVEMENT MARKING DETAILS

cggervasini 7/17/2014 7:43:18 PM
WORKSPACE: AHTD
L:\2014\14017709 - I-40 at I-430 Interchange Modifications\Drawings\RCA0609_PM_430_02.dgn
REVISED DATE:

DATE REVISED	DATE FILMED	DATE REVISED	DATE FILMED	FED.RD. DIST.NO.	STATE	FED.AID PROJ.NO.	SHEET NO.	TOTAL SHEETS
				6	ARK.			
				JOB NO.		CA0609	121	693

(2) PERMANENT PAVEMENT MARKING DETAILS

STATE OF ARKANSAS LICENSED PROFESSIONAL ENGINEER No. 13422 JOHN F. CANTABERY

7-18-14

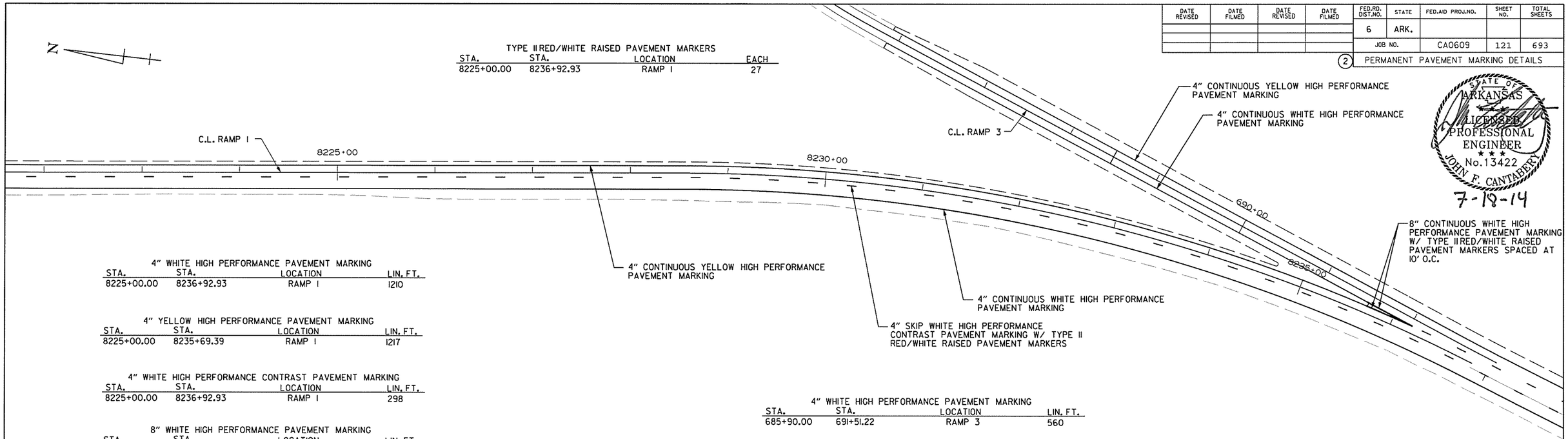

TYPE II RED/WHITE RAISED PAVEMENT MARKERS

STA.	STA.	LOCATION	EACH
8225+00.00	8236+92.93	RAMP 1	27

4" WHITE HIGH PERFORMANCE PAVEMENT MARKING

STA.	STA.	LOCATION	LIN. FT.
8225+00.00	8236+92.93	RAMP 1	1210

4" YELLOW HIGH PERFORMANCE PAVEMENT MARKING

STA.	STA.	LOCATION	LIN. FT.
8225+00.00	8235+69.39	RAMP 1	1217

4" WHITE HIGH PERFORMANCE CONTRAST PAVEMENT MARKING

STA.	STA.	LOCATION	LIN. FT.
8225+00.00	8236+92.93	RAMP 1	298

8" WHITE HIGH PERFORMANCE PAVEMENT MARKING

STA.	STA.	LOCATION	LIN. FT.
8235+69.39	8236+21.68	RAMP 1	104

4" WHITE HIGH PERFORMANCE PAVEMENT MARKING

STA.	STA.	LOCATION	LIN. FT.
685+90.00	691+51.22	RAMP 3	560

4" YELLOW HIGH PERFORMANCE PAVEMENT MARKING

STA.	STA.	LOCATION	LIN. FT.
685+90.00	691+51.22	RAMP 3	561

8" WHITE HIGH PERFORMANCE PAVEMENT MARKING

STA.	STA.	LOCATION	LIN. FT.
691+49.22	691+51.22	RAMP 3	2

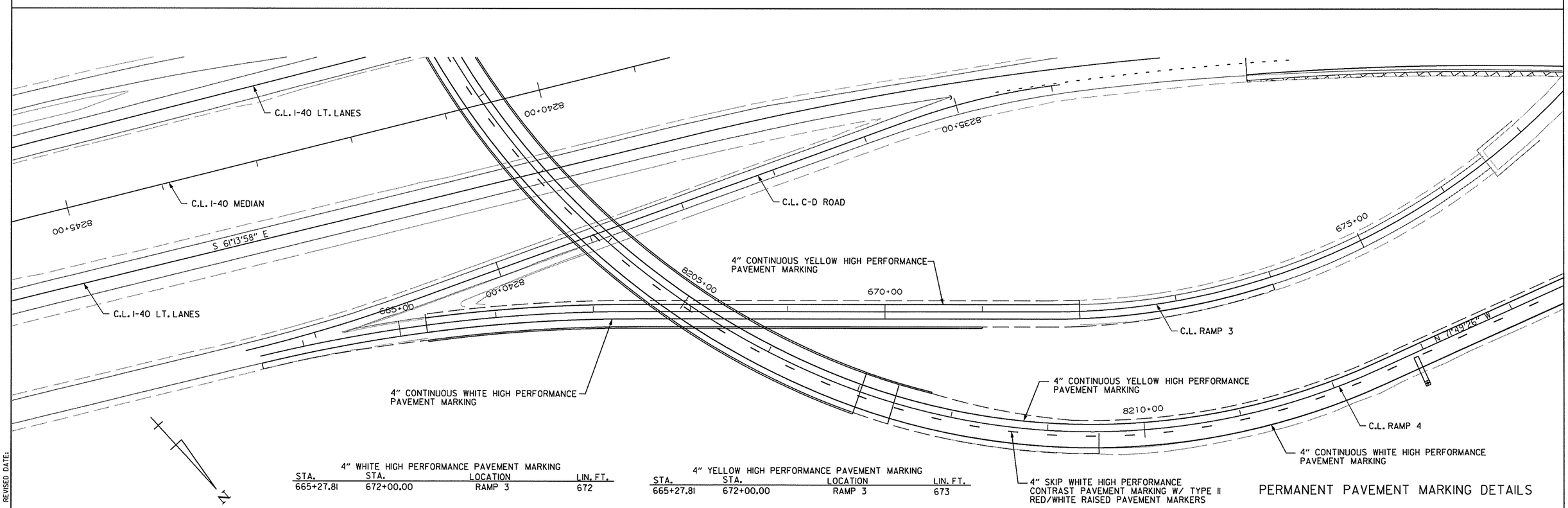

4" WHITE HIGH PERFORMANCE PAVEMENT MARKING

STA.	STA.	LOCATION	LIN. FT.
665+27.81	672+00.00	RAMP 3	672

4" YELLOW HIGH PERFORMANCE PAVEMENT MARKING

STA.	STA.	LOCATION	LIN. FT.
665+27.81	672+00.00	RAMP 3	673

PERMANENT PAVEMENT MARKING DETAILS

cggervasini 7/17/2014 7:43:18 PM
WORKSPACE: AHTD
L:\2011\11017709 - I-40 at I-430 Interchange Modifications\Drawings\RCA0609_PM_RPI_01.dgn
REVISED DATE:

DATE REVISED	DATE FILMED	DATE REVISED	DATE FILMED	FED.RD. DIST.NO.	STATE	FED.AID PROJ.NO.	SHEET NO.	TOTAL SHEETS
				6	ARK.			
				JOB NO.		CA0609	122	693

(2) PERMANENT PAVEMENT MARKING DETAILS

STATE OF ARKANSAS
LICENSED PROFESSIONAL ENGINEER
No.13422
JOHN F. CANTABERY
7-18-14

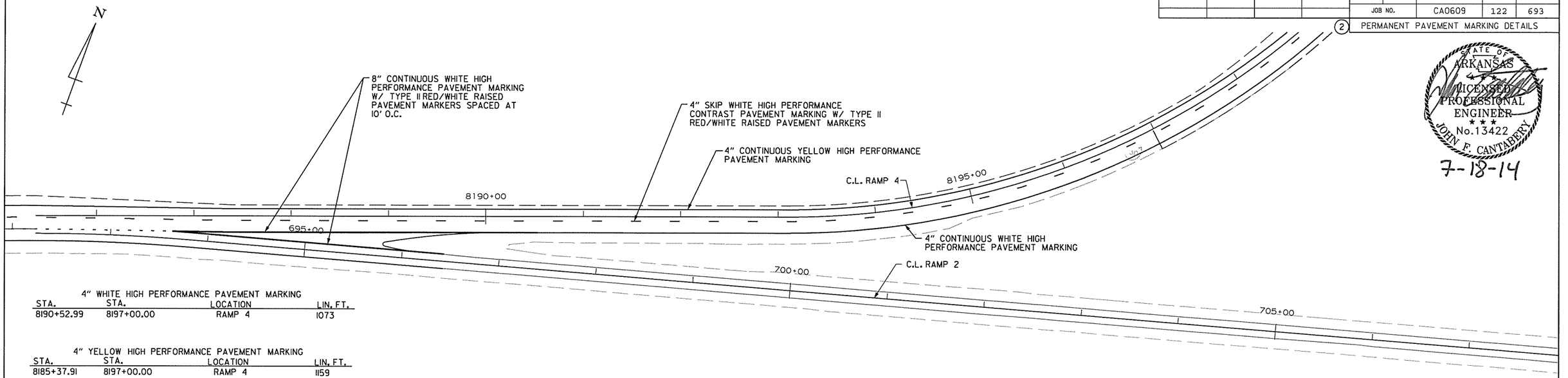

4" WHITE HIGH PERFORMANCE PAVEMENT MARKING

STA.	STA.	LOCATION	LIN. FT.
8190+52.99	8197+00.00	RAMP 4	1073

4" YELLOW HIGH PERFORMANCE PAVEMENT MARKING

STA.	STA.	LOCATION	LIN. FT.
8185+37.91	8197+00.00	RAMP 4	1159

4" WHITE HIGH PERFORMANCE CONTRAST PAVEMENT MARKING

STA.	STA.	LOCATION	LIN. FT.
8185+37.91	8197+00.00	RAMP 4	292

8" WHITE HIGH PERFORMANCE PAVEMENT MARKING

STA.	STA.	LOCATION	LIN. FT.
8186+77.99	8190+52.99	RAMP 4	638

TYPE II RED/WHITE RAISED PAVEMENT MARKERS

STA.	STA.	LOCATION	EACH
8185+37.91	8197+00.00	RAMP 4	79

4" WHITE HIGH PERFORMANCE PAVEMENT MARKING

STA.	STA.	LOCATION	LIN. FT.
8197+00.00	8210+00.00	RAMP 4	1328

4" YELLOW HIGH PERFORMANCE PAVEMENT MARKING

STA.	STA.	LOCATION	LIN. FT.
8197+00.00	8210+00.00	RAMP 4	1288

4" WHITE HIGH PERFORMANCE CONTRAST PAVEMENT MARKING

STA.	STA.	LOCATION	LIN. FT.
8197+00.00	8210+00.00	RAMP 4	327

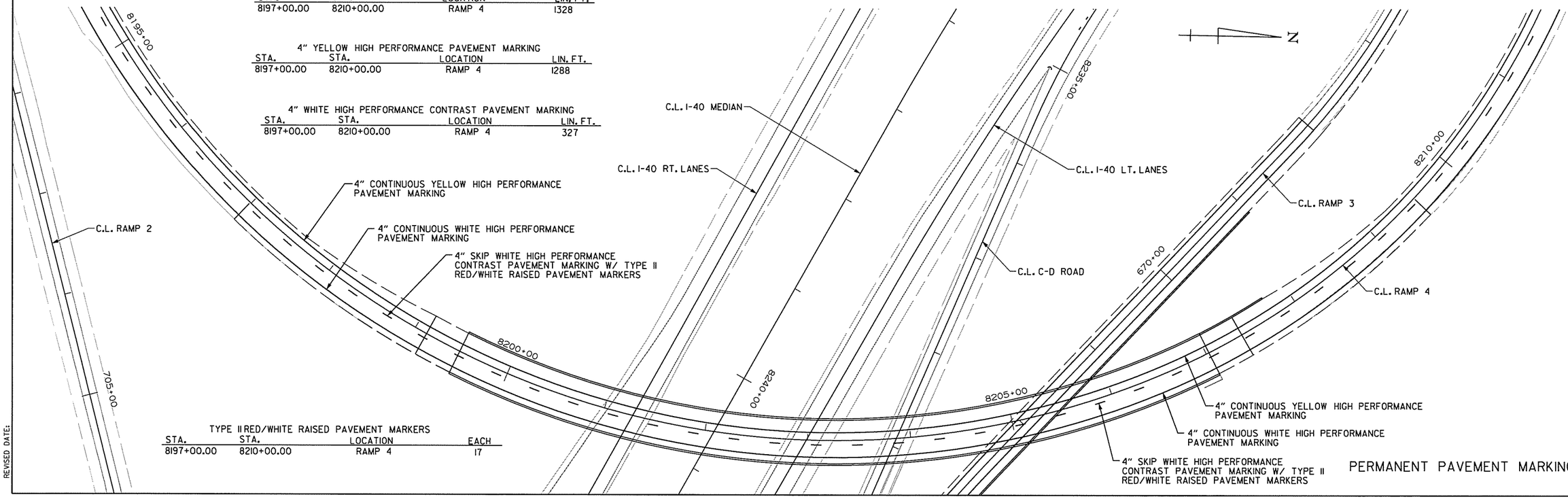

TYPE II RED/WHITE RAISED PAVEMENT MARKERS

STA.	STA.	LOCATION	EACH
8197+00.00	8210+00.00	RAMP 4	17

PERMANENT PAVEMENT MARKING DETAILS

cggervasini 7/17/2014 7:43:19 PM
WORKSPACE: AHTD
L:\20IN\I40IT709 - I-40 at I-430 Interchange Modifications\Drawings\RCA0609_PM_RP4_01.dgn
REVISED DATE:

DATE REVISED	DATE FILMED	DATE REVISED	DATE FILMED	FED.RD. DIST.NO.	STATE	FED.AID PROJ.NO.	SHEET NO.	TOTAL SHEETS
				6	ARK.			
				JOB NO.		CA0609	123	693

(2) PERMANENT PAVEMENT MARKING DETAILS

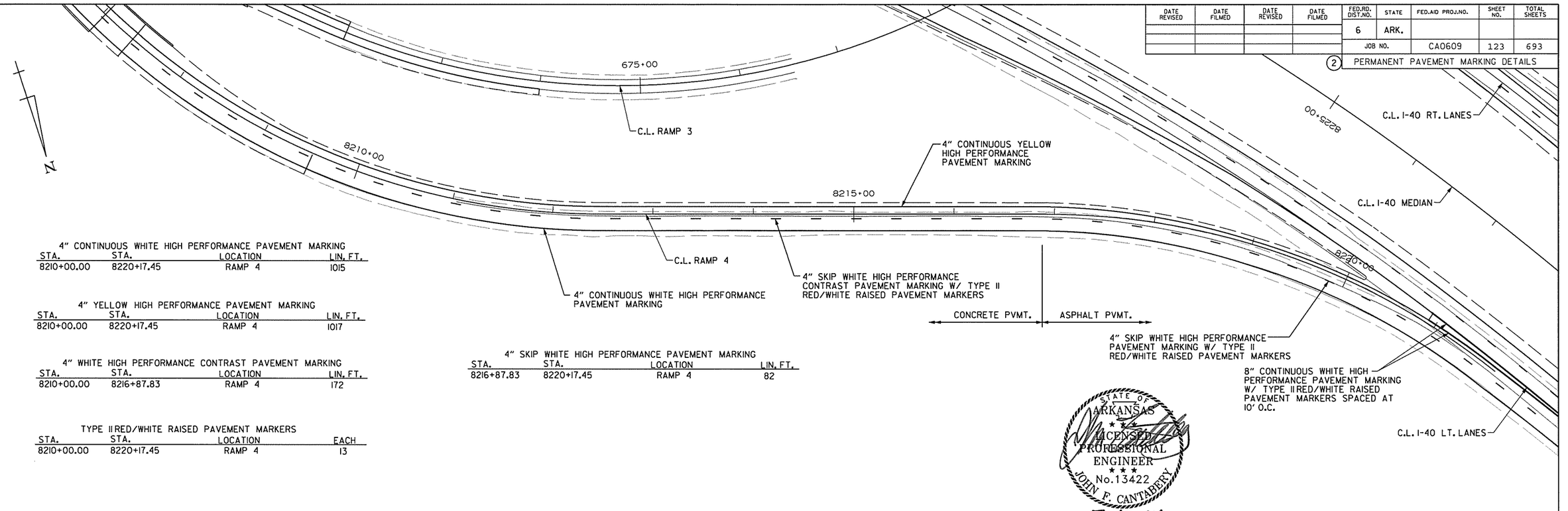

4" CONTINUOUS WHITE HIGH PERFORMANCE PAVEMENT MARKING

STA.	STA.	LOCATION	LIN. FT.
8210+00.00	8220+17.45	RAMP 4	1015

4" YELLOW HIGH PERFORMANCE PAVEMENT MARKING

STA.	STA.	LOCATION	LIN. FT.
8210+00.00	8220+17.45	RAMP 4	1017

4" WHITE HIGH PERFORMANCE CONTRAST PAVEMENT MARKING

STA.	STA.	LOCATION	LIN. FT.
8210+00.00	8216+87.83	RAMP 4	172

TYPE II RED/WHITE RAISED PAVEMENT MARKERS

STA.	STA.	LOCATION	EACH
8210+00.00	8220+17.45	RAMP 4	13

4" SKIP WHITE HIGH PERFORMANCE PAVEMENT MARKING

STA.	STA.	LOCATION	LIN. FT.
8216+87.83	8220+17.45	RAMP 4	82

STATE OF ARKANSAS
LICENSED PROFESSIONAL ENGINEER
No. 13422
JOHN F. CANTABERRY
7-18-14

4" YELLOW REFLECTORIZED PAINT PAVEMENT MARKING

STA.	STA.	LOCATION	LIN. FT.
14+50.00	26+00.00	NORMAN RD.	1739

4" YELLOW HIGH PERFORMANCE CONTRAST PAVEMENT MARKING

STA.	STA.	LOCATION	LIN. FT.
18+57.72	21+37.93	NORMAN RD.	561

4" WHITE REFLECTORIZED PAINT PAVEMENT MARKING

STA.	STA.	LOCATION	LIN. FT.
14+50.00	26+00.00	NORMAN RD.	2195

12" WHITE REFLECTORIZED PAINT PAVEMENT MARKING

STA.	LOCATION	LIN. FT.
9+80.00	NEVA RD.	24

4" YELLOW REFLECTORIZED PAINT PAVEMENT MARKING

STA.	STA.	LOCATION	LIN. FT.
7+15.00	9+80.00	NEVA RD.	530

4" WHITE REFLECTORIZED PAINT PAVEMENT MARKING

STA.	STA.	LOCATION	LIN. FT.
7+15.00	9+89.98	NEVA RD.	597

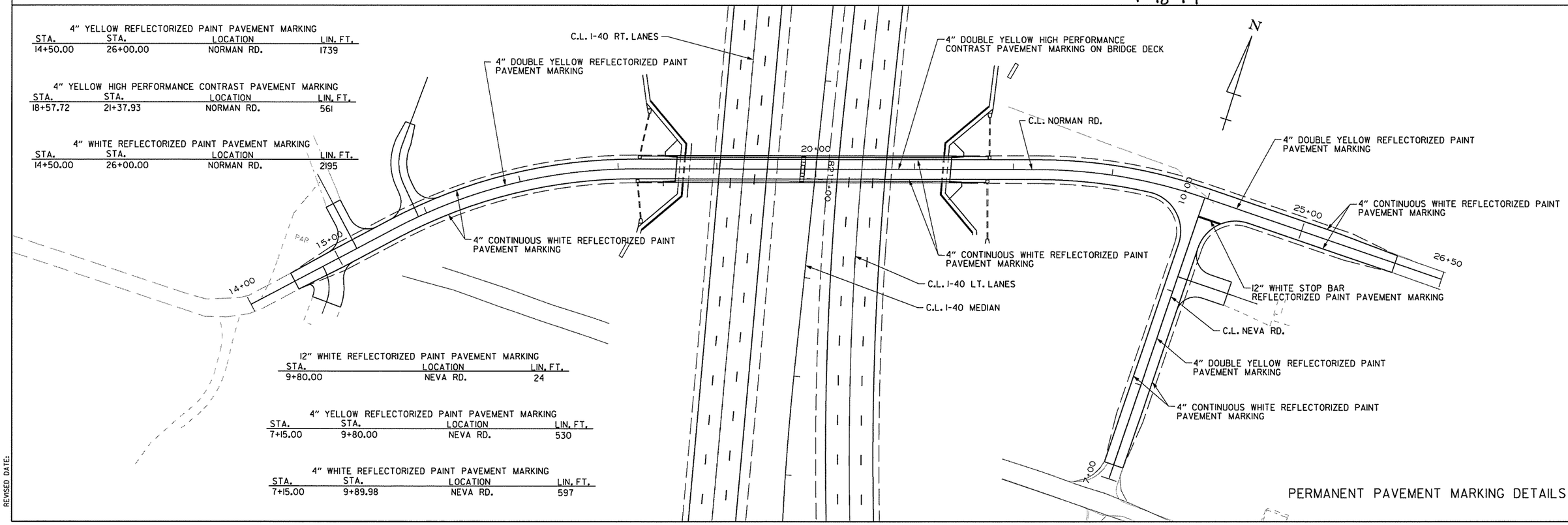

PERMANENT PAVEMENT MARKING DETAILS

cggervasini 7/17/2014 7:43:19 PM
WORKSPACE: AHTD
L:\CON\00170\9 - I-40 at I-430 Interchange Modifications\Drawings\RCA0609_PM_RP41.02.dgn
REVISED DATE:

DATE REVISED	DATE FILMED	DATE REVISED	DATE FILMED	FED.RD. DIST.NO.	STATE	FED.AID PROJ.NO.	SHEET NO.	TOTAL SHEETS
				6	ARK.			
				JOB NO.		CA0609	124	693

(2) PERMANENT PAVEMENT MARKING DETAILS

STATE OF ARKANSAS
LICENSED PROFESSIONAL ENGINEER
No. 13422
JOHN F. CANTABERY
7-18-14

4" WHITE HIGH PERFORMANCE PAVEMENT MARKING

STA.	STA.	LOCATION	LIN. FT.
8251+21.00	8262+12.00	LT. LANES	1091

8" WHITE HIGH PERFORMANCE PAVEMENT MARKING

STA.	STA.	LOCATION	LIN. FT.
8262+12.00	8265+87.00	LT. LANES/EXIT RAMP	655

TYPE II RED/WHITE RAISED PAVEMENT MARKERS

STA.	STA.	LOCATION	EACH
8262+12.00	8265+87.00	LT. LANES/EXIT RAMP	67

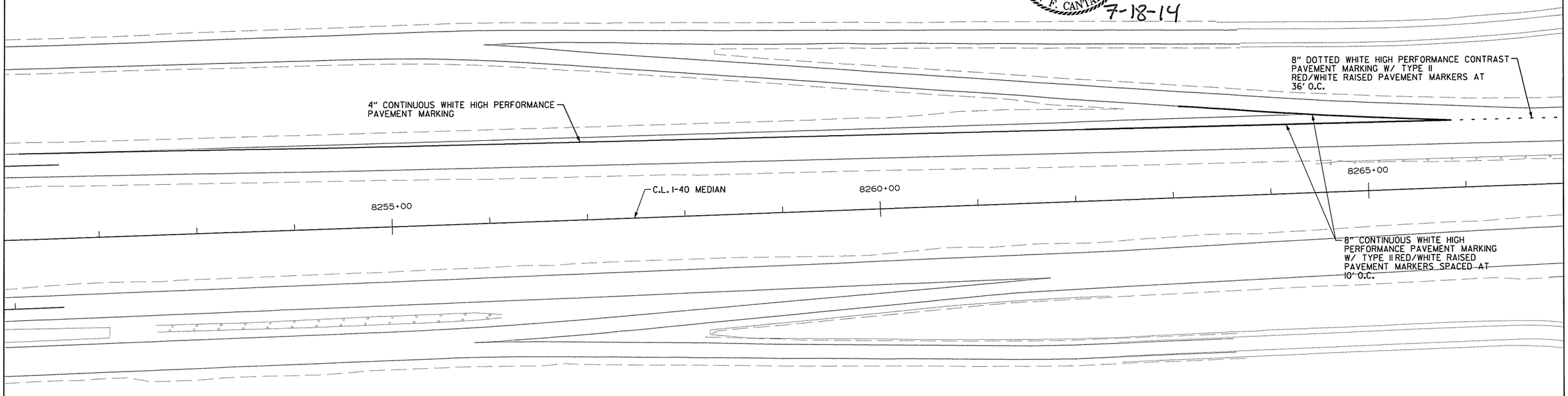

8" WHITE HIGH PERFORMANCE CONTRAST PAVEMENT MARKING

STA.	STA.	LOCATION	LIN. FT.
8265+87.00	8283+35.00	LT. LANES	437

TYPE II RED/WHITE RAISED PAVEMENT MARKERS

STA.	STA.	LOCATION	EACH
8265+87.00	8283+35.00	LT. LANES	50

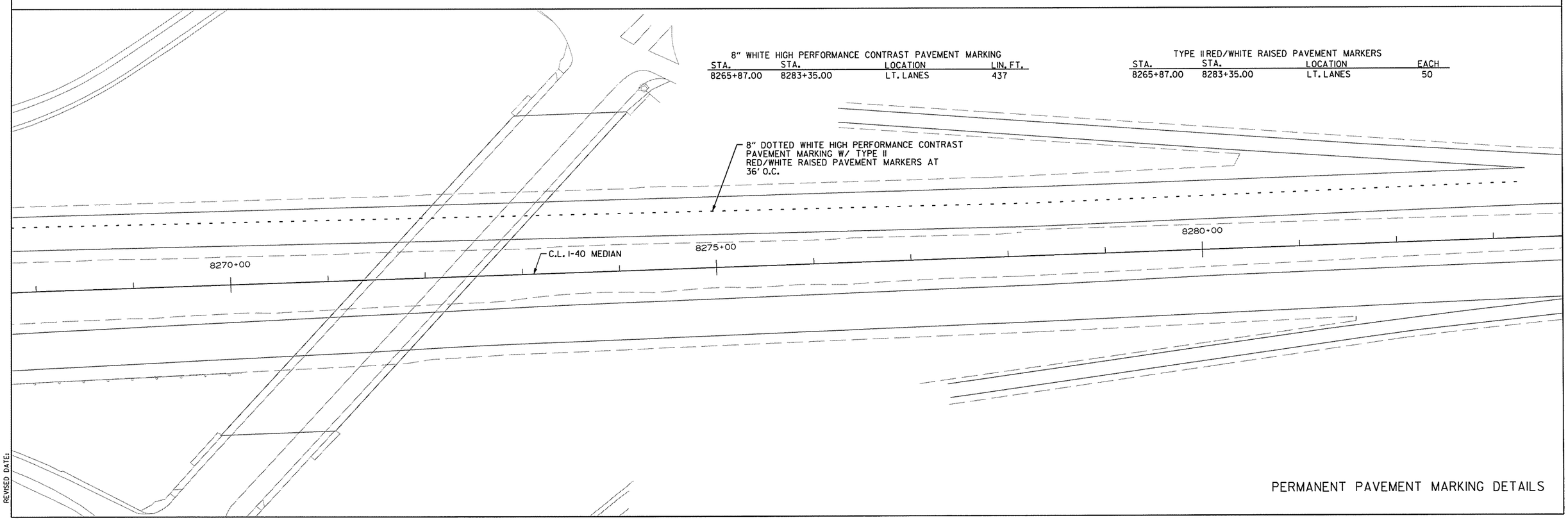

PERMANENT PAVEMENT MARKING DETAILS

cggervasini 7/17/2014 7:43:19 PM
WORKSPACE: AHTD
L:\2011\1101709 - I-40 at I-430 Interchange Modifications\Drawings\RCA0609_PM_MNL_03.dgn
REVISED DATE:

DATE REVISED	DATE FILMED	DATE REVISED	DATE FILMED	FED.RD. DIST.NO.	STATE	FED.AID PROJ.NO.	SHEET NO.	TOTAL SHEETS
				6	ARK.			
				JOB NO.		CA0609	125	693

(2) SIGN PLACEMENT SHEET

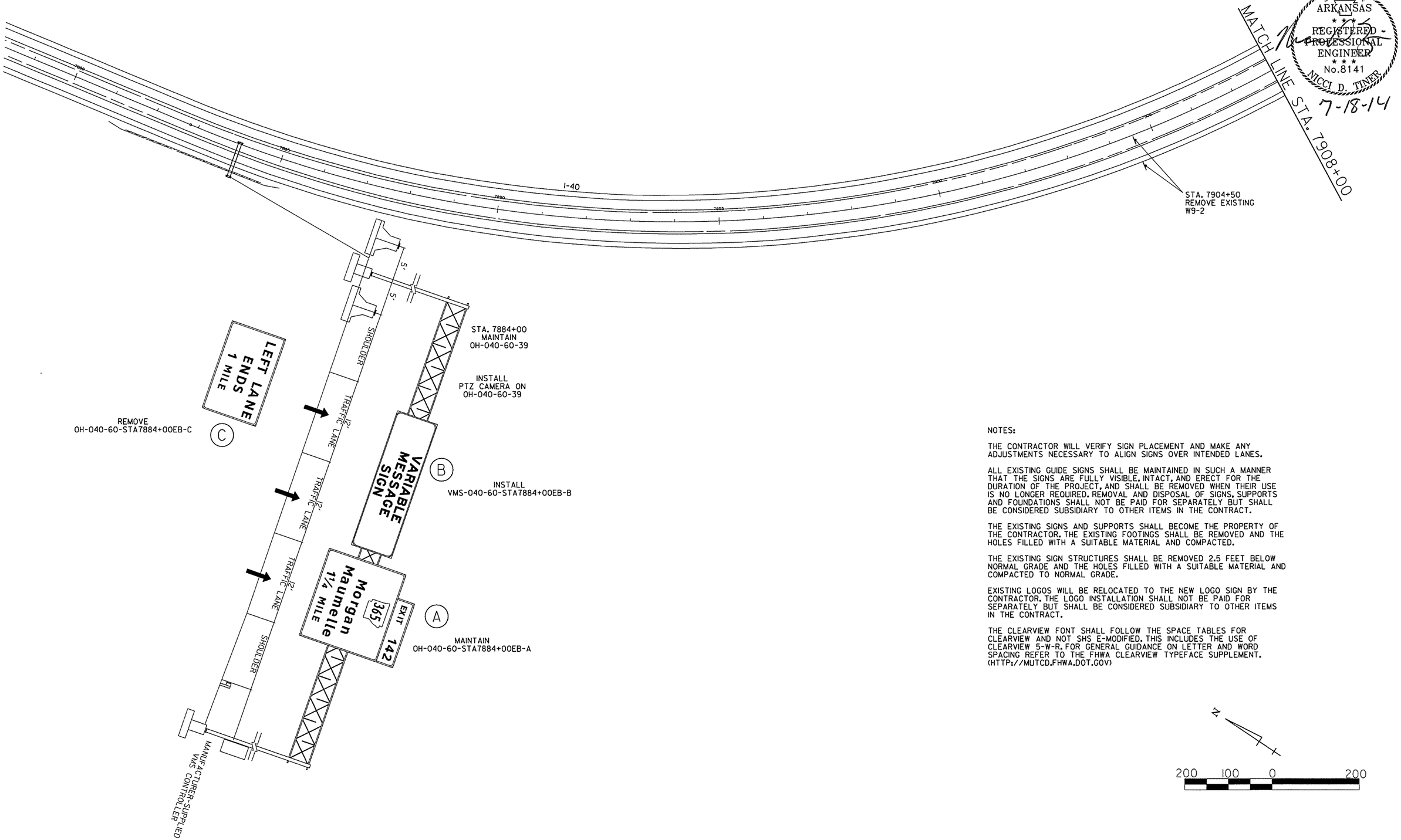

NOTES:

THE CONTRACTOR WILL VERIFY SIGN PLACEMENT AND MAKE ANY ADJUSTMENTS NECESSARY TO ALIGN SIGNS OVER INTENDED LANES.

ALL EXISTING GUIDE SIGNS SHALL BE MAINTAINED IN SUCH A MANNER THAT THE SIGNS ARE FULLY VISIBLE, INTACT, AND ERECT FOR THE DURATION OF THE PROJECT, AND SHALL BE REMOVED WHEN THEIR USE IS NO LONGER REQUIRED. REMOVAL AND DISPOSAL OF SIGNS, SUPPORTS AND FOUNDATIONS SHALL NOT BE PAID FOR SEPARATELY BUT SHALL BE CONSIDERED SUBSIDIARY TO OTHER ITEMS IN THE CONTRACT.

THE EXISTING SIGNS AND SUPPORTS SHALL BECOME THE PROPERTY OF THE CONTRACTOR. THE EXISTING FOOTINGS SHALL BE REMOVED AND THE HOLES FILLED WITH A SUITABLE MATERIAL AND COMPACTED.

THE EXISTING SIGN STRUCTURES SHALL BE REMOVED 2.5 FEET BELOW NORMAL GRADE AND THE HOLES FILLED WITH A SUITABLE MATERIAL AND COMPACTED TO NORMAL GRADE.

EXISTING LOGOS WILL BE RELOCATED TO THE NEW LOGO SIGN BY THE CONTRACTOR. THE LOGO INSTALLATION SHALL NOT BE PAID FOR SEPARATELY BUT SHALL BE CONSIDERED SUBSIDIARY TO OTHER ITEMS IN THE CONTRACT.

THE CLEARVIEW FONT SHALL FOLLOW THE SPACE TABLES FOR CLEARVIEW AND NOT SHS E-MODIFIED. THIS INCLUDES THE USE OF CLEARVIEW 5-W-R. FOR GENERAL GUIDANCE ON LETTER AND WORD SPACING REFER TO THE FHWA CLEARVIEW TYPEFACE SUPPLEMENT. (HTTP://MUTCD.FHWA.DOT.GOV)

cggervasini 7/17/2014 7:43:20 PM
WORKSPACE: AHTD
L:\2011\1017709 - I-40 at I-430 Interchange Modifications\Drawings\RCA0609_SP_MNL_01.dgn
REVISED DATE:

DATE REVISED	DATE FILMED	DATE REVISED	DATE FILMED	FED.RD. DIST.NO.	STATE	FED.AID PROJ.NO.	SHEET NO.	TOTAL SHEETS
				6	ARK.			
				JOB NO.		CA0609	126	693

(2) SIGN PLACEMENT SHEET

STATE OF ARKANSAS
REGISTERED PROFESSIONAL ENGINEER
No. 8141
NICCI D. TINER

7-16-14

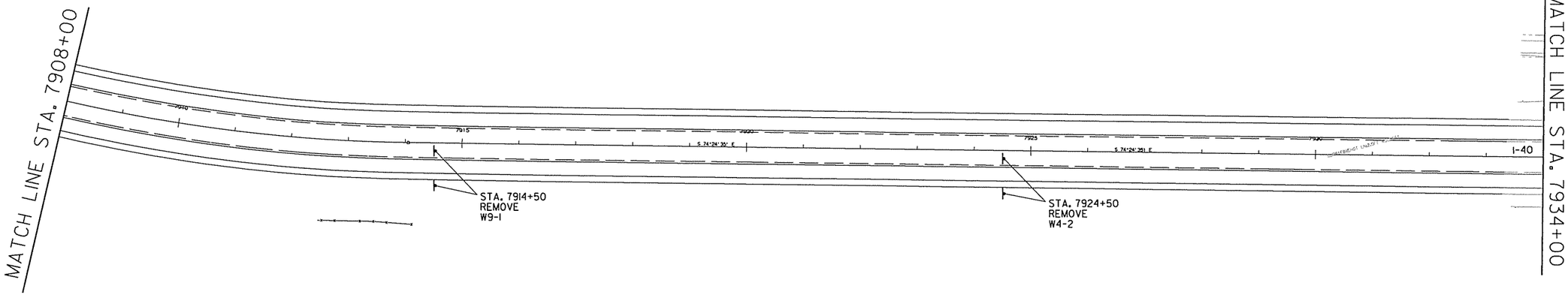

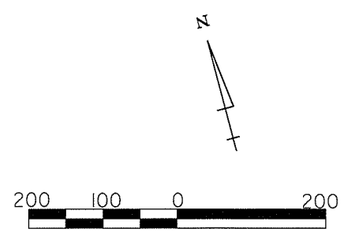

cggervasini 7/17/2014 7:43:21 PM
WORKSPACE: AHTD
L:\2014\14017\09 - I-40 at I-430 Interchange Modifications\Drawings\RCA0609_SP_MNL_02.dgn
REVISED DATE:

DATE REVISED	DATE FILMED	DATE REVISED	DATE FILMED	FED.RD. DIST.NO.	STATE	FED.AID PROJ.NO.	SHEET NO.	TOTAL SHEETS
				6	ARK.			
				JOB NO.		CA0609	127	693

(2) SIGN PLACEMENT SHEET

STATE OF ARKANSAS
REGISTERED PROFESSIONAL ENGINEER
No.8141
NICCI D. TINER
7-18-14

MATCH LINE STA. 7934+00

7935 7940 7945 7950 7955

I-40

PAVING

PAVED DRIVE

MAINTAIN
SS-040-60-STA7956+74WB

MATCH LINE STA. 7960+00

EXIT 142

MAINTAIN
EX-040-60-STA7956+26EB

STA. 7950+50
MAINTAIN
OH-040-60-40

SHOULDER
12' TRAFFIC LANE
12' TRAFFIC LANE
12' TRAFFIC LANE
SHOULDER

EAST
Little Rock
40
MEMPHIS

(B) MAINTAIN
OH-040-60-STA7950+50EB-B

Morgan
Maumelle
365
EXIT 142

(A) MAINTAIN
OH-040-60-STA7950+50EB-A

N

200 100 0 200

cggervasini 7/17/2014 7:43:21 PM
WORKSPACE: AHTD
L:\2014\14017709 - I-40 at I-430 Interchange Modifications\Drawings\RCA0609_SP_MNL_03.dgn
REVISED DATE:

DATE REVISED	DATE FILMED	DATE REVISED	DATE FILMED	FED.RD. DIST.NO.	STATE	FED.AID PROJ.NO.	SHEET NO.	TOTAL SHEETS
				6	ARK.			
				JOB NO.		CA0609	128	693

(2) SIGN PLACEMENT SHEET

STATE OF ARKANSAS
REGISTERED PROFESSIONAL ENGINEER
No.8141
NICCI D. TINER
7-18-14

INSTALL
OH-040-60-41

INSTALL
OH-040-60-STA7979+45WB-A

INSTALL
OH-040-60-STA7979+45WB-B

REPLACE
EX-040-60-STA7974+59WB

REPLACE
SS-040-60-STA7970+30EB

INSTALL
SS-040-60-STA7986+91EB

MATCH LINE STA. 7960+00

MATCH LINE STA. 7988+00

I-40

S 29°33'24" E

200 100 0 200

cggervasini 7/17/2014 7:43:21 PM
WORKSPACE: AHTD
L:\20IN\I\01709 - I-40 at I-430 Interchange Modifications\Drawings\RCA0609_SP_MNL_04.dgn
REVISED DATE:

DATE REVISED	DATE FILMED	DATE REVISED	DATE FILMED	FED.RD. DIST.NO.	STATE	FED.AID PROJ.NO.	SHEET NO.	TOTAL SHEETS
				6	ARK.			
				JOB NO.		CA0609	129	693

(2) SIGN PLACEMENT SHEET

STATE OF ARKANSAS
REGISTERED PROFESSIONAL ENGINEER
No.8141
NICCI D. TINER
7-18-14

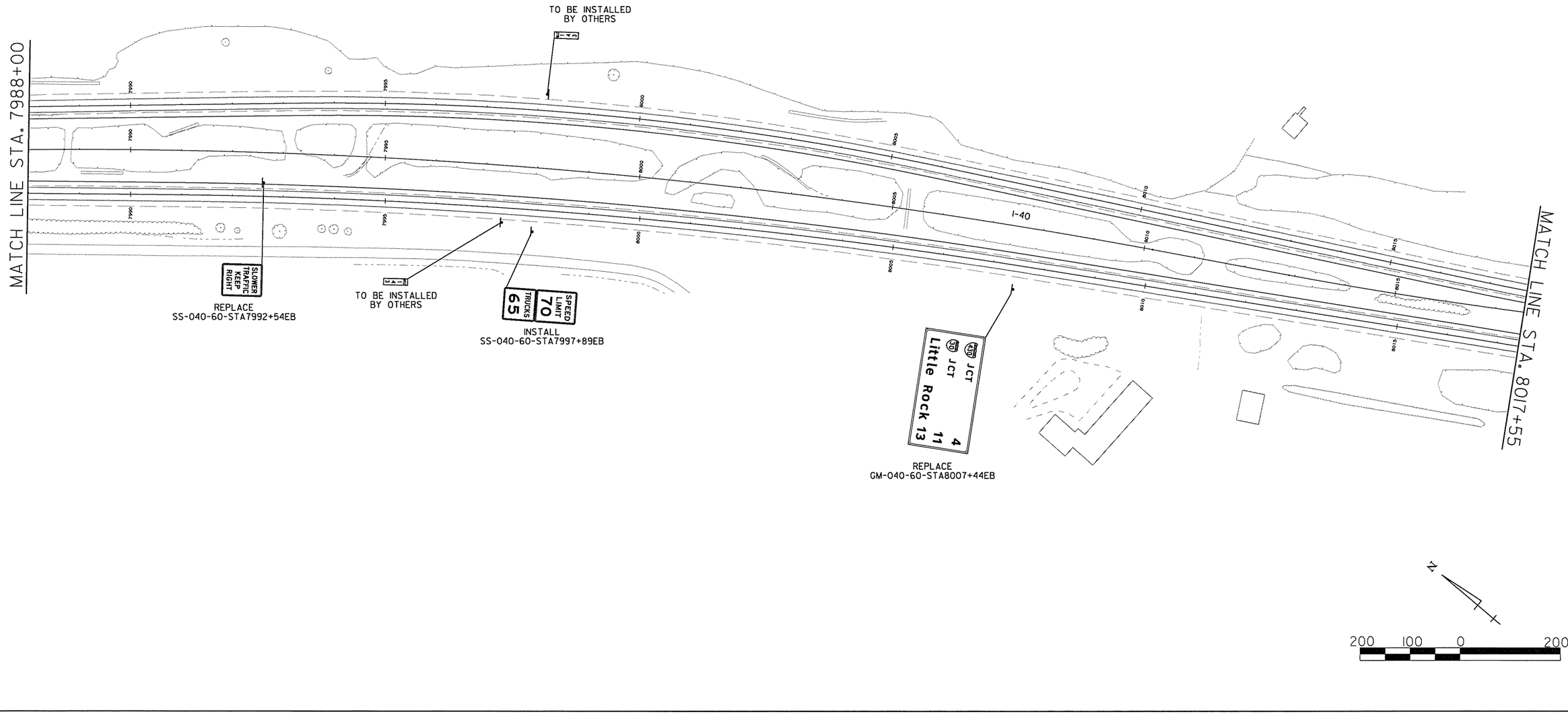

cggervasini 7/17/2014 7:43:22 PM
WORKSPACE: AHTD
L:\20IN\I40I709 - I-40 at I-430 Interchange Modifications\Drawings\RCA0609_SP_MNL_05.dgn
REVISED DATE:

DATE REVISED	DATE FILMED	DATE REVISED	DATE FILMED	FED.RD. DIST.NO.	STATE	FED.AID PROJ.NO.	SHEET NO.	TOTAL SHEETS
				6	ARK.			
				JOB NO.		CA0609	130	693

(2) SIGN PLACEMENT SHEET

STATE OF ARKANSAS
REGISTERED PROFESSIONAL ENGINEER
No.8141
NICCI D. TINER
7-18-14

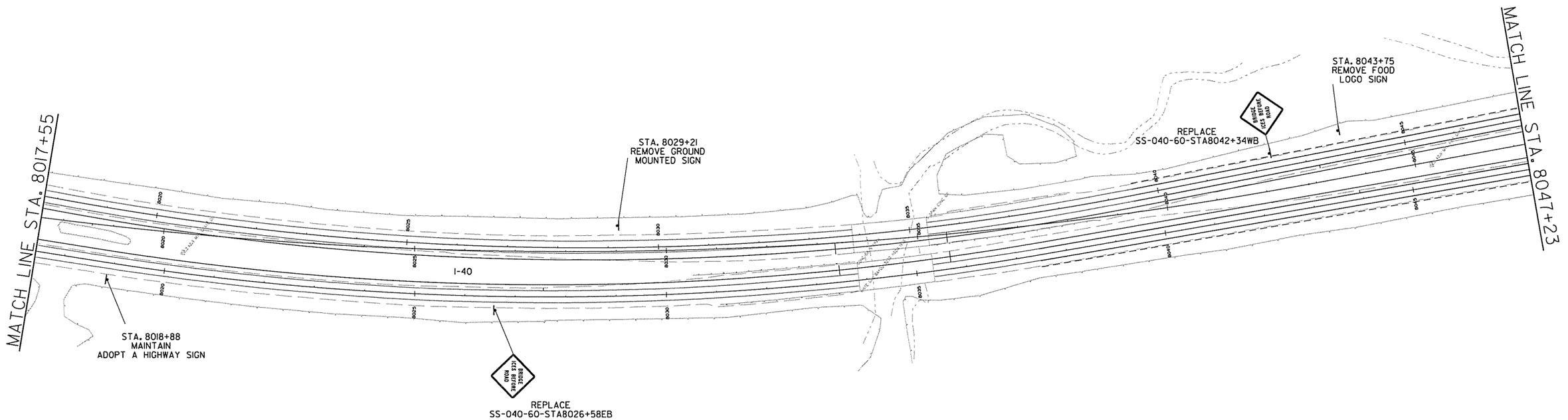

cggervasini 7/17/2014 7:43:22 PM
WORKSPACE: AHTD
L:\2011\101709 - I-40 at I-430 Interchange Modifications\Drawings\RCA0609_SP_MNL_06.dgn
REVISED DATE:

DATE REVISED	DATE FILMED	DATE REVISED	DATE FILMED	FED.RD. DIST.NO.	STATE	FED.AID PROJ.NO.	SHEET NO.	TOTAL SHEETS
				6	ARK.			
				JOB NO.		CA0609	131	693
				(2)	SIGN PLACEMENT SHEET			

STATE OF ARKANSAS
REGISTERED PROFESSIONAL ENGINEER
No.8141
NICCI D. TINER
7-18-14

INSTALL
BM-040-60-STA8051+54WB

EXIT 142
365
Morgan
Maumelle
1 MILE

STA. 8051+54
INSTALL
BM-040-60-42

SHOULDER
12' TRAFFIC LANE
12' TRAFFIC LANE
12' TRAFFIC LANE
SHOULDER

STA. 8051+91
REMOVE FOOD
LOGO SIGN

INSTALL
LG-040-60-STA8060+14WB

GAS-EXIT 142
Phillips 66
Valero
Shell

STA. 8062+53
REMOVE LODGING
LOGO SIGN

INSTALL
LF-040-60-STA8070+19WB

FOOD-EXIT 142
Arby's
KFC/Taco Bell
Wattle House
McDonald's
Subway
Taco Bueno

STA. 8074+31
REMOVE CAMPING
LOGO SIGN

MATCH LINE STA. 8047+23

TO BE INSTALLED
BY OTHERS

I-40

TO BE INSTALLED
BY OTHERS

MATCH LINE STA. 8076+00

8'-0" SHOULDER
10' TRAFFIC LANE
12' TRAFFIC LANE
12' TRAFFIC LANE
12' TRAFFIC LANE
10' SHOULDER
8'-0"

INSTALL
OH-040-60-STA8074+91EB

EXIT 147
JCT
430
Texarkana
2 MILES

STA. 8074+91
INSTALL
OH-040-60-43

N

200 100 0 200

cggervasini 7/17/2014 7:43:23 PM
WORKSPACE: AHTD
L:\X20II\I0II709 - I-40 at I-430 Interchange Modifications\Drawings\RCA0609_SP_MNL_07.dgn
REVISED DATE:

DATE REVISED	DATE FILMED	DATE REVISED	DATE FILMED	FED.RD. DIST.NO.	STATE	FED.AID PROJ.NO.	SHEET NO.	TOTAL SHEETS
				6	ARK.			
				JOB NO.		CA0609	132	693

(2) SIGN PLACEMENT SHEET

STATE OF ARKANSAS
REGISTERED PROFESSIONAL ENGINEER
No.8141
NICCI D. TINER
7-18-14

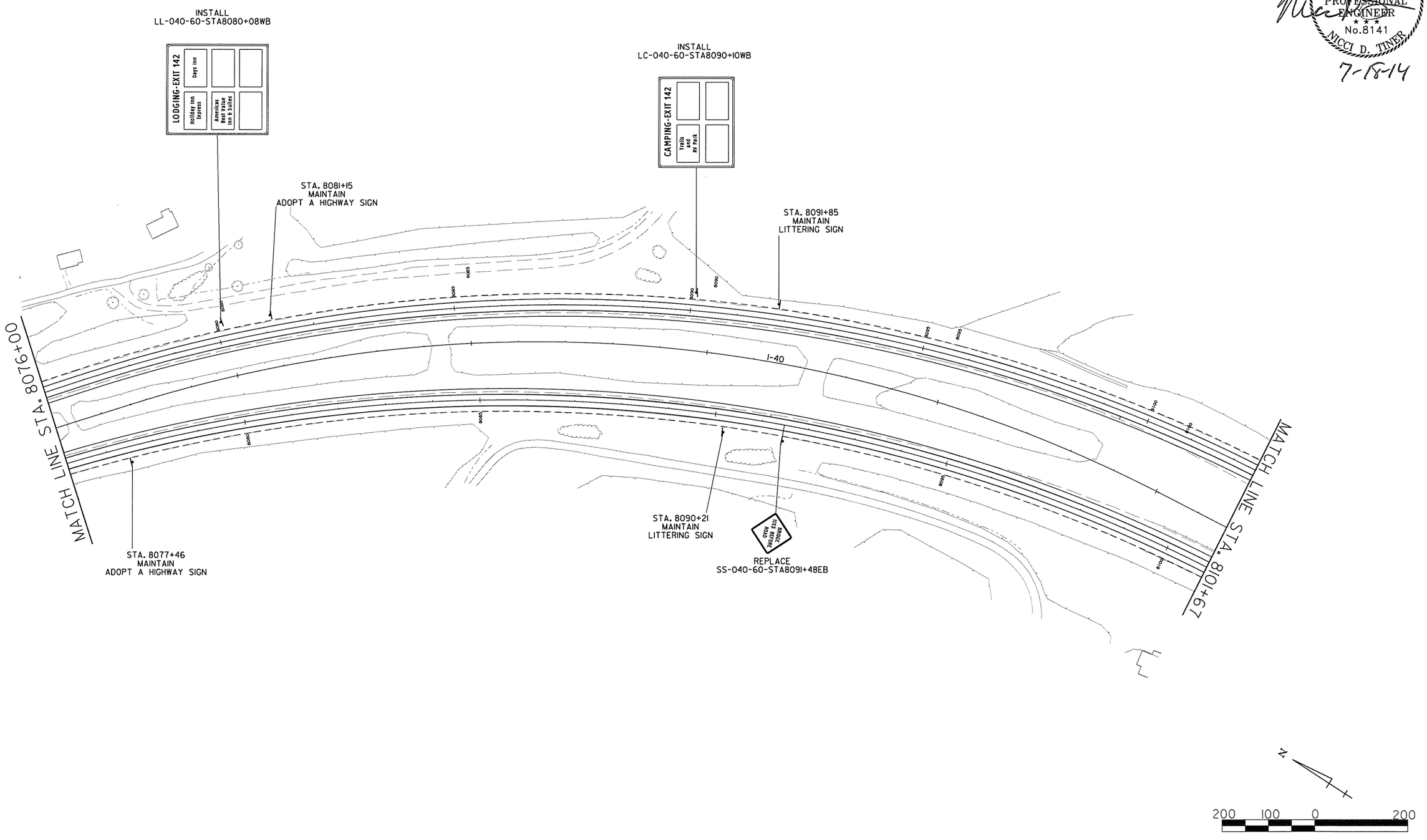

cggervasini 7/17/2014 7:43:23 PM
WORKSPACE: AHTD
L:\2011\1017709 - I-40 at I-430 Interchange Modifications\Drawings\RCA0609_SP_MNL_08.dgn
REVISED DATE:

DATE REVISED	DATE FILMED	DATE REVISED	DATE FILMED	FED.RD. DIST.NO.	STATE	FED.AID PROJ.NO.	SHEET NO.	TOTAL SHEETS
				6	ARK.			
				JOB NO.		CA0609	133	693

(2) SIGN PLACEMENT SHEET

STATE OF ARKANSAS
REGISTERED PROFESSIONAL ENGINEER
No.8141
NICCI D. TINER
7-8-14

MAINTAIN
GM-040-60-STA8113+99WB

CHECK TRAVEL CONDITIONS AT
IDRIVE ARKANSAS.COM
ARKANSAS STATE HIGHWAY AND TRANSPORTATION DEPT.

REPLACE
SS-040-60-STA8118+19WB

BRIDGE ICES BEFORE ROAD

TO BE INSTALLED
BY OTHERS

MATCH LINE STA. 8101+67

STA. 8131+29
MAINTAIN
ADOPT A HIGHWAY SIGN

MATCH LINE STA. 813+23

I-40

8105 8110 8115 8120 8125 8130

TO BE INSTALLED
BY OTHERS

INSTALL
SS-040-60-STA8127+01EB(LT)
AND
SS-040-60-STA8127+01EB(RT)

N

200 100 0 200

cggar-vasinl 7/17/2014 7:43:24 PM
WORKSPACE: AHTD
L:\ROW\NOT709 - I-40 at I-430 Interchange Modifications\Drawings\RCA0609_SP_MNL_09.dgn
REVISED DATE:

DATE REVISED	DATE FILMED	DATE REVISED	DATE FILMED	FED.RD. DIST.NO.	STATE	FED.AID PROJ.NO.	SHEET NO.	TOTAL SHEETS
				6	ARK.			
				JOB NO.		CA0609	134	693

(2) SIGN PLACEMENT SHEET

STATE OF ARKANSAS
REGISTERED PROFESSIONAL ENGINEER
No.8141
NICCI D. TINER
7-18-14

MATCH LINE STA. 8131+23

MATCH LINE STA. 8160+22

I-40

REMOVE EXISTING OVERHEAD SIGN STRUCTURE STA.8149+41EB

TO BE INSTALLED BY OTHERS

TO BE INSTALLED BY OTHERS

SPEED LIMIT 65

REPLACE
SS-040-60-STA8140+99EB(LT)
AND
SS-040-60-STA8140+99EB(RT)

8'-0" SHOULDER
12' TRAFFIC LANE
12' TRAFFIC LANE
12' EXIT ONLY LANE
10' SHOULDER
8'-0"

INTERSTATE 40 EAST
Little Rock
Memphis

(B) REPLACE
OH-040-60-STA8149+41EB-B

INTERSTATE 430 SOUTH
Texarkana
EXIT ONLY

EXIT 147

(A) REPLACE
OH-040-60-STA8149+41EB-A

STA. 8149+41
INSTALL OH-040-60-01

N

200 100 0 200

cggervosini 7/17/2014 7:43:24 PM
WORKSPACE: AHTD
L:\ROW\100709 - I-40 at I-430 Interchange Modifications\Drawings\RCA0609_SP_MNL_10.dgn
REVISED DATE:

DATE REVISED	DATE FILMED	DATE REVISED	DATE FILMED	FED.RD. DIST.NO.	STATE	FED.AID PROJ.NO.	SHEET NO.	TOTAL SHEETS
				6	ARK.			
				JOB NO.		CA0609	135	693

(2) SIGN PLACEMENT SHEET

STATE OF ARKANSAS
REGISTERED PROFESSIONAL ENGINEER
No.8141
NICCI D. TINER
7-18-14

MATCH LINE STA. 8160+22

INSTALL
GM-040-60-STA8168+09WB

Conway 22
Fort Smith 148

MAINTAIN
GM-040-60-STA8173+38WB

Veterans Momorial Highway
Purple Heart Trail

STA. 8173+33
REMOVE
EXISTING R4-3

INSTALL
SS-040-60-STA8177+03WB

SPEED LIMIT 70
TRUCKS 65

INSTALL
SS-040-60-STA8180+33WB

SLOWER TRAFFIC KEEP RIGHT

INSTALL
SS-040-60-STA8183+84WB

WEST 40

REPLACE
SS-040-60-STA8188+43WB

BRIDGE ICES BEFORE ROAD

MATCH LINE STA. 8190+00

I-40

REPLACE
SS-040-60-STA8172+37EB

BRIDGE ICES BEFORE ROAD

Carpool info
arkRide.com
372-3600

MAINTAIN
GM-040-60-STA8183+82EB

(B)
INSTALL
OH-040-60-STA8187+00EB-B

(A)
INSTALL
OH-040-60-STA8187+00EB-A

EXIT 147

INTERSTATE 40 EAST
Little Rock
Memphis

INTERSTATE 430 SOUTH
Texarkana
EXIT ONLY

STA. 8187+00
INSTALL
OH-040-60-44

8'-0"	10' SHOULDER	12' TRAFFIC LANE	12' TRAFFIC LANE	12' EXIT ONLY LANE	12' EXIT ONLY LANE	6' SHLD.	8'-0"

N

200 100 0 200

cggervasini 7/17/2014 7:43:24 PM
WORKSPACE: AHTD
L:\ROW\NOI7709 - I-40 at I-430 Interchange Modifications\Drawings\RCA0609_SP_MNL_11.dgn
REVISED DATE:

DATE REVISED	DATE FILMED	DATE REVISED	DATE FILMED	FED.RD. DIST.NO.	STATE	FED.AID PROJ.NO.	SHEET NO.	TOTAL SHEETS
				6	ARK.			
				JOB NO.		CA0609	136	693

(2) SIGN PLACEMENT SHEET

STATE OF ARKANSAS
REGISTERED PROFESSIONAL ENGINEER
No.8141
NICCI D. TINER
7-18-14

STA. 8209+98
INSTALL
BM-040-60-45

LANE ENDS MERGE LEFT

INSTALL
BM-040-60-STA8209+98WB

SHOULDER	12' TRAFFIC LANE	12' TRAFFIC LANE	12' TRAFFIC LANE	12' TRAFFIC LANE	SHLD.

STA. 8191+32
REMOVE
EXISTING GM SIGN

STA. 8197+88
REMOVE
EXISTING R2-1 AND R2-2P

STA. 8206+06
REMOVE EXISTING
M1-1 AND M3-4

MATCH LINE STA. 8190+00

I-40

STA. 8203+98
REMOVE EXISTING R2-1

INSTALL
SS-NORMAN RD-STA23+79SB

INSTALL
SS-NEVA RD-STA9+80WB

INSTALL
SS-NORMAN RD.-STA21+29SB

INSTALL
SS-NORMAN RD.-STA21+26SB

MATCH LINE STA. 8218+81

INSTALL
SS-NORMAN RD.-STA18+61NB

INSTALL
SS-NORMAN RD.-STA18+56NB

REMOVE
EXISTING OVERHEAD
SIGN STRUCTURE
STA. 8211+06

INSTALL
EX-040-60-STA8217+39EB

EXIT 147

INSTALL
SS-NORMAN RD.-STA16+06NB

INSTALL
OH-040-60-STA8213+85EB-C

INSTALL
OH-040-60-STA8213+85EB-B

INSTALL
OH-040-60-STA8213+85EB-A

STA. 8213+85
INSTALL
OH-040-60-02

INSTALL
SS-040-60-STA8213+85EB

N

200 100 0 200

cggervasini 7/17/2014 7:43:25 PM
WORKSPACE: AHTD
L:\ROW\WO1709 - I-40 at I-430 Interchange Modifications\Drawings\RCA0609_SP_MNL_12.dgn
REVISED DATE:

DATE REVISED	DATE FILMED	DATE REVISED	DATE FILMED	FED.RD. DIST.NO.	STATE	FED.AID PROJ.NO.	SHEET NO.	TOTAL SHEETS
				6	ARK.			
				JOB NO.		CA0609	137	693

(2) SIGN PLACEMENT SHEET

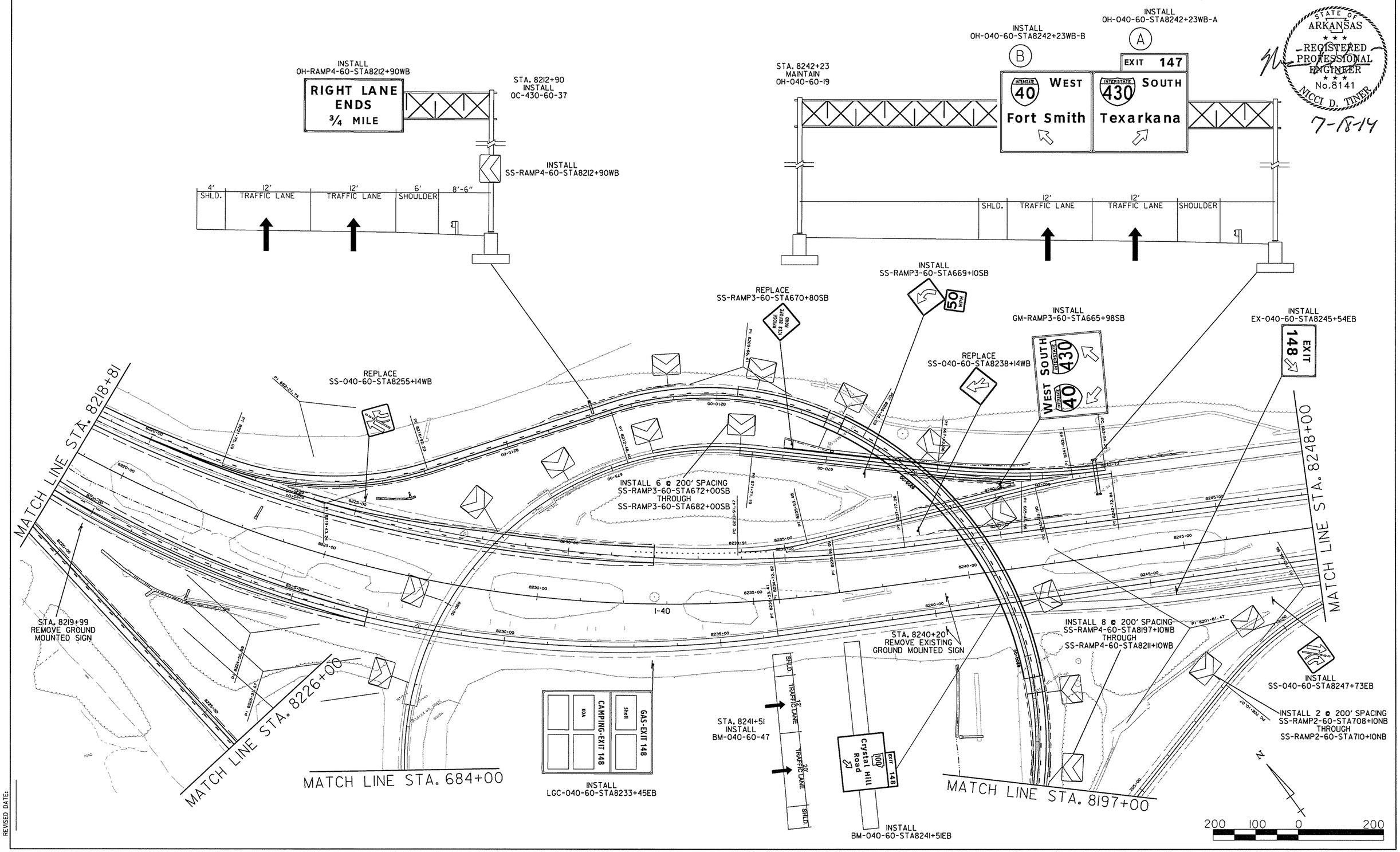

STATE OF ARKANSAS
REGISTERED PROFESSIONAL ENGINEER
No.8141
NICCI D. TINER
7-18-14

cggervasini 7/17/2014 7:43:25 PM
WORKSPACE: AHTD
L:\2011\1101709 - I-40 at I-430 Interchange Modifications\Drawings\RCA0609_SP_MNL_13.dgn
REVISED DATE:

DATE REVISED	DATE FILMED	DATE REVISED	DATE FILMED	FED.RD. DIST.NO.	STATE	FED.AID PROJ.NO.	SHEET NO.	TOTAL SHEETS
				6	ARK.			
				JOB NO.		CA0609	138	693

(2) SIGN PLACEMENT SHEET

STATE OF ARKANSAS
REGISTERED PROFESSIONAL ENGINEER
No.8141
NICCI D. TIVER
7-18-14

MATCH LINE STA. 8248+00

MATCH LINE STA. 8277+00

I-40

REPLACE
GM-040-60-STA8252+57WB

EXIT 147 SOUTH
INTERSTATE 430
Little Rock
Texarkana
NEXT RIGHT

REPLACE
EX-040-60-STA8261+00WB

EXIT 147

TO BE INSTALLED BY OTHERS

REMOVE
EXISTING OVERHEAD
SIGN STRUCTURE
STA. 8264+91

INSTALL
OH-040-60-STA8267+09WB-A

(A) EXIT 147 SOUTH
INTERSTATE 430
Texarkana
EXIT ONLY

INSTALL
OH-040-60-STA8267+09WB-B

(B) WEST
INTERSTATE 40
Fort Smith
Oklahoma City

STA. 8267+09
INSTALL
OH-040-60-18

8'-0" SHOULDER | 12' EXIT ONLY LANE | 12' TRAFFIC LANE | 12' TRAFFIC LANE | 10' SHOULDER | 8'-0"

INSTALL
SS-RAMP2-60-STA712+10NB

STA. 8255+54
MAINTAIN
OH-040-60-03

TO BE INSTALLED BY OTHERS

15' TRAFFIC LANE | 15' TRAFFIC LANE | SHOULDER

(A) INTERSTATE 40 EAST
Memphis

INSTALL
OH-040-60-STA8255+54EB-A

(B) Crystal Hill Road
EXIT 148

INSTALL
OH-040-60-STA8255+54EB-B

200 100 0 200

cggervasini 7/17/2014 7:43:26 PM
WORKSPACE: AHTD
L:\20II\II0II709 - I-40 at I-430 Interchange Modifications\Drawings\RCA0609_SP_MNL_14.dgn
REVISED DATE:

DATE REVISED	DATE FILMED	DATE REVISED	DATE FILMED	FED.RD. DIST.NO.	STATE	FED.AID PROJ.NO.	SHEET NO.	TOTAL SHEETS
				6	ARK.			
				JOB NO.		CA0609	139	693

(2) SIGN PLACEMENT SHEET

STATE OF ARKANSAS
REGISTERED PROFESSIONAL ENGINEER
No.8141
NICCI D. TINER
7-18-14

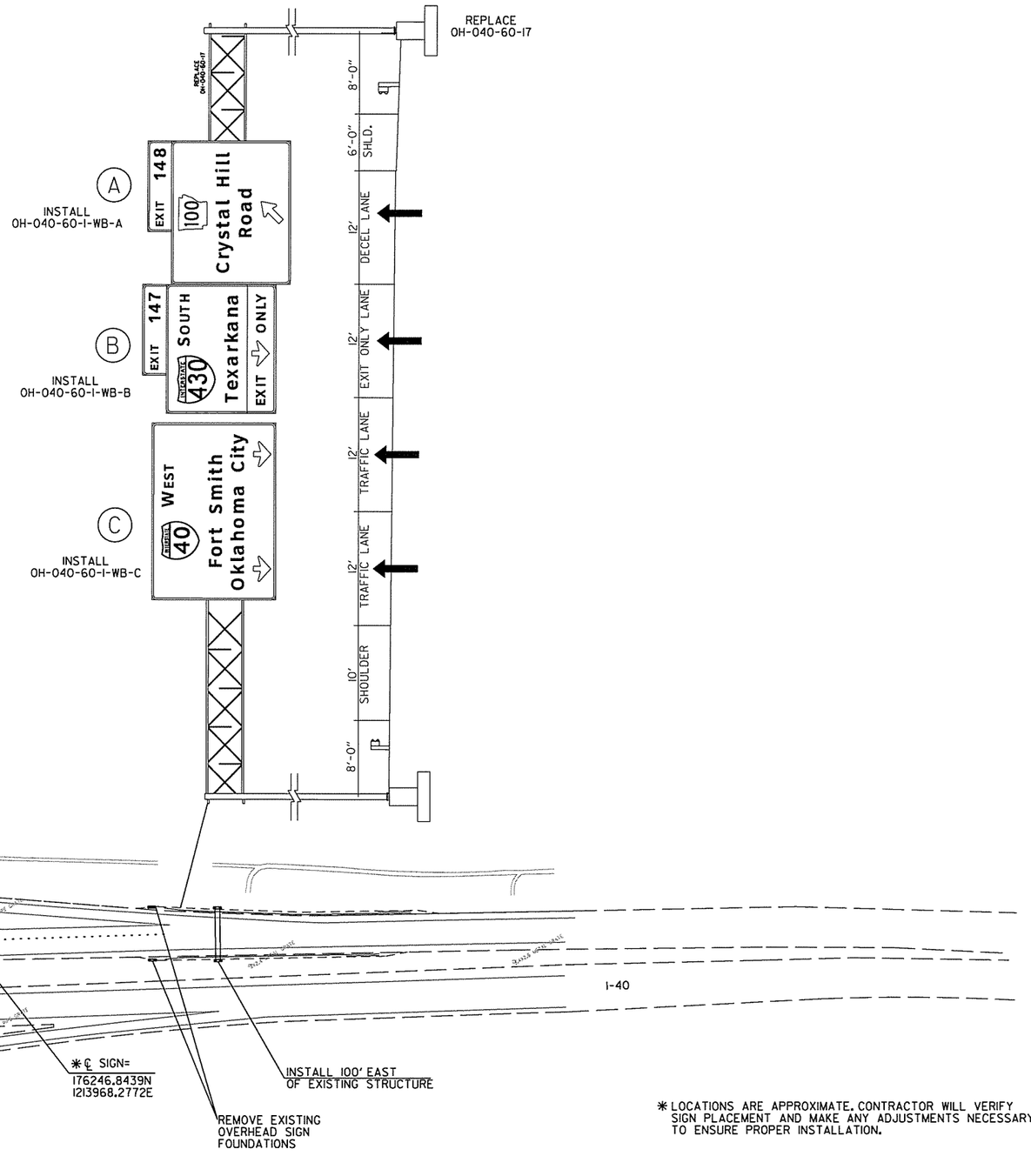

* LOCATIONS ARE APPROXIMATE. CONTRACTOR WILL VERIFY SIGN PLACEMENT AND MAKE ANY ADJUSTMENTS NECESSARY TO ENSURE PROPER INSTALLATION.

N

200 100 0 200

cggervasini 7/17/2014 7:43:26 PM
WORKSPACE: AHTD
L:\2011\11017709 - I-40 at I-430 Interchange Modifications\Drawings\RCA0609_SP_MNL_15.dgn
REVISED DATE:

DATE REVISED	DATE FILMED	DATE REVISED	DATE FILMED	FED.RD. DIST.NO.	STATE	FED.AID PROJ.NO.	SHEET NO.	TOTAL SHEETS
				6	ARK.			
				JOB NO.		CA0609	140	693

(2) SIGN PLACEMENT SHEET

STATE OF ARKANSAS
REGISTERED PROFESSIONAL ENGINEER
No.8141
NICCI D. TINER
7-18-14

MATCH LINE STA. 8226+00

MATCH LINE STA. 684+00

INSTALL
SS-RAMP3-60-STA684+00SB

REPLACE
SS-RAMPI-60-STA8233+99SB

STA. 692+30
INSTALL
OH-430-60-36

REPLACE
SS-430-60-STA690+01SB(LT)
SS-430-60-STA690+01SB(RT)

INSTALL
OH-430-60-STA692+30SB-B

INSTALL
OH-430-60-STA692+30SB-A

STA. 688+24
REMOVE EXISTING
GROUND MOUNTED SIGN

REPLACE
SS-430-60-STA686+09SB(LT)
SS-430-60-STA686+09SB(RT)

MATCH LINE STA. 686+00

MATCH LINE STA. 8197+00

INSTALL 2 @ 200' SPACING
SS-RAMP4-60-STA8193+10WB
TO
SS-RAMP4-60-STA8195+10WB

REPLACE
SS-RAMP2-60-STA700+82NB(LT)
SS-RAMP2-60-STA700+82NB(RT)

REPLACE
SS-RAMP4-60-STA8191+46NB(LT)
SS-RAMP4-60-STA8191+46NB(RT)

REMOVE
EXISTING OVERHEAD
SIGN STRUCTURE
STA.8186+38WB

INSTALL
GM-RAMP2-60-STA697+00NB

REPLACE
OH-430-60-STA692+23NB-B

REPLACE
OH-430-60-STA692+23NB-A

STA. 692+23
REPLACE
OH-430-60-13

MATCH LINE STA. 688+00

I-430

200 100 0 200

cggervasini 7/17/2014 7:43:27 PM
WORKSPACE: AHTD
L:\20IN\I0I7709 - I-40 at I-430 Interchange Modifications\Drawings\RCA0609_SP_MNL_I6.dgn
REVISED DATE:

DATE REVISED	DATE FILMED	DATE REVISED	DATE FILMED	FED.RD. DIST.NO.	STATE	FED.AID PROJ.NO.	SHEET NO.	TOTAL SHEETS
				6	ARK.			
				JOB NO.		CA0609	141	693

(2) SIGN PLACEMENT SHEET

STATE OF ARKANSAS
REGISTERED PROFESSIONAL ENGINEER
No.8141
NICCI D. TINER
7-16-14

MATCH LINE STA. 688+00

MATCH LINE STA. 686+00

REMOVE
EXISTING OVERHEAD
SIGN STRUCTURE
STA673+38NB

INSTALL 25' SOUTH OF
BRIDGEWAY BRIDGE SEE
GUARDRAIL SPECIAL DETAIL SHEETS

REMOVE
EXISTING W4-2

*℄ SIGN=
1754I7.775IN
I206887.6009E

25'

*℄ SIGN=
I75663.3652N
I206968.0437E

REMOVE
EXISTING GM SIGN

*℄ SIGN=
I7532I.239IN
I206549.85I7E

REPLACE
SS-430-60-I-SB

REPLACE
GM-430-60-STA67I+I5SB

INSTALL
OH-430-60-I-NB-A

INSTALL
OH-430-60-I-NB-B

INSTALL
OH-430-60-35

(A) EXIT 13A EAST INTERSTATE 40 Memphis

(B) LEFT EXIT 13B WEST INTERSTATE 40 Fort Smith Oklahoma City

EXIT 12 North Little Rock Maumelle

8'-0" SHOULDER
12' EXIT ONLY LANE
12' TRAFFIC LANE
10' SHOULDER
8'-0"

I-430

MATCH LINE A

*LOCATIONS ARE APPROXIMATE. CONTRACTOR WILL VERIFY SIGN PLACEMENT AND MAKE ANY ADJUSTMENTS NECESSARY TO ENSURE PROPER INSTALLATION OR REMOVAL.

N

200 100 0 200

cggervasinl 7/17/2014 7:43:27 PM
WORKSPACE: AHTD
L:\20IN\I0I709 - I-40 at I-430 Interchange Modifications\Drawings\RCA0609_SP_MNL_I7.dgn
REVISED DATE:

DATE REVISED	DATE FILMED	DATE REVISED	DATE FILMED	FED.RD. DIST.NO.	STATE	FED.AID PROJ.NO.	SHEET NO.	TOTAL SHEETS
				6	ARK.			
				JOB NO.		CA0609	142	693

(2) SIGN PLACEMENT SHEET

STATE OF ARKANSAS
REGISTERED PROFESSIONAL ENGINEER
No.8141
NICCI D. TINER
7-18-14

MATCH LINE A

MATCH LINE B

*INSTALL 65' SOUTH OF BRIDGE NO. 5322A
SEE GUARDRAIL SPECIAL DETAIL SHEETS

65'

BRIDGE NO. 5322A

INSTALL
OH-430-60-38

8'-0" SHLD. | 6' TRAFFIC | 12' LANE | 12' TRAFFIC | 12' LANE | 12' TRAFFIC | 12' RAMP | 10' SHOULDER | 8'-0"

I-430 Texarkana SOUTH

B

INSTALL
OH-430-60-I-SB-B

Maumelle Blvd
Crystal Hill Rd
107

A

INSTALL
OH-430-60-I-SB-A

EXIT 12

EXIT 35

INSTALL
SS-430-60-2-SB

*℄ SIGN=
174709.3290N
1205928.5542E

*℄ SIGN=
174504.8059N
1205951.2123E

REPLACE
SS-430-60-1-NB

BRIDGE ICES BEFORE ROAD

REPLACE
SS-430-60-2-NB

MAINTAIN
EXISTING ADOPT A HIGHWAY SIGN

*℄ SIGN=
174363.6282N
1205816.4509E

*℄ SIGN=
174290.2278N
1205743.6969E

REMOVE
W9-1

I-430

*℄ SIGN=
174348.2883N
1205682.8691E

*℄ SIGN=
174475.0315N
1205698.1686E

EXIT 12

REPLACE
EX-430-60-I-SB

REPLACE
SS-430-60-3-SB

*℄ SIGN=
174458.5548N
1205907.0546E

REPLACE
SS-430-60-3-NB

*℄ SIGN=
173231.7977N
1204506.1796E

*℄ SIGN=
173601.1091N
1204711.9332E

REPLACE
SS-430-60-4-SB

*LOCATIONS ARE APPROXIMATE. CONTRACTOR WILL VERIFY SIGN PLACEMENT AND MAKE ANY ADJUSTMENTS NECESSARY TO ENSURE PROPER INSTALLATION OR REMOVAL.

N

200 100 0 200

cggervasini 7/17/2014 7:43:28 PM
WORKSPACE: AHTD
L:\20II\II07709 - I-40 at I-430 Interchange Modifications\Drawings\RCA0609_SP_MNL_I8.dgn
REVISED DATE:

DATE REVISED	DATE FILMED	DATE REVISED	DATE FILMED	FED.RD. DIST.NO.	STATE	FED.AID PROJ.NO.	SHEET NO.	TOTAL SHEETS
				6	ARK.			
				JOB NO.		CA0609	143	693

(2) SIGN PLACEMENT SHEET

STATE OF ARKANSAS
REGISTERED PROFESSIONAL ENGINEER
No. 8141
NICCI D. TINER
7-18-14

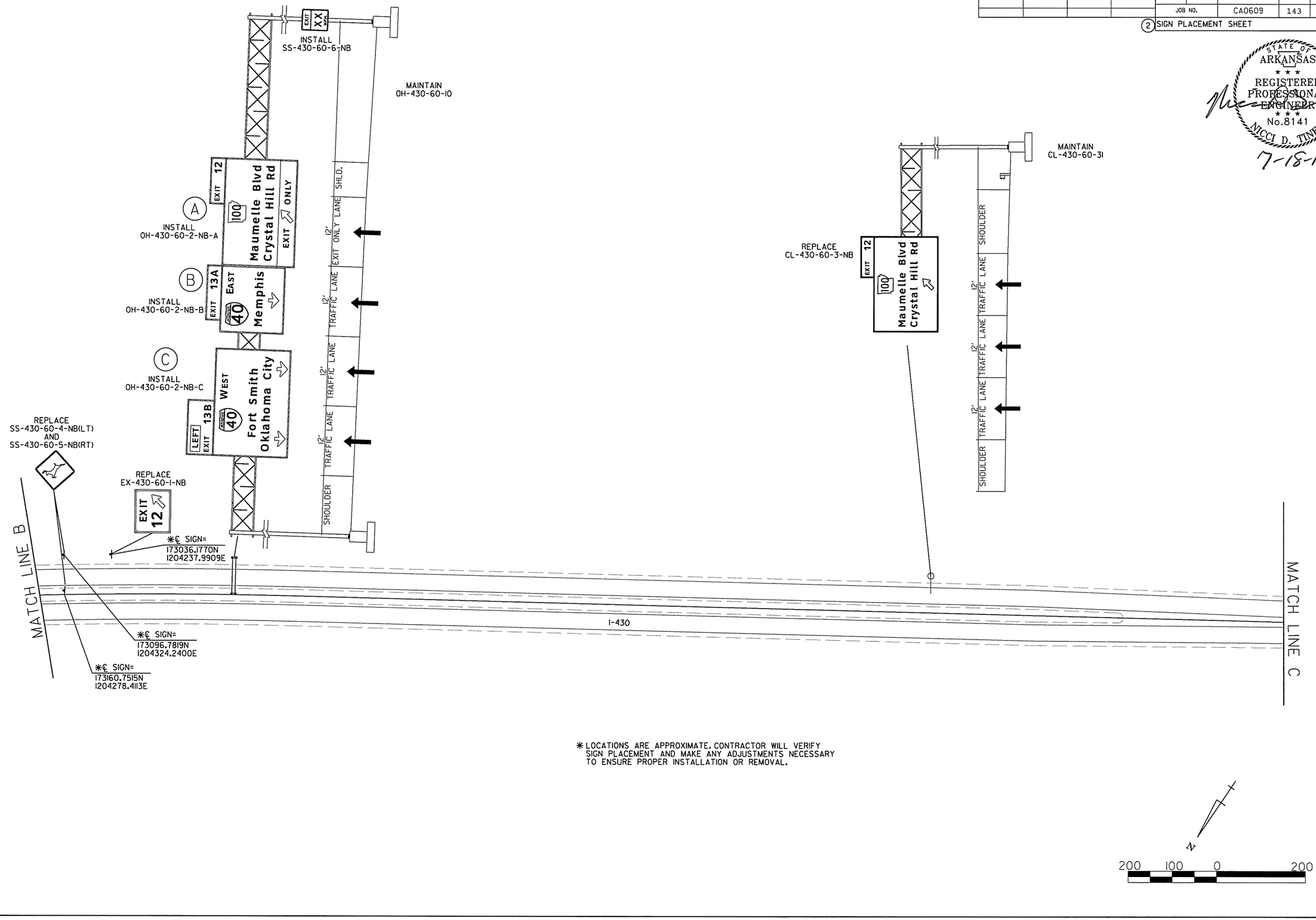

* LOCATIONS ARE APPROXIMATE. CONTRACTOR WILL VERIFY SIGN PLACEMENT AND MAKE ANY ADJUSTMENTS NECESSARY TO ENSURE PROPER INSTALLATION OR REMOVAL.

cggervasini 7/17/2014 7:43:28 PM
WORKSPACE: AHTD
L:\20IN\I00709 - I-40 at I-430 Interchange Modifications\Drawings\RCA0609_SP_MNL.I9.dgn
REVISED DATE:

DATE REVISED	DATE FILMED	DATE REVISED	DATE FILMED	FED.RD. DIST.NO.	STATE	FED.AID PROJ.NO.	SHEET NO.	TOTAL SHEETS
				6	ARK.			
				JOB NO.		CA0609	144	693

(2) SIGN PLACEMENT SHEET

STATE OF ARKANSAS
REGISTERED PROFESSIONAL ENGINEER
No.8141
NICCI D. TINER
7-18-14

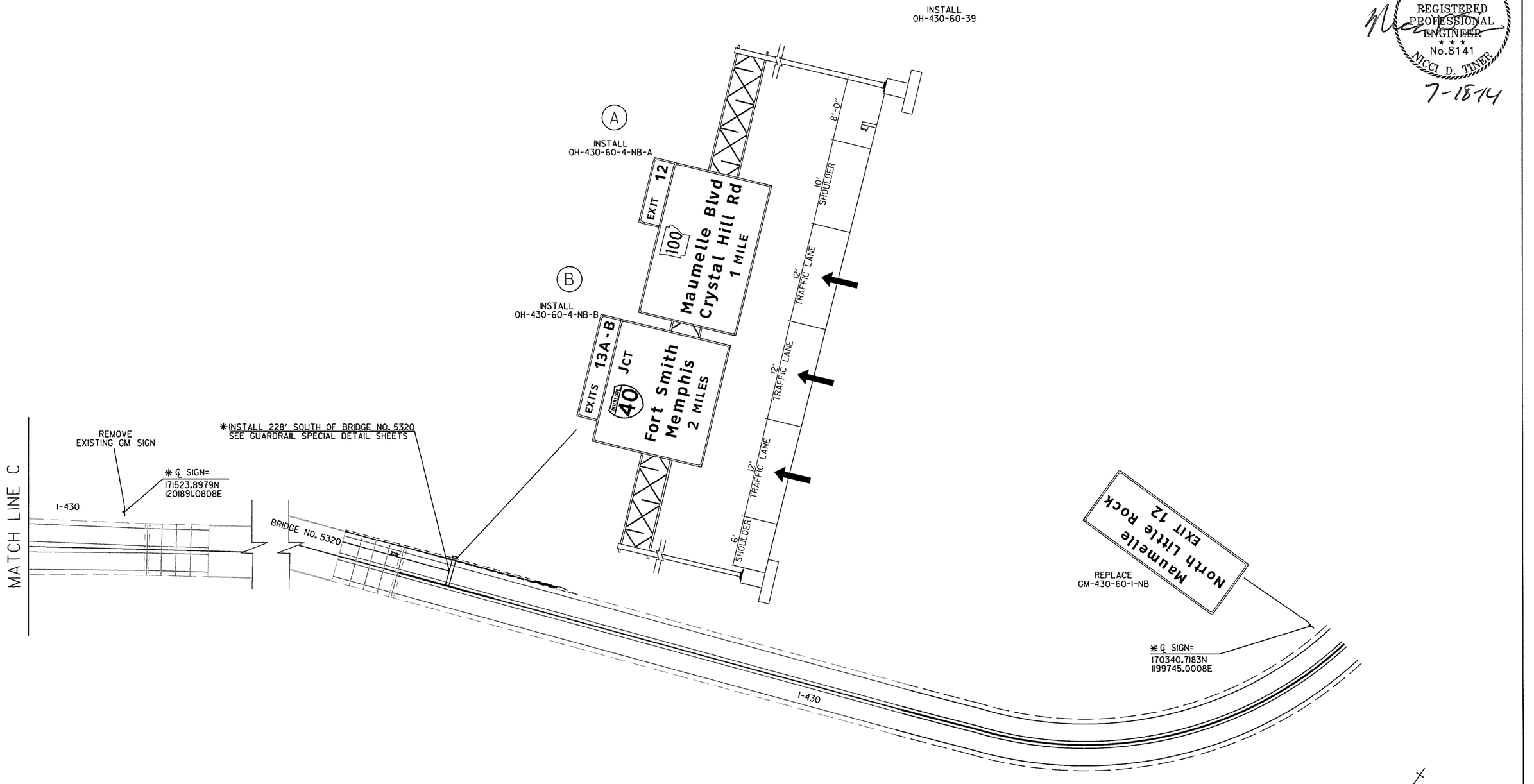

*LOCATIONS ARE APPROXIMATE. CONTRACTOR WILL VERIFY SIGN PLACEMENT AND MAKE ANY ADJUSTMENTS NECESSARY TO ENSURE PROPER INSTALLATION OR REMOVAL.

cggervasini 7/17/2014 7:43:29 PM
WORKSPACE: AHTD
L:\20IN\I01709 - I-40 at I-430 Interchange Modifications\Drawings\RCA0609_SP_MNL_20.dgn
REVISED DATE:

DATE REVISED	DATE FILMED	DATE REVISED	DATE FILMED	FED.RD. DIST.NO.	STATE	FED.AID PROJ.NO.	SHEET NO.	TOTAL SHEETS
				6	ARK.			
				JOB NO.		CA0609	145	693

(2) SIGN PLACEMENT SHEET

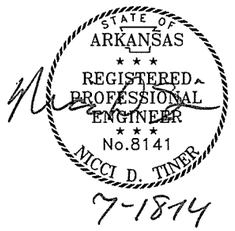

NOTES:

THE CONTRACTOR WILL VERIFY SIGN PLACEMENT AND MAKE ANY ADJUSTMENTS NECESSARY TO ALIGN SIGNS OVER INTENDED LANES.

SINCE THE CONTRACTOR WILL BE REQUIRED TO INSTALL OVERHEAD SIGNS ON STRUCTURES WHICH ARE LOCATED OVER THE ROADWAYS WHICH ARE CURRENTLY OPEN TO TRAFFIC, IT WILL BE THE RESPONSIBILITY OF THE CONTRACTOR TO PROVIDE LANE CLOSURES AS A PART OF TRAFFIC CONTROL. PAYMENT FOR PROVIDING LANE CLOSURES WILL BE PAID SUBSIDIARY TO THE PAY ITEM "MAINTENANCE OF TRAFFIC". ALL MAINTENANCE OF TRAFFIC WORK MUST CONFORM WITH THE MUTCD.

SYSTEM INTER-OPERATION REQUIREMENT: THE CONTRACTOR IS TO GUARANTEE SYSTEM COMPATIBILITY FOR ALL PROJECT COMPONENTS.

THE SYSTEM WILL BE CONSIDERED INSTALLED UPON REVIEW OF THE FINAL INSTALLATION BY THE ENGINEER. AT THIS TIME A ONE MONTH TEST WILL COMMENCE WHEREIN ANYTHING THAT FAILS WILL BE THE RESPONSIBILITY OF THE CONTRACTOR. ONLY AT THE DISCRETION OF THE ENGINEER WILL THERE BE ADDITIONAL TIME AWARDED FOR REPAIR WORK FOR UNFORESEEN ACCIDENTS.

ALL VMS EQUIPMENT WILL BE TESTED AND VERIFIED PRIOR TO INSTALLATION. IT IS THE RESPONSIBILITY OF THE CONTRACTOR TO INSURE THAT ALL COMPONENTS MEET OR EXCEED EXISTING NTCIP REQUIREMENTS AS STATED ON THE VMS SPECIAL PROVISIONS OF THIS JOB.

THE CONTRACTOR WILL CONDUCT ALL FIRMWARE UPGRADES TO ANY NTCIP EQUIPMENT THAT OCCUR PRIOR TO THE COMPLETION OF THIS PROJECT. ALL VMS EQUIPMENT AND SOFTWARE SHALL BE FROM MANUFACTURERS THAT HAVE REFERENCES FROM THREE DOT'S FROM PRIOR JOBS WITH THEIR EQUIPMENT AND/OR SOFTWARE. THIS DOCUMENTATION WILL BE AVAILABLE UPON REQUEST BY THE ENGINEER.

THE CONTRACTOR WILL BE RESPONSIBLE FOR COORDINATION WITH LOCAL POWER COMPANIES IN THE INSTALLATION OF POWER TO ALL VMS AND CAMERA ASSEMBLIES. ALL INSTALLATION NEEDS, CONDUIT, BORING, OR TRENCHING WILL BE THE RESPONSIBILITY OF THE CONTRACTOR. ALL COSTS REQUIRED FOR THE INSTALLATION OF POWER WILL BE ABSORBED BY THE CONTRACTOR PER SIGN. THE CONTRACTOR WILL COORDINATE WITH THE ENGINEER TO ESTABLISH BILLING FOR THE MONTHLY ENERGY COST TO THE DEPARTMENT.

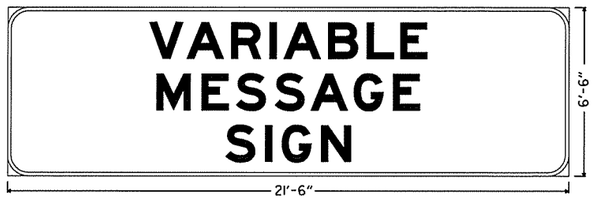

VMS-040-60-STA7884+00EB-B

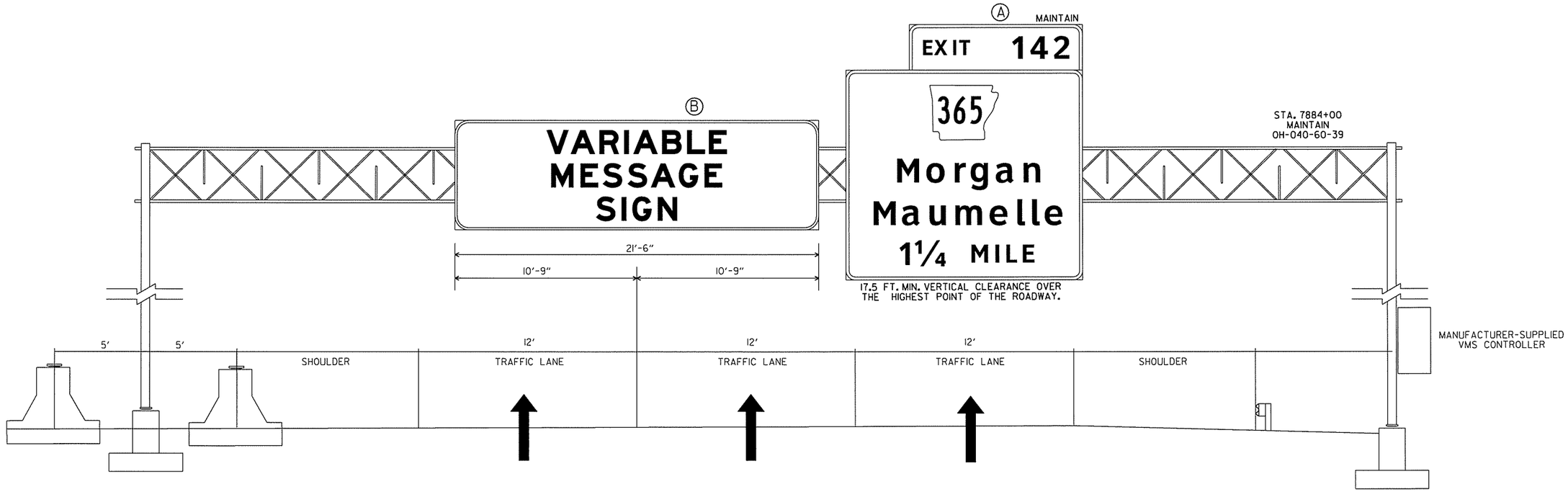

cggervasini 7/17/2014 7:43:29 PM
WORKSPACE: AHTD
L:\ZOIN\NO17709 - I-40 at I-430 Interchange Modifications\Drawings\RCA0609_SP_MNL_21-46.dgn
REVISED DATE:

DATE REVISED	DATE FILMED	DATE REVISED	DATE FILMED	FED.RD. DIST.NO.	STATE	FED.AID PROJ.NO.	SHEET NO.	TOTAL SHEETS
				6	ARK.			
				JOB NO.		CA0609	146	693

(2) SIGN PLACEMENT SHEET

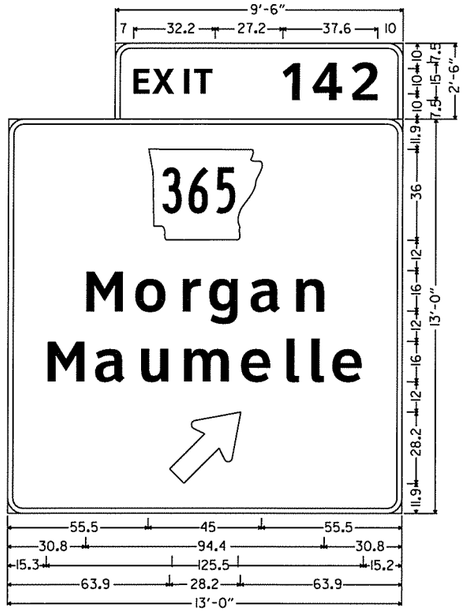

OH-040-60-STA7979+45WB-A;
6.0" Radius, 2.0" Border, White on Green;
[EXIT] ClearviewHwy-5-W; [142] ClearviewHwy-5-W;
6.0" Radius, 2.0" Border, White on Green;
MI-6; [Morgan] ClearviewHwy-5-W; [Maumelle] ClearviewHwy-5-W;
Standard Arrow Custom 35.8" X 21.6" 45°;

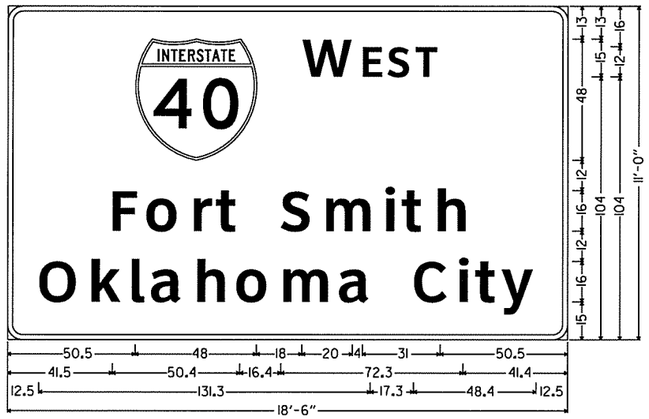

OH-040-60-STA7979+45WB-B;
6.0" Radius, 2.0" Border, White on Green;
[W] ClearviewHwy-5-W; [EST] ClearviewHwy-5-W; [Fort Smith] ClearviewHwy-5-W;
[Oklahoma City] ClearviewHwy-5-W;

NOTES:

THE CONTRACTOR WILL VERIFY SIGN PLACEMENT AND MAKE ANY ADJUSTMENTS NECESSARY TO ALIGN SIGNS OVER INTENDED LANES.

SINCE THE CONTRACTOR WILL BE REQUIRED TO INSTALL OVERHEAD SIGNS ON STRUCTURES WHICH ARE LOCATED OVER THE ROADWAYS WHICH ARE CURRENTLY OPEN TO TRAFFIC, IT WILL BE THE RESPONSIBILITY OF THE CONTRACTOR TO PROVIDE LANE CLOSURES AS A PART OF TRAFFIC CONTROL. PAYMENT FOR PROVIDING LANE CLOSURES WILL BE PAID SUBSIDIARY TO THE PAY ITEM "MAINTENANCE OF TRAFFIC". ALL MAINTENANCE OF TRAFFIC WORK MUST CONFORM WITH THE MUTCD.

STATE OF ARKANSAS
REGISTERED PROFESSIONAL ENGINEER
No.8141
NICCI D. TINER
7-18-14

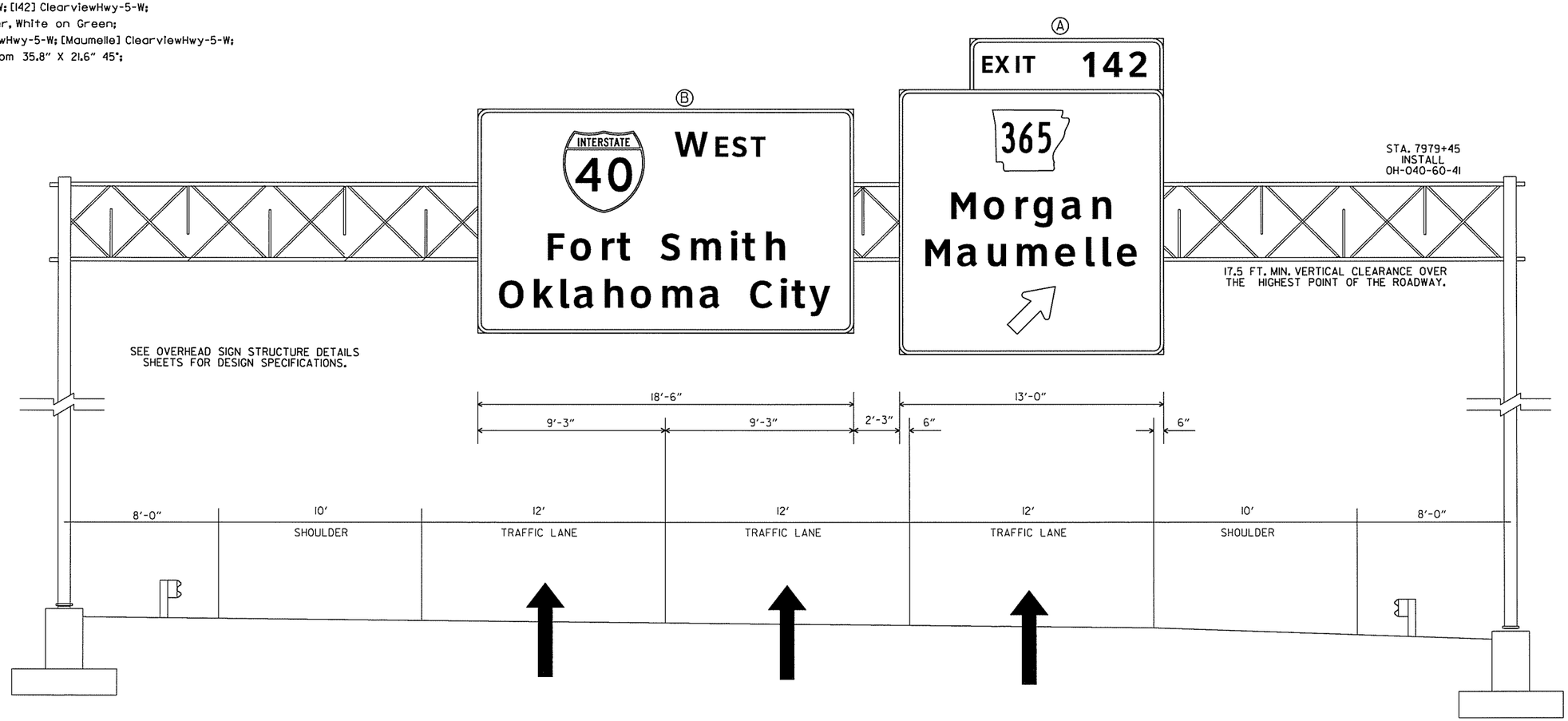

cggervasini 7/17/2014 7:43:30 PM
WORKSPACE: AHTD
L:\201\N017709 - I-40 at I-430 Interchange Modifications\Drawings\RCA0609_SP_MNL_2i-46.dgn
REVISED DATE:

DATE REVISED	DATE FILMED	DATE REVISED	DATE FILMED	FED.RD. DIST.NO.	STATE	FED.AID PROJ.NO.	SHEET NO.	TOTAL SHEETS
				6	ARK.			
				JOB NO.		CA0609	147	693

(2) SIGN PLACEMENT SHEET

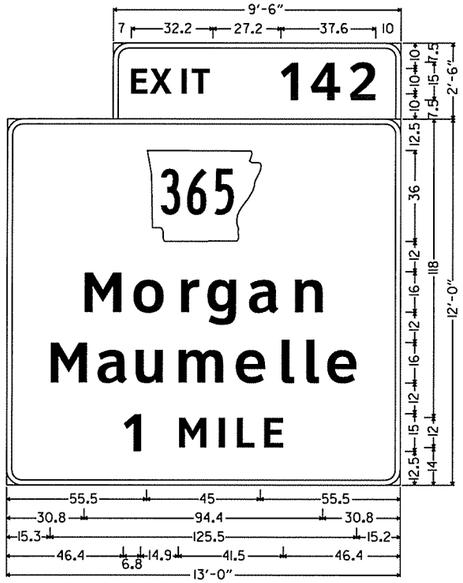

BM-040-60-STA8051+54WB;
6.0" Radius, 2.0" Border, White on Green;
[EXIT] ClearviewHwy-5-W; [142] ClearviewHwy-5-W;
6.0" Radius, 2.0" Border, White on Green;
MI-6; [Morgan] ClearviewHwy-5-W; [Maumelle] ClearviewHwy-5-W;
[1 MILE] ClearviewHwy-5-W;

NOTES:

THE CONTRACTOR WILL VERIFY SIGN PLACEMENT AND MAKE ANY ADJUSTMENTS NECESSARY TO ALIGN SIGNS OVER INTENDED LANES.

SINCE THE CONTRACTOR WILL BE REQUIRED TO INSTALL OVERHEAD SIGNS ON STRUCTURES WHICH ARE LOCATED OVER THE ROADWAYS WHICH ARE CURRENTLY OPEN TO TRAFFIC, IT WILL BE THE RESPONSIBILITY OF THE CONTRACTOR TO PROVIDE LANE CLOSURES AS A PART OF TRAFFIC CONTROL. PAYMENT FOR PROVIDING LANE CLOSURES WILL BE PAID SUBSIDIARY TO THE PAY ITEM "MAINTENANCE OF TRAFFIC". ALL MAINTENANCE OF TRAFFIC WORK MUST CONFORM WITH THE MUTCD.

STATE OF ARKANSAS
REGISTERED PROFESSIONAL ENGINEER
No.8141
NICCI D. TINER
7-18-14

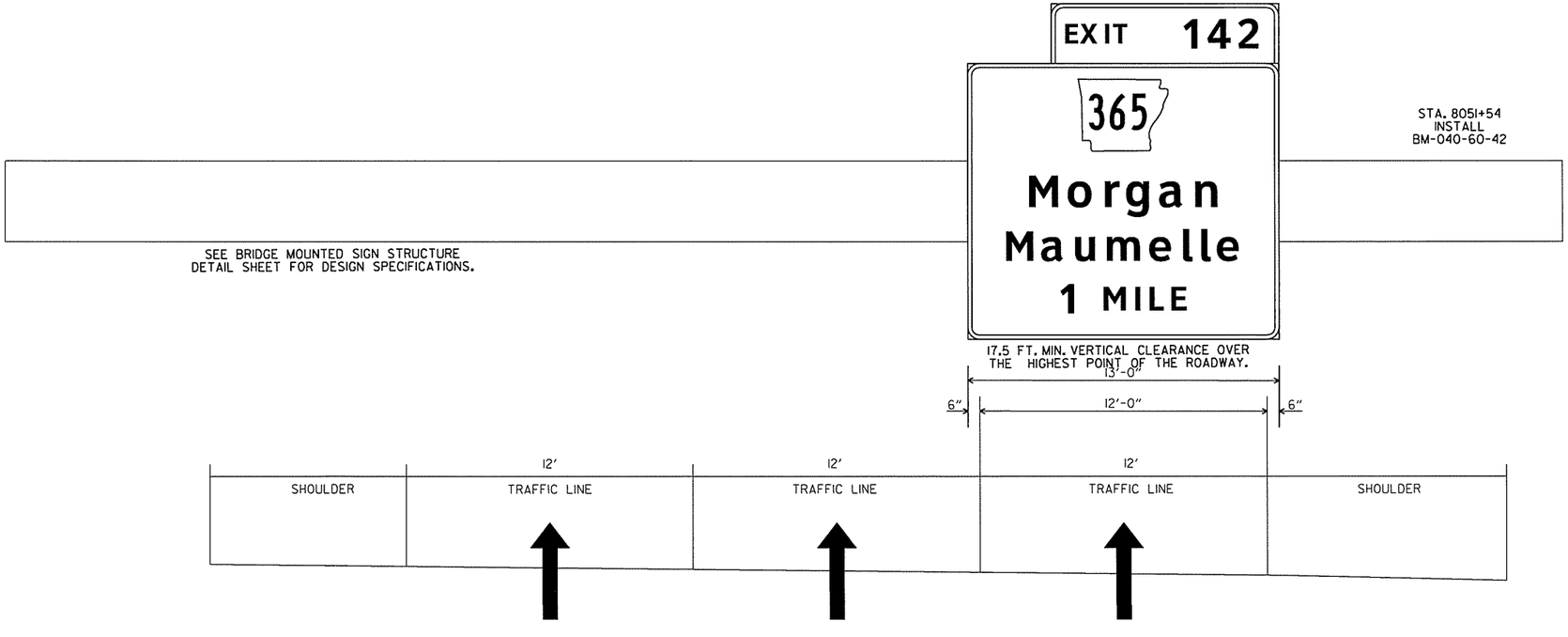

cggervasini 7/17/2014 7:43:30 PM
WORKSPACE: AHTD
L:\ROW\100709 - I-40 at I-430 Interchange Modifications\Drawings\RCA0609_SP_MNL_21-46.dgn
REVISED DATE:

DATE REVISED	DATE FILMED	DATE REVISED	DATE FILMED	FED.RD. DIST.NO.	STATE	FED.AID PROJ.NO.	SHEET NO.	TOTAL SHEETS
				6	ARK.			
				JOB NO.		CA0609	148	693

(2) SIGN PLACEMENT SHEET

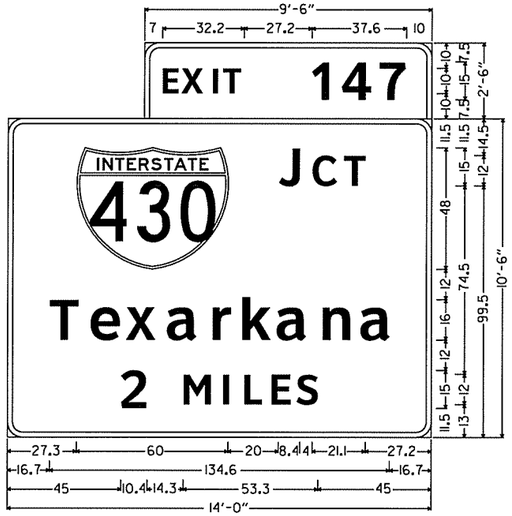

OH-040-60-STA8074+91EB;
6.0" Radius, 2.0" Border, White on Green;
[EXIT] ClearviewHwy-5-W; [147] ClearviewHwy-5-W;
6.0" Radius, 2.0" Border, White on Green;
[J] ClearviewHwy-5-W; [CT] ClearviewHwy-5-W; [Texarkana] ClearviewHwy-5-W;
[2] ClearviewHwy-5-W; [MILES] ClearviewHwy-5-W;

NOTES:

THE CONTRACTOR WILL VERIFY SIGN PLACEMENT AND MAKE ANY ADJUSTMENTS NECESSARY TO ALIGN SIGNS OVER INTENDED LANES.

SINCE THE CONTRACTOR WILL BE REQUIRED TO INSTALL OVERHEAD SIGNS ON STRUCTURES WHICH ARE LOCATED OVER THE ROADWAYS WHICH ARE CURRENTLY OPEN TO TRAFFIC, IT WILL BE THE RESPONSIBILITY OF THE CONTRACTOR TO PROVIDE LANE CLOSURES AS A PART OF TRAFFIC CONTROL. PAYMENT FOR PROVIDING LANE CLOSURES WILL BE PAID SUBSIDIARY TO THE PAY ITEM "MAINTENANCE OF TRAFFIC". ALL MAINTENANCE OF TRAFFIC WORK MUST CONFORM WITH THE MUTCD.

STATE OF ARKANSAS
REGISTERED PROFESSIONAL ENGINEER
No.8141
NICCI D. TINER
7-18-14

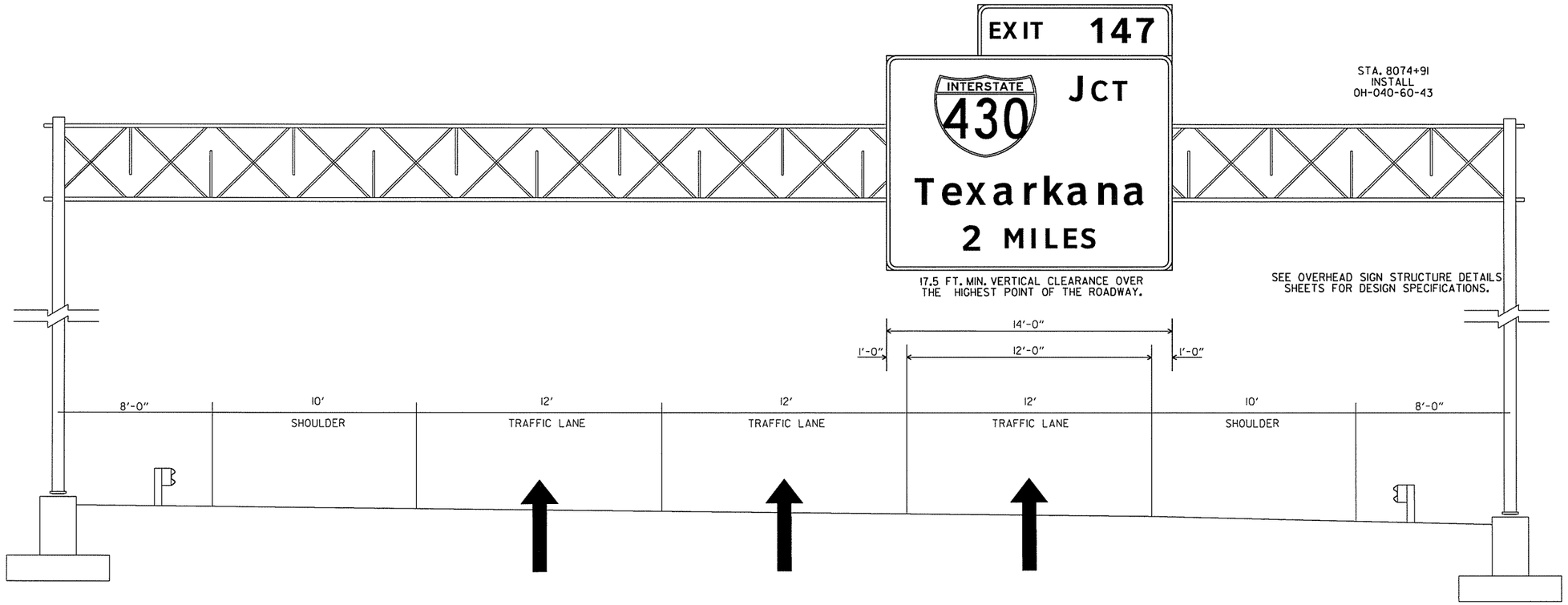

cggervasini 7/17/2014 7:43:34 PM
WORKSPACE: AHTD
L:\20IN\IN07709 - I-40 at I-430 Interchange Modifications\Drawings\RCA0609_SP_MNL_21-46.dgn
REVISED DATE:

DATE REVISED	DATE FILMED	DATE REVISED	DATE FILMED	FED.RD. DIST.NO.	STATE	FED.AID PROJ.NO.	SHEET NO.	TOTAL SHEETS
				6	ARK.			
				JOB NO.		CA0609	149	693

(2) SIGN PLACEMENT SHEET

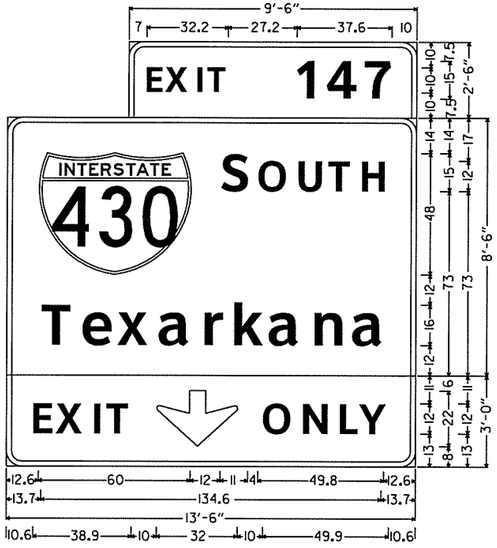

OH-040-60-STA8149+41EB-A;
6.0" Radius, 2.0" Border, White on Green;
[EXIT] ClearviewHwy-5-W; [147] ClearviewHwy-5-W;
6.0" Radius, 2.0" Border, White on Green;
[S] ClearviewHwy-5-W; [OUTH] ClearviewHwy-5-W;
[Texarkana] ClearviewHwy-5-W;
6.0" Radius, 2.0" Border, Black on Yellow;
[EXIT] ClearviewHwy-5-W; Down Arrow 22.0" 270°;
[ONLY] ClearviewHwy-5-W;

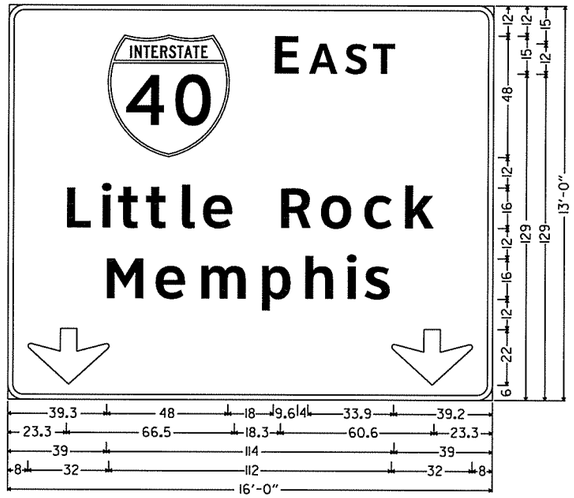

OH-040-60-STA8149+41EB-B;
6.0" Radius, 2.0" Border, White on Green;
[E] ClearviewHwy-5-W; [AST] ClearviewHwy-5-W; [Little Rock] ClearviewHwy-5-W;
[Memphis] ClearviewHwy-5-W; Down Arrow 22.0" 270°; Down Arrow 22.0" 270°;

NOTES:

THE CONTRACTOR WILL VERIFY SIGN PLACEMENT AND MAKE ANY ADJUSTMENTS NECESSARY TO ALIGN SIGNS OVER INTENDED LANES.

SINCE THE CONTRACTOR WILL BE REQUIRED TO INSTALL OVERHEAD SIGNS ON STRUCTURES WHICH ARE LOCATED OVER THE ROADWAYS WHICH ARE CURRENTLY OPEN TO TRAFFIC, IT WILL BE THE RESPONSIBILITY OF THE CONTRACTOR TO PROVIDE LANE CLOSURES AS A PART OF TRAFFIC CONTROL. PAYMENT FOR PROVIDING LANE CLOSURES WILL BE PAID SUBSIDIARY TO THE PAY ITEM "MAINTENANCE OF TRAFFIC". ALL MAINTENANCE OF TRAFFIC WORK MUST CONFORM WITH THE MUTCD.

STATE OF ARKANSAS
REGISTERED PROFESSIONAL ENGINEER
No.8141
NICCI D. TINDER
7-18-14

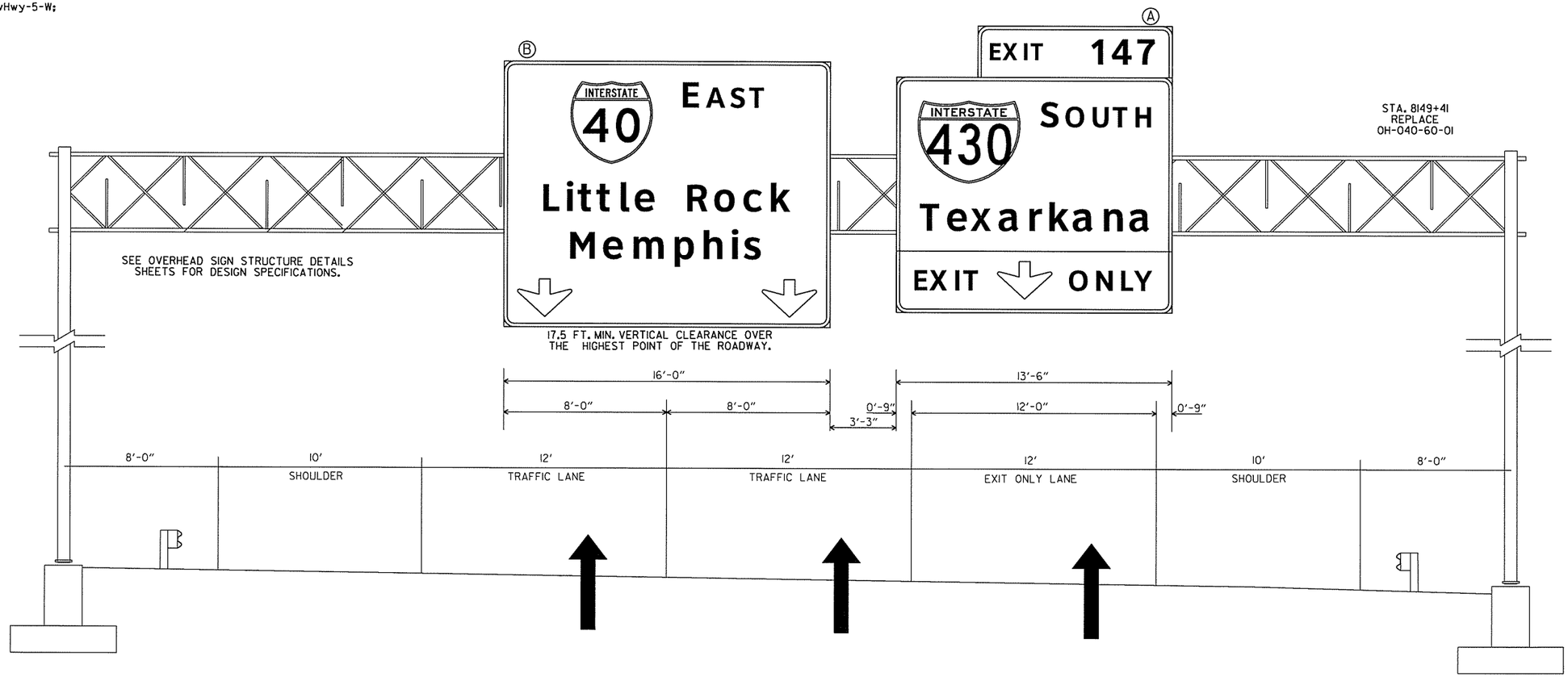

cggervasini 7/17/2014 7:43:35 PM
WORKSPACE: AHTD
L:\20IN\M01709 - I-40 at I-430 Interchange Modifications\Drawings\RCA0609_SP_MNL_2I-46.dgn
REVISED DATE:

DATE REVISED	DATE FILMED	DATE REVISED	DATE FILMED	FED.RD. DIST.NO.	STATE	FED.AID PROJ.NO.	SHEET NO.	TOTAL SHEETS
				6	ARK.			
				JOB NO.		CA0609	150	693

(2) SIGN PLACEMENT SHEET

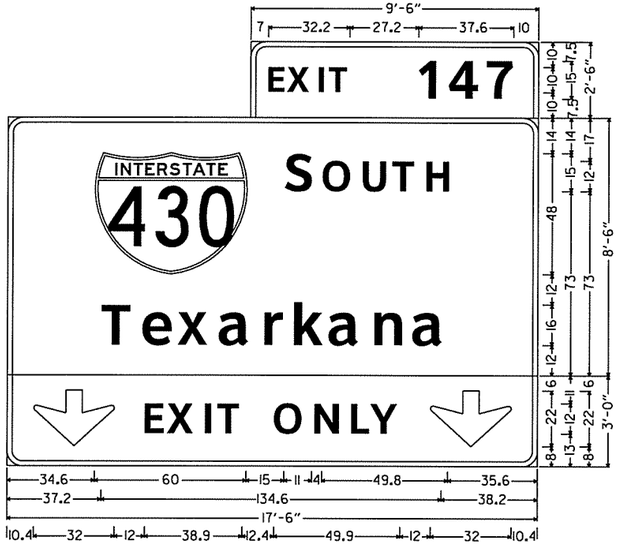

OH-040-60-STA8187+00EB-A;
6.0" Radius, 2.0" Border, White on Green;
[EXIT] ClearviewHwy-5-W; [147] ClearviewHwy-5-W;
6.0" Radius, 2.0" Border, White on Green;
[S] ClearviewHwy-5-W; [OUTH] ClearviewHwy-5-W; [Texarkana] ClearviewHwy-5-W;
6.0" Radius, 2.0" Border, Black on Yellow;
Down Arrow 22.0" 270°; [EXIT ONLY] ClearviewHwy-5-W; Down Arrow 22.0" 270°;

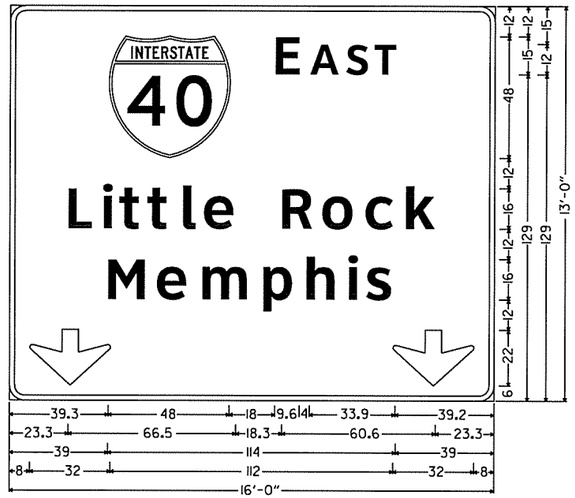

OH-040-60-STA8187+00EB-B;
6.0" Radius, 2.0" Border, White on Green;
[E] ClearviewHwy-5-W; [AST] ClearviewHwy-5-W; [Little Rock] ClearviewHwy-5-W;
[Memphis] ClearviewHwy-5-W; Down Arrow 22.0" 270°; Down Arrow 22.0" 270°;

NOTES:

THE CONTRACTOR WILL VERIFY SIGN PLACEMENT AND MAKE ANY ADJUSTMENTS NECESSARY TO ALIGN SIGNS OVER INTENDED LANES.

SINCE THE CONTRACTOR WILL BE REQUIRED TO INSTALL OVERHEAD SIGNS ON STRUCTURES WHICH ARE LOCATED OVER THE ROADWAYS WHICH ARE CURRENTLY OPEN TO TRAFFIC, IT WILL BE THE RESPONSIBILITY OF THE CONTRACTOR TO PROVIDE LANE CLOSURES AS A PART OF TRAFFIC CONTROL. PAYMENT FOR PROVIDING LANE CLOSURES WILL BE PAID SUBSIDIARY TO THE PAY ITEM "MAINTENANCE OF TRAFFIC". ALL MAINTENANCE OF TRAFFIC WORK MUST CONFORM WITH THE MUTCD.

STATE OF ARKANSAS
REGISTERED PROFESSIONAL ENGINEER
No.8141
NICCI D. TINER
7-18-14

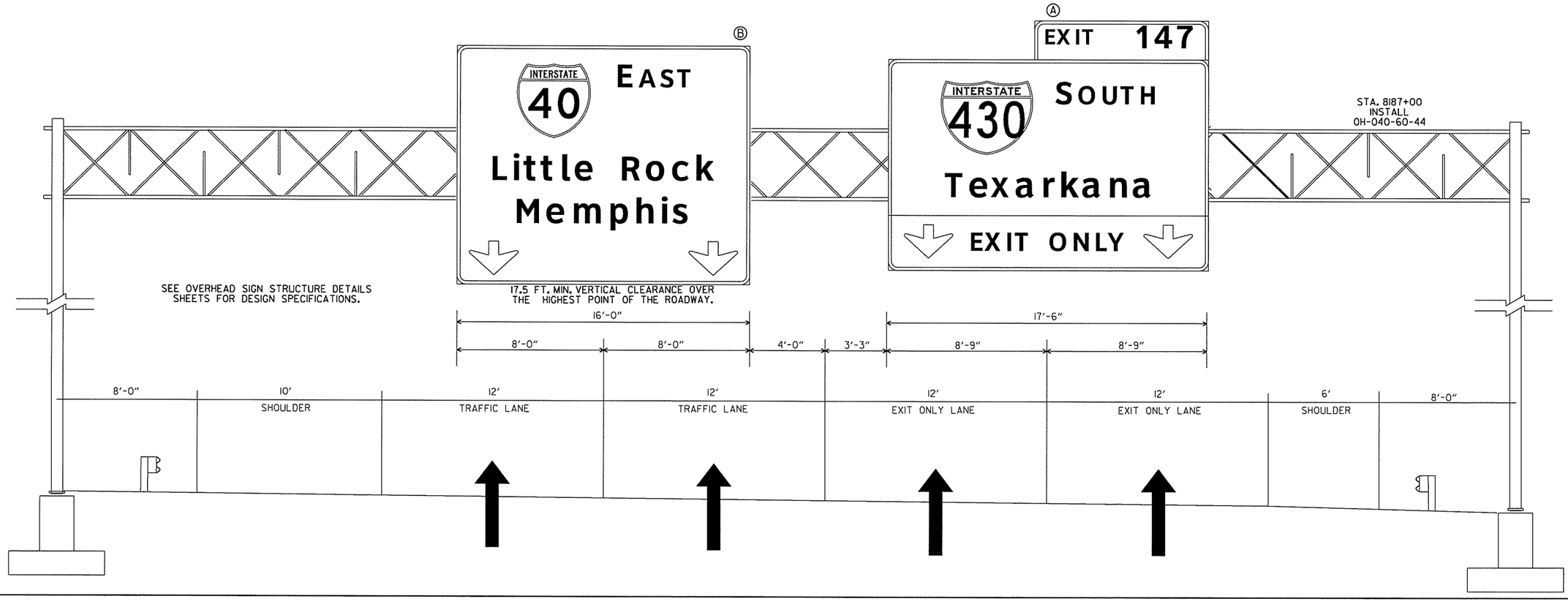

cggervasini 7/17/2014 7:43:35 PM
WORKSPACE: AHTD
L:\20IN\I40\709 - I-40 at I-430 Interchange Modifications\Drawings\RCA0609_SP_MNL_21-16.dgn
REVISED DATE:

DATE REVISED	DATE FILMED	DATE REVISED	DATE FILMED	FED.RD. DIST.NO.	STATE	FED.AID PROJ.NO.	SHEET NO.	TOTAL SHEETS
				6	ARK.			
				JOB NO.		CA0609	151	693

(2) SIGN PLACEMENT SHEET

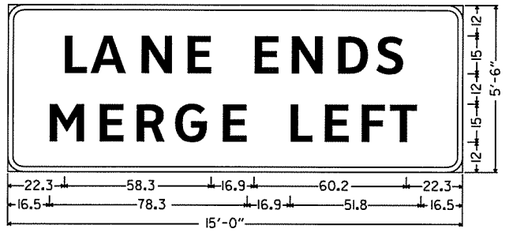

BM-040-60-STA8209+98WB; 6.0" Radius, 2.0" Border, Black on Yellow;
[LANE ENDS] ClearviewHwy-5-W; [MERGE LEFT] ClearviewHwy-5-W;

NOTES:

THE CONTRACTOR WILL VERIFY SIGN PLACEMENT AND MAKE ANY ADJUSTMENTS NECESSARY TO ALIGN SIGNS OVER INTENDED LANES.

SINCE THE CONTRACTOR WILL BE REQUIRED TO INSTALL OVERHEAD SIGNS ON STRUCTURES WHICH ARE LOCATED OVER THE ROADWAYS WHICH ARE CURRENTLY OPEN TO TRAFFIC, IT WILL BE THE RESPONSIBILITY OF THE CONTRACTOR TO PROVIDE LANE CLOSURES AS A PART OF TRAFFIC CONTROL. PAYMENT FOR PROVIDING LANE CLOSURES WILL BE PAID SUBSIDIARY TO THE PAY ITEM "MAINTENANCE OF TRAFFIC". ALL MAINTENANCE OF TRAFFIC WORK MUST CONFORM WITH THE MUTCD.

STATE OF ARKANSAS
REGISTERED PROFESSIONAL ENGINEER
No.8141
NICCI D. TINER
7-18-14

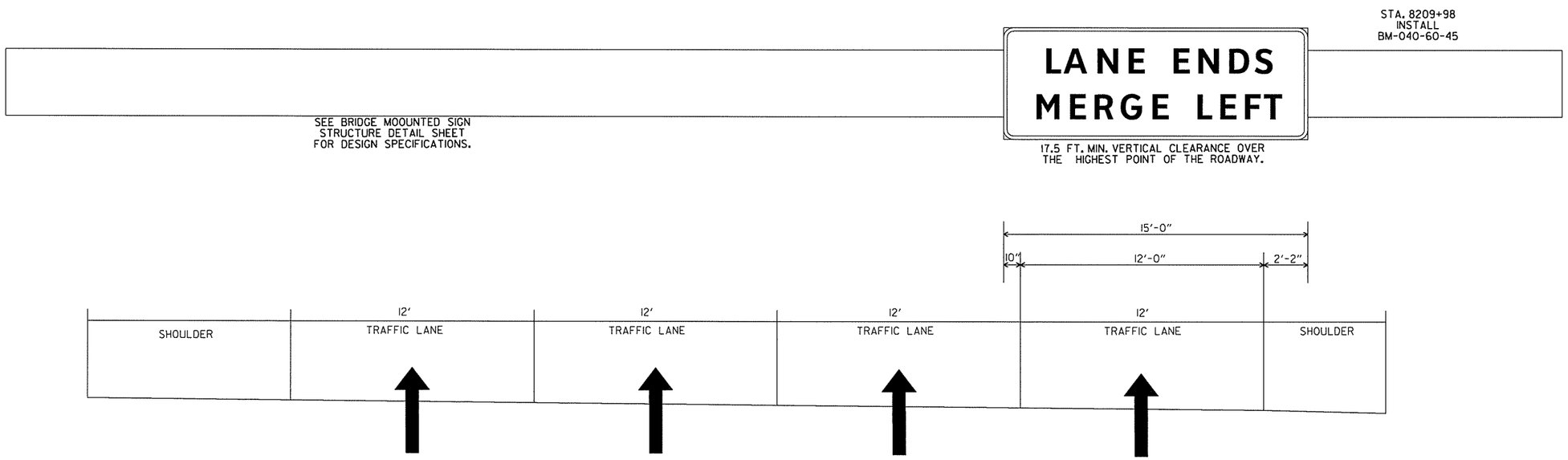

cggervasini 7/17/2014 7:43:35 PM
WORKSPACE: AHTD
L:\2011\101709 - I-40 at I-430 Interchange Modifications\Drawings\RCA0609_SP_MNL_21-46.dgn
REVISED DATE:

DATE REVISED	DATE FILMED	DATE REVISED	DATE FILMED	FED.RD. DIST.NO.	STATE	FED.AID PROJ.NO.	SHEET NO.	TOTAL SHEETS
				6	ARK.			
				JOB NO.		CA0609	152	693

(2) SIGN PLACEMENT SHEET

STATE OF ARKANSAS
REGISTERED PROFESSIONAL ENGINEER
No.8141
NICCI D. TINER
7-18-14

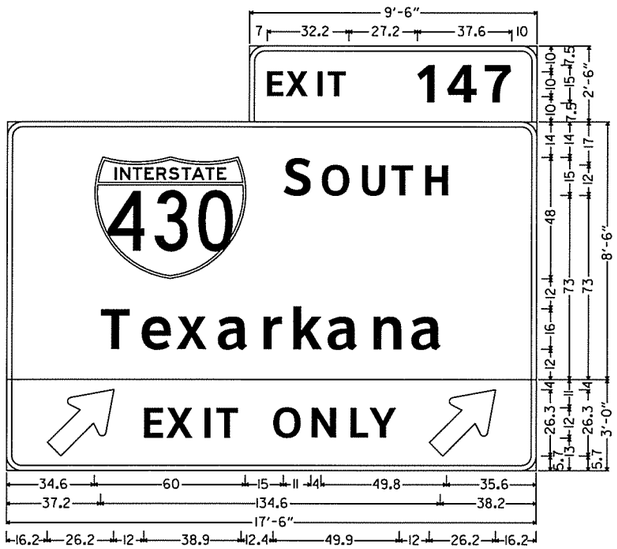

OH-040-60-STA8213+85EB-A;
6.0" Radius, 2.0" Border, White on Green;
[EXIT] ClearviewHwy-5-W; [147] ClearviewHwy-5-W;
6.0" Radius, 2.0" Border, White on Green;
[S] ClearviewHwy-5-W; [OUTH] ClearviewHwy-5-W; [Texarkana] ClearviewHwy-5-W;
6.0" Radius, 2.0" Border, Black on Yellow;
Standard Arrow Custom 33.4" X 20.3" 45°; [EXIT ONLY] ClearviewHwy-5-W;
Standard Arrow Custom 33.4" X 20.3" 45°;

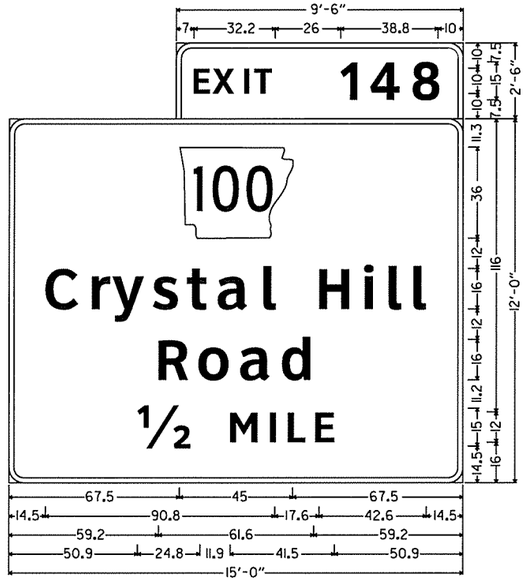

OH-040-60-STA8213+85EB-B;
6.0" Radius, 2.0" Border, White on Green;
[EXIT] ClearviewHwy-5-W; [148] ClearviewHwy-5-W;
6.0" Radius, 2.0" Border, White on Green;
MI-6; [Crystal Hill] ClearviewHwy-5-W; [Road] ClearviewHwy-5-W;
[½ MILE] ClearviewHwy-5-W;

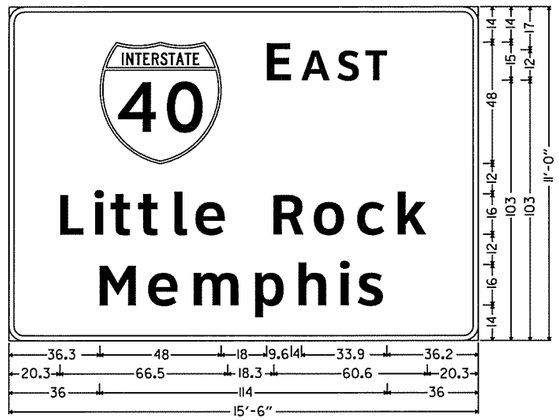

OH-040-60-STA8213+85EB-C;
6.0" Radius, 2.0" Border, White on Green;
[E] ClearviewHwy-5-W; [AST] ClearviewHwy-5-W; [Little Rock] ClearviewHwy-5-W;
[Memphis] ClearviewHwy-5-W;

NOTES:

THE CONTRACTOR WILL VERIFY SIGN PLACEMENT AND MAKE ANY ADJUSTMENTS NECESSARY TO ALIGN SIGNS OVER INTENDED LANES.

SINCE THE CONTRACTOR WILL BE REQUIRED TO INSTALL OVERHEAD SIGNS ON STRUCTURES WHICH ARE LOCATED OVER THE ROADWAYS WHICH ARE CURRENTLY OPEN TO TRAFFIC, IT WILL BE THE RESPONSIBILITY OF THE CONTRACTOR TO PROVIDE LANE CLOSURES AS A PART OF TRAFFIC CONTROL. PAYMENT FOR PROVIDING LANE CLOSURES WILL BE PAID SUBSIDIARY TO THE PAY ITEM "MAINTENANCE OF TRAFFIC". ALL MAINTENANCE OF TRAFFIC WORK MUST CONFORM WITH THE MUTCD.

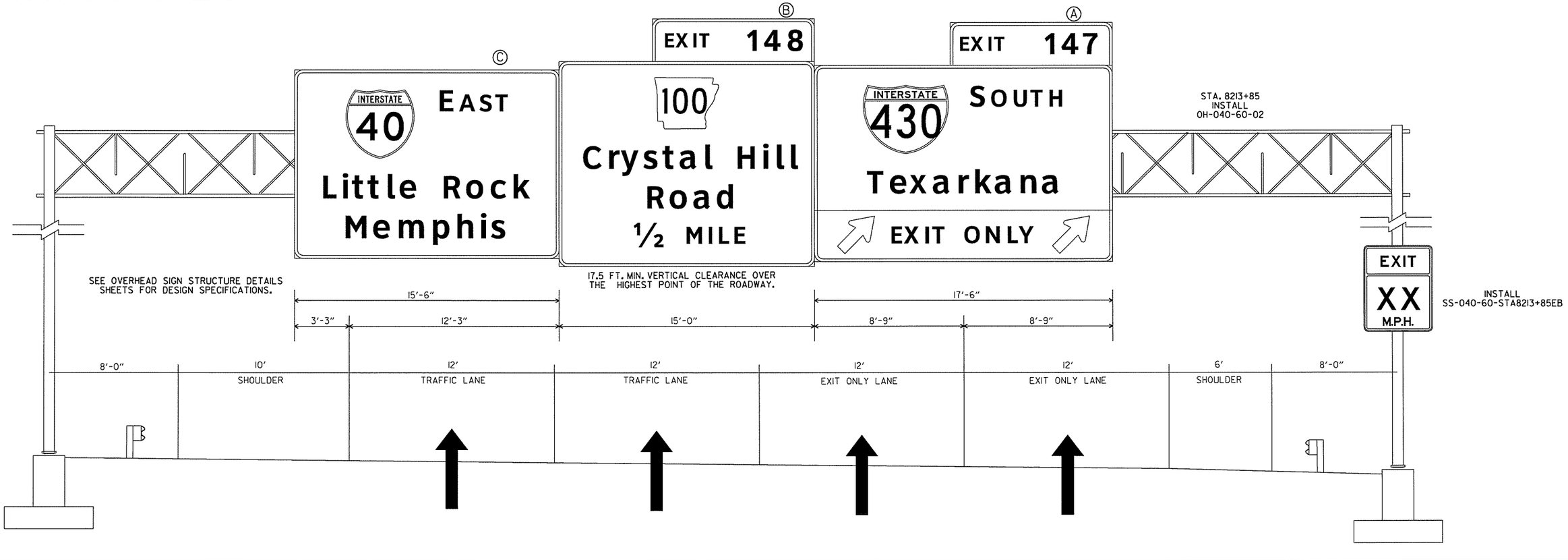

cggervasini 7/17/2014 7:43:35 PM
WORKSPACE: AHTD
L:\2011\11017709 - I-40 at I-430 Interchange Modifications\Drawings\RCA0609_SP_MNL_21-46.dgn
REVISED DATE:

DATE REVISED	DATE FILMED	DATE REVISED	DATE FILMED	FED.RD. DIST.NO.	STATE	FED.AID PROJ.NO.	SHEET NO.	TOTAL SHEETS
				6	ARK.			
				JOB NO.		CA0609	153	693

(2) SIGN PLACEMENT SHEET

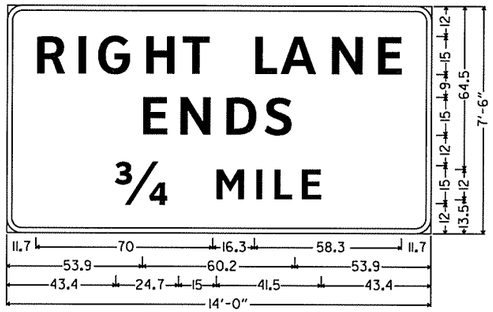

OH-RAMP4-60-8212+90WB; 6.0" Radius, 2.0" Border, Black on Yellow;
[RIGHT LANE] ClearviewHwy-5-W; [ENDS] ClearviewHwy-5-W;
[3/4] ClearviewHwy-5-W; [MILE] ClearviewHwy-5-W;

STATE OF ARKANSAS
REGISTERED PROFESSIONAL ENGINEER
No.8141
NICCI D. TINER
7-18-14

NOTES:

THE CONTRACTOR WILL VERIFY SIGN PLACEMENT AND MAKE ANY ADJUSTMENTS NECESSARY TO ALIGN SIGNS OVER INTENDED LANES.

SINCE THE CONTRACTOR WILL BE REQUIRED TO INSTALL OVERHEAD SIGNS ON STRUCTURES WHICH ARE LOCATED OVER THE ROADWAYS WHICH ARE CURRENTLY OPEN TO TRAFFIC, IT WILL BE THE RESPONSIBILITY OF THE CONTRACTOR TO PROVIDE LANE CLOSURES AS A PART OF TRAFFIC CONTROL. PAYMENT FOR PROVIDING LANE CLOSURES WILL BE PAID SUBSIDIARY TO THE PAY ITEM "MAINTENANCE OF TRAFFIC". ALL MAINTENANCE OF TRAFFIC WORK MUST CONFORM WITH THE MUTCD.

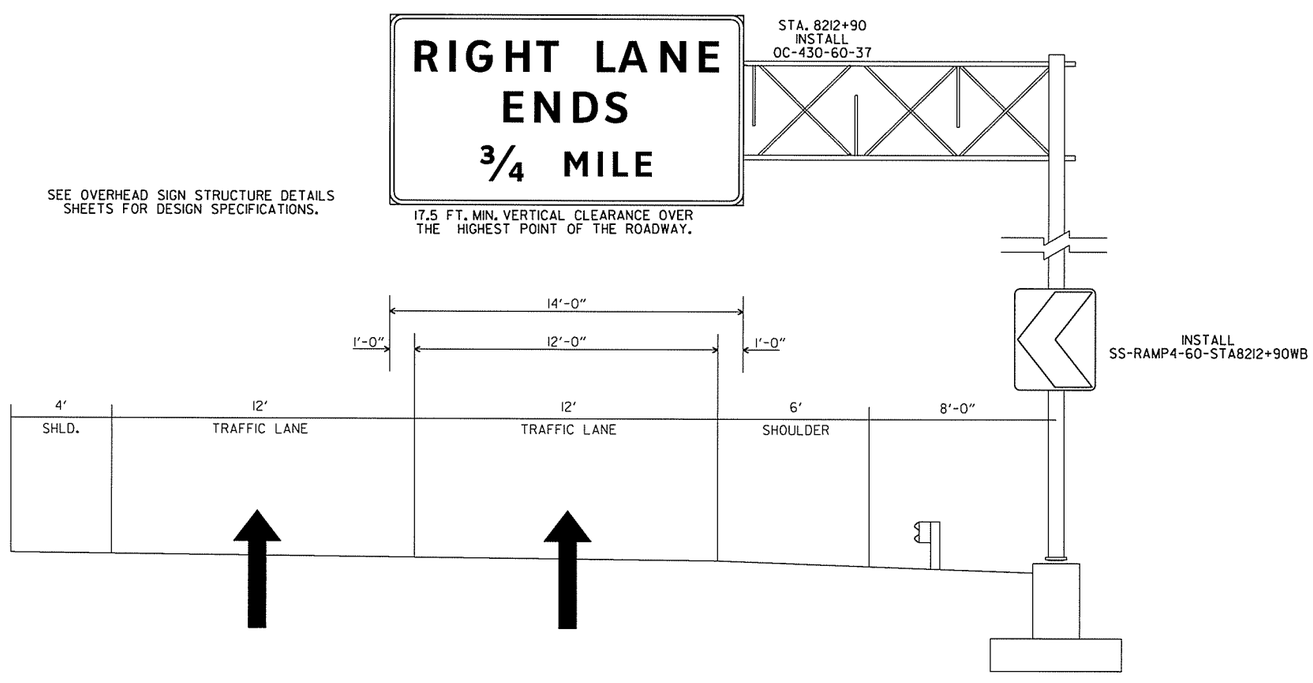

cggervasini 7/17/2014 7:43:36 PM
WORKSPACE: AHTD
L:\2011\1017709 - I-40 at I-430 Interchange Modifications\Drawings\RCA0609_SP_MNL_21-46.dgn
REVISED DATE:

DATE REVISED	DATE FILMED	DATE REVISED	DATE FILMED	FED.RD. DIST.NO.	STATE	FED.AID PROJ.NO.	SHEET NO.	TOTAL SHEETS
				6	ARK.			
				JOB NO.		CA0609	154	693

(2) SIGN PLACEMENT SHEET

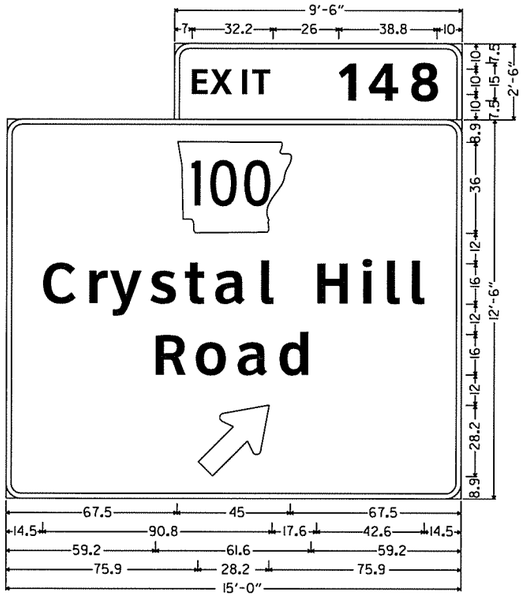

BM-040-60-STA824I+5IEB;
6.0" Radius, 2.0" Border, White on Green;
[EXIT] ClearviewHwy-5-W; [148] ClearviewHwy-5-W;
6.0" Radius, 2.0" Border, White on Green;
MI-6; [Crystal Hill] ClearviewHwy-5-W; [Road] ClearviewHwy-5-W;
Standard Arrow Custom 35.8" X 21.6" 45°;

NOTES:

THE CONTRACTOR WILL VERIFY SIGN PLACEMENT AND MAKE ANY ADJUSTMENTS NECESSARY TO ALIGN SIGNS OVER INTENDED LANES.

SINCE THE CONTRACTOR WILL BE REQUIRED TO INSTALL OVERHEAD SIGNS ON STRUCTURES WHICH ARE LOCATED OVER THE ROADWAYS WHICH ARE CURRENTLY OPEN TO TRAFFIC, IT WILL BE THE RESPONSIBILITY OF THE CONTRACTOR TO PROVIDE LANE CLOSURES AS A PART OF TRAFFIC CONTROL. PAYMENT FOR PROVIDING LANE CLOSURES WILL BE PAID SUBSIDIARY TO THE PAY ITEM "MAINTENANCE OF TRAFFIC". ALL MAINTENANCE OF TRAFFIC WORK MUST CONFORM WITH THE MUTCD.

STATE OF ARKANSAS
REGISTERED PROFESSIONAL ENGINEER
No.8141
NICCI D. TINER
7-18-14

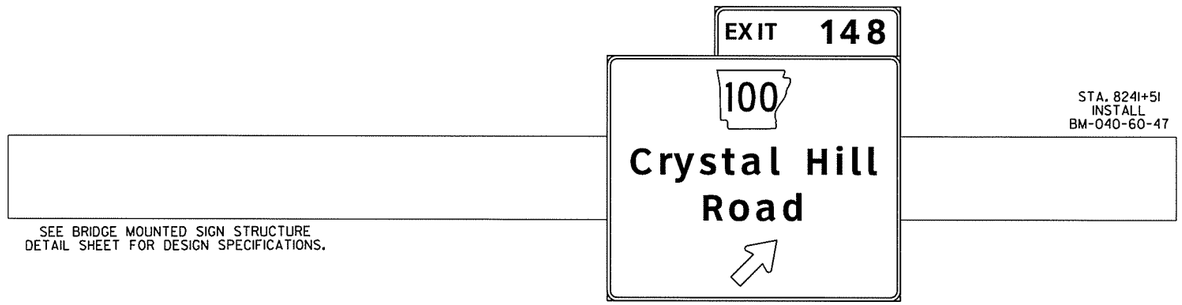

17.5 FT. MIN. VERTICAL CLEARANCE OVER THE HIGHEST POINT OF THE ROADWAY.

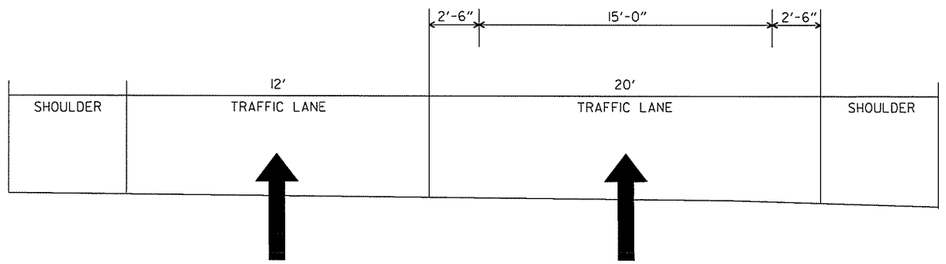

cggervasini 7/17/2014 7:43:36 PM
WORKSPACE: AHTD
L:\20IN\I0I709 - I-40 at I-430 Interchange Modifications\Drawings\RCA0609_SP_MNL_2I-46.dgn
REVISED DATE:

DATE REVISED	DATE FILMED	DATE REVISED	DATE FILMED	FED.RD. DIST.NO.	STATE	FED.AID PROJ.NO.	SHEET NO.	TOTAL SHEETS
				6	ARK.			
				JOB NO.		CA0609	155	693

(2) SIGN PLACEMENT SHEET

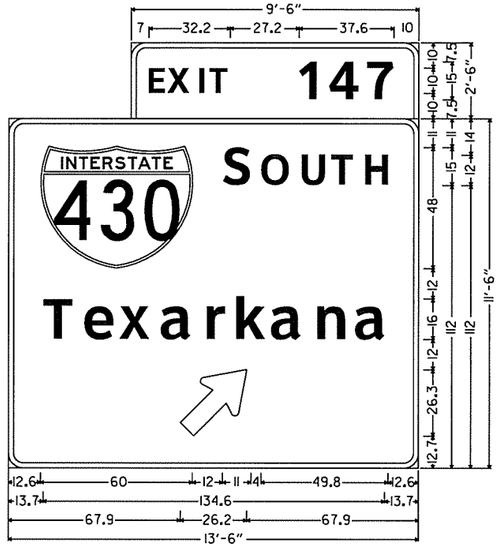

OH-040-60-STA8242+23WB-A;
6.0" Radius, 2.0" Border, White on Green;
[EXIT] ClearviewHwy-5-W; [147] ClearviewHwy-5-W;
6.0" Radius, 2.0" Border, White on Green;
[S] ClearviewHwy-5-W; [OUTH] ClearviewHwy-5-W;
[Texarkana] ClearviewHwy-5-W; Standard Arrow Custom 33.4" X 20.3" 45°;

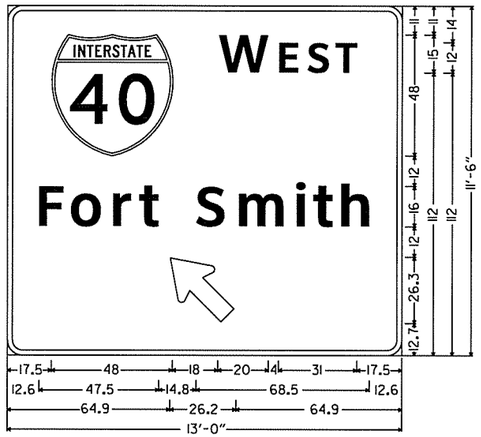

OH-040-60-STA8242+23WB-B;
6.0" Radius, 2.0" Border, White on Green;
[W] ClearviewHwy-5-W; [EST] ClearviewHwy-5-W;
[Fort Smith] ClearviewHwy-5-W-R;
Standard Arrow Custom 33.4" X 20.3" 135°;

NOTES:

THE CONTRACTOR WILL VERIFY SIGN PLACEMENT AND MAKE ANY ADJUSTMENTS NECESSARY TO ALIGN SIGNS OVER INTENDED LANES.

SINCE THE CONTRACTOR WILL BE REQUIRED TO INSTALL OVERHEAD SIGNS ON STRUCTURES WHICH ARE LOCATED OVER THE ROADWAYS WHICH ARE CURRENTLY OPEN TO TRAFFIC, IT WILL BE THE RESPONSIBILITY OF THE CONTRACTOR TO PROVIDE LANE CLOSURES AS A PART OF TRAFFIC CONTROL. PAYMENT FOR PROVIDING LANE CLOSURES WILL BE PAID SUBSIDIARY TO THE PAY ITEM "MAINTENANCE OF TRAFFIC". ALL MAINTENANCE OF TRAFFIC WORK MUST CONFORM WITH THE MUTCD.

STATE OF ARKANSAS
REGISTERED PROFESSIONAL ENGINEER
No.8141
NICCI D. TINER
7-18-14

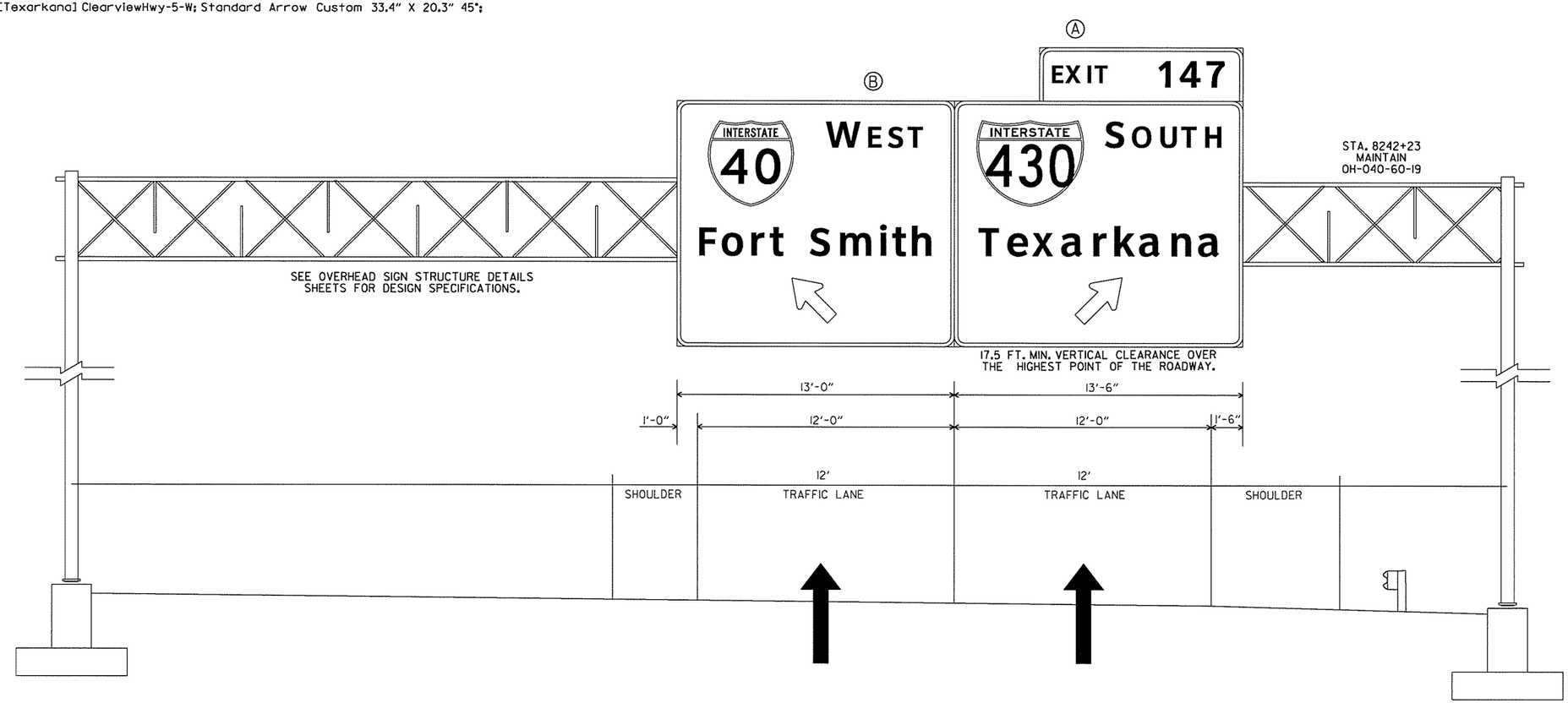

cggervasini 7/17/2014 7:43:36 PM
WORKSPACE: AHTD
L:\20IN\I0I709 - I-40 at I-430 Interchange Modifications\Drawings\RCA0609_SP_MNL_21-46.dgn
REVISED DATE:

DATE REVISED	DATE FILMED	DATE REVISED	DATE FILMED	FED.RD. DIST.NO.	STATE	FED.AID PROJ.NO.	SHEET NO.	TOTAL SHEETS
				6	ARK.			
				JOB NO.		CA0609	156	693

(2) SIGN PLACEMENT SHEET

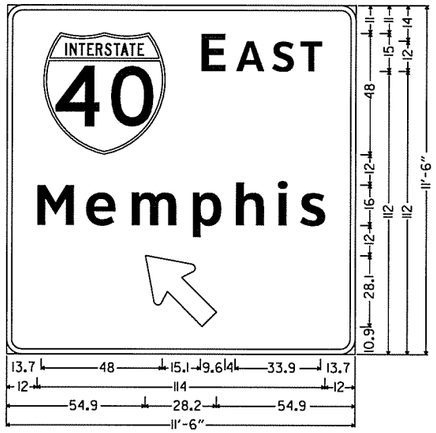

OH-040-60-STA8255+54EB-A;
6.0" Radius, 2.0" Border, White on Green;
[E] ClearviewHwy-5-W; [AST] ClearviewHwy-5-W;
[Memphis] ClearviewHwy-5-W;
Standard Arrow Custom 35.8" X 21.6" 135°;

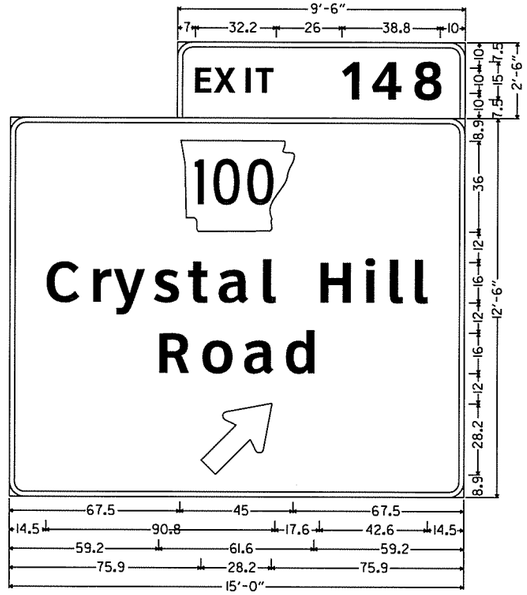

OH-040-60-STA8255+54EB-B
6.0" Radius, 2.0" Border, White on Green;
[EXIT] ClearviewHwy-5-W; [148] ClearviewHwy-5-W;
6.0" Radius, 2.0" Border, White on Green;
MI-6; [Crystal Hill] ClearviewHwy-5-W; [Road] ClearviewHwy-5-W;
Standard Arrow Custom 35.8" X 21.6" 45°;

NOTES:

THE CONTRACTOR WILL VERIFY SIGN PLACEMENT AND MAKE ANY ADJUSTMENTS NECESSARY TO ALIGN SIGNS OVER INTENDED LANES.

SINCE THE CONTRACTOR WILL BE REQUIRED TO INSTALL OVERHEAD SIGNS ON STRUCTURES WHICH ARE LOCATED OVER THE ROADWAYS WHICH ARE CURRENTLY OPEN TO TRAFFIC, IT WILL BE THE RESPONSIBILITY OF THE CONTRACTOR TO PROVIDE LANE CLOSURES AS A PART OF TRAFFIC CONTROL. PAYMENT FOR PROVIDING LANE CLOSURES WILL BE PAID SUBSIDIARY TO THE PAY ITEM "MAINTENANCE OF TRAFFIC". ALL MAINTENANCE OF TRAFFIC WORK MUST CONFORM WITH THE MUTCD.

STATE OF ARKANSAS
REGISTERED PROFESSIONAL ENGINEER
No. 8141
NICCI D. TINER
7-18-14

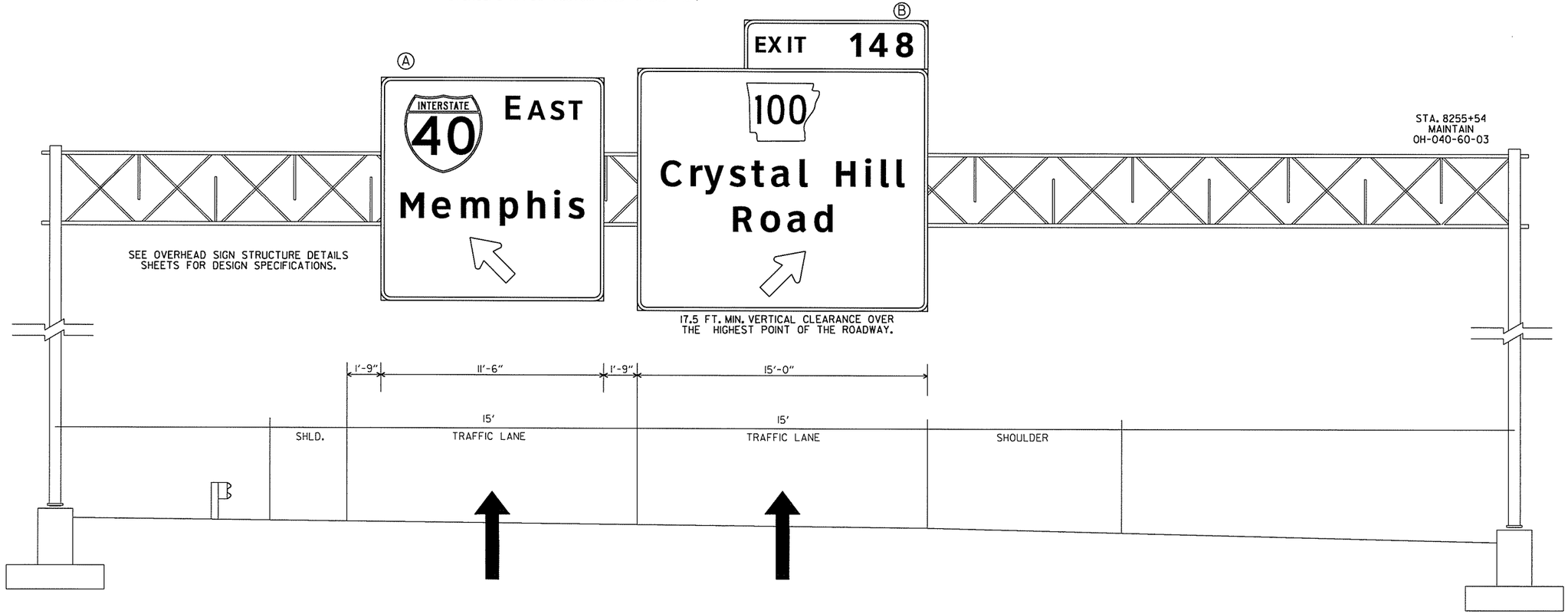

cggervasini 7/17/2014 7:43:36 PM
WORKSPACE: AHTD
L:\ZOIN\601709 - I-40 at I-430 Interchange Modifications\Drawings\RCA0609_SP_MNL_2I-46.dgn
REVISED DATE:

DATE REVISED	DATE FILMED	DATE REVISED	DATE FILMED	FED.RD. DIST.NO.	STATE	FED.AID PROJ.NO.	SHEET NO.	TOTAL SHEETS
				6	ARK.			
				JOB NO.		CA0609	157	693

(2) SIGN PLACEMENT SHEET

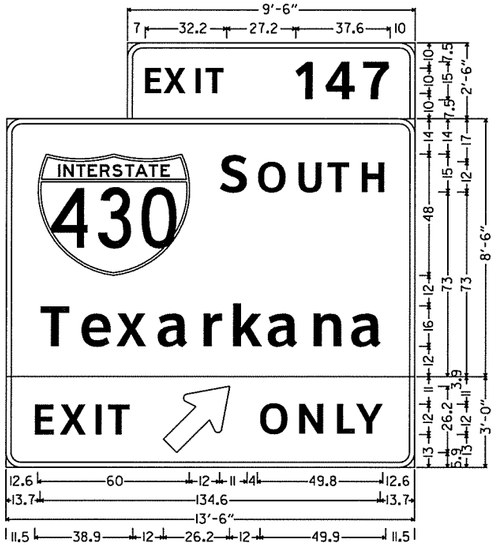

OH-040-60-STA8267+09WB-A;
6.0" Radius, 2.0" Border, White on Green;
[EXIT] ClearviewHwy-5-W; [147] ClearviewHwy-5-W;
6.0" Radius, 2.0" Border, White on Green;
[S] ClearviewHwy-5-W; [OUTH] ClearviewHwy-5-W;
[Texarkana] ClearviewHwy-5-W;
6.0" Radius, 2.0" Border, Black on Yellow;
[EXIT] ClearviewHwy-5-W 103 spacing;
Standard Arrow Custom 33.4" X 20.3" 45°; [ONLY] ClearviewHwy-5-W;

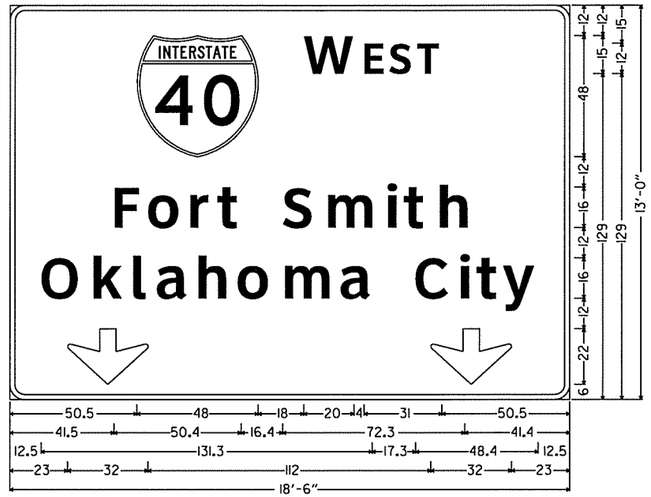

OH-040-60-STA8267+09WB-B;
6.0" Radius, 2.0" Border, White on Green;
[W] ClearviewHwy-5-W; [EST] ClearviewHwy-5-W; [Fort Smith] ClearviewHwy-5-W;
[Oklahoma City] ClearviewHwy-5-W; Down Arrow 22.0" 270°; Down Arrow 22.0" 270°;

STATE OF ARKANSAS
REGISTERED PROFESSIONAL ENGINEER
No.8141
NICCI D. TINER
7-18-14

NOTES:

THE CONTRACTOR WILL VERIFY SIGN PLACEMENT AND MAKE ANY ADJUSTMENTS NECESSARY TO ALIGN SIGNS OVER INTENDED LANES.

SINCE THE CONTRACTOR WILL BE REQUIRED TO INSTALL OVERHEAD SIGNS ON STRUCTURES WHICH ARE LOCATED OVER THE ROADWAYS WHICH ARE CURRENTLY OPEN TO TRAFFIC, IT WILL BE THE RESPONSIBILITY OF THE CONTRACTOR TO PROVIDE LANE CLOSURES AS A PART OF TRAFFIC CONTROL. PAYMENT FOR PROVIDING LANE CLOSURES WILL BE PAID SUBSIDIARY TO THE PAY ITEM "MAINTENANCE OF TRAFFIC". ALL MAINTENANCE OF TRAFFIC WORK MUST CONFORM WITH THE MUTCD.

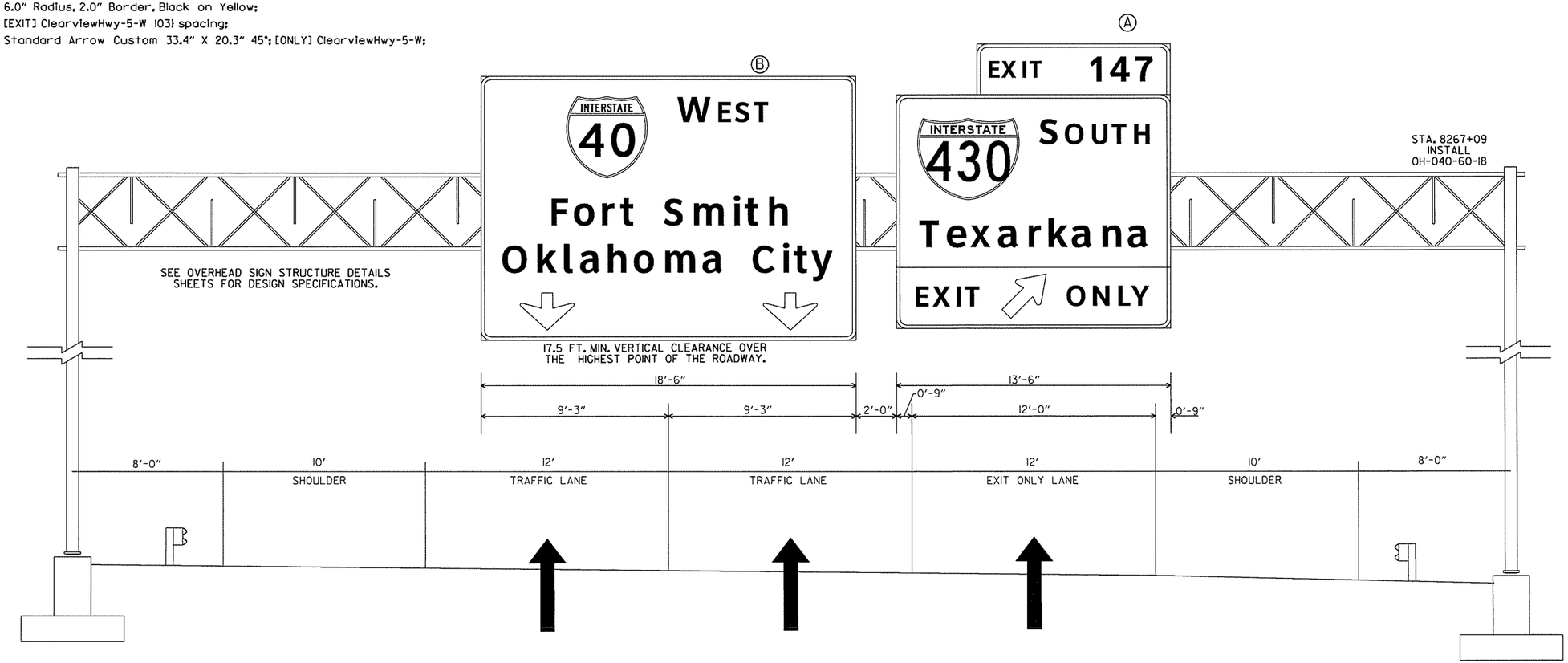

cggervasini 7/17/2014 7:43:36 PM
WORKSPACE: AHTD
L:\ROW\ROT\709 - I-40 at I-430 Interchange Modifications\Drawings\RCA0609_SP_MNL_21-46.dgn
REVISED DATE:

DATE REVISED	DATE FILMED	DATE REVISED	DATE FILMED	FED.RD. DIST.NO.	STATE	FED.AID PROJ.NO.	SHEET NO.	TOTAL SHEETS
				6	ARK.			
				JOB NO.		CA0609	158	693

(2) SIGN PLACEMENT SHEET

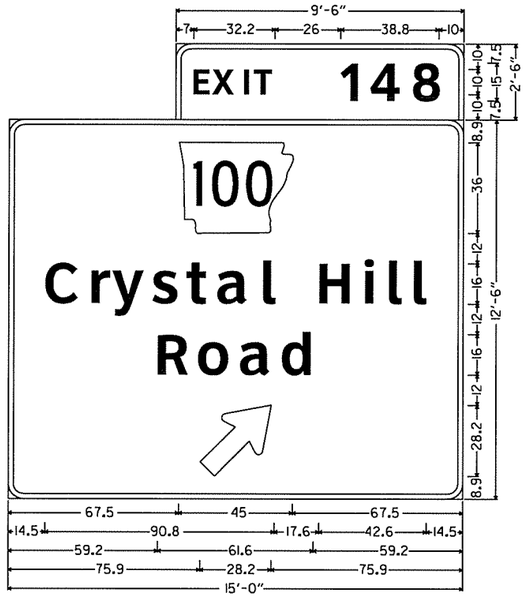

OH-040-60-I-WB-A;
6.0" Radius, 2.0" Border, White on Green;
[EXIT] ClearviewHwy-5-W; [148] ClearviewHwy-5-W;
6.0" Radius, 2.0" Border, White on Green;
MI-6; [Crystal Hill] ClearviewHwy-5-W; [Road] ClearviewHwy-5-W;
Standard Arrow Custom 35.8" X 21.6" 45°;

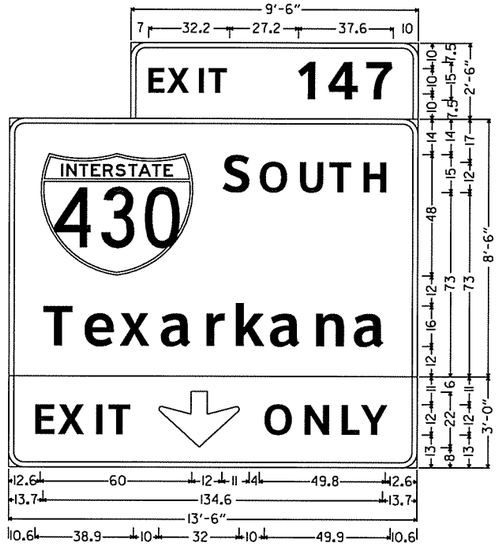

OH-040-60-I-WB-B;
6.0" Radius, 2.0" Border, White on Green;
[EXIT] ClearviewHwy-5-W; [147] ClearviewHwy-5-W;
6.0" Radius, 2.0" Border, White on Green;
[S] ClearviewHwy-5-W; [OUTH] ClearviewHwy-5-W;
[Texarkana] ClearviewHwy-5-W;
6.0" Radius, 2.0" Border, Black on Yellow;
[EXIT] ClearviewHwy-5-W; Down Arrow 22.0" 270°;
[ONLY] ClearviewHwy-5-W;

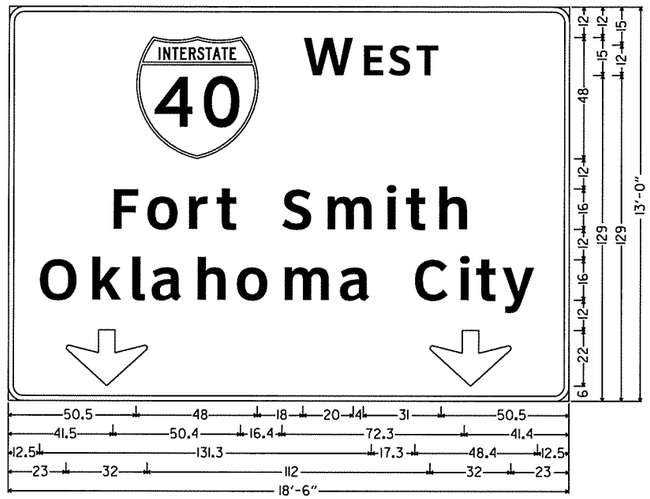

OH-040-60-I-WB-C;
6.0" Radius, 2.0" Border, White on Green;
[W] ClearviewHwy-5-W; [EST] ClearviewHwy-5-W; [Fort Smith] ClearviewHwy-5-W;
[Oklahoma City] ClearviewHwy-5-W; Down Arrow 22.0" 270°; Down Arrow 22.0" 270°;

STATE OF ARKANSAS
REGISTERED PROFESSIONAL ENGINEER
No.8141
NICCI D. TINER
7-18-14

NOTES:

THE CONTRACTOR WILL VERIFY SIGN PLACEMENT AND MAKE ANY ADJUSTMENTS NECESSARY TO ALIGN SIGNS OVER INTENDED LANES.

SINCE THE CONTRACTOR WILL BE REQUIRED TO INSTALL OVERHEAD SIGNS ON STRUCTURES WHICH ARE LOCATED OVER THE ROADWAYS WHICH ARE CURRENTLY OPEN TO TRAFFIC, IT WILL BE THE RESPONSIBILITY OF THE CONTRACTOR TO PROVIDE LANE CLOSURES AS A PART OF TRAFFIC CONTROL. PAYMENT FOR PROVIDING LANE CLOSURES WILL BE PAID SUBSIDIARY TO THE PAY ITEM "MAINTENANCE OF TRAFFIC". ALL MAINTENANCE OF TRAFFIC WORK MUST CONFORM WITH THE MUTCD.

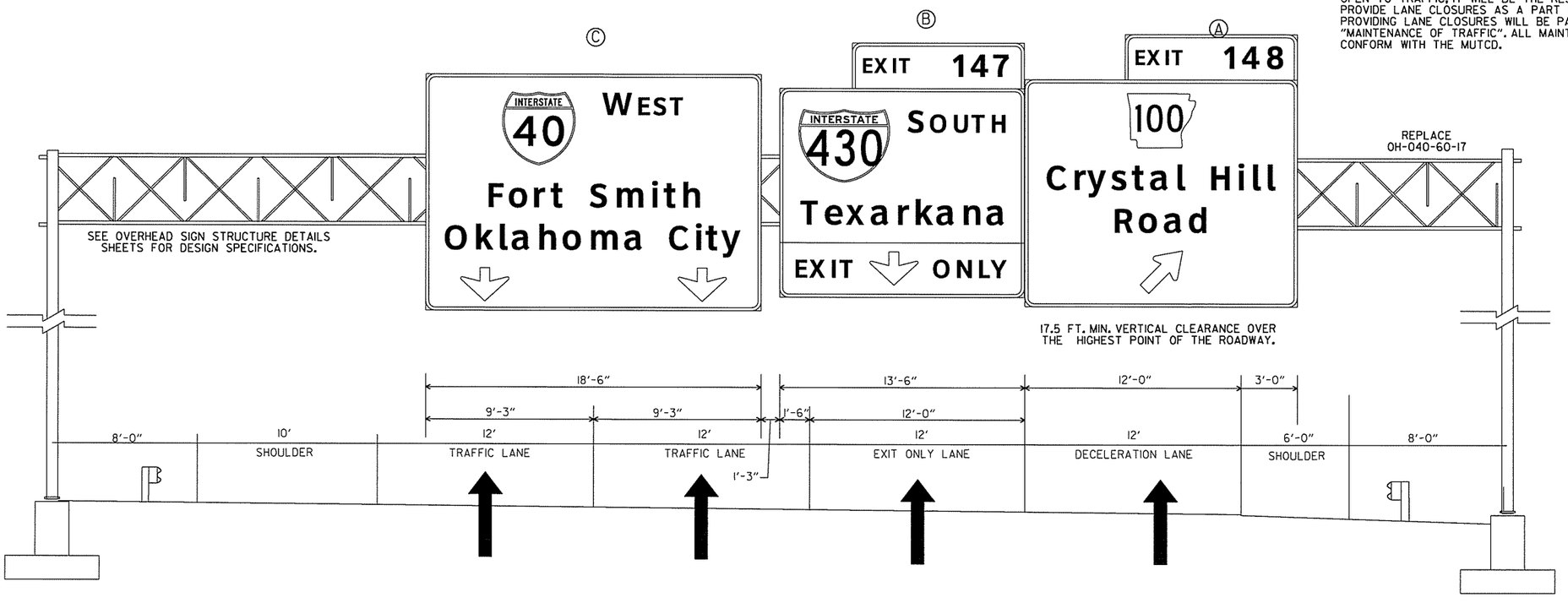

cggervasini 7/17/2014 7:43:37 PM
WORKSPACE: AHTD
L:\201\1\01709 - I-40 at I-430 Interchange Modifications\Drawings\RCA0609_SP_MNL_2i-46.dgn
REVISED DATE:

DATE REVISED	DATE FILMED	DATE REVISED	DATE FILMED	FED.RD. DIST.NO.	STATE	FED.AID PROJ.NO.	SHEET NO.	TOTAL SHEETS
				6	ARK.			
				JOB NO.		CA0609	159	693

(2) SIGN PLACEMENT SHEET

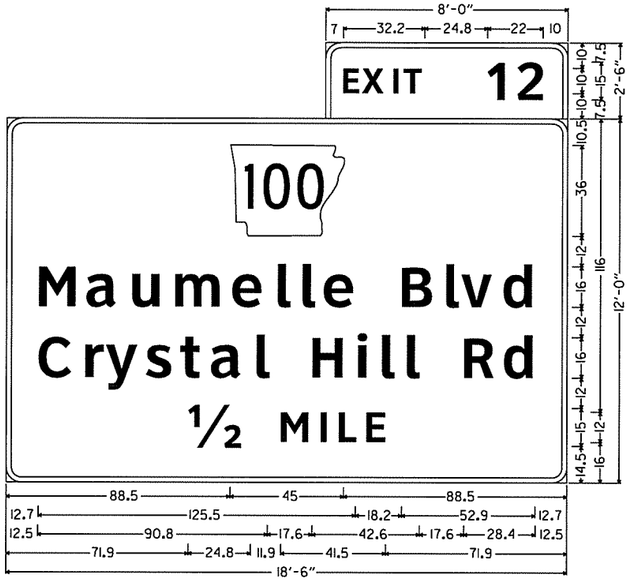

OH-430-60-STA692+30SB-A;
6.0" Radius, 2.0" Border, White on Green;
[EXIT] ClearviewHwy-5-W; [12] ClearviewHwy-5-W;
6.0" Radius, 2.0" Border, White on Green;
MI-6; [Maumelle Blvd] ClearviewHwy-5-W; [Crystal Hill Rd] ClearviewHwy-5-W; [½ MILE] ClearviewHwy-5-W;

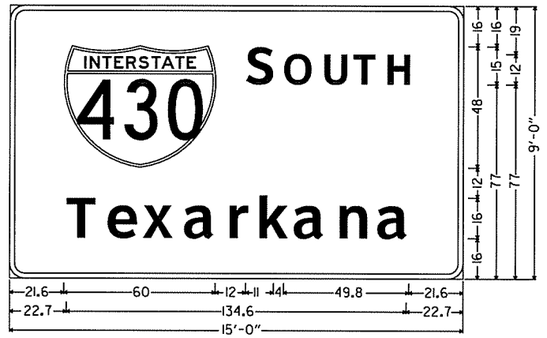

OH-430-60-STA692+30SB-B;
6.0" Radius, 2.0" Border, White on Green;
[S] ClearviewHwy-5-W; [OUTH] ClearviewHwy-5-W; [Texarkana] ClearviewHwy-5-W;

STATE OF ARKANSAS
REGISTERED PROFESSIONAL ENGINEER
No.8141
NICCI D. TINER
7-18-14

NOTES:

THE CONTRACTOR WILL VERIFY SIGN PLACEMENT AND MAKE ANY ADJUSTMENTS NECESSARY TO ALIGN SIGNS OVER INTENDED LANES.

SINCE THE CONTRACTOR WILL BE REQUIRED TO INSTALL OVERHEAD SIGNS ON STRUCTURES WHICH ARE LOCATED OVER THE ROADWAYS WHICH ARE CURRENTLY OPEN TO TRAFFIC, IT WILL BE THE RESPONSIBILITY OF THE CONTRACTOR TO PROVIDE LANE CLOSURES AS A PART OF TRAFFIC CONTROL. PAYMENT FOR PROVIDING LANE CLOSURES WILL BE PAID SUBSIDIARY TO THE PAY ITEM "MAINTENANCE OF TRAFFIC". ALL MAINTENANCE OF TRAFFIC WORK MUST CONFORM WITH THE MUTCD.

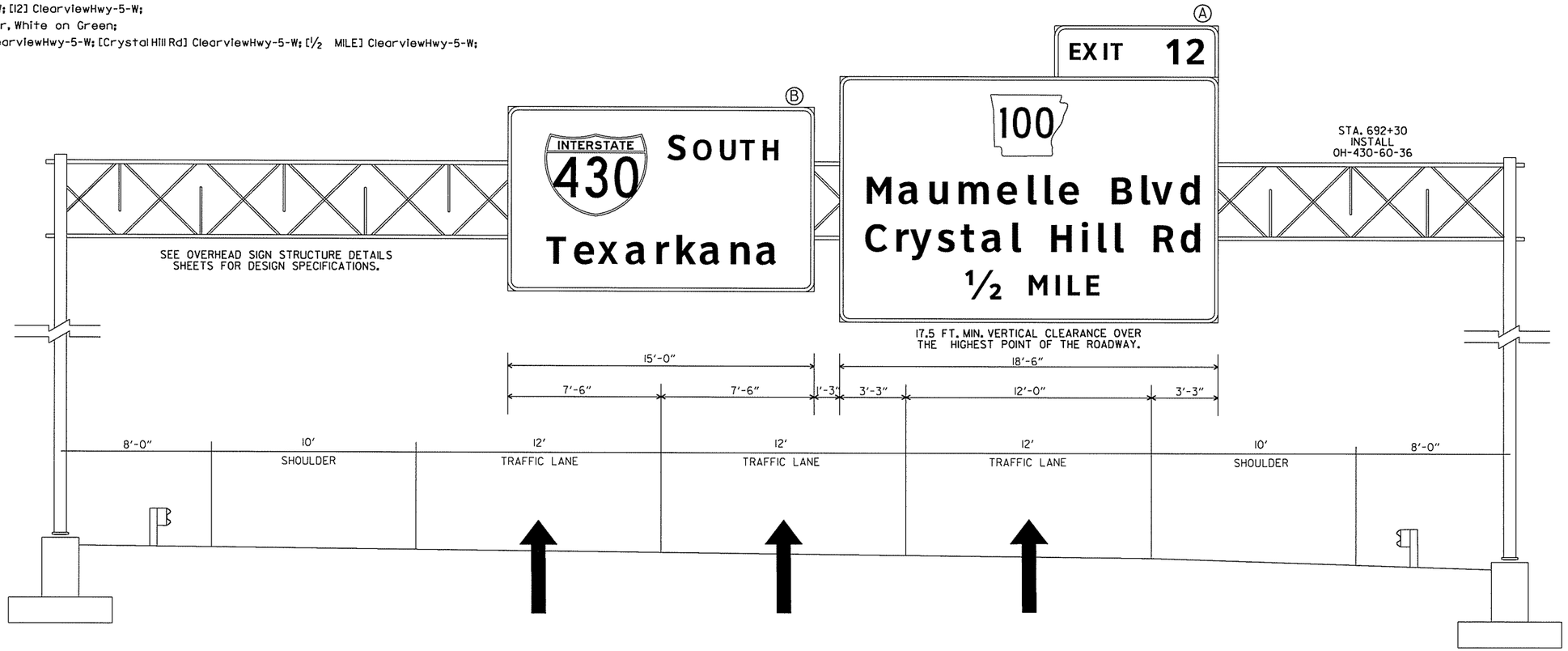

cggervasini 7/17/2014 7:43:37 PM
WORKSPACE: AHTD
L:\20IN\I0I709 - I-40 at I-430 Interchange Modifications\Drawings\RCA0609_SP_MNL_21-46.dgn
REVISED DATE:

DATE REVISED	DATE FILMED	DATE REVISED	DATE FILMED	FED.RD. DIST.NO.	STATE	FED.AID PROJ.NO.	SHEET NO.	TOTAL SHEETS
				6	ARK.			
				JOB NO.		CA0609	160	693

23 SIGN PLACEMENT SHEET

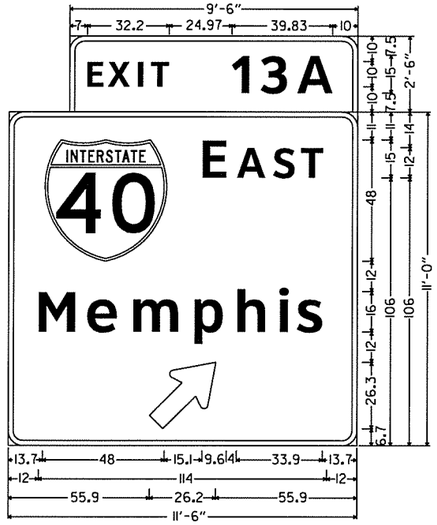

OH-430-60-STA692+23NB-A;
6.0" Radius, 2.0" Border, White on Green;
[EXIT] ClearviewHwy-5-W; [13A] ClearviewHwy-5-W;
6.0" Radius, 2.0" Border, White on Green;
[E] ClearviewHwy-5-W; [AST] ClearviewHwy-5-W;
[Memphis] ClearviewHwy-5-W;
Standard Arrow Custom 33.4" X 20.3" 45°;

NOTES:

THE CONTRACTOR WILL VERIFY SIGN PLACEMENT AND MAKE ANY ADJUSTMENTS NECESSARY TO ALIGN SIGNS OVER INTENDED LANES.

SINCE THE CONTRACTOR WILL BE REQUIRED TO INSTALL OVERHEAD SIGNS ON STRUCTURES WHICH ARE LOCATED OVER THE ROADWAYS WHICH ARE CURRENTLY OPEN TO TRAFFIC, IT WILL BE THE RESPONSIBILITY OF THE CONTRACTOR TO PROVIDE LANE CLOSURES AS A PART OF TRAFFIC CONTROL. PAYMENT FOR PROVIDING LANE CLOSURES WILL BE PAID SUBSIDIARY TO THE PAY ITEM "MAINTENANCE OF TRAFFIC". ALL MAINTENANCE OF TRAFFIC WORK MUST CONFORM WITH THE MUTCD.

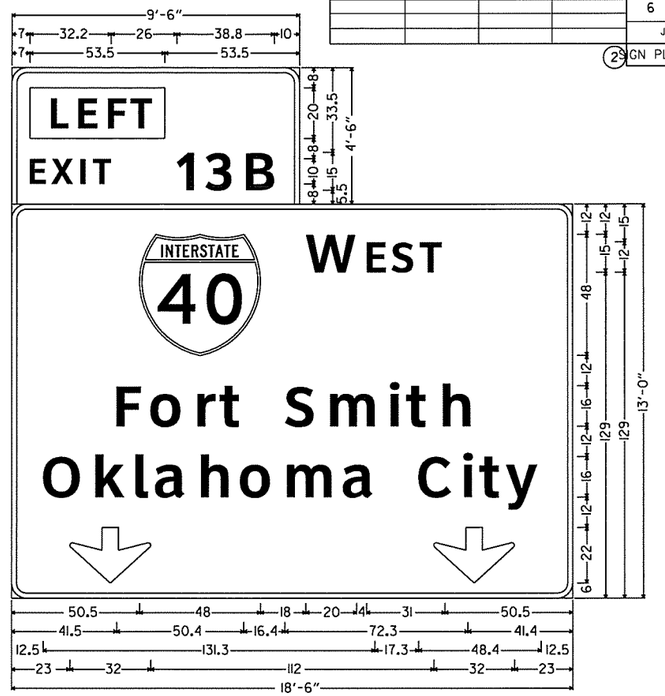

OH-430-60-STA692+23NB-B;
6.0" Radius, 2.0" Border, White on Green;
Rectangle Yellow;
[EXIT] ClearviewHwy-5-W; [13B] ClearviewHwy-5-W;
OH-040-60-7950+50EB-B; 6.0" Radius, 2.0" Border, White on Green;
[W] ClearviewHwy-5-W; [EST] ClearviewHwy-5-W; [Fort Smith] ClearviewHwy-5-W;
[Oklahoma City] ClearviewHwy-5-W; Down Arrow 22.0" 270°; Down Arrow 22.0" 270°;

STATE OF ARKANSAS
REGISTERED PROFESSIONAL ENGINEER
No.8141
NICCI D. TINER
7-18-14

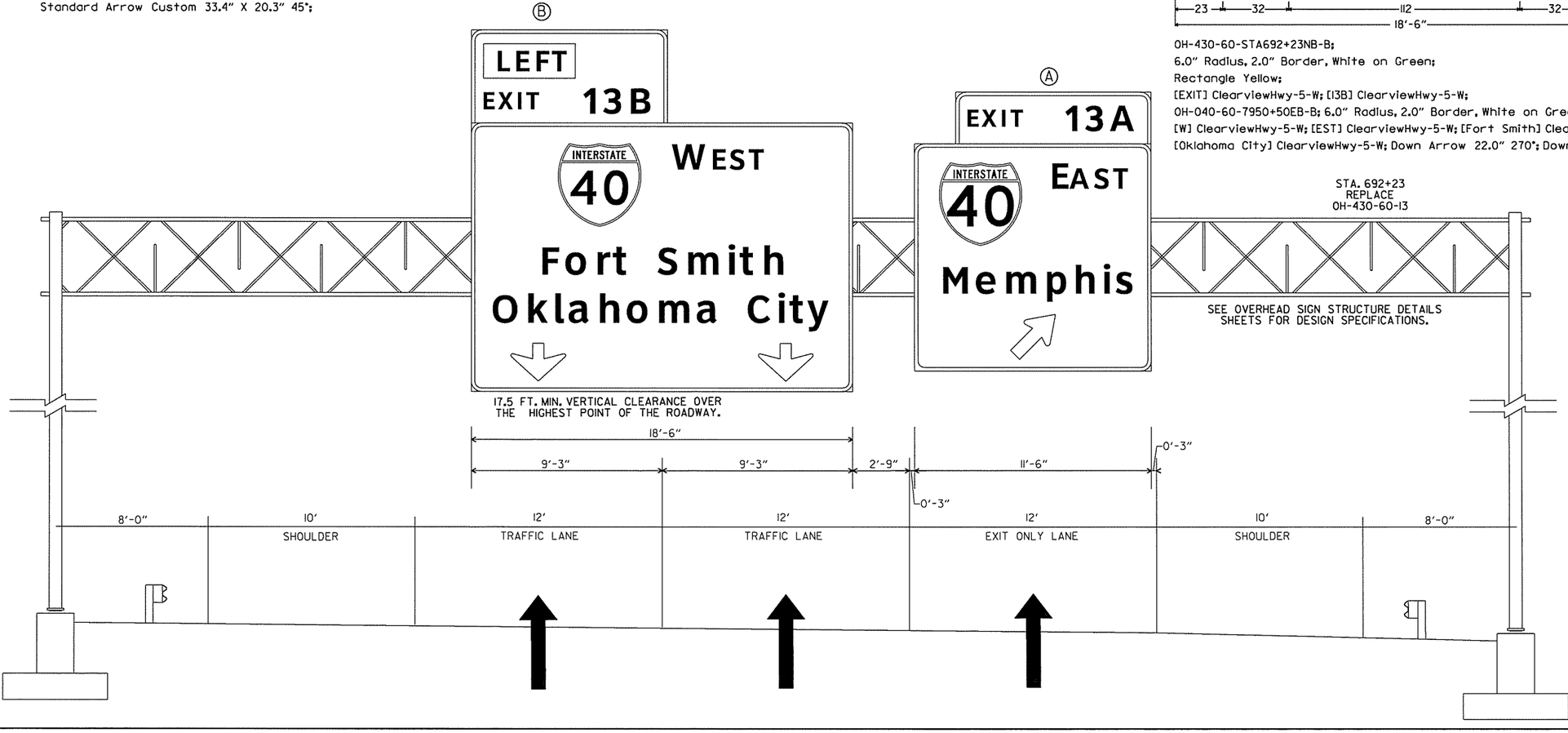

cggervasini 7/17/2014 7:43:37 PM
WORKSPACE: AHTD
L:\20IN\I0I709 - I-40 at I-430 Interchange Modifications\Drawings\RCA0609_SP_MNL_21-46.dgn
REVISED DATE:

DATE REVISED	DATE FILMED	DATE REVISED	DATE FILMED	FED.RD. DIST.NO.	STATE	FED.AID PROJ.NO.	SHEET NO.	TOTAL SHEETS
				6	ARK.			
				JOB NO.		CA0609	161	693

(2) SIGN PLACEMENT SHEET



OH-430-60-I-NB-B;
6.0" Radius, 2.0" Border, White on Green;
Rectangle Yellow;
[EXIT] ClearviewHwy-5-W; [13B] ClearviewHwy-5-W;
OH-040-60-7950+50EB-B; 6.0" Radius, 2.0" Border, White on Green;
[W] ClearviewHwy-5-W; [EST] ClearviewHwy-5-W; [Fort Smith] ClearviewHwy-5-W;
[Oklahoma City] ClearviewHwy-5-W; Down Arrow 22.0" 270°; Down Arrow 22.0" 270°;



OH-430-60-I-NB-A;
6.0" Radius, 2.0" Border, White on Green;
[EXIT] ClearviewHwy-5-W; [13A] ClearviewHwy-5-W;
6.0" Radius, 2.0" Border, White on Green;
[E] ClearviewHwy-5-W; [AST] ClearviewHwy-5-W;
[Memphis] ClearviewHwy-5-W; Down Arrow 22.0" 270°;

NOTES:

THE CONTRACTOR WILL VERIFY SIGN PLACEMENT AND MAKE ANY ADJUSTMENTS NECESSARY TO ALIGN SIGNS OVER INTENDED LANES.

SINCE THE CONTRACTOR WILL BE REQUIRED TO INSTALL OVERHEAD SIGNS ON STRUCTURES WHICH ARE LOCATED OVER THE ROADWAYS WHICH ARE CURRENTLY OPEN TO TRAFFIC, IT WILL BE THE RESPONSIBILITY OF THE CONTRACTOR TO PROVIDE LANE CLOSURES AS A PART OF TRAFFIC CONTROL. PAYMENT FOR PROVIDING LANE CLOSURES WILL BE PAID SUBSIDIARY TO THE PAY ITEM "MAINTENANCE OF TRAFFIC". ALL MAINTENANCE OF TRAFFIC WORK MUST CONFORM WITH THE MUTCD.

STATE OF ARKANSAS
REGISTERED PROFESSIONAL ENGINEER
No.8141
NICCI D. TINER
7-18-14

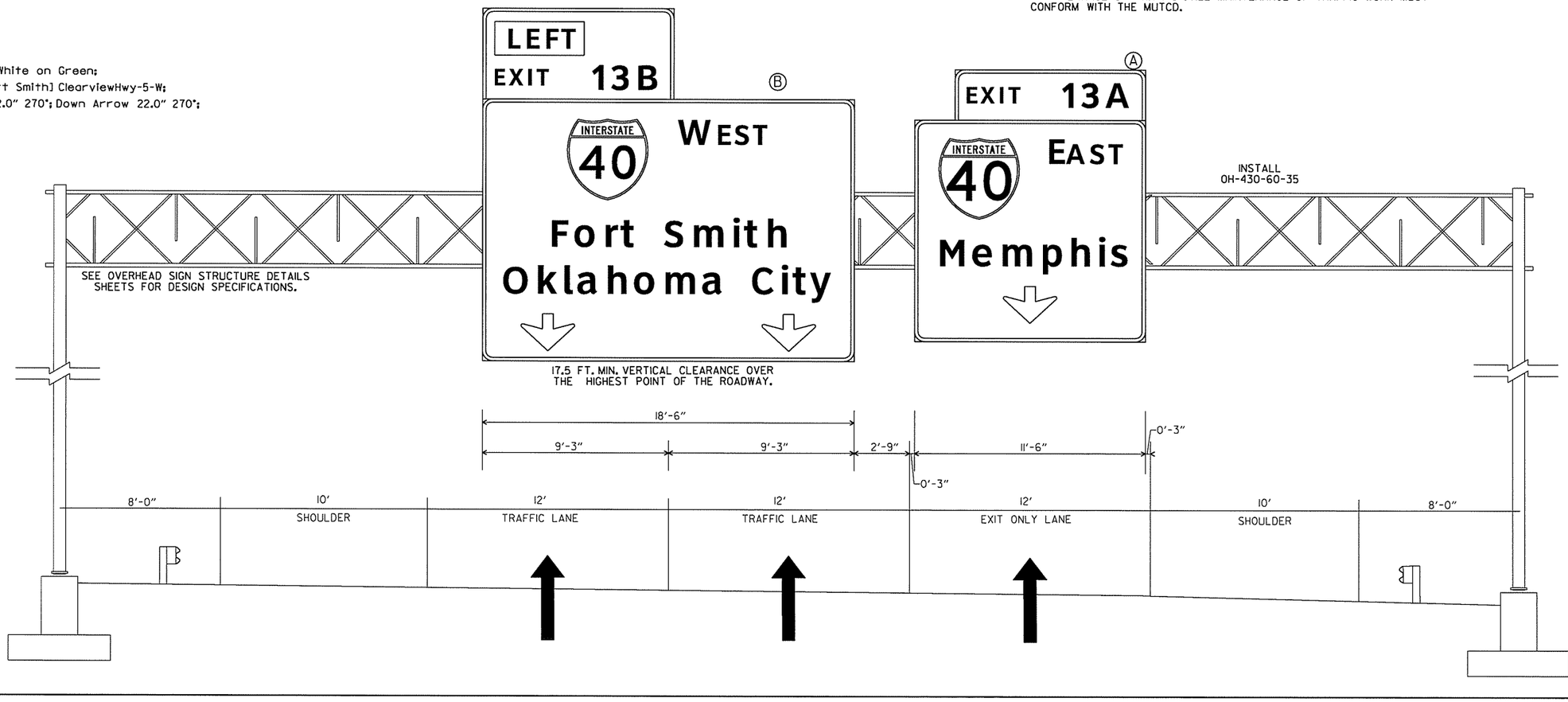

cggarvasini 7/17/2014 7:43:37 PM
WORKSPACE: AHTD
L:\ZOIN\ROIT709 - I-40 at I-430 Interchange Modifications\Drawings\RCA0609_SP_MNL_2i-46.dgn
REVISED DATE:

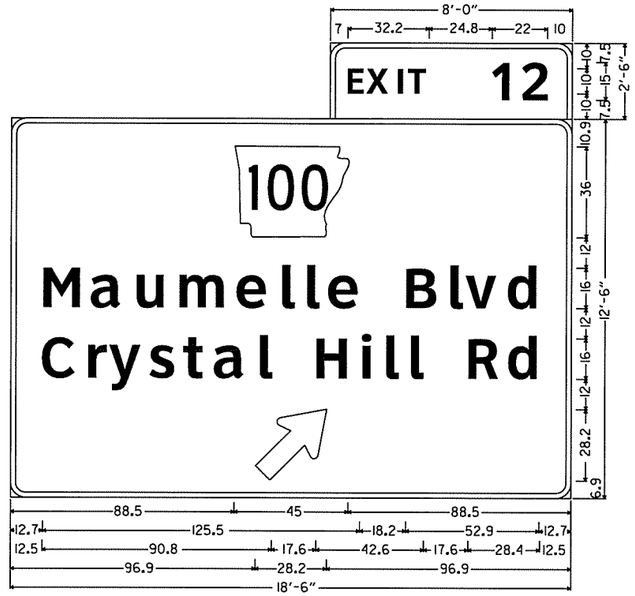

OH-430-60-I-SB-A;
6.0" Radius, 2.0" Border, White on Green;
[EXIT] ClearviewHwy-5-W; [12] ClearviewHwy-5-W;
6.0" Radius, 2.0" Border, White on Green;
MI-6; [Maumelle Blvd] ClearviewHwy-5-W; [Crystal Hill Rd] ClearviewHwy-5-W;
Standard Arrow Custom 35.8" X 21.6" 45°;

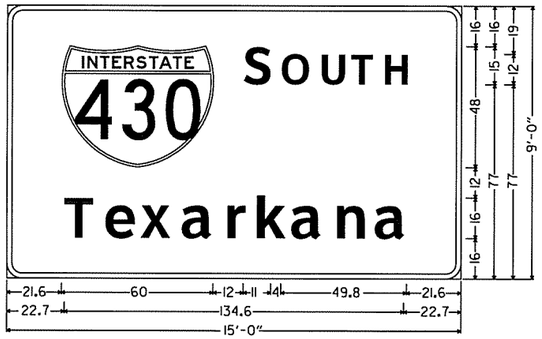

OH-430-60-I-SB-B;
6.0" Radius, 2.0" Border, White on Green;
[S] ClearviewHwy-5-W; [outh] ClearviewHwy-5-W; [Texarkana] ClearviewHwy-5-W;

DATE REVISED	DATE FILMED	DATE REVISED	DATE FILMED	FED.RD. DIST.NO.	STATE	FED.AID PROJ.NO.	SHEET NO.	TOTAL SHEETS
				6	ARK.			
				JOB NO.		CA0609	162	693

(2) SIGN PLACEMENT SHEET

STATE OF ARKANSAS
REGISTERED PROFESSIONAL ENGINEER
No.8141
NICCI D. TINER
7-18-14

NOTES:

THE CONTRACTOR WILL VERIFY SIGN PLACEMENT AND MAKE ANY ADJUSTMENTS NECESSARY TO ALIGN SIGNS OVER INTENDED LANES.

SINCE THE CONTRACTOR WILL BE REQUIRED TO INSTALL OVERHEAD SIGNS ON STRUCTURES WHICH ARE LOCATED OVER THE ROADWAYS WHICH ARE CURRENTLY OPEN TO TRAFFIC, IT WILL BE THE RESPONSIBILITY OF THE CONTRACTOR TO PROVIDE LANE CLOSURES AS A PART OF TRAFFIC CONTROL. PAYMENT FOR PROVIDING LANE CLOSURES WILL BE PAID SUBSIDIARY TO THE PAY ITEM "MAINTENANCE OF TRAFFIC". ALL MAINTENANCE OF TRAFFIC WORK MUST CONFORM WITH THE MUTCD.

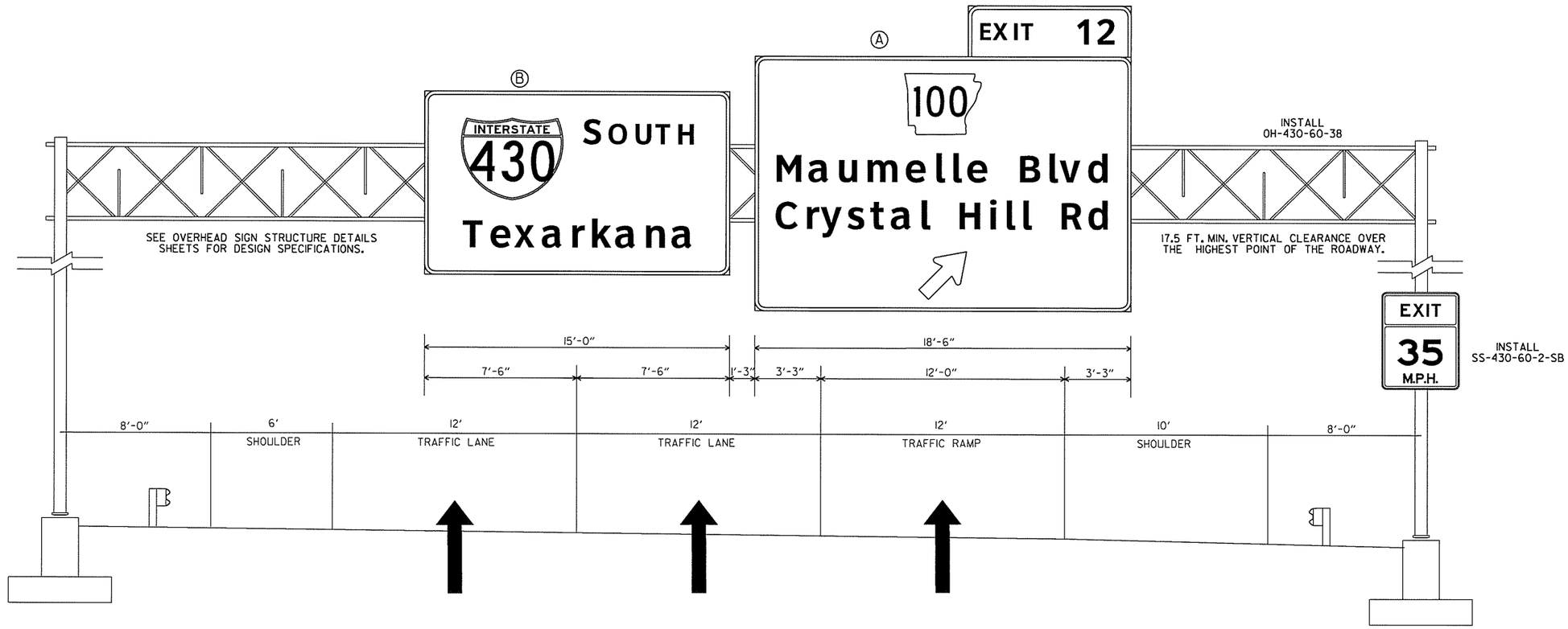

cggervasini 7/17/2014 7:43:38 PM
WORKSPACE: AHTD
L:\20IN\I00709 - I-40 at I-430 Interchange Modifications\Drawings\RCA0609_SP_MNL_21-16.dgn
REVISED DATE:

DATE REVISED	DATE FILMED	DATE REVISED	DATE FILMED	FED.RD. DIST.NO.	STATE	FED.AID PROJ.NO.	SHEET NO.	TOTAL SHEETS
				6	ARK.			
				JOB NO.		CA0609	163	693

(2) SIGN PLACEMENT SHEET

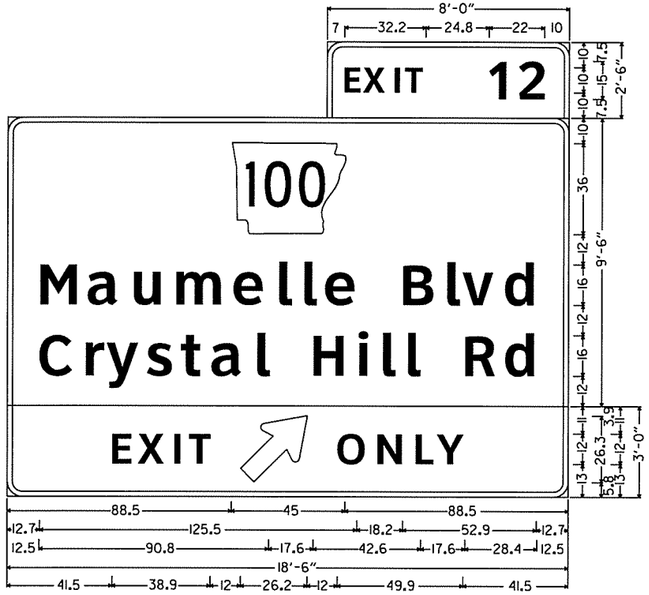

OH-430-60-2-NB-A;
6.0" Radius, 2.0" Border, White on Green;
[EXIT] ClearviewHwy-5-W; [12] ClearviewHwy-5-W;
6.0" Radius, 2.0" Border, White on Green;
MI-6; [Maumelle Blvd] ClearviewHwy-5-W; [Crystal Hill Rd] ClearviewHwy-5-W;
6.0" Radius, 2.0" Border, Black on Yellow;
[EXIT] ClearviewHwy-5-W; Standard Arrow Custom 33.4" X 20.3" 45°; [ONLY] ClearviewHwy-5-W;



OH-430-60-2-NB-B;
6.0" Radius, 2.0" Border, White on Green;
[EXIT] ClearviewHwy-5-W; [13A] ClearviewHwy-5-W;
6.0" Radius, 2.0" Border, White on Green;
[E] ClearviewHwy-5-W; [AST] ClearviewHwy-5-W;
[Memphis] ClearviewHwy-5-W; Down Arrow 22.0" 270°;



OH-430-60-2-NB-C;
6.0" Radius, 2.0" Border, White on Green;
Rectangle Yellow;
[EXIT] ClearviewHwy-5-W; [13B] ClearviewHwy-5-W;
OH-040-60-7950+50EB-B; 6.0" Radius, 2.0" Border, White on Green;
[W] ClearviewHwy-5-W; [EST] ClearviewHwy-5-W; [Fort Smith] ClearviewHwy-5-W;
[Oklahoma City] ClearviewHwy-5-W; Down Arrow 22.0" 270°; Down Arrow 22.0" 270°;

NOTES:

THE CONTRACTOR WILL VERIFY SIGN PLACEMENT AND MAKE ANY ADJUSTMENTS NECESSARY TO ALIGN SIGNS OVER INTENDED LANES.

SINCE THE CONTRACTOR WILL BE REQUIRED TO INSTALL OVERHEAD SIGNS ON STRUCTURES WHICH ARE LOCATED OVER THE ROADWAYS WHICH ARE CURRENTLY OPEN TO TRAFFIC, IT WILL BE THE RESPONSIBILITY OF THE CONTRACTOR TO PROVIDE LANE CLOSURES AS A PART OF TRAFFIC CONTROL. PAYMENT FOR PROVIDING LANE CLOSURES WILL BE PAID SUBSIDIARY TO THE PAY ITEM "MAINTENANCE OF TRAFFIC". ALL MAINTENANCE OF TRAFFIC WORK MUST CONFORM WITH THE MUTCD.

STATE OF ARKANSAS
REGISTERED PROFESSIONAL ENGINEER
No.8141
NICCI D. TINER
7-18-14

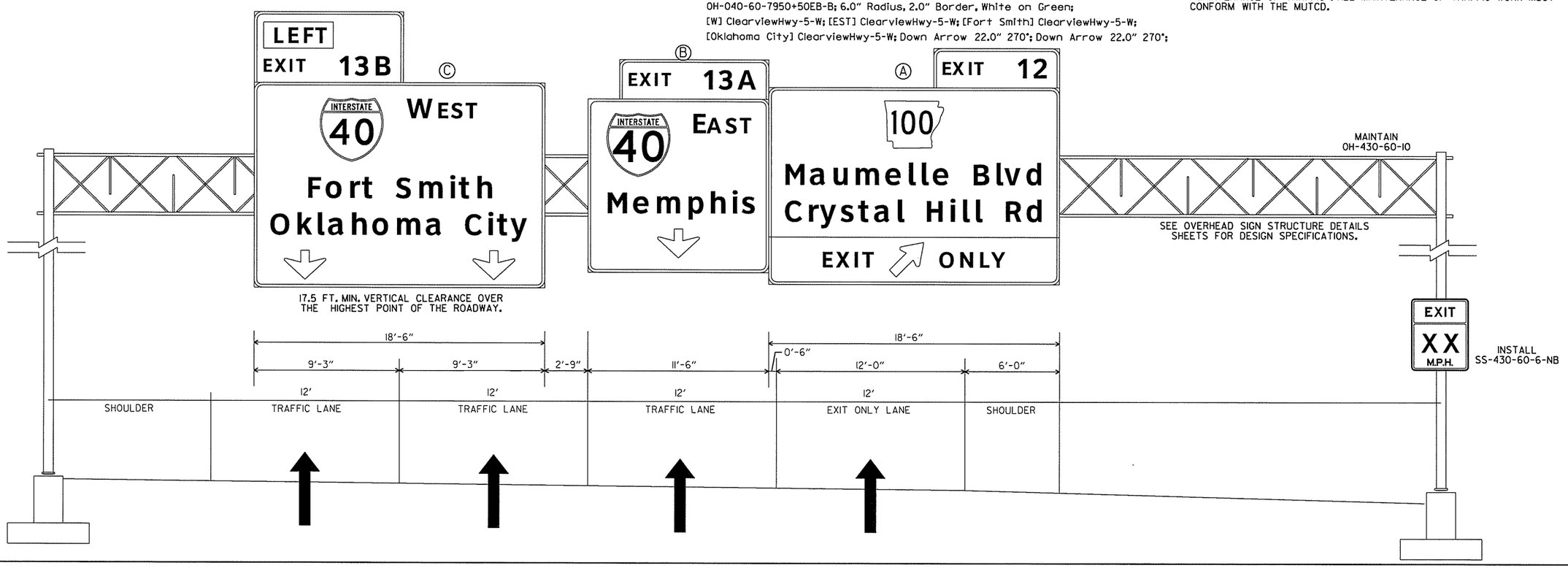

cggervasini 7/17/2014 7:43:38 PM
WORKSPACE: AHTD
L:\20IN\I0I709 - I-40 at I-430 Interchange Modifications\Drawings\RCA0609_SP_MNL_21-46.dgn
REVISED DATE:

DATE REVISED	DATE FILMED	DATE REVISED	DATE FILMED	FED.RD. DIST.NO.	STATE	FED.AID PROJ.NO.	SHEET NO.	TOTAL SHEETS
				6	ARK.			
				JOB NO.		CA0609	164	693

(2) SIGN PLACEMENT SHEET

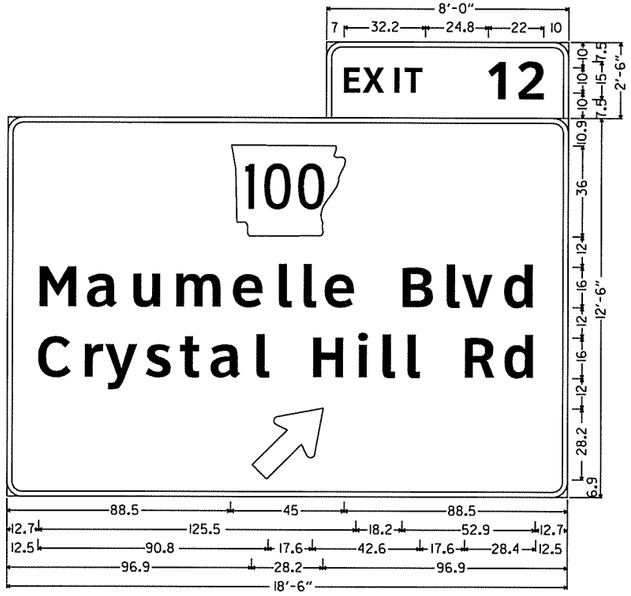

OH-430-60-3-NB;
6.0" Radius, 2.0" Border, White on Green;
[EXIT] ClearviewHwy-5-W; [12] ClearviewHwy-5-W;
6.0" Radius, 2.0" Border, White on Green;
MI-6; [Maumelle Blvd] ClearviewHwy-5-W; [Crystal Hill Rd] ClearviewHwy-5-W;
Standard Arrow Custom 35.8" X 21.6" 45°;

NOTES:

THE CONTRACTOR WILL VERIFY SIGN PLACEMENT AND MAKE ANY ADJUSTMENTS NECESSARY TO ALIGN SIGNS OVER INTENDED LANES.

SINCE THE CONTRACTOR WILL BE REQUIRED TO INSTALL OVERHEAD SIGNS ON STRUCTURES WHICH ARE LOCATED OVER THE ROADWAYS WHICH ARE CURRENTLY OPEN TO TRAFFIC, IT WILL BE THE RESPONSIBILITY OF THE CONTRACTOR TO PROVIDE LANE CLOSURES AS A PART OF TRAFFIC CONTROL. PAYMENT FOR PROVIDING LANE CLOSURES WILL BE PAID SUBSIDIARY TO THE PAY ITEM "MAINTENANCE OF TRAFFIC". ALL MAINTENANCE OF TRAFFIC WORK MUST CONFORM WITH THE MUTCD.

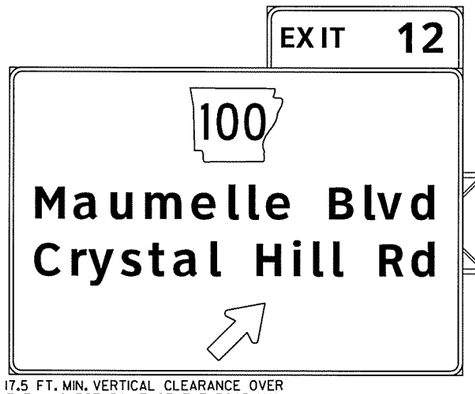

17.5 FT. MIN. VERTICAL CLEARANCE OVER THE HIGHEST POINT OF THE ROADWAY.

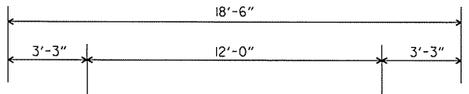

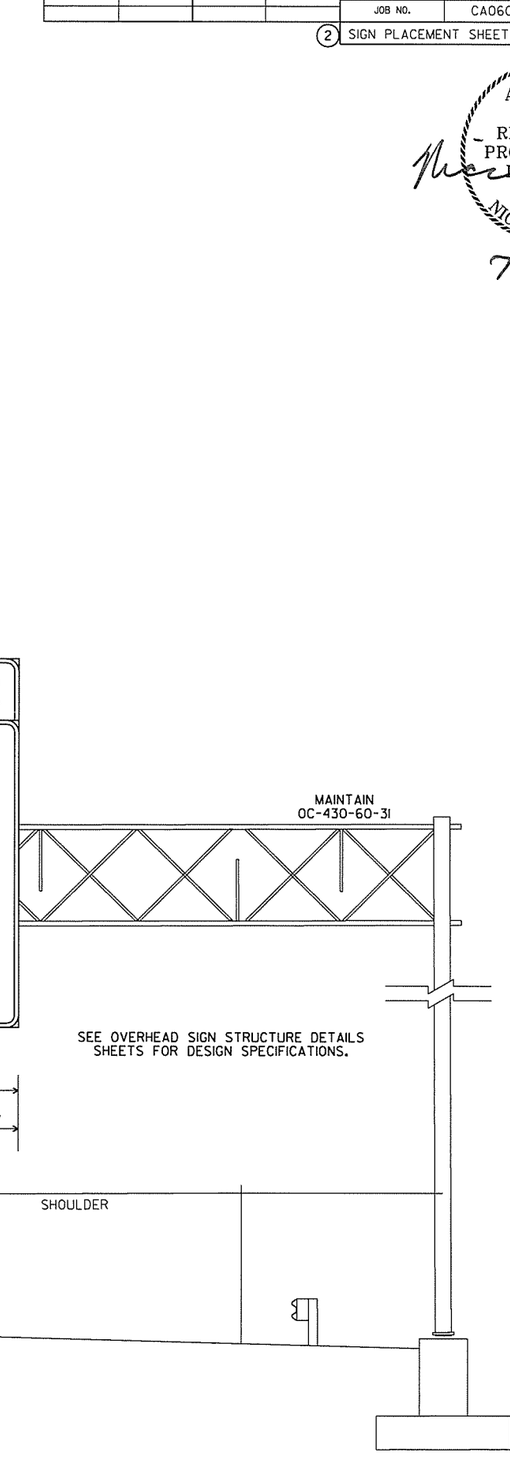

SEE OVERHEAD SIGN STRUCTURE DETAILS SHEETS FOR DESIGN SPECIFICATIONS.

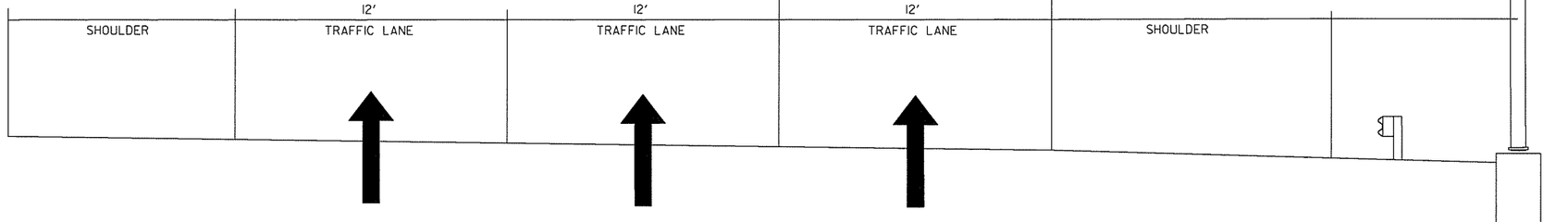

STATE OF ARKANSAS
REGISTERED PROFESSIONAL ENGINEER
No.8141
NICCI D. TINER
7-18-14

cggervasini 7/17/2014 7:43:38 PM
WORKSPACE: AHTD
L:\20II\I0I709 - I-40 at I-430 Interchange Modifications\Drawings\RCA0609_SP_MNL_2I-46.dgn
REVISED DATE:

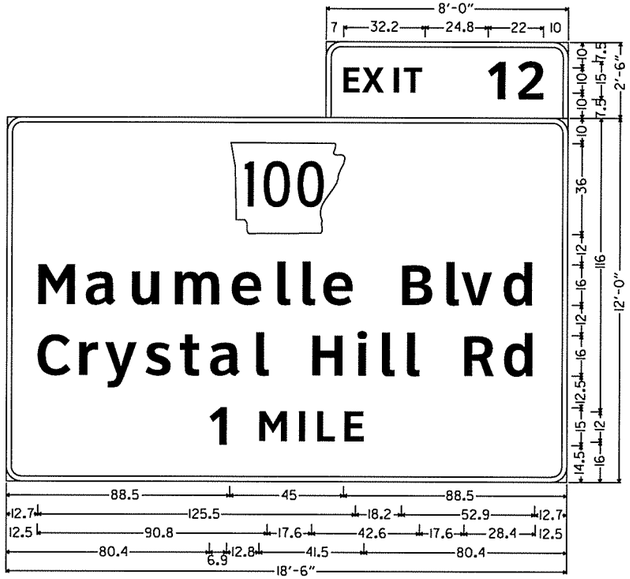

OH-430-60-4-NB-A;
6.0" Radius, 2.0" Border, White on Green;
[EXIT] ClearviewHwy-5-W; [12] ClearviewHwy-5-W;
6.0" Radius, 2.0" Border, White on Green;
MI-6; [Maumelle Blvd] ClearviewHwy-5-W; [Crystal Hill Rd] ClearviewHwy-5-W; [1 MILE] ClearviewHwy-5-W;



OH-430-60-3-NB-B;
6.0" Radius, 2.0" Border, White on Green;
[EXITS] ClearviewHwy-5-W; [13A-B] ClearviewHwy-5-W;
6.0" Radius, 2.0" Border, White on Green;
[J] ClearviewHwy-5-W; [CT] ClearviewHwy-5-W; [Fort Smith] ClearviewHwy-5-W;
[Memphis] ClearviewHwy-5-W; [2 MILES] ClearviewHwy-5-W;

DATE REVISED	DATE FILMED	DATE REVISED	DATE FILMED	FED.RD. DIST.NO.	STATE	FED.AID PROJ.NO.	SHEET NO.	TOTAL SHEETS
				6	ARK.			
				JOB NO.		CA0609	165	693

(2) SIGN PLACEMENT SHEET

STATE OF ARKANSAS
REGISTERED PROFESSIONAL ENGINEER
No.8141
NICCI D. TINER
7-18-14

NOTES:

THE CONTRACTOR WILL VERIFY SIGN PLACEMENT AND MAKE ANY ADJUSTMENTS NECESSARY TO ALIGN SIGNS OVER INTENDED LANES.

SINCE THE CONTRACTOR WILL BE REQUIRED TO INSTALL OVERHEAD SIGNS ON STRUCTURES WHICH ARE LOCATED OVER THE ROADWAYS WHICH ARE CURRENTLY OPEN TO TRAFFIC, IT WILL BE THE RESPONSIBILITY OF THE CONTRACTOR TO PROVIDE LANE CLOSURES AS A PART OF TRAFFIC CONTROL. PAYMENT FOR PROVIDING LANE CLOSURES WILL BE PAID SUBSIDIARY TO THE PAY ITEM "MAINTENANCE OF TRAFFIC". ALL MAINTENANCE OF TRAFFIC WORK MUST CONFORM WITH THE MUTCD.

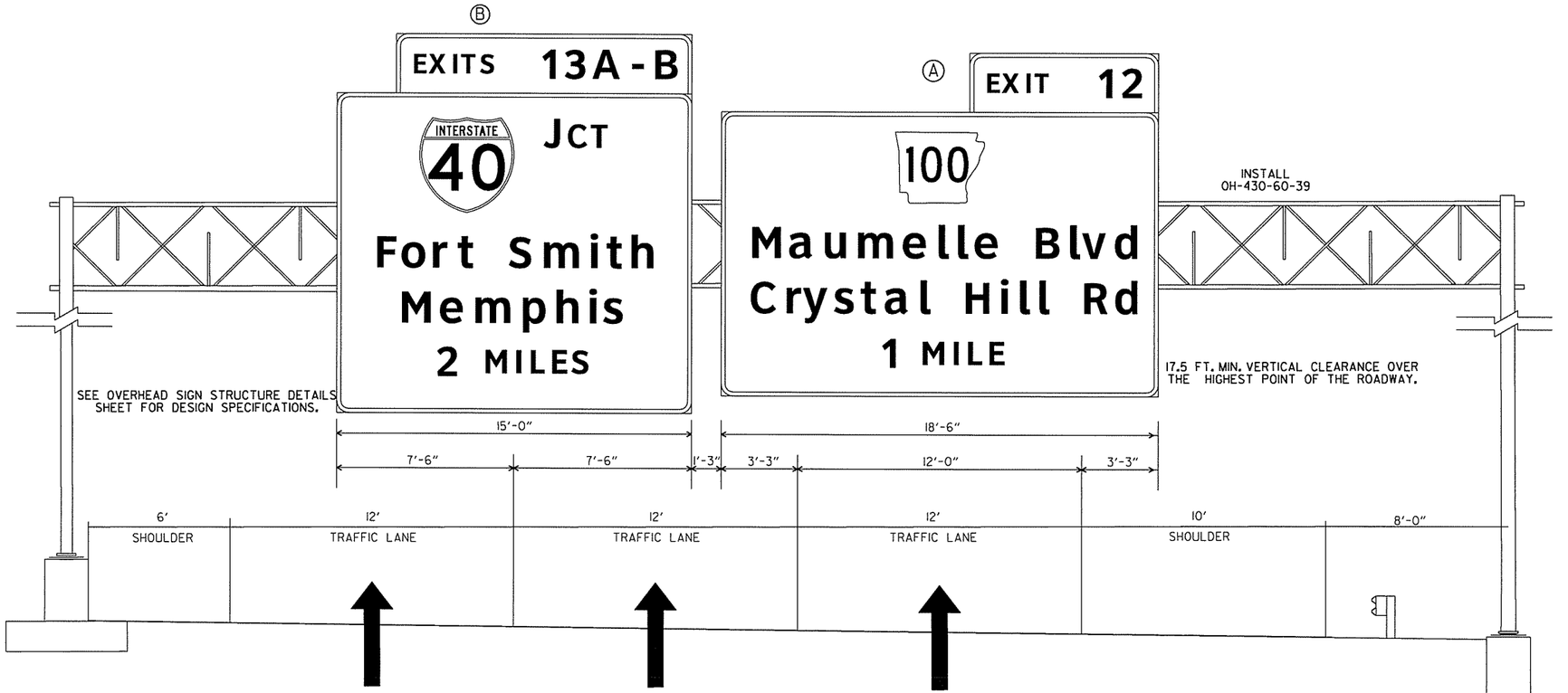

cggervasini 7/17/2014 7:43:38 PM
WORKSPACE: AHTD
L:\2011\011709 - I-40 at I-430 Interchange Modifications\Drawings\RCA0609_SP_MNL_21-46.dgn
REVISED DATE:

DATE REVISED	DATE FILMED	DATE REVISED	DATE FILMED	FED.RD. DIST.NO.	STATE	FED.AID PROJ.NO.	SHEET NO.	TOTAL SHEETS
				6	ARK.			
				JOB NO.		CA0609	166	693

(2) SIGN PLACEMENT SHEET

STATE OF ARKANSAS
REGISTERED PROFESSIONAL ENGINEER
No.8141
NICCI D. TINER
7-18-14

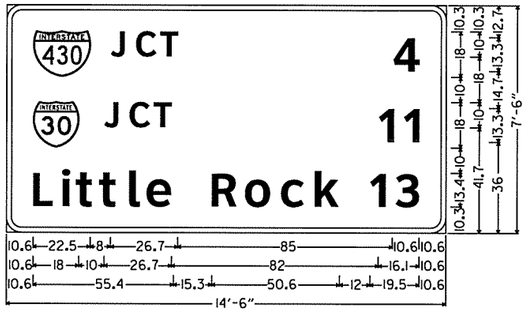

GM-040-60-STA8007+44EB;
6.0" Radius, 2.0" Border, White on Green;
[JCT] ClearviewHwy-5-W; [4] ClearviewHwy-5-W; [JCT] ClearviewHwy-5-W;
[11] ClearviewHwy-5-W; [Little Rock] ClearviewHwy-5-W; [13] ClearviewHwy-5-W;

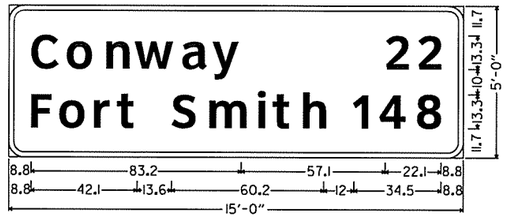

GM-040-60-STA8168+09WB;
6.0" Radius, 2.0" Border, White on Green;
[Conway] ClearviewHwy-5-W; [22] ClearviewHwy-5-W; [Fort Smith] ClearviewHwy-5-W;
[148] ClearviewHwy-5-W;

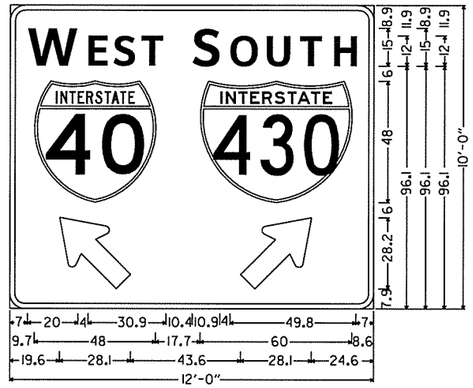

GM-RAMP3-60-STA665+98SB;
6.0" Radius, 2.0" Border, White on Green;
[W] ClearviewHwy-5-W; [EST] ClearviewHwy-5-W;
[S] ClearviewHwy-5-W; [OUTH] ClearviewHwy-5-W;
Standard Arrow Custom 35.8" X 21.6" 135°;
Standard Arrow Custom 35.8" X 21.6" 45°;



GM-040-60-STA8252+57WB;
6.0" Radius, 2.0" Border, White on Green;
[EXIT] ClearviewHwy-5-W; [147] ClearviewHwy-5-W;
6.0" Radius, 2.0" Border, White on Green;
[S] ClearviewHwy-5-W; [OUTH] ClearviewHwy-5-W; [Little Rock] ClearviewHwy-5-W;
[Texarkana] ClearviewHwy-5-W; [NEXT RIGHT] ClearviewHwy-5-W;

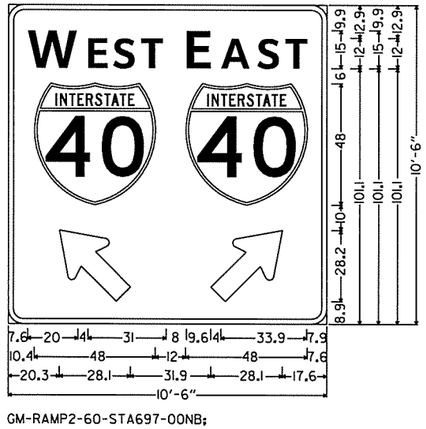

GM-RAMP2-60-STA697-00NB;
6.0" Radius, 2.0" Border, White on Green;
[W] ClearviewHwy-5-W; [EST] ClearviewHwy-5-W;
[E] ClearviewHwy-5-W; [AST] ClearviewHwy-5-W;
Standard Arrow Custom 35.8" X 21.6" 135°;
Standard Arrow Custom 35.8" X 21.6" 45°;

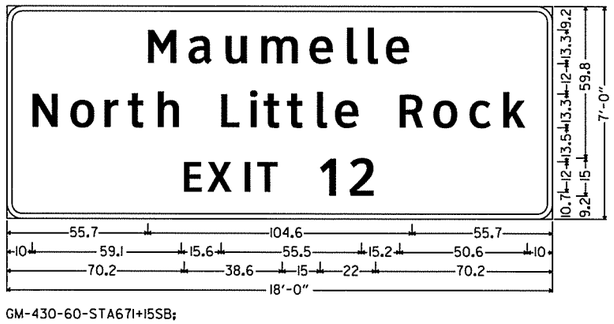

GM-430-60-STA671+15SB;
GM-430-60-I-NB;
6.0" Radius, 2.0" Border, White on Green;
[Maumelle] ClearviewHwy-5-W; [North Little Rock] ClearviewHwy-5-W; [EXIT] ClearviewHwy-5-W;
[12] ClearviewHwy-5-W;

caggervasini 7/17/2014 7:43:39 PM
WORKSPACE: AHTD
L:\2014\140709 - I-40 at I-430 Interchange Modifications\Drawings\RCA0609_SP_MNL_2i-46.dgn
REVISED DATE:

DATE REVISED	DATE FILMED	DATE REVISED	DATE FILMED	FED.RD. DIST.NO.	STATE	FED.AID PROJ.NO.	SHEET NO.	TOTAL SHEETS
				6	ARK.			
				JOB NO.		CA0609	167	693

(2) SIGN PLACEMENT SHEET

STATE OF ARKANSAS
REGISTERED PROFESSIONAL ENGINEER
No.8141
NICCI D. TINER
7-18-14

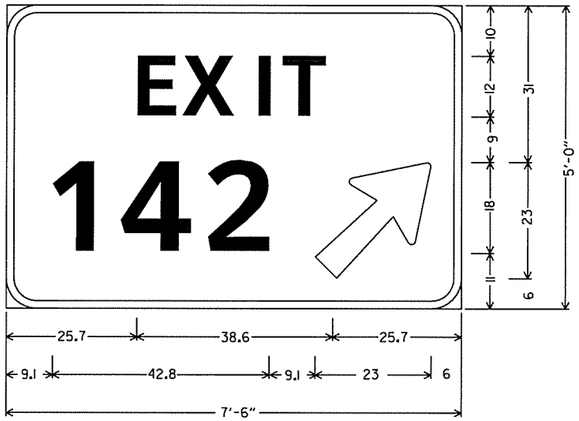

EX-040-60-STA7974+59WB;
6.0" Radius, 1.5" Border, White on Green;
[EXIT] ClearviewHwy-5-W;
[142] ClearviewHwy-5-W-R;
Arrow Custom - 29.0" 45°;

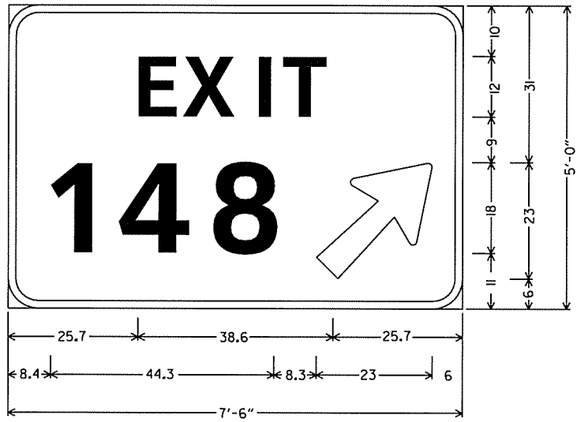

EX-040-60-STA8245+54EB,
EX-040-60-I-WB;
6.0" Radius, 1.5" Border, White on Green;
[EXIT] ClearviewHwy-5-W;
[148] ClearviewHwy-5-W-R;
Arrow Custom - 29.0" 45°;

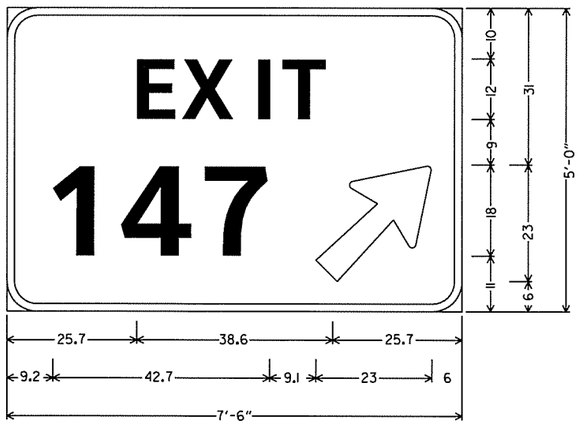

EX-040-60-STA8217+39EB;
EX-040-60-STA8261+00WB;
6.0" Radius, 1.5" Border, White on Green;
[EXIT] ClearviewHwy-5-W;
[147] ClearviewHwy-5-W-R;
Arrow Custom - 29.0" 45°;

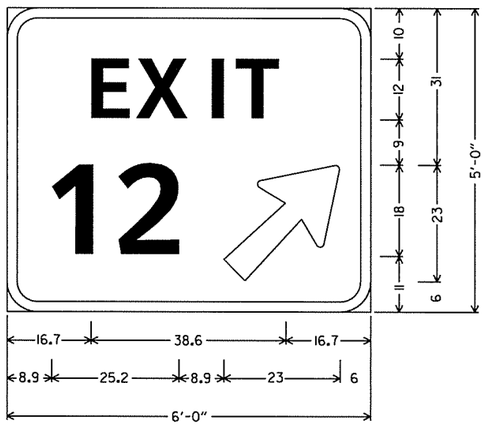

EX-430-60-I-SB
EX-430-60-I-NB
6.0" Radius, 2.0" Border, White on Green;
[EXIT] ClearviewHwy-5-W;
[12] ClearviewHwy-5-W-R;
Arrow Custom - 29.0" 45°;

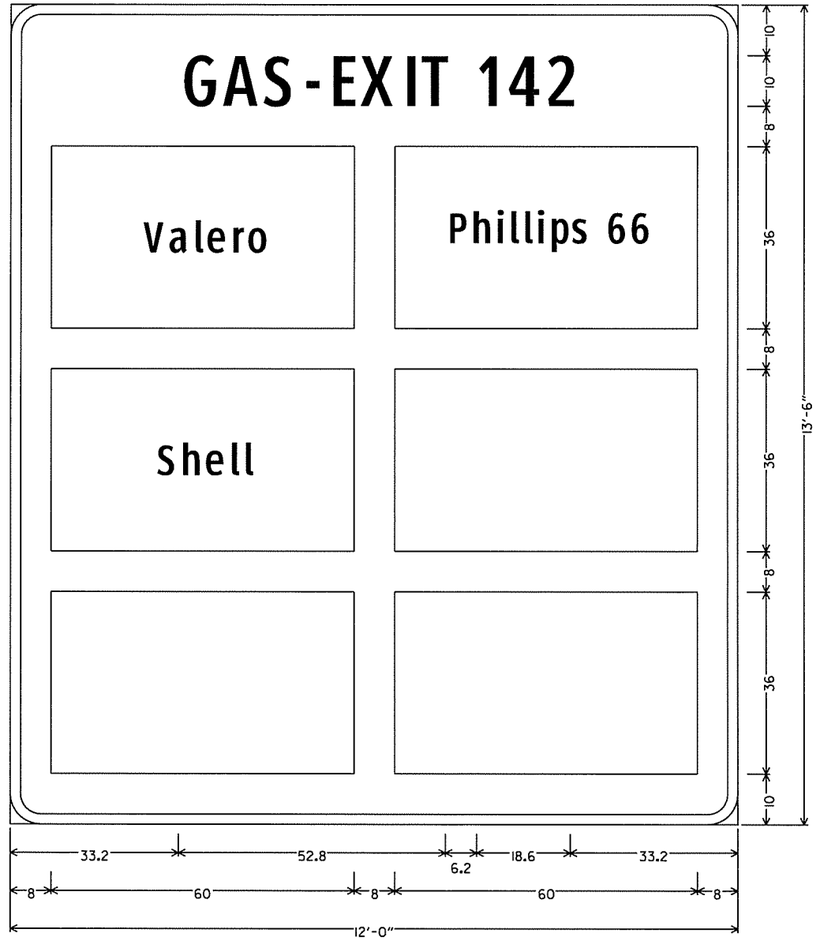

LG-040-60-STA8060+14WB;
6.0" Radius, 2.0" Border, White on Blue;
[GAS-EXIT 142] ClearviewHwy-2-W;

cggervasini 7/17/2014 7:43:39 PM
WORKSPACE: AHTD
L:\20IN\10I7709 - I-40 at I-430 Interchange Modifications\Drawings\RCA0609_SP_MNL_21-46.dgn
REVISED DATE:

DATE REVISED	DATE FILMED	DATE REVISED	DATE FILMED	FED.RD. DIST.NO.	STATE	FED.AID PROJ.NO.	SHEET NO.	TOTAL SHEETS
				6	ARK.			
				JOB NO.		CA0609	168	693

(2) SIGN PLACEMENT SHEET

STATE OF ARKANSAS
REGISTERED PROFESSIONAL ENGINEER
No.8141
NICCI D. TINER
7-18-14

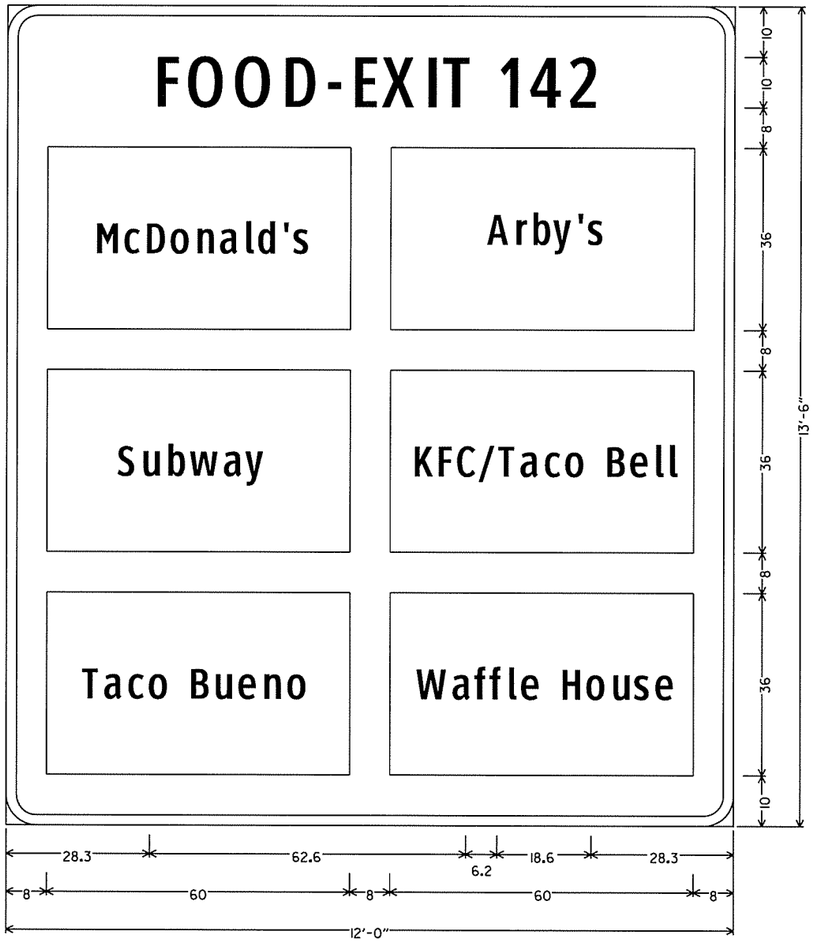

LF-040-60-STA8070+19WB;
6.0" Radius, 2.0" Border, White on Blue;
[FOOD-EXIT 142] ClearviewHwy-2-W;

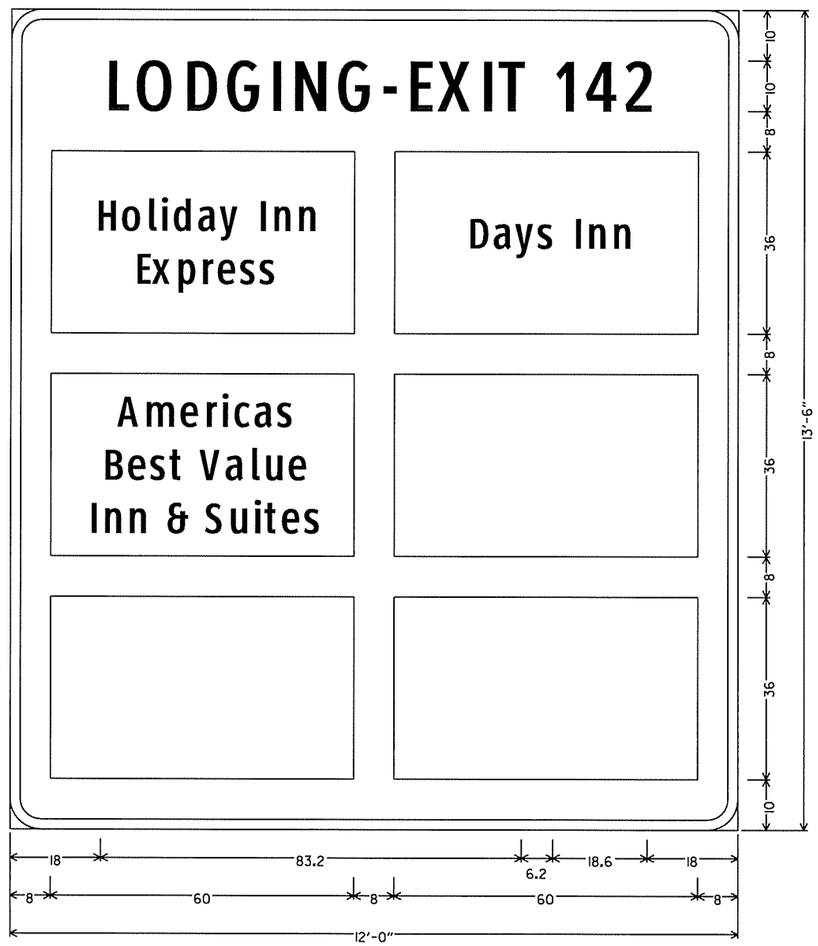

LL-040-60-STA8080+08WB;
6.0" Radius, 2.0" Border, White on Blue;
[LODGING-EXIT 142] ClearviewHwy-2-W;

cgpervasini 7/17/2014 7:43:39 PM
WORKSPACE: AHTD
L:\20IN\I0I709 - I-40 at I-430 Interchange Modifications\Drawings\RCA0609_SP_MNL_2I-46.dgn
REVISED DATE:

DATE REVISED	DATE FILMED	DATE REVISED	DATE FILMED	FED.RD. DIST.NO.	STATE	FED.AID PROJ.NO.	SHEET NO.	TOTAL SHEETS
				6	ARK.			
				JOB NO.		CA0609	169	693

(2) SIGN PLACEMENT SHEET

STATE OF ARKANSAS
REGISTERED PROFESSIONAL ENGINEER
No.8141
NICCI D. TINER
7-18-14

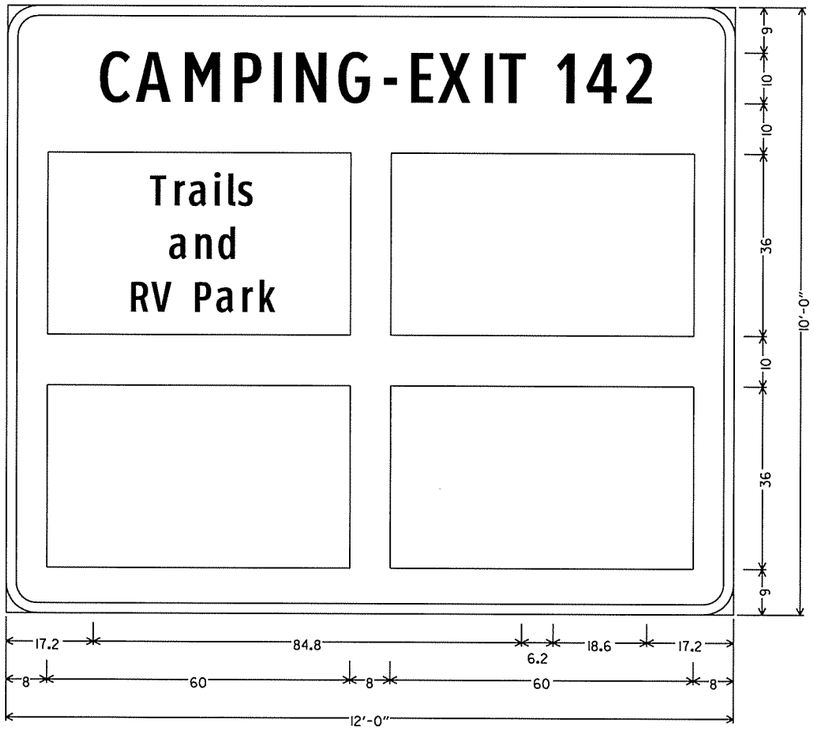

LC-040-60-STA8090+10WB;
6.0" Radius, 2.0" Border, White on Blue;
[CAMPING-EXIT 142] ClearviewHwy-2-W;

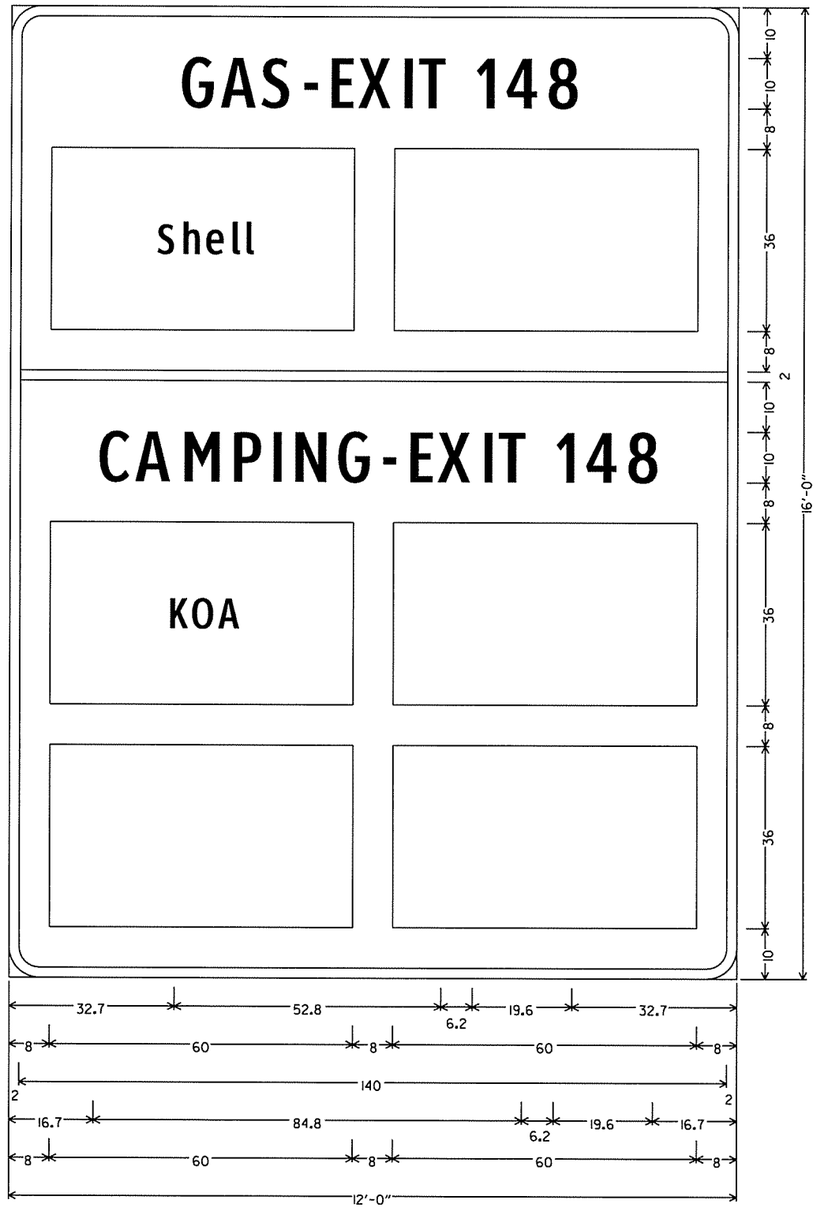

LGC-040-60-STA8233+45EB;
6.0" Radius, 2.0" Border, White on Blue;
[GAS-EXIT 148] ClearviewHwy-2-W;
[CAMPING-EXIT 148] ClearviewHwy-2-W;

cggervasini 7/17/2014 7:43:39 PM
WORKSPACE: AHTD
L:\20IN\00T709 - I-40 at I-430 Interchange Modifications\Drawings\RCA0609_SP_IANL_2I-46.dgn
REVISED DATE:

DATE REVISED	DATE FILMED	DATE REVISED	DATE FILMED	FED.RD. DIST.NO.	STATE	FED.AID PROJ.NO.	SHEET NO.	TOTAL SHEETS
				6	ARK.			
				JOB NO.		CA0609	170	693

(2) SIGN PLACEMENT SHEET

STATE OF ARKANSAS ★★★ REGISTERED PROFESSIONAL ENGINEER ★★★ No.8141 NICCI D. TINER

7-8-14

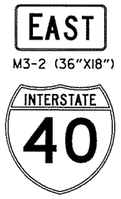

M3-2 (36"X18")

MI-1(36"X36")
SS-040-60-STA7986+91EB



M3-4 (36"X18")



MI-1(36"X36")
SS-040-60-STA8183+84WB



OM-3L (12"X36")
SS-NORMAN RD-60-STA18+61NB
SS-NORMAN RD-60-STA21+26SB



OM-3R (12"X36")
SS-NORMAN RD-60-STA18+56NB
SS-NORMAN RD-60-STA21+29SB



RI-1(36"X36")
SS-NEVA RD-60-STA9+80WB



R2-1(48"X60")



R2-2P (48"X48")
SS-040-60-STA7997+89EB
SS-040-60-STA8177+03WB



R2-1(48"X60")
SS-040-60-STA8140+99EB(LT)
SS-040-60-STA8140+99EB(RT)
SS-430-60-STA686+09SB(LT)
SS-430-60-STA686+09SB(RT)



R4-3 (48"X60")
SS-040-60-STA7992+54EB
SS-040-60-STA8180+33WB

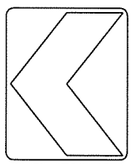

WI-8L (36"X48")
SS-RAMP3-60-STA672+00SB
SS-RAMP3-60-STA674+00SB
SS-RAMP3-60-STA676+00SB
SS-RAMP3-60-STA678+00SB
SS-RAMP3-60-STA680+00SB
SS-RAMP3-60-STA682+00SB
SS-RAMP3-60-STA684+00SB
SS-RAMP4-60-STA8193+10WB
SS-RAMP4-60-STA8195+10WB
SS-RAMP4-60-STA8197+10WB
SS-RAMP4-60-STA8199+10WB
SS-RAMP4-60-STA8201+10WB
SS-RAMP4-60-STA8203+10WB
SS-RAMP4-60-STA8205+10WB
SS-RAMP4-60-STA8207+10WB
SS-RAMP4-60-STA8209+10WB
SS-RAMP4-60-STA8211+10WB
SS-RAMP4-60-STA8212+90WB

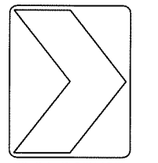

WI-8R (36"X48")
SS-RAMP2-60-STA708+10NB
SS-RAMP2-60-STA710+10NB
SS-RAMP2-60-STA712+10NB

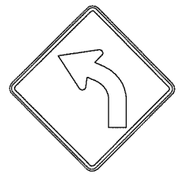

WI-2(LT) (48"X48")



WI3-1P (30"X30")
SS-RAMP3-60-STA669+10SB(LT)
SS-RAMP4-60-STA8191+46NB(LT)
SS-RAMP4-60-STA8191+46NB(RT)



WI-2(RT) (48"X48")



WI3-1P (30"X30")
SS-RAMP2-60-STA700+82NB(LT)
SS-RAMP2-60-STA700+82NB(RT)



W3-5 (48"X48")
SS-040-60-STA8127+01EB(LT)
SS-040-60-STA8127+01EB(RT)

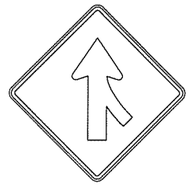

W4-1(48"X48")
SS-040-60-STA7970+30EB
SS-040-60-STA8238+14WB
SS-430-60-1-NB
SS-430-60-3-NB
SS-430-60-3-SB
SS-430-60-4-SB

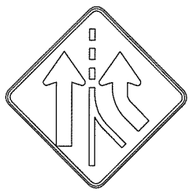

W4-3 (48"X48")
SS-040-60-STA8255+14WB
SS-040-60-STA8247+73EB
SS-RAMP1-60-STA8233+99SB



W8-13 (48"X48")
SS-040-60-STA8026+58EB
SS-040-60-STA8042+34WB
SS-040-60STA8091+48EB
SS-040-60-STA8118+19WB
SS-040-60-STA8172+37EB
SS-040-60-STA8188+43WB
SS-RAMP3-60-STA670+80SB
SS-430-60-1-SB
SS-430-60-2-NB
SS-NORMAN RD-STA16+06NB
SS-NORMAN RD-STA23+79SB



WII-3 (48"X48")
SS-430-60-STA690+01SB(LT)
SS-430-60-STA690+01SB(RT)
SS-430-60-4-NB(LT)
SS-430-60-5-NB(RT)

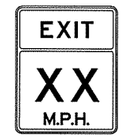

WI3-12 (36"X48")
SS-040-60-STA8213+85EB
SS-430-60-6-NB

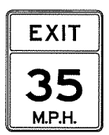

WI3-12 (36"X48")
SS-430-60-2-SB

cggervasini 7/17/2014 7:43:39 PM
WORKSPACE: AHTD
L:\20IN\I0I709 - I-40 at I-430 Interchange Modifications\Drawings\RCA0609_SP_MNL.2I-46.dgn
REVISED DATE:

DATE REVISED	DATE FILMED	DATE REVISED	DATE FILMED	FED.RD. DIST.NO.	STATE	FED.AID PROJ.NO.	SHEET NO.	TOTAL SHEETS
				6	ARK.			
				JOB NO.		CA0609	171	693

(2) SIGNING QUANTITIES

STATE OF ARKANSAS
REGISTERED PROFESSIONAL ENGINEER
No.8141
NICCI D. TINER
7-18-14

MAIN LANES SIGNING QUANTITIES
OVERHEAD MOUNTED

SIGN NO./ LOCATION	STRUCTURE TYPE			SIGN				EXIT NUMBER PANEL				GUARDRAIL				
				STANDARD SIGN	GUIDE SIGN				TYPE							
					LENGTH	HEIGHT			A	B	C	TYPE A	TERM. ANCHOR TYPE 1	GUARDRAIL TERM. TYPE 2	AGG. BASE CR (CL. 7)	ACHM SURF. CR. 220
	OH	BM	CL	SQ. FT.	LIN. FT.		SQ. FT.	LEGEND	SQ. FT.			LIN. FT.	EACH	EACH	TON	TON
OH-040-60-39	0															
VMS-040-60-STA7884+00EB-B					21.50	6.50	139.75									
OH-040-60-41	1											SEE ROADWAY PLANS FOR GUARDRAIL DETAILS				
OH-040-60-STA7979+45WB-A					13.00	13.00	169.00	142	23.75							
OH-040-60-STA7979+45WB-B					18.50	11.00	203.50									
BM-040-60-42		1														
BM-040-60-STA8051+54WB					13.00	12.00	156.00	142	23.75							
OH-040-60-43	1											SEE ROADWAY PLANS FOR GUARDRAIL DETAILS				
OH-040-60-STA8074+91EB					14.00	10.50	147.00	147	23.75							
OH-040-60-01	1											SEE ROADWAY PLANS FOR GUARDRAIL DETAILS				
OH-040-60-STA8149+41EB-A					13.50	11.50	155.25	147	23.75							
OH-040-60-STA8149+41EB-B					16.00	13.00	208.00									
OH-040-60-44	1											SEE ROADWAY PLANS FOR GUARDRAIL DETAILS				
OH-040-60-STA8187+00EB-A					17.50	11.50	201.25	147	23.75							
OH-040-60-STA8187+00EB-B					16.00	13.00	208.00									
BM-040-60-45		1														
BM-040-60-STA8209+98WB					15.00	5.50	82.50									
OH-040-60-02	1											SEE ROADWAY PLANS FOR GUARDRAIL DETAILS				
OH-040-60-STA8213+85EB-A					17.50	11.50	201.25	147	23.75							
OH-040-60-STA8213+85EB-B					15.00	12.00	180.00	148	23.75							
OH-040-60-STA8213+85EB-C				12.00	15.50	11.00	170.50									
OH-040-60-19	0															
OH-040-60-STA8242+23WB-A					13.50	11.50	155.25	147	23.75							
OH-040-60-STA8242+23WB-B					13.00	11.50	149.50									
OC-430-60-37			1									SEE ROADWAY PLANS FOR GUARDRAIL DETAILS				
OH-RAMP4-60-STA8212+90WB				12.00	14.00	7.50	105.00									
BM-040-60-47		1														
BM-040-60-STA8241+51EB					15.00	12.50	187.50	148	23.75							
OH-040-60-18	1											SEE ROADWAY PLANS FOR GUARDRAIL DETAILS				
OH-040-60-STA8267+09WB-A					13.50	11.50	155.25		23.75							
OH-040-60-STA8267+09WB-B					18.50	13.00	240.50									
OH-040-60-03	0															
OH-040-60-STA8255+54EB-A					11.50	11.50	132.25									
OH-040-60-STA8255+54EB-B					15.00	12.50	187.50	148	23.75							
OH-040-60-17	1											SEE ROADWAY PLANS FOR GUARDRAIL DETAILS				
OH-040-60-1-WB-A					15.00	12.50	187.50	148	23.75							
OH-040-60-1-WB-B					13.50	11.50	155.25	147	23.75							
OH-040-60-1-WB-C					18.50	13.00	240.50									
OH-430-60-36	1											SEE ROADWAY PLANS FOR GUARDRAIL DETAILS				
OH-430-60-STA692+30SB-A					18.50	12.00	222.00	12	20.00							
OH-430-60-STA692+30SB-B					15.00	9.00	135.00									
OH-430-60-13	1											SEE ROADWAY PLANS FOR GUARDRAIL DETAILS				
OH-430-60-STA692+23NB-A					11.50	11.00	126.50	13A		23.75						
OH-430-60-STA692+23NB-B					18.50	13.00	240.50	13B		42.75						
OH-430-60-35	1											SEE ROADWAY PLANS FOR GUARDRAIL DETAILS				
OH-430-60-1-NB-A					11.50	11.00	126.50	13A		23.75						
OH-430-60-1-NB-B					18.50	13.00	240.50	13B		42.75						
OH-430-60-38	1											SEE ROADWAY PLANS FOR GUARDRAIL DETAILS				
OH-430-60-1-SB-A					18.50	12.50	231.25	12	20.00							
OH-430-60-1-SB-B				12.00	15.00	9.00	135.00									
OH-430-60-10	0															
OH-430-60-2-NB-A					18.50	12.50	231.25	12	20.00							
OH-430-60-2-NB-B					11.50	11.00	126.50	13A		23.75						
OH-430-60-2-NB-C				12.00	18.50	13.00	240.50	13B		42.75						
OC-430-60-31			0													
OH-430-60-3-NB					18.50	12.50	231.25	12	20.00							
OH-430-60-39	1											SEE ROADWAY PLANS FOR GUARDRAIL DETAILS				
OH-430-60-4-NB-A					18.50	12.00	222.00	12	20.00							
OH-430-60-4-NB-B					15.00	13.50	202.50	13A-B			31.25					
TOTALS:	12	3	1	48.00			6829.25		408.75	199.50	31.25					

STANDARD SIGN QUANTITIES
U-CHANNEL POSTS

SIGN NO./ LOCATION	STANDARD ROADSIDE SIGNS TO BE MOUNTED	U-CHANNEL POST ASSEMBLIES	
		U-1	U-2
		EACH	EACH
SS-NORMAN RD-STA16+06NB	W8-13		1
SS-NORMAN RD-STA23+79SB	W8-13		1
SS-NORMAN RD-STA18+61NB	OM-3L	1	
SS-NORMAN RD-STA21+26SB	OM-3L	1	
SS-NORMAN RD-STA18+56NB	OM-3R	1	
SS-NORMAN RD-STA21+29SB	OM-3R	1	
SS-NEVA RD-STA9+80WB	R1-1	1	
TOTALS:		5	2

STANDARD ROADSIDE SIGNS
SHEET ALUMINUM 0.100" THICKNESS
(5 SQ. FT. OR LESS)

SIGN NO.	SIZE OF SIGN	UNIT AREA (SQ. FT.)	QUANTITY REQUIRED	TOTAL SIGN AREA (SQ. FT.)	LEGEND/BACKGROUND
M3-2	24" x 12"	4.50	1	4.50	BLACK/WHITE
M3-4	24" x 12"	4.50	1	4.50	BLACK/WHITE
OM-3L	12" x 36"	3.00	2	6.00	BLACK/YELLOW
OM-3R	12" x 36"	3.00	2	6.00	BLACK/YELLOW
TOTAL 0.100" THICKNESS:				21.00	

STANDARD ROADSIDE SIGNS
SHEET ALUMINUM 0.125" THICKNESS
(GREATER THAN 5 SQ. FT.)

SIGN NO.	SIZE OF SIGN	UNIT AREA (SQ. FT.)	QUANTITY REQUIRED	TOTAL SIGN AREA (SQ. FT.)	LEGEND/BACKGROUND
M1-1	36" x 36"	9.00	2	18.00	WHITE/BLUE
R1-1	36" x 36"	9.00	1	9.00	WHITE/RED
R2-1	48" x 60"	20.00	6	120.00	BLACK/WHITE
R2-2P	48" x 48"	16.00	2	32.00	BLACK/WHITE
R4-3	48" x 60"	20.00	2	40.00	BLACK/WHITE
W1-2L	48" x 48"	16.00	3	48.00	BLACK/YELLOW
W1-2R	48" x 48"	16.00	2	32.00	BLACK/YELLOW
W1-8L	36" x 48"	12.00	18	216.00	BLACK/YELLOW
W1-8R	36" x 48"	12.00	3	36.00	BLACK/YELLOW
W3-5	48" x 48"	16.00	2	32.00	BLACK/YELLOW
W4-1	48" x 48"	16.00	6	96.00	BLACK/YELLOW
W4-3	48" x 48"	16.00	3	48.00	BLACK/YELLOW
W8-13	48" x 48"	16.00	11	176.00	BLACK/YELLOW
W11-3	48" x 48"	16.00	4	64.00	BLACK/YELLOW
W13-1P	30" x 30"	6.25	5	31.25	BLACK/YELLOW
W13-12	30" x 30"	12.00	3	36.00	BLACK/YELLOW
TOTAL 0.125" THICKNESS:				1034.25	

rnfortner 7/8/2014 12:18:35 PM
WORKSPACE: AHTD
L:\2014\140709 - I-40 at I-430 Interchange Modifications\Drawings\RCA0609_SP_MNL_47.dgn
REVISED DATE:

SIGNING QUANTITIES

DATE REVISED	DATE FILMED	DATE REVISED	DATE FILMED	FED.RD. DIST.NO.	STATE	FED.AID PROJ.NO.	SHEET NO.	TOTAL SHEETS
				6	ARK.			
				JOB NO.		CA0609	172	693

(2) SIGNING QUANTITIES

MAIN LANES SIGNING QUANTITIES
SQUARE TUBE POSTS

SIGN NO./ LOCATION	STANDARD ROADSIDE SIGNS TO BE MOUNTED	SQUARE TUBE POST ASSEMBLIES		
		G-1	G2-1	G2-2
		EACH	EACH	EACH
SS-040-60-STA7970+30EB	W4-1		1	
SS-040-60-STA7986+91EB	M1-1, M3-2	1		
SS-040-60+STA7992+54EB	R4-3	1		
SS-040-60-STA7997+89EB	R2-1, R2-2P	1		
SS-040-60-STA8026+58EB	W8-13		1	
SS-040-60-STA8042+34WB	W8-13		1	
SS-040-60-STA8091+48EB	W8-13		1	
SS-040-60-STA8118+19WB	W8-13		1	
SS-040-60-STA8127+01EB(LT)	W3-5		1	
SS-040-60-STA8127+01EB(RT)	W3-5		1	
SS-040-60-STA8140+99EB(LT)	R2-1	1		
SS-040-60-STA8140+99EB(RT)	R2-1	1		
SS-040-60-STA8172+37EB	W8-13		1	
SS-040-60-STA8177+03WB	R2-1, R2-2P	1		
SS-040-60-STA8180+33WB	R4-3	1		
SS-040-60-STA8183+84WB	M1-1, M3-4	1		
SS-040-60-STA8188+43WB	W8-13		1	
SS-040-60-STA8255+14WB	W4-3		1	
SS-RAMP3-60-STA670+80SB	W8-13		1	
SS-RAMP3-60-STA669+10SB	W1-2, W13-1P			1
SS-040-60-STA8238+14WB	W4-1		1	
SS-040-60-STA8247+73EB	W4-3		1	
SS-RAMP3-60-STA672+00SB	W1-8L	1		
SS-RAMP3-60-STA674+00SB	W1-8L	1		
SS-RAMP3-60-STA676+00SB	W1-8L	1		
SS-RAMP3-60-STA678+00SB	W1-8L	1		
SS-RAMP3-60-STA680+00SB	W1-8L	1		
SS-RAMP3-60-STA682+00SB	W1-8L	1		
SS-RAMP4-60-STA8197+10WB	W1-8L	1		
SS-RAMP4-60-STA8199+10WB	W1-8L	1		
SS-RAMP4-60-STA8201+10WB	W1-8L	1		
SS-RAMP4-60-STA8203+10WB	W1-8L	1		
SS-RAMP4-60-STA8205+10WB	W1-8L	1		
SS-RAMP4-60-STA8207+10WB	W1-8L	1		
SS-RAMP4-60-STA8209+10WB	W1-8L	1		
SS-RAMP4-60-STA8211+10WB	W1-8L	1		
SS-RAMP2-60-STA708+10NB	W1-8R	1		
SS-RAMP2-60-STA710+10NB	W1-8R	1		
SS-RAMP2-60-STA712+10NB	W1-8R	1		
SS-RAMP1-60-STA8233+99SB	W4-3		1	
SS-RAMP3-60-STA684+00SB	W1-8R	1		
SS-RAMP4-60-STA8193+10WB	W1-8L	1		
SS-RAMP4-60STA8195+10WB	W1-8L	1		
SS-430-60-STA690+01SB(LT)	W11-3		1	
SS-430-60-STA690+01SB(RT)	W11-3		1	
SS-430-60-STA686+09SB(LT)	R2-1	1		
SS-430-60-STA686+09SB(RT)	R2-1	1		
SS-RAMP4-60-STA8191+46NB(LT)	W1-2, W13-1P			1
SS-RAMP4-60-STA8191+46NB(RT)	W1-2, W13-1P			1
SS-RAMP2-60-STA700+82NB(LT)	W1-2, W13-1P			1
SS-RAMP2-60-STA700+82NB(RT)	W1-2, W13-1P			1
SS-430-60-1-SB	W8-13		1	
SS-430-60-1-NB	W4-1		1	
SS-430-60-3-SB	W4-1		1	
SS-430-60-2-NB	W8-13		1	
SS-430-60-4-SB	W4-1		1	
SS-430-60-3-NB	W4-1		1	
SS-430-60-4-NB(LT)	W11-3		1	
SS-430-60-5-NB(RT)	W11-3		1	
TOTALS:		30	24	5

SIGNING SUMMARY OF QUANTITIES

ITEM NUMBER	ITEM	TOTAL	UNIT
SP	ANTENNA SUPPORT (10' HT.) WITH CAMERA	1	EACH
SP	OMNI-DIRECTIONAL BREAKAWAY SIGN SUPPORT (TYPE G-1)	30	EACH
SP	OMNI-DIRECTIONAL BREAKAWAY SIGN SUPPORT (TYPE G2-1)	24	EACH
SP	OMNI-DIRECTIONAL BREAKAWAY SIGN SUPPORT (TYPE G2-2)	5	EACH
SP	OVERHEAD VMS ASSEMBLY	1	EACH
SP	STEEL OVERHEAD SIGN STRUCTURE (OH-040-60-01)	1	EACH
SP	STEEL OVERHEAD SIGN STRUCTURE (OH-040-60-02)	1	EACH
SP	STEEL OVERHEAD SIGN STRUCTURE (OH-040-60-17)	1	EACH
SP	STEEL OVERHEAD SIGN STRUCTURE (OH-040-60-18)	1	EACH
SP	STEEL OVERHEAD SIGN STRUCTURE (OH-040-60-41)	1	EACH
SP	STEEL OVERHEAD SIGN STRUCTURE (OH-040-60-43)	1	EACH
SP	STEEL OVERHEAD SIGN STRUCTURE (OH-040-60-44)	1	EACH
SP	STEEL OVERHEAD SIGN STRUCTURE (OH-430-60-13)	1	EACH
SP	STEEL OVERHEAD SIGN STRUCTURE (OH-430-60-35)	1	EACH
SP	STEEL OVERHEAD SIGN STRUCTURE (OH-430-60-36)	1	EACH
SP	STEEL OVERHEAD SIGN STRUCTURE (OH-430-60-38)	1	EACH
SP	STEEL OVERHEAD SIGN STRUCTURE (OH-430-60-39)	1	EACH
SP	STEEL CANTILEVER SIGN STRUCTURE (OC-430-60-37)	1	EACH
SP	STEEL BRIDGE MOUNTED SIGN STRUCTURE (BM-040-60-42)	1	EACH
SP	STEEL BRIDGE MOUNTED SIGN STRUCTURE (BM-040-60-45)	1	EACH
SP	STEEL BRIDGE MOUNTED SIGN STRUCTURE (BM-040-60-47)	1	EACH
SP & 725	GUIDE SIGN-ROADSIDE MOUNTED (DEMOUNTABLE LEGEND)	1905	SQ. FT.
SP & 725	GUIDE SIGN-OVERHEAD MOUNTED (DEMOUNTABLE LEGEND)	6829	SQ. FT.
SP & 726	STANDARD SIGN	1103	SQ. FT.
SP & 727	EXIT NUMBER PANEL (TYPE A)	433	SQ. FT.
SP & 727	EXIT NUMBER PANEL (TYPE B)	200	SQ. FT.
SP & 727	EXIT NUMBER PANEL (TYPE C)	31	SQ. FT.
SP & 729	CHANNEL POST SIGN SUPPORT (TYPE U-1)	5	EACH
SP & 729	CHANNEL POST SIGN SUPPORT (TYPE U-2)	2	EACH
730	BREAKAWAY SIGN SUPPORT (TYPE G-2)	14106	POUND

STATE OF ARKANSAS
REGISTERED PROFESSIONAL ENGINEER
No. 8741
NICCI D. TINER
7-30-14

MAIN LANES SIGNING QUANTITIES
ROADSIDE MOUNTED I-BEAM SIGN SUPPORTS

SIGN NO./ LOCATION	STRUCTURE TYPE	SIGN				BREAKAWAY SIGN SUPPORT										EXIT NUMBER PANEL			
			GUIDE SIGN			STEEL SECT.		SIGN POST LENGTH		STUB POST		FOOTINGS			SIGN POST AND STUB		TYPE		
	TYPE	STANDARD SIGN	LENGTH	HEIGHT		A-572		H-1	H-2	H-1	H-2	DIA.	DEPTH	EMBED.			A	B	C
	G-2	SQ. FT.	FT.	FT.	SQ. FT.	BEAM	LBS	LIN FT		LIN FT		LIN FT			POUND	LEGEND	SQ. FT.		
EX-040-60-STA7974+59WB	1		7.50	5.00	37.50	W6	9	13	13.21	3.66	3.66	1.5	5	3.33	301.83				
GM-040-60-STA8007+44EB	1		14.50	7.50	108.75	W8	18	16.99	18.22	6.00	6.00	3	8.5	5.67	849.67				
LG-040-60-STA8060+14WB	1		12.00	13.50	162.00	W8	21	22.13	23.11	6.33	6.33	3	9	6.00	1215.91				
LF-040-60-STA8070+19WB	1		12.00	13.50	162.00	W10	22	22.81	24.42	6.66	6.66	3	9.5	6.33	1332.26				
LL-040-60-STA8080+08WB	1		12.00	13.50	162.00	W10	22	22.24	23.69	6.66	6.66	3	9.5	6.33	1303.66				
LC-040-60-STA8090+10WB	1		12.00	10.00	120.00	W8	18	18.77	20.05	6.00	6.00	3	8.5	5.67	914.65				
GM-040-60-STA8168+09WB	1		15.00	5.00	75.00	W8	18	13.94	15.6	5.00	5.00	2.5	7	4.67	711.61				
EX-040-60-STA8217+39EB	1		7.50	5.00	37.50	W6	9	12.77	13.38	4.33	4.33	2	6	4.00	313.29				
GM-RAMP3-60-STA665+98SB	1		12.00	10.00	120.00	W8	18	17.66	18.86	6.00	6.00	3	8.5	5.67	873.25				
LGC-040-60-STA8233+45EB	1		12.00	16.00	192.00	W10	22	25.16	26.48	7.00	7.00	3	10	6.67	1443.95				
EX-040-60-STA8245+54EB	1		7.50	5.00	37.50	W6	9	12.74	13.03	3.66	3.66	1.5	5	3.33	297.87				
GM-040-60-STA8252+57WB	1		15.50	12.50	193.75	W8	21	21.14	22.41	7.00	7.00	3	10	6.67	1208.42	147	23.75		
EX-040-60-STA8261+00WB	1		7.50	5.00	37.50	W6	9	12.64	12.38	3.33	3.33	1.5	4.5	3.00	285.12				
EX-040-60-1-WB	1		7.50	5.00	37.50	W6	9	12.57	12.52	3.33	3.33	1.5	4.5	3.00	285.75				
GM-RAMP2-60-STA697+00NB	1		10.50	10.50	110.25	W8	18	18.85	19.63	5.66	5.66	3	8	5.33	896.53				
GM-430-60-STA671+15SB	1		18.00	7.00	126.00	W8	18	16.61	18.09	6.00	6.00	3	8.5	5.67	840.49				
EX-430-60-1-SB	1		6.00	5.00	30.00	W6	9	12.744	12.904	3.33	3.33	1.5	4.5	3.00	290.77				
EX-430-60-1-NB	1		6.00	5.00	30.00	W6	9	12.744	12.904	3.66	3.66	1.5	5	3.33	296.78				
GM-430-60-1-NB	1		18.00	7.00	126.00	W6	12	12.744	12.904	5.66	5.66	3	8	5.33	443.70				
TOTALS:	19	0			1905.25										14105.51		23.75	0.00	0.00

NOTE:
BREAKAWAY SIGN SUPPORT TOTAL IS CALCULATED BY TAKING THE LENGTH OF H-1, H-2, AND EACH STUB POST AND MULTIPLYING BY THE BEAM WEIGHT (LBS).

cggervasini 7/30/2014 8:34:34 AM
WORKSPACE: AHTD
L:\2014\14017709 - I-40 at I-430 Interchange Modifications\Drawings\RCA0609_SP_MNL_48.dgn
REVISED DATE:

DATE REVISED	DATE FILMED	DATE REVISED	DATE FILMED	FED.RD. DIST.NO.	STATE	FED.AID PROJ.NO.	SHEET NO.	TOTAL SHEETS
				6	ARK.			
				JOB NO.		CA0609	173	693
				(2)	SOIL BORING LOGS			

STATE OF ARKANSAS
LICENSED PROFESSIONAL ENGINEER
No.13422
JOHN F. CANTABERY
7-18-14

SOIL BORING LOG

BORING NO.	LOCATION	APPROX. STATION	SAMPLE DEPTH (ft)	WATER CONTENT (%)	ATTERBERG LIMITS			PERCENT PASSING #200	UNIFIED CLASS.	AASHTO CLASS.
					LIQUID LIMIT	PLASTIC LIMIT	PLASTICITY INDEX			
R1	I-40	7962+00	0.5-1.5	14	40	22	18	57	CL	A-6
R1	I-40	7962+00	4-5	12	27	15	12	65	CL	A-6
R2	I-40	7972+00	0.5-1.5	12	30	16	14	33	SC	A-2-6
R3	I-40	7982+00	1.2-2.5	12	31	17	14	24	SC	A-2-6
R4	I-40	7994+00	0.5-1.5	14	33	18	15	38	SC	A-2-6
R5	I-40	8002+00	0.5-1.5	15	38	19	19	48	GC	A-6
R6	I-40	8012+00	0-1	10	35	28	7	12	GP-GM	A-2-4
R6	I-40	8012+00	1.2-2.5	12	31	17	14	26	SC	A-2-6
R7	I-40	8022+00	1.2-2.5	12	30	18	12	33	SC	A-2-6
R8	I-40	8032+00	2.5-3.5	15	38	17	21	58	CL	A-6
R9	I-40	8042+00	0.5-1.5	11	25	15	10	40	SC	A-4
R10	I-40	8052+00	2.5-3.5	13	33	18	15	49	SC	A-6
R11	I-40	8062+00	0.5-1.5	14	22	14	8	68	CL	A-4
R12	I-40	8072+00	2.5-3.5	15	35	18	17	92	CL	A-6
R12	I-40	8072+00	4-5	13	35	18	17	90	CL	A-6
R13	I-40	8082+00	0.5-1.5	11	32	18	14	34	SC	A-2-6
R14	I-40	8092+00	0.5-1.5	8	31	18	13	16	GC	A-2-6
R16	I-40	8113+00	0.5-1.5	10	30	17	13	32	SC	A-2-6
R17	I-40	8122+00	1-2	13	32	17	15	47	SC	A-6
R17	I-40	8122+00	4.5-5.5	26	58	18	40	92	CH	A-7-6
R18	I-40	8132+00	0.7-1	11	-NON PLASTIC-			11	SP-SM	A-2-4
R18	I-40	8132+00	1-2	13	35	16	19	46	SC	A-6
R19	I-40	8142+00	0-1	7	32	26	6	9	GP-GM	A-1-b
R20	I-40	8152+00	0.5-1.5	9	30	18	12	27	GC	A-2-6
R21	I-40	8162+00	0.5-1.5	13	35	18	17	35	GC	A-2-6
R22	I-40	8173+00	1.5-2.5	12	36	19	17	32	SC	A-2-6
R22	I-40	8173+00	3-4	17	42	18	24	88	CL	A-7-6
R23	I-40	8176+50	0.5-1.5	14	39	21	18	35	GC	A-2-6
R23	I-40	8176+50	3-4	19	41	20	21	69	CL	A-7-6
R24	I-40	7967+00	1.2-2.5	9	33	18	15	22	GC	A-2-6
R25	I-40	7977+00	6.5-7.5	21	32	17	15	63	CL	A-6
R25	I-40	7977+00	1.2-2.5	11	31	19	12	18	GC	
R26	I-40	7987+00	0-1	13	-NON PLASTIC-			21	SM	A-2-4
R26	I-40	7987+00	1.5-2.5	15	45	21	24	34	GC	A-2-7
R27	I-40	7997+00	1.5-2.5	15	41	20	21	48	SC	A-7-6
R28	I-40	8007+00	1.5-2.5	19	54	24	30	54	CH	A-7-6
R29	I-40	8017+00	1.5-2.5	13	34	17	17	50	CL	A-6
R30	I-40	8027+00	0.5-1.5	5	-NON PLASTIC-			10	GP-GM	A-1-b
R30	I-40	8027+00	1.5-2	13	-NON PLASTIC-			33	SM	A-2-4
R31	I-40	8039+00	2.5-3.5	12	33	18	15	46	SC	A-2-6
R32	I-40	8047+00	2-3	15	33	17	16	51	CL	A-6
R33	I-40	8057+00	1-2	12	32	18	14	24	GC	A-2-6
R33	I-40	8057+00	5.5-6.5	27	68	22	46	96	CH	A-7-6
R34	I-40	8067+00	0.5-1.5	13	27	16	11	69	CL	A-6
R35	I-40	8077+00	4-5	18	28	16	12	91	CL	A-6
R36	I-40	8087+00	0.5-1.5	9	30	16	14	50	CL	A-6
R37	I-40	8095+00	1-2	11	28	16	12	28	GC	A-2-6
R38	I-40	8099+50	0.5-1.5	13	39	20	19	48	CL	A-6
R39	I-40	8117+00	1.5-2.5	10	33	18	15	36	GC	A-2-6
R40	I-40	8127+00	0.5-1.5	5	-NON PLASTIC-			16	GM	A-1-b
R40	I-40	8127+00	2.5-3.5	14	22	19	3	62	ML	A-4
R40	I-40	8127+00	6.5-7.5	25	53	20	33	93	CH	A-7-6
R41	I-40	8137+00	2-3	11	32	19	13	25	GC	A-2-6
R42	I-40	8147+00	1-2	10	32	19	13	23	GC	A-2-6
R43	I-40	8158+50	2.5-3.5	16	32	17	15	78	CL	A-6
R44	I-40	8167+00	1-2	14	21	19	2	----	SHALE	
R45	I-40	8174+00	0.5-1.2	8	23	16	7	24	GC-GM	A-4

SOIL BORING LOG

BORING NO.	LOCATION	APPROX. STATION	SAMPLE DEPTH (ft)	WATER CONTENT (%)	ATTERBERG LIMITS			PERCENT PASSING #200	UNIFIED CLASS.	AASHTO CLASS.
					LIQUID LIMIT	PLASTIC LIMIT	PLASTICITY INDEX			
S1	MARCHE RD.	15+76	2.5-3.5	9	33	19	14	59	CL	A-6
S1	MARCHE RD.	15+76	9-10	20	27	18	9	91	CL	A-4
S1	MARCHE RD.	15+76	14-15	16	18	17	1	57	ML	A-4
S2	MARCHE RD.	14+14	2.5-3.5	16	37	21	16	62	CL	A-6
S2	MARCHE RD.	14+14	6.5-7.5	23	28	19	9	93	CL	A-4
S2	MARCHE RD.	14+14	24-25	22	26	16	10	88	CL	A-6
S3	MARCHE RD.	17+59	4.5-7.5	12	35	17	18	59	CL	A-6
S3	MARCHE RD.	17+59	24-24.5	13	37	18	19	71	CL	A-6
S3	MARCHE RD.	17+59	39-40	17	23	16	7	72	CL	A-4
S4	MARCHE RD.	11+85	14-15	13	37	19	18	59	CL	A-6
S4	MARCHE RD.	11+85	34-35	21	34	18	16	89	CL	A-6
W1	MARCHE RD.	12+40	2-2.5	9	41	17	24	58	CL	A-7-6
W1	MARCHE RD.	12+40	14-15	24	23	19	4	89	ML	A-4
W2	MARCHE RD.	12+74	0.5-1.5	12	27	15	12	38	CL	A-6
W2	MARCHE RD.	12+74	14-15	30	26	18	8	86	CL	A-4
W3	MARCHE RD.	13+16	1-2	11	36	16	20	34	GC	A-2-6
W4	MARCHE RD.	12+60	4-5	8	33	17	16	16	GC	A-2-6
W4B	MARCHE RD.	13+26	0.5-2	11	31	17	14	46	GC	A-6
W5	MARCHE RD.	16+24	8-9	17	31	17	14	66	CL	A-6
W6	MARCHE RD.	16+20	0.8-2.5	19	31	19	12	86	CL	A-6
W7	MARCHE RD.	16+52	3.5-4.5	21	35	19	16	90	CL	A-6
W8	MARCHE RD.	16+95	2-3	11	33	17	16	32	GC	A-2-6
W8	MARCHE RD.	16+95	9.5-10	20	47	18	29	78	CL	A-7-6
S1	NORMAN RD.	18+40	---	---	---	---	---	---	---	---
S2	NORMAN RD.	19+85	4.5-5.5	23	59	22	37	70	CH	A-7-6
S3	NORMAN RD.	21+35	2.5-3.5	21	62	30	32	81	CH	A-7-6
S4	RAMP 4	8199+30	9-10	13	42	18	24	55	CL	A-7-6
S4	RAMP 4	8199+30	29-30	11	29	17	12	28	GC	A-2-6
S5	RAMP 4	8200+40	9-10	12	36	20	16	----	Shale	
S6	RAMP 4	8201+90	2.5-3.5	15	29	17	12	55	CL	A-6
S8	RAMP 4	8204+40	0.5-1.5	17	37	18	19	62	CL	A-6
S10	RAMP 4	8207+45	14-15	6	27	17	10	18	GC	A-2-4
W1	NORMAN RD.	18+30	0.5-1.5	25	50	26	24	81	CL	A-7-6
W2	NORMAN RD.	18+30	2.5-3.5	9	35	20	15	38	GC	A-6
W3	NORMAN RD.	21+55	2.5-3.5	13	38	23	15	43	GC	A-6
W3	NORMAN RD.	21+55	6.5-7.5	17	36	19	17	----	Shale	
W4	NORMAN RD.	21+55	2.5-3.5	11	56	27	29	59	CH	A-7-6
R1	I-430	690+00	2.5-3.5	8	27	17	10	36	SC	A-4
R2	RAMP 4	8187+10	0.5-1.5	10	27	17	10	38	GC	A-4
R3	RAMP 4	8190+50	0.5-1.5	13	30	19	11	47	SC	A-6
R4	RAMP 4	8198+00	4-5	3	24	15	9	10	GC-GP	A-2-4
R5	RAMP 4	8207+20	0.5-1.5	9	29	18	11	29	GC	A-2-6
R6	RAMP 4	8212+50	2.5-3.5	16	37	20	17	42	GC	A-6
R6A	RAMP 4	8217+00	0.5-1.5	8	30	17	13	26	GC	A-2-6
R7	I-40	8217+00	0.5-1.5	8	22	19	3	19	GM	A-1-b
R7	I-40	8217+00	2.5-3.5	26	39	18	21	----	Shale	
R7A	I-40	8231+00	2.5-3.5	20	41	20	21	84	CL	A-7-6
R9	I-40	8222+00	0.5-1.5	8	29	19	10	38	SC	A-4
R10	I-40	8229+00	2.5-3.5	9	31	18	13	25	GC	A-2-6
R11	NORMAN RD.	16+00	0.5-1.5	17	41	22	19	51	CL	A-7-6
R12	NORMAN RD.	24+20	1-2	19	62	26	36	64	CH	A-7-6
R13	NORMAN RD.	7+70	0.5-1.5	3	Non-plastic			27	GM	A-2-4
R13	NEVA AVE.	7+70	2.5-3.5	16	40	22	18	54	CL	A-6
TP-1	I-430	680+25	1-3	15	24	17	7	69	CL-ML	A-4
TP-2	RAMP 4	8209+00	1-3	12	30	17	13	47	GC	A-6
TP-3	I-40	8222+00	1-3	7	34	20	14	19	GC	A-2-6
TP-4	I-40	8185+00	1-3	14	29	17	12	80	CL	A-6

SOIL CHARACTERISTICS TABULATED ABOVE ARE REPRESENTATIVE AT THE LOCATION OF THE SAMPLE, AND FROM SURFACE INDICATIONS ARE TYPICAL FOR THE LIMITS SHOWN. THESE DATA ARE SHOWN FOR INFORMATION ONLY. THE STATE WILL NOT BE RESPONSIBLE FOR VARIATIONS IN THE SOIL CHARACTERISTICS AND/OR EXTENT OF SAME DIFFERING FROM THE ABOVE TABULATIONS.

rnfortner 7/8/2014 12:20:50 PM
WORKSPACE: AHTD
L:\20II\II0II709 - I-40 at I-430 Interchange Modifications\Drawings\ARCA0609_SBL_01.dgn
REVISED DATE:

DATE REVISED	DATE FILMED	DATE REVISED	DATE FILMED	FED.RD. DIST.NO.	STATE	FED.AID PROJ.NO.	SHEET NO.	TOTAL SHEETS
				6	ARK.			
				JOB NO.		CA0609	174	693

(2) QUANTITIES

ADVANCE WARNING SIGNS AND DEVICES

SIGN NUMBER	DESCRIPTION	SIGN SIZE	I-40 STAGE 1	MARCHE ROAD - STAGE 1A	MARCHE ROAD - STAGE 1B	MARCHE ROAD - STAGE 1C	MAXIMUM NUMBER REQUIRED	TOTAL SIGNS REQUIRED		VERTICAL PANELS	TRAFFIC DRUMS	BARRICADES (TYPE III)		FURNISHING & INSTALLING PRECAST CONC. BARRIER	TEMPORARY IMPACT ATTENUATION BARRIER	TEMP. IMPACT ATTEN.BARR. (REPAIR)
												RIGHT	LEFT			
			LIN. FT. - EACH					NO.	SQ. FT.	EACH		LIN. FT.		LIN. FT.	EACH	
G20-2	END ROAD WORK	48"x24"	2	2	2	2	2	2	16.0							
R11-2	ROAD CLOSED	48"x30"	4	4	4	4	4	4	40.0							
W16-2P	500 FEET	24"x18"		2	2	2	2	2	6.0							
W20-1	ROAD WORK 1500 FT.	48"x48"	2	2	2	2	2	2	32.0							
W20-1	ROAD WORK 1000 FT.	48"x48"	2	2	2	2	2	2	32.0							
W20-1	ROAD WORK 500 FT.	48"x48"	2	2	2	2	2	2	32.0							
W20-4	ONE LANE ROAD 1000 FT	36"x36"			2	2	2	2	18.0							
W20-7	FLAGGER AHEAD	36"x36"			2	2	2	2	18.0							
	VERTICAL PANELS			53			53			53						
	TRAFFIC DRUMS		298		72	72	298				298					
	TRAFFIC CONES															
	TYPE III BARRICADE-RT. (8')			2	2	1	2					16				
	TYPE III BARRICADE-LT. (8')			2	2	1	2						16			
	TYPE III BARRICADE-RT. (16')															
	TYPE III BARRICADE-LT. (16')															
	FURNISHING AND INSTALLING PRECAST CONCRETE BARRIER		45053				45053							45053		
	RELOCATING PRECAST CONCRETE BARRIER															
	TEMPORARY IMPACT ATTENUATION BARRIER		2				2								2	
	TEMPORARY IMPACT ATTENUATION BARRIER (REPAIR)		2				2									2
TOTALS:									194.0	53	298	16	16	45053	2	2

NOTE: THIS IS A HIGH TRAFFIC VOLUME ROAD AS DEFINED IN SECTION 604.03, STANDARD SPECIFICATIONS FOR HIGHWAY CONSTRUCTION, 2014 EDITION.

STATE OF ARKANSAS
REGISTERED PROFESSIONAL ENGINEER
No. 11427
KEVIN G. TOBLESKY
7/29/14

CONSTRUCTION PAVEMENT MARKINGS AND PERMANENT PAVEMENT MARKINGS

DESCRIPTION	MARCHE ROAD - STAGE 1C	END OF JOB	REMOVAL OF PERMANENT PAVEMENT MARKINGS	CONSTRUCTION PAVEMENT MARKINGS	RAISED PAVEMENT MARKERS	REFLECTORIZED PAINT PAVEMENT MARKINGS		HIGH PERFORMANCE CONTRAST PAVEMENT MARKING		HIGH PERFORMANCE PAVEMENT MARKING	
					TYPE II (WHITE/RED)	4"		4"		4"	
						WHITE	YELLOW	WHITE	YELLOW	WHITE (SKIP)	YELLOW
	LIN. FT. - EACH		LIN. FT.		EACH	LIN. FT.		LIN. FT.		LIN. FT.	
REMOVAL OF PERMANENT PAVEMENT MARKINGS		48856	48856								
CONSTRUCTION PAVEMENT MARKINGS	2156			2156							
RAISED PAVEMENT MARKERS TYPE II (WHITE/RED)		591			591						
REFLECTORIZED PAINT PAVEMENT MARKINGS WHITE (4") EDGE LINE		4472				4472					
REFLECTORIZED PAINT PAVEMENT MARKINGS YELLOW (4")		3690					3690				
HIGH PERFORMANCE CONTRAST PAVEMENT MARKING WHITE (4")		420						420			
HIGH PERFORMANCE CONTRAST PAVEMENT MARKING YELLOW (4") DBL. CENTERLINE		782							782		
HIGH PERFORMANCE PAVEMENT MARKING WHITE (4") SKIP		11370								11370	
HIGH PERFORMANCE PAVEMENT MARKING YELLOW (4") EDGE LINE		46257									46257
TOTALS:			48856	2156	591	4472	3690	420	782	11370	46257

NOTE: THIS IS A HIGH TRAFFIC VOLUME ROAD AS DEFINED IN SECTION 604.03, STANDARD SPECIFICATIONS FOR HIGHWAY CONSTRUCTION, 2014 EDITION.

CLEARING AND GRUBBING

STATION	STATION	LOCATION	CLEARING	GRUBBING
			STATION	
7967+00	8011+00	I-40 C.L. MEDIAN	44	44
8056+00	8065+00	I-40 C.L. MEDIAN	9	9
8067+00	8092+00	I-40 C.L. MEDIAN	25	25
8094+00	8099+00	I-40 C.L. MEDIAN	5	5
8115+00	8158+00	I-40 C.L. MEDIAN	43	43
8163+00	8175+00	I-40 C.L. MEDIAN	12	12
5+00	13+00	C.L. MARCHE ROAD	8	8
16+00	23+00	C.L. MARCHE ROAD	7	7
TOTALS:			153	153

NOTE: CLEARING AND GRUBBING QUANTITIES SHALL BE WITHIN THE MEDIAN UNLESS OTHERWISE NOTED ON THE PLANS.
REFER TO SECTION 203 OF THE STANDARD SPECIFICATIONS FOR ADDITIONAL INFORMATION.

BENCH MARKS

STATION	LOCATION	EACH
16+70	NW CORNER OF MARCHE RD. BRIDGE	1
7985+45	BOX CULVERT, RT. OF LT. MAIN LANES	1
7985+75	BOX CULVERT, LT. OF RT. MAIN LANES	1
8138+45	BOX CULVERT, RT. OF LT. MAIN LANES	1
8136+40	BOX CULVERT, LT. OF RT. MAIN LANES	1
TOTAL:		5

NOTE: SHOWN FOR INFORMATION ONLY. BENCH MARKS SHALL BE FURNISHED AND PLACED BY STATE FORCES.

QUANTITIES
STA. 7963+00.00 TO STA. 8181+22.02

7/29/2014 2:36:02 PM ...\Drawings\9-Quantities.dgn T:\Job\WLXM2650 AHTD CAP CA0603\700 CADD Files\777 Roadway Files\Drawings\9-Quantities.dgn

DATE REVISED	DATE FILMED	DATE REVISED	DATE FILMED

FED.RD. DIST.NO.	STATE	FED.AID PROJ.NO.	SHEET NO.	TOTAL SHEETS
6	ARK.			
JOB NO.		CA0609	175	693

(2) QUANTITIES

STATE OF ARKANSAS
REGISTERED PROFESSIONAL ENGINEER
No. 11427
KEVIN G. TOBLESEY
7/17/14

REMOVAL AND DISPOSAL OF ITEMS

FROM			TO			CONCRETE PAVEMENT	APPROACH GUTTER	APPROACH SLAB AND GUTTERS	PRECAST CONCRETE BARRIER	CONCRETE DITCH PAVING	FENCE	STEEL GRATE ASSEMBLIES	DROP INLETS	CONCRETE PIER PROTECTION	GUARDRAIL	UNDERDRAIN OUTLET PROTECTOR	IMPACT ATTENUATION BARRIER
STATION	SIDE	LOCATION	STATION	SIDE	LOCATION	SQ. YD.	EACH	EACH	LIN. FT.	SQ. YD.	LIN. FT.	EACH	EACH	LIN. FT.	LIN. FT.	EACH	EACH
11+72	RIGHT	C.L. EXISTING MARCHE ROAD	12+22	RIGHT	C.L. EXISTING C.L. MARCHE ROAD										50		
12+01	LEFT	C.L. EXISTING MARCHE ROAD	12+41	LEFT	C.L. EXISTING C.L. MARCHE ROAD										40		
12+18		C.L. EXISTING MARCHE ROAD						1									
16+93		C.L. EXISTING MARCHE ROAD						1									
16+68	RIGHT	C.L. EXISTING MARCHE ROAD	17+08	RIGHT	C.L. EXISTING C.L. MARCHE ROAD										40		
16+87	LEFT	C.L. EXISTING MARCHE ROAD	17+37	LEFT	C.L. EXISTING C.L. MARCHE ROAD										50		
7974+33	LEFT	I-40 C.L. RIGHT MAIN LANES										1					
7982+80	LEFT	I-40 C.L. RIGHT MAIN LANES	7986+30	LEFT	I-40 C.L. RIGHT MAIN LANES										350		
7985+07	RIGHT	I-40 C.L. LEFT MAIN LANES	7988+57	RIGHT	I-40 C.L. LEFT MAIN LANES										350		
7985+34		I-40 C.L. MEDIAN	7985+97		I-40 C.L. MEDIAN					154							
7986+26		I-40 C.L. MEDIAN	7986+66		I-40 C.L. MEDIAN					22							
7989+03		I-40 C.L. MEDIAN	7989+86		I-40 C.L. MEDIAN					44							
7990+75		I-40 C.L. MEDIAN	7991+32		I-40 C.L. MEDIAN					32							
7993+17	RIGHT	I-40 C.L. LEFT MAIN LANES														1	
7994+19	RIGHT	I-40 C.L. LEFT MAIN LANES														1	
7994+24		I-40 C.L. MEDIAN	7994+71		I-40 C.L. MEDIAN					30							
7995+18	RIGHT	I-40 C.L. LEFT MAIN LANES														1	
7996+33	RIGHT	I-40 C.L. LEFT MAIN LANES														1	
7997+34	RIGHT	I-40 C.L. LEFT MAIN LANES														1	
7998+35	RIGHT	I-40 C.L. LEFT MAIN LANES														1	
7999+32	RIGHT	I-40 C.L. LEFT MAIN LANES														1	
8002+32		I-40 C.L. MEDIAN	8003+34		I-40 C.L. MEDIAN					53							
8002+32	RIGHT	I-40 C.L. LEFT MAIN LANES														1	
8005+28		I-40 C.L. MEDIAN	8005+30		I-40 C.L. MEDIAN					44							
8005+31	RIGHT	I-40 C.L. LEFT MAIN LANES														1	
8006+33	RIGHT	I-40 C.L. LEFT MAIN LANES														1	
8017+96	LEFT	I-40 C.L. RIGHT MAIN LANES														1	
8019+70	LEFT	I-40 C.L. RIGHT MAIN LANES														1	
8020+32		I-40 C.L. MEDIAN											1				
8021+45	LEFT	I-40 C.L. RIGHT MAIN LANES														1	
8024+74	LEFT	I-40 C.L. RIGHT MAIN LANES														1	
8025+88	LEFT	I-40 C.L. RIGHT MAIN LANES														1	
8028+41	LEFT	I-40 C.L. RIGHT MAIN LANES														1	
8030+53	LEFT	I-40 C.L. RIGHT MAIN LANES	8033+78	LEFT	I-40 C.L. RIGHT MAIN LANES										325		
8031+05	RIGHT	I-40 C.L. RIGHT MAIN LANES	8033+80	RIGHT	I-40 C.L. RIGHT MAIN LANES										275		
8033+48	LEFT	I-40 C.L. RIGHT MAIN LANES	8033+84	LEFT	I-40 C.L. RIGHT MAIN LANES		1										
8033+50	RIGHT	I-40 C.L. LEFT MAIN LANES	8033+86	RIGHT	I-40 C.L. LEFT MAIN LANES		1										
8035+34	LEFT	I-40 C.L. RIGHT MAIN LANES	8035+71	LEFT	I-40 C.L. RIGHT MAIN LANES		1										
8035+36	RIGHT	I-40 C.L. LEFT MAIN LANES	8035+73	RIGHT	I-40 C.L. LEFT MAIN LANES		1										
8035+37	RIGHT	I-40 C.L. LEFT MAIN LANES	8038+62	RIGHT	I-40 C.L. LEFT MAIN LANES										325		
8035+44	LEFT	I-40 C.L. LEFT MAIN LANES	8038+19	LEFT	I-40 C.L. LEFT MAIN LANES										275		
8040+49	LEFT	I-40 C.L. RIGHT MAIN LANES														1	
8049+43	RIGHT	I-40 C.L. RIGHT MAIN LANES	8052+18	RIGHT	I-40 C.L. RIGHT MAIN LANES										275		
8051+13	LEFT	I-40 C.L. LEFT MAIN LANES	8051+46	LEFT	I-40 C.L. LEFT MAIN LANES									33			
8051+46	LEFT	I-40 C.L. LEFT MAIN LANES	8054+21	LEFT	I-40 C.L. LEFT MAIN LANES										275		
8051+53	RIGHT	I-40 C.L. LEFT MAIN LANES	8051+76	RIGHT	I-40 C.L. LEFT MAIN LANES									23			
8051+72	LEFT	I-40 C.L. RIGHT MAIN LANES															1
8051+86	LEFT	I-40 C.L. RIGHT MAIN LANES	8052+09	LEFT	I-40 C.L. RIGHT MAIN LANES									23			
8051+91	RIGHT	I-40 C.L. LEFT MAIN LANES															1
8052+18	RIGHT	I-40 C.L. RIGHT MAIN LANES	8052+51	RIGHT	I-40 C.L. RIGHT MAIN LANES									33			
8076+72	RIGHT	I-40 C.L. LEFT MAIN LANES														1	
8078+52	RIGHT	I-40 C.L. LEFT MAIN LANES														1	
8081+52	RIGHT	I-40 C.L. LEFT MAIN LANES														1	
8084+54	RIGHT	I-40 C.L. LEFT MAIN LANES														1	
8088+50	RIGHT	I-40 C.L. LEFT MAIN LANES														1	
8090+60	RIGHT	I-40 C.L. LEFT MAIN LANES														1	
8094+52	RIGHT	I-40 C.L. LEFT MAIN LANES														1	
8098+00	RIGHT	I-40 C.L. LEFT MAIN LANES														1	
8099+47	RIGHT	I-40 C.L. RIGHT MAIN LANES	8102+22	RIGHT	I-40 C.L. RIGHT MAIN LANES										275		
8099+58	LEFT	I-40 C.L. RIGHT MAIN LANES	8102+83	LEFT	I-40 C.L. RIGHT MAIN LANES										325		
8100+52	RIGHT	I-40 C.L. LEFT MAIN LANES														1	
8110+35	RIGHT	I-40 C.L. LEFT MAIN LANES	8113+60	RIGHT	I-40 C.L. LEFT MAIN LANES										325		
8110+94	LEFT	I-40 C.L. LEFT MAIN LANES	8113+69	LEFT	I-40 C.L. LEFT MAIN LANES										275		
8129+45		I-40 C.L. MEDIAN	8131+44		I-40 C.L. MEDIAN					109							
8130+80		I-40 C.L. MEDIAN	8132+25		I-40 C.L. MEDIAN					79							
8134+17		I-40 C.L. MEDIAN	8136+97		I-40 C.L. MEDIAN					153							
8163+50		I-40 C.L. MEDIAN	8165+00		I-40 C.L. MEDIAN					84							
8137+55		I-40 C.L. MEDIAN	8137+92		I-40 C.L. MEDIAN					18							
8137+82		I-40 C.L. MEDIAN	8139+61		I-40 C.L. MEDIAN					101							
8139+98		I-40 C.L. MEDIAN	8141+62	RIGHT	I-40 C.L. MEDIAN					93							
8149+30	RIGHT	I-40 C.L. RIGHT MAIN LANES														1	
8149+87	RIGHT	I-40 C.L. RIGHT MAIN LANES	8150+33	RIGHT	I-40 C.L. RIGHT MAIN LANES						46						
8150+33	RIGHT	I-40 C.L. RIGHT MAIN LANES	8152+86	RIGHT	I-40 C.L. RIGHT MAIN LANES				253								
8152+86	RIGHT	I-40 C.L. RIGHT MAIN LANES	8153+25	RIGHT	I-40 C.L. RIGHT MAIN LANES						39						
8156+48	LEFT	I-40 C.L. RIGHT MAIN LANES														1	
8159+50	LEFT	I-40 C.L. RIGHT MAIN LANES														1	
8162+50	LEFT	I-40 C.L. RIGHT MAIN LANES														1	
8163+46		I-40 C.L. MEDIAN	8165+76		I-40 C.L. MEDIAN					277							
8163+80		I-40 C.L. MEDIAN	8165+50		I-40 C.L. MEDIAN					95							
8165+50	LEFT	I-40 C.L. RIGHT MAIN LANES														1	
8165+95	RIGHT	I-40 C.L. RIGHT MAIN LANES	8171+45	RIGHT	I-40 C.L. RIGHT MAIN LANES				560								
8168+26	RIGHT	I-40 C.L. RIGHT MAIN LANES	8171+09	RIGHT	I-40 C.L. RIGHT MAIN LANES	515											
8167+08	RIGHT	I-40 C.L. RIGHT MAIN LANES														1	
8167+32	LEFT	I-40 C.L. RIGHT MAIN LANES														1	
8168+84	RIGHT	I-40 C.L. RIGHT MAIN LANES														1	
8170+59		I-40 C.L. MEDIAN	8073+51		I-40 C.L. MEDIAN					148							
8171+50	RIGHT	I-40 C.L. RIGHT MAIN LANES														1	
8176+42	LEFT	I-40 C.L. RIGHT MAIN LANES	8179+67	LEFT	I-40 C.L. RIGHT MAIN LANES										325		
8177+57	RIGHT	I-40 C.L. RIGHT MAIN LANES	8180+32	RIGHT	I-40 C.L. RIGHT MAIN LANES										275		
8148+50	RIGHT	I-40 C.L. RIGHT MAIN LANES	8153+00	RIGHT	I-40 C.L. RIGHT MAIN LANES	534											
TOTALS:						1049	4	2	813	1536	85	1	1	112	4430	35	2

NOTE: PIPE CULVERTS SHOWN ABOVE SHALL INCLUDE REMOVAL & DISPOSAL OF ALL HEADWALLS AND FLARED END SECTIONS IF APPLICABLE.

QUANTITIES
STA. 7963+00.00 TO
STA. 8181+22.02

t:\lob\wlxm2650 ahtd cap ca0603\700 cadd files\777 roadway files\drawings\9-Quantities.dgn
...\drawings\9-Quantities.dgn
7/16/2014 1:4:27 PM

DATE REVISED	DATE FILMED	DATE REVISED	DATE FILMED	FED.RD. DIST.NO.	STATE	FED.AID PROJ.NO.	SHEET NO.	TOTAL SHEETS
9-2-2014				6	ARK.			
				JOB NO.		CA0609	176	693

(2) QUANTITIES

CONCRETE DITCH PAVING

STATION	STATION	SIDE	LOCATION	LENGTH	"W"	"B"	CONC. DITCH PAVING (TYPE A)	CONC. DITCH PAVING (TYPE B)	SOLID SODDING	WATER
				LIN. FT.	FEET	FEET	SQ. YD.	SQ. YD.	SQ. YD.	M. GAL.
7985+51	7985+80		I-40 C.L. MEDIAN	58.00	18.00	10.00	116		25.78	0.32
7996+00	8003+00	RIGHT	I-40 C.L. LEFT MAIN LANES	700.00	4.00			311	311.11	3.92
8005+25			I-40 C.L. MEDIAN	36.00	6.00			24	16.00	0.20
8006+00	8011+18	LEFT	I-40 C.L. RIGHT MAIN LANES	518.00	4.00			230	230.22	2.90
8020+00	8033+77		I-40 C.L. MEDIAN	1377.00	27.98			4281		
8035+22	8046+88		I-40 C.L. MEDIAN	1166.00	23.66			3065		
8129+00	8130+00		I-40 C.L. MEDIAN	100.00	4.00			44	44.44	0.56
8134+00	8136+35		I-40 C.L. MEDIAN	235.00	4.00			104	104.44	1.32
8131+75	8133+25		I-40 C.L. MEDIAN	150.00	4.00			67	66.67	0.84
8138+50	8141+00		I-40 C.L. MEDIAN	250.00	4.00			111	111.11	1.40
8137+15	8137+64		I-40 C.L. MEDIAN	92.00	14.00	10.00	143		40.89	0.52
8139+75	8141+75		I-40 C.L. MEDIAN	200.00	4.00			89		
8163+25	8164+85	LEFT	I-40 C.L. RIGHT MAIN LANES	160.00	4.00			71	71.11	0.90
8164+25	8165+80	RIGHT	I-40 C.L. LEFT MAIN LANES	155.00	4.00			69	68.89	0.87
8165+25			I-40 C.L. MEDIAN	65.00	8.00			58	28.89	0.36
8168+10	8174+59	RIGHT	I-40 C.L. LEFT MAIN LANES	649.00	4.00			288	288.44	3.63
8167+70	8172+21	LEFT	I-40 C.L. RIGHT MAIN LANES	451.00	4.00			200	200.44	2.53
12+12.45	12+84.45	RIGHT	C.L. MARCHE ROAD	130.71	4.00			58	13.78	0.17
12+84.45	12+86.51	LEFT	C.L. MARCHE ROAD	107.04	4.00			48	20.00	0.25
15+94.03	16+61.53	RIGHT	C.L. MARCHE ROAD	109.66	4.00			49	27.56	0.35
16+61.53	17+33.37	LEFT	C.L. MARCHE ROAD	134.13	4.00			60	23.11	0.29
* TO BE USED IF AND WHERE DIRECTED BY THE ENGINEER								75	75.00	0.95
TOTALS:							259	9302	1767.88	22.28

BASIS OF ESTIMATE:
WATER.....12.6 GAL. / SQ. YD. OF SOLID SODDING.

* NOTE: QUANTITIES ARE ESTIMATED.
SEE SECTION 104.03 OF THE STD. SPECS.

SELECTED PIPE BEDDING

LOCATION	CU. YD.
TO BE USED IF AND WHERE DIRECTED BY THE ENGINEER.	40
TOTAL:	40

NOTE: QUANTITY IS ESTIMATED.
SEE SECTION 104.03 OF THE STD. SPECS.

ACHM PATCHING OF EXISTING ROADWAY

LOCATION / DESCRIPTION	TON
TO BE USED IF AND WHERE DIRECTED BY THE ENGINEER	100
TOTAL:	100

NOTE: QUANTITY IS ESTIMATED
SEE SECTION 104.03 OF THE STD. SPECS.

ASPHALT CONCRETE PATCHING FOR MAINTENANCE OF TRAFFIC

LOCATION	TON	TACK COAT GALLON
TO BE USED IF AND WHERE DIRECTED BY THE ENGINEER	103	206
TOTALS:	103	206

BASIS OF ESTIMATE:
ACHM PATCH.....25 TONS/MILE
TACK.....50 GAL./MILE

NOTE: QUANTITIES ARE ESTIMATED.
SEE SECTION 104.03 OF THE STD. SPECS.

EARTHWORK

STATION	STATION	LOCATION / DESCRIPTION	UNCLASSIFIED EXCAVATION	COMPACTED EMBANKMENT	* SELECT GRANULAR BACKFILL	*SOIL STABILIZATION
			CU. YD.			TON
7963+00	8179+35	I-40 C.L. RIGHT MAIN LANES	20690	36327		
7963+00	8180+68	I-40 C.L. LEFT MAIN LANES	15764	33752		
3+78	12+78	C.L. MARCHE ROAD	474	15626		
16+68	26+15	C.L. MARCHE ROAD	110	10979		
7+54	12+31	EXISTING C.L. MARCHE RD. OBLITERATION OF EXISTING PAVEMENT	558			
16+78	22+40	EXISTING C.L. MARCHE RD. OBLITERATION OF EXISTING PAVEMENT	551			
		MARCHE ROAD RETAINING WALL 1	1050		1464	
		MARCHE ROAD RETAINING WALL 2	2497		1260	
		MARCHE ROAD FOR THE CONSTRUCTION OF RETAINING WALL 1	3012	5		
TO BE USED IF AND WHERE DIRECTED BY THE ENGINEER.						250
TOTALS:			44706	96689	2724	250

* QUANTITY ESTIMATED.
SEE SECTION 104.03 OF THE STD. SPECS.

APPROACH GUTTERS

STATION	STATION	SIDE	LOCATION	APPROACH GUTTER (TYPE SPECIAL 1)	APPROACH GUTTER (TYPE C)	REINFORCING STEEL RDWY. (GR 60)
				CU.YD.		POUND
8033+47.55	8033+84.05	LEFT	I-40 C.L. RIGHT MAIN LANES	20.10		4037
8035+34.05	8035+70.55	LEFT	I-40 C.L. RIGHT MAIN LANES	20.10		4037
8033+49.79	8033+86.29	RIGHT	I-40 C.L. LEFT MAIN LANES	20.10		4037
8035+36.29	8035+72.79	RIGHT	I-40 C.L. LEFT MAIN LANES	20.10		4037
12+48.56	12+85.06	LEFT	C.L. MARCHE ROAD		11.55	630
12+32.58	12+69.08	RIGHT	C.L. MARCHE ROAD		11.55	630
16+76.92	17+13.42	LEFT	C.L. MARCHE ROAD		11.55	630
16+60.94	16+97.44	RIGHT	C.L. MARCHE ROAD		11.55	630
TOTALS:				80.40	46.20	18668

STATE OF ARKANSAS
REGISTERED PROFESSIONAL ENGINEER
No. 11427
KEVIN G. TOBLESKY
9/2/14

COLD MILLING ASPHALT PAVEMENT

STATION	STATION	SIDE	LOCATION	LENGTH	AVG. WIDTH	SQ. YD.
				LIN. FT.	FEET	
7963+00.00	8015+84.70	LEFT	I-40 C.L. RIGHT MAIN LANES	5284.70	4	2348.76
8015+84.70	8016+00.00	LEFT	I-40 C.L. RIGHT MAIN LANES	15.30	4	6.80
8016+00.00	8024+55.55	LEFT	I-40 C.L. RIGHT MAIN LANES	855.55	4	380.24
8024+55.55	8032+91.11	LEFT	I-40 C.L. RIGHT MAIN LANES	835.56	14	1299.76
8032+91.11	8033+47.55	LEFT	I-40 C.L. RIGHT MAIN LANES	56.44	23	144.24
8035+70.55	8040+09.30	LEFT	I-40 C.L. RIGHT MAIN LANES	438.75	22	1072.50
8040+09.30	8043+94.63	LEFT	I-40 C.L. RIGHT MAIN LANES	385.33	13	556.59
8043+94.63	8050+00.00	LEFT	I-40 C.L. RIGHT MAIN LANES	605.37	4	269.05
8050+00.00	8073+24.80	LEFT	I-40 C.L. RIGHT MAIN LANES	2324.80	4	1033.24
8073+24.80	8091+15.65	LEFT	I-40 C.L. RIGHT MAIN LANES	1790.85	4	795.93
8091+15.65	8099+63.68	LEFT	I-40 C.L. RIGHT MAIN LANES	848.03	17	1601.83
8099+63.68	8102+22.90	LEFT	I-40 C.L. RIGHT MAIN LANES	259.22	30	864.07
8107+19.08	8111+38.45	LEFT	I-40 C.L. RIGHT MAIN LANES	419.37	22	1025.13
8111+38.45	8114+57.09	LEFT	I-40 C.L. RIGHT MAIN LANES	318.64	13	460.26
8114+57.09	8173+76.23	LEFT	I-40 C.L. RIGHT MAIN LANES	5919.14	4	2630.73
8173+76.23	8176+44.02	LEFT	I-40 C.L. RIGHT MAIN LANES	267.79	17	505.83
8176+44.02	8179+35.42	LEFT	I-40 C.L. RIGHT MAIN LANES	291.40	30	971.33
7963+00.00	7990+65.23	RIGHT	I-40 C.L. LEFT MAIN LANES	2765.23	4	1228.99
7990+65.23	8008+66.65	RIGHT	I-40 C.L. LEFT MAIN LANES	1801.42	4	800.63
8008+66.65	8013+90.68	RIGHT	I-40 C.L. LEFT MAIN LANES	524.03	4	232.90
8013+90.68	8016+00.00	RIGHT	I-40 C.L. LEFT MAIN LANES	209.32	4	93.03
8016+00.00	8025+77.75	RIGHT	I-40 C.L. LEFT MAIN LANES	977.75	4	434.56
8025+77.75	8033+49.79	RIGHT	I-40 C.L. LEFT MAIN LANES	772.04	13	1115.17
8035+72.79	8039+10.12	RIGHT	I-40 C.L. LEFT MAIN LANES	337.33	24	899.55
8039+10.12	8043+25.06	RIGHT	I-40 C.L. LEFT MAIN LANES	414.94	14	645.46
8043+25.06	8051+31.00	RIGHT	I-40 C.L. LEFT MAIN LANES	805.94	4	358.20
8051+31.00	8074+25.91	RIGHT	I-40 C.L. LEFT MAIN LANES	2294.91	4	1019.96
8074+25.91	8099+42.83	RIGHT	I-40 C.L. LEFT MAIN LANES	2516.92	4	1118.63
8099+42.83	8102+63.11	RIGHT	I-40 C.L. LEFT MAIN LANES	320.28	13	462.63
8102+63.11	8106+05.25	RIGHT	I-40 C.L. LEFT MAIN LANES	342.14	22	836.34
8111+01.43	8113+68.61	RIGHT	I-40 C.L. LEFT MAIN LANES	267.18	30	890.60
8113+68.61	8123+64.21	RIGHT	I-40 C.L. LEFT MAIN LANES	995.60	17	1880.58
8123+64.21	8155+14.06	RIGHT	I-40 C.L. LEFT MAIN LANES	3149.85	4	1399.93
8155+14.06	8169+23.60	RIGHT	I-40 C.L. LEFT MAIN LANES	1409.54	4	626.46
8169+23.60	8173+60.00	RIGHT	I-40 C.L. LEFT MAIN LANES	436.40	4	193.96
8173+60.00	8178+85.81	RIGHT	I-40 C.L. LEFT MAIN LANES	525.81	13	759.50
8178+85.81	8180+67.99	RIGHT	I-40 C.L. LEFT MAIN LANES	182.18	22	445.33
8120+04.93	8124+84.93		I-40 C.L. LEFT MAIN LANES - INSIDE LANE	480.00	12	640.00
* 3+78.20	4+78.20		C.L. MARCHE RD.	100.00	22	244.44
* 25+14.65	26+14.65		C.L. MARCHE RD.	100.00	22	244.44
TOTAL:						32537.58

NOTE: AVERAGE MILLING DEPTH 2".
* NOTE: AVERAGE MILLING DEPTH 1"

QUANTITIES
STA. 7963+00.00 TO STA. 8181+22.02

T:\Job\WLXM2650 AHTD CAP CA0603\700 CADD Files\777 Roadway Files\Drawings\9-QuantTitles.dgn
...\Drawings\9-QuantTitles.dgn
9/2/2014 9:07:37 AM

DATE REVISED	DATE FILMED	DATE REVISED	DATE FILMED	FED.RD. DIST.NO.	STATE	FED.AID PROJ.NO.	SHEET NO.	TOTAL SHEETS
				6	ARK.			
				JOB NO.		CA0609	177	693

(2) QUANTITIES

STATE OF ARKANSAS
REGISTERED PROFESSIONAL ENGINEER
No. 11427
KEVIN G. TOBLESKY

7/29/14

STRUCTURES

STATION	SIDE	DESCRIPTION	REINFORCED CONCRETE PIPE CULVERT (CLASS III)				FLARED END SECTIONS FOR R.C. PIPE CULVERTS				TEMPORARY CULVERTS	DROP INLETS	ADJUSTED TO GRADE	SPAN	HEIGHT	LENGTH	CLASS S CONCRETE-ROADWAY	REINF. STEEL-ROADWAY (GRADE 60)	UNCL.EXC. FOR STR.-ROADWAY	SOLID SODDING	WATER	STANDARD DRAWING NUMBERS
			24"	30"	42"	48"	24"	30"	42"	48"	22"x14"	TYPE RM	DROP INLETS									
			LIN. FT.				EACH				LIN. FT.		EACH	LIN. FT.			CU. YD.	POUND	CU. YD.	SQ. YD.	M. GAL	
7974+33	I-40 C.L. RIGHT MAIN LANES	REMOVE STEEL GRATE ASSEMBLY AND EXTEND PIPE TO THE LEFT	14				1													8	0.10	FES-1, FES-2, PCC-1
7985+18	I-40 C.L. LEFT MAIN LANES	EXTEND DOUBLE BOX CULVERT TO THE RIGHT												5	6	23	36.44	4788	18	13	0.16	RCB-1, RCB-2, RCB-3, W-X30, W-X-303-1, R-230X-01
7986+10	I-40 C.L. RIGHT MAIN LANES	EXTEND DOUBLE BOX CULVERT TO THE LEFT												5	6	25	35.06	4720	18	13	0.16	RCB-1, RCB-2, RCB-3, W-X30, W-X-303-1, R-230X-01
8005+47	I-40 C.L. LEFT MAIN LANES	REMOVE HEADWALL AND EXTEND PIPE TO THE RIGHT		22				1												13	0.16	FES-1, FES-2, PCC-1
8005+20	I-40 C.L. RIGHT MAIN LANES	REMOVE HEADWALL AND EXTEND PIPE TO THE LEFT		24				1												13	0.16	FES-1, FES-2, PCC-1
8011+52	I-40 C.L. LEFT MAIN LANES	REMOVE F.E.S. AND EXTEND PIPE TO THE RIGHT	14				1													8	0.10	FES-1, FES-2, PCC-1
8011+18	I-40 C.L. RIGHT MAIN LANES	REMOVE F.E.S. AND EXTEND PIPE TO THE LEFT	12				1													8	0.10	FES-1, FES-2, PCC-1
8020+32	I-40 C.L. RIGHT MAIN LANES	REMOVE D.I. EXTEND PIPE TO THE LEFT AND CONSTRUCT D.I.	6									1								4	0.05	PCC-1, FPC-9D
8045+43	I-40 C.L. LEFT MAIN LANES	ADJUST D.I. TO GRADE											1							4	0.05	FPC-9D
8054+45	I-40 C.L. LEFT MAIN LANES	ADJUST D.I. TO GRADE											1							4	0.05	FPC-9D
8056+33	I-40 C.L. LEFT MAIN LANES	REMOVE HEADWALL AND EXTEND TO THE LEFT AND CONSTRUCT D.I.	9									1								4	0.05	PCC-1, FPC-9D
8067+42	I-40 C.L. LEFT MAIN LANES	REMOVE F.E.S. AND EXTEND PIPE TO THE RIGHT	34				1													8	0.10	FES-1, FES-2, PCC-1
8076+34	I-40 C.L. LEFT MAIN LANES	REMOVE HEADWALL AND EXTEND PIPE TO THE RIGHT	22				1													8	0.10	FES-1, FES-2, PCC-1
8091+91	I-40 C.L. RIGHT MAIN LANES	REMOVE F.E.S. AND EXTEND PIPE TO THE LEFT			10				1											23	0.29	FES-1, FES-2, PCC-1
8092+91	I-40 C.L. LEFT MAIN LANES	REMOVE F.E.S. AND EXTEND PIPE TO THE RIGHT			26				1											23	0.29	FES-1, FES-2, PCC-1
8122+21	I-40 C.L. LEFT MAIN LANES	REMOVE F.E.S. AND EXTEND PIPE TO THE RIGHT	12				1													8	0.10	FES-1, FES-2, PCC-1
8135+97	I-40 C.L. RIGHT MAIN LANES	EXTEND BOX CULVERT TO THE LEFT												8	7	26	33.20	4019	22	14	0.18	RCB-1, RCB-2, RCB-3, W-X30, W-X-303-1, R-130X-1, R-100X-X2
8138+86	I-40 C.L. LEFT MAIN LANES	EXTEND BOX CULVERT TO THE RIGHT												8	7	24	34.66	3571	21	14	0.18	RCB-1, RCB-2, RCB-3, W-X30, W-X-303-1, R-130X-1, R-100X-X2
8148+54	I-40 C.L. RIGHT MAIN LANES	REMOVE HEADWALL AND EXTEND PIPE TO THE LEFT				20				1										29	0.37	FES-1, FES-2, PCC-1
8150+20	I-40 C.L. LEFT MAIN LANES	REMOVE F.E.S. AND EXTEND PIPE TO THE RIGHT				12				1										29	0.37	FES-1, FES-2, PCC-1
8165+18	I-40 C.L. LEFT MAIN LANES	REMOVE HEADWALL AND EXTEND PIPE TO THE RIGHT				46				1										29	0.37	FES-1, FES-2, PCC-1
8165+61	I-40 C.L. RIGHT MAIN LANES	REMOVE HEADWALL AND EXTEND PIPE TO THE LEFT				28				1										29	0.37	FES-1, FES-2, PCC-1
8174+64	I-40 C.L. RIGHT MAIN LANES	REMOVE F.E.S. AND EXTEND PIPE TO THE LEFT	16				1													8	0.10	FES-1, FES-2, PCC-1
8+50	C.L. MARCHE ROAD	INSTALL TEMPORARY ARCH PIPE CULVERT									56											
18+50	C.L. MARCHE ROAD	INSTALL TEMPORARY ARCH PIPE CULVERT									56											
TOTALS:			**139**	**46**	**36**	**106**	**7**	**2**	**2**	**4**	**112**	**2**	**2**				**139.36**	**17098**	**79**	**314**	**3.96**	

BASIS OF ESTIMATE:
WATER.....12.6 GAL. / SQ. YD. OF SOLID SODDING.
NOTE: FOR R.C. PIPE CULVERT INSTALLATIONS USE TYPE 3 BEDDING UNLESS OTHERWISE SPECIFIED.

QUANTITIES
STA. 7963+00.00 TO STA. 8181+22.02

T:\Job\WLXM2650 AHTD CAP CA0603\700 CADD Files\777 Roadway Files\Drawings\9-Quantities.dgn
7/29/2014 2:35:28 PM ...\Drawings\9-Quantities.dgn

DATE REVISED	DATE FILMED	DATE REVISED	DATE FILMED	FED.RD. DIST.NO.	STATE	FED.AID PROJ.NO.	SHEET NO.	TOTAL SHEETS
				6	ARK.			
				JOB NO.		CA0609	178	693

(2) QUANTITIES

STATE OF ARKANSAS
REGISTERED PROFESSIONAL ENGINEER
No. 11427
KEVIN G. TOBLESKY
7/29/14

GUARDRAIL

STATION	STATION	SIDE	LOCATION	GUARDRAIL (TYPE A)	THRIE BEAM GUARDRAIL TERMINAL	GUARDRAIL TERMINAL (TYPE 2)	TERMINAL ANCHOR POST (TYPE 1)
				LIN. FT.	EACH		
7978+70.00	7981+95.00	LEFT	I-40 C.L. LEFT MAIN LANES	275		1	1
7978+70.00	7981+95.00	RIGHT	I-40 C.L. LEFT MAIN LANES	275		1	1
8013+31.85	8016+00.60	LEFT	I-40 C.L. RIGHT MAIN LANES	200	1	1	
8051+30.40	8054+49.15	RIGHT	I-40 C.L. LEFT MAIN LANES	250	1	1	
8049+99.40	8052+68.15	LEFT	I-40 C.L. RIGHT MAIN LANES	250	1		1
8072+91.00	8076+16.00	LEFT	I-40 C.L. RIGHT MAIN LANES	275		1	1
8072+91.00	8076+16.00	RIGHT	I-40 C.L. RIGHT MAIN LANES	275		1	1
8147+41.00	8150+66.00	LEFT	I-40 C.L. RIGHT MAIN LANES	275		1	1
8147+41.00	8150+66.00	RIGHT	I-40 C.L. RIGHT MAIN LANES	275		1	1
11+59.44	12+53.19	RIGHT	C.L. MARCHE ROAD	75	1		1
11+84.14	12+77.89	LEFT	C.L. MARCHE ROAD	75	1		1
16+68.11	17+61.86	RIGHT	C.L. MARCHE ROAD	75	1		1
16+92.81	17+86.56	LEFT	C.L. MARCHE ROAD	75	1		1
8100+03.25	8102+22.00	LEFT	I-40 C.L. RIGHT MAIN LANES	150	1	1	
8100+64.25	8102+83.00	RIGHT	I-40 C.L. RIGHT MAIN LANES	150	1	1	
8110+94.00	8113+12.75	LEFT	I-40 C.L. LEFT MAIN LANES	150	1	1	
8110+35.00	8112+53.75	RIGHT	I-40 C.L. LEFT MAIN LANES	150	1	1	
8035+44.00	8037+62.75	LEFT	I-40 C.L. LEFT MAIN LANES	150	1	1	
8031+61.25	8033+80.00	RIGHT	I-40 C.L. RIGHT MAIN LANES	150	1	1	
8178+13.25	8180+32.00	RIGHT	I-40 C.L. RIGHT MAIN LANES	150	1	1	
8187+48.24	8189+67.00	LEFT	I-40 C.L. RIGHT MAIN LANES	150	1	1	
TOTALS:				3850	15	16	11

FLOWABLE SELECT MATERIAL

STATION	LOCATION	LENGTH	WIDTH	DEPTH	CU. YD.
		LIN. FT.	FEET	FEET	
* 8+50	C.L. MARCHE RD.	56			3.5
* 18+50	C.L. MARCHE RD.	56			3.5
12+77	C.L. MARCHE RD. - BRIDGE APPROACH	22	5	3	12.2
16+68	C.L. MARCHE RD. - BRIDGE APPROACH	22	5	3	12.2
TOTAL:					31.4

*ABANDON TEMPORARY ARCH PIPE CULVERT

TEMPORARY RETAINING WALL

LOCATION	SQ. FT.
MARCHE ROAD - WALL NO. 1	870
MARCHE ROAD - WALL NO. 2	710
TOTAL:	1580

4" PIPE UNDERDRAIN

STATION	SIDE	LOCATIONS	4" PIPE UNDERDRAINS	UNDERDRAIN OUTLET PROTECTORS
			LIN. FT.	EACH
7993+17	RIGHT	I-40 C.L. LEFT MAIN LANES	44	1
7994+19	RIGHT	I-40 C.L. LEFT MAIN LANES	44	1
7995+18	RIGHT	I-40 C.L. LEFT MAIN LANES	44	1
7996+33	RIGHT	I-40 C.L. LEFT MAIN LANES	44	1
7997+34	RIGHT	I-40 C.L. LEFT MAIN LANES	44	1
7998+35	RIGHT	I-40 C.L. LEFT MAIN LANES	44	1
7999+32	RIGHT	I-40 C.L. LEFT MAIN LANES	44	1
8002+32	RIGHT	I-40 C.L. LEFT MAIN LANES	40	1
8005+31	RIGHT	I-40 C.L. LEFT MAIN LANES	44	1
8006+33	RIGHT	I-40 C.L. LEFT MAIN LANES	36	1
8076+72	RIGHT	I-40 C.L. LEFT MAIN LANES	80	1
8078+52	RIGHT	I-40 C.L. LEFT MAIN LANES	80	1
8081+52	RIGHT	I-40 C.L. LEFT MAIN LANES	80	1
8084+54	RIGHT	I-40 C.L. LEFT MAIN LANES	80	1
8088+50	RIGHT	I-40 C.L. LEFT MAIN LANES	80	1
8090+60	RIGHT	I-40 C.L. LEFT MAIN LANES	80	1
8094+52	RIGHT	I-40 C.L. LEFT MAIN LANES	80	1
8098+00	RIGHT	I-40 C.L. LEFT MAIN LANES	24	1
8100+52	RIGHT	I-40 C.L. LEFT MAIN LANES	20	1
8017+96	LEFT	I-40 C.L. RIGHT MAIN LANES	28	1
8019+70	LEFT	I-40 C.L. RIGHT MAIN LANES	24	1
8021+45	LEFT	I-40 C.L. RIGHT MAIN LANES	24	1
8024+74	LEFT	I-40 C.L. RIGHT MAIN LANES	28	1
8025+88	LEFT	I-40 C.L. RIGHT MAIN LANES	60	1
8028+41	LEFT	I-40 C.L. RIGHT MAIN LANES	60	1
8156+48	LEFT	I-40 C.L. RIGHT MAIN LANES	28	1
8159+50	LEFT	I-40 C.L. RIGHT MAIN LANES	72	1
8162+50	LEFT	I-40 C.L. RIGHT MAIN LANES	32	1
8165+50	LEFT	I-40 C.L. RIGHT MAIN LANES	40	1
8167+32	LEFT	I-40 C.L. RIGHT MAIN LANES	32	1
8149+30	RIGHT	I-40 C.L. RIGHT MAIN LANES	10	1
8167+08	RIGHT	I-40 C.L. RIGHT MAIN LANES		1
8168+64	RIGHT	I-40 C.L. RIGHT MAIN LANES		1
8171+50	RIGHT	I-40 C.L. RIGHT MAIN LANES		1
* TO BE USED IF AND WHERE DIRECTED BY THE ENGINEER.			150	2
TOTALS:			1620	36

* NOTE: QUANTITIES ARE ESTIMATED.
SEE SECTION 104.03 OF THE STD. SPECS.

RAMMED AGGREGATE PIERS

STATION	STATION	LOCATION	EACH
12+14	12+96	MARCHE ROAD - WALL NO. 1	150
TOTAL:			150

MSE RETAINING WALL

STATION	STATION	LOCATION	AGGREGATE BASE COURSE (CLASS 7)	SQ. FT.
12+14	12+96	MARCHE ROAD - WALL NO. 1		2985
16+45	17+16	MARCHE ROAD - WALL NO. 2	1312	2360
TOTALS:			1312	5345

RUMBLE STRIPS

STATION	STATION	SIDE	LOCATION	IN ASPHALT SHOULDER
				LIN. FT.
7963+00	8033+48	LEFT	I-40 C.L. RIGHT MAIN LANES	7048
8035+71	8102+23	LEFT	I-40 C.L. RIGHT MAIN LANES	6652
8107+19	8179+35	LEFT	I-40 C.L. RIGHT MAIN LANES	7216
7963+00	8033+50	RIGHT	I-40 C.L. LEFT MAIN LANES	7050
8035+73	8106+05	RIGHT	I-40 C.L. LEFT MAIN LANES	7032
8111+01	8180+68	RIGHT	I-40 C.L. LEFT MAIN LANES	6967
TOTAL:				41965

CONCRETE BARRIER WALL

STATION	STATION	SIDE	LOCATION	SIDE TYPE A
				LIN. FT.
8016+00	8033+48	LEFT	I-40 C.L. RIGHT MAIN LANES	1748
8016+00	8033+50	RIGHT	I-40 C.L. LEFT MAIN LANES	1750
8035+71	8050+00	LEFT	I-40 C.L. RIGHT MAIN LANES	1429
8035+73	8051+31	RIGHT	I-40 C.L. LEFT MAIN LANES	1558
TOTAL:				6485

SEEDING

STATION	STATION	LOCATION / DESCRIPTION	PERMANENT EROSION CONTROL				
			SEEDING	LIME	MULCH COVER	WATER	SECOND SEEDING APPLICATION
			ACRE	TON	ACRE	M. GAL.	ACRE
7963+00	8180+62	I-40 C.L. MEDIAN	16.00	32.00	16.00	1632.0	16.00
3+78	12+78	C.L. MARCHE ROAD	1.75	3.50	1.75	178.5	1.75
16+68	26+15	C.L. MARCHE ROAD	1.25	2.50	1.25	127.5	1.25
* TO BE USED IF AND WHERE DIRECTED BY THE ENGINEER.			4.75	9.50	4.75	484.5	4.75
TOTALS:			23.75	47.50	23.75	2422.5	23.75

BASIS OF ESTIMATE:
LIME .....2 TONS / ACRE OF SEEDING
WATER.....102.0 M.G. / ACRE OF SEEDING.

NOTE: THE TEMPORARY EROSION CONTROL DEVICES SHOWN ABOVE AND ON THE PLANS SHALL BE INSTALLED IN SUCH A SEQUENCE AS TO DETER EROSION AND SEDIMENTATION ON U.S. WATERWAYS AS EXPLAINED BY THE NATIONAL POLLUTANT DISCHARGE ELIMINATION SYSTEM PERMIT.

*QUANTITIES ARE ESTIMATED.
SEE SECTION 104.03 OF THE STD. SPECS.

TEMPORARY EROSION CONTROL ITEMS AND DEVICES

STATION	STATION	LOCATION	TEMPORARY SEEDING	MULCH COVER	WATER	SAND BAG DITCH CHECKS	ROCK DITCH CHECKS	DROP INLET SILT FENCE	SILT FENCE	*SEDIMENT REMOVAL & DISPOSAL
						(E-5)	(E-6)	(E-7)	(E-11)	
			ACRE	ACRE	M. GAL.	BAG	CU. YD.	LIN. FT.	LIN. FT.	CU. YD.
7963+00	8180+62	I-40 C.L. MEDIAN	16.00	16.00	326.4		93	48	18761	33
3+78	14+60	C.L. MARCHE ROAD	1.75	1.75	35.7	22			2410	89
16+10	26+15	C.L. MARCHE ROAD	1.25	1.25	25.5	22			2220	82
* TO BE USED IF AND WHERE DIRECTED BY THE ENGINEER.			4.75	4.44	90.5	220	24	12	5293	196
TOTALS:			23.75	23.44	478.1	264	117	60	28684	400

BASIS OF ESTIMATE:
WATER.....20.4 M.G. / ACRE OF TEMPORARY SEEDING.
SAND BAG DITCH CHECKS.....22 BAGS / LOCATION
ROCK DITCH CHECKS.....3 CU. YD./LOCATION

NOTE: THE TEMPORARY EROSION CONTROL DEVICES SHOWN ABOVE AND ON THE PLANS SHALL BE INSTALLED IN SUCH A SEQUENCE AS TO DETER EROSION AND SEDIMENTATION ON U.S. WATERWAYS AS EXPLAINED BY THE NATIONAL POLLUTANT DISCHARGE ELIMINATION SYSTEM PERMIT.

*QUANTITIES ARE ESTIMATED.
SEE SECTION 104.03 OF THE STD. SPECS.

QUANTITIES
STA. 7963+00.00 TO STA. 8181+22.02

T:\Job\WLXM2650 AHTD CAP CA0603\700 CADD Files\777 Roadway Files\Drawings\9-QuantTitles.dgn ...\Drawings\9-QuantTitles.dgn 7/29/2014 10:12:26 AM

DATE REVISED	DATE FILMED	DATE REVISED	DATE FILMED	FED.RD. DIST.NO.	STATE	FED.AID PROJ.NO.	SHEET NO.	TOTAL SHEETS
				6	ARK.			
				JOB NO.		CA0609	179	693

(2)

STATE OF ARKANSAS
REGISTERED PROFESSIONAL ENGINEER
No. 11427
KEVIN G. TOBLESKY
7/17/14

BASE AND SURFACING (SHEETS 1 OF 4)

STATION	STATION	LOCATION	LENGTH	AGGREGATE BASE COURSE (CLASS 7)		TACK COAT				ACHM BASE COURSE (1 1/2")				ACHM BINDER COURSE (1")				ACHM SURFACE COURSE (1/2")				
				TON / STATION	TON	TOTAL WID.	SQ. YD.	GALLONS / SQ. YD.	GALLON	AVG. WID.	SQ. YD.	POUND / SQ. YD.	PG 76-22	AVG. WID.	SQ. YD.	POUND / SQ. YD.	PG 76-22	AVG. WID.	SQ. YD.	POUND / SQ. YD.	PG 64-22	PG 76-22
			FEET			FEET				FEET			TON	FEET			TON	FEET			TON	TON
MAIN LANES - NOTCH & WIDEN																						
7963+00.00	8015+84.70	I-40 C.L. RIGHT MAIN LANES	5284.70	31.00	1638.26	24.90	14621.00	0.03	438.63	8.52	5002.85	990	2476.41	8.25	4844.31	440	1065.75	8.13	4773.85	220		525.12
8015+84.70	8016+00.00	I-40 C.L. RIGHT MAIN LANES	15.30	31.00	4.74	24.90	42.33	0.03	1.27	8.52	14.48	990	7.17	8.25	14.03	440	3.09	8.13	13.82	220		1.52
8016+00.00	8027+55.53	I-40 C.L. RIGHT MAIN LANES	1155.53	31.00	358.21	24.90	3196.97	0.03	95.91	8.52	1093.90	990	541.48	8.25	1059.24	440	233.03	8.13	1043.83	220		114.82
8027+55.53	8029+65.18	I-40 C.L. RIGHT MAIN LANES - PAVEMENT TRANSITIONS	209.65	15.50	32.50	12.50	291.18	0.03	8.74	4.26	99.23	990	49.12	4.13	96.21	440	21.17	4.07	94.81	220		10.43
8041+87.07	8043+94.63	I-40 C.L. RIGHT MAIN LANES - PAVEMENT TRANSITIONS	207.56	15.50	32.17	12.50	288.28	0.03	8.65	4.26	98.25	990	48.63	4.13	95.25	440	20.96	4.07	93.86	220		10.32
8043+94.63	8050+00.00	I-40 C.L. RIGHT MAIN LANES	605.37	31.00	187.66	24.90	1674.86	0.03	50.25	8.52	573.08	990	283.67	8.25	554.92	440	122.08	8.13	546.85	220		60.15
8050+00.00	8073+24.80	I-40 C.L. RIGHT MAIN LANES	2324.80	31.00	720.69	24.90	6431.95	0.03	192.96	8.52	2200.81	990	1089.40	8.25	2131.07	440	468.84	8.13	2100.07	220		231.01
8073+24.80	8091+15.65	I-40 C.L. RIGHT MAIN LANES	1790.85	31.00	555.16	24.90	4954.69	0.03	148.64	8.52	1695.34	990	839.19	8.25	1641.61	440	361.15	8.13	1617.73	220		177.95
8091+15.65	8095+75.63	I-40 C.L. RIGHT MAIN LANES - PAVEMENT TRANSITIONS	459.98	15.50	71.30	12.50	638.86	0.03	19.17	4.26	217.72	990	107.77	4.13	211.08	440	46.44	4.07	208.01	220		22.88
8113+26.24	8114+57.09	I-40 C.L. RIGHT MAIN LANES - PAVEMENT TRANSITIONS	130.85	15.50	20.28	12.50	181.74	0.03	5.45	4.26	61.94	990	30.66	4.13	60.05	440	13.21	4.07	59.17	220		6.51
8114+57.09	8173+76.23	I-40 C.L. RIGHT MAIN LANES	5919.14	31.00	1834.93	24.90	16376.29	0.03	491.29	8.52	5603.45	990	2773.71	8.25	5425.88	440	1193.69	8.13	5346.96	220		588.17
8173+76.23	8175+36.52	I-40 C.L. RIGHT MAIN LANES - PAVEMENT TRANSITIONS	160.29	15.50	24.84	12.50	222.63	0.03	6.68	4.26	75.87	990	37.56	4.13	73.56	440	16.18	4.07	72.49	220		7.97
7963+00.00	7990+65.23	I-40 C.L. LEFT MAIN LANES	2765.23	31.00	857.22	24.90	7650.47	0.03	229.51	8.52	2617.75	990	1295.79	8.25	2534.79	440	557.65	8.13	2497.92	220		274.77
7990+65.23	8008+66.65	I-40 C.L. LEFT MAIN LANES	1801.42	31.00	558.44	24.90	4983.93	0.03	149.52	8.52	1705.34	990	844.14	8.25	1651.30	440	363.29	8.13	1627.28	220		179.00
8008+66.65	8013+90.68	I-40 C.L. LEFT MAIN LANES	524.03	31.00	162.45	24.90	1449.82	0.03	43.49	8.52	496.08	990	245.56	8.25	480.36	440	105.68	8.13	473.37	220		52.07
8013+90.68	8016+00.00	I-40 C.L. LEFT MAIN LANES	209.32	31.00	64.89	24.90	579.12	0.03	17.37	8.52	198.16	990	98.09	8.25	191.88	440	42.21	8.13	189.09	220		20.80
8016+00.00	8025+77.75	I-40 C.L. LEFT MAIN LANES	977.75	31.00	303.10	24.90	2705.11	0.03	81.15	8.52	925.60	990	458.17	8.25	896.27	440	197.18	8.13	883.23	220		97.16
8025+77.75	8028+81.45	I-40 C.L. LEFT MAIN LANES - PAVEMENT TRANSITIONS	303.70	15.50	47.07	12.50	421.81	0.03	12.65	4.26	143.75	990	71.16	4.13	139.36	440	30.66	4.07	137.34	220		15.11
8041+38.29	8042+11.90	I-40 C.L. LEFT MAIN LANES - PAVEMENT TRANSITIONS	73.61	15.50	11.41	12.50	102.24	0.03	3.07	4.26	34.84	990	17.25	4.13	33.78	440	7.43	4.07	33.29	220		3.66
8042+11.90	8043+25.06	I-40 C.L. LEFT MAIN LANES - PAVEMENT TRANSITIONS	113.16	15.50	17.54	12.50	157.17	0.03	4.72	4.26	53.56	990	26.51	4.13	51.93	440	11.42	4.07	51.17	220		5.63
8043+25.06	8051+31.00	I-40 C.L. LEFT MAIN LANES	805.94	31.00	249.84	24.90	2229.77	0.03	66.89	8.52	762.96	990	377.67	8.25	738.78	440	162.53	8.13	728.03	220		80.08
8051+31.00	8074+25.91	I-40 C.L. LEFT MAIN LANES	2294.91	31.00	711.42	24.90	6349.25	0.03	190.48	8.52	2172.51	990	1075.39	8.25	2103.67	440	462.81	8.13	2073.07	220		228.04
8074+25.91	8099+42.83	I-40 C.L. LEFT MAIN LANES	2516.92	31.00	780.25	24.90	6963.48	0.03	208.90	8.52	2382.68	990	1179.43	8.25	2307.18	440	507.58	8.13	2273.62	220		250.10
8099+42.83	8100+57.62	I-40 C.L. LEFT MAIN LANES - PAVEMENT TRANSITIONS	114.79	15.50	17.79	12.50	159.43	0.03	4.78	4.26	54.33	990	26.89	4.13	52.68	440	11.59	4.07	51.91	220		5.71
8116+95.56	8123+64.21	I-40 C.L. LEFT MAIN LANES - PAVEMENT TRANSITIONS	668.65	15.50	103.64	12.50	928.68	0.03	27.86	4.26	316.49	990	156.66	4.13	306.84	440	67.50	4.07	302.38	220		33.26
8123+64.21	8155+14.06	I-40 C.L. LEFT MAIN LANES	3149.85	31.00	976.45	24.90	8714.59	0.03	261.44	8.52	2981.86	990	1476.02	8.25	2887.36	440	635.22	8.13	2845.36	220		312.99
8155+14.06	8169+23.60	I-40 C.L. LEFT MAIN LANES	1409.54	31.00	436.96	24.90	3899.73	0.03	116.99	8.52	1334.36	990	660.51	8.25	1292.08	440	284.26	8.13	1273.28	220		140.06
8169+23.60	8173+60.00	I-40 C.L. LEFT MAIN LANES	436.40	31.00	135.28	24.90	1207.37	0.03	36.22	8.52	413.13	990	204.50	8.25	400.03	440	88.01	8.13	394.21	220		43.36
8173+60.00	8176+52.87	I-40 C.L. LEFT MAIN LANES - PAVEMENT TRANSITIONS	292.87	15.50	45.39	12.50	406.76	0.03	12.20	4.26	138.63	990	68.62	4.13	134.39	440	29.57	4.07	132.44	220		14.57
SUBTOTALS:					**10959.88**		**97829.51**		**2934.88**		**33468.95**		**16567.13**		**32409.89**		**7130.18**		**31938.44**			**3513.22**

QUANTITIES
STA. 7963+00.00 TO STA. 8181+22.02

7/16/2014 11:45 PM ...\drawings\9-Quantities.dgn t:\lob\wixn2650 ahtd cap ca0603\700 cadd files\777 roadway files\drawings\9-Quantities.dgn

DATE REVISED	DATE FILMED	DATE REVISED	DATE FILMED	FED.RD. DIST.NO.	STATE	FED.AID PROJ.NO.	SHEET NO.	TOTAL SHEETS
				6	ARK.			
				JOB NO.		CA0609	180	693
				(2)	QUANTITIES			

STATE OF ARKANSAS
REGISTERED PROFESSIONAL ENGINEER
No. 11427
KEVIN G. TOBLESKY
7/17/14

BASE AND SURFACING (SHEETS 2 OF 4)

STATION	STATION	LOCATION	LENGTH	AGGREGATE BASE COURSE (CLASS 7)		TACK COAT				ACHM BASE COURSE (1 1/2")				ACHM BINDER COURSE (1")				ACHM SURFACE COURSE (1/2")				
				TON / STATION	TON	TOTAL WID.	SQ. YD.	GALLONS / SQ. YD.	GALLON	AVG. WID.	SQ. YD.	POUND / SQ. YD.	PG 76-22	AVG. WID.	SQ. YD.	POUND / SQ. YD.	PG 76-22	AVG. WID.	SQ. YD.	POUND / SQ. YD.	PG 64-22	PG 76-22
			FEET			FEET				FEET			TON	FEET			TON	FEET			TON	TON
MAIN LANES - FINAL SURFACE																						
7963+00.00	8015+84.70	I-40 C.L. RIGHT MAIN LANES	5284.70			4.00	2348.76	0.10	234.88									22.00	12918.16	220		1421.00
						8.00	4697.51	0.03	140.93													
8015+84.70	8016+00.00	I-40 C.L. RIGHT MAIN LANES	15.30			4.00	6.80	0.10	0.68									22.00	37.40	220		4.11
						8.00	13.60	0.03	0.41													
8016+00.00	8025+55.53	I-40 C.L. RIGHT MAIN LANES	955.53			4.00	424.68	0.10	42.47									23.00	2441.91	220		268.61
						8.00	849.36	0.03	25.48													
8027+55.53	8029+65.18	I-40 C.L. RIGHT MAIN LANES - PAVEMENT TRANSITION	209.65			8.00	186.36	0.10	18.64									23.00	535.77	220		58.93
						4.00	93.18	0.03	2.80													
8029+65.18	8032+91.11	I-40 C.L. RIGHT MAIN LANES - PAVEMENT TRANSITION	325.93			13.50	488.90	0.10	48.89									23.00	832.93	220		91.62
						9.50	344.04	0.03	10.32													
8032+91.11	8033+47.55	I-40 C.L. RIGHT MAIN LANES	56.44			23.00	144.24	0.10	14.42									23.00	144.24	220		15.87
8035+70.55	8040+09.30	I-40 C.L. RIGHT MAIN LANES	438.75			23.00	1121.25	0.10	112.13									23.00	1121.25	220		123.34
8040+09.30	8043+94.63	I-40 C.L. RIGHT MAIN LANES - PAVEMENT TRANSITION	385.33			13.50	578.00	0.10	57.80									23.00	984.73	220		108.32
						9.50	406.74	0.03	12.20													
8043+94.63	8050+00.00	I-40 C.L. RIGHT MAIN LANES	605.37			4.00	269.05	0.10	26.91									23.00	1547.06	220		170.18
						8.00	538.11	0.03	16.14													
8050+00.00	8073+24.80	I-40 C.L. RIGHT MAIN LANES	2324.80			4.00	1033.24	0.10	103.32									22.00	5682.84	220		625.11
						8.00	2066.49	0.03	61.99													
8073+24.80	8091+15.65	I-40 C.L. RIGHT MAIN LANES	1790.85			4.00	795.93	0.10	79.59									22.00	4377.63	220		481.54
						8.00	1591.87	0.03	47.76													
8091+15.65	8099+63.68	I-40 C.L. RIGHT MAIN LANES - PAVEMENT TRANSITION	848.03			13.00	1224.93	0.10	122.49									22.00	2072.96	220		228.03
						9.00	848.03	0.03	25.44													
8099+63.68	8102+22.90	I-40 C.L. RIGHT MAIN LANES	259.22			30.00	864.07	0.10	86.41									30.00	864.07	220		95.05
8107+19.08	8111+38.45	I-40 C.L. RIGHT MAIN LANES	419.37			22.00	1025.13	0.10	102.51									22.00	1025.13	220		112.76
8113+26.24	8114+57.09	I-40 C.L. RIGHT MAIN LANES - PAVEMENT TRANSITION	130.85			13.00	189.01	0.10	18.90									22.00	319.86	220		35.18
						9.00	130.85	0.03	3.93													
8114+57.09	8173+76.23	I-40 C.L. RIGHT MAIN LANES	5919.14			4.00	2630.73	0.10	263.07									22.00	14469.01	220		1591.59
						8.00	5261.46	0.03	157.84													
8173+76.23	8176+44.02	I-40 C.L. RIGHT MAIN LANES - PAVEMENT TRANSITION	267.79			13.00	386.81	0.10	38.68									22.00	654.60	220		72.01
						9.00	267.79	0.03	8.03													
8176+44.02	8179+35.42	I-40 C.L. RIGHT MAIN LANES	291.40			22.00	712.31	0.10	71.23									22.00	712.31	220		78.35
7963+00.00	7990+65.23	I-40 C.L. LEFT MAIN LANES	2765.23			4.00	1228.99	0.10	122.90									22.00	6759.45	220		743.54
						8.00	2457.98	0.03	73.74													
7990+65.23	8008+66.65	I-40 C.L. LEFT MAIN LANES	1801.42			4.00	800.63	0.10	80.06									22.00	4403.47	220		484.38
						8.00	1601.26	0.03	48.04													
8008+66.65	8013+90.68	I-40 C.L. LEFT MAIN LANES	524.03			4.00	232.90	0.10	23.29									22.00	1280.96	220		140.91
						8.00	465.80	0.03	13.97													
8013+90.68	8016+00.00	I-40 C.L. LEFT MAIN LANES	209.32			4.00	93.03	0.10	9.30									22.00	511.67	220		56.28
						8.00	186.06	0.03	5.58													
8016+00.00	8025+77.75	I-40 C.L. LEFT MAIN LANES	977.75			4.00	434.56	0.10	43.46									23.00	2498.69	220		274.86
						8.00	869.11	0.03	26.07													
8025+77.75	8033+49.79	I-40 C.L. LEFT MAIN LANES - PAVEMENT TRANSITION	772.04			9.50	814.93	0.10	81.49									23.00	1972.99	220		217.03
						13.50	1158.06	0.03	34.74													
8035+72.79	8039+10.12	I-40 C.L. LEFT MAIN LANES	337.33			23.00	862.07	0.10	86.21									23.00	862.07	220		94.83
8039+10.12	8043+25.06	I-40 C.L. RIGHT MAIN LANES - PAVEMENT TRANSITION	414.94			9.50	437.99	0.10	43.80									23.00	1060.40	220		116.64
						13.50	622.41	0.03	18.67													
8043+25.06	8051+31.00	I-40 C.L. LEFT MAIN LANES	805.94			4.00	358.20	0.10	35.82									23.00	2059.62	220		226.56
						8.00	716.39	0.03	21.49													
8051+31.00	8074+25.91	I-40 C.L. LEFT MAIN LANES	2294.91			4.00	1019.96	0.10	102.00									22.00	5609.78	220		617.08
						8.00	2039.92	0.03	61.20													
8074+25.91	8099+42.83	I-40 C.L. LEFT MAIN LANES	2516.92			4.00	1118.63	0.10	111.86									22.00	6152.47	220		676.77
						8.00	2237.26	0.03	67.12													
8099+42.83	8102+63.11	I-40 C.L. LEFT MAIN LANES - PAVEMENT TRANSITIONS	320.28			9.00	320.28	0.10	32.03									22.00	782.91	220		86.12
						13.00	462.63	0.03	13.88													
8102+63.09	8106+05.25	I-40 C.L. LEFT MAIN LANES	342.16			22.00	836.39	0.10	83.64									22.00	836.39	220		92.00
8111+01.43	8113+68.61	I-40 C.L. LEFT MAIN LANES	267.18			22.00	653.11	0.10	65.31									22.00	653.11	220		71.84
8113+68.61	8123+64.21	I-40 C.L. LEFT MAIN LANES - PAVEMENT TRANSITIONS	995.60			9.00	995.60	0.10	99.56									22.00	2433.69	220		267.71
						13.00	1438.09	0.03	43.14													
8123+64.21	8155+14.06	I-40 C.L. LEFT MAIN LANES	3149.85			4.00	1399.93	0.10	139.99									22.00	7699.63	220		846.96
						8.00	2799.87	0.03	84.00													
8155+14.06	8169+23.60	I-40 C.L. LEFT MAIN LANES	1409.54			4.00	626.46	0.10	62.65									22.00	3445.54	220		379.01
						8.00	1252.92	0.03	37.59													
8169+23.60	8173+60.00	I-40 C.L. LEFT MAIN LANES	436.40			4.00	193.96	0.10	19.40									22.00	1066.76	220		117.34
						8.00	387.91	0.03	11.64													
8173+60.00	8178+85.81	I-40 C.L. LEFT MAIN LANES - PAVEMENT TRANSITIONS	525.81			9.00	525.81	0.10	52.58									22.00	1285.31	220		141.38
						13.00	759.50	0.03	22.79													
8178+85.81	8180+67.99	I-40 C.L. LEFT MAIN LANES	182.18			22.00	445.33	0.10	44.53									22.00	445.33	220		48.99
8123+64.21	8124+84.93	I-40 C.L. LEFT MAIN LANES INSIDE LANE INLAY	120.72			12.00	160.96	0.10	16.10									12.00	160.96	220		17.71
SUBTOTALS:							64554.12		3895.93										102723.06			11299.54

QUANTITIES
STA. 7963+00.00 TO STA. 8181+22.02

t:\job\wixm2650 ahtd cap ca0603\700 cadd files\777 roadway files\drawings\9-Quantities.dgn
...\drawings\9-Quantities.dgn
7/16/2014 1:4:48 PM

DATE REVISED	DATE FILMED	DATE REVISED	DATE FILMED	FED.RD. DIST.NO.	STATE	FED.AID PROJ.NO.	SHEET NO.	TOTAL SHEETS
				6	ARK.			
				JOB NO.		CA0609	181	693

(2) QUANTITIES

STATE OF ARKANSAS
REGISTERED PROFESSIONAL ENGINEER
No. 11427
KEVIN G. TOBLESEY
7/17/14

BASE AND SURFACING (SHEETS 3 OF 4)

STATION	STATION	LOCATION	LENGTH	AGGREGATE BASE COURSE (CLASS 7)		TACK COAT				ACHM BASE COURSE (1 1/2")				ACHM BINDER COURSE (1")				ACHM SURFACE COURSE (1/2")				
			FEET	TON / STATION	TON	TOTAL WID. FEET	SQ. YD.	GALLONS / SQ. YD.	GALLON	AVG. WID. FEET	SQ. YD.	POUND / SQ. YD.	PG 76-22 TON	AVG. WID. FEET	SQ. YD.	POUND / SQ. YD.	PG 76-22 TON	AVG. WID. FEET	SQ. YD.	POUND / SQ. YD.	PG 64-22 TON	PG 76-22 TON
MAIN LANES - SHOULDERS																						
7963+00.00	8015+84.70	I-40 C.L. RIGHT MAIN LANES - INSIDE SHOULDER	5284.70	206.75	10926.12																	
8015+84.70	8016+00.00	I-40 C.L. RIGHT MAIN LANES - INSIDE SHOULDER	15.30	VAR.	16.20																	
8016+00.00	8025+55.53	I-40 C.L. RIGHT MAIN LANES - INSIDE SHOULDER	955.53	VAR.	1012.90																	
8027+55.53	8029+65.18	I-40 C.L. RIGHT MAIN LANES - INSIDE SHOULDER	209.65	VAR.	171.90																	
8029+65.18	8031+13.39	I-40 C.L. RIGHT MAIN LANES - INSIDE SHOULDER	148.21	VAR.	103.80																	
8031+13.39	8033+47.55	I-40 C.L. RIGHT MAIN LANES - INSIDE SHOULDER	234.16																			
8035+70.55	8040+29.03	I-40 C.L. RIGHT MAIN LANES - INSIDE SHOULDER	458.48																			
8040+29.03	8041+87.07	I-40 C.L. RIGHT MAIN LANES - INSIDE SHOULDER	158.04	VAR.	110.60																	
8041+87.07	8043+94.63	I-40 C.L. RIGHT MAIN LANES - INSIDE SHOULDER	207.56	VAR.	354.90																	
8043+94.63	8050+00.00	I-40 C.L. RIGHT MAIN LANES - INSIDE SHOULDER	605.37	184.50	1116.91																	
8050+00.00	8073+24.80	I-40 C.L. RIGHT MAIN LANES - INSIDE SHOULDER	2324.80	206.75	4806.52																	
8073+24.80	8091+15.65	I-40 C.L. RIGHT MAIN LANES - INSIDE SHOULDER	1790.85	VAR.	6590.30																	
8091+15.65	8095+75.63	I-40 C.L. RIGHT MAIN LANES - INSIDE SHOULDER	459.98	VAR.	377.20																	
8095+75.63	8098+73.40	I-40 C.L. RIGHT MAIN LANES - INSIDE SHOULDER	297.77	VAR.	393.10																	
8111+38.45	8113+26.24	I-40 C.L. RIGHT MAIN LANES - INSIDE SHOULDER	187.79	VAR.	247.90																	
8113+26.24	8114+57.09	I-40 C.L. RIGHT MAIN LANES - INSIDE SHOULDER	130.85	206.75	270.53																	
8114+57.09	8173+76.23	I-40 C.L. RIGHT MAIN LANES - INSIDE SHOULDER	5919.14	206.75	12237.82																	
8173+76.23	8175+36.52	I-40 C.L. RIGHT MAIN LANES - INSIDE SHOULDER	160.29	206.75	331.40																	
8175+36.52	8176+39.51	I-40 C.L. RIGHT MAIN LANES - INSIDE SHOULDER	102.99	VAR.	131.80																	
7963+00.00	7990+65.23	I-40 C.L. LEFT MAIN LANES - INSIDE SHOULDER	2765.23	206.75	5717.11																	
7990+65.23	8008+66.65	I-40 C.L. LEFT MAIN LANES - INSIDE SHOULDER	1801.42	206.75	3724.44																	
8008+66.65	8013+90.68	I-40 C.L. LEFT MAIN LANES - INSIDE SHOULDER	524.03	206.75	1083.43																	
8013+90.68	8016+00.00	I-40 C.L. LEFT MAIN LANES - INSIDE SHOULDER	209.32	VAR.	514.90																	
8016+00.00	8025+77.75	I-40 C.L. LEFT MAIN LANES - INSIDE SHOULDER	977.75	VAR.	2571.50																	
8025+77.75	8028+81.45	I-40 C.L. LEFT MAIN LANES - INSIDE SHOULDER	303.70	VAR.	798.70																	
8028+81.45	8031+72.83	I-40 C.L. LEFT MAIN LANES - INSIDE SHOULDER	291.38	VAR.	308.90																	
8031+72.83	8033+49.79	I-40 C.L. LEFT MAIN LANES - INSIDE SHOULDER	176.96																			
8035+72.79	8039+42.25	I-40 C.L. LEFT MAIN LANES - INSIDE SHOULDER	369.46																			
8039+42.25	8041+38.29	I-40 C.L. LEFT MAIN LANES - INSIDE SHOULDER	196.04	VAR.	207.80																	
8041+38.29	8042+11.90	I-40 C.L. LEFT MAIN LANES - INSIDE SHOULDER	73.61	VAR.	168.60																	
8042+11.90	8043+25.06	I-40 C.L. LEFT MAIN LANES - INSIDE SHOULDER	113.16	VAR.	259.10																	
8043+25.06	8051+31.00	I-40 C.L. LEFT MAIN LANES - INSIDE SHOULDER	805.94	184.50	1486.96																	
8051+31.00	8074+25.91	I-40 C.L. LEFT MAIN LANES - INSIDE SHOULDER	2294.91	206.75	4744.73																	
8074+25.91	8099+42.83	I-40 C.L. LEFT MAIN LANES - INSIDE SHOULDER	2516.92	VAR.	6468.50																	
8099+42.83	8100+57.62	I-40 C.L. LEFT MAIN LANES - INSIDE SHOULDER	114.79	VAR.	312.20																	
8100+57.62	8102+63.09	I-40 C.L. LEFT MAIN LANES - INSIDE SHOULDER	205.47	VAR.	279.40																	
8114+96.78	8116+95.56	I-40 C.L. LEFT MAIN LANES - INSIDE SHOULDER	198.78	VAR.	540.70																	
8116+95.56	8123+64.21	I-40 C.L. LEFT MAIN LANES - INSIDE SHOULDER	668.65	206.75	1382.43																	
8123+64.21	8155+14.06	I-40 C.L. LEFT MAIN LANES - INSIDE SHOULDER	3149.85	206.75	6512.31																	
8155+14.06	8169+23.60	I-40 C.L. LEFT MAIN LANES - INSIDE SHOULDER	1409.54	VAR.	3397.00																	
8169+23.60	8173+60.00	I-40 C.L. LEFT MAIN LANES - INSIDE SHOULDER	436.40	206.75	902.26																	
8173+60.00	8176+52.87	I-40 C.L. LEFT MAIN LANES - INSIDE SHOULDER	292.87	206.75	605.51																	
8176+52.87	8178+85.81	I-40 C.L. LEFT MAIN LANES - INSIDE SHOULDER	232.94	VAR.	300.50																	
SUBTOTALS:					81486.88																	

7/16/2014 1:4:50 PM ...\drawings\9-Quantities.dgn t:\job\wlxm2650 ahtd cap ca0603\700 cadd files\777 roadway files\drawings\9-Quantities.dgn

DATE REVISED	DATE FILMED	DATE REVISED	DATE FILMED	FED.RD. DIST.NO.	STATE	FED.AID PROJ.NO.	SHEET NO.	TOTAL SHEETS
				6	ARK.			
				JOB NO.		CA0609	182	693
				(2)		QUANTITIES		

STATE OF ARKANSAS
REGISTERED PROFESSIONAL ENGINEER
No. 11427
KEVIN G. TOBLESKY
7/17/14

BASE AND SURFACING (SHEETS 4 OF 4)

STATION	STATION	LOCATION	LENGTH	AGGREGATE BASE COURSE (CLASS 7)		TACK COAT				ACHM BASE COURSE (1 1/2")				ACHM BINDER COURSE (1")				ACHM SURFACE COURSE (1/2")				
			FEET	TON / STATION	TON	TOTAL WID. FEET	SQ. YD.	GALLONS / SQ. YD.	GALLON	AVG. WID. FEET	SQ. YD.	POUND / SQ. YD.	PG 76-22 TON	AVG. WID. FEET	SQ. YD.	POUND / SQ. YD.	PG 76-22 TON	AVG. WID. FEET	SQ. YD.	POUND / SQ. YD.	PG 64-22 TON	PG 76-22 TON
C.L. MARCHE ROAD - LANES																						
4+78.20	7+35.35	C.L. MARCHE ROAD - NOTCH AND WIDEN	257.15	57.00	146.58	10.00	285.72	0.10	28.57									10.00	285.72	468	66.86	
7+35.35	12+77.69	C.L. MARCHE ROAD - FULL DEPTH CONSTRUCTION	542.34	114.00	618.27													22.25	1340.79	220	147.49	
16+68.31	22+13.96	C.L. MARCHE ROAD - FULL DEPTH CONSTRUCTION	545.65	114.00	622.04													22.25	1348.97	220	148.39	
22+13.96	25+14.65	C.L. MARCHE ROAD - NOTCH AND WIDEN	300.69	57.00	171.39	10.00	334.10	0.10	33.41									10.00	334.10	330	55.13	
SUBTOTALS:					1558.28		619.82		61.98										3309.58		417.87	
C.L. MARCHE ROAD - FINAL SURFACE																						
3+78.20	12+77.69	C.L. MARCHE ROAD	899.49			22.00	2198.75	0.03	65.96									34.00	3398.07	220	373.79	
16+68.31	26+14.65	C.L. MARCHE ROAD	946.34			22.00	2313.28	0.03	69.40									34.00	3575.06	220	393.26	
SUBTOTALS:							4512.03		135.36										6973.13		767.05	
C.L. MARCHE ROAD - SHOULDERS																						
3+78.20	4+78.20	C.L. MARCHE ROAD LEFT SHOULDER - TRANSITION	100.00	24.50	24.50													1.13	12.56	220	1.38	
4+78.20	6+44.87	C.L. MARCHE ROAD LEFT SHOULDER - SUPERELEVATION TRANSITION	166.67	57.25	95.42													1.13	20.93	220	2.30	
6+44.87	6+84.18	C.L. MARCHE ROAD LEFT SHOULDER - SUPERELEVATION	39.31	65.25	25.65													1.13	4.94	220	0.54	
6+84.18	7+35.35	C.L. MARCHE ROAD LEFT SHOULDER - SUPERELEVATION TRANSITION	51.17	57.25	29.29													1.13	6.42	220	0.71	
7+35.35	9+34.18	C.L. MARCHE ROAD LEFT SHOULDER - SUPERELEVATION TRANSITION	198.83	57.25	113.83																	
9+34.18	12+48.56	C.L. MARCHE ROAD LEFT SHOULDER	314.38	49.00	154.05																	
17+13.42	22+13.96	C.L. MARCHE ROAD LEFT SHOULDER	500.54	49.00	245.26																	
22+13.96	22+56.07	C.L. MARCHE ROAD LEFT SHOULDER	42.11	49.00	20.63													1.13	5.29	220	0.58	
22+56.07	24+31.07	C.L. MARCHE ROAD LEFT SHOULDER - SUPERELEVATION TRANSITION	175.00	54.25	94.94													1.13	21.97	220	2.42	
24+31.07	24+54.05	C.L. MARCHE ROAD LEFT SHOULDER - SUPERELEVATION	22.98	59.25	13.62													1.13	2.89	220	0.32	
24+54.05	25+14.65	C.L. MARCHE ROAD LEFT SHOULDER - SUPERELEVATION TRANSITION	60.60	54.25	32.88													1.13	7.61	220	0.84	
25+14.65	26+14.65	C.L. MARCHE ROAD LEFT SHOULDER - TRANSITION	100.00	49.00	49.00													1.13	12.56	220	1.38	
3+78.20	4+78.20	C.L. MARCHE ROAD RIGHT SHOULDER - TRANSITION	100.00	24.50	24.50													1.13	12.56	220	1.38	
4+78.20	6+44.87	C.L. MARCHE ROAD RIGHT SHOULDER - SUPERELEVATION TRANSITION	166.67	77.50	129.17													1.13	20.93	220	2.30	
6+44.87	6+84.18	C.L. MARCHE ROAD RIGHT SHOULDER - SUPERELEVATION	39.31	105.75	41.57													1.13	4.94	220	0.54	
6+84.18	7+35.35	C.L. MARCHE ROAD RIGHT SHOULDER - SUPERELEVATION TRANSITION	51.17	77.50	39.66													1.13	6.42	220	0.71	
7+35.35	9+34.18	C.L. MARCHE ROAD RIGHT SHOULDER - SUPERELEVATION TRANSITION	198.83	77.50	154.09																	
9+34.18	12+32.57	C.L. MARCHE ROAD RIGHT SHOULDER	298.39	49.00	146.21																	
16+97.44	22+13.96	C.L. MARCHE ROAD RIGHT SHOULDER	516.52	49.00	253.09																	
22+13.96	22+56.07	C.L. MARCHE ROAD RIGHT SHOULDER	42.11	49.00	20.63													1.13	5.29	220	0.58	
22+56.07	24+31.07	C.L. MARCHE ROAD RIGHT SHOULDER - SUPERELEVATION TRANSITION	175.00	68.50	119.88													1.13	21.97	220	2.42	
24+31.07	24+54.05	C.L. MARCHE ROAD RIGHT SHOULDER - SUPERELEVATION	22.98	87.75	20.16													1.13	2.89	220	0.32	
24+54.05	25+14.65	C.L. MARCHE ROAD RIGHT SHOULDER - SUPERELEVATION TRANSITION	60.60	68.50	41.51													1.13	7.61	220	0.84	
25+14.65	26+14.65	C.L. MARCHE ROAD RIGHT SHOULDER - TRANSITION	100.00	38.00	38.00													1.13	12.56	220	1.38	
SUBTOTALS:					1927.54														190.34		20.94	
ADDITIONAL FOR GUARDRAIL WIDENING																						
		WIDENING FOR GUARDRAIL - INSIDE AND OUTSIDE SHOULDERS		VAR.	986.00													VAR.	3012.78	220	331.41	
SUBTOTALS:					986.00																331.41	
TOTALS:					96918.58		167515.48		7028.15		33468.95		16567.13		32409.89		7130.18		145134.55		1537.27	14812.76

BASIS OF ESTIMATE:
ACHM SURFACE COURSE (1/2")(PG64-22).....95.0 % MIN. AGGR.....5.0% ASPHALT BINDER
ACHM SURFACE COURSE (1/2")(PG76-22).....95.2 % MIN. AGGR.....4.8% ASPHALT BINDER
ACHM BINDER COURSE (1")(PG76-22).....95.7 % MIN. AGGR.....4.3% ASPHALT BINDER
ACHM BASE COURSE (1 1/2")(PG76-22).....96.4 % MIN. AGGR.....3.6% ASPHALT BINDER
MAXIMUM NUMBER OF GYRATIONS = 115 FOR PG 64-22
MAXIMUM NUMBER OF GYRATIONS = 205 FOR PG 76-22

QUANTITIES
STA. 7963+00.00 TO STA. 8181+22.02

...\drawings\9-Quantities.dgn t:\job\wixm2650 ahtd cap ca0603\700 cadd files\777 roadway files\drawings\9-Quantities.dgn 7/16/2014 11:4:52 PM

DATE REVISED	DATE FILMED	DATE REVISED	DATE FILMED	FED.RD. DIST.NO.	STATE	FED.AID PROJ.NO.	SHEET NO.	TOTAL SHEETS
				6	ARK.			
				JOB NO.		CA0609	183	693

(2) QUANTITIES

STATE OF ARKANSAS
LICENSED PROFESSIONAL ENGINEER
No. 13422
JOHN F. CANTABERY
8-18-14

ADVANCE WARNING SIGNS AND DEVICES

	SIGN NUMBER	DESCRIPTION	SIGN SIZE	STAGE 1	STAGE 2	STAGE 3	MAX. NUMBER	TOTAL REQUIRED	ADVANCE WARNING ARROW PANEL	PORTABLE CHANGEABLE MESSAGE SIGN	TRAFFIC DRUMS	BARRICADES (TYPE III) RIGHT	TEMP. IMP. ATT. BAR.	TEMP. IMP. ATT. BAR. RELOCATION	TEMP. IMP. ATT. REPAIR	TEMP. PORT. RUMBLE STRIPS	FURNISH AND INSTALL PRECAST CONC. BAR.	RELOCATING PRECAST CONC. BARRIER
			IN.	EACH	EACH	EACH	REQ'D.	SQ. FT.	DAY	WEEK	EACH	L.F.	EACH	EACH	EACH	EACH	L.F.	L.F.
	G20-1	ROAD WORK NEXT 1.2 MILES	60" X 24"	3	3	3	3	30.00										
	G20-2	END ROAD WORK	48" X 24"	9	6	6	9	72.00										
	R2-1	SPEED LIMIT 60 MPH	48" X 60"	4	4	4	4	80.00										
	R2-1	SPEED LIMIT 70 MPH	48" X 60"	4	4	4	4	80.00										
	R2-2	TRUCKS 65 MPH	48" X 48"	4	4	4	4	64.00										
	R2-5A	REDUCED SPEED AHEAD	48" X 60"	4	4	4	4	80.00										
	R4-1	DO NOT PASS	48" X 60"	8	8	8	8	160.00										
	R11-2	ROAD CLOSED	48" X 30"	2			2	20.00										
	R55-1	FINES DOUBLE IN WORK ZONES	36" X 60"	6	6	6	6	90.00										
	RSP-1	SHOULDER CLOSED	48" X 30"	4	4	4	4	40.00										
	SPECIAL	MERGE NOW	48" X 48"	2	2	2	2	32.00										
	W4-2R	RIGHT LANE ENDS	48" X 48"	4	4	4	4	64.00										
	WI-6	LEFT ARROW	60" X 30"	6	6	6	6	75.00										
	WI-6	RIGHT ARROW	60" X 30"	6	6	6	6	75.00										
	W20-1	ROAD WORK AHEAD	48" X 48"	5	4	4	5	80.00										
	W20-1	ROAD WORK 500 FT.	48" X 48"	2			2	32.00										
	W20-1	ROAD WORK 1000 FT.	48" X 48"	2			2	32.00										
	W20-1	ROAD WORK 1500 FT.	48" X 48"	8	6	6	8	128.00										
	W20-1	ROAD WORK 1/2 MILE	48" X 48"	6	6	6	6	96.00										
	W20-1	ROAD WORK 1 MILE	48" X 48"	6	6	6	6	96.00										
	W20-5	RIGHT LANE CLOSED 1500 FT.	48" X 48"	4	4	4	4	64.00										
	W20-5	RIGHT LANE CLOSED 1/2 MILE	48" X 48"	4	4	4	4	64.00										
	W20-5	RIGHT LANE CLOSED 1 MILE	48" X 48"	4	4	4	4	64.00										
		TYPE III BARRICADE-RT. (16')		4			4					64						
		TRAFFIC DRUMS		461	650	473	650				650							
*		TEMPORARY IMPACT ATTENUATION BARRIER		8	7	7	8						8					
*		TEMPORARY IMPACT ATTENUATION BARRIER (RELOCATION)		2	6	6	6							6				
*		TEMPORARY IMPACT ATTENUATION (REPAIR)		8			8								8			
		TEMPORARY PORTABLE RUMBLE STRIPS		24	24	24	24									24		
		FURN. AND INST. PRECAST CONC. BARRIER		28903			28903										28903	
		RELOCATING PRECAST CON. BARRIER		2616	12464	2672	17752											17752
		ADVANCE WARNING ARROW PANEL		2	2	2	2		1200									
*		PORTABLE CHANGEABLE MESSAGE SIGN		4	4	4	4			340								
		TOTALS:						1618.00	1200	340	650	64	8	6	8	24	28903	17752

NOTE: THIS IS A HIGH VOLUME ROAD AS DEFINED IN SECTION 604.03 OF THE STANDARD SPECIFICATIONS FOR HIGHWAY CONSTRUCTION, EDITION OF 2014.

* QUANTITY ESTIMATED. TO BE USED IF AND WHERE DIRECTED BY THE ENGINEER. SEE SECTION 104.03 OF THE STANDARD SPECIFICATIONS.

PERMANENT ROAD BARRICADE

STATION	DESCRIPTION	GUARDRAIL (TYPE C)
		LF
8213+22.22	I-40 - LT. OF LT. MAIN LANES	25
8211+23.73	I-40 - RT. OF RT. MAIN LANES	25
	TOTAL:	50

NOTE: PRICE BID FOR GUARDRAIL (TYPE C) INCLUDES RED DIAMOND REFLECTORS AND SUPPORTS.

AUTOMATED WORK ZONE INFORMATION SYSTEM

LOCATION	* AWIS MOBILIZATION	* AWIS OPERATION	* DEVICE RELOCATION	FURNISH AND INSTALL * CLOSED CIRCUIT TELEVISION SYSTEM	* PUBLIC NOTIFICATION SYSTEM	* VARIABLE MESSAGE SIGN	* VEHICLE DETECTION SYSTEM
	LUMP SUM	MONTH	EACH	EACH			
ENTIRE PROJECT	1.00	20	14	3	2	5	18
TOTALS:	1.00	20	14	3	2	5	18

* QUANTITIES ARE ESTIMATED. REFER TO SECTION 104.03 OF THE STANDARD SPECIFICATIONS.
REFER TO "AUTOMATED WORK ZONE INFORMATION SYSTEM" SPECIAL PROVISION.

QUANTITIES
STA. 8181+22.02 TO STA. 8232+68.78

JFCantabery 8/8/2014 9:25:09 AM
WORKSPACE: AHTD
\\garverinc\ltprojects\20in\10177O9 - I-40 at I-430 Interchange Modifications\Drawings\RCA0609_QTY_01.dgn
REVISED DATE:

DATE REVISED	DATE FILMED	DATE REVISED	DATE FILMED	FED.RD. DIST.NO.	STATE	FED.AID PROJ.NO.	SHEET NO.	TOTAL SHEETS
				6	ARK.			
				JOB NO.		CA0609	184	693
				(2)	QUANTITIES			

STATE OF ARKANSAS
LICENSED PROFESSIONAL ENGINEER
No.13422
JOHN F. CANTABERY
7-18-14

BASE & SURFACING

STATION	STATION	LOCATION	LENGTH	ACHM SURFACE COURSE (1/2") (PG 76-22)				ACHM BINDER COURSE (1") (PG 76-22)				ACHM BASE COURSE (1 1/2") (PG 76-22)				AGGREGATE BASE COURSE (CLASS 7)		TACK COAT				
				AVG. WIDTH	SQUARE YARDS	LBS. PER SQ. YD.	TON	AVG. WIDTH	SQUARE YARDS	LBS. PER SQ. YD.	TON	AVG. WIDTH	SQUARE YARDS	LBS. PER SQ. YD.	TON	TONS PER STATION	TON	TOTAL WIDTH	SQUARE YARDS	0.03 G/SY	AVG. WIDTH	SQUARE YARDS	0.1 G/SY
			FEET	FEET				FEET				FEET						FEET		GAL.	FEET		GAL.
8181+58.79	8182+96.24	I-40 RT. LANES	137.45	48.13	735.05	220	80.86	8.25	125.99	440	27.72	8.52	130.13	990	64.41	114.00	156.69	33.42	510.40	15.31	32.00	488.71	48.87
8182+96.24	8204+68.58	I-40 RT. LANES	2172.34	56.25	13577.13	220	1493.48	16.50	3982.62	440	876.18	17.04	4112.96	990	2035.92	351.75	7641.21	66.83	16130.83	483.92	14.00	3379.20	337.92
8204+68.58	8211+68.58	I-40 RT. LANES	700.00	66.25	5152.78	220	566.81	26.50	2061.11	440	453.44	27.04	2103.11	990	1041.04	254.50	1781.50	106.83	8309.00	249.27	14.00	1088.89	108.89
8211+68.58	8218+37.48	I-40 RT. LANES	668.90	VAR.	8146.26	220	896.09	VAR.	3983.86	440	876.45	VAR.	3983.86	990	1972.01	VAR.	2421	VAR.	15935.43	478.06	4.00	297.29	29.73
8218+37.48	8226+77.48	I-40 RT. LANES	840.00	VAR.	3861.58	220	424.77	VAR.	1114.75	440	245.25	VAR.	1139.74	990	564.17	VAR.	4635	VAR.	4497.31	134.92	14.00	1306.67	130.67
8181+58.79	8188+25.00	I-40 RT. LANES REPAIR	666.21	12.00	888.28	220	97.71														12.00	888.28	88.83
8181+51.11	8184+82.27	I-40 LT. LANES	331.16	VAR.	1442.77	220	158.70														VAR.	1442.77	144.28
8184+82.27	8206+67.21	I-40 LT. LANES	2184.94	VAR.	12976.82	220	1427.45	VAR.	3793.58	440	834.59	VAR.	3925.01	990	1942.88	351.75	7685.53	VAR.	15376.11	461.28	14.00	3398.80	339.88
8206+67.21	8215+59.33	I-40 LT. LANES	892.12	56.25	5575.75	220	613.33	16.50	1635.55	440	359.82	17.04	1689.08	990	836.09	VAR.	4573	66.83	6624.49	198.73	14.00	1387.74	138.77
8215+59.33	8231+97.95	I-40 LT. LANES	1638.62	VAR.	4547.14	220	500.19	VAR.	1100.15	440	242.03	VAR.	1100.15	990	544.57	VAR.	6162	VAR.	4400.60	132.02	4.00	728.28	72.83
8261+38.40	8265+64.26	I-40 LT. (SLIDE REPAIR)	425.86	6.00	283.91	220	31.23														6.00	283.91	28.39
8216+74.66	8218+74.66	RAMP 1	200.00	26.13	580.67	220	63.87	13.25	294.44	440	64.78	13.52	300.44	990	148.72	138.50	277.00	53.42	1187.11	35.61			
8218+74.66	8220+78.25	RAMP 1	203.59	22.13	500.61	220	55.07	9.25	209.25	440	46.04	9.52	215.35	990	106.60	177.50	361.37	37.42	846.48	25.39			
8199+12.31	8199+48.81	RAMP 4 APPROACH SLAB										24.00	81.33	VAR.	22								
8207+02.75	8207+39.26	RAMP 4 APPROACH SLAB										24.00	81.33	VAR.	22								
8216+86.38	8220+91.64	RAMP 4	405.26	VAR.	974.80	220	107.23	VAR.	397.34	440	87.41	VAR.	397.34	990	196.68	VAR.	566	VAR.	1589.36	47.68			
		GUARDRAIL WIDENING																					
8183+63.00	8188+24.00	I-40 RT. - RT.	461.00	VAR.	261.56	220	28.77									VAR.	288						
8184+13.00	8188+24.00	I-40 RT. - LT.	411.00	VAR.	231.00	220	25.41									VAR.	243						
8210+48.00	8215+09.00	I-40 RT. - RT.	461.00	VAR.	262.17	220	28.84									VAR.	261						
8210+98.00	8215+09.00	I-40 RT. - LT.	411.00	VAR.	230.46	220	25.35									VAR.	185						
8238+32.17	8241+78.32	I-40 LT. - LT.	346.15	VAR.	150.23	220	16.53									VAR.	2						
8265+85.00	8269+95.98	I-40 C.L. MEDIAN - LT.	410.98	VAR.	231.00	220	25.41									VAR.	73						
8265+85.73	8269+96.71	I-40 C.L. MEDIAN - LT.	410.98	VAR.	231.00	220	25.41									VAR.	39						
NA	NA	OH - 040 - 60 - 17 - LT.	461.00	VAR.	261.38	220	28.75									VAR.	74						
NA	NA	OH - 040 - 60 - 17 - RT.	411.00	VAR.	231.00	220	25.41									VAR.	66						
661+49.53	665+27.81	RAMP 3 - RT.	378.28	VAR.	197.21	220	21.69									VAR.	151						
665+27.81	668+08.43	RAMP 3 - LT. & C-D RD.	280.62	VAR.	312.10	220	34.33									VAR.	382						
		TEMPORARY WIDENING																					
12+25.67	19+62.13	RAMP 3 DETOUR	736.46	VAR.	1473.31	220	162.06	VAR.	1486.96	440	327.13	VAR.	1502.33	550	413.14			VAR.	4462.60	133.88			
		SHOULDER RECONSTRUCTION																					
8216+74.66	8218+74.66	RAMP 1	200.00	6.00	133.33	220	14.67	6.17	137.11	440	30.16	6.35	141.11	550	38.81	25.75	51.50	18.52	411.56	12.35			
663+54.20	665+27.81	RAMP 3	173.61	VAR.	129.01	220	14.19	VAR.	131.40	440	28.91	VAR.	138.17	550	38.00	25.75	44.70	VAR.	398.58	11.96			
672+00.00	674+40.00	RAMP 3	240.00	VAR.	190.65	220	20.97	VAR.	194.05	440	42.69	VAR.	199.15	550	54.77	25.75	61.80	VAR.	583.85	17.52			
685+90.00	688+50.00	RAMP 3	260.00	VAR.	477.96	220	52.58	VAR.	485.19	440	106.74	VAR.	496.03	550	136.41	VAR.	112	VAR.	1459.18	43.78			
688+50.00	692+30.00	RAMP 3	380.00	VAR.	244.06	220	26.85	VAR.	247.79	440	54.51	VAR.	251.98	550	69.29	25.75	97.85	VAR.	743.83	22.31			
TO BE USED IF AND WHERE DIRECTED BY THE ENGINEER							500				500				500								
TOTALS:					64490.98		7594.01		21381.14		5203.85		21988.60		10747.51		38392.15		83466.72	2503.99		14690.54	1469.06

BASIS OF ESTIMATE:
ACHM SURFACE COURSE (1/2") : 4.8% ASPHALT BINDER (PG 76-22), 95.2% MINERAL AGGREGATE, N_{MAX}=205
ACHM BINDER COURSE (1") : 4.3% ASPHALT BINDER (PG 76-22), 95.7% MINERAL AGGREGATE, N_{MAX}=205
ACHM BASE (1 1/2") : 3.6% ASPHALT BINDER (PG 76-22), 96.4% MINERAL AGGREGATE, N_{MAX}=205

BASE & SURFACING - DRIVEWAYS

LOCATION	WIDTH	PORTLAND CEMENT CONCRETE DRIVEWAY	AGGREGATE BASE COURSE (CLASS 7)		ACHM SURFACE COURSE (1/2") (220 LBS. PER S.Y.) (PG 64-22)	
	FEET	SQUARE YARDS	TONS PER	TONS	SQUARE YARDS	TON
NORMAN ROAD @ STA. 14+82.03	VAR.	86.19				
NORMAN ROAD @ STA. 15+20.77	VAR.		VAR.	31	37	4
NEVA ROAD @ STA. 9+15.76	VAR.		VAR	79	53	6
DRIVEWAY 1 STA. 9+00.00 TO STA. 10+00.00	VAR.		VAR.	92	35	4
*ENTIRE PROJECT - TEMPORARY DRIVES				100		
TOTALS:		86.19		302	125	14

BASIS OF ESTIMATE:
ACHM SURFACE COURSE (1/2") : 5.0% ASPHALT BINDER (PG 64-22), 95.0% MINERAL AGGREGATE, N_{MAX}=115

* QUANTITY ESTIMATED. TO BE USED IF AND WHERE DIRECTED BY THE ENGINEER. SEE SECTION 104.03 OF THE STANDARD SPECIFICATIONS. FOR INFORMATION ONLY

THE CONTRACTOR, WITH THE APPROVAL OF THE ENGINEER, WILL BE ALLOWED TO SUBSTITUTE A HIGHER PERFORMANCE GRADE ASPHALT SURFACE COURSE FOR DRIVEWAYS AND MINOR SIDE STREET CONSTRUCTION AT NO ADDITIONAL COST TO THE DEPARTMENT.

CONCRETE BARRIER WALL

STATION	STATION	LOCATION	SIDE TYPE A	MEDIAN TYPE SPECIAL
			L.F.	L.F.
665+27.81	671+00.00	RAMP 3	570	
8207+02.76	8207+75.00	RAMP 4	70	
NA	NA	I-430 RT. LANES		180
		TOTALS:	640	180

QUANTITIES
STA. 8181+22.02 TO STA. 8232+68.78

rnfortner 7/8/2014 12:22:12 PM
WORKSPACE: AHTD
L:\ROW\NO1709 - I-40 at I-430 Interchange Modifications\Drawings\RCA0609.QTY_02.dgn
REVISED DATE:

DATE REVISED	DATE FILMED	DATE REVISED	DATE FILMED	FED.RD. DIST.NO.	STATE	FED.AID PROJ.NO.	SHEET NO.	TOTAL SHEETS
				6	ARK.			
				JOB NO.		CA0609	185	693

(2) QUANTITIES

ASPHALT CONCRETE PATCHING FOR MAINTENANCE OF TRAFFIC		
LOCATION	ASPHALT CONCRETE TON	TACK COAT GAL.
ENTIRE PROJECT *	128	255

*QUANTITIES ESTIMATED. TO BE USED IF AND WHERE DIRECTED BY THE ENGINEER. SEE SECTION 104.03 OF THE STANDARD SPECIFICATIONS.

BASIS OF ESTIMATE:
ASPHALT CONCRETE= 25 TONS PER MILE
TACK COAT = 50 GAL. PER MILE

ACHM PATCHING OF EXISTING ROADWAY	
LOCATION	TON
ENTIRE PROJECT *	400
TOTAL:	400

*QUANTITIES ESTIMATED. TO BE USED IF AND WHERE DIRECTED BY THE ENGINEER. SEE SECTION 104.03 OF THE STANDARD SPECIFICATIONS.

STATE OF ARKANSAS LICENSED PROFESSIONAL ENGINEER No.13422 JOHN F. CANTABERY

7-18-14

BASE & SURFACING

STATION	STATION	LOCATION	LENGTH	CONTINUOUSLY REINFORCED CONCRETE PAVEMENT (11" UNIFORM THICKNESS)		REINFORCING STEEL FOR PAVEMENT (BARS)		ACHM SURFACE COURSE (1/2") (PG 64-22)				ACHM BINDER COURSE (1") (PG 64-22)				ACHM BASE COURSE (1 1/2") (PG 64-22)				AGGREGATE BASE COURSE (CLASS 7)		TACK COAT						
			FEET	AVG. WIDTH FEET	SQUARE YARDS	LBS. PER SQ. YD.	LBS.	AVG. WIDTH FEET	SQUARE YARDS	LBS. PER SQ. YD.	TON	AVG. WIDTH FEET	SQUARE YARDS	LBS. PER SQ. YD.	TON	AVG. WIDTH FEET	SQUARE YARDS	LBS. PER SQ. YD.	TON	TONS PER	TON	TOTAL WIDTH FEET	SQUARE YARDS	0.03 G/SY GAL.	AVG. WIDTH FEET	SQUARE YARDS	0.1 G/S.Y. GAL.
672+16.66	684+62.62	I-430 RT. LANES	1245.96	12.00	1661.28	32.75	54406.92	10.00	1384.40	220	152.28					14.00	1938.16	550	532.99	110.75	1380	12.00	1661.28	49.84			
684+62.62	692+23.45	I-430 RT. LANES	760.83	12.00	1014.44	32.75	33222.91	10.00	845.37	220	92.99					14.00	1183.51	550	325.47	VAR.	1540	12.00	1014.44	30.43			
672+16.66	686+47.83	I-430 LT. LANES	1431.17	12.00	1908.23	32.75	62494.53	10.00	1590.19	220	174.92					14.00	2226.26	550	612.22	VAR.	2633	12.00	1908.23	57.25			
686+47.83	688+96.95	I-430 LT. LANES	249.12	VAR.	287.34	32.75	9410.39	10.00	276.80	220	30.45					VAR.	342.70	550	94.24	VAR.	471	VAR.	287.34	8.62			
688+96.95	689+40.00	I-430 LT. LANES	43.05	VAR.	35.89	32.75	1175.40	10.00	47.83	220	5.26					VAR.	45.95	550	12.64	110.75	48	VAR.	35.89	1.08			
689+40.00	691+59.66	I-430 LT. LANES	219.66	VAR.	120.45	32.75	3944.74	10.00	244.07	220	26.85	10.15	247.73	330	40.88	VAR.	171.80	550	47.25	94.15	207	VAR.	364.52	10.94			
691+59.66	693+17.76	I-430 LT. LANES	158.10	21.00	368.90	32.75	12081.48	10.00	175.67	220	19.32	10.15	178.30	330	29.42	23.00	404.03	550	111.11	94.15	149	21.00	544.57	16.34			
8220+78.25	8226+30.24	RAMP 1	551.99	9.00	551.99	32.75	18077.67	4.00	245.33	220	26.99					11.00	674.65	550	185.53	70.00	386	9.00	551.99	16.56			
8226+30.24	8235+71.38	RAMP 1	941.14	9.00	941.14	32.75	30822.34	4.00	418.28	220	46.01					11.00	1150.28	550	316.33	VAR.	879	9.00	941.14	28.23			
8235+71.38	8236+92.93	RAMP 1	121.55	VAR.	262.43	32.75	8594.58	10.00	135.06	220	14.86	10.15	137.08	330	22.62	VAR.	289.44	550	79.60	94.15	114	VAR.	262.43	7.87			
665+27.81	671+00.00	RAMP 3	572.19	15.00	953.65	32.75	31232.04	11.00	699.34	220	76.93	5.00	317.88	330	52.45	19.00	1207.96	550	332.19	VAR.	760	20.00	1271.53	38.15			
671+00.00	672+00.00	RAMP 3	100.00	15.00	166.67	32.75	5458.44	12.00	133.33	220	14.67	8.15	90.56	330	14.94	19.00	211.11	550	58.06	VAR.	243	23.15	257.22	7.72			
688+50.00	690+21.65	RAMP 3	171.65	15.00	286.08	32.75	9369.12	18.00	343.30	220	37.76	10.15	193.58	330	31.94	19.00	362.37	550	99.65	VAR.	324	25.15	479.67	14.39			
690+21.65	691+51.05	RAMP 3	129.40	15.00	215.67	32.75	7063.19	18.00	258.80	220	28.47	10.15	145.93	330	24.08	19.00	273.18	550	75.12	189.00	245	25.15	361.60	10.85			
8185+37.91	8187+62.91	RAMP 4	225.00	VAR.	260.92	32.75	8545.13	VAR.	166.67	220	18.33					VAR.	310.92	550	85.50	VAR.	323	VAR.	260.92	7.83			
8187+62.91	8190+84.89	RAMP 4	321.98	9.00	321.98	32.75	10544.85	4.00	143.10	220	15.74					11.00	393.53	550	108.22	70.00	225	9.00	321.98	9.66			
8190+84.89	8196+98.81	RAMP 4	613.92	9.00	613.92	32.75	20105.88	4.00	272.85	220	30.01	VAR.	97.99	330	16.17	11.00	750.35	550	206.35	VAR.	585	VAR.	711.91	21.36			
8196+98.81	8199+12.31	RAMP 4	213.50	24.00	569.33	32.75	18645.56	VAR.	305.03	220	33.55	VAR.	162.70	330	26.85	28.00	664.22	550	182.66	VAR.	658	VAR.	732.03	21.96			
8207+39.26	8207+75.00	RAMP 4	35.74	24.00	95.31	32.75	3121.40	17.00	67.51	220	7.43	9.00	35.74	330	5.90	28.00	111.19	550	30.58	VAR.	78	33.00	131.05	3.93			
8207+75.00	8209+52.76	RAMP 4	177.76	24.00	474.03	32.75	15524.48	VAR.	265.05	220	29.16	VAR.	146.12	330	24.11	28.00	553.03	550	152.08	VAR.	511	VAR.	620.15	18.60			
8209+52.76	8214+70.32	RAMP 4	517.56	9.00	517.56	32.75	16950.09	4.00	230.03	220	25.30	VAR.	68.17	330	11.25	11.00	632.57	550	173.96	VAR.	462	VAR.	586.73	17.60			
8214+70.32	8216+86.38	RAMP 4	216.06	9.00	216.06	32.75	7075.97	4.00	96.03	220	10.56					11.00	264.07	550	72.62	VAR.	195	9.00	216.06	6.48			
GUARDRAIL WIDENING																											
NA	NA	OH - 430 - 60 - 39 - RT.	493.65					VAR.	253.22	220	27.85									VAR.	439						
NA	NA	OH - 430 - 60 - 10 - RT.	211.15					VAR.	103.82	220	11.42									VAR.	183						
NA	NA	OH - 430 - 60 - 10 - LT.	161.32					VAR.	73.51	220	8.09									VAR.	134						
NA	NA	OH - 430 - 60 - 35 - RT.	386.81					VAR.	215.93	220	23.75									VAR.	62						
689+61.45	8186+60.69	I-430 RT. - RT. / RAMP 4 - RT.	381.87					VAR.	213.46	220	23.48									VAR.	156						
689+61.45	692+23.45	I-430 RT. - LT.	262.00					VAR.	152.89	220	16.82									VAR.	219						
8235+18.69	691+06.00	RAMP 1 - RT. / I-430 LT. - LT.	383.41					VAR.	214.14	220	23.56									VAR.	119						
690+98.91	691+06.00	RAMP 3 -LT. / I-430 LT. - RT.	385.63					VAR.	215.46	220	23.70									VAR.	147						
8185+37.91	8187+10.24	RAMP 4 - LT.	172.33					VAR.	95.33	220	10.49									VAR.	129						
8196+77.21	8199+48.81	RAMP 4 - RT.	271.60					VAR.	128.28	220	14.11									VAR.	184						
8196+77.38	8199+48.81	RAMP 4 - LT.	271.43					VAR.	122.38	220	13.46									VAR.	109						
8210+53.75	8214+13.81	RAMP 4 - RT.	360.06					VAR.	214.76	220	23.62									VAR.	72						
LOCAL ROADS																											
14+50.00	15+00.00	NORMAN ROAD TRANSITION	50.00					VAR.	127.89	220	14.07																
15+00.00	18+57.71	NORMAN ROAD	357.71					28	1112.88	220	122.42									207.75	743						
21+37.93	24+20.00	NORMAN ROAD	282.07					28	877.55	220	96.53									207.75	586						
24+20.00	25+50.00	NORMAN ROAD NOTCH AND WIDEN	130.00					28	404.44	220	44.49									VAR.	111						
25+50.00	26+00.00	NORMAN ROAD TRANSITION	50.00					VAR.	127.24	220	14.00																
7+15.00	7+65.00	NEVA ROAD TRANSITION	50.00					VAR.	132.24	220	14.55																
7+65.00	9+70.00	NEVA ROAD NOTCH AND WIDEN	205.00					28	637.78	220	70.16									VAR.	172						
9+70.00	9+90.00	NEVA ROAD & RADIUS RETURNS	20.00					VAR.	106.93	220	11.76									VAR.	65						
24+20.00	25+50.00	NORMAN ROAD LEVELING COURSE	130.00													VAR.	282.94	VAR.	92.00						VAR.	282.94	28.29
7+65.00	9+70.00	NEVA LEVELING COURSE	205.00													VAR.	423.46	VAR.	433.00						VAR.	423.46	42.35
16+99.95	18+47.77	NORMAN ROAD GUARDRAIL WIDENING L	147.82					VAR.	61.14	220	6.73									VAR.	18						
16+72.55	18+45.67	NORMAN ROAD GUARDRAIL WIDENING R	173.12					VAR.	69.72	220	7.67									VAR.	30						
21+49.98	23+23.10	NORMAN ROAD GUARDRAIL WIDENING L	173.12					VAR.	73.48	220	8.08									VAR.	30						
21+47.88	22+96.10	NORMAN ROAD GUARDRAIL WIDENING R	148.22					VAR.	58.23	220	6.41									VAR.	22						
TOTALS:					11843.27		387867.11		14136.74		1555.06		1821.78		300.61		14867.68		4419.37		16146.00		13522.68	405.69		706.40	70.64

BASIS OF ESTIMATE:
ACHM SURFACE COURSE (1/2") : 5.0% ASPHALT BINDER (PG 64-22), 95.0% MINERAL AGGREGATE, N_{MAX}=115
ACHM BINDER COURSE (1") : 4.1% ASPHALT BINDER (PG 64-22), 95.9% MINERAL AGGREGATE, N_{MAX}=115
ACHM BASE COURSE (1 1/2") : 3.8% ASPHALT BINDER (PG 64-22), 96.2% MINERAL AGGREGATE, N_{MAX}=115

QUANTITIES
STA. 8181+22.02 TO STA. 8232+68.78

rnfortner 7/8/2014 12:23:03 PM
WORKSPACE: AHTD
L:\CONWDOT09 - I-40 at I-430 Interchange Modifications\Drawings\RCA0609_QTY_03.dgn
REVISED DATE:

DATE REVISED	DATE FILMED	DATE REVISED	DATE FILMED	FED.RD. DIST.NO.	STATE	FED.AID PROJ.NO.	SHEET NO.	TOTAL SHEETS
9-2-14				6	ARK.			
9-9-14				JOB NO.		CA0609	186	693

(2) QUANTITIES

CONSTRUCTION PAVEMENT MARKINGS AND PERMANENT PAVEMENT MARKINGS

DESCRIPTION	ENTIRE JOB	REMOVAL OF PERMANENT PAVEMENT MARKINGS	REMOVABLE CONSTRUCTION PAVEMENT MARKINGS	CONSTRUCTION PAVEMENT MARKINGS	REMOVAL OF CONSTRUCTION PAVEMENT MARKINGS	RAISED PAVEMENT MARKERS TYPE II (WHITE/RED)	REFLECTORIZED PAINT PAVEMENT MARKING 4" WHITE	REFLECTORIZED PAINT PAVEMENT MARKING 4" YELLOW	REFLECTORIZED PAINT PAVEMENT MARKING 12" WHITE	THERMOPLASTIC PAVEMENT MARKING (ARROWS)	HIGH PERFORMANCE PAVEMENT MARKING 4" WHITE	HIGH PERFORMANCE PAVEMENT MARKING 4" YELLOW	HIGH PERFORMANCE PAVEMENT MARKING 8" WHITE	HIGH PERFORMANCE PAVEMENT MARKING (SKIP LINE) 4" WHITE	HIGH PERFORMANCE PAVEMENT MARKING (SKIP LINE) 8" WHITE	HIGH PERFORMANCE CONTRAST PAVEMENT MARKING 4" WHITE	HIGH PERFORMANCE CONTRAST PAVEMENT MARKING 4" YELLOW	HIGH PERFORMANCE CONTRAST PAVEMENT MARKING 8" WHITE
	LIN. FT. - EACH	LIN. FT.	LIN. FT.	LIN. FT.	LIN. FT.	EACH	LIN. FT.		LIN. FT.	EACH	LIN. FT.		LIN. FT.	LIN. FT.	LIN. FT.	LIN. FT.		LIN. FT.
REMOVAL OF PERMANENT PAVEMENT MARKINGS	35490	35490																
REMOVABLE CONSTRUCTION PAVEMENT MARKINGS	51655		51655															
CONSTRUCTION PAVEMENT MARKINGS	2172			2172														
REMOVAL OF CONSTRUCTION PAVEMENT MARKINGS	84				84													
RAISED PAVEMENT MARKERS (TYPE II)	813					813												
REFLECTORIZED PAINT PAVEMENT MARKING WHITE (4")	2792						2792											
REFLECTORIZED PAINT PAVEMENT MARKING WHITE (12")	24								24									
REFLECTORIZED PAINT PAVEMENT MARKING YELLOW (4")	2269							2269										
THERMOPLASTIC PAVEMENT MARKING (ARROWS)	2									2								
HIGH PERFORMANCE MARKING TAPE WHITE (4")	21484										21484							
HIGH PERFORMANCE MARKING TAPE (SKIP LINE) WHITE (4")	5098													5098				
HIGH PERFORMANCE MARKING TAPE WHITE (8")	2906												2906					
HIGH PERFORMANCE MARKING TAPE (SKIP LINE) WHITE (8")	740														740			
HIGH PERFORMANCE MARKING TAPE YELLOW (4")	20418											20418						
HIGH PERFORMANCE CONTRAST MARKING TAPE WHITE (4")	3453															3453		
HIGH PERFORMANCE CONTRAST MARKING TAPE WHITE (8")	1097																	1097
HIGH PERFORMANCE CONTRAST MARKING TAPE YELLOW (4")	561																561	
TOTALS:		35490	51655	2172	84	813	2792	2269	24	2	21484	20418	2906	5098	740	3453	561	1097

NOTE: THIS IS A HIGH TRAFFIC VOLUME ROAD AS DEFINED IN SECTION 604.03, STANDARD SPECIFICATIONS FOR HIGHWAY CONSTRUCTION, 2014 EDITION.

STATE OF ARKANSAS
LICENSED PROFESSIONAL ENGINEER
No.13422
JOHN F. CANTABERY
9-9-14

FLOWABLE SELECT MATERIAL

STATION	STATION	LOCATION	CU. YD.
18+52.71	18+57.71	NORMAN ROAD	15.15
21+37.93	21+42.93	NORMAN ROAD	15.15
8199+43.80	8199+48.80	RAMP 4	23.33
8207+02.75	8207+07.75	RAMP 4	23.33
TOTAL:			76.96

EARTHWORK

LOCATION	UNCLASSIFIED EXCAVATION UNDERCUT	UNCLASSIFIED EXCAVATION TYPICAL	UNCLASSIFIED EXCAVATION TOTAL	COMPACTED EMBANKMENT TYPICAL	COMPACTED EMBANKMENT *ADDITIONAL	COMPACTED EMBANKMENT PLATING	COMPACTED EMBANKMENT SM-1	COMPACTED EMBANKMENT TOTAL	SM-3
	CU. YD.								
I-40 RT. - STAGE 1	8237	5814	14051	5346	8237			13583	
I-40 RT. - STAGE 2	5044	10464	15508	3725	5044			8769	
I-40 RT. - STAGE 3	2397	1696	4093	2966	2397			5363	
I-40 LT. - STAGE 1	10933	4836	15769	11106	10933			22039	
I-40 LT. - STAGE 2	4698	14761	19459	2077	4698			6775	
I-430 RT. - STAGE 1	2397	2531	4928	1788	2397			4185	
I-430 RT. - STAGE 2		33	33	3				3	
I-430 LT. - STAGE 1	4566	10223	14789	2911	4566			7477	
I-430 LT. - STAGE 2		4	4	6				6	
RAMP 1 - STAGE 1	4508	806	5314	969	4508			5477	
RAMP 1 - STAGE 2		319	319	44				44	
RAMP 1 - STAGE 3		0	0	37				37	
RAMP 3 - STAGE 1	1932	4320	6252	206	1932			2138	
RAMP 3 - STAGE 2		162	162	0				0	
RAMP 4 - STAGE 1	10905	5259	16164	29402	10905			40307	
RAMP 4 - STAGE 2		1098	1098	116				116	
NORMAN RD.	2354	4815	7169	18273	2354		3741	24368	
NEVA RD.	520	245	765	435	520			955	
RAMP 3 DETOUR		239	239	209				209	
SLIDE REPAIR		58105	58105			5752		5752	34331
DRIVEWAYS		57	57	139				139	
OH SIGNS GR WIDENING	1978	106	2084	902	1978			2880	
TOTALS:	60469	125893	186362	80660	60469	5752	3741	150622	34331

EARTHWORK NOTES:

1. ESTIMATES FOR QUANTITIES OF EXCAVATION AND EMBANKMENT ARE TAKEN DIRECTLY FROM THE CROSS SECTIONS, DETAILED IN ACCORDANCE WITH THE PLANS.

2. ALL FLEXIBLE BASE AND ASPHALTIC PAVEMENT REMOVED SHALL BE PAID FOR UNDER PAY ITEM 210 - EXCAVATION AND EMBANKMENT, UNLESS OTHERWISE NOTED.

* INCLUDES 60469 CU. YDS. OF COMPACTED EMBANKMENT USED FOR BACKFILL OF UNDERCUT TO BE USED IF AND WHERE DIRECTED BY THE ENGINEER.

APPROACH SLABS

STATION	STATION	LOCATION	APPROACH SLAB CU. YD.	REINFORCING STEEL RDWY. (GR 60) POUND
8199+12.31	8199+48.81	RAMP 4	49.76	5887
8207+02.76	8207+39.26	RAMP 4	49.94	5906
TOTALS:			99.70	11793

FENCING

STATION	STATION	LOCATION	TYPE A L.F.	16' GATE EACH
15+00.00	18+45.00	NORMAN ROAD - RT.	355	1
16+15.00	18+50.00	NORMAN ROAD - LT.	315	
21+50.00	23+45.00	NORMAN ROAD - RT.	245	
21+50.00	23+55.00	NORMAN ROAD - LT.	285	1
6+40.00	9+45.00	NEVA ROAD - LT.	305	
8261+65.00	8266+00.00	I-40 - LT.	740	
TOTALS:			2245	2

PORTLAND CEMENT CONCRETE PAVEMENT PATCHING (8" UNIFORM THICKNESS) / REMOVAL

LOCATION	SQ. YD.	SQ. YD.
ENTIRE PROJECT *	1047	1047
TOTAL:	1047	1047

*QUANTITIES ESTIMATED. TO BE USED IF AND WHERE DIRECTED BY THE ENGINEER. SEE SECTION 104.03 OF THE STANDARD SPECIFICATIONS.

CONCRETE DITCH PAVING

STATION	STATION	LOCATION	LENGTH FEET	CONCRETE DITCH PAVING (TYPE B) "W"	CONCRETE DITCH PAVING (TYPE B) SQ. YD.	SOLID SODDING SQ. YD.	WATER M.G.
8206+90.00	8209+30.00	I-40 LEFT LANES LT.	241	6	161	107.1	1.3
8207+10.00	8208+10.00	I-40 LEFT LANES RT.	100	6	67	44.4	0.6
8181+22.00	8183+20.00	I-40 RIGHT LANES RT.	198	6	132	88.0	1.1
8220+60.00	8223+75.00	I-40 RIGHT LANES RT.	351	6	234	156.0	2.0
8261+41.00	8265+65.00	SLIDE REPAIR	424	6	283	188.4	2.4
684+00.00	685+40.00	I-430 LEFT LANES RT.	150	6	100	66.7	0.8
685+30.00	687+20.00	I-430 RIGHT LANES LT.	190	6	127	84.4	1.1
665+28.00	671+00.00	RAMP 3 RT.	572	8.33	529	254.2	3.2
8198+15.00	8200+25.00	RAMP 4 LT.	166	6	111	73.8	0.9
8217+35.00	8218+20.00	RAMP 4 LT.	94	4	41	41.8	0.5
18+40.00	18+66.00	NORMAN ROAD RT.	26	4	12	11.6	0.1
20+98.00	21+12.00	NORMAN ROAD RT.	14	4	6	6.2	0.1
25+50.00	26+00.00	NORMAN ROAD RT.	50	6	33	22.2	0.3
7+20.00	8+95.00	NEVA AVENUE RT.	175	6	117	77.8	1.0
9+35.00	9+75.00	NEVA AVENUE RT.	40	6	27	17.8	0.2
*ENTIRE PROJECT					200	200.0	2.5
TOTALS:					2180	1440.4	18.1

BASIS OF ESTIMATE:
WATER = 12.6 GALS. PER SQ. YD. SOLID SODDING

*QUANTITY ESTIMATED. TO BE USED IF AND WHERE DIRECTED BY THE ENGINEER. SEE SECTION 104.03 OF THE STANDARD SPECIFICATIONS.

APPROACH GUTTERS

STATION	STATION	LOCATION	APPROACH GUTTERS (TYPE A)	APPROACH GUTTERS (TYPE AT)	APPROACH GUTTERS (TYPE SPECIAL 2)	APPROACH GUTTERS (TYPE SPECIAL 3)	APPROACH GUTTERS (TYPE SPECIAL 4)	REINFORCING STEEL - ROADWAY (GR 60)
			CU. YD.	CU.YD.	CU. YD.	CU. YD.	CU. YD.	LB.
NA	NA	OH - 430 - 60 - 39		18.78				1573
NA	NA	OH - 430 - 60 - 38		18.78				1574
NA	NA	OH - 430 - 60 - 38		12.06				1091
18+27.71	18+57.71	NORMAN ROAD	3.40					285
18+27.71	18+57.71	NORMAN ROAD	3.40					285
21+37.93	21+67.93	NORMAN ROAD	3.40					285
21+37.93	21+67.93	NORMAN ROAD	3.40					285
8199+12.31	8199+48.81	RAMP 4			23.19			2080
8207+02.76	8207+39.26	RAMP 4				27.65		4199
8199+12.31	8199+48.81	RAMP 4					13.38	1295
8207+02.76	8207+39.26	RAMP 4					13.38	1295
TOTALS:			13.60	49.62	23.19	27.65	26.76	14247

RETAINING WALL

STATION	LOCATION	RETAINING WALL SQ. FT.	SELECT GRANULAR BACKFILL CU. YD.
18+67.71	NORMAN ROAD	3352	1148
21+27.93	NORMAN ROAD	3218	1041
TOTALS:		6570	2189

SELECTED PIPE BEDDING

LOCATION	SELECTED BEDDING CU. YD.
ENTIRE PROJECT *	100

* QUANTITY ESTIMATED. TO BE USED IF AND WHERE DIRECTED BY THE ENGINEER. SEE SECTION 104.03 OF THE STANDARD SPECIFICATIONS.

MAILBOXES

STATION	LOCATION	MAILBOXES EACH	MAILBOX SUPPORTS (SINGLE) EACH
15+27	NORMAN RD.	10	10
25+11	NORMAN RD.	1	1
TOTALS:		11	11

QUANTITIES
STA. 8181+22.02 TO STA. 8232+68.78

JFCantabery 9/9/2014 10:03:29 AM
WORKSPACE: AHTD
\\Qarverfnc\Projects\20N\10\07709 - I-40 at I-430 Interchange Modifications\Drawings\RCA0609_QTY_04.dgn
REVISED DATE:

DATE REVISED	DATE FILMED	DATE REVISED	DATE FILMED	FED.RD. DIST.NO.	STATE	FED.AID PROJ.NO.	SHEET NO.	TOTAL SHEETS
				6	ARK.			
				JOB NO.		CA0609	187	693
				(2)	QUANTITIES			

STATE OF ARKANSAS
LICENSED
PROFESSIONAL
ENGINEER
No.13422
JOHN F. CANTABERY
7-18-14

TEMPORARY EROSION CONTROL BOX (1 OF 2)

STATION	STATION	SAND BAG DITCH CHECK (E-5)	ROCK DITCH CHECK (E-6)	DROP INLET SILT FENCE (E-7)	SILT FENCE (E-11)	SEDIMENT BASIN (E-14)	OBLITERATION OF SEDIMENT BASIN	SEDIMENT REMOVAL AND DISPOSAL	TEMPORARY SEEDING	MULCH COVER	WATER
		BAG	CU. YD.	L.F.	L.F.	CU. YD.	CU. YD.	CU. YD.	ACRE	ACRE	M.G.
CLEARING AND GRUBBING											
I-430 RT. LANES											
682+95	688+35				550						
I-430 LT. LANES											
682+70	685+35				290						
I-40 LANES											
8181+29	8181+66				80						
8181+29	8181+56				120						
8182+50	8185+20				155						
8182+45	8185+15				305						
8189+90	8191+55				165						
8189+80	8191+55				175						
8189+90	8196+40				450						
8189+49	8191+99				255						
8192+02	8194+10				212						
8192+37	8192+75				75						
8192+83	8193+17				75						
8198+40	8200+70				242						
8201+00	8205+60				484						
8200+40	8202+11				186						
8202+42	8208+60				627						
8201+25	8201+46				51						
8201+70	8201+88				52						
8212+90	8222+20				1190						
8219+45	8221+60				235						
8226+20	8226+45				800						
8223+40	8226+20				305						
8262+20	8265+60				580						
RAMP 1											
8215+80	8216+85				140						
8219+75	8230+15				1040						
RAMP 3											
688+90	694+80				590						
668+10	670+10				230						
685+85	685+85				75						
685+85	687+00				150						
RAMP 4											
8189+30	8197+00				720						
8207+95	8208+80				90						
NORMAN ROAD											
15+40	16+10				115						
16+25	18+60				325						
21+30	26+05				570						
NEVA ROAD											
7+15	9+35				270						
SUBTOTALS BOX 1:					11974						

TEMPORARY EROSION CONTROL BOX (2 OF 2)

STATION	STATION	SAND BAG DITCH CHECK (E-5)	ROCK DITCH CHECK (E-6)	DROP INLET SILT FENCE (E-7)	SILT FENCE (E-11)	SEDIMENT BASIN (E-14)	OBLITERATION OF SEDIMENT BASIN	SEDIMENT REMOVAL AND DISPOSAL	TEMPORARY SEEDING	MULCH COVER	WATER
		BAG	CU. YD.	L.F.	L.F.	CU. YD.	CU. YD.	CU. YD.	ACRE	ACRE	M.G.
STAGE 1											
I-430 RT. LANES											
684+84	690+84	220	30								
I-430 LT. LANES											
672+64	681+00	140	120								
681+40	692+24	320	105								
I-40 RT. LANES											
8185+30	8190+65	80	45								
8192+00	8192+50		30								
8192+64	8198+42	60	60								
8202+00				20							
8202+33	8208+00	160	60								
8208+50	8210+30	40	45								
I-40 LT. LANES											
8185+30	8190+65	80	60								
8227+00	8230+40	40	30								
I-40 LANES											
8262+20	8265+60		135								
RAMP 1											
8230+20	8231+71	100	60								
RAMP 3											
666+53	671+44	160	15								
668+27	671+77	160	45								
RAMP 4											
8188+88		20									
8197+93	8199+46	80	15								
8209+45	8217+99	220	90								
NORMAN ROAD											
16+76	17+82	40	30								
17+94		20									
21+95	25+68	120	90								
NEVA ROAD											
7+77	9+26	140	90								
7+76	9+52	180									
DRIVEWAY 1											
9+10	9+53	40	30								
9+16	9+38	20	15								
STAGE 2											
I-40 RT. LANES											
8181+73	8192+73	140	15								
8193+22	8208+00	80	90								
8208+18	8223+00	280	105								
8223+80	8224+80	120									
I-40 LT. LANES											
8186+40	8191+25	40	30								
8193+50	8208+50	160	45								
* ENTIRE PROJECT AS DIRECTED BY THE ENGINEER							100	100	100	30.74	30.74	627.10
SUBTOTALS BOX 1:					11974						
SUBTOTALS BOX 2:		3260	1485	20		100	100	100	30.74	30.74	627.10
TOTALS:		3260	1485	20	11974	100	100	100	30.74	30.74	627.10

* QUANTITIES ESTIMATED. TO BE USED IF AND WHERE DIRECTED BY THE ENGINEER.
SEE SECTION 104.03 OF THE STANDARD SPECIFICATIONS.
BASIS OF ESTIMATE:
SAND BAG DITCH CHECKS = 20 BAGS / LOCATION
ROCK DITCH CHECKS = 15 CU. YD. / LOCATION
WATER = 20.4 M.G. PER ACRE TEMPORARY SEEDING

TEMPORARY EROSION CONTROL DEVICES SHOWN ABOVE AND ON THE PLANS SHALL BE INSTALLED IN SUCH A SEQUENCE AS TO DETER EROSION AND SEDIMENTATION OF U.S. WATERWAYS AS EXPLAINED BY THE NATIONAL POLLUTANT DISCHARGE ELIMINATION SYSTEM PERMIT.

QUANTITIES
STA. 8181+22.02 TO STA. 8232+68.78

sadonaldson 7/18/2014 12:17:12 PM
WORKSPACE: AHTD
L:\20\NDIT709 - I-40 at I-430 Interchange Modifications\Drawings\RCA0609_QTY_05.dgn
REVISED DATE:

DATE REVISED	DATE FILMED	DATE REVISED	DATE FILMED	FED.RD. DIST.NO.	STATE	FED.AID PROJ.NO.	SHEET NO.	TOTAL SHEETS
				6	ARK.			
				JOB NO.		CA0609	188	693

(2) QUANTITIES

WIRE ROPE SAFETY FENCE

STATION	STATION	LOCATION	WIRE ROPE SAFETY FENCE	WRSF ANCHOR*	CONCRETE DITCH PAVING (TYPE B)			SOLID SODDING	WATER
			L.F.	EACH	LENGTH	"W"	SQ. YD.	SQ. YD.	M.G.
669+85	686+72	RT OF I-430 LT. LANE EDGE	1687	2	1637	4	727	727.6	9.2
ENTIRE	PROJECT								
TOTALS:			1687	2			727	727.6	9.2

*THIS ITEM SHOWN FOR INFORMATION ONLY

BASIS OF ESTIMATE:
WATER = 12.6 GALS. PER SQ. YD. SOLID SODDING

STATE OF ARKANSAS
LICENSED PROFESSIONAL ENGINEER
No.13422
JOHN F. CANTABERY
7-18-14

STRUCTURES

STATION	LOCATION	DESCRIPTION	ZINC COATED C.S.P.(16 GAUGE)	SIDE DRAINS	REINFORCED CONCRETE PIPE CULVERT					FLARED END SECTIONS					CONCRETE SPILLWAY (TYPE A)	DROP INLETS			R.C. BOX CULVERT						SOLID SODDING	WATER	STANDARD DRAWINGS
					CLASS III				CLASS IV							(TYPE N1)	ADJUSTED TO GRADE	(TYPE RM)	DIMENSIONS			CLASS S CONCRETE - ROADWAY	REINFORCING STEEL - ROADWAY (GR 60)	UNCL. EX. FOR STRUCTURES - ROADWAY			
			12 IN.	18 IN.	24 IN.	30 IN.	42 IN.	48 IN.	54 IN.	24 IN.	30 IN.	42 IN.	48 IN.	54 IN.					LENGTH	SPAN	HEIGHT						
			L.F.		L.F.					EACH					EACH	EACH			FEET			CU. YD.	LB.	CU. YD.	SQ. YD.	M.G.	
673+02.00	I-430 RT. LANES	MODIFY TO GRADE DROP INLET IN MEDIAN WITH R.C. PIPE CULVERT WITH F.E.S. RT.															1										
678+50.00	I-430 RT. LANES	MODIFY TO GRADE DROP INLET IN MEDIAN WITH R.C. PIPE CULVERT RT. FWD. SKEW															1								6	0.1	
8182+24.00	I-40 RT. LANES	EXTEND R.C. PIPE CULVERT RT. WITH F.E.S. RT.			17					1															6	0.1	
8192+36.00	I-40 RT. LANES	EXTEND R.C. PIPE CULVERT LT. WITH F.E.S. RT. & LT.						42																	29	0.4	FES-1, FES-2, PCC-1
8193+21.00	I-40 LT. LANES	EXTEND R.C. PIPE CULVERT RT. & LT. WITH F.E.S. RT. & LT.					33					2													46	0.6	FES-1, FES-2, PCC-1
8201+19.00	I-40 RT. LANES	EXTEND R.C. BOX CULVERT LT. AND RT. WITH WINGS RT.																	77	5	4	37.63	4748.07	15.73	9	0.1	RCB-1, RCB-2, RCB-3,W303-1, R130X-0
8201+90.00	I-40 LT. LANES	EXTEND R.C. BOX CULVERT LT. WITH WINGS LT.																	19	5	4	13.44	1288.87	5.65	9	0.1	RCB-1, RCB-2, RCB-3,W303-1, R130X-0
8202+00.00	I-40 RT. LANES	CONSTRUCT DROP INLET IN MEDIAN WITH R.C. PIPE CULVERT TO R.C. BOX CULVERT			40													1							6	0.1	FPC-9D, PCC-1
8208+18.00	I-40 LT. LANES	EXTEND R.C. PIPE LT. AND RT. WITH F.E.S. LT. AND RT.			32					2															16	0.2	FES-1, FES-2, PCC-1
8217+33.00	I-40 RT. LANES	EXTEND R.C. PIPE LT. WITH F.E.S. LT.			16					1															8	0.1	FES-1, FES-2, PCC-1
8222+74.00	I-40 RT. LANES	EXTEND R.C. PIPE RT. WITH F.E.S. RT.						20					1												29	0.4	FES-1, FES-2, PCC-1
8223+04.00	I-40 LT. LANES	EXTEND R.C. PIPE CULVERT RT. WITH F.E.S. RT.						29					1												29	0.4	FES-1, FES-2, PCC-1
9+16.00	NEVA ROAD	CONSTRUCT R.C. PIPE CULVERT RT.		41																							FES-1, FES-2, PCC-1
18+19.70	NORMAN ROAD	CONSTRUCT TYPE N-1 DROP INLET RT.	40												1	1											FPC-9N, PCM-1
18+21.80	NORMAN ROAD	CONSTRUCT TYPE N-1 DROP INLET LT.	48												1	1											FPC-9N, PCM-1
21+73.80	NORMAN ROAD	CONSTRUCT TYPE N-1 DROP INLET RT.	49												1	1											FPC-9N, PCM-1
21+75.90	NORMAN ROAD	CONSTRUCT TYPE N-1 DROP INLET LT.	50												1	1											FPC-9N, PCM-1
24+75.00	NORMAN ROAD	EXTEND R.C. PIPE CULVERT RT. AND LT. WITH F.E.S. RT. AND LT			13					2															16	0.2	FES-1, FES-2, PCC-1
669+89.00	RAMP 3	CONSTRUCT DROP INLET RT. WITH EXIST. R.C. PIPE CULVERT																1								0.0	FPC-9D
8198+15.00	RAMP 4	EXTEND R.C. PIPE CULVERT LT. WITH F.E.S. LT.							46					1											35	0.4	FES-1, FES-2, PCC-1
8217+47.00	RAMP 4	EXTEND R.C. PIPE CULVERT LT. WITH F.E.S. LT.				11					1														13	0.2	FES-1, FES-2, PCC-1
TOTALS:			187	41	118	11	33	91	46	6	1	2	4	1	4	4	2	2	96	10	8	51.07	6036.94	21.38	257	3.4	

BASIS OF ESTIMATE:
WATER = 12.6 GALS. PER SQ. YD. SOLID SODDING

FOR R.C. PIPE CULVERT INSTALLATIONS, USE TYPE 3 BEDDING UNLESS OTHERWISE SPECIFIED.
FOR C.M. PIPE CULVERT INSTALLATIONS, USE TYPE 2 BEDDING UNLESS OTHERWISE SPECIFIED.

GUARDRAIL

STATION	STATION	LOCATION	GUARDRAIL TYPE "A"	TERMINAL ANCHOR POSTS (TYPE 1)	GUARDRAIL TERMINAL (TYPE 2)	THRIE BEAM GUARDRAIL TERMINAL
			L.F.	EACH	EACH	EACH
8181+19.01	8183+37.76	I-40 LT. LANES - LT.	150		1	1
8181+19.01	8183+37.76	I-40 LT. LANES - RT.	150		1	1
8238+72.36	8241+47.36	I-40 LT. LANES - LT.	225	1	1	
8184+06.00	8187+81.00	I-40 RT. LANES - RT.	325	1	1	
8184+56.00	8187+81.00	I-40 RT. LANES - LT.	275	1	1	
8210+91.00	8214+66.00	I-40 RT. LANES - RT.	325	1	1	
8211+41.00	8214+66.00	I-40 RT. LANES - LT.	275	1	1	
8266+28.78	8269+53.73	I-40 MEDIAN - LT.	275	1	1	
8266+28.00	8269+52.95	I-40 MEDIAN - LT.	275	1	1	
NA	NA	OH - 040 - 60 -17 - LT. LANES - LT.	325	1	1	
NA	NA	OH - 040 - 60 -17 - LT. LANES - RT.	275	1	1	
NA	NA	OH - 430 - 60 - 39 - RT.	375		1	1
NA	NA	OH - 430 - 60 - 38 - RT.	100	1		1
NA	NA	OH - 430 - 60 - 38 - LT.	150	1		1
NA	NA	OH - 430 - 60 - 35 - RT.	250	1	1	
8235+61.69	691+49.00	RAMP 1/I-430 LT. - RT.	250	1	1	
691+41.91	691+49.00	RAMP 3/I-430 LT. - LT.	250	1	1	
690+04.45	8186+17.98	I-430 RT. LANES/RAMP 4 - RT.	250	1	1	
690+04.45	8186+18.91	I-430 RT. LANES/RAMP 4 - LT.	250	1	1	
661+84.72	665+28.47	RAMP 3 - RT.	275		1	1
665+65.43	667+65.43	RAMP 3 - LT.	150	1	1	
8238+25.62	8240+50.62	C-D ROAD - LT.	175	1	1	
8197+20.38	8199+39.13	RAMP 4 - LT.	150		1	1
8197+20.97	8199+39.72	RAMP 4 - RT.	150		1	1
8210+92.50	8213+67.50	RAMP 4 - RT.	225	1	1	
17+27.55	18+46.27	NORMAN ROAD - RT.	100	1		1
17+54.62	18+48.37	NORMAN ROAD - LT.	75	1		1
21+47.28	22+41.03	NORMAN ROAD - RT.	75	1		1
21+49.38	22+68.13	NORMAN ROAD - LT.	100	1		1
TOTALS:			6225	23	23	12

4" PIPE UNDERDRAINS

LOCATION	4" PIPE UNDERDRAINS	UNDERDRAIN OUTLET PROTECTORS
	LIN. FT.	EACH
* TO BE USED IF AND WHERE DIRECTED BY THE ENGINEER	571	28

* QUANTITIES ESTIMATED, SEE SECTION 104.03 OF THE STANDARD SPECIFICATIONS.

RUMBLE STRIPS IN ASPHALT SHOULDERS

STATION	STATION	LOCATION	RUMBLE STRIPS IN ASPHALT SHOULDERS
			L.F.
8181+51.11	8215+59.33	I-40 - LT. OF LT. MAIN LANES	3408
8223+57.95	8231+97.95	I-40 - LT. OF LT. MAIN LANES	840
8181+51.11	8231+97.95	I-40 - RT. OF LT. MAIN LANES	5047
8181+58.79	8226+77.48	I-40 - LT. OF RT. MAIN LANES	4519
8181+58.79	8216+66.11	I-40 - RT. OF RT. MAIN LANES	3507
8217+02.52	8226+77.48	I-40 - RT. OF RT. MAIN LANES	975
672+16.66	693+17.76	I-430 - RT. OF LT. MAIN LANES	2101
672+16.66	692+23.45	I-430 - LT. OF RT. MAIN LANES	2007
8216+74.66	8218+74.66	RAMP 1 - RT.	200
8217+05.27	8234+71.14	RAMP 1 - LT.	1766
685+90.00	692+72.98	RAMP 3 - LT.	683
685+90.00	690+50.59	RAMP 3 - RT.	461
8185+37.91	8199+12.31	RAMP 4 - LT.	1374
8196+98.81	8199+12.31	RAMP 4 - RT.	214
8207+39.26	8209+52.76	RAMP 4 - RT.	214
8207+39.26	8219+96.36	RAMP 4 - LT.	1257
TOTAL:			28573

QUANTITIES
STA. 8181+22.02 TO STA. 8232+68.78

sadonaldson 7/8/2014 12:17:35 PM
WORKSPACE: AHTD
L:\20IN\00709 - I-40 at I-430 Interchange Modifications\Drawings\RCA0609_QTY_06.dgn
REVISED DATE:

DATE REVISED	DATE FILMED	DATE REVISED	DATE FILMED	FED.RD. DIST.NO.	STATE	FED.AID PROJ.NO.	SHEET NO.	TOTAL SHEETS
				6	ARK.			
				JOB NO.		CA0609	189	693

(2) QUANTITIES

REMOVAL AND DISPOSAL OF STRUCTURES BOX (1 OF 2)

STATION	STATION	LOCATION	APPROACH GUTTERS	APPROACH SLAB AND GUTTERS	CONCRETE DITCH PAVING	CONCRETE DRIVEWAYS	CONCRETE MEDIAN BARRIER	CONCRETE PAVEMENT	CONCRETE PIER PROTECTION	DROP INLETS	FENCE	FLARED END SECTION	SIGN FOUNDATIONS	* GUARDRAIL	HEADWALL	IMPACT ATTENUATION BARRIER	MAILBOXES	OVERHEAD SIGN STRUCTURE	PIPE CULVERT	SIGNS	STEEL GRATE ASSEMBLIES	UNDERDRAIN OUTLET PROTECTORS	WIRE ROPE SAFETY FENCE
			EACH	EACH	SQ. YD.	SQ. YD.	L.F.	SQ. YD.	L.F.	EACH	L.F.	EACH	EACH	L.F.	EACH	EACH	EACH	EACH	EACH	EACH	EACH	EACH	L.F.
685+30.00	686+70.00	I-430 RT. LANES - LT.			108																		
669+85.00	686+32.00	I-430 LT. LANES - RT.																					1647
670+43.00	681+00.00	I-430 LT. LANES - RT.			450																		
684+00.00	687+41.00	I-430 LT. LANES - RT.			193																		
681+00.00	686+35.00	I-430 LT. LANES - RT.			225																		
8206+92.00	8211+74.00	I-40 LT. LANES - LT.			208																		
8208+15.00	8208+91.00	I-40 LT. LANES - RT.			38																		
8181+22.00	8182+28.00	I-40 RT. LANES - RT.			67																		
8205+23.00	8211+40.00	I-40 RT. LANES - RT.			267																		
8212+15.00	8212+74.00	I-40 RT. LANES - RT.			32																		
8212+57.00	8212+64.00	I-40 RT. LANES - RT.			3																		
8221+89.00	8225+01.00	I-40 RT. LANES - RT.			176																		
8198+03.00	8199+89.00	RAMP 4 - LT.			158																		
8181+64.64	8224+23.22	I-40 MEDIAN																				28	
8199+17.00		RAMP 4								1											1		
8207+35.00		RAMP 4								1											1		
8212+57.59	8213+13.67	I-40 LT. LANES - LT.									62												
8199+17.22	8212+99.82	I-40 MEDIAN									298												
8211+56.72	8211+61.58	I-40 RT. LANES - RT.									15												
670+36.19	670+76.92	RAMP 3 - RT.									41												
15+67.22	16+75.67	NORMAN RD. - LT.									346												
15+00.92	24+35.78	NORMAN RD. - RT.									335												
15+27.00		NORMAN ROAD															10						
25+11.00		NORMAN ROAD															1						
NA	NA	OH - 430 - 60 - 39												200									
8181+19.46	8184+42.08	I-40 LT. LANES - RT.												325									
8181+16.20	8183+95.00	I-40 LT. LANES - LT.												280									
8209+35.00	8211+80.00	I-40 RT. LANES - RT.												245									
8212+61.00	8215+11.00	I-40 LT. LANES - LT.												250									
17+94.00	18+44.00	NORMAN ROAD - RT.												50									
18+05.00	18+45.00	NORMAN ROAD - LT.												40									
21+06.00	21+46.00	NORMAN ROAD - RT.												40									
21+10.00	21+60.00	NORMAN ROAD - LT.												50									
661+90.00	664+15.00	RAMP 3 - RT.												225									
665+92.00	668+18.00	RAMP 3 - LT.												228									
8197+50.00	8199+50.00	RAMP 4 - LT.												200									
8197+50.00	8199+50.00	RAMP 4 - RT.												200									
8264+46.66	8267+24.15	I-40 MEDIAN - LT. OF L.M.L.												275									
8212+18.00	8212+36.00	I-40 MEDIAN - RT. OF L.M.L.							8														
8212+04.00	8212+22.00	I-40 MEDIAN - LT. OF R.M.L.							8														
8211+80.00	8212+08.00	I-40 RT. LANES - RT.							28														
8212+35.00	8212+63.00	I-40 LT. LANES - LT.							28														
8211+60.00		I-40 MEDIAN - RT.														1							
8212+82.00		I-40 MEDIAN - LT.														1							
18+65.00		NORMAN ROAD																	1				
20+80.00		NORMAN ROAD																	1				
21+65.00		NORMAN ROAD																	1				
9+16.00		NEVA ROAD																	1				
8182+23.63		I-40 RT. LANES - RT.													1								
8193+21.00		I-40 LT. LANES - RT.													1								
8192+09.18		I-40 RT. LANES - RT.													1								
8192+36.00		I-40 RT. LANES - LT.													1								
8208+18.00		I-40 LT. LANES - LT. & RT.													2								
8217+33.00		I-40 RT. LANES - LT.													1								
8222+74.00		I-40 RT. LANES - RT.													1								
8223+04.00		I-40 LT. LANES - RT.													1								
14+58.55	14+88.20	NORMAN RD. - RT.				43																	
NA		40 AT EXIT 148 WB											1										
NA		40 AT EXIT 148 WB											1										
8211+06.03		I-40 RT. LANES - RT.											1										
8211+06.10		I-40 RT. LANES - LT.											1										
673+25.89		I-430 RT. LANES - RT.											1										
673+25.95		I-430 RT. LANES - LT.											1										
8264+77.76		I-40 MEDIAN - LT.											1										
8264+77.96		I-40 MEDIAN - LT.											1										
8186+38.56		RAMP 4 - RT.											1										
8186+38.77		RAMP 4 - LT.											1										
8149+41.00		I-40 RT. LANES																1					
8211+06.00		I-40 RT. LANES																1					
8264+91.00		I-40 LT. LANES (MEDIAN)																1					
673+38.00		I-430 RT. LANES - RT.																1					
8186+38.63		RAMP 4																1					
8198+15.00		RAMP 4 - LT.										1											
8217+47.00		RAMP 4 - LT.										1											
SUBTOTALS BOX 1:			0	0	1925	43	0	0	72	2	1097	2	10	2608	9	2	11	5	4	0	2	28	1647

* THE PRICE BID FOR REMOVAL AND DISPOSAL OF GUARDRAIL SHALL INCLUDE THE REMOVAL AND DISPOSAL OF ANY TERMINAL ANCHOR POSTS.

STATE OF ARKANSAS
LICENSED PROFESSIONAL ENGINEER
No.13422
JOHN F. CANTABERY
7-30-14

SOIL STABILIZATION

LOCATION	TON
ENTIRE PROJECT	100

QUANTITY ESTIMATED. TO BE USED IF AND WHERE DIRECTED BY THE ENGINEER. SEE SECTION 104.03 OF THE STANDARD SPECIFICATIONS.

CLEARING AND GRUBBING

STATION	STATION	LOCATION	CLEARING	GRUBBING
			STA.	
672+16.66	693+17.76	I-430 LT. & RT. LANES	21	21
8181+51.11	8231+97.95	I-40 LT. & RT. LANES	50	50
8213+68.18	8236+92.93	RAMP 1	23	23
663+54.20	692+95.45	RAMP 3	29	29
8185+37.91	8199+48.81	RAMP 4	14	14
8207+02.76	8221+75.09	RAMP 4	15	15
14+50.00	18+57.71	NORMAN ROAD	4	4
21+37.93	26+00.00	NORMAN ROAD	5	5
7+15.00	10+00.00	NEVA ROAD	3	3
TOTALS:			164	164

EROSION CONTROL

LOCATION	LIME	SEEDING	MULCH COVER	SECOND SEEDING	WATER
	TON		ACRE		M.G.
I-40 MEDIAN	14.08	7.04	7.04	7.04	718.1
WEST OF I-40	13.46	6.73	6.73	6.73	686.5
EAST OF I-40	13.96	6.98	6.98	6.98	712.0
I-430 MEDIAN	14.20	7.10	7.10	7.10	724.2
SLIDE REPAIR	5.66	2.83	2.83	2.83	288.7
GUARDRAIL WIDENING	2.74	1.37	1.37	1.37	139.7
TOTALS:	64.10	32.05	32.05	32.05	3269.2

BASIS OF ESTIMATE:
LIME = 2 TONS PER ACRE SEEDING
WATER = 102.0 M.G.PER ACRE SEEDING

COLD MILLING ASPHALT PAVEMENT

STATION	STATION	LOCATION	WIDTH FEET	SQ. YD.
8181+51.11	8184+82.27	I-40 LT.	VAR.	1442
8184+82.27	8206+67.21	I-40 LT.	14.00	3399
8215+59.33	8231+97.95	I-40 LT.	4.00	728
8218+37.48	8226+77.48	I-40 LT.	14.00	1307
8181+58.79	8182+96.24	I-40 RT.	32.00	489
8181+58.79	8188+25.00	I-40 RT.	12.00	888
8182+96.24	8196+68.18	I-40 RT.	14.00	2134
8196+68.18	8211+68.58	I-40 RT.	14.00	2334
8216+71.79	8218+37.48	I-40 RT.	4.00	74
07+15.00	07+65.00	NEVA RD.	VAR.	108
25+50.00	26+00.00	NORMAN RD.	VAR.	119
TOTAL:				13022

BENCH MARK CAPS

STATION	LOCATION	EACH
8200+86.12	BOX CULVERT, RT. OF RT. MAIN LANES	1
8202+22.55	BOX CULVERT, LT. OF LT. MAIN LANES	1
18+60.00	SW CORNER OF NORMAN ROAD BRIDGE	1
673+02.00	DROP INLET I-430 MEDIAN	1
678+50.00	DROP INLET I-430 MEDIAN	1
8199+50.00	SE CORNER OF FLYOVER BRIDGE RAMP 4	1
8207+00.00	NW CORNER OF FLYOVER BRIDGE RAMP 4	1
TOTAL:		7

NOTE: SHOWN FOR INFORMATION ONLY. BENCH MARKS SHALL BE FURNISHED AND PLACED BY STATE FORCES.

QUANTITIES
STA. 8181+22.02 TO STA. 8232+68.78

cgarvasini 7/30/2014 8:26:37 AM
WORKSPACE: AHTD
L:\201\N017709 - I-40 at I-430 Interchange Modifications\Drawings\RCA0609_QTY_07.dgn
REVISED DATE:

DATE REVISED	DATE FILMED	DATE REVISED	DATE FILMED

FED.RD. DIST.NO.	STATE	FED.AID PROJ.NO.	SHEET NO.	TOTAL SHEETS
6	ARK.			
JOB NO.		CA0609	190	693

(2) QUANTITIES

REMOVAL AND DISPOSAL OF STRUCTURES BOX (2 OF 2)

STATION	STATION	LOCATION	APPROACH GUTTERS	APPROACH SLAB AND GUTTERS	CONCRETE DITCH PAVING	CONCRETE DRIVEWAYS	CONCRETE MEDIAN BARRIER	CONCRETE PAVEMENT	CONCRETE PIER PROTECTION	DROP INLETS	FENCE	FLARED END SECTION	SIGN FOUNDATIONS	* GUARDRAIL	HEADWALL	IMPACT ATTENUATION BARRIER	MAILBOXES	OVERHEAD SIGN STRUCTURE	PIPE CULVERT	SIGNS	STEEL GRATE ASSEMBLIES	UNDERDRAIN OUTLET PROTECTORS	WIRE ROPE SAFETY FENCE
			EACH	EACH	SQ. YD.	SQ. YD.	L.F.	SQ. YD.	L.F.	EACH	L.F.	EACH	EACH	L.F.	EACH	EACH	EACH	EACH	EACH	EACH	EACH	EACH	L.F.
NA	NA	I-430 RT. LANES - RT. (OH-430-60-38)	1																				
NA	NA	I-430 LT. LANES - LT. OH-430-60-38)	1																				
NA	NA	I-430 RIVER BRIDGE (OH-430-60-39)	1																				
8198+85.66	8199+51.43	RAMP 4		1																			
8207+03.03	8207+68.62	RAMP 4		1																			
18+29.55	18+45.68	NORMAN RD.		1																			
21+06.33	21+23.78	NORMAN RD.		1																			
NA	NA	I-430 RIVER BRIDGE (OH-430-60-39)						31															
672+16.66	674+66.69	I-430 LT. LANES						55															
672+16.66	674+97.45	I-430 RT. LANES						62															
8235+71.38	8236+92.93	RAMP 1						405															
665+27.81	671+00.00	RAMP 3						1073															
688+50.00	691+51.05	RAMP 3						475															
8197+48.81	8199+12.31	RAMP 4						260															
8207+39.26	8209+02.76	RAMP 4						261															
NA	NA	I-430 RIVER BRIDGE (OH-430-60-39)					170																
7884+00.00		I-40 RT. LANES																		1			
7904+50.00		I-40 RT. LANES - LT.																		1			
7904+51.00		I-40 RT. LANES - RT.																		1			
7914+50.00		I-40 RT. LANES - LT.																		1			
7914+50.00		I-40 RT. LANES - RT.																		1			
7924+50.00		I-40 RT. LANES - LT.																		1			
7924+50.00		I-40 RT. LANES - RT.																		1			
7970+30.00		I-40 RT. LANES - RT.																		1			
7974+59.00		I-40 LT. LANES - LT.																		1			
7992+54.00		I-40 RT. LANES - LT.																		1			
8007+44.00		I-40 RT. LANES - RT.																		1			
8026+58.00		I-40 RT. LANES - RT.																		1			
8029+21.00		I-40 LT. LANES - LT.																		1			
8042+34.00		I-40 LT. LANES - LT.																		1			
8043+75.00		I-40 LT. LANES - LT.																		1			
8051+91.00		I-40 LT. LANES - LT.																		1			
8062+53.00		I-40 LT. LANES - LT.																		1			
8074+31.00		I-40 LT. LANES - LT.																		1			
8091+48.00		I-40 RT. LANES - RT.																		1			
8118+19.00		I-40 LT. LANES - LT.																		1			
8140+99.00		I-40 RT. LANES - LT.																		1			
8140+99.00		I-40 RT. LANES - RT.																		1			
8172+37.00		I-40 RT. LANES - RT.																		1			
8173+33.00		I-40 LT. LANES - RT.																		1			
8188+43.00		I-40 LT. LANES - LT.																		1			
8191+32.00		I-40 LT. LANES - LT.																		1			
8197+88.00		I-40 LT. LANES - LT.																		1			
8203+98.00		I-40 RT. LANES - RT.																		1			
8206+06.00		I-40 LT. LANES - LT.																		1			
8219+99.00		I-40 RT. LANES - RT.																		1			
8255+14.00		I-40 LT. LANES - LT.																		1			
8238+14.00		I-40 LT. LANES - LT.																		1			
8240+20.00		I-40 RT. LANES - LT.																		1			
8240+20.00		I-40 RT. LANES - RT.																		1			
8252+57.00		I-40 LT. LANES - LT.																		1			
8261+00.00		I-40 LT. LANES - LT.																		1			
8264+91.00		I-40 LT. LANES - RT.																		1			
NA		GM - 430 - 60 - 1 - NB																		1			
NA		I-430 RT. LANES RT. (EXIST. GM SIGN)																		1			
NA		EX - 430 - 60 - 1 - NB																		1			
NA		CL - 430 - 60 - 3 - NB																		1			
NA		SS - 430 - 60 - 4 - NB(RT)																		1			
NA		SS - 430 - 60 - 4 - NB(LT)																		1			
NA		SS - 430 - 60 - 3 - NB																		1			
NA		SS - 430 - 60 - 4 - SB																		1			
NA		I-430 RT. LANES - RT. (W9-1)																		1			
NA		I-430 RT. LANES - LT. (W9-1)																		1			
NA		SS - 430 - 60 - 3 - SB																		1			
NA		SS - 430 - 60 - 2 - NB																		1			
NA		SS - 430 - 60 - 1 - NB																		1			
NA		EX - 430 - 60 - 1 - SB																		1			
NA		I-430 LT. LANES - LT. (EXIST. GM SIGN)																		1			
NA		I-430 RT. LANES - RT. (EXIST. W4-2)																		1			
NA		SS - 430 - 60 - 1 - SB																		1			
671+15.00		I-430 LT. LANES - LT.																		1			
686+09.00		I-430 LT. LANES - LT.																		1			
686+09.00		I-430 LT. LANES - RT.																		1			
688+24.00		I-430 LT. LANES - LT.																		1			
690+01.00		I-430 LT. LANES - LT.																		1			
690+01.00		I-430 LT. LANES - RT.																		1			
8233+99.00		RAMP 1 - LT.																		1			
700+82.00		RAMP 2 - LT.																		1			
700+82.00		RAMP 2 - RT.																		1			
670+80.00		RAMP 3 - RT.																		1			
8191+46.00		RAMP 4 - LT.																		1			
8191+46.00		RAMP 4 - RT.																		1			
SUBTOTALS BOX 2:			3	4	0	0	170	2622	0	0	0	0	0	0	0	0	0	0	0	66	0	0	0
SUBTOTALS BOX 1:			0	0	1925	43	0	0	72	2	1097	2	10	2608	9	2	11	5	4	0	2	28	1647
TOTALS:			3	4	1925	43	170	2622	72	2	1097	2	10	2608	9	2	11	5	4	66	2	28	1647

* THE PRICE BID FOR REMOVAL AND DISPOSAL OF GUARDRAIL SHALL INCLUDE THE REMOVAL AND DISPOSAL OF ANY TERMINAL ANCHOR POSTS.

STATE OF ARKANSAS
LICENSED
PROFESSIONAL
ENGINEER
No.13422
JOHN F. CANTABERY
7-30-14

QUANTITIES
STA. 8181+22.02 TO STA. 8232+68.78

cggarvosini 7/30/2014 8:23:51 AM
WORKSPACE: AHTD
L:\ROW\NMT\09 - I-40 at I-430 Interchange Modifications\Drawings\RCA0609_QTY_08.dgn
REVISED DATE:

DATE REVISED	DATE FILMED	DATE REVISED	DATE FILMED

FED. RD. DIST. NO.	STATE	FED. AID PROJ. NO.	SHEET NO.	TOTAL SHEETS
6	ARK.			
JOB NO.		CA0609	191	693

(1) A&B3230, 07317 - QUANTITIES - 55692

SCHEDULE OF BRIDGE QUANTITIES - JOB NO. CA0609

BRIDGE NUMBER	CODE NUMBER	NAME PLATE TITLE	UNIT OF STRUCTURE	ITEM NO.	205	801	802	802	803	SP & 804	804	805	805	805	807	807	808	809	809	812	816	821
				ITEM	REMOVAL OF EXISTING BRIDGE STRUCTURE (SITE NO. _)	UNCLASSIFIED EXCAVATION FOR STRUCTURES - BRIDGE	CLASS S CONCRETE - BRIDGE	CLASS S(AE) CONCRETE - BRIDGE	CLASS 1 PROTECTIVE SURFACE TREATMENT	REINFORCING STEEL - BRIDGE (GRADE 60)	EPOXY COATED REINFORCING STEEL (GRADE 60)	STEEL PILING (HP12X53) (1)	STEEL PILING (HP14X73) (1)	PREBORING (2)	STRUCTURAL STEEL IN PLATE GIRDER SPANS (M270-GR. 50)	PAINTING STRUCTURAL STEEL (3)	ELASTOMERIC BEARINGS	SILICONE JOINT SEALANT	ARMORED JOINT WITH NEOPRENE STRIP SEAL	BRIDGE NAME PLATE (TYPE D)	CONCRETE RIPRAP	MODIFICATION OF EXISTING BRIDGE STRUCTURE (BRIDGE NO. _)
				UNIT	LUMP SUM	CUBIC YARD	CUBIC YARD	CUBIC YARD	GALLON	POUND	POUND	LINEAR FOOT	LINEAR FOOT	LINEAR FOOT	POUND	TON	CUBIC INCH	LINEAR FOOT	LINEAR FOOT	EACH	CUBIC YARD	LUMP SUM
A3230	X020	White Oak Bayou	END BENT NO. 1 & 6					2.50	0.1		270											
			SITE NO. 1 (BRIDGE NO. A3230)																			1
			TOTALS FOR BRIDGE NO. A3230		-	-	-	2.50	0.1	-	270	-	-	-	-	-	-	-	-	-	-	-
B3230	X020	White Oak Bayou	END BENT NO. 1 & 6					2.50	0.1		270											
			SITE NO. 1 (BRIDGE NO. B3230)																			1
			TOTALS FOR BRIDGE NO. B3230		-	-	-	2.50	0.1	-	270	-	-	-	-	-	-	-	-	-	-	-
07317	X771	Marche Road	BENT NO. 1				45.15		0.1	4,788			323		815	0.4	3,740.0		44		12	
			BENT NO. 2			134	128.29			26,854			522				3,900.0					
			BENT NO. 3			210	144.00			27,430			576				3,900.0					
			BENT NO. 4				45.76		0.1	4,788			351		815	0.4	3,740.0		44		79	
			388'-0" CONT. COMP. PLATE GIRDER UNIT					451.20	29.2		136,160				534,470	267.2				1		
			SITE NO. 2 (BRIDGE NO. 03231)		1																	
			TOTALS FOR BRIDGE NO. 07317		-	344	363.20	451.20	29.4	63,860	136,160	-	1,772	-	536,100	268.0	15,280.0	-	88	1	91	-

BRIDGE NUMBER	CODE NUMBER	NAME PLATE TITLE	UNIT OF STRUCTURE	ITEM NO.	SP JOB CA0609	SP JOB CA0609	SP JOB CA0609	SP JOB CA0609	SP JOB CA0609	SP JOB CA0609	SP JOB CA0609
				ITEM	ARCHITECTURAL FINISH	CLEANING AND PAINTING EXISTING STRUCTURAL STEEL (5)	DRILLED SHAFT (84" DIAMETER)	EXPLORATORY HOLES (2)	CROSSHOLE SONIC LOGGING (84" DIAMETER)	CORING DRILLED SHAFT	TEXTURED COATING FINISH (4)
				UNIT	SQ. FT.	TON	LINEAR FOOT	LINEAR FOOT	EACH	LINEAR FOOT	SQUARE YARD
A3230	X020	White Oak Bayou	END BENT NO. 1 & 6								
			SITE NO. 1 (BRIDGE NO. A3230)								
			TOTALS FOR BRIDGE NO. A3230		-	-	-	-	-	-	-
B3230	X020	White Oak Bayou	END BENT NO. 1 & 6								
			SITE NO. 1 (BRIDGE NO. B3230)								
			TOTALS FOR BRIDGE NO. B3230		-	-	-	-	-	-	-
07317	X771	Marche Road	BENT NO. 1		48						407
			BENT NO. 2		666						146
			BENT NO. 3		774						158
			BENT NO. 4		48						256
			388'-0" CONT. COMP. PLATE GIRDER UNIT		1,746						758
			SITE NO. 2 (BRIDGE NO. 03231)								
			TOTALS FOR BRIDGE NO. 07317		3,282	-	-	-	-	-	1,725

(1) These steel piles are required to have special driving points which will not be paid for directly but shall be considered subsidiary to the item "STEEL PILING (HP12x53)" or "STEEL PILING (HP14X73)".

(2) The quantities shown for Preboring and Exploratory Holes are for estimating and bidding purposes only. Actual quantities will be determined in the field.

(3) For Bridge No. 07317 & 07318, paint shall conform to Federal Standard 595B, Color Chip No. 20108, Dark Brown, unless noted otherwise. For Bridge No. 05324, paint shall conform to Federal Standard 595B, Color Chip No. 37200, Aluminum, unless noted otherwise.

(4) Includes quantities to be applied to MSE Retaining Walls and Concrete Riprap.

(5) Paint shall conform to Federal Standard 595B, Color Chip No. 37200, Aluminum, unless noted otherwise.

STATE OF ARKANSAS
REGISTERED PROFESSIONAL ENGINEER
No. 11328
CHRISTOPHER J. CRISWELL
7/30/14

BRIDGE ENGINEER
PRINT DATE: 7/30/2014

SHEET 1 OF 2
SCHEDULE OF BRIDGE QUANTITIES
HWY. 365-I-430 (WIDENING) & I-430 INTCHNG. MOD. (F)
PULASKI COUNTY
ROUTE 40 SECTION 33
ARKANSAS STATE HIGHWAY COMMISSION
LITTLE ROCK, ARKANSAS

DRAWN BY: LHG DATE: 3/15/14 FILENAME: bca0609xl_qxl.dgn
CHECKED BY: JRS DATE: 3/16/14
DESIGNED BY: CMF DATE: 3/15/14 SCALE: No Scale
BRIDGE NOS. A&B3230, 07317 DRAWING NO. 55692

JACOBS

T:\Job\WLXM2650 AHTD CAP CA0603\700 CADD Files\709 Structural Files\Drawings\B2650Marche Quantities 01.dgn
9:47:57 AM
7/30/2014

DATE REVISED	DATE FILMED	DATE REVISED	DATE FILMED	FED. ROAD DIST. NO.	STATE	FED. AID PROJ. NO.	SHEET NO.	TOTAL SHEETS
				6	ARK.			
				JOB NO.		CA0609	192	693
				(1) 05324, 07318		QUANTITIES		55693

SCHEDULE OF BRIDGE QUANTITIES FOR JOB CA0609

BRIDGE NO. / CODE NO. / NAME PLATE TITLE	UNIT OF STRUCTURE	ITEM NO.	205	801	802	802	803	SP & 804	804	805	805	805	807	807	808	809	809	812	816	821
		ITEM	REMOVAL OF EXISTING BRIDGE STRUCTURE (SITE NO. _)	UNCLASSIFIED EXCAVATION FOR STRUCTURES - BRIDGE	CLASS S CONCRETE -BRIDGE	CLASS S(AE) CONCRETE - BRIDGE	CLASS I PROTECTIVE SURFACE TREATMENT	REINFORCING STEEL- BRIDGE (GRADE 60)	EPOXY COATED REINFORCING STEEL (GRADE 60)	STEEL PILING (HP12X53) (1)	STEEL PILING (HP14X73) (1)	PREBORING (2)	STRUCTURAL STEEL IN PLATE GIRDER SPANS (M270-GR. 50)	PAINTING STRUCTURAL STEEL (3)	ELASTOMERIC BEARINGS	SILICONE JOINT SEALANT	ARMORED JOINT WITH NEOPRENE STRIP SEAL	BRIDGE NAME PLATE (TYPE D)	CONCRETE RIPRAP	MODIFICATION OF EXISTING BRIDGE STRUCTURE (BRIDGE NO. _)
		UNIT	LUMP SUM	CUBIC YARD	CUBIC YARD	CUBIC YARD	GALLON	POUND	POUND	LINEAR FOOT	LINEAR FOOT	LINEAR FOOT	POUND	TON	CUBIC INCH	LINEAR FOOT	LINEAR FOOT	EACH	CUBIC YARD	LUMP SUM
07318 X171 NORMAN ROAD OVER I-40	BENT NO. 1			33.42		0.1	4,540		224		35	458	0.2	2,204.0	27				8	
	BENT NO. 2			135	94.06			19,540							2,904.0					
	BENT NO. 3				33.52		0.1	4,540		217		35	458	0.2	2,204.0	27			8	
	278'-0" CONT. COMP. PLATE GIRDER UNIT					245.60	14.7		66,040				312,144	156.1				1		
	SITE NO. 5 (EXISTING BRIDGE NO. 03234)		1																	
	TOTALS FOR BRIDGE NO. 07318		-	135	161.00	245.60	14.9	28,620	66,040	441	-	70	313,060	156.5	7,312.0	54	-	1	16	-
05324 X971 RAMP 4 OVER I-40	ABUTMENT NO. 1			70	23.49		0.1	2,646		212			874	0.4	3,132.0		44		67	
	PIER NO. 1				95.72			12,007							4,698.0					
	PIER NO. 2				92.85			11,895							5,148.0					
	PIER NO. 3				84.29			11,556							6,612.0					
	PIER NO. 4				86.04			11,610							4,320.0					
	PIER NO. 5				79.88			11,360							3,888.0					
	ABUTMENT NO. 2			67	23.43		0.1	2,646		130			874	0.4	2,592.0		44		143	
	398'-7" CONT. COMP. PLATE GIRDER UNIT					556.12	37.3		177,822				438,223	219.2				1		
	354'-7" CONT. COMP. PLATE GIRDER UNIT					498.28	33.1		158,218				362,879	181.4						
	SITE NO. 6 (EXISTING BRIDGE NO. 05324)																			1
	TOTALS FOR BRIDGE NO. 05324		-	137	485.70	1,054.40	70.6	63,720	336,040	342	-	-	802,850	401.4	30,390.0	-	88	1	210	-
	TOTALS FOR JOB NO. CA0609			616 *	1,009.90	1,756.20	115.1	156,200	538,780	783	1,772	70	1,652,010	825.9	52,982.0	54	176	3	317	

* Includes approximately 28 cu. yds. of rock excavation.

SCHEDULE OF BRIDGE QUANTITIES FOR JOB CA0609

BRIDGE NO. / CODE NO. / NAME PLATE TITLE	UNIT OF STRUCTURE	ITEM NO.	SP JOB CA0609	SP JOB CA0609	SP JOB CA0609	SP JOB CA0609	SP JOB CA0609	SP JOB CA0609	SP JOB CA0609
		ITEM	ARCHITECTURAL FINISH	CLEANING AND PAINTING EXISTING STRUCTURAL STEEL (5)	DRILLED SHAFT (84" DIAMETER)	EXPLORATORY HOLES (2)	CROSSHOLE SONIC LOGGING (84" DIAMETER)	CORING DRILLED SHAFT	TEXTURED COATING FINISH (4)
		UNIT	SQUARE FOOT	TON	LINEAR FOOT	LINEAR FOOT	EACH	LINEAR FOOT	SQUARE YARD
07318 X171 NORMAN ROAD OVER I-40	BENT NO. 1		39						417
	BENT NO. 2		483						88
	BENT NO. 3		39						417
	278'-0" CONT. COMP. PLATE GIRDER UNIT		1,250						578
	SITE NO. 5 (EXISTING BRIDGE NO. 03234)								
	TOTALS FOR BRIDGE NO. 07318		1,811	-	-	-	-	-	1,500
05324 X971 RAMP 4 OVER I-40	ABUTMENT NO. 1								
	PIER NO. 1				34		1	15	
	PIER NO. 2				31		1	15	
	PIER NO. 3				20		1	15	
	PIER NO. 4				24		1	15	
	PIER NO. 5				20		1	15	
	ABUTMENT NO. 2					10			
	398'-7" CONT. COMP. PLATE GIRDER UNIT								
	354'-7" CONT. COMP. PLATE GIRDER UNIT								
	SITE NO. 6 (EXISTING BRIDGE NO. 05324)			377					
	TOTALS FOR BRIDGE NO. 05324		-	377	129	10	5	75	-
	TOTALS FOR JOB NO. CA0609		5,093	377	129	10	5	75	3,225

(1) These steel piles are required to have special driving points which will not be paid for directly but shall be considered subsidiary to the item "STEEL PILING (HP12x53)" or "STEEL PILING (HP14x73)".

(2) The quantities shown for Preboring and Exploratory Holes are for estimating and bidding purposes only. Actual quantities will be determined in the field.

(3) For Bridge Nos. 07317 & 07318, paint shall conform to Federal Standard 595B, Color Chip No. 20108, Dark Brown, unless noted otherwise. For Bridge No. 05324, paint shall conform to Federal Standard 595B, Color Chip No. 37200, Aluminum, unless noted otherwise.

(4) Includes quantities to be applied to MSE Retaining Walls and Concrete Riprap.

(5) Paint shall conform to Federal Standard 595B, Color Chip No. 37200, Aluminum, unless noted otherwise.

STATE OF ARKANSAS
LICENSED PROFESSIONAL ENGINEER
No. 13047
JOHN H. RUDDELL
3-31-14
BRIDGE ENGINEER

SHEET 2 OF 2
SCHEDULE OF BRIDGE QUANTITIES
HWY. 365 - I-430 (WIDENING) & I-430 INTCHNG. MOD. (F)
PULASKI COUNTY
ROUTE SEC.
ARKANSAS STATE HIGHWAY COMMISSION
LITTLE ROCK, ARK.

DRAWN BY: DRG DATE: APR. 2014 FILENAME: BCA0609_02.DGN
CHECKED BY: SRY DATE: MAY 2014 SCALE: AS SHOWN
DESIGNED BY: DRG DATE: APR. 2014
BRIDGE NO. 05324, 07318 DRAWING NO. 55693

hewilliams 7/30/2014 3:58:48 PM
WORKSPACE: AHTD Bridges
L:\2011\091709 - I-40 at I-430 Interchange Modifications\Drawings\BCA0609x1.02 (Quantities).dgn
REVISED DATE:

SUMMARY OF QUANTITIES (BOX 1 OF 2)

ITEM NUMBER	ITEM	HSIP-430-2(267)13 QUANTITY	STPF-EBS-EBE-IMD-CM-430-2(267)13 QUANTITY	UNIT
201	CLEARING		317	STA.
201	GRUBBING		317	STA.
202	REMOVAL AND DISPOSAL OF APPROACH SLAB AND GUTTERS		6	EACH
202	REMOVAL AND DISPOSAL OF APPROACH GUTTERS		7	EACH
202	REMOVAL AND DISPOSAL OF CONCRETE DITCH PAVING		3461	SQ. YD.
202	REMOVAL AND DISPOSAL OF CONCRETE DRIVEWAYS		43	SQ. YD.
202	REMOVAL AND DISPOSAL OF CONCRETE MEDIAN BARRIER		170	L.F.
202	REMOVAL AND DISPOSAL OF CONCRETE PAVEMENT		3671	SQ. YD.
202	REMOVAL AND DISPOSAL OF CONCRETE PIER PROTECTION		184	L.F.
202	REMOVAL AND DISPOSAL OF DROP INLETS		3	EACH
202	REMOVAL AND DISPOSAL OF FENCE		1182	L.F.
202	REMOVAL AND DISPOSAL OF FLARED END SECTION		2	EACH
202	REMOVAL AND DISPOSAL OF SIGN FOUNDATIONS		10	EACH
SP & 202	REMOVAL AND DISPOSAL OF GUARDRAIL		7038	L.F.
202	REMOVAL AND DISPOSAL OF HEADWALL		9	EACH
202	REMOVAL AND DISPOSAL OF IMPACT ATTENUATION BARRIER		4	EACH
202	REMOVAL AND DISPOSAL OF MAILBOXES		11	EACH
202	REMOVAL AND DISPOSAL OF OVERHEAD SIGN STRUCTURE		5	EACH
202	REMOVAL AND DISPOSAL OF PIPE CULVERTS		4	EACH
SP	REMOVAL AND DISPOSAL OF PRECAST CONCRETE BARRIER		813	L.F.
202	REMOVAL AND DISPOSAL OF SIGNS		66	EACH
202	REMOVAL AND DISPOSAL OF STEEL GRATE ASSEMBLIES		3	EACH
202	REMOVAL AND DISPOSAL OF UNDERDRAIN OUTLET PROTECTOR		63	EACH
SP & 202	REMOVAL AND DISPOSAL OF WIRE ROPE SAFETY FENCE		1647	L.F.
206	FLOWABLE SELECT MATERIAL		108	CU. YD.
210	UNCLASSIFIED EXCAVATION		231068	CU. YD.
SP & 210	COMPACTED EMBANKMENT		247311	CU. YD.
SP & 210	SOIL STABILIZATION		350	TON
302	SELECTED MATERIAL (CLASS SM-3)		34331	CU. YD.
303	AGGREGATE BASE COURSE (CLASS 7)		153070	TON
401	TACK COAT		11938	GAL.
SP & 405	MINERAL AGGREGATE IN ACHM BASE COURSE (1 1/2")		30583	TON
SP & 405	ASPHALT BINDER (PG 64-22) IN ACHM BASE COURSE (1 1/2")		168	TON
SP & 405	ASPHALT BINDER (PG 76-22) IN ACHM BASE COURSE (1 1/2")		983	TON
SP, SS & 406	MINERAL AGGREGATE IN ACHM BINDER COURSE (1")		12093	TON
SP, SS & 406	ASPHALT BINDER (PG 64-22) IN ACHM BINDER COURSE (1")		12	TON
SP, SS & 406	ASPHALT BINDER (PG 76-22) IN ACHM BINDER COURSE (1")		530	TON
SP, SS & 407	MINERAL AGGREGATE IN ACHM SURFACE COURSE (1/2")		24282	TON
SP, SS & 407	ASPHALT BINDER (PG 64-22) IN ACHM SURFACE COURSE (1/2")		155	TON
SP, SS & 407	ASPHALT BINDER (PG 76-22) IN ACHM SURFACE COURSE (1/2")		1076	TON
412	COLD MILLING ASPHALT PAVEMENT		45560	SQ. YD.
SP & 414	ASPHALT CONCRETE PATCHING FOR MAINTENANCE OF TRAFFIC		231	TON
SP & 415	ACHM PATCHING OF EXISTING ROADWAY		500	TON
502	REINFORCING STEEL FOR PAVEMENT (BARS)		387867	LB.
503	CONTINUOUSLY REINFORCED CONCRETE PAVEMENT (11" UNIFORM THICKNESS)		11843	SQ. YD.
504	APPROACH GUTTERS		267.42	CU. YD.
504	APPROACH SLABS		99.70	CU. YD.
505	PORTLAND CEMENT CONCRETE DRIVEWAY		86.19	SQ. YD.
507	PORTLAND CEMENT CONCRETE PAVEMENT PATCHING (8" UNIFORM THICKNESS)		1047	SQ. YD.
507	REMOVAL AND DISPOSAL OF CONCRETE PAVEMENT FOR PATCHING		1047	SQ. YD.
601	MOBILIZATION		1.00	L.S.
SP & 602	FURNISHING FIELD OFFICE		1	EACH
SP & 603	MAINTENANCE OF TRAFFIC		1.00	L.S.
603	22"x14" TEMPORARY CULVERT		112	LIN. FT.
603	TRAFFIC CONTROL SUPERVISOR		1.00	L.S.
604	SIGNS		1812	SQ. FT.
604	TRAFFIC DRUMS		948	EACH
604	BARRICADES		96	L.F.
604	FURNISHING AND INSTALLING PRECAST CONCRETE BARRIER		73956	L.F.
604	RELOCATING PRECAST CONCRETE BARRIER		17752	L.F.
604	REMOVABLE CONSTRUCTION PAVEMENT MARKINGS		51655	L.F.
604	REMOVAL OF PERMANENT PAVEMENT MARKINGS		84346	L.F.
604	ADVANCE WARNING ARROW PANEL		1200	DAY
SP & 604	PORTABLE CHANGEABLE MESSAGE SIGN		340	WEEK
SP	TEMPORARY PORTABLE RUMBLE STRIPS		24	EACH
604	CONSTRUCTION PAVEMENT MARKINGS		4328	L.F.
604	REMOVAL OF CONSTRUCTION PAVEMENT MARKINGS		84	L.F.
604	VERTICAL PANELS		53	EACH
SP & 605	CONCRETE DITCH PAVING (TYPE A)		259	SQ. YD.
SP & 605	CONCRETE DITCH PAVING (TYPE B)	727	11482	SQ. YD.
606	12" ZINC COATED (GALVANIZED) CORRUGATED STEEL PIPE CULVERTS (16 GAUGE)		187	L.F.
606	24" REINFORCED CONCRETE PIPE CULVERTS (CLASS III)		257	L.F.
606	30" REINFORCED CONCRETE PIPE CULVERTS (CLASS III)		57	L.F.
606	42" REINFORCED CONCRETE PIPE CULVERTS (CLASS III)		69	L.F.
606	48" REINFORCED CONCRETE PIPE CULVERTS (CLASS III)		197	L.F.
606	54" REINFORCED CONCRETE PIPE CULVERTS (CLASS IV)		46	L.F.
606	24" FLARED END SECTIONS FOR REINFORCED CONCRETE PIPE CULVERTS		13	EACH
606	30" FLARED END SECTIONS FOR REINFORCED CONCRETE PIPE CULVERTS		3	EACH
606	42" FLARED END SECTIONS FOR REINFORCED CONCRETE PIPE CULVERTS		4	EACH
606	48" FLARED END SECTIONS FOR REINFORCED CONCRETE PIPE CULVERTS		8	EACH
606	54" FLARED END SECTIONS FOR REINFORCED CONCRETE PIPE CULVERTS		1	EACH
SP & 606	18" SIDE DRAIN		41	L.F.
606	SELECTED PIPE BEDDING		140	CU. YD.
609	DROP INLETS (TYPE N1)		4	EACH
609	DROP INLETS (TYPE RM)		4	EACH
610	DROP INLETS ADJUSTED TO GRADE		4	EACH
611	UNDERDRAIN OUTLET PROTECTORS		64	EACH
611	4" PIPE UNDERDRAINS		2191	L.F.
614	CONCRETE SPILLWAY (TYPE A)		4	EACH
617	GUARDRAIL (TYPE A)		10075	L.F.
617	GUARDRAIL (TYPE C)		50	L.F.
617	TERMINAL ANCHOR POSTS (TYPE 1)		34	EACH
617	GUARDRAIL TERMINAL (TYPE 2)		39	EACH
617	THRIE BEAM GUARDRAIL TERMINAL		27	EACH
SP	WIRE ROPE SAFETY FENCE	1687		L.F.
619	WIRE FENCE (TYPE A)		2245	L.F.
* 619	16' STEEL GATES (ALTERNATE NO. 1)		2	EACH
* 619	16' ALUMINUM GATES (ALTERNATE NO. 2)		2	EACH
620	LIME		112	TON
620	SEEDING		55.80	ACRE
SS & 620	MULCH COVER		109.98	ACRE
620	WATER	9.2	6844.6	M.G.
621	TEMPORARY SEEDING		54.49	ACRE
621	SILT FENCE		40658	L.F.
621	SAND BAG DITCH CHECKS		3524	BAG
621	DROP INLET SILT FENCE		80	L.F.
621	SEDIMENT BASIN		100	CU. YD.
621	OBLITERATION OF SEDIMENT BASIN		100	CU. YD.
621	SEDIMENT REMOVAL AND DISPOSAL		500	CU. YD.
621	ROCK DITCH CHECKS		1602	CU. YD.
623	SECOND SEEDING APPLICATION		55.80	ACRE
624	SOLID SODDING	728	3779	SQ. YD.
SP & 631	CONCRETE BARRIER WALL (SIDE TYPE A)		7125	L.F.
631	CONCRETE BARRIER WALL (MEDIAN TYPE SPECIAL)		180	L.F.
635	ROADWAY CONSTRUCTION CONTROL		1.00	L.S.
637	MAILBOXES		11	EACH
637	MAILBOX SUPPORTS (SINGLE)		11	EACH
642	RUMBLE STRIPS IN ASPHALT SHOULDERS		70538	L.F.

* DENOTES ALTERNATE BID ITEMS.

STATE OF ARKANSAS
JOHN F. CANTABERY
No. 13422
PROFESSIONAL ENGINEER
9-9-14

DATE REVISED	DATE FILMED	DATE REVISED	DATE FILMED	FED.RD. DIST.NO.	STATE	FED.AID PROJ.NO.	SHEET NO.	TOTAL SHEETS
9-2-14				6	ARK.		193	693
9-9-14				JOB NO.		CA0609	.	

(2) SUMMARY OF QUANTITIES

SUMMARY OF QUANTITIES

JFCantabery 9/11/2014 11:16:08 PM
WORKSPACE: AHTD
\\garverinc\lfprojects\2011\11017709 - I-40 at I-430 Interchange Modifications\Drawings\RCA0609_QTY_SUM_02.dgn
REVISED DATE:

SUMMARY OF QUANTITIES (BOX 2 OF 2)

ITEM NUMBER	ITEM	HSIP-430-2(267)13 QUANTITY	STPF-EBS-EBE-IMD-CM-430-2(267)13 QUANTITY	UNIT
718	REFLECTORIZED PAINT PAVEMENT MARKING WHITE (4")		7264	L.F.
718	REFLECTORIZED PAINT PAVEMENT MARKING WHITE (12")		24	L.F.
718	REFLECTORIZED PAINT PAVEMENT MARKING YELLOW (4")		5959	L.F.
719	THERMOPLASTIC PAVEMENT MARKING (ARROWS)		2	EACH
* SP & 719	INVERTED PROFILE THERMOPLASTIC PAVEMENT MARKING WHITE (4") (ALTERNATE NO. 1)		21484	L.F.
* SP	HIGH PERFORMANCE MARKING TAPE WHITE (4") (ALTERNATE NO. 2)		21484	L.F.
* SP & 719	INVERTED PROFILE THERMOPLASTIC PAVEMENT MARKING (SKIP LINE) WHITE (4") (ALTERNATE NO. 1)		16468	L.F.
* SP	HIGH PERFORMANCE MARKING TAPE (SKIP LINE) WHITE (4") (ALTERNATE NO. 2)		16468	L.F.
* SP & 719	INVERTED PROFILE THERMOPLASTIC PAVEMENT MARKING WHITE (8") (ALTERNATE NO. 1)		2906	L.F.
* SP	HIGH PERFORMANCE MARKING TAPE WHITE (8") (ALTERNATE NO. 2)		2906	L.F.
* SP & 719	INVERTED PROFILE THERMOPLASTIC PAVEMENT MARKING (SKIP LINE) WHITE (8") (ALTERNATE NO. 1)		740	L.F.
* SP	HIGH PERFORMANCE MARKING TAPE (SKIP LINE) WHITE (8") (ALTERNATE NO. 2)		740	L.F.
* SP & 719	INVERTED PROFILE THERMOPLASTIC PAVEMENT MARKING YELLOW (4") (ALTERNATE NO. 1)		66675	L.F.
* SP	HIGH PERFORMANCE MARKING TAPE YELLOW (4") (ALTERNATE NO. 2)		66675	L.F.
* SP & 719	INVERTED PROFILE THERMOPLASTIC CONTRAST PAVEMENT MARKING WHITE (4") (ALTERNATE NO. 1)		3873	L.F.
* SP	HIGH PERFORMANCE CONTRAST MARKING TAPE WHITE (4") (ALTERNATE NO. 2)		3873	L.F.
* SP & 719	INVERTED PROFILE THERMOPLASTIC CONTRAST PAVEMENT MARKING WHITE (8") (ALTERNATE NO. 1)		1097	L.F.
* SP	HIGH PERFORMANCE CONTRAST MARKING TAPE WHITE (8") (ALTERNATE NO. 2)		1097	L.F.
* SP & 719	INVERTED PROFILE THERMOPLASTIC CONTRAST PAVEMENT MARKING YELLOW (4") (ALTERNATE NO. 1)		1343	L.F.
* SP	HIGH PERFORMANCE CONTRAST MARKING TAPE YELLOW (4") (ALTERNATE NO. 2)		1343	L.F.
721	RAISED PAVEMENT MARKERS (TYPE II)		1404	EACH
SP	ANTENNA SUPPORT (10' HT.) WITH CAMERA		1	EACH
SP	OMNI-DIRECTIONAL BREAKAWAY SIGN SUPPORT (TYPE G-1)		30	EACH
SP	OMNI-DIRECTIONAL BREAKAWAY SIGN SUPPORT (TYPE G2-1)		24	EACH
SP	OMNI-DIRECTIONAL BREAKAWAY SIGN SUPPORT (TYPE G2-2)		5	EACH
SP	OVERHEAD VMS ASSEMBLY		1	EACH
SP	STEEL OVERHEAD SIGN STRUCTURE (OH-040-60-01)		1	EACH
SP	STEEL OVERHEAD SIGN STRUCTURE (OH-040-60-02)		1	EACH
SP	STEEL OVERHEAD SIGN STRUCTURE (OH-040-60-17)		1	EACH
SP	STEEL OVERHEAD SIGN STRUCTURE (OH-040-60-18)		1	EACH
SP	STEEL OVERHEAD SIGN STRUCTURE (OH-040-60-41)		1	EACH
SP	STEEL OVERHEAD SIGN STRUCTURE (OH-040-60-43)		1	EACH
SP	STEEL OVERHEAD SIGN STRUCTURE (OH-040-60-44)		1	EACH
SP	STEEL OVERHEAD SIGN STRUCTURE (OH-430-60-13)		1	EACH
SP	STEEL OVERHEAD SIGN STRUCTURE (OH-430-60-35)		1	EACH
SP	STEEL OVERHEAD SIGN STRUCTURE (OH-430-60-36)		1	EACH
SP	STEEL OVERHEAD SIGN STRUCTURE (OH-430-60-38)		1	EACH
SP	STEEL OVERHEAD SIGN STRUCTURE (OH-430-60-39)		1	EACH
SP	STEEL CANTILEVER SIGN STRUCTURE (OC-430-60-37)		1	EACH
SP	STEEL BRIDGE MOUNTED SIGN STRUCTURE (BM-040-60-42)		1	EACH
SP	STEEL BRIDGE MOUNTED SIGN STRUCTURE (BM-040-60-45)		1	EACH
SP	STEEL BRIDGE MOUNTED SIGN STRUCTURE (BM-040-60-47)		1	EACH
SP & 725	GUIDE SIGN - ROADSIDE MOUNTED (DEMOUNTABLE LEGEND)		1905	SQ. FT.
SP & 725	GUIDE SIGN - OVERHEAD MOUNTED (DEMOUNTABLE LEGEND)		6829	SQ. FT.
SP & 726	STANDARD SIGN		1103	SQ. FT.
SP & 727	EXIT NUMBER PANEL (TYPE A)		433	SQ. FT.
SP & 727	EXIT NUMBER PANEL (TYPE B)		200	SQ. FT.
SP & 727	EXIT NUMBER PANEL (TYPE C)		31	SQ. FT.
SP & 729	CHANNEL POST SIGN SUPPORT (TYPE U-1)		5	EACH
SP & 729	CHANNEL POST SIGN SUPPORT (TYPE U-2)		2	EACH
730	BREAKAWAY SIGN SUPPORT (TYPE G-2)		14106	POUND
731	TEMPORARY IMPACT ATTENUATION BARRIER		10	EACH
731	TEMPORARY IMPACT ATTENUATION BARRIER (RELOCATION)		6	EACH
731	TEMPORARY IMPACT ATTENUATION BARRIER (REPAIR)		10	EACH
801	UNCLASSIFIED EXCAVATION FOR STRUCTURES - ROADWAY		100	CU. YD.
802	CLASS S CONCRETE - ROADWAY		190.43	CU. YD.
804	REINFORCING STEEL - ROADWAY (GRADE 60)		67843	LB.
SP	TEMPORARY RETAINING WALL		1580	SQ. FT.
SP	RETAINING WALL		11915	SQ. FT.
SP	RAMMED AGGREGATE PIERS		150	EACH
SP	SELECT GRANULAR BACKFILL		4913	CU. YD.
SP	AWIS MOBILIZATION		1.00	L.S.
SP	AWIS OPERATION		20	MONTH
SP	DEVICE RELOCATION		14	EACH
SP	FURNISH AND INSTALL CLOSED CIRCUIT TELEVISION SYSTEM		3	EACH
SP	FURNISH AND INSTALL PUBLIC NOTIFICATION SYSTEM		2	EACH
SP	FURNISH AND INSTALL VARIABLE MESSAGE SIGN		5	EACH
SP	FURNISH AND INSTALL VEHICLE DETECTION SYSTEM		18	EACH

* DENOTES ALTERNATE BID ITEMS.

STRUCTURES OVER 20' SPAN

ITEM NUMBER	ITEM	HSIP-430-2(267)13 QUANTITY	STPF-EBS-EBE-IMD-CM-430-2(267)13 QUANTITY	UNIT
205	REMOVAL OF EXISTING BRIDGE STRUCTURE (SITE NO. 2)		1.00	L.S.
205	REMOVAL OF EXISTING BRIDGE STRUCTURE (SITE NO. 5)		1.00	L.S.
636	BRIDGE CONSTRUCTION CONTROL		1.00	L.S.
801	UNCLASSIFIED EXCAVATION FOR STRUCTURES - BRIDGE		616	CU. YD.
802	CLASS S CONCRETE - BRIDGE		1009.90	CU. YD.
802	CLASS S(AE) CONCRETE - BRIDGE		1756.20	CU. YD.
803	CLASS 1 PROTECTIVE SURFACE TREATMENT		115.1	GALLON
SP & 804	REINFORCING STEEL - BRIDGE (GRADE 60)		156200	POUND
804	EPOXY COATED REINFORCING STEEL (GRADE 60)		538780	POUND
805	STEEL PILING (HP12X53)		783	L.F.
805	STEEL PILING (HP14X73)		1772	L.F.
805	PREBORING		70	L.F.
807	STRUCTURAL STEEL IN PLATE GIRDER SPANS (M270-GR 50)		1652010	POUND
807	PAINTING STRUCTURAL STEEL		825.9	TON
808	ELASTOMERIC BEARINGS		52982.0	CU. IN.
809	SILICONE JOINT SEALANT		54	L.F.
809	ARMORED JOINT WITH NEOPRENE STRIP SEAL		176	L.F.
812	BRIDGE NAME PLATE (TYPE D)		3	EACH
816	CONCRETE RIPRAP		317	CU. YD.
821	MODIFICATION OF EXISTING BRIDGE STRUCTURE (BRIDGE NO. 05324)		1.00	L.S.
821	MODIFICATION OF EXISTING BRIDGE STRUCTURE (BRIDGE NO. A3230)		1.00	L.S.
821	MODIFICATION OF EXISTING BRIDGE STRUCTURE (BRIDGE NO. B3230)		1.00	L.S.
SP	ARCHITECTURAL FINISH		5093	SQ. FT.
SP	CLEANING AND PAINTING EXISTING STRUCTURAL STEEL		377	TON
SP	DRILLED SHAFT (84" DIAMETER)		129	L.F.
SP	EXPLORATORY HOLES		10	L.F.
SP	CROSSHOLE SONIC LOGGING (84" DIAMETER)		5	EACH
SP	CORING DRILLED SHAFT		75	L.F.
SP	TEXTURED COATING FINISH		3225	SQ. YD.

REVISIONS

DATE	REVISION	SHEET NUMBER
9-2-14	REMOVED "REMOVAL AND DISPOSAL OF PLOWABLE PAVEMENT MARKERS" AND REVISED RAISED PAVEMENT MARKERS QUANTITY	176, 186, 193, 194
9-9-14	CHANGED UNDERCUT FILL FROM SM-1 TO REGULAR COMPACTED EMBANKMENT, MADE "SELECTED MATERIAL (CLASS SM-3)" A SEPARATE PAY ITEM, AND REVISED "EXCAVATION AND EMBANKMENT" AND "PERCENT WITHIN LIMITS/PAVEMENT SMOOTHNESS" SPECIAL PROVISIONS	186, 193, 194
9-11-14	REVISED "OVERHEAD VARIABLE MESSAGE SIGN ASSEMBLY" SPECIAL PROVISION AND ADDED ADDITIONAL ELEVATIONS TO RETAINING WALL DRAWINGS	249, 250, 279, 194

SUMMARY OF QUANTITIES AND REVISIONS

STATE OF ARKANSAS
LICENSED PROFESSIONAL ENGINEER
JOHN P. CANTABERY
No. 13422
9-11-14

DATE REVISED	DATE FILMED	DATE REVISED	DATE FILMED
9-11-14			
9-9-14			
9-2-14			

FED.RD. DIST.NO.	STATE	FED.AID PROJ.NO.	SHEET NO.	TOTAL SHEETS
6	ARK.		194	693
JOB NO.		CA0609		

(2) SUMMARY OF QUANTITIES AND REVISIONS

DATE REVISED	DATE FILMED	DATE REVISED	DATE FILMED	FED.RD. DIST.NO.	STATE	FED.AID PROJ.NO.	SHEET NO.	TOTAL SHEETS
				6	ARK.			
				JOB NO.		CA0609	195	693
				(2)	SURVEY CONTROL DETAILS			

APPROXIMATE MIDPOINT
LT: 34-51-17.62
LG: 092-21-00.64

SURVEY CONTROL COORDINATES

Project Name: s061317
Date: 1/23/2013
Coordinate System: ARKANSAS STATE PLANE - NORTH ZONE BASED ON GPS CONTROL, PROJECTED TO GROUND.
Units: U.S. SURVEY FOOT

Point Name	Northing	Easting	Elev	Feature	Description
100	174996.8970	1206314.9654	274.10	GPS	*AHTD GPS 600013 RTK ELEV
101	184317.4905	1207507.0281	286.80	GPS	*AHTD GPS 600068
103	182896.8266	1207918.9890	268.82	GPS	*AHTD GPS 600062A RTK ELEV
105	174050.8766	1205640.6075	293.94	GPS	*AHTD GPS 600013A RESET
110	200550.3569	1198617.5281	272.50	GPS	*AHTD GPS 600023A RESET RTK ELEV
887	201199.1091	1198504.8578	275.36	CTL	*5/8" REBAR W/2" CAP
888	200668.2328	1198786.1125	272.48	CTL	*5/8" REBAR W/2" CAP
889	200855.2367	1198864.6940	272.75	CTL	*5/8" REBAR W/2" CAP
890	199974.5880	1199349.0065	268.90	CTL	*5/8" REBAR W/2" CAP
891	200174.2878	1199455.5664	269.27	CTL	*5/8" REBAR W/2" CAP
892	199388.6393	1199843.2855	268.89	CTL	*5/8" REBAR W/2" CAP
893	199531.5285	1200013.4799	274.03	CTL	*5/8" REBAR W/2" CAP
894	198713.5302	1200384.4765	282.17	CTL	*5/8" REBAR W/2" CAP
895	198867.5359	1200575.7137	294.95	CTL	*5/8" REBAR W/2" CAP
896	198094.8512	1200816.6994	277.56	CTL	*5/8" REBAR W/2" CAP
897	198184.4589	1201031.3227	287.72	CTL	*5/8" REBAR W/2" CAP
898	197416.6954	1201230.2357	268.66	CTL	*5/8" REBAR W/2" CAP
899	197441.3796	1201429.6313	269.70	CTL	*5/8" REBAR W/2" CAP
998	193154.8197	1203458.2466	267.41	BM	*NGS MARK M 70
999	190246.5905	1206999.0536	301.25	BM	*NGS MARK L 290 RTK ELEV
1000	196674.8448	1201734.8184	268.22	CTL	*5/8" REBAR W/2" CAP
1001	196047.3229	1202219.1469	267.85	CTL	*3' EAST OF EAST EP EAST BND LANE
1002	195576.3386	1202708.4621	269.64	CTL	*5/8" REBAR W/2" CAP
1003	195031.8645	1203323.9260	267.12	CTL	*5/8" REBAR W/2" CAP
1004	194552.2360	1203890.6719	267.79	CTL	*5/8" REBAR W/2" CAP
1005	193807.8116	1203869.0624	268.17	CTL	*5/8" REBAR W/2" CAP
1006	194309.5036	1203923.4594	285.79	CTL	*5/8" REBAR W/2" CAP
1007	194901.7229	1203957.5682	281.89	CTL	*5/8" REBAR W/2" CAP
1008	195731.0176	1204026.4164	261.24	CTL	*5/8" REBAR W/2" CAP
1009	194323.6119	1204352.7312	267.16	CTL	*5/8" REBAR W/2" CAP
1010	194035.5794	1204431.9965	267.18	CTL	*5/8" REBAR W/2" CAP
1011	193780.5990	1205027.9433	267.03	CTL	*5/8" REBAR W/2" CAP
1012	193493.5418	1205075.6027	270.66	CTL	*5/8" REBAR W/2" CAP
1013	193120.1868	1205844.8364	274.21	CTL	*5/8" REBAR W/2" CAP
1014	192936.1044	1205739.1621	276.47	CTL	*5/8" REBAR W/2" CAP
1015	192604.9780	1206389.8984	281.65	CTL	*5/8" REBAR W/2" CAP
1016	192496.3839	1206172.1624	279.32	CTL	*5/8" REBAR W/2" CAP
1017	191982.9901	1206808.8870	284.64	CTL	*5/8" REBAR W/2" CAP
1018	191786.4661	1206667.5968	286.88	CTL	*5/8" REBAR W/2" CAP
1019	191206.2721	1207095.2126	305.45	CTL	*5/8" REBAR W/2" CAP
1020	190933.2687	1206927.1604	313.09	CTL	*5/8" REBAR W/2" CAP
1021	190426.2011	1207197.6438	317.47	CTL	*5/8" REBAR W/2" CAP
1022	190223.2932	1206929.9666	316.09	CTL	*5/8" REBAR W/2" CAP
1023	191030.2631	1206133.0771	278.57	CTL	*5/8" REBAR W/2" CAP
1024	190535.0629	1206697.7589	291.85	CTL	*5/8" REBAR W/2" CAP
1025	190027.3135	1207266.3569	294.78	CTL	*5/8" REBAR W/2" CAP
1026	189587.6173	1207886.4092	278.22	CTL	*5/8" REBAR W/2" CAP
1027	189636.5132	1207262.9096	305.85	CTL	*5/8" REBAR W/2" CAP
1028	189361.5517	1207007.7915	295.83	CTL	*5/8" REBAR W/2" CAP
1029	188715.5102	1207348.1512	282.42	CTL	*5/8" REBAR W/2" CAP
1030	188545.6843	1207081.9143	283.96	CTL	*5/8" REBAR W/2" CAP
1031	187892.3293	1207416.1140	276.04	CTL	*5/8" REBAR W/2" CAP
1032	187728.4650	1207157.1070	277.97	CTL	*5/8" REBAR W/2" CAP
1033	187033.5017	1207487.8143	272.93	CTL	*5/8" REBAR W/2" CAP
1034	186880.2973	1207235.5494	274.87	CTL	*5/8" REBAR W/2" CAP
1035	186210.3358	1207558.7674	279.63	CTL	*5/8" REBAR W/2" CAP
1036	186093.8908	1207305.4890	278.96	CTL	*5/8" REBAR W/2" CAP
1037	185427.1592	1207625.7973	295.73	CTL	*5/8" REBAR W/2" CAP
1038	185194.7816	1207395.2306	298.05	CTL	*5/8" REBAR W/2" CAP
1039	184637.0836	1207718.3357	295.93	CTL	*5/8" REBAR W/2" CAP
1040	183616.8503	1207683.6179	268.96	CTL	*5/8" REBAR W/2" CAP
1041	183730.6543	1207899.6739	274.31	CTL	*5/8" REBAR W/2" CAP
1042	182073.8009	1208025.0883	273.16	CTL	*5/8" REBAR W/2" CAP
1043	182348.1550	1208181.0446	271.29	CTL	*5/8" REBAR W/2" CAP
1044	181381.9845	1208176.0658	280.02	CTL	*5/8" REBAR W/2" CAP
1045	181474.9734	1208354.9352	280.47	CTL	*5/8" REBAR W/2" CAP
1046	180566.2555	1208353.7519	291.97	CTL	*5/8" REBAR W/2" CAP
1047	180740.1489	1208502.9247	289.83	CTL	*5/8" REBAR W/2" CAP
1048	179899.3068	1208113.6495	315.06	CTL	*5/8" REBAR W/2" CAP
1049	179862.0512	1208943.4079	345.53	CTL	*5/8" REBAR W/2" CAP
1050	180207.2045	1208947.7379	314.68	CTL	*5/8" REBAR W/2" CAP
1051	178652.6377	1209822.6007	337.51	CTL	*5/8" REBAR W/2" CAP
1052	179744.2950	1208531.2010	312.20	CTL	*5/8" REBAR W/2" CAP
1053	179956.8608	1208669.3724	310.71	CTL	*5/8" REBAR W/2" CAP
1054	179139.1719	1208726.9389	321.10	CTL	*5/8" REBAR W/2" CAP
1055	179251.0123	1208967.4019	320.76	CTL	*5/8" REBAR W/2" CAP
1056	178510.7662	1209133.8989	327.30	CTL	*5/8" REBAR W/2" CAP
1057	178714.2518	1209332.6036	326.14	CTL	*5/8" REBAR W/2" CAP
1058	177994.4931	1209756.5879	330.89	CTL	*5/8" REBAR W/2" CAP
1059	178174.1465	1209937.7692	334.20	CTL	*5/8" REBAR W/2" CAP
1060	177529.9342	1210618.4092	308.61	CTL	*5/8" REBAR W/2" CAP
1061	177740.9794	1210798.2975	315.98	CTL	*5/8" REBAR W/2" CAP
1062	177157.5713	1211318.6389	291.84	CTL	*5/8" REBAR W/2" CAP
1063	177392.5113	1211434.4392	298.10	CTL	*5/8" REBAR W/2" CAP
1064	176719.8080	1212109.6326	303.63	CTL	*5/8" REBAR W/2" CAP
1065	176912.6490	1212176.8781	308.86	CTL	*5/8" REBAR W/2" CAP
1066	176456.8713	1212866.0653	322.26	CTL	*5/8" REBAR W/2" CAP
1067	178293.7657	1210287.4121	353.24	CTL	*5/8" REBAR W/2" CAP
1068	178489.3953	1208680.1864	335.00	CTL	*5/8" REBAR W/2" CAP
1069	178343.5388	1209070.9686	357.07	CTL	*5/8" REBAR W/2" CAP
1070	177681.9619	1208724.1554	345.50	CTL	*5/8" REBAR W/2" CAP
1071	176991.1293	1208443.4164	331.58	CTL	*5/8" REBAR W/2" CAP
1072	176331.4103	1208118.0160	310.25	CTL	*5/8" REBAR W/2" CAP
1073	175921.6735	1207530.7718	288.44	CTL	*5/8" REBAR W/2" CAP
1074	175578.3163	1206994.2903	271.72	CTL	*5/8" REBAR W/2" CAP
1075	176687.3647	1208719.6150	327.57	CTL	*5/8" REBAR W/2" CAP
1076	177000.9937	1209584.5942	337.22	CTL	*5/8" REBAR W/2" CAP
1077	177185.8400	1210020.6829	344.24	CTL	*5/8" REBAR W/2" CAP
1078	177517.9560	1210309.8935	352.74	CTL	*5/8" REBAR W/2" CAP
1079	177163.6202	1210358.0614	315.86	CTL	*5/8" REBAR W/2" CAP

Note - Rebar and Cap - Standard -" Rebar with 2" Aluminum Cap stamped
*(standard markings common to all caps), or as indicated
(other markings indicated in the point description of the individual point).
ALL DISTANCES ARE GROUND.
USE CAF = 1.0 FOR STAKEOUT FOR THIS PROJECT.
A PROJECT CAF OF 1.0000015208 HAS BEEN USED TO COMPUTE THE ABOVE LISTED GROUND COORDINATES.
THIS CAF IS INTENDED FOR USE WITHIN THE PROJECT LIMITS.
GRID DISTANCE = GROUND DISTANCE X CAF.
GROUND COORDINATES ARE PROJECTED FROM AR. STATE PLANE GRID COORDINATES BY SCALING ALL X,Y COORDINATE VALUES WITH THE INVERSE (1/X) OF THE COMBINED AJUSTMENT FACTOR (CAF) ABOUT X=0,Y=0.

GRID COORDINATES ARE STORED UNDER FILE NAME. s061317GI.CTL
HORIZONTAL DATUM: NAD 83 (1997)
VERTICAL DATUM: NAVD 88 ELEVATIONS FOR POINTS 887-899 & 1000-1079, 100-110, AND 998-999 WERE ESTABLISHED BY 3-WIRE LEVEL TECHNIQUES FROM NGS BENCHMARKS.

POSITIONAL ACCURACY:

HORIZONTAL-GPS(POINTS 100-111): 1.0 CM 10 PPM, PRIMARY CONTROL(POINTS 887-899, 1000-1079): 2.0 CM 20 PPM

VERTICAL-POSITIONAL ACCURACY IS THIRD ORDER, UNLESS SPECIFIED OTHERWISE AT A SPECIFIC POINT

BASIS OF BEARING:
ARKANSAS STATE PLANE GRID BEARINGS - 0301-NORTH ZONE
DETERMINED FROM GPS CONTROL POINTS: 600023A RESET - 600062A, 600013 - 600068
CONVERGENCE ANGLE: 00 12 14 LEFT AT PN: 1025
GRID AZIMUTH = ASTRONOMICAL AZIMUTH - CONVERGENCE ANGLE.

LT: 34-51-18 LG: 092-21-01

GRID NORTHING: 190027.6025 GRID EASTING: 1207268.1929

GROUND NORTHING: 190027.3135 GROUND EASTING: 1207266.3569

STATE OF ARKANSAS
LICENSED PROFESSIONAL ENGINEER
No.13422
JOHN F. CANTABERY
7-18-14

SURVEY CONTROL DETAILS

cggervasini 7/17/2014 7:43:57 PM
WORKSPACE: AHTD
L:\CAD\MDT709 - I-40 at I-430 Interchange Modifications\Drawings\RCA0609_SC_01.dgn
REVISED DATE:

DATE REVISED	DATE FILMED	DATE REVISED	DATE FILMED	FED.RD. DIST.NO.	STATE	FED.AID PROJ.NO.	SHEET NO.	TOTAL SHEETS
				6	ARK.			
				JOB NO.		CA0609	196	693
				(2)	SURVEY CONTROL DETAILS			

STATE OF ARKANSAS
LICENSED PROFESSIONAL ENGINEER
No.13422
JOHN F. CANTABERY
7-18-14

ALIGNMENT NAME: I-40 MEDIAN

POINT	STATION	TYPE	NORTHING	EASTING
8000	7957+50.59	POB	201764.0196	1197977.086
8001	7988+69.60	PC	199384.0761	1199993.0495
8002	7999+46.08	PI	198562.6731	1200688.8301
8003	8010+16.27	PT	197626.0600	1201219.4614
8004	8012+89.11	PC	197388.6674	1201353.9544
8005	8028+03.67	PI	196070.8981	1202100.5268
8006	8042+84.35	PT	195107.5221	1203269.1982
8007	8077+65.63	PC	192893.1610	1205955.4395
8008	8089+46.45	PI	192142.0661	1206866.5927
8009	8100+05.70	PT	190967.0783	1206983.8433
8010	8154+86.13	PC	185513.7356	1207528.0259
8011	8160+86.54	PI	184916.2879	1207587.6445
8012	8166+85.96	PT	184327.714	1207706.2988
8013	8211+90.67	PC	179911.8497	1208596.5212
8014	8225+31.67	PI	178597.2933	1208861.5305
8015	8236+99.09	PT	177958.7853	1210040.7639
8016	8278+20.86	POE	175996.2344	1213665.3164

ALIGNMENT NAME: I-40 RT. LANES

POINT	STATION	TYPE	NORTHING	EASTING
8017	7961+00.00	POB	201463.2485	1198162.6032
8018	7990+76.93	PC	199168.5248	1200059.0035
8019	7999+40.55	PI	198502.8154	1200609.1575
8020	8008+00.91	PT	197762.1692	1201053.3215
8021	8018+47.20	PC	196864.8578	1201591.4374
8022	8028+05.80	PI	196042.7590	1202084.4483
8023	8037+46.80	PT	195425.9066	1202818.2053
8024	8075+87.30	PC	192954.5626	1205757.9128
8025	8089+30.89	PI	192089.9694	1206786.3618
8026	8101+37.25	PT	190752.1754	1206911.0063
8027	8109+48.28	PC	189944.6450	1206986.2453
8028	8111+13.03	PI	189780.6054	1207001.5291
8029	8112+77.77	PT	189616.3631	1207014.4531
8030	8115+82.32	PC	189312.7469	1207038.3442
8031	8117+31.77	PI	189163.7599	1207050.0677
8032	8118+81.22	PT	189014.9385	1207063.7332
8033	8153+66.48	PC	185544.2720	1207382.4269
8034	8160+77.47	PI	184836.2642	1207447.4397
8035	8167+86.64	PT	184141.7231	1207599.4740
8141	8180+61.92	EQ	182895.9364	1207872.1753
8036	8214+31.08	PC	179663.6823	1208579.7123
8037	8226+06.44	PI	178515.5156	1208831.0447
8038	8236+33.41	PT	177961.9023	1209867.8509
8039	8252+49.68	POE	177200.6078	1211293.6019

ALIGNMENT NAME: I-40 LT. LANES

POINT	STATION	TYPE	NORTHING	EASTING
8040	7961+00.00	POB	201532.7716	1198244.6786
8041	7993+27.73	PC	199092.6030	1200357.4554
8042	7999+68.59	PI	198608.1097	1200776.9453
8043	8006+04.15	PT	198042.9076	1201079.0250
8044	8016+53.18	PC	197117.7274	1201573.4998
8045	8028+16.91	PI	196091.3898	1202122.0395
8046	8039+49.40	PT	195360.3753	1203027.5133
8047	8076+88.41	PC	193011.6628	1205936.7546
8048	8090+84.86	PI	192134.4597	1207023.3054
8049	8103+28.33	PT	190743.0833	1207142.2572
8050	8113+82.64	PC	189692.5981	1207232.0655
8051	8115+28.78	PI	189546.9903	1207244.5139
8052	8116+74.92	PT	189401.5530	1207258.8180
8053	8119+35.35	PC	189142.3682	1207284.3097
8054	8121+05.44	PI	188973.0963	1207300.9581
8055	8122+75.53	PT	188803.5960	1207315.0922
8056	8157+76.56	PC	185314.6730	1207606.0245
8057	8162+19.32	PI	184873.4375	1207642.8180
8058	8166+61.10	PT	184439.4071	1207730.3402
8140	8181+94.49	EQ	182936.2746	1208033.4467
8059	8209+29.71	PC	180176.7175	1208589.9112
8060	8224+50.59	PI	178685.8516	1208890.5442
8061	8237+77.26	PT	177953.9294	1210223.7176
8062	8250+75.95	POE	177328.9358	1211362.1240

ALIGNMENT NAME: I-430 RT. LANES

POINT	STATION	TYPE	NORTHING	EASTING
8063	669+00.00	POB	175620.8431	1207133.8354
8064	674+89.66	PC	175920.0654	1207641.9357
8065	678+70.81	PI	176113.4772	1207970.3625
8066	682+51.32	PT	176338.6670	1208277.8716
8067	686+73.91	PC	176588.3414	1208618.8159
8068	689+50.57	PI	176751.7994	1208842.0268
8069	692+23.45	PT	176845.6603	1209102.2802

ALIGNMENT NAME: I-430 LT. LANES

POINT	STATION	TYPE	NORTHING	EASTING
8070	669+00.00	POB	175696.6712	1207089.1800
8071	673+66.66	PC	175933.4746	1207491.2888
8072	676+67.55	PI	176086.1653	1207750.5682
8073	679+67.90	PCC	176265.1211	1207992.4669
8074	683+30.06	PI	176480.5115	1208283.6150
8075	686+71.95	PT	176819.9729	1208409.8140
8076	693+17.76	POE	177425.3042	1208634.8536

ALIGNMENT NAME: RAMP 1

POINT	STATION	TYPE	NORTHING	EASTING
8077	8213+68.18	PC	179723.5251	1208558.9352
8078	8214+64.40	PI	179629.5332	1208579.5099
8079	8215+60.45	PT	179533.9495	1208590.5339
8080	8228+55.24	PC	178247.6838	1208738.8837
8081	8232+82.00	PI	177823.7413	1208787.7785
8082	8236+92.93	PT	177423.7361	1208639.0715

ALIGNMENT NAME: RAMP 2

POINT	STATION	TYPE	NORTHING	EASTING
8083	692+23.45	PC	176841.4271	1209103.8069
8084	693+02.36	PI	176868.1992	1209178.0394
8085	693+81.19	PT	176888.7807	1209254.2209
8086	708+10.07	PC	177261.4526	1210633.6480
8087	710+96.96	PI	177336.2780	1210910.6108
8088	713+56.35	PT	177201.0115	1211163.6132

ALIGNMENT NAME: RAMP 3

POINT	STATION	TYPE	NORTHING	EASTING
8089	663+54.20	PC	177823.3445	1210701.3442
8090	665+49.56	PI	177917.5225	1210530.1819
8091	667+43.06	PT	178049.4908	1210386.1320
8092	671+71.19	PC	178338.6935	1210070.4529
8093	682+21.74	PI	179048.3504	1209295.8274
8094	685+71.65	PT	178071.6915	1208908.7939
8095	692+54.64	PC	177436.7464	1208657.1759
8096	692+75.05	PI	177417.7753	1208649.6579
8097	692+95.45	PT	177398.6478	1208642.5471

ALIGNMENT NAME: RAMP 4

POINT	STATION	TYPE	NORTHING	EASTING
8098	8185+37.91	POB	176858.3596	1209097.7002
8099	8193+09.89	PC	177120.2642	1209823.8982
8100	8201+81.47	PI	177415.9567	1210643.7822
8101	8206+46.03	PCC	178215.0405	1210295.7749
8102	8209+66.41	PI	178508.7700	1210167.8533
8103	8212+48.40	PT	178608.7077	1209863.4632
8104	8216+92.23	PC	178747.1556	1209441.7791
8105	8219+43.24	PI	178825.4561	1209203.2917
8106	8221+75.09	PT	179035.5066	1209065.8654

ALIGNMENT NAME: MARCHE RD.

POINT	STATION	TYPE	NORTHING	EASTING
8113	3+53.20	POB	193572.7596	1203696.6146
8114	4+78.20	PC	193670.0144	1203775.1418
8115	6+16.93	PI	193777.9483	1203862.2916
8116	7+46.68	PT	193916.4376	1203870.3860
8142	16+93.79	PC	194861.9286	1203925.6479
8143	19+82.02	PI	195149.6740	1203942.4661
8144	22+69.77	PT	195434.2789	1203988.0773
8145	23+43.58	PC	195507.1513	1203999.7559
8146	24+29.27	PI	195591.7684	1204013.3168
8147	25+14.65	PT	195677.4613	1204014.1411

ALIGNMENT NAME: NORMAN RD.

POINT	STATION	TYPE	NORTHING	EASTING
8117	14+00.00	POB	179806.6226	1208053.1956
8118	15+63.42	PC	179922.9318	1208167.9906
8119	16+93.18	PI	180015.2845	1208259.1411
8120	18+17.76	PT	180054.0831	1208382.9640
8121	22+24.85	PC	180175.8050	1208771.4300
8122	23+11.59	PI	180201.7399	1208854.1994
8123	23+96.00	PT	180199.4529	1208940.9067
8124	26+50.00	POE	180192.7754	1209194.0713

ALIGNMENT NAME: NEVA RD.

POINT	STATION	TYPE	NORTHING	EASTING
8125	7+00.00	POB	179899.5537	1208933.1320
8126	10+00.00	POE	180199.4529	1208940.9067

ALIGNMENT NAME: DRIVEWAY 1

POINT	STATION	TYPE	NORTHING	EASTING
8127	8+50.00	POB	180079.1187	1208154.2236
8128	9+23.92	PC	180005.3014	1208150.3037
8129	9+44.83	PI	179984.4228	1208149.1950
8130	9+63.53	PT	179968.9698	1208163.2787
8131	10+00.00	POE	179942.0133	1208187.8466

ALIGNMENT NAME: RAMP 3 DETOUR

POINT	STATION	TYPE	NORTHING	EASTING
8132	10+00.00	PC	177817.0657	1210712.7555
8133	10+37.93	PI	177835.3511	1210679.5230
8134	10+75.85	PRC	177852.0863	1210645.4834
8135	12+40.09	PI	177924.5503	1210498.0908
8136	14+02.11	PT	178035.4977	1210376.9863
8137	19+29.54	PC	178391.7826	1209988.0838
8138	20+03.37	PI	178441.6818	1209933.6101
8139	20+75.79	PT	178470.6664	1209865.7098

sadonaldson 7/18/2014 12:9:30 PM
WORKSPACE: AHTD
L:\ROW\100177\09 - I-40 at I-430 Interchange Modifications\Drawings\RCA0609_SC_02.dgn
REVISED DATE:

DATE REVISED	DATE FILMED	DATE REVISED	DATE FILMED	FED.RD. DIST.NO.	STATE	FED.AID PROJ.NO.	SHEET NO.	TOTAL SHEETS
				6	ARK.			
				JOB NO.		CA0609	197	693

(2) SURVEY CONTROL STA. 7960+00 TO 7975+00

STATE OF ARKANSAS
REGISTERED PROFESSIONAL ENGINEER
No. 11427
KEVIN G. TOBLESEY
7/17/14

ALL BEARINGS ARE GRID
BASED ON GPS
ALL DISTANCES ARE GROUND

0 50 100 FEET

POB MEDIAN 7957+50.59
8000
I-40 C.L. MEDIAN
MATCH LINE

POB LT. 7961+00.00
8040
MATCH LINE
POB RT. 7961+00.00
8017

7960 7965 7970 7975

SURVEY BASELINE
C.L. I-40 LT. MAIN LANES
C.L. I-40 RT. MAIN LANES
I-40 C.L. MEDIAN

PN:887
PD:5/8"REBAR W/2"CAP

PN:888
PD:5/8"REBAR W/2"CAP

S 40° 53'13" E
3227.73'

S 40° 16'00" E
3119.01'

S27°54'52"E
600.78'

S 39° 34'15" E
2976.93'

S39°03'34"E
893.30'

BEGIN JOB CA0609
STA. 7963+00.00
LOG MILE 142.35

SURVEY CONTROL DETAILS

t:\Job\wlxm2650 ahtd cap ca0603\700 cadd files\777 roadway files\drawings\10-Survey ControlDetails.dgn
...\10-Survey ControlDetails.dgn
7/16/2014 1:32:25 PM

DATE REVISED	DATE FILMED	DATE REVISED	DATE FILMED	FED.RD. DIST.NO.	STATE	FED.AID PROJ.NO.	SHEET NO.	TOTAL SHEETS
				6	ARK.			
				JOB NO.		CA0609	198	693

(2) SURVEY CONTROL STA. 7975+00 TO STA. 7990+00

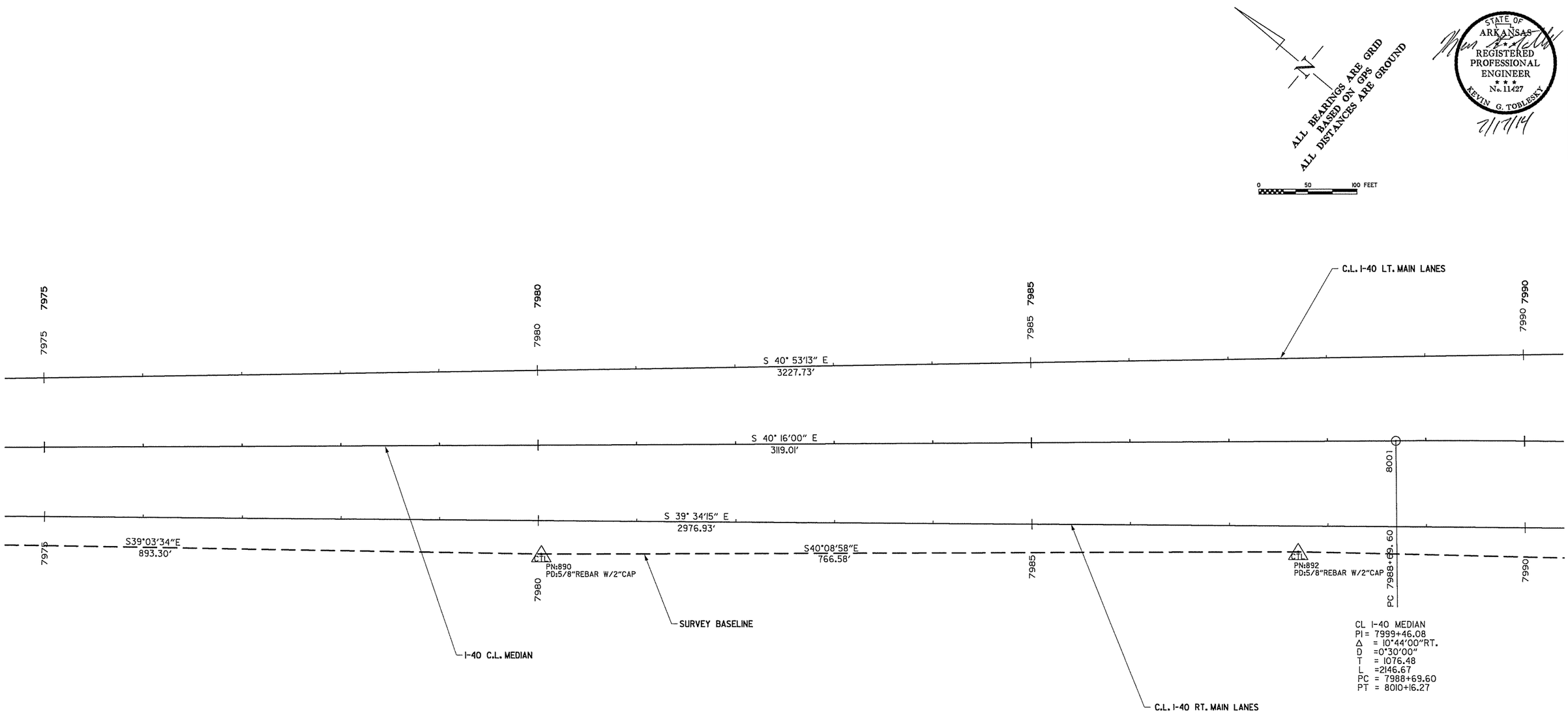

SURVEY CONTROL DETAILS

7/16/2014 1:32:26 PM ...\10-Survey ControlDetails.dgn t:\job\wlxm2650 ahtd cap ca0603\700 cadd files\777 roadway files\drawings\10-Survey ControlDetails.dgn

DATE REVISED	DATE FILMED	DATE REVISED	DATE FILMED	FED.RD. DIST.NO.	STATE	FED.AID PROJ.NO.	SHEET NO.	TOTAL SHEETS
				6	ARK.			
				JOB NO.		CA0609	199	693

(2) SURVEY CONTROL STA. 7990+00 TO STA. 8005+00

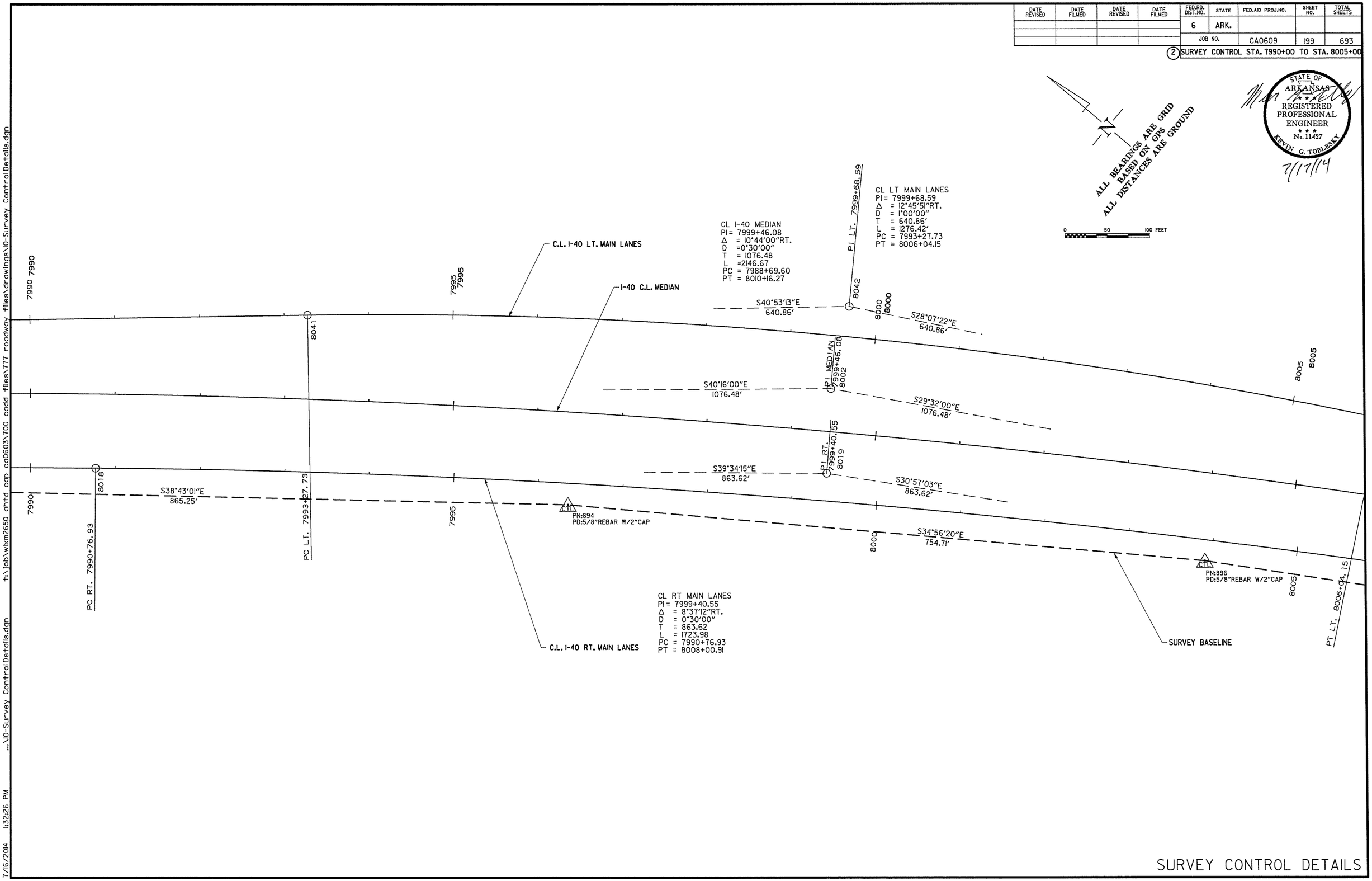

SURVEY CONTROL DETAILS

7/16/2014 1:32:26 PM ...\10-Survey ControlDetails.dgn t:\job\wlxm2650 ahtd cap ca0603\700 cadd files\777 roadway files\drawings\10-Survey ControlDetails.dgn

DATE REVISED	DATE FILMED	DATE REVISED	DATE FILMED	FED.RD. DIST.NO.	STATE	FED.AID PROJ.NO.	SHEET NO.	TOTAL SHEETS
				6	ARK.			
				JOB NO.		CA0609	200	693

(2) SURVEY CONTROL STA. 8005+00 TO STA. 8020+00

STATE OF ARKANSAS
REGISTERED PROFESSIONAL ENGINEER
No. 11427
KEVIN G. TOBLESEY
7/17/14

ALL BEARINGS ARE GRID
ALL DISTANCES ARE GROUND
BASED ON GPS

0 50 100 FEET

CL LT MAIN LANES
PI = 7999+68.59
Δ = 12°45'51"RT.
D = 1°00'00"
T = 640.86'
L = 1276.42'
PC = 7993+27.73
PT = 8006+04.15

CL I-40 MEDIAN
PI = 7999+46.08
Δ = 10°44'00"RT.
D = 0°30'00"
T = 1076.48
L = 2146.67
PC = 7988+69.60
PT = 8010+16.27

CL I-40 MEDIAN
PI = 8028+03.67
Δ = 20°58'00"LT.
D = 0°42'00"
T = 1514.56
L = 2995.24
PC = 8012+89.11
PT = 8042+84.35

CL LT MAIN LANES
PI = 8028+16.91
Δ = 22°57'44"LT.
D = 1°00'00"
T = 1163.73
L = 2296.22
PC = 8016+53.18
PT = 8039+49.40

CL RT MAIN LANES
PI = 8028+05.80
Δ = 18°59'46"LT.
D = 1°00'00"
T = 958.60
L = 1899.60
PC = 8018+47.20
PT = 8037+46.80

8005 8005 8010 8010 8015 8015 8020

PT MEDIAN 8010+16.27
PC MEDIAN 8012+89.11
PC LT. 8016+53.18
PC RT. 8018+47.20

C.L. I-40 LT. MAIN LANES

8043 8003 8004 8044 8021

S 28° 07'22" E
1049.03'

S 29° 32'00" E
272.84'

S 30° 57'03" E
1046.30'

S31°22'29"E
794.30'

S34°13'20"E
897.19'

8"REBAR W/2"CAP

8005 8020 8010 8015

PT LT. 8006+04.15
PT RT. 8008+00.91

PN:898
PD:5/8"REBAR W/2"CAP

I-40 C.L. MEDIAN

SURVEY BASELINE

C.L. I-40 RT. MAIN LANES

CL RT MAIN LANES
PI = 7999+40.55
Δ = 8°37'12"RT.
D = 0°30'00"
T = 863.62
L = 1723.98
PC = 7990+76.93
PT = 8008+00.91

SURVEY CONTROL DETAILS

t:\job\wixm2650 ahtd cap ca0603\700 cadd files\777 roadway files\drawings\10-Survey ControlDetails.dgn
...\10-Survey ControlDetails.dgn
7/16/2014 1:32:26 PM

DATE REVISED	DATE FILMED	DATE REVISED	DATE FILMED	FED.RD. DIST.NO.	STATE	FED.AID PROJ.NO.	SHEET NO.	TOTAL SHEETS
				6	ARK.			
				JOB NO.		CA0609	201	693

(2) SURVEY CONTROL STA. 8020+00 TO STA. 8035+00

STATE OF ARKANSAS
REGISTERED PROFESSIONAL ENGINEER
No. 11427
KEVIN G. TOBLESKY
7/17/14

N

ALL BEARINGS ARE GRID
ALL DISTANCES ARE GROUND

0 50 100 FEET

8020 8025 8030 8035

C.L. I-40 LT. MAIN LANES

PN:1000
PD:5/8"REBAR W/2"CAP
CTL

S37°39'41"E
792.69'

S28°07'22"E
1163.73'

S29°32'00"E
1514.56'

S30°57'03"E
958.60'

I-40 C.L. MEDIAN

PN:1001
PD:3' E OF E EP EAST BND LANE
CTL

S46°05'37"E
679.16'

S51°05'06"E
1163.73'

S50°30'00"E
1514.56'

S49°56'49"E
958.60'

8045
8005
8022

P.I. LT. 8028+16.91
P.I. MEDIAN 8028+03.67
P.I. RT. 8028+05.80

SURVEY BASELINE

C.L. I-40 RT. MAIN LANES

CL LT MAIN LANES
PI = 8028+16.91
Δ = 22°57'44"LT.
D = 1°00'00"
T = 1163.73
L = 2296.22
PC = 8016+53.18
PT = 8039+49.40

CL I-40 MEDIAN
PI = 8028+03.67
Δ = 20°58'00"LT.
D = 0°42'00"
T = 1514.56
L = 2995.24
PC = 8012+89.11
PT = 8042+84.35

CL RT MAIN LANES
PI = 8028+05.80
Δ = 18°59'46"LT.
D = 1°00'00"
T = 958.60
L = 1899.60
PC = 8018+47.20
PT = 8037+46.80

SURVEY CONTROL DETAILS

7/16/2014 1:32:27 PM ...\10-Survey Control Details.dgn f:\lob\wlxm2650 ahtd cap ca0603\700 cadd files\777 roadway files\drawings\10-Survey Control Details.dgn

DATE REVISED	DATE FILMED	DATE REVISED	DATE FILMED	FED.RD. DIST.NO.	STATE	FED.AID PROJ.NO.	SHEET NO.	TOTAL SHEETS
				6	ARK.			
				JOB NO.		CA0609	202	693

(2) SURVEY CONTROL STA. 8035+00 TO STA. 8050+00

STATE OF ARKANSAS
REGISTERED PROFESSIONAL ENGINEER
No. 11427
KEVIN G. TOBLESKY
7/17/14

CL MARCHE RD.
PI = 24+29.27
Δ = 8°33'14" LT.
D = 5°00'00"
T = 85.70'
L = 171.08'
PC = 23+43.58
PT = 25+14.65

PT 25+14.65 — 8147 — 25 — N0°33'04"E — 8146 — PI 24+29.27

PC 23+43.58 — 8145 — N 9°06'18" E 73.80' — 8144 — PT 22+69.77

ALL BEARINGS ARE GRID BASED ON GPS
ALL DISTANCES ARE GROUND

0 50 100 FEET

C.L. MARCHE ROAD

CL MARCHE RD.
PI = 19+82.02
Δ = 5°45'36" RT.
D = 1°00'00"
T = 288.24'
L = 575.99'
PC = 16+93.79
PT = 22+69.77

20 — 8143 — PI 19+82.02

C.L. MARCHE RD.

PC 16+93.79 — 8142 — N 3°20'42" E 941.10'

CL RT MAIN LANES
PI = 8028+05.80
Δ = 18°59'46"LT.
D = 1°00'00"
T = 958.60
L = 1899.60
PC = 8018+47.20
PT = 8037+46.80

CL LT MAIN LANES
PI = 8028+16.91
Δ = 22°57'44"LT.
D = 1°00'00"
T = 1163.73
L = 2296.22
PC = 8016+53.18
PT = 8039+49.40

CL I-40 MEDIAN
PI = 8028+03.67
Δ = 20°58'00"LT.
D = 0°42'00"
T = 1514.56
L = 2995.24
PC = 8012+89.11
PT = 8042+84.35

8035 8040 8045 8050

PT RT. 8037+46.80 — 8023

C.L. I-40 LT. MAIN LANES

PT LT. 8039+49.40 — 8046

PT MEDIAN 8042+84.35 — 8006

C.L. I-40 RT. MAIN LANES

I-40 C.L. MEDIAN

S 51° 05'06" E 3739.00'

S 50° 30'00" E 3481.28'

S48°30'08"E 821.73'

S49°45'33"E 742.46'

S 49° 56'49" E 3840.50'

C.T.L. PN:1002 PD:5/8"REBAR W/2"CAP

C.T.L. PN:1003 PD:5/8"REBAR W/2"CAP

SURVEY BASELINE

SURVEY CONTROL DETAILS

7/16/2014 1:32:27 PM t:\lob\wixm2650 dhtd cap ca0603\700 cadd files\777 roadway files\drawings\10-Survey ControlDetails.dgn ...\10-Survey ControlDetails.dgn

DATE REVISED	DATE FILMED	DATE REVISED	DATE FILMED	FED.RD. DIST.NO.	STATE	FED.AID PROJ.NO.	SHEET NO.	TOTAL SHEETS
				6	ARK.			
				JOB NO.		CA0609	203	693

(2) SURVEY CONTROL STA. 8050+00 TO STA. 8065+00

8050 8055 8060 8065

C.L. I-40 LT. MAIN LANES

S 51° 05'06" E
3739.00'

S 50° 30'00" E
3481.28'

S 49° 56'49" E
3840.50'

S49°53'47"E
841.45'

I-40 C.L. MEDIAN

C.L. I-40 RT. MAIN LANES

SURVEY BASELINE

PN:1004
PD:5/8"REBAR W/2"CAP

PN:1006
PD:5/8"REBAR W/2"CAP

PN:1010
PD:5/8"REBAR W/2"CAP

S07°41'34"E
244.94'

S61°41'27"E
577.62'

N 3°20'42" E
947.10'

15

10

5

C.L. MARCHE ROAD

8115

8116

PT 7+46.68

PI 6+16.93
8115

CL MARCHE RD.
PI = 6+16.93
Δ = 35°34'25" LT.
D = 13°15'00"
T = 138.73'
L = 268.48'
PC = 4+78.20
PT = 7+46.68

PC 4+78.20
8114

N 38° 55'07" E
125.00'

POB 3+53.20
8113

STATE OF ARKANSAS
REGISTERED PROFESSIONAL ENGINEER
No. 11427
KEVIN G. TOBLESKY
7/17/14

N

ALL BEARINGS ARE GRID
BASED ON GPS
ALL DISTANCES ARE GROUND

0 50 100 FEET

SURVEY CONTROL DETAILS

7/16/2014 1:32:27 PM ...\10-Survey Control Details.dgn t:\job\wlkm2650 ahtd cap ca0603\700 cadd files\777 roadway files\drawings\10-Survey Control Details.dgn

DATE REVISED	DATE FILMED	DATE REVISED	DATE FILMED	FED.RD. DIST.NO.	STATE	FED.AID PROJ.NO.	SHEET NO.	TOTAL SHEETS
				6	ARK.			
				JOB NO.		CA0609	204	693

(2) SURVEY CONTROL STA. 8065+00 TO STA. 8080+00

STATE OF ARKANSAS
REGISTERED PROFESSIONAL ENGINEER
No. 11427
KEVIN G. TOBLESKY
7/17/14

N

ALL BEARINGS ARE GRID
BASED ON GPS
ALL DISTANCES ARE GROUND

0 50 100 FEET

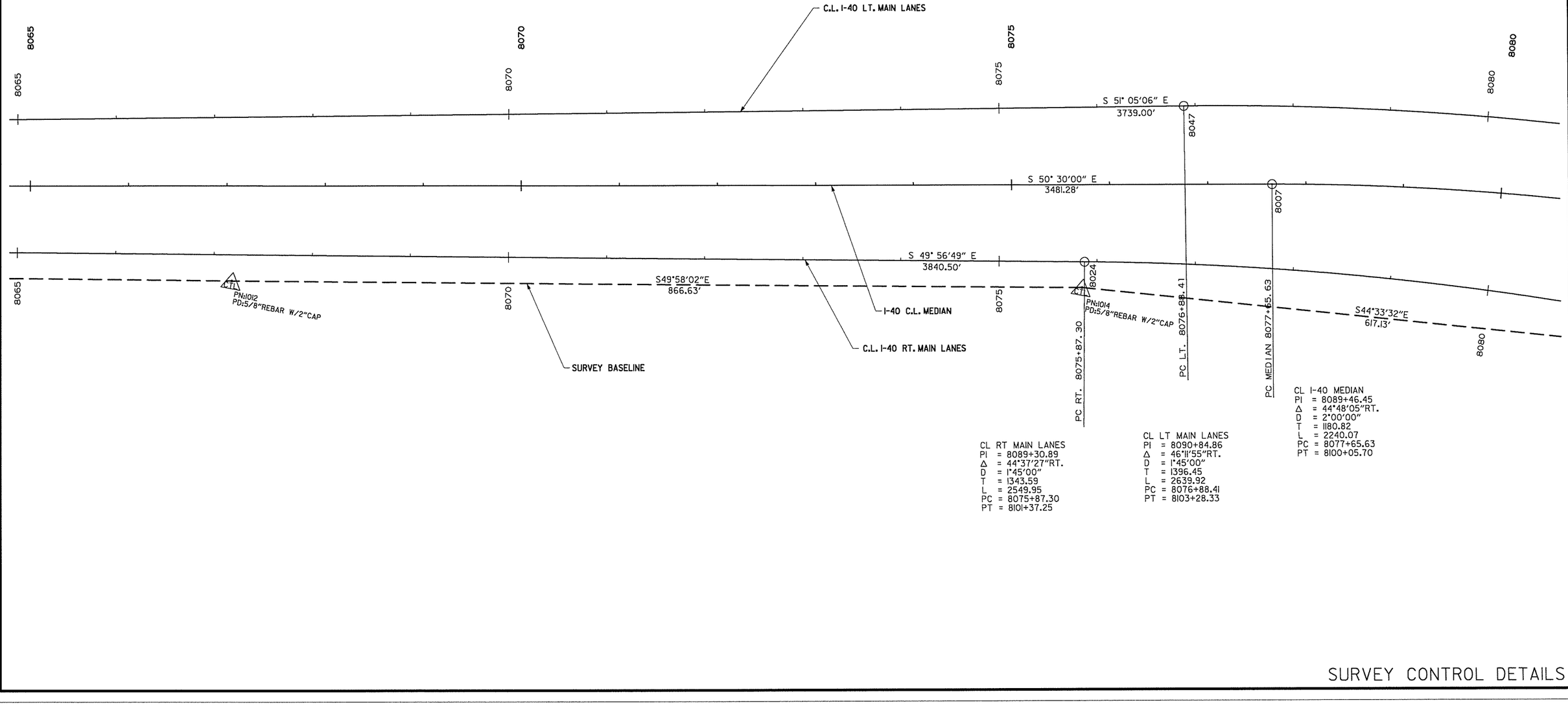

CL RT MAIN LANES
PI = 8089+30.89
Δ = 44°37'27"RT.
D = 1°45'00"
T = 1343.59
L = 2549.95
PC = 8075+87.30
PT = 8101+37.25

CL LT MAIN LANES
PI = 8090+84.86
Δ = 46°11'55"RT.
D = 1°45'00"
T = 1396.45
L = 2639.92
PC = 8076+88.41
PT = 8103+28.33

CL I-40 MEDIAN
PI = 8089+46.45
Δ = 44°48'05"RT.
D = 2°00'00"
T = 1180.82
L = 2240.07
PC = 8077+65.63
PT = 8100+05.70

SURVEY CONTROL DETAILS

7/16/2014 1:32:27 PM ...\10-Survey ControlDetails.dgn t:\job\wlxm2650 dhtd cap ca0603\700 cadd files\777 roadway files\drawings\10-Survey ControlDetails.dgn

DATE REVISED	DATE FILMED	DATE REVISED	DATE FILMED	FED.RD. DIST.NO.	STATE	FED.AID PROJ.NO.	SHEET NO.	TOTAL SHEETS
				6	ARK.			
				JOB NO.		CA0609	205	693

(2) SURVEY CONTROL STA. 8080+00 TO STA. 8095+00

CL I-40 MEDIAN
PI = 8089+46.45
Δ = 44°48'05"RT.
D = 2°00'00"
T = 1180.82
L = 2240.07
PC = 8077+65.63
PT = 8100+05.70

CL RT MAIN LANES
PI = 8089+30.89
Δ = 44°37'27"RT.
D = 1°45'00"
T = 1343.59
L = 2549.95
PC = 8075+87.30
PT = 8101+37.25

CL LT MAIN LANES
PI = 8090+84.86
Δ = 46°11'55"RT.
D = 1°45'00"
T = 1396.45
L = 2639.92
PC = 8076+88.41
PT = 8103+28.33

ALL BEARINGS ARE GRID
ALL DISTANCES ARE GROUND

0 50 100 FEET

STATE OF ARKANSAS
REGISTERED PROFESSIONAL ENGINEER
No. 11427
KEVIN G. TOBLESKY
7/17/14

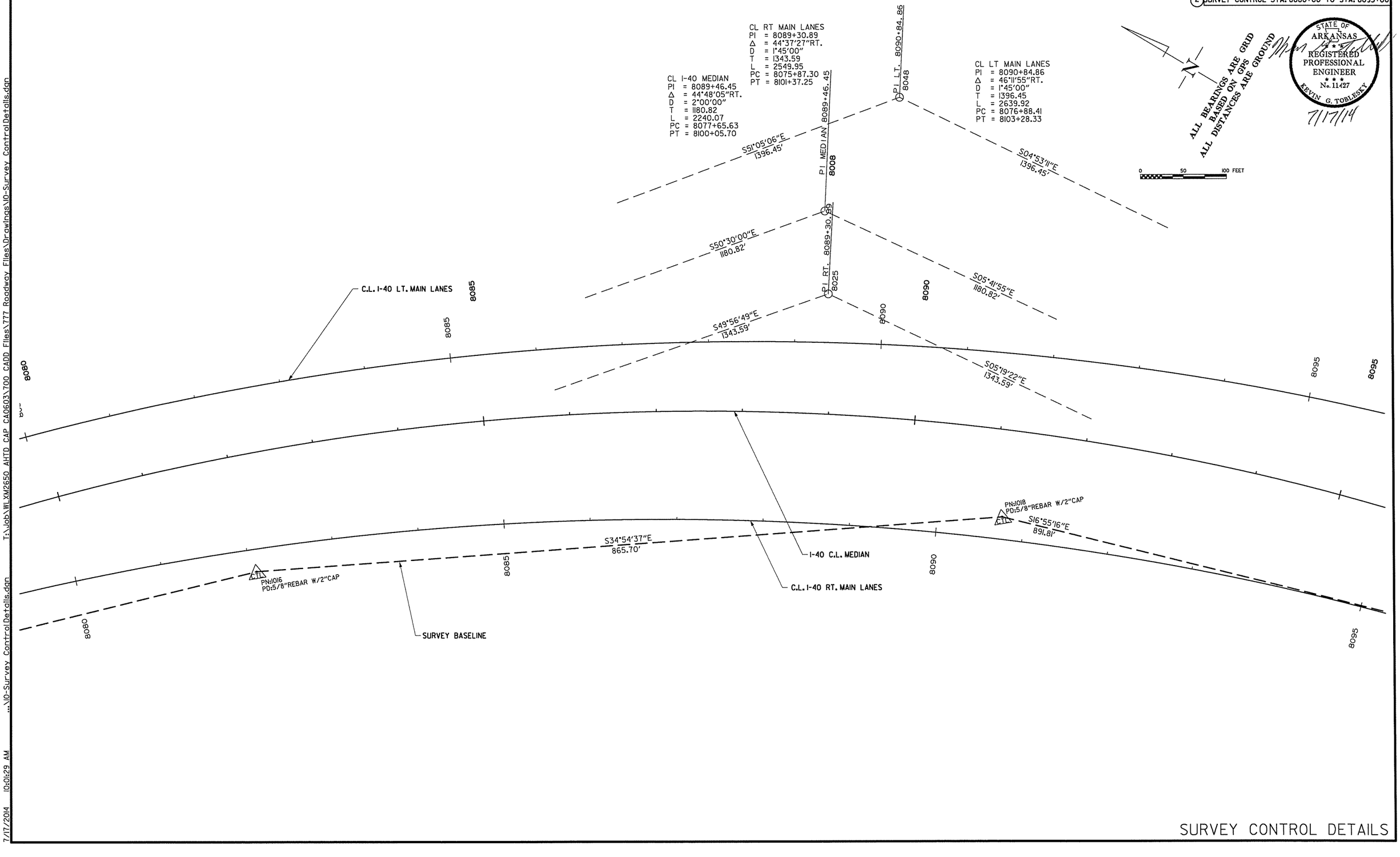

SURVEY CONTROL DETAILS

7/17/2014 10:01:29 AM ...\10-Survey Control Details.dgn T:\Job\WLXM2650 AHTD CAP CA0603\700 CADD Files\777 Roadway Files\Drawings\10-Survey Control Details.dgn

DATE REVISED	DATE FILMED	DATE REVISED	DATE FILMED	FED.RD. DIST.NO.	STATE	FED.AID PROJ.NO.	SHEET NO.	TOTAL SHEETS
				6	ARK.			
				JOB NO.		CA0609	206	693

(2) SURVEY CONTROL STA. 8095+00 TO STA. 8110+00

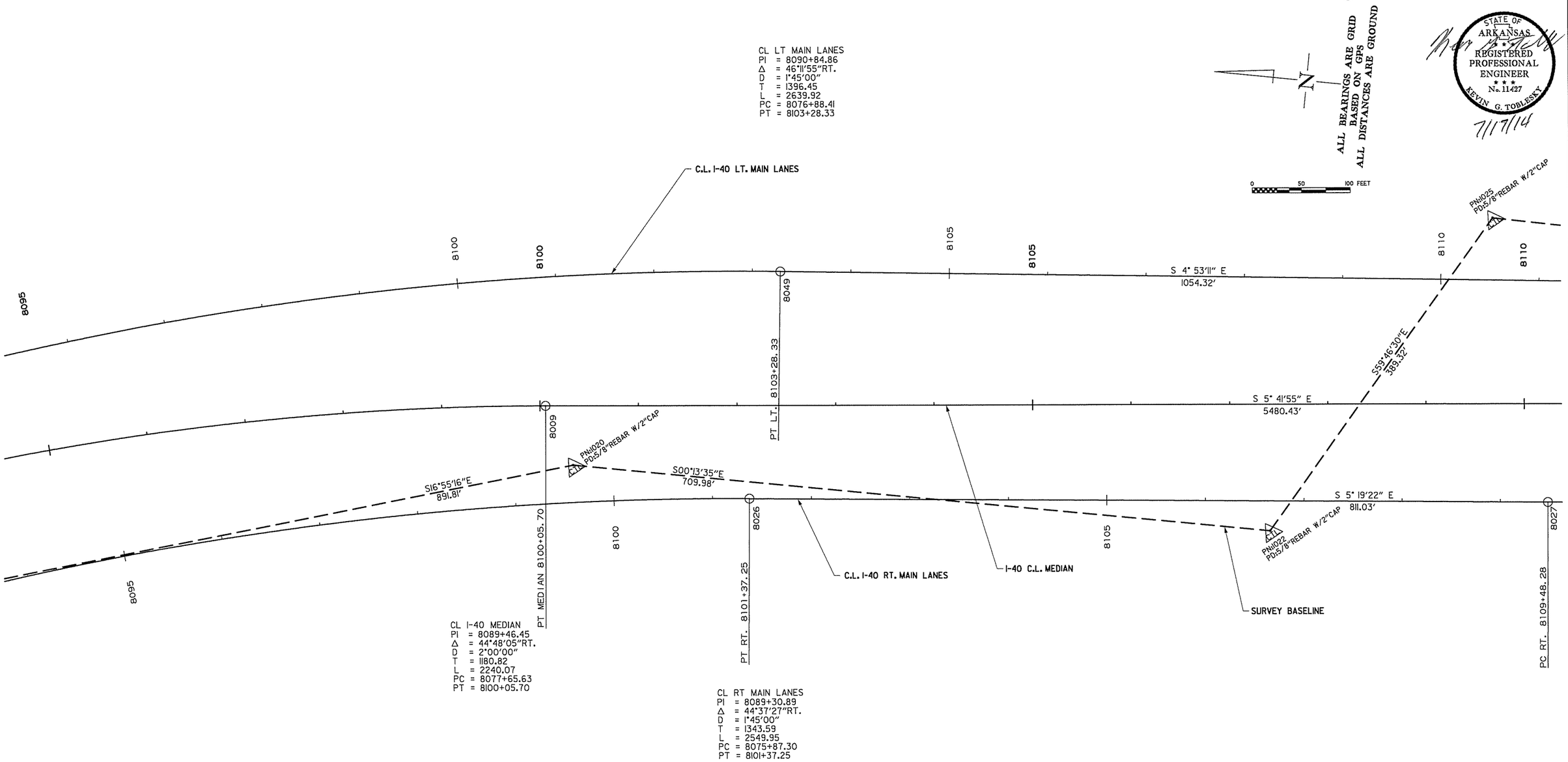

SURVEY CONTROL DETAILS

7/16/2014 1:32:28 PM ...\10-Survey ControlDetails.dgn t:\job\wlxm2650 ahtd cap ca0603\700 cadd files\777 roadway files\drawings\10-Survey ControlDetails.dgn

DATE REVISED	DATE FILMED	DATE REVISED	DATE FILMED	FED.RD. DIST.NO.	STATE	FED.AID PROJ.NO.	SHEET NO.	TOTAL SHEETS
				6	ARK.			
				JOB NO.		CA0609	207	693

(2) SURVEY CONTROL STA. 8110+00 TO STA. 8125+00

STATE OF ARKANSAS
REGISTERED PROFESSIONAL ENGINEER
No. 11427
KEVIN G. TOBLESEY
7/17/14

ALL BEARINGS ARE GRID BASED ON GPS
ALL DISTANCES ARE GROUND

0 50 100 FEET

CL LT MAIN LANES
PI = 8115+28.78
Δ = 0°43'51"LT.
D = 0°15'00"
T = 146.14
L = 292.28
PC = 8113+82.64
PT = 8116+74.92

CL LT MAIN LANES
PI = 8121+05.44
Δ = 0°51'02"RT.
D = 0°15'00"
T = 170.09
L = 340.18
PC = 8119+35.35
PT = 8122+75.53

REBAR W/2"CAP

8110

S00°30'19"W
390.82'

PC LT. 8113+82.64
8054

PN1027
PD5/8"REBAR W/2"CAP

8115

PI LT. 8115+28.78
8051

8115

S04°53'11" E
170.09'

S05°37'02" E
170.09'

PT LT. 8116+74.92
8052

S05°17'16"E
924.94'

PC LT. 8119+35.35
8053

8120

S05°37'02" E
170.09'

8120

PI LT. 8121+05.44
8054

S04°46'00" E
170.09'

PT LT. 8122+75.53
8055

C.L. I-40 LT. MAIN LANES

PN1029
PD5/8"REBAR W/2"CAP

SURVEY BASELINE

8125

8125

S 4° 46'00" E
3501.03'

S 5° 41'55" E
5480.43'

I-40 C.L. MEDIAN

C.L. I-40 RT. MAIN LANES

8027

PC RT. 8109+48.28

S05° 19'22" E
164.75'

8110

8028

PI RT. 8111+13.03

S04° 29'57" E
164.75'

8029

PT RT. 8112+77.77

CL RT MAIN LANES
PI = 8111+13.03
Δ = 0°49'25"RT.
D = 0°15'00"
T = 164.75
L = 329.49
PC = 8109+48.28
PT = 8112+77.77

S 4° 29'57" E
304.55'

8115

8030

PC RT. 8115+82.32

S04° 29'57" E
149.45'

8031

PI RT. 8117+31.77

S05° 14'47" E
149.45'

8032

PT RT. 8118+81.22

CL RT MAIN LANES
PI = 8117+31.77
Δ = 0°44'50"LT.
D = 0°15'00"
T = 149.45
L = 298.90
PC = 8115+82.32
PT = 8118+81.22

8120

S 5° 14'47" E
3485.27'

SURVEY CONTROL DETAILS

7/16/2014 1:32:28 PM ...\10-Survey Control Details.dgn t:\lob\wlkm2650 ahtd cap ca0603\700 cadd files\777 roadway files\drawings\10-Survey Control Details.dgn

DATE REVISED	DATE FILMED	DATE REVISED	DATE FILMED	FED.RD. DIST.NO.	STATE	FED.AID PROJ.NO.	SHEET NO.	TOTAL SHEETS
				6	ARK.			
				JOB NO.		CA0609	208	693

(2) SURVEY CONTROL STA. 8125+00 TO STA. 8140+00

STATE OF ARKANSAS
REGISTERED PROFESSIONAL ENGINEER
No. 11427
KEVIN G. TOBLESKY
7/17/14

ALL BEARINGS ARE GRID BASED ON GPS
ALL DISTANCES ARE GROUND

0 50 100 FEET

8125
S04°43'11"E
825.98'
8130
8130
PNH031
PD35/8"REBAR W/2"CAP
8135
8135
S04°46'20"E
861.82'
8140
PNH033
PD35/8"REBAR W/2"CAP
8140

C.L. I-40 LT. MAIN LANES
SURVEY BASELINE

S 4° 46'00" E
3501.03'

S 5° 41'55" E
5480.43'

S 5° 14'47" E
3485.27'

8125
8130
8135

I-40 C.L. MEDIAN
C.L. I-40 RT. MAIN LANES

SURVEY CONTROL DETAILS

7/16/2014 1:32:28 PM ...\10-Survey Control Details.dgn t:\Job\wlxm2650 ahtd cap ca0603\700 cadd files\777 roadway files\drawings\10-Survey Control Details.dgn

DATE REVISED	DATE FILMED	DATE REVISED	DATE FILMED	FED.RD. DIST.NO.	STATE	FED.AID PROJ.NO.	SHEET NO.	TOTAL SHEETS
				6	ARK.			
				JOB NO.		CA0609	209	693

(2) SURVEY CONTROL STA. 8140+00 TO STA. 8155+00

ALL BEARINGS ARE GRID BASED ON GPS
ALL DISTANCES ARE GROUND

0 50 100 FEET

STATE OF ARKANSAS
REGISTERED PROFESSIONAL ENGINEER
No. 11427
KEVIN G. TOBLESEY
7/17/14

CL I-40 MEDIAN
PI = 8160+86.54
Δ = 5°41'57" LT.
D = 0°28'30"
T = 600.41'
L = 1199.83'
PC = 8154+86.13
PT = 8166+85.96

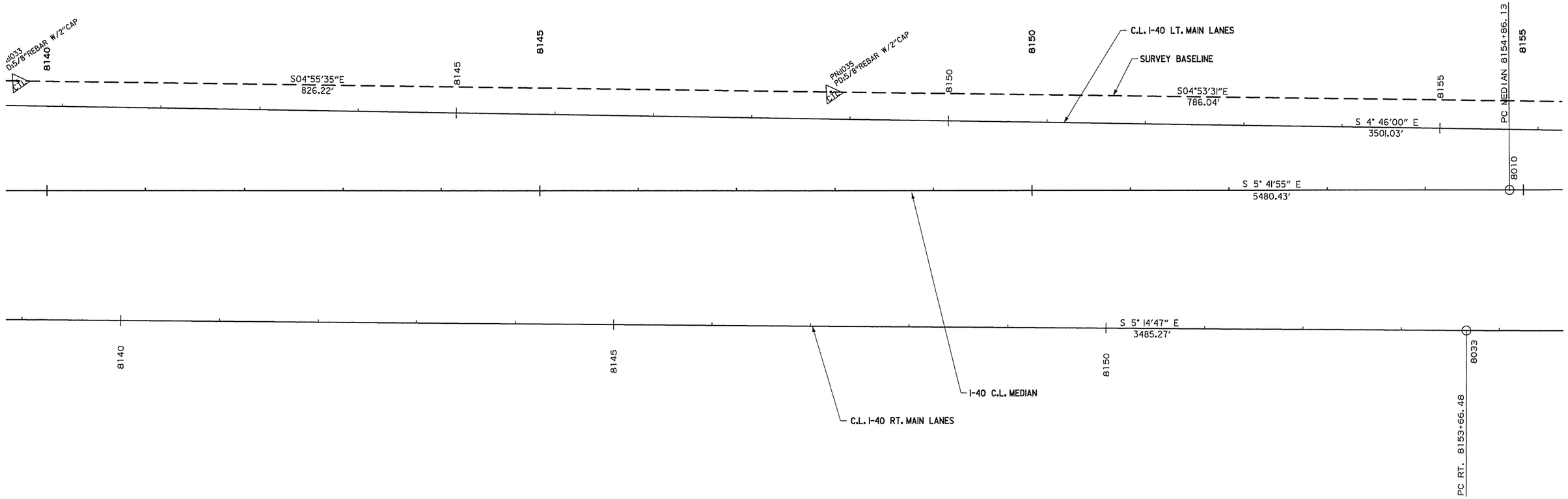

CL RT. MAIN LANES
PI = 8160+77.47
Δ = 7°06'03" LT.
D = 0°30'00"
T = 710.99'
L = 1420.16'
PC = 8153+66.48
PT = 8167+86.64

SURVEY CONTROL DETAILS

7/16/2014 1:32:29 PM ...\10-Survey ControlDetails.dgn t:\lob\wlkm2650 ahtd cap ca0603\700 cadd files\777 roadway files\drawings\10-Survey ControlDetails.dgn

DATE REVISED	DATE FILMED	DATE REVISED	DATE FILMED	FED.RD. DIST.NO.	STATE	FED.AID PROJ.NO.	SHEET NO.	TOTAL SHEETS
				6	ARK.			
				JOB NO.		CA0609	210	693

(2) SURVEY CONTROL STA. 8155+00 TO STA. 8170+00

STATE OF ARKANSAS REGISTERED PROFESSIONAL ENGINEER No. 11427 KEVIN G. TOBLESKY 7/17/14

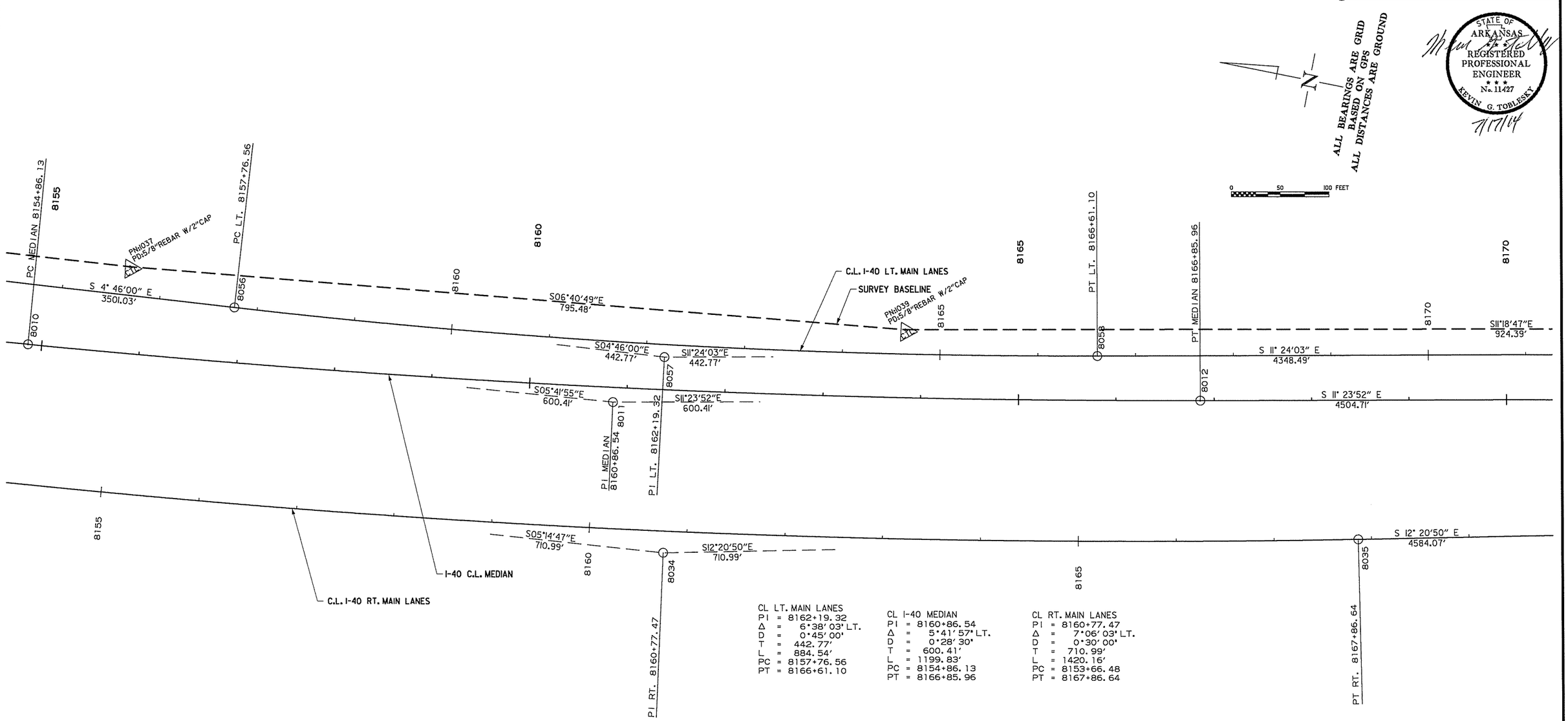

CL LT. MAIN LANES
PI = 8162+19.32
Δ = 6°38'03" LT.
D = 0°45'00"
T = 442.77'
L = 884.54'
PC = 8157+76.56
PT = 8166+61.10

CL I-40 MEDIAN
PI = 8160+86.54
Δ = 5°41'57" LT.
D = 0°28'30"
T = 600.41'
L = 1199.83'
PC = 8154+86.13
PT = 8166+85.96

CL RT. MAIN LANES
PI = 8160+77.47
Δ = 7°06'03" LT.
D = 0°30'00"
T = 710.99'
L = 1420.16'
PC = 8153+66.48
PT = 8167+86.64

SURVEY CONTROL DETAILS

7/16/2014 1:32:29 PM ...\10-Survey ControlDetails.dgn t:\job\wlxm2650 ahtd cap ca0603\700 cadd files\777 roadway files\drawings\10-Survey ControlDetails.dgn

DATE REVISED	DATE FILMED	DATE REVISED	DATE FILMED	FED.RD. DIST.NO.	STATE	FED.AID PROJ.NO.	SHEET NO.	TOTAL SHEETS
				6	ARK.			
				JOB NO.		CA0609	211	693

(2) SURVEY CONTROL STA. 8170+00 TO STA. 8185+00

STATE OF ARKANSAS
REGISTERED PROFESSIONAL ENGINEER
No. 11427
KEVIN G. TOBLESEY
7/17/14

ALL BEARINGS ARE GRID
BASED ON GPS
ALL DISTANCES ARE GROUND

0 50 100 FEET

8170 8175 8180 8185

C.L. I-40 LT. MAIN LANES

SURVEY BASELINE

PNJ1041
PD5/8"REBAR W/2"CAP

S11°18'47"E
924.39'

8175

S 11° 24'03" E
4348.49'

8180

S11°30'14"E
1410.84'

8185

S 11° 23'52" E
4504.71'

S 12° 20'50" E
4584.07'

8170 8175 8180

I-40 C.L. MEDIAN

C.L. I-40 RT. MAIN LANES

SURVEY CONTROL DETAILS

7/16/2014 1:32:29 PM ...\10-Survey ControlDetails.dgn t:\lob\wkm2650 dhtd cap ca0603\700 cadd files\777 roadway files\drawings\10-Survey ControlDetails.dgn

DATE REVISED	DATE FILMED	DATE REVISED	DATE FILMED	FED.RD. DIST.NO.	STATE	FED.AID PROJ.NO.	SHEET NO.	TOTAL SHEETS
				6	ARK.			
				JOB NO.		CA0609	212	693

(2) SURVEY CONTROL DETAILS

STATE OF ARKANSAS
LICENSED PROFESSIONAL ENGINEER
No.13422
JOHN F. CANTABERY
7-18-14

N

1" =250'

ALL BEARINGS ARE GRID
BASED ON GPS
ALL DISTANCES ARE GROUND

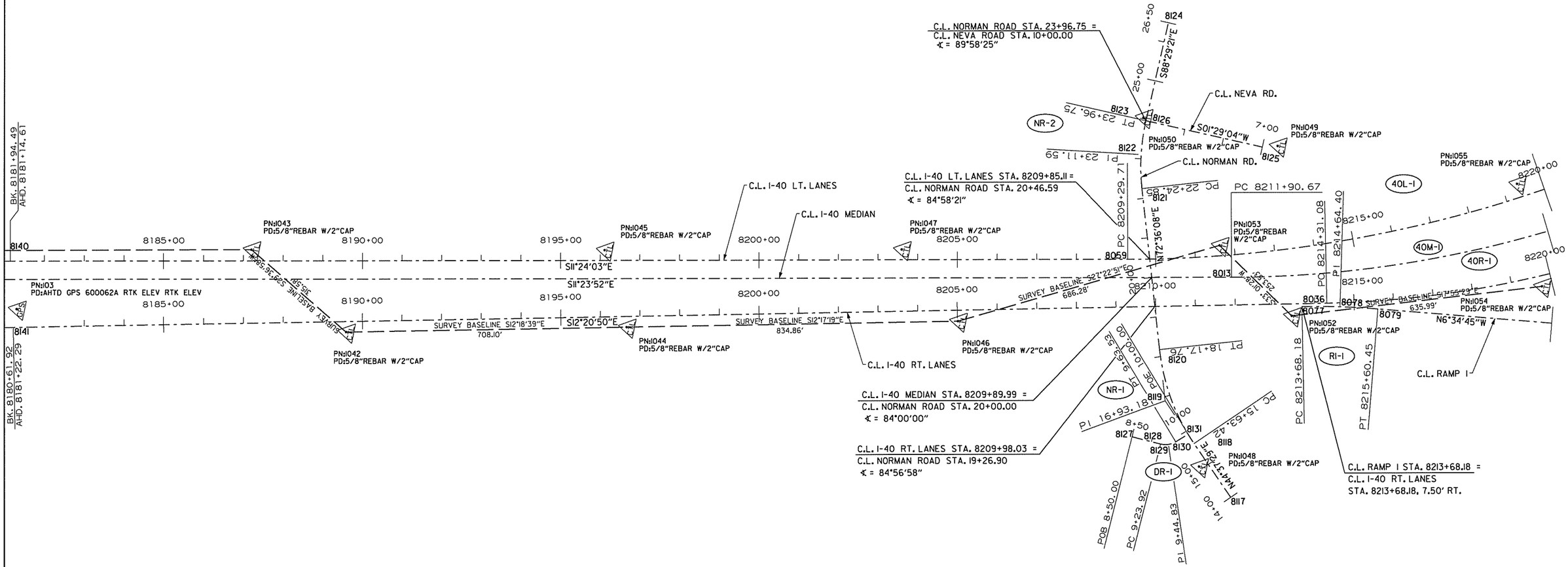

CURVE DATA

CURVE	PC	PI	PT	Δ	D	TANGENT FEET	LENGTH FEET	e FT./FT.	Ls FEET	DESIGN SPEED
40M-1	8211+90.67	8225+31.67	8236+99.09	50°10'06"	2°00'00"	1341.00	2508.42	N.A.	N.A.	N.A.
40R-1	8214+31.08	8226+06.44	8236+33.41	49°33'08"	2°15'00"	1175.35	2202.33	MATCH EXIST. (0.070)	MATCH EXIST.	70 MPH
40L-1	8209+29.71	8224+50.59	8237+77.26	49°49'56"	1°45'00"	1520.88	2847.55	MATCH EXIST. (0.060)	MATCH EXIST.	70 MPH
RI-1	8213+68.18	8214+64.40	8215+60.45	5°46'05"	3°00'00"	96.22	192.27	N.A.	N.A.	70 MPH
NR-1	15+63.42	16+93.18	18+17.76	27°58'39"	11°00'00"	129.76	254.34	N.C.	N.A.	30 MPH
NR-2	22+24.85	23+11.59	23+96.75	18°54'31"	11°00'00"	86.74	171.90	N.C.	N.A.	30 MPH
DR-1	9+23.92	9+44.83	9+63.53	45°23'08"	114°35'30"	86.74	171.90	N.C.	N.A.	N.A.

SURVEY CONTROL DETAILS

cggervasini 7/17/2014 7:43:58 PM
WORKSPACE: AHTD
L:\20IN\10I7709 - I-40 at I-430 Interchange Modifications\Drawings\RCA0609_SC.03.dgn
REVISED DATE:

DATE REVISED	DATE FILMED	DATE REVISED	DATE FILMED	FED.RD. DIST.NO.	STATE	FED.AID PROJ.NO.	SHEET NO.	TOTAL SHEETS
				6	ARK.			
				JOB NO.		CA0609	213	693

(2) SURVEY CONTROL DETAILS

N

1" =250'

ALL BEARINGS ARE GRID
BASED ON GPS
ALL DISTANCES ARE GROUND

CURVE DATA

CURVE	PC	PI	PT	Δ	D	TANGENT FEET	LENGTH FEET	e FT./FT.	Ls FEET	DESIGN SPEED
R3-3	692+54.64	692+75.05	692+95.45	1°13'28"	3°00'00"	20.41	40.81	MATCH EXIST. (0.020)	MATCH EXIST.	50 MPH
R4-1	8193+09.89	8201+81.47	8206+46.03	93°42'06"	7°00'46"	871.58	1336.14	MATCH EXIST. (0.080)	MATCH EXIST.	50 MPH
R4-2	8206+46.03	8209+66.41	8212+48.40	48°17'25"	8°01'00"	320.38	602.37	MATCH EXIST. (0.080)	MATCH EXIST.	50 MPH
R4-3	8216+92.23	8219+43.24	8221+75.09	38°37'44"	8°00'00"	251.01	482.86	MATCH EXIST. (0.080)	MATCH EXIST.	50 MPH
R3D-1	10+00.00	10+37.93	10+75.85	2°38'25"	3°28'51"	37.93	75.85	MATCH EXIST. (0.003)	MATCH EXIST.	50 MPH
R3D-2	10+75.85	12+40.09	14+02.11	16°18'47"	5°00'00"	164.24	326.26	MATCH EXIST. (0.040)	MATCH EXIST.	50 MPH
R3D-3	19+29.54	20+03.37	20+75.79	19°22'39"	13°15'00"	73.83	146.25	MATCH EXIST. (0.080)	MATCH EXIST.	40 MPH

CURVE DATA

CURVE	PC	PI	PT	Δ	D	TANGENT FEET	LENGTH FEET	e FT./FT.	Ls FEET	DESIGN SPEED
40M-1	8211+90.67	8225+31.67	8236+99.09	50°10'06"	2°00'00"	1341.00	2508.42	N.A.	N.A.	N.A.
40R-1	8214+31.08	8226+06.44	8236+33.41	49°33'08"	2°15'00"	1175.35	2202.33	MATCH EXIST. (0.070)	MATCH EXIST.	70 MPH
40L-1	8209+29.71	8224+50.59	8237+77.26	49°49'56"	1°45'00"	1520.88	2847.55	MATCH EXIST. (0.060)	MATCH EXIST.	70 MPH
430R-1	674+89.66	678+70.81	682+51.32	5°43'17"	0°45'04"	381.15	761.66	MATCH EXIST. (R.C.)	MATCH EXIST.	60 MPH
430R-2	686+73.91	689+50.57	692+23.45	16°23'01"	2°58'53"	276.66	549.55	MATCH EXIST. (0.040)	MATCH EXIST.	60 MPH
430L-1	673+66.66	676+67.55	679+67.90	6°00'00"	0°59'53"	300.90	601.25	MATCH EXIST. (0.030)	MATCH EXIST.	60 MPH
430L-2	679+67.90	683+30.06	686+71.95	33°06'46"	4°42'12"	362.16	704.05	MATCH EXIST. (0.046)	MATCH EXIST.	60 MPH
RI-1	8213+68.18	8214+64.40	8215+60.45	5°46'05"	3°00'00"	96.22	192.27	N.A.	N.A.	70 MPH
RI-2	8228+55.24	8232+82.00	8236+92.93	26°58'20"	3°13'12"	426.75	837.68	MATCH EXIST. (0.040)	MATCH EXIST.	50 MPH
R2-1	692+23.45	693+02.36	693+81.19	4°42'49"	2°59'18"	78.91	157.74	N.A.	N.A.	50 MPH
R3-1	663+54.20	665+49.56	667+43.06	13°40'23"	3°30'58"	195.36	388.87	MATCH EXIST. (0.040)	MATCH EXIST.	50 MPH
R3-2	671+71.19	682+21.74	685+71.65	110°52'34"	7°55'02"	1050.55	1400.47	MATCH EXIST. (0.080)	MATCH EXIST.	50 MPH

STATE OF ARKANSAS
LICENSED PROFESSIONAL ENGINEER
No.13422
JOHN F. CANTABERRY
7-18-14

PI 10+37.93 8133 R3D-1
C.L. RAMP 3
C.L. RAMP 4 STA. 8205+17.86 = C.L. RAMP 3 STA. 668+08.96
∢ = 32°57'41"
PC 8206+46.03 PT 14+02.11 PT 667+43.06
PN:1067 PD:5/8"REBAR W/2"CAP
R4-2
PI 8209+66.41 8102
PI 20+03.37
PT 8212+48.40
PN:1051 PD:5/8"REBAR W/2"CAP
PN:1059 PD:5/8"REBAR W/2"CAP
PT 20+75.79
PC 8216+92.23 8104
PI 682+21.74 8093 R4-3
PT 8221+75.09 8106
40L-1
8105
PN:1057 PD:5/8"REBAR W/2"CAP
40M-1
PI 8219+43.24
PN:1056 PD:5/8"REBAR W/2"CAP
40R-1
C.L. I-40 RT. LANES
PN:1069 PD:5/8"REBAR W/2"CAP
R3-2
PI 685+71.65 8094
PI 8232+82.00
8060 8014 8037
PI 8225+30.61
PI 8225+90.44
PN:1068 PD:5/8"REBAR W/2"CAP
8080
C.L. RAMP 4 STA. 8221+75.09 = C.L. I-40 LT. LANES STA. 8221+75.09, 7.50' LT.
PC 8228+55.24
C.L. RAMP 1
RI-2 8081
PN:1070 PD:5/8"REBAR W/2"CAP
C.L. RAMP 1 STA. 8236+92.93 = C.L. I-430 LT. LANES STA. 693+17.76, 4.50' RT.
PT 8236+92.93 8076
C.L. I-40 MEDIAN
C.L. I-40 LT. LANES
PT 8236+33.41 8038
PN:1058 PD:5/8"REBAR W/2"CAP
C.L. I-40 MEDIAN STA. 8240+59.16 = C.L. RAMP 4 STA. 8202+08.71
∢ = 68°42'05"
C.L. I-40 LT. LANES STA. 8239+36.89 = C.L. RAMP 4 STA. 8202+98.74
∢ = 62°03'15"
R3D-2 8240+60.15 PT 8239+77.28 8090
R3D-3 8082
PC 671+71.19 PT 19+29.54 8091
8139 8138 8137
8240+00
8235+00
8230+00
8225+00
8220+00
680+00
670+00
S47°30'23"E
S71°49'26"E
S21°37'03"W
N06°34'45"W
N20°23'36"E
N74°52'54"E
N10°10'05"E
C.L. I-40 RT. LANES STA. 8241+72.57 = C.L. RAMP 4 STA. 8201+28.07
∢ = 74°41'23"
PI 8201+81.47 8100
PN:1060 PD:5/8"REBAR W/2"CAP
PC 708+10.07 8086
PN:1078 PD:5/8"REBAR W/2"CAP
R4-1
PN:1079 PD:5/8"REBAR W/2"CAP
705+00
PN:1077 PD:5/8"REBAR W/2"CAP
C.L. RAMP 4
PC 8193+09.89
700+00
8099
C.L. RAMP 2
PN:1076 PD:5/8"REBAR W/2"CAP
8190+00
695+00
8085
PI 693+81.19
8084
8083
R2-1
PC 692+23.45
PI 693+02.36
8069
8068
PI 689+50.57
C.L. I-430 RT. LANES
430R-2
PN:1075 PD:5/8"REBAR W/2"CAP
MATCH LINE "B"
C.L. RAMP 2 STA. 692+23.45 = C.L. I-430 RT. LANES STA. 692+23.45, 4.50' RT.
C.L. I-430 RT. LANES STA. 692+23.45 = C.L. RAMP 2 STA. 692+23.45, 4.50' LT. = C.L. RAMP 4 STA. 8185+37.91, 13.50' RT.
C.L. RAMP 4 STA. 8185+37.91 = C.L. I-430 RT. LANES STA. 692+23.45, 13.50' LT.
C.L. RAMP 3 STA. 692+95.45 = C.L. I-430 LT. LANES STA. 692+95.45, 16.50' RT.
PC 692+54.64
PT 692+75.05
PT 692+95.45 8097
R3-3
PN:1071 PD:5/8"REBAR W/2"CAP
C.L. I-430 LT. LANES
C.L. I-430 LT. LANES STA. 693+17.76 = C.L. RAMP 1 STA. 8236+92.93, 4.50' RT.
MATCH LINE "A"
PC 686+73.91 8067
MATCH LINE "A"
PT 686+71.95 8075
N53°47'04"E
PI 683+30.06 8074
PT 682+51.32 8066
PN:1072 PD:5/8"REBAR W/2"CAP
430L-2
C.L. I-430 LT. LANES
430R-1
PI 678+70.81 8065
PC 679+67.90 8073
PI 676+67.55 8072
C.L. I-430 RT. LANES
430L-1
PC 674+89.66 8064
PN:1073 PD:5/8"REBAR W/2"CAP
PC 673+66.66 8071
N59°30'22"E
8070
8063

SURVEY CONTROL DETAILS

STA. 8232+68.78
END JOB CA0609
L.M. 147.46

cggervasini 7/17/2014 7:43:59 PM
WORKSPACE: AHTD
L:\CAD\MOT709 - I-40 at I-430 Interchange Modifications\Drawings\RCA0609_SC_04.dgn
REVISED DATE:

DATE	DATE FILMED	DATE REVISED	DATE FILMED	FED.RD. DIST.NO.	STATE	FED.AID PROJ.NO.	SHEET NO.	TOTAL SHEETS
				6	ARK.			
				JOB NO.		CA0609	214	693

(2) P & P-STA. 7960 +00 TO STA. 7975+00

STATE OF ARKANSAS
REGISTERED PROFESSIONAL ENGINEER
No. 11427
KEVIN G. TOBLESKY
7/17/14

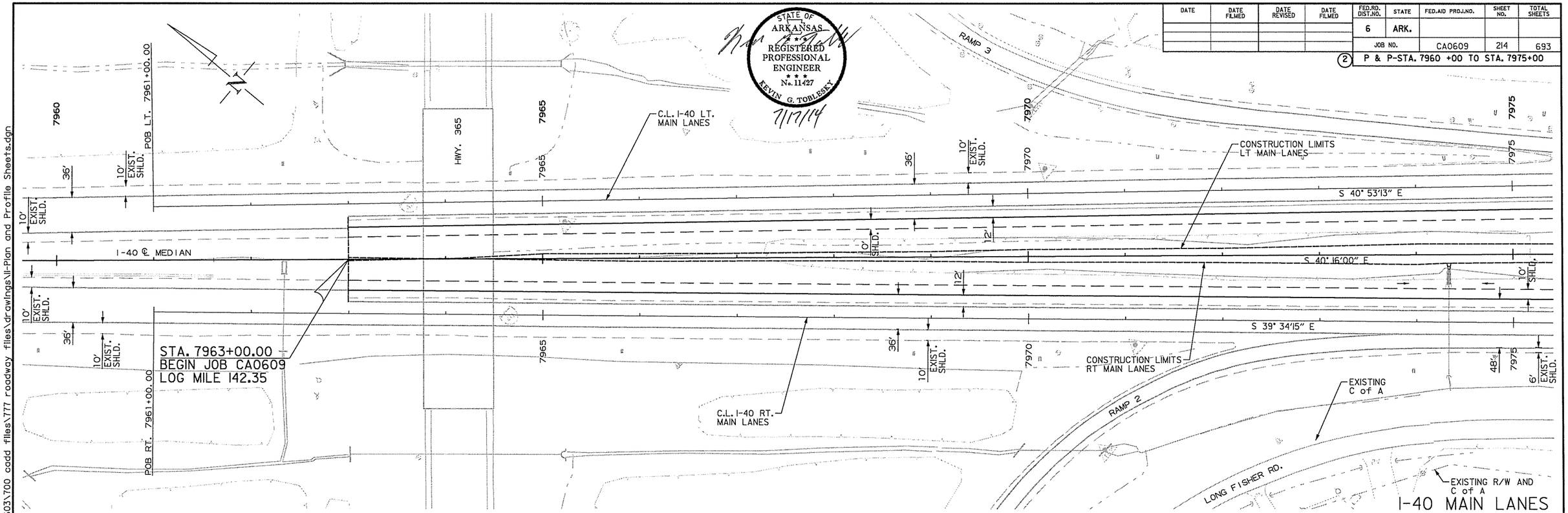

I-40 MAIN LANES

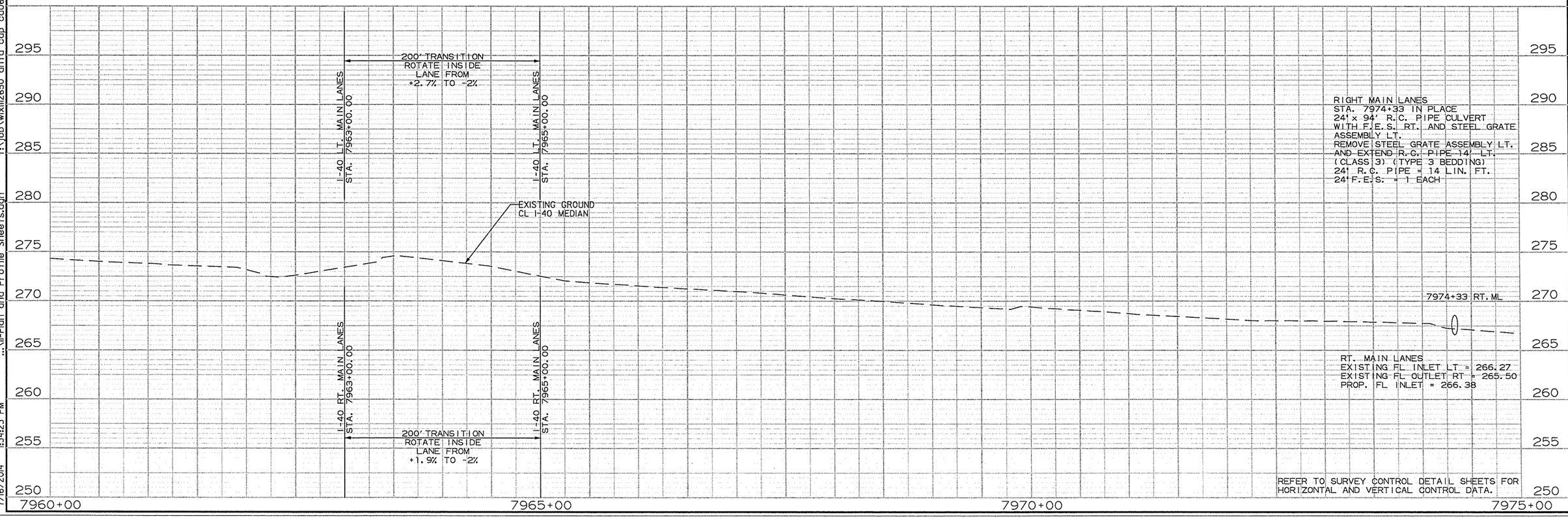

t:\Job\wixm2650 ahtd cap ca0603\700 cadd files\777 roadway files\drawings\ll-Plan and Profile Sheets.dgn
...\ll-Plan and Profile Sheets.dgn
7/16/2014 1:34:23 PM

DATE	DATE FILMED	DATE REVISED	DATE FILMED	FED.RD. DIST.NO.	STATE	FED.AID PROJ.NO.	SHEET NO.	TOTAL SHEETS
				6	ARK.			
				JOB NO.		CA0609	215	693

(2) P & P-STA. 7975+00 TO STA. 7990+00

GUARDRAIL - INSTALLATION	GUARDRAIL (TYPE A)	GUARDRAIL TEMINAL (TYPE 1)	GUARDRAIL TERMINAL (TYPE 2)
STA. 7978+70 TO STA. 7981+95 LT OF CL LT MAIN LANES = 275 LIN. FT.		1 EACH	1 EACH
STA. 7978+70 TO STA. 7981+95 RT OF CL LT MAIN LANES = 275 LIN. FT.		1 EACH	1 EACH

STA 7979+45 INSTALL OVERHEAD HIGHWAY SIGNS AND OVERHEAD STRUCTURE I-40 LT. MAIN LANES SEE SIGNING PLANS

EXISTING GUARDRAIL - RETAIN

STA.	STA.	LOCATION	LIN. FT.
7984+66	7987+66	LT OF CL LT MAIN LANES	300
7983+64	7986+64	RT OF CL RT MAIN LANES	300

LEFT MAIN LANES
STA. 7985+18 IN PLACE
DBL. 5' x 6' x89' R.C. BOX CULVERT
WITH 3:1 WINGS LT.
30° RT. FORWARD SKEW
RETAIN AND EXTEND 23' RT.
FOR A COMPLETED LENGTH OF 112'

EXISTING R/W AND C of A

C.L. I-40 LT MAIN LANES

S 40° 53'13" E

CONSTRUCTION LIMITS LT MAIN LANES

I-40 ℄ MEDIAN

S 40° 16'00" E

S 39° 34'15" E

C.L. I-40 RT MAIN LANES

CONSTRUCTION LIMITS RT MAIN LANES

CONCRETE DITCH PAVING (TYPE A)

STA.	STA.	LOCATION	'W'	'B'	SQ. YD.
7985+51	7985+80	I-40 CL MEDIAN	18	10	116

REMOVAL AND DISPOSAL OF CONCRETE DITCH PAVING

STA.	STA.	LOCATION	SQ. YD.
7985+34	7985+97	I-40 CL MEDIAN	154
7986+26	7986+66	I-40 CL MEDIAN	22
7989+03	7989+86	I-40 CL MEDIAN	44

REMOVAL AND DISPOSAL OF GUARDRAIL

STA.	STA.	LOCATION	LIN. FT.
7985+07	7988+57	RT OF CL LT MAIN LANES	350
7982+80	7986+30	LT OF CL RT MAIN LANES	350

EXISTING C of A

RIGHT MAIN LANES
STA. 7986+10 IN PLACE
DBL. 5' x 6' x83' R.C. BOX CULVERT
WITH 3:1 WINGS LT.
30° RT. FORWARD SKEW
RETAIN AND EXTEND 25' LT.
FOR A COMPLETED LENGTH OF 108'

EXISTING R/W

CL I-40 MEDIAN
PI = 7999+46.08
Δ = 10°44'00"RT.
D = 0°30'00"
T = 1076.48
L = 2146.67
PC = 7988+69.60
PT = 8010+16.27

I-40 MAIN LANES

EXISTING GROUND CL I-40 MEDIAN

7985+18 LT. ML 7986+10 RT. ML

LEFT MAIN LANES
EXIST. FL INLET LT = 260.12
EXIST. FL OUTLET RT = 259.95
PROP. FL OUTLET RT = 259.91

RIGHT MAIN LANES
EXIST. FL INLET LT = 259.55
EXIST. FL OUTLET RT = 259.19
PROP. FL INLET LT = 259.68

REFER TO SURVEY CONTROL DETAIL SHEETS FOR HORIZONTAL AND VERTICAL CONTROL DATA.

STATE OF ARKANSAS
REGISTERED PROFESSIONAL ENGINEER
No. 11427
KEVIN G. TOBLESEY
7/17/14

7975+00 7980+00 7985+00 7990+00

295 290 285 280 275 270 265 260 255 250

t:\job\wlxm2650 ahtd cap ca0603\700 cadd files\777 roadway files\drawings\ll-Plan and Profile Sheets.dgn
...\ll-Plan and Profile Sheets.dgn
7/16/2014 1:34:24 PM

DATE	DATE FILMED	DATE REVISED	DATE FILMED	FED.RD. DIST.NO.	STATE	FED.AID PROJ.NO.	SHEET NO.	TOTAL SHEETS
				6	ARK.			
				JOB NO.		CA0609	216	693

(2) P & P-STA. 7990+00 TO STA. 8005+00

REMOVAL AND DISPOSAL OF CONCRETE DITCH PAVING

STA.	STA.	LOCATION	SQ. YD.
7990+75	7991+32	I-40 CL MEDIAN	32
7994+24	7994+71	I-40 CL MEDIAN	30
8002+32	8003+34	I-40 CL MEDIAN	53
8005+28	8005+30	I-40 CL MEDIAN	44

CONCRETE DITCH PAVING (TYPE B)

STA.	STA.	SIDE	"W"	SQ. YDS.
7996+00	8003+00	RT OF CL LT MAIN LANES	4'	311

CL I-40 MEDIAN
PI= 7999+46.08
Δ = 10°44'00"RT.
D = 0°30'00"
T = 1076.48
L = 2146.67
PC = 7988+69.60
PT = 8010+16.27

CL LT MAIN LANES
PI = 7999+68.59
Δ = 12°45'51"RT.
D = 1°00'00"
T = 640.86'
L = 1276.42'
PC = 7993+27.73
PT = 8006+04.15
e = MATCH EXISTING
Ls = MATCH EXISTING

CL RT MAIN LANES
PI = 7999+40.55
Δ = 8°37'12"RT.
D = 0°30'00"
T = 863.62
L = 1723.98
PC = 7990+76.93
PT = 8008+00.91
e = N.C.
Ls = N.A.

STATE OF ARKANSAS
REGISTERED PROFESSIONAL ENGINEER
No. 11427
KEVIN G. TOBLESEY
7/17/14

7990 7990 36' 10' EXIST. SHLD. S 40° 53'13" E 12' 10' SHLD. CONSTRUCTION LIMITS LT MAIN LANES C.L. I-40 LT MAIN LANES 7995 7995 PI LT. 7999+68.59 8000 8000 S 28° 07'22" E PI MEDIAN 7999+46.08 I-40 ℄ MEDIAN S 40° 16'00" E S 29° 32'00" E 10' SHLD. CONSTRUCTION LIMITS RT MAIN LANES 36' 12' S 39° 34'15" E PI RT. 7999+40.55 S 30° 57'03" E 7990 10' EXIST. SHLD. PC LT. 7993+27.73 7995 C.L. I-40 RT MAIN LANES 8000 8005 8005 PC RT. 7990+76.93 EXISTING R/W

I-40 MAIN LANES

EXISTING GROUND CL I-40 MEDIAN

295 290 285 280 275 270 265 260 255 250

7990+00 7995+00 8000+00 8005+00

REFER TO SURVEY CONTROL DETAIL SHEETS FOR HORIZONTAL AND VERTICAL CONTROL DATA.

7/16/2014 t:34:24 PM t:\Job\wlxm2650 dhtd cap ca0603\700 cadd files\777 roadway files\drawings\II-Plan and Profile Sheets.dgn ...\II-Plan and Profile Sheets.dgn

DATE	DATE FILMED	DATE REVISED	DATE FILMED	FED.RD. DIST.NO.	STATE	FED.AID PROJ.NO.	SHEET NO.	TOTAL SHEETS
				6	ARK.			
				JOB NO.		CA0609	217	693

(2) P & P-STA. 8005+00 TO STA. 8020+00

LEFT MAIN LANES
STA. 8005+47 IN PLACE
30" x 115' R.C. PIPE CULVERT
WITH F.E.S. LT. AND HDWL. RT.
REMOVE HDWL. RT. AND EXTEND R.C. PIPE
18' RT.
(CLASS 3) (TYPE 3 BEDDING)
30' R.C. PIPE = 22 LIN. FT.
30' F.E.S. = 1 EACH

CONCRETE DITCH PAVING (TYPE B)

STA.	STA.	SIDE	"W"	SQ. YDS.
8006+00	8011+18	LT OF CL RT MAIN LANES	4'	230
8005+25		MEDIAN	6'	24

LEFT MAIN LANES
STA. 8011+52 IN PLACE
24" x 85' R.C. PIPE CULVERT
WITH HDWL. LT. AND F.E.S. RT.
REMOVE F.E.S. RT. AND EXTEND R.C. PIPE
14' RT.
(CLASS 3) (TYPE 3 BEDDING)
24' R.C. PIPE = 14 LIN. FT.
24' F.E.S. = 1 EACH

EXISTING R/W AND C of A

CL LT MAIN LANES
PI = 8028+16.91
Δ = 22°57'44" LT.
D = 1°00'00"
T = 1163.73
L = 2296.22
PC = 8016+53.18
PT = 8039+49.40

CL I-40 MEDIAN
PI = 8028+03.67
Δ = 20°58'00" LT.
D = 0°42'00"
T = 1514.56
L = 2995.24
PC = 8012+89.11
PT = 8042+84.35

CL RT MAIN LANES
PI = 8028+05.80
Δ = 18°59'46" LT.
D = 1°00'00"
T = 958.60
L = 1899.60
PC = 8018+47.20
PT = 8037+46.80

STATE OF ARKANSAS
REGISTERED PROFESSIONAL ENGINEER
No. 11427
KEVIN G. TOBLESKY
7/7/14

8005 8005 36' 10' EXIST. SHLD. C.L. I-40 LT. MAIN LANES 8010 8010 PT MEDIAN 8010+16.27 PC MEDIAN 8012+89.11 8015 8015 PC LT. 8016+53.18 PC RT. 8018+47.20 8020 8020

CONSTRUCTION LIMITS LT MAIN LANES

STA. 8016+00 LT MAIN LANES BEGIN CONC. BARRIER WALL (SIDE TYPE A)

FLOOD PLAIN LIMITS

12' 10' SHLD. GRADE TO PROVIDE POSITIVE DRAINAGE

S 28° 07'22" E

S 29° 32'00" E

I-40 ℄ MEDIAN

10' SHLD. 36' 12'

S 30° 57'03" E

8005 PT LT. 8006+04.15 C.D.P. C.L. I-40 RT. MAIN LANES 10' EXIST. SHLD. 8010 8015 8020

CONSTRUCTION LIMITS RT MAIN LANES

STA. 8016+00 RT MAIN LANES BEGIN CONC. BARRIER WALL (SIDE TYPE A)

FLOOD PLAIN LIMITS

RIGHT MAIN LANES
STA. 8005+20 IN PLACE
30" x 86' R.C. PIPE CULVERT
WITH F.E.S. RT. AND HDWL. LT.
REMOVE HDWL. LT. AND EXTEND R.C. PIPE
20' LT.
(CLASS 3) (TYPE 3 BEDDING)
30" R.C. PIPE = 24 LIN. FT.
30' F.E.S. = 1 EACH

PT RT. 8008+00.91

RIGHT MAIN LANES
STA. 8011+18 IN PLACE
24" x 85' R.C. PIPE CULVERT
WITH HDWL. RT. AND F.E.S. LT.
REMOVE F.E.S. LT. AND EXTEND R.C. PIPE
12' LT.
(CLASS 3) (TYPE 3 BEDDING)
24' R.C. PIPE = 12 LIN. FT.
24' F.E.S. = 1 EACH

EXISTING R/W AND C of A

GUARDRAIL - INSTALLATION

	GUARDRAIL (TYPE A)	THRIE BEAM GUARDRAIL TERMINAL (TYPE 2)	GUARDRAIL TERMINAL
STA. 8013+31.85 TO STA. 8016+00.60 LT OF CL RT MAIN LANES	200 LIN. FT.	1 EACH	1 EACH

8005+47 LT. ML
8005+20 RT. ML

LEFT MAIN LANES
EXIST. FL INLET LT = 274.29
EXIST. FL OUTLET RT = 273.71
PROP FL OUTLET RT = 273.62

RIGHT MAIN LANES
EXIST. FL INLET LT = 270.40
EXIST. FL OUTLET RT = 268.44
PROP. FL INLET LT = 270.87

8011+52 LT. ML
8011+18 RT. ML

EXISTING GROUND CL I-40 MEDIAN

SPECIAL DITCH GRADE STATIONS ARE BASED ON C.L. I-40 RIGHT MAIN LANE STATIONING

0.30% DT. GR. SPECIAL DITCH

0.42% DT. GR. SPECIAL DITCH

8011+18.00 265.54

8013+00.00 266.09

LT MAIN LANES
EXIST. FL INLET LT = 267.32
EXIST. FL OUTLET RT = 266.51
PROP. FL OUTLET RT = 266.38

RT MAIN LANES
EXIST. FL INLET LT = 265.36
EXIST. FL OUTLET RT = 264.10
PROP. FL INLET LT = 265.54

REFER TO SURVEY CONTROL DETAIL SHEETS FOR HORIZONTAL AND VERTICAL CONTROL DATA.

295 290 285 280 275 270 265 260 255 250

8005+00 8010+00 8015+00 8020+00

t:\Job\wlkm2650 ahtd cap ca0603\700 cadd files\777 roadway files\drawings\II-Plan and Profile Sheets.dgn
...\II-Plan and Profile Sheets.dgn
7/16/2014 1:34:24 PM

DATE	DATE FILMED	DATE REVISED	DATE FILMED	FED.RD. DIST.NO.	STATE	FED.AID PROJ.NO.	SHEET NO.	TOTAL SHEETS
				6	ARK.			
				JOB NO.		CA0609	218	693

(2) P & P -STA. 8020+00 TO STA. 8035+00

REMOVAL AND DISPOSAL OF GUARDRAIL

STA.	STA.	LOCATION	LIN. FT.
8030+53	8033+78	LT OF CL RT MAIN LANES	325
8031+05	8033+80	RT OF CL RT MAIN LANES	275

LEFT MAIN LANES-BR A3230
STA. 8033+86.29 TO STA. 8035+36.29 IN PLACE
150'-0" X 56'-0" CLEAR ROADWAY WIDTH
BRIDGE CONSISTING OF FIVE 30'-0" R.C. DECK GIRDER SPANS
RETAIN

RIGHT MAIN LANES-BR B3230
STA. 8033+84.05 TO STA. 8035+34.05 IN PLACE
150'-0" X 56'-0" CLEAR ROADWAY WIDTH
BRIDGE CONSISTING OF FIVE 30'-0" R.C. DECK GIRDER SPANS
RETAIN

CONCRETE DITCH PAVING (TYPE B)

STA.	STA.	SIDE	'W'	SQ. YDS.
8020+00	8033+77	CL I-40 MEDIAN	VAR.	4281

EXISTING R/W AND C of A

FLOOD PLAIN LIMITS

C.D.P.

C.L. I-40 LT. MAIN LANES

I-40 ℄ MEDIAN

C.L. I-40 RT. MAIN LANES

EXISTING BR. END 8033+86.29

WHITE OAK BAYOU

A3230

B3230

C. D. P.

STA. 8033+49.79 LT MAIN LANES END CONC. BARRIER WALL (SIDE TYPE A)

STA. 8033+47.55 RT MAIN LANES END CONC. BARRIER WALL (SIDE TYPE A)

EXISTING BR. END 8033+84.05

S 28° 07'22" E
S 51° 05'06" E
S 29° 32'00" E
S 50° 30'00" E
S 30° 57'03" E
S 49° 56'49" E

RIGHT MAIN LANES
STA. 8020+32 IN PLACE
TYPE M DROP INLET ON LT. IN MEDIAN WITH
24' x 96' R.C. PIPE CULVERT WITH HDWL. RT.
REMOVE DROP INLET AND EXTEND R.C. PIPE
6' LT.
(CLASS 3) (TYPE 3 BEDDING)
CONSTRUCT TYPE 'RM' DROP INLET
4'-x4'-xH = 3'-0"
24" R.C. PIPE = 6 LIN. FT.

DENOTES COLD MILLING & INLAY OF EXISTING PAVEMENT

DENOTES REMOVAL AND DISPOSAL OF PAVEMENT

EXISTING R/W AND C of A

CL LT MAIN LANES
PI = 8028+16.91
Δ = 22°57'44"LT.
D = 1°00'00"
T = 1163.73
L = 2296.22
PC = 8016+53.18
PT = 8039+49.40

CL I-40 MEDIAN
PI = 8028+03.67
Δ = 20°58'00"LT.
D = 0°42'00"
T = 1514.56
L = 2995.24
PC = 8012+89.11
PT = 8042+84.35

CL RT MAIN LANES
PI = 8028+05.80
Δ = 18°59'46"LT.
D = 1°00'00"
T = 958.60
L = 1899.60
PC = 8018+47.20
PT = 8037+46.80

PI LT. 8028+16.91
MEDIAN 8028+03.67
8028+05.80

GUARDRAIL - INSTALLATION

	GUARDRAIL (TYPE-A)	GUARDRAIL THRIE BEAM	GUARDRAIL TERMINAL (TYPE 2)
STA. 8031+61.25 TO STA. 8033+80.00 RT OF CL RT MAIN LANES = 150 LIN. FT.		1 EACH	1 EACH

REMOVAL AND DISPOSAL OF APPROACH GUTTERS

STA.	STA.	LOCATION	EACH
8033+47.55	8033+84.05	LT OF CL RT MAIN LANES	1
8033+49.79	8033+86.29	RT OF CL LT MAIN LANES	1

STATE OF ARKANSAS
REGISTERED PROFESSIONAL ENGINEER
No. 11427
KEVIN G. TOBLESKY
7/10/14

I-40 MAIN LANES

EXISTING GROUND CL I-40 MEDIAN

SPECIAL DITCH GRADE STATIONS ARE BASED ON C.L. I-40 RIGHT MAIN LANE STATIONING

0.32% DT. GR. SPECIAL DITCH

0.34% DT. GR.

8020+32 RT. ML

8020+32.00 263.01

8033+00.00 267.07

8033+86.00 266.78

RT MAIN LANES
EXIST. FL INLET LT = 260.01
EXIST. FL OUTLET RT = 258.70
PROP. FL INLET LT = 260.09
TOP = 263.01

REFER TO SURVEY CONTROL DETAIL SHEETS FOR HORIZONTAL AND VERTICAL CONTROL DATA.

295 290 285 280 275 270 265 260 255 250

8020+00 8025+00 8030+00 8035+00

t:\Job\wlxm2650 ahtd cap ca0603\700 cadd files\777 roadway files\drawings\ll-Plan and Profile Sheets.dgn
7/16/2014 1:34:25 PM

DATE	DATE FILMED	DATE REVISED	DATE FILMED	FED.RD. DIST.NO.	STATE	FED.AID PROJ.NO.	SHEET NO.	TOTAL SHEETS
				6	ARK.			
				JOB NO.		CA0609	219	693

P & P-STA. 8035+00 TO STA. 8050+00

STATE OF ARKANSAS
REGISTERED PROFESSIONAL ENGINEER
No. 11427
KEVIN G. TOBLESEY
7/17/14

EXISTING BR. END 8035+36.29

STA. 8035+72.79 LT MAIN LANES BEGIN CONC. BARRIER WALL (SIDE TYPE A)

WHITE OAK BAYOU

PT RT. 8037+46.80

PT LT. 8039+49.40

PT MEDIAN 8042+84.35

FLOOD PLAIN LIMITS

C.L. I-40 LT. MAIN LANES

FLOOD PLAIN LIMITS

10' EXIST. SHLD.

36'

A3230

S 51° 05'06" E

C.D.P.

B3230

S 50° 30'00" E

I-40 ℄ MEDIAN

10' SHLD.

16' SHLD.

12'

S 49° 56'49" E

STA. 8035+70.55 RT MAIN LANES BEGIN CONC. BARRIER WALL (SIDE TYPE A)

C.D.P.

C.L. I-40 RT. MAIN LANES

FLOOD PLAIN LIMITS

10' EXIST. SHLD.

36'

EXISTING BR. END 8035+34.05

STA. 8050+00 RT MAIN LANES END CONC. BARRIER WALL (SIDE TYPE A)

REMOVAL AND DISPOSAL OF GUARDRAIL

STA.	STA.	LOCATION	LIN. FT.
8035+37	8038+62	RT OF CL LT MAIN LANES	325
8035+44	8038+19	LT OF CL LT MAIN LANES	275

LEFT MAIN LANES
STA. 8045+43 IN PLACE
24' x 109' R.C. PIPE CULVERT WITH TYPE H DROP INLET RT. IN MEDIAN
4' x 3' x H = 5'-6'
RETAIN AND ADJUST DROP INLET TO GRADE H = 7'-5"

CL RT MAIN LANES
PI = 8028+05.80
Δ = 18°59'46"LT.
D = 1°00'00"
T = 958.60
L = 1899.60
PC = 8018+47.20
PT = 8037+46.80

CL LT MAIN LANES
PI = 8028+16.91
Δ = 22°57'44"LT.
D = 1°00'00"
T = 1163.73
L = 2296.22
PC = 8016+53.18
PT = 8039+49.40

CL I-40 MEDIAN
PI = 8028+03.67
Δ = 20°58'00"LT.
D = 0°42'00"
T = 1514.56
L = 2995.24
PC = 8012+89.11
PT = 8042+84.35

CONCRETE DITCH PAVING (TYPE B)

STA.	STA.	SIDE	"W"	SQ. YDS.
8035+22	8046+88	CL I-40 MEDIAN	VAR.	3065

REMOVAL AND DISPOSAL OF APPROACH GUTTERS

STA.	STA.	LOCATION	EACH
8035+34.05	8035+70.55	LT OF CL RT MAIN LANES	1
8035+36.29	8035+72.79	RT OF CL LT MAIN LANES	1

DENOTES COLD MILLING & INLAY OF EXISTING PAVEMENT

DENOTES REMOVAL AND DISPOSAL OF PAVEMENT

GUARDRAIL - INSTALLATION
STA. 8035+44.00 TO STA. 8037+62.75 LT OF CL LT MAIN LANES = 150 LIN. FT.

GUARDRAIL (TYPE A)	GUARDRAIL THRIE BEAM	GUARDRAIL TERMINAL (TYPE 2)
	1 EACH	1 EACH

EXISTING R/W AND C of A

I-40 MAIN LANES

SPECIAL DITCH GRADE STATIONS ARE BASED ON C.L. I-40 RIGHT MAIN LANE STATIONING

8035+36.00
267.29

0.50% DT. GR.

8037+00.00
268.11

-0.44% DT. GR.
SPECIAL DITCH

EXISTING GROUND CL I-40 MEDIAN

8045+43.00
264.40

8045+43 LT. ML
TOP D. I. = 261.67

0.83% DT. GR.

8047+00.00
265.70

0.30% DT. GR.
SPECIAL DITCH

LT MAIN LANES
EXIST. FL INLET RT = 257.02
EXIST. FL OUTLET LT = 255.71
EXIST. FL DROP INLET RT = 256.99
TOP=264.40

REFER TO SURVEY CONTROL DETAIL SHEETS FOR HORIZONTAL AND VERTICAL CONTROL DATA.

285 280 275 270 265 260 255 250 245 240

8035+00 8040+00 8045+00 8050+00

t:\Job\wlxm2650 ahtd cap ca0603\700 cadd files\777 roadway files\drawings\ll-Plan and Profile Sheets.dgn

7/16/2014 1:34:29 PM ...\ll-Plan and Profile Sheets.dgn

DATE	DATE FILMED	DATE REVISED	DATE FILMED	FED.RD. DIST.NO.	STATE	FED.AID PROJ.NO.	SHEET NO.	TOTAL SHEETS
				6	ARK.			
				JOB NO.		CA0609	220	693

(2) P & P-STA. 8050+00 TO STA. 8065+00

GUARDRAIL - INSTALLATION

	GUARDRAIL (TYPE A)	THRIE BEAM GUARDRAIL TEMINAL	GUARDRAIL TERMINAL (TYPE 2)	TERMINAL ANCHOR POST (TYPE 1)
STA. 8051+30.40 TO STA. 8054+49.15 RT OF CL LT MAIN LANES = 250 LIN. FT.		1 EACH	1 EACH	
STA. 8049+99.40 TO STA. 8052+68.15 LT OF CL RT MAIN LANES = 250 LIN. FT.		1 EACH		1 EACH

REMOVAL AND DISPOSAL OF GUARDRAIL

STA.	STA.	LOCATION	LIN. FT.
8051+46	8054+21	LT OF CL LT MAIN LANES	275
8049+43	8052+18	RT OF CL RT MAIN LANES	275

STATE OF ARKANSAS
REGISTERED PROFESSIONAL ENGINEER
No. 11427
KEVIN G. TOBLESKY
7/17/14

LEFT MAIN LANES
STA. 8054+45 IN PLACE
WITH TYPE H DROP INLET RT.
IN MEDIAN,
4' x 3' x H = 3'-6"
24" x 112' R.C. PIPE OULET
RETAIN AND ADJUST DROP INLET
TO GRADE H = 8'-10

FLOOD PLAIN LIMITS

STA. 8051+31 LT MAIN LANES
END CONC. BARRIER WALL
(SIDE TYPE A)

STA. 8051+54 INSTALL
OVERHEAD HIGHWAY SIGN
AND BRIDGE MOUNTED STRUCTURE
I-40 LT. MAIN LANES
SEE SIGNING PLANS

LEFT MAIN LANES
STA. 8056+33 IN PLACE
24" x 110' R.C. PIPE CULVERT
WITH HDWLS. LT. AND RT.
REMOVE HDWL. RT. AND EXTEND R.C. PIPE
5' RT.
CONSTRUCT TYPE 'RM' DROP INLET IN MEDIAN
4' x 4' x H = 7'-4"
(CLASS 3) (TYPE 3 BEDDING)
24" R.C. PIPE = 9 LIN. FT.

FLOOD PLAIN LIMITS
C.L. I-40 LT. MAIN LANES
10' EXIST. SHLD.
36'
10' SHLD.
12'
12'
10' SHLD.
I-40 ℄ MEDIAN
C.L. I-40 RT. MAIN LANES
10' EXIST. SHLD.
36'

CONSTRUCTION LIMITS

STA. 14+11.35 ℄ MARCHE RD. =
STA. 8051+13.73 I-40 ℄ MEDIAN
Δ= 53°50'42"

STA. 8050+00 RT MAIN LANES
END CONC. BARRIER WALL
(SIDE TYPE A)

FLOOD PLAIN LIMITS

℄ MARCHE RD.
N 3°20'42" E

FLOOD PLAIN LIMITS

FLOOD PLAIN LIMITS

RIGHT MAIN LANES
STA. 8054+45 IN PLACE
24' X 120' R.C. PIPE INLET
RETAIN

CONSTRUCTION LIMITS

REMOVAL AND DISPOSAL OF IMPACT ATTENUATION BARRIER

STA.	LOCATION	EACH
8051+91	RT OF CL LT MAIN LANES	1
8051+72	LT OF CL RT MAIN LANES	1

REMOVAL AND DISPOSAL OF PIER PROTECTION

STA.	STA.	LOCATION	LIN. FT.
8051+13	8051+46	LT OF CL LT MAIN LANES	33
8051+53	8051+76	RT OF CL LT MAIN LANES	23
8051+86	8052+09	LT OF CL RT MAIN LANES	23
8052+18	8052+51	RT OF CL RT MAIN LANES	33

EXISTING R/W AND C of A

I-40 MAIN LANES

8051+50.00 267.05
0.73% DT. GR.
SPECIAL DITCH
0.38% RT. DT. GR.
SPECIAL DITCH
8051+50.00 264.12
SPECIAL DITCH GRADE STATIONS ARE BASED ON C.L. I-40 RIGHT MAIN LANE STATIONING
8052+75.00 264.60
0.36% RT. DT. GR.
8053+00.00 265.96
-0.45% DT. GR.
8053+50.00 264.33
8054+45 LT. ML
8054+45 RT. ML
TOP D. I. = 260.62
8054+44.00 265.31
-2.14% DT. GR.
8055+00.00 264.11
LT MAIN LANES
EXIST. FL INLET RT = 256.50
EXIST. FL OUTLET LT = 255.99
F.L. D. I. RT = 256.50
TOP=265.31
RT MAIN LANES
EXIST. FL INLET LT = 256.54
EXIST. FL OUTLET RT = 256.41
8056+33 LT. ML
8056+33.00 263.71
-0.30% DT. GR.
SPECIAL DITCH GRADE STATIONS ARE BASED ON C.L. I-40 RIGHT MAIN LANE STATIONING
LT MAIN LANES
EXIST. FL INLET RT = 256.40
EXIST. FL OUTLET LT = 255.14
PROP. FL INLET RT = 256.41
TOP=263.71
0.30% DT. GR.
SPECIAL DITCH
EXISTING GROUND CL I-40 MEDIAN
8064+53.76 266.7

285 280 275 270 265 260 255 250 245 240

8050+00 8055+00 8060+00 8065+00

REFER TO SURVEY CONTROL DETAIL SHEETS FOR HORIZONTAL AND VERTICAL CONTROL DATA.

t:\job\wlxm2650 dhtd cap ca0603\700 cadd files\777 roadway files\drawings\II-Plan and Profile Sheets.dgn
7/16/2014 1:34:30 PM

DATE	DATE FILMED	DATE REVISED	DATE FILMED	FED.RD. DIST.NO.	STATE	FED.AID PROJ.NO.	SHEET NO.	TOTAL SHEETS
				6	ARK.			
				JOB NO.		CA0609	221	693

(2) P & P-STA. 8065+00 TO STA. 8080+00

LEFT MAIN LANES
STA. 8067+42 IN PLACE
24" x 89' R.C. PIPE CULVERT
WITH HDWL. LT. AND F.E.S. RT.
REMOVE 26 LIN. FT. OF R.C. PIPE CULVERT &
F.E.S. RT. AND EXTEND R.C. PIPE
34' RT. (CLASS 3) (TYPE 3 BEDDING)
24' R.C. PIPE = 34 LIN. FT.
24" F.E.S. = 1 EACH

LEFT MAIN LANES
STA. 8076+34 IN PLACE
24" x 102' R.C. PIPE CULVERT
WITH HDWLS. LT. AND RT.
REMOVE HDWL. RT. AND EXTEND R.C. PIPE
18' RT.
(CLASS 3) (TYPE 3 BEDDING)
24' R.C. PIPE = 22 LIN. FT.
24" F.E.S. = 1 EACH

EXISTING R/W AND C of A

FLOOD PLAIN LIMITS

C.L. I-40 LT. MAIN LANES

10' EXIST. SHLD.

36'

S 51° 05'06", E

10' SHLD.

12'

CONSTRUCTION LIMITS LT MAIN LANES

I-40 ℄ MEDIAN

S 50° 30'00" E

CONSTRUCTION LIMITS RT MAIN LANES

12'

10' SHLD.

S 49° 56'49" E

C.L. I-40 RT. MAIN LANES

10' EXIST. SHLD.

36'

STA. 8074+91 INSTALL OVERHEAD HIGHWAY SIGN AND OVERHEAD STRUCTURE I-40 RT. MAIN LANES SEE SIGNING PLANS

PC LT. 8076+88.41

PC MEDIAN 8077+65.63

PC RT. 8075+87.30

CL LT MAIN LANES
PI = 8090+84.86
Δ = 46°11'55"RT.
D = 1°45'00"
T = 1396.45
L = 2639.92
PC = 8076+88.41
PT = 8103+28.33

CL I-40 MEDIAN
PI = 8089+46.45
Δ = 44°48'05"RT.
D = 2°00'00"
T = 1180.82
L = 2240.07
PC = 8077+65.63
PT = 8100+05.70

CL RT MAIN LANES
PI = 8089+30.89
Δ = 44°37'27"RT.
D = 1°45'00"
T = 1343.59
L = 2549.95
PC = 8075+87.30
PT = 8101+37.25

GUARDRAIL - INSTALLATION	GUARDRAIL (TYPE A)	GUARDRAIL TEMINAL (TYPE 1)	GUARDRAIL TERMINAL (TYPE 2)
STA. 8072+91 TO STA. 8076+16 LT OF CL RT MAIN LANES	275 LIN. FT.	1 EACH	1 EACH
STA. 8072+91 TO STA. 8076+16 RT OF CL RT MAIN LANES	275 LIN. FT.	1 EACH	1 EACH

EXISTING R/W AND C of A

I-40 MAIN LANES

SPECIAL DITCH GRADE STATIONS ARE BASED ON C.L. I-40 RIGHT MAIN LANE STATIONING

EXISTING GROUND CL I-40 MEDIAN

8067+42 LT. ML

8076+34 LT. ML

≈ 0.50% DT. GR.

8067+42.00
264.73

LT MAIN LANES
EXIST. FL INLET RT = 265.43
EXIST. FL OUTLET LT = 262.12
PROP. FL INLET RT = 264.73

LT MAIN LANES
EXIST. FL INLET RT = 267.03
EXIST. FL OUTLET LT = 265.46
PROP. FL INLET RT = 267.31

REFER TO SURVEY CONTROL DETAIL SHEETS FOR HORIZONTAL AND VERTICAL CONTROL DATA.

8065+00 8070+00 8075+00 8080+00

295 290 285 280 275 270 265 260 255 250

STATE OF ARKANSAS
REGISTERED PROFESSIONAL ENGINEER
No. 11427
KEVIN G. TOBLESKY
7/7/14

t:\Job\wlxm2650 ah+d cap ca0603\700 cadd files\777 roadway files\drawings\II-Plan and Profile Sheets.dgn
7/16/2014 1:34:30 PM

DATE	DATE FILMED	DATE REVISED	DATE FILMED	FED.RD. DIST.NO.	STATE	FED.AID PROJ.NO.	SHEET NO.	TOTAL SHEETS
				6	ARK.			
				JOB NO.		CA0609	222	693

(2) P & P-STA. 8080+00 TO STA. 8095+00

STATE OF ARKANSAS
REGISTERED PROFESSIONAL ENGINEER
No. 11427
KEVIN G. TOBLESKY
7/11/14

EXISTING R/W AND C of A

PI MEDIAN 8089+46.45

S 51° 05'06" E

S 50° 30'00" E

S 49° 56'49" E

PI RT. 8089+30.89

S 5° 41'55" E

S 5° 19'22" E

S 4° 53'11" E

C.L. I-40 LT. MAIN LANES

C.L. I-40 RT. MAIN LANES

I-40 ℄ MEDIAN

CONSTRUCTION LIMITS LT MAIN LANES

CONSTRUCTION LIMITS RT MAIN LANES

10' EXIST. SHLD.

36'

12'

10' SHLD.

8080 8085 8090 8095

LEFT MAIN LANES
STA. 8092+91 IN PLACE
42" x 98' R.C. PIPE CULVERT
WITH F.E.S. LT. AND RT.
REMOVE F.E.S. RT. AND EXTEND R.C. PIPE
26' RT.
(CLASS 3) (TYPE 3 BEDDING)
42' R.C. PIPE = 26 LIN. FT.
42" F.E.S. = 1 EACH

CL RT MAIN LANES	CL I-40 MEDIAN	CL LT MAIN LANES
PI = 8089+30.89	PI = 8089+46.45	PI = 8090+84.86
Δ = 44°37'27"RT.	Δ = 44°48'05"RT.	Δ = 46°11'55"RT.
D = 1°45'00"	D = 2°00'00"	D = 1°45'00"
T = 1343.59	T = 1180.82	T = 1396.45
L = 2549.95	L = 2240.07	L = 2639.92
PC = 8075+87.30	PC = 8077+65.63	PC = 8076+88.41
PT = 8101+37.25	PT = 8100+05.70	PT = 8103+28.33

RIGHT MAIN LANES
STA. 8091+91 IN PLACE
42" x 113' R.C. PIPE CULVERT
WITH HDWL. RT. AND F.E.S. LT.
REMOVE F.E.S. LT. AND EXTEND R.C. PIPE
10' LT.
(CLASS 3) (TYPE 3 BEDDING)
42' R.C. PIPE = 10 LIN. FT.
42" F.E.S. = 1 EACH

DENOTES COLD MILLING & INLAY OF EXISTING PAVEMENT

I-40 MAIN LANES

EXISTING GROUND CL I-40 MEDIAN

8092+91 LT. ML
8091+91 RT. ML

LT MAIN LANES
EXIST. FL INLET LT = 279.50
EXIST. FL OUTLET RT = 278.16
PROP. FL OUTLET RT = 278.26

RT MAIN LANES
EXIST. FL INLET LT = 278.07
EXIST. FL OUTLET RT = 277.41
PROP. FL INLET LT = 278.13

295 290 285 280 275 270 265 260 255 250

REFER TO SURVEY CONTROL DETAIL SHEETS FOR HORIZONTAL AND VERTICAL CONTROL DATA.

8080+00 8085+00 8090+00 8095+00

t:\job\wlxm2650 dhtd cap ca0603\700 cadd files\777 roadway files\drawings\II-Plan and Profile Sheets.dgn
7/16/2014 11:34:30 PM
...\II-Plan and Profile Sheets.dgn

DATE	DATE FILMED	DATE REVISED	DATE FILMED	FED.RD. DIST.NO.	STATE	FED.AID PROJ.NO.	SHEET NO.	TOTAL SHEETS
				6	ARK.			
				JOB NO.		CA0609	223	693

(2) P & P-STA. 8095+00 TO STA. 8110+00

CL RT MAIN LANES
PI = 8089+30.89
Δ = 44°37'27"RT.
D = 1°45'00"
T = 1343.59
L = 2549.95
PC = 8075+87.30
PT = 8101+37.25

CL I-40 MEDIAN
PI = 8089+46.45
Δ = 44°48'05"RT.
D = 2°00'00"
T = 1180.82
L = 2240.07
PC = 8077+65.63
PT = 8100+05.70

CL LT MAIN LANES
PI = 8090+84.86
Δ = 46°11'55"RT.
D = 1°45'00"
T = 1396.45
L = 2639.92
PC = 8076+88.41
PT = 8103+28.33

GUARDRAIL - INSTALLATION

	GUARDRAIL (TYPE A)	GUARDRAIL THRIE BEAM	GUARDRAIL TERMINAL (TYPE 2)
STA. 8100+03.25 TO STA. 8102+22.00 LT OF CL RT MAIN LANES	150 LIN. FT.	1 EACH	1 EACH
STA. 8100+64.25 TO STA. 8102+83.00 RT OF CL RT MAIN LANES	150 LIN. FT.	1 EACH	1 EACH

C.L. I-40 LT. MAIN LANES

10' EXIST. S.H.D.

12'

36'

CONSTRUCTION LIMITS LT MAIN LANES

S 5° 41'55" E

PT LT. 8103+28.33

I-40 ℄ MEDIAN

EXISTING BR. END 8106+41.75

A3232

S 4° 53'11" E

EXISTING BR. END 8110+64.93

UNION PACIFIC R.R.

B3232

S 5° 19'22" E

EXISTING BR. END 8106+82.58

EXISTING BR. END 8102+59.40

C.L. I-40 RT. MAIN LANES

PT MEDIAN 8100+05.70

PT RT. 8101+37.25

RT. 8109+48.28

LEFT MAIN LANES-BR. A3232
STA. 8106+41.75 TO STA. 8110+64.93 IN PLACE
423' - 2⅛" X 56'-0" CLEAR ROADWAY WIDTH
BRIDGE CONSISTING OF 420'-0" CONT. COMP. W-BEAM UNIT
(SPANS: 60', 2 @ 85', 70', 2 @ 60')
RETAIN

RIGHT MAIN LANES-BR. B3232
STA. 8102+59.40 TO STA. 8106+82.58 IN PLACE
423' - 2⅛" X 56'-0" CLEAR ROADWAY WIDTH
BRIDGE CONSISTING OF 420'-0" CONT. COMP. W-BEAM UNIT
(SPANS: 60', 2 @ 85', 70', 2 @ 60')
RETAIN

EXISTING R/W AND ℄ of A

STATE OF ARKANSAS
REGISTERED PROFESSIONAL ENGINEER
No. 11427
KEVIN G. TOBLESET
7/16/14

DENOTES COLD MILLING & INLAY OF EXISTING PAVEMENT

DENOTES REMOVAL AND DISPOSAL OF PAVEMENT

REMOVAL AND DISPOSAL OF GUARDRAIL

STA.	STA.	LOCATION	LIN. FT.
8099+47	8102+22	RT OF CL RT MAIN LANES	275
8099+58	8102+83	LT OF CL RT MAIN LANES	325

I-40 MAIN LANES

EXISTING GROUND CL I-40 MEDIAN

BM 999 NGS MARK
56.41' RT. C.L. SURVEY MEDIAN
STA. 8107+24.14
ELEV. 301.25

REFER TO SURVEY CONTROL DETAIL SHEETS FOR HORIZONTAL AND VERTICAL CONTROL DATA.

315 310 305 300 295 290 285 280 275 270

8095+00 8100+00 8105+00 8110+00

t:\Job\wlxm2650 ahtd cap ca0603\700 cadd files\777 roadway files\drawings\VI-Plan and Profile Sheets.dgn
...\VI-Plan and Profile Sheets.dgn
1:34:31 PM
7/16/2014

DATE	DATE FILMED	DATE REVISED	DATE FILMED	FED.RD. DIST.NO.	STATE	FED.AID PROJ.NO.	SHEET NO.	TOTAL SHEETS
				6	ARK.			
				JOB NO.		CA0609	224	693

P & P-STA. 8110+00 TO STA. 8125+00

MARCHE RD.

EXISTING BR. END 8110+64.93

CL LT MAIN LANES
PI = 8115+28.78
Δ = 0°43'52"LT.
D = 0°15'00"
T = 146.14
L = 292.28
PC = 8113+82.64
PT = 8116+74.92

DENOTES COLD MILLING & INLAY OF EXISTING PAVEMENT

DENOTES REMOVAL AND DISPOSAL OF PAVEMENT

CL LT MAIN LANES
PI = 8121+05.44
Δ = 0°51'02"RT.
D = 0°15'00"
T = 170.09
L = 340.18
PC = 8119+35.35
PT = 8122+75.53

LEFT MAIN LANES
STA. 8122+21 IN PLACE
24" x 85' R.C. PIPE CULVERT
WITH F.E.S. LT AND RT
REMOVE F.E.S. RT. AND EXTEND R.C. PIPE
12' RT.
(CLASS 3) (TYPE 3 BEDDING)
24" R.C. PIPE = 12 LIN. FT.
24" F.E.S. = 1 EACH

S 4° 53'11" E

S 5° 37'02" E

S 5° 41' 55" E

S 5° 19'22" E

S 4° 29'57" E

S 5° 14'47" E

10' EXIST. SHLD.

12'

36'

10' SHLD.

CONSTRUCTION LIMITS LT MAIN LANES

CONSTRUCTION LIMITS RT MAIN LANES

C.L. I-40 LT. MAIN LANES

C.L. I-40 RT. MAIN LANES

I-40 ℄ MEDIAN

8110 8115 8120 8125

RT. 8109+48.28

CL RT MAIN LANES
PI = 8111+13.03
Δ = 0°49'25"RT.
D = 0°15'00"
T = 164.75
L = 329.49
PC = 8109+48.28
PT = 8112+77.77

RT. 8111+13.03

RT. 8112+77.77

REMOVAL AND DISPOSAL OF GUARDRAIL

STA.	STA.	LOCATION	LIN. FT.
8110+94	8113+69	LT OF CL LT MAIN LANES	275
8110+35	8113+60	RT OF CL LT MAIN LANES	325

PC RT. 8115+82.32

CL RT MAIN LANES
PI = 8117+31.77
Δ = 0°44'50"LT.
D = 0°15'00"
T = 149.45
L = 298.90
PC = 8115+82.32
PT = 8118+81.22

PI RT. 8117+31.77

PT RT. 8118+81.22

STATE OF ARKANSAS
REGISTERED PROFESSIONAL ENGINEER
No. 11427
KEVIN G. TOBLESKY
7/17/14

GUARDRAIL - INSTALLATION

	GUARDRAIL (TYPE A)	GUARDRAIL THRIE BEAM	GUARDRAIL TERMINAL (TYPE 2)
STA. 8110+94.00 TO STA. 8113+12.75 LT OF CL LT MAIN LANES = 150 LIN. FT.		1 EACH	1 EACH
STA. 8110+35.00 TO STA. 8113+53.75 RT OF CL LT MAIN LANES = 150 LIN. FT.		1 EACH	1 EACH

I-40 MAIN LANES

315 310 305 300 295 290 285 280 275 270

EXISTING GROUND CL I-40 MEDIAN

8122+21 LT. ML

LT MAIN LANES
EXIST. FL INLET RT = 279.46
EXIST. FL OUTLET LT = 278.81
PROP. FL INLET RT = 279.55

REFER TO SURVEY CONTROL DETAIL SHEETS FOR HORIZONTAL AND VERTICAL CONTROL DATA.

8110+00 8115+00 8120+00 8125+00

t:\job\wlxm2650 dhtd cap ca0603\700 cadd files\777 roadway files\drawings\ll-Plan and Profile Sheets.dgn
...\ll-Plan and Profile Sheets.dgn
7/16/2014 1:34:31 PM

DATE	DATE FILMED	DATE REVISED	DATE FILMED	FED.RD. DIST.NO.	STATE	FED.AID PROJ.NO.	SHEET NO.	TOTAL SHEETS
				6	ARK.			
				JOB NO.		CA0609	225	693

(2) P & P-STA. 8125+00 TO STA. 8140+00

REMOVAL AND DISPOSAL OF CONCRETE DITCH PAVING

STA.	STA.	SIDE	SQ. YD.
8129+45	8131+44	RT OF CL I-40 MEDIAN	109
8130+80	8132+25	LT OF CL I-40 MEDIAN	79
8134+17	8136+97	RT OF CL I-40 MEDIAN	153
8137+55	8137+92	RT OF CL I-40 MEDIAN	18
8137+82	8139+61	LT OF CL I-40 MEDIAN	101

STATE OF ARKANSAS
REGISTERED PROFESSIONAL ENGINEER
No. 11427
KEVIN G. TOBLESKY
7/17/14

EXISTING R/W AND C of A

LEFT MAIN LANES
STA. 8138+86 IN PLACE
8' x 7' x 103' R.C. BOX CULVERT
WITH 3:1 WINGS LT.
30° LT. FORWARD SKEW
RETAIN AND EXTEND 24' RT.
FOR A COMPLETED LENGTH OF 127'

C.L. I-40 LT. MAIN LANES
C.L. I-40 RT. MAIN LANES
I-40 ℄ MEDIAN
CONSTRUCTION LIMITS LT MAIN LANES
CONSTRUCTION LIMITS RT MAIN LANES
S 4° 46'00" E
S 5° 41'55" E
S 5° 14'47" E
C.D.P.
12'
10' SHLD.
36'
10' EXIST. SHLD.

RIGHT MAIN LANES
STA. 8135+97 IN PLACE
8' x 7' x 126' R.C. BOX CULVERT
WITH 3:1 WINGS LT.
30° LT. FORWARD SKEW
RETAIN AND EXTEND 26' LT.
FOR A COMPLETED LENGTH OF 152'

I-40 MAIN LANES

CONCRETE DITCH PAVING (TYPE A)

STA.	STA.	SIDE	'W'	'W'	SQ. YDS.
8137+15	8137+64	CL I-40 MEDIAN	14'	10'	143

CONCRETE DITCH PAVING (TYPE B)

STA.	STA.	SIDE	'W'	SQ. YDS.
8129+00	8130+00	LT OF CL RT MAIN LANES	4'	44
8134+00	8136+35	LT OF CL RT MAIN LANES	4'	104
8131+75	8133+25	RT OF CL LT MAIN LANES	4'	67
8138+50	8141+00	RT OF CL LT MAIN LANES	4'	111

EXISTING GROUND CL I-40 MEDIAN

LT MAIN LANES
EXIST. FL INLET LT = 259.43
EXIST. FL OUTLET RT = 258.94
PROP FL OUTLET RT = 258.83

8138+86 LT. ML
8135+97 RT. ML

RT MAIN LANES
EXIST. FL INLET LT = 257.86
EXIST. FL OUTLET RT = 257.06
PROP. FL INLET LT = 258.02

REFER TO SURVEY CONTROL DETAIL SHEETS FOR HORIZONTAL AND VERTICAL CONTROL DATA.

295 290 285 280 275 270 265 260 255 250

8125+00 8130+00 8135+00 8140+00

t:\Job\wlxm2650 dhtd cap ca0603\700 cadd files\777 roadway files\drawings\II-Plan and Profile Sheets.dgn
...\II-Plan and Profile Sheets.dgn
11:34:31 PM
7/16/2014

DATE	DATE FILMED	DATE REVISED	DATE FILMED	FED.RD. DIST.NO.	STATE	FED.AID PROJ.NO.	SHEET NO.	TOTAL SHEETS
				6	ARK.			
				JOB NO.		CA0609	226	693

(2) P & P-STA. 8140+00 TO STA. 8155+00

EXISTING R/W AND C of A

GUARDRAIL - INSTALLATION	GUARDRAIL (TYPE A)	GUARDRAIL TEMINAL (TYPE 1)	GUARDRAIL TERMINAL (TYPE 2)
STA. 8147+41 TO STA. 8150+66 LT OF CL RT MAIN LANES	275 LIN. FT.	1 EACH	1 EACH
STA. 8147+41 TO STA. 8150+66 RT OF CL RT MAIN LANES	275 LIN. FT.	1 EACH	1 EACH

CL RT. MAIN LANES
PI = 8160+77.47
Δ = 7°06'03" LT.
D = 0°30'00"
T = 710.99'
L = 1420.16'
PC = 8153+66.48
PT = 8167+86.64

CL I-40 MEDIAN
PI = 8160+86.54
Δ = 5°41'57" LT.
D = 0°28'30"
T = 600.41'
L = 1199.83'
PC = 8154+86.13
PT = 8166+85.96

LEFT MAIN LANES
STA. 8150+20 IN PLACE
48" x 94" R.C. PIPE CULVERT
WITH F.E.S. LT. AND RT.
REMOVE F.E.S. RT. AND EXTEND R.C. PIPE
12' RT.
(CLASS 3) (TYPE 3 BEDDING)
48" R.C. PIPE = 12 LIN. FT.
48" F.E.S. = 1 EACH

STATE OF ARKANSAS
REGISTERED PROFESSIONAL ENGINEER
No. 11427
KEVIN G. TOBLESEN
7/17/14

CONSTRUCTION LIMITS LT MAIN LANES
C.L. I-40 LT. MAIN LANES
10' EXIST. SHLD.
36'
12'
10' SHLD.
S 4° 46'00" E
I-40 ℄ MEDIAN
S 5° 41'55" E
PC MEDIAN 8154+86.13
C.D.P.
C.L. I-40 RT. MAIN LANES
CONSTRUCTION LIMITS RT MAIN LANES
S 5° 14'47" E
RAMP
CONSTRUCTION LIMITS RT MAIN LANES
STA. 8149+41 REPLACE OVERHEAD HIGHWAY SIGNS AND OVERHEAD STRUCTURE I-40 RT MAIN LANES SEE SIGNING PLANS
PC RT. 8153+66.48
MORGAN REST AREA (ABANDONED)

I-40 MAIN LANES

REMOVAL AND DISPOSAL OF CONCRETE DITCH PAVING

STA.	STA.	LOCATION	SQ. YD.
8139+98	8141+62	CL I-40 MEDIAN	93

CONCRETE DITCH PAVING (TYPE B)

STA.	STA.	SIDE	"W"	SQ. YDS.
8139+75	8141+75	LT OF CL RT MAIN LANES	4'	89

RIGHT MAIN LANES
STA. 8148+54 IN PLACE
48" x 90" R.C. PIPE CULVERT
WITH HDWL.S. LT. AND RT.
REMOVE HDWL. LT. AND EXTEND R.C. PIPE
16' LT.
(CLASS 3) (TYPE 3 BEDDING)
48" R.C. PIPE = 20 LIN. FT.
48" F.E.S. = 1 EACH

EXISTING GROUND CL I-40 MEDIAN

8150+20 LT. ML
8148+54 RT. ML

LT MAIN LANES
EXIST. FL INLET LT = 273.90
EXIST. FL OUTLET RT = 272.92
PROP. FL OUTLET RT = 272.79

RT MAIN LANES
EXIST. FL INLET LT = 271.05
EXIST. FL OUTLET RT = 267.47
PROP. FL INLET LT = 271.31

REFER TO SURVEY CONTROL DETAIL SHEETS FOR HORIZONTAL AND VERTICAL CONTROL DATA.

305 300 295 290 285 280 275 270 265 260

8140+00 8145+00 8150+00 8155+00

t:\Job\wlxm2650 dhtd cap ca0603\700 cadd files\777 roadway files\drawings\II-Plan and Profile Sheets.dgn
...\II-Plan and Profile Sheets.dgn
7/16/2014 1:34:32 PM

DATE	DATE FILMED	DATE REVISED	DATE FILMED	FED.RD. DIST.NO.	STATE	FED.AID PROJ.NO.	SHEET NO.	TOTAL SHEETS
				6	ARK.			
				JOB NO.		CA0609	227	693

(2) P & P-STA. 8155+00 TO STA. 8170+00

REMOVAL AND DISPOSAL OF CONCRETE DITCH PAVING

STA.	STA.	LOCATION	SQ. YD.
8163+50	8165+00	CL I-40 MEDIAN	84
8163+80	8165+50	CL I-40 MEDIAN	95
8163+46	8165+76	CL I-40 MEDIAN	277

LEFT MAIN LANES
STA. 8165+18 IN PLACE
48" x 113' R.C. PIPE CULVERT
45° RT. FORWARD SKEW
WITH HDWLS. LT. AND RT.
REMOVE HDWL. RT. AND EXTEND R.C. PIPE 30' RT.
(CLASS 3) (TYPE 3 BEDDING)
48" R.C. PIPE = 46 LIN. FT.
48" F.E.S. = 1 EACH

STATE OF ARKANSAS
REGISTERED PROFESSIONAL ENGINEER
No. 11427
KEVIN G. TOBLESKY

PC MEDIAN 8154+86.13
PC LT. 8157+76.56
S 4° 46'00" E
C.L. I-40 LT. MAIN LANES
PT LT. 8166+61.10
PT MEDIAN 8166+85.96
CONSTRUCTION LIMITS LT MAIN LANES
10' EXIST. SHLD.
36'
S 11° 24'03" E
I-40 ℄ MEDIAN
S 11° 23'52" E
12'
10' SHLD.
C.D.P.
C.D.P.
PI MEDIAN 8160+86.54
PI LT. 8162+19.32
CONSTRUCTION LIMITS RT MAIN LANES
C.L. I-40 RT. MAIN LANES
MORGAN REST AREA (ABANDONED)
S 12° 20'50" E
PI RT. 8160+77.47
RAMP
PT RT. 8167+86.64

CONCRETE DITCH PAVING (TYPE B)

STA.	STA.	SIDE	"W"	SQ. YDS.
8163+25	8164+85	LT OF CL RT MAIN LANES	4'	71
8164+25	8165+80	RT OF CL LT MAIN LANES	4'	69
8165+25		MEDIAN	8'	58

CL LT. MAIN LANES
PI = 8162+19.32
Δ = 6°38'03" LT.
D = 0°45'00"
T = 442.77'
L = 884.54'
PC = 8157+76.56
PT = 8166+61.10

CL I-40 MEDIAN
PI = 8160+86.54
Δ = 5°41'57" LT.
D = 0°28'30"
T = 600.41'
L = 1199.83'
PC = 8154+86.13
PT = 8166+85.96

CL RT. MAIN LANES
PI = 8160+77.47
Δ = 7°06'03" LT.
D = 0°30'00"
T = 710.99'
L = 1420.16'
PC = 8153+66.48
PT = 8167+86.64

RIGHT MAIN LANES
STA. 8165+61 IN PLACE
48" x 193' R.C. PIPE CULVERT
45° RT. FORWARD SKEW
WITH HDWL. LT. AND F.E.S. RT.
REMOVE HDWL. LT. AND EXTEND R.C. PIPE 24' LT.
(CLASS 3) (TYPE 3 BEDDING)
48" R.C. PIPE = 28 LIN. FT.
48" F.E.S. = 1 EACH

I-40 MAIN LANES

EXISTING GROUND CL I-40 MEDIAN

8165+18 LT. ML

LT MAIN LANES
EXIST. FL INLET LT = 287.62
EXIST. FL OUTLET RT = 286.34
PROP. FL OUTLET RT = 286.00

8165+61 RT. ML

RT MAIN LANES
EXIST. FL INLET LT = 277.56
EXIST. FL OUTLET RT = 275.70
PROP. FL INLET LT = 277.79

305 300 295 290 285 280 275 270 265 260

REFER TO SURVEY CONTROL DETAIL SHEETS FOR HORIZONTAL AND VERTICAL CONTROL DATA.

8155+00 8160+00 8165+00 8170+00

t:\Job\wlxm2650 ahtd cap ca0603\700 cadd files\777 roadway files\drawings\ll-Plan and Profile Sheets.dgn
7/16/2014 1:34:32 PM
...\ll-Plan and Profile Sheets.dgn

DATE	DATE FILMED	DATE REVISED	DATE FILMED	FED.RD. DIST.NO.	STATE	FED.AID PROJ.NO.	SHEET NO.	TOTAL SHEETS
				6	ARK.			
				JOB NO.		CA0609	228	693

(2) P & P-STA. 8170+00 TO STA. 8185+00

CONCRETE DITCH PAVING (TYPE B)

STA.	STA.	SIDE	'W'	SQ. YDS.
8168+10	8174+59	RT OF CL LT MAIN LANES	4'	288
8167+70	8172+21	LT OF CL RT MAIN LANES	4'	200

REMOVAL AND DISPOSAL OF CONCRETE DITCH PAVING

STA.	STA.	LOCATION	SQ. YD.
8170+59	8173+51	CL I-40 MEDIAN	148

STATE OF ARKANSAS
REGISTERED PROFESSIONAL ENGINEER
No. 11427
KEVIN G. TOBLESKY
7/17/14

DENOTES COLD MILLING & INLAY OF EXISTING PAVEMENT

DENOTES REMOVAL AND DISPOSAL OF PAVEMENT

8170 8175 8180 8185

10' EXIST. SHLD. 36' 12' I-40 ℄ MEDIAN 10' SHLD.

S 11° 24'03" E

S 11° 23'52" E

S 12° 20'50" E

CONSTRUCTION LIMITS LT MAIN LANES

C.L. I-40 LT. MAIN LANES

C.L. I-40 RT. MAIN LANES

CONSTRUCTION LIMITS RT MAIN LANES

C.D.P.

EXISTING BR. END 8181+04.49

EXISTING BR. END 8181+94.49

EXISTING BR. END 8180+61.92

EXISTING 8179+71.92

STA. 8181+94.49 BK = STA. 8181+14.61 AHD.

STA. 8180+61.92 BK = STA. 8181+22.29 AHD.

A3233

B3233

NEWTON CREEK

C of A

RIGHT MAIN LANES
STA. 8174+64 IN PLACE
24' x 127' R.C. PIPE CULVERT
WITH F.E.S. LT. AND HDWL. RT.
REMOVE F.E.S. LT. AND EXTEND R.C. PIPE 16' LT.
(CLASS 3) (TYPE 3 BEDDING)
24' R.C. PIPE = 16 LIN. FT.
24' F.E.S. = 1 EACH

REMOVAL AND DISPOSAL OF GUARDRAIL

STA.	STA.	LOCATION	LIN. FT.
8177+57	8180+32	RT OF CL RT MAIN LANES	275
8176+42	8189+67	LT OF CL RT MAIN LANES	325

REMOVAL AND DISPOSAL OF GUARDRAIL

STA.	STA.	LOCATION	LIN. FT.
8176+42	8179+67	LT OF CL RT MAIN LANES	325

GUARDRAIL - INSTALLATION

	GUARDRAIL (TYPE A)	GUARDRAIL THRIE BEAM	GUARDRAIL TERMINAL (TYPE 2)
STA. 8178+13.25 TO STA. 8180+32.00 RT OF CL RT MAIN LANES = 150 LIN. FT.		1 EACH	1 EACH
STA. 8187+48.25 TO STA. 8189+67.00 LT OF CL RT MAIN LANES = 150 LIN. FT.		1 EACH	1 EACH

LEFT MAIN LANES-BR A3233
STA. 8181+04.49 TO STA. 8181+94.49 IN PLACE
90'-0" X 56'-0" CLEAR ROADWAY WIDTH
BRIDGE CONSISTING OF THREE 30'-0" R.C. DECK GIRDER SPANS
RETAIN

RIGHT MAIN LANES-BR B3233
STA. 8179+71.92 TO STA. 8180+61.92 IN PLACE
90'-0" X 56'-0" CLEAR ROADWAY WIDTH
BRIDGE CONSISTING OF THREE 30'-0" R.C. DECK GIRDER SPANS
RETAIN

EXISTING R/W AND C of A

I-40 MAIN LANES

295 290 285 280 275 270 265 260 255 250

EXISTING GROUND CL I-40 MEDIAN

8174+64 RT. ML

RT MAIN LANES
EXIST. FL INLET LT = 255.52
EXIST. FL OUTLET RT = 254.64
PROP. FL INLET LT = 255.63

REFER TO SURVEY CONTROL DETAIL SHEETS FOR HORIZONTAL AND VERTICAL CONTROL DATA.

8170+00 8175+00 8180+00 8185+00

t:\job\wlxm2650 ahtd cap ca0603\700 cadd files\777 roadway files\drawings\ll-Plan and Profile Sheets.dgn
7/16/2014 1:34:32 PM

STATE OF ARKANSAS
LICENSED PROFESSIONAL ENGINEER
No.13422
JOHN F. CANTABERRY
7-18-14

DATE	DATE FILMED	DATE REVISED	DATE FILMED

FED.RD. DIST.NO.	STATE	FED.AID PROJ.NO.	SHEET NO.	TOTAL SHEETS
6	ARK.			
JOB NO.		CA0609	229	693

(2) PLAN AND PROFILE - I-40

APPROXIMATE FEMA 100 YR. FLOODPLAIN LIMITS

CONCRETE DITCH PAVING (TYPE B) I-40 RT. LANES

STA.	STA.	SIDE	"W"	SQ. YDS.
8181+22	8183+20	RT. = 198 LIN. FT.	6'-0"	132

REMOVAL AND DISPOSAL OF CONCRETE DITCH PAVING RT. LANES

STA.	STA.	SIDE	UNIT
8181+22	8182+28	RT.	67 SQ. YDS.

C.L. I-40 LT. LANES
STA. 8193+21 IN PLACE
42" X 109' R.C. PIPE CULVERT
WITH HDWLS. LT. & RT.
REMOVE HDWLS. LT. & RT.
AND EXTEND R.C. PIPE 15' RT. AND 10' LT.
30° LT. FWD. SKEW
(CLASS III) TYPE 3 BEDDING WITH
F.E.S. LT. AND RT.
Q50 = 100 CFS DA = 21.1 ACRES
42" R.C. PIPE = 33 LIN. FT.
42" F.E.S. = 2 EA.

I-40 LT. LANES STA. 8181+04.49 BR. END A
I-40 RT. LANES STA. 8179+71.92 BR. END B
BRIDGE NO. A3233 & B3233
IN PLACE
90'-0" R.C. DECK GIRDER
56'-0" CLEAR ROADWAY
I-40 LT. LANES STA. 8181+94.49 BR. END A
I-40 RT. LANES STA. 8180+61.92 BR. END B
RETAIN

OBLITERATE EXISTING GUARDRAIL WIDENING

COLD MILL & INLAY EXISTING PAVEMENT

BRIDGE END I-40 LT. LANES BK. 8181+94.49 AHD. 8181+14.61
BRIDGE END I-40 RT. LANES BK. 8180+61.92 AHD. 8181+22.29
I-40 LT. LANES STA. 8181+51.11
I-40 LT. LANES STA. 8181+59.33
I-40 LT. LANES STA. 8184+82.27
I-40 LT. LANES STA. 8189+99.33
I-40 RT. LANES STA. 8181+58.79
I-40 RT. LANES STA. 8181+68.18
I-40 RT. LANES STA. 8182+96.24
I-40 RT. LANES STA. 8183+68.18

EX. 36' LANES
EX. 10' SHLDR.
EX. G.R. WIDENING
EX. 24' LANES
840' TAPER
3260' AUXILIARY LANE
200' STRIPED TAPER
3000' AUXILIARY LANE
CONSTRUCTION LIMITS
SAW CUT EXISTING PAVEMENT
C.L. I-40 LT. LANES
C.L. I-40 RT. LANES
C.L. I-40 MEDIAN
EXISTING R/W

PN:1043 PD:5/8"REBAR W/2"CAP
PN:1042 PD:5/8"REBAR W/2"CAP
PN:1041 PD:AHTD GPS 60006ZA RTK ELEV RTK ELEV

8180+00
8185+00
8190+00
S 11°24'03" E
S 11°23'52" E
S 12°20'50" E

C.L. I-40 RT. LANES
STA. 8182+24 IN PLACE
24" X 94' R.C. PIPE CULVERT
WITH F.E.S. LT. & HDWL. RT.
REMOVE HDWL. RT.
AND EXTEND R.C. PIPE 13' RT.
(CLASS III) TYPE 3 BEDDING WITH
FES. RT.
Q50 = 10 CFS DA = 2 ACRES
24" R.C. PIPE = 17 LIN. FT.
24" F.E.S. = 1 EA.

STA. 8187+00 INSTALL OVERHEAD HIGHWAY SIGN I-40 RT. LANES SEE SIGNING PLANS

C.L. I-40 RT. LANES
STA. 8192+36 IN PLACE
48" X 108' R.C. PIPE CULVERT
WITH HDWLS. LT. & RT.
REMOVE HDWLS. LT. & RT.
AND EXTEND R.C. PIPE 17' RT. AND 17' LT.
30° LT. FWD. SKEW
(CLASS III) TYPE 3 BEDDING WITH
F.E.S. LT. AND RT.
Q50 = 121 CFS DA = 24 ACRES
48" R.C. PIPE = 42 LIN. FT.
48" F.E.S. = 2 EA.

I-40 MAIN LANES

REMOVAL AND DISPOSAL OF GUARDRAIL

STA.	STA.	LOCATION	LIN. FT.
8181+16.20	8183+95.00	LT. OF C.L. I-40 LT. LANES	280
8181+19.46	8184+42.08	RT. OF C.L. I-40 LT. LANES	325

C.L. I-40 LT. LANES STATIONING	GUARDRAIL (TYPE A)	GUARDRAIL TERMINAL (TYPE 2)	THRIE BEAM GUARDRAIL TERMINAL
STA. 8181+19.01 TO STA. 8183+37.76 LT.	= 150 LIN. FT.	1 EACH	1 EACH
STA. 8181+19.01 TO STA. 8183+37.76 RT.	= 150 LIN. FT.	1 EACH	1 EACH

C.L. I-40 RT. LANES STATIONING	GUARDRAIL (TYPE A)	TERMINAL ANCHOR POSTS (TYPE 1)	GUARDRAIL TERMINAL (TYPE 2)
STA. 8184+06.00 TO STA. 8187+81.00 RT.	= 325 LIN. FT.	1 EACH	1 EACH
STA. 8184+56.00 TO STA. 8187+81.00 LT.	= 275 LIN. FT.	1 EACH	1 EACH

NOTCH & WIDEN LT. LANES
NOTCH & WIDEN RT. LANES
200' TRANSITION ROTATE INSIDE LANE FROM +2% TO -2% AND SHOULDER FROM +2% TO -4%
200' TRANSITION ROTATE INSIDE LANE FROM +2% TO -2% AND SHOULDER FROM +2% TO -4%

I-40 RT. LANES STA. 8182+96.24
I-40 LT. LANES STA. 8184+82.27
I-40 RT. LANES STA. 8184+96.24
I-40 LT. LANES STA. 8186+82.27

3.66% RIGHT DITCH GRADE
3.10% RIGHT DITCH GRADE
I-40 RT. LANES +22.00 RT. 258.16
I-40 RT. LANES +24.00 RT. 261.89
I-40 RT. LANES +20.00 RT. 264.87

EXISTING GROUND ℄ C.L. I-40 MEDIAN

I-40 RT. LANES
EX. F.L. = 263.02 (LT.)
EX. F.L. = 262.08 (RT.)
PROP. F.L. = 261.89 (RT.)

I-40 RT. LANES
EX. F.L. = 265.44 (LT.)
EX. F.L. = 264.67 (RT.)
PROP. F.L. = 267.57 (LT.)
PROP. F.L. = 264.50 (RT.)

REFER TO SURVEY CONTROL DETAIL SHEETS FOR HORIZONTAL AND VERTICAL CONTROL DATA

300 290 280 270 260 250 240 230 220 210

8178+00 8179+00 8180+00 8181+00 8182+00 8183+00 8184+00 8185+00 8186+00 8187+00 8188+00 8189+00 8190+00 8191+00 8192+00 8193+00

cggervasini 7/17/2014 7:44:00 PM
WORKSPACE: AHTD
L:\ZONING\TF09 - I-40 at I-430 Interchange Modifications\Drawings\RCA0609_PP_MNL_01.dgn
REVISED DATE:

DATE	DATE FILMED	DATE REVISED	DATE FILMED	FED.RD. DIST.NO.	STATE	FED.AID PROJ.NO.	SHEET NO.	TOTAL SHEETS
				6	ARK.			
				JOB NO.		CA0609	230	693

(2) PLAN AND PROFILE - I-40

C.L. I-40 LT. LANES
STA. 8193+21 IN PLACE
42" X 109' R.C. PIPE CULVERT
WITH HDWLS. LT. & RT.
REMOVE HDWLS. LT. & RT.
AND EXTEND R.C. PIPE 15' RT. AND 10' LT.
30° LT. FWD. SKEW
(CLASS III) TYPE 3 BEDDING WITH
F.E.S. LT. AND RT.
Q50 = 100 CFS DA = 21.1 ACRES
42" R.C. PIPE = 33 LIN. FT.
42" F.E.S. = 2 EA.

C.L. I-40 RT. LANES
STA. 8182+24 IN PLACE
24" X 94' R.C. PIPE CULVERT
WITH F.E.S. LT. & HDWL. RT.
REMOVE HDWL. RT.
AND EXTEND R.C. PIPE 13' RT.
(CLASS III) TYPE 3 BEDDING WITH
FES. RT.
Q50 = 10 CFS DA = 2 ACRES
24" R.C. PIPE = 17 LIN. FT.
24" F.E.S. = 1 EA.

STATE OF ARKANSAS
LICENSED PROFESSIONAL ENGINEER
No. 13422
JOHN F. CANTABERY
7-18-14

C.L. I-40 LT. LANES
STA. 8201+90 IN PLACE
5' X 4' X 104' R.C. BOX CULVERT
WITH 3:1 WINGS LT. AND RT.
RETAIN AND EXTEND 19' LT.
30° LT. FWD SKEW
WITH 3:1 WINGS LT.
Q50 = 98 CFS DA = 72.7 ACRES

REMOVAL AND DISPOSAL
OF CONCRETE DITCH PAVING LT. LANES

STA.	STA.	SIDE	UNIT
8206+92	8211+74	LT.	208 SQ. YDS.
8208+15	8208+91	RT.	38 SQ. YDS.

CONCRETE DITCH PAVING (TYPE B) I-40 LT. LANES

STA.	STA.	SIDE	"W"	SQ. YDS.
8206+90	8209+30	LT. = 241 LIN. FT.	6'-0"	161
8207+10	8208+10	RT. = 100 LIN. FT.	6'-0"	67

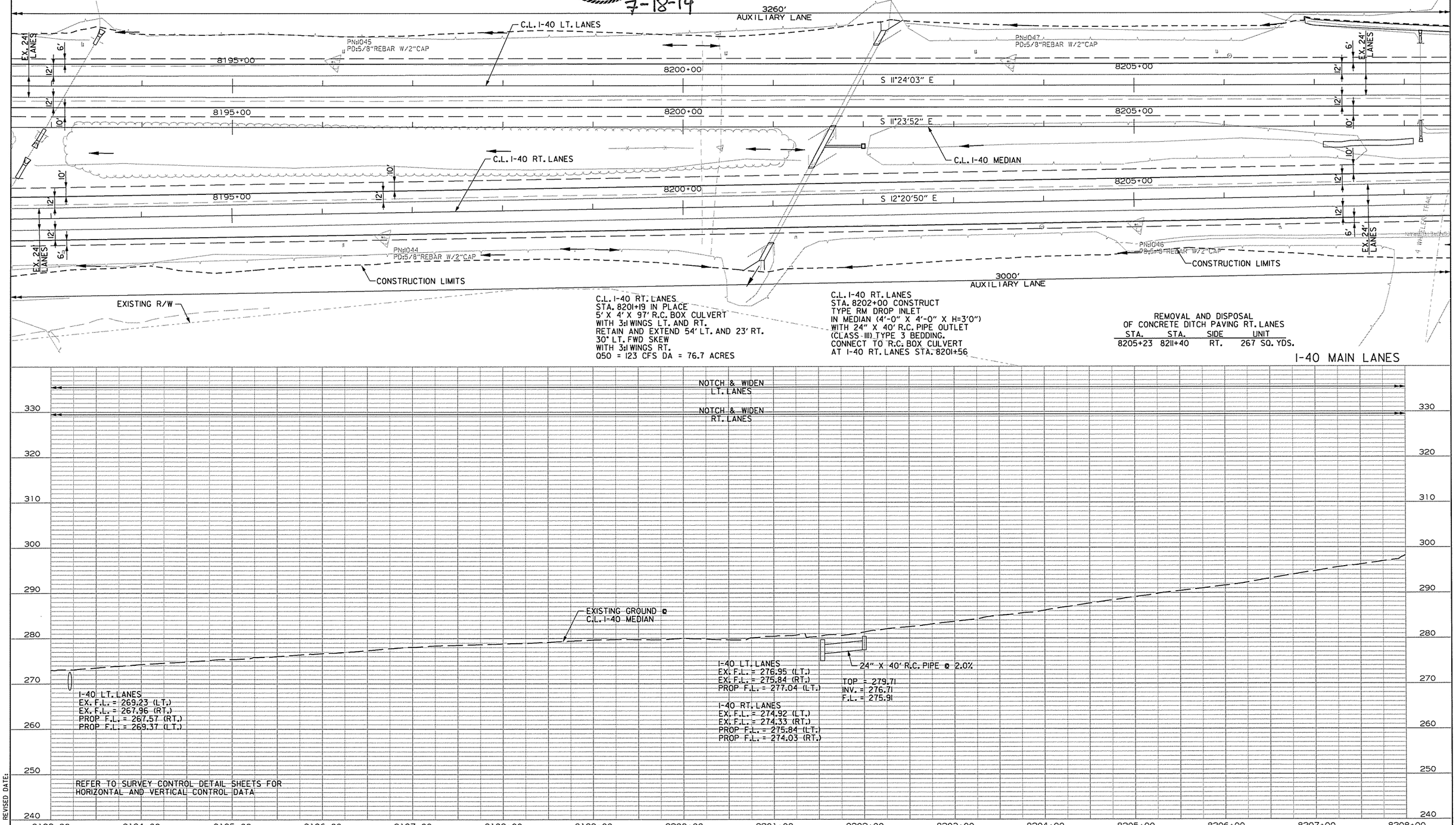

C.L. I-40 RT. LANES
STA. 8201+19 IN PLACE
5' X 4' X 97' R.C. BOX CULVERT
WITH 3:1 WINGS LT. AND RT.
RETAIN AND EXTEND 54' LT. AND 23' RT.
30° LT. FWD SKEW
WITH 3:1 WINGS RT.
Q50 = 123 CFS DA = 76.7 ACRES

C.L. I-40 RT. LANES
STA. 8202+00 CONSTRUCT
TYPE RM DROP INLET
IN MEDIAN (4'-0" X 4'-0" X H=3'0")
WITH 24" X 40' R.C. PIPE OUTLET
(CLASS III) TYPE 3 BEDDING.
CONNECT TO R.C. BOX CULVERT
AT I-40 RT. LANES STA. 8201+56

REMOVAL AND DISPOSAL
OF CONCRETE DITCH PAVING RT. LANES

STA.	STA.	SIDE	UNIT
8205+23	8211+40	RT.	267 SQ. YDS.

I-40 MAIN LANES

cggervasini 7/17/2014 7:44:00 PM
WORKSPACE: AHTD
L:\2011\11017709 - I-40 at I-430 Interchange Modifications\Drawings\RCA0609_PP_MNL_02.dgn
REVISED DATE:

DATE	DATE FILMED	DATE REVISED	DATE FILED

FED.RD. DIST.NO.	STATE	FED.AID PROJ.NO.	SHEET NO.	TOTAL SHEETS
6	ARK.			
JOB NO.		CA0609	231	693

PLAN AND PROFILE - I-40

C.L. I-40 LT. LANES
STA. 8208+18 IN PLACE
24" X 86' R.C. PIPE CULVERT
WITH HDWLS. LT. AND RT.
REMOVE HDWLS. LT. AND RT.
AND EXTEND R.C. PIPE
8' LT. AND 16' RT.
(CLASS III) TYPE 3 BEDDING
WITH F.E.S. LT. AND RT.
Q50 = 1.9 CFS DA = 0.3 ACRES
24" R.C. PIPE = 32 LIN. FT.
24" F.E.S. = 2 EA.

C.L. I-40 LT. LANES STA. 8209+85.11 =
C.L. NORMAN ROAD STA. 20+46.59
℄ = 84°58'21"

PC 22+24.85

C.L. I-40 MEDIAN STA. 8209+89.99 =
C.L. NORMAN ROAD STA. 20+00.00
℄ = 84°00'00"

CONSTRUCTION LIMITS

STATE OF ARKANSAS
LICENSED PROFESSIONAL ENGINEER
JOHN F. CANTABERY
No. 13422
7-18-14

C.L. I-40 LT. LANES	C.L. I-40 MEDIAN	C.L. I-40 RT. LANES
PI = 8224+50.59	PI = 8225+31.67	PI = 8226+06.44
Δ = 49°49'56" LT.	Δ = 50°10'06" LT.	Δ = 49°33'08" LT.
D = 1°45'00"	D = 2°00'00"	D = 2°15'00"
T = 1520.88'	T = 1341.00'	T = 1175.35'
L = 2847.55'	L = 2508.42'	L = 2202.33'
PC= 8209+29.71	PC= 8211+90.67	PC= 8214+31.08
PT= 8237+77.26	PT= 8236+99.09	PT= 8236+33.41
e = MATCH EXISTING	e = N.A.	e = MATCH EXISTING
Ls = MATCH EXISTING	Ls = N.A.	Ls = MATCH EXISTING

EXISTING R/W

OBLITERATE EXISTING ROADWAY

BRIDGE NO. 3234 IN PLACE 277'-03" X 24'-0"
BRIDGE CONSISTING OF A STEEL
SUPERSTRUCTURE SUPPORTED BY A
CONCRETE SUBSTRUCTURE. REMOVE AS
EXISTING BRIDGE STRUCTURE = 1.00 LUMP SUM

C.L. RAMP 4 STA. 8221+75.09 =
C.L. I-40 LT. LANES STA. 8221+75.09, 7.50' LT.

C.L. RAMP 4

EX. 24' LANES
EX. 10' SHLDR.
EX. 6' SHLDR.
EX. 15' LANE
EX. 4' SHLDR.

PC 8209+29.71
S 11°24'03" E
S 11°23'52" E
S 12°20'50" E
S 11°24'03" E

3260' AUXILIARY LANE

I-40 LT. LANES
STA. 8215+59.33

PC 8211+90.67

PNH055
PD:5/8"REBAR W/2"CAP

8210+00
8211+00
8212+00
8213+00
8214+00
8215+00
8216+00
8220+00

20:00

C.L. RAMP 1 STA. 8213+68.18 =
C.L. I-40 RT. LANES
STA. 8213+68.18, 7.50' RT.

PC 8214+31.08
PC 8214+54.40
PC 8213+68.18

PT 8215+60.45

3000' AUXILIARY LANE

PT 18+76

CONSTRUCTION LIMITS

STA. 8213+85 INSTALL
OVERHEAD HIGHWAY SIGN
I-40 RT. LANES
SEE SIGNING PLANS

C.L. I-40 RT. LANES STA. 8209+98.03 =
C.L. NORMAN ROAD STA. 19+26.90
℄ = 84°56'58"

N

CONSTRUCTION LIMITS

I-40 RT. LANES
STA. 8218+37.48

C.L. I-40 LT. LANES

C.L. I-40 MEDIAN

840' TAPER

NOSE
+71.79
32.70' RT.

C.L. I-40 RT. LANES

PNH054
PD:5/8"REBAR W/2"CAP

C.L. RAMP 1

S 76°34'44.6" E

700' RECOVERY LANE

CONSTRUCTION LIMITS

NOSE
+39.33
3.82 LT.

EX. 24' LANES
VAR.
36'
10'

I-40 MAIN LANES

REMOVAL AND DISPOSAL OF IMPACT ATTENUATION BARRIERS I-40 MEDIAN

STA.	SIDE	EACH
8211+60	RT.	1
8212+82	LT.	1

REMOVAL AND DISPOSAL OF CONCRETE DITCH PAVING RT. LANES

STA.	STA.	SIDE	UNIT
8212+15	8212+74	RT.	32 SQ. YDS.
8212+57	8212+64	RT.	3 SQ. YDS.
8221+89	8225+01	RT.	176 SQ. YDS.

REMOVAL AND DISPOSAL OF GUARDRAIL I-40 RT. LANES

STA.	STA.	SIDE	UNIT
8209+35	8211+80	RT.	245 LIN. FT.

REMOVAL AND DISPOSAL OF GUARDRAIL I-40 LT. LANES

STA.	STA.	SIDE	UNIT
8212+61	8215+11	LT.	250 LIN. FT.

REMOVAL AND DISPOSAL OF PIER PROTECTION I-40 MEDIAN

STA.	STA.	SIDE	UNIT
8212+18	8212+36	RT. OF R.M.I.	18 LIN. FT.
8212+04	8212+22	LT. OF R.M.I.	18 LIN. FT.

C.L. I-40 RT. LANES
STA. 8217+33 IN PLACE
24" X 195' R.C. PIPE CULVERT
WITH HDWLS. LT. AND F.E.S. RT.
REMOVE HDWL. LT.
AND EXTEND R.C. PIPE 12' LT.
(CLASS III) TYPE 3 BEDDING WITH
FES LT.
Q50 = 1.3 CFS DA = 1.7 ACRES
24" R.C. PIPE = 16 LIN. FT.
24" F.E.S. = 1 EA.

C.L. I-40 RT. LANES
STA. 8222+74 IN PLACE
48" X 131' R.C. PIPE CULVERT
WITH HDWLS. LT. AND RT.
REMOVE HDWL. RT.
AND EXTEND R.C. PIPE 16' RT.
(CLASS III) TYPE 3 BEDDING WITH
FES RT.
Q50 = 102 CFS DA = 46.8 ACRES
48" R.C. PIPE = 20 LIN. FT.
48" F.E.S. = 1 EA.

REMOVAL AND DISPOSAL OF PIER PROTECTION I-40 RT. LANES

STA.	STA.	SIDE	UNIT
8211+80	8212+08	RT.	28 LIN. FT.

REMOVAL AND DISPOSAL OF PIER PROTECTION I-40 LT. LANES

STA.	STA.	SIDE	UNIT
8212+35	8212+63	LT.	28 LIN. FT.

CONCRETE DITCH PAVING (TYPE B) I-40 RT. LANES

STA.	STA.	SIDE	"W"	SQ. YDS.
8220+60	8223+75	RT. = 351 LIN. FT.	6'-0"	234

C.L. I-40 RT. LANES STATIONING	GUARDRAIL (TYPE A)	TERMINAL ANCHOR POSTS (TYPE I)	GUARDRAIL TERMINAL (TYPE 2)
STA. 8210+91.00 TO STA. 8214+66.00 RT.	= 325 LIN. FT.	1 EACH	1 EACH
STA. 8211+41.00 TO STA. 8214+66.00 LT.	= 275 LIN. FT.	1 EACH	1 EACH

NOTCH & WIDEN LT. LANES

NOTCH & WIDEN RT. LANES

EXISTING GROUND ℄ C.L. I-40 MEDIAN

0.53% LEFT DITCH GRADE

-0.50% LEFT DITCH GRADE

1.88% LEFT DITCH GRADE

-1.57% LEFT DITCH GRADE

I-40 RT. LANES
+00.00 LT. 305.28

I-40 RT. LANES
+00.00 LT. 309.88

I-40 RT. LANES
+33.00 LT. 309.22

I-40 RT. LANES
+50.00 LT. 313.30

I-40 RT. LANES
+75.00 LT. 308.21

I-40 LT. LANES
EX. F.L. = 295.95 (LT.)
EX. F.L. = 296.83 (RT.)
PROP F.L. = 295.88 (LT.)
PROP F.L. = 297.38 (RT.)

I-40 RT. LANES
EX. F.L. = 309.11 (LT.)
EX. F.L. = 300.63 (RT.)
PROP F.L. = 309.22 (LT.)

I-40 RT. LANES
EX. F.L. = 308.21 (LT.)
EX. F.L. = 305.92 (RT.)
PROP F.L. = 305.50 (RT.)

REFER TO SURVEY CONTROL DETAIL SHEETS FOR HORIZONTAL AND VERTICAL CONTROL DATA

350 340 330 320 310 300 290 280 270 260

8208+00 8209+00 8210+00 8211+00 8212+00 8213+00 8214+00 8215+00 8216+00 8217+00 8218+00 8219+00 8220+00 8221+00 8222+00 8223+00

eggerv ashl 7/17/2014 7:44:00 PM
W:\ROADS\CA0609 MHD
LAYOUT\M07709 - I-40 at I-430 Interchange Modifications\Drawings\RCA0609_PP_MNL_03.dgn
REVISED DATE:

DATE	DATE FILMED	DATE REVISED	DATE FILMED	FED.RD. DIST.NO.	STATE	FED.AID PROJ.NO.	SHEET NO.	TOTAL SHEETS
				6	ARK.			
				JOB NO.		CA0609	232	693

(2) PLAN AND PROFILE - I-40

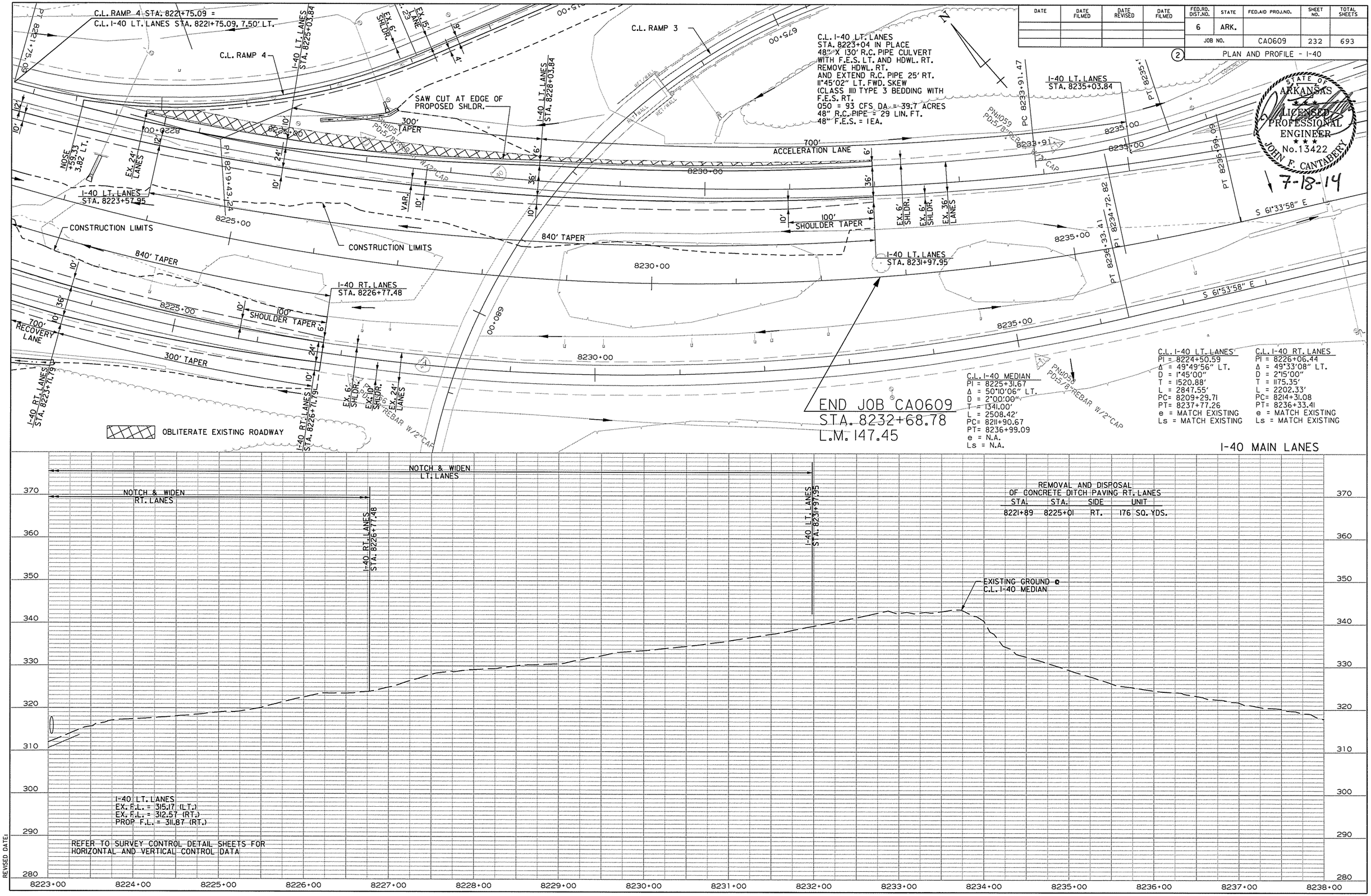

STATE OF ARKANSAS
LICENSED PROFESSIONAL ENGINEER
No. 13422
JOHN F. CANTABERY
7-18-14

cggervasini 7/17/2014 7:44:01 PM
WORKSPACE: AHTD
L:\2011\11017709 - I-40 at I-430 Interchange Modifications\Drawings\RCA0609_PP_MNL_04.dgn
REVISED DATE:

DATE	DATE FILMED	DATE REVISED	DATE FILMED	FED.RD. DIST.NO.	STATE	FED.AID PROJ.NO.	SHEET NO.	TOTAL SHEETS
				6	ARK.			
				JOB NO.		CA0609	233	693

(2) PLAN AND PROFILE - I-430 RT. LANES

I-430 LT. LANES
STA. 669+85
BEGIN WRSF

EXISTING R/W

WIRE ROPE SAFETY FENCE
12' RT. OF I-430 LT. LANES
PAVEMENT EDGE

C.L. I-430 LT. LANES

EX. 70' MEDIAN
EX. 36' LANES
EX. SHLDR.
I-430 LT. LANES STA. 672+16.66
EX. SHLDR.
PC 673+66.66
PCC 679+67.90
EX. SHLDR.
EX. 24' LANE
670+00
675+00
680+00
N 59°30'22" E
10'
36'
12'
40'
10'
12'
10'
12'
PK NAIL & PONTY 673
PK NAIL & PONTY 672
PONTY 5/8" REBAR W/2" ALUM. CAP
50' SHLDR. TAPER
EX. 36' LANES
EX. SHLDR.
I-430 RT. LANES STA. 672+16.66
EX. SHLDR.
EX. 24' LANES
EX. SHLDR.

APPROXIMATE FEMA 100 YR. FLOODPLAIN LIMITS

I-430 RT. LANES
STA. 673+02 IN PLACE
DROP INLET IN MEDIAN
WITH 24" X 105' R.C. PIPE CULVERT
WITH F.E.S. RT.
RETAIN AND ADJUST TO GRADE

PC 674+89.66

C.L. I-430 RT. LANES
PI = 678+70.81
Δ = 5°43'17" LT.
D = 0°45'04"
T = 381.15'
L = 761.66'
PC= 674+89.66
PT= 682+51.32
e = MATCH EXISTING
Ls = MATCH EXISTING

C.L. I-430 RT. LANES

PI 676+67.55

I-430 RT. LANES
STA. 678+50 IN PLACE
DROP INLET IN MEDIAN
WITH 30" X 162' R.C. PIPE CULVERT
10°58'15" RT. FWD. SKEW
RETAIN AND ADJUST TO GRADE

PI 678+70.81

EXISTING R/W

STATE OF ARKANSAS
LICENSED PROFESSIONAL ENGINEER
No. 13422
JOHN F. CANTABERY
7-18-14

I-430 RT. LANES

340 330 320 310 300 290 280 270 260 250

I-430 RT. LANES
STA. 672+16.66

NOTCH & WIDEN RT. LANES

EXISTING GROUND

REFER TO SURVEY CONTROL DETAIL SHEETS FOR HORIZONTAL AND VERTICAL CONTROL DATA

666+00 667+00 668+00 669+00 670+00 671+00 672+00 673+00 674+00 675+00 676+00 677+00 678+00 679+00 680+00 681+00

cgervasini 7/17/2014 7:44:01 PM
WORKSPACE: AHTD
L:\20II\II0I7709 - I-40 at I-430 Interchange Modifications\Drawings\RCA0609_PP_430_0I.dgn
REVISED DATE:

DATE	DATE FILMED	DATE REVISED	DATE FILMED	FED.RD. DIST.NO.	STATE	FED.AID PROJ.NO.	SHEET NO.	TOTAL SHEETS
				6	ARK.			
				JOB NO.		CA0609	234	693

(2) PLAN AND PROFILE - I-430 RT. LANES

STATE OF ARKANSAS
LICENSED PROFESSIONAL ENGINEER
No.13422
JOHN F. CANTABERY
7-18-14

C.L. RAMP 4 STA. 8185+37.91 =
C.L. I-430 RT. LANES STA. 692+23.45, 13.50' LT.

C.L. I-430 RT. LANES STA. 692+23.45 =
C.L. RAMP 2 STA. 692+23.45, 4.50' LT. =
C.L. RAMP 4 STA. 8185+37.91, 13.50' RT.

CONSTRUCTION LIMITS

C.L. I-430 LT. LANES

WIRE ROPE SAFETY FENCE
12' RT. OF I-40 LT. LANES
PAVEMENT EDGE

EX. 24' LANE
EX. SHLDR.
12'
10'
90
PI 689+50.57
685+00
690+00
695+00
N 53°47'04" E
N 70°10'05" E
N 74°52'54" E
PI 685+18.18
PNHOZ10(10)
PD15/8TRBAR W/2"CAP
EX. 24' LANES
EX. SHLDR.
PT 682+51.32
PC 686+73.91
C.L. I-430 LT. LANES

I-430 RT. LANES
STA. 682+67 IN PLACE
DROP INLET IN MEDIAN
WITH 36" X 148' R.C. PIPE CULVERT
13°35'01" RT. FWD SKEW
WITH F.E.S. RT.
RETAIN

STA. 692+23 REPLACE
OVERHEAD HIGHWAY SIGN
I-430 RT. LANES
SEE SIGNING PLANS

C.L. RAMP 2 STA. 692+23.45 =
C.L. I-430 RT. LANES STA. 692+23.45, 4.50' RT.

200'
LANE & SHOULDER TAPER
I-430 RT. LANES
STA. 692+23.45
693+02.36
9'
RAMP 4
STA. 8187+37.91
4'
C.L. RAMP 4
NOSE
+89.29
33.35' RT.
EX. SHLDR.
EX. 24' LANES
PT 692+23.45
PC 692+23.45
PT 693+81.19
C.L. RAMP 2
EX. SHLDR.
EX. 15' LANE
EXISTING R/W

I-430 RT. LANES

C.L. I-430 RT. LANES
PI = 678+70.81
Δ = 5°43'17" LT.
D = 0°45'04"
T = 381.15'
L = 761.66'
PC= 674+89.66
PT= 682+51.32
e = MATCH EXISTING
Ls = MATCH EXISTING

REMOVAL AND DISPOSAL OF CONCRETE DITCH PAVING

STA.	STA.	SIDE	UNIT
685+30	686+70	LT.	108 SQ. YDS.

C.L. I-430 RT. LANES
PI = 689+50.57
Δ = 16°23'06" RT.
D = 2°58'53"
T = 276.66'
L = 549.55'
PC= 686+73.91
PT= 692+23.45
e = MATCH EXISTING
Ls = MATCH EXISTING

CONCRETE DITCH PAVING (TYPE B) I-430 RT. LANES

STA.	STA.	SIDE	"W"	SQ. YDS.
685+30	687+20	LT. = 190 LIN. FT.	6'-0"	127

C.L. I-430 RT. LANES/RAMP 4 STATIONING	GUARDRAIL (TYPE A)	GUARDRAIL TERMINAL (TYPE 2)	TERMINAL ANCHOR POST (TYPE I)
STA. 690+04.45 TO STA. 8186+18.91 LT.	= 250 LIN. FT.	1 EACH	1 EACH
STA. 690+04.45 TO STA. 8186+17.98 RT.	= 250 LIN. FT.	1 EACH	1 EACH

360
350
340
330
320
310
300
290
280
270

NOTCH & WIDEN
RT. LANES

I-430 RT. LANES
STA. 692+23.45

EXISTING GROUND

REFER TO SURVEY CONTROL DETAIL SHEETS FOR
HORIZONTAL AND VERTICAL CONTROL DATA

681+00 682+00 683+00 684+00 685+00 686+00 687+00 688+00 689+00 690+00 691+00 692+00 693+00 694+00 695+00 695+00

cggervasini 7/17/2014 7:44:02 PM
WORKSPACE: AHTD
L:\20II\II07709 - I-40 at I-430 Interchange Modifications\Drawings\RCA0609_PP_430_02.dgn
REVISED DATE:

DATE	DATE FILMED	DATE REVISED	DATE FILMED	FED.RD. DIST.NO.	STATE	FED.AID PROJ.NO.	SHEET NO.	TOTAL SHEETS
				6	ARK.			
				JOB NO.		CA0609	235	693

(2) PLAN AND PROFILE - I-430 LT. LANES

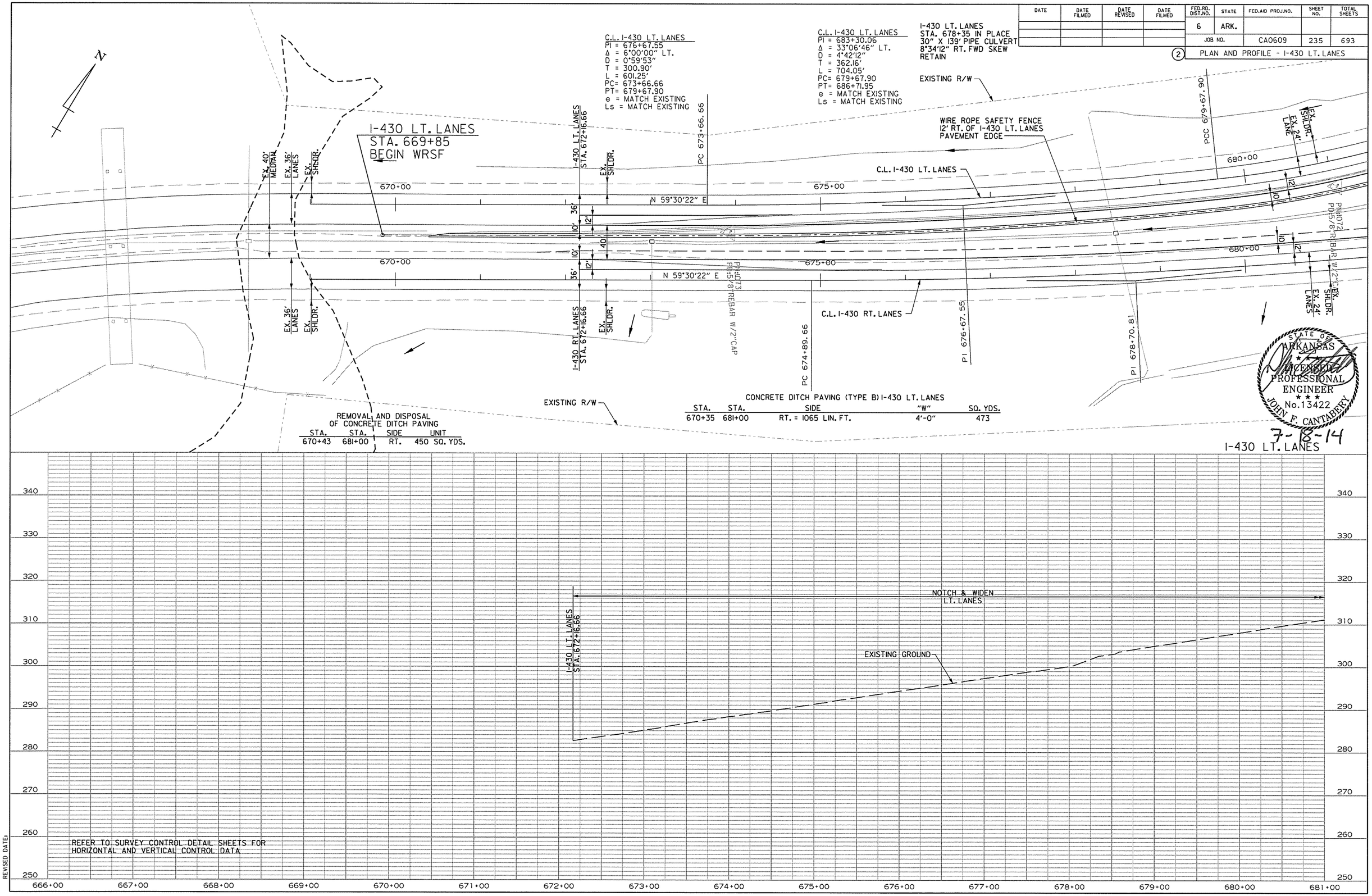

cggervasini 7/17/2014 7:44:02 PM
WORKSPACE: AHTD
L:\2011\1017709 - I-40 at I-430 Interchange Modifications\Drawings\RCA0609_PP_430_03.dgn
REVISED DATE:

DATE	DATE FILMED	DATE REVISED	DATE FILMED	FED.RD. DIST.NO.	STATE	FED.AID PROJ.NO.	SHEET NO.	TOTAL SHEETS
				6	ARK.			
				JOB NO.		CA0609	236	693

(2) PLAN AND PROFILE - I-430 LT. LANES

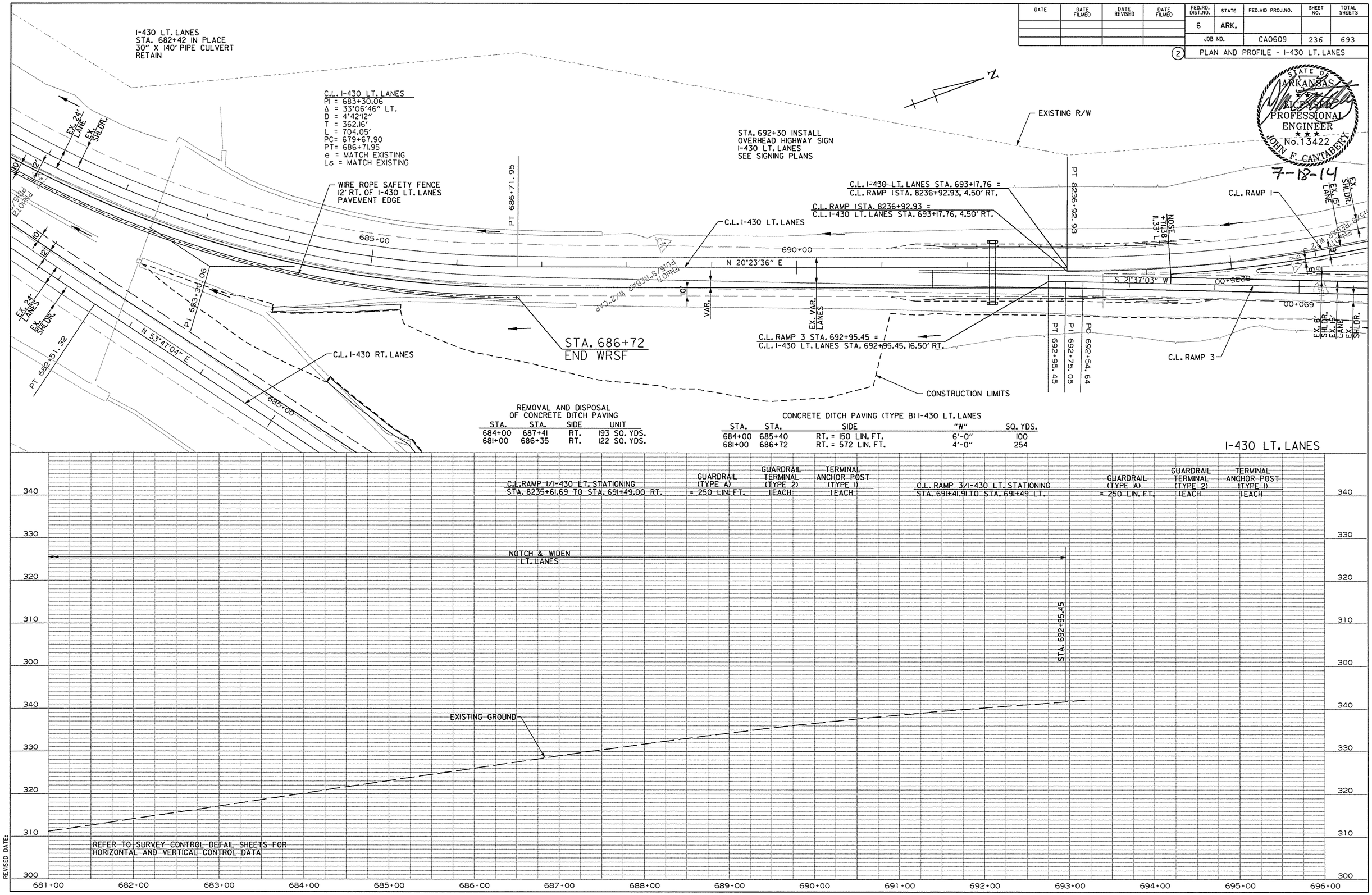

REMOVAL AND DISPOSAL OF CONCRETE DITCH PAVING

STA.	STA.	SIDE	UNIT
684+00	687+41	RT.	193 SQ. YDS.
681+00	686+35	RT.	122 SQ. YDS.

CONCRETE DITCH PAVING (TYPE B) I-430 LT. LANES

STA.	STA.	SIDE	"W"	SQ. YDS.
684+00	685+40	RT. = 150 LIN. FT.	6'-0"	100
681+00	686+72	RT. = 572 LIN. FT.	4'-0"	254

cggervasini 7/17/2014 7:44:02 PM
WORKSPACE: AHTD
L:\2011\1017709 - I-40 at I-430 Interchange Modifications\Drawings\RCA0609_PP_430_04.dgn
REVISED DATE:

DATE REVISED	DATE FILMED	DATE REVISED	DATE FILMED	FED.RD. DIST.NO.	STATE	FED.AID PROJ.NO.	SHEET NO.	TOTAL SHEETS
				6	ARK.			
				JOB NO.		CA0609	237	693

(2) INTERCHANGE LAYOUT - I-40 @ I-430

N

C.L. I-40 LT. LANES STA. 8239+36.89=
C.L. RAMP 4 STA. 8202+98.74
∢ = 62°03'15"

C.L. RAMP 4 STA. 8205+17.86=
C.L. RAMP 3 STA. 668+08.96
∢ = 32°57'41"

CONCRETE BARRIER WALL

C.L. RAMP 4

C.L. RAMP 3

C.L. I-40 LT. LANES STA. 8222+59.33, 3.82' LT. =
C.L. RAMP 4 STA. 8220+91.64, 7.50' LT.

C.L. RAMP 4 STA. 8221+75.09 =
C.L. I-40 LT. LANES STA. 8221+75.09, 7.50' LT.

C.L. NORMAN ROAD

C.L. NEVA ROAD

C.L. NORMAN ROAD STA. 23+96.75 =
C.L. NEVA ROAD STA. 10+00.00
∢ = 89°58'25"

C.L. I-40 LT. LANES STA. 8209+85.11=
C.L. NORMAN ROAD STA. 20+46.59
∢ = 84°58'21"

C.L. I-40 MEDIAN STA. 8209+89.99=
C.L. NORMAN ROAD STA. 20+00.00
∢ = 84°00'00"

C.L. I-40 LT LANES

C.L. I-40 MEDIAN

C.L. I-40 RT LANES

3260' AUXILIARY LANE

3000' AUXILIARY LANE

840' TAPER

300' TAPER

700' RECOVERY LANE

C.L. I-40 MEDIAN STA. 8240+59.16=
C.L. RAMP 4 STA. 8202+08.71
∢ = 68°42'05"

C.L. I-40 RT. LANES STA. 8241+72.57=
C.L. RAMP 4 STA. 8201+28.07
∢ = 74°41'23"

C.L. RAMP 2

C.L. RAMP 4 STA. 8188+94.28, 33.35' RT. =
C.L. RAMP 2 STA. 695+80.06, 7.50' LT.

C.L. RAMP 4
STA. 8185+37.91 =
C.L. I-430 RT. LANES
STA. 692+23.45, 13.50' LT.

C.L. RAMP 2 STA. 692+23.45 =
C.L. I-430 RT. LANES STA. 692+23.45, 4.50' RT.

C.L. I-430 RT. LANES STA. 692+23.45 =
C.L. RAMP 2 STA. 692+23.45, 4.50' LT. =
C.L. RAMP 4 STA. 8185+37.91, 13.50' RT.

C.L. I-40 RT. LANES STA. 8209+98.03=
C.L. NORMAN ROAD STA. 19+26.90
∢ = 84°56'58"

C.L. I-40 RT. LANES STA. 8216+71.79, 32.70' RT. =
C.L. RAMP 1 STA. 8216+74.66, 7.50' LT.

C.L. RAMP 1 STA. 8213+68.18 =
C.L. I-40 RT. LANES STA. 8213+68.18, 7.50' RT.

C.L. RAMP 1 STA. 8235+71.38, 11.33' LT. =
C.L. RAMP 3 STA. 691+51.05, 7.50' RT.

C.L. I-430 LT. LANES STA. 693+17.76 =
C.L. RAMP 1 STA. 8236+92.93, 4.50' RT.

C.L. RAMP 1 STA. 8236+92.93 =
C.L. I-430 LT. LANES STA. 693+17.76, 4.50' RT.

C.L. RAMP 3 STA. 692+95.45 =
C.L. I-430 LT. LANES STA. 692+95.45, 16.50' RT.

PC 663+54.20
PI 665+49.56
PT 667+43.06
PCC 8206+46.03
PI 8209+86.41
PC 671+71.19
PT 8212+48.40
PC 8216+92.23
PI 8219+43.24
PT 8221+75.09
PI 682+21.74
PC 22+24.85
PI 23+11.59
PT 23+96.75
PC 8209+29.71
PT 18+17.76
PI 16+93.18
PC 15+63.42
POB 8+50.00
PC 9+23.92
PI 9+44.83
PT 9+63.53
PCC 10+00.00
PC 8213+68.18
PI 8214+64.40
PT 8215+60.45
PC 8214+31.08
PC 8211+90.67
PI 8224+50.59
PI 8225+31.67
PI 8226+06.44
PC 8228+55.24
PC 692+54.64
PI 692+75.05
PT 692+95.45
PI 685+71.65
PT 685+71.65
PI 8232+82.00
PI 8201+81.47
PT 8237+77.26
PT 8236+99.09
PT 8236+33.41
PC 8193+09.89
PT 8236+92.93
PC 8201+81.47
PI 693+02.36
PT 693+81.19
PC 692+23.45
PT 692+23.45
PI 689+50.57
PC 686+73.91
PI 683+30.06
PT 682+51.32
PT 686+71.95
PCC 679+67.90
PI 678+70.81
PI 676+67.55
PC 674+89.66
PC 673+66.66

8195+00 8200+00 8205+00 8210+00 8215+00 8220+00 8225+00 8230+00 8235+00 8240+00 8245+00 8200+00 8205+00 8210+00 8215+00 8220+00 8225+00 8230+00 8235+00 8240+00 8245+00 8195+00 8200+00 8205+00 8210+00 8215+00 8220+00 8225+00 8230+00 8235+00 8240+00 8245+00 8250+00 8255+00 8260+00 8265+00 8270+00 8275+00 8280+00 8285+00 8290+00 8295+00 8300+00 8305+00 8310+00 8315+00 8320+00 8325+00 8330+00 8335+00 8340+00 8345+00 8350+00 8355+00 8360+00 8365+00 8370+00 8375+00 8380+00 8385+00 8390+00 8395+00 8400+00 8405+00 8410+00 8415+00 8420+00 8425+00 8430+00 8435+00 8440+00 8445+00 8450+00 8455+00 8460+00 8465+00 8470+00 8475+00 8480+00 8485+00 8490+00 8495+00 8500+00 8505+00 8510+00 8515+00 8520+00 8525+00 8530+00 8535+00 8540+00 8545+00 8550+00 8555+00 8560+00 8565+00 8570+00 8575+00 8580+00 8585+00 8590+00 8595+00 8600+00 8605+00 8610+00 8615+00 8620+00 8625+00 8630+00 8635+00 8640+00 8645+00 8650+00 8655+00 8660+00 8665+00 8670+00 8675+00 8680+00 8685+00 8690+00 8695+00 8700+00 8705+00 8710+00 8715+00 8720+00 8725+00 8730+00 8735+00 8740+00 8745+00 8750+00 8755+00 8760+00 8765+00 8770+00 8775+00 8780+00 8785+00 8790+00 8795+00 8800+00 8805+00 8810+00 8815+00 8820+00 8825+00 8830+00 8835+00 8840+00 8845+00 8850+00 8855+00 8860+00 8865+00 8870+00 8875+00 8880+00 8885+00 8890+00 8895+00 8900+00 8905+00 8910+00 8915+00 8920+00 8925+00 8930+00 8935+00 8940+00 8945+00 8950+00 8955+00 8960+00 8965+00 8970+00 8975+00 8980+00 8985+00 8990+00 8995+00 9000+00 9005+00 9010+00 9015+00 9020+00 9025+00 9030+00 9035+00 9040+00 9045+00 9050+00 9055+00 9060+00 9065+00 9070+00 9075+00 9080+00 9085+00 9090+00 9095+00 9100+00 9105+00 9110+00 9115+00 9120+00 9125+00 9130+00 9135+00 9140+00 9145+00 9150+00 9155+00 9160+00 9165+00 9170+00 9175+00 9180+00 9185+00 9190+00 9195+00 9200+00 9205+00 9210+00 9215+00 9220+00 9225+00 9230+00 9235+00 9240+00 9245+00 9250+00 9255+00 9260+00 9265+00 9270+00 9275+00 9280+00 9285+00 9290+00 9295+00 9300+00 9305+00 9310+00 9315+00 9320+00 9325+00 9330+00 9335+00 9340+00 9345+00 9350+00 9355+00 9360+00 9365+00 9370+00 9375+00 9380+00 9385+00 9390+00 9395+00 9400+00 9405+00 9410+00 9415+00 9420+00 9425+00 9430+00 9435+00 9440+00 9445+00 9450+00 9455+00 9460+00 9465+00 9470+00 9475+00 9480+00 9485+00 9490+00 9495+00 9500+00 9505+00 9510+00 9515+00 9520+00 9525+00 9530+00 9535+00 9540+00 9545+00 9550+00 9555+00 9560+00 9565+00 9570+00 9575+00 9580+00 9585+00 9590+00 9595+00 9600+00 9605+00 9610+00 9615+00 9620+00 9625+00 9630+00 9635+00 9640+00 9645+00 9650+00 9655+00 9660+00 9665+00 9670+00 9675+00 9680+00 9685+00 9690+00 9695+00 9700+00 9705+00 9710+00 9715+00 9720+00 9725+00 9730+00 9735+00 9740+00 9745+00 9750+00 9755+00 9760+00 9765+00 9770+00 9775+00 9780+00 9785+00 9790+00 9795+00 9800+00 9805+00 9810+00 9815+00 9820+00 9825+00 9830+00 9835+00 9840+00 9845+00 9850+00 9855+00 9860+00 9865+00 9870+00 9875+00 9880+00 9885+00 9890+00 9895+00 9900+00 9905+00 9910+00 9915+00 9920+00 9925+00 9930+00 9935+00 9940+00 9945+00 9950+00 9955+00 9960+00 9965+00 9970+00 9975+00 9980+00 9985+00 9990+00 9995+00 10000+00

STATE OF ARKANSAS
LICENSED PROFESSIONAL ENGINEER
No.13422
JOHN F. CANTABERRY
7-18-14

CURVE DATA

CURVE	PC	PI	PT	Δ	D	TANGENT FEET	LENGTH FEET	e FT./FT.	Ls FEET	DESIGN SPEED	
40M-1	8211+90.67	8225+31.67	8236+99.09	50°10'06"	2°00'00"	1341.00	2508.42	N.A.	N.A.	N.A.	
40R-1	8214+31.08	8226+06.44	8236+33.41	49°33'08"	2°15'00"	1175.35	2202.33	MATCH EXIST. (0.070)	MATCH EXIST.	70 MPH	○
40L-1	8209+29.71	8224+50.59	8237+77.26	49°49'56"	1°45'00"	1520.88	2847.55	MATCH EXIST. (0.060)	MATCH EXIST.	70 MPH	○
430R-1	674+89.66	678+70.81	682+51.32	5°43'17"	0°45'04"	381.15	761.66	MATCH EXIST. (R.C.)	MATCH EXIST.	60 MPH	○
430R-2	686+73.91	689+50.57	692+23.45	16°23'01"	2°58'53"	276.66	549.55	MATCH EXIST. (0.040)	MATCH EXIST.	60 MPH	○
430L-1	673+66.66	676+67.55	679+67.90	6°00'00"	0°59'53"	300.90	601.25	MATCH EXIST. (0.030)	MATCH EXIST.	60 MPH	
430L-2	679+67.90	683+30.06	686+71.95	33°06'46"	4°42'12"	362.16	704.05	MATCH EXIST. (0.046)	MATCH EXIST.	60 MPH	○
RI-1	8213+68.18	8214+64.40	8215+60.45	5°46'05"	3°00'00"	96.22	192.27	N.A.	N.A.	70 MPH	
RI-2	8228+55.24	8232+82.00	8236+92.93	26°58'20"	3°13'12"	426.75	837.68	MATCH EXIST. (0.040)	MATCH EXIST.	50 MPH	○
R2-1	692+23.45	693+02.36	693+81.19	4°42'49"	2°59'18"	78.91	157.74	N.A.	N.A.	50 MPH	
R3-1	663+54.20	665+49.56	667+43.06	13°40'23"	3°30'58"	195.36	388.87	MATCH EXIST. (0.040)	MATCH EXIST.	50 MPH	○
R3-2	671+71.19	682+21.74	685+71.65	110°52'34"	7°55'02"	1050.55	1400.47	MATCH EXIST. (0.080)	MATCH EXIST.	50 MPH	○
R3-3	692+54.64	692+75.05	692+95.45	1°13'28"	3°00'00"	20.41	40.81	MATCH EXIST. (0.020)	MATCH EXIST.	50 MPH	
R4-1	8193+09.89	8201+81.47	8206+46.03	93°42'06"	7°00'46"	871.58	1336.14	MATCH EXIST. (0.080)	MATCH EXIST.	50 MPH	○
R4-2	8206+46.03	8209+66.41	8212+48.40	48°17'25"	8°01'00"	320.38	602.37	MATCH EXIST. (0.080)	MATCH EXIST.	50 MPH	○
R4-3	8216+92.23	8219+43.24	8221+75.09	38°37'44"	8°00'00"	251.01	482.86	MATCH EXIST. (0.080)	MATCH EXIST.	50 MPH	○
NR-1	15+63.42	16+93.18	18+17.76	27°58'39"	11°00'00"	129.76	254.34	N.C.	N.A.	30 MPH	▲
NR-2	22+24.85	23+11.59	23+96.75	18°54'31"	11°00'00"	86.74	171.90	N.C.	N.A.	30 MPH	▲
DR-1	9+23.92	9+44.83	9+63.53	45°23'08"	114°35'30"	20.91	39.61	N.C.	N.A.	NA MPH	

○ DEGREE OF CURVE MEETS DESIGN SPEED, BUT EXISTING SUPERELEVATION IS BELOW RECOMMENDED VALUES ON STD. DWG. SE-1.
▲ SUPERELEVATION BASED ON 2004 GREEN BOOK TABLE 3-16, e=-2%

INTERCHANGE LAYOUT - I-40 @ I-430

cggervasini 7/17/2014 7:44:03 PM
WORKSPACE: AHTD
L:\2011\11007709 - I-40 at I-430 Interchange Modifications\Drawings\RCA0609_IP_MNL_01.dgn
REVISED DATE:

DATE	DATE FILMED	DATE REVISED	DATE FILMED	FED.RD. DIST.NO.	STATE	FED.AID PROJ.NO.	SHEET NO.	TOTAL SHEETS
				6	ARK.			
				JOB NO.		CA0609	238	693

2 PLAN AND PROFILE - RAMP I

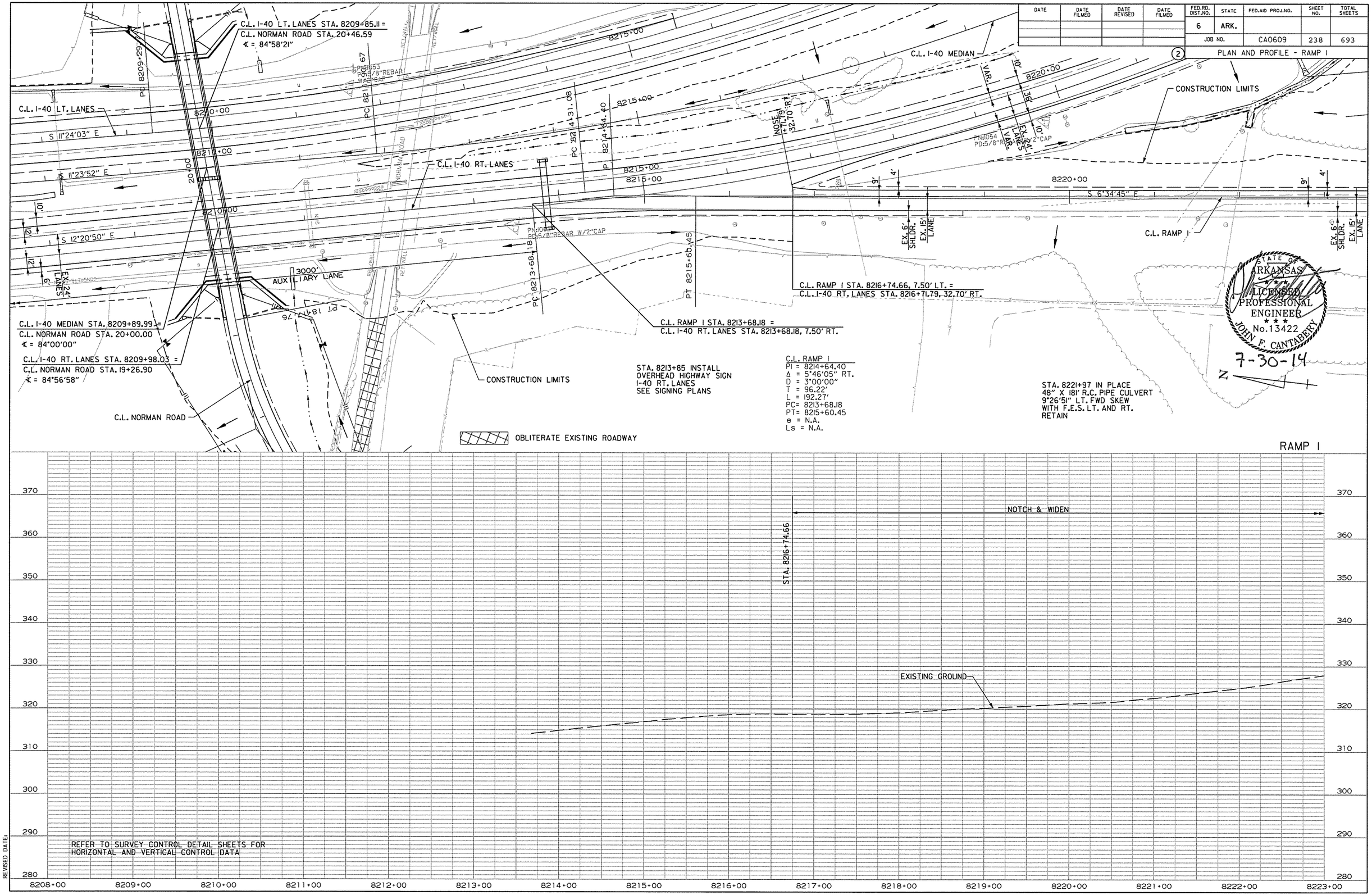

cggervasini 7/30/2014 2:31:00 PM
WORKSPACE: AHTD
L:\2011\1017709 - I-40 at I-430 Interchange Modifications\Drawings\RCA0609_PP_RPI_01.dgn
REVISED DATE:

DATE	DATE FILMED	DATE REVISED	DATE FILMED	FED.RD. DIST.NO.	STATE	FED.AID PROJ.NO.	SHEET NO.	TOTAL SHEETS
				6	ARK.			
				JOB NO.		CA0609	239	693

(2) PLAN AND PROFILE - RAMP I

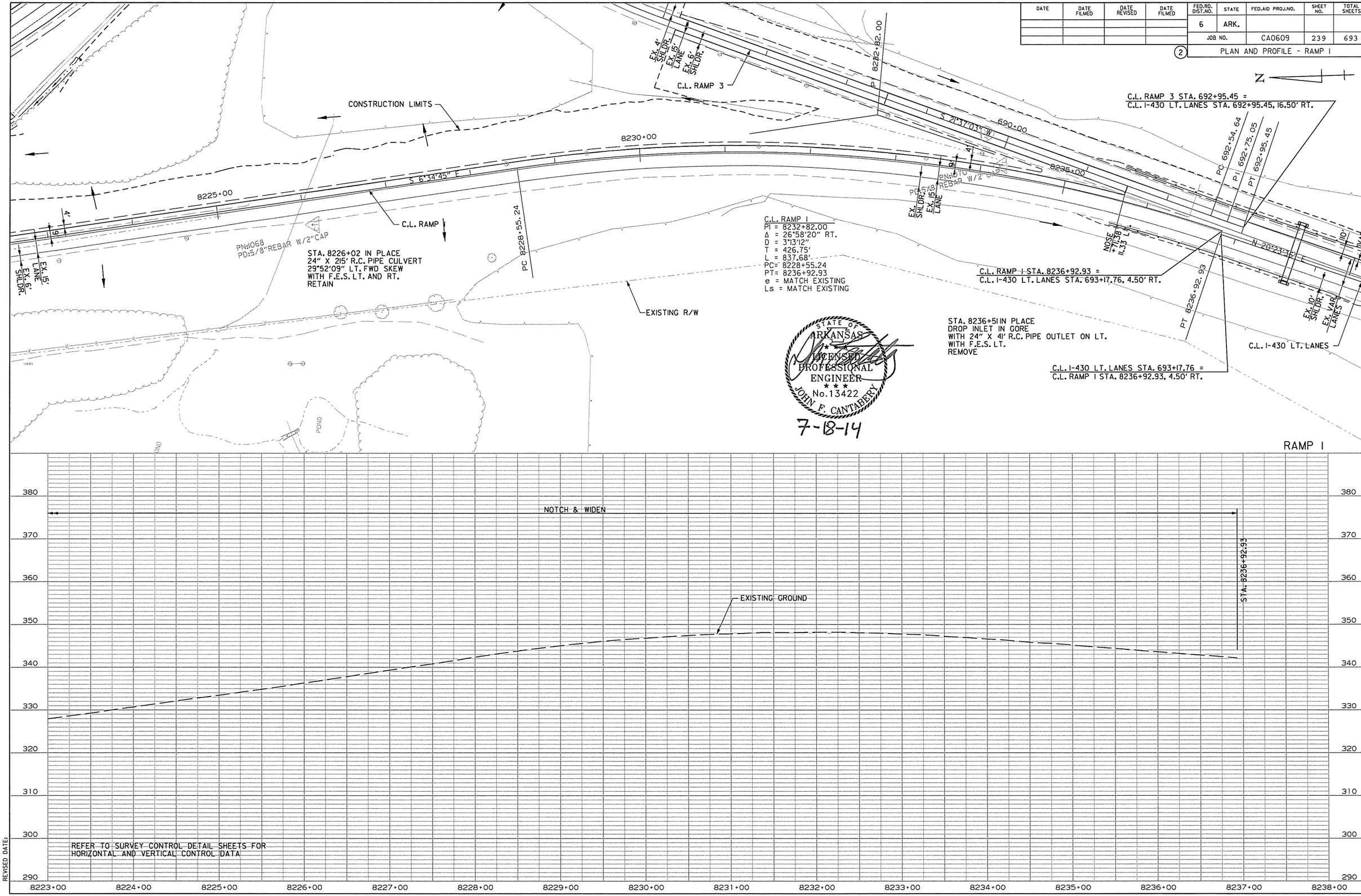

cggervasini 7/17/2014 7:44:04 PM
WORKSPACE: AHTD
L:\2011\1017709 - I-40 at I-430 Interchange Modifications\Drawings\RCA0609_PP_RPI_02.dgn
REVISED DATE:

DATE	DATE FILMED	DATE REVISED	DATE FILMED	FED.RD. DIST.NO.	STATE	FED.AID PROJ.NO.	SHEET NO.	TOTAL SHEETS
				6	ARK.			
				JOB NO.		CA0609	240	693

(2) PLAN AND PROFILE - RAMP 3

STATE OF ARKANSAS
LICENSED PROFESSIONAL ENGINEER
No.13422
JOHN F. CANTABERY
7-18-14

C.L. I-40 LT. LANES STA. 8239+36.89 =
C.L. RAMP 4 STA. 8202+98.74
℄ = 62°03'15"

C.L. I-40 MEDIAN STA. 8240+59.16 =
C.L. RAMP 4 STA. 8202+08.71
℄ = 68°42'05"

S 61°53'58" E
S 61°33'58" E
S 61°13'58" E

C.L. I-40 RT. LANES
C.L. I-40 MEDIAN
C.L. I-40 LT. LANES
C.L. C-D ROAD

PC 8242+72.84
PI 8241+83.46
PC 8240+63.90
PI 8237+77.26
PT 8236+99.09
PC 8233+91.47
PT 8235+53.48
PC 8206+46.03
PT 667+43.06
PC 671+71.19
PI 665+49.56
PC 8242+73.20

BEGIN RAMP 3
STA. 665+27.81

CONSTRUCTION LIMITS

STA. 669+97 IN PLACE
DROP INLET RT.
WITH 30" X 98' R.C. PIPE OUTLET TO LT.
30° RT. FWD SKEW
WITH HDWL. LT.
PLUG AND ABANDON INLET
RETAIN PIPE

END RAMP 3
STA. 672+00.00

N 47°30'23" W
N 11°49'25" W

4' 15' 8' 4' 15' 4' 6'
EX. 4' SHLDR. EX. 15' LANE EX. 6' SHLDR.

C.L. RAMP 4

STATION 669+89 CONSTRUCT
TYPE "RM" DROP INLET RT.
5'-6" x 3'-0" x H = 5'-10"
WITH EXIST. 30" X 98' R.C. PIPE CULVERT
30° RT. FWD. SKEW.

REMOVAL AND DISPOSAL OF GUARDRAIL RAMP 3

STA.	STA.	SIDE	UNIT
661+90	664+15	RT.	225 LIN. FT.
665+92	668+18	LT.	228 LIN. FT.

C.L. RAMP 4 STA. 8205+17.86 =
C.L. RAMP 3 STA. 668+08.96
℄ = 32°57'41"

EXISTING R/W

C.L. RAMP 3
PI = 665+49.56
Δ = 13°40'23" RT.
D = 3°30'58"
T = 195.36'
L = 388.87'
PC= 663+54.20
PT= 667+43.06
e = MATCH EXISTING
Ls = MATCH EXISTING

C.L. RAMP 3
PI = 682+21.74
Δ = 110°52'34" LT.
D = 7°55'02"
T = 1050.55'
L = 1400.47
PC= 671+71.19
PT= 685+71.65
e = MATCH EXISTING
Ls = MATCH EXISTING

RAMP 3

STA. 665+27.81 MATCH EXISTING (0.040 FT./FT.)
STA. 666+68.06 MAX. SUPERELEVATION (0.04 FT./FT.)
STA. 667+81.24 END SUPERELEVATION (0.02 FT./FT.)

STA. 667+81.24 BEGIN SUPERELEVATION (0.020 FT./FT.)
STA. 672+00.00 MATCH EXISTING (0.054 FT./FT.)

C.L. C-D ROAD STATIONING	GUARDRAIL (TYPE A)	TERMINAL ANCHOR POST (TYPE I)	GUARDRAIL TERMINAL (TYPE 2)
STA. 8238+25.62 TO STA. 8240+50.62 LT.	= 175 LIN. FT.	1 EACH	1 EACH

C.L. I-40 LT. LANES STATIONING	GUARDRAIL (TYPE A)	TERMINAL ANCHOR POST (TYPE I)	GUARDRAIL TERMINAL (TYPE 2)
STA. 8238+72.36 TO STA. 8241+47.36 LT.	= 225 LIN. FT.	1 EACH	1 EACH

C.L. RAMP 3 STATIONING	GUARDRAIL (TYPE A)	TERMINAL ANCHOR POST (TYPE I)	GUARDRAIL TERMINAL (TYPE 2)	THRIE BEAM GUARDRAIL TERMINAL
STA. 661+84.72 TO STA. 665+28.47 RT.	= 275 LIN. FT.		1 EACH	1 EACH
STA. 665+65.43 TO STA. 667+65.43 LT.	= 150 LIN. FT.	1 EACH	1 EACH	

CONCRETE DITCH PAVING (TYPE B) RAMP 3

STA.	STA.	SIDE	"W"	SQ. YDS.
665+28	671+00	RT. = 572 LIN. FT.	8'-4" (AVE.)	529

C.L. RAMP 3 STA. 665+27.81, 7.50' LT.
ELEV. 324.72

C.L. RAMP 3 STA. 672+00.00, 7.50' LT.
ELEV. 341.47

PROFILE GRADE
EXISTING GROUND

PVI 666+10.00
ELEV. 326.78
P.G. ELEV. 326.57

PVC 667+80.00
ELEV. 329.21

PVI 671+20.00
ELEV. 339.47
P.G. ELEV. 339.17

VC=260.00'
K 101.17

VC=150.00'
K 140.19

VC=160.00'
K 106.67

2.50%
2.36% RIGHT DITCH GRADE
1.43%
4.00%
2.50%
1.45% RIGHT DITCH GRADE

PVI 666+85.00
ELEV. 327.85

PVI 669+10.00
ELEV. 331.07
P.G. ELEV. 331.90

PVRC 670+40.00
ELEV. 336.27

PVT 672+00.00
ELEV. 341.47

+27.81 RT. 321.66
PVC 665+35.00
ELEV. 324.90

+50.00 RT. 329.25
+00.00 RT. 334.22
+00.00 RT. 335.67
+00.00 RT. 339.17

TOP = 333.78
INV. = 327.95
F.L. = 326.00 (LT.)

REFER TO SURVEY CONTROL DETAIL SHEETS FOR HORIZONTAL AND VERTICAL CONTROL DATA

390 380 370 360 350 340 330 320 310 300

661+00 662+00 663+00 664+00 665+00 666+00 667+00 668+00 669+00 670+00 671+00 672+00 673+00 674+00 675+00 676+00

cggarvasini 7/17/2014 7:44:04 PM
WORKSPACE: AHTD
L:\ROW\NOT709 - I-40 at I-430 Interchange Modifications\Drawings\RCA0609_PP_RP3_01.dgn
REVISED DATE:

DATE	DATE FILMED	DATE REVISED	DATE FILMED	FED.RD. DIST.NO.	STATE	FED.AID PROJ.NO.	SHEET NO.	TOTAL SHEETS
				6	ARK.			
				JOB NO.		CA0609	241	693

(2) PLAN AND PROFILE - RAMP 3

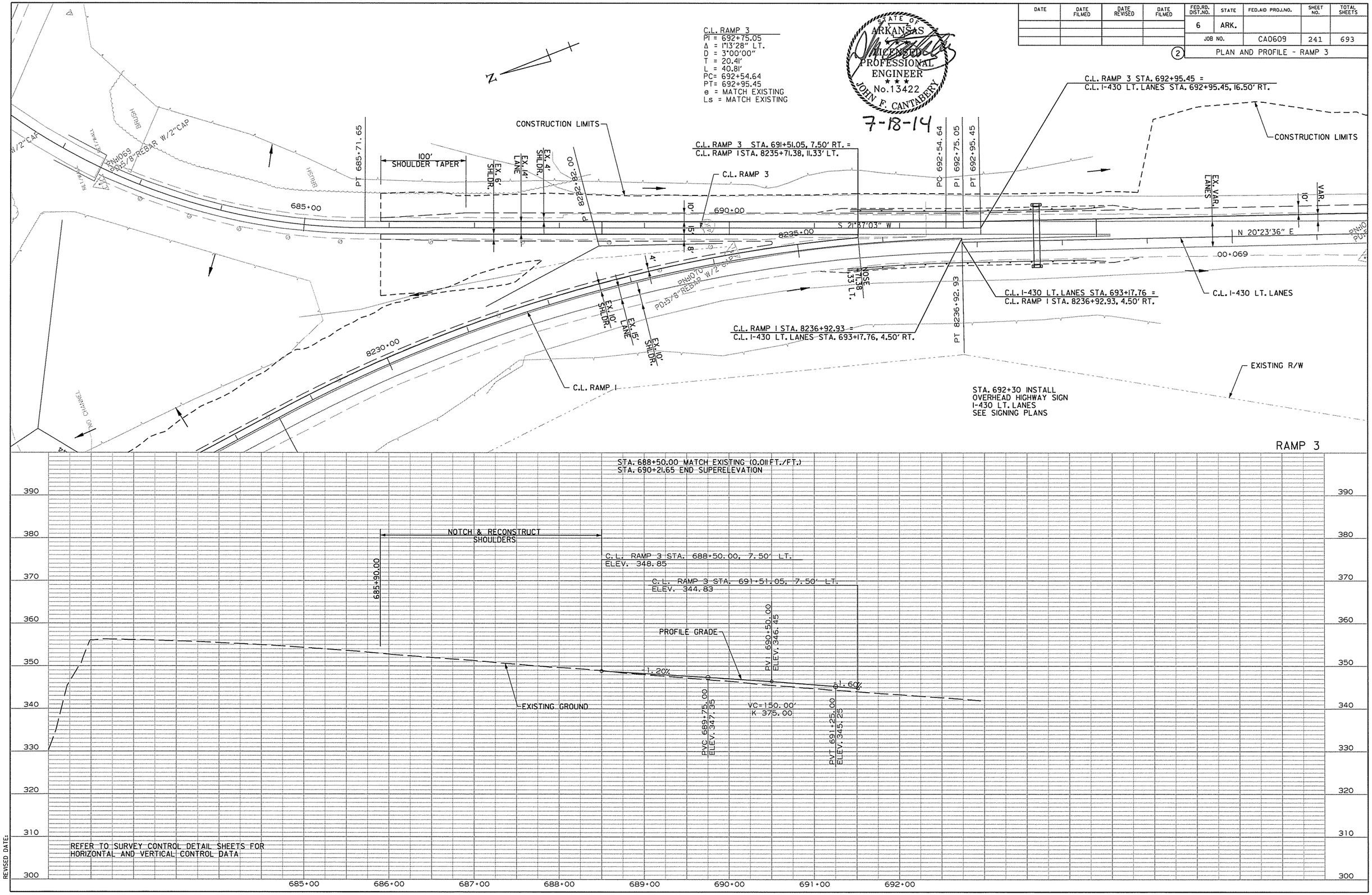

REFER TO SURVEY CONTROL DETAIL SHEETS FOR HORIZONTAL AND VERTICAL CONTROL DATA

cggervasini 7/17/2014 7:44:04 PM
WORKSPACE: AHTD
L:\2011\1017709 - I-40 at I-430 Interchange Modifications\Drawings\RCA0609_PP_RP3_02.dgn
REVISED DATE:

DATE	DATE FILMED	DATE REVISED	DATE FILMED	FED.RD. DIST.NO.	STATE	FED.AID PROJ.NO.	SHEET NO.	TOTAL SHEETS
				6	ARK.			
				JOB NO.		CA0609	242	693

(2) PLAN AND PROFILE - RAMP 4

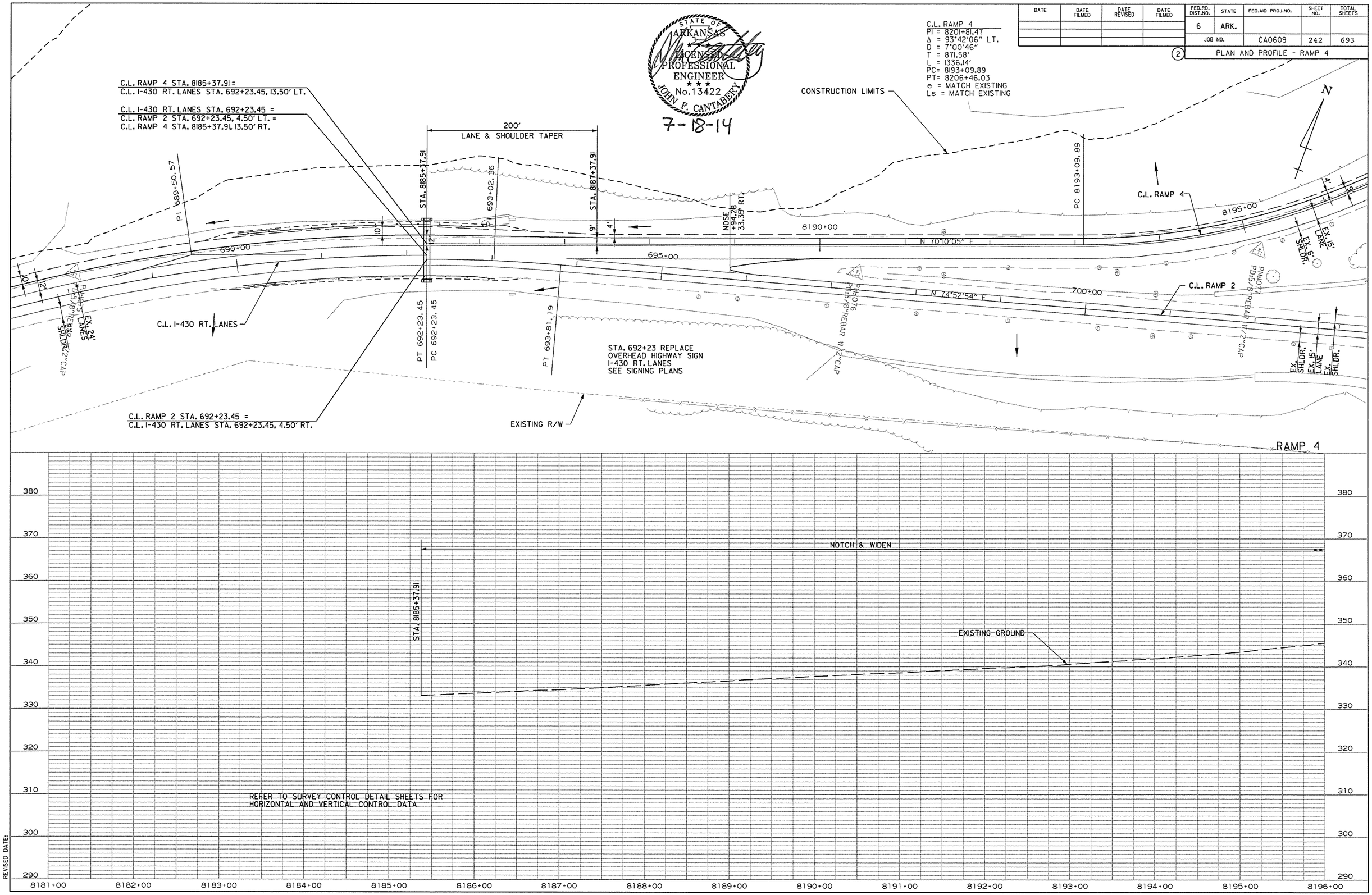

cggervasini 7/17/2014 7:44:05 PM
WORKSPACE: AHTD
L:\2011\1017709 - I-40 at I-430 Interchange Modifications\Drawings\RCA0609_PP_RP4_01.dgn
REVISED DATE:

DATE	DATE FILMED	DATE REVISED	DATE FILMED	FED.RD. DIST.NO.	STATE	FED.AID PROJ.NO.	SHEET NO.	TOTAL SHEETS
				6	ARK.			
				JOB NO.		CA0609	243	693

(2) PLAN AND PROFILE - RAMP 4

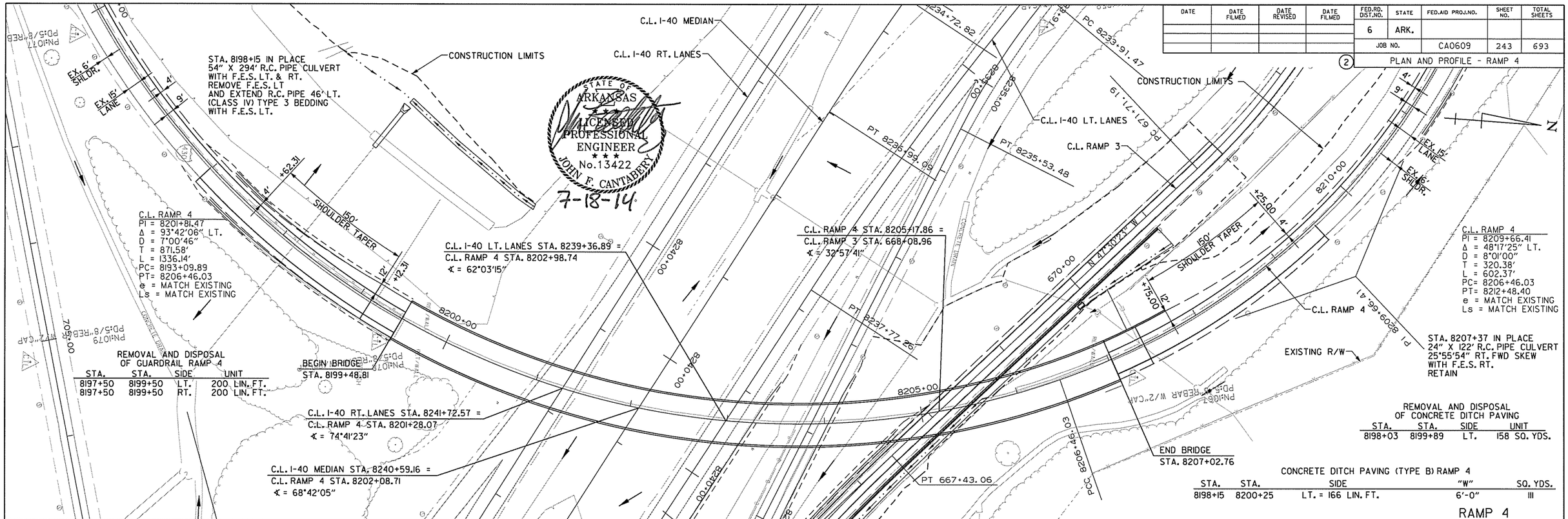

cggervasini 7/17/2014 7:44:05 PM
WORKSPACE: AHTD
L:\2011\11017709 - I-40 at I-430 Interchange Modifications\Drawings\RCA0609_PP_RP4_02.dgn
REVISED DATE:

DATE	DATE FILMED	DATE REVISED	DATE FILMED	FED.RD. DIST.NO.	STATE	FED.AID PROJ.NO.	SHEET NO.	TOTAL SHEETS
				6	ARK.			
				JOB NO.		CA0609	244	693

2 PLAN AND PROFILE - RAMP 4

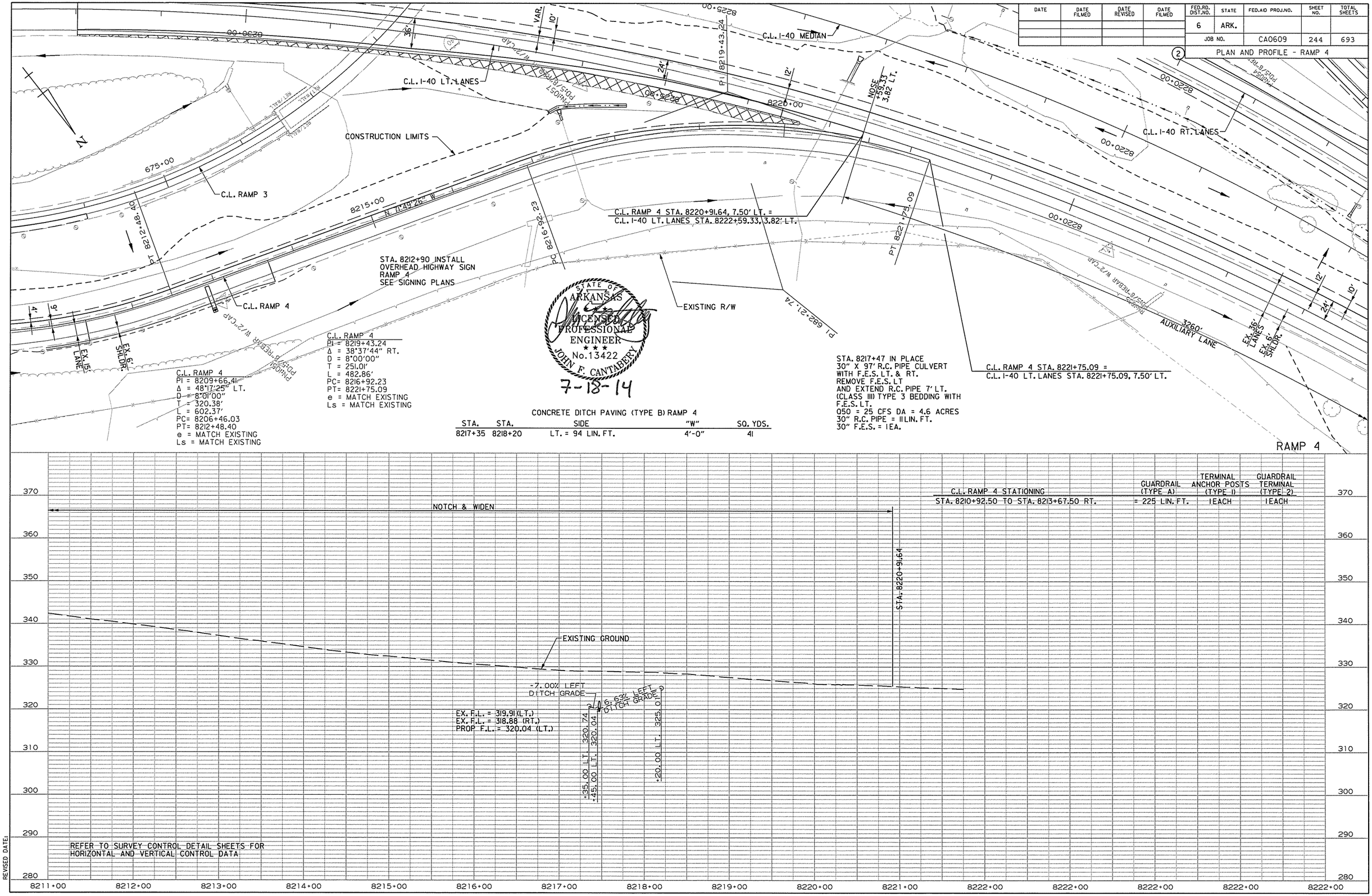

CONCRETE DITCH PAVING (TYPE B) RAMP 4

STA.	STA.	SIDE	"W"	SQ. YDS.
8217+35	8218+20	LT. = 94 LIN. FT.	4'-0"	41

C.L. RAMP 4 STATIONING	GUARDRAIL (TYPE A)	TERMINAL ANCHOR POSTS (TYPE 1)	GUARDRAIL TERMINAL (TYPE 2)
STA. 8210+92.50 TO STA. 8213+67.50 RT.	= 225 LIN. FT.	1 EACH	1 EACH

cggervasini 7/17/2014 7:44:05 PM
WORKSPACE: AHTD
L:\2011\11017709 - I-40 at I-430 Interchange Modifications\Drawings\RCA0609_PP_RP4_03.dgn
REVISED DATE:

DATE	DATE FILMED	DATE REVISED	DATE FILMED	FED.RD. DIST.NO.	STATE	FED.AID PROJ.NO.	SHEET NO.	TOTAL SHEETS
				6	ARK.			
				JOB NO.		CA0609	245	693

(2) PLAN & PROFILE-STA. 3+53.20 TO STA. 11+50

STATE OF ARKANSAS
REGISTERED PROFESSIONAL ENGINEER
No. 11427
KEVIN G. TOBLESKY
7/17/14

CL MARCHE RD.
PI = 6+16.93
Δ = 35°34'25" LT.
D = 13°15'00"
T = 138.73'
L = 268.48'
PC = 4+78.20
PT = 7+46.68
Ls = 250'
e = 0.100'/'

DENOTES OBLITERATION OF PAVEMENT

EXIST. R/W
EXIST. R/W
POB 3+53.20
3+78.20
100'
BEGIN MARCHE ROAD IMPROVEMENTS STA. 3+78.20
N 38°55'07" E
PC 4+78.20
5.5' SHLD.
22'
6' SHLD.
EXISTING R/W AND C of A
FLOOD PLAIN LIMITS
FLOOD PLAIN LIMITS
CONSTRUCTION LIMITS
PT 7+46.68
C.L. MARCHE RD.
N 3° 20'42" E
10
6' SHLD.
22'
6' SHLD.
6
PI 6+16.93
EXISTING C.L. MARCHE RD.
CONSTRUCTION LIMITS
FLOOD PLAIN LIMITS
EXISTING R/W & C of A
MARCHE RD.

DENOTES PAVEMENT TRANSITION

STA. 4+78.20 BEGIN SUPERELEVATION (MATCH EXIST. 0.020'/')
STA. 6+44.87 MAX. SUPERELEVATION (0.100'/')
STA. 6+84.18 MAX. SUPERELEVATION (0.100'/')
STA. 9+34.18 END SUPERELEVATION (N.C.)

100' VERTICAL TRANSITION TO MATCH EXISTING
3+78.20
4+78.20
PVC 5+33.46 Elev 267.14
PVI 4+78.20 ELEV. 267.29
-0.28%
PROFILE GRADE
VC=300.00'
K = 70.12
PVI 6+83.46 ELEV. 266.72 P.O. 266.32
PVT 8+33.46 Elev 272.72
4.00%
EXISTING GROUND @ C.L.

REFER TO SURVEY CONTROL DETAIL SHEETS FOR HORIZONTAL AND VERTICAL CONTROL DATA.

295 290 285 280 275 270 265 260 255 250

0+00 5+00 10+00

t:\job\wlxm2650 dhtd cap ca0603\700 cadd files\777 roadway files\drawings\ll-Plan and Profile Sheets.dgn
...\ll-Plan and Profile Sheets.dgn
7/16/2014 1:34:33 PM

DATE	DATE FILMED	DATE REVISED	DATE FILMED

FED.RD. DIST.NO.	STATE	FED.AID PROJ.NO.	SHEET NO.	TOTAL SHEETS
6	ARK.			
JOB NO.		CA0609	246	693

(2) PLAN & PROFILE-STA. 11+50 TO STA. 26+14.65

REMOVAL AND DISPOSAL OF APPROACH SLAB & GUTTERS

STA.	LOCATION	EACH
12+16	C.L. EXISTING MARCHE RD.	1
16+93	C.L. EXISTING MARCHE RD.	1

REMOVAL AND DISPOSAL OF GUARDRAIL

STA.	STA.	LOCATION	LIN. FT.
11+72	12+22	RT. OF C.L. EXISTING MARCHE RD.	50
12+01	12+41	LT. OF C.L. EXISTING MARCHE RD.	40
16+68	17+08	RT. OF C.L. EXISTING MARCHE RD.	40
16+87	17+37	LT. OF C.L. EXISTING MARCHE RD.	50

DENOTES OBLITERATION OF PAVEMENT

GUARDRAIL - INSTALLATION

	GUARDRAIL (TYPE A)	THRIE BEAM GUARDRAIL TEMINAL	TERMINAL ANCHOR POST (TYPE 1)
STA. 11+59.44 TO STA. 12+53.19 RT OF CL MARCHE RD.	75 LIN. FT.	1 EACH	1 EACH
STA. 11+84.14 TO STA. 12+77.89 LT OF CL MARCHE RD.	75 LIN. FT.	1 EACH	1 EACH
STA. 16+68.11 TO STA. 17+61.86 RT OF CL MARCHE RD.	75 LIN. FT.	1 EACH	1 EACH
STA. 16+92.81 TO STA. 17+86.56 LT OF CL MARCHE RD.	75 LIN. FT.	1 EACH	1 EACH

MARCHE-BR 3231
STA. 12+31.06 TO STA. 16+78.92
447'-10⅜" X 26'-0" CLEAR ROADWAY WIDTH
BRIDGE CONSISTING OF SEVEN COMPOSITE I-BEAM UNITS
(SPANS: 55', 70', 55', 70', 70', 70', 55')
REMOVE AS EXISTING BRIDGE STRUCTURES = 1.00 LUMP SUM

CL MARCHE RD.
PI = 24+29.27
Δ = 8°33'14"LT.
D = 5°00'00"
T = 85.70'
L = 171.08'
PC = 23+43.58
PT = 25+14.65
Ls = 175'
e = 0.061'/'

CL MARCHE RD.
PI = 19+82.02
Δ = 5°45'36"RT.
D = 1°00'00"
T = 288.24'
L = 575.99'
PC = 16+93.79
PT = 22+69.77
NO SUPERELEVATION

STA 12+77.69 TO STA. 16+68.31 CONSTRUCT
390'-7½" x 34'-0" CLEAR ROADWAY WIDTH
388'-0" CONTINUOUS COMPOSITE PLATE GIRDER UNIT
(132'-135'-121')

CONCRETE DITCH PAVING (TYPE B)

STA.	STA.	SIDE	'W'	SQ. YDS.
12+12	12+84	RT. OF CL MARCHE RAOD	4'	58
12+84	12+87	LT. OF CL MARCHE ROAD	4'	48
15+94	16+62	RT. OF CL MARCHE ROAD	4'	49
16+61	17+33	LT. OF CL MARCHE ROAD	4'	60

STA. 14+11.35 ℄ MARCHE RD. =
STA. 8051+13.73 I-40 ℄ SURVEY MEDIAN
Δ = 53°50'42"

STA. 22+56.07 BEGIN SUPERELEVATION (N.C.)
STA. 24+31.07 MAX. SUPERELEVATION (0.061'/')
STA. 24+54.05 MAX. SUPERELEVATION (0.061'/')
STA. 25+14.65 END SUPERELEVATION (MATCH EXIST. 0.033'/')

STATE OF ARKANSAS
REGISTERED PROFESSIONAL ENGINEER
No. 11427
KEVIN G. TOBLESKY
7/17/14

END MARCHE ROAD IMPROVEMENTS
STA. 26+14.65

MARCHE RD.

t:\Job\wlxm2650 ah-td cap ca0603\700 cadd files\777 roadway files\drawings\VII-Plan and Profile Sheets.dgn
...\VII-Plan and Profile Sheets.dgn
7/16/2014 1:34:33 PM

DATE	DATE FILMED	DATE REVISED	DATE FILMED	FED.RD. DIST.NO.	STATE	FED.AID PROJ.NO.	SHEET NO.	TOTAL SHEETS
				6	ARK.			
				JOB NO.		CA0609	247	693

(2) PLAN AND PROFILE - NORMAN ROAD

STATE OF ARKANSAS
LICENSED PROFESSIONAL ENGINEER
JOHN F. CANTABERY
No. 13422
8-6-14

NORMAN ROAD

BEGIN DRIVEWAY 1 STA. 9+00.00
EXISTING R/W
C.L. I-40 RT. LANES
C.L. I-40 MEDIAN STA. 8209+89.99= C.L. NORMAN ROAD STA. 20+00.00 ℄ = 84°00'00"
C.L. I-40 RT. LANES STA. 8209+88.03= C.L. NORMAN ROAD STA. 19+26.90 ℄ = 84°56'58"
C.L. I-40 LT. LANES STA. 8209+85.11= C.L. NORMAN ROAD STA. 20+46.59 ℄ = 84°58'21"
EXISTING R/W
CONSTRUCTION LIMITS
STA. 15+21 CONSTRUCT APPROACH 0 CU. YDS.
C.L. DRIVEWAY 1 PROPOSED TCE
PC 9+23.92
+15 107'
+35 86.01'
+14.75 60'
+80 80'
+35.05 25'
PI 9+44.83
PI 9+63.53
PI 9+93.18
STA. 15+91 CONSTRUCT APPROACH 127 CU. YDS.
C.L. NORMAN RD. DRIVEWAY 15+21
+35.05 60'
50' TRANSITION TO MATCH EXISTING
+02.04 60'
+66.66 25'
EX. 5 LANES
20' R.
20' R.
20' R.
20' R.
N 48°37'29" E 1100.00'
+35 25'
14+00
5' R.
30' R.
20' R.
PROPOSED R/W
+35 25'
+55 25'
STA. 14+82 CONSTRUCT APPROACH 0 CU. YDS.
BEGIN NORMAN ROAD STA. 15+00.00
+00 50.05'
+87 61.61'
+75 25'
PROPOSED TCE
C.L. NORMAN RD. DRIVEWAY 14+82
PC 15+63.42
STA. 18+21.80 CONSTRUCT TYPE N-1DI. LT. 12" X 48' Z.C.C.S.P. OUTLET ON LT.
STA. 18+19.70 CONSTRUCT TYPE N-1DI. RT. 12" X 40' Z.C.C.S.P. OUTLET ON RT.
CONSTRUCTION LIMITS
BEGIN BRIDGE STA. 18+57.71
PT 18+17.76
PC 18+76.43
20+00
N 72°36'08" E
END BRIDGE STA. 21+37.93
PC 22+24.85
C.L. I-40 LT. LANES
C.L. I-40 MEDIAN
STA. 21+75.90 CONSTRUCT TYPE N-1DI. LT. 12" X 49' Z.C.C.S.P. OUTLET ON LT.
STA. 21+73.80 CONSTRUCT TYPE I N-1DI. RT. 12" X 50' Z.C.C.S.P. OUTLET ON RT.
PC 8213+90.67
EXISTING BRIDGE TO BE REMOVED
SAW CUT EXISTING PAVEMENT
PC 8213+68.18
EXISTING R/W
50' TRANSITION TO MATCH EXISTING
N 72°36'06" E
+50 230'
+42.43 300.52'
+23.81 301.80'
BEGIN NEVA ROAD STA. 7+70.00
CONSTRUCTION LIMITS
PROPOSED R/W
C.L. NORMAN ROAD STA. 23+96.75 = C.L. NEVA ROAD STA. 10+00.00 ℄ = 89°58'25"
PROPOSED TCE
+52.52 45'
PT 23+96.75
23+11.59
+90 50'
+30 50'
+90 33.43'
+30 30.73'
50' TRANSITION TO MATCH EXISTING
28+00
S 88°29'21" E
EX. 5 LANES
+15 25'
26+50
+15 5.29'
+15 22.12'
END NORMAN ROAD STA. 25+50.00
PROPOSED R/W
C.L. NORMAN RD.
PI = 23+11.59
Δ = 18°54'31" RT.
D = 11°00'00"
T = 86.74'
L = 171.90'
PC = 22+24.85
PT = 23+96.75
e = N.C.
Ls = N.A.
40' R.
20' R.
+46.33 42'
+45 50'
+65 65'
+50 35'
+35 110'
+65 105'
C.L. NEVA RD. DRIVEWAY 9+16
PROPOSED TCE
C.L. NEVA RD.
PROPOSED R/W
NEVA ROAD STA. 9+16 CONSTRUCT APPROACH 12 CU. YDS.
C.L. NORMAN RD. STA. 24+75 IN PLACE 24" X 38' R.C. PIPE CULVERT EXTEND R.C. PIPE 10' RT. AND 3' LT. (CLASS III) TYPE 3 BEDDING WITH FES RT. AND LT. QIO = 15 CFS DA = 2.7 ACRES 24" R.C. PIPE = 13 LIN. FT. 24" F.E.S. = 2 EA.
STA. 21+65 IN PLACE EXIST. NORMAN RD. 24" X 45' R.C. PIPE CULVERT WITH HDWLS. LT. AND RT. REMOVE

REMOVAL AND DISPOSAL OF GUARDRAIL EXISTING NORMAN ROAD

STA.	STA.	SIDE	UNIT
17+94	18+44	RT.	50 LIN. FT.
18+05	18+45	LT.	40 LIN. FT.
21+06	21+46	RT.	40 LIN. FT.
21+10	21+60	LT.	50 LIN. FT.

OBLITERATE EXISTING ROADWAY

C.L. NORMAN RD.
PI = 16+93.18
Δ = 27°58'39" RT.
D = 11°00'00"
T = 129.76'
L = 254.34'
PC = 15+63.42
PT = 18+17.76
e = N.C.
Ls = N.A.

BRIDGE NO. 3234 IN PLACE
277'-03" X 24'-0"
BRIDGE CONSISTING OF A STEEL SUPERSTRUCTURE SUPPORTED BY A CONCRETE SUBSTRUCTURE. REMOVE AS EXISTING BRIDGE STRUCTURE = 1.00 LUMP SUM

C.L. NORMAN ROAD STATIONING	GUARDRAIL (TYPE A)	THRIE BEAM GUARDRAIL TERMINAL	TERMINAL ANCHOR POST (TYPE I)
STA. 17+27.55 TO STA. 18+46.27 RT.	= 100 LIN. FT.	1 EACH	1 EACH
STA. 17+54.62 TO STA. 18+48.37 LT.	= 75 LIN. FT.	1 EACH	1 EACH
STA. 21+47.28 TO STA. 22+41.03 RT.	= 75 LIN. FT.	1 EACH	1 EACH
STA. 21+49.38 TO STA. 22+68.13 LT.	= 100 LIN. FT.	1 EACH	1 EACH

CONCRETE DITCH PAVING (TYPE B) NORMAN RD.

STA.	STA.	SIDE	"W"	SQ. YDS.
18+40	18+66	RT. = 26 LIN. FT.	4'-0"	12
20+98	21+12	RT. = 14 LIN. FT.	4'-0"	6
25+50	26+00	RT. = 50 LIN. FT.	6'-0"	33

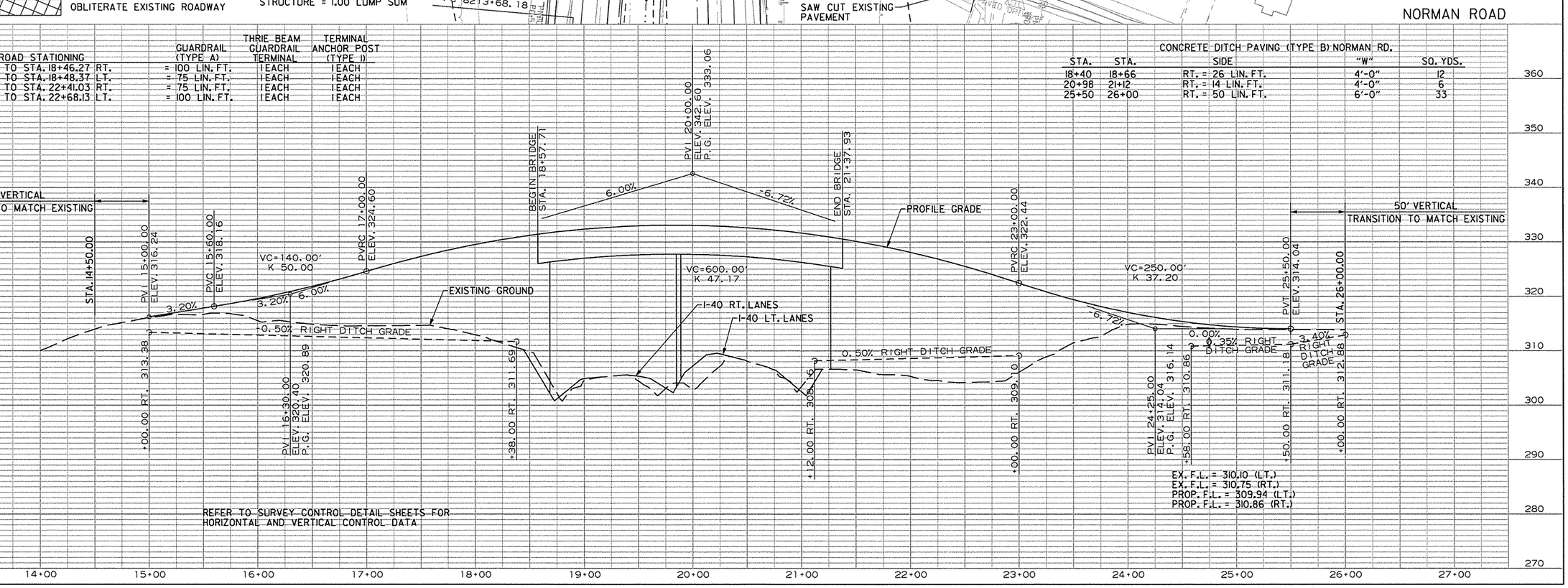

REFER TO SURVEY CONTROL DETAIL SHEETS FOR HORIZONTAL AND VERTICAL CONTROL DATA

JFCantabery 8/5/2014 7:40:01 PM
WORKSPACE: AHTD
\\garverinc\ltprojects\20111107709 - I-40 at I-430 Interchange Modifications\Drawings\RCA0609_PP_NRM_01.dgn
REVISED DATE:

DATE	DATE FILMED	DATE REVISED	DATE FILMED	FED.RD. DIST.NO.	STATE	FED.AID PROJ.NO.	SHEET NO.	TOTAL SHEETS
				6	ARK.			
				JOB NO.		CA0609	248	693

(2) PLAN AND PROFILE - NEVA RD. & DRIVEWAY I

STATE OF ARKANSAS
LICENSED PROFESSIONAL ENGINEER
No. 13422
JOHN F. CANTABERY
8-6-14

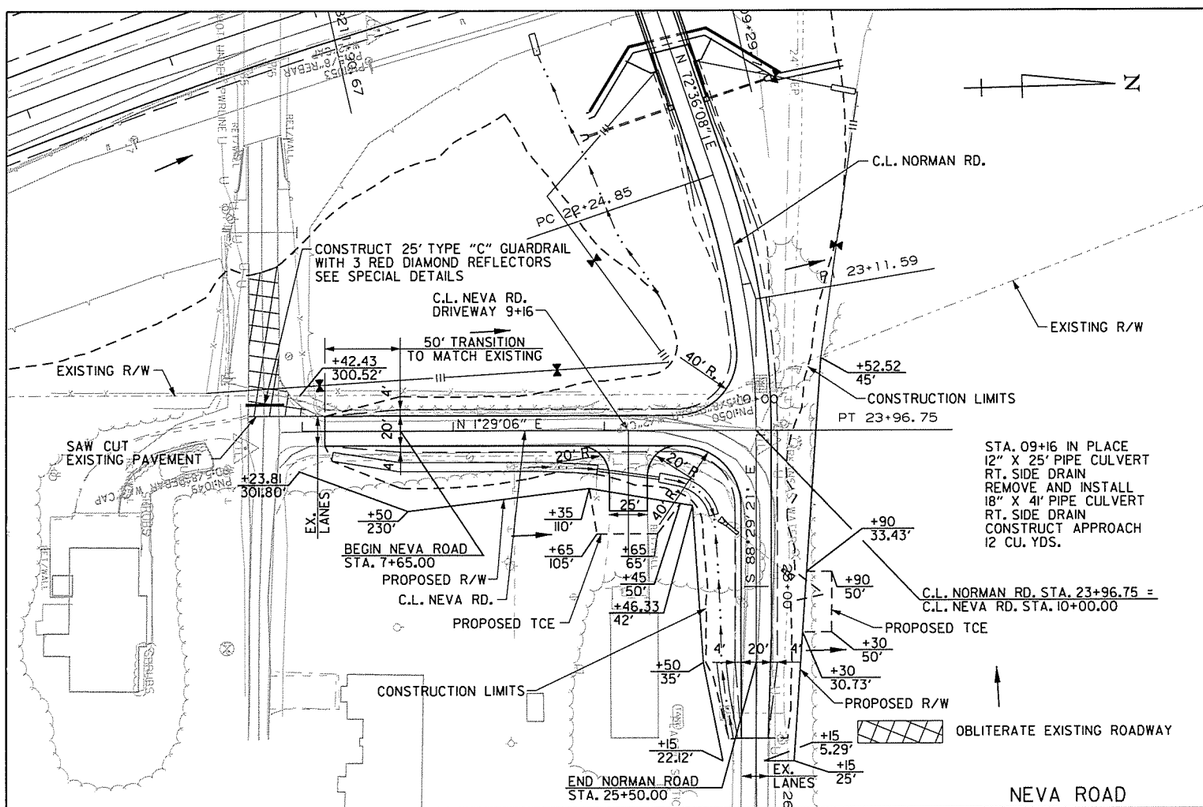

NEVA ROAD

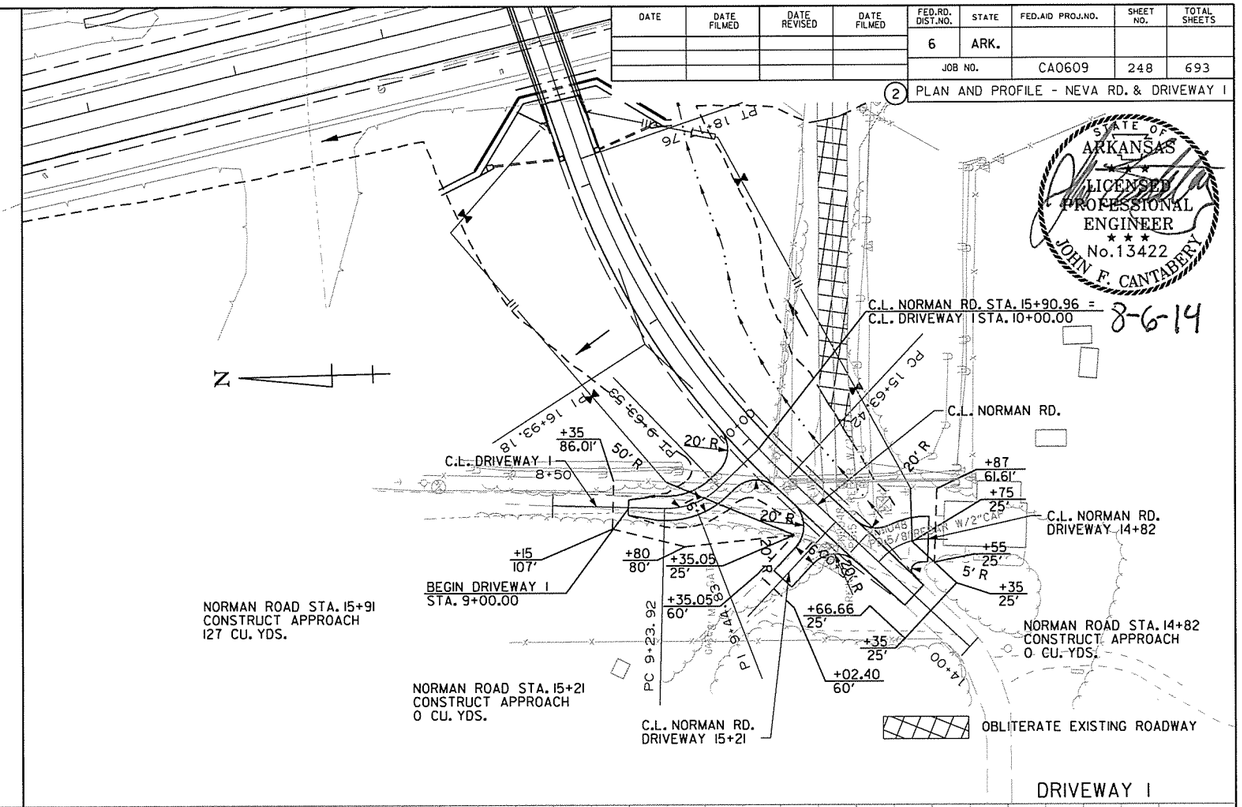

DRIVEWAY I

CONCRETE DITCH PAVING (TYPE B) NEVA RD.

STA.	STA.	SIDE	"W"	SQ. YDS.
7+20	8+95	RT. = 175 LIN. FT.	6'-0"	117
9+35	9+75	RT. = 40 LIN. FT.	6'-0"	27

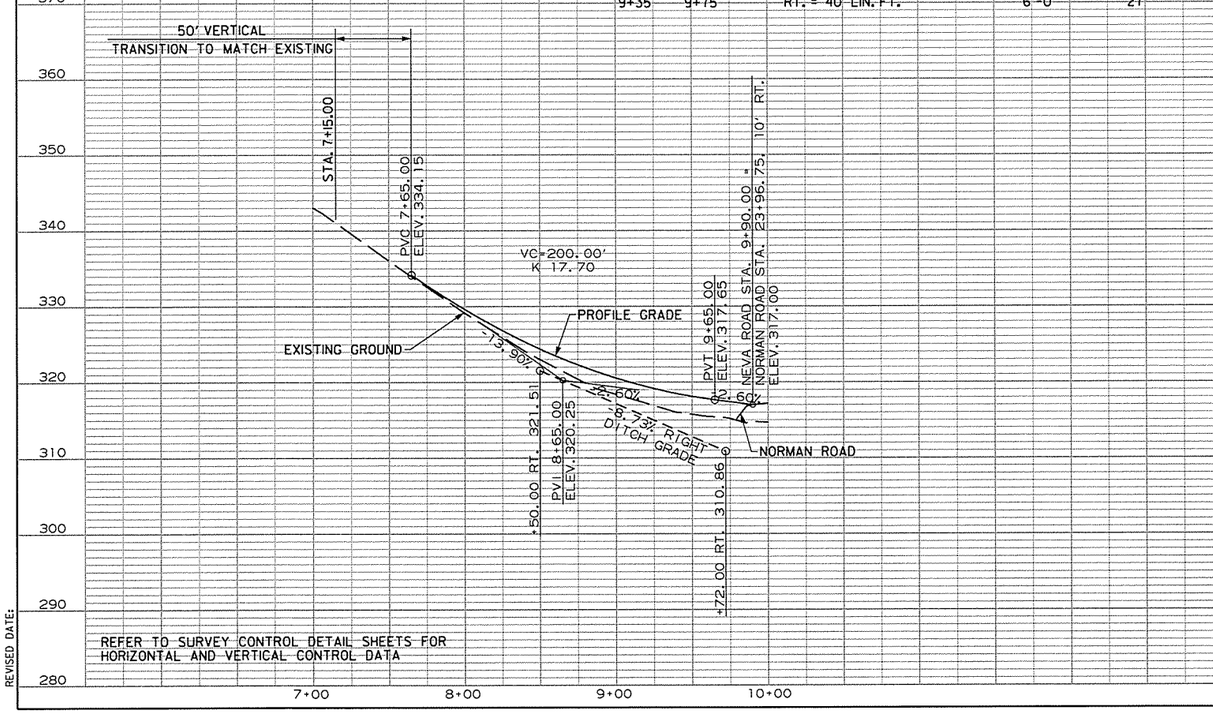

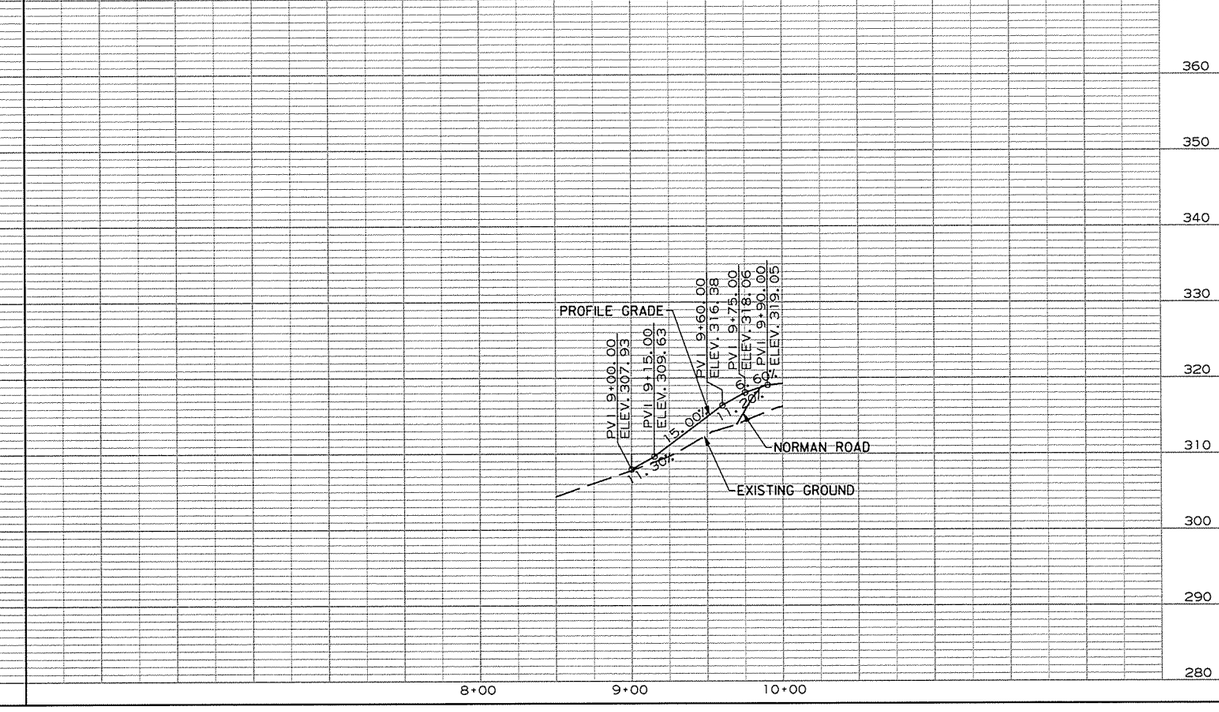

REFER TO SURVEY CONTROL DETAIL SHEETS FOR HORIZONTAL AND VERTICAL CONTROL DATA

JFCantabery 8/5/2014 7:39:29 PM
WORKSPACE: AHTD
\\garverinc\ltprojects\2011\11017709 - I-40 at I-430 Interchange Modifications\Drawings\RCA0609_PP_NEV_01.dgn
REVISED DATE:

DATE REVISED	DATE FILMED	DATE REVISED	DATE FILMED	FED. RD. DIST. NO.	STATE	FED. AID PROJ. NO.	SHEET NO.	TOTAL SHEETS
9/11/2014				6	ARK.			
				JOB NO.		CA0609	249	693
				1	07317 - RET. WALL LAYOUT -		55694	

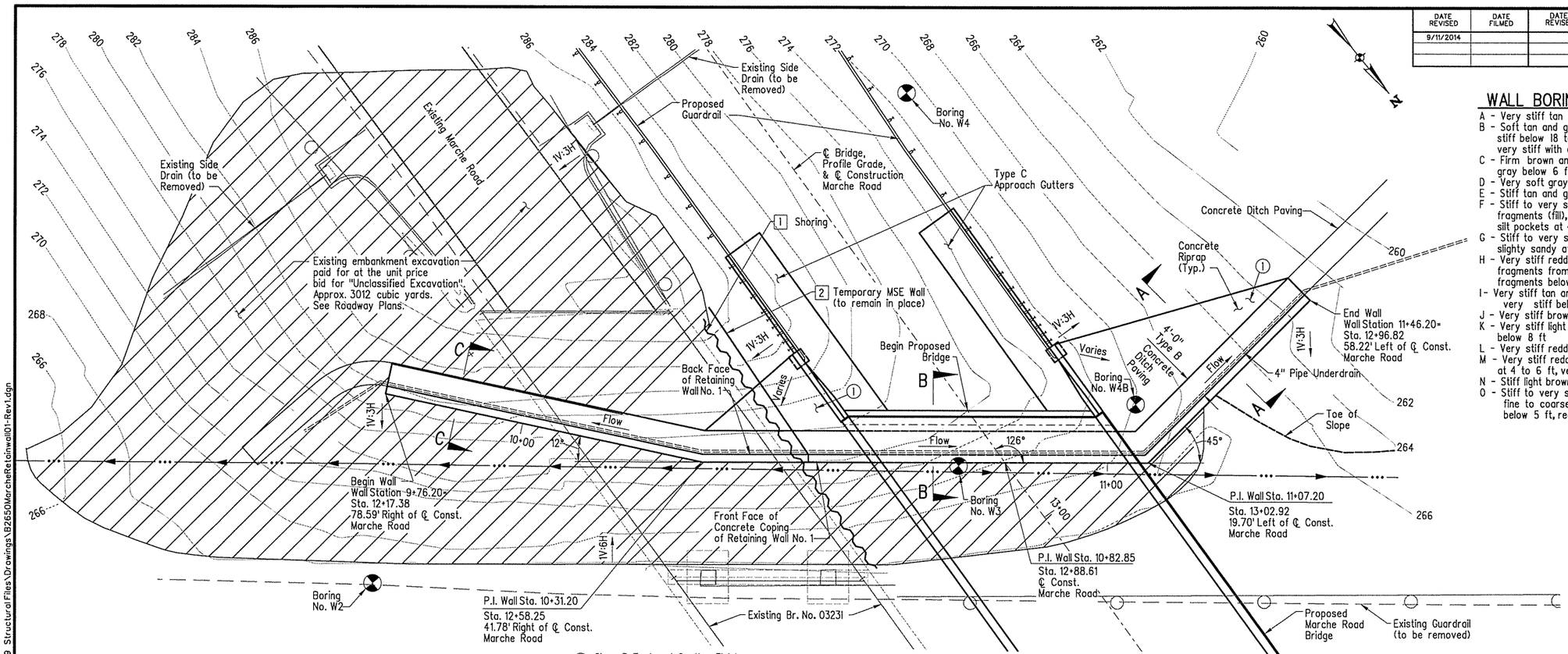

PLAN

① Class 3 Textured Coating Finish (Color = Brown, Color Chip No. 33522)

② Class 3 Textured Coating Finish (Color = Brown, Color Chip No. 30219)

③ Construction Joint at temporary MSE Wall (location to be determined by Wall Manufacturer prior to fabrication of panels).

[1] Shoring shall be required, as needed, to excavate existing embankment and construct Retaining Wall No. 1 while maintaining traffic on Marche Road. See SP Job CA0609 "Shoring".

[2] Temporary MSE Wall will be required, as needed, to remove existing Bridge No. 03231 and existing embankment. See SP Job CA0609 "Temporary Retaining Wall".

WALL BORING LEGEND

A - Very stiff tan and gray silty clay w/shale fragments (fill), stiff below 6 ft
B - Soft tan and gray silty clay, moist to 18 ft, borehole bottom heave at 15.5 ft, stiff below 18 to 24 ft, very stiff with occasional inclusions below 24 ft
C - Firm brown and tan silty clay w/shale fragments (fill), stiff below 2 ft, tan and gray below 6 ft, stiff to very stiff below 8 ft
D - Very soft gray and tan silty clay, wet to 18 ft, stiff below 18 ft
E - Stiff tan and gray fine sandy clay w/fine sand pockets and ferrous stains
F - Stiff to very stiff dark reddish brown silty clay w/shale and sandstone fragments (fill), with trace fine sand to 1 ft, dark gray at 2 - 4.5 ft, with silt pockets at 4.5 - 5 ft, wet at 5 - 5.5 ft
G - Stiff to very stiff brown, red and gray silty clay w/shale fragments (fill), slighty sandy at 2 - 5 ft, stiff below 6 ft
H - Very stiff reddish brown and tan silty clay w/shale fragments (fill), more shale fragments from 2 - 4 ft, stiff at 5 - 6 ft, with some fine to coarse sandstone fragments below 5 ft, very stiff below 6 ft
I - Very stiff tan and brown silty clay w/shale fragments (fill), stiff from 4 - 6 ft, very stiff below 6 ft, red, brown, tan and gray below 8 ft
J - Very stiff brown and tan silt, silghty fine sandy clay w/shale fragments (fill)
K - Very stiff light tan and gray silty clay w/ferrous stains and nodules, stiff below 8 ft
L - Very stiff reddish brown and gray silty clay w/shale fragments (fill)
M - Very stiff reddish tan and gray silty clay w/ferrous stains and nodules, stiff at 4 to 6 ft, very stiff below 6 ft
N - Stiff light brown silty clay (fill)
O - Stiff to very stiff reddish brown and gray silty clay, slightly sandy w/some fine to coarse sandstone and shale fragments (fill), with more shale fragments below 5 ft, red and gray at 8 - 8.5 ft

BORING BLOW COUNTS/FT.

Boring No. W2
℄ Construction Marche Road
Sta. 12+42.06, 99.21' Right

0.5-1.5, N-8
2.5-3.5, N-12
4.5-5.5, N-14
6.5-7.5, N-14
9.0-10.0, N-24
14.0-15.0, N-3
19.0-20.0, N-19
24.0-25.0, N-15

Notes:

Wall Alignment Stations and Offsets in Plan View are measured to the front face of concrete coping.

For Retaining Wall General Notes and Details, See Dwg. No. 55697.

See Dwg. No. 55696 for Sec. A-A, Sec. B-B & Sec. C-C.

State of Arkansas Form Insert to be used at MSE Walls, See Dwg. No. 55697.

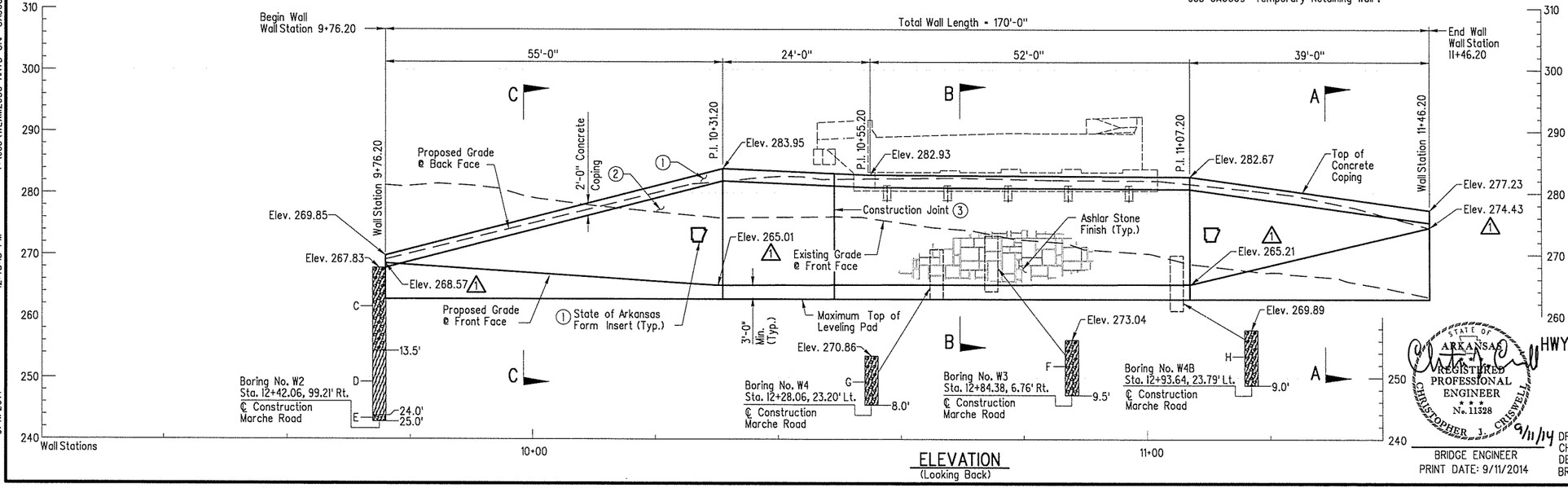

ELEVATION
(Looking Back)

⚠1 Added proposed grade elevations at Front Face at bottom of wall, LHG 9/8/14. Checked by CJC.

LAYOUT OF RETAINING WALL NO. 1
MARCHE SEPARATION
HWY. 365-I-430 (WIDENING) & I-430 INTCHNG. MOD. (F)
PULASKI COUNTY
ROUTE 40 SECTION 33
ARKANSAS STATE HIGHWAY COMMISSION
LITTLE ROCK, ARKANSAS

STATE OF ARKANSAS CHRISTOPHER J. CRISWELL REGISTERED PROFESSIONAL ENGINEER No. 11528 9/11/14

BRIDGE ENGINEER
PRINT DATE: 9/11/2014

DRAWN BY: WEG DATE: 11/08/13 FILENAME: bca0609xl_rwl.dgn
CHECKED BY: MAA DATE: 11/08/13
DESIGNED BY: CGW DATE: 10/22/13 SCALE: 1"=10'-0"
BRIDGE NO. 07317 DRAWING NO. 55694

JACOBS

T:\Job\WLXM2650 AHTD CAP CA0603\700 CADD Files\709 Structural Files\Drawings\B2650MarcheRetainingWall01-Rev1.dgn 9/11/2014 12:45:15 PM

DATE REVISED	DATE FILMED	DATE REVISED	DATE FILMED	FED. RD. DIST. NO.	STATE	FED. AID PROJ. NO.	SHEET NO.	TOTAL SHEETS
9/11/2014				6	ARK.			
				JOB NO.		CA0609	250	693
				07317 - RET. WALL LAYOUT - 55695				

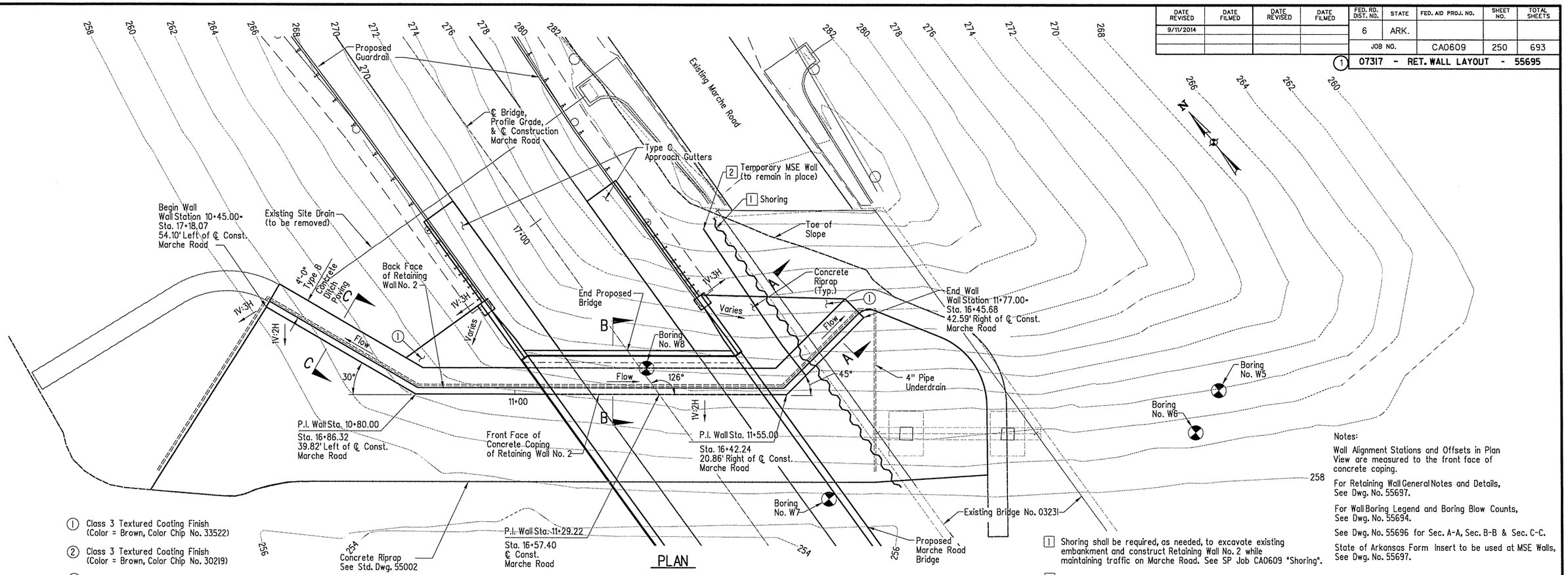

PLAN

① Class 3 Textured Coating Finish (Color = Brown, Color Chip No. 33522)

② Class 3 Textured Coating Finish (Color = Brown, Color Chip No. 30219)

③ Construction Joint at temporary MSE Wall (location to be determined by Wall Manufacturer prior to fabrication of panels).

1 Shoring shall be required, as needed, to excavate existing embankment and construct Retaining Wall No. 2 while maintaining traffic on Marche Road. See SP Job CA0609 "Shoring".

2 Temporary MSE Wall will be required, as needed, to remove existing Bridge No. 03231 and existing embankment. See SP Job CA0609 "Temporary Retaining Wall".

Notes:

Wall Alignment Stations and Offsets in Plan View are measured to the front face of concrete coping.

For Retaining Wall General Notes and Details, See Dwg. No. 55697.

For Wall Boring Legend and Boring Blow Counts, See Dwg. No. 55694.

See Dwg. No. 55696 for Sec. A-A, Sec. B-B & Sec. C-C.

State of Arkansas Form Insert to be used at MSE Walls, See Dwg. No. 55697.

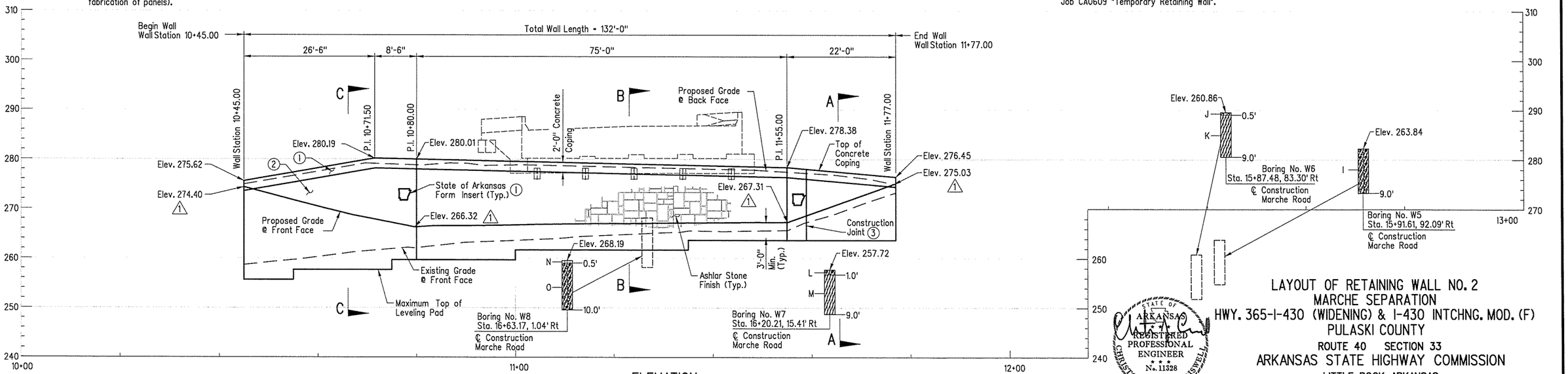

ELEVATION

(Looking Ahead)

1 Added proposed grade elevations at Front Face at bottom of wall, LHG 9/8/14. Checked by CJC.

LAYOUT OF RETAINING WALL NO. 2
MARCHE SEPARATION
HWY. 365-I-430 (WIDENING) & I-430 INTCHNG. MOD. (F)
PULASKI COUNTY
ROUTE 40 SECTION 33
ARKANSAS STATE HIGHWAY COMMISSION
LITTLE ROCK, ARKANSAS

STATE OF ARKANSAS REGISTERED PROFESSIONAL ENGINEER No. 11328 CHRISTOPHER J. CRISWELL 9/11/14

BRIDGE ENGINEER
PRINT DATE: 9/11/2014

DRAWN BY: WEG DATE: 11/08/13 FILENAME: bca0609xl_rw2.dgn
CHECKED BY: MAA DATE: 11/08/13
DESIGNED BY: CGW DATE: 10/22/13 SCALE: 1"-10'-0"
BRIDGE NO.07317 DRAWING NO.55695

JACOBS

T:\Job\WLXM2650 AHTD CAP CA0603\700 CADD Files\709 Structural Files\Drawings\B2650MarcheRetainwall02-Rev1.dgn
9/11/2014 12:44:48 PM

DATE REVISED	DATE FILMED	DATE REVISED	DATE FILMED	FED. RD. DIST. NO.	STATE	FED. AID PROJ. NO.	SHEET NO.	TOTAL SHEETS
				6	ARK.			
				JOB NO.		CA0609	251	693
				1 07317 - RET. WALL DETAILS - 55696				

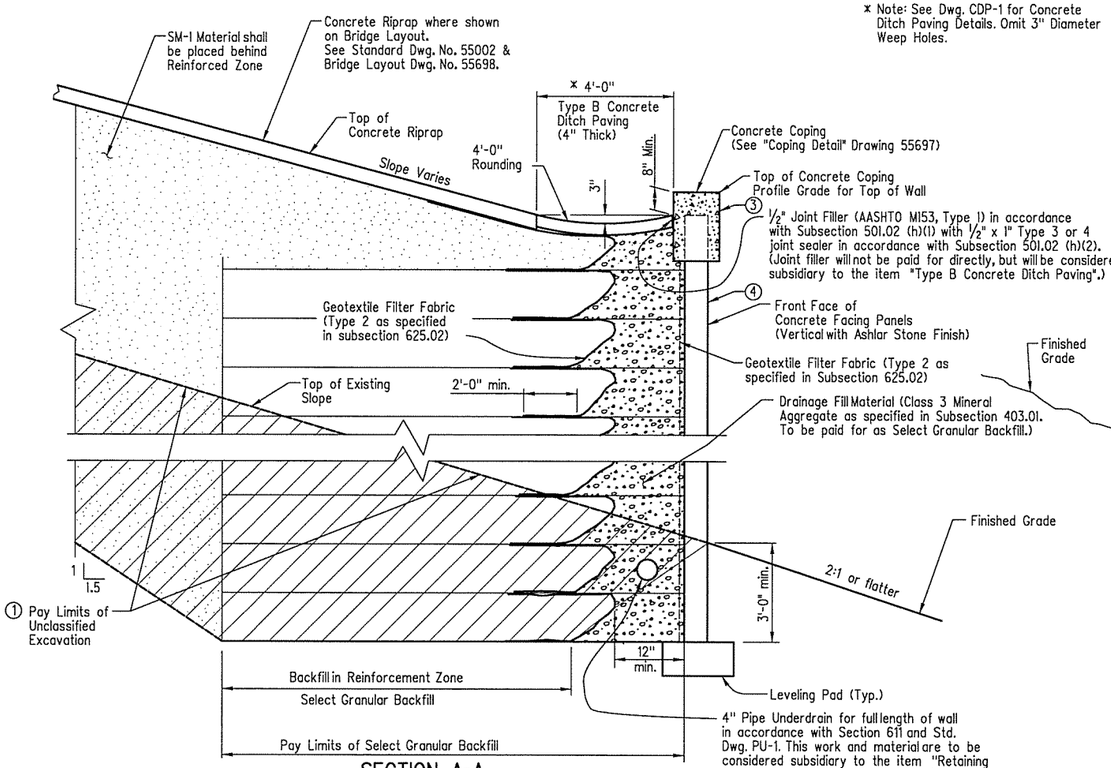

SECTION A-A

(No Scale)

* Note: See Dwg. CDP-1 for Concrete Ditch Paving Details. Omit 3" Diameter Weep Holes.

Note: Outlet ends of underdrain shall be located to avoid clogging or flow into the drainage system. Provide rodent screen at outlets.

Adjustment in the vertical and horizontal alignment of the drainage pipes from that depicted in the plans may be necessary to ensure positive flow out of the drainage system.

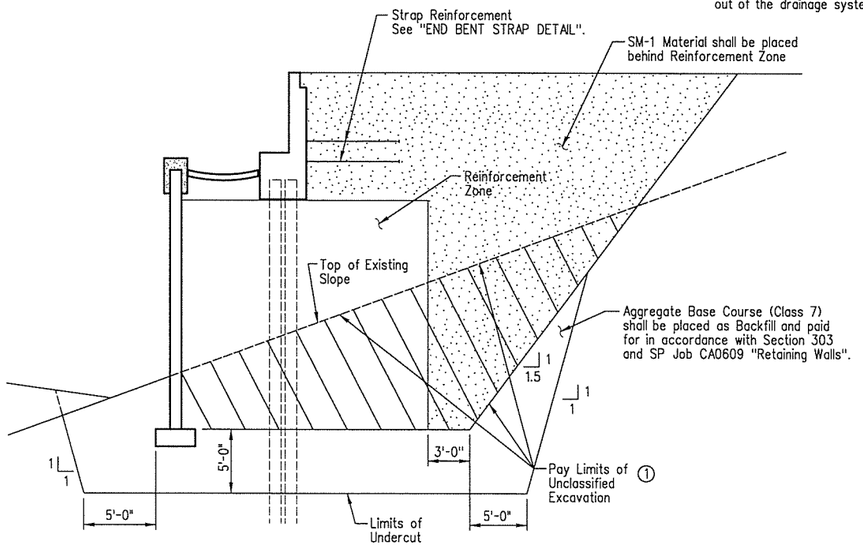

FOUNDATION DETAILS AT WALL NO. 2

(No Scale)

① Excavation required for reinforcement zone and leveling pad will be paid for under the pay item "UNCLASSIFIED EXCAVATION". See SP JOB CA0609 "RETAINING WALLS".

All backfill and drainage fill material within the reinforcement zone shall be included in the price bid for "SELECT GRANULAR MATERIAL". Material required behind reinforcement zone shall be included in the price bid for "Compacted Embankment". See SP JOB CA0609 "RETAINING WALLS".

② Rammed aggregate piers are to be spaced to avoid conflict with end bent piles. See Drawing Nos. 55700 - 55702 for pile locations.

③ Class 3 Textured Coating Finish (Color = Brown, Color Chip No. 33522)

④ Class 3 Textured Coating Finish (Color = Brown, Color Chip No. 30219)

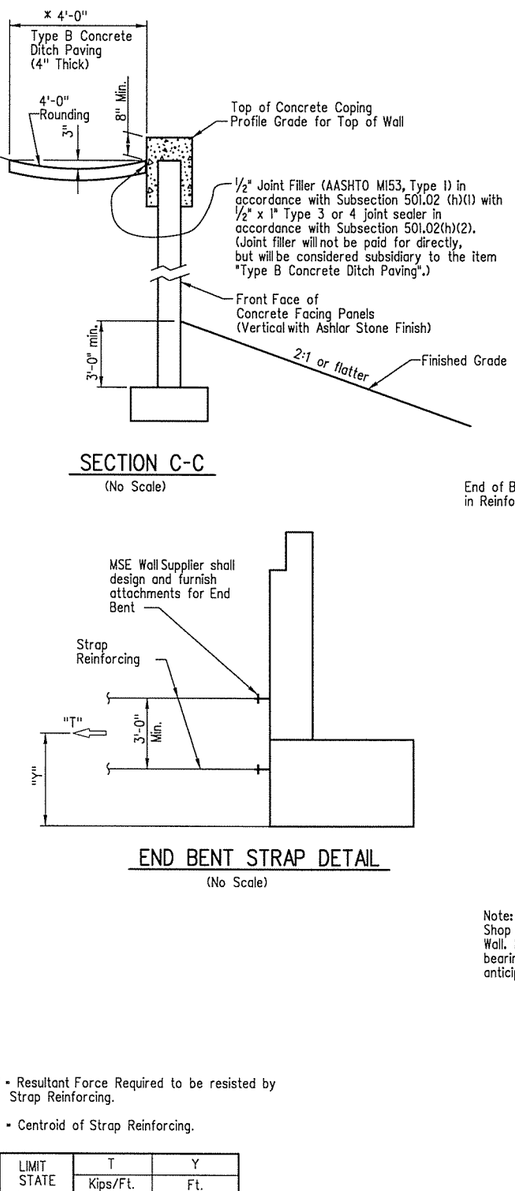

SECTION C-C

(No Scale)

END BENT STRAP DETAIL

(No Scale)

"T" = Resultant Force Required to be resisted by Strap Reinforcing.

"Y" = Centroid of Strap Reinforcing.

LIMIT STATE	T	Y
	Kips/Ft.	Ft.
Service	3.8	3.0'
Strength	6.9	

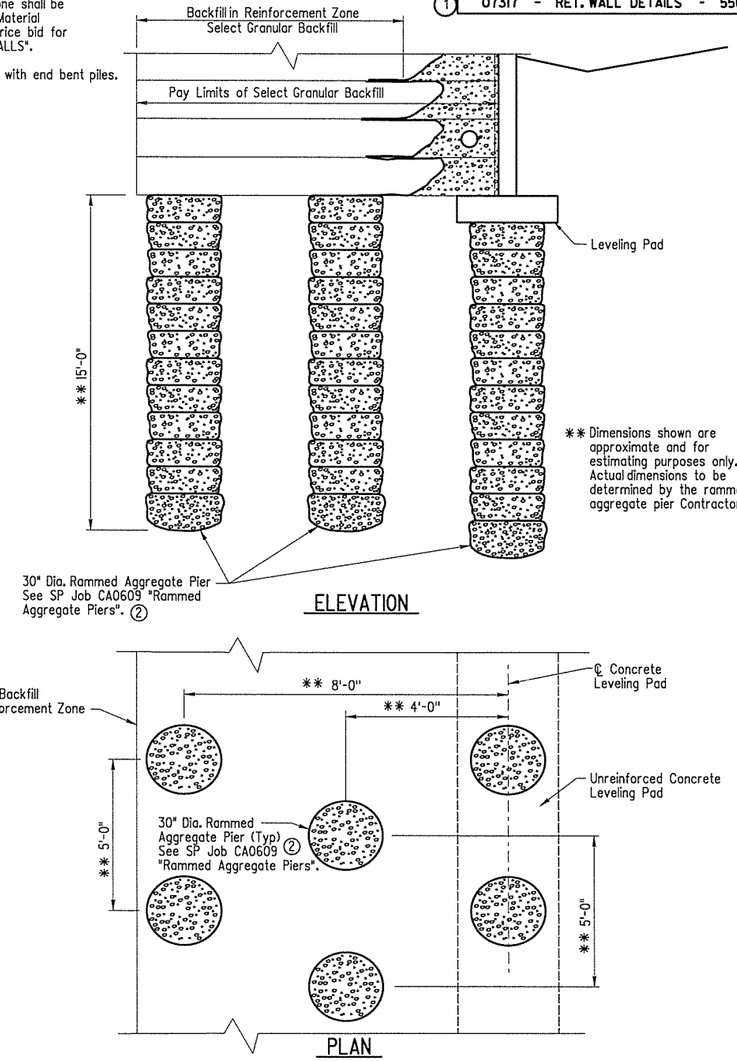

FOUNDATION DETAILS AT WALL NO. 1

(No Scale)

Note:
Shop drawings for MSE Walls shall include the factored bearing pressures along the length of each Wall. Foundation improvements will be necessary when factored bearing pressures exceed the factored bearing resistance of the foundation material. Rammed aggregate piers at Retaining Wall No. 1 are anticipated. Undercutting at Retaining Wall No. 2 is anticipated.

STATE OF ARKANSAS REGISTERED PROFESSIONAL ENGINEER CHRISTOPHER J. CRISWELL No. 11328 7/17/14

BRIDGE ENGINEER
PRINT DATE: 7/17/2014

SHEET 1 OF 2
DETAILS OF MECHANICALLY STABILIZED EARTH WALLS
MARCHE SEPARATION
PULASKI COUNTY
ROUTE 40 SECTION 33
ARKANSAS STATE HIGHWAY COMMISSION
LITTLE ROCK, ARKANSAS

DRAWN BY: WEG DATE: 10/29/13
CHECKED BY: MAA DATE: 11/27/13
DESIGNED BY: CGW DATE: 10/22/13
FILENAME: bca0609x1_rw3.dgn
SCALE: No Scale
BRIDGE NO. 07317
DRAWING NO. 55696

JACOBS

7/17/2014 11:08:36 AM T:\Job\WLXM2650 AHTD CAP CA0603\700 CADD Files\709 Structural Files\Drawings\B2650MarcheRetainwalldetails01.dgn

DATE REVISED	DATE FILMED	DATE REVISED	DATE FILMED	FED. RD. DIST. NO.	STATE	FED. AID PROJ. NO.	SHEET NO.	TOTAL SHEETS
				6	ARK.			
				JOB NO.		CA0609	252	693
				① 07317 - RET. WALL DETAILS - 55697				

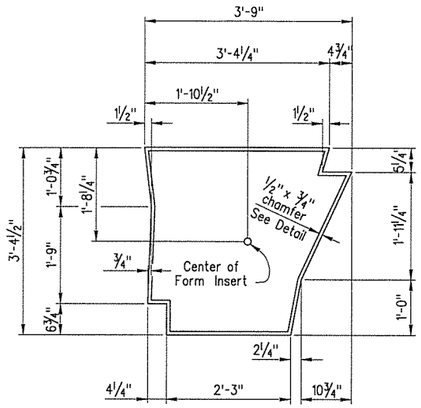

② FORM INSERT DETAILS

No Scale

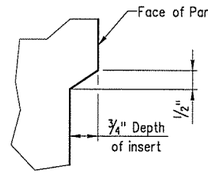

CHAMFER DETAILS

No Scale

② Form insert shall be placed near the mid-height of exposed face of wall. See Dwg. No. 55726 for details.

FORM INSERT GENERAL NOTES

Fabricate form insert as a one piece unit, without the use of splices, joints or glue.

Wash and clean multi-use form inserts before each use.

All work and materials for form inserts shall be included in the unit price bid for "Retaining Walls".

Damaged or worn form inserts shall be replaced at the contractor's expense.

The form inserts shall be approved by the Engineer before their use.

Place form inserts on both sides of the bridge at Bents 1 & 4 as shown on wall layouts. Location of inserts shall be shown on working drawings and submitted to the Engineer for approval. Working drawings must show the interaction of the panel surface finsh and the form insert. Inset lines of panel surface finish shall not cross form insert.

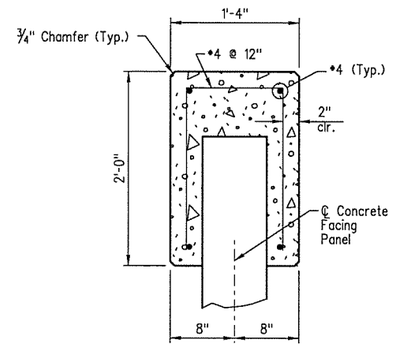

COPING DETAIL

(No Scale)

NOTE: Reinforcing Steel for Concrete Coping Shall not be paid for directly, but will be considered subsidiary to the item "Retaining Walls". Precast Concrete Coping may be substituted for the cast-in-place coping shown.

RETAINING WALL GENERAL NOTES

CONSTRUCTION SPECIFICATIONS: Arkansas State Highway and Transportation Department Standard Specifications for Highway Construction (2014 Edition) with applicable supplemental specifications and Special Provision Job CA0609 "Retaining Walls".

DESIGN SPECIFICATIONS: AASHTO LRFD Bridge Design Specifications 6th Edition (2012) with current interims.

SEISMIC ZONE: 1 SD1= 0.15 SITE CLASS: C

BORING LOGS: Boring logs may be obtained from the Programs and Contracts Division.

MSE RETAINING WALL: Basic wall geometry, including top and bottom of wall face, grade lines, and length and limits of walls shall be as shown. Other dimensions shown may vary depending on wall design. Placement of strip reinforcement for MSE retaining walls may be affected by end bent construction. See end bent details for pile and wingwall locations. The Concrete Facing Panels, Concrete Coping, Leveling Pad, Soil Reinforcement, Pipe Underdrain and Geotextile Filter Fabric shall be included in the price bid for "Retaining Walls". Pipe underdrains shall be used in the area of backfill as determined by the Engineer in the field. See SP JOB CA0609 "Retaining Walls" for additional information.

CONCRETE: Concrete shall comply with the requirements of Section 802. Coping shall be Class S(AE) Concrete. Leveling pad shall be Class A or higher class concrete.

TEXTURED COATING FINISH: Class 3 Textured Coating Finish shall be applied to surfaces as specified in SP JOB CA0609 "Textured Coating Finish" and in accordance with Subsection 802.19.

REINFORCING STEEL: Reinforcing steel shall comply with the requirements of Section 804. Reinforcing steel for retaining walls shall not be paid for directly.

RAMMED AGGREGATE PIERS: Details shown are for general information and estimating purposes only. Actual dimensions to be determined by the designer. Rammed aggregate pier design and construction shall meet the requirements of Special Provision Job CA0609 "Rammed Aggregate Piers". To avoid conflict with bridge structural elements, the location of proposed piling in Bent 1 of Bridge No. 07317 and the location of the temporary MSE Wall shall be considered in the design and placement of the rammed aggregate piers.

① TABLE OF QUANTITIES

Location	ITEM NO.	210	302	303	SP JOB CA0609	SP JOB CA0609	SP JOB CA0609
	ITEM	UNCLASSIFIED EXCAVATION ②	SELECT GRANULAR BACKFILL	AGGREGATE BASE COURSE (CLASS 7)	RETAINING WALLS	RAMMED AGGREGATE PIERS	TEMPORARY RETAINING WALL
	UNIT	CU. YD.	CU. YD.	CU. YD.	SQ. FT.	EACH	SQ. FT.
Wall No. 1		1050	1464	0	2985	150	870
Wall No. 2		2497	1260	1312	2360	0	710
	TOTALS	3547	2724	1312	5345	150	1580

① Quantities are for estimating purposes and are subject to field measurement.

② Quantities include 1312 cubic yards for Undercutting at Wall No. 2.

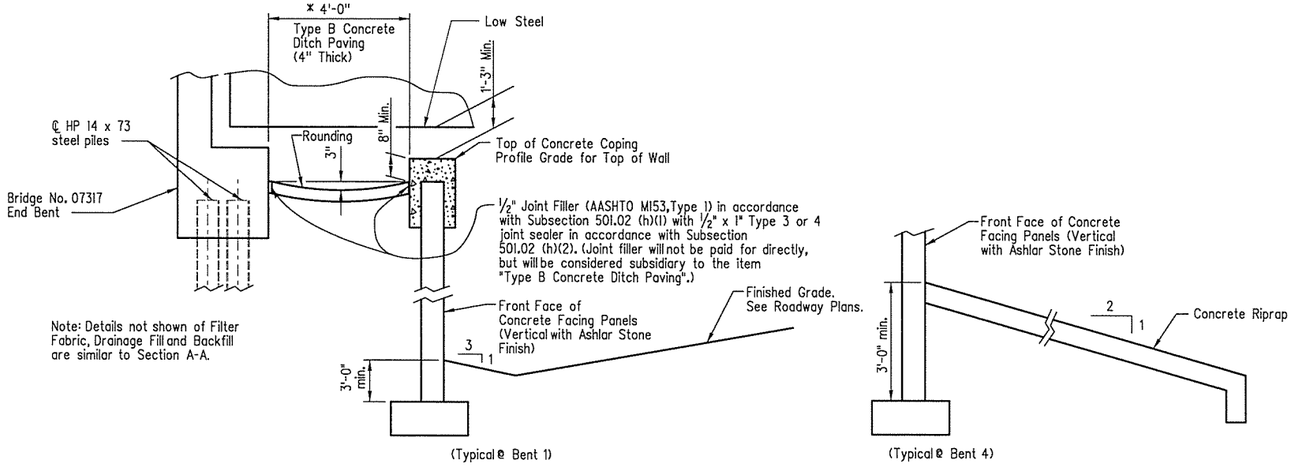

SECTION B-B

(No Scale)

STATE OF ARKANSAS
REGISTERED PROFESSIONAL ENGINEER
No. 11528
CHRISTOPHER J. CRISWELL
7/17/14

BRIDGE ENGINEER
PRINT DATE: 7/17/2014

SHEET 2 OF 2
DETAILS OF MECHANICALLY STABILIZED EARTH WALLS
MARCHE SEPARATION
PULASKI COUNTY
ROUTE 40 SECTION 33
ARKANSAS STATE HIGHWAY COMMISSION
LITTLE ROCK, ARKANSAS

DRAWN BY: WEG DATE: 10/29/13
CHECKED BY: MAA DATE: 11/27/13
DESIGNED BY: CGW DATE: 10/22/13
FILENAME: bca0609x1_rw4.dgn
SCALE: No Scale
BRIDGE NO. 07317
DRAWING NO. 55697

JACOBS

T:\Job\WL\XM2650 AHTD CAP CA0603\700 CADD Files\709 Structural Files\Drawings\B2650MarcheRetainwalldetails02.dgn 7/17/2014 11:08:38 AM

DATE REVISED	DATE FILMED	DATE REVISED	DATE FILMED

FED. RD. DIST. NO.	STATE	FED. AID PROJ. NO.	SHEET NO.	TOTAL SHEETS
6	ARK.			
JOB NO.		CA0609	253	693
07317 - LAYOUT - 55698				

Note: For R/W Data, See Roadway Plans.

[1] Shoring will be required, as needed, to excavate existing embankment and construct Retaining Walls while maintaining traffic on Marche Road. See SP Job CA0609 "Shoring".

[2] Temporary MSE Wall will be required, as needed, to remove existing Bridge No. 03231 and existing embankment. See SP Job CA0609 "Temporary Retaining Wall".

[3] Class 3 Textured Cooting Finish (Color = Brown, Color Chip No. 33522)

PLAN

ELEVATION

SHEET 1 OF 2
LAYOUT OF
MARCHE SEPARATION
HWY. 365-I-430 (WIDENING) & I-430 INTCHNG. MOD. (F)
PULASKI COUNTY
ROUTE 40 SECTION 33
ARKANSAS STATE HIGHWAY COMMISSION
LITTLE ROCK, ARKANSAS

STATE OF ARKANSAS
CHRISTOPHER J. CRISWELL
REGISTERED PROFESSIONAL ENGINEER
No. 11528
7/30/14
BRIDGE ENGINEER
PRINT DATE: 7/30/2014

DRAWN BY: WEG DATE: 10/15/13
CHECKED BY: MAA DATE: 10/22/13
DESIGNED BY: CJC DATE: 10/11/13
BRIDGE NO. 07317
FILENAME: bca0609xl_lxl.dgn
SCALE: 1"=20'-0"
DRAWING NO. 55698

JACOBS

T:\Job\WL\XM2650 AHTD CAP CA0603\700 CADD Files\709 Structural Files\Drawings\B2650MarcheLAYOUT01.dgn
7/30/2014 11:46:19 AM

GENERAL NOTES

BENCH MARK:
BM 9947: Chiseled Sq. cut in SE corner of Marche Br.
17.40' Rt C.L. Construction Marche Road Sta. 12+43.48 Elev. 288.50

CONSTRUCTION SPECIFICATIONS: Arkansas State Highway and Transportation Department Standard Specifications for Highway Construction (2014 Edition) with applicable Supplemental Specifications and Special Provisions. Unless otherwise noted in the plans, Section and Subsection numbers refer to the Construction Specifications.

DESIGN SPECIFICATIONS: AASHTO LRFD Bridge Design Specifications 6th Edition (2012) with current interims.

LIVE LOADING: HL-93
OPERATIONAL IMPORTANCE: Typical Bridge
SEISMIC ZONE: 1 SD1 = 0.15 SITE CLASS: C

MATERIALS AND STRENGTHS:

Class S (AE) Concrete (superstructure)	f'c = 4000 psi
Class S Concrete (substructure)	f'c = 3500 psi
Reinforcing Steel (AASHTO M31 or M322, Type A Gr. 60)	fy = 60,000 psi
Structural Steel (AASHTO M270, Gr. 50)	Fy = 50,000 psi
Structural Steel (AASHTO M270, Gr. 36)	Fy = 36,000 psi

BORING LOGS: Boring logs may be obtained from the Programs and Contracts Division.

BRIDGE DECK: The Concrete bridge deck shall be given a tine finish as specified for final finishing in Subsection 802.19 for Class 5 Tined Bridge Roadway Surface Finish.

PROTECTIVE SURFACE TREATMENT: Class 1 Protective Surface Treatment shall be applied to the roadway surface only. Class 1 Protective Surface Treatment shall meet the requirements of Section 803.

PAINTING: All structural steel except galvanized members, machined surfaces and some surfaces in contact with concrete, and as otherwise noted shall be painted as specified in Subsection 807.75. The color shall match Federal Standard 595B, color chip No. 20108, Dark Brown.

TEXTURED COATING FINISH: Class 3 Textured Coating Finish shall be applied to all areas as specified in SP Job CA0609 "TEXTURED COATING FINISH" and in accordance with Subsection 802.19 (b)(3). Textured Coating Finish shall not be applied on surfaces where Class 1 Protective Surface Treatment is applied.

SHORING: Shoring will be required to excavate existing embankment and construct MSE Retaining Walls No. 1 and No. 2 while maintaining traffic on Marche Road. Location of the shoring shall be determined by the Contractor. Shoring shall be constructed in accordance with SP JOB CA0609 "Shoring". Payment shall be in accordance with SP JOB CA0609 "Shoring".

EXISTING BRIDGE: Existing Bridge No. 03231 (log 144.04) is 31.5' wide and 448' long and consists of a steel superstructure supported by a concrete substructure. The existing bridge is approximately 45' east of the proposed bridge. Half size sheets of the existing bridge may be obtained from the Arkansas Highway and Transportation Department. See Drawing No. 10232 - 10238 and 05456B.

REMOVAL AND SALVAGE: Existing Bridge No. 03231, including concrete rip rap, shall be removed in accordance with Section 205 of the Standard Specifications. All material from the existing bridge shall become the property of the Contractor.

FOUNDATION NOTES

STEEL PILING: All piling shall be HP 14x73 (Grade 50) and shall be driven with an approved air, steam, or diesel hammer to minimum safe bearing capacity of 95 tons per pile. All piles shall be driven into the material designated as moderately hard to hard dark gray shale on the boring legend. Drive all piles in Bents 1 and 4 to a minimum depth of 5' below leveling pad. Lengths of piling shown are assumed for estimating quantities and for use in determining payment for cut-off and build-up in accordance with the Standard Specifications. On all piles the contractor shall use approved H-Pile driving points. Minimum penetration for all piles at Bents 2 and 3 shall be 20' below bottom of footing.

The Contractor may drive the piling in Bents 1 and 4 in one of the following sequences:

Piling may be driven after excavation to bottom of leveling pad is complete and prior to backfilling.

Piling may be driven after embankment construction. Pile casings shall be used for all piling and shall be installed prior to or during embankment construction extending from bottom of leveling pad to bottom of cap. Pile casing material shall have sufficient strength to retain its original form free from harmful distortions after compaction of the fill material surrounding it. The minimum inside diameter of the casing shall be 18" and large enough to avoid damage when driving the pile. Piles shall be driven through the open casings after embankment to bottom of cap is in place. After driving is completed, the pile casing shall be backfilled with an approved non-shrink grout or other approved material in a single continuous operation to completely fill voids. Pile casings and backfill will not be paid for directly but shall be considered subsidiary to the item "Steel Piling (HP14x73)".

FOOTINGS: Top of footing shall be a minimum of 2'-0" below finished ground line at Bents 2 and 3. Foundations for footings shall be prepared in accordance with Subsection 801.04.

LIST OF DETAIL DRAWINGS

	Drawing No.
Details of Retaining Walls	55694 - 55697
End Bent Details	55700 - 55703
Intermediate Bent Details	55704 - 55705
388' Composite Plate Girder Unit	55706 - 55714
Details of Elastomeric Bearings	55715 - 55716
Details of Bridge Mounted Sign Structure	55717 - 55719
Embankment Construction and Backfill at Bridge Ends	55000
Computing Excavation for Structures	55001
Concrete Riprap	55002
Permanent Steel Bridge Deck Forms	55005
Type D Bridge Name Plate	55010
Steel H-Piles	55020
Type C Approach Gutters	55030C

SUPERSTRUCTURE NOTES

STRUCTURAL STEEL: All Structural Steel shall be AASHTO M270, Gr. 50 unless otherwise noted. All structural shall be paid for as "Structural Steel in Plate Girder Spans (M270, Gr. 50)". Structural Steel completely embedded in concrete may be AASHTO M270 Gr. 36. AASHTO M270, Gr. 50 steel shall be painted. All exposed surfaces shall be cleaned in accordance with Subsection 807.84 unless noted otherwise.

Requests for substitution of structural steel plates or shapes shown with plates or shapes of greater size must be submitted by the Contractor to the Engineer for approval. Steels of equal or greater strengths will be accepted only when shown on the approved shop drawings. Shapes, plate sizes, and materials shown in the plans will be the basis of payment and no additional compensation will be made for any adjustments due to substitutions.

Longitudinal girders and all field splice plates are considered main load carrying members and shall meet the Longitudinal Charpy V-Notch Test specified in Subsection 807.05. This work & material will not be paid for directly, but are considered as subsidiary to the item "Structural Steel in Plate Girder Spans (M270, Gr. 50)".

Steel plates for girders and flange splice plates shall be cut and fabricated so that the primary direction of rolling is parallel to the direction of main tensile and/or compressive stresses.

All girders shall be blocked in their true position in the shop. See Subsection 807.54(b)(2). Girders shall be blocked with web horizontal. The camber, length of sections, distance between bearings, and openings of joints shall be measured with the girders in their true position and this information shall become a part of the permanent records of this job. The component parts shall be match marked in this assembly and these marks shall be shown on the erection diagram. All girder dimensions are based on a temperature of 60° F. A tolerance of +/- 1/4" is allowed for camber.

Girder webs may be made by shop splicing with a minimum length of 25 feet for sections. Flange plates longer than 50 feet may be made by shop splicing with a minimum length of 25 feet for sections. No additional payment for these welds will be made. Material specifications and location of shop welded splices, if any, shall be shown on shop drawings.

Field connections shall be bolted with high strength bolts. For 3/4" bolts: Open holes = 13/16" unless otherwise noted. Bolt spacing = 2 1/2" unless otherwise noted. Minimum edge distance = 1 1/4" unless otherwise noted. For 7/8" Bolts: Open holes = 15/16" unless otherwise noted. Bolt spacing = 3" unless otherwise noted. Minimum edge distance = 1 1/2" unless otherwise noted. Bolts shall be placed with heads on the outside face of the exterior girder webs and on bottom of girder flanges.

Holes for 3/4" high strength bolts in crossframes and expansion devices may be 15/16" diameter if a washer is supplied for use under both the nut and the head of the bolt.

All welding that is to be done during fabrication of structural steel, including temporary welds, shall be detailed on the shop drawings and submitted for approval. If additional welds are required, whether permanent or temporary, a formal request with detailed drawings shall be submitted to the Engineer for approval; however, additional welds used for attaching falsework support devices or screed rail supports to the structural steel that do not exceed the limitations of Subsection 802.13 will not require approval prior to construction. All welding shall conform to Subsection 807.26.

Groove welds in main plate girder members shall be Quality Control (Q.C.) tested by nondestructive testing, as required by the Standard Specifications. Fillet welds at flange to web plate connections shall be Q.C. tested by the magnetic particle method. All Quality Control (Q.C.) testing is at the contractors expense.

Drawings show general features of design only. Shop drawings shall be made in accordance with Subsection 807.04, submitted and approval secured before fabrication is begun.

Steel crossframes shall be installed as girders are erected. All bolts in steel crossframes and field splices shall be installed and tightened in accordance with Subsection 807.71 of the Standard Specifications prior to pouring of the slab.

All stud shear connectors shall be granular flux filled, solid fluxed, or equal and shall be automatically end welded in accordance with the recommendations of the manufacturer.

REINFORCING STEEL: All reinforcing steel shall conform to AASHTO M 31 or M 322, Type A, Grade 60, with mill test reports. The reinforcing steel shall be accurately located in the forms and firmly held in place by steel wire supports sufficient in size and number to prevent displacement during the course of construction. The wire supports will not be paid for directly but will be considered subsidary to the item of "Epoxy Coated Reinforcing Steel (Grade 60)".

CONCRETE: All Superstructure concrete shall be Class S(AE) with a minimum 28 day compressive strength of f'c = 4,000 psi. Concrete shall be poured in the dry and all exposed corners are to be chamfered 3/4" unless noted otherwise.

The superstructure details shown are for use when removable deck forming is used and are the basis for measurement of Class S(AE) Concrete. See Standard Drawing No. 55005 for allowable modifications and for tolerances when Permanent Steel Bridge Deck Forms are used.

Concrete in bridge superstructure shall be placed and consolidated for the entire pour and screeded off before any concrete has taken its initial set. This may require the use of a retarding agent. The concrete bridge deck shall be given a tine finish as specified for final finishing in Subsection 802.19 for a Class 5 tined bridge roadway surface finish. Movement of the finishing machine across the new concrete shall be on planks placed on the surface and shall be prohibited for 72 hours after finishing the pour. Sufficient concrete must be placed ahead of the strike-off to fully load the girder. A minimum of 72 hours shall elapse between completion of slab and pouring of the parapet rail. Any railing pours made before the entire slab has been placed and cured must be approved by the Engineer.

HYDRAULIC DATA

FLOOD DESCRIPTION	FREQUENCY (YEARS)	DISCHARGE (CFS)	(1) NATURAL WATER SURFACE ELEVATION (ft)	WATER SURFACE ELEV. W/BACKWATER (2) PLAN EMBANK.	(3) FUTURE EMBANK.
DESIGN	25	2090	262.44	262.78	263.01
BASE	100	2860	263.45	263.74	264.13
EXTREME	500	3700	265.09	265.25	265.42
OVERTOPPING	15	1950	261.09	261.09	------
OVERTOPPING	50	2540	263.42	------	263.94

(1) Unconstricted water surface without existing or proposed structure and roadway approaches.

(2) Overtopping of Marche Road occurs approximately 1000' north of the existing bridge at elevation 260.0

(3) Low elevation of future embankment = 263.83

Q100 backwater elevation for existing structure = 263.93 feet.

Proposed Low Bridge Chord Elev. = 280.68 feet.

Drainage Area = 3.8 sq. miles

1927 H.W. Elev. = 265.4 feet (Backwater) (From existing bridge plans)

DATE REVISED	DATE FILMED	DATE REVISED	DATE FILMED	FED. RD. DIST. NO.	STATE	FED. AID PROJ. NO.	SHEET NO.	TOTAL SHEETS
				6	ARK.			
				JOB NO.		CA0609	254	693
				07317 - LAYOUT - 55699				

BORING BLOW COUNTS/FT. (1)

Boring No. S1
℄ Construction Marche Road
Sta. 15+45, 23' Left

0.5-1.5, N=21
2.5-3.5, N=38
4.5-5.5, N=6
6.5-7.5, N=7
9.0-10.0, N=22
14.0-15.0, N=21
19.0-20.0, N=15
24.0-25.0, N=34
29.0-30.0, N=50 (4")
34.0-35.0, N=30 (0")
39.0-40.0, N=30 (0")
44.0-45.0, N=30 (0")
49.0-50.0, N=30 (0")
54.0-55.0, N=30 (0")
59.0-60.0, N=30 (0")
64.0-65.0, N=30 (0")
69.0-70.0, N=30 (0")

Boring No. S3
℄ Construction Marche Road
Sta. 17+40, 11' Left

0.5-1.5, N=21
2.5-3.5, N=8
4.5-5.5, N=7
6.5-7.5, N=10
9.0-10.0, N=14
14.0-15.0, N=24
19.0-20.0, N=30
24.0-25.0, N=18
29.0-30.0, N=23
34.0-35.0, N=50 (9")
39.0-40.0, N=25
44.0-45.0, N=40
49.0-50.0, N=50 (6")
54.0-55.0, N=50 (3")
59.0-60.0, N=30 (0")
64.0-65.0, N=30 (0")
69.0-70.0, N=30 (0")
74.0-75.0, N=30 (0")
79.0-80.0, N=30 (0")

Boring No. S2
℄ Construction Marche Road
Sta. 14+05, 25' Right

0.5-1.5, N=7
2.5-3.5, N=19
4.5-5.5, N=13
6.5-7.5, N=4
9.0-10.0, N=16
14.0-15.0, N=31
19.0-20.0, N=17
29.0-30.0, N=22
34.0-35.0, N=50 (4")
39.0-40.0, N=25 (0")
44.0-45.0, N=25 (0")
49.0-50.0, N=25 (0")
54.0-55.0, N=25 (0")
59.0-60.0, N=25 (0")
64.0-65.0, N=25 (0")
69.0-70.0, N=25 (0")

Boring No. S4
℄ Construction Marche Road
Sta. 12+85, 11' Right

0.5-1.5, N=18
2.5-3.5, N=20
4.5-5.5, N=32
6.5-7.5, N=16
9.0-10.0, N=15
14.0-15.0, N=22
19.0-20.0, N=28
24.0-25.0, N=18
29.0-30.0, N=19
34.0-35.0, N=24
44.0-45.0, N=50
49.0-50.0, N=50 (3")
54.0-55.0, N=50 (0")
59.0-60.0, N=50 (0")
64.0-65.0, N=50 (0")
74.0-75.0, N=50 (0")
79.0-80.0, N=50 (0")

BORING LEGEND

A - Loose gray silt w/organics (fill)
B - Stiff tan, gray and brown silty clay w/shale fragments (fill)
C - Soft gray silty clay w/ trace organics
D - Firm gray and tan silty clay, stiff below 8 ft
E - Stiff gray and tan fine sandy clay, water at 16 ft
F - Stiff tan and gray silty clay, very stiff below 23 ft, sandstone fragments below 26 ft
G - Moderately hard tan and gray weathered shale +/- 60° dip, dark gray below 31 ft
H - Moderately hard to hard dark gray shale
I - Firm gray and brown clayey silt w/ organics (fill)
J - Stiff gray, reddish tan and brown silty clay w/shale fragments (fill)
K - Stiff gray silty clay, soft brown and gray at 6 to 8 ft, stiff below 8 ft
L - Very stiff gray, brown and tan silty clay w/occasional silt pockets, ferrous nodules and stains
M - Medium dense reddish tan and tan silty fine sand w/ferrous nodules and organic inclusions
N - Stiff gray and reddish tan fine sandy clay w/ferrous nodules and stains
O - Stiff gray and tan silty clay w/ferrous nodules and stains and occasional shale fragments
P - Low hardness tan, gray and dark gray highly weathered shale, moderately hard, tan and dark gray, moderately weathered below 33 ft
Q - Medium dense gray syenite fines w/trace crushed stone (fill)
R - Firm tan, brown and gray silty clay and shale fragments (fill), firm to stiff at 6 to 8 ft, stiff at 8 to 18 ft, very stiff at 18 to 22 ft, stiff below 22 ft
S - Stiff gray silty clay w/trace organics
T - Stiff gray, tan and reddish tan silty clay
U - Dense to very dense gray and tan clayey fine sand
V - Very stiff tan fine sandy clay
W - Moderately hard dark gray and tan weathered shale, tan gray and dark gray below 53.5 ft
X - Medium dense gray syenite fines w/ trace crushed stone (fill)
Y - Stiff to very stiff gray, brown and tan silty clay and shale fragments (fill)
Z - Stiff to very stiff gray and tan silty clay w/ferrous stains and nodules, very stiff below 38 ft, weathered shale seams below 44 ft
AA - Moderately hard tan, gray and dark gray weathered shale, water at 47 ft
BB - Moderately hard tan and dark gray slightly weathered shale

STATE OF ARKANSAS
REGISTERED PROFESSIONAL ENGINEER
No. 11328
CHRISTOPHER J. CRISWELL
7/17/14

BRIDGE ENGINEER
PRINT DATE: 7/17/2014

SHEET 2 OF 2
LAYOUT OF
MARCHE SEPARATION
PULASKI COUNTY
ROUTE 40 SECTION 33
ARKANSAS STATE HIGHWAY COMMISSION
LITTLE ROCK, ARKANSAS

DRAWN BY: WEG DATE: 10/15/13
CHECKED BY: MAA DATE: 10/22/13
DESIGNED BY: CJC DATE: 10/11/13
FILENAME: bca0609x1_lx2.dgn
SCALE: No Scale
BRIDGE NO. 07317
DRAWING NO. 55699

JACOBS

T:\Job\WLXM2650 AHTD CAP CA0603\700 CADD Files\709 Structural Files\Drawings\B2650MarcheLAYOUT02.dgn
11:08:42 AM
7/17/2014

DATE REVISED	DATE FILMED	DATE REVISED	DATE FILMED	FED. RD. DIST. NO.	STATE	FED. AID PROJ. NO.	SHEET NO.	TOTAL SHEETS
				6	ARK.			
				JOB NO.		CA0609	255	693
				(1) 07317 - END BENTS - 55700				

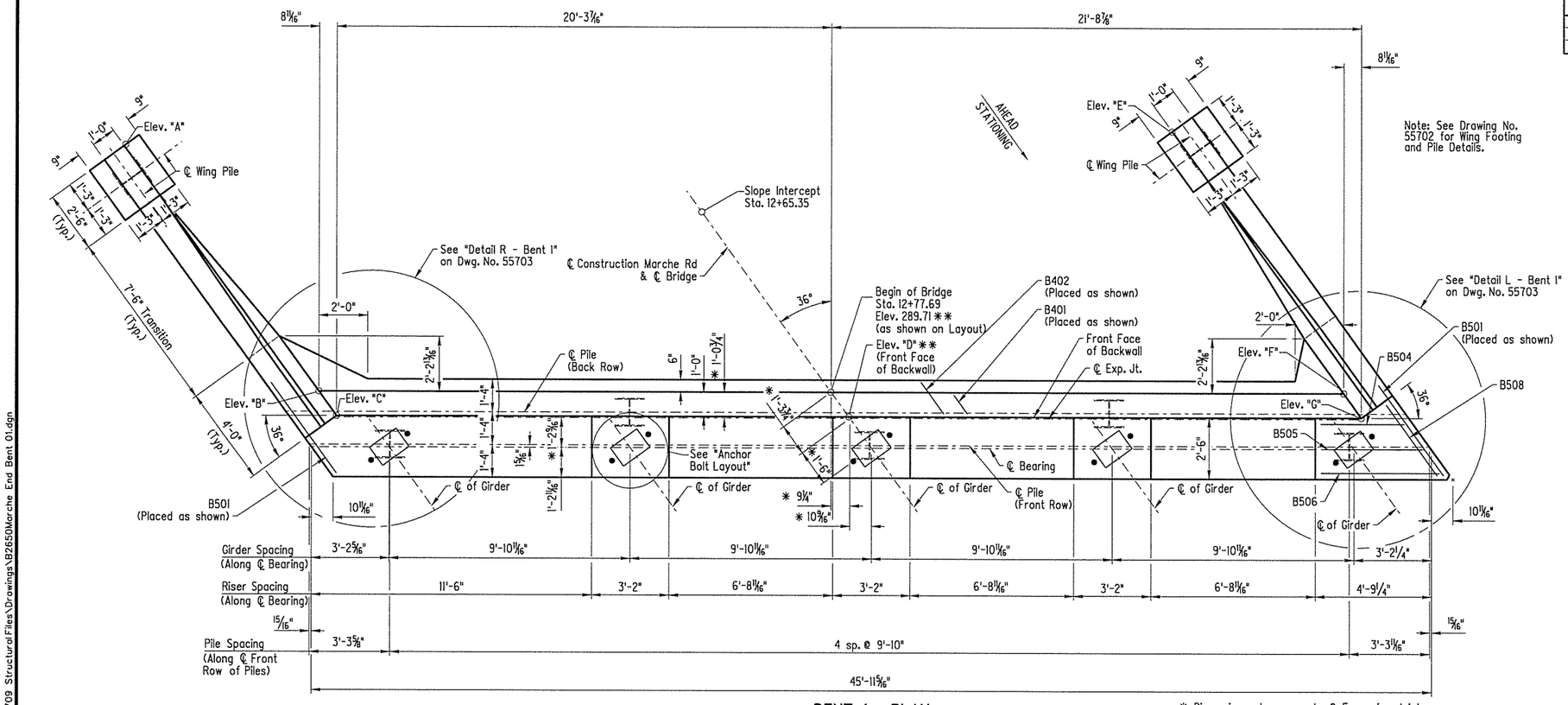

BENT 1 - PLAN

Scale: 3/8" = 1'-0"

* Dimensions shown are to ℄ Expansion Joint.
** Elevation at Working Point. See "Rounding Detail" on Dwg. No. 55706.

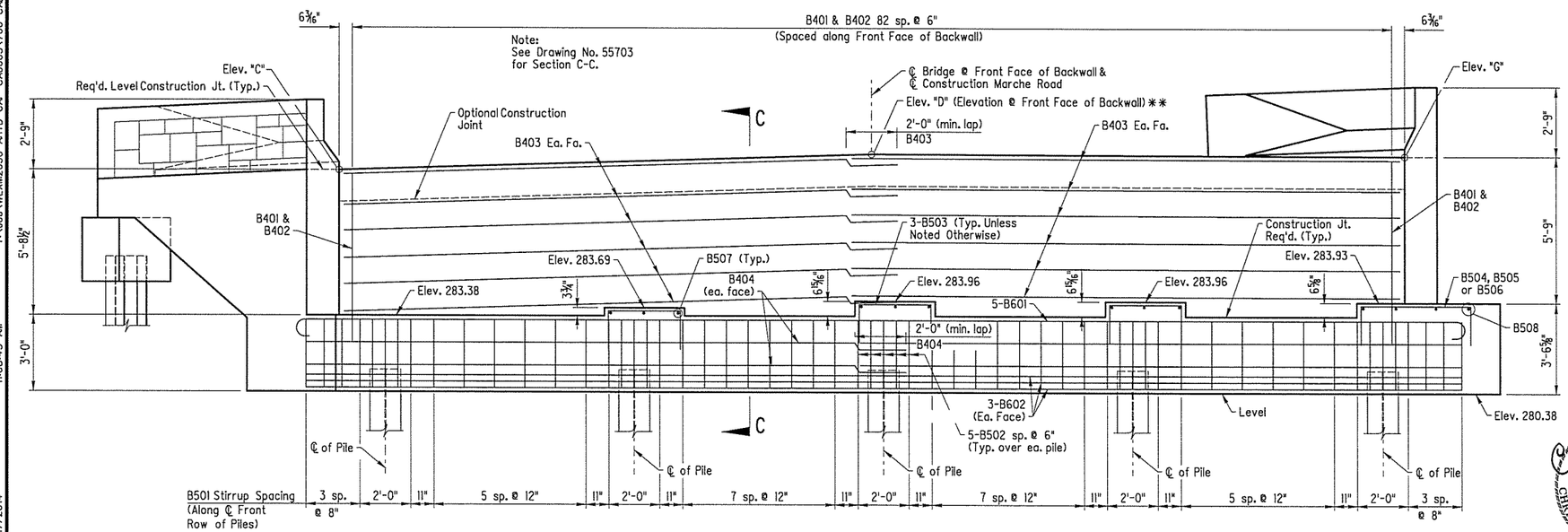

BENT 1 - ELEVATION

(Looking Back)
(No Scale)

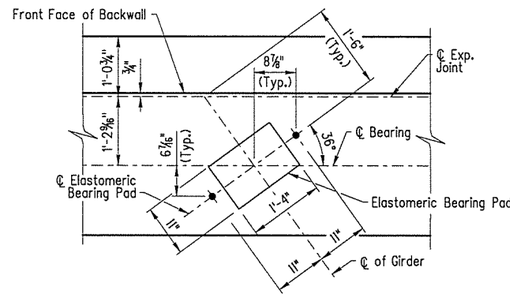

TYPICAL ANCHOR BOLT LAYOUT

Scale: 3/4" = 1'-0"

GENERAL NOTES

All concrete shall be Class "S" with a minimum 28 day compressive strength of f'c=3,500 psi.

Concrete shall be poured in the dry and exposed corners shall be chamfered 3/4" unless otherwise noted.

All reinforcing steel shall conform to AASHTO M31 or M322, Type A, Gr. 60, with mill test reports.

All piles shall be HP 14x73 (AASHTO M270, Gr. 50).

No portion of the backwall shall be poured until the girders are in place. See Dwg. No. 55714 for "Expansion Device Installation".

Finish top of backwall to match the bridge deck.

Structural steel in end bents shall be M270, Gr. 50 and shall be paid for as "Structural Steel in Plate Girder Spans (M270, Gr. 50)". All exposed surfaces shall be cleaned and painted in accordance with Section 807 and will be paid for under the pay item "Painting Structural Steel." The color shall match Federal Standard 595B, color chip No. 20108, Dark Brown.

Top reinforcing bars in cap shall be properly placed to avoid interference with anchor bolts or sheet metal sleeves.

Class 1 Protective Surface Treatment shall be applied to the top of backwall. Class 3 Textured Coating Finish shall be applied in accordance with SP Job 080395 "TEXTURED COATING FINISH" and in accordance with Subsection 802.19. Textured Coating Finish shall not be applied on surfaces where Class 1 Protective Surface Treatment is applied.

For additional information, see Layout.

TABLE OF ELEVATIONS

End Bt. No. 1	Elevation
Elev. "A"	288.70
Elev. "B"	289.06
Elev. "C"	289.09
Elev. "D"	289.74
Elev. "E"	289.35
Elev. "F"	289.65
Elev. "G"	289.68

SHEET 1 OF 4
END BENT DETAILS
MARCHE SEPARATION
PULASKI COUNTY
ROUTE 40 SECTION 33
ARKANSAS STATE HIGHWAY COMMISSION
LITTLE ROCK, ARKANSAS

STATE OF ARKANSAS REGISTERED PROFESSIONAL ENGINEER No. 11328 CHRISTOPHER J. CRISWELL 7/17/14

BRIDGE ENGINEER
PRINT DATE: 7/17/2014

DRAWN BY: LHG DATE: 1/13/14 FILENAME: bca0609xl_axl.dgn
CHECKED BY: BSK DATE: 2/21/14
DESIGNED BY: RLS DATE: 2/13/14 SCALE: AS NOTED
BRIDGE NO. 07317 DRAWING NO. 55700

JACOBS

T:\Jobs\WLXM2650 AHTD CAP CA0603\700 CADD Files\709 Structural Files\Drawings\B2650Marche End Bent 01.dgn
11:08:43 AM
7/17/2014

DATE REVISED	DATE FILMED	DATE REVISED	DATE FILMED	FED. RD. DIST. NO.	STATE	FED. AID PROJ. NO.	SHEET NO.	TOTAL SHEETS
				6	ARK.			
				JOB NO.		CA0609	256	693
				1	07317 - END BENTS - 55701			

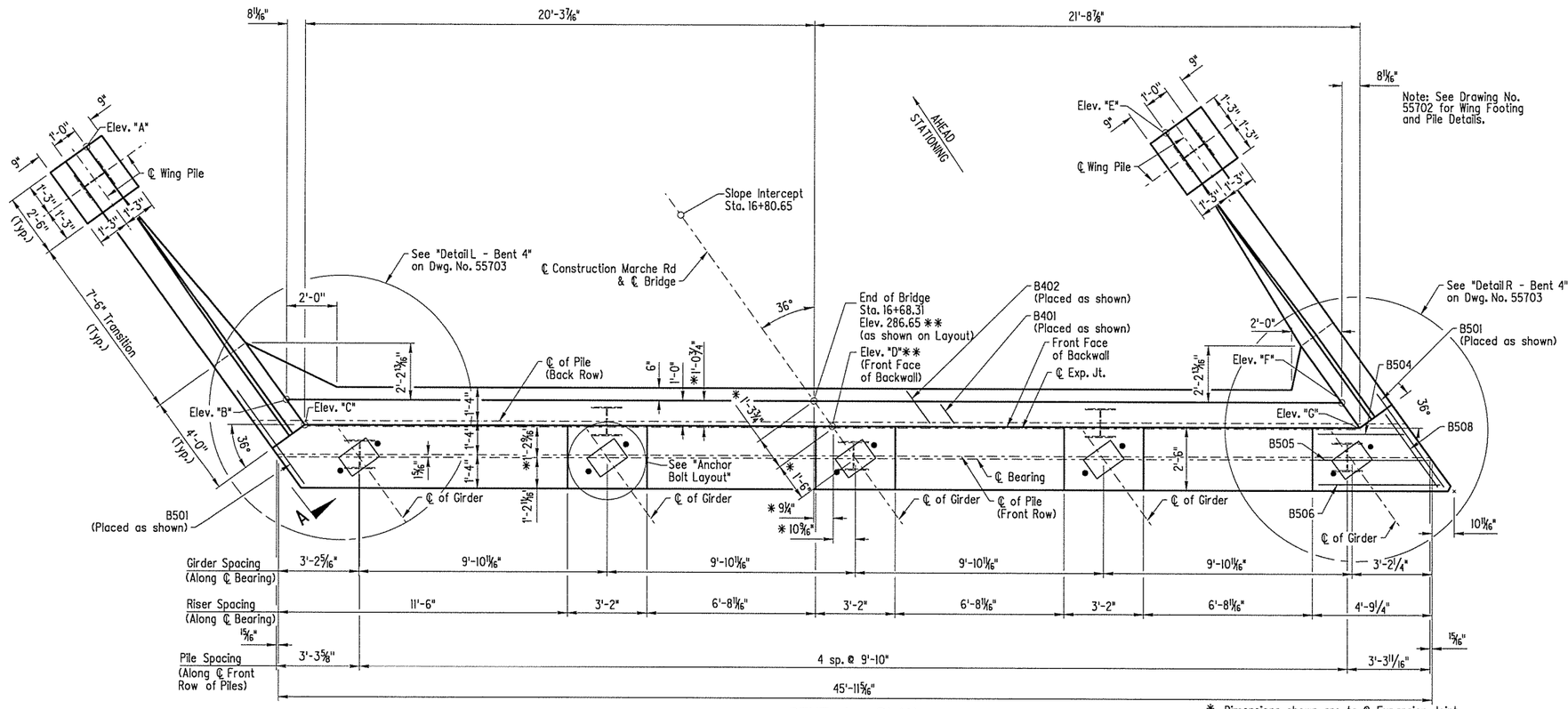

BENT 4 - PLAN

* Dimensions shown are to ℄ Expansion Joint.
** Elevation at Working Point. See "Rounding Detail on Dwg. No. 55706.

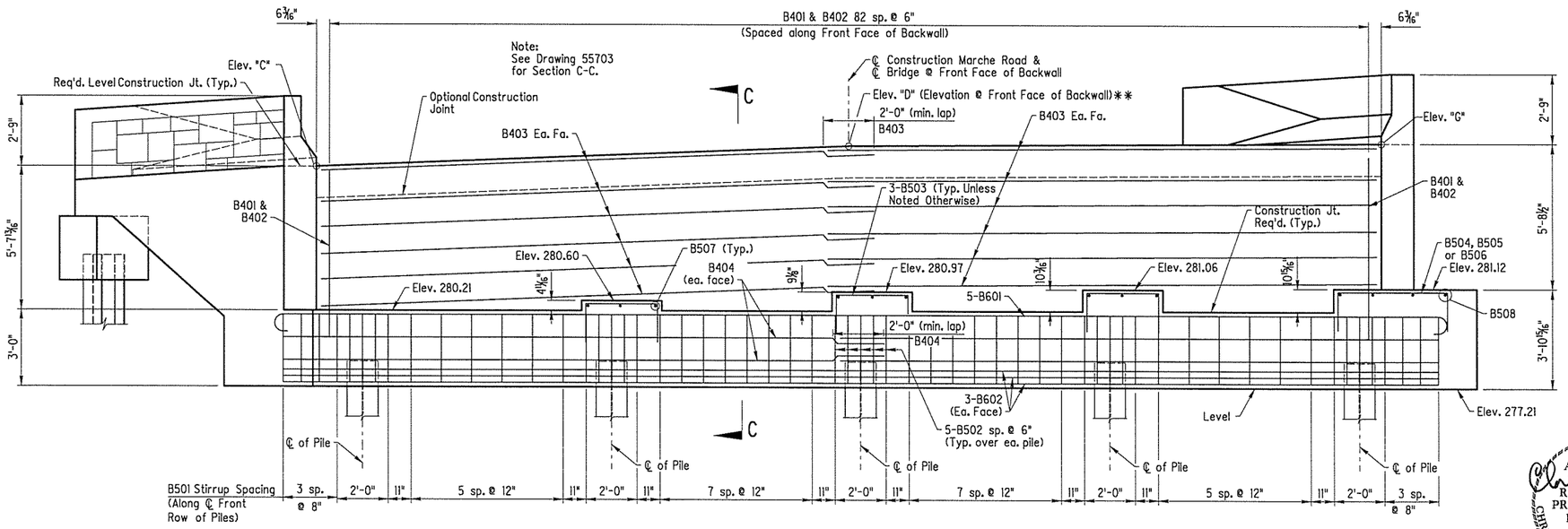

BENT 4 - ELEVATION

(Looking Ahead)
(No Scale)

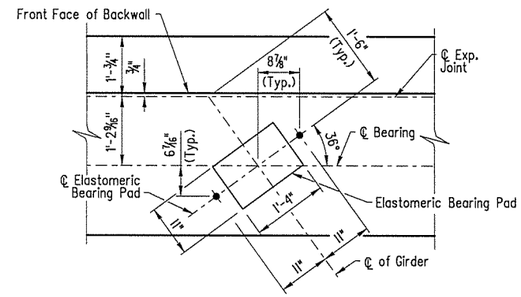

TYPICAL ANCHOR BOLT LAYOUT

Scale: 3/4" = 1'-0"

GENERAL NOTES

All concrete shall be Class "S" with a minimum 28 day compressive strength of f'c=3,500 psi.

Concrete shall be poured in the dry and exposed corners shall be chamfered 3/4" unless otherwise noted.

All reinforcing steel shall conform to AASHTO M31 or M322, Type A, Gr. 60, with mill test reports.

All piles shall be HP 14x73 (AASHTO M270, Gr. 50).

No portion of the backwall shall be poured until the girders are in place. See Dwg. No. 55714 for "Expansion Device Installation".

Finish top of backwall to match the bridge deck.

Structural steel in end bents shall be M270, Gr. 50 and shall be paid for as "Structural Steel in Plate Girder Spans (M270, Gr. 50)". All exposed surfaces shall be cleaned and painted in accordance with Section 807 and will be paid for under the pay item "Painting Structural Steel." The color shall match Federal Standard 595B, color chip No. 20108, Dark Brown.

Top reinforcing bars in cap shall be properly placed to avoid interference with anchor bolts or sheet metal sleeves.

Class 1 Protective Surface Treatment shall be applied to the top of backwall. Class 3 Textured Coating Finish shall be applied in accordance with SP Job 080395 "TEXTURED COATING FINISH" and in accordance with Subsection 802.19. Textured Coating Finish shall not be applied on surfaces where Class 1 Protective Surface Treatment is applied.

For additional information, see Layout.

TABLE OF ELEVATIONS

End Bt. No. 4	Elevation
Elev. "A"	285.29
Elev. "B"	285.81
Elev. "C"	285.86
Elev. "D"	286.70
Elev. "E"	286.28
Elev. "F"	286.79
Elev. "G"	286.83

STATE OF ARKANSAS
CHRISTOPHER J. CRISWELL
REGISTERED PROFESSIONAL ENGINEER
No. 11328
7/17/14

BRIDGE ENGINEER
PRINT DATE: 7/17/2014

SHEET 2 OF 4
END BENT DETAILS
MARCHE SEPARATION
PULASKI COUNTY
ROUTE 40 SECTION 33
ARKANSAS STATE HIGHWAY COMMISSION
LITTLE ROCK, ARKANSAS

DRAWN BY: LHG DATE: 1/13/14 FILENAME: bca0609x1_ax2.dgn
CHECKED BY: BSK DATE: 2/21/14
DESIGNED BY: RLS DATE: 2/13/14 SCALE: AS NOTED
BRIDGE NO. 07317 DRAWING NO. 55701

JACOBS

T:\Job\WLXM2650 AHTD CAP CA0603\700 CADD Files\709 Structural Files\Drawings\B2650Marche End Bent 02.dgn
11:08:44 AM
7/17/2014

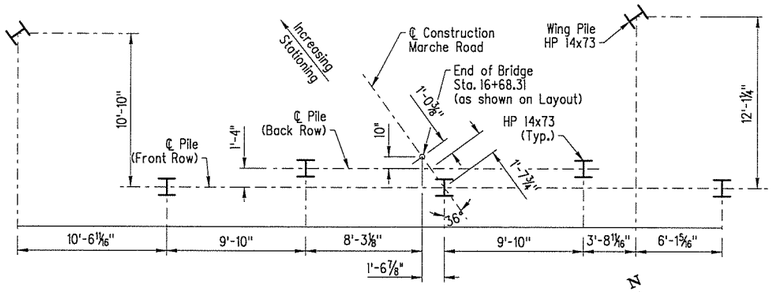

PILE PLAN - BENT 4

(No Scale)

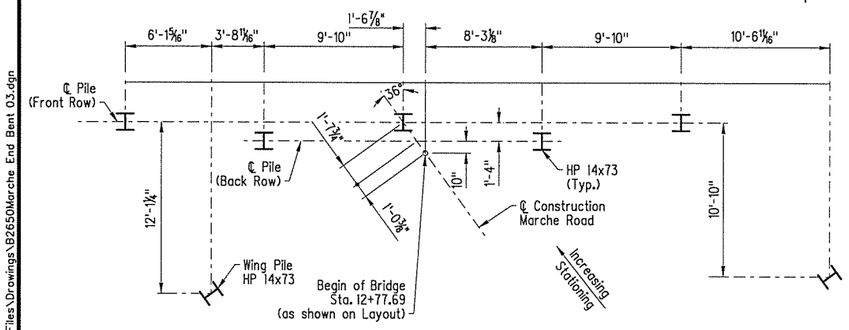

PILE PLAN - BENT 1

(No Scale)

▲ Shop Weld - See Section 809 of the Standard Specifications.

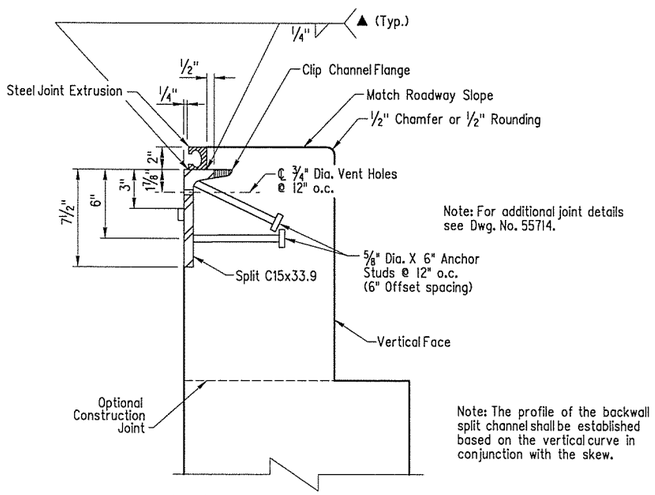

DETAIL Z

(No Scale)

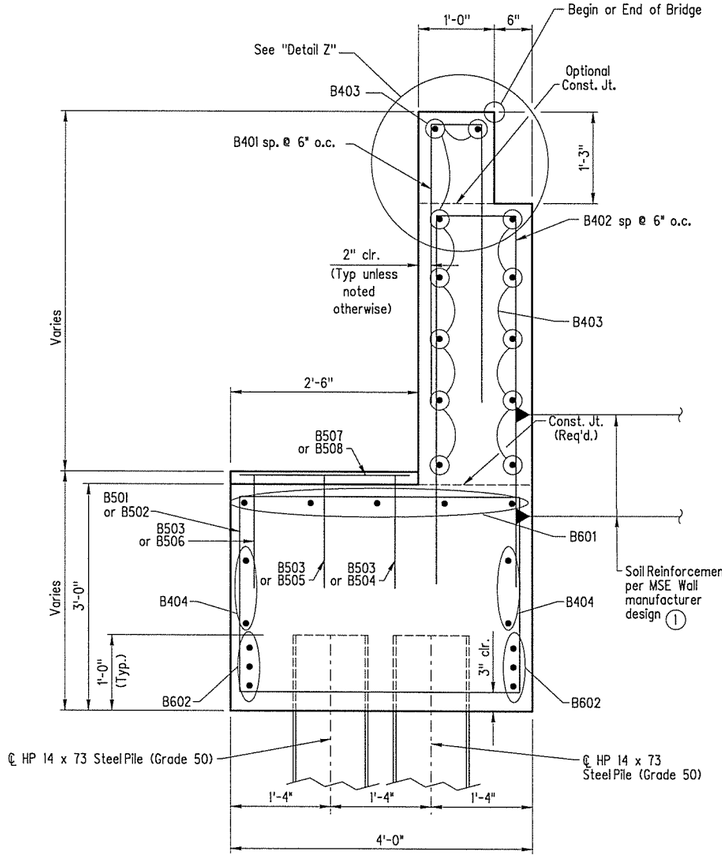

SECTION C-C

(No Scale)

Note: For details of piles, see Drawing No. 55020.

(1) Soil reinforcement shall be attached at the back of End Bents. Type, size, and spacing of soil reinforcement shall be designed by the contractor. The design details and computations shall accompany the wall design submittal for review by the Engineer. Cost shall be subidiary to item "Retaining Walls". See Special Provision Job CA0609 "Retaining Walls" and Drawing No. 55696 for additional information.

DATE REVISED	DATE FILMED	DATE REVISED	DATE FILMED	FED. RD. DIST. NO.	STATE	FED. AID PROJ. NO.	SHEET NO.	TOTAL SHEETS
				6	ARK.			
				JOB NO.		CA0609	257	693
				(1)	07317 - END BENTS - 55702			

BAR LIST (PER END BENT)

MARK	NO. REQ'D	LENGTH	PIN DIA.
B401	83	4'-10"	2"
B402	83	12'-3"	2"
B403	24	23'-6"	3"
B404	8	23'-10"	Str.
B405	6	6'-11"	Str.
B406	4	7'-11"	Str.
B501	34	14'-8"	2½"
B502	25	9'-6"	2½"
B503	9	6'-2"	2½"
B504 to B506	1 ea.	6'-9" to 8'-7"	2½"
B507	12	2'-2"	Str.
B508	1	3'-8"	Str.
B601	5	46'-10"	4½"
B602	6	45'-6"	Str.
B603	4	13'-3"	4½"
B604	4	6'-11"	4½"
W401	5	9'-10"	2"
W402	5	11'-0"	Str.
W403 to W410	2 ea.	3'-3" to 7'-0"	2"
W411 to W418	2 ea.	4'-6" to 8'-3"	Str.
W419	6	11'-0"	2"
W420	6	8'-0"	2"
W421	5	10'-6"	2"
W422	5	11'-8"	Str.
W601	20	2'-0"	Str.
W701	12	13'-8"	Str.
W702	4	10'-7"	Str.
W703	4	9'-1"	Str.
W704	4	7'-7"	Str.
W705	4	6'-1"	Str.
W706	4	4'-7"	Str.
W707	4	13'-10"	5¼"
R401	18	3'-11"	2"
R402	8	4'-0"	2"
R403	12	13'-8"	Str.
R601	16	5'-10"	Str.
R602	6	5'-0"	Str.

BENDING DIAGRAMS (DIMENSIONS ARE OUT TO OUT OF BARS)

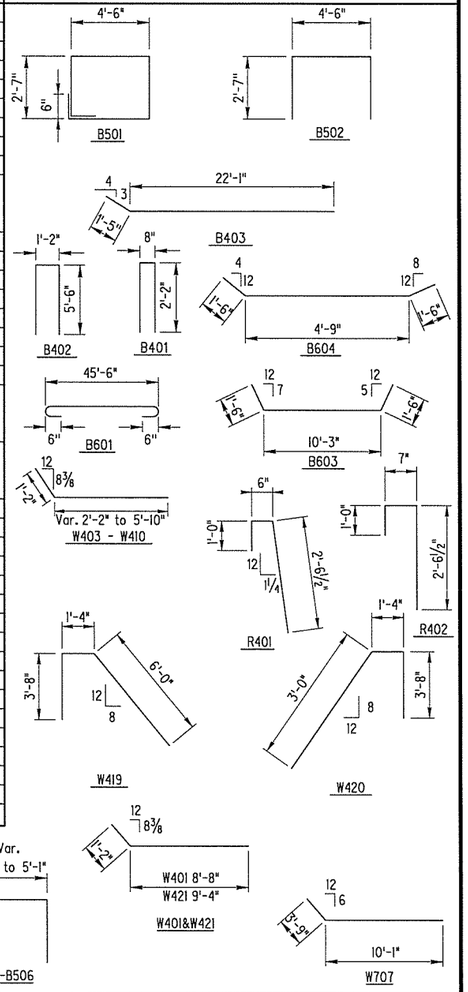

STATE OF ARKANSAS
CHRISTOPHER J. CRISWELL
REGISTERED PROFESSIONAL ENGINEER
No. 11328
7/17/14

BRIDGE ENGINEER
PRINT DATE: 7/17/2014

SHEET 3 OF 4
END BENT DETAILS
MARCHE SEPARATION
PULASKI COUNTY
ROUTE 40 SECTION 33
ARKANSAS STATE HIGHWAY COMMISSION
LITTLE ROCK, ARKANSAS

DRAWN BY: LHG DATE: 1/13/14
CHECKED BY: BSK DATE: 2/21/14
DESIGNED BY: RLS DATE: 2/13/14
BRIDGE NO. 07317
FILENAME: bca0609x1_ax3.dgn
SCALE: No Scale
DRAWING NO. 55702

JACOBS

T:\Job\WLXM2650 AHTD CAP CA0603\700 CADD Files\709 Structural Files\Drawings\B2650Marche End Bent 03.dgn 1:08:45 AM 7/17/2014

DATE REVISED	DATE FILMED	DATE REVISED	DATE FILMED	FED. RD. DIST. NO.	STATE	FED. AID PROJ. NO.	SHEET NO.	TOTAL SHEETS
				6	ARK.			
				JOB NO.		CA0609	258	693
				(1) 07317 - END BENTS - 55703				

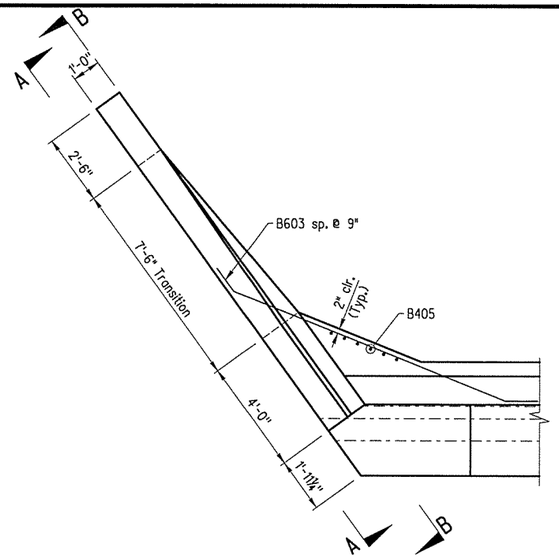

DETAIL R - BENT 1
DETAIL L - BENT 4
(No Scale)

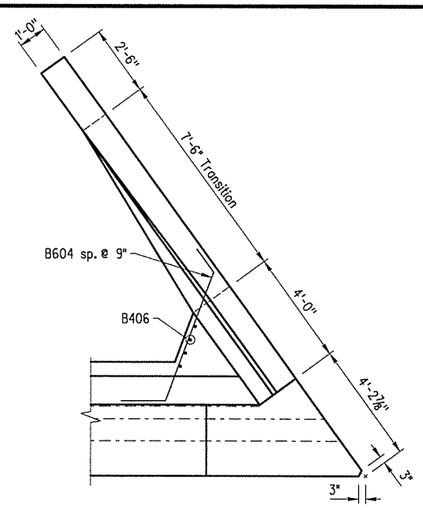

DETAIL L - BENT 1
DETAIL R - BENT 4
(No Scale)

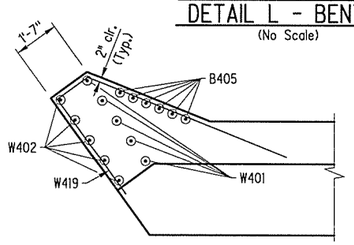

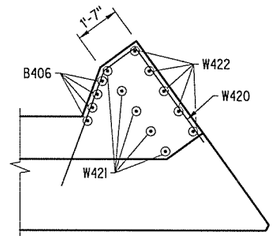

SECTION X-X
(No Scale)

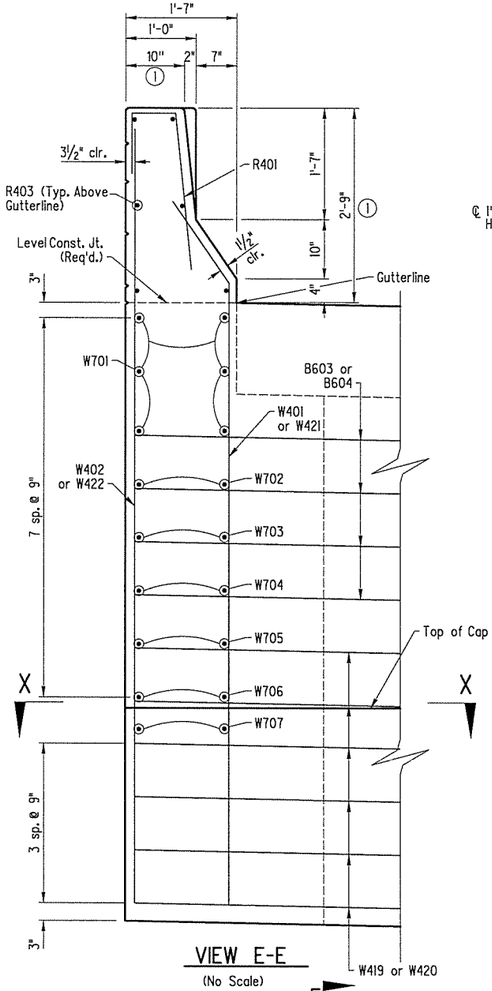

VIEW E-E
(No Scale)

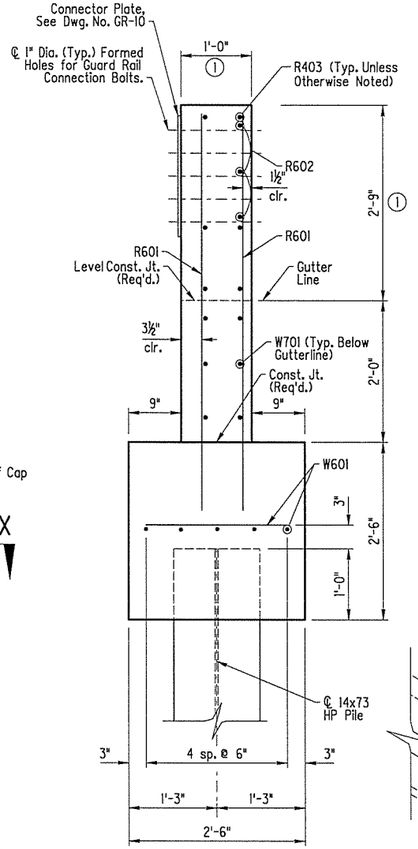

SECTION G-G
(No Scale)

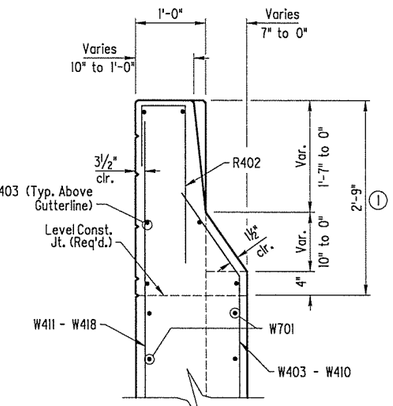

SECTION F-F
(No Scale)

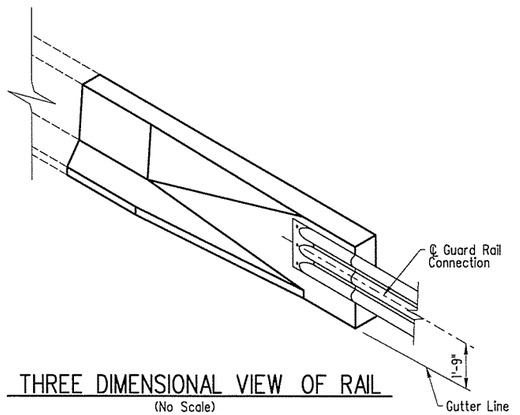

THREE DIMENSIONAL VIEW OF RAIL
(No Scale)

Note: Form liner shall be a max. depth of 2" to provide a min. clearance of 1½" to parapet reinforcing.

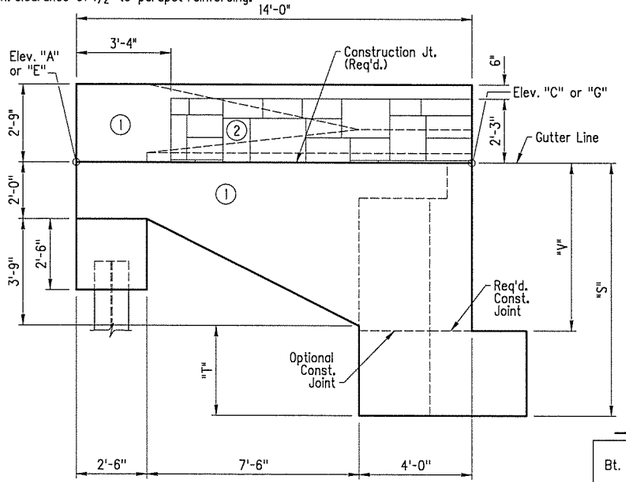

① Class 3 Textured Coating Finish (Color = Brown, Color Chip No. 33522).

② "Ashlar Stone" Form Liner & Class 3 Textured Coating Finish (Color = Brown, Color Chip No. 30219).

VIEW A-A
(No Scale)

TABLE OF VARIABLES

Bt.	Wing	"S"	"T"	"V"
1	Right	8'-8½"	2'-6 13/16"	5'-8½"
1	Left	9'-3⅝"	3'-2⅝"	6'-3⅝"
4	Right	9'-7 7/16"	3'-3 13/16"	6'-7 7/16"
4	Left	8'-7 13/16"	2'-4"	5'-7 13/16"

Note: Wing designations are looking ahead.

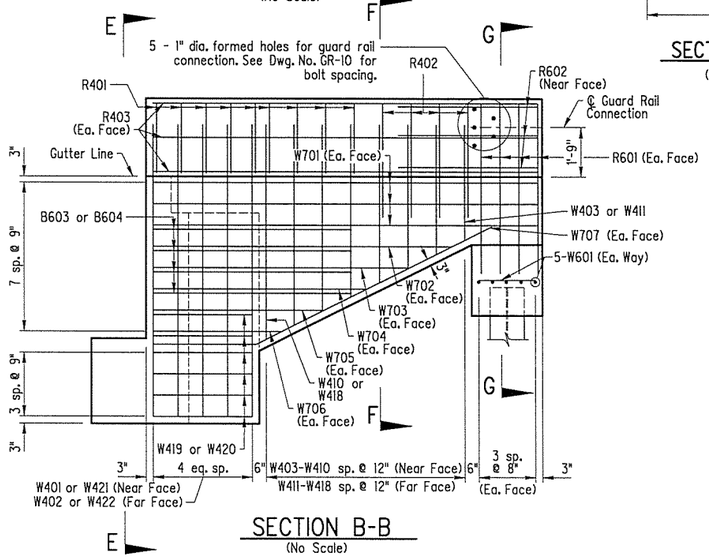

SECTION B-B
(No Scale)

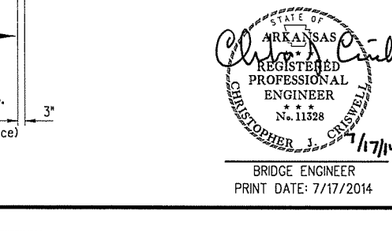

BRIDGE ENGINEER
PRINT DATE: 7/17/2014

SHEET 4 OF 4
END BENT DETAILS
MARCHE SEPARATION
PULASKI COUNTY
ROUTE 40 SECTION 33
ARKANSAS STATE HIGHWAY COMMISSION
LITTLE ROCK, ARKANSAS

DRAWN BY: LHG DATE: 1/13/14
CHECKED BY: BSK DATE: 2/21/14
DESIGNED BY: RLS DATE: 2/13/14
FILENAME: bca0609x1_ax4.dgn
SCALE: No Scale
BRIDGE NO. 07317
DRAWING NO. 55703

JACOBS

T:\Job\WLXM2650 AHTD CAP CA0603\700 CADD Files\709 Structural Files\Drawings\B2650Marche End Bent 04.dgn 11:08:46 AM 7/17/2014

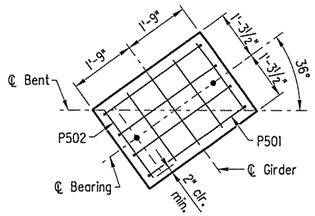

PEDESTAL DETAIL
½" = 1'-0"

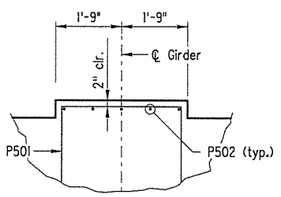

PEDESTAL ELEVATION
½" = 1'-0"

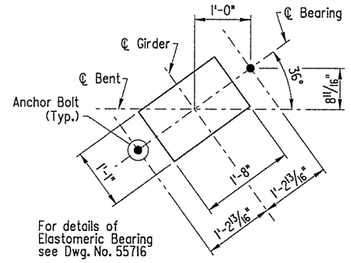

ANCHOR BOLT LAYOUT
¾" = 1'-0"

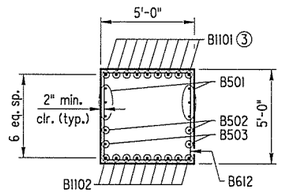

SECTION A-A
¼" = 1'-0"

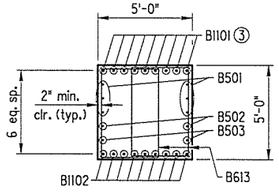

SECTION B-B
¼" = 1'-0"

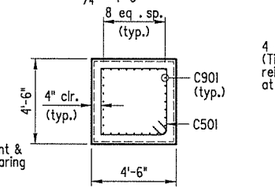

SECTION D-D
¼" = 1'-0"

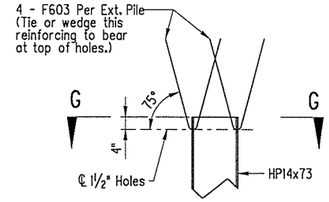

DETAIL AT PILE TOP
⅛" = 1'-0"

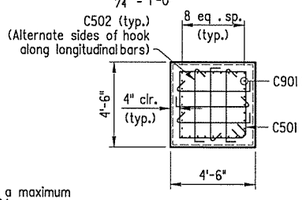

SECTION E-E
¼" = 1'-0"

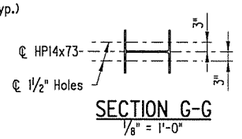

SECTION G-G
⅛" = 1'-0"

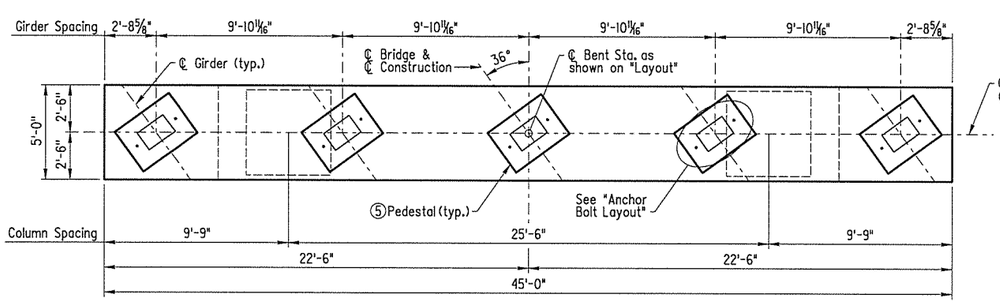

PLAN
¼" = 1'-0"

⑤ Pedestals are to be poured monolithically with the cap.

③ Reinforcing bars in top of cap shall be properly placed to avoid interference with anchor bolts or sheet metal sleeves.

Note:
Form Liner shall be a maximum depth of 2" to provide a minimum clearance of 2".

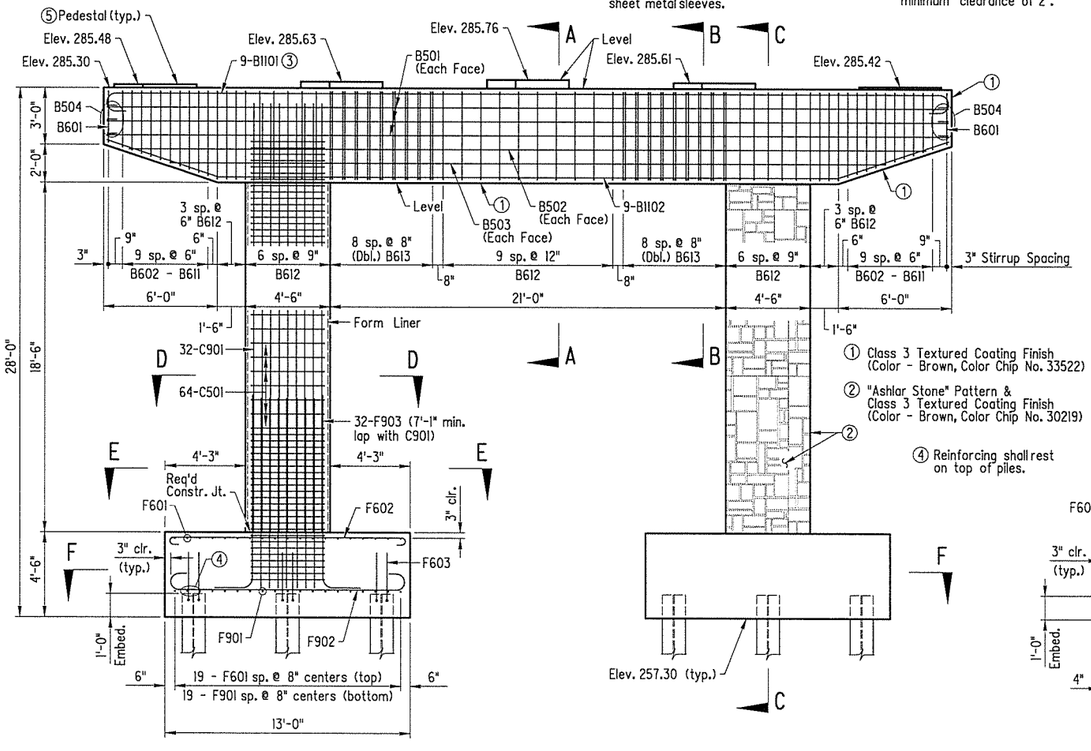

ELEVATION
¼" = 1'-0"
(Reinforcing, stone pattern and texture are typical to both columns.)

Note:
C502 bars not shown in Elevation and Section C-C for clarity.
See "Section E-E".

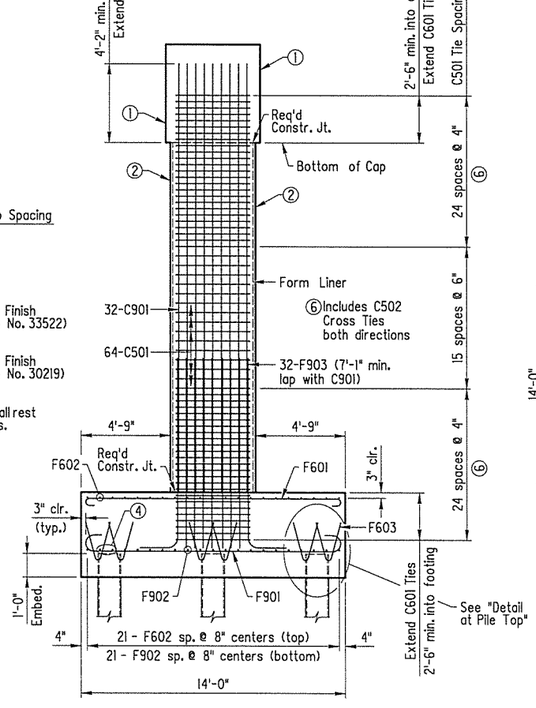

SECTION C-C
¼" = 1'-0"

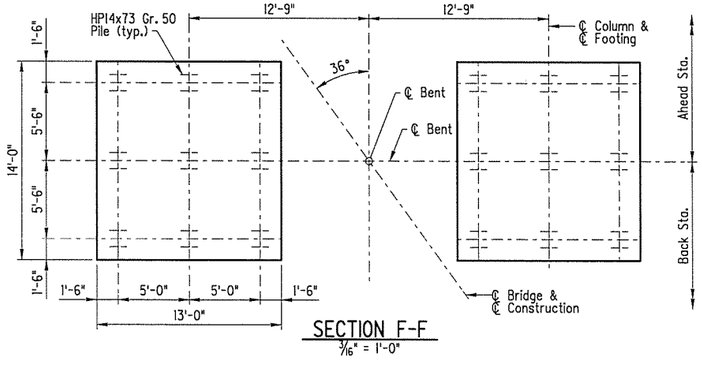

SECTION F-F
3/16" = 1'-0"

DATE REVISED	DATE FILMED	DATE REVISED	DATE FILMED	FED. RD. DIST. NO.	STATE	FED. AID PROJ. NO.	SHEET NO.	TOTAL SHEETS
				6	ARK.			
				JOB NO.		CA0609	259	693
				① 07317 - INTERMEDIATE BENTS - 55704				

BAR LIST

MARK	NO. REQ'D.	LENGTH	A	B	PIN DIA.
B501	6	44'-8"			Str.
B502	2	42'-6"			Str.
B503	2	38'-1"			Str.
B504	6	5'-7"	6"	4'-6½"	2½"
B601	2	16'-10"	2'-9"	4'-8"	4½"
B602 To B611	2 EACH	17'-4" To 20'-4"	3'-0" To 4'-6"	4'-8"	4½"
B612	28	20'-8"	4'-8"	4'-8"	4½"
B613	36	17'-10"	4'-8"	3'-3"	4½"
B1101	9	49'-2"	44'-8"	1'-0½"	11¼"
B1102	9	45'-4"			11¼"
C501	128	16'-8"	3'-10"	3'-10"	2½"
C502	600	4'-10"	6"	3'-10"	2½"
C901	64	22'-8"			Str.
F601	38	15'-0"	13'-6"	6"	4½"
F602	42	14'-0"	12'-6"	6"	4½"
F603	64	5'-0"	2'-6"		4½"
F901	38	16'-3"	13'-6"	10"	9"
F902	42	15'-3"	12'-6"	10"	9"
F903	64	12'-0"	10'-5"	1'-7"	9"
P501	12	6'-2"	1'-6"	3'-2"	3¾"
P502	15	2'-3"			Str.

BENDING DIAGRAM (DIMENSIONS ARE OUT TO OUT OF BARS)

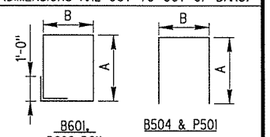

B601, B602-B611, B612 & B613 | B504 & P501

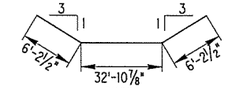

B1102

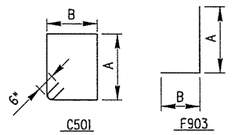

C501 | F903

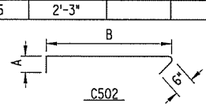

C502

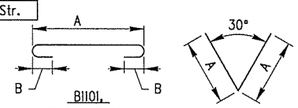

B1101, F601 & F602, F901 & F902 | F603

GENERAL NOTES

All concrete shall be Class "S" with a minimum 28 day compressive strength of f'c=3,500 psi.

Concrete shall be poured in the dry and exposed corners shall be chamfered ¾" unless otherwise noted.

All reinforcing shall conform to AASHTO M31 or M322, Type A Grade 60 (fy=60,000 psi).

If anchor bolts are drilled into cap, top reinforcing bars shall be properly placed to avoid damage.

Provide reinforcing in pedestals taller than 3".

For additional information see layout.

STATE OF ARKANSAS
CHRISTOPHER J. CRISWELL
REGISTERED PROFESSIONAL ENGINEER
No. 11328
7/17/14

BRIDGE ENGINEER
PRINT DATE: 7/17/2014

DETAILS OF INTERMEDIATE BENT 2
MARCHE SEPARATION
PULASKI COUNTY
ROUTE 40 SECTION 33
ARKANSAS STATE HIGHWAY COMMISSION
LITTLE ROCK, ARKANSAS

DRAWN BY:	LTT	DATE:	2/21/14	FILENAME:	bca0609x1_b2.dgn
CHECKED BY:	RLS	DATE:	2/19/14		
DESIGNED BY:	BSK	DATE:	2/13/14	SCALE:	As Shown
BRIDGE NO. 07317				DRAWING NO. 55704	

JACOBS

T:\Job\WLKM2650 AHTD CAP CA0603\700 CADD Files\709 Structural Files\Drawings\B2650Marche Int Bents 01.dgn
11:08:47 AM
7/17/2014

DATE REVISED	DATE FILMED	DATE REVISED	DATE FILMED	FED. RD. DIST. NO.	STATE	FED. AID PROJ. NO.	SHEET NO.	TOTAL SHEETS
				6	ARK.			
				JOB NO.		CA0609	260	693
				(1) 07317 - INTERMEDIATE BENTS - 55705				

BAR LIST

MARK	NO. REQ'D.	LENGTH	A	B	PIN DIA.	BENDING DIAGRAM (DIMENSIONS ARE OUT TO OUT OF BARS)
B501	6	44'-8"			Str.	
B502	2	42'-6"			Str.	
B503	2	38'-1"			Str.	
B504	6	5'-7"	6"	4'-6½"	2½"	
B601	2	16'-10"	2'-9"	4'-8"	4½"	
B602 To B611	2 EACH	17'-4" To 20'-4"	3'-0" To 4'-6"	4'-8"	4½"	
B612	28	20'-8"	4'-8"	4'-8"	4½"	
B613	36	17'-10"	4'-8"	3'-3"	4½"	
B1101	9	49'-2"	44'-8"	1'-0½"	11¼"	
B1102	9	45'-4"			11¼"	
C501	126	16'-8"	3'-10"	3'-10"	2½"	
C502	600	4'-10"	6"	3'-10"	2½"	
C801	64	24'-9"			Str.	
F601	44	17'-9"	16'-0"	6"	4½"	
F602	56	14'-0"	12'-6"	6"	4½"	
F603	80	5'-0"	2'-6"		4½"	
F801	64	10'-3"	8'-11"	1'-4"	6"	
F901	44	18'-8"	16'-0"	10"	9"	
F902	56	15'-2"	12'-6"	10"	9"	
P501	16	6'-2"	1'-6"	3'-2"	3¾"	
P502	20	2'-3"			Str.	

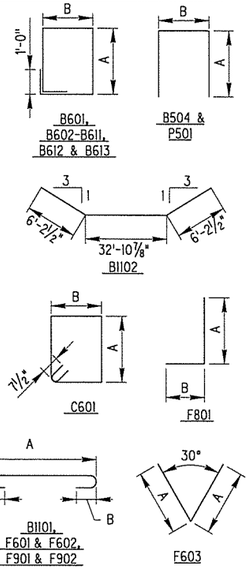

PEDESTAL DETAIL
1/2" = 1'-0"

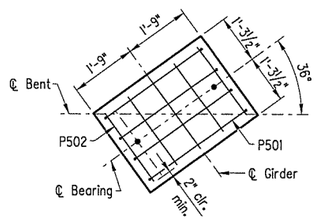

PEDESTAL ELEVATION
1/2" = 1'-0"

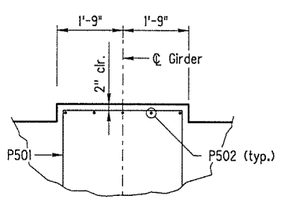

ANCHOR BOLT LAYOUT
3/4" = 1'-0"

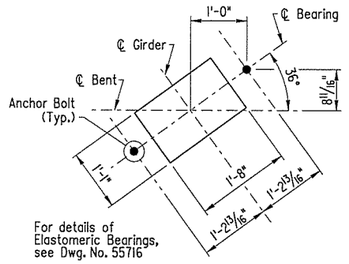

For details of Elastomeric Bearings, see Dwg. No. 55716

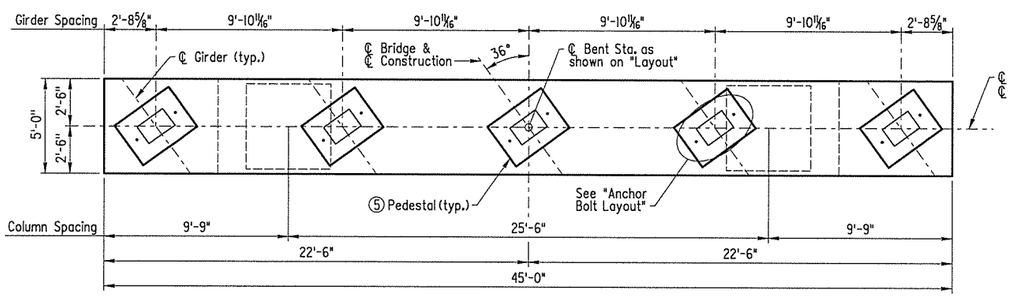

PLAN
1/4" = 1'-0"

⑤ Pedestals are to be poured monolithically with the cap.

③ Reinforcing bars in top of cap shall be properly placed to avoid interference with anchor bolts or sheet metal sleeves.

Note:
Form Liner shall be a maximum depth of 2" to provide a minimum clearance of 2".

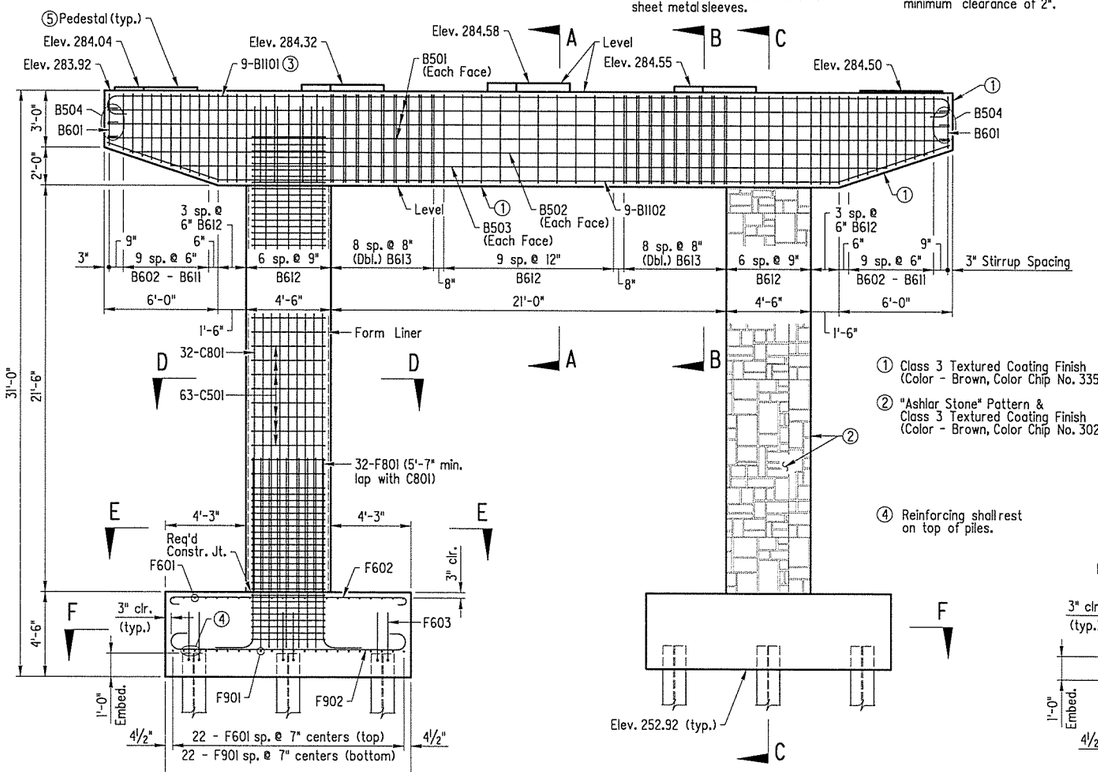

ELEVATION
1/4" = 1'-0"
(Reinforcing, stone pattern and texture are typical to both columns.)

① Class 3 Textured Coating Finish (Color - Brown, Color Chip No. 33522)

② "Ashlar Stone" Pattern & Class 3 Textured Coating Finish (Color - Brown, Color Chip No. 30219)

④ Reinforcing shall rest on top of piles.

Note:
C502 bars not shown in Elevation and Section C-C for clarity. See "Section E-E".

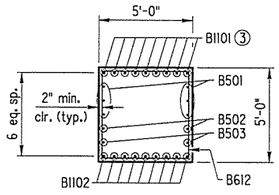

SECTION A-A
1/4" = 1'-0"

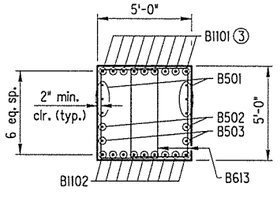

SECTION B-B
1/4" = 1'-0"

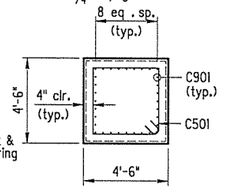

SECTION D-D
1/4" = 1'-0"

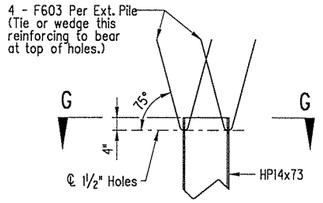

DETAIL AT PILE TOP
1/8" = 1'-0"

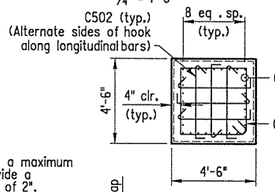

SECTION E-E
1/4" = 1'-0"

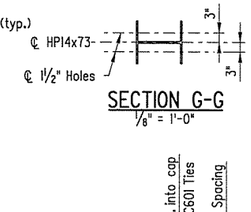

SECTION G-G
1/8" = 1'-0"

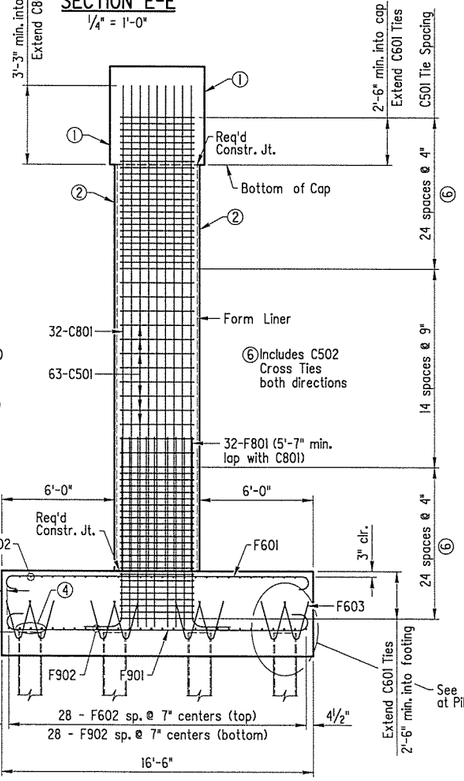

SECTION C-C
1/4" = 1'-0"

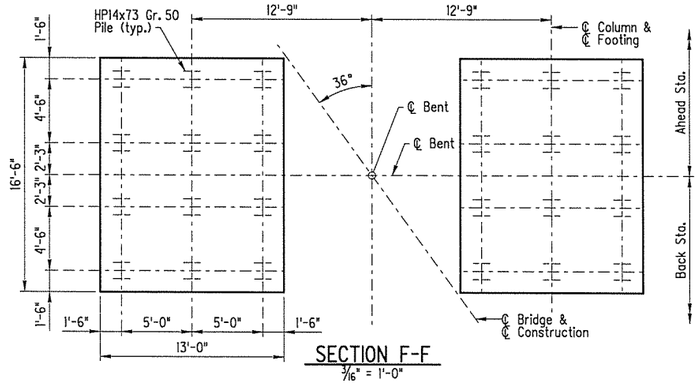

SECTION F-F
3/16" = 1'-0"

GENERAL NOTES

All concrete shall be Class "S" with a minimum 28 day compressive strength of f'c=3,500 psi.
Concrete shall be poured in the dry and exposed corners shall be chamfered ¾" unless otherwise noted.
All reinforcing shall conform to AASHTO M31 or M322, Type A, Grade 60 (fy=60,000 psi).
If anchor bolts are drilled into cap, top reinforcing bars shall be properly placed to avoid damage.
Provide reinforcing in pedestals taller than 3".
For additional information see layout.

STATE OF ARKANSAS
CHRISTOPHER J. CRISWELL
REGISTERED PROFESSIONAL ENGINEER
No. 11328
7/17/14

BRIDGE ENGINEER
PRINT DATE: 7/17/2014

DETAILS OF INTERMEDIATE BENT 3
MARCHE SEPARATION
PULASKI COUNTY
ROUTE 40 SECTION 33
ARKANSAS STATE HIGHWAY COMMISSION
LITTLE ROCK, ARKANSAS

DRAWN BY: LTT DATE: 2/26/14 FILENAME: bca0609x1_b3.dgn
CHECKED BY: RLS DATE: 2/20/14
DESIGNED BY: BSK DATE: 2/15/14 SCALE: As Shown
BRIDGE NO. 07317 DRAWING NO. 55705

JACOBS

T:\Job\WLXM2650 AHTD CAP CA0603\700 CADD Files\709 Structural Files\Drawings\B2650Marche Int Bents 02.dgn
7/17/2014 11:08:48 AM

DATE REVISED	DATE FILMED	DATE REVISED	DATE FILMED	FED. RD. DIST. NO.	STATE	FED. AID PROJ. NO.	SHEET NO.	TOTAL SHEETS
				6	ARK.			
				JOB NO.		CA0609	261	693
				(1) 07317 - 388' PL. GIRDER UNIT - 55706				

Note: Class 1 Protective Surface Treatment shall be applied to the roadway surface only. For details of Class 3 Textured Coating Finish to be applied to Concrete Parapet, See Drawing No. 55713.

One #5 epoxy coated bar in the top and one #5 epoxy coated bar in the bottom may be substituted for the S503E. Payment will be based on the weight of bar S503E.

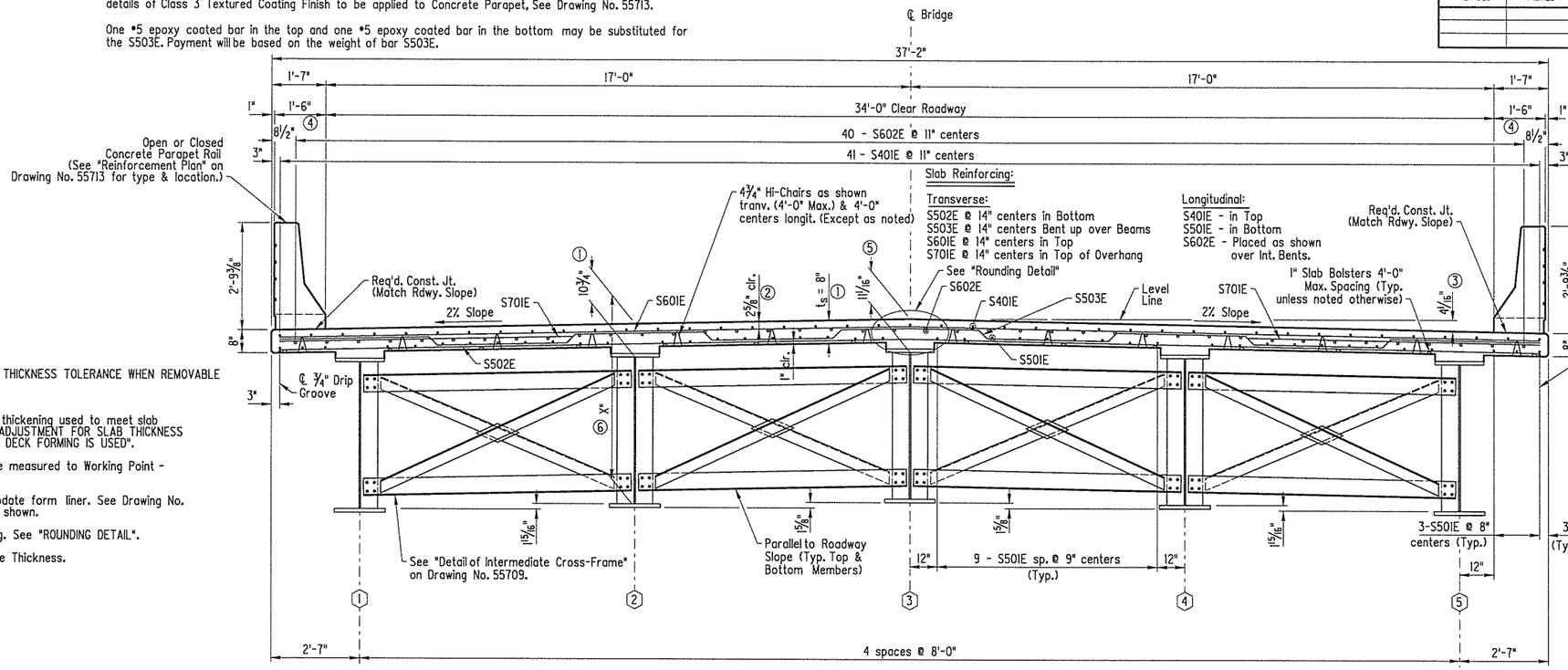

TYPICAL ROADWAY SECTION

(Looking Ahead)
Scale: 1½" = 1'-0"

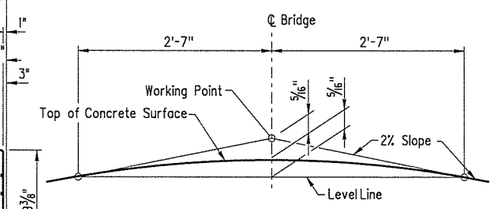

ROUNDING DETAIL

(No Scale)

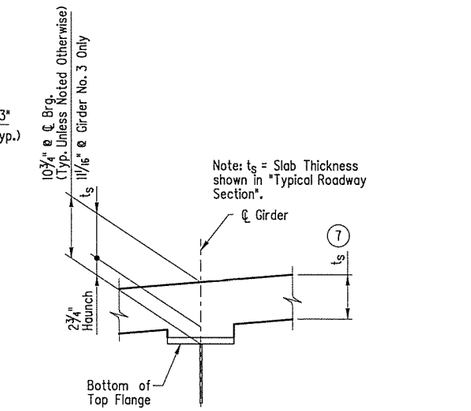

(1) See "ADJUSTMENT FOR SLAB THICKNESS TOLERANCE WHEN REMOVABLE DECK FORMING IS USED".

(2) Tolerance: Minus =¼"
Plus: Equal to amount of slab thickening used to meet slab thickness tolerances - See "ADJUSTMENT FOR SLAB THICKNESS TOLERANCE WHEN REMOVABLE DECK FORMING IS USED".

(3) ℄ Construction to Gutter Line measured to Working Point - See Rounding Detail.

(4) Widened Parapet to accommodate form liner. See Drawing No. 55713 for Parapet details not shown.

(5) To Working Point @ ℄ Bearing. See "ROUNDING DETAIL".

(6) "X" = 5'-1¾" + Bottom Flange Thickness.

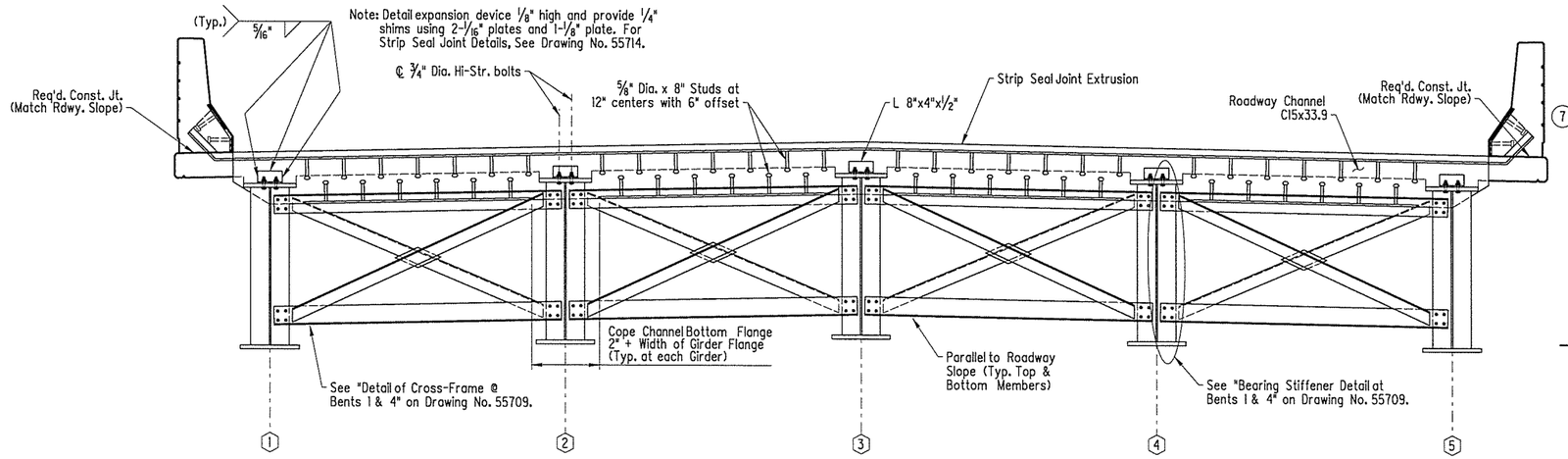

SECTION THROUGH JOINT

(Looking Forward - Bent No. 1)
(Looking Back - Bent No. 4)
No Scale

(7) Tolerance when removable deck forming is used is +½", -¼". Haunch forming is required and shall be adjusted to maintain slab thickness tolerance.

Haunch dimension may vary within the following limits to maintain the grade and slab thickness tolerance. Minimum - occurs when top flange contacts bottom reinforcing steel. Maximum - top flange thickness plus 1 ¾". No increase in concrete and structural steel quantities will be made to maintain tolerances.

Tolerances shown are applicable only when removable deck forming is used. See Std. Dwg. No. 55005 for tolerances when permanent steel deck forms are used. Payment for concrete shall be based on removable deck forming.

ADJUSTMENT FOR SLAB THICKNESS TOLERANCE WHEN REMOVABLE DECK FORMING IS USED

(No Scale)

STATE OF ARKANSAS REGISTERED PROFESSIONAL ENGINEER No. 11328 CHRISTOPHER J. CRISWELL 7/17/14

BRIDGE ENGINEER
PRINT DATE: 7/17/2014

SHEET 1 OF 9
DETAILS OF 388'-0" COMPOSITE PLATE GIRDER UNIT
MARCHE SEPARATION
PULASKI COUNTY
ROUTE 40 SECTION 33
ARKANSAS STATE HIGHWAY COMMISSION
LITTLE ROCK, ARKANSAS

DRAWN BY: LHG DATE: 10/15/13
CHECKED BY: MAA DATE: 3/14/14
DESIGNED BY: CJC DATE: 10/11/13
FILENAME: bca0609xl_sll.dgn
SCALE: As Noted
BRIDGE NO. 07317
DRAWING NO. 55706

JACOBS

T:\Job\WLKM2650 AHTD CAP CA0603\700 CADD Files\709 Structural Files\Drawings\B2650Marche TypSec 01.dgn
11:08:49 AM
7/17/2014

DATE REVISED	DATE FILMED	DATE REVISED	DATE FILMED	FED. RD. DIST. NO.	STATE	FED. AID PROJ. NO.	SHEET NO.	TOTAL SHEETS
				6	ARK.			
				JOB NO.		CA0609	262	693

1 07317 - 388' PL. GIRDER UNIT - 55707

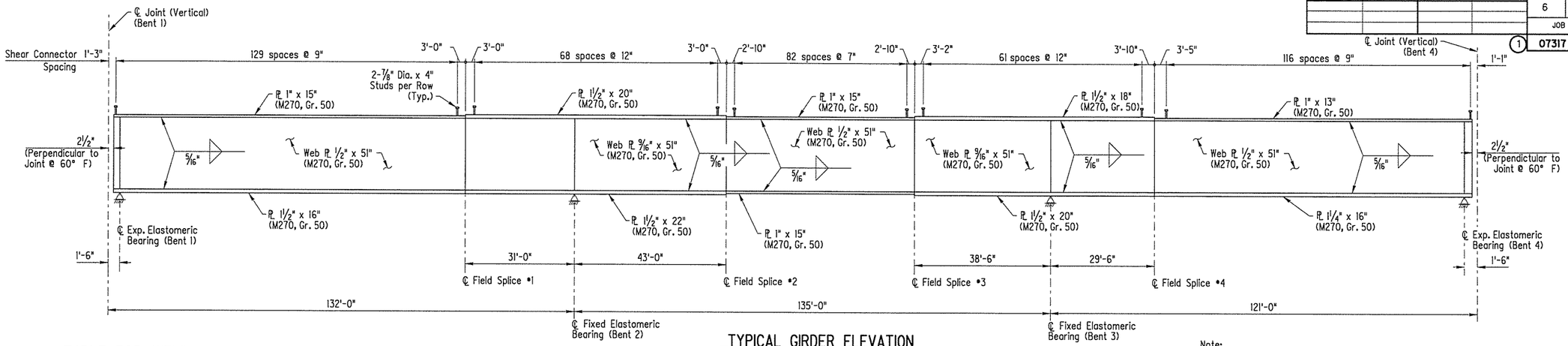

TYPICAL GIRDER ELEVATION
(No Scale)

Note:
For sizes and details of bearing stiffener plates, see Drawing No. 55708 & 55709.

TABLE FOR WELD

Material Thickness of Thicker Part Jointed (inches)	Minimum Size of Fillet Weld (inches)	Single Pass Weld Must Be Used
to ¾" inclusive	¼"	
Over ¾"	5/16"	

Note: When a fillet weld size, as shown on the Plans, is larger than the minimum, the First Pass shall be that specified for minimum size of fillet weld.

Note: Bolted Field Splices shown may be eliminated or shop welded splices may be substituted with the approval of the Engineer. Payment will be made on the basis of the Plan Quantities.

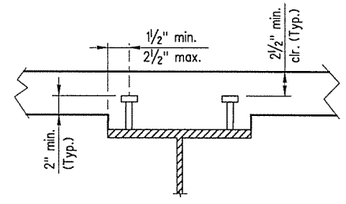

Stud Shear Connectors shown shall be ⅞" Ø x 4" long, granular flux filled, solid fluxed or equal, and automatically end welded to the girder flange in accordance with the recommendations of the Manufacturer. ¾" Ø studs may be used in place of the ⅞" Ø studs shown at the ratio of 1.361-¾" Ø studs in place of one ⅞" Ø stud. ⅞" Ø studs will be used as basis for measurement of structural steel in shear connectors. Maximum stud spacing = 2'-0".

SHEAR CONNECTOR DETAIL
(No Scale)

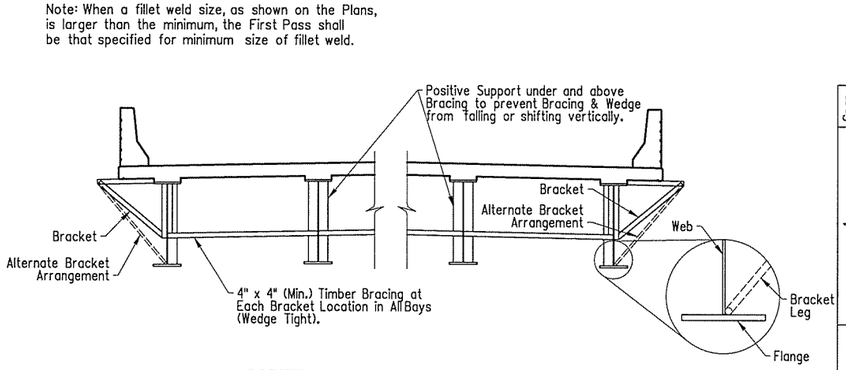

SCREED RAIL SUPPORT DETAIL
(No Scale)

Note: The bracket shall be installed in a manner that avoids any nicks or gouges in the flange, web and weld.

Note:
If a transverse finishing machine is used, the rail shall be supported directly over the exterior girders, or as an alternate, the rail may be supported by the overhang brackets if the above strutting system is used. The strutting system may be omitted if ½" x 6" web stiffeners are welded to the insides of the exterior girders at the location of each bracket or if the alternate bracket shown above is used. The alternate bracket arrangement shall extend down to the junction of the web and bottom flange. The stiffeners shall conform to the details for cross-frame connection plates shown on Drawing No. 55709. No direct payment will be made for brackets, timber bracing, supports, or welded stiffeners. Payment shall be subsidiary to "Structural Steel in Plate Girder Spans (M270, Gr. 50)."

Span	Span Point	Exterior Girders 1 & 5: Structural Steel	Exterior Girders 1 & 5: Struct. Steel & Slab	Exterior Girders 1 & 5: Struct. Steel Slab & Parapet	Interior Girders 2-4: Structural Steel	Interior Girders 2-4: Struct. Steel & Slab	Interior Girders 2-4: Struct. Steel Slab & Parapet
1	1.0	0.00	0.00	0.00	0.00	0.00	0.00
	1.1	0.29	1.13	1.26	0.31	1.31	1.43
	1.2	0.54	2.09	2.32	0.57	2.44	2.66
	1.3	0.72	2.76	3.07	0.75	3.24	3.53
	1.4	0.80	3.09	3.44	0.84	3.61	3.94
	1.5	0.78	3.04	3.38	0.82	3.55	3.87
	1.6	0.68	2.64	2.94	0.71	3.09	3.37
	1.7	0.51	1.99	2.22	0.54	2.33	2.55
	1.8	0.31	1.23	1.37	0.33	1.44	1.57
	1.9	0.13	0.52	0.58	0.13	0.60	0.65
	2.0	0.00	0.00	0.00	0.00	0.00	0.00
2	2.1	-0.03	-0.18	-0.19	-0.04	-0.22	-0.23
	2.2	0.00	-0.13	-0.11	0.00	-0.16	-0.14
	2.3	0.05	0.03	0.09	0.06	0.00	0.06
	2.4	0.11	0.19	0.28	0.11	0.20	0.29
	2.5	0.14	0.28	0.39	0.14	0.29	0.40
	2.6	0.13	0.24	0.34	0.13	0.26	0.36
	2.7	0.08	0.11	0.18	0.08	0.10	0.17
	2.8	0.03	-0.05	-0.02	0.03	-0.07	-0.04
	2.9	-0.01	-0.13	-0.13	-0.02	-0.15	-0.15
3	3.0	0.00	0.00	0.00	0.00	0.00	0.00
	3.1	0.08	0.38	0.42	0.09	0.45	0.49
	3.2	0.21	0.92	1.02	0.22	1.09	1.19
	3.3	0.35	1.51	1.68	0.37	1.77	1.93
	3.4	0.47	2.01	2.23	0.50	2.36	2.57
	3.5	0.55	2.31	2.57	0.58	2.72	2.96
	3.6	0.56	2.36	2.62	0.60	2.78	3.03
	3.7	0.51	2.13	2.36	0.54	2.49	2.71
	3.8	0.39	1.61	1.79	0.41	1.88	2.05
	3.9	0.21	0.87	0.97	0.22	1.02	1.11
	4.0	0.00	0.00	0.00	0.00	0.00	0.00

TABLE OF DEAD LOAD DEFLECTIONS - INCHES

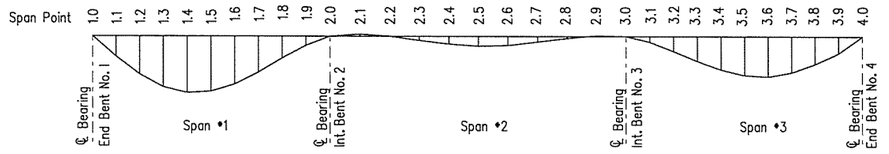

DEAD LOAD DEFLECTION DIAGRAM
(No Scale)

Note: Camber girders for dead load deflection plus vertical curve. Tolerance is +/- ¼". Deflections shown are from a chord from centerline bearing to centerline bearing. Vertical curve corrections are not included. Negative sign (-) indicates point above chord.

STATE OF ARKANSAS REGISTERED PROFESSIONAL ENGINEER No. 11528 CHRISTOPHER J. CRISWELL 7/17/14

BRIDGE ENGINEER
PRINT DATE: 7/17/2014

SHEET 2 OF 9
DETAILS OF 388'-0"
COMPOSITE PLATE GIRDER UNIT
MARCHE SEPARATION
PULASKI COUNTY
ROUTE 40 SECTION 33
ARKANSAS STATE HIGHWAY COMMISSION
LITTLE ROCK, ARKANSAS

DRAWN BY: LHC DATE: 1/13/14 FILENAME: bca0609xl_sl2.dgn
CHECKED BY: BSK DATE: 3/7/14
DESIGNED BY: CJC DATE: 12/15/13 SCALE: No Scale
BRIDGE NO. 07317 DRAWING NO. 55707

JACOBS

T:\Jobs\WLXM2650 AHTD CAP CA0603\700 CADD Files\709 Structural Files\Drawings\B2650Marche Girder Elev 01.dgn
7/17/2014 11:08:50 AM

DATE REVISED	DATE FILMED	DATE REVISED	DATE FILMED	FED. RD. DIST. NO.	STATE	FED. AID PROJ. NO.	SHEET NO.	TOTAL SHEETS
				6	ARK.			
				JOB NO.		CA0609	263	693
				(1)	07317 - 388' PL. GIRDER UNIT - 55708			

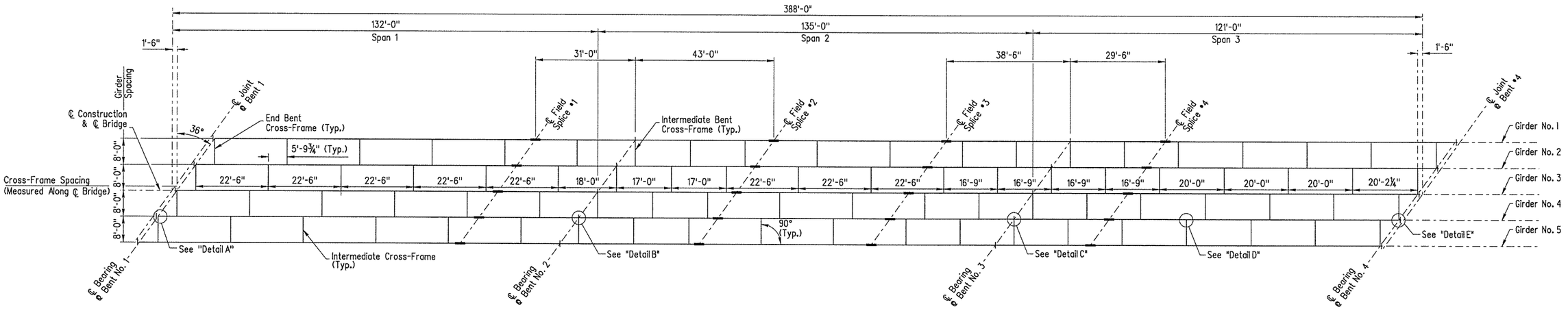

FRAMING PLAN
Scale: 1/16" = 1'-0"

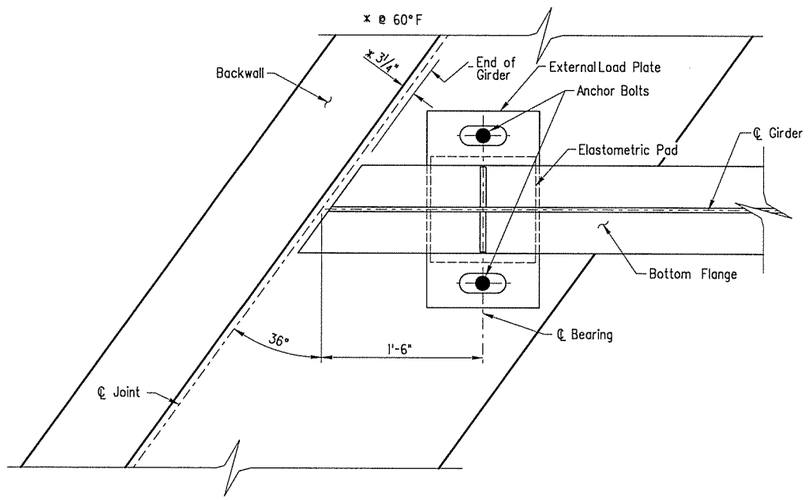

PLAN OF BEARING AT END BENT
(No Scale)

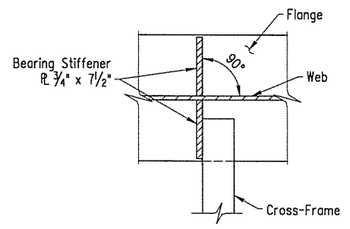

DETAIL "A"
(No Scale)
Girder 1 through 4 shown
Girder 5 similar
Bent 1

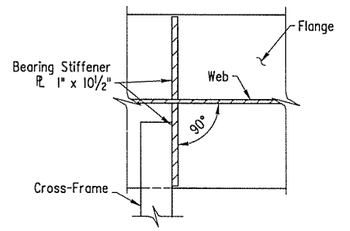

DETAIL "B"
(No Scale)
Girders 1 through 4 shown
Girder 5 similar
Bent 2

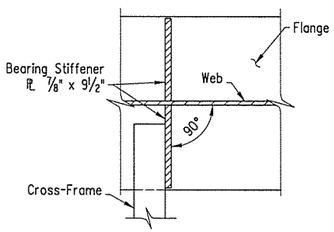

DETAIL "C"
(No Scale)
Girders 1 through 4 shown
Girder 5 similar
Bent 3

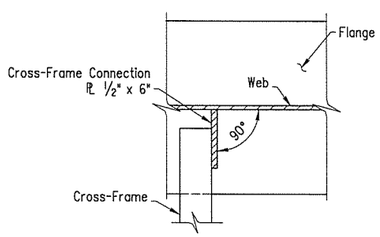

DETAIL "D"
(No Scale)
Girders 1 through 5
Intermediate Cross-Frame

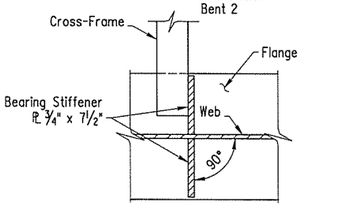

DETAIL "E"
(No Scale)
Girders 2 through 5 shown
Girder 1 similar
Bent 4

Notes:
1. For General Notes, see Drawing No. 55699.
2. All Structural Steel including Girders, Cross-Frames, Bearing Stiffener and Cross-Frame connection plates shall be AASHTO M270 Gr. 50.
3. For Elastomeric Bearing Details, see Drawing No. 55715 & 55716.
4. For Details of Field Splices, see Drawing No. 55710.
5. For Dead Load Deflection Diagram, see Drawing No. 55707.
6. For Intermediate Cross-Frame, End Bent Cross-Frame and Intermediate Bent Cross-Frame details not shown, see Drawing No. 55709.

STATE OF ARKANSAS
REGISTERED PROFESSIONAL ENGINEER
No. 11528
CHRISTOPHER J. CRISWELL
7/17/14

BRIDGE ENGINEER
PRINT DATE: 7/17/2014

SHEET 3 OF 9
DETAILS OF 388'-0" COMPOSITE PLATE GIRDER UNIT
MARCHE SEPARATION
PULASKI COUNTY
ROUTE 40 SECTION 33
ARKANSAS STATE HIGHWAY COMMISSION
LITTLE ROCK, ARKANSAS

DRAWN BY: LHG DATE: 1/13/14
CHECKED BY: BSK DATE: 3/7/14
DESIGNED BY: CJC DATE: 12/15/13
BRIDGE NO. 07317
FILENAME: bca0609x1_sl3.dgn
SCALE: 1/16" = 1'-0"
DRAWING NO. 55708

JACOBS

T:\Jobs\WLXM2650 AHTD CAP CA0603\700 CADD Files\709 Structural Files\Drawings\B2650Marche framing 01.dgn
11:08:52 AM
7/17/2014

DATE REVISED	DATE FILMED	DATE REVISED	DATE FILMED	FED. RD. DIST. NO.	STATE	FED. AID PROJ. NO.	SHEET NO.	TOTAL SHEETS
				6	ARK.			
				JOB NO.		CA0609	264	693
				(1) 07317 - 388' PL. GIRDER UNIT - 55709				

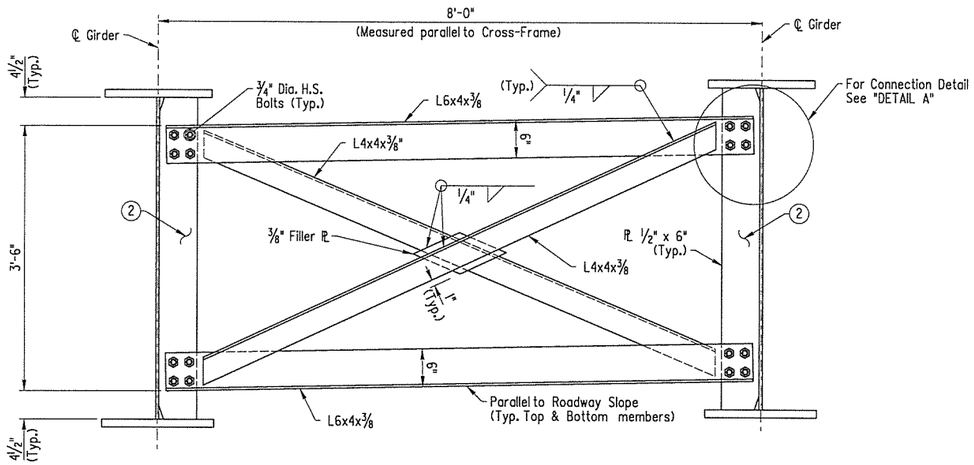

DETAIL OF INTERMEDIATE CROSS-FRAME

Scale: 1" = 1'-0"

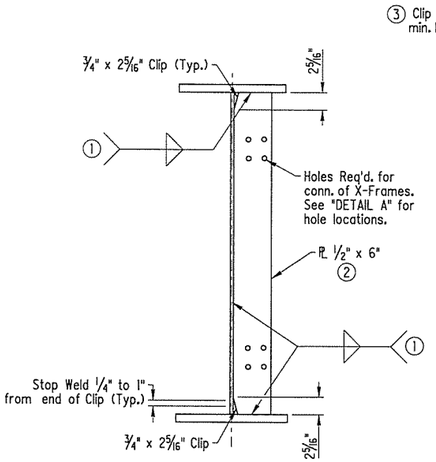

CROSS-FRAME CONNECTION PLATE DETAIL

(No Scale)

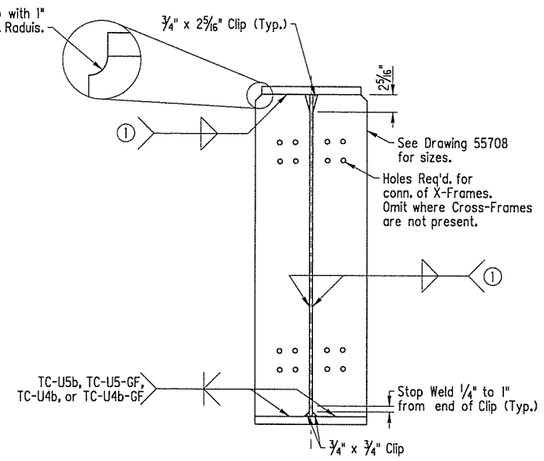

BEARING STIFFENER DETAIL AT BENTS 1 & 4

(No Scale)

1. See weld table on Drawing No. 55710 for min. weld size.
2. Place plates normal to ℄ Girder.
3. If permanant deck forms are used, the fabricator shall clip the plate as necessary to accommodate the support angle.

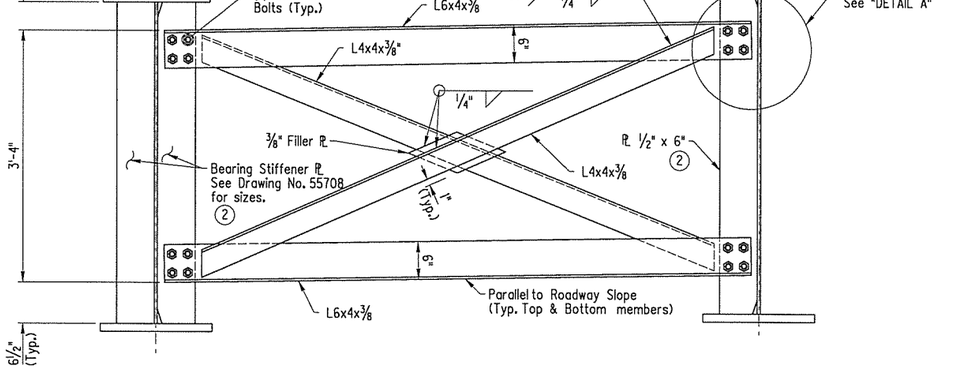

TYPICAL DETAIL OF CROSS-FRAME @ BENTS

Scale: 1" = 1'-0"

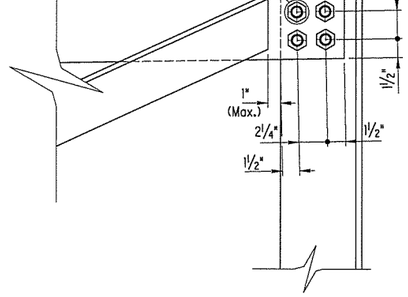

DETAIL A

(No Scale)

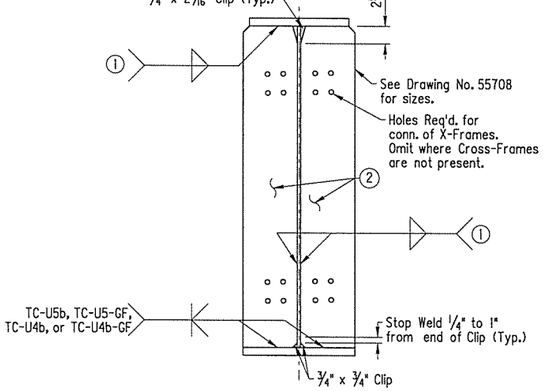

BEARING STIFFENER DETAIL AT INTERMEDIATE BENTS

(No Scale)

Note:
Bolts in Cross-Frame Connections shall be properly installed and tightened in accordance with Subsection 807.71 of the Standard Specifications.

Note:
Bearing stiffeners shall be fabricated to be plumb in their final position.

STATE OF ARKANSAS
REGISTERED PROFESSIONAL ENGINEER
No. 11528
CHRISTOPHER J. CHISWELL
7/17/14

BRIDGE ENGINEER
PRINT DATE: 7/17/2014

SHEET 4 OF 9
DETAILS OF 388'-0"
COMPOSITE PLATE GIRDER UNIT
MARCHE SEPARATION
PULASKI COUNTY
ROUTE 40 SECTION 33
ARKANSAS STATE HIGHWAY COMMISSION
LITTLE ROCK, ARKANSAS

DRAWN BY: LHG DATE: 1/13/14
CHECKED BY: BSK DATE: 3/7/14
DESIGNED BY: CJC DATE: 12/15/13
FILENAME: bca0609x1_sl4.dgn
SCALE: As Noted
BRIDGE NO. 07317
DRAWING NO. 55709

JACOBS

T:\Job\WLXM2650 AHTD CAP CA0603\700 CADD Files\709 Structural Files\Drawings\B2650Marche framing 02.dgn
11:08:52 AM
7/17/2014

DATE REVISED	DATE FILMED	DATE REVISED	DATE FILMED	FED. RD. DIST. NO.	STATE	FED. AID PROJ. NO.	SHEET NO.	TOTAL SHEETS
				6	ARK.			
				JOB NO.		CA0609	265	693
				(1)	07317 - 388' PL. GIRDER UNIT - 55710			

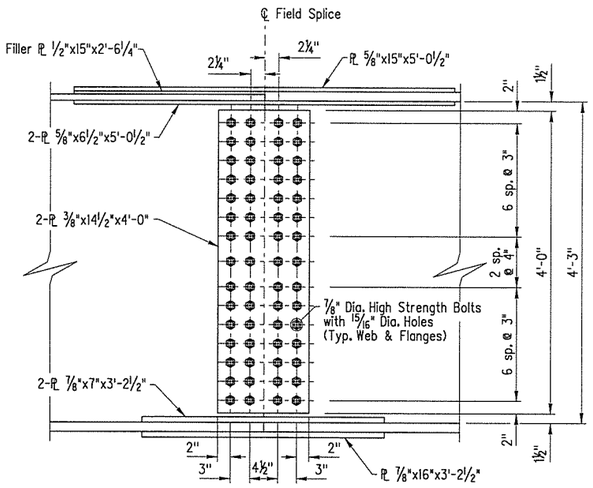

DETAILS OF FIELD SPLICE #1

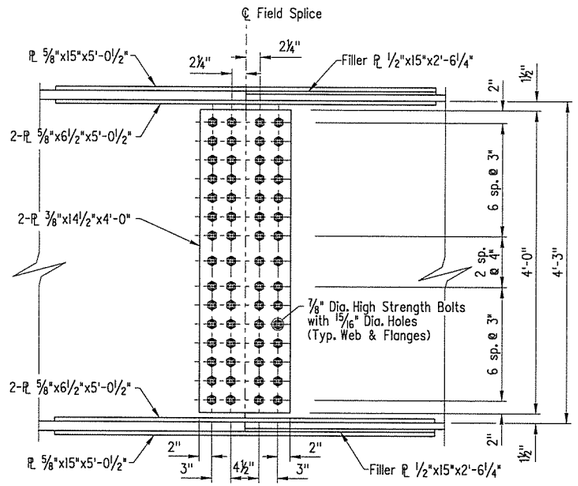

DETAILS OF FIELD SPLICE #2 & #3

Note: Splice #2 shown,
Splice #3 similar but opposite hand.

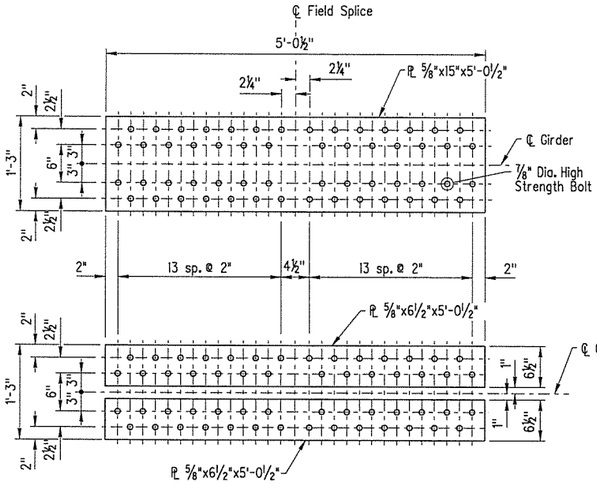

TOP FLANGE SPLICE #1, #2 & #3
BOTTOM FLANGE SPLICE #2 & #3

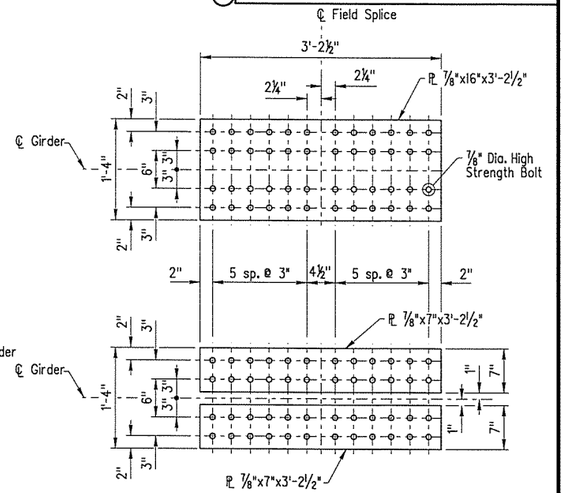

BOTTOM FLANGE SPLICE #1

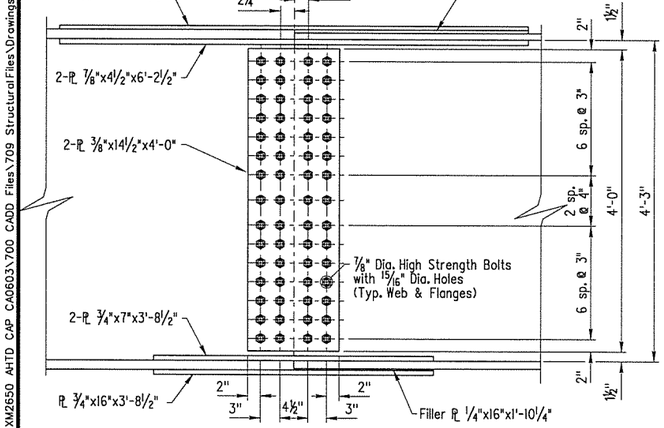

DETAILS OF FIELD SPLICE #4

TABLE FOR WELD

Material Thickness of Thicker Part Jointed (inches)	Minimum Size of Fillet Weld (inches)	Single Pass Weld Must Be Used
to ¾" inclusive	¼"	
Over ¾"	5/16"	

Note: When a fillet weld size, as shown on the Plans, is larger than the minimum, the First Pass shall be that specified for minimum size of fillet weld.



DETAILS OF WELDED SPLICE
(No Scale)

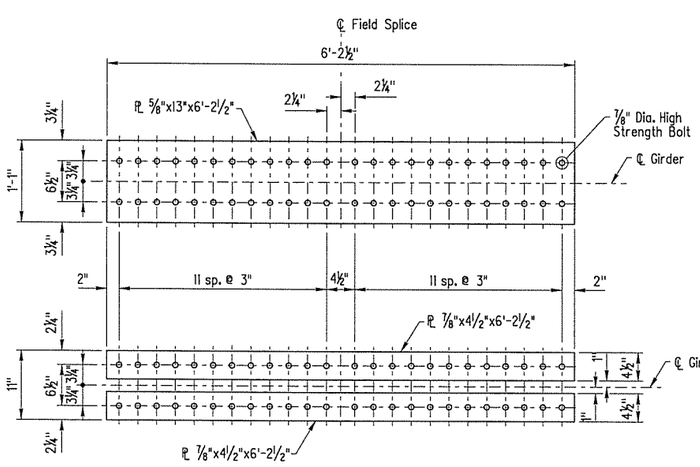

TOP FLANGE SPLICE #4

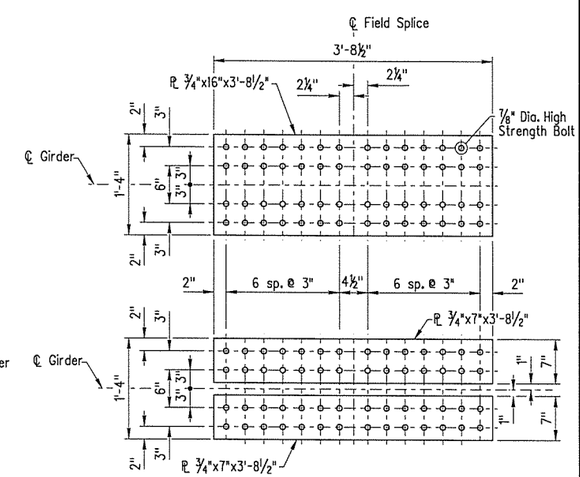

BOTTOM FLANGE SPLICE #4

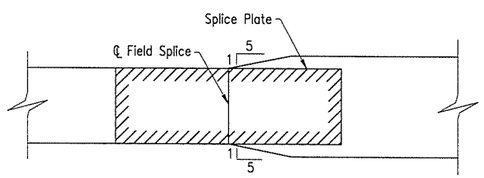

DETAILS OF BOTTOM FLANGE TRANSITION
(No Scale)

Note:
1. All Field Splice Plates shall be M270, Gr. 50 Steel.
2. All Field Splice Bolts shall be ⅞" High Strength Bolts.
3. All Field Splice Bolt Holes shall be 15/16" Dia.
4. Bolted field splices shown may be eliminated or shop welded splices may be substituted with approval of the Engineer. Payment will be made on the basis of the Plan Quantities.

STATE OF ARKANSAS
REGISTERED PROFESSIONAL ENGINEER
No. 11528
CHRISTOPHER J. CRISWELL
7/17/14

BRIDGE ENGINEER
PRINT DATE: 7/17/2014

SHEET 5 OF 9
DETAILS OF 388'-0" COMPOSITE PLATE GIRDER UNIT
MARCHE SEPARATION
PULASKI COUNTY
ROUTE 40 SECTION 33
ARKANSAS STATE HIGHWAY COMMISSION
LITTLE ROCK, ARKANSAS

DRAWN BY: LHG DATE: 1/29/14 FILENAME: bca0609x1_sl5.dgn
CHECKED BY: BSK DATE: 3/7/14
DESIGNED BY: CJC DATE: 1/8/14 SCALE: 1" = 1'-0"
BRIDGE NO. 07317 DRAWING NO. 55710

T:\Job\WLXM2650 AHTD CAP CA0603\700 CADD Files\709 Structural Files\Drawings\B2650Marche Splice Details 01.dgn 11:08:53 AM 7/17/2014

JACOBS

DATE REVISED	DATE FILMED	DATE REVISED	DATE FILMED	FED. RD. DIST. NO.	STATE	FED. AID PROJ. NO.	SHEET NO.	TOTAL SHEETS
				6	ARK.			
				JOB NO.		CA0609	266	693

(1) 07317 - 388' PL. GIRDER UNIT - 55711

Note: Required Slab Joints and Pouring Sequence Construction Joints shall align with the Parapet Joints at the Gutterline.

(P) ℄ Partial Depth Parapet Joint (1/4" to 1" max.). Stop 1'-2" from top of slab. See Drawing No. 55713 for additional details.

(F) ℄ Full Depth Parapet Joint (1/4" to 1" max.). Stop 4" from top of slab. See Drawing No. 55713 for additional details.

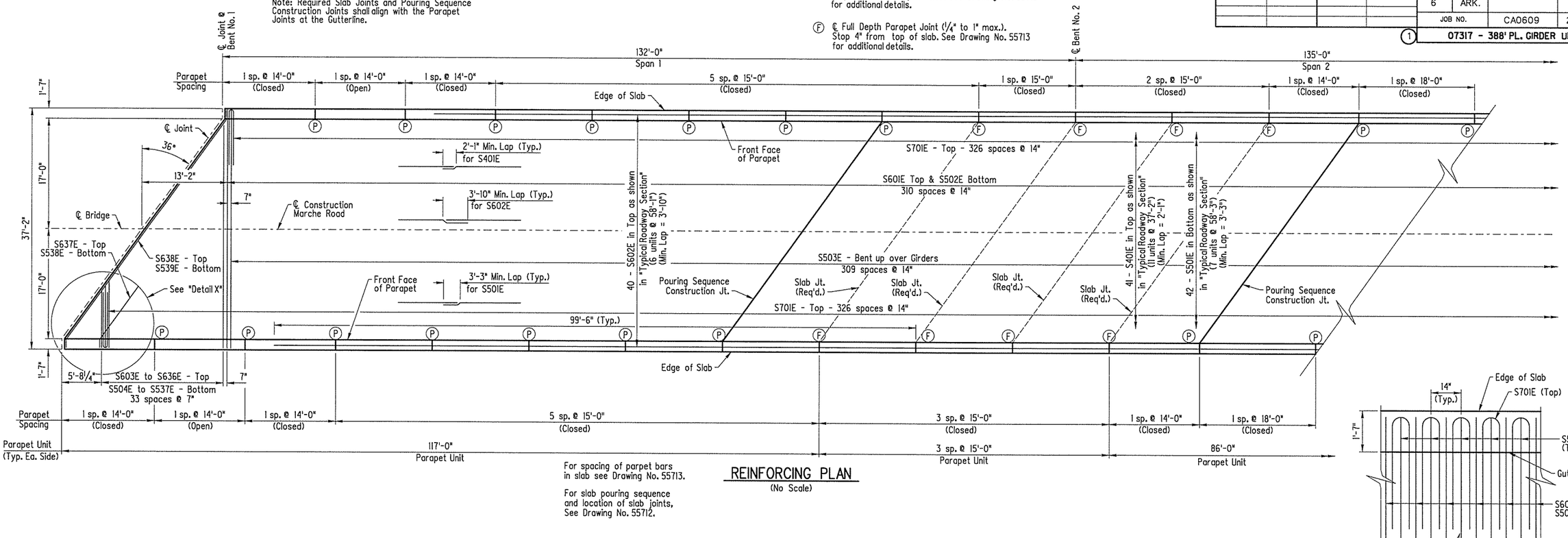

For spacing of parpet bars in slab see Drawing No. 55713.

For slab pouring sequence and location of slab joints, See Drawing No. 55712.

REINFORCING PLAN
(No Scale)

REINFORCING DETAIL
(No Scale)

BAR LIST

Mark	No. Required	Length	Pin Dia.
P401E	1440	5'-7"	3"
P402E	112	4'-11"	3"
P403E	24	13'-8"	Str.
P404E	98	14'-8"	Str.
P405E	24	17'-8"	Str.
P406E	38	18'-8"	Str.
P407E	16	59'-10"	Str.
P408E	16	44'-4"	Str.
P409E	16	54'-4"	Str.
P501E	1440	4'-11"	3 3/4"
S401E	451	37'-2"	Str.
S501E	294	58'-3"	Str.
S502E	311	36'-10"	Str.
S503E	310	37'-6"	3"
S504E to S537E	2 ea.	8'-9" to 35'-3"	Str.
S538E	36	10'-1"	3 3/4"
S539E	2	44'-10"	3 3/4"
S601E	311	36'-10"	Str.
S602E	240	58'-1"	Str.
S603E to S636E	2 ea.	8'-9" to 35'-3"	Str.
S637E	36	10'-1"	4 1/2"
S638E	2	44'-10"	4 1/2"
S701E	654	17'-4"	5 1/4"

Bending Diagrams
Dimensions shown are out to out of bars
± 1/2" Overtolerance, No Undertolerance

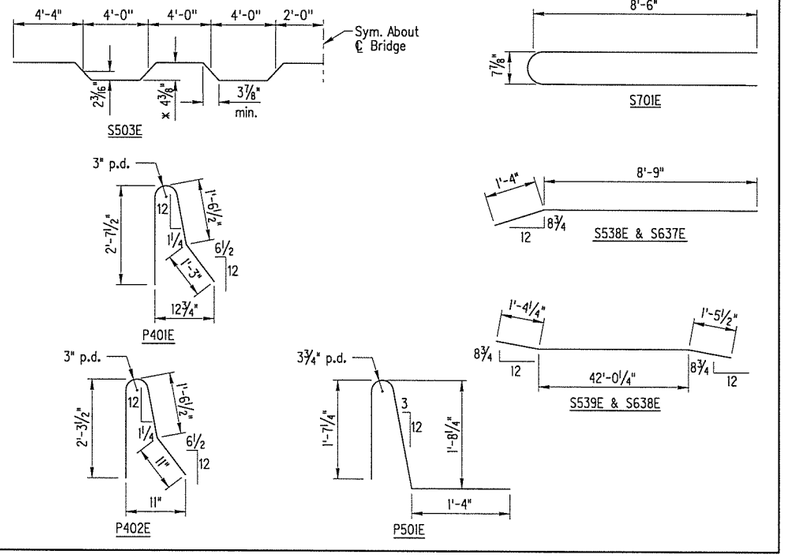

Note: All bars designated with an "E" suffix are to be epoxy coated.

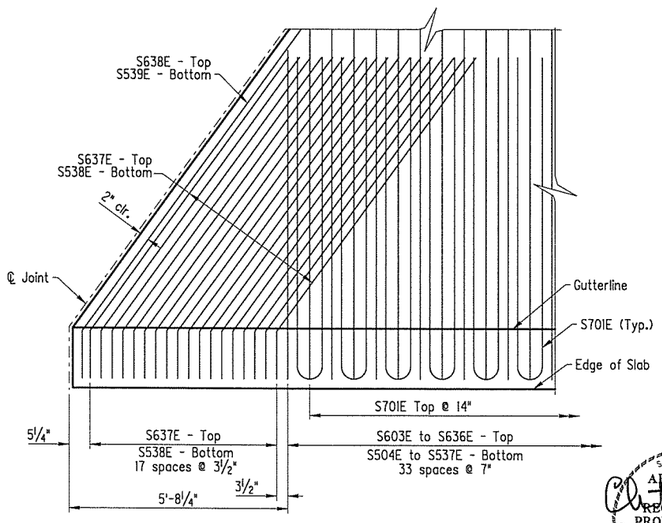

DETAIL X
(No Scale)

Use Type 3 or 4 Joint Sealer. See Subsections 501.02(h) and 501.05(j). Backer Rod filler will not be required. Joint Sealer shall be measured and paid for as Class S(AE) Concrete-Bridge. Slab joints shall extend to the outside edge of the deck slab. Slab joints shall be installed before the parapet railing is poured. If slab joints are to be sawed, they shall be sawed as soon as the concrete has sufficiently set to allow sawing of the joint without damage to the slab. Slab joints shall be placed at all pouring sequence construction joints and required slab joint locations. The joint sealer shall extend across the deck slab (gutterline to gutterline). Slab joints shall align with parapet open joints.

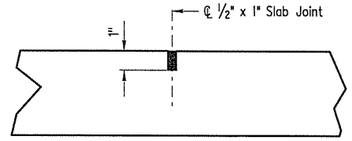

SLAB JOINT DETAIL
(No Scale)

STATE OF ARKANSAS
CHRISTOPHER J. CRISWELL
REGISTERED PROFESSIONAL ENGINEER
No. 11528
7/17/14

BRIDGE ENGINEER
PRINT DATE: 7/17/2014

SHEET 6 OF 9
DETAILS OF 388'-0"
COMPOSITE PLATE GIRDER UNIT
MARCHE SEPARATION
PULASKI COUNTY
ROUTE 40 SECTION 33
ARKANSAS STATE HIGHWAY COMMISSION
LITTLE ROCK, ARKANSAS

DRAWN BY: LHG DATE: 2/4/14 FILENAME: bca0609xl_sl6.dgn
CHECKED BY: MAA DATE: 3/14/14
DESIGNED BY: CMF DATE: 1/31/14 SCALE: No Scale
BRIDGE NO. 07317 DRAWING NO. 55711

JACOBS

T:\Job\WLXM2650 AHTD CAP CA0603\700 CADD Files\709 Structural Files\Drawings\B2650Marche Slab Plan 01.dgn 11:08:54 AM 7/17/2014

Note: Required Slab Joints and Pouring Sequence Construction Joints shall align with the Parapet Joints at the Gutterline.

(P) ℄ Partial Depth Parapet Joint (1/4" to 1" max.). Stop 1'-2" from top of slab. See Drawing No. 55713 for additional details.

(F) ℄ Full Depth Parapet Joint (1/4" to 1" max.). Stop 4" from top of slab. See Drawing No. 55713 for additional details.

DATE REVISED	DATE FILMED	DATE REVISED	DATE FILMED	FED. RD. DIST. NO.	STATE	FED. AID PROJ. NO.	SHEET NO.	TOTAL SHEETS
				6	ARK.			
				JOB NO.		CA0609	267	693

(1) 07317 - 388' PL. GIRDER UNIT - 55712

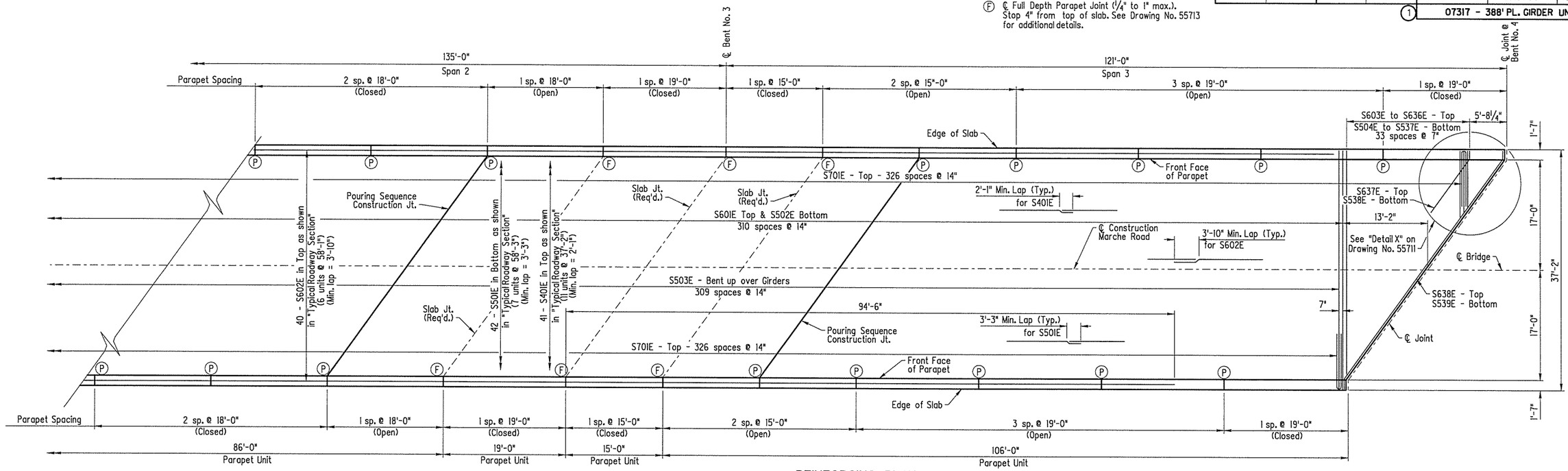

REINFORCING PLAN

Scale: 1/8" = 1'-0"
For spacing of parpet bars in slab see Drawing No. 55713

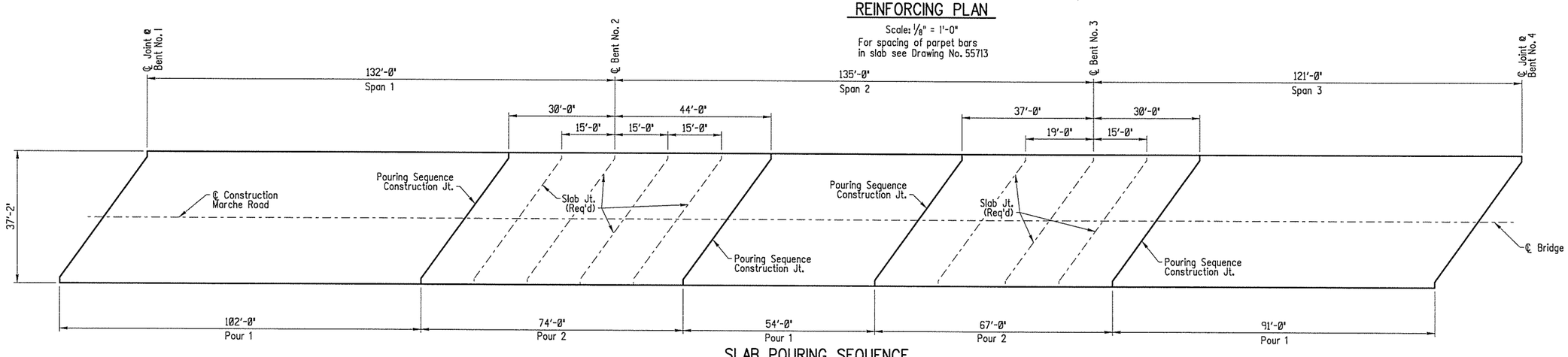

SLAB POURING SEQUENCE

Scale: 1/16" = 1'-0"

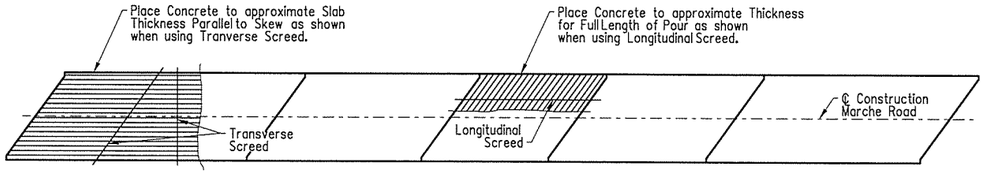

CONCRETE PLACEMENT PROCEDURE

(No Scale)

Note:
At the Contractor's option the transverse screed may be placed parallel to the skew or perpendicular to ℄ Bridge.

Note:
Pours with the same number may be placed simultaneously or separately. All pours (1) must be placed before pours (2) can be placed. Forty- Eight (48) hours shall elapse between the end of a pour and the start of the next pour. Seventy-two (72) hours shall elapse between the end of a pour and the start of an adjacent pour. Seventy-two (72) hours shall elapse between the completion of the entire deck and the pouring of the parapet. Any Railling pours made before the slab unit has been placed must be approved by the Engineer.

Concrete in bridge superstructure shall be consolidated for the entire pour before any concrete has taken its initial set. This may require the use of a retarding agent.

The Contractor must obtain approval from the Engineer for any deviations from the pouring sequence shown.

STATE OF ARKANSAS REGISTERED PROFESSIONAL ENGINEER CHRISTOPHER J. CRISWELL No. 11528
7/17/14
BRIDGE ENGINEER
PRINT DATE: 7/17/2014

SHEET 7 OF 9
DETAILS OF 388'-0"
COMPOSITE PLATE GIRDER UNIT
MARCHE SEPARATION
PULASKI COUNTY
ROUTE 40 SECTION 33
ARKANSAS STATE HIGHWAY COMMISSION
LITTLE ROCK, ARKANSAS

DRAWN BY:	LHG	DATE:	2/15/14	FILENAME: bca0609x1_sl7.dgn
CHECKED BY:	MAA	DATE:	3/14/14	
DESIGNED BY:	CMF	DATE:	2/11/14	SCALE: AS NOTED
BRIDGE NO. 07317				DRAWING NO. 55712

JACOBS

T:\Jobs\WLXM2650 AHTD CAP CA0603\700 CADD Files\709 Structural Files\Drawings\B2650Marche Slab Plan 02.dgn
11:08:55 AM
7/17/2014

DATE REVISED	DATE FILMED	DATE REVISED	DATE FILMED	FED. RD. DIST. NO.	STATE	FED. AID PROJ. NO.	SHEET NO.	TOTAL SHEETS
				6	ARK.			
				JOB NO.		CA0609	268	693
				1	07317 - 388' PL. GIRDER UNIT - 55713			

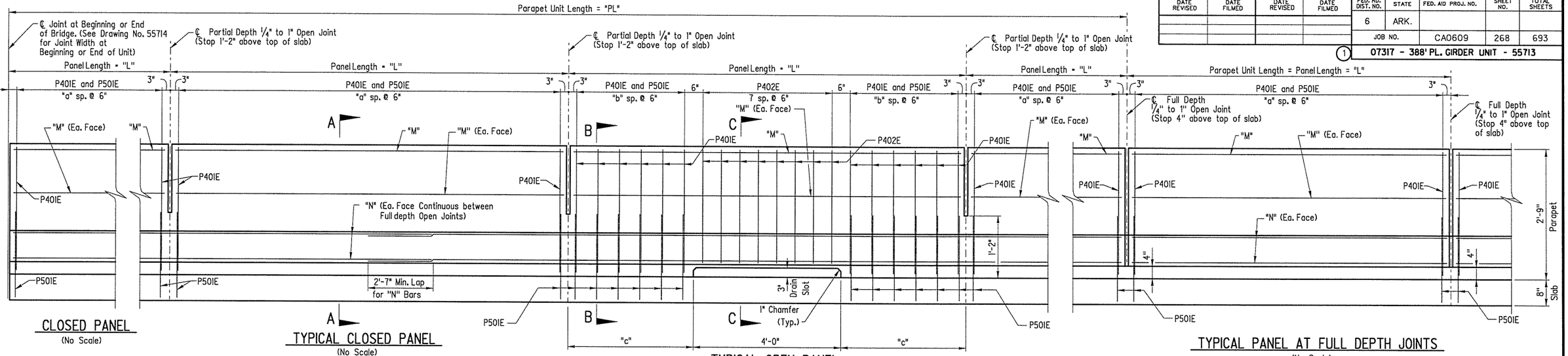

CLOSED PANEL
(No Scale)

TYPICAL CLOSED PANEL
(No Scale)

TYPICAL OPEN PANEL
(No Scale)

TYPICAL PANEL AT FULL DEPTH JOINTS
(No Scale)

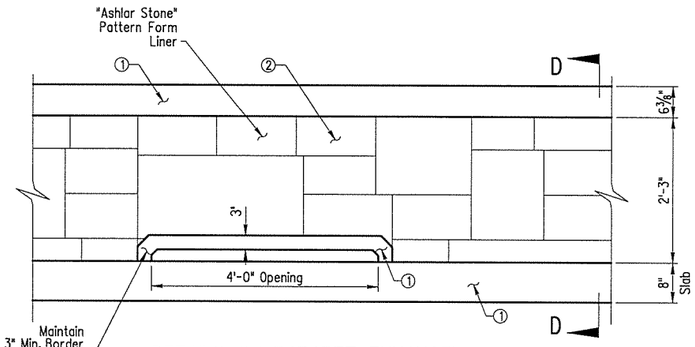

DETAILS OF PARAPET ENHANCEMENT
(Showing Outside Face of Parapet)
(No Scale)

ELEVATION OF TYPICAL PARAPET RAIL
(As viewed from roadway side of Parapet)

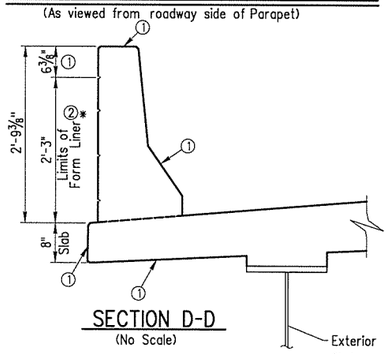

SECTION D-D
(No Scale)
* "Ashlar Stone" Pattern

PARAPET TABLE OF VARIABLES

Parapet Unit Length "PL"	Number of each Panel	Panel Length "L"	Panel Type	Closed Parapet Panel	Open Parapet Panel		Longitudinal Bars	
				"a"	"b"	"c"	"M"	"N"
117'-0"	1	14'-0"	Closed	27	-	-	P403E	P407E
	1	14'-0"	Open	-	9	5'-0"	P403E	
	1	14'-0"	Closed	27	-	-	P403E	
	5	15'-0"	Closed	29	-	-	P404E	
15'-0"	1	15'-0"	Closed	29	-	-	P404E	P404E
15'-0"	1	15'-0"	Closed	29	-	-	P404E	P404E
15'-0"	1	15'-0"	Closed	29	-	-	P404E	P404E
86'-0"	1	14'-0"	Closed	27	-	-	P403E	P408E
	3	18'-0"	Closed	35	-	-	P405E	
	1	18'-0"	Open	-	13	7'-0"	P405E	
19'-0"	1	19'-0"	Closed	37	-	-	P406E	P406E
15'-0"	1	15'-0"	Closed	29	-	-	P404E	P404E
106'-0"	2	15'-0"	Open	-	10	5'-6"	P404E	P409E
	3	19'-0"	Open	-	14	7'-6"	P406E	
	1	19'-0"	Closed	37	-	-	P406E	

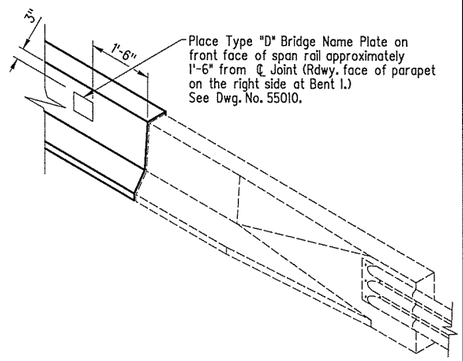

THREE DIMENSIONAL VIEW OF RAIL
(No Scale)

** Note:
Form liner shall be a max. depth of 2" to provide a min. clearance of 1½" to parapet reinforcing.

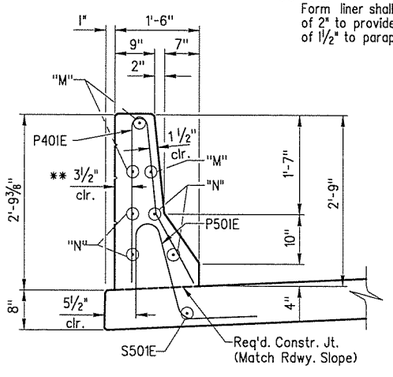

CLOSED PARAPET
SECTION A-A
(No Scale)

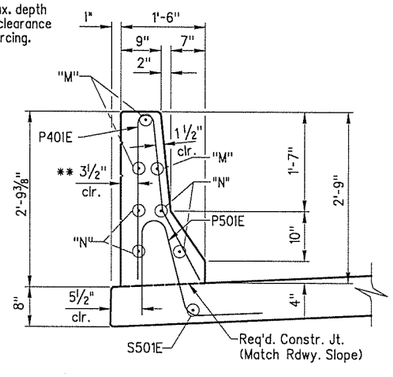

OPEN PARAPET @ END POST
SECTION B-B
(No Scale)

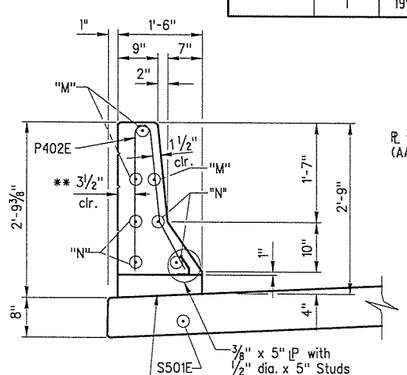

OPEN PARAPET @ DRAIN
SECTION C-C
(No Scale)

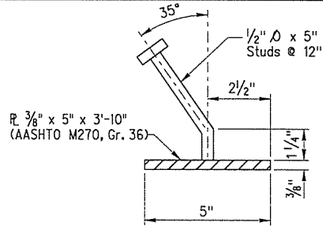

DETAIL Z
(No Scale)

Note:
Parapet Studs shall be 5" long, granular flux filled, solid fluxed, or equal, and automatically end welded to the plate. Studs and plate shall meet the requirements of Section 807. Studs and plate shall be measured and paid for as "Structural Steel in Plate Girder Spans (M 270- Gr. 50)". The surfaces of the ⅜" plates which will not be in contact with concrete shall be painted in accordance with Section 638 or as approved by the Engineer. Only one coat is required and shall be applied in the fabricator's shop. Painting will not be paid for directly, but will be considered subsidiary to "Structural Steel in Plate Girder Spans (M270, Gr. 50).

STATE OF ARKANSAS
REGISTERED PROFESSIONAL ENGINEER
No. 11528
CHRISTOPHER J. CRISWELL
7/17/14

BRIDGE ENGINEER
PRINT DATE: 7/17/2014

SHEET 8 OF 9
DETAILS OF 388'-0"
COMPOSITE PLATE GIRDER UNIT
MARCHE SEPARATION
PULASKI COUNTY
ROUTE 40 SECTION 33
ARKANSAS STATE HIGHWAY COMMISSION
LITTLE ROCK, ARKANSAS

DRAWN BY: LHG DATE: 2/4/14
CHECKED BY: MAA DATE: 3/14/14
DESIGNED BY: JRS DATE: 1/31/14
FILENAME: bca0609x1_s18.dgn
SCALE: No Scale
BRIDGE NO. 07317
DRAWING NO. 55713

JACOBS

T:\Jobs\WLXM2650 AHTD CAP CA0603\700 CADD Files\709 Structural Files\Drawings\B2650Marche Parapet 01.dgn
11:08:55 AM
7/17/2014

DATE REVISED	DATE FILMED	DATE REVISED	DATE FILMED	FED. RD. DIST. NO.	STATE	FED. AID PROJ. NO.	SHEET NO.	TOTAL SHEETS
				6	ARK.			
				JOB NO.		CA0609	269	693
				(1)	07317 - 388' PL. GIRDER UNIT - 55714			

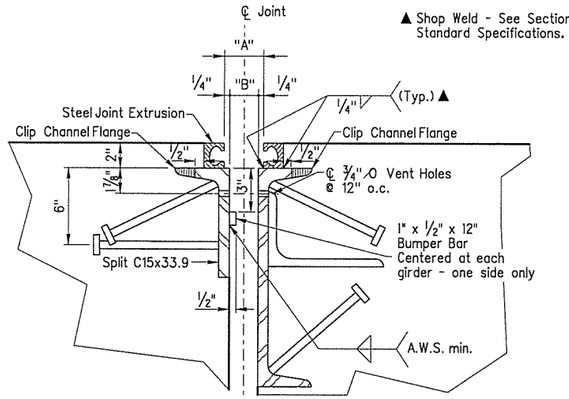

▲ Shop Weld - See Section 809 of the Standard Specifications.

DETAIL A
(No Scale)

Note: Concrete shall be hand packed under the joint armor in the backwall and the span.

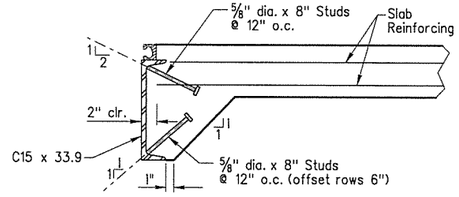

Note:
As an alternate to 5/8" dia. studs shown, 1/2" dia. x 8" studs spaced at 8" on centers may be used with 4" offset of rows. Use weight of 5/8" stud as basis of measurement of structural steel in anchors.

DETAILS OF ANCHORS
(No Scale)

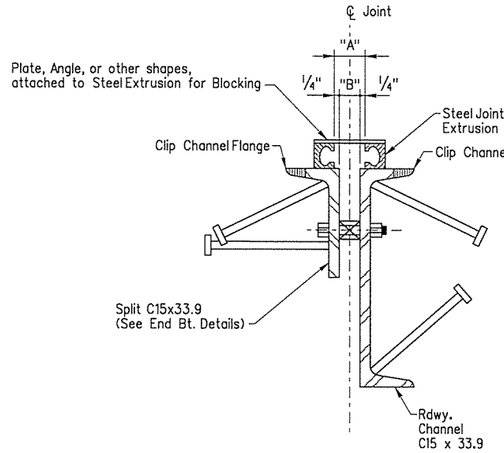

EXPANSION DEVICE INSTALLATION

The Contractor may elect to install the expansion device using one of the following two alternatives.

1. The concrete span pour adjacent to joint shall be placed before the end bent backwall is placed. After the end bent backwall forms are in place and the girders erected, the blocked expansion device shall be installed and adjusted for grade. All connection bolts shall be fully tightened prior to placing the deck concrete adjacent to the bent. Immediately prior to pouring the backwall concrete, the blocking shall be removed, the opening adjusted for temperature, and the backwall constructed.

2. The backwall shall be poured to the optional construction joint after girders are erected. The blocked expansion device shall be installed and adjusted for grade. All connection bolts shall be fully tightened prior to placing the deck concrete adjacent to the bent. Immediately prior to pouring the remainder of the backwall concrete, the blocking shall be removed and the opening adjusted for temperature.

STRIP SEAL JOINT DATA

Bent No.	Movement Rating	"A" width perpendicular to joint at 24 hour average temperature of :			"B" width perpendicular to joint at 24 hour average temperature of :			"C" width perpendicular to joint at 24 hour average temperature of
		40° F	60° F	80° F	40° F	60° F	80° F	60° F
1 & 4	4"	2 1/4"	2"	1 3/4"	1 3/4"	1 1/2"	1 1/4"	2 1/2"

Note:
The temperature used to set the joint opening shall be the approximate average air temperature during the 24 hour period immediately before the bolts are tightened. The Engineer shall establish the temperature. Interpolation of the table may be necessary.

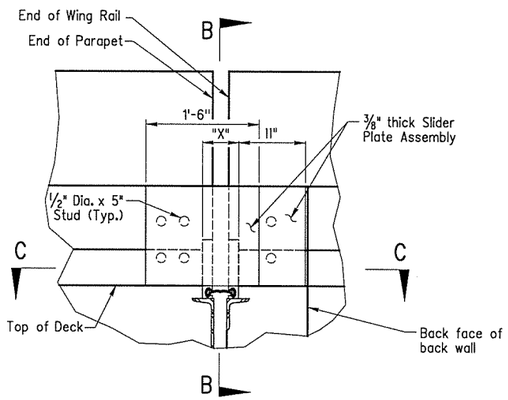

DETAILS OF NEOPRENE SEAL AT CURB
(No Scale)

Note: Dimension "X" equals the width of the opening in the parapet at the curb to allow for removal or repair of joint.

DETAILS FOR BLOCKING EXPANSION JOINT DEVICE
(No Scale)

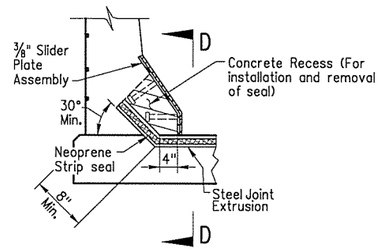

SECTION B-B
(No Scale)

Note: Details of joint turn-up in parapet are general and show basic design controls only. Method of installation and fabrication shall be determined by the manufacturer. See Section 809 of the Standard Specifications.

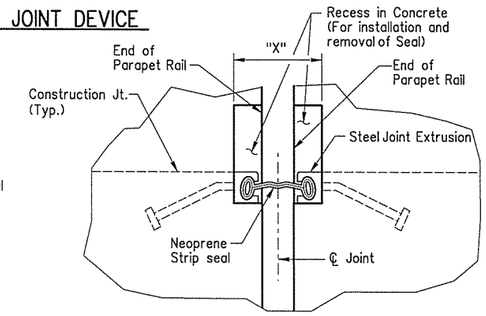

SECTION D-D
(No Scale)

Note: Dimension "X" equals the width of the opening in the parapet at the curb to allow for removal or repair of joint.

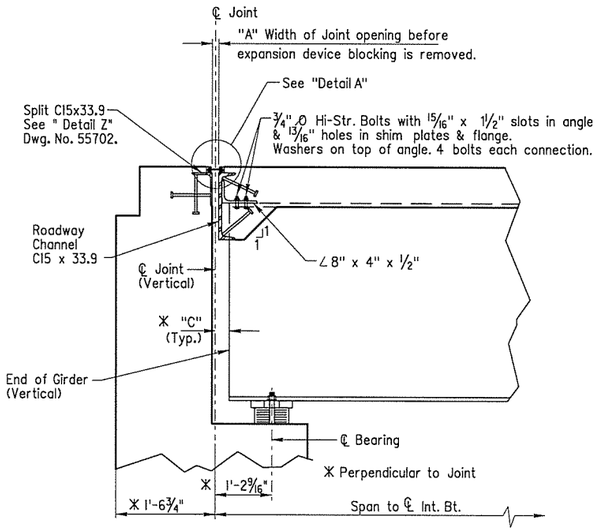

JOINT AT END BENTS
(No Scale)

Note: Detail expansion device 1/8" high and provide 1/4" shims using 2-1/16" plates and 1-1/8" plate. For additional details see Dwg. No. 55706.

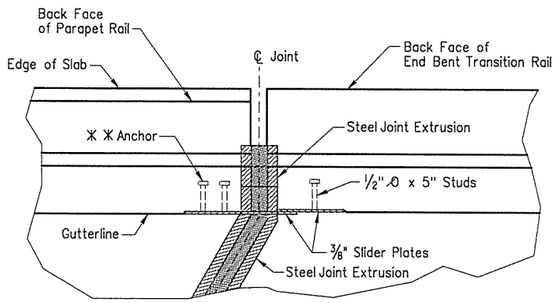

SECTION C-C
(No Scale)

✱ ✱ The method of attachment of the cover slider plate assembly or similar device must be such that it may be removed in order to provide for future replacement of the neoprene seal.

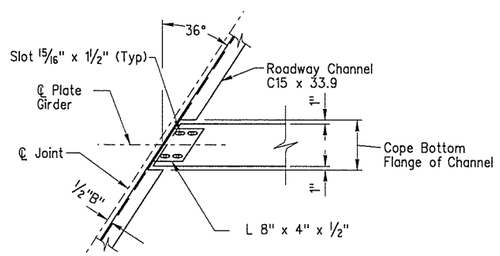

TYPICAL CHANNEL CONNECTION DETAIL
(No Scale)

GENERAL NOTES

EXPANSION NEOPRENE STRIP SEAL: The Expansion Device shall provide a movement of 4" as shown in the "STRIP SEAL JOINT DATA" table. The Expansion Joint shall be capable of sealing the Deck Surface and Parapet Area to prevent moisture and other contaminants from descending through the Joint.

All Structural Steel shall be AASHTO M270, Gr. 50 unless otherwise noted. Slider plates shall be AASHTO M270, Gr. 36.

All Structural Steel, except for the Steel Extrusion for the Strip Seal, shall be paid for as "STRUCTURAL STEEL IN PLATE GIRDER SPANS (M270, Gr. 50)". The Steel Extrusion and Neoprene Strip Seal shall be paid for in accordance with Section 809 of the Standard Specifications.

Details of the Proposed Slider Plate Assembly shall be submitted to and approved by the Engineer prior to fabrication of the Structural Steel at the Expansion Device.

Structural Steel completely embedded in concrete need not be painted. All exposed surfaces, except the Parapet Rail Slider Plates, are to be cleaned and painted Dark Brown, Color Chip No. 20108, in accordance with Section 807. The Parapet Rail Slider Plates are to be cleaned and painted Brown, Color Chip No. 33522, in accordance with Section 807.

STATE OF ARKANSAS
REGISTERED PROFESSIONAL ENGINEER
No. 11528
CHRISTOPHER J. CRISWELL
7/17/14

BRIDGE ENGINEER
PRINT DATE: 7/17/2014

SHEET 9 OF 9
DETAILS OF 388'-0" COMPOSITE PLATE GIRDER UNIT MARCHE SEPARATION
PULASKI COUNTY
ROUTE 40 SECTION 33
ARKANSAS STATE HIGHWAY COMMISSION
LITTLE ROCK, ARKANSAS

DRAWN BY:	LHG	DATE:	2/5/14	FILENAME:	bca0609xl_sl9.dgn
CHECKED BY:	MSM	DATE:	2/6/14		
DESIGNED BY:	CJC	DATE:	10/14/13	SCALE:	No Scale
BRIDGE NO. 07317				DRAWING NO.	55714

JACOBS

T:\Jobs\WLXM2650 AHTD CAP CA0603\700 CADD Files\709 Structural Files\Drawings\B2650Marche Joint Details 01.dgn
11:08:56 AM
7/17/2014

DATE REVISED	DATE FILMED	DATE REVISED	DATE FILMED	FED. RD. DIST. NO.	STATE	FED. AID PROJ. NO.	SHEET NO.	TOTAL SHEETS
				6	ARK.			
				JOB NO.		CA0609	270	693

(1) 07317 - BEARING DETAILS - 55715

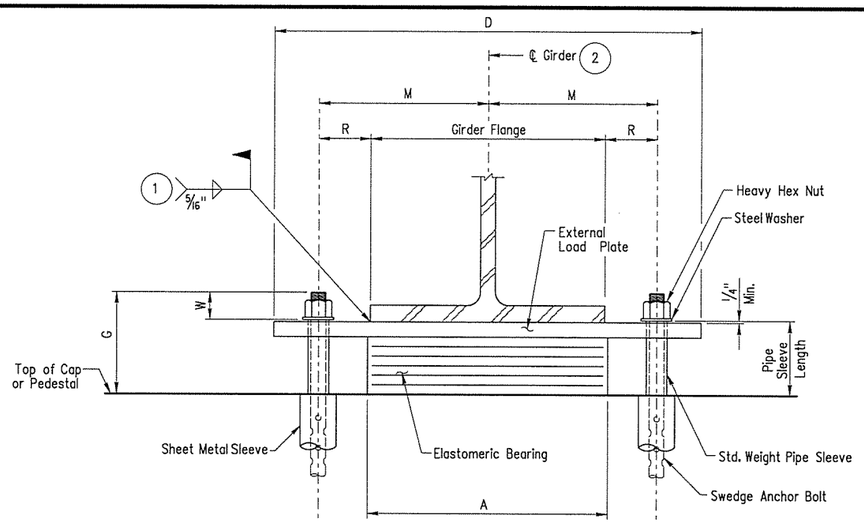

FRONT VIEW - BENT NOS. 1 & 4

(No Scale)

(1) Care shall be taken to ensure that the external load plate is in full and complete contact with the girder flange before welding begins.

(2) ℄ Elastomeric pad shall be aligned with ℄ Girder.

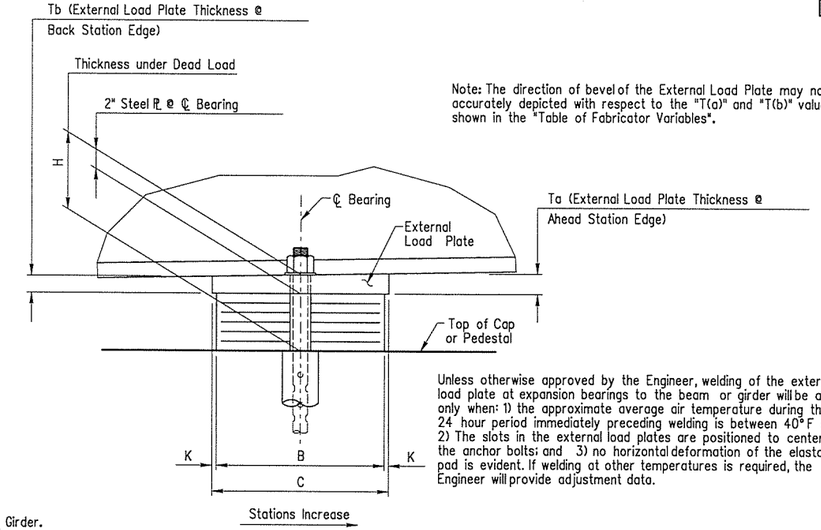

Note: The direction of bevel of the External Load Plate may not be accurately depicted with respect to the "T(a)" and "T(b)" values shown in the "Table of Fabricator Variables".

Unless otherwise approved by the Engineer, welding of the external load plate at expansion bearings to the beam or girder will be allowed only when: 1) the approximate average air temperature during the 24 hour period immediately preceding welding is between 40°F and 80°F. 2) The slots in the external load plates are positioned to center on the anchor bolts; and 3) no horizontal deformation of the elastomeric pad is evident. If welding at other temperatures is required, the Engineer will provide adjustment data.

SIDE VIEW BENTS NOS. 1 & 4

(No Scale)

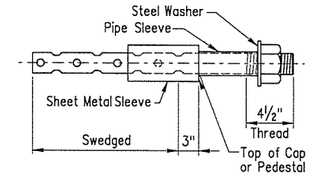

ANCHOR BOLT DETAIL

(No Scale)

NOTE:
Anchor Bolts may be cast in place or drilled and grouted into place. If Anchor Bolts are to be cast in place, the Galvanized Sheet Metal Sleeves will not be required.

If Anchor Bolts are to be drilled and grouted in place, the Galvanized Sheet Metal Sleeves shall be cast in place as shown. Sleeves shall be dry packed with styrofoam, urethane foam or approved equal prior to pouring of concrete. After pouring of the cap or pedestal and prior to erection of Structural Steel, the dry pack shall be removed and holes for the anchor bolts shall be accurately drilled into the masonry. Bolts placed in drilled holes shall be accurately set and fixed using a QPL approved epoxy or non-shrink grout that completely fills the holes. Galvanized Sheet Metal Sleeves will not be paid for directly, but will be considered subsidiary to the item "Structural Steel in Plate Girder Spans (M 270, Gr. 50)".

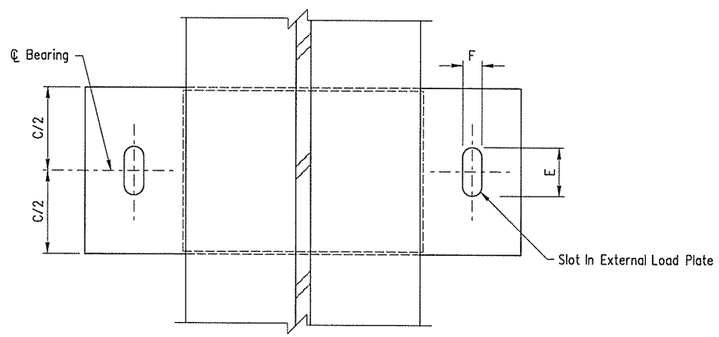

PLAN VIEW - BENT NOS. 1 & 4

(No Scale)

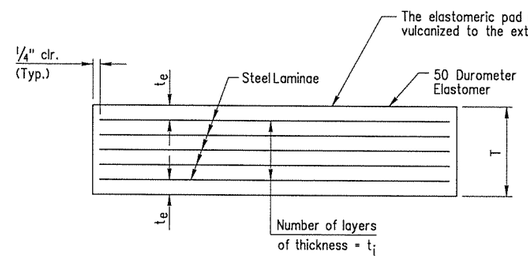

t_i = thickness of elastomer between steel laminae
t_e = thickness of elastomer cover on top and bottom of pad
N = number of elastomer layers of thickness t_i

ELASTOMERIC BEARING

(No Scale)

GENERAL NOTES

Elastomeric Bearings shall conform to Section 808 of the Standard Specifications and shall be paid for at the unit price bid for "Elastomeric Bearings."

External load plates shall conform to AASHTO M 270, Grade 50 and will not be paid for separately, but will be included in the unit price bid for "Elastomeric Bearings". Pipe sleeves shall be ASTM A53, Grade B, and shall be galvanized to conform to AASHTO M 232, Class C or ASTM B695, Class 50.

External load plates shall be completely fabricated (including bevel, bolt holes and all shop welding) and shall be cleaned before vulcanized to the elastomeric bearing. The surface in contact with the elastomeric bearing shall be cleaned in accordance with Subsection 808.03. Other surfaces shall be blast cleaned in accordance with Subsection 807.84(b) for painted steel and painted in accordance with Subsection 807.75. Painting will not be paid for directly but will be considered subsidiary to "Elastomeric Bearings".

Anchor Bolts, Washers and Nuts shall conform to Subsection 807.07 of the Standard Specifications. The anchor bolt grade of steel shall be as specified in the "Table of Fabricator Variables". Indentations shall be circular with rounded bottoms and staggered as shown in the details.

Pipe Sleeves, Anchor Bolts, Washers and Nuts shall be paid for at the unit price bid for "Structural Steel in Plate Girder Spans (M270, Gr. 50)".

Bearings shall be seated in accordance with Subsection 808.08. Work and materials shall be considered subsidiary to the item "Elastomeric Bearings" and will not be paid for directly.

TABLE OF FABRICATOR VARIABLES

BRIDGE NO.	LOCATION		BEARING TYPE	NO. of BRGS. EACH BENT	* MAXIMUM DESIGN LOAD (kips)	ELASTOMERIC PAD							EXTERNAL LOAD PLATE								ANCHOR BOLT				
	BENT NO.	GIRDER NO.				G	H	A	B	N	t_i	t_e	NO. & THICKNESS OF STEEL LAMINAE	T	C	D	E	F	K	M	R	T_a	T_b	ANCHOR BOLT (Ø x L)	GRADE	PIPE SLEEVE SIZE (Ø x L)	SHEET METAL SLEEVE SIZE (Ø x L)	STEEL WASHER SIZE (O.D.)	W
07317	1	All	Exp.	5	175.12	9 3/4"	6 3/16"	1'-4"	11"	6	1/2"	1/4"	7 @ 12 ga.	4 1/4"	1'-0"	2'-4 1/2"	6"	3/8"	1/2"	11"	3"	2.15"	1.85"	2 1/4" x 3'-0"	55	2 1/2" x 6 1/2"	4" x 15"	4"	3 1/4"
07317	4	All	Exp.	5	164.14	9 3/4"	6 7/16"	1'-4"	11"	6	1/2"	1/4"	7 @ 12 ga.	4 1/4"	1'-0"	2'-4 1/2"	6"	3/8"	1/2"	11"	3"	1.75"	2.25"	2 1/4" x 3'-0"	55	2 1/2" x 6 1/2"	4" x 15"	4"	3 1/4"

*Maximum Load = Service I Limit State.

STATE OF ARKANSAS
REGISTERED PROFESSIONAL ENGINEER
No. 11328
CHRISTOPHER J. CRISWELL
7/17/14

BRIDGE ENGINEER
PRINT DATE: 7/17/2014

SHEET 1 OF 2
DETAILS OF ELASTOMERIC BEARINGS
MARCHE SEPARATION
PULASKI COUNTY
ROUTE 40 SECTION 33
ARKANSAS STATE HIGHWAY COMMISSION
LITTLE ROCK, ARKANSAS

DRAWN BY: LHG DATE: 2/5/14
CHECKED BY: CJC DATE: 3/18/14
DESIGNED BY: JRS DATE: 2/7/14
FILENAME: bca0609xl_ell.dgn
SCALE: No Scale
BRIDGE NO. 07317
DRAWING NO. 55715

JACOBS

T:\Jobs\WLXM2650 AHTD CAP CA0603\700 CADD Files\709 Structural Files\Drawings\B2650Marche Bearings Exp 01.dgn
11:08:57 AM
7/17/2014

DATE REVISED	DATE FILMED	DATE REVISED	DATE FILMED	FED. RD. DIST. NO.	STATE	FED. AID PROJ. NO.	SHEET NO.	TOTAL SHEETS
				6	ARK.			
				JOB NO.		CA0609	271	693
				(1)	07317 - BEARING DETAILS -			55716

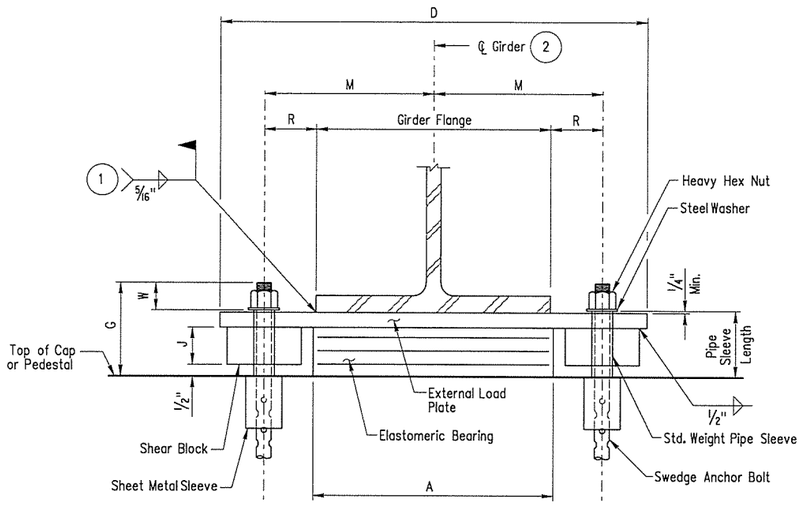

FRONT VIEW
(No Scale)

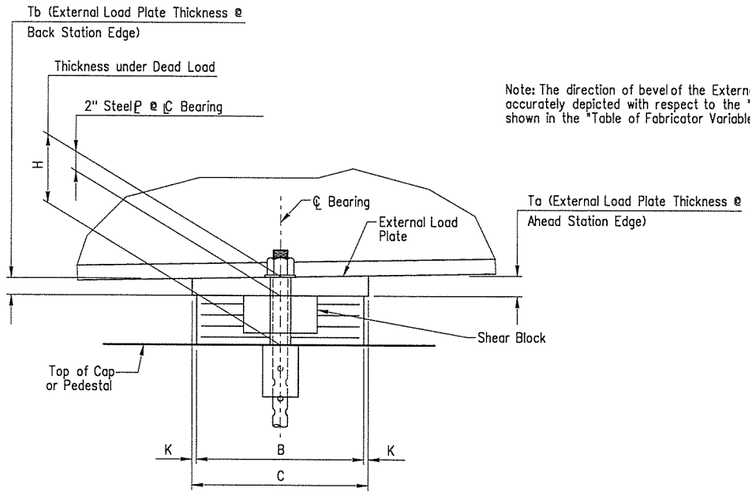

SIDE VIEW - BENT NOS. 2 & 3
(No Scale)

Note: The direction of bevel of the External Load Plate may not be accurately depicted with respect to the "T(a)" and "T(b)" values shown in the "Table of Fabricator Variables".

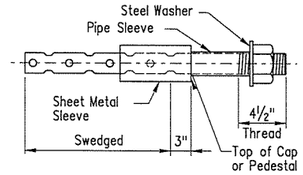

ANCHOR BOLT DETAIL
(No Scale)

Note:
Anchor Bolts may be cast in place or drilled and grouted into place. If Anchor Bolts are to be cast in place, the Galvanized Sheet Metal Sleeves will not be required.

If Anchor Bolts are to be drilled and grouted in place, the Galvanized Sheet Metal Sleeves shall be cast in place as shown. Sleeves shall be dry packed with styrofoam, urethane foam or approved equal prior to pouring of concrete. After pouring of the cap or pedestal and prior to erection of Structural Steel, the dry pack shall be removed and holes for the anchor bolts shall be accurately drilled into the masonry. Bolts placed in drilled holes shall be accurately set and fixed using a QPL approved epoxy or non-shrink grout that completely fills the holes. Galvanized Sheet Metal Sleeves will not be paid for directly, but will be considered subsidiary to the item "Structural Steel in Plate Girder Spans (M 270, Gr. 50)".

(1) Care shall be taken to ensure that the external load plate is in full and complete contact with the girder flange before welding begins.

(2) ℄ Elastomeric pad shall be aligned with ℄ Girder.

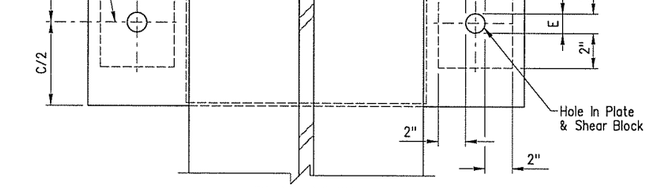

PLAN VIEW
(No Scale)

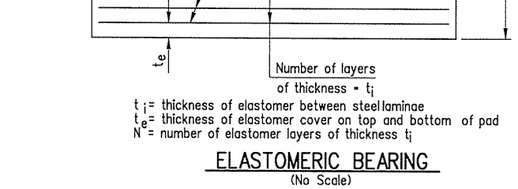

t_i = thickness of elastomer between steel laminae
t_e = thickness of elastomer cover on top and bottom of pad
N = number of elastomer layers of thickness t_i

ELASTOMERIC BEARING
(No Scale)

GENERAL NOTES

Elastomeric Bearings shall conform to Section 808 of the Standard Specifications and shall be paid for at the unit price bid for "Elastomeric Bearings."

External load plates and shear blocks shall conform to AASHTO M 270, Grade 50 and will not be paid for separately, but will be included in the unit price bid for "Elastomeric Bearings". Pipe sleeves shall be ASTM A53, Grade B, and shall be galvanized to conform to AASHTO M 232, Class C or ASTM B695, Class 50.

External load plates with shear blocks shall be completely fabricated (including bevel, bolt holes and all shop welding) and shall be cleaned before vulcanized to the elastomeric bearing. The surface in contact with the elastomeric bearing shall be cleaned in accordance with Subsection 808.03. Other surfaces shall be blast cleaned in accordance with Subsection 807.84(b) for painted steel and painted in accordance with Subsection 807.75. Painting will not be paid for directly but will be considered subsidiary to "Elastomeric Bearings".

Anchor Bolts, Washers and Nuts shall conform to Subsection 807.07 of the Standard Specifications. The anchor bolt grade of steel shall be as specified in the "Table of Fabricator Variables". Indentations shall be circular with rounded bottoms and staggered as shown in the details.

Pipe Sleeves, Anchor Bolts, Washers and Nuts shall be paid for at the unit price bid for "Structural Steel in Plate Girder Spans (M270, Gr. 50)".

Bearings shall be seated in accordance with Subsection 808.08. Work and materials shall be considered subsidiary to the item "Elastomeric Bearings" and will not be paid for directly.

TABLE OF FABRICATOR VARIABLES

BRIDGE NO.	LOCATION		BEARING TYPE	NO. of BRGS. EACH BENT	* MAXIMUM DESIGN LOAD (kips)	ELASTOMERIC PAD								EXTERNAL LOAD PLATE										ANCHOR BOLT				
	BENT NO.	GIRDER NO.				G	H	A	B	N	t_i	t_e	NO. & THICKNESS OF STEEL LAMINAE	T	C	D	E	F	J	K	R	M	T_a	T_b	ANCHOR BOLT (Ø x L)	GRADE	PIPE SLEEVE SIZE (Ø x L)	SHEET METAL SLEEVE SIZE (Ø x L)	STEEL WASHER SIZE (O.D.)	W
07317	2	All	Fix	5	424.88	8"	4 15/16"	1'-8"	1'-1"	4	1/2"	1/4"	5 @ 12 ga.	3"	1'-2"	3'-2 1/4"	2 5/8"	2 5/8"	2 3/8"	1/2"	3 13/16"	1'-2 13/16"	2.00"	2.00"	1 3/4" x 2'-5"	55	2" x 5 1/4"	4" x 12"	3 3/8"	2 3/4"
07317	3	All	Fix	5	400.34	8"	4 15/16"	1'-8"	1'-1"	4	1/2"	1/4"	5 @ 12 ga.	3"	1'-2"	3'-2 1/4"	2 5/8"	2 5/8"	2 3/8"	1/2"	4 13/16"	1'-2 13/16"	1.86"	2.14"	1 3/4" x 2'-5"	55	2" x 5 1/4"	4" x 12"	3 3/8"	2 3/4"

* Maximum Load = Service I Limit State.

STATE OF ARKANSAS
CHRISTOPHER J. CRISWELL
REGISTERED PROFESSIONAL ENGINEER
No. 11328
7/17/14

BRIDGE ENGINEER
PRINT DATE: 7/17/2014

SHEET 2 OF 2
DETAILS OF ELASTOMERIC BEARINGS
MARCHE SEPARATION
PULASKI COUNTY
ROUTE 40 SECTION 33
ARKANSAS STATE HIGHWAY COMMISSION
LITTLE ROCK, ARKANSAS

DRAWN BY: LHG DATE: 2/5/14
CHECKED BY: CJC DATE: 3/18/14
DESIGNED BY: JRS DATE: 2/1/14
FILENAME: bca0609x1_el2.dgn
SCALE: No Scale
BRIDGE NO. 07317
DRAWING NO. 55716

JACOBS

T:\Job\WLXM2650 AHTD CAP CA0603\700 CADD Files\709 Structural Files\Drawings\B2650Marche Bearings Fix 02.dgn
11:08:57 AM
7/17/2014

DATE REVISED	DATE FILMED	DATE REVISED	DATE FILMED	FED. RD. DIST. NO.	STATE	FED. AID PROJ. NO.	SHEET NO.	TOTAL SHEETS
				6	ARK.			
				JOB NO.		CA0609	272	693

(1) BM-040-60-42 - SIGN STRUCTURE - 55717

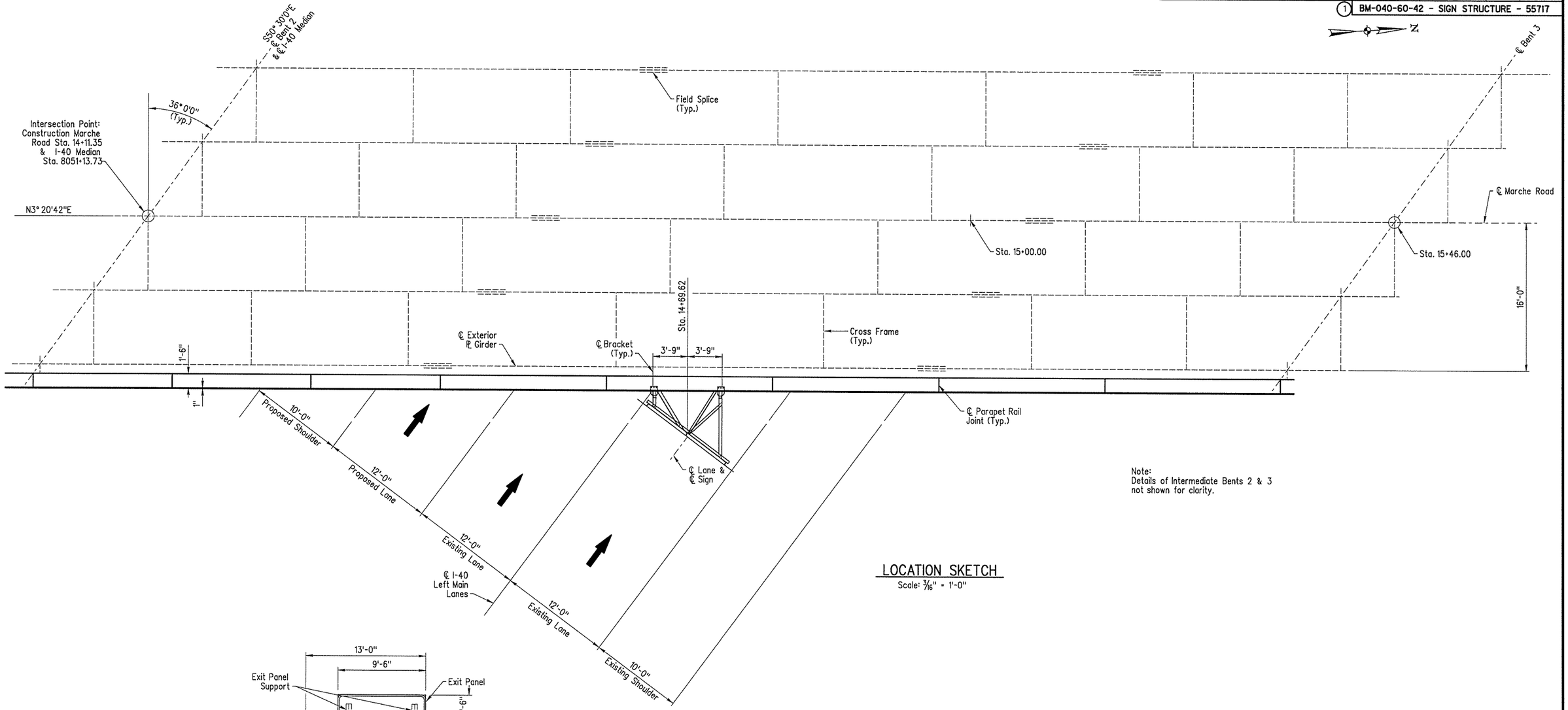

Note:
Details of Intermediate Bents 2 & 3
not shown for clarity.

LOCATION SKETCH

Scale: 3/16" = 1'-0"

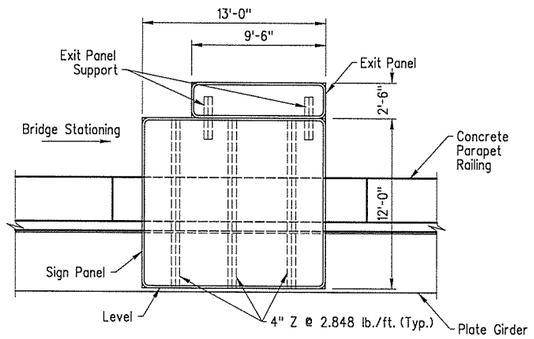

ELEVATION OF SIGN

(Normal to Sign)
Scale: 3/16" = 1'-0"

STATE OF ARKANSAS
REGISTERED PROFESSIONAL ENGINEER
No. 11328
CHRISTOPHER J. CRISWELL
7/17/14

BRIDGE ENGINEER
PRINT DATE: 7/17/2014

SHEET 1 OF 3
DETAILS OF BRIDGE MOUNTED SIGN STRUCTURE
PULASKI COUNTY
ROUTE 40 SECTION 33
ARKANSAS STATE HIGHWAY COMMISSION
LITTLE ROCK, ARKANSAS

DRAWN BY: LHG DATE: 2/27/14
CHECKED BY: CGW DATE: 3/8/14
DESIGNED BY: CMF DATE: 3/12/14
FILENAME: bca0609x1_tl.dgn
SCALE: As Noted
STRUCTURE NO. BM-040-60-42 DRAWING NO. 55717

JACOBS

T:\Job\WLXM2650 AHTD CAP CA0603\700 CADD Files\709 Structural Files\Drawings\B2650Marche Sign 01.dgn
11:08:59 AM
7/17/2014

DATE REVISED	DATE FILMED	DATE REVISED	DATE FILMED	FED. RD. DIST. NO.	STATE	FED. AID PROJ. NO.	SHEET NO.	TOTAL SHEETS
				6	ARK.			
				JOB NO.		CA0609	273	693
				1	BM 040-60-42 - SIGN STRUCTURE - 55718			

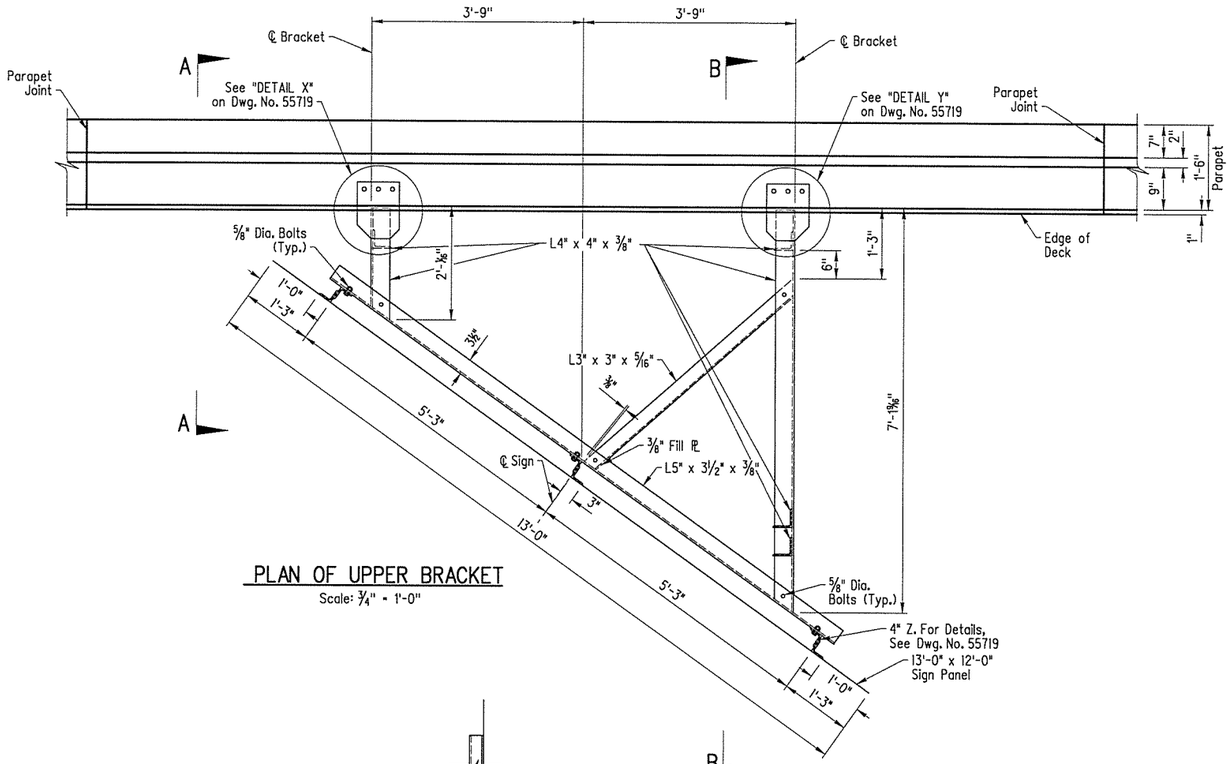

PLAN OF UPPER BRACKET

Scale: 3/4" = 1'-0"

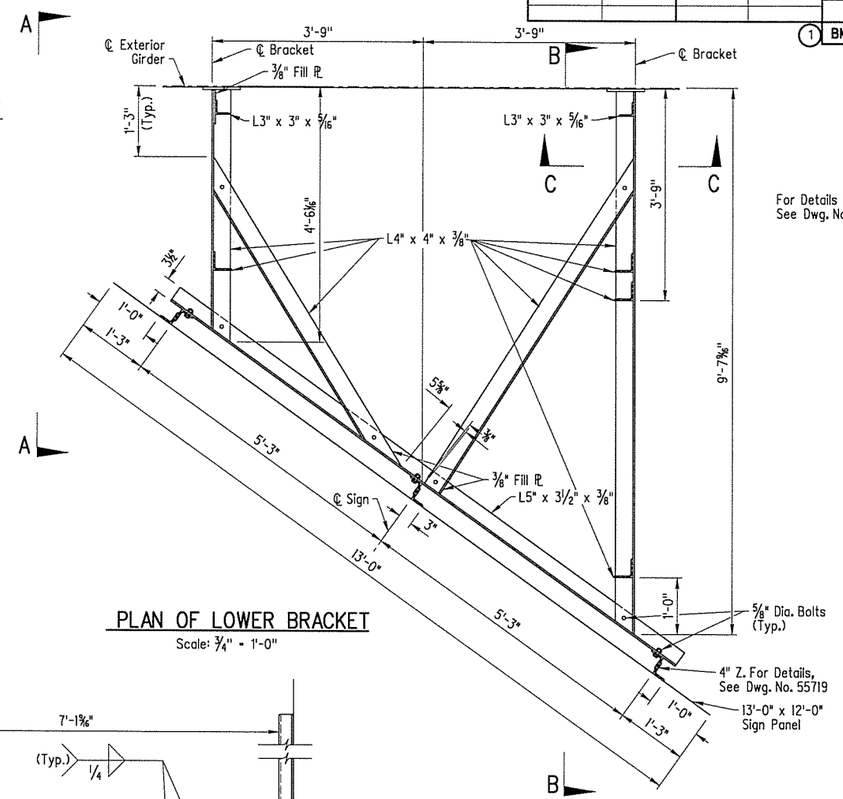

For Details of View C-C, See Dwg. No. 55719.

PLAN OF LOWER BRACKET

Scale: 3/4" = 1'-0"

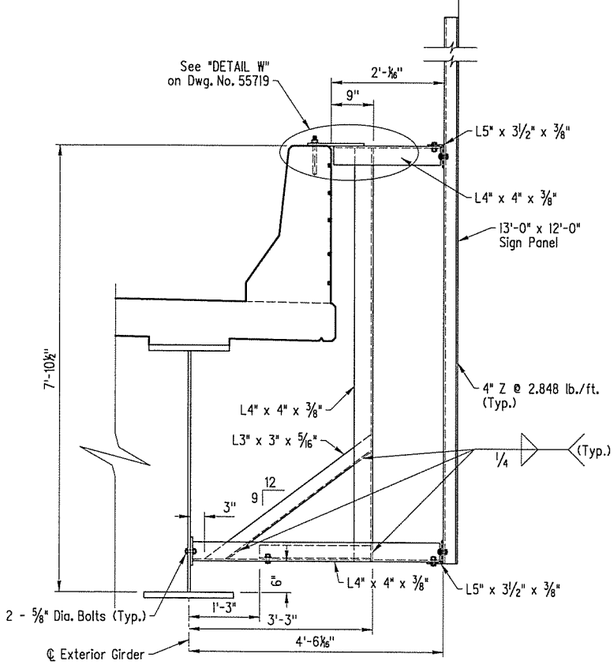

VIEW A-A

Scale: 3/4" = 1'-0"

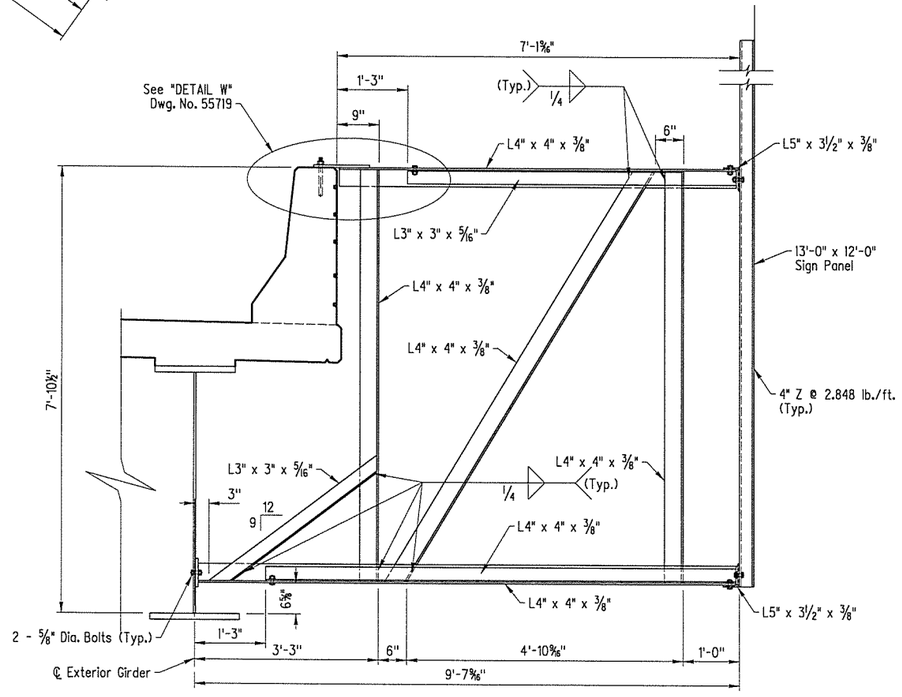

VIEW B-B

Scale: 3/4" = 1'-0"

STATE OF ARKANSAS
CHRISTOPHER J. CRISWELL
REGISTERED PROFESSIONAL ENGINEER
No. 11528
7/17/14

BRIDGE ENGINEER
PRINT DATE: 7/17/2014

SHEET 2 OF 3
DETAILS OF BRIDGE MOUNTED SIGN STRUCTURE
PULASKI COUNTY
ROUTE 40 SECTION 33
ARKANSAS STATE HIGHWAY COMMISSION
LITTLE ROCK, ARKANSAS

DRAWN BY: LHG DATE: 2/27/14
CHECKED BY: CGW DATE: 3/8/14
DESIGNED BY: CMF DATE: 3/12/14
FILENAME: bca0609x1_t2.dgn
SCALE: As Noted
STRUCTURE NO. BM-040-60-42
DRAWING NO. 55718

JACOBS

T:\Job\WLXM2650 AHTD CAP CA0603\700 CADD Files\709 Structural Files\Drawings\B2650Marche Sign 02.dgn
11:09:00 AM
7/17/2014

DATE REVISED	DATE FILMED	DATE REVISED	DATE FILMED	FED. RD. DIST. NO.	STATE	FED. AID PROJ. NO.	SHEET NO.	TOTAL SHEETS
				6	ARK.			
				JOB NO.		CA0609	274	693
				(1) BM 040-60-42 - SIGN STRUCTURE - 55719				

Note:
The Concrete Anchors shall be an approved QPL type and installed according to Manufacturer's recommendations.

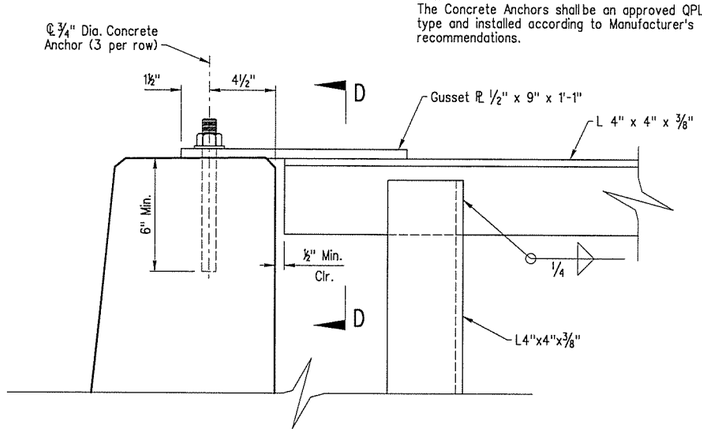

DETAIL W
Scale: 3" = 1'-0"

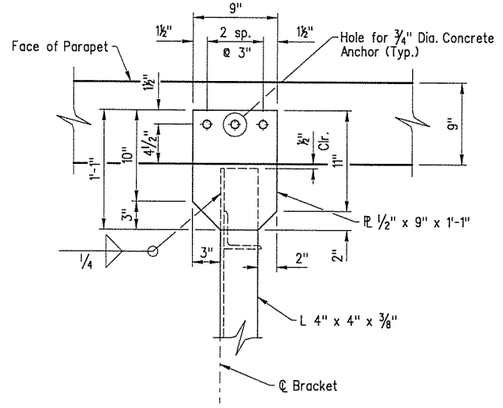

DETAIL X
Scale: 1½" = 1'-0"

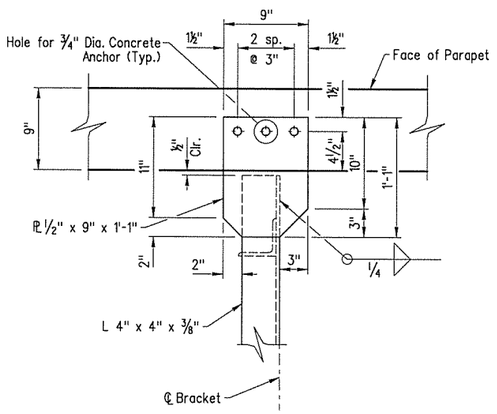

DETAIL Y
Scale: 1½" = 1'-0"

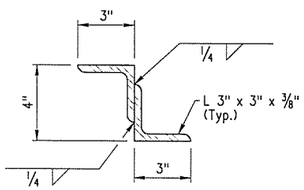

Note:
Structural Z Sign Support may be fabricated from angles as shown.

DETAILS OF ALTERNATE Z SIGN SUPPORT
Scale: 3" = 1'-0"

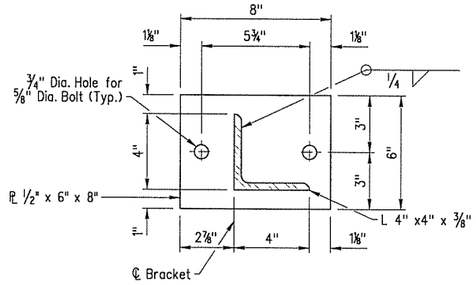

VIEW C-C
Scale: 3" = 1'-0"

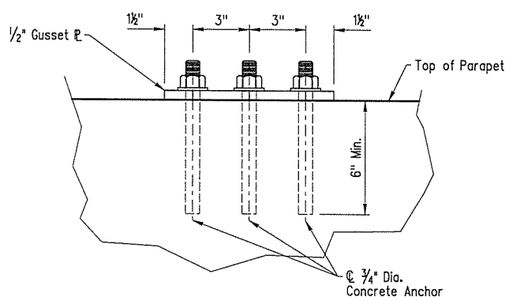

VIEW D-D
Scale: 3" = 1'-0"

GENERAL NOTES

DESIGN SPECIFICATIONS: AASHTO Standard Specifications for Structural Supports for Highway Signs, Luminaires and Traffic Signals, Sixth Edition 2013.

CONSTRUCTION SPECIFICATIONS: Arkansas State Highway and Transportation Department Standard Specifications for Highway Construction (2014 Edition) with applicable Supplemental Specifications and Special Provisions.

BASIC WIND SPEED: 90 m.p.h.

Fatigue Category I

MATERIALS AND STRENGTHS:
Structural Steel Angles and Z Shapes (AASHTO M 270, Gr. 36, Fy = 36,000 psi)
Structural Steel Plate (AASHTO M 270, Gr. 50, Fy = 50,000 psi)
Bolts (ASTM A325, Type 1)
Nuts (ASTM A563 or AASHTO M 292, Grade 2H, Grade DH or Grade 10S)
Washers (ASTM F436)
Locknuts (Approved type, meeting or exceeding AASHTO M 292)

Structural members of sign support shall be galvanized in accordance with Subsection 807.19.

Bolts, nuts and washers shall be galvanized in accordance with Subsection 807.06.

Locknuts to be equipped with nylon locking inserts or other approved locking system. Locknuts to be installed according to Manufacturer's recommendations.

Drawings show general features of design only. Shop drawings shall be made in accordance with Subsection 807.04, submitted, and approval secured before fabrication is begun.

Requests for substitution of structural steel shapes shown with shapes of greater size must be submitted by the Contractor to the Engineer for approval. Steels of equal or greater strengths will be accepted only when shown on the approved shop drawings. Shapes and materials shown in the plans will be the basis of payment and no additional compensation will be made for any adjustments due to substitutions.

Connections shall be bolted with high-strength bolts. Unless noted otherwise, bolts shall be ⅝" diameter and open holes shall be ¾". Bolts shall be placed with heads on the outside face of all members.

All welding that is to be done during fabrication of structural steel, including temporary welds, shall be detailed on the shop drawings and submitted for approval. If additional welds are required, whether temporary or permanent, a formal request with detailed drawings shall be submitted to the Engineer for approval. All welding shall conform to Subsection 807.26.

Galvanized coating damaged during transport, handling, or erection shall be field repaired in accordance with Subsection 807.88.

Surfaces of plates in contact with concrete or girder web shall be coated with a thick layer of asphaltic paint and allowed to dry before erection. Preformed fabric pads ⅛" thick conforming to Section 808 fo the Standard Specifications may be used in lieu of asphaltic paint coating.

The Contractor shall make check measurements in the field and make any adjustments necessary to avoid cross-frames, splice plates and joints in parapet on the bridge. This may include shifting the sign structure with approval from the Engineer.

STATE OF ARKANSAS
REGISTERED PROFESSIONAL ENGINEER
No. 11328
CHRISTOPHER J. CRISWELL
7/17/14

BRIDGE ENGINEER
PRINT DATE: 7/17/2014

SHEET 3 OF 3
DETAILS OF BRIDGE MOUNTED SIGN STRUCTURE
PULASKI COUNTY
ROUTE 40 SECTION 33
ARKANSAS STATE HIGHWAY COMMISSION
LITTLE ROCK, ARKANSAS

DRAWN BY: LHG DATE: 2/27/14 FILENAME: bca0609x1_t3.dgn
CHECKED BY: CGW DATE: 3/8/14
DESIGNED BY: CMF DATE: 3/12/14 SCALE: As Noted
STRUCTURE NO. BM-040-60-42 DRAWING NO. 55719

JACOBS

T:\Job\WLXM2650 A+TD CAP CA0603\700 CADD Files\709 Structural Files\Drawings\B2650Marche Sign 03.dgn
11:09:01 AM
7/17/2014

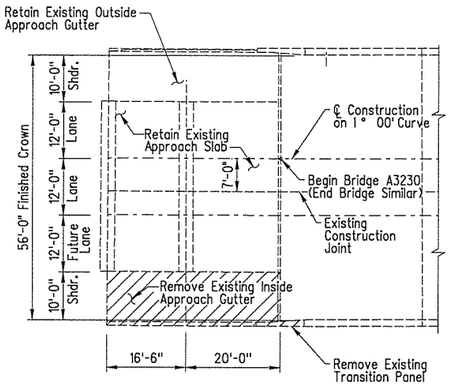

Note: Longitudinal lines of approach slab are concentric to a 1° 00' curve along ℄ Construction.

Note: Class 1 Protective Surface Treatment shall be applied to the Roadway Face and Top of the new Jersey Rail. Payment will be paid as Class 1 Protective Surface Treatment.

PLAN OF APPROACH FOR EXISTING BRIDGE A3230

Begin or End Bridge A3230
(No Scale)

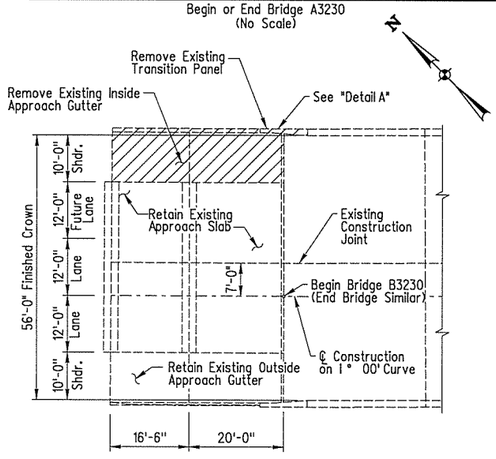

PLAN OF APPROACH FOR EXISTING BRIDGE B3230

Begin or End Bridge B3230
(No Scale)

① Remove hatched portion of the existing transition panel, wing, & existing inside approach gutters. Indicated bars extending from the existing concrete shall not be cut but shall to be cleaned and incorporated into new work as shown. If bars are broken in concrete removal or bar straightening process, replacement dowel bars shall be drilled and grouted in place as approved by the Engineer. See Section 821. This work shall be paid for as part of the pay item "Modification of Existing Bridge Structure".

② Indicated bars extending from the existing concrete shall be cut off one inch below concrete removal surface and the resulting holes shall be filled with a QPL approved non-shrink grout. Cutting and grouting will be paid for as part of the item "Modification of Existing Bridge Structure".

Note: The Contractor shall verify measurements and make any necessary adjustments. This work will not be paid for directly but will be considered subsidiary to the bid price for "Modification of Existing Bridge Structure".

BAR LIST PER PARAPET PANEL

Mark	No. Required	Length	Pin Dia.
R401E	7	5'-3"	2"
R402E	6	4'-8"	Str.

Bending Diagrams
Dimensions shown are out to out of bars

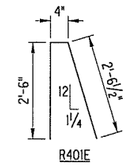

GENERAL NOTES

Governing specifications are the Arkansas State Highway and Transportation Department Standard Specifications for Highway Construction (2014 edition), with applicable supplemental specifications and special provisions.

Concrete shall be Class S(AE) (f'c = 4,000 psi). Payment will be paid for Class S(AE) Concrete-Bridge. Concrete shall be poured in the dry and all exposed corners to be chamfered ¾" unless otherwise noted.

Reinforcement Steel shall conform to AASHTO M31 or M322 Type A, Grade 60 (fy = 60,000 psi) with mill test reports.

EXISTING BRIDGE: Existing Bridge Nos. A&B3230 are 56' wide and 150' long and consist of reinforced concrete deck girder spans supported by a concrete substructure. Sheets from the existing bridge plans may be obtained from the Arkansas State Highway and Transportation Department. For Bridges A&B3230, see Drawing Nos. 37022 - 37035. All information required to complete the work should be field verified by the Contractor.

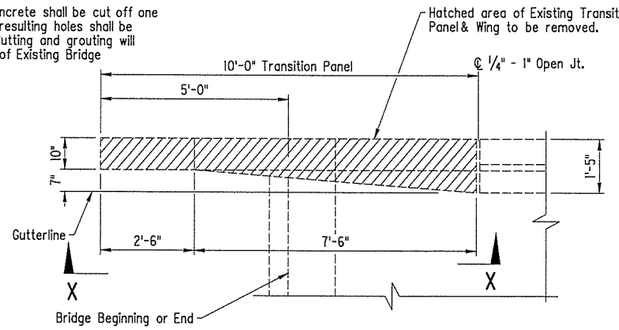

DETAIL A - PLAN OF EXISTING TRANSITION PANEL

(No Scale)

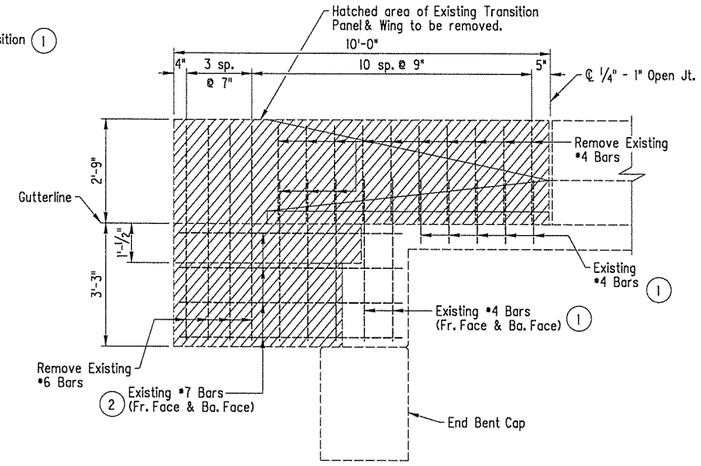

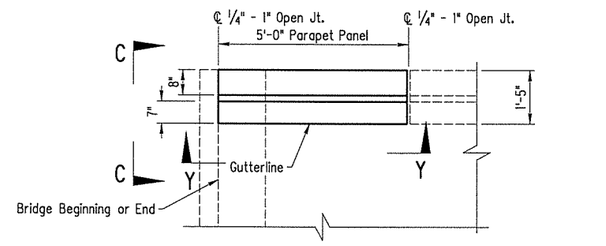

PLAN OF PROPOSED PARAPET PANEL

(No Scale)

SECTION X-X

(No Scale)

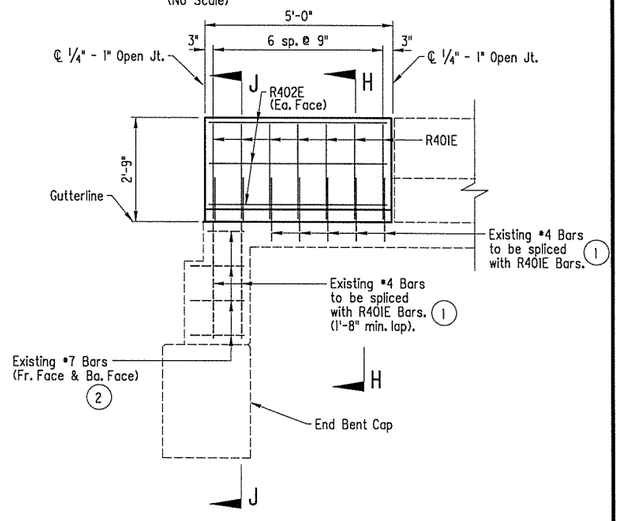

SECTION Y-Y

(No Scale)

QUANTITIES TABLE PER PARAPET PANEL

Reinforcing Steel (lbs.)	Concrete (Cubic Yards)	Class I Protective Surface Treatment (Gal.)
43.3	0.5	0.1

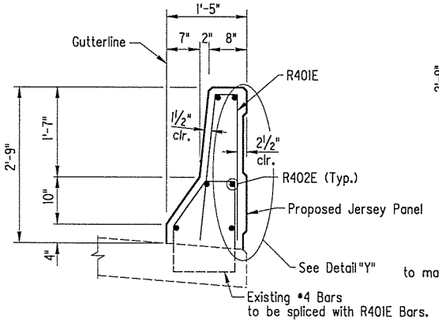

SECTION H-H

(No Scale)

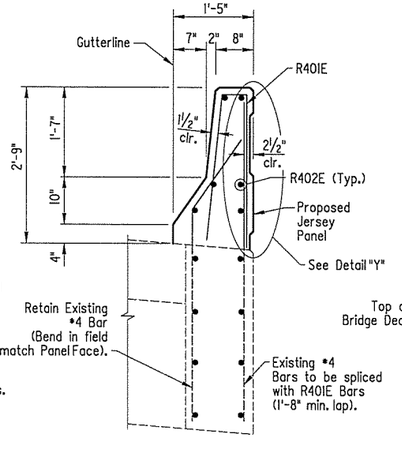

SECTION J-J

(No Scale)

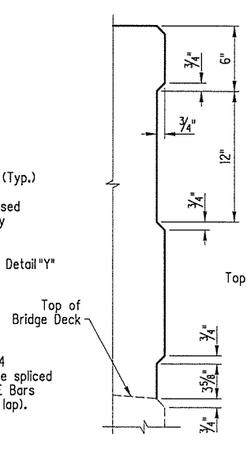

DETAIL "Y"

(No Scale)

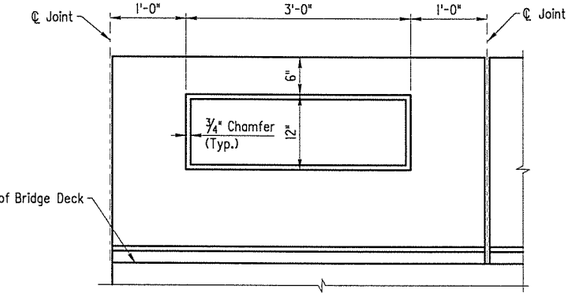

DETAILS OF PARAPET ENHANCEMENT

(No Scale)

DATE REVISED	DATE FILMED	DATE REVISED	DATE FILMED

FED. RD. DIST. NO.	STATE	FED. AID PROJ. NO.	SHEET NO.	TOTAL SHEETS
6	ARK.			
JOB NO.		CA0609	275	693

① A3230 & B3230 REMODEL DETAILS - 55720

STATE OF ARKANSAS
REGISTERED PROFESSIONAL ENGINEER
No. 12981
JASON RANDALL SULLIVAN
7-17-14

BRIDGE ENGINEER
PRINT DATE: 7/17/2014

REMODELING DETAILS FOR BRIDGES OVER WHITE OAK BAYOU

PULASKI COUNTY
ROUTE 40 SECTION 33
ARKANSAS STATE HIGHWAY COMMISSION
LITTLE ROCK, ARKANSAS

DRAWN BY: LHG DATE: 3/10/14
CHECKED BY: MAA DATE: 3/14/14
DESIGNED BY: JRS DATE: 3/8/14
BRIDGE NO. A3230 & B3230

FILENAME: bca0609x2_gl.dgn
SCALE: No Scale
DRAWING NO. 55720

JACOBS

T:\Jobs\WLXM2650 AHTD CAP CA0603\700 CADD Files\709 Structural Files\Drawings\B2650Whiteoak approach gutter 01.dgn
11:09:02 AM
7/17/2014

DATE REVISED	DATE FILMED	DATE REVISED	DATE FILMED	FED. RD. DIST. NO.	STATE	FED. AID PROJ. NO.	SHEET NO.	TOTAL SHEETS
				6	ARK.			
				JOB NO.		CA0609	276	693

(1) A3230 & B3230 TYPE SPECIAL GUTTER-55721

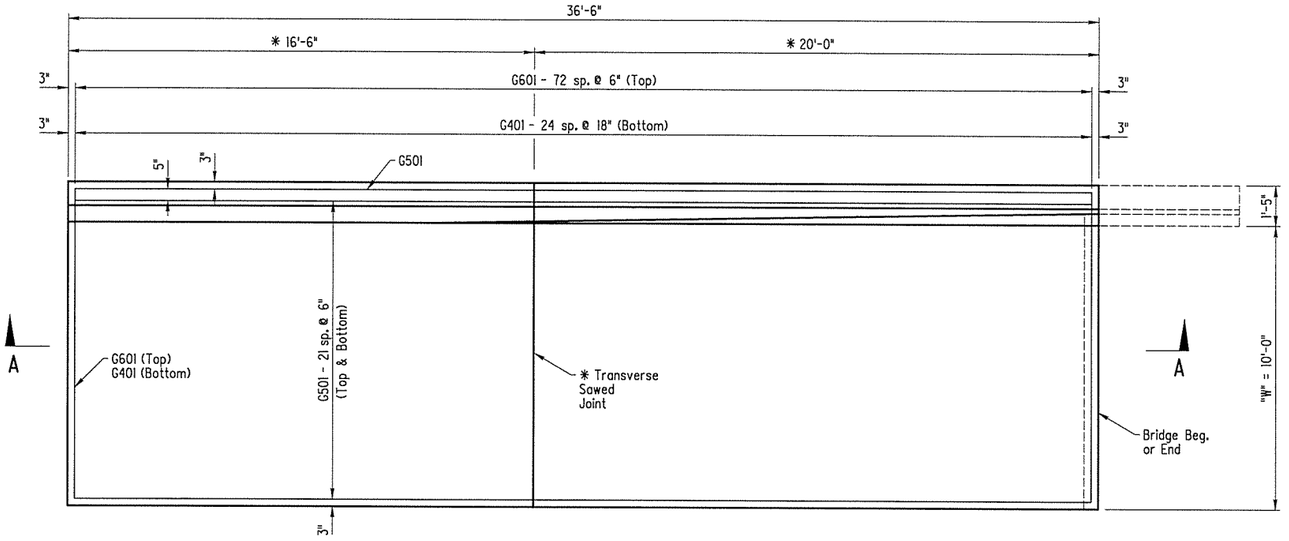

* Transverse Sawed Joint shall be aligned with joints in Approach Slab.

PLAN OF TYPE SPECIAL APPROACH GUTTER
(No Scale)

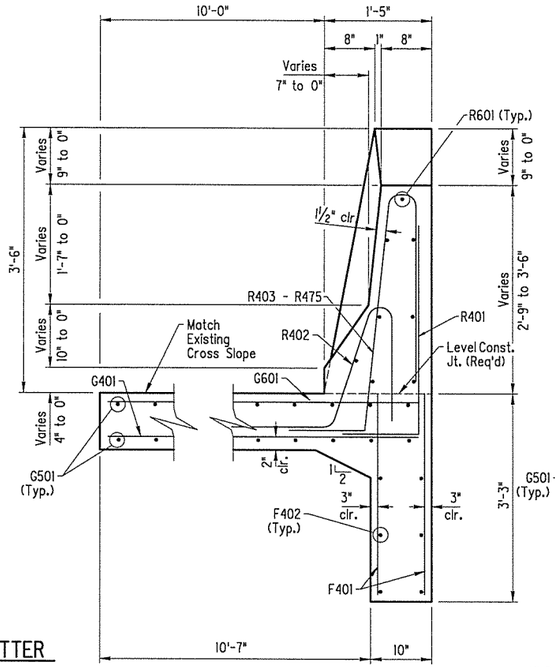

SECTION B-B
(No Scale)

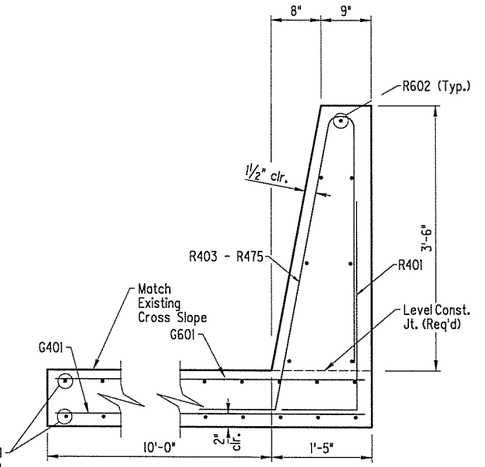

SECTION C-C
(No Scale)

QUANTITIES FOR TYPE SPECIAL APPROACH GUTTER

Bridge	Bent	Shoulder Width (ft.)	Reinforcing Steel (lbs.)	Concrete (cu. yds.) T = 12"
A3230	1	10	4037.2	20.1
	6	10	4037.2	20.1
B3230	1	10	4037.2	20.1
	6	10	4037.2	20.1

GENERAL NOTES

All Concrete shall be Class S or Class S(AE) or mixture used for Portland Cement Concrete Pavement (f'c = 4,000 psi) and shall be poured in the dry.

All Reinforcement Steel shall conform to AASHTO M 31 or M 322 Type A, Grade 60 (fy = 60,000 psi) with mill test reports.

Approach Gutters will be measured and paid for in accordance with Section 504 of the Standard Specifications.

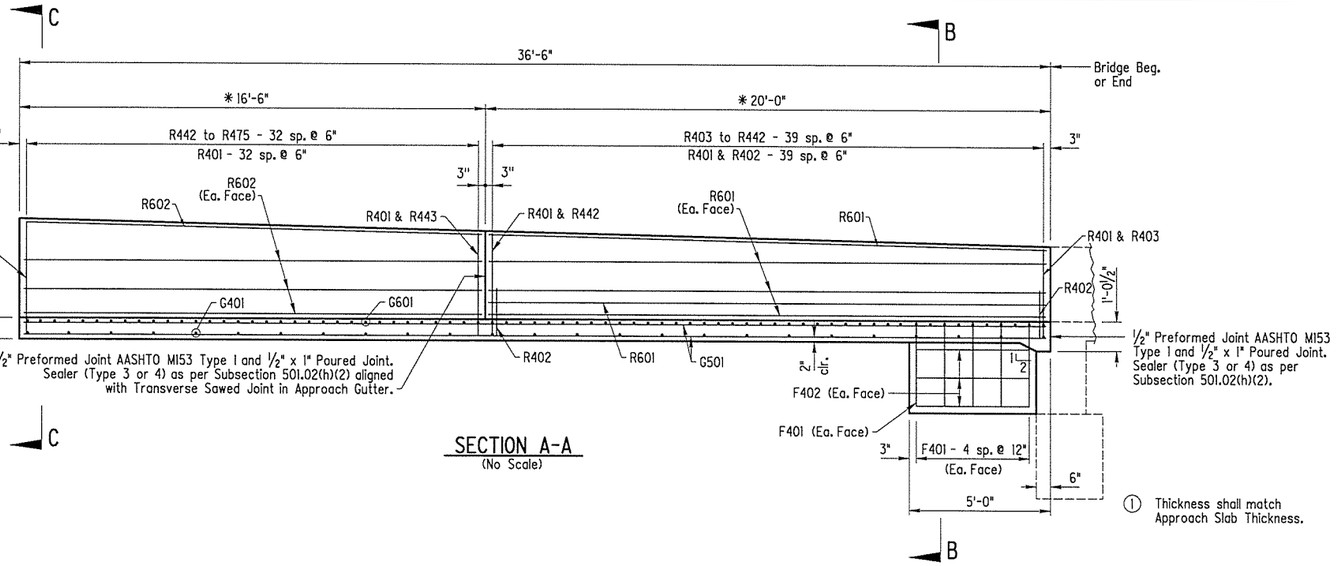

SECTION A-A
(No Scale)

BAR LIST FOR ONE TYPE SPECIAL APPROACH GUTTER

Mark	No. Required	Length	A	B	C	Pin Dia.	Bending Diagrams (Dimensions shown are out to out of bars)
F401	10	3'-0"					
F402	6	4'-2"					
G401	25	11'-0"				Str.	
G501	46	36'-2"				Str.	
G601	73	11'-0"				Str.	
R401	73	3'-8"				3"	
R402	40	4'-8"				3¾"	
R403 to R475	1 ea.	7'-0" to 8'-8"	3'-2" to 4'-1"	2'-5" to 3'-3"	8" to 1'-1"	3½"	
R601	8	19'-8"				Str.	
R602	7	16'-2"				Str.	

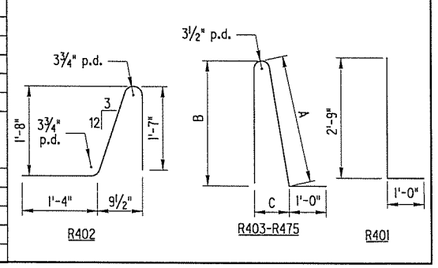

STATE OF ARKANSAS
REGISTERED PROFESSIONAL ENGINEER
No. 12981
JASON RANDALL STUDLEY
7-17-14

BRIDGE ENGINEER
PRINT DATE: 7/17/2014

DETAILS FOR APPROACH GUTTER (TYPE SPECIAL) FOR BRIDGES OVER WHITE OAK BAYOU

PULASKI COUNTY

ROUTE 40 SECTION 33

ARKANSAS STATE HIGHWAY COMMISSION

LITTLE ROCK, ARKANSAS

DRAWN BY: LHG DATE: 3/7/14
CHECKED BY: MAA DATE: 3/14/14
DESIGNED BY: JRS DATE: 3/6/14
FILENAME: bca0609x2_g2.dgn
SCALE: No Scale
BRIDGE NO. A3230 & B3230
DRAWING NO. 55721

JACOBS

T:\Job\WLXM2650 AHTD CAP CA0603\700 CADD Files\709 Structural Files\Drawings\B2650Whiteoak approach gutter 02.dgn
11:09:04 AM
7/17/2014

DATE REVISED	DATE FILMED	DATE REVISED	DATE FILMED	FED. ROAD DIST. NO.	STATE	FED. AID PROJ. NO.	SHEET NO.	TOTAL SHEETS
				6	ARK.			
				JOB NO.		CA0609	277	693
				(1) 07318		LAYOUT		55722

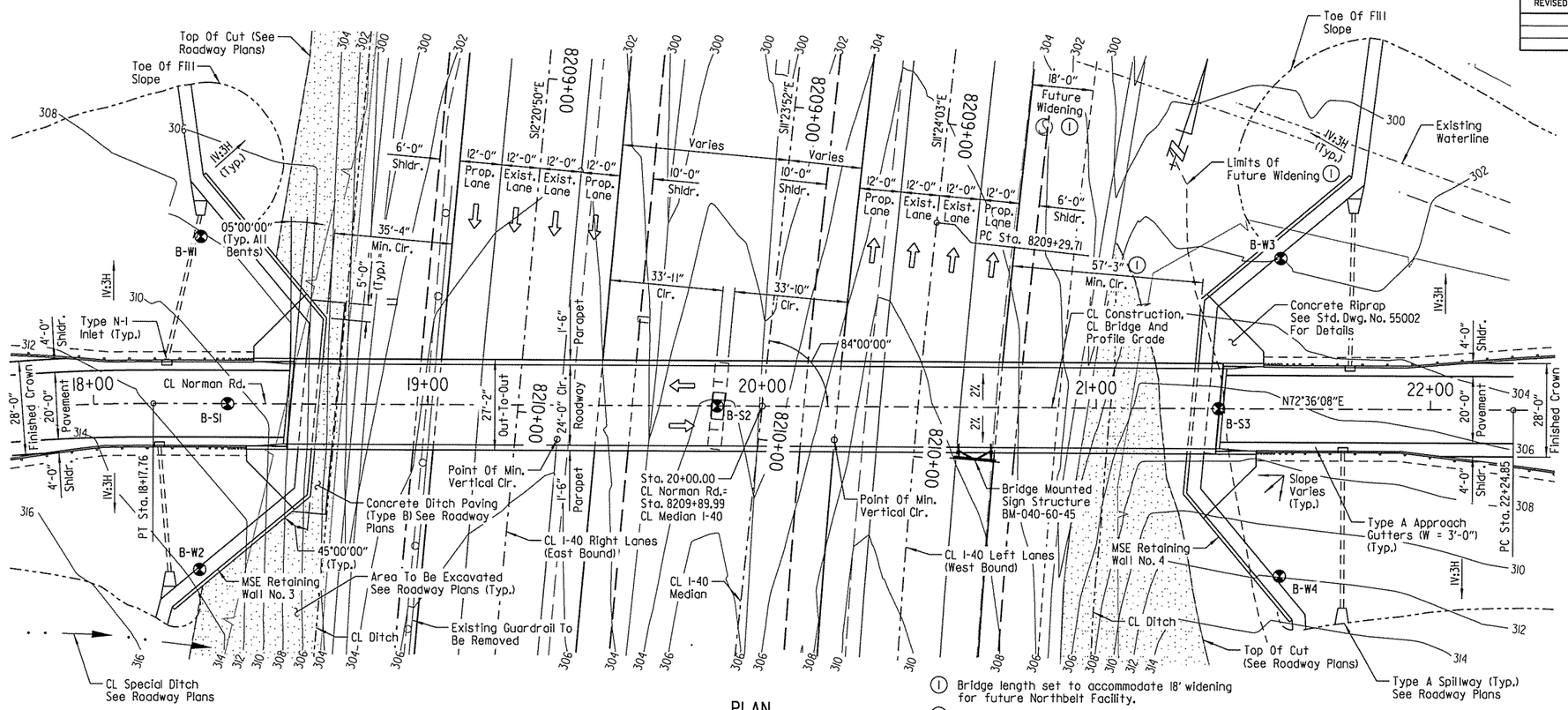

(1) Bridge length set to accommodate 18' widening for future Northbelt Facility.

(2) Measured to Working Point. See "ROUNDING DETAIL" on Dwg. No. 55733.

PLAN

NOTE:
See Roadway Plans for details of excavation.

NOTE:
Stations and elevations shown are along CL Bridge. Elevations shown are at Working Point.

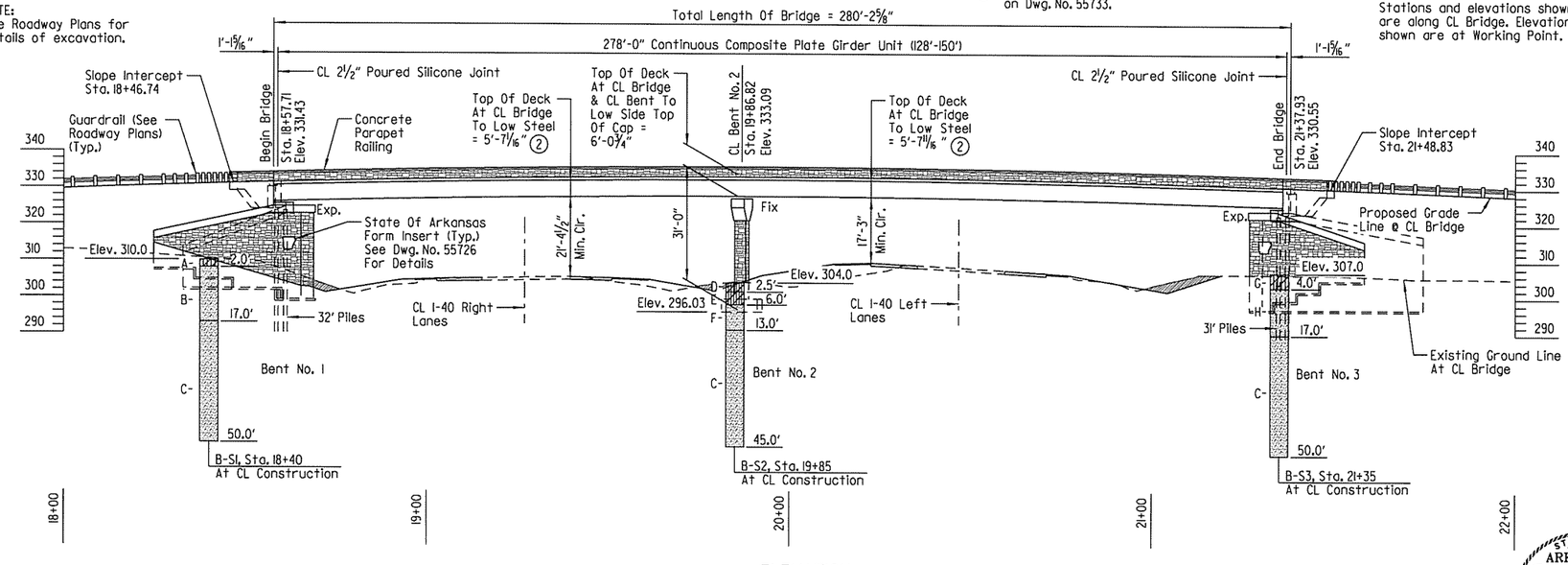

ELEVATION

FOR R/W DATA AND GUARDRAIL DETAILS, SEE ROADWAY PLANS

NOTES:
Use Type A Approach Gutters (W = 3'-0") at each bridge end.

Use Type N-1 Inlets at each bridge end.

For "GENERAL NOTES", "BORING LEGEND" & "N" Values, See Dwg. No. 55723.

For details of Bridge Mounted Sign Structure BM-040-60-45, See Dwg. Nos. 55744-55746.

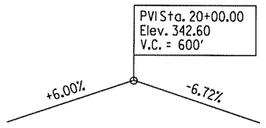

VERTICAL CURVE DATA

Norman Road
(Profile Grade Along CL Bridge)

HORIZONTAL CURVE DATA 1

Norman Rd.
PI = 16+93.18
Δ = 27°58'39" Rt.
D = 11°00'00"
T = 129.76'
L = 254.34'
e = N.C.
R = 520.87'

HORIZONTAL CURVE DATA 2

Norman Rd.
PI = 23+11.59
Δ = 18°54'31" Rt.
D = 11°00'00"
T = 86.74'
L = 171.90'
e = N.C.
R = 520.87'

HORIZONTAL CURVE DATA

I-40 Left Lane
PI = 8224+50.59
Δ = 49°49'56" Lt.
D = 01°45'00"
T = 1520.88'
L = 2847.55'
e = Match Existing
R = 3274.04'

STATE OF ARKANSAS
LICENSED PROFESSIONAL ENGINEER
No. 14058
SETH R. YANCEY
1-12-14
BRIDGE ENGINEER

SHEET 1 OF 5
LAYOUT OF BRIDGE
NORMAN ROAD OVER I-40
HWY. 365 - I-430 (WIDENING) & I-430 INTCHNG. MOD. (F)
PULASKI COUNTY
ROUTE 40 SEC. 33

ARKANSAS STATE HIGHWAY COMMISSION
LITTLE ROCK, ARK.

DRAWN BY: HEW DATE: NOV. 2013 FILENAME: BCA0609x5_LI.dgn
CHECKED BY: JES DATE: APR. 2014 SCALE: 1" = 20'
DESIGNED BY: SRY DATE: NOV. 2013
BRIDGE NO. 07318 DRAWING NO. 55722

SRYancey 7/18/2014 8:44:08 AM
WORKSPACE: AHTD Bridge
L:\20INDOT709 - I-40 at I-430 Interchange Modifications\Drawings\BCA0609x2_LI\Layout 1of 5.dgn
REVISED DATE:

DATE REVISED	DATE FILMED	DATE REVISED	DATE FILMED	FED. ROAD DIST. NO.	STATE	FED. AID PROJ. NO.	SHEET NO.	TOTAL SHEETS
				6	ARK.			
				JOB NO.		CA0609	278	693
				(1) 07318		LAYOUT		55723

GENERAL NOTES

BENCH MARK: PN: 1050, PD: 5/8" REBAR W/2" CAP, ST: 24+03.37
OF: 7.93' LT. ZC: 314.68

CONSTRUCTION SPECIFICATIONS: Arkansas State Highway and Transportation Department Standard Specifications For Highway Construction (2014 Edition) with Applicable Supplemental Specifications And Special Provisions. Unless otherwise noted in the plans, for section and subsection refer to The Standard Construction Specifications.

DESIGN SPECIFICATIONS: AASHTO LRFD Bridge Design Specifications 6th Edition (2012) with current Interim Revisions

LIVE LOADING: HL93

SEISMIC PERFORMANCE ZONE: I SDI = 0.091 Site Class = B

OPERATIONAL CLASSIFICATION: TYPICAL BRIDGE

MATERIALS AND STRENGTHS:

Class S(AE) Concrete - Bridge (Superstructure)	f'c = 4,000 psi
Class S Concrete - Bridge (Substructure)	f'c = 3,500 psi
Reinforcing Steel (AASHTO M 31 Or M 322 Type A, GR. 60)	fy = 60,000 psi
Structural Steel (AASHTO M 270, GR. 50)	Fy = 50,000 psi
Structural Steel (AASHTO M 270, GR. 36)	Fy = 36,000 psi

BORING LOGS: Boring Logs may be obtained from Programs And Contracts Division.

STEEL PILING: All Piling shall be HP12x53 (Grade 50) and shall be driven with an approved air, steam or diesel hammer to a safe bearing capacity of 95 tons. Drive all piles in Bents 1 & 3 to a minimum penetration of 5' below leveling pad. Lengths of piling shown are for estimating quantities and for use in determining payment for cut-off and build-up in accordance with Section 805. Actual lengths are to be determined in the field. The Contractor shall use approved steel H-pile driving points.

The contractor may drive the piling in Bents 1 and 3 in one of the following sequences:

Piling may be driven after excavation to bottom of leveling pad is complete, after any required preboring and prior to backfilling.

Piling may be driven after embankment construction. Pile casings shall be used for all piling and shall be installed prior to or during embankment construction extending from bottom of leveling pad to bottom of cap. Pile casing material shall have sufficient strength to retain its original form free from harmful distortions after compaction of the fill material surrounding it. The minimum inside diameter of the casing shall be 18". Piles shall be driven after preboring and through the open casings after embankment to bottom of cap is in place. After driving is completed, the pile casing shall be backfilled with an approved non-shrink grout, or other approved material in a single continuous operation to completely fill voids. Pile casings and backfill will not be paid for directly but shall be considered subsidiary to the item "STEEL PILING (HP12x53)".

PREBORING: Preboring will be required at Bents 1 & 3 to obtain the minimum pile penetration requirements. Preboring shall take place after excavation to the top of leveling pad is complete. The size and depth of preboring will be determined by the Engineer. Preboring will be measured from bottom of leveling pad. The Contractor shall be responsible for keeping the prebored holes free from debris prior to backfilling which may require the use of temporary casings or other methods. After driving is completed, the prebored hole shall be backfilled with Class S Concrete to the top of rock and the remaining length of prebored holes shall be backfilled with an approved non-shrink grout, or other approved material to completely fill voids. The cost of preboring, temporary casings and backfill will be included in the item "PREBORING".

SPREAD FOOTING: The footing at Bent 2 shall be set a minimum of 2'-0" into material designated as moderately hard weathered shale on the boring legend and shall have a minimum 2'-0" cover above the top of footing. Foundations for footings shall be prepared in accordance with Subsection 801.04 and backfilled in accordance with Subsection 801.08.

BRIDGE DECK: The concrete bridge deck shall be given a tine finish as specified for final finishing in Subsection 802.19 for Class 5 Tined Bridge Roadway Surface Finish.

PROTECTIVE SURFACE TREATMENT: Class 1 Protective Surface Treatment shall be applied to the roadway surface. Class 1 Protective Surface Treatment shall meet the requirements of Section 803.

TEXTURED COATING FINISH: Class 3 Textured Coating Finish shall be applied to all areas as specified in SP JOB NO. CA0609 "TEXTURED COATING FINISH" and in accordance with Subsection 802.19(b)(3). Textured Coating Finish shall not be applied on surfaces where Class 1 Protective Surface Treatment is applied.

PAINT: All Structural Steel except galvanized members, some surfaces in contact with concrete, and as otherwise noted, shall be painted as specified in Subsection 807.75. The color of the paint shall be Dark Brown and shall match Federal Standard 595B, Color Chip No. 20108.

DETAIL DRAWINGS:	DRAWING NO:
End Bents	55727-55730
Intermediate Bent	55731-55732
278'-0" Cont. Comp. Plate Girder Unit	55733-55742
Elastomeric Bearings	55743
Bridge Mounted Sign Structure	55744-55746
Concrete Riprap	55002
Steel Piling	55020
Type A Approach Gutters	55030A

EXISTING BRIDGE: Existing Bridge No. 03234 is 24' wide and 277' long and consists of simple spans with steel beams and a concrete deck supported by a concrete substructure with spread footings. The new bridge is approximately 230' North of the existing bridge.

REMOVAL AND SALVAGE: After the new bridge is open to traffic, existing bridge No. 03234 shall be removed in accordance with Section 205. All material from the existing bridge shall become property of the Contractor.

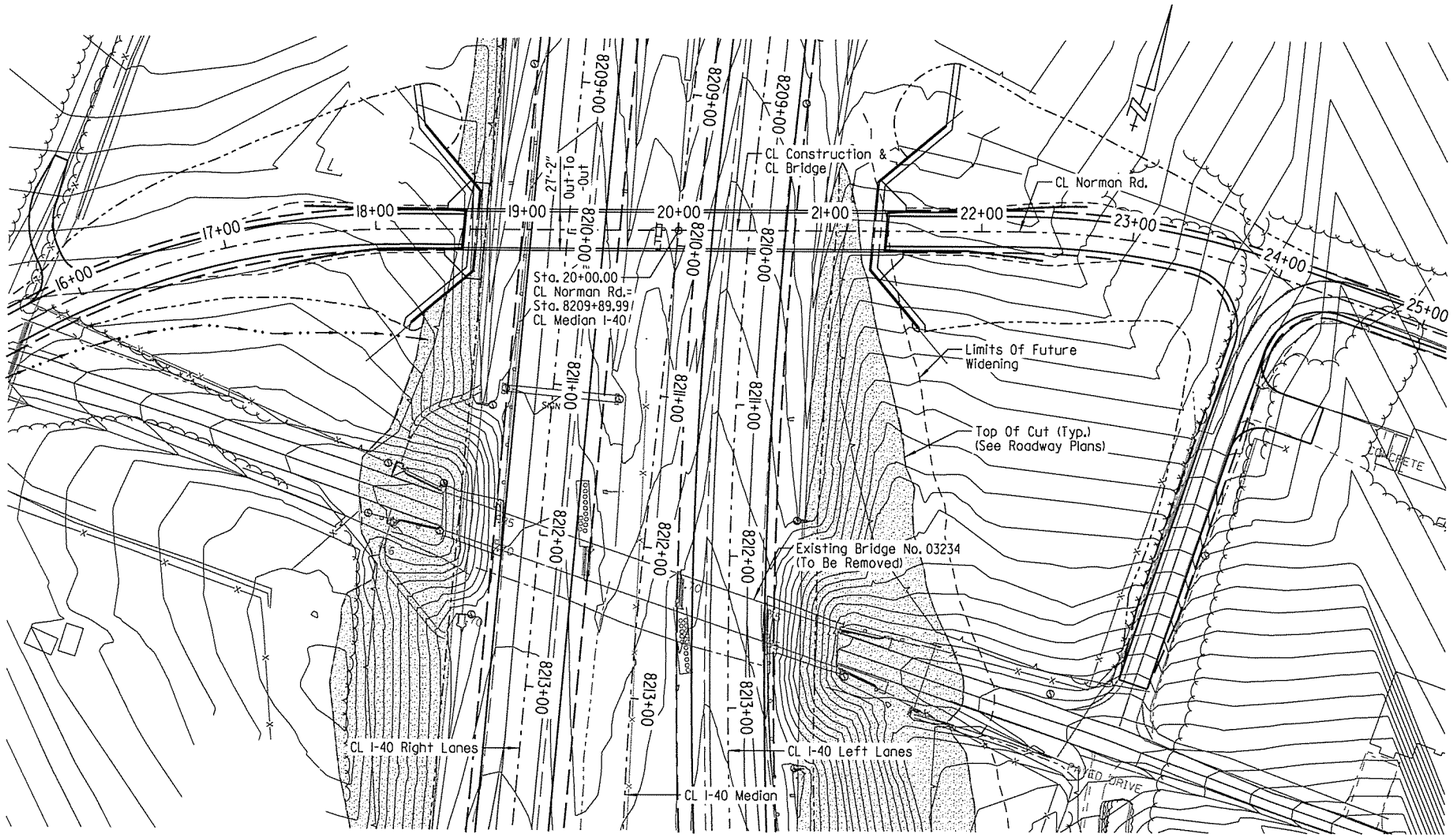

LOCATION SKETCH

BORING LEGEND

A - Soft to firm red silty clay w/ some sandstone fragments
B - Moderately hard brown, tan and gray weathered shale w/ ferrous stains
C - Moderately hard to hard dark gray shale
D - Stiff brown silty clay
E - Stiff brown and tan silty clay, shaly
F - Moderately hard brown weathered shale
G - Stiff red silty clay w/ some sandstone fragments
H - Moderately hard tan and gray weathered shale w/ ferrous stains in fractures
I - Loose brown silt w/ organics
J - Firm reddish tan and tan silty clay
K - Very stiff gray and tan silty clay w/ shale fragments (completely weathered shale)
L - Moderately hard tan, gray and dark gray weathered shale
M - Moderately hard dark gray shale
N - Moderately hard gray and tan weathered shale
O - Stiff mottled reddish tan, gray and tan silty clay w/ sandstone fragments
P - Moderately hard gray and tan highly weathered shale w/ silty clay seams and sandstone inclusions
Q - Moderately hard tan and dark gray weathered shale w/ sandstone inclusions and seams
R - Moderately hard to hard dark gray slightly weathered to fresh shale
S - Very loose brown silt w/ organics
T - Soft red and tan silty clay w/ a little sandstone fragments
U - Very stiff red and gray shaly clay, silty (completely weathered shale)
V - Moderately hard gray, tan and dark gray weathered shale w/ close sandstone seams and inclusions
W - Moderately hard to hard tan and dark gray slightly weathered shale

N VALUES

B-S1, Sta. 18+40 At CL Construction	B-S2, Sta. 19+85 At CL Construction	B-S3, Sta. 21+35 At CL Construction	B-W1, Sta. 18+30 50' Lt. Of CL Norman Rd.	B-W2, Sta. 18+30 50' Rt. Of CL Norman Rd.	B-W3, Sta. 21+55 45' Lt. Of CL Norman Rd.	B-W4, Sta. 21+55 50' Rt. Of CL Norman Rd.
1.0-1.5, N=8	0.5-1.5, N=16	0.5-1.5, N=15	0.5-1.5, N=8	0.5-1.5, N=9	0.5-1.5, N=18	0.5-1.5, N=5
2.0-3.0, N=50/10"	2.5-3.5, N=13	2.5-3.5, N=29	2.5-3.0, N=50/5"	2.5-3.5, N=50/9"	2.5-3.5, N=29	2.5-3.5, N=27
4.0-4.5, N=50/6"	4.5-5.5, N=31	4.5-5.0, N=50/5"	3.5-3.75, N=50/2"	3.5-3.75, N=50/3"	4.0-5.0, N=50/11"	4.0-4.5, N=50/6"
6.0-6.5, N=30/0"	6.5-7.5, N=50/7"	6.0-6.25, N=50/3"	5.5-6.0, N=30/0"	5.5-6.0, N=30/0"	6.5-7.5, N=50/10"	6.0-6.25, N=50/2"
8.5-9.0, N=30/0"	9.0-10.0, N=50/7"	8.5-9.0, N=30/0"	8.0-8.5, N=30/0"	8.0-8.5, N=30/0"	8.5-8.75, N=50/3"	8.0-8.5, N=50/1"
13.5-14.0, N=30/0"	14.0-14.25, N=50/2"	13.5-14.0, N=30/0"	13.0-13.5, N=30/0"	13.0-13.5, N=30/0"	13.0-13.5, N=30/0"	13.0-13.5, N=30/0"
18.5-19.0, N=30/0"	18.5-19.0, N=25/0"	18.5-19.0, N=30/0"	18.0-18.5, N=30/0"	18.0-18.5, N=30/0"	18.0-18.5, N=30/0"	18.0-18.5, N=30/0"
23.5-24.0, N=30/0"	23.5-24.0, N=25/0"	33.5-34.0, N=30/0"				
33.5-34.0, N=30/0"	28.5-29.0, N=25/0"	38.5-39.0, N=30/0"				
38.5-39.0, N=30/0"	33.5-34.0, N=25/0"	43.5-44.0, N=30/0"				
43.5-44.0, N=30/0"	38.5-39.0, N=25/0"	48.5-49.0, N=30/0"				
48.5-49.0, N=30/0"	43.5-44.0, N=25/0"					

STATE OF ARKANSAS
LICENSED PROFESSIONAL ENGINEER
No. 14098
SETH R. YANCEY
7-18-14
BRIDGE ENGINEER

SHEET 2 OF 5
LAYOUT OF BRIDGE
NORMAN ROAD OVER I-40
HWY. 365 - I-430 (WIDENING) & I-430 INTCHNG. MOD. (F)
PULASKI COUNTY

ROUTE 40 SEC. 33

ARKANSAS STATE HIGHWAY COMMISSION
LITTLE ROCK, ARK.

DRAWN BY: HEW DATE: NOV. 2013 FILENAME: BCA0609x5_L2.dgn
CHECKED BY: JES DATE: APR. 2014 SCALE: 1" = 50'
DESIGNED BY: SRY DATE: NOV. 2013

BRIDGE NO. 07318 DRAWING NO. 55723

SRYancey 7/18/2014 8:44:09 AM
WORKSPACE: AHTD_Bridge
L:\20NODOT\09 - I-40 at I-430 Interchange Modifications\Drawings\BCA0609x2_L2\Layout 2 of 5.dgn
REVISED DATE:

DATE REVISED	DATE FILMED	DATE REVISED	DATE FILMED	FED. ROAD DIST. NO.	STATE	FED. AID PROJ. NO.	SHEET NO.	TOTAL SHEETS
9-11-14				6	ARK.			
				JOB NO.		CA0609	279	693
				07318		LAYOUT		55724

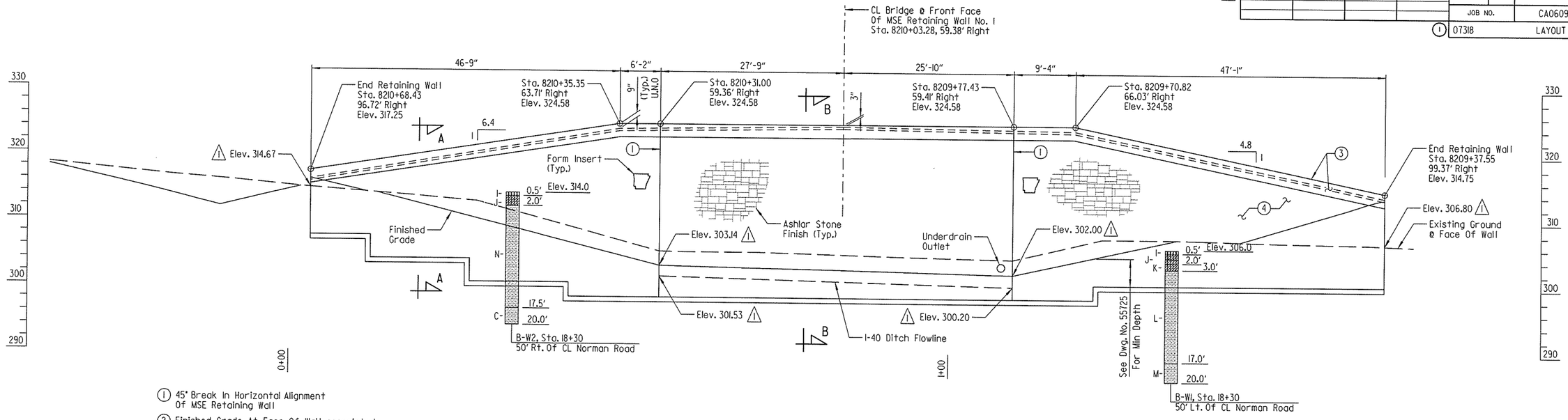

(1) 45° Break In Horizontal Alignment Of MSE Retaining Wall

(2) Finished Grade At Face Of Wall associated with future widening of Northbelt Facility.

(3) Class 3 Texture Coating Finish (Color = Brown, Color Chip No. 33522)

(4) Class 3 Texture Coating Finish (Color = Brown, Color Chip No. 30219)

ELEVATION - MSE RETAINING WALL NO. 3

(Looking At Front Face)
Scale: 1/8" = 1'-0"

(1) Added Finished Grade And Ditch Flowline Elevations SRY, 9-11-14

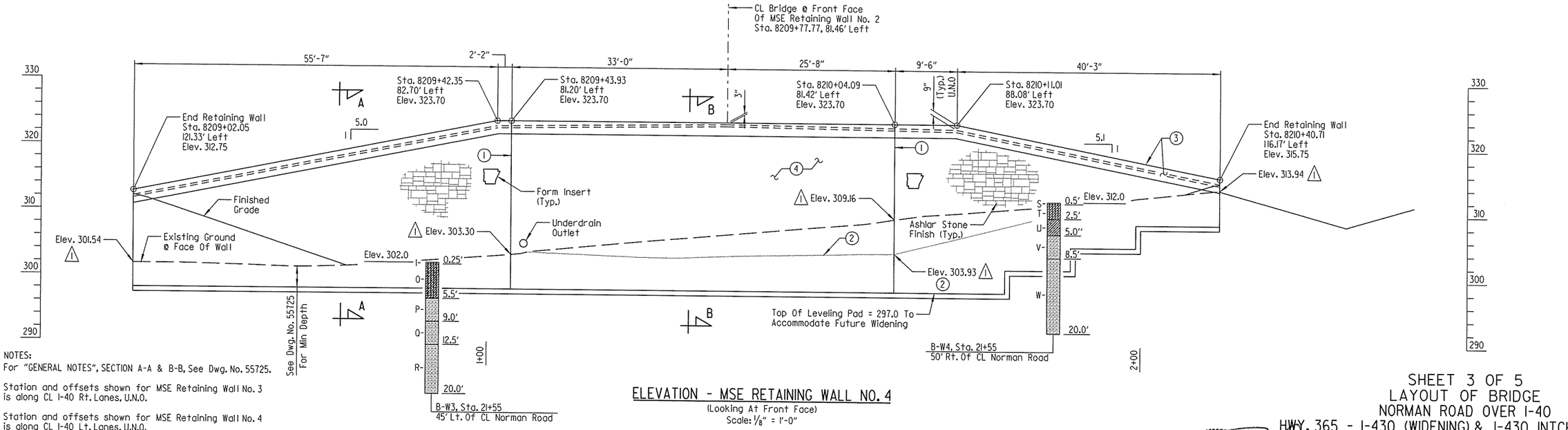

ELEVATION - MSE RETAINING WALL NO. 4

(Looking At Front Face)
Scale: 1/8" = 1'-0"

NOTES:
For "GENERAL NOTES", SECTION A-A & B-B, See Dwg. No. 55725.

Station and offsets shown for MSE Retaining Wall No. 3 is along CL I-40 Rt. Lanes, U.N.O.

Station and offsets shown for MSE Retaining Wall No. 4 is along CL I-40 Lt. Lanes, U.N.O.

Offset dimensions are measured to outside face of MSE Retaining Wall.

For details of form insert, See Dwg. No. 55726.

Underdrain outlet to penetrate front face of MSE Retaining Wall.

For "BORING LEGEND" & "N VALUES", See Dwg. No. 55723.

LEGEND

U.N.O. = Unless Noted Otherwise

STATE OF ARKANSAS
LICENSED PROFESSIONAL ENGINEER
No. 8017
JOHN H. RUDDELL
9/11/14
BRIDGE ENGINEER

SHEET 3 OF 5
LAYOUT OF BRIDGE
NORMAN ROAD OVER I-40
HWY. 365 - I-430 (WIDENING) & I-430 INTCHNG. MOD. (F)
PULASKI COUNTY

ROUTE 40 SEC. 33

ARKANSAS STATE HIGHWAY COMMISSION

LITTLE ROCK, ARK.

DRAWN BY: DRG DATE: FEB. 2014 FILENAME: BCA0609x5_L3.dgn
CHECKED BY: SRY DATE: MAR. 2014 SCALE: AS SHOWN
DESIGNED BY: DRG DATE: FEB. 2014
BRIDGE NO. 07318 DRAWING NO. 55724

hewilliams 9/11/2014 12:59:22 PM
WORKSPACE: AHTD Bridge
L:\ZOM\HDT709 - I-40 at I-430 Interchange Modifications\Drawings\BCA0609x2_L3\Layout 3 of 5.dgn
REVISED DATE:

DATE REVISED	DATE FILMED	DATE REVISED	DATE FILMED	FED. ROAD DIST. NO.	STATE	FED. AID PROJ. NO.	SHEET NO.	TOTAL SHEETS
				6	ARK.			
				JOB NO.		CA0609	280	693
				(1) 07318		LAYOUT		55725

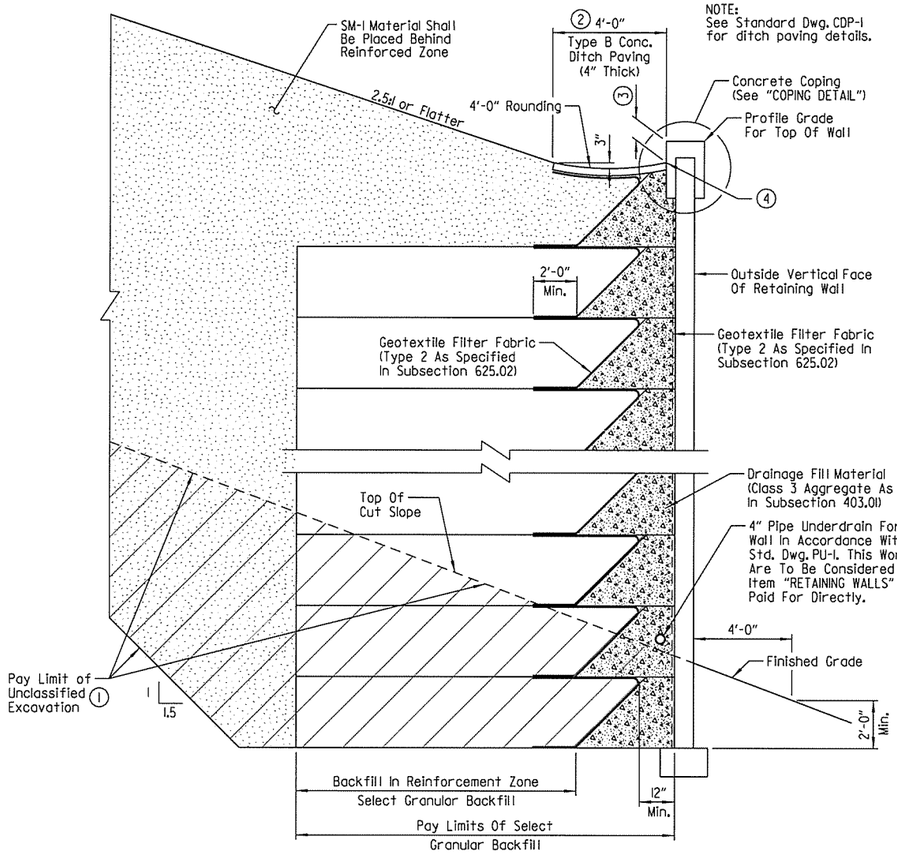

SECTION A-A

No Scale

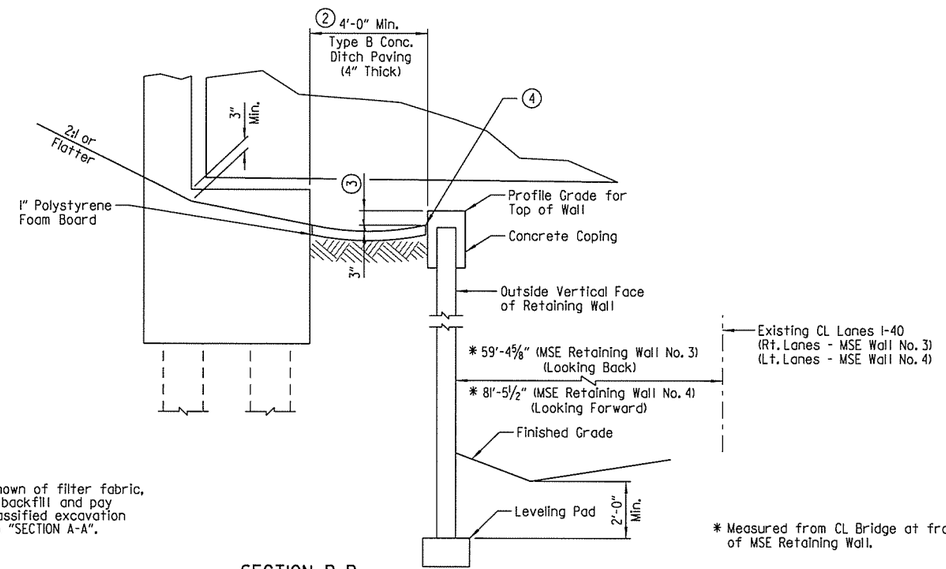

NOTE:
Details not shown of filter fabric, drainage fill, backfill and pay limits of unclassified excavation are similar to "SECTION A-A".

* Measured from CL Bridge at front face of MSE Retaining Wall.

SECTION B-B

No Scale

(1) Excavation required for reinforcing zone, leveling pad and placement of SM-1 material will be paid for under the pay item "UNCLASSIFIED EXCAVATION". See SP JOB CA0609 "RETAINING WALLS".

NOTE:
All backfill and drainage fill material within the reinforcement zone shall be included in the price bid for "SELECT GRANULAR BACKFILL".
Select material required behind reinforced zone shall be included in the price bid for "COMPACTED EMBANKMENT". See SP JOB CA0609 "RETAINING WALLS".

(2) The 4'-0" concrete ditch paving shall be constructed without the 3" weep holes shown on Standard Dwg. CDP-1.

(3) Varies From 3" To 9", See "ELEVATION".

(4) ½" Joint Filler (AASHTO M153, Type 1 Per Subsection 501.02(h)(1) With ½" x 1" Type 3 or 4 Joint Sealer Per Subsection 501.02(h)(2))

MSE Wall Supplier Shall Design And Furnish Attachments For End Bent. This Work And Material Are To Be Considered Subsidiary To The Item "RETAINING WALLS" And Will Not Be Paid For Directly.

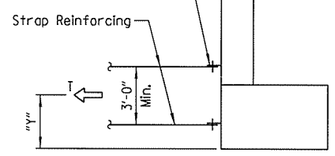

END BENT STRAP DETAIL

No Scale

T = Resultant Force Required To Be Resisted By Strap Reinforcing

Y = Centroid Of Strap Reinforcing

LIMIT STATE	T	Y
	Kips/Ft.	Ft.
Service	3.9	3.0
Strength	5.7	

NOTE:
Undercut at MSE Retaining Wall No. 3 & 4 is not anticipated provided that reinforced zone bears on material designated as weathered shale in the "BORING LEGEND".

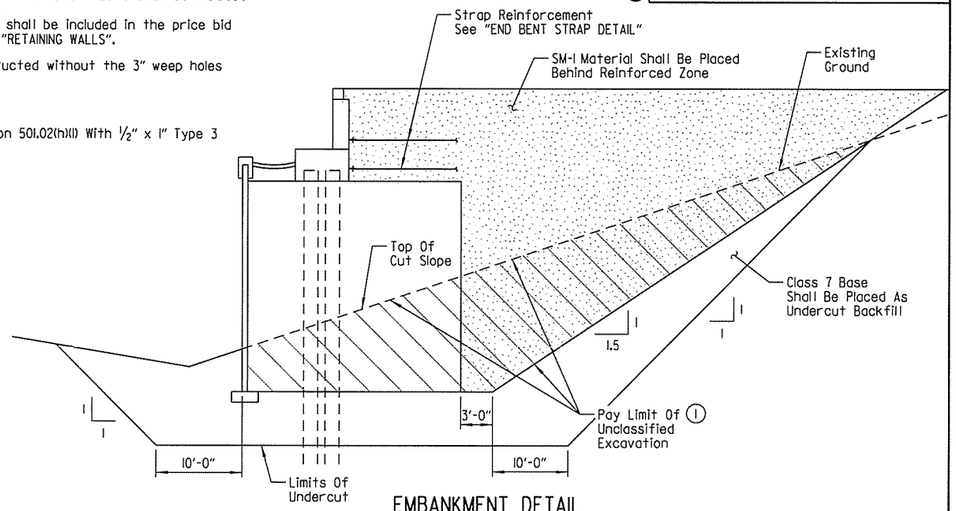

EMBANKMENT DETAIL

No Scale

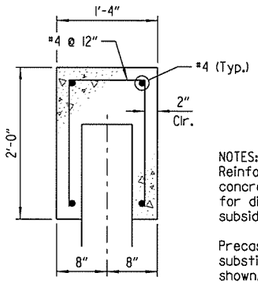

NOTES:
Reinforcing steel and concrete for concrete coping shall not be paid for directly but will be considered subsidiary to the Item "RETAINING WALLS".

Precast concrete coping may be substituted for cast-in-place coping shown.

COPING DETAIL

No Scale

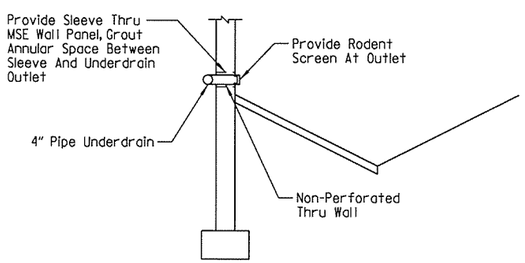

OUTLET DETAIL

No Scale

GENERAL NOTES:

DESIGN SPECIFICATIONS: AASHTO LRFD Bridge Design Specifications 6th Edition (2012) with Current Interim Revisions

SEISMIC PERFORMANCE ZONE: 1 SDI = 0.091 SITE CLASS: B

4" pipe underdrain shall maintain a minimum slope of ⅛" per foot toward nearest outlet.

Elevations are approximate. Wall dimensions may vary depending on wall design selected.

Placement of reinforcing straps for retaining walls may be affected by end bent construction. See Dwg. Nos. 55727-55730 for pile locations and wingwall details.

For ditch paving, see Standard Dwg. No. CDP-1.

See SP JOB NO. CA0609 "RETAINING WALLS" for additional information.

Boring logs, including laboratory results, may be obtained from Programs and Contracts Division.

Joint filler, joint sealer, polystyrene foam board and rodent screen will not be paid for directly but will be considered subsidiary to SP JOB NO. CA0609 "RETAINING WALLS".

A Class 3 Textured Coating Finish shall be applied to surfaces as specified in SP JOB NO. CA0609 "TEXTURED COATING FINISH" and in accordance with Subsection 802.19.

(1) TABLE OF QUANTITES

Location	ITEM NO.	210	302	SP JOB CA0609
	ITEM	UNCLASSIFIED EXCAVATION	SELECT GRANULAR BACKFILL	RETAINING WALLS
	UNIT	CU. YD.	CU. YD.	SQ. FT.
Wall No. 3		1875	1148	3352
Wall No. 4		1173	1041	3218
TOTALS		3048	2189	6570

(1) Quantities are for estimating purposes and are subject to field measurement.

SHEET 4 OF 5
LAYOUT OF BRIDGE
NORMAN ROAD OVER I-40
HWY. 365 - I-430 (WIDENING) & I-430 INTCHNG. MOD. (F)
PULASKI COUNTY
ROUTE 40 SEC. 33
ARKANSAS STATE HIGHWAY COMMISSION
LITTLE ROCK, ARK.

STATE OF ARKANSAS LICENSED PROFESSIONAL ENGINEER No. 14058 SETH ROYANEY BRIDGE ENGINEER

DRAWN BY: DRG DATE: FEB. 2014 FILENAME: BCA0609x5_L4.dgn
CHECKED BY: SRY DATE: MAR. 2014 SCALE: AS SHOWN
DESIGNED BY: DRG DATE: FEB. 2014
BRIDGE NO. 07318 DRAWING NO. 55725

SRYancey 7/8/2014 8:44:12 AM
WORKSPACE: AHTD_Bridge
L:\ROW\JOB\7709 - I-40 at I-430 interchange Modifications\Drawings\BCA0609x2.L4 (Layout 4 of 5).dgn
REVISED DATE:

DATE REVISED	DATE FILMED	DATE REVISED	DATE FILMED	FED. ROAD DIST. NO.	STATE	FED. AID PROJ. NO.	SHEET NO.	TOTAL SHEETS
				6	ARK.			
				JOB NO.		CA0609	281	693
				(1) 07318		LAYOUT		55726

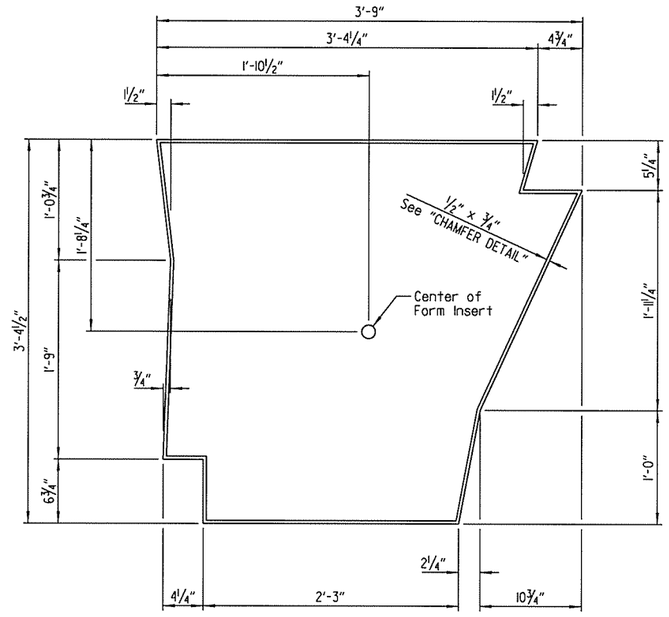

NOTE:
Use form insert on designated walls as noted on Dwg. No. 55724.

FORM INSERT DETAILS AT MSE WALL

Scale: 1½" = 1'-0"

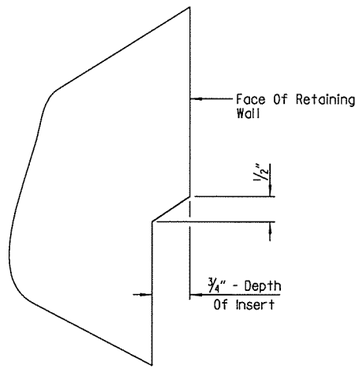

CHAMFER DETAIL

No Scale

NOTES:
Fabricate form insert as a one piece unit, without the use of splices, joints or glue.

Wash and clean multi-use form inserts before each use.

All work and materials for inserts shall be included in the unit price bid for the item "RETAINING WALLS".

Damaged or worn form inserts shall be replaced at the Contractor's expense.

The form shall be approved by the Engineer before its use.

Recessed image (including chamfers) of State of Arkansas insert shall be given a Class 3 Textured Coating Finish as specified in SP JOB NO. CA0609 "TEXTURED COATING FINISH."

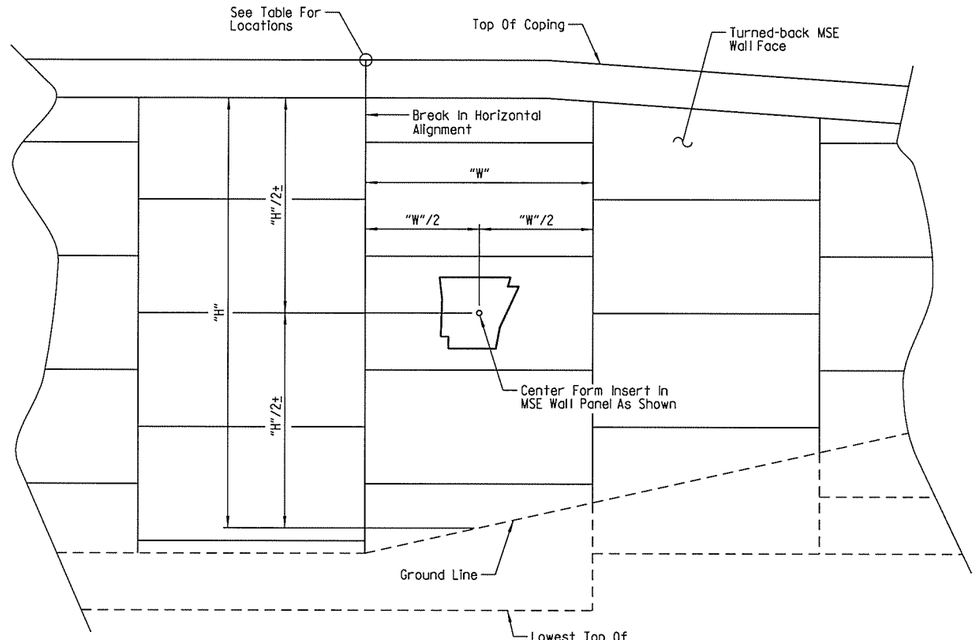

DEVELOPED ELEVATION AT MSE WALL

No Scale

LOCATION OF FORM INSERT	
Location	Station (1)
Retaining Wall 3	8209+77.43 And 8210+31.00
Retaining Wall 4	8209+43.93 And 8210+04.09

(1) Station shown for MSE Retaining Wall No. 3 are along CL I-40 Right Lanes, Station shown for MSE Retaining Wall No. 4 are along CL I-40 Left Lanes.

STATE OF ARKANSAS
LICENSED PROFESSIONAL ENGINEER
No. 14058
SETH R. YANCEY
7-18-14
BRIDGE ENGINEER

SHEET 5 OF 5
LAYOUT OF BRIDGE
NORMAN ROAD OVER I-40
HWY. 365 - I-430 (WIDENING) & I-430 INTCHNG. MOD. (F)
PULASKI COUNTY
ROUTE 40 SEC. 33
ARKANSAS STATE HIGHWAY COMMISSION
LITTLE ROCK, ARK.

DRAWN BY: CWT DATE: FEB. 2014 FILENAME: BCA0609x5_L5.dgn
CHECKED BY: SRY DATE: MAR. 2014 SCALE: AS SHOWN
DESIGNED BY: DRG DATE: FEB. 2014
BRIDGE NO. 07318 DRAWING NO. 55726

SRYancey 7/18/2014 8:44:12 AM
WORKSPACE: AHTD Bridge
L:\2014\14071709 - I-40 at I-430 Interchange Modifications\Drawings\BCA0609x2_L5 (Layout 5 of 5).dgn
REVISED DATE:

DATE REVISED	DATE FILMED	DATE REVISED	DATE FILMED	FED. ROAD DIST. NO.	STATE	FED. AID PROJ. NO.	SHEET NO.	TOTAL SHEETS
				6	ARK.			
				JOB NO.		CA0609	282	693
				(1) 07318		END BENT DETAILS		55727

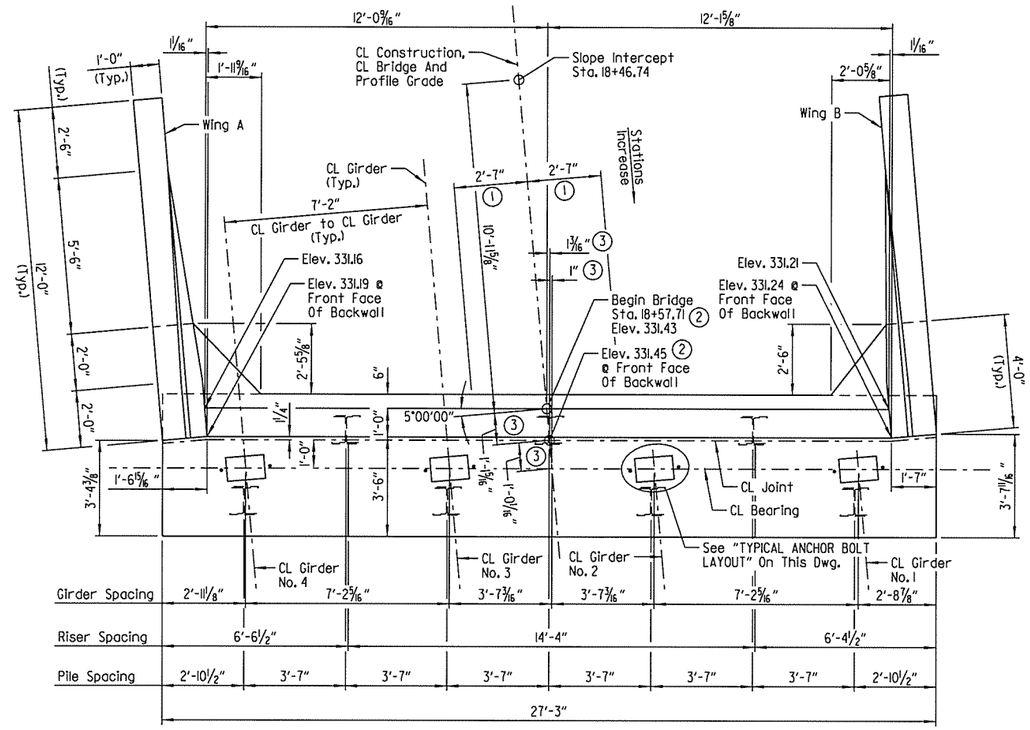

PLAN - END BENT NO. 1

Scale: 3/8" = 1'-0"

(1) See "ROUNDING DETAIL" On Dwg. No. 55733.

(2) Measured To Working Point, See "ROUNDING DETAIL" On Dwg. No. 55733.

(3) Measured To CL Joint

GENERAL NOTES

All concrete shall be Class "S" with a minimum 28 day compressive strength f'c = 3500 psi. Concrete shall be poured in the dry, and all exposed corners to be chamfered 3/4" unless otherwise noted.

All reinforcing steel shall conform to AASHTO M31 or M322, Type A, Gr. 60.

All piles shall be HP12x53 (AASHTO M270, Gr. 50).

No portion of the backwall shall be poured until the girders are in place.

Finish top of backwall to match the bridge deck.

Structural steel in end bents shall be AASHTO M270, Gr. 50 and shall be paid for as "STRUCTURAL STEEL IN PLATE GIRDER SPANS (AASHTO M270, GR. 50)". Structural Steel shall be cleaned and painted in accordance with Section 807. The color of the paint shall be Dark Brown and shall match Fed. Std. 595B, Color Chip No. 20108.

Top reinforcing bars in cap shall be properly placed to avoid damage or interference with anchor bolts or sheet metal sleeves.

For additional information, see layout.

Class 1 Protective Surface Treatment shall be applied to the top of backwall. Class 3 Textured Coating Finish shall be applied in accordance with SP JOB NO. CA0609 "TEXTURED COATING FINISH" and in accordance with Subsection 802.19. Textured Coating Finish shall not be applied on surfaces where Class 1 Protective Surface Treatment is applied.

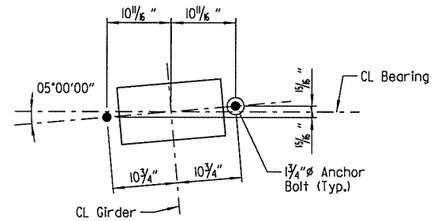

TYPICAL ANCHOR BOLT LAYOUT

Scale: 1" = 1'-0"

NOTE:
For details of elastomeric bearings, see Dwg. No. 55743.

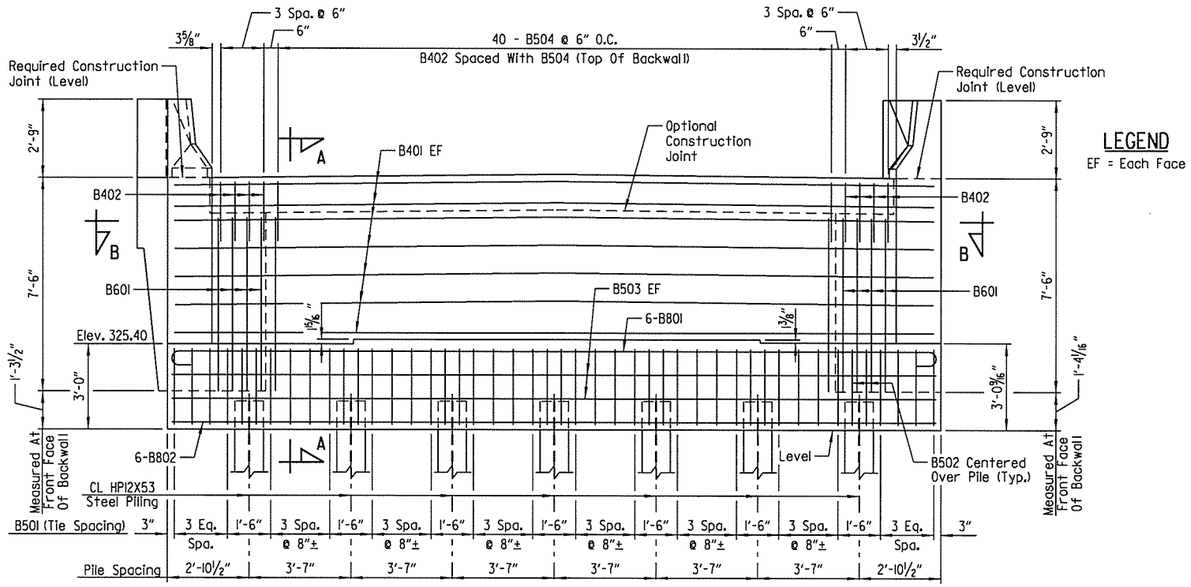

ELEVATION - END BENT NO. 1

(Looking Back)
Scale: 3/8" = 1'-0"

LEGEND

EF = Each Face

NOTE:
For "SECTION A-A", "SECTION B-B", "BAR LIST" & "BAR BENDING DIAGRAM", see Dwg. No. 55729.

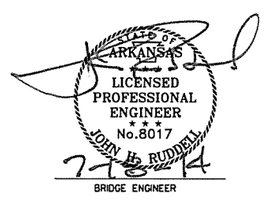

SHEET 1 OF 4
DETAILS OF END BENTS
NORMAN ROAD OVER I-40
PULASKI COUNTY
ROUTE 40 SEC. 33
ARKANSAS STATE HIGHWAY COMMISSION
LITTLE ROCK, ARK.

DRAWN BY: HEW DATE: FEB. 2014 FILENAME: BCA0609x5_BI.DGN
CHECKED BY: JES DATE: MAR. 2014 SCALE: AS SHOWN
DESIGNED BY: WMM DATE: FEB. 2014
BRIDGE NO. 07318 DRAWING NO. 55727

SRYancey 7/18/2014 8:44:43 AM
WORKSPACE: AHTD Bridge
L:\2014\1401709 - I-40 at I-430 Interchange Modifications\Drawings\BCA0609x2_BI\End Bent No. 1.dgn
REVISED DATE:

DATE REVISED	DATE FILMED	DATE REVISED	DATE FILMED	FED. ROAD DIST. NO.	STATE	FED. AID PROJ. NO.	SHEET NO.	TOTAL SHEETS
				6	ARK.			
				JOB NO.		CA0609	283	693
				(1) 07318		END BENT DETAILS		55728

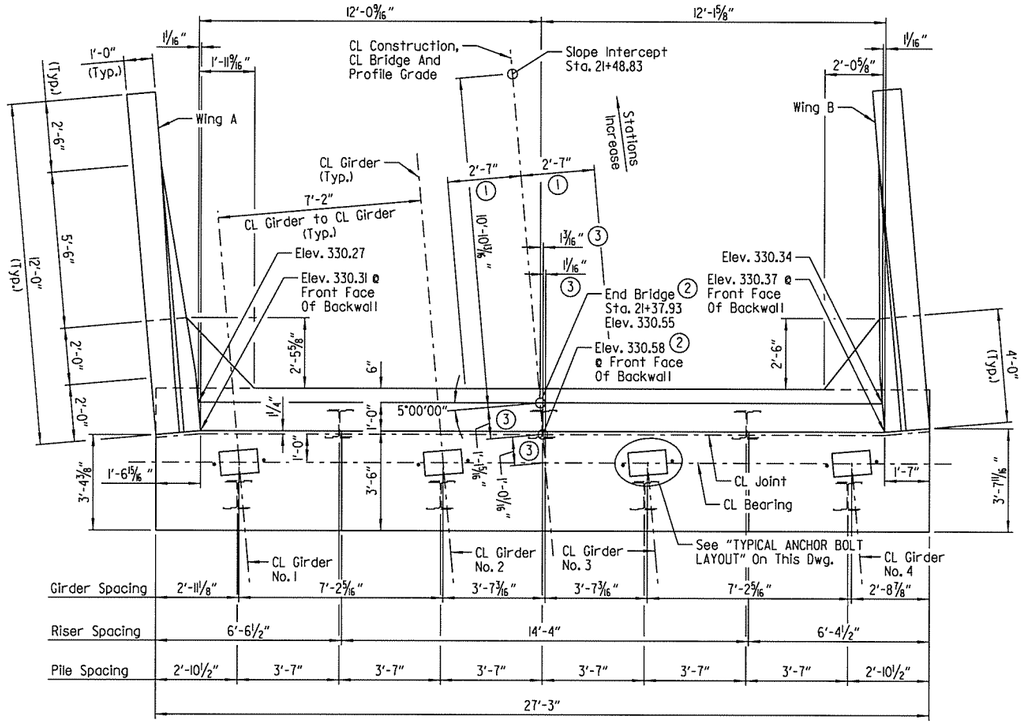

PLAN - END BENT NO. 3

Scale: 3/8" = 1'-0"

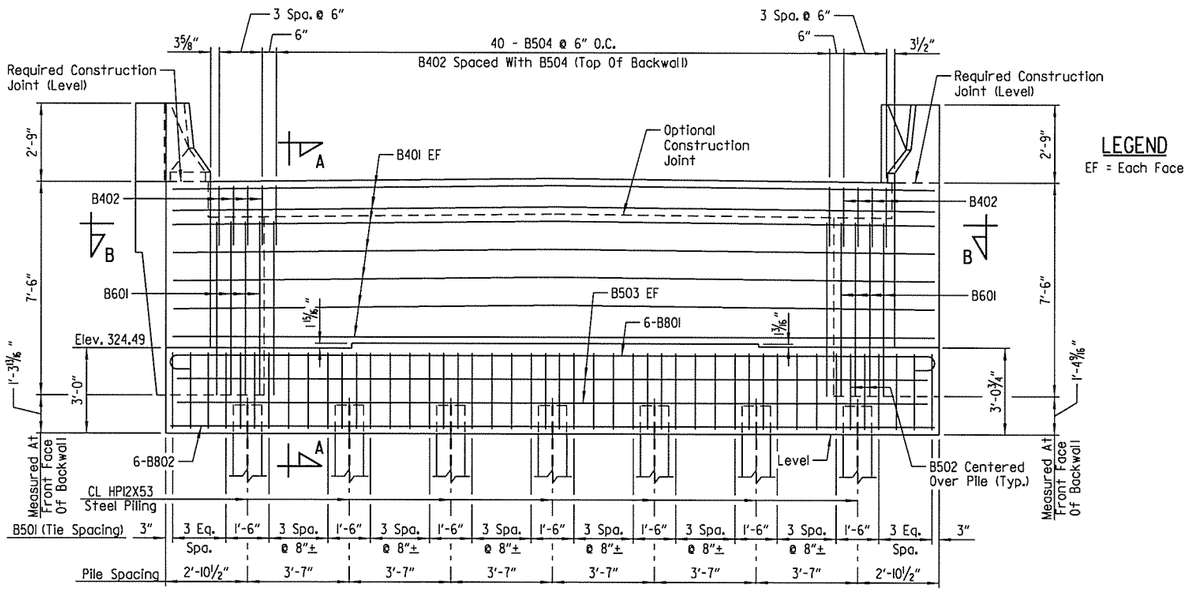

ELEVATION - END BENT NO. 3

(Looking Ahead)
Scale: 3/8" = 1'-0"

LEGEND

EF = Each Face

(1) See "ROUNDING DETAIL" On Dwg. No. 55733.

(2) Measured To Working Point, See "ROUNDING DETAIL" On Dwg. No. 55733.

(3) Measured To CL Joint

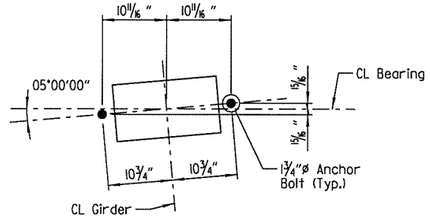

TYPICAL ANCHOR BOLT LAYOUT

Scale: 1" = 1'-0"

NOTE:
For details of elastomeric bearings, see Dwg. No. 55743.

NOTE:
For "GENERAL NOTES", See Dwg. No. 55727.

NOTE:
For "SECTION A-A", "SECTION B-B", "BAR LIST" & "BAR BENDING DIAGRAM", see Dwg. No. 55729.

STATE OF ARKANSAS
LICENSED PROFESSIONAL ENGINEER
No. 8017
JOHN H. RUDDELL
BRIDGE ENGINEER

SHEET 2 OF 4
DETAILS OF END BENTS
NORMAN ROAD OVER I-40
PULASKI COUNTY

ROUTE 40 SEC. 33

ARKANSAS STATE HIGHWAY COMMISSION

LITTLE ROCK, ARK.

DRAWN BY: HEW DATE: FEB. 2014 FILENAME: BCA0609x5_B2.DGN
CHECKED BY: JES DATE: MAR. 2014 SCALE: AS SHOWN
DESIGNED BY: WMM DATE: FEB. 2014
BRIDGE NO. 07318 DRAWING NO. 55728

SRYancey 7/18/2014 8:44:14 AM
WORKSPACE: AHTD Bridge
L:\20IN\10I709 - I-40 at I-430 Interchange Modifications\Drawings\BCA0609x2_B2 (End Bent No. 3).dgn
REVISED DATE:

DATE REVISED	DATE FILMED	DATE REVISED	DATE FILMED	FED. ROAD DIST. NO.	STATE	FED. AID PROJ. NO.	SHEET NO.	TOTAL SHEETS
				6	ARK.			
				JOB NO.		CA0609	284	693
				(1) 07318		END BENT DETAILS		55729

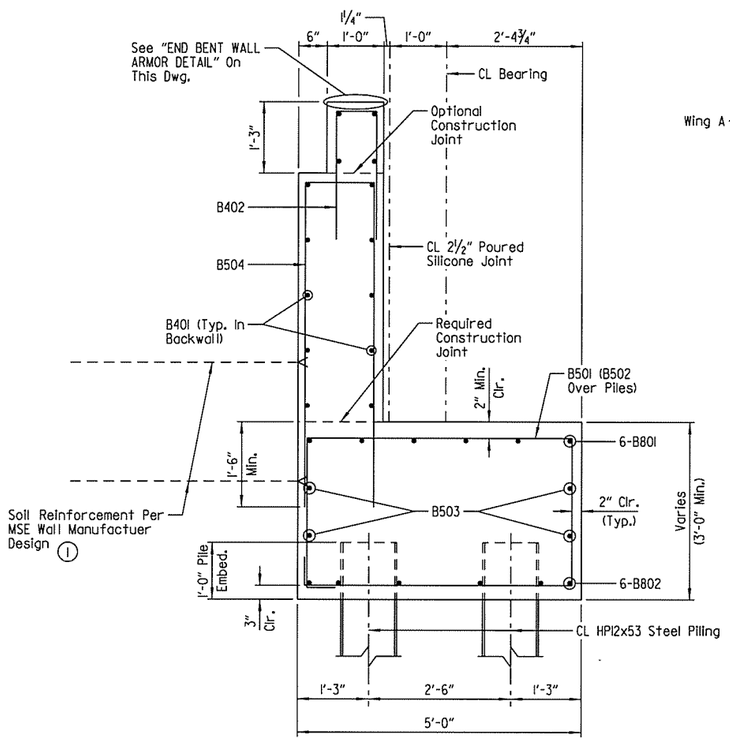

SECTION A-A
Scale: ¾" = 1'-0"

(1) Soil reinforcement shall be attached at the back of End Bents. Type, size and spacing of soil reinforcement shall be designed by the Contractor. The design details and computations shall accompany the wall design submittal for review by the Engineer. Cost shall be subidiary to item "RETAINING WALL". See SP JOB NO. CA0609 "RETAINING WALLS" and Drawing No. 55725 for additional information.

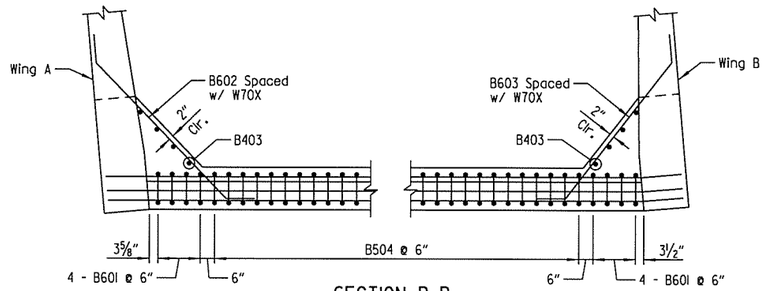

SECTION B-B
Scale: ⅜" = 1'-0"

NOTE:
The backwall above the required construction joint shall not be poured until the girders are in place. Backwall may be placed prior to placing the adjacent concrete deck only if the optional backwall construction joint is used. No heavy construction equipment shall be allowed directly behind the backwall until the concrete for the span has been completed. See "DETAILS FOR BLOCKING EXPANSION JOINT DEVICE" on Dwg. No. 55742 for additional information.

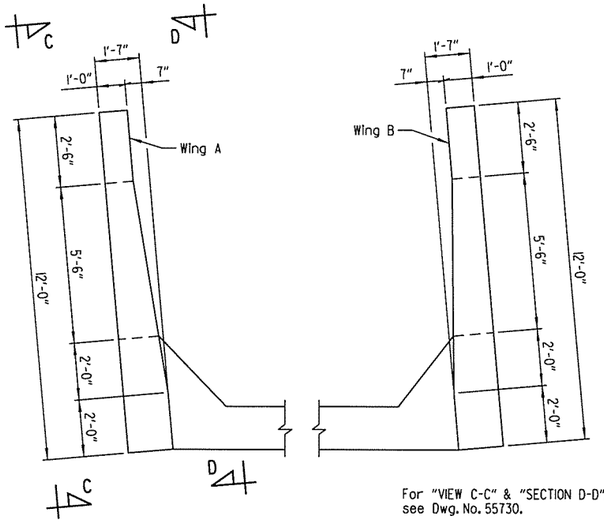

For "VIEW C-C" & "SECTION D-D", see Dwg. No. 55730.

PLAN OF RAIL
Scale: ⅜" = 1'-0"

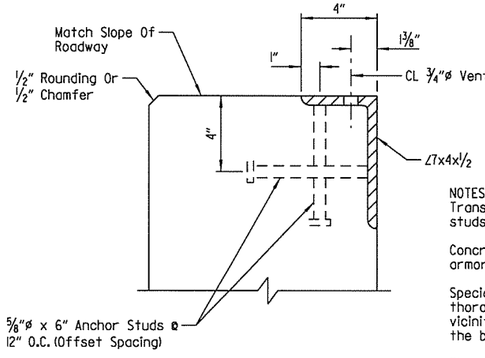

NOTES:
Transverse spacing between vertical anchor studs and vent holes shall be 6".

Concrete shall be hand packed under joint armor.

Special care shall be taken to properly and thoroughly consolidate the concrete in the vicinity of the expansion joint device in the backwall, see Section 802.09(a)(3).

The profile of the end bent wall armor shall be established based on the vertical curve in conjunction with the skew angle as shown on the layout.

END BENT WALL ARMOR DETAIL
No Scale

BAR LIST

MARK	NO. REQ'D	LENGTH	"A"	"B"	P.D.
B401	14	26'-11"			Str.
B402	48	4'-8"	8"	2'-1"	2"
B403	8	5'-11"			Str.
B501	32	15'-0"			2½"
B502	14	9'-7½"	4'-8"	2'-7"	2½"
B503	4	26'-11"			Str.
B504	40	13'-1½"	1'-2"	6'-1"	2½"
B601	8	13'-0"	1'-2"	6'-1"	4½"
B602	5	8'-7"			4½"
B603	5	8'-1"			4½"
B801	6	28'-9"			6"
B802	6	26'-11"			Str.
R401	10	3'-9"			2"
R402	10	3'-9"			2"
R403	12	11'-8"			Str.
R601	20	4'-11"			Str.
R602	6	5'-0"			Str.
W401	10	8'-9"	7'-7"		3"
W402	10	9'-11"			Str.
W403 To W407	2 Ea.	4'-3" To 8'-2"	3'-1" To 7'-0"		3"
W408 To W412	2 Ea.	5'-5" To 9'-3"			Str.
W413	3	10'-0"			2"
W414	3	9'-7"			2"
W701	16	11'-8"			Str.
W702	4	8'-5"			Str.
W703	4	7'-5"			Str.
W704	4	6'-5"			Str.
W705	4	5'-6"			Str.
W706	4	4'-8"			Str.
W707	4	13'-0"			5¼"

NOTE:
Number of bars shown are for one end bent only.

BAR BENDING DIAGRAM

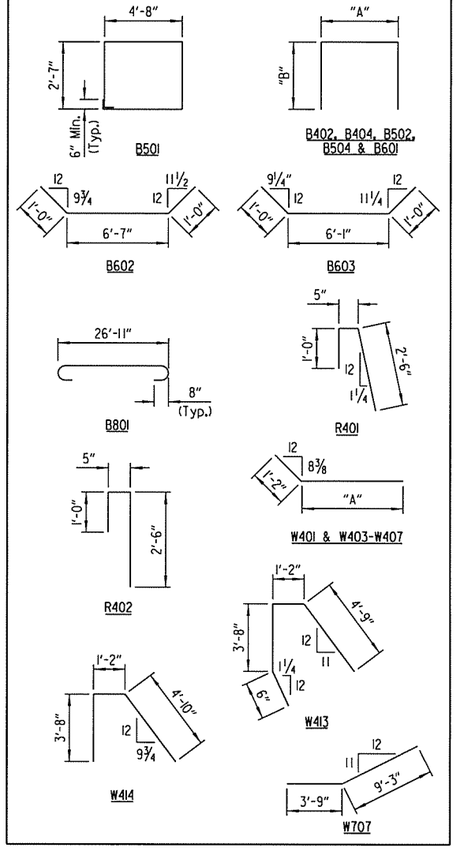

NOTE:
Dimensions of bars are out-to-out.

SRYancey 7/18/2014 8:44:14 AM
WORKSPACE: AHTD Bridge
L:\ZONING\07709 - I-40 at I-430 Interchange Modifications\Drawings\BCA0609x2.B3 (End Bent Details 1 of 2).dgn
REVISED DATE:

STATE OF ARKANSAS
LICENSED PROFESSIONAL ENGINEER
No. 8017
JOHN H. RUDDELL
BRIDGE ENGINEER

SHEET 3 OF 4
DETAILS OF END BENTS
NORMAN ROAD OVER I-40
PULASKI COUNTY
ROUTE 40 SEC. 33
ARKANSAS STATE HIGHWAY COMMISSION
LITTLE ROCK, ARK.

DRAWN BY: HEW DATE: FEB. 2014 FILENAME: BCA0609x5_B3.DGN
CHECKED BY: JES DATE: MAR. 2014 SCALE: AS SHOWN
DESIGNED BY: WMM DATE: FEB. 2014
BRIDGE NO. 07318 DRAWING NO. 55729

DATE REVISED	DATE FILMED	DATE REVISED	DATE FILMED	FED. ROAD DIST. NO.	STATE	FED. AID PROJ. NO.	SHEET NO.	TOTAL SHEETS
				6	ARK.			
				JOB NO.		CA0609	285	693
				(1)	07318	END BENT DETAILS		55730

* Form liner shall be a max. depth of 2" to provide a min. clearance of 1½" to parapet reinforcing. See SP JOB CA0609 "ARCHITECTURAL FINISH".

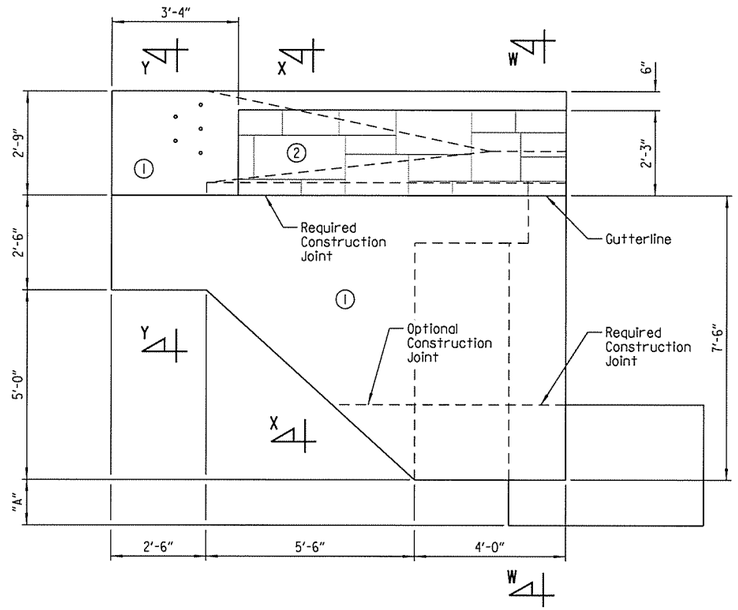

(1) Class 3 Textured Coating Finish (Color = Brown, Color Chip No. 33522)

(2) "Ashlar Stone" Form Liner & Class 3 Textured Coating Finish (Color = Brown, Color Chip No. 30219)

VIEW C-C
Scale: ½" = 1'-0"

NOTE:
A Class 3 Textured Coating Finish shall be applied to bridge surfaces as specified in SP JOB NO. CA0609 "TEXTURED COATING FINISH" and in accordance with Subsection 802.19.

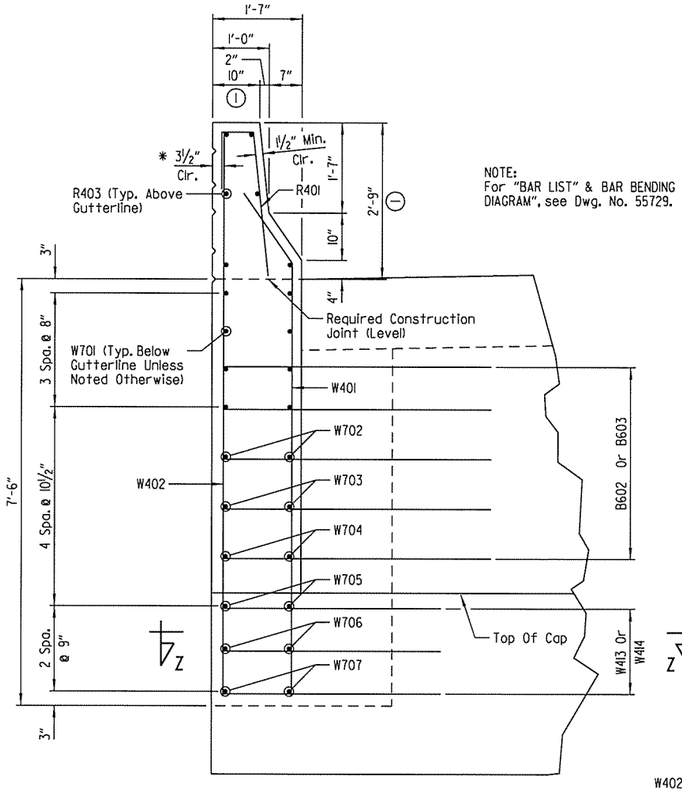

NOTE:
For "BAR LIST" & BAR BENDING DIAGRAM", see Dwg. No. 55729.

SECTION W-W
Scale: ¾" = 1'-0"

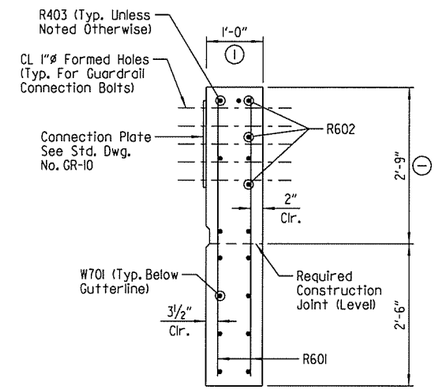

SECTION Y-Y
Scale: ¾" = 1'-0"

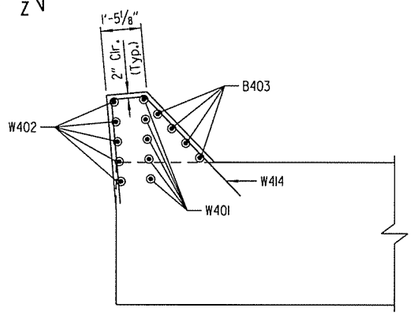

SECTION Z-Z (WING A)
Scale: ⅜" = 1'-0"

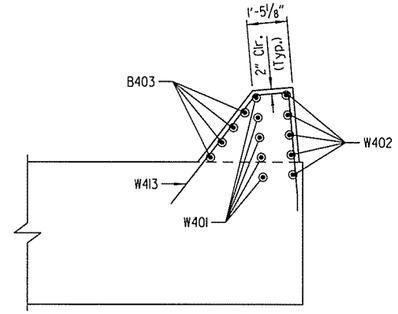

SECTION Z-Z (WING B)
Scale: ⅜" = 1'-0"

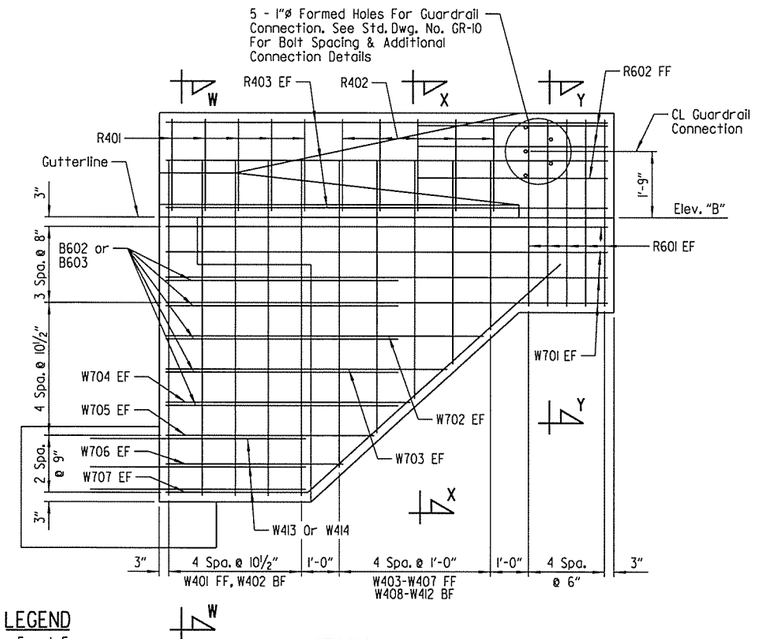

LEGEND
FF = Front Face
BF = Back Face
EF = Each Face

SECTION D-D
Scale: ½" = 1'-0"

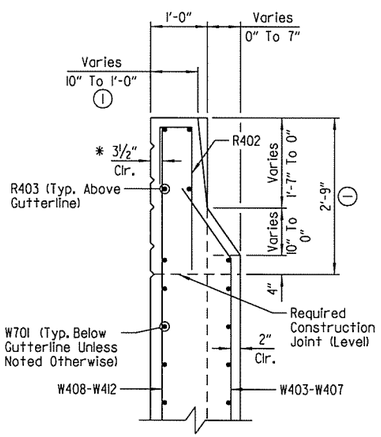

SECTION X-X
Scale: ¾" = 1'-0"

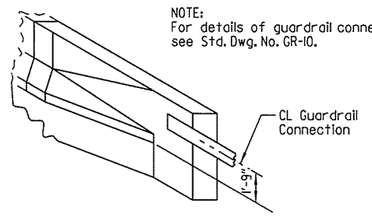

NOTE:
For details of guardrail connection, see Std. Dwg. No. GR-10.

3-D VIEW OF RAIL TRANSITION
No Scale

TABLE OF VARIABLES			
BENT NO.	WING	"A"	Elev. "B"
1	A	11'-1¼"	330.84
1	B	1'-0"	330.90
3	A	10'-11⅞"	329.88
3	B	11'-5⅞"	329.96

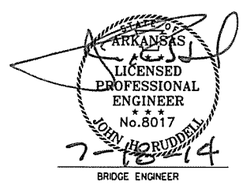

SHEET 4 OF 4
DETAILS OF END BENTS
NORMAN ROAD OVER I-40
PULASKI COUNTY
ROUTE 40 SEC. 33
ARKANSAS STATE HIGHWAY COMMISSION
LITTLE ROCK, ARK.

DRAWN BY: HEW DATE: FEB. 2014 FILENAME: BCA0609x5_B4.DGN
CHECKED BY: JES DATE: MAR. 2014 SCALE: AS SHOWN
DESIGNED BY: WMM DATE: FEB.2014
BRIDGE NO. 07318 DRAWING NO. 55730

SRYancey 7/18/2014 8:44:15 AM
WORKSPACE: AHTD Bridge
L:\CON\HDT709 - I-40 at I-430 Interchange Modifications\Drawings\BCA0609x2_B4 (End Bent Details 2 of 2).dgn
REVISED DATE:

DATE REVISED	DATE FILMED	DATE REVISED	DATE FILMED	FED. ROAD DIST. NO.	STATE	FED. AID PROJ. NO.	SHEET NO.	TOTAL SHEETS
				6	ARK.			
				JOB NO.		CA0609	286	693
				(1) 07318		INT. BENT DETAILS		55731

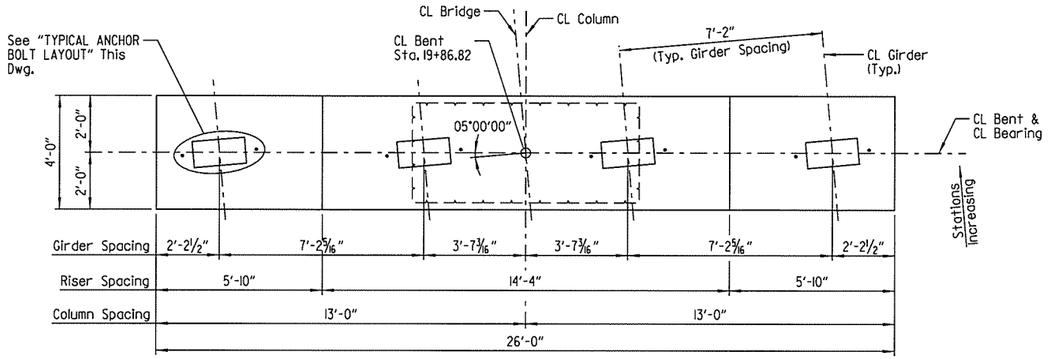

PLAN
Scale: ⅜" = 1'-0"

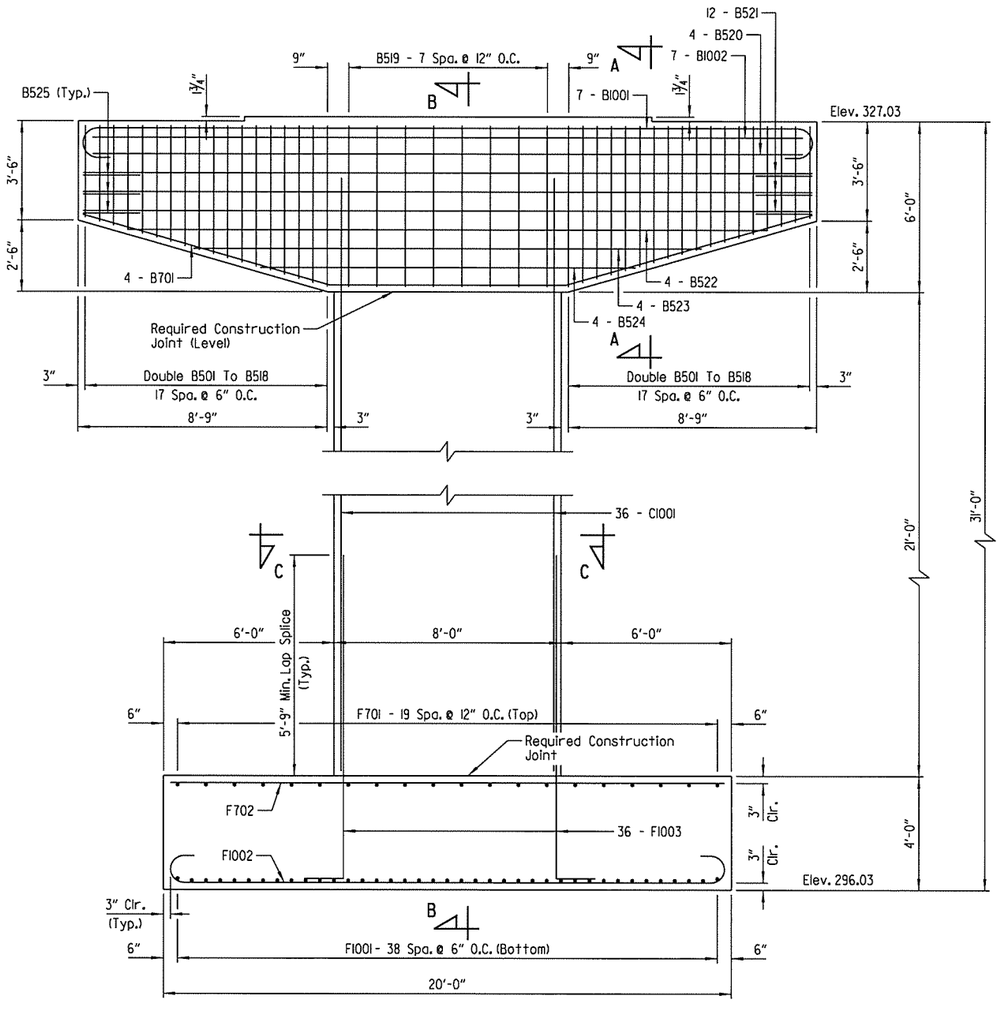

ELEVATION
(Looking Forward)
Scale: ⅜" = 1'-0"

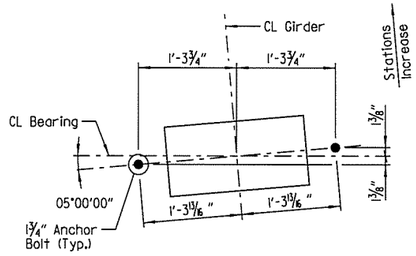

TYPICAL ANCHOR BOLT LAYOUT
Scale: 1" = 1'-0"

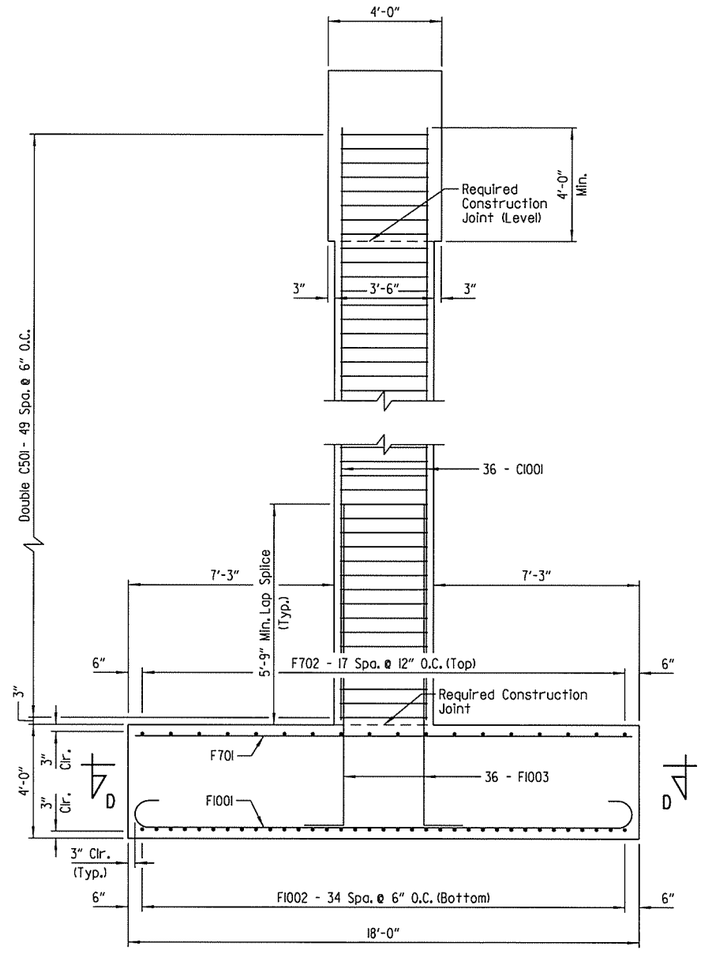

SECTION B-B
Scale: ⅜" = 1'-0"

NOTES:
For details of elastomeric bearing pads, see Dwg. No. 55743.

For "BAR LIST" & "BAR BENDING DIAGRAM", see Dwg. No. 55732.

For "SECTION A-A", "SECTION C-C", "SECTION D-D" & "GENERAL NOTES", see Dwg. No. 55732.

STATE OF ARKANSAS
LICENSED PROFESSIONAL ENGINEER
No. 8017
JOHN H. RUDDELL
7-8-14
BRIDGE ENGINEER

SHEET 1 OF 2
DETAILS OF INTERMEDIATE BENT
NORMAN ROAD OVER I-40
PULASKI COUNTY
ROUTE 40 SEC. 33

ARKANSAS STATE HIGHWAY COMMISSION
LITTLE ROCK, ARK.

DRAWN BY: DRG DATE: FEB. 2014 FILENAME: BCA0609x5_B5.DGN
CHECKED BY: JES DATE: MAR. 2014 SCALE: AS SHOWN
DESIGNED BY: DRG DATE: FEB. 2014
BRIDGE NO. 07318 DRAWING NO. 55731

SRYancey 7/8/2014 8:44:15 AM
WORKSPACE: AHTD Bridge
L:\2014\001709 - I-40 at I-430 Interchange Modifications\Drawings\BCA0609x2_B5 Int Bent No. 2.dgn
REVISED DATE:

DATE REVISED	DATE FILMED	DATE REVISED	DATE FILMED	FED. ROAD DIST. NO.	STATE	FED. AID PROJ. NO.	SHEET NO.	TOTAL SHEETS
				6	ARK.			
				JOB NO.		CA0609	287	693
				(1) 07318		INT. BENT DETAILS		55732

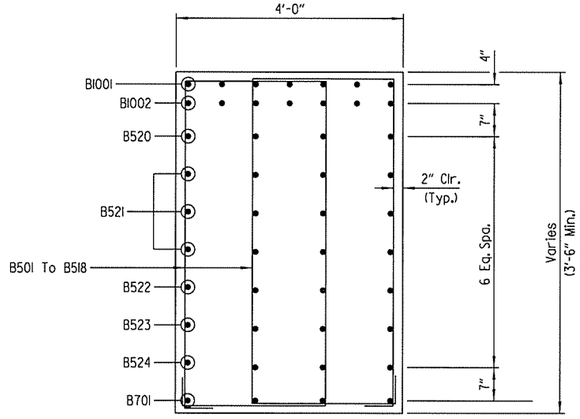

SECTION A-A
Scale: 3/4" = 1'-0"

* Form Liner Shall Be A Maximum Of 2" To Provide A Minimum Clearance Of 2". See SP JOB CA0609 "ARCHITECTURAL FINISH".

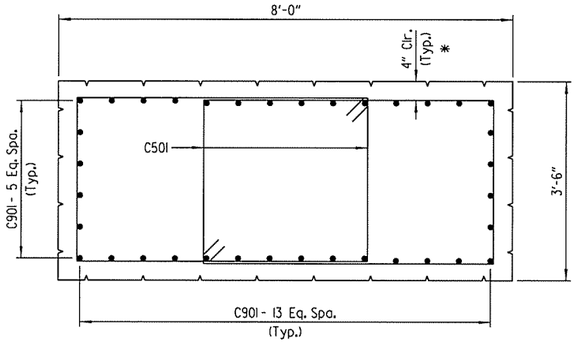

SECTION C-C
Scale: 3/4" = 1'-0"

BAR LIST

MARK	NO. REQ'D.	LENGTH	"A"	"B"	P.D.
B501 To B518	4 Each	11'-10" To 16'-10"	2'-6"	3'-2" To 5'-8"	2½"
B519	8	14'-9½"	3'-8"	5'-8"	2½"
B520	4	25'-0"			Str.
B521	12	25'-8"			Str.
B522	4	22'-6"			Str.
B523	4	17'-10"			Str.
B524	4	13'-2"			Str.
B525	6	7'-5½"	3'-8"	2'-0"	2½"
B701	4	26'-4"			5¼"
B1001	7	28'-6"	25'-8"	11½"	10"
B1002	7	25'-0"			Str.
C501	100	16'-8"			3¾"
C1001	36	25'-0"			Str.
F701	20	17'-6"			Str.
F702	18	19'-6"			Str.
F1001	39	20'-4"	17'-6"	11½"	10"
F1002	35	22'-4"	19'-6"	11½"	10"
F1003	36	12'-10"			10"

NOTE:
Dimensions of bars are out-to-out.

BAR BENDING DIAGRAM

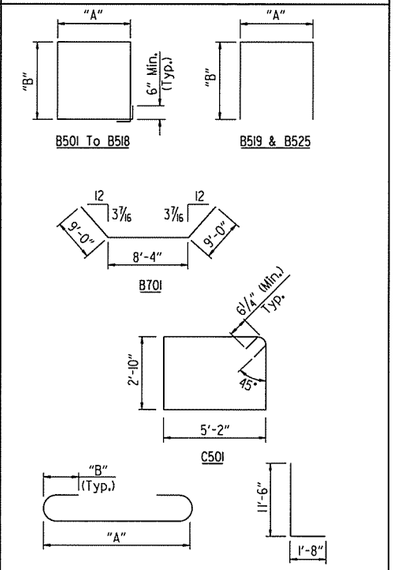

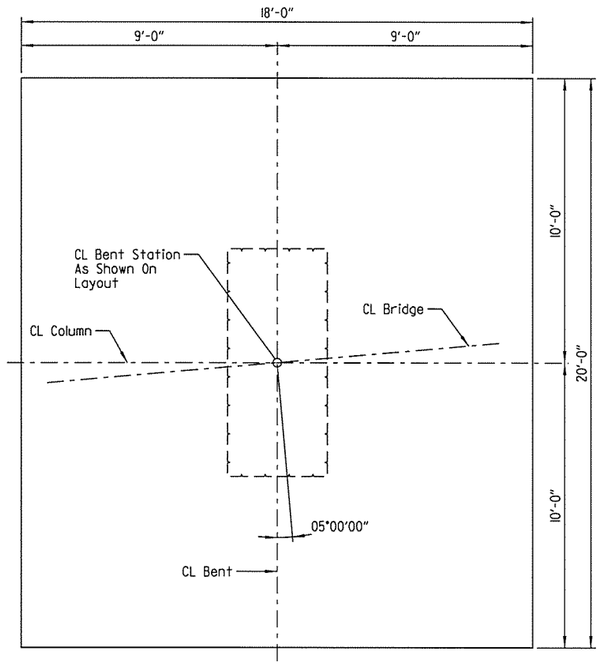

SECTION D-D
Scale: 3/8" = 1'-0"

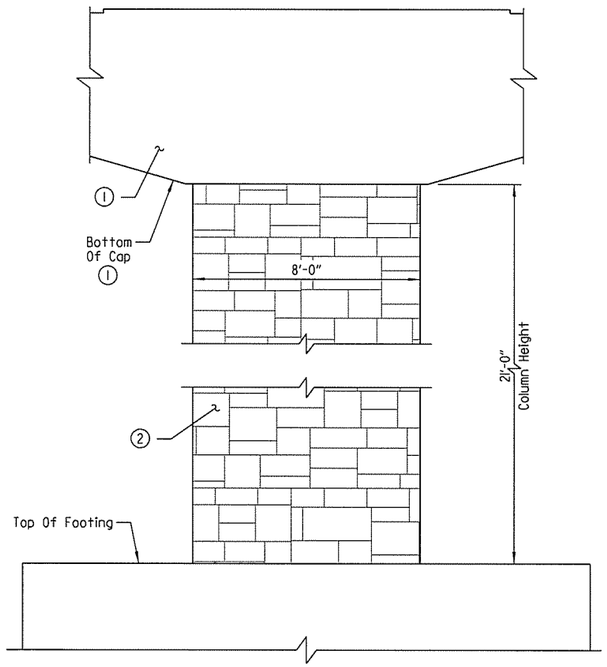

COLUMN

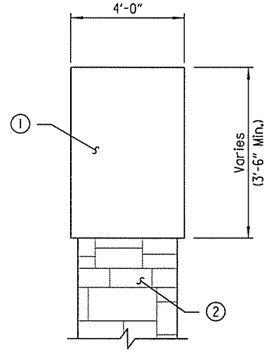

CAP - END VIEW

(1) Class 3 Textured Coating Finish
(Color = Brown, Color Chip No. 33522)

(2) "Ashlar Stone" Pattern &
Class 3 Textured Coating Finish
(Color = Brown, Color Chip No. 30219)

ASHLAR STONE PATTERN
Scale: 3/8" = 1'-0"

GENERAL NOTES

All concrete shall be Class "S" with a minimum 28-day compressive strength f'c = 3500 psi. Concrete shall be poured in the dry and all exposed corners shall be chamfered ¾" unless otherwise noted.

All reinforcing steel shall conform to AASHTO M31 or M322 Type A, Gr. 60.

Reinforcing bars in top of cap shall be properly placed to avoid interference with anchor bolts or sheet metal sleeves.

A Class 3 Texture Coating Finish shall be applied to bridge surfaces as specified in SP JOB NO. CA0609 "TEXTURED COATING FINISH" and in accordance with Subsection 802.19.

For additional information, see Layout.

STATE OF ARKANSAS
LICENSED PROFESSIONAL ENGINEER
No. 8017
JOHN H. RUDDELL
7-18-14
BRIDGE ENGINEER

SHEET 2 OF 2
DETAILS OF INTERMEDIATE BENT
NORMAN ROAD OVER I-40
PULASKI COUNTY
ROUTE 40 SEC. 33

ARKANSAS STATE HIGHWAY COMMISSION
LITTLE ROCK, ARK.

DRAWN BY: DRG DATE: FEB. 2014 FILENAME: BCA0609x5_B6.DGN
CHECKED BY: JES DATE: MAR. 2014 SCALE: AS SHOWN
DESIGNED BY: DRG DATE: FEB. 2014

BRIDGE NO. 07318 DRAWING NO. 55732

SRYancey 7/18/2014 8:44:16 AM
WORKSPACE: AHTD Bridge
L:\20INI\01709 - I-40 at I-430 Interchange Modifications\Drawings\BCA0609x2_B6 Int Bent No. 2 Details1.dgn
REVISED DATE:

DATE REVISED	DATE FILMED	DATE REVISED	DATE FILMED	FED. ROAD DIST. NO.	STATE	FED. AID PROJ. NO.	SHEET NO.	TOTAL SHEETS
				6	ARK.			
				JOB NO.		CA0609	288	693
				(1) 07318		278'-0" PL GIRDER UNIT		55733

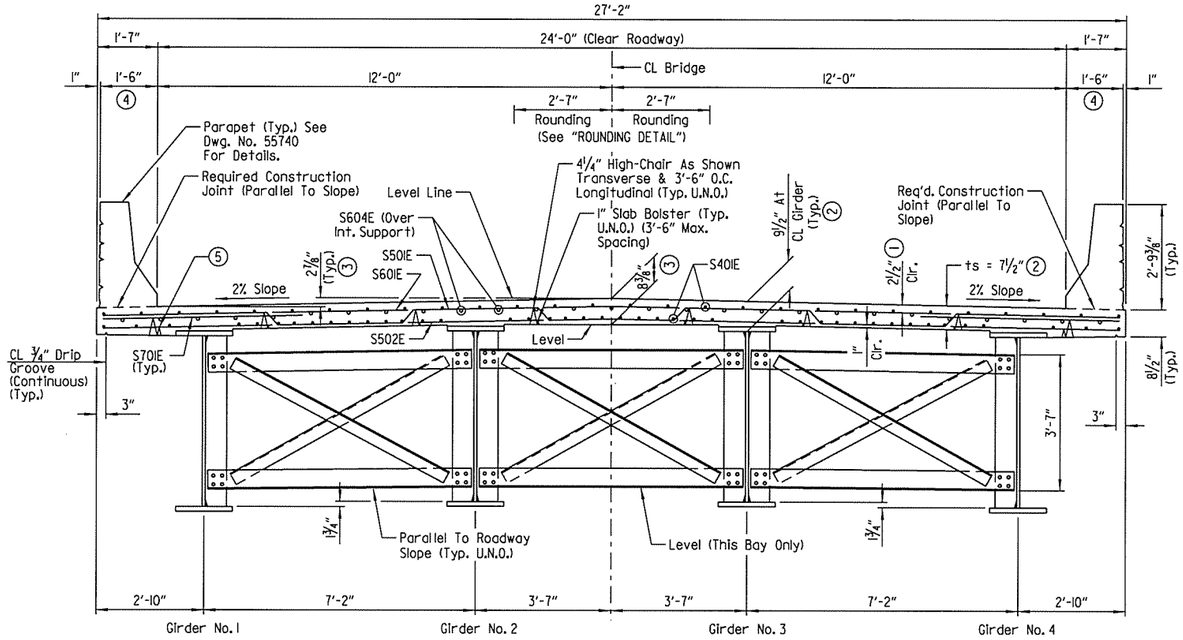

TYPICAL ROADWAY SECTION

(Looking Forward)
Scale: ½" = 1'-0"

SLAB REINFORCING:
Transverse: S501E @ 14" O.C. Bent Up Over Girder — Alternate
S601E @ 14" O.C. In Top — Alternate
S502E @ 14" O.C. In Bottom — Alternate
S701E @ 14" O.C. At Gutterline (Both Sides)
See "DETAIL B" On Dwg. No. 55738.

Longitudinal: S401E (Placed As Shown)
S604E (Placed As Shown Over Int. Supports)
See "PART REINFORCING PLAN & POURING SEQUENCE" On Dwg. Nos. 55738 & 55739.

NOTE:
At the Contractor's option, one epoxy coated #5 bar in the top and one epoxy coated #5 bar in the bottom may be substituted for each bar S501E. Payment will be based on the weight of bar S501E.

NOTE:
For "BAR BENDING DIAGRAM" & "BAR LIST", see Dwg. No. 55740.

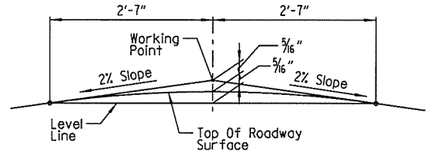

NOTE:
Working Point matches Theoretical Profile Grade.

ROUNDING DETAIL

No Scale

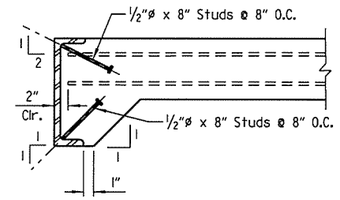

DETAIL OF ALTERNATE ANCHORS

No Scale

NOTE:
As an alternate to ⅝"ø studs, ½"ø x 8" studs spaced as shown may be used. Use weight of ⅝"ø stud as basis of measurement of structural steel.

(1) TOLERANCE:
Minus = ¼"
Plus = Amount of slab thickening used to meet slab thickness tolerance - See "ADJUSTMENT FOR SLAB THICKNESS TOLERANCE WHEN REMOVABLE DECK FORMING IS USED".

(2) See "ADJUSTMENT FOR SLAB THICKNESS TOLERANCE WHEN REMOVABLE DECK FORMING IS USED".

(3) Measured to Working Point, see "ROUNDING DETAIL".

(4) Widened Parapet to accomodate form liner. See Dwg. No. 55740 for parapet details.

(5) Height of Hi-chair and bolsters in overhang shall be set as necessary to maintain clear cover. 3'-6" max. spacing.

EXPANSION DEVICE:
Rdwy. Channel C15x33.9
Conn. Angles ∠ 8x4x½
Detail Device ⅛" High And Provide ¼" Shims Using 2 - 1/16" And 1 - ⅛" Plates

NOTE:
For "DETAIL OF POURED SILICONE JOINT", see Dwg. No. 55742.

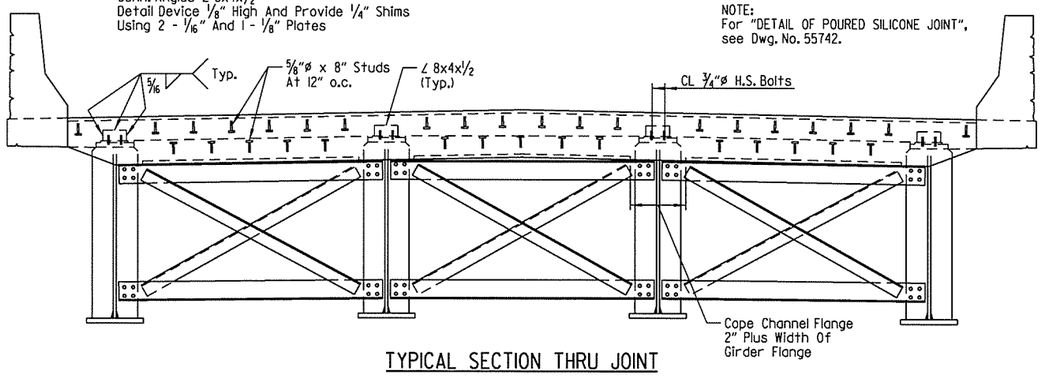

TYPICAL SECTION THRU JOINT

Looking Forward - Bent No. 1
Looking Back - Bent No. 3
No Scale

NOTE:
Class 1 Protective Surface Treatment shall be applied to the roadway surface. Class 3 Textured Coating Finish shall be applied to bridge surfaces as specified in SP JOB NO. CA0609 "TEXTURED COATING FINISH" and in accordance with Subsection 802.19. Textured Coating Finish shall not be applied on surfaces where Class 1 Protective Surface Treatment is applied.

LEGEND

U.N.O. = Unless Noted Otherwise

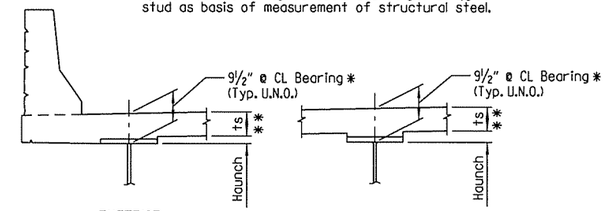

EXTERIOR INTERIOR

NOTE: ts = Slab thickness as shown on "TYPICAL ROADWAY SECTION".

* Measured to bottom of top flange.

** Tolerance when removable deck forming is used is + ½", - ¼". Haunch forming is required and shall be adjusted to maintain slab thickness tolerance.

ADJUSTMENT FOR SLAB THICKNESS TOLERANCE WHEN REMOVABLE DECK FORMING IS USED

No Scale

Haunch dimension may vary within the following limits to maintain the grade and slab thickness tolerance: Minimum - occurs when the top flange contacts the bottom reinforcing steel; Maximum - top flange thickness plus 1¾". No increase in concrete and structural steel quantities will be made to maintain tolerances.

Tolerances shown are applicable only when removable deck forming is used. See Std. Dwg. No. 55005 for tolerances when permanent steel bridge deck forms are used. Payment for "CLASS S(AE) CONCRETE-BRIDGE" shall be based on removable deck forming.

STATE OF ARKANSAS
LICENSED PROFESSIONAL ENGINEER
No. 14058
SETH R. YANCEY
7-18-2014
BRIDGE ENGINEER

SHEET 1 OF 10
DETAILS OF 278'-0" CONTINUOUS COMPOSITE PLATE GIRDER UNIT NORMAN ROAD OVER I-40 PULASKI COUNTY

ROUTE 40 SEC. 33

ARKANSAS STATE HIGHWAY COMMISSION

LITTLE ROCK, ARK.

DRAWN BY: HEW DATE: JAN. 2014 FILENAME: BCA0609x5_SI.DGN
CHECKED BY: JHR DATE: MAR. 2014 SCALE: AS SHOWN
DESIGNED BY: SRY DATE: JAN. 2014

BRIDGE NO. 07318 DRAWING NO. 55733

SRYancey 7/18/2014 8:44:17 AM
WORKSPACE: AHTD Bridge
L:\20IN\07709 - I-40 at I-430 Interchange Modifications\Drawings\BCA0609x2_SI(Typical Section).dgn
REVISED DATE:

DATE REVISED	DATE FILMED	DATE REVISED	DATE FILMED	FED. ROAD DIST. NO.	STATE	FED. AID PROJ. NO.	SHEET NO.	TOTAL SHEETS
				6	ARK.			
				JOB NO.		CA0609	289	693
				(1) 07318		278'-0" PL GIRDER UNIT		55734

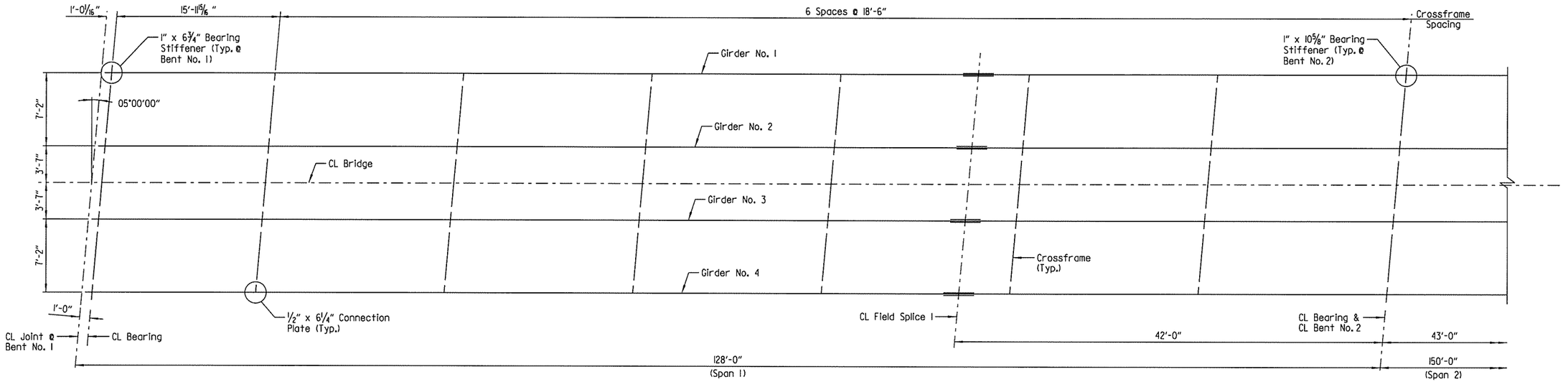

PART FRAMING PLAN
Scale: 3/16" = 1'-0"

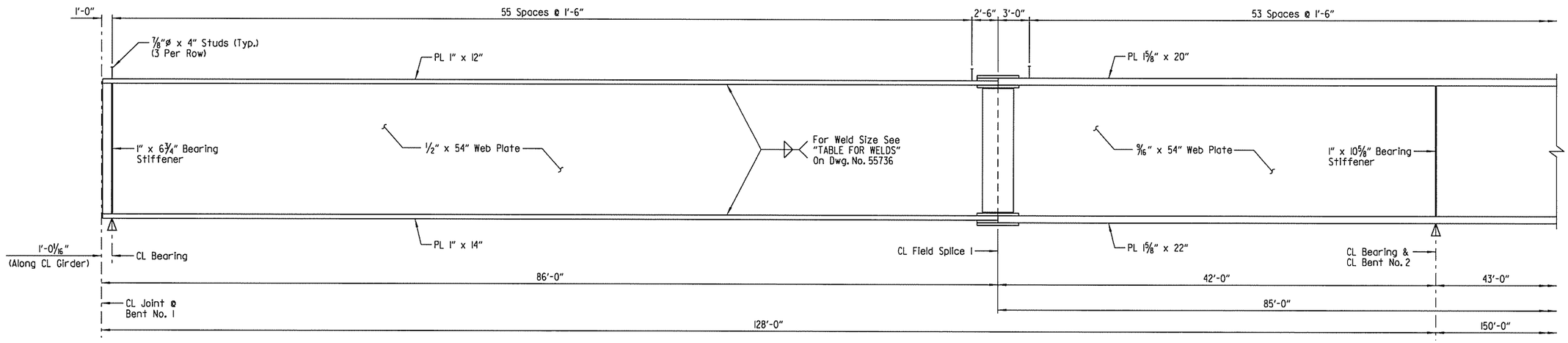

PART GIRDER ELEVATION
No Scale

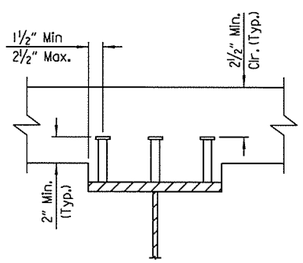

SHEAR CONNECTOR DETAIL
No Scale

Stud shear connectors shown shall be 7/8"ø x 4" long, granular flux filled, solid fluxed or equal, and automatically end welded to the flange in accordance with the recommendations of the Manufacturer. 3/4"ø studs may be used in place of the 7/8"ø studs shown, at the ratio of 1.361- 3/4"ø studs in place of one 7/8"ø stud. 7/8"ø studs will be used as basis for measurement of structural steel in shear connectors.

NOTES:
For "CONNECTION PLATE DETAIL", "BEARING STIFFENER DETAIL" and "CROSSFRAME DETAIL", see Dwg. No. 55736.

For bolted field splice details, see Dwg. No. 55737.

For "GENERAL NOTES" see Dwg. No. 55741.

STATE OF ARKANSAS
SETH ROYANCEY
LICENSED PROFESSIONAL ENGINEER
No. 14058
1-28-14
BRIDGE ENGINEER

SHEET 2 OF 10
DETAILS OF 278'-0" CONTINUOUS COMPOSITE PLATE GIRDER UNIT NORMAN ROAD OVER I-40 PULASKI COUNTY

ROUTE 40 SEC. 33

ARKANSAS STATE HIGHWAY COMMISSION
LITTLE ROCK, ARK.

DRAWN BY: HEW DATE: JAN. 2014 FILENAME: BCA0609x5_S2.DGN
CHECKED BY: JHR DATE: MAR. 2014 SCALE: AS SHOWN
DESIGNED BY: SRY DATE: JAN. 2014
BRIDGE NO. 07318 DRAWING NO. 55734

SRYancey 7/18/2014 8:44:17 AM
WORKSPACE: AHTD Bridge
L:\20#\10\1709 - I-40 at I-430 Interchange Modifications\Drawings\BCA0609x2_S2 (Framing Plan).dgn
REVISED DATE:

DATE REVISED	DATE FILMED	DATE REVISED	DATE FILMED

FED. ROAD DIST. NO.	STATE	FED. AID PROJ. NO.	SHEET NO.	TOTAL SHEETS
6	ARK.			
JOB NO.		CA0609	290	693
(1) 07318		278'-0" PL GIRDER UNIT		55735

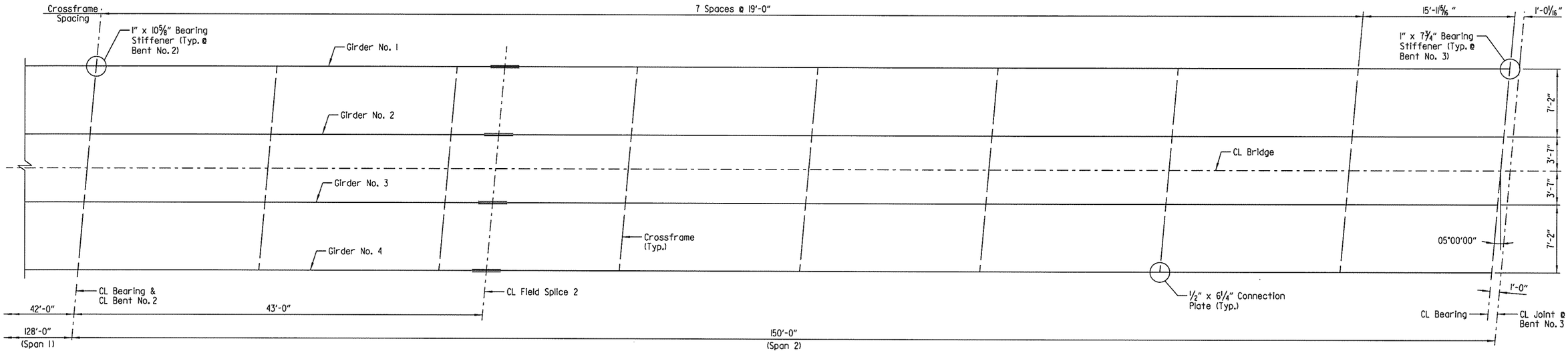

PART FRAMING PLAN
Scale: 3/16" = 1'-0"

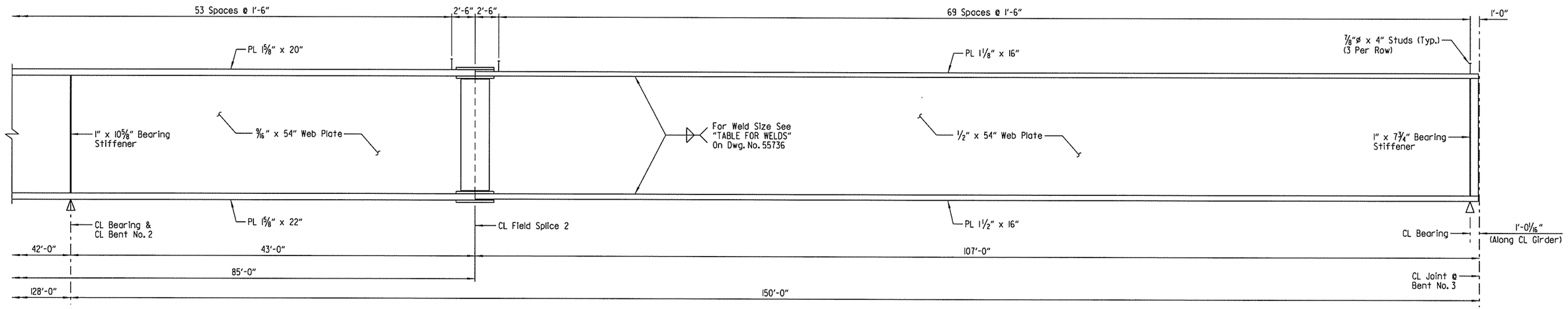

PART GIRDER ELEVATION
No Scale

NOTES:
For "SHEAR CONNECTOR DETAIL" see Dwg. No. 55734.

For "CONNECTION PLATE DETAIL", "BEARING STIFFENER DETAIL" and "CROSSFRAME DETAIL", see Dwg. No. 55736.

For bolted field splice details, see Dwg. No. 55737.

For "GENERAL NOTES" see Dwg. No. 55741.

STATE OF ARKANSAS
LICENSED PROFESSIONAL ENGINEER
No. 14058
SETH ROYANCEY
7-18-2014
BRIDGE ENGINEER

SHEET 3 OF 10
DETAILS OF 278'-0" CONTINUOUS COMPOSITE PLATE GIRDER UNIT NORMAN ROAD OVER I-40 PULASKI COUNTY

ROUTE 40 SEC. 33

ARKANSAS STATE HIGHWAY COMMISSION

LITTLE ROCK, ARK.

DRAWN BY: HEW DATE: JAN. 2014 FILENAME: BCA0609x5_S3.DGN
CHECKED BY: JHR DATE: MAR. 2014 SCALE: AS SHOWN
DESIGNED BY: SRY DATE: JAN. 2014
BRIDGE NO. 07318 DRAWING NO. 55735

SRYancey 7/18/2014 8:44:18 AM
WORKSPACE: AHTD Bridge
L:\2014\07709 - I-40 at I-430 Interchange Modifications\Drawings\BCA0609x2_S3 (Framing Plan).dgn
REVISED DATE:

DATE REVISED	DATE FILMED	DATE REVISED	DATE FILMED	FED. ROAD DIST. NO.	STATE	FED. AID PROJ. NO.	SHEET NO.	TOTAL SHEETS
				6	ARK.			
				JOB NO.		CA0609	291	693
				① 07318		278'-0" PL GIRDER UNIT		55736

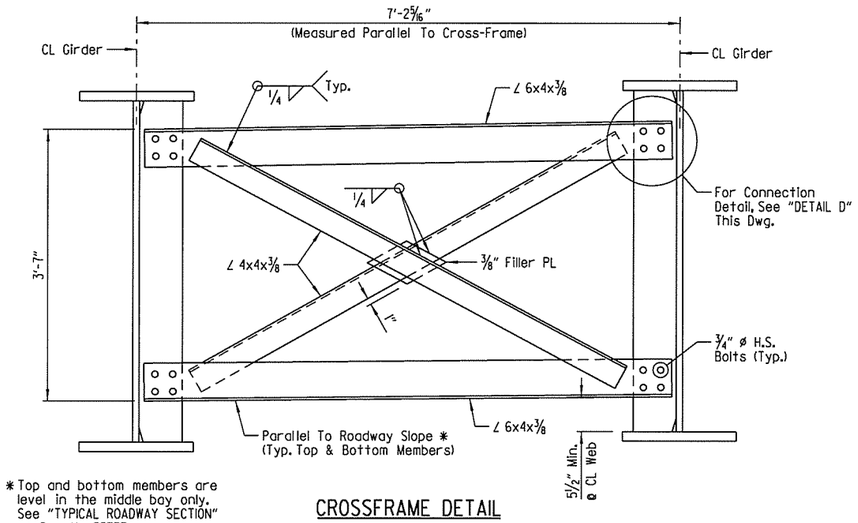

* Top and bottom members are level in the middle bay only. See "TYPICAL ROADWAY SECTION" on Dwg. No. 55733.

CROSSFRAME DETAIL

Scale: 1" = 1'-0"

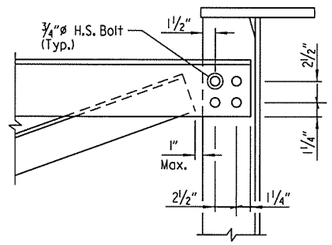

DETAIL D

Scale: 1 1/2" = 1'-0"

NOTES:

For "GENERAL NOTES" see Dwg. No. 55741.

All structural steel, including girders, crossframes, bearing stiffener plates and connection plates, shall be AASHTO M270 Gr. 50.

TABLE FOR WELDS		
Material Thickness Of Thicker Part Joined (Inches)	Minimum Size Of Fillet Weld (Inches)	Single Pass Weld Must Be Used
To 3/4" Inclusive	1/4"	
Over 3/4"	5/16"	

NOTE:
When a fillet weld size, as shown on the plans, is larger than the minimum, the first pass shall be that specified for minimum size of fillet weld.

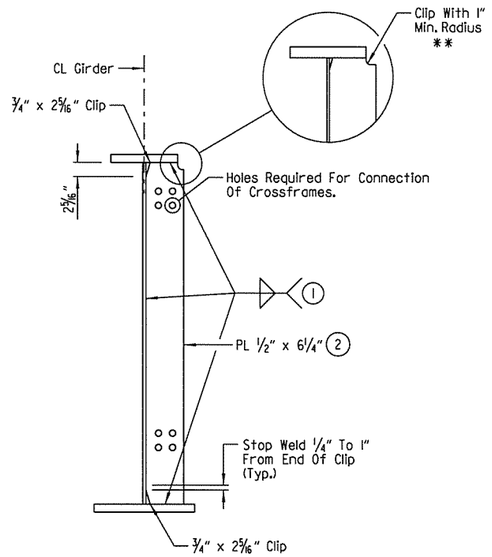

CONNECTION PLATE DETAIL

Scale: 1" = 1'-0"

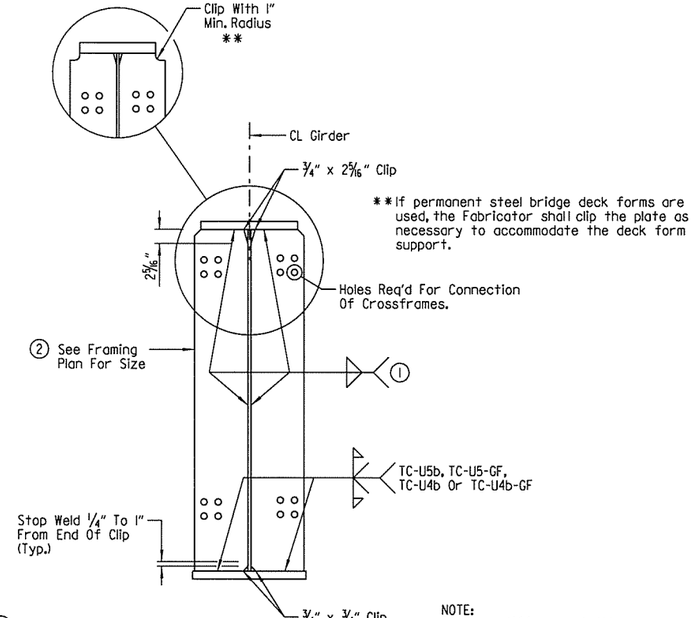

① See "TABLE FOR WELDS" on this sheet for min. weld size.

② Place Connection Plates And Bearing Stiffeners Parallel To Skew.

NOTE:
Bearing stiffeners shall be fabricated to be plumb in their final positions.

BEARING STIFFENER DETAIL

Scale: 1" = 1'-0"

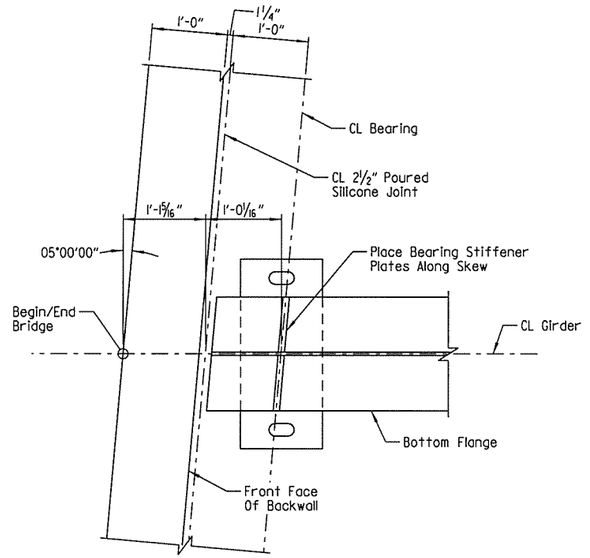

BEARING @ END BENT

Scale: 1" = 1'-0"

STATE OF ARKANSAS
LICENSED PROFESSIONAL ENGINEER
No. 14058
SETH R. YANCEY
7-18-14
BRIDGE ENGINEER

SHEET 4 OF 10
DETAILS OF 278'-0" CONTINUOUS COMPOSITE PLATE GIRDER UNIT
NORMAN ROAD OVER I-40
PULASKI COUNTY

ROUTE 40 SEC. 33

ARKANSAS STATE HIGHWAY COMMISSION

LITTLE ROCK, ARK.

DRAWN BY: HEW DATE: JAN. 2014 FILENAME: BCA0609x5_S4.DGN
CHECKED BY: JHR DATE: MAR. 2014 SCALE: AS SHOWN
DESIGNED BY: SRY DATE: JAN. 2014

BRIDGE NO. 07318 DRAWING NO. 55736

SRYancey 7/18/2014 8:44:18 AM
WORKSPACE: AHTD_Bridge
L:\ROW\NOT\09 - I-430 at I-430 Interchange Modifications\Drawings\BCA0609x2_S4 (Crossframe Details).dgn
REVISED DATE:

DATE REVISED	DATE FILMED	DATE REVISED	DATE FILMED	FED. ROAD DIST. NO.	STATE	FED. AID PROJ. NO.	SHEET NO.	TOTAL SHEETS
				6	ARK.			
				JOB NO.		CA0609	292	693
				(1) 07318		278'-0" PL GIRDER UNIT		55737

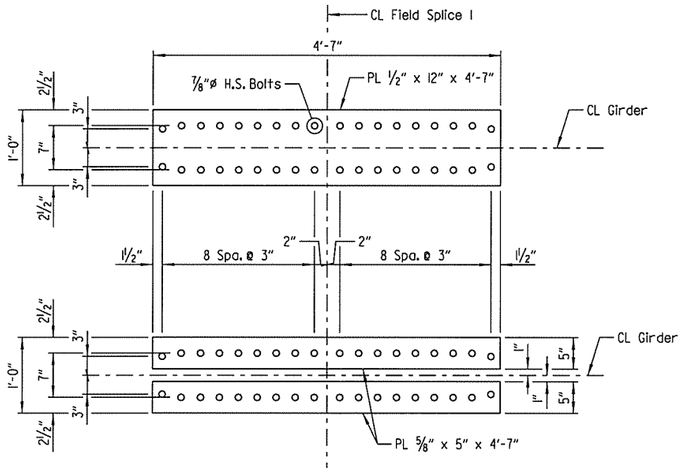

TOP FLANGE SPLICE - FIELD SPLICE 1

Scale: 1" = 1'-0"

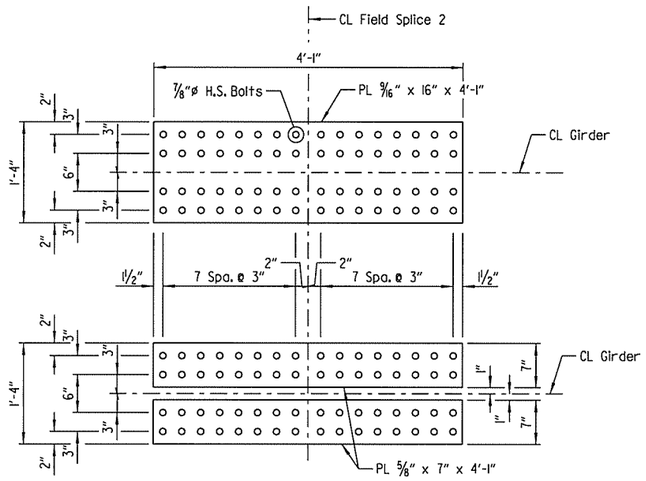

TOP FLANGE SPLICE - FIELD SPLICE 2

Scale: 1" = 1'-0"

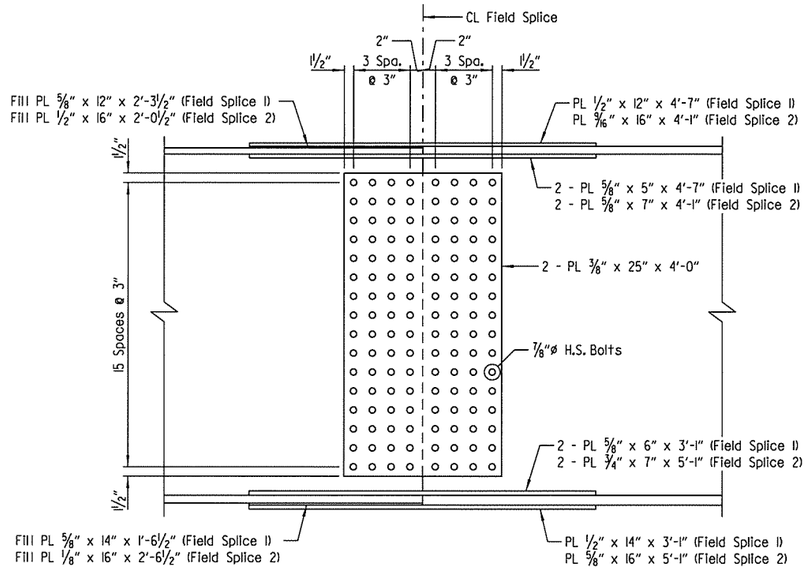

ELEVATION OF FIELD SPLICE

Scale: 1" = 1'-0"

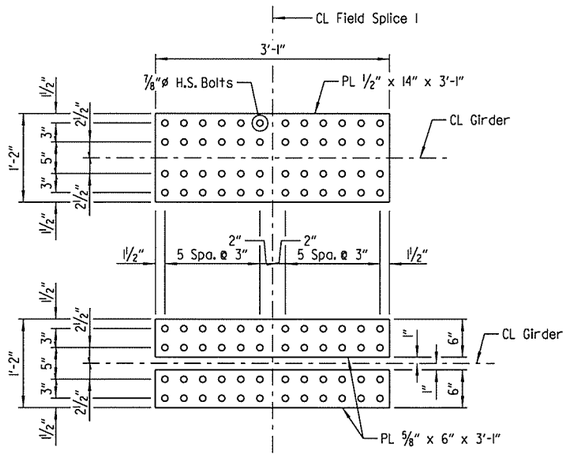

BOTTOM FLANGE SPLICE - FIELD SPLICE 1

Scale: 1" = 1'-0"

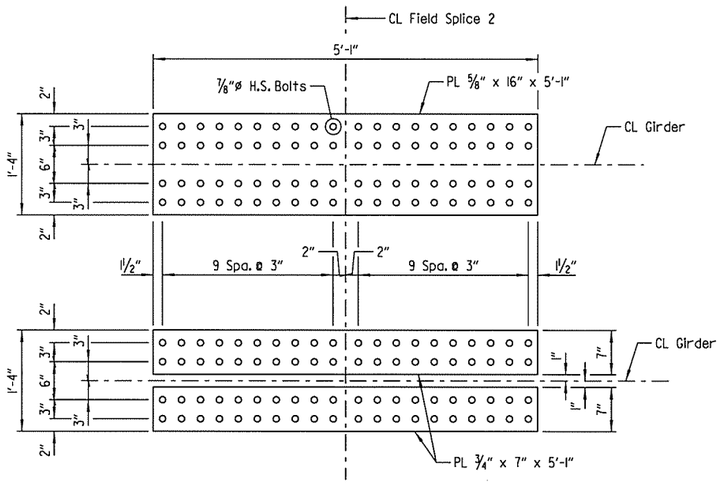

BOTTOM FLANGE SPLICE - FIELD SPLICE 2

Scale: 1" = 1'-0"

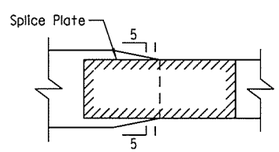

Plan - Unequal Width (Flange)

BOTTOM FLANGE TRANSITION

No Scale

NOTES:
All field splice bolts shall be 7/8"ø H.S. bolts.

All holes for field splice bolts shall be 15/16 "ø.

All field splice plates shall be AASHTO M270, Gr. 50 steel.

Bolted field splices shown may be eliminated or shop welded splices may be substituted with approval of the Engineer. Payment will be made on the basis of the plan quantities.

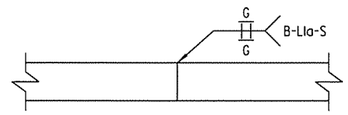

Equal Thickness (Web)

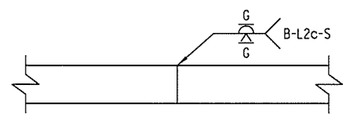

Equal Thickness (Flange)

DETAILS OF WELDED SPLICES

No Scale

SHEET 5 OF 10
DETAILS OF 278'-0" CONTINUOUS COMPOSITE PLATE GIRDER UNIT
NORMAN ROAD OVER I-40
PULASKI COUNTY
ROUTE 40 SEC. 33

ARKANSAS STATE HIGHWAY COMMISSION
LITTLE ROCK, ARK.

DRAWN BY: HEW DATE: JAN. 2014 FILENAME: BCA0609x5_S5.DGN
CHECKED BY: JHR DATE: MAR. 2014 SCALE: AS SHOWN
DESIGNED BY: SRY DATE: JAN. 2014
BRIDGE NO. 07318 DRAWING NO. 55737

STATE OF ARKANSAS
LICENSED PROFESSIONAL ENGINEER
No. 14058
SETH R. YANCEY
7/8/14
BRIDGE ENGINEER

SRYancey 7/8/2014 8:44:19 AM
W:\Design\Projects_AHTD Bridge Projects\07318 I-430 Interchange Modifications\Drawings\BCA0609x2_S5 (Splice Details).dgn
REVISED DATE:

DATE REVISED	DATE FILMED	DATE REVISED	DATE FILMED	FED. ROAD DIST. NO.	STATE	FED. AID PROJ. NO.	SHEET NO.	TOTAL SHEETS
				6	ARK.			
				JOB NO.		CA0609	293	693
				(1) 07318		278'-0" PL GIRDER UNIT		55738

(1) Parapet joints designated with symbol (F) shall be stopped 4" from top of slab. All other parapet joints with symbol (P) shall be partial depth joints stopped 1'-2" from top of slab.

* Refer to "TYPICAL ROADWAY SECTION" on Dwg. No. 55733 for placement

** Pouring Sequence Construction Joint

*** Required Slab Joint

NOTE:
Required slab joints and pouring sequence joints shall align with the parapet open joints at the gutterline.

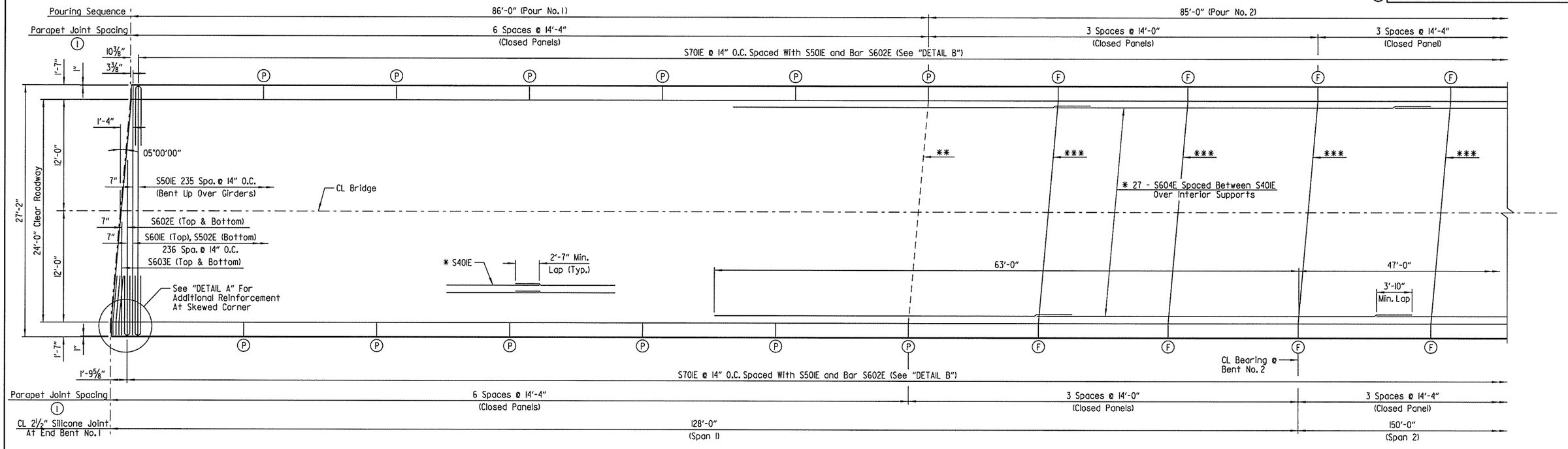

PART REINFORCING PLAN & POURING SEQUENCE

Scale: 3/16" = 1'-0"

NOTE:
Pours with the same number may be placed simultaneously or separately. All pours (1) must be placed before pour (2) can be placed. 48 hours shall elapse before the end of a pour and the start of the next pour. 72 hours shall elapse between the end of a pour and the start of an adjacent pour. 72 hours shall elapse between the completion of the entire deck and the pouring of the parapet. Any railing pours made before the entire slab unit has been placed must be approved by the Engineer.

The Contractor must obtain approval from the Engineer for any deviations from the pouring sequence shown.

Concrete in bridge superstructure shall be consolidated for the entire pour before any concrete has taken its initial set. This may require the use of a retarding agent.

NOTE:
See Dwg. No. 55740 for parapet reinforcing details.

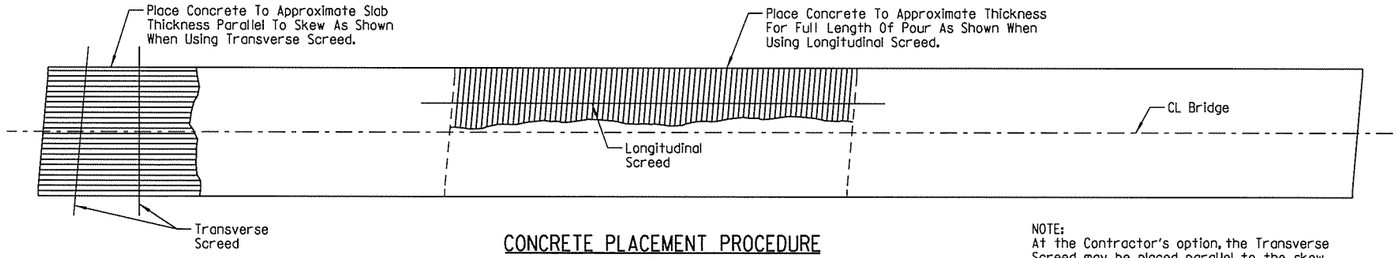

CONCRETE PLACEMENT PROCEDURE
No Scale

NOTE:
At the Contractor's option, the Transverse Screed may be placed parallel to the skew or perpendicular to CL Bridge.

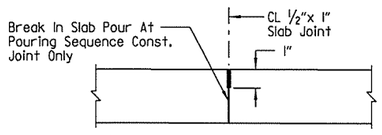

The 1/2" x 1" Poured Joint Sealer (Type 3 or 4) in slab shall conform to Subsection 501.02 (h) and 501.05 (j). Backer Rod filler will not be required. The Poured Joint Sealer shall be paid for as "CLASS S(AE) CONCRETE-BRIDGE". Slab joints shall extend to the outside edge of the deck slab. Slab joints shall be installed before the parapet railing is poured. If slab joints are to be sawed, they shall be sawed as soon as the concrete has sufficiently set to allow sawing of the joint without damage to the slab. Slab joints shall be placed at all pouring sequence construction joints and required slab joint locations. The joint sealer shall extend across the deck from gutterline to gutterline.

SLAB JOINT DETAIL
No Scale

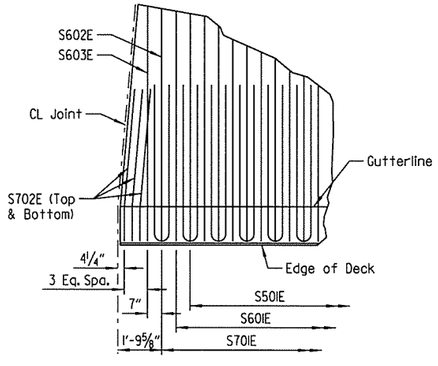

DETAIL A
No Scale

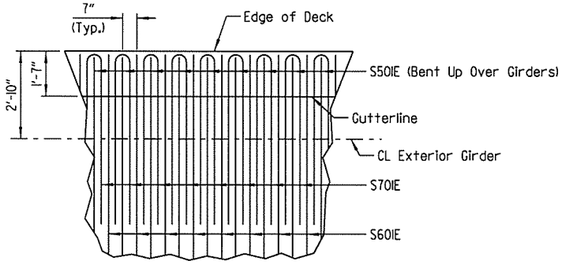

DETAIL B
No Scale

STATE OF ARKANSAS
LICENSED PROFESSIONAL ENGINEER
No. 14038
SETH R. YANCEY
BRIDGE ENGINEER

SHEET 6 OF 10
DETAILS OF 278'-0" CONTINUOUS COMPOSITE PLATE GIRDER UNIT
NORMAN ROAD OVER I-40
PULASKI COUNTY
ROUTE 40 SEC. 33

ARKANSAS STATE HIGHWAY COMMISSION
LITTLE ROCK, ARK.

DRAWN BY: HEW DATE: JAN. 2014 FILENAME: BCA0609x5_S6.DGN
CHECKED BY: JHR DATE: MAR. 2014 SCALE: AS SHOWN
DESIGNED BY: SRY DATE: JAN. 2014
BRIDGE NO. 07318 DRAWING NO. 55738

SRYancey 7/18/2014 8:44:26 AM
WORKSPACE: AHTD Bridge
L:\20IN\NOI709 - I-430 Interchange Modifications\Drawings\BCA0609x2.56 (Slab Plan).dgn
REVISED DATE:

DATE REVISED	DATE FILMED	DATE REVISED	DATE FILMED	FED. ROAD DIST. NO.	STATE	FED. AID PROJ. NO.	SHEET NO.	TOTAL SHEETS
				6	ARK.			
				JOB NO.		CA0609	294	693
				(1) 07318		278'-0" PL GIRDER UNIT		55739

(1) Parapet joints designated with symbol (F) shall be stopped 4" from top of slab. All other parapet joints with symbol (P) shall be partial depth joints stopped 1'-2" from top of slab.

* Refer to "TYPICAL ROADWAY SECTION" on Dwg. No. 55733 for placement

** Pouring Sequence Construction Joint

*** Required Slab Joint

NOTE:
Required slab joints and pouring sequence joints shall align with the parapet open joints at the gutterline.

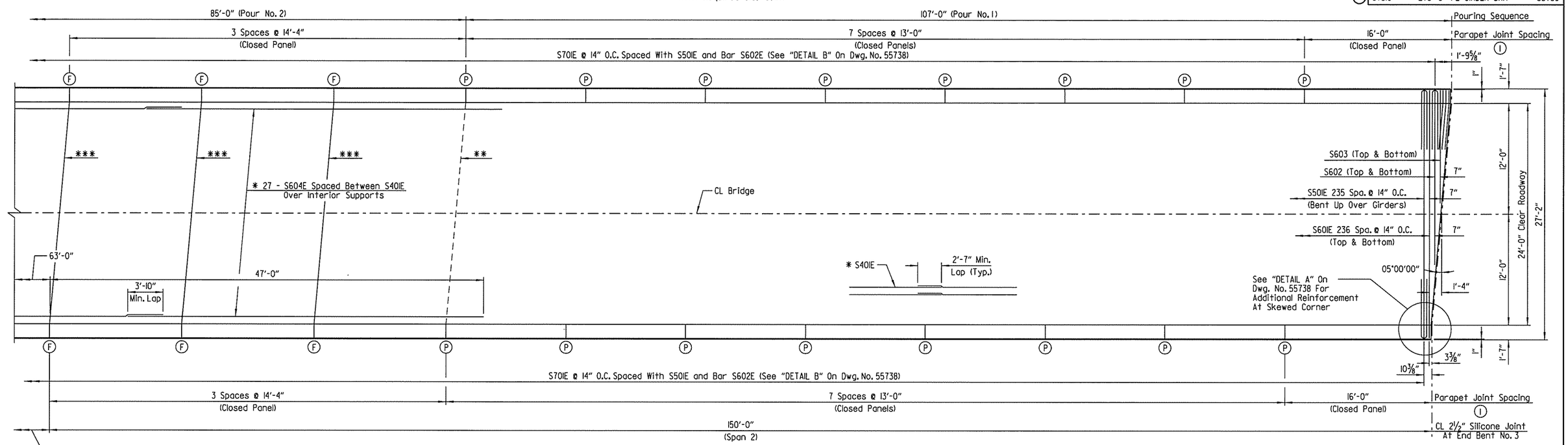

PART REINFORCING PLAN & POURING SEQUENCE

Scale: 3/16" = 1'-0"

TABLE OF DEAD LOAD DEFLECTIONS (Inch)			
Point Of Deflection	Wt. Of Girder And Cross-Frames	Wt. Of Girder, Cross-Frames And Slab	Wt. Of Girder, Cross-Frames, Slab And Parapet
1.0	0.00	0.00	0.00
1.1	0.16	0.68	0.78
1.2	0.28	1.22	1.41
1.3	0.35	1.53	1.77
1.4	0.35	1.58	1.83
1.5	0.30	1.38	1.61
1.6	0.20	1.00	1.17
1.7	0.10	0.57	0.66
1.8	0.01	0.18	0.22
1.9	-0.04	-0.05	-0.06
2.0	0.00	0.00	0.00
2.1	0.18	0.54	0.62
2.2	0.45	1.40	1.61
2.3	0.75	2.37	2.73
2.4	1.01	3.24	3.72
2.5	1.17	3.80	4.36
2.6	1.20	3.92	4.50
2.7	1.08	3.55	4.07
2.8	0.82	2.70	3.10
2.9	0.44	1.46	1.68
3.0	0.00	0.00	0.00

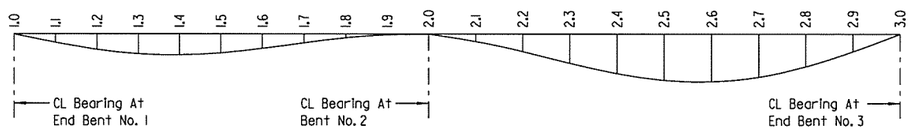

DEAD LOAD DEFLECTION

No Scale

NOTE:
Camber for dead load deflection plus vertical curve +/- 1/4" tolerance. Deflections shown are from a chord from Centerline Bearing to Centerline Bearing. Vertical curve corrections are not included. Negative sign (-) indicates point above chord.

STATE OF ARKANSAS
LICENSED PROFESSIONAL ENGINEER
No. 14038
SETH R. YANCEY
7-18-2014
BRIDGE ENGINEER

SHEET 7 OF 10
DETAILS OF 278'-0" CONTINUOUS COMPOSITE PLATE GIRDER UNIT NORMAN ROAD OVER I-40 PULASKI COUNTY

ROUTE 40 SEC. 33

ARKANSAS STATE HIGHWAY COMMISSION

LITTLE ROCK, ARK.

DRAWN BY: HEW DATE: JAN. 2014 FILENAME: BCA0609x5_S7.DGN
CHECKED BY: JHR DATE: MAR. 2014 SCALE: AS SHOWN
DESIGNED BY: SRY DATE: JAN. 2014

BRIDGE NO. 07318 DRAWING NO. 55739

SRYancey 7/18/2014 8:44:26 AM
WORKSPACE: AHTD Bridge
L:\ZDRIVE\07709 - I-40 at I-430 Interchange Modifications\Drawings\BCA0609x2_S7 (Slab Plan).dgn
REVISED DATE:

DATE REVISED	DATE FILMED	DATE REVISED	DATE FILMED	FED. ROAD DIST. NO.	STATE	FED. AID PROJ. NO.	SHEET NO.	TOTAL SHEETS
				6	ARK.			
				JOB NO.		CA0609	295	693
				(1) 07318		278'-0" PL GIRDER UNIT		55740

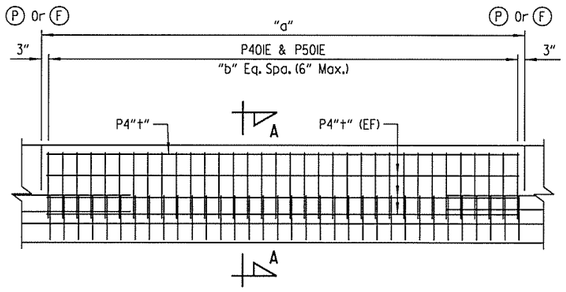

TYPICAL CLOSED PARAPET RAIL ELEVATION

(Looking At Front Face)
Scale: 3/8" = 1'-0"

(P) CL Partial-Depth Parapet Joint (1/4" to 1" Max.) as shown on "PART REINFORCING PLAN & POURING SEQUENCE" on Dwg Nos. 55738 & 55739. Stop 1'-2" from top of slab.

(F) CL Full-Depth Parapet Joint (1/4" to 1" Max.) as shown on "PART REINFORCING PLAN & POURING SEQUENCE" on Dwg Nos. 55738 & 55739. Stop 4" from top of slab.

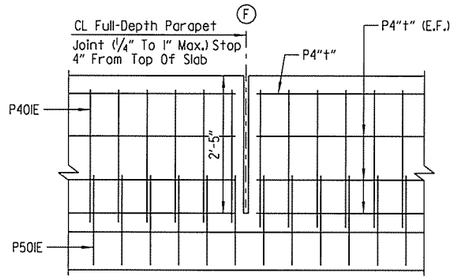

PARAPET REINFORCING (FULL DEPTH JOINTS)

Scale: 3/4" = 1'-0"

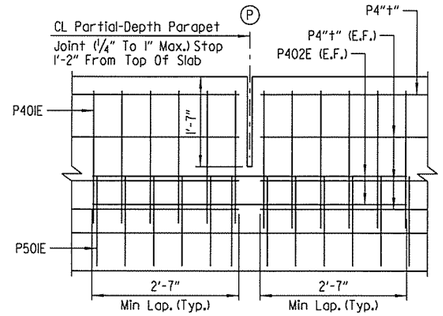

PARAPET REINFORCING (PARTIAL DEPTH JOINTS)

Scale: 3/4" = 1'-0"

TABLE OF PARAPET VARIABLES		
PANEL LENGTH		CLOSED PARAPET
"a"	"†"	"b"
13'-0"	03E	25
14'-0"	04E	27
14'-4"	05E	28
16'-0"	06E	31

BAR LIST

Mark	No. Req'd.	Length	Pin Dia.
S40IE	560	37'-0"	Str.
S50IE	236	27'-4"	3"
S502E	237	26'-10"	Str.
S60IE	237	26'-10"	Str.
S602E	4	18'-10"	Str.
S603E	4	12'-2"	Str.
S604E	81	40'-6"	Str.
S70IE	474	13'-1"	5 1/4"
S702E	12	6'-5"	5 1/4"
P40IE	1,118	5'-6"	3"
P402E	112	5'-6"	Str.
P403E	98	12'-8"	Str.
P404E	42	13'-8"	Str.
P405E	12	14'-0"	Str.
P406E	14	15'-8"	Str.
P50IE	1,118	4'-7"	3 3/4"

BAR BENDING DIAGRAM

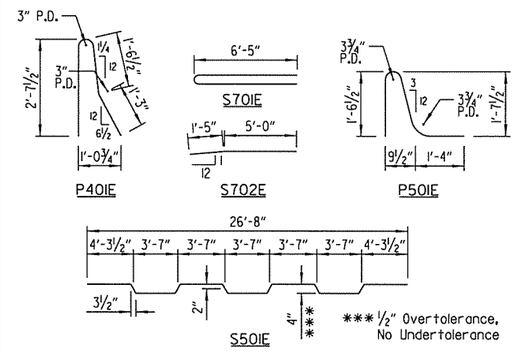

NOTE:
Dimensions of bars are out-to-out.

Bar designations ending with "E" indicate epoxy coated bars.

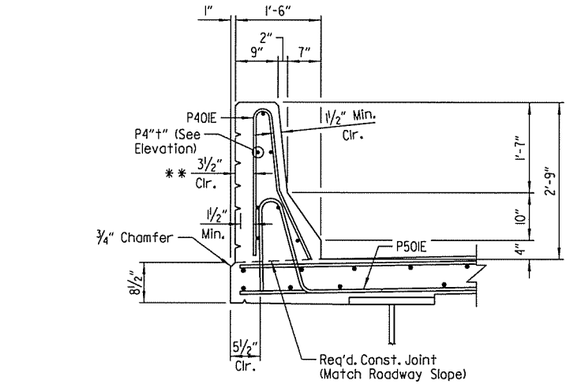

SECTION A-A

Scale: 3/4" = 1'-0"

** NOTE:
Form liner shall be a max. depth of 2" to provide a min. clearance of 1 1/2" to parapet reinforcing. See SP JOB CA0609 "ARCHITECTURAL FINISH".

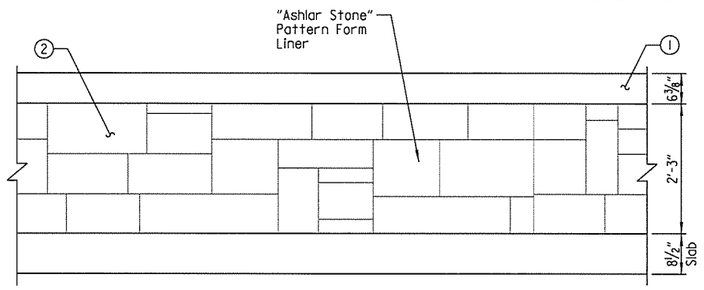

PANEL ELEVATION

(Showing Outside Face Of Parapet)
Scale: 3/4" = 1'-0"

(1) Class 3 Textured Coating Finish (Color = Brown, Color Chip No. 33522)

(2) Class 3 Textured Coating Finish (Color = Brown, Color Chip No. 30219)

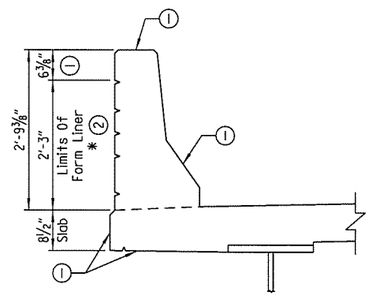

CLOSED PANEL PARAPET

Scale: 3/4" = 1'-0"

* "Ashlar Stone" Pattern

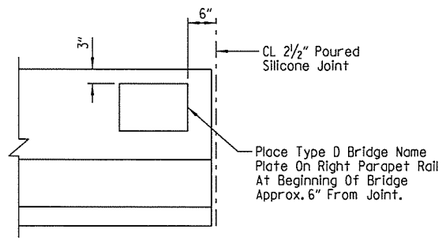

VIEW SHOWING LOCATION OF NAME PLATE

(Showing Inside Face Of Parapet)
Scale: 3/4" = 1'-0"

STATE OF ARKANSAS
LICENSED PROFESSIONAL ENGINEER
No. 14038
SETH R. YANCEY
7-18-14
BRIDGE ENGINEER

SHEET 8 OF 10
DETAILS OF 278'-0" CONTINUOUS COMPOSITE PLATE GIRDER UNIT
NORMAN ROAD OVER I-40
PULASKI COUNTY

ROUTE 40 SEC. 33

ARKANSAS STATE HIGHWAY COMMISSION
LITTLE ROCK, ARK.

DRAWN BY: HEW DATE: FEB. 2014 FILENAME: BCA0609x5_S8.DGN
CHECKED BY: JHR DATE: MAR. 2014 SCALE: AS SHOWN
DESIGNED BY: SRY DATE: FEB. 2014
BRIDGE NO. 07318 DRAWING NO. 55740

SRYancey 7/18/2014 8:44:27 AM
WORKSPACE: AHTD Bridge
L:\ZDWN\0IT709 - I-40 at I-430 Interchange Modifications\Drawings\BCA0609x2.S8 (Parapet Details).dgn
REVISED DATE:

DATE REVISED	DATE FILMED	DATE REVISED	DATE FILMED	FED. ROAD DIST. NO.	STATE	FED. AID PROJ. NO.	SHEET NO.	TOTAL SHEETS
				6	ARK.			
				JOB NO.		CA0609	296	693
				(1)	07318	278'-0" PL GIRDER UNIT		55741

GENERAL NOTES

CONCRETE:

Concrete shall be poured in the dry and all exposed corners shall be chamfered ¾" unless otherwise noted. All concrete shall be Class S(AE) with a minimum 28 day compressive strength f'c = 4,000 psi.

The superstructure details shown are for use when removable deck forming is used and are the basis for measurements of Class S(AE) Concrete. See Standard Drawing No. 55005 for allowable modifications and for tolerances when permanent steel bridge deck forms are used.

Concrete in bridge superstructure shall be placed, consolidated and screeded off for the entire pour before any concrete has taken its initial set. This may require the use of a retarding agent.

The concrete deck shall be given a tine finish in accordance with Subsection 802.19 for Class 5 Tined Bridge Roadway Surface Finish. Movement of the finishing machine across new concrete shall be on planks placed on the surface and shall be prohibited for 72 hours after finishing the pour. Sufficient concrete must be placed ahead of the strike-off to fully load the girder. If a longitudinal strike-off is used, a vertical camber adjustment must be made in the strike-off to account for the future dead load deflection due to the railing. A minimum of 72 hours shall elapse between completion of the slab and the pouring of the parapet railing. Any railing pours made before the entire slab has been placed and cured must be approved by the Engineer.

REINFORCING STEEL:

All reinforcing steel shall conform to AASHTO M31 or M322, Type A, Grade 60. The reinforcing steel is to be accurately located in the forms and firmly held in place by steel wire supports, sufficient in number and size to prevent displacement during the course of construction. The wire supports will not be paid for directly, but will be considered subsidiary to the pay item "EPOXY COATED REINFORCING STEEL (GRADE 60)".

STRUCTURAL STEEL:

All structural steel shall be AASHTO M270, Gr. 50 and shall be paid for at the unit price per pound bid for "STRUCTURAL STEEL IN PLATE GIRDER SPANS (M270, GR. 50)". All structural steel shall be cleaned in accordance with Subsection 807.84 unless noted otherwise. Structural steel completely embedded in concrete may be AASHTO M270 Gr. 36 unless otherwise noted. See Dwg. No. 55743 for cleaning requirements of external load plates on elastomeric bearings.

All structural steel except galvanized members or steel which is completely encased in concrete shall be painted in accordance with Subsection 807.75. The color of paint shall conform to Federal Standard 595B, Color Chip No. 20108, Dark Brown.

Requests for substitution of structural steel shapes shown with shapes of greater size must be submitted by the Contractor to the Engineer for approval. Steels of equal or greater strengths will be accepted only when shown on approved shop drawings. Shapes and materials shown in the plans will be the basis of payment and no additional compensation will be made for any adjustments due to substitutions.

Drawings show general features of design only. Shop drawings shall be prepared in accordance with Subsection 807.04, submitted and approved before fabrication is begun.

Bolted field splices shown may be eliminated or shop welded splices may be substituted with approval of the Engineer. Payment will be made on the basis of plan quantities.

All girder webs and flanges of plate girders and splice plates are considered main load carrying members and shall meet the Longitudinal Charpy V-Notch Test specified in Subsection 807.05. This work and material will not be paid for directly but are considered as subsidiary to the item "STRUCTURAL STEEL IN PLATE GIRDER SPANS (M270, GR. 50)".

Steel plates for main load carrying members (flange and web plates) and flange field splice plates shall be cut and fabricated so that the primary direction of rolling is parallel to the direction of the main tensile and/or compressive stresses.

Girder webs may be made by shop splicing with a minimum length of 25'-0" for sections. Flange plates longer than 50'-0" may be made by shop splicing with a minimum length of 25'-0" for sections. Material specifications and locations of shop-welded splices, if any, shall be shown on the shop drawings. No additional payment for these welded splices will be made.

All welding that is to be done during fabrication of structural steel, including temporary welds, shall be detailed on the shop drawings and submitted for approval. If additional welds are required, whether temporary or permanent, a formal request with detailed drawings shall be submitted to the Engineer for approval; however, additional welds used for attaching falsework support devices or screed rail supports to the structural steel that do not exceed the limitations of Subsection 802.13 will not require approval prior to construction. All welding shall conform to Subsection 807.26.

All girders shall be blocked in their true positions with webs horizontal in the shop as specified in Subsection 807.54(b)(2). The camber, length of sections, distance between bearings and opening of joints shall be measured with the girders in their true positions and this information shall become a part of the permanent records of this job. The component parts shall be match marked in this assembly and these marks shall be shown on the erection diagram. All girder dimensions are based on a temperature of 60°F. A tolerance of +/- ¼" is allowed for camber.

Groove welds in flange and web plates shall be Quality Control (Q.C.) tested by nondestructive testing, as required by the Standard Specifications. Fillet welds at flange to web plate connections shall be Quality Control (Q.C.) tested by the magnetic particle method. All Quality Control (Q. C.) testing is at the Contractor's expense.

All connection plates and intermediate stiffeners shall be fabricated normal to the top flange and on the side of the girder web as indicated on the framing plan. No intermediate stiffeners are to be placed on the outside of the exterior girders except as noted. All bearing stiffeners shall be fabricated to be plumb in their final positions.

Crossframes shall be installed as girders are erected. All bolts in crossframes and field splices shall be installed and tightened in accordance with subsection 807.71 prior to pouring of the concrete deck.

Field connections shall be bolted with high-strength bolts conforming to ASTM A325. Bolts shall be ⅞" diameter, except as noted, and open holes shall be 15/16 ", unless noted otherwise. Holes for ¾" diameter bolts may be 15/16 " diameter if a washer is supplied for use under both the nut and head of the bolt. Bolt spacing shall be 2½" for ¾" diameter bolts unless otherwise noted. For Field Splices, bolts shall be 1" diameter bolts unless otherwise noted. Open holes shall be 15/16 " unless noted otherwise. Bolt spacing shall be 3" for ⅞" diameter bolts unless otherwise noted. Bolts shall be placed with heads on the outside face of the exterior girder web and on the bottom of the girder flanges.

All contact surfaces between plates at field splices shall be free of oil, rust or scale before assembly.

All stud shear connectors shall be granular flux filled, solid fluxed or equal and shall be automatically end welded in accordance with recommendations of the Manufacturer.

Bearings shall be firmly seated in accordance with Subsection 808.08. This work and material is to be considered subsidiary to the item "STRUCTURAL STEEL IN PLATE GIRDER SPANS (M270, GR. 50)" and will not be paid for directly.

Anchor bolts shall be AASHTO designation M314 Gr. 55, including supplemental requirement S1, and shall be galvanized to conform to AASHTO M 232, Class C or ASTM B695 Class 50. Anchor bolts will be paid for at the contract unit price bid for "STRUCTURAL STEEL IN PLATE GIRDER SPANS (M 270, GR. 50)".

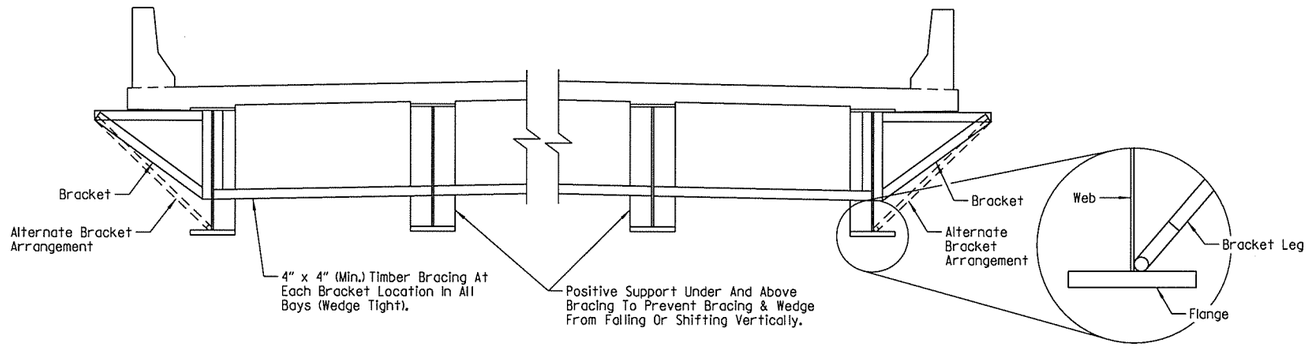

SCREED RAIL SUPPORT DETAIL

No Scale

NOTE: The bracket shall be installed in a manner that avoids any nicks or gouges in the flange, web and weld.

NOTE:
If a transverse finishing machine is used, the rail shall be supported directly over the exterior girders, or as an alternate, the rail may be supported by the overhang brackets if the above strutting system is used. The strutting system may be omitted if ½" x 6¼" web stiffeners are welded to the insides of the exterior girders at the location of each bracket or if the alternate bracket shown above is used. The alternate bracket arrangement shall extend down to the junction of the web and bottom flange. The stiffeners shall conform to the details for cross-frame connection plates shown on Dwg. No. 55736. No direct payment will be made for brackets, timber bracing, supports, or welded stiffeners. Payment shall be subsidiary to "STRUCTURAL STEEL IN PLATE GIRDER SPANS (M270, GR. 50)."

STATE OF ARKANSAS
LICENSED PROFESSIONAL ENGINEER
No. 14058
SETH RAYNEY
BRIDGE ENGINEER

SHEET 9 OF 10
DETAILS OF 278'-0" CONTINUOUS COMPOSITE PLATE GIRDER UNIT
NORMAN ROAD OVER I-40
PULASKI COUNTY
ROUTE 40 SEC. 33

ARKANSAS STATE HIGHWAY COMMISSION
LITTLE ROCK, ARK.

DRAWN BY: HEW DATE: JAN. 2014 FILENAME: BCA0609x5_S9.DGN
CHECKED BY: JHR DATE: MAR. 2014 SCALE: AS SHOWN
DESIGNED BY: SRY DATE: JAN. 2014
BRIDGE NO. 07318 DRAWING NO. 55741

SRYancey 7/8/2014 8:44:27 AM
WORKSPACE: AHTD Bridge
LIVE\MODIFY09 - I-40 at I-430 Interchange Modifications\Drawings\BCA0609x2_S9 (Gen. Notes).dgn
REVISED DATE:

DATE REVISED	DATE FILMED	DATE REVISED	DATE FILMED	FED. ROAD DIST. NO.	STATE	FED. AID PROJ. NO.	SHEET NO.	TOTAL SHEETS
				6	ARK.			
				JOB NO.		CA0609	297	693
				(1) 07318		278'-0" PL GIRDER UNIT		55742

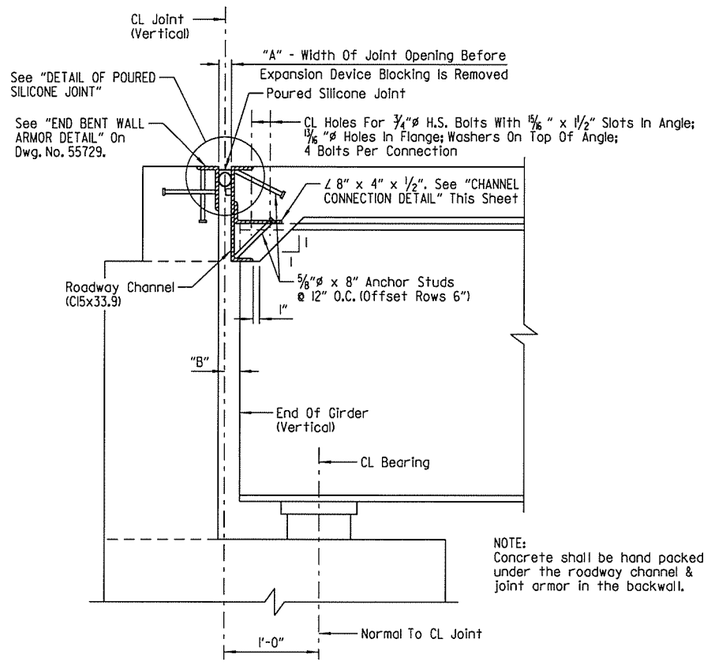

SECTION THRU SILICONE JOINT

Note: Section Taken Normal To CL Joint
No Scale

SILICONE JOINT DATA					
"A" Width Perpendicular To Joint At 24 Hour Average Temperature (1) Of:			"B" Perpendicular To Joint At 60°F	"D"	Bumper Plate Size
40°F	60°F	80°F			
2¾"	2½"	2¼"	2½"±	5"	1¼" x 1" x 12"

(1) The temperature used to set the joint opening shall be the approximate average air temperature during the 24 hour period immediately before the bolts are tightened. The Engineer shall establish the temperature. Interpolation of the table may be necessary.

NOTES:
The temperature limitations recommended by the sealant Manufacturer shall be observed.

The sealant may be installed in skewed joints only when the average 24 hour air temperature is between 40° and 80°F.

(2) BACKER ROD NOTE:
Use an appropriately sized backer rod at the depth shown in the Manufacturer's literature based on the joint width at the time of sealing.

Except as noted, do not install more backer rod that can be sealed in the same day.

The Contractor shall verify separation of the backer rod from the joint material after the joint material has set.

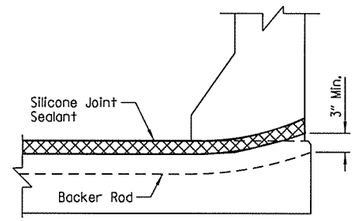

JOINT SEAL PLACEMENT AT CURB

No Scale

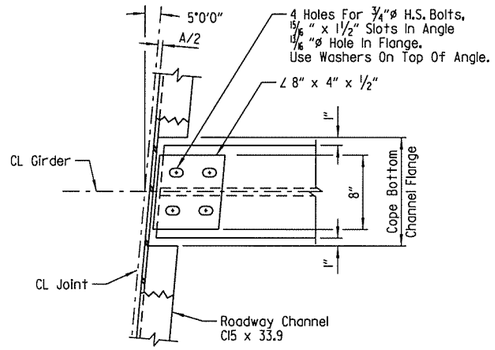

CHANNEL CONNECTION DETAIL

No Scale

(3) Recess depth as recommended by the sealant Manufacturer.

DETAIL OF POURED SILICONE JOINT

No Scale

One of two different blocking systems is required depending on the type of span finishing machine that is used.

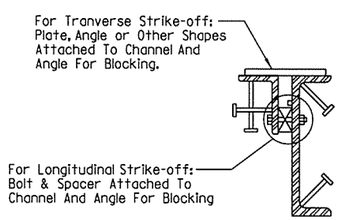

NOTE:
Each expansion joint device shall be blocked in the shop by the Fabricator to the dimension "A" shown for 60°F and the blocking details shall be shown on the shop drawings. Blocking shall be placed within 2' of each end of the device and with a maximum spacing of 8'.

EXPANSION DEVICE INSTALLATION AT END BENTS:

The Contractor may elect to install the expansion device using one of the following two alternatives.

1) The concrete span pour adjacent to joint shall be placed before the end bent backwall is placed. After the end bent backwall forms are in place and the girders erected, the blocked expansion device shall be installed and adjusted for grade. All connection bolts shall be fully tightened prior to placing the deck concrete adjacent to the bent. Immediately prior to pouring the backwall concrete, the blocking shall be removed, the opening adjusted for temperature, and the backwall constructed.

2) The backwall shall be poured to the optional construction joint after girders are erected. The blocked expansion device shall be installed and adjusted for grade. All connection bolts shall be fully tightened prior to placing the deck concrete adjacent to the bent. Immediately prior to pouring the remainder of the backwall concrete, the blocking shall be removed and the opening adjusted for temperature. Backfill shall not be placed behind the backwall until the deck concrete on the adjacent span has been placed.

DETAILS FOR BLOCKING EXPANSION JOINT DEVICE

No Scale

STATE OF ARKANSAS
LICENSED PROFESSIONAL ENGINEER
No. 14058
SETH D. YANCEY
7-18-14
BRIDGE ENGINEER

SHEET 10 OF 10
DETAILS OF 278'-0" CONTINUOUS COMPOSITE PLATE GIRDER UNIT NORMAN ROAD OVER I-40 PULASKI COUNTY

ROUTE 40 SEC. 33

ARKANSAS STATE HIGHWAY COMMISSION

LITTLE ROCK, ARK.

DRAWN BY: HEW DATE: JAN. 2014 FILENAME: BCA0609x5_SI0.DGN
CHECKED BY: JHR DATE: MAR. 2014 SCALE: AS SHOWN
DESIGNED BY: SRY DATE: JAN. 2014
BRIDGE NO. 07318 DRAWING NO. 55742

SRYancey 7/18/2014 8:44:28 AM
WORKSPACE: AHTD Bridge
L:\CONWDOT709 - I-40 at I-430 Interchange Modifications\Drawings\BCA0609x2_SI0 Joint Details1.dgn
REVISED DATE:

DATE REVISED	DATE FILMED	DATE REVISED	DATE FILMED	FED. ROAD DIST. NO.	STATE	FED. AID PROJ. NO.	SHEET NO.	TOTAL SHEETS
				6	ARK.			
				JOB NO.		CA0609	298	693
				①	07318	ELASTOMERIC BEARINGS		55743

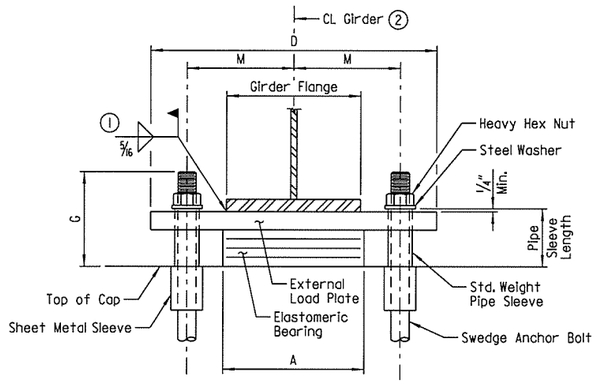

FRONT VIEW - AT BENT NOS. 1 & 3

① Care shall be taken to ensure that the external load plate is in full and complete contact with the girder flange before welding begins.

② Centerline elastomeric pad shall be aligned with centerline girder.

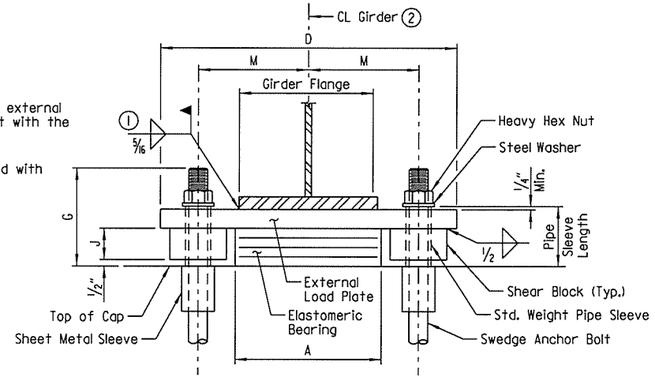

FRONT VIEW - AT BENT NO. 2

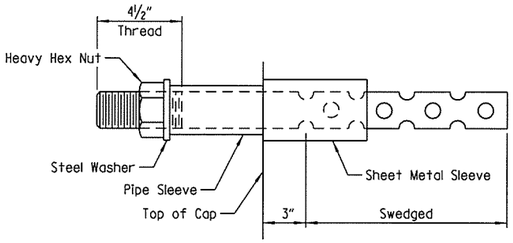

ANCHOR BOLT DETAIL

NOTE:
Anchor bolts may be cast in place or drilled and grouted into place. If anchor bolts are to be cast in place, the galvanized sheet metal sleeves will not be required.

If anchor bolts are to be drilled and grouted in place, the galvanized sheet metal sleeves shall be cast in place as shown. Sleeves shall be dry packed with styrofoam, urethane foam or approved equal prior to pouring of concrete. After pouring of the cap and prior to erection of structural steel, the dry pack shall be removed and holes for the anchor bolts shall be accurately drilled into the masonry. Bolts placed in drilled holes shall be accurately set and fixed using a QPL approved epoxy or non-shrink grout that completely fills the holes. Galvanized sheet metal sleeves will not be paid for directly but will be considered subsidiary to the item "STRUCTURAL STEEL IN PLATE GIRDER SPANS (M270-GR. 50)".

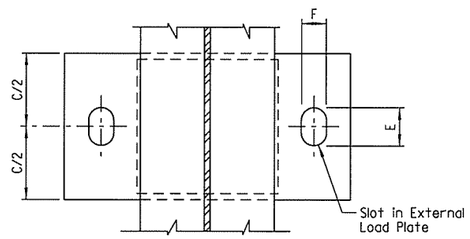

PLAN VIEW - AT BENT NOS. 1 & 3

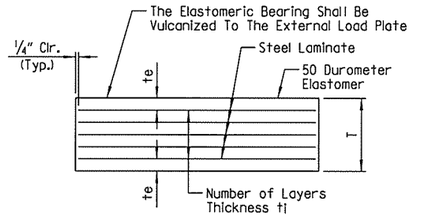

t_e = Thickness Of Elastomer Cover On Top And Bottom Of Pad
t_i = Thickness Of Elastomer Between Steel Laminae
N = Number Of Elastomer Layers Of Thickness t_i

ELASTOMERIC BEARING

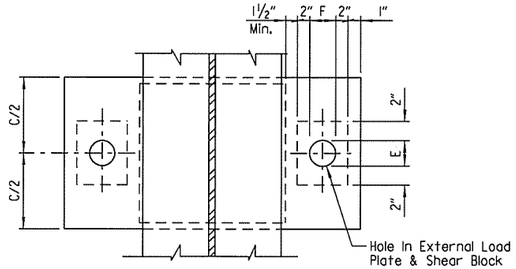

PLAN VIEW - AT BENT NO. 2

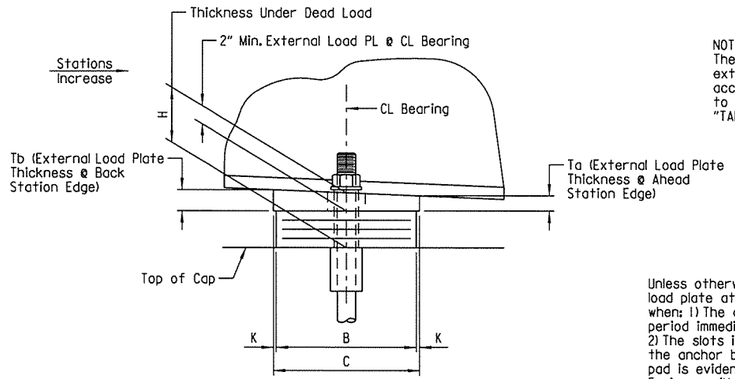

SIDE VIEW - AT BENT NOS. 1 & 3

NOTE:
The direction of the bevel of the external load plate may not be accurately depicted with respect to Ta and Tb values shown in "TABLE OF FABRICATOR VARIABLES".

Unless otherwise approved by the Engineer, welding of the external load plate at expansion bearings to the girder will be allowed only when: 1) The approximate average air temperature during the 24 hour period immediately preceding welding is between 40°F and 80°F; and 2) The slots in the external load plate are positioned to center on the anchor bolts; and 3) No horizontal deformation of the elastomeric pad is evident. If welding at other temperatures is required, the Engineer will provide adjustment data.

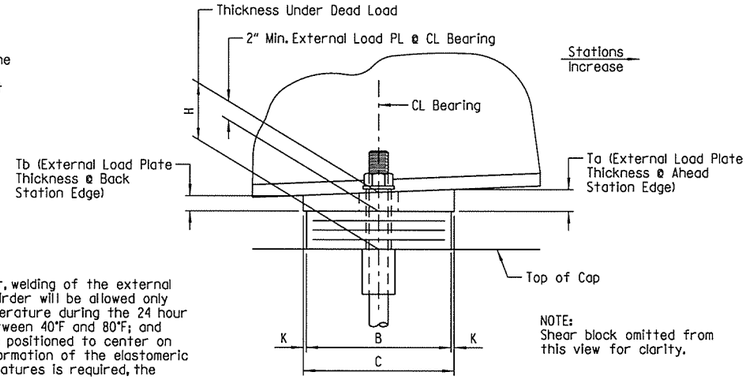

NOTE:
Shear block omitted from this view for clarity.

SIDE VIEW - AT BENT NO. 2

GENERAL NOTES

Elastomeric bearings shall conform to Section 808 and shall be paid for at the unit price bid for "ELASTOMERIC BEARINGS."

External load plates and shear blocks shall conform to AASHTO M270, Grade 50. Pipe sleeves shall be ASTM A53, Grade B, and shall be galvanized to conform to AASHTO M232, Class C or ASTM B695, Class 50.

External load plates and shear blocks shall be completely fabricated (including bevel and bolt holes) and shall be cleaned before vulcanizing to the elastomeric bearing. The surface in contact with the elastomeric bearing shall be cleaned in accordance with Subsection 808.03. Other surfaces shall be blast cleaned in accordance with Subsection 807.84(b) for painted steel and painted in accordance with Subsection 807.75. Mask areas of field welding. Painting will not be paid for directly but will be considered subsidiary to the item "ELASTOMERIC BEARINGS".

Anchor bolts, washers and nuts shall conform to Subsection 807.07. The anchor bolt grade of steel shall be as specified in the "TABLE OF FABRICATOR VARIABLES". Indentations shall be circular with rounded bottoms and staggered as shown in the details.

Pipe sleeves, anchor bolts, washers and nuts shall be paid for at the unit price bid for "STRUCTURAL STEEL IN PLATE GIRDER SPANS (M270, GR. 50)". External load plates and shear blocks will not be measured or paid for separately but will be included in the unit price bid for "ELASTOMERIC BEARINGS".

Bearings shall be seated in accordance with Subsection 808.08. This work and materials are considered subsidiary to the item "ELASTOMERIC BEARINGS" and will not be paid for directly.

TABLE OF FABRICATOR VARIABLES

Bridge No.	Location		Bearing Type	No. Of Bearings Each Bent	* Maximum Design Load (Kips)	G	H	Elastomeric Pad							External Load Plate									Anchor Bolt				
	Bent No(s).	Girder No.						A	B	N	t_i	t_e	No. & Thickness Of Steel Laminate	T	C	D	E	F	J	K	M	T_a **	T_b **	Anchor Bolt (Dia. x L)	Anchor Bolt Grade	Pipe Sleeve Size (Dia. x L)	Sheet Metal Sleeve Size (Dia. x L)	Steel Washer Size (O.D.)
07318	1	1, 3-4	Exp.	3	132	8 3/16"	5 3/16"	16"	9 1/2"	5	1/2"	1/4"	6 @ 12 Ga.	3 5/8"	10 1/2"	27 1/2"	5 1/4"	2 5/8"	-	1/2"	10 3/4"	2.14"	1.86"	1 3/4" x 29"	55	2" x 5 11/16"	4" x 7"	3 3/8"
	1	2	Exp.	1	132	8 3/4"	5 3/4"	16"	9 1/2"	5	1/2"	1/4"	6 @ 12 Ga.	3 5/8"	10 1/2"	27 1/2"	5 1/4"	2 5/8"	-	1/2"	10 3/4"	2.32"	2.05"	1 3/4" x 29"	55	2" x 6"	4" x 7"	3 3/8"
	2	1-4	Fix.	4	424	7 15/16"	4 15/16"	22"	11"	4	1/2"	1/4"	5 @ 12 Ga.	3"	12"	40 1/4"	2 5/8"	2 5/8"	2 1/2"	1/2"	15 11/16"	2.00"	2.00"	1 3/4" x 29"	55	2" x 5 3/16"	4" x 11"	3 3/8"
	3	1-2, 4	Exp.	3	161	8 3/16"	5 3/16"	16"	9 1/2"	5	1/2"	1/4"	6 @ 12 Ga.	3 5/8"	10 1/2"	27 1/2"	5 1/2"	2 5/8"	-	1/2"	10 3/4"	1.83"	2.17"	1 3/4" x 29"	55	2" x 5 13/16"	4" x 7"	3 3/8"
	3	3	Exp.	1	161	8 13/16"	5 13/16"	16"	9 1/2"	5	1/2"	1/4"	6 @ 12 Ga.	3 5/8"	10 1/2"	27 1/2"	5 1/2"	2 5/8"	-	1/2"	10 3/4"	2.08"	2.42"	1 3/4" x 29"	55	2" x 6 1/16"	4" x 7"	3 3/8"

* Maximum Design Load = Service I Limit State
** Includes Load Plate thickening at Girder No. 2, Bent No. 1 and Girder No. 3, Bent No. 3.

STATE OF ARKANSAS
SETH R. YANCEY
No. 14058
LICENSED PROFESSIONAL ENGINEER
7-18-14
BRIDGE ENGINEER

DETAILS OF ELASTOMERIC BEARINGS
NORMAN ROAD OVER I-40
PULASKI COUNTY

ROUTE 40 SEC. 33

ARKANSAS STATE HIGHWAY COMMISSION

LITTLE ROCK, ARK.

DRAWN BY: HEW DATE: FEB. 2014 FILENAME: BCA0609x5_EI.DGN
CHECKED BY: JES DATE: MAR. 2014 SCALE: NO SCALE
DESIGNED BY: SRY DATE: FEB. 2014

BRIDGE NO. 07318 DRAWING NO. 55743

SRYancey 7/18/2014 8:44:28 AM
WORKSPACE: AHTD Bridge I-40 at I-430 interchange Modifications\Drawings\BCA0609x2_EI(Bearing Details).dgn
L:\ROW\DOT\09 I-40 at I-430 interchange Modifications\Drawings\BCA0609x2_EI(Bearing Details).dgn
REVISED DATE:

DATE REVISED	DATE FILMED	DATE REVISED	DATE FILMED	FED. ROAD DIST. NO.	STATE	FED. AID PROJ. NO.	SHEET NO.	TOTAL SHEETS
				6	ARK.			
				JOB NO.		CA0609	299	693

(1) BM 040-60-01 SIGN STRUCTURE 55744

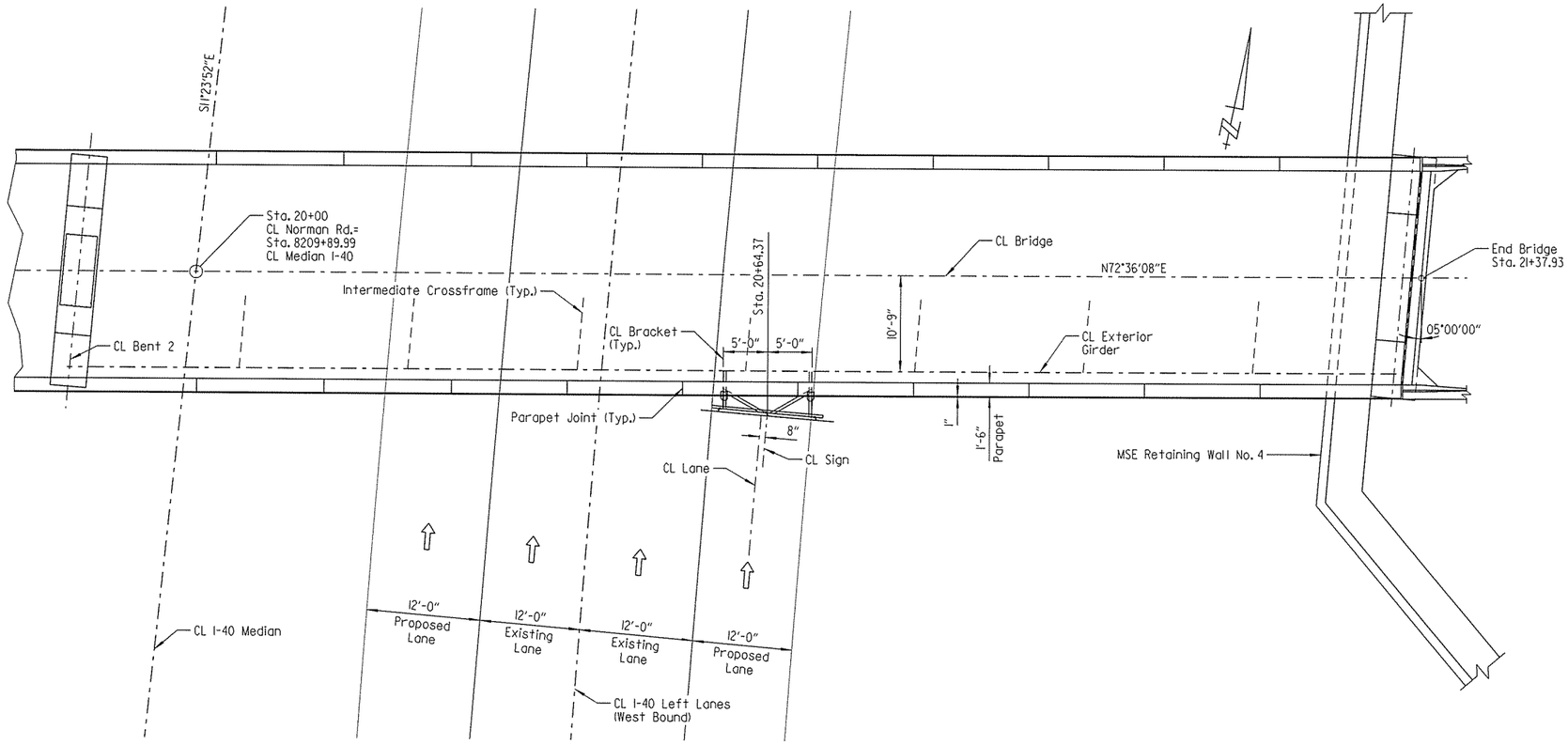

LOCATION SKETCH
Scale: 1/8" = 1'-0"

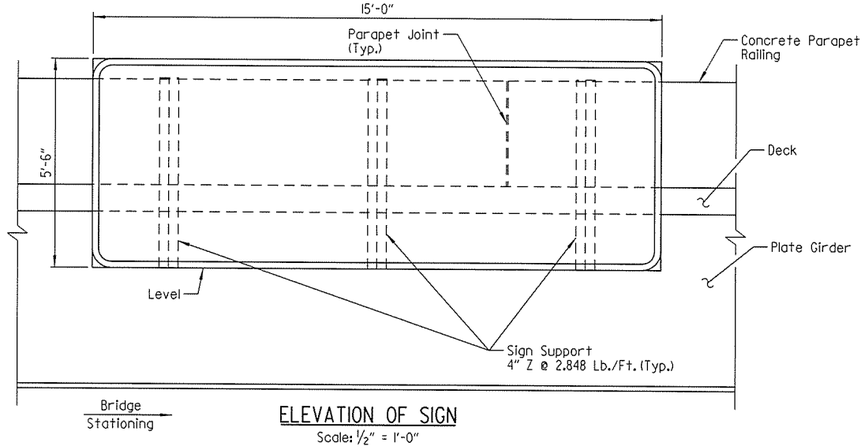

ELEVATION OF SIGN
Scale: 1/2" = 1'-0"

STATE OF ARKANSAS
LICENSED PROFESSIONAL ENGINEER
No. 8017
JOHN H. RUDDELL
BRIDGE ENGINEER

SHEET 1 OF 3
DETAILS OF BRIDGE MOUNTED SIGN STRUCTURE
NORMAN ROAD OVER I-40
PULASKI COUNTY
ROUTE 40 SEC. 33
ARKANSAS STATE HIGHWAY COMMISSION
LITTLE ROCK, ARK.

DRAWN BY: DRG DATE: MAR. 2014 FILENAME: BCA0609x5_T1.DGN
CHECKED BY: SRY DATE: APR. 2014 SCALE: AS SHOWN
DESIGNED BY: DRG DATE: MAR. 2014
STR. NO. BM 040-60-45 DRAWING NO. 55744

pccampbell 7/29/2014 4:25:23 PM
WORKSPACE: AHTD Bridge
L:\2011\11017709 - I-40 at I-430 Interchange Modifications\Drawings\BCA0609x2_T1(Sign 1 of 3).dgn
REVISED DATE:

DATE REVISED	DATE FILMED	DATE REVISED	DATE FILMED	FED. ROAD DIST. NO.	STATE	FED. AID PROJ. NO.	SHEET NO.	TOTAL SHEETS
				6	ARK.			
				JOB NO.		CA0609	300	693
				(1) BM 040-60-01 SIGN STRUCTURE				55745

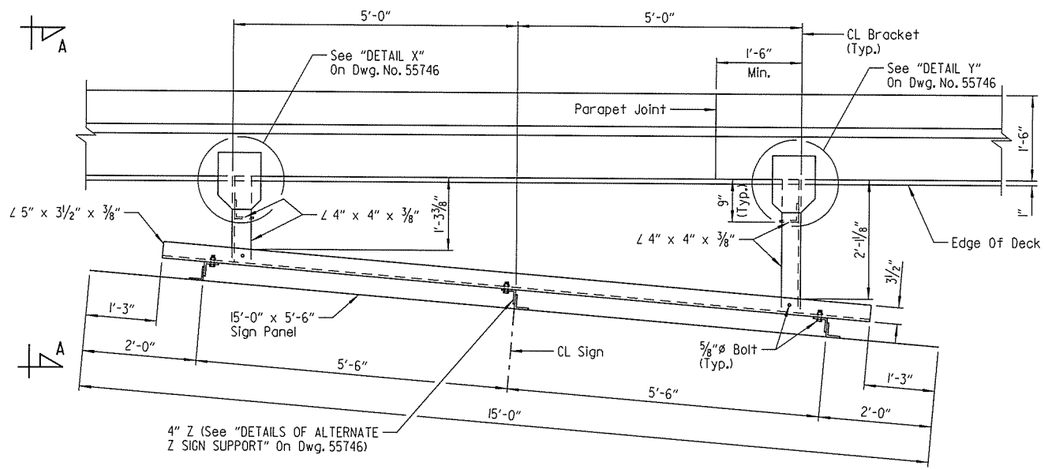

PLAN OF UPPER BRACKET
Scale: ¾" = 1'-0"

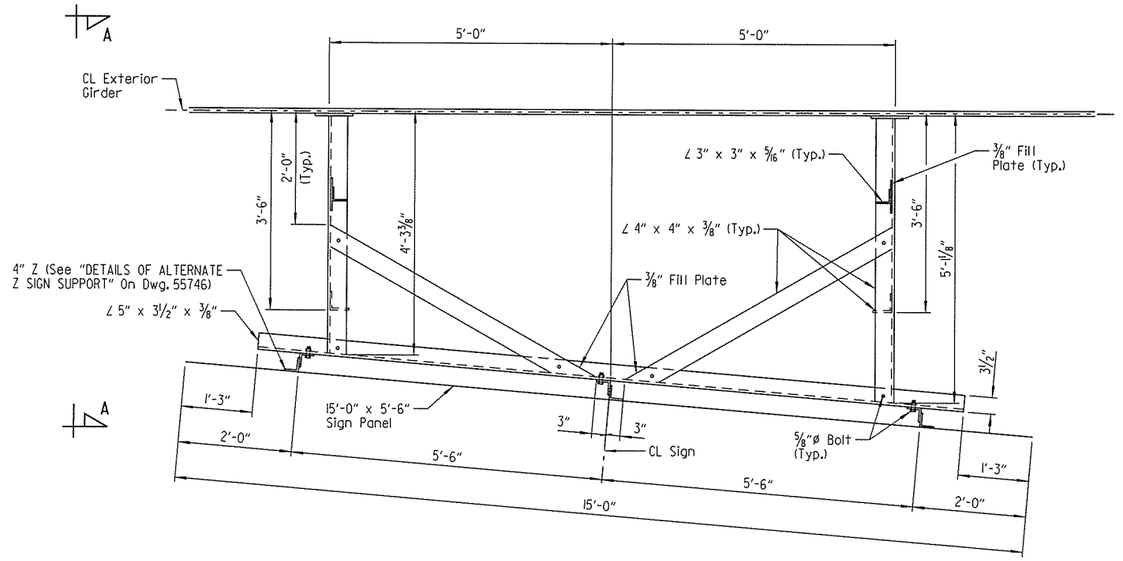

PLAN OF LOWER BRACKET
Scale: ¾" = 1'-0"

GENERAL NOTES:

CONSTRUCTION SPECIFICATIONS: Arkansas State Highway and Transportation Department Standard Specifications For Highway Construction (2014 Edition) with Applicable Supplemental Specifications And SP Job No. CA0609 "STEEL SIGN STRUCTURES".

DESIGN SPECIFICATIONS: AASHTO Standard Specifications for Structural Supports for Highway Signs, Luminaires, and Traffic Signals, Fifth Edition 2009 (2011 Interim Revisions).

BASIC WIND SPEED: 90 m.p.h.

MATERIALS AND STRENGTHS:
Structural Steel (AASHTO M 270, GR. 36, Fy = 36,000 psi)
Bolts (ASTM A325, Type 1)
Nuts (ASTM A563 or AASHTO M 292, Grade 2H Or Grade DH)
Washers (ASTM F436)
Locknuts (Approved Type, meeting or exceeding AASHTO M 292)

Structral members of sign support shall be galvanized in accordance with Subsection 807.19.

Bolts, nuts and washers shall be galvanized in accordance with Subsection 807.06.

Locknuts to be equipped with nylon locking inserts or other approved locking system. Locknuts to be installed according to Manufacturers recommendations.

The Contractor shall make check measurements in the field and make any adjustments necessary to avoid any diaphragms, splice plates and joints in parapet on the bridge. This may include shifting the sign structure with approval from the Engineer.

The cost of all labor, materials and equipment required for the fabrication and installation of the bridge mounted sign structure shall be included in the item "STEEL SIGN STRUCTURES".

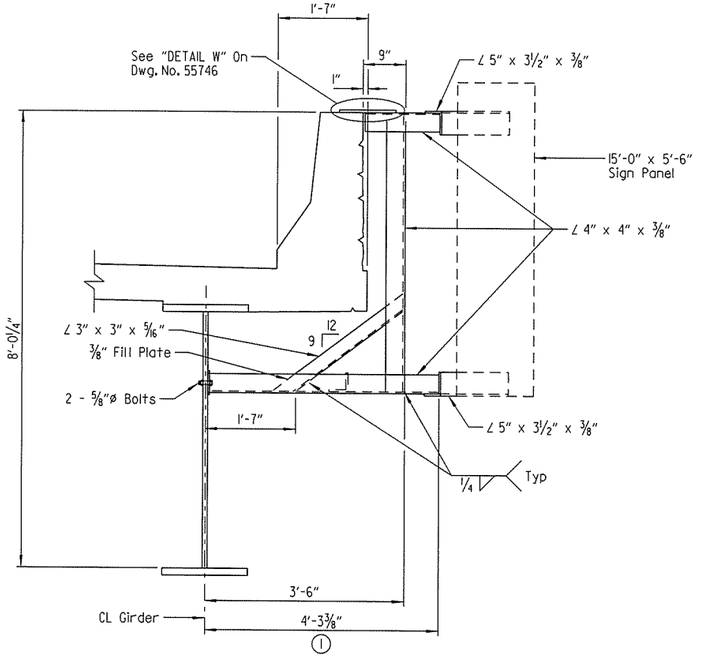

SECTION A-A
Scale: ¾" = 1'-0"

(1) Measured along insie edge of angle

STATE OF ARKANSAS
LICENSED PROFESSIONAL ENGINEER
No. 8617
JOHN H. RUDDELL
7-25-14

BRIDGE ENGINEER

SHEET 2 OF 3
DETAILS OF BRIDGE MOUNTED SIGN STRUCTURE
NORMAN ROAD OVER I-40
PULASKI COUNTY
ROUTE 40 SEC. 33
ARKANSAS STATE HIGHWAY COMMISSION
LITTLE ROCK, ARK.

DRAWN BY: DRG DATE: MAR. 2014 FILENAME: BCA0609x5_T2.DGN
CHECKED BY: SRY DATE: APR. 2014 SCALE: AS SHOWN
DESIGNED BY: DRG DATE: MAR. 2014

STR. NO. BM 040-60-45 DRAWING NO. 55745

pccampbell 7/29/2014 4:25:24 PM
WORKSPACE: AHTD Bridge
L:\CON\MOTT09 - I-40 at I-430 Interchange Modifications\Drawings\BCA0609x2_T2 (Sign 2 of 3).dgn
REVISED DATE:

DATE REVISED	DATE FILMED	DATE REVISED	DATE FILMED	FED. ROAD DIST. NO.	STATE	FED. AID PROJ. NO.	SHEET NO.	TOTAL SHEETS
				6	ARK.			
				JOB NO.		CA0609	301	693

(1) BM 040-60-01 SIGN STRUCTURE 55746

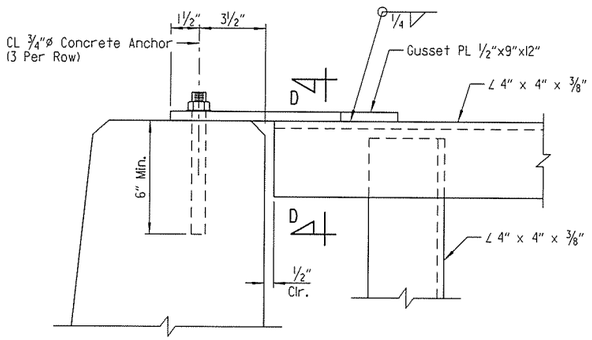

DETAIL W
Scale: 3" = 1'-0"

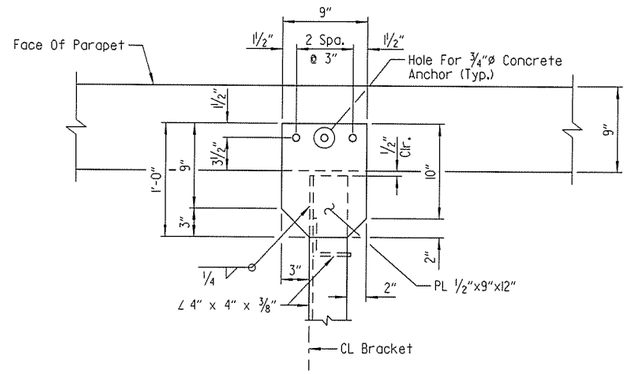

DETAIL X
Scale: 1½" = 1'-0"

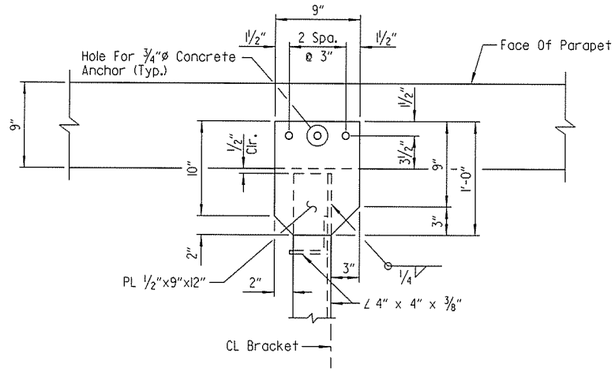

DETAIL Y
Scale: 1½" = 1'-0"

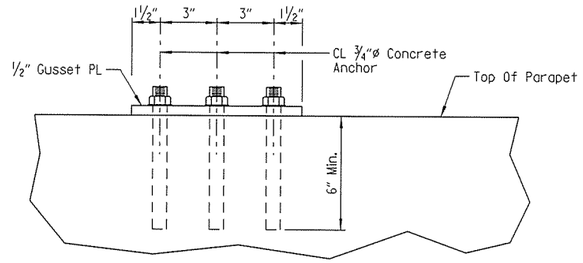

VIEW D-D
Scale: 3" = 1'-0"

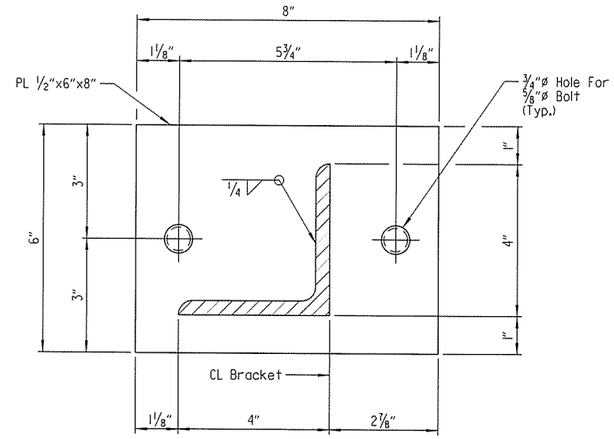

DETAIL V
Scale: 6" = 1'-0"

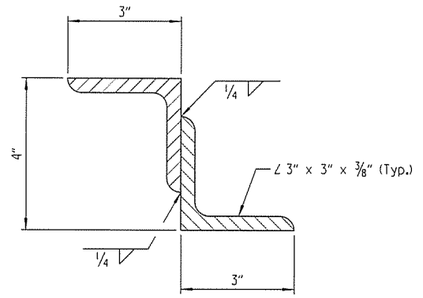

NOTE:
Structural Z Sign Support may be fabricated from angles as shown.

DETAILS OF ALTERNATE Z SIGN SUPPORT
Scale: 6" = 1'-0"

STATE OF ARKANSAS
LICENSED PROFESSIONAL ENGINEER
No.8017
JOHN H. RUDDELL
7-28-14

BRIDGE ENGINEER

SHEET 3 OF 3
DETAILS OF BRIDGE MOUNTED SIGN STRUCTURE
NORMAN ROAD OVER I-40
PULASKI COUNTY

ROUTE 40 SEC. 33

ARKANSAS STATE HIGHWAY COMMISSION

LITTLE ROCK, ARK.

DRAWN BY: DRG DATE: MAR. 2014 FILENAME: BCA0609x5_T3.DGN
CHECKED BY: SRY DATE: APR. 2014 SCALE: AS SHOWN
DESIGNED BY: DRG DATE: MAR. 2014

STR. NO. BM 040-60-45 DRAWING NO. 55746

pccampbell 7/29/2014 4:25:24 PM
WORKSPACE: AHTD Bridge
L:\2011\801709 - I-40 at I-430 Interchange Modifications\Drawings\BCA0609x2_T3 (Sign 3 of 3).dgn
REVISED DATE:

DATE REVISED	DATE FILMED	DATE REVISED	DATE FILMED	FED. ROAD DIST. NO.	STATE	FED. AID PROJ. NO.	SHEET NO.	TOTAL SHEETS
				6	ARK.			
				JOB NO.		CA0609	302	693
				(1) 05324		LAYOUT		55747

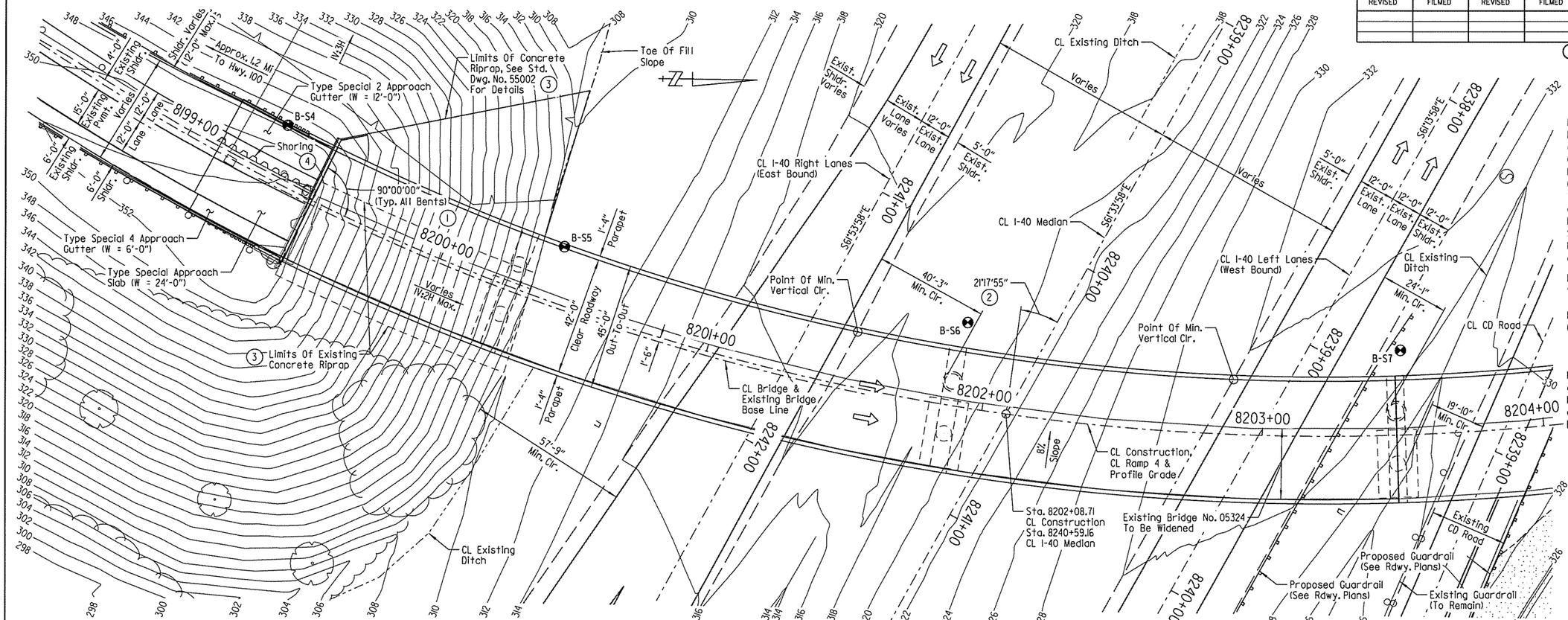

PLAN

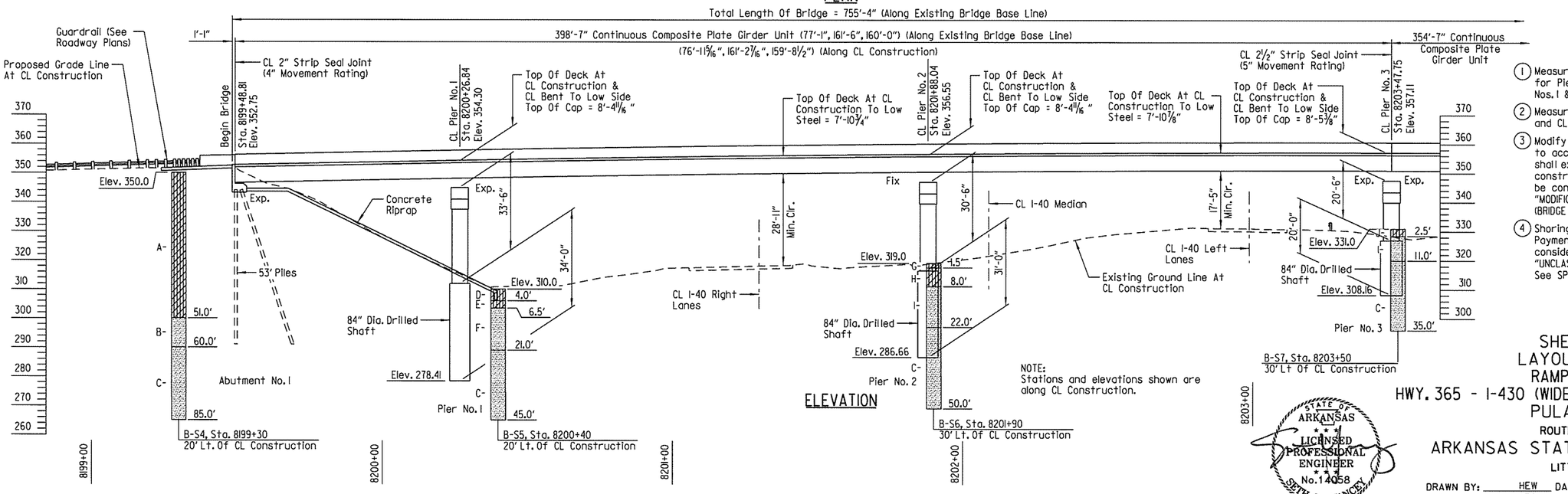

ELEVATION

NOTE:
Stations and elevations shown are along CL Construction.

FOR R/W DATA AND GUARDRAIL DETAILS, SEE ROADWAY PLANS

NOTES:
Replace Approach Slabs & Gutters at both ends of Bridge. Use Type Special2 Approach Gutters (W = 12'-0") on left side of begin bridge. Use Type Special 3 Approach Gutters (W = 12'-0") on left side of end bridge. Use Type Special 4 Approach Gutters (W = 6'-0") on right side of begin and end bridge. See Dwg. Nos. 55801-55803 for details. Use Type Special Approach Slab (W = 24'-0") at each bridge end, see Dwg. Nos. 55799 & 55800 for details.

For "GENERAL NOTES", "BORING LEGEND" & "N VALUES", See Dwg. No. 55749.

For "VERTICAL CURVE DATA" and "HORIZONTAL CURVE DATA", See Dwg. No. 55748.

Longitudinal lines on the Proposed Bridge are concentric with Existing Bridge Base Line. The widening shall be constructed on curves concentric with Existing Bridge Base Line.

(1) Measured to line tangent to curve at CL joint for Pier No. 3 and CL bearing for Abutment Nos. 1 & 2 and Pier Nos. 1, 2, 4 and 5.

(2) Measured between line radial to CL Construction and CL I-40 Median.

(3) Modify existing concrete riprap, as necessary to accomodate new concrete riprap. Any removal shall extend to the location of an existing construction joint. Payment for removal shall be considered subsidiary to the pay item "MODIFICATION OF EXISTING BRIDGE STRUCTURE (BRIDGE NO. 05324)".

(4) Shoring may be required during construction. Payment for this work, if required, shall be considered subsidiary to the pay item "UNCLASSIFIED EXCAVATION FOR STRUCTURES - BRIDGE". See SP JOB NO. CA0609 "SHORING".

STATE OF ARKANSAS
LICENSED PROFESSIONAL ENGINEER
No. 14058
SETH R. YANCEY
7-18-14
BRIDGE ENGINEER

SHEET 1 OF 3
LAYOUT OF BRIDGE
RAMP 4 OVER I-40
HWY. 365 - I-430 (WIDENING) & I-430 INTCHNG. MOD. (F)
PULASKI COUNTY
ROUTE 430 SEC. 21

ARKANSAS STATE HIGHWAY COMMISSION
LITTLE ROCK, ARK.

DRAWN BY: HEW DATE: NOV. 2013 FILENAME: BCA0609x6_LI.DGN
CHECKED BY: JES DATE: APR. 2014 SCALE: 1" = 20'
DESIGNED BY: SRY DATE: NOV. 2013

BRIDGE NO. 05324 DRAWING NO. 55747

SRYancey 7/18/2014 8:44:32 AM
WORKSPACE: AHTD Bridge
L:\2011\M011709 - I-40 at I-430 Interchange Modifications\Drawings\BCA0609xLI\Layout 1of 3.dgn
REVISED DATE:

DATE REVISED	DATE FILMED	DATE REVISED	DATE FILMED

FED. ROAD DIST. NO.	STATE	FED. AID PROJ. NO.	SHEET NO.	TOTAL SHEETS
6	ARK.			
JOB NO.		CA0609	303	693
(1) 05324		LAYOUT		55748

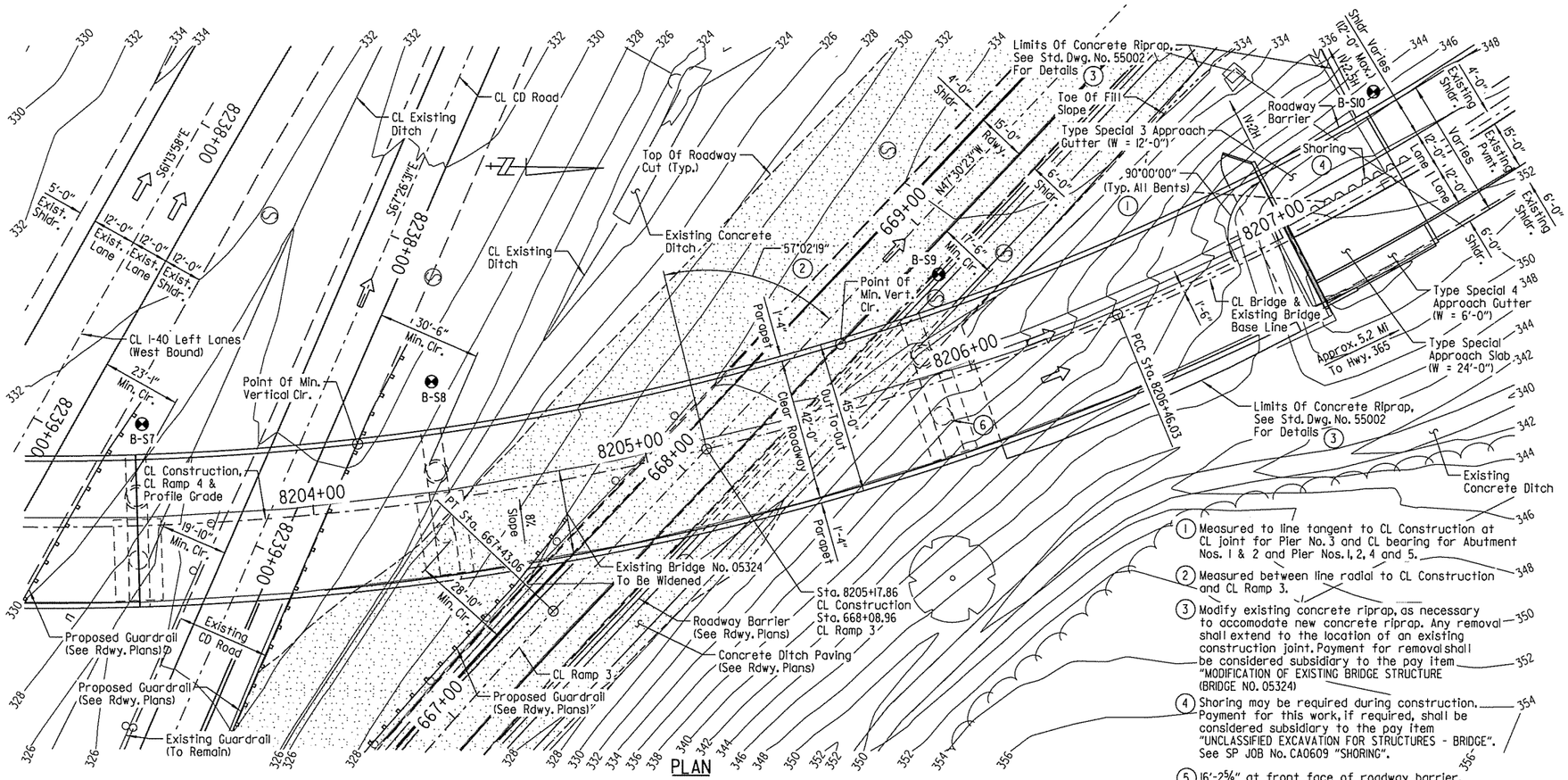

(1) Measured to line tangent to CL Construction at CL joint for Pier No. 3 and CL bearing for Abutment Nos. 1 & 2 and Pier Nos. 1, 2, 4 and 5.

(2) Measured between line radial to CL Construction and CL Ramp 3.

(3) Modify existing concrete riprap, as necessary to accomodate new concrete riprap. Any removal shall extend to the location of an existing construction joint. Payment for removal shall be considered subsidiary to the pay item "MODIFICATION OF EXISTING BRIDGE STRUCTURE (BRIDGE NO. 05324)

(4) Shoring may be required during construction. Payment for this work, if required, shall be considered subsidiary to the pay item "UNCLASSIFIED EXCAVATION FOR STRUCTURES - BRIDGE". See SP JOB No. CA0609 "SHORING".

(5) 16'-2⅝" at front face of roadway barrier.

PLAN

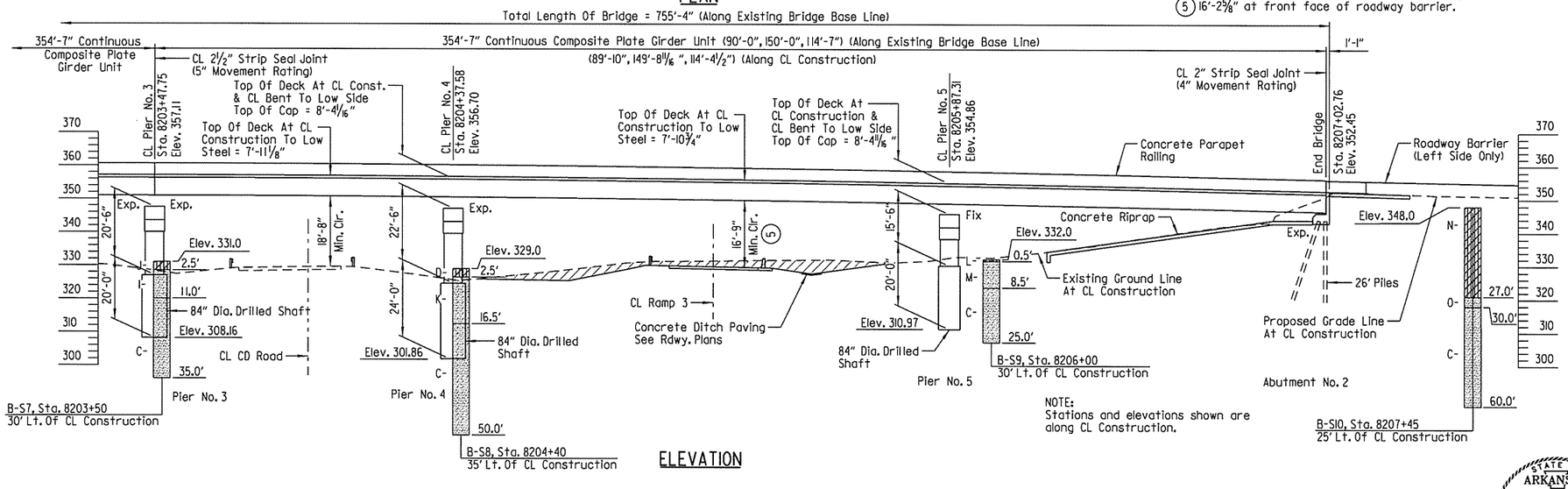

ELEVATION

NOTE:
Stations and elevations shown are along CL Construction.

FOR R/W DATA AND GUARDRAIL DETAILS, SEE ROADWAY PLANS

NOTES:
Replace Approach Slabs & Gutters at both ends of Bridge. Use Type Special 2 Approach Gutters (W = 12'-0") on left side of begin bridge. Use Type Special 3 Approach Gutters (W = 12'-0") on left side of end bridge. Use Type Special 4 Approach Gutters (W = 6'-0") on right side of begin and end bridge. See Dwg. Nos. 55801-55803 for details. Use Type Special Approach Slab (W = 24'-0") at each bridge end, see Dwg. Nos. 55799 & 55800 for details.

For "GENERAL NOTES", "BORING LEGEND" & "N VALUES", See Dwg. No. 55749.

Longitudinal lines on the Proposed Bridge are concentric with Existing Bridge Base Line. The widening shall be constructed on curves concentric with Existing Bridge Base Line.

HORIZONTAL CURVE DATA 1

CL Construction *
PI = 8201+81.47
Δ = 93°42'06" LT.
D = 07°00'46" **
T = 871.58'
L = 1336.14'
e = 0.08 Ft./Ft.
R = 817.01'
PC = 8193+09.89
PCC = 8206+46.03

HORIZONTAL CURVE DATA 2

CL Construction *
PI = 8209+66.41
Δ = 48°17'25" LT.
D = 08°01'00" **
T = 320.38'
L = 602.37'
e = 0.08 Ft./Ft.
R = 714.70'
PCC = 8206+46.03
PT = 8212+48.40

* Curve data shown based on existing plans and survey data, contractor to field verify.

** Existing bridge plans indicate that the horizontal geometry consists of 7°00'00" and 8°00'00" curves, respectively, measured along the Existing Bridge Base Line which is 1'-6" from the Proposed CL Construction.

*** Vertical Curve Data was determined from a best fit profile based off the existing bridge deck and abutment cap elevations and was adjusted to accommodate proposed mofifications. Contractor to verify accuracy of proposed vertical curve data prior to any construction.

(6) Pier No. 5 shall be shored prior to any Stage I Superstructure demolition, See Dwg. No. 55754 for details.

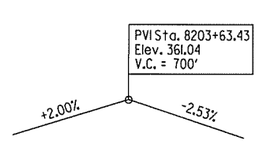

VERTICAL CURVE DATA

CL Construction ***
(Profile Grade Along CL Construction)

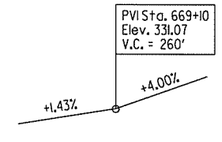

VERTICAL CURVE DATA

Ramp 3
(Profile Along Left Edge Of Lane)

STATE OF ARKANSAS
LICENSED PROFESSIONAL ENGINEER
No. 14058
SETH R. YANCEY
7-18-14
BRIDGE ENGINEER

SHEET 2 OF 3
LAYOUT OF BRIDGE
RAMP 4 OVER I-40
HWY. 365 - I-430 (WIDENING) & I-430 INTCHNG. MOD. (F)
PULASKI COUNTY
ROUTE 430 SEC. 21

ARKANSAS STATE HIGHWAY COMMISSION
LITTLE ROCK, ARK.

DRAWN BY: HEW DATE: NOV. 2013 FILENAME: BCA0609x6_L2.DGN
CHECKED BY: JES DATE: APR. 2014 SCALE: 1" = 20'
DESIGNED BY: SRY DATE: NOV. 2013
BRIDGE NO. 05324 DRAWING NO. 55748

SRYancey 7/18/2014 8:44:33 AM
WORKSPACE: AHTD Bridge
L:\ZONING\07109 - I-40 at I-430 Interchange Modifications\Drawings\BCA0609xL2 (Layout 2 of 3).dgn
REVISED DATE:

DATE REVISED	DATE FILMED	DATE REVISED	DATE FILMED	FED. ROAD DIST. NO.	STATE	FED. AID PROJ. NO.	SHEET NO.	TOTAL SHEETS
				6	ARK.			
				JOB NO.		CA0609	304	693

(1) 05324 LAYOUT 55749

GENERAL NOTES

BENCH MARK: PN: 1078, PD: 5/8" REBAR W/2" CAP, ST: 8199+40.89
OF: 31.50' RT. ZC: 352.74

CONSTRUCTION SPECIFICATIONS: Arkansas State Highway and Transportation Department Standard Specifications For Highway Construction (2014 Edition) with Applicable Supplemental Specifications And Special Provisions. Unless otherwise noted in the plans, for section and subsection refer to The Standard Construction Specifications.

DESIGN SPECIFICATIONS: AASHTO Standard Specifications For Highway Bridges 17th Edition (2002) with current Interim Specifications

LIVE LOADING: HS20 & Military METHOD OF DESIGN: LFD

FUTURE WEARING SURFACE DESIGN LOADING: 0 psf

SEISMIC PERFORMANCE CATEGORY: A

MATERIALS AND STRENGTHS:

Class S(AE) Concrete - Bridge (Superstructure)	f'c = 4,000 psi
Class S Concrete - Bridge (Substructure)	f'c = 3,500 psi
Reinforcing Steel (AASHTO M 31 Or M 322 Type A, GR. 60)	fy = 60,000 psi
Structural Steel (AASHTO M 270, GR. 50)	Fy = 50,000 psi
Structural Steel (AASHTO M 270, GR. 36)	Fy = 36,000 psi

BORING LOGS: Boring Logs may be obtained from Programs And Contracts Division.

STEEL PILING: Piling at Abutment Nos. 1 and 2 shall be HP12x53 (Grade 50) and shall be driven with an approved air, steam or diesel hammer to a minimum safe bearing capacity of 95 tons. All piling shall be driven into the material designated as shale in the boring legend. Lengths of piling shown are for estimating quantities and for use in determining payment for cutoff and build-up in accordance with Section 805. Actual lengths will be determined in the field. Piles will be measured and paid for as the actual linear foot of accepted pile left in place. Piles in abutments to be driven after required excavation or embankment to bottom of cap is in place. The Contractor shall use approved steel H-Pile driving points on all piles.

EXPLORATORY HOLES: The Contractor shall drill exploratory holes at Abutment 2 in accordance with SP JOB NO. CA0609 "EXPLORATORY HOLES". The quantities of exploratory holes shown are for bidding purposes only. The actual location, number and depth of exploratory holes are to be determined in the field by the Engineer.

PREBORING: Preboring is required at Abutment No. 2 if exploratory holes indicate that the depth of rock is less than 10'. Preboring shall be to a minimum 3' depth into the material designated as shale on the boring legend. The actual size and depth of preboring, if required, will be determined in the field by the Engineer. The Contractor shall be responsible for keeping the prebored holes free from debris prior to backfilling which may require the use of casings or other methods. After driving is completed, the prebored hole shall be backfilled Class S concrete to the top of rock and remaining length of prebored holes shall be backfilled in accordance with Subsection 805.08(a) to completely fill voids. The cost of preboring, if required, temporary casings and backfill will not be paid for directly but will be considered subsidiary to the item "STEEL PILING (HP12x53)".

DRILLED SHAFTS: All drilled shafts shall be founded a minimum of 10'-0" into material designated as moderately hard to hard dark gray shale on the boring legend. No adjustment in plan tip elevation shall be made without prior approval from the Engineer. Methods of construction of the drilled shafts shall be in accordance with SP JOB NO. CA0609 "DRILLED SHAFT FOUNDATIONS".

CROSSHOLE SONIC LOGGING: Nondestructive testing shall be performed on each drilled shaft in accordance with SP JOB NO. CA0609 "NONDESTRUCTIVE TESTING OF DRILLED SHAFTS".

BRIDGE DECK: The concrete bridge deck shall be given a tine finish as specified for final finishing in Subsection 802.19 for Class 5 Tined Bridge Roadway Surface Finish.

CLASS I PROTECTIVE SURFACE TREATMENT: Class I Protective Surface Treatment shall be applied to the roadway surface and the roadway face and top of the concrete parapet rail.

PAINT: All new structural steel except galvanized members, some surfaces in contact with concrete, and as otherwise noted, shall be painted as specified in Subsection 807.75. The existing structural steel shall be cleaned and painted in accordance with SP JOB NO. CA0609 "CLEANING AND PAINTING EXISITNG STRUCTURAL STEEL". The color of the paint shall be Aluminum and shall match Federal Standard 595B, Color Chip No. 37200. The existing paint system contains lead based primer. Proper containment methods shall be used for existing paint removed.

DETAIL DRAWINGS:	DRAWING NOS:
Stage Construction	55750-55754
Abutments	55755-55758
Piers	55759-55761
398'-7" Continuous Composite Plate Girder Unit	55762-55777
354'-7" Continuous Composite Plate Girder Unit	55778-55791
Strip Seal Joint	55792-55793
Elastomeric Bearings	55794-55795
Bridge Mounted Sign Structure	55796-55798
Type Special Approach Slabs	55799-55800
Type Special Approach Gutters	55801-55803
Concrete Riprap	55002
Steel Piling	55020

THE PROPOSED WORK CONSISTS OF: Widening of Existing Bridge No. 05324, modifying the existing bents, removing and replacing the concrete deck, replace bearing devices, cleaning and painting existing girders and crossframes (see "METHOD OF WORK" On Dwg. No. 55777 for additional details) and replacing joint seals. For additional requirements in conducting the work, see Section 821.

VERIFICATION: Except as noted, components of Existing Bridge No. 05324 are to be retained and joined to the proposed work. Information and dimensions shown are based on existing bridge plans. The Contractor is to adhere strictly to the requirements for verification of the geometry of the existing bridge and its relationship to the proposed work described in Subsection 821.02 and make necessary adjustments to fit the proposed work to the existing structure. Payment for this work shall be considered subsidiary to the pay item "MODIFICATION OF EXISTING BRIDGE STRUCTURE (BRIDGE NO. 05324)".

EXISTING BRIDGE: Existing Bridge No. 05324 is 25' wide and 755' long and consists of continuous units with steel girders and a concrete deck supported by a concrete substructure with steel piling and spread footings. Plans of the existing structure may be obtained upon request to the Programs and Contracts Division.

REMOVAL AND SALVAGE: Existing Bridge No. 05324 is to be widened in stages and the existing deck and barrier railing are to be removed in accordance with Section 205. All material removed from the existing bridge shall become property of the Contractor.

MAINTENANCE OF TRAFFIC: See Roadway Plans.

BORING LEGEND

A - Very stiff tan and gray silty clay and shale and sandstone fragments (fill)
B - Moderately hard tan and brown weathered shale
C - Moderately hard to hard dark gray shale
D - Stiff brown silty clay w/ shale fragments (fill)
E - Stiff brown silty clay
F - Low hardness brown and tan weathered shale
G - Stiff tan silty clay w/ shale fragments (fill)
H - Very stiff brown and reddish brown silty clay w/ sandstone fragments
I - Moderately hard tan weathered shale
J - Very stiff dark brown silty clay w/ crushed stone (fill)
K - Low hardness tan weathered shale
L - Stiff brown silty clay w/ some shale fragments
M - Moderately hard tan and dark gray weathered shale
N - Stiff to very stiff tan, dark gray and brown silty clay and shale fragments (fill)
O - Moderately hard dark gray and brown weathered shale

"N" VALUES

B-S4, Sta. 8199+30 20' Lt. Of CL Construction	B-S5, Sta. 8200+40 20' Lt. Of CL Construction	B-S6, Sta. 8201+90 30' Lt. Of CL Construction	B-S7, Sta. 8203+50 30' Lt. Of CL Construction	B-S8, Sta. 8204+40 35' Lt. Of CL Construction	B-S9, Sta. 8206+00 30' Lt. Of CL Construction	B-S10, Sta. 8207+45 25' Lt. Of CL Construction
0.5-1.5, N=31	0.5-1.5, N=16	0.5-1.5, N=17	0.5-1.5, N=18	0.5-1.5, N=15	0.5-1.5, N=50/9"	0.5-1.5, N=26
2.5-3.5, N=40	2.5-3.5, N=28	2.5-3.5, N=24	2.5-3.5, N=50/10"	2.5-3.5, N=29	2.0-2.5, N=50/4"	2.5-3.5, N=30
4.5-5.5, N=48	4.5-5.5, N=14	4.5-5.5, N=14	4.0-4.5, N=50/5"	4.5-5.5, N=50/8"	3.5-4.0, N=30/0"	4.5-5.5, N=12
6.5-7.5, N=43	6.5-7.5, N=33	8.5-9.0, N=50/4"	6.0-6.5, N=30/0"	6.5-7.0, N=50/6"	6.0-6.5, N=30/0"	6.5-7.5, N=15
9.0-10.0, N=30	9.0-9.5, N=50/7"	13.5-14.0, N=30/0"	8.5-9.0, N=30/0"	9.0-9.25, N=50/2"	8.5-9.0, N=30/0"	9.0-10.0, N=34
14.0-15.0, N=50/8"	14.0-14.5, N=50/4"	18.5-19.0, N=30/0"	13.5-14.0, N=30/0"	13.5-14.0, N=25/0"	13.5-14.0, N=30/0"	14.0-15.0, N=16
19.0-20.0, N=50/8"	18.5-19.0, N=25/0"	23.5-24.0, N=30/0"	18.5-19.0, N=30/0"	18.5-19.0, N=25/0"	18.5-19.0, N=30/0"	19.0-20.0, N=22
24.0-25.0, N=40	23.5-24.0, N=25/0"	28.5-29.0, N=30/0"	28.5-29.0, N=30/0"	23.5-24.0, N=25/0"		24.0-25.0, N=50/9"
29.0-30.0, N=34	28.5-29.0, N=25/0"	33.5-34.0, N=30/0"	33.5-34.0, N=30/0"	28.5-29.0, N=25/0"		29.0-29.25, N=50/3"
34.0-35.0, N=50/10"	33.5-34.0, N=25/0"	38.5-39.0, N=30/0"		33.5-34.0, N=25/0"		34.0-34.25, N=50/1"
39.0-40.0, N=37	38.5-39.0, N=25/0"	43.5-44.0, N=30/0"		38.5-39.0, N=25/0"		38.5-39.0, N=30/0"
44.0-45.0, N=43	43.5-44.0, N=25/0"	48.5-49.0, N=30/0"		43.5-44.0, N=25/0"		43.5-44.0, N=30/0"
49.0-50.0, N=50/10"				48.5-49.0, N=25/0"		48.5-49.0, N=30/0"
54.0-55.0, N=55						53.5-54.0, N=30/0"
59.5-60.0, N=50/3"						58.5-59.0, N=30/0"
63.5-64.0, N=25/0"						
68.5-69.0, N=25/0"						
73.5-74.0, N=25/0"						
78.5-79.0, N=25/0"						
83.5-84.0, N=25/0"						

STATE OF ARKANSAS
LICENSED PROFESSIONAL ENGINEER
No. 14058
SETH R. YANCEY
7-18-14
BRIDGE ENGINEER

SHEET 3 OF 3
LAYOUT OF BRIDGE
RAMP 4 OVER I-40
HWY. 365 - I-430 (WIDENING) & I-430 INTCHNG. MOD. (F)
PULASKI COUNTY
ROUTE 430 SEC. 21
ARKANSAS STATE HIGHWAY COMMISSION
LITTLE ROCK, ARK.

DRAWN BY: HEW DATE: NOV. 2013 FILENAME: BCA0609x6_L3.DGN
CHECKED BY: JES DATE: APR. 2014 SCALE: NO SCALE
DESIGNED BY: SRY DATE: NOV. 2013
BRIDGE NO. 05324 DRAWING NO. 55749

SRYancey 7/18/2014 8:44:34 AM
WORKSPACE: AHTD Bridge
L:\2011\1017709 - I-40 at I-430 Interchange Modifications\Drawings\BCA0609x1_L3 (Layout 3 of 3).dgn
REVISED DATE:

DATE REVISED	DATE FILMED	DATE REVISED	DATE FILMED	FED. ROAD DIST. NO.	STATE	FED. AID PROJ. NO.	SHEET NO.	TOTAL SHEETS
				6	ARK.			
				JOB NO.		CA0609	305	693
				(1) 05324		STAGE CONSTRUCTION		55750

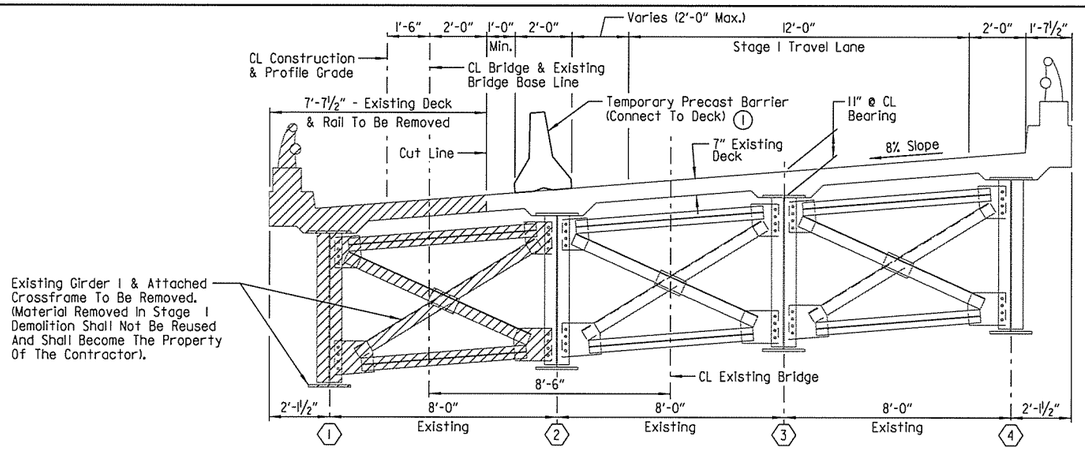

TYPICAL SECTION - STAGE 1 DEMOLITION

(Looking Forward)
Scale: ⅛" = 1'-0"

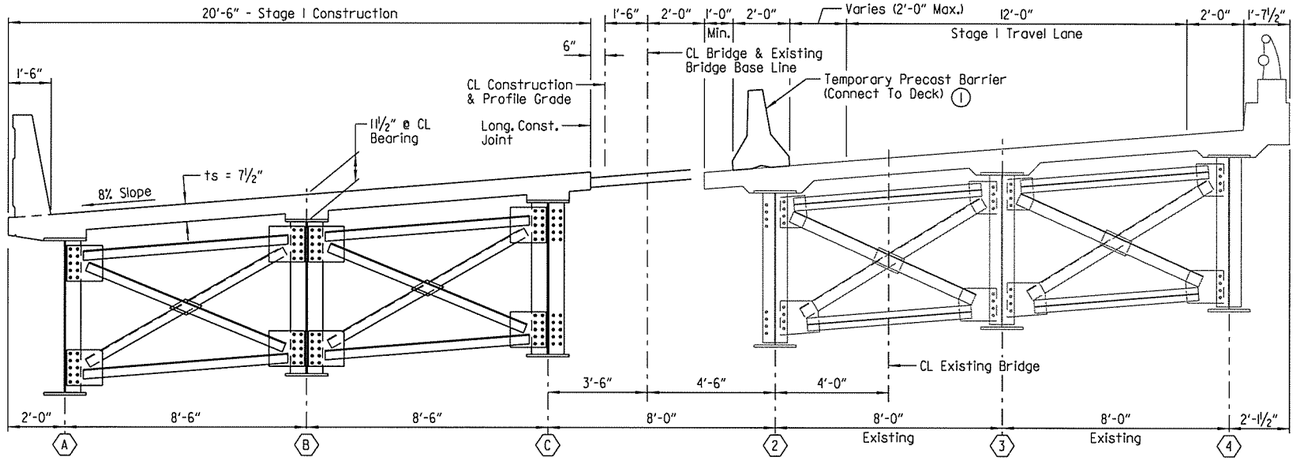

TYPICAL SECTION - STAGE 1 CONSTRUCTION

(Looking Forward)
Scale: ⅛" = 1'-0"

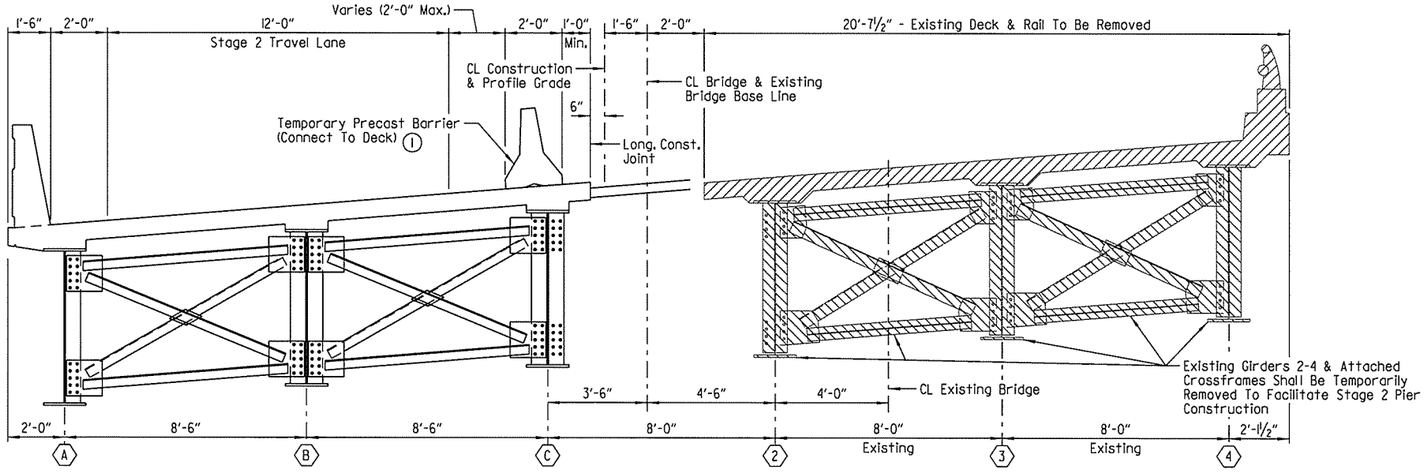

TYPICAL SECTION - STAGE 2 DEMOLITION

(Looking Forward)
Scale: ⅛" = 1'-0"

(1) For details of Temporary Precast Barrier, See Std. Dwg. No. TC-4

NOTES:
Dimensions are measured along a radial line projected from Existing Bridge Base Line.

Details which relate to maintenance of traffic are shown on the bridge plans for information only. See Roadway Plans for Maintenance of Traffic.

Existing Bridge Base Line is on a 7° curve before the PCC (at Sta. 8206+46.03) and 8° curve after the PCC. Longitudinal lines on the proposed bridge are concentric to Existing Bridge Base Line. The widening shall be constructed on curves concentric with the respective Existing Bridge Base Line.

STATE OF ARKANSAS
LICENSED PROFESSIONAL ENGINEER
No. 14498
ADAM B. HALL
7-18-14
BRIDGE ENGINEER

SHEET 1 OF 5
DETAILS OF STAGE CONSTRUCTION
RAMP 4 OVER I-40
PULASKI COUNTY
ROUTE 430 SEC. 21
ARKANSAS STATE HIGHWAY COMMISSION
LITTLE ROCK, ARK.

DRAWN BY: ABH DATE: MAR. 2014 FILENAME: BCA0609x6_SCI.DGN
CHECKED BY: SRY DATE: MAR. 2014 SCALE: AS SHOWN
DESIGNED BY: ABH DATE: MAR. 2014
BRIDGE NO. 05324 DRAWING NO. 55750

SRYancey 7/18/2014 8:44:35 AM
WORKSPACE: AHTD Bridge
L:\2DRAWDIT709 - I-40 at I-430 Interchange Modifications\Drawings\BCA0609x6_SCI\Stage Const.-Super-11.dgn
REVISED DATE:

DATE REVISED	DATE FILMED	DATE REVISED	DATE FILMED	FED. ROAD DIST. NO.	STATE	FED. AID PROJ. NO.	SHEET NO.	TOTAL SHEETS
				6	ARK.			
				JOB NO.		CA0609	306	693
				(1) 05324		STAGE CONSTRUCTION		55751

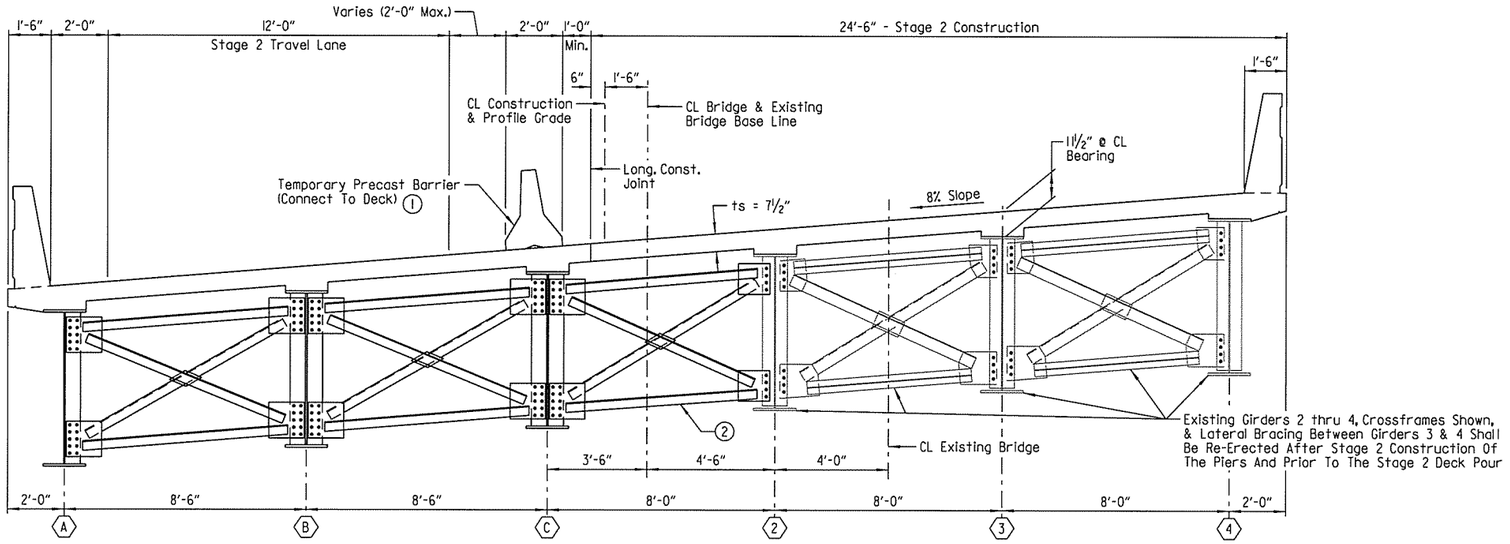

TYPICAL SECTION - STAGE 2 CONSTRUCTION

(Looking Forward)
Scale: ⅜" = 1'-0"

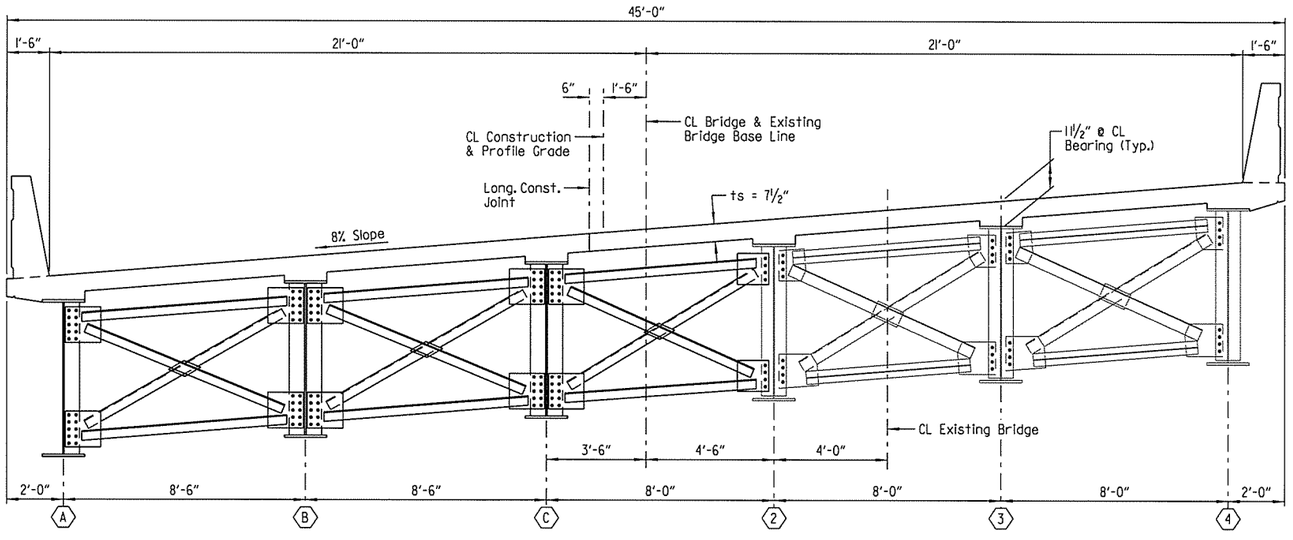

TYPICAL SECTION - FINAL CONDITION

(Looking Forward)
Scale: ⅜" = 1'-0"

(1) For details of Temporary Precast Barrier, See Std. Dwg. No. TC-4

(2) Crossframes connecting new Girder C and existing Girder 2 (Crossframe "B") shall not be erected until existing Girders 2 thru 4 and existing crossframes between girders 2 & 4 shown have been re-erected. See "CROSSFRAME B DETAIL" on Dwg. No. 55768 for additional information concerning sequence of field welding bracing members.

NOTES:
Dimensions are measured along a radial line projected from Existing Bridge Base Line.

Details which relate to maintenance of traffic are shown on the bridge plans for information only. See Roadway Plans for Maintenance of Traffic.

Existing Bridge Base Line is on a 7° curve before the PCC (at Sta. 8206+46.03) and 8° curve after the PCC. Longitudinal lines on the proposed bridge are concentric to Existing Bridge Base Line. The widening shall be constructed on curves concentric with the respective Existing Bridge Base Line.

STATE OF ARKANSAS
LICENSED PROFESSIONAL ENGINEER
No. 14498
ADAM B. HALL
7-18-14
BRIDGE ENGINEER

SHEET 2 OF 5
DETAILS OF STAGE CONSTRUCTION
RAMP 4 OVER I-40
PULASKI COUNTY
ROUTE 430 SEC. 21
ARKANSAS STATE HIGHWAY COMMISSION
LITTLE ROCK, ARK.

DRAWN BY: ABH DATE: MAR. 2014 FILENAME: BCA0609x6_SC2.DGN
CHECKED BY: SRY DATE: MAR. 2014 SCALE: AS SHOWN
DESIGNED BY: ABH DATE: MAR. 2014
BRIDGE NO. 05324 DRAWING NO. 55751

SRYancey 7/18/2014 8:44:35 AM
WORKSPACE: AHTD Bridge
L:\2011\1017709 - I-40 at I-430 Interchange Modifications\Drawings\BCA0609x1_SC2 (Stage Const.-Super-2).dgn
REVISED DATE:

DATE REVISED	DATE FILMED	DATE REVISED	DATE FILMED	FED. ROAD DIST. NO.	STATE	FED. AID PROJ. NO.	SHEET NO.	TOTAL SHEETS
				6	ARK.			
				JOB NO.		CA0609	307	693
				(1) 05324		STAGE CONSTRUCTION		55752

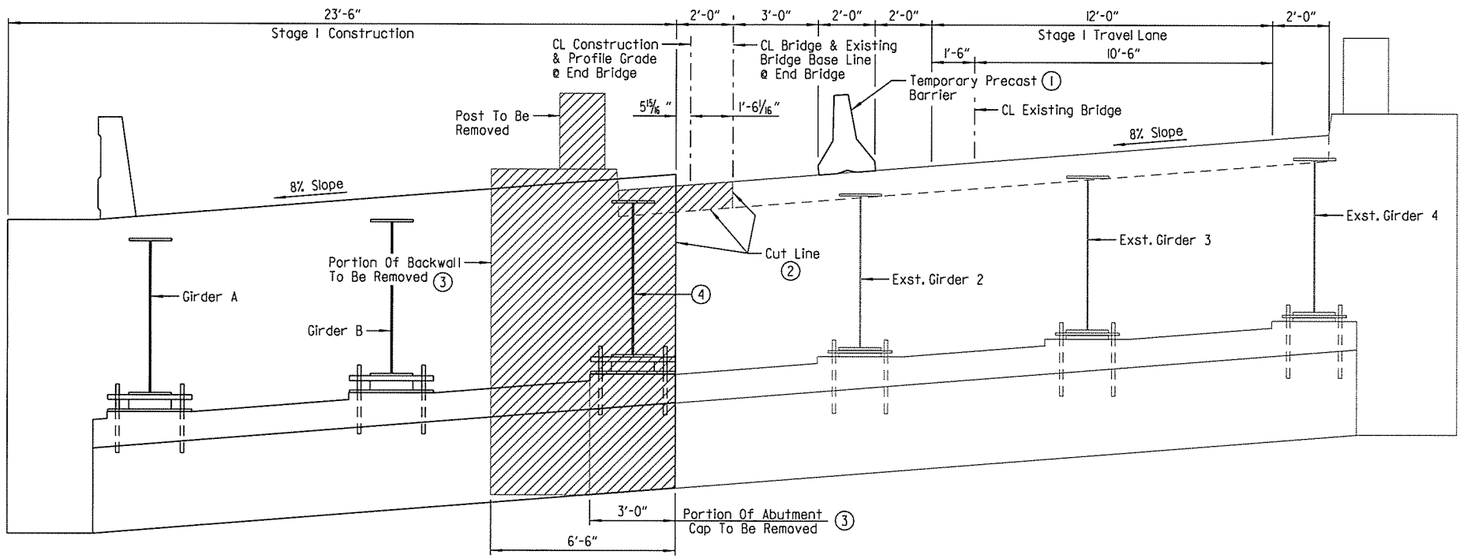

ABUTMENT ELEVATION - STAGE 1 CONSTRUCTION

Abutment 2 (Looking Forward) Shown
(Abutment 1 Similar)
Scale: 3/8" = 1'-0"

(1) For details of Temporary Precast Barrier, see Std. Dwg. No. TC-4.

(2) Existing cap and backwall shall be saw cut to clean lines.

(3) Concrete shall be removed from the existing cap and backwall as shown. The existing reinforcing steel shall be retained to be lapped to the new reinforcing steel as shown in the abutment details, see Dwg. Nos. 55755-55758.

(4) Existing Girder 1 shall be removed prior to Stage 1 abutment demolition and shall be replaced with new Girder C after Stage 1 Construction of abutment.

(5) Existing Girders 2-4 shall be temporarily removed during Stage 2 Construction to allow for modifications to the existing piers and for placement of new bearings. Girders shall be re-erected once Stage 2 pier modifications, bearings replacement, and abutment backwall modifications have been completed and prior to the Stage 2 deck pour.

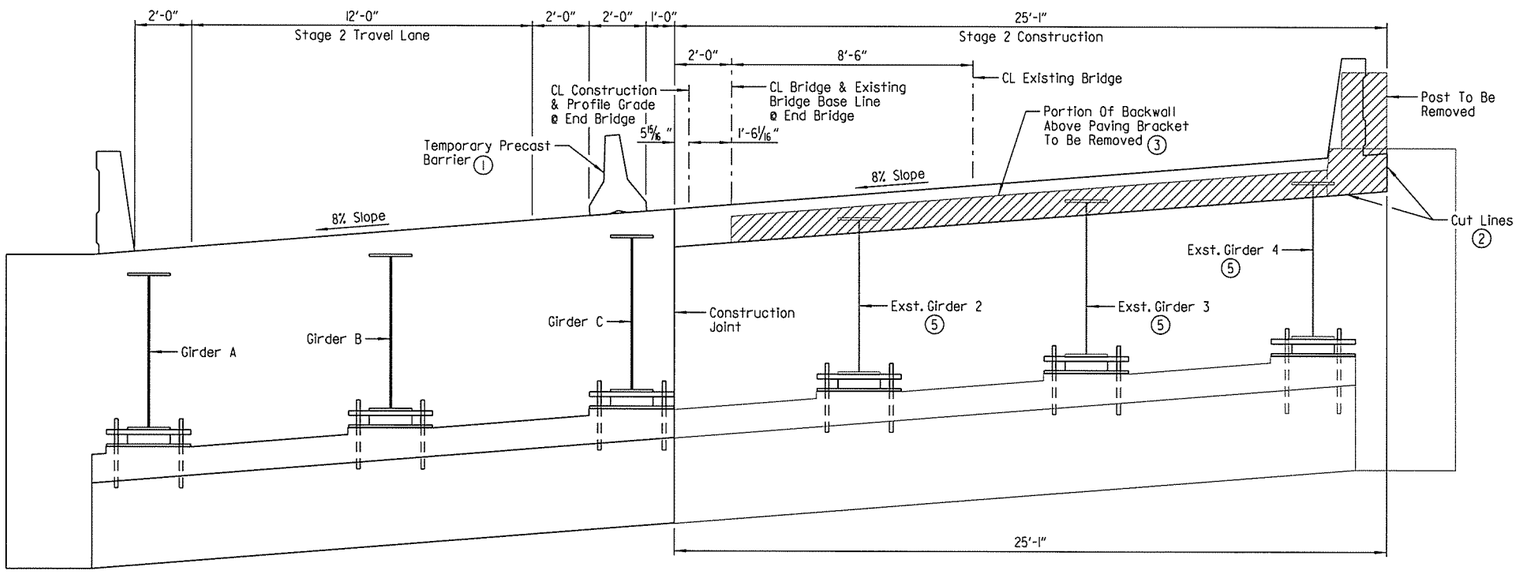

ABUTMENT ELEVATION - STAGE 2 CONSTRUCTION

Abutment 2 (Looking Forward) Shown
(Abutment 1 Similar)
Scale: 3/8" = 1'-0"

NOTES:
Dimensions shown are measured along CL Joint.

Details which relate to maintenance of traffic are shown on the bridge plans for information only. See Roadway Plans for Maintenance of Traffic.

STATE OF ARKANSAS
LICENSED PROFESSIONAL ENGINEER
No. 14058
SETH R. YANCEY
7-18-14
BRIDGE ENGINEER

SHEET 3 OF 5
DETAILS OF STAGE CONSTRUCTION
RAMP 4 OVER I-40
PULASKI COUNTY

ROUTE 430 SEC. 21

ARKANSAS STATE HIGHWAY COMMISSION

LITTLE ROCK, ARK.

DRAWN BY: HEW DATE: JAN. 2014 FILENAME: BCA0609x6_SC3.DGN
CHECKED BY: ABH DATE: MAR. 2014 SCALE: AS SHOWN
DESIGNED BY: SRY DATE: JAN. 2014

BRIDGE NO. 05324 DRAWING NO. 55752

SRYancey 7/18/2014 8:44:36 AM
WORKSPACE: AHTD Bridge
L:\20IN\I01T709 - I-40 at I-430 Interchange Modifications\Drawings\BCA0609x1_SC3 (Stage Const.-Abut1.dgn
REVISED DATE:

DATE REVISED	DATE FILMED	DATE REVISED	DATE FILMED	FED. ROAD DIST. NO.	STATE	FED. AID PROJ. NO.	SHEET NO.	TOTAL SHEETS
				6	ARK.			
				JOB NO.		CA0609	308	693
				(1) 05324		STAGE CONSTRUCTION		55753

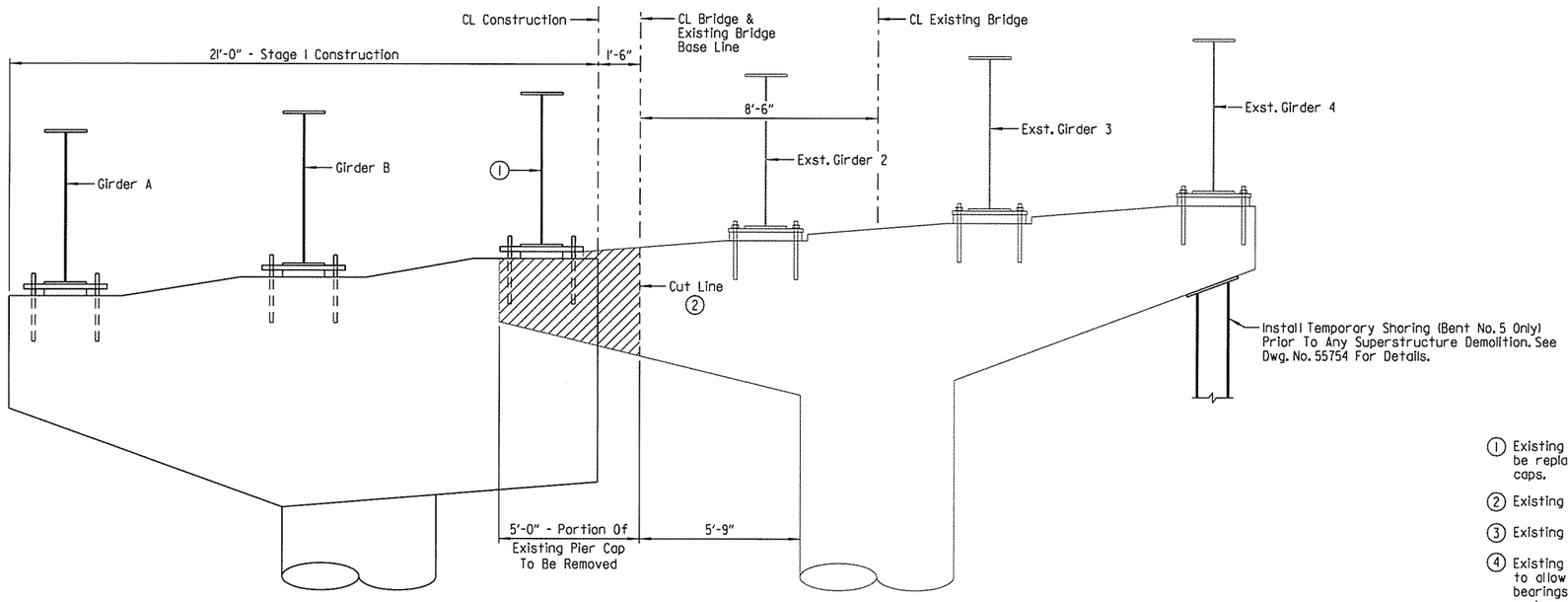

PIER ELEVATION - STAGE 1 CONSTRUCTION

(Looking Forward)
Scale: ⅜" = 1'-0"

(1) Existing Girder 1 shall be removed prior to Stage 1 demolition and shall be replaced with new Girder C after Stage 1 Construction of pier caps.

(2) Existing cap shall be saw cut to clean lines.

(3) Existing vertical column reinforcement shall be retained.

(4) Existing Girders 2-4 shall be temporarily removed during Stage 2 Construction to allow for modifications to the existing piers and for placement of new bearings. Girders shall be re-erected once Stage 2 pier modifications, bearing replacement and abutment backwall modifications have been completed and prior to the Stage 2 deck pour.

NOTE:
All dimensions shown are along CL Pier.

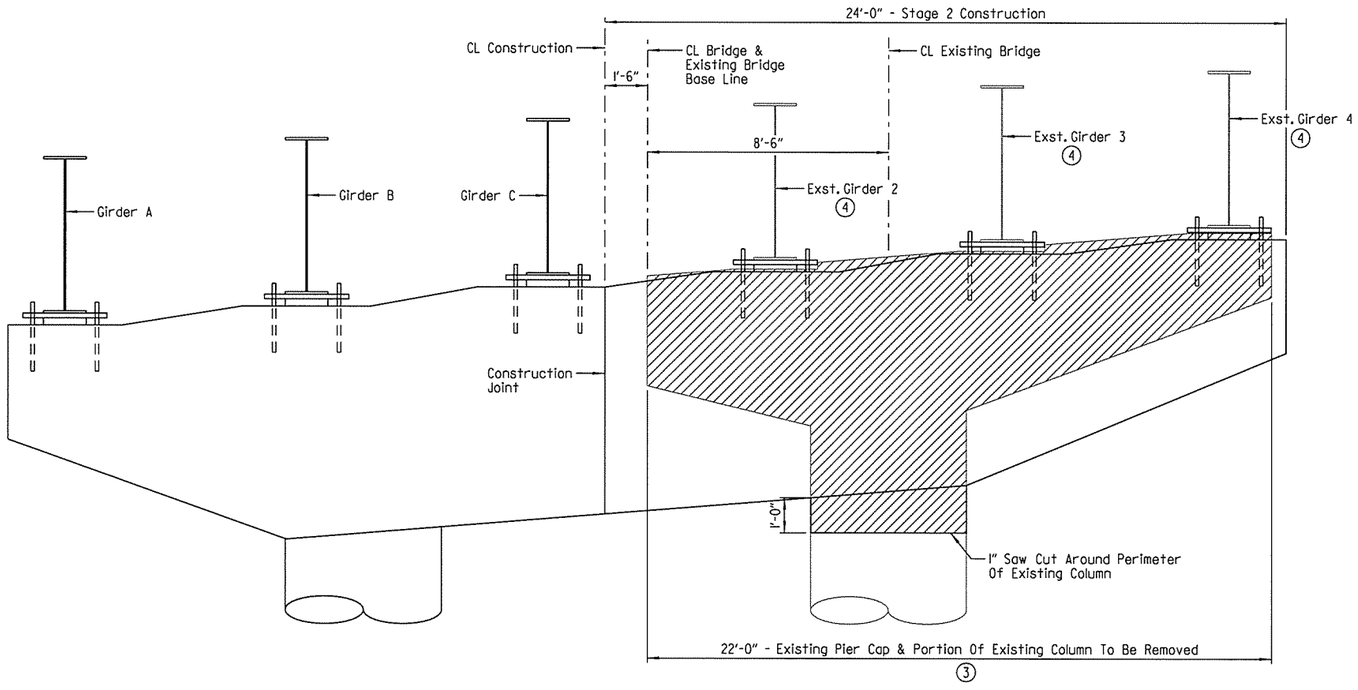

PIER ELEVATION - STAGE 2 CONSTRUCTION

(Looking Forward)
Scale: ⅜" = 1'-0"

STATE OF ARKANSAS
LICENSED PROFESSIONAL ENGINEER
No. 14058
SETH R. YANCEY
7-17-14
BRIDGE ENGINEER

SHEET 4 OF 5
DETAILS OF STAGE CONSTRUCTION
RAMP 4 OVER I-40
PULASKI COUNTY

ROUTE 430 SEC. 21

ARKANSAS STATE HIGHWAY COMMISSION

LITTLE ROCK, ARK.

DRAWN BY: ABH DATE: MAR. 2014 FILENAME: BCA0609x6_SC4.DGN
CHECKED BY: JES DATE: MAR. 2014 SCALE: AS SHOWN
DESIGNED BY: SRY DATE: JAN. 2014
BRIDGE NO. 05324 DRAWING NO. 55753

SRYancey 7/18/2014 8:44:36 AM
WORKSPACE: AHTD Bridge
L:\2014\14017\09 - I-40 at I-430 Interchange Modifications\Drawings\BCA0609x6_SC4 (Stage Const.-Pier).dgn
REVISED DATE:

DATE REVISED	DATE FILMED	DATE REVISED	DATE FILMED	FED. ROAD DIST. NO.	STATE	FED. AID PROJ. NO.	SHEET NO.	TOTAL SHEETS
				6	ARK.			
				JOB NO.		CA0609	309	693
				(1) 05324		STAGE CONSTRUCTION		55754

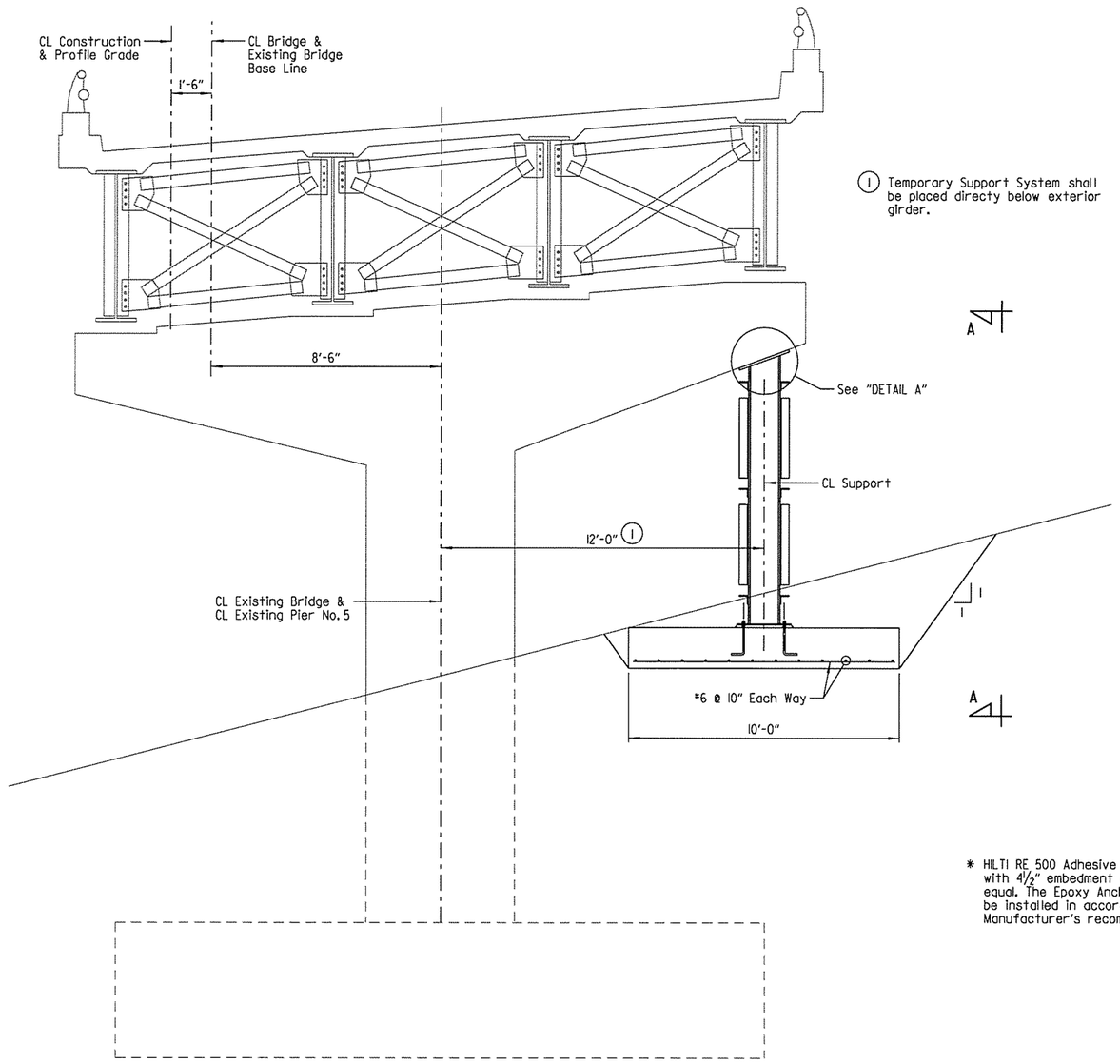

(1) Temporary Support System shall be placed directy below exterior girder.

EXISTING PIER 5 ELEVATION - STAGE I CONSTRUCTION
(Looking Forward)
Scale: 3/8" = 1'-0"

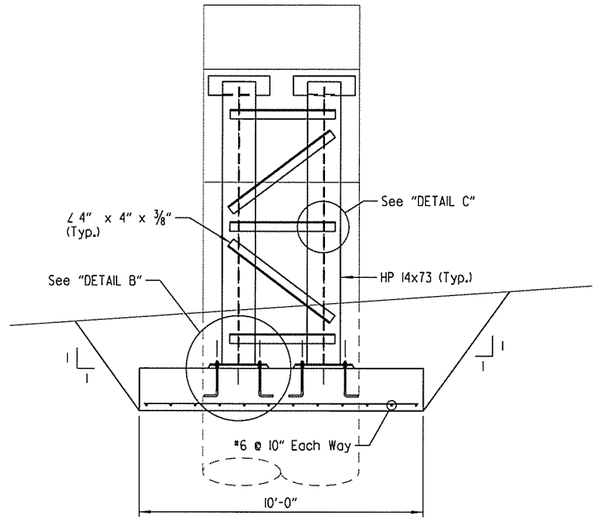

VIEW A-A
(Looking Forward)
Scale: 3/8" = 1'-0"

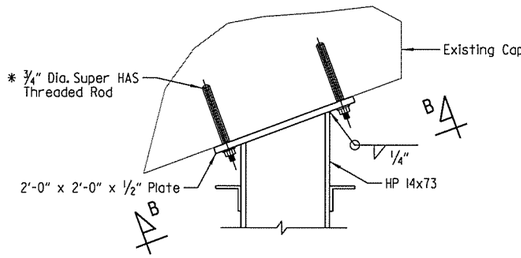

* HILTI RE 500 Adhesive Anchor System with 4½" embedment or approved equal. The Epoxy Anchor System shall be installed in accordance with Manufacturer's recommendations.

DETAIL A
Scale: 1" = 1'-0"

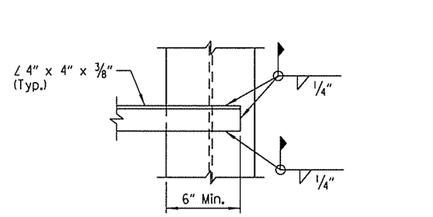

DETAIL C
Scale: 1" = 1'-0"

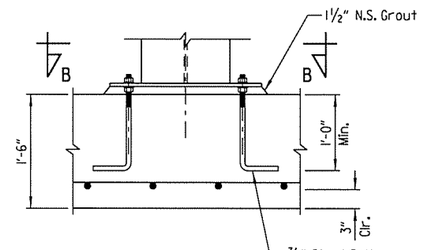

DETAIL B
Scale: 1" = 1'-0"

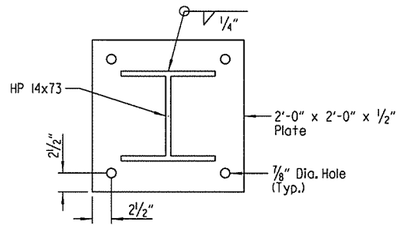

VIEW B-B
Scale: 1" = 1'-0"

GENERAL NOTES

Install Temporary Shoring prior to any superstructure demolition. Temporary shoring to remain in place until Bent 5 cap demolition has begun.

All structural steel shall be AASHTO M270, Grade 50.

All concrete shall be Class S with a minimum 28 day compressive strength f'c = 3,500 psi.

All reinforcing steel shall conform to AASHTO M31 or M322 Type A, Grade 60.

Cast in place anchor bolts shall be high strength steel. High strength steel anchor bolts shall conform to AASHTO M164 or A354-Grade BC galvanized in accordance with AASHTO M232 Class C or ASTM B695, Class 50.

Nuts shall galvanized in accordance with AASHTO M232 Class C or ASTM B695 Class 50.

Threads on bolts and nuts shall conform to American Standard Coarse Series, Class 2 Fit, ASA Specification B1.1.

Washers shall be high strength steel conforming to AASHTO M293 and galvanized in accordance with AASHTO M232 Class C or ASTM B695, Class 50.

All work and material required shall not be paid for directly but shall be considered subsidiary to "MODIFICATION OF EXISTING BRIDGE STRUCTURE (BRIDGE NO. 05324)".

STATE OF ARKANSAS
LICENSED PROFESSIONAL ENGINEER
No. 12058
SETH R. YANCEY
7-18-14
BRIDGE ENGINEER

SHEET 5 OF 5
DETAILS OF STAGE CONSTRUCTION
RAMP 4 OVER I-40
PULASKI COUNTY
ROUTE 430 SEC. 21
ARKANSAS STATE HIGHWAY COMMISSION
LITTLE ROCK, ARK.

DRAWN BY: HEW DATE: MAR. 2014 FILENAME: BCA0609x6_SC5.DGN
CHECKED BY: JES DATE: MAR. 2014 SCALE: AS SHOWN
DESIGNED BY: SRY DATE: JAN. 2014
BRIDGE NO. 05324 DRAWING NO. 55754

SRYancey 7/18/2014 8:44:37 AM
WORKSPACE: AHTD Bridge
L:\CONSULT\709 - I-40 at I-430 Interchange Modifications\Drawings\BCA0609x1_SC5 (Pier Shoring Details).dgn
REVISED DATE:

DATE REVISED	DATE FILMED	DATE REVISED	DATE FILMED	FED. ROAD DST. NO.	STATE	FED. AID PROJ. NO.	SHEET NO.	TOTAL SHEETS
				6	ARK.			
				JOB NO.		CA0609	310	693
				(1) 05324		ABUTMENT DETAILS		55755

NOTE:
For additional details of Stage Construction, See Dwg. No. 55752.

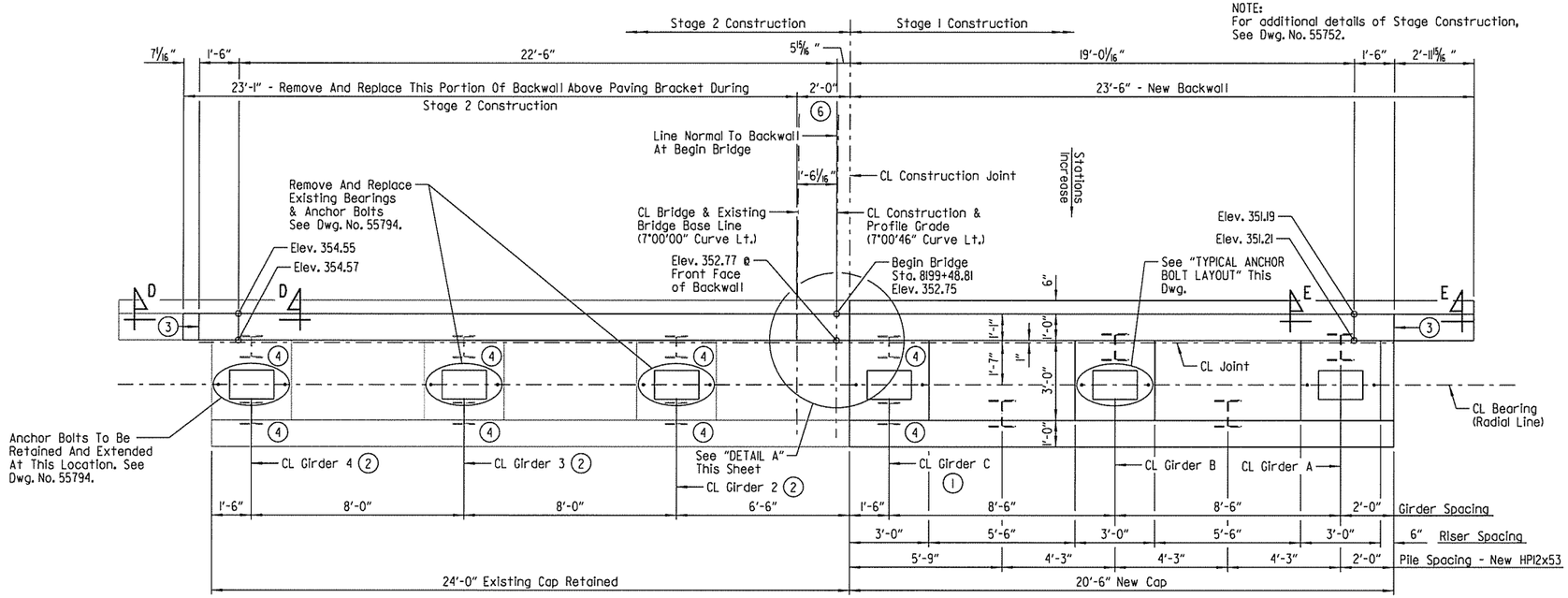

PLAN - ABUTMENT NO. 1

Scale: 3/8" = 1'-0"

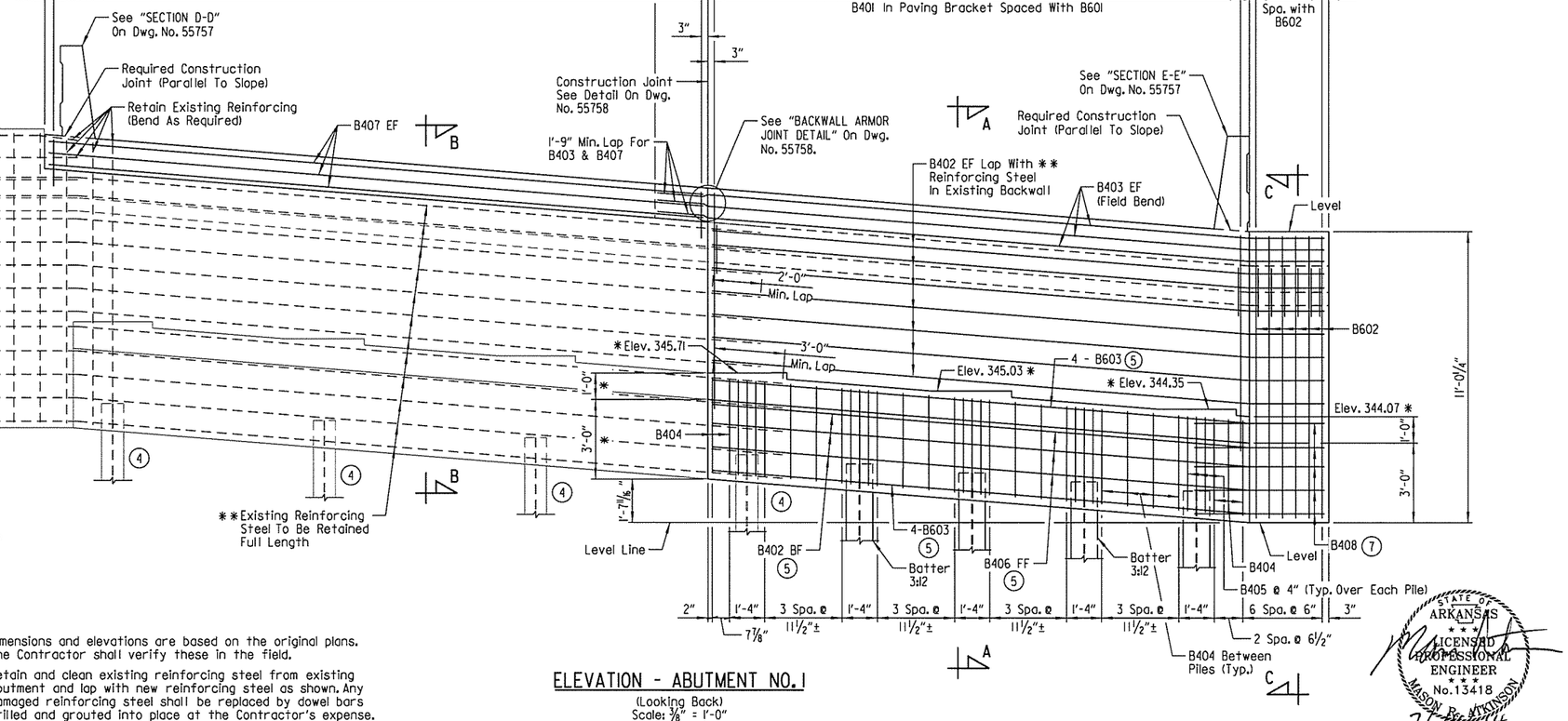

LEGEND

EF = Each Face
FF = Front Face
BF = Back Face

** Existing Reinforcing Steel To Be Retained Full Length

* Dimensions and elevations are based on the original plans. The Contractor shall verify these in the field.

** Retain and clean existing reinforcing steel from existing abutment and lap with new reinforcing steel as shown. Any damaged reinforcing steel shall be replaced by dowel bars drilled and grouted into place at the Contractor's expense.

ELEVATION - ABUTMENT NO. 1

(Looking Back)
Scale: 3/8" = 1'-0"

(1) Girder 1 to be removed and replaced during Stage 1 Construction.

(2) Girders 2-4 to be temporarily removed during Stage 2 Construction to allow for modifications to abutments and piers.

(3) Rail shall be constructed on curves concentric with CL Construction.

(4) Existing 10BP42 steel piles to remain in place.

(5) Lap with existing reinforcing steel in cap.

(6) Remove this portion of backwall above paving bracket during Stage 1 Construction and replace during Stage 2 Construction.

(7) See "SECTION C-C" on Dwg. No. 55757 for placement (field bend as required).

NOTES:
For "SECTION A-A", "SECTION B-B", "SECTION C-C", "SECTION D-D" & "SECTION E-E", see Dwg. No. 55757.

For "BAR LIST" & "BAR BENDING DIAGRAM", see Dwg. No. 55758.

For "GENERAL NOTES" see Dwg. No. 55756.

For details of elastomeric bearings, see Dwg. No. 55794.

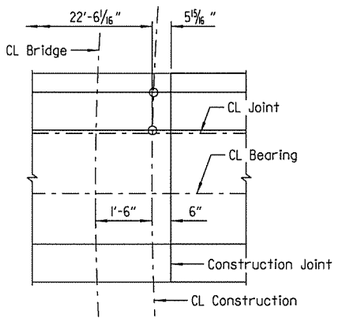

DETAIL A

Scale: 1/2" = 1'-0"

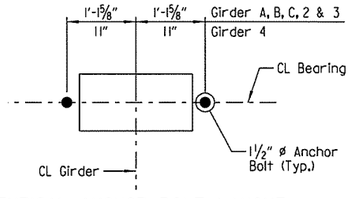

TYPICAL ANCHOR BOLT LAYOUT

Scale: 1" = 1'-0"

SHEET 1 OF 4
DETAILS OF ABUTMENTS
RAMP 4 OVER I-40
PULASKI COUNTY
ROUTE 430 SEC. 21
ARKANSAS STATE HIGHWAY COMMISSION
LITTLE ROCK, ARK.

STATE OF ARKANSAS
LICENSED PROFESSIONAL ENGINEER
No. 13418
MASON B. ATKINSON
7/18/14
BRIDGE ENGINEER

DRAWN BY: HEW DATE: FEB. 2014 FILENAME: BCA0609x6_AI.DGN
CHECKED BY: ABH DATE: MAR. 2014 SCALE: AS SHOWN
DESIGNED BY: MRA DATE: FEB. 2014
BRIDGE NO. 05324 DRAWING NO. 55755

SRTancey 7/18/2014 8:44:37 AM
WORKSPACE: AHTD Bridge
L:\ROW\NHT709 - I-430 at I-430 Interchange Modifications\Drawings\BCA0609xl_AI(Abutment No. 1).dgn
REVISED DATE:

DATE REVISED	DATE FILMED	DATE REVISED	DATE FILMED	FED. ROAD DIST. NO.	STATE	FED. AID PROJ. NO.	SHEET NO.	TOTAL SHEETS
				6	ARK.			
				JOB NO.		CA0609	311	693
				(1) 05324		ABUTMENT DETAILS		55756

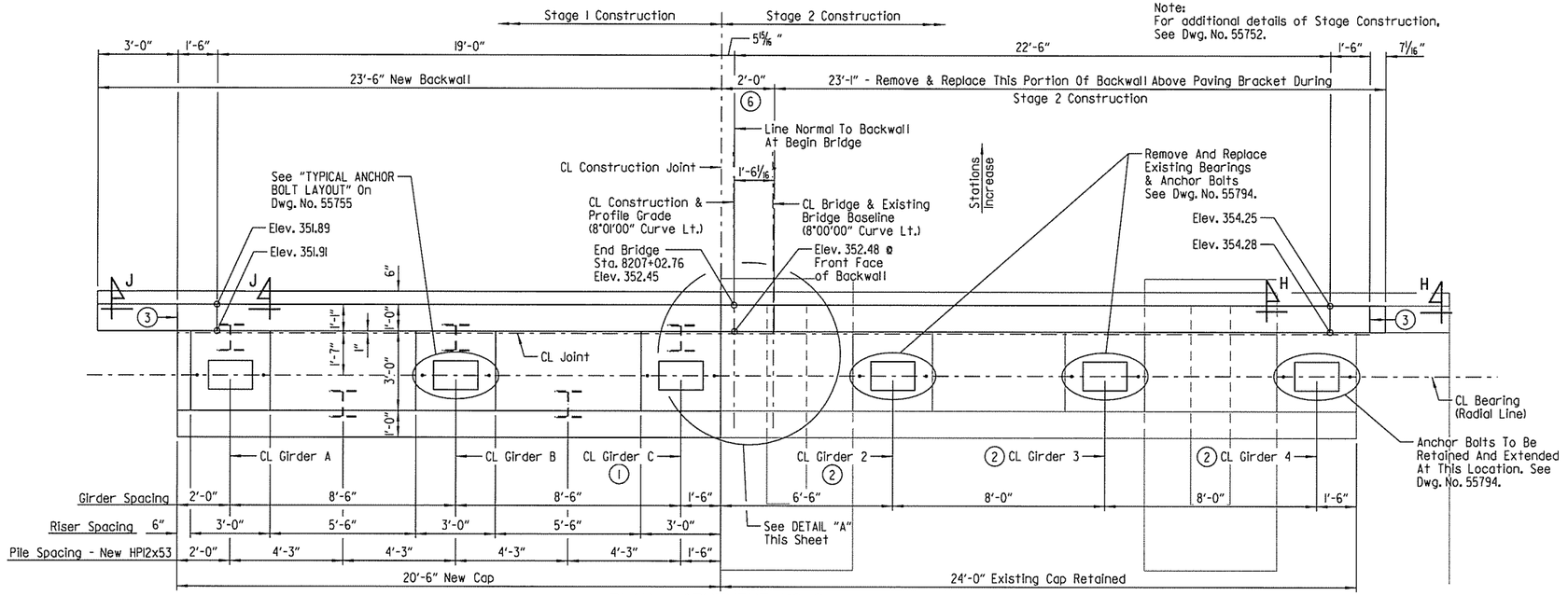

PLAN - ABUTMENT NO. 2

Scale: 3/8" = 1'-0"

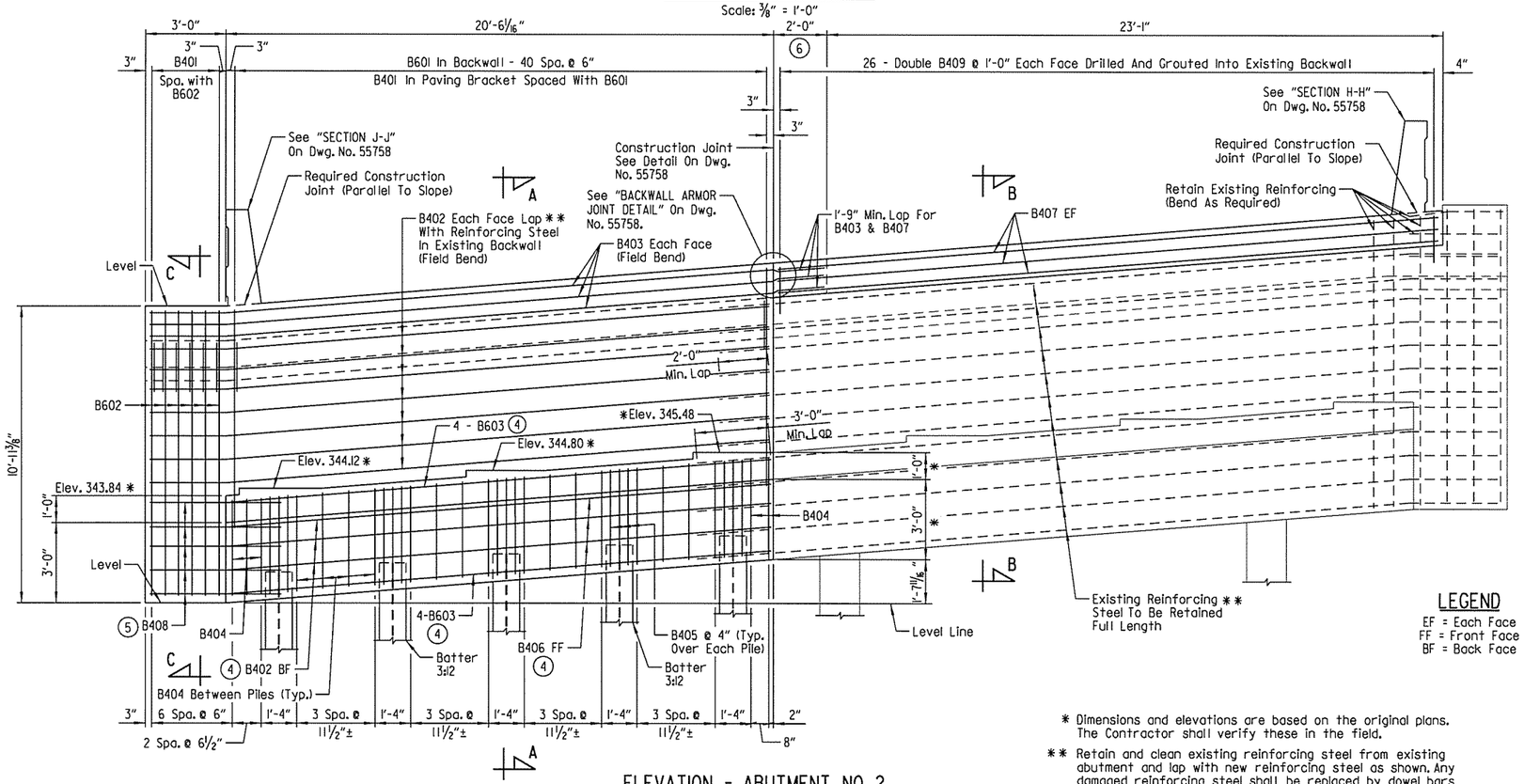

ELEVATION - ABUTMENT NO. 2

(Looking Forward)
Scale: 3/8" = 1'-0"

(1) Girder 1 to be removed and replaced during Stage 1 Construction.

(2) Girders 2-4 to be temporarily removed during Stage 2 Construction to allow for modifications to abutments and piers.

(3) Rail shall be constructed on curves concentric with CL Construction.

(4) Lap with existing reinforcing steel in cap.

(5) See "SECTION C-C" on Dwg. No. 55757 for placement (field bend as required).

(6) Remove this portion of backwall above paving bracket during Stage 1 Construction and replace during Stage 2 Construction.

GENERAL NOTES

Work required to remove and dispose portions of the existing bridge, retain and clean existing reinforcing steel and any required doweling will not be paid for directly but will be considered subsidiary to the item "MODIFICATION OF EXISTING BRIDGE STRUCTURE (BRIDGE NO. 05324)".

For existing anchor bolts being replaced, remove existing bolts 1½" below the top of cap and fill the holes with an approved non-shrink grout.

All concrete shall be Class "S" and shall be poured in the dry. All exposed corners shall be chamfered ¾" unless otherwise noted.

All reinforcing steel shall conform to AASHTO M31 or M322, Type A, Gr. 60.

All piles shall be HP12x53 (AASHTO M270, Gr. 50).

No portion of the backwall for Stage 1 Construction shall be poured until the girders are in place. The portion of the backwall above the optional construction joint or paving bracket shall not be placed until the adjacent deck pour has been made.

Structural steel in end bents shall be AASHTO M270, Gr. 50 and shall be paid for as "STRUCTURAL STEEL IN PLATE GIRDER SPANS (AASHTO M270, GR. 50)". All new structural steel, except galvanized steel and steel that is completely encased in concrete, shall be cleaned and painted in accordance with Section 638.

If anchor bolts for Stage 1 Construction are drilled into cap, top reinforcing bars shall be placed to avoid damage. The existing reinforcing steel in top of cap may be drilled during placement of anchor bolts for Stage 2 Construction.

Class 1 Protection Surface Treatment shall be applied to the top of backwall and the face and top of rail.

For additional information, see Layout.

NOTES:
For "SECTION A-A", "SECTION B-B", & "SECTION C-C", See Dwg. No. 55757.

For "SECTION H-H", "SECTION J-J", "BAR LIST" & "BAR BENDING DIAGRAM", See Dwg. No. 55758.

For details of Elastomeric bearings, see Dwg. No. 55794.

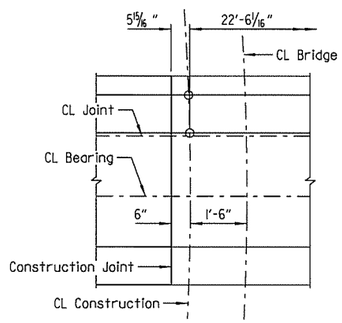

DETAIL A

Scale: ½" = 1'-0"

* Dimensions and elevations are based on the original plans. The Contractor shall verify these in the field.

** Retain and clean existing reinforcing steel from existing abutment and lap with new reinforcing steel as shown. Any damaged reinforcing steel shall be replaced by dowel bars drilled and grouted into place at the Contractor's expense.

LEGEND

EF = Each Face
FF = Front Face
BF = Back Face

STATE OF ARKANSAS
LICENSED PROFESSIONAL ENGINEER
No. 13418
MASON R. ATKINSON
7/8/14
BRIDGE ENGINEER

SHEET 2 OF 4
DETAILS OF ABUTMENTS
RAMP 4 OVER I-40
PULASKI COUNTY

ROUTE 430 SEC. 21

ARKANSAS STATE HIGHWAY COMMISSION

LITTLE ROCK, ARK.

DRAWN BY: HEW DATE: FEB. 2014 FILENAME: BCA0609x6_A2.DGN
CHECKED BY: ABH DATE: MAR. 2014 SCALE: AS SHOWN
DESIGNED BY: MRA DATE: FEB. 2014

BRIDGE NO. 05324 DRAWING NO. 55756

SRYancey 7/8/2014 8:44:38 AM
WORKSPACE: AHTD Bridge
L:\20IN\I0I0709 - I-40 at I-430 Interchange Modifications\Drawings\BCA0609xL_A2 (Abutment No. 2).dgn
REVISED DATE:

DATE REVISED	DATE FILMED	DATE REVISED	DATE FILMED	FED. ROAD DIST. NO.	STATE	FED. AID PROJ. NO.	SHEET NO.	TOTAL SHEETS
				6	ARK.			
				JOB NO.		CA0609	312	693
				(1) 05324		ABUTMENT DETAILS		55757

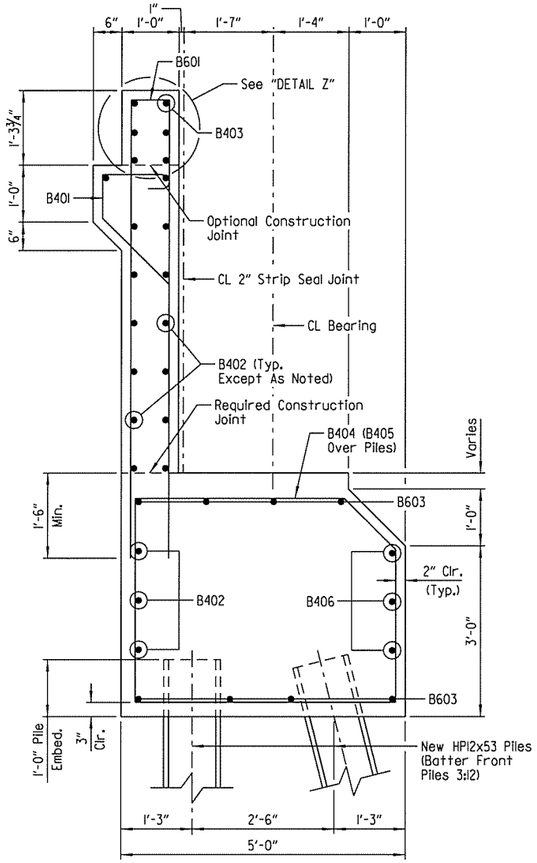

SECTION A-A
Scale: ¾" = 1'-0"

LEGEND

EF = Each Face
FF = Front Face
BF = Back Face

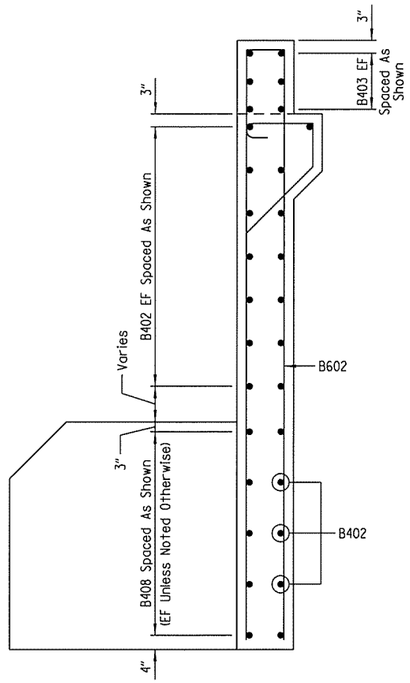

SECTION C-C
Scale: ¾" = 1'-0"

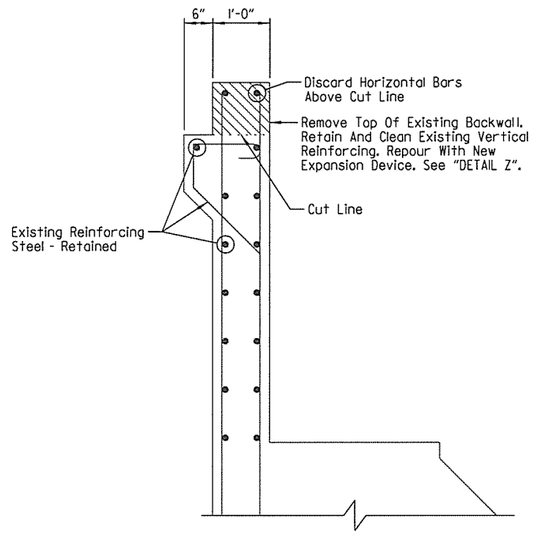

REMOVAL

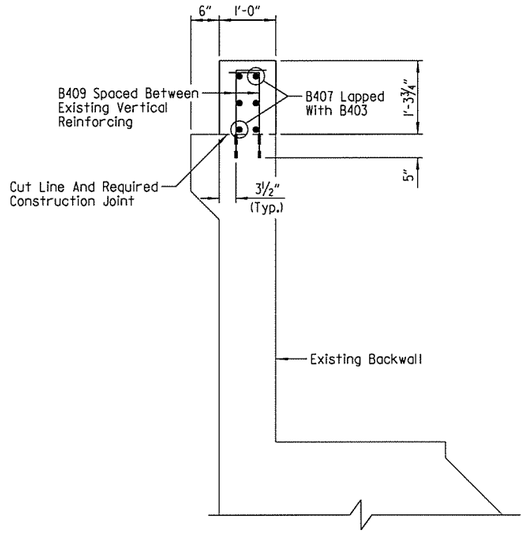

CONSTRUCTION

NOTES:
Grout B409 bars into 5" min. deep drilled holes. Grout used shall be an approved epoxy grout listed on the QPL. Hole diameter and installation procedure shall be as recommended by the grout manufacturer.

B409 bars shall be located to avoid damaging the existing backwall reinforcing steel. Payment for grouting and placement of bars shall be considered subsidiary to pay item "MODIFICATION OF EXISTING BRIDGE STRUCTURE (BRIDGE NO. 05324)."

SECTION B-B
Scale: ¾" = 1'-0"

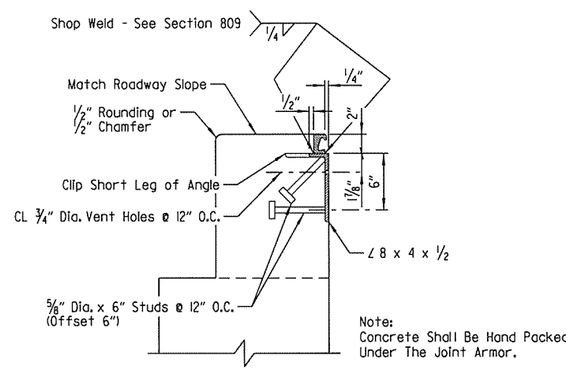

DETAIL Z
Scale: 1½" = 1'-0"

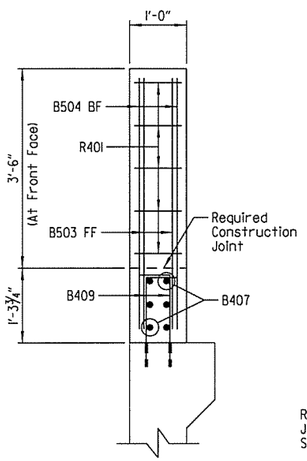

VIEW F-F
Scale: ¾" = 1'-0"

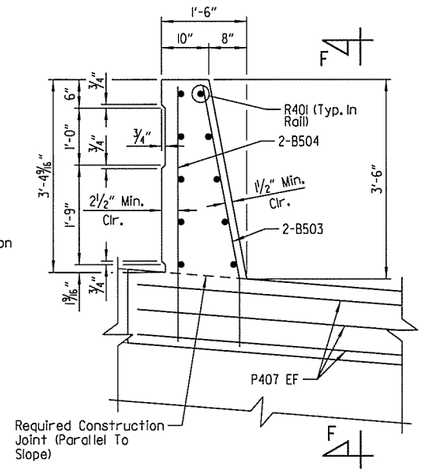

SECTION D-D
Scale: ¾" = 1'-0"

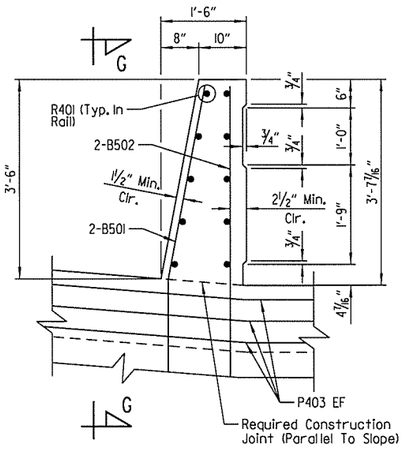

SECTION E-E
Scale: ¾" = 1'-0"

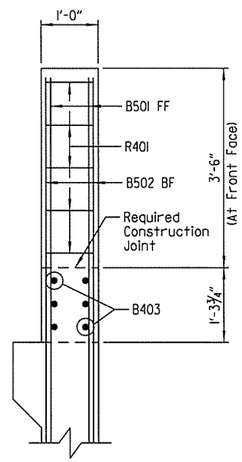

SECTION G-G
Scale: ¾" = 1'-0"

STATE OF ARKANSAS
LICENSED PROFESSIONAL ENGINEER
No. 13418
MASON R. ATKINSON
BRIDGE ENGINEER

SHEET 3 OF 4
DETAILS OF ABUTMENTS
RAMP 4 OVER I-40
PULASKI COUNTY

ROUTE 430 SEC. 21

ARKANSAS STATE HIGHWAY COMMISSION
LITTLE ROCK, ARK.

DRAWN BY: HEW DATE: FEB. 2014 FILENAME: BCA0609x6_A3.DGN
CHECKED BY: JES DATE: APR. 2014 SCALE: AS SHOWN
DESIGNED BY: MRA DATE: FEB. 2014

BRIDGE NO. 05324 DRAWING NO. 55757

SRYancey 7/8/2014 8:44:39 AM
WORKSPACE: AHTD Bridge
L:\20IN\I0I709 - I-40 at I-430 Interchange Modifications\Drawings\BCA0609x1_A3 (Abutment Details 1 of 2).dgn
REVISED DATE:

DATE REVISED	DATE FILMED	DATE REVISED	DATE FILMED	FED. ROAD DST. NO.	STATE	FED. AID PROJ. NO.	SHEET NO.	TOTAL SHEETS
				6	ARK.			
				JOB NO.		CA0609	313	693
				(1) 05324		ABUTMENT DETAILS		55758

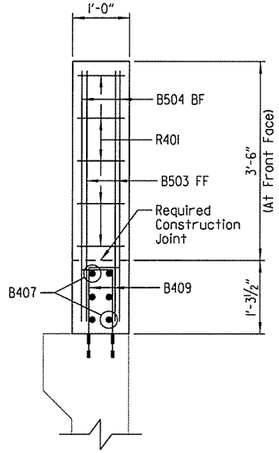

VIEW K-K
Scale: ¾" = 1'-0"

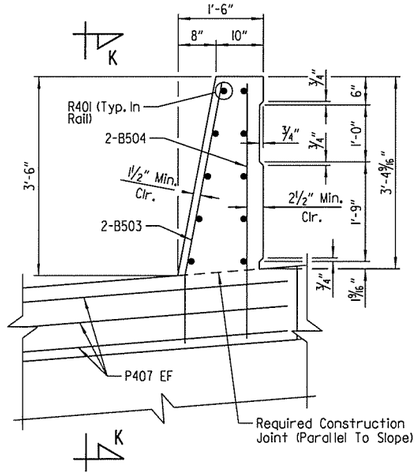

SECTION H-H
Scale: ¾" = 1'-0"

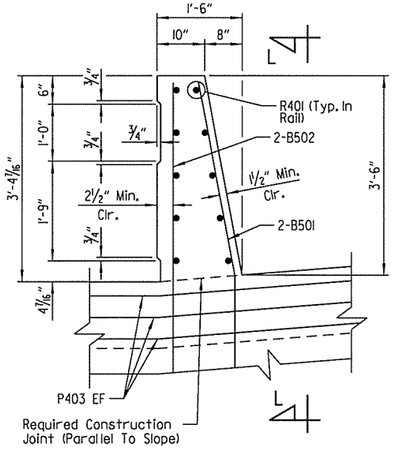

SECTION J-J
Scale: ¾" = 1'-0"

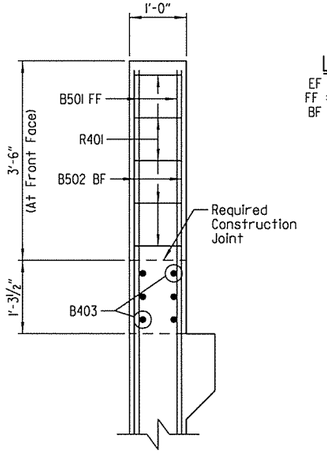

SECTION L-L
Scale: ¾" = 1'-0"

LEGEND
EF = Each Face
FF = Front Face
BF = Back Face

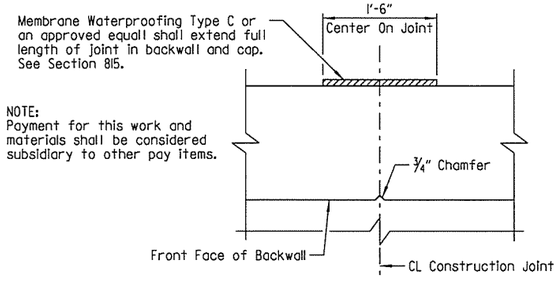

NOTE:
Payment for this work and materials shall be considered subsidiary to other pay items.

CONSTRUCTION JOINT DETAIL
Scale: 1" = 1'-0"

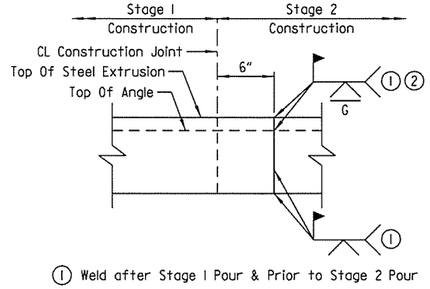

① Weld after Stage 1 Pour & Prior to Stage 2 Pour
② Grind Flush

BACKWALL ARMOR JOINT DETAIL
Scale: 1½" = 1'-0"

BAR LIST

MARK	NO. REQ'D	LENGTH	"A"	"B"	P.D.
B401	47	3'-11"			2"
B402	17	23'-2"			STR.
B403	6	25'-4"			STR.
B404	21	16'-4"			2"
B405	15	11'-2"			2"
B406	3	20'-3"			STR.
B407	6	25'-10"			STR.
B408	7	4'-6"			STR.
B409	52	3'-6"			2"
B501	2	9'-6"	6'-0"		3¾"
B502	2	10'-5"			STR.
B503	2	4'-9"	1'-3"		3¾"
B504	2	4'-6½"			STR.
B601	41	16'-10"	8'-3"		4½"
B602	6	21'-4"	10'-6"		4½"
B603	8	20'-3"			STR.
R401	20	8"			STR.

NOTE:
Number of bars shown are for one abutment only.

BAR BENDING DIAGRAM

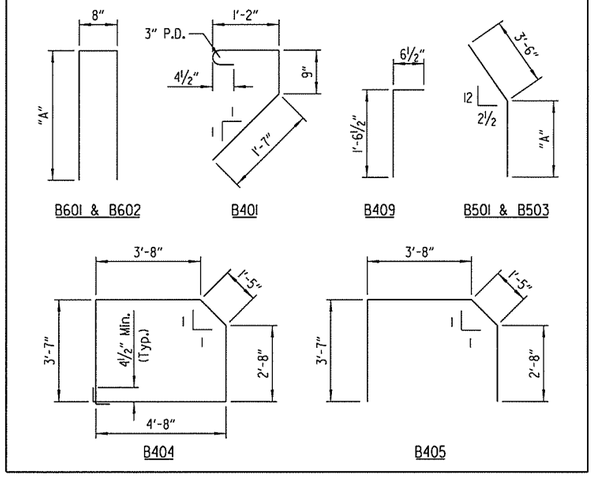

NOTE:
Dimensions of bars are out-to-out.

STATE OF ARKANSAS
LICENSED PROFESSIONAL ENGINEER
No. 13418
MASON B. ATKINSON
7/18/14
BRIDGE ENGINEER

SHEET 4 OF 4
DETAILS OF ABUTMENTS
RAMP 4 OVER I-40
PULASKI COUNTY
ROUTE 430 SEC. 21

ARKANSAS STATE HIGHWAY COMMISSION
LITTLE ROCK, ARK.

DRAWN BY: HEW DATE: FEB. 2014 FILENAME: BCA0609x6_A4.DGN
CHECKED BY: JES DATE: APR. 2014 SCALE: AS SHOWN
DESIGNED BY: MRA DATE: FEB. 2014
BRIDGE NO. 05324 DRAWING NO. 55758

SRYancey 7/18/2014 8:44:39 AM
WORKSPACE: AHTD Bridge
L:\2011\11017709 - I-40 at I-430 Interchange Modifications\Drawings\BCA0609xL_A4 (Abutment Details 2 of 2).dgn
REVISED DATE:

DATE REVISED	DATE FILMED	DATE REVISED	DATE FILMED	FED. ROAD DIST. NO.	STATE	FED. AID PROJ. NO.	SHEET NO.	TOTAL SHEETS
				6	ARK.			
				JOB NO.		CA0609	314	693
				(1) 05324		PIER DETAILS		55759

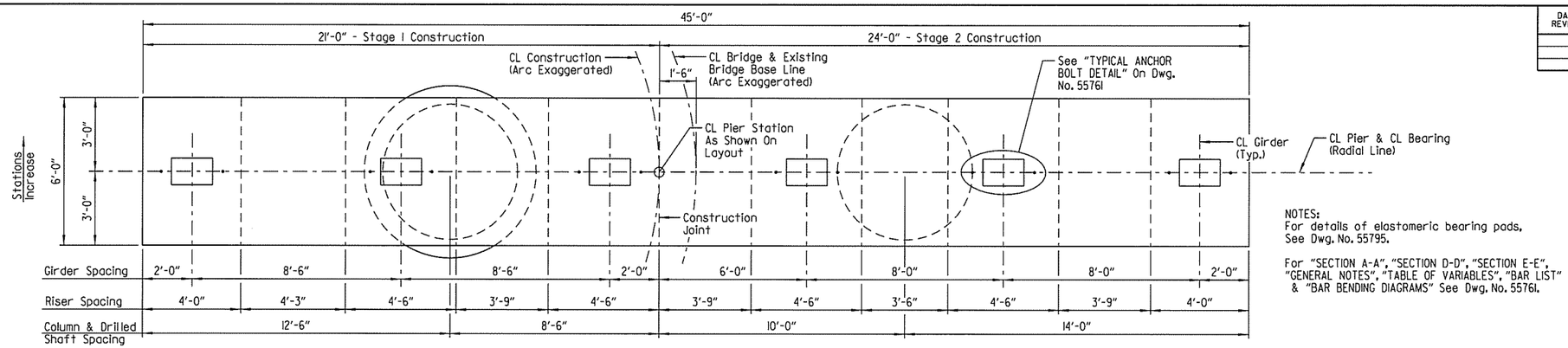

NOTES:
For details of elastomeric bearing pads, See Dwg. No. 55795.

For "SECTION A-A", "SECTION D-D", "SECTION E-E", "GENERAL NOTES", "TABLE OF VARIABLES", "BAR LIST" & "BAR BENDING DIAGRAMS" See Dwg. No. 55761.

PLAN - PIER NOS. 1, 2, 4 & 5

Scale: 3/8" = 1'-0"

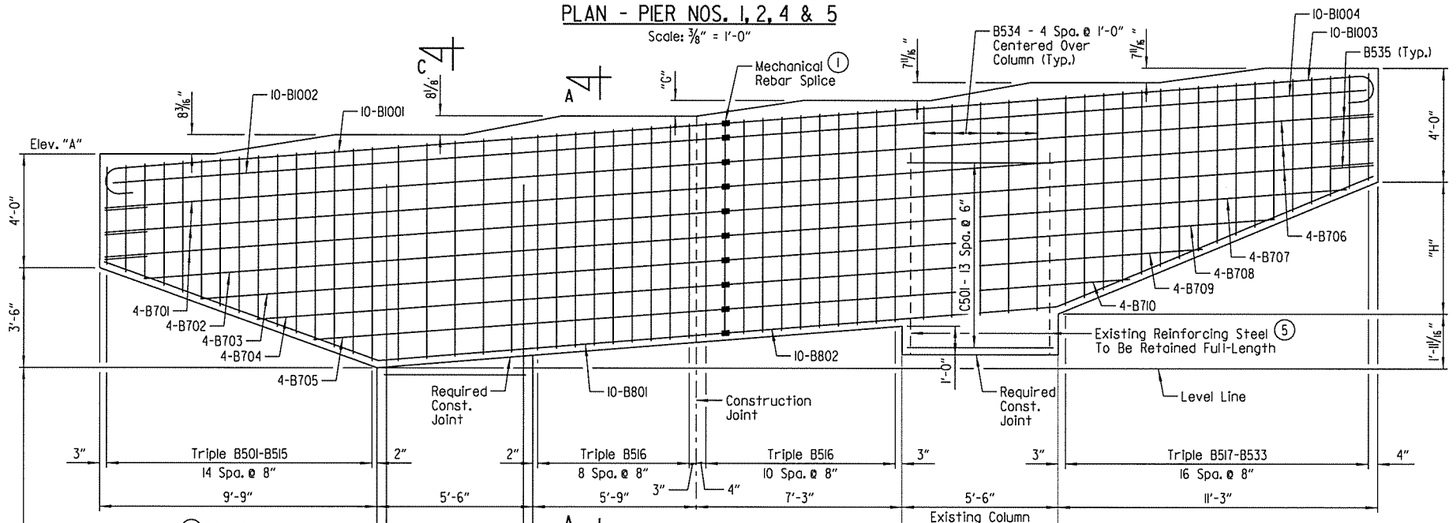

ELEVATION - PIER NOS. 1, 2, 4 & 5

(Looking Forward)
Scale: 3/8" = 1'-0"

(1) The mechanical rebar splices shall be an approved type in accordance with the AHTD Qualifield Products List (QPL) and shall maintain clearances shown.

The cost of mechanical rebar splices shall not be measured for separate payment but shall be considered subsidiary to the item "REINFORCING STEEL - BRIDGE (GRADE 60)". Mechanical rebar splices shall develop at least 125% of the specified yield strength of the reinforcing steel.

(2) See "DRILLED SHAFT AND COLUMN BAR DETAIL" On Dwg. No. 55761.

(3) Minimum penetration into material designated as hard shale on the boring legend. In no case shall the total length of shaft be less than 20 ft.

(4) Dimensions & elevations are based on the original plans. The Contractor shall verify these in the field.

(5) Retain and clean existing vertical reinforcing steel from existing column. Remove column spiral reinforcing above required construction joint and field bend to terminate with 1 1/2 turns. Any damaged reinforcing steel shall be replaced by dowel bars drilled and grouted into place at the Contractor's expense.

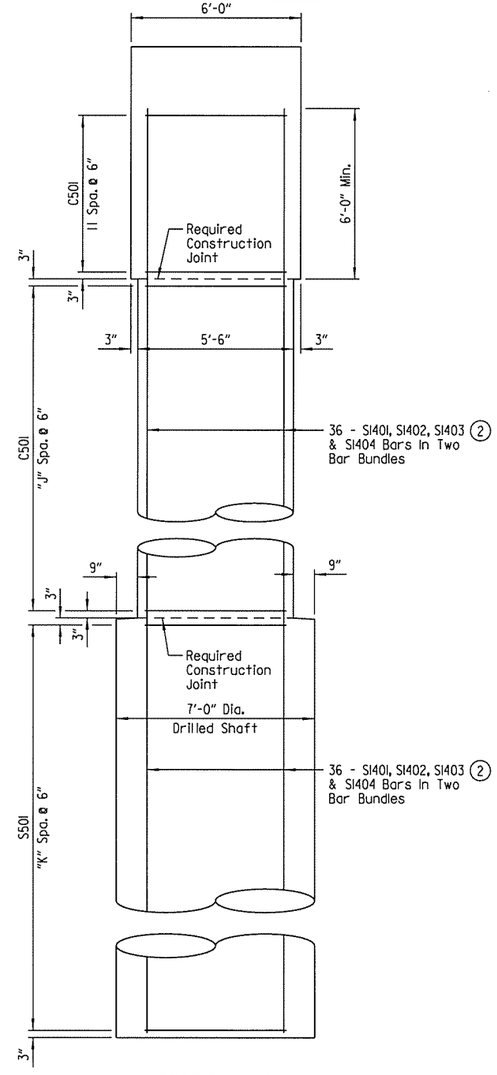

SECTION C-C

Scale: 3/8" = 1'-0"

STATE OF ARKANSAS
LICENSED PROFESSIONAL ENGINEER
No. 13418
MASON R. ATKINSON
7/18/14
BRIDGE ENGINEER

SHEET 1 OF 3
DETAILS OF PIERS
RAMP 4 OVER I-40
PULASKI COUNTY

ROUTE 430 SEC. 21

ARKANSAS STATE HIGHWAY COMMISSION

LITTLE ROCK, ARK.

DRAWN BY: HEW DATE: MAR. 2014 FILENAME: BCA0609x6_BI.DGN
CHECKED BY: JES DATE: MAR. 2014 SCALE: AS SHOWN
DESIGNED BY: MRA DATE: MAR. 2014
BRIDGE NO. 05324 DRAWING NO. 55759

SRYancey 7/18/2014 8:44:40 AM
WORKSPACE: AHTD Bridge
L:\2011\I001709 - I-40 at I-430 Interchange Modifications\Drawings\BCA0609xL_BI(Pier 1,2,4,5).dgn
REVISED DATE:

DATE REVISED	DATE FILMED	DATE REVISED	DATE FILMED	FED. ROAD DIST. NO.	STATE	FED. AID PROJ. NO.	SHEET NO.	TOTAL SHEETS
				6	ARK.			
				JOB NO.		CA0609	315	693
				(1) 05324		PIER DETAILS		55760

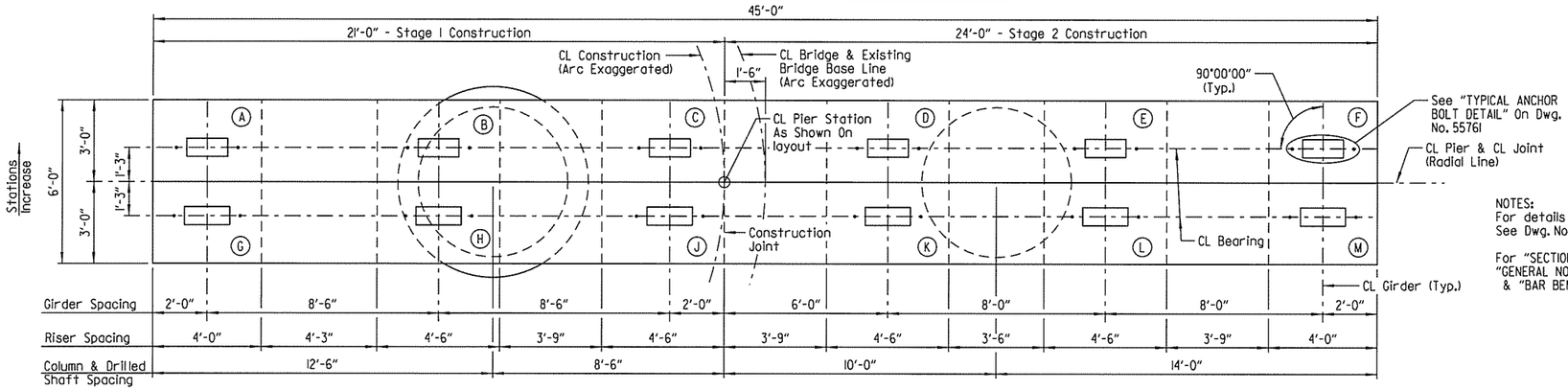

PLAN - PIER NO. 3

Scale: 3/8" = 1'-0"

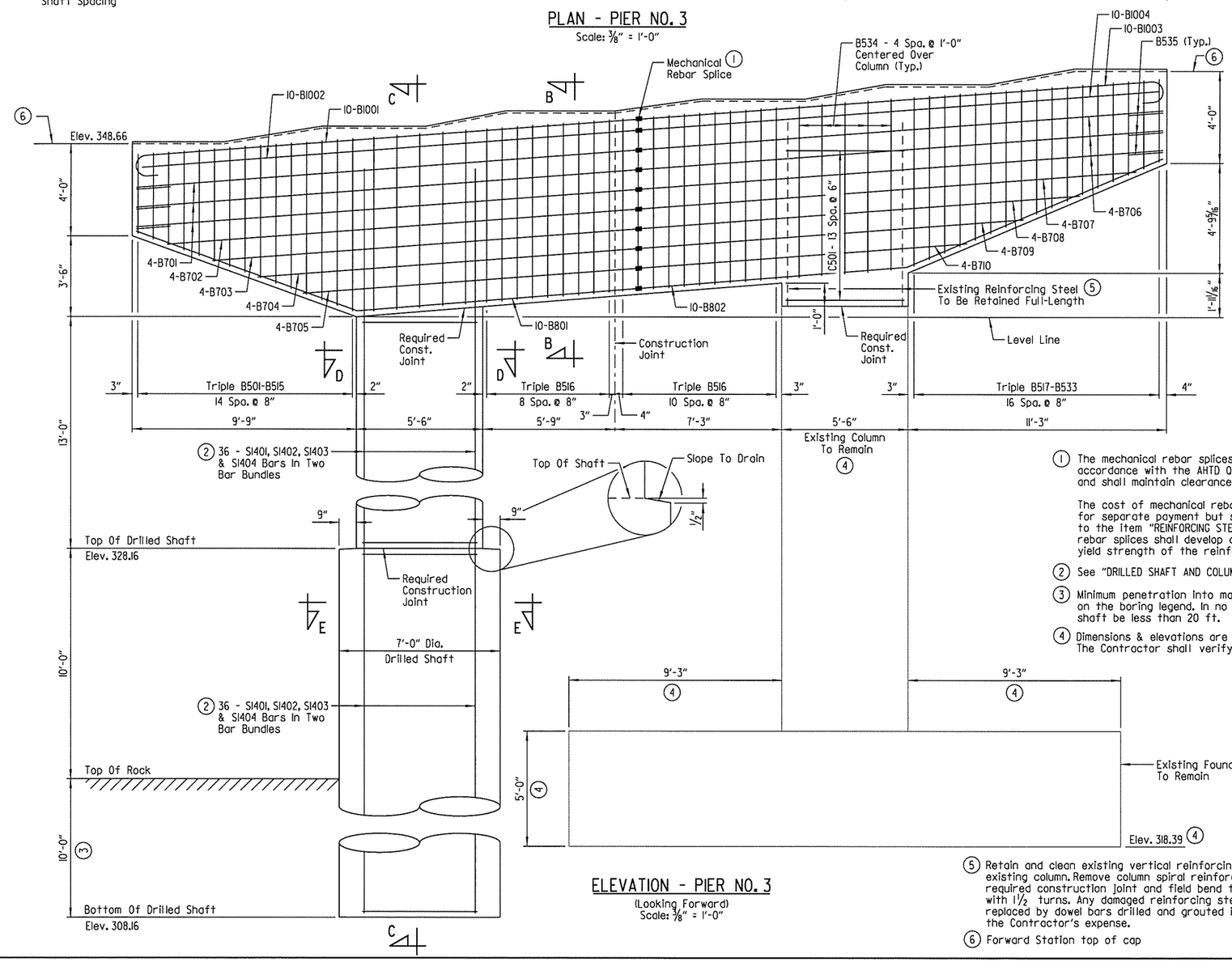

ELEVATION - PIER NO. 3

(Looking Forward)
Scale: 3/8" = 1'-0"

TABLE OF BEARING ELEVATIONS

BEARING NO.	ELEVATION
A	348.66
B	349.34
C	350.02
D	350.53
E	351.17
F	351.81
G	348.74
H	349.42
J	350.10
K	350.63
L	351.27
M	351.91

NOTES:
For details of elastomeric bearing pads, See Dwg. Nos. 55794 & 55795.

For "SECTION A-A", "SECTION D-D", "SECTION E-E", "GENERAL NOTES", "TABLE OF VARIABLES", "BAR LIST" & "BAR BENDING DIAGRAMS" See Dwg. No. 55761.

(1) The mechanical rebar splices shall be an approved type in accordance with the AHTD Qualifield Products List (QPL) and shall maintain clearances shown.

The cost of mechanical rebar splices shall not be measured for separate payment but shall be considered subsidiary to the item "REINFORCING STEEL - BRIDGE (GRADE 60)". Mechanical rebar splices shall develop at least 125% of the specified yield strength of the reinforcing steel.

(2) See "DRILLED SHAFT AND COLUMN BAR DETAIL" On Dwg. No. 55761.

(3) Minimum penetration into material designated as hard shale on the boring legend. In no case shall the total length of shaft be less than 20 ft.

(4) Dimensions & elevations are based on the original plans. The Contractor shall verify these in the field.

(5) Retain and clean existing vertical reinforcing steel from existing column. Remove column spiral reinforcing above required construction joint and field bend to terminate with 1 1/2 turns. Any damaged reinforcing steel shall be replaced by dowel bars drilled and grouted into place at the Contractor's expense.

(6) Forward Station top of cap

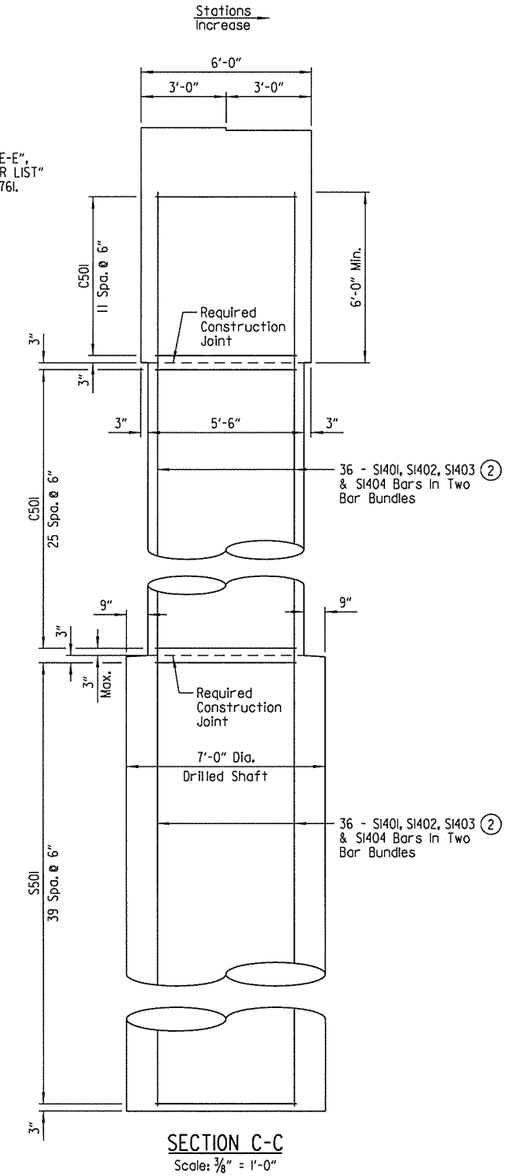

SECTION C-C

Scale: 3/8" = 1'-0"

STATE OF ARKANSAS
LICENSED PROFESSIONAL ENGINEER
No. 13418
MASON R. ATKINSON
7/18/14
BRIDGE ENGINEER

SHEET 2 OF 3
DETAILS OF PIERS
RAMP 4 OVER I-40
PULASKI COUNTY

ROUTE 430 SEC. 21

ARKANSAS STATE HIGHWAY COMMISSION

LITTLE ROCK, ARK.

DRAWN BY: HEW DATE: MAR. 2014 FILENAME: BCA0609x6_B2.DGN
CHECKED BY: JES DATE: MAR. 2014 SCALE: AS SHOWN
DESIGNED BY: MRA DATE: MAR. 2014

BRIDGE NO. 05324 DRAWING NO. 55760

SRYancey 7/18/2014 8:44:40 AM
WORKSPACE: AHTD Bridge
L:\CDN\NOT709 - I-40 at I-430 Interchange Modifications\Drawings\BCA0609x1_B2 (Pier 3).dgn
REVISED DATE:

DATE REVISED	DATE FILMED	DATE REVISED	DATE FILMED	FED. ROAD DIST. NO.	STATE	FED. AID PROJ. NO.	SHEET NO.	TOTAL SHEETS
				6	ARK.			
				JOB NO.		CA0609	316	693
				(1) 05324		PIER DETAILS		5576I

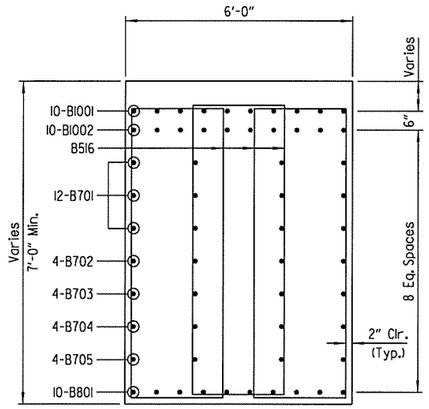

SECTION A-A
Scale: 1/2" = 1'-0"

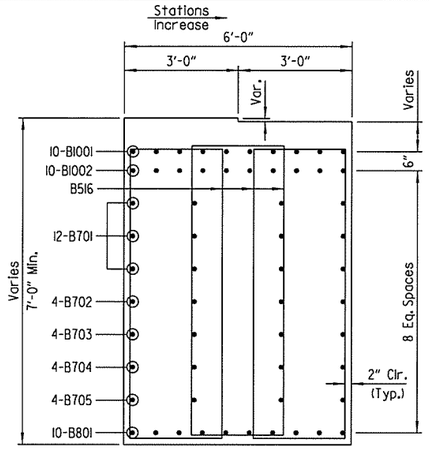

SECTION B-B
Scale: 1/2" = 1'-0"

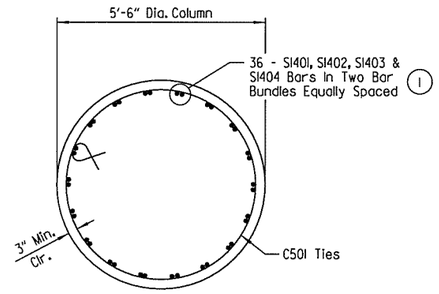

SECTION D-D
Scale: 1/2" = 1'-0"

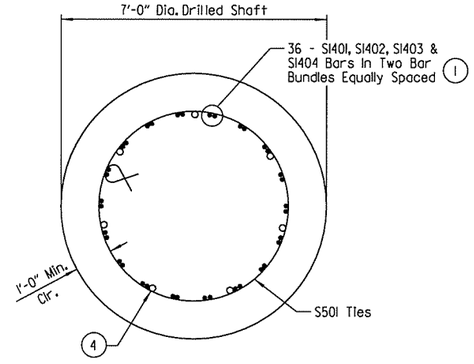

SECTION E-E
Scale: 1/2" = 1'-0"

(4) 7 - 2" Min. Dia. Schedule 40 Steel pipes equally spaced. See SP JOB NO. CA0609 "NON-DESTRUCTIVE TESTING OF DRILLED SHAFTS".

TABLE OF VARIABLES

PIER NO.	ELEV. "A"	ELEV. "B"	ELEV. "C"	ELEV. "D"	"E"	"F"	"G"	"H"	"J"	"K"
1	345.91	312.41	278.41	300.13	26'-0"	24'-0"	7 7/16"	4'-10 1/16"	51	67
2	348.16	317.66	286.66	309.11	23'-0"	21'-0"	6 11/16"	4'-9 5/16"	45	61
4	348.36	325.86	301.86	317.65	15'-0"	14'-0"	7 7/16"	4'-10 1/16"	25	47
5	346.47	330.97	310.97	320.88	8'-0"	10'-0"	7 7/16"	4'-10 1/16"	15	39

TABLE OF VARIABLES

PIER NO.	"L"	"M"	"N"	"O"	"P"	"Q"	"R"
1	78	68	23'-3"	43'-0"	26'-3"	40'-0"	1 1/2"
2	72	62	20'-3"	40'-0"	23'-3"	37'-0"	2"
3	53	40	9'-3"	30'-0"	12'-3"	27'-0"	1 1/2"
4	56	48	13'-3"	32'-0"	16'-3"	29'-0"	1 1/2"
5	42	40	9'-3"	25'-0"	12'-3"	22'-0"	2"

GENERAL NOTES

All Concrete shall be Class "S" with a minimum 28-day compressive strength f'c = 3500 psi. Concrete shall be poured in the dry and all exposed corners to be chamfered 3/4" unless otherwise noted.

All reinforcing steel shall conform to AASHTO M31 or M322 Type A, Grade 60 (Yield Strength = 60,000 psi).

Reinforcing bars in top of cap shall be properly placed to avoid interference with anchor bolts or sheet metal sleeves.

For additional information, see Layout.

Concrete and reinforcing steel in drilled shafts will not be paid for directly but will be included in the unit prices of "DRILLED SHAFT (84" DIA.)."

For construction methods, materials, measurement and payment of drilled shafts, see SP JOB CA0609 "DRILLED SHAFT FOUNDATIONS."

Work required to remove and dispose of portions of the existing bridge, retain and clean existing reinforcing steel and any required doweling will not be paid for directly but will be considered to the item "MODIFICATION OF EXISTING BRIDGE STRUCTURE (BRIDGE NO. 05324)".

BAR LIST

	MARK	NO. REQ'D	LENGTH	"A"	"B"	P.D.
	B501 To B515	3 EA.	12'-2" To 20'-2"	2'-5"	3'-5" To 7'-5"	2 1/2"
	B516	60	20'-6"	2'-5"	7'-7"	2 1/2"
	B517 To B533	3 EA.	20'-0" To 12'-6"	2'-5"	7'-4" To 3'-7"	2 1/2"
	B534	10	20'-7 1/2"	5'-8"	7'-7"	2 1/2"
	B535	6	8'-4"	5'-6 1/2"	1'-6"	2 1/2"
(3)	B701	12	20'-10 1/2"			Str.
(3)	B702	4	19'-5"			Str.
(3)	B703	4	17'-5"			Str.
(3)	B704	4	15'-6"			Str.
(3)	B705	4	13'-6"			Str.
(3)	B706	12	23'-10 1/2"			Str.
(3)	B707	4	22'-8"			Str.
(3)	B708	4	20'-3"			Str.
(3)	B709	4	17'-10"			Str.
(3)	B710	4	15'-4"			Str.
(3)	B801	10	21'-5"			6"
(3)	B802	10	24'-9"			6"
(3)	B1001	10	22'-3 1/2"	20'-10 1/2"		10"
(3)	B1002	10	20'-7"			Str.
(3)	B1003	10	25'-3 1/2"	23'-10 1/2"		10"
(3)	B1004	10	23'-7"			Str.
	C501	"L"	17'-1"			3 3/4"
(2)	S501	"M"	17'-1"			3 3/4"
(2)	S1401	18	"N"			Str.
(2)	S1402	18	"O"			Str.
(2)	S1403	18	"P"			Str.
(2)	S1404	18	"Q"			Str.

BAR BENDING DIAGRAM

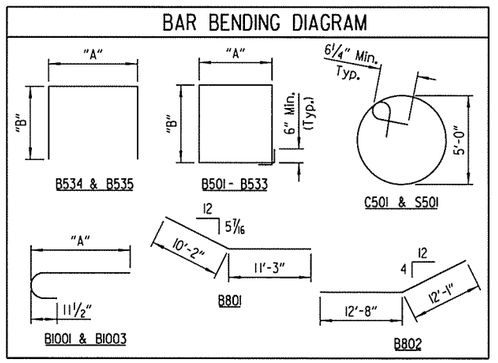

(1) See "DRILLED SHAFT AND COLUMN BAR DETAIL".

(2) Non-Pay Item - Subsidiary to Item "DRILLED SHAFT (84" DIA.)"

(3) The lengths shown are from end of bar to the required construction joint. Individual lengths shall be determined in the field based on the type of mechanical rebar splice used.

NOTE:
Dimensions of bars are out-to-out.

NOTE:
Mechanical rebar splices in the column shall conform to the requirements of SP JOB CA0609 "SPLICING REINFORCING STEEL", and shall maintain the clearances shown. Their payment shall be subsidiary to the item "REINFORCING STEEL-BRIDGE (GRADE 60)". The mechanical rebar splice shall develop at least 125% of the specified yield strength of the bar.

The bars shall be assembled as shown, with no more than two mechanical rebar splices per bar. Minimum length of bars used in the assembly shall be 5'-0"

At The Contractor's option, mechanically spliced bars may be substituted with one bar if the total length of bar is less than 60 ft.

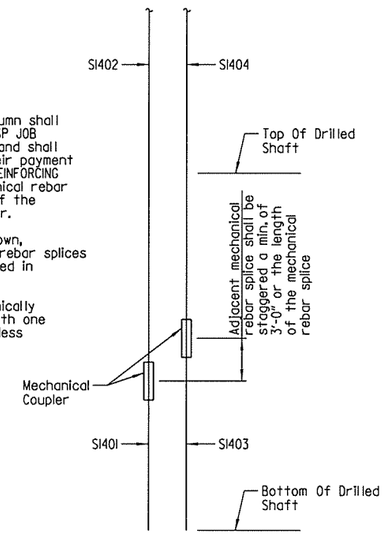

DRILLED SHAFT AND COLUMN BAR DETAIL
No Scale

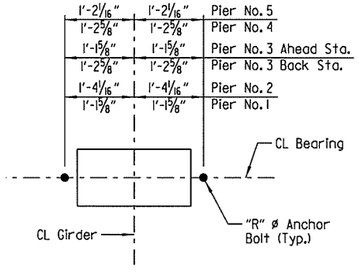

TYPICAL ANCHOR BOLT LAYOUT
Scale: 1" = 1'-0"

STATE OF ARKANSAS
LICENSED PROFESSIONAL ENGINEER
No. 13418
MASON R. ATKINSON
7/18/14
BRIDGE ENGINEER

SHEET 3 OF 3
DETAILS OF PIERS
RAMP 4 OVER I-40
PULASKI COUNTY
ROUTE 430 SEC. 21
ARKANSAS STATE HIGHWAY COMMISSION
LITTLE ROCK, ARK.

DRAWN BY: HEW DATE: MAR. 2014 FILENAME: BCA0609x6_B3.DGN
CHECKED BY: JES DATE: MAR. 2014 SCALE: AS SHOWN
DESIGNED BY: MRA DATE: MAR. 2014
BRIDGE NO. 05324 DRAWING NO. 5576I

SRYancey 7/18/2014 8:44:41 AM
WORKSPACE: AHTD Bridge
L:\ROW\DOT\09 - I-40 GT I-430 Interchange Modifications\Drawings\BCA0609xL_B3 (Pier Details).dgn
REVISED DATE:

DATE REVISED	DATE FILMED	DATE REVISED	DATE FILMED	FED. ROAD DIST. NO.	STATE	FED. AID PROJ. NO.	SHEET NO.	TOTAL SHEETS
				6	ARK.			
				JOB NO.		CA0609	317	693
				(1) 05324		398'-7" PL GIRDER UNIT		55762

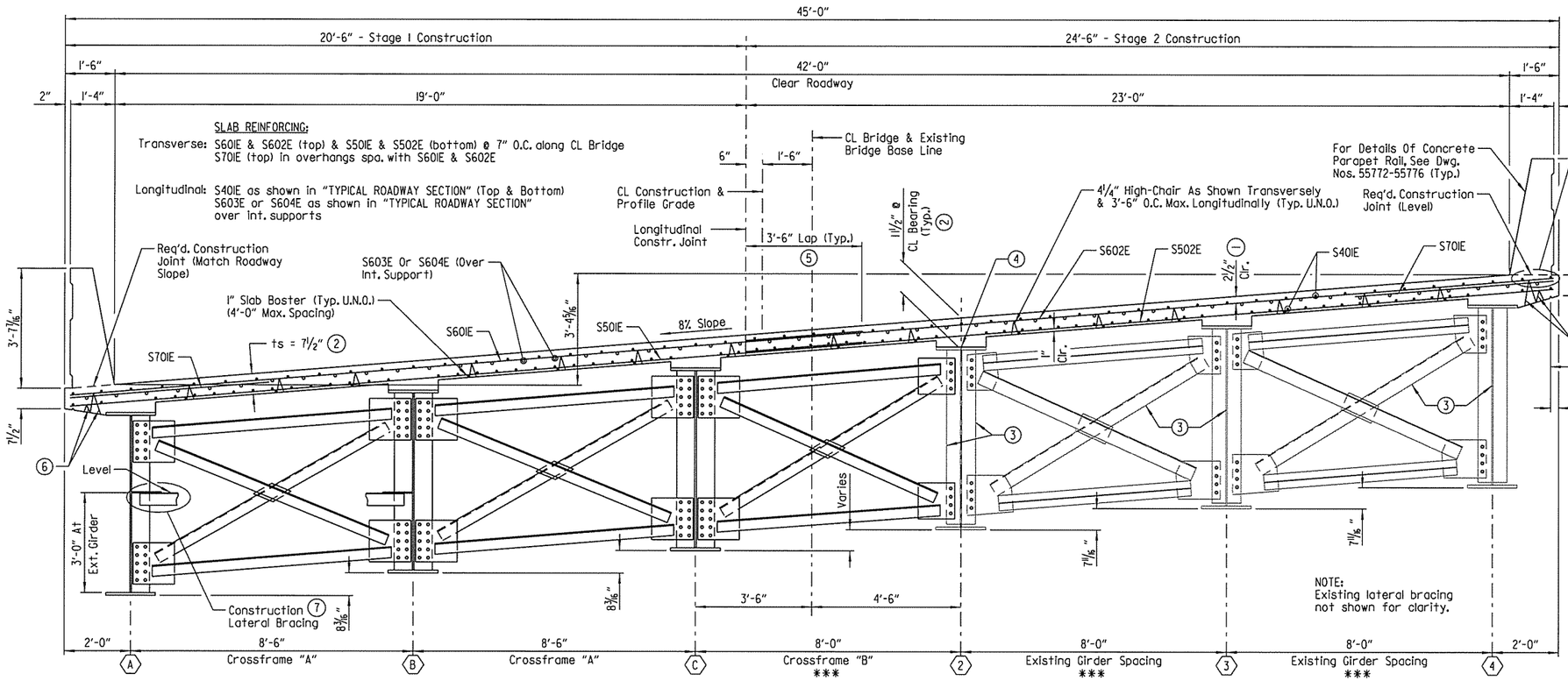

NOTE:
An external means of supporting the Stage 1 overhang between Girders C & 2 shall be provided and shall remain in place until after completion of the Stage 2 deck pour. See "DECK SUPPORT AT LONGITUDINAL CONSTRUCTION JOINT" on Dwg. No. 55763.

TYPICAL ROADWAY SECTION

(Looking Forward)
Scale: ½" = 1'-0"

*** NOTE:
See Dwg. Nos. 55750, 5575l, 55764, 55765 & 55768 for notes relating to sequence of erection of crossframes.

NOTE:
Class I Protective Surface Treatment shall be applied to the roadway surface and the face and top of concrete parapet rails.

(1) TOLERANCE:
Minus = ¼"
Plus = Amount of slab thickening used to meet slab thickness tolerance - see "ADJUSTMENT FOR SLAB THICKNESS TOLERANCE".

(2) See "ADJUSTMENT FOR SLAB THICKNESS TOLERANCE".

(3) Existing Girders 2, 3 & 4 and crossframes shall be temporarily removed for Stage 2 Construction. At Girder 2, existing gusset plate bolts shall be replaced with new 1"ø high-strength bolts conforming to AASHTO M253. At Girder 2 only, existing 15/16 "ø holes in gusset, connection plates and bearing stiffeners shall be reamed in accordance with Section 807 to 1 1/16 "ø to allow for installation of 1"ø bolts. At Girders 3 & 4, existing bolts shall be replaced with new ⅞"ø high- strength bolts conforming to AASHTO M164. Modification of existing connection plates, gusset plates and bearing stiffeners shall be considered subsidiary to the item "MODIFICATION OF EXISTING BRIDGE STRUCTURE (BRIDGE NO. 05324)". All new high-strength bolts shall be paid for as "STRUCTURAL STEEL IN PLATE GIRDER SPANS (M270, Gr. 50)".

(4) After deck removal and prior to installation of new shear connectors, the existing tops of girders and shear connectors shall be cleaned. Any damaged shear connectors shall be replaced as directed by the Engineer at the Contractor's expense. Payment will not be paid for directly but shall be considered subsidiary to the item "MODIFICATION OF EXISTING BRIDGE STRUCTURE (BRIDGE NO. 05324)".

(5) Stage 2 transverse reinforcing steel shall not be tied to Stage 1 transverse reinforcing steel.

(6) Height of Hi-chairs and bolsters in overhang shall be set as necessary to maintain clear cover. 4'-0" max. spacing.

(7) See "PART FRAMING PLAN" on Dwg. Nos. 55764 & 55765 for locations of construction lateral bracing. For construction lateral bracing details, see Dwg. No. 55768.

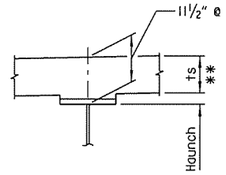

Note: t_S = Slab Thickness as shown on "TYPICAL ROADWAY SECTION"

* Measured to bottom of top flange.

** Tolerance when removable deck forming is used is + ½", - ¼". Haunch forming is required and shall be adjusted to maintain slab thickness tolerance.

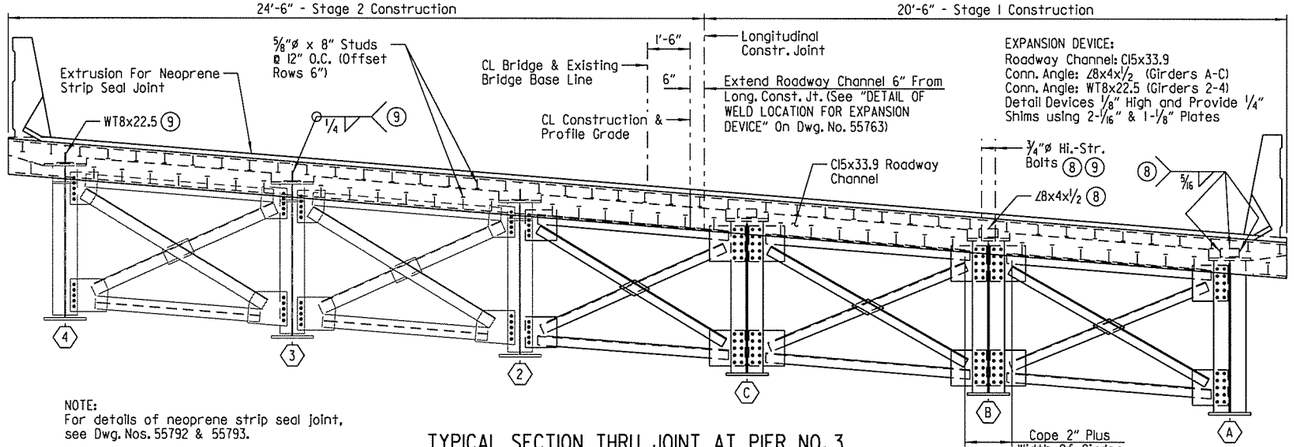

NOTE:
For details of neoprene strip seal joint, see Dwg. Nos. 55792 & 55793.

TYPICAL SECTION THRU JOINT AT PIER NO. 3

(Looking Back)
No Scale

8 Typ. @ Girders A-C
9 Typ. @ Girders 2-4

LEGEND

U.N.O. = Unless Noted Otherwise

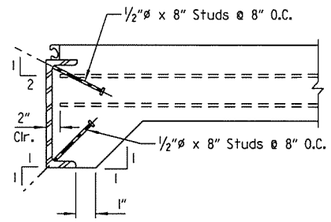

DETAIL OF ALTERNATE ANCHORS

(Shown At Pier 3, Similar At Abutment 1)
No Scale

NOTE:
As an alternate to ⅝"ø studs, ½"ø x 8" studs spaced as shown may be used. Use weight of ⅞"ø stud as basis of measurement of structural steel.

ADJUSTMENT FOR SLAB THICKNESS TOLERANCE

No Scale

Haunch dimension may vary within the following limits to maintain the grade and slab thickness tolerance: minimum (for new Girders A-C) - occurs when the top edge of the top flange contacts the bottom of the 7½" slab; minimum (for existing Girders 2-4) - occurs when the top edge of the top flange is positioned ⅛" below the bottom of the 7½" slab; maximum - top flange thickness plus 3¼". No increase in concrete and structural steel quantities will be made to maintain tolerances.

Tolerances shown are applicable when removable deck forming or permanent steel deck forms are used. Payment for concrete shall be based on removable deck forming.

STATE OF ARKANSAS
LICENSED PROFESSIONAL ENGINEER
No. 14498
ADAM B. HALL
7-18-2014
BRIDGE ENGINEER

SHEET 1 OF 15
DETAILS OF 398'-7" CONTINUOUS COMPOSITE PLATE GIRDER UNIT
RAMP 4 OVER I-40
PULASKI COUNTY

ROUTE 430 SEC. 21

ARKANSAS STATE HIGHWAY COMMISSION

LITTLE ROCK, ARK.

DRAWN BY: JLH DATE: FEB. 2014 FILENAME: BCA0609x6_SI.DGN
CHECKED BY: SRY DATE: MAR. 2014 SCALE: AS SHOWN
DESIGNED BY: ABH DATE: FEB. 2014

BRIDGE NO. 05324 DRAWING NO. 55762

SRYancey 7/18/2014 8:44:42 AM
WORKSPACE: AHTD Bridge
L:\20IN\I0I709 - I-40 at I-430 Interchange Modifications\Drawings\BCA0609x6_SI(Unit 1 - Typ Sec).dgn
REVISED DATE:

DATE REVISED	DATE FILMED	DATE REVISED	DATE FILMED	FED. ROAD DIST. NO.	STATE	FED. AID PROJ. NO.	SHEET NO.	TOTAL SHEETS
				6	ARK.			
				JOB NO.		CA0609	318	693
				(1) 05324		398'-7" PL GIRDER UNIT		55763

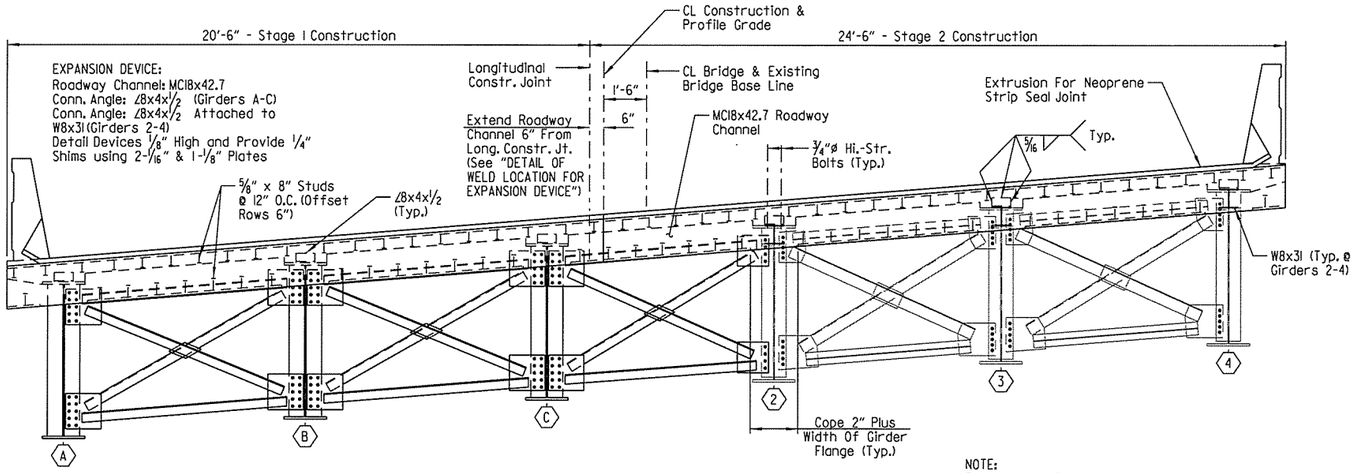

NOTE:
For "DETAIL OF ALTERNATE ANCHORS", see Dwg. No. 55762.

TYPICAL SECTION THRU JOINT AT ABUTMENT NO. 1

(Looking Forward)
No Scale

NOTE:
For details of neoprene strip seal joint, see Dwg. Nos. 55792 & 55793.

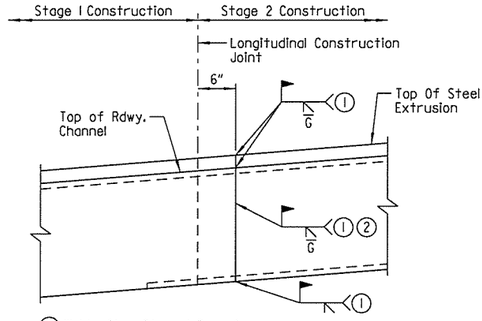

(1) Weld after Stage 1 Pour & prior to Stage 2 Pour

(2) Grind flush 5" from top of deck

DETAIL OF WELD LOCATION FOR EXPANSION DEVICE

(Looking Forward)
No Scale

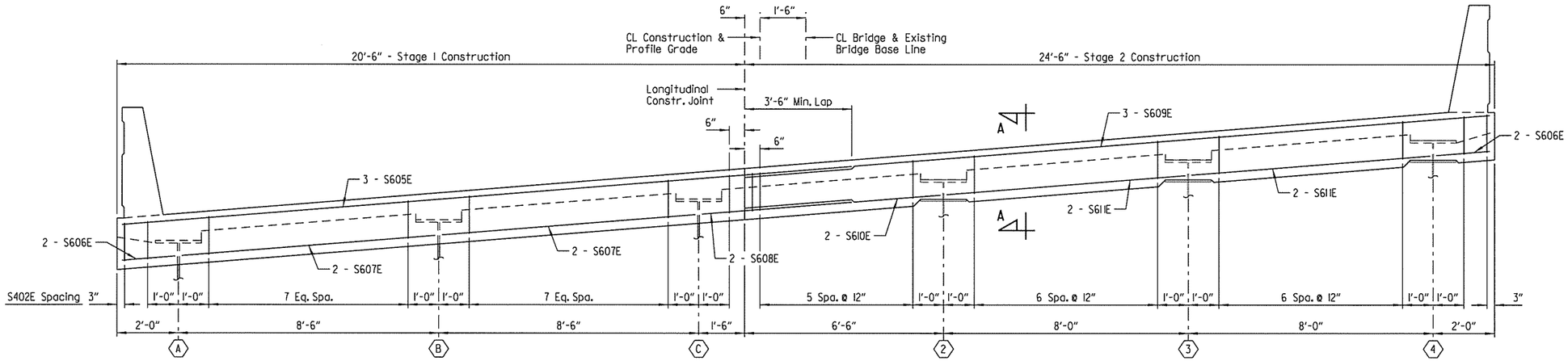

TURNDOWN REINFORCING AT ABUTMENT NO. 1

(Looking Forward)
No Scale

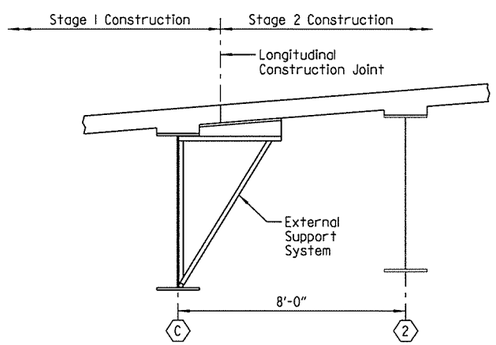

NOTE:
Stage 1 external supports in this bay shall remain in place until after completion of the Stage 2 deck pour. See Subsection 802.15 for additional information regarding the removal of the support system.

DECK SUPPORT AT LONGITUDINAL CONSTRUCTION JOINT

(Looking Forward)
No Scale

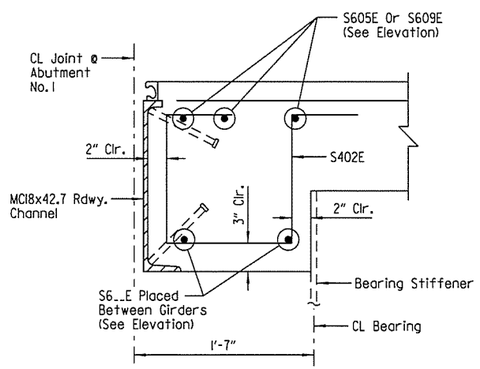

SECTION A-A

Scale: 1 1/2" = 1'-0"

STATE OF ARKANSAS
LICENSED PROFESSIONAL ENGINEER
No. 14498
ADAM B. HALL
7-15-14
BRIDGE ENGINEER

SHEET 2 OF 15
DETAILS OF 398'-7" CONTINUOUS COMPOSITE PLATE GIRDER UNIT
RAMP 4 OVER I-40
PULASKI COUNTY

ROUTE 430 SEC. 21

ARKANSAS STATE HIGHWAY COMMISSION

LITTLE ROCK, ARK.

DRAWN BY: JLH DATE: FEB. 2014 FILENAME: BCA0609x6_S2.DGN
CHECKED BY: BWS DATE: MAR. 2014 SCALE: AS SHOWN
DESIGNED BY: ABH DATE: FEB. 2014
BRIDGE NO. 05324 DRAWING NO. 55763

SRYancey 7/8/2014 8:44:42 AM
WORKSPACE: AHTD Bridge
L:\2011\11007109 - I-40 at I-430 Interchange Modifications\Drawings\BCA0609x6_S2 Unit 1 - Typ Sec-2).dgn
REVISED DATE:

DATE REVISED	DATE FILMED	DATE REVISED	DATE FILMED	FED. ROAD DIST. NO.	STATE	FED. AID PROJ. NO.	SHEET NO.	TOTAL SHEETS
				6	ARK.			
				JOB NO.		CA0609	319	693
				(1) 05324		398'-7" UNIT		55764

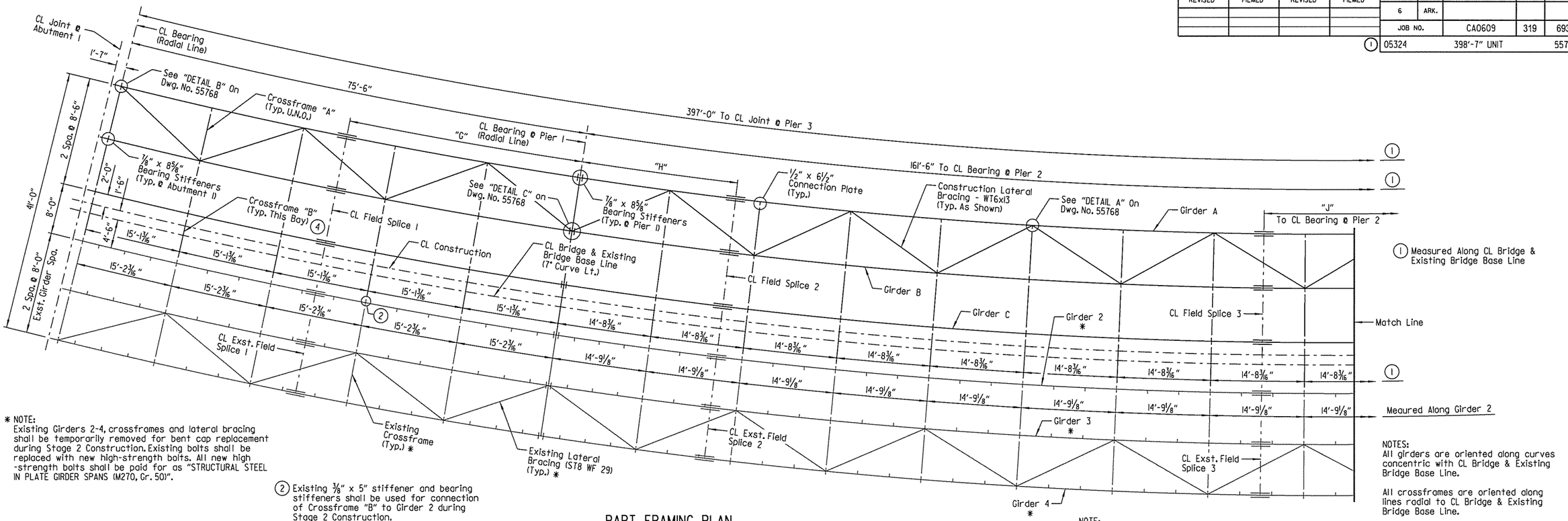

* NOTE:
Existing Girders 2-4, crossframes and lateral bracing shall be temporarily removed for bent cap replacement during Stage 2 Construction. Existing bolts shall be replaced with new high-strength bolts. All new high-strength bolts shall be paid for as "STRUCTURAL STEEL IN PLATE GIRDER SPANS (M270, Gr. 50)".

(2) Existing 3/8" x 5" stiffener and bearing stiffeners shall be used for connection of Crossframe "B" to Girder 2 during Stage 2 Construction.

PART FRAMING PLAN

Scale: 1/8" = 1'-0"

(4) Install Crossframe "B" during Stage 2 Construction. Tighten bolts in Crossframe "B" after Stage 2 deck pour is complete.

NOTE:
Information and dimensions shown are based on existing bridge plans. See Section 821 for geometry verification requirements. Fabrication of new girders shall be adjusted as necessary to fit the proposed work to the existing structure.

NOTES:
All girders are oriented along curves concentric with CL Bridge & Existing Bridge Base Line.

All crossframes are oriented along lines radial to CL Bridge & Existing Bridge Base Line.

For "BEARING STIFFENER DETAIL" & crossframe details, see Dwg. No. 55768.

For "CONNECTION PLATE DETAIL", see Dwg. No. 55767.

For "GENERAL NOTES", see Dwg. No. 55777.

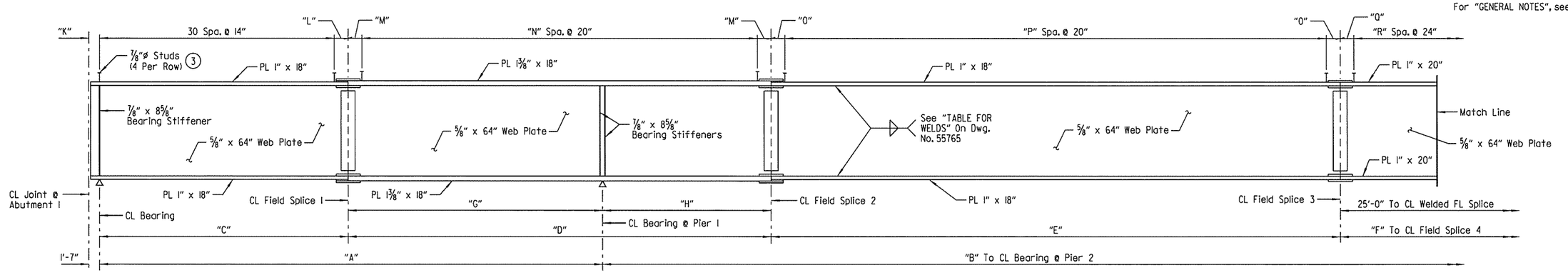

(3) For heights of new shear studs, see "NEW SHEAR CONNECTOR DETAIL" on Dwg. No. 55766.

PART GIRDER ELEVATION

New Girders A, B & C
(Dimensions measured along CL Girder)
No Scale

TABLE OF VARIABLES

GIRDER	"A"	"B"	"C"	"D"	"E"	"F"	"G"	"H"	"J"	"K"	"L"	"M"	"N"	"O"	"P"	"Q"	"R"
A	73'-7 1/4"	157'-5 7/16"	36'-4 3/8"	61'-11 5/8"	83'-3 1/2"	86'-1 3/16"	37'-2 7/8"	24'-8 3/4"	49'-5 3/16"	11 3/8"	2'-0"	2'-7 11/16"	34	2'-5 3/4"	47	2'-0 5/8"	41
B	74'-4 11/16"	159'-1 9/16"	36'-9 1/16"	62'-7 1/2"	84'-2 3/16"	87'-0 3/16"	37'-7 5/8"	24'-11 7/8"	49'-11 1/2"	1'-4 1/16"	2'-0"	2'-1 3/4"	35	2'-1 1/8"	48	2'-6 1/8"	41
C	75'-2 1/16"	160'-9 11/16"	37'-1 11/16"	63'-3 7/16"	85'-0 13/16"	87'-11 3/16"	38'-0 3/8"	25'-3 1/16"	50'-5 5/16"	1'-7"	2'-1 11/16"	2'-5 3/4"	35	2'-6 7/16"	48	1'-11 5/8"	42

LEGEND

U.N.O. = Unless Noted Otherwise

STATE OF ARKANSAS
LICENSED PROFESSIONAL ENGINEER
No. 14498
ADAM B. HALL
7-08-14
BRIDGE ENGINEER

SHEET 3 OF 15
DETAILS OF 398'-7" CONTINUOUS COMPOSITE PLATE GIRDER UNIT
RAMP 4 OVER I-40
PULASKI COUNTY

ROUTE 430 SEC. 21

ARKANSAS STATE HIGHWAY COMMISSION

LITTLE ROCK, ARK.

DRAWN BY: CWT DATE: FEB. 2014 FILENAME: BCA0609x6_S3.DGN
CHECKED BY: BWS DATE: MAR. 2014 SCALE: AS SHOWN
DESIGNED BY: ABH DATE: FEB. 2014

BRIDGE NO. 05324 DRAWING NO. 55764

SRYancey 7/18/2014 8:44:43 AM
WORKSPACE: AHTD Bridge
L:\20NOI0709 - I-40 at I-430 Interchange Modifications\Drawings\BCA0609x1_S3 (Unit 1 - Framing).dgn
REVISED DATE:

DATE REVISED	DATE FILMED	DATE REVISED	DATE FILMED	FED. ROAD DIST. NO.	STATE	FED. AID PROJ. NO.	SHEET NO.	TOTAL SHEETS
				6	ARK.			
				JOB NO.		CA0609	320	693
				(1) 05324		398'-7" UNIT		55765

* NOTE:
Existing Girders 2-4, crossframes and lateral bracing shall be temporarily removed for bent cap replacement during Stage 2 Construction. Existing bolts shall be replaced with new high-strength bolts. All new high-strength bolts shall be paid for as "STRUCTURAL STEEL IN PLATE GIRDER SPANS (M270, Gr. 50)".

(1) Measured Along CL Bridge & Existing Bridge Base Line

(2) Existing 3/8" x 5" stiffener and bearing stiffeners shall be used for connection of Crossframe "B" to Girder 2 during Stage 2 Construction.

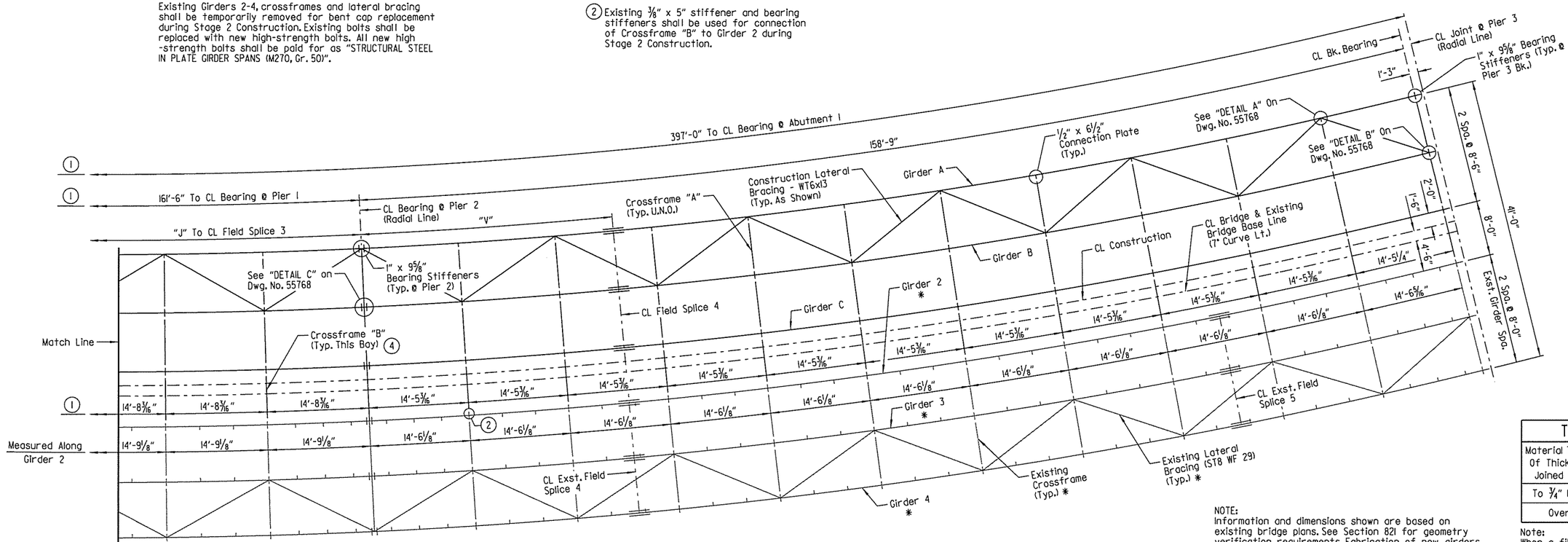

(4) Install Crossframe "B" during Stage 2 Construction. Tighten bolts in Crossframe "B" after Stage 2 deck pour is complete.

PART FRAMING PLAN

Scale: 1/8" = 1'-0"

TABLE FOR WELDS		
Material Thickness Of Thicker Part Joined (Inches)	Minimum Size Of Fillet Weld (Inches)	Single Pass Weld Must Be Used
To 3/4" Inclusive	1/4"	
Over 3/4"	5/16"	

Note:
When a fillet weld size, as shown on the plans, is larger than the minimum, the first pass shall be that specified for minimum size of fillet weld.

NOTE:
Information and dimensions shown are based on existing bridge plans. See Section 821 for geometry verification requirements. Fabrication of new girders shall be adjusted as necessary to fit the proposed work to the existing structure.

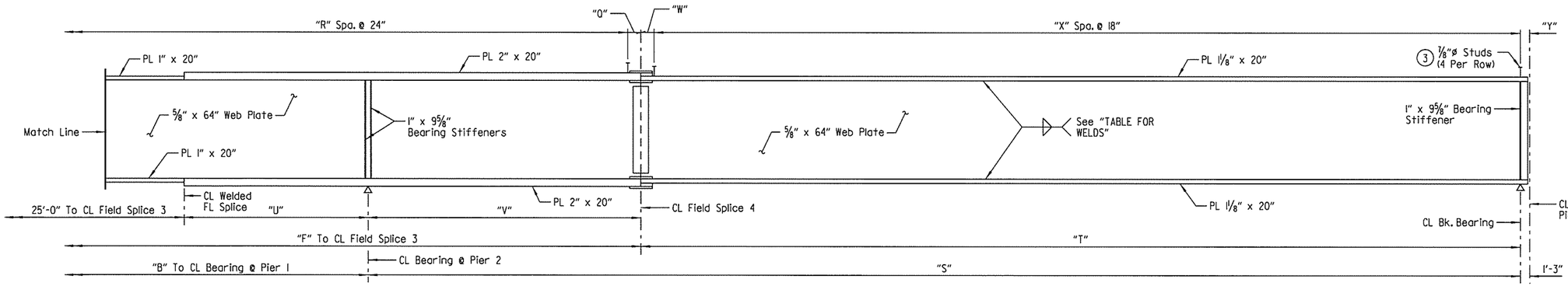

(3) For heights of new shear studs, see "NEW SHEAR CONNECTOR DETAIL" on Dwg. No. 55766.

PART GIRDER ELEVATION

New Girders A, B & C
(Dimensions measured along CL Girder)
No Scale

LEGEND
U.N.O. = Unless Noted Otherwise

TABLE OF VARIABLES							
GIRDER	"S"	"T"	"U"	"V"	"W"	"X"	"Y"
A	154'-9"	118'-1"	24'-5 3/16"	36'-8"	2'-1"	77	1'-9"
B	156'-4 15/16"	119'-4 1/4"	24'-11 1/2"	37'-0 11/16"	2'-0"	78	1'-7 1/4"
C	158'-0 7/8"	120-7 1/2"	25'-5 13/16"	37'-5 3/8"	1'-9"	79	1'-7 1/2"

NOTE:
For dimensions "B", "F", "J", "Q" & "R", see "TABLE OF VARIABLES" on Dwg. No. 55764.

NOTES:
All girders are oriented along curves concentric with CL Bridge & Existing Bridge Base Line.

Except for crossframes shown along CL Bk. Bearing, all crossframes are oriented along lines radial to CL Bridge & Existing Bridge Base Line.

For "BEARING STIFFENER DETAIL" & crossframe details, see Dwg. No. 55768.

For "CONNECTION PLATE DETAIL", see Dwg. No. 55767.

For "GENERAL NOTES", see Dwg. No. 55777.

STATE OF ARKANSAS
LICENSED PROFESSIONAL ENGINEER
No. 14498
ADAM B. HALL
7-18-14
BRIDGE ENGINEER

SHEET 4 OF 15
DETAILS OF 398'-7" CONTINUOUS COMPOSITE PLATE GIRDER UNIT
RAMP 4 OVER I-40
PULASKI COUNTY

ROUTE 430 SEC. 21

ARKANSAS STATE HIGHWAY COMMISSION
LITTLE ROCK, ARK.

DRAWN BY: JLH DATE: FEB. 2014 FILENAME: BCA0609x6_S4.DGN
CHECKED BY: BWS DATE: MAR. 2014 SCALE: AS SHOWN
DESIGNED BY: ABH DATE: FEB. 2014
BRIDGE NO. 05324 DRAWING NO. 55765

SRYancey 7/18/2014 8:44:44 AM
WORKSPACE: AHTD Bridge
L:\2016\16D1709 - I-40 at I-430 Interchange Modifications\Drawings\BCA0609x1_S4 (Unit 1 - Framing2).dgn
REVISED DATE:

DATE REVISED	DATE FILMED	DATE REVISED	DATE FILMED	FED. ROAD DIST. NO.	STATE	FED. AID PROJ. NO.	SHEET NO.	TOTAL SHEETS
				6	ARK.			
				JOB NO.		CA0609	321	693
				(1) 05324		398'-7" UNIT		55766

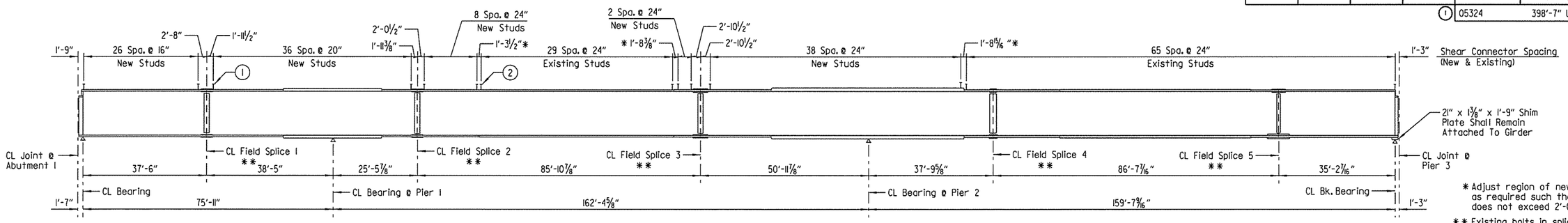

EXISTING GIRDER ELEVATION - GIRDER 2

(Dimensions measured along CL Girder)
No Scale

* Adjust region of new stud placement as required such that this dimension does not exceed 2'-0".

** Existing bolts in splice plates shall be removed and replaced with new ⅞"ø high-strength bolts conforming to AASHTO M164. All new high-strength bolts shall be paid for as "STRUCTURAL STEEL IN PLATE GIRDER SPANS (M270, GR. 50)".

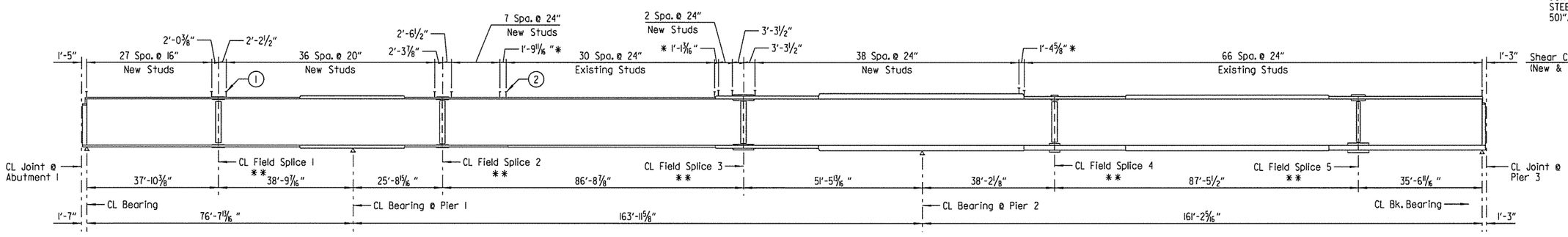

EXISTING GIRDER ELEVATION - GIRDER 3

(Dimensions measured along CL Girder)
No Scale

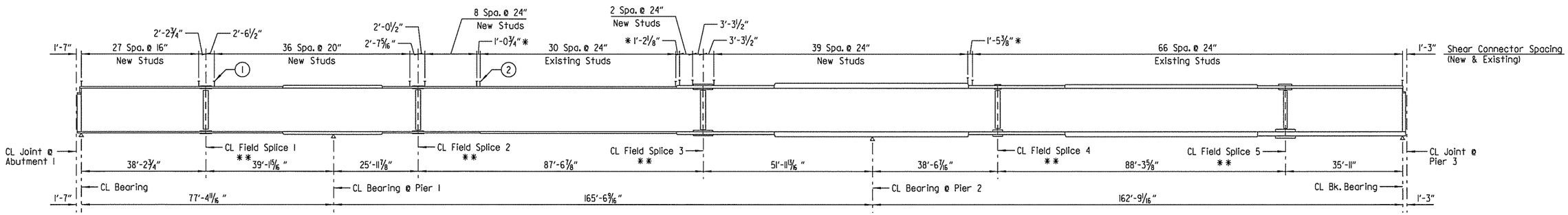

EXISTING GIRDER ELEVATION - GIRDER 4

(Dimensions measured along CL Girder)
No Scale

(3) The Contractor shall verify the existing girder camber before placement of new shear studs on existing girders. Adjustments to all new shear stud lengths shall be made if the minimum 2½" cover is violated. New shear studs shall be embedded a minimum of 2" into deck. This work will not be paid for directly but will be considered subsidiary to the item "MODIFICATION OF EXISTING BRIDGE STRUCTURE (BRIDGE NO. 05324)". All new shear studs shall be paid for as "STRUCTURAL STEEL IN PLATE GIRDER SPANS (M270, GR. 50)".

NOTE:
New stud shear connectors shown shall be ⅞"ø, granular flux filled, solid fluxed or equal, and automatically end welded to the girder flange in accordance with the recommendations of the Manufacturer. ¾"ø studs may be used in place of the ⅞"ø studs shown, at the ratio of 1.361 - ¾"ø studs in place of one ⅞"ø stud. ⅞"ø studs will be used as basis for measurement of structural steel.

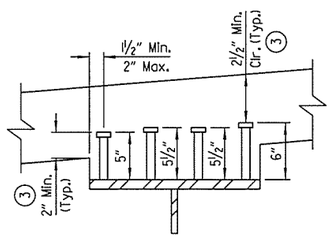

NEW SHEAR CONNECTOR DETAIL

(Looking Forward)
No Scale

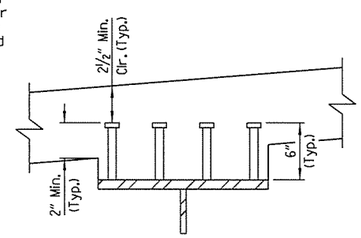

EXISTING SHEAR CONNECTOR DETAIL

(Looking Forward)
No Scale

(1) New studs shall be ⅞"ø, 4 per row. See "NEW SHEAR CONNECTOR DETAIL".

(2) Existing studs are ⅞"ø x 6", 4 per row. See "EXISTING SHEAR CONNECTOR DETAIL".

NOTE:
After deck removal and prior to installation of new shear connectors, the existing tops of girders and shear connectors shall be cleaned. Any damaged shear connectors shall be replaced as directed by the Engineer at the Contractor's expense. Payment will not be paid for directly but shall be considered subsidiary to the item "MODIFICATION OF EXISTING BRIDGE STRUCTURE (BRIDGE NO. 05324)".

NOTE:
Information and dimensions shown are based on existing plans. See Section 821 for geometry verification requirements. Placement of new studs shall be adjusted as necessary to fit existing conditions. Spacings shown in girder elevations are maximum dimensions.

STATE OF ARKANSAS
LICENSED PROFESSIONAL ENGINEER
No. 14498
ADAM B. HALL
7-18-14
BRIDGE ENGINEER

SHEET 5 OF 15
DETAILS OF 398'-7" CONTINUOUS COMPOSITE PLATE GIRDER UNIT RAMP 4 OVER I-40 PULASKI COUNTY

ROUTE 430 SEC. 21

ARKANSAS STATE HIGHWAY COMMISSION

LITTLE ROCK, ARK.

DRAWN BY: CWT DATE: FEB. 2014 FILENAME: BCA0609x6_S5.DGN
CHECKED BY: BWS DATE: MAR. 2014 SCALE: AS SHOWN
DESIGNED BY: ABH DATE: FEB. 2014

BRIDGE NO. 05324 DRAWING NO. 55766

SRYancey 7/18/2014 8:44:44 AM
WORKSPACE: AHTD Bridge
L:\CON\MOT109 - I-40 at I-430 Interchange Modifications\Drawings\BCA0609x1_S5 (Unit 1- Existing Girder).dgn
REVISED DATE:

DATE REVISED	DATE FILMED	DATE REVISED	DATE FILMED	FED. ROAD DIST. NO.	STATE	FED. AID PROJ. NO.	SHEET NO.	TOTAL SHEETS
				6	ARK.			
				JOB NO.		CA0609	322	693
				①	05324	398'-7" UNIT		55767

TABLE OF DEAD LOAD DEFLECTIONS (INCHES) - GIRDERS A, B, & C

	Point Of Deflection	Girder A			Girder B			Girder C		
		Wt. Of Girder And Cross-Frames	Wt. Of Girder, Cross-Frames And Slab	Wt. Of Girder, Cross-Frames, Slab And Parapet	Wt. Of Girder And Cross-Frames	Wt. Of Girder, Cross-Frames And Slab	Wt. Of Girder, Cross-Frames, Slab And Parapet	Wt. Of Girder And Cross-Frames	Wt. Of Girder, Cross-Frames And Slab	Wt. Of Girder, Cross-Frames, Slab And Parapet
SPAN 1	1.0	0.000	0.000	0.000	0.000	0.000	0.000	0.000	0.000	0.000
	1.1	0.006	0.018	0.019	0.007	0.007	0.007	0.008	0.002	0.001
	1.2	0.009	0.027	0.027	0.011	0.006	0.005	0.013	-0.008	-0.010
	1.3	0.008	0.022	0.021	0.011	-0.009	-0.012	0.014	-0.030	-0.034
	1.4	0.003	0.002	-0.002	0.006	-0.038	-0.044	0.008	-0.071	-0.079
	1.5	-0.006	-0.027	-0.034	-0.002	-0.074	-0.084	-0.001	-0.119	-0.131
	1.6	-0.015	-0.059	-0.070	-0.013	-0.111	-0.124	-0.012	-0.164	-0.180
	1.7	-0.024	-0.087	-0.100	-0.022	-0.139	-0.155	-0.022	-0.194	-0.212
	1.8	-0.027	-0.096	-0.109	-0.026	-0.141	-0.157	-0.026	-0.188	-0.205
	1.9	-0.022	-0.075	-0.085	-0.021	-0.104	-0.115	-0.021	-0.134	-0.146
	2.0	0.000	0.000	0.000	0.000	0.000	0.000	0.000	0.000	0.000
SPAN 2	2.1	0.102	0.347	0.391	0.102	0.446	0.493	0.101	0.548	0.598
	2.2	0.237	0.804	0.904	0.233	1.016	1.124	0.229	1.245	1.360
	2.3	0.355	1.206	1.355	0.341	1.500	1.661	0.328	1.830	2.002
	2.4	0.414	1.417	1.593	0.382	1.724	1.914	0.348	2.065	2.268
	2.5	0.402	1.390	1.564	0.342	1.623	1.812	0.281	1.891	2.093
	2.6	0.318	1.121	1.265	0.230	1.218	1.374	0.139	1.329	1.496
	2.7	0.191	0.699	0.793	0.085	0.647	0.750	-0.027	0.585	0.696
	2.8	0.064	0.268	0.309	-0.033	0.131	0.177	-0.137	-0.027	0.024
	2.9	-0.011	-0.001	0.003	-0.071	-0.125	-0.119	-0.134	-0.262	-0.254
	3.0	0.000	0.000	0.000	0.000	0.000	0.000	0.000	0.000	0.000
SPAN 3	3.1	0.130	0.376	0.422	0.211	0.626	0.670	0.293	0.878	0.920
	3.2	0.331	0.986	1.108	0.509	1.577	1.696	0.686	2.167	2.283
	3.3	0.552	1.669	1.877	0.827	2.627	2.833	1.105	3.599	3.801
	3.4	0.743	2.273	2.556	1.102	3.565	3.848	1.465	4.875	5.154
	3.5	0.861	2.655	2.986	1.272	4.167	4.500	1.688	5.702	6.030
	3.6	0.883	2.740	3.081	1.303	4.304	4.649	1.728	5.895	6.235
	3.7	0.797	2.481	2.789	1.173	3.900	4.213	1.558	5.350	5.660
	3.8	0.607	1.895	2.128	0.890	2.968	3.205	1.178	4.064	4.300
	3.9	0.329	1.031	1.157	0.481	1.608	1.736	0.634	2.197	2.325
	4.0	0.000	0.000	0.000	0.000	0.000	0.000	0.000	0.000	0.000

TABLE OF DEAD LOAD DEFLECTIONS (INCHES) - GIRDERS 2, 3, & 4

	Point Of Deflection	Girder 2		Girder 3		Girder 4	
		Weight Of Slab	Weight Of Slab And Parapet	Weight Of Slab	Weight Of Slab And Parapet	Weight Of Slab	Weight Of Slab And Parapet
SPAN 1	1.0	0.000	0.000	0.000	0.000	0.000	0.000
	1.1	-0.001	-0.002	-0.009	-0.010	-0.029	-0.030
	1.2	-0.005	-0.007	-0.021	-0.024	-0.060	-0.063
	1.3	-0.018	-0.023	-0.041	-0.047	-0.097	-0.104
	1.4	-0.038	-0.047	-0.072	-0.083	-0.142	-0.154
	1.5	-0.063	-0.077	-0.106	-0.122	-0.187	-0.205
	1.6	-0.086	-0.104	-0.137	-0.157	-0.219	-0.242
	1.7	-0.099	-0.120	-0.151	-0.174	-0.226	-0.252
	1.8	-0.091	-0.110	-0.134	-0.155	-0.194	-0.217
	1.9	-0.061	-0.074	-0.088	-0.102	-0.123	-0.139
	2.0	0.000	0.000	0.000	0.000	0.000	0.000
SPAN 2	2.1	0.248	0.301	0.345	0.402	0.439	0.501
	2.2	0.586	0.708	0.812	0.944	1.021	1.164
	2.3	0.886	1.069	1.219	1.415	1.533	1.747
	2.4	1.041	1.257	1.430	1.660	1.786	2.035
	2.5	1.025	1.238	1.393	1.618	1.716	1.956
	2.6	0.842	1.017	1.117	1.299	1.340	1.530
	2.7	0.557	0.672	0.710	0.826	0.820	0.938
	2.8	0.264	0.315	0.328	0.379	0.353	0.402
	2.9	0.065	0.073	0.074	0.082	0.069	0.076
	3.0	0.000	0.000	0.000	0.000	0.000	0.000
SPAN 3	3.1	0.125	0.166	0.165	0.205	0.196	0.236
	3.2	0.374	0.487	0.487	0.598	0.579	0.689
	3.3	0.683	0.880	0.884	1.077	1.060	1.253
	3.4	0.958	1.229	1.239	1.503	1.498	1.763
	3.5	1.142	1.460	1.477	1.787	1.796	2.109
	3.6	1.198	1.527	1.549	1.870	1.891	2.216
	3.7	1.106	1.406	1.431	1.724	1.749	2.046
	3.8	0.862	1.093	1.119	1.345	1.368	1.598
	3.9	0.476	0.602	0.617	0.741	0.753	0.879
	4.0	0.000	0.000	0.000	0.000	0.000	0.000

Note:
Dead load deflections shown are based on removable deck forms.

If permanent steel deck forms are used, the corrugations shall be non-matching and shall be filled with styrofoam.

Revision to the deflection tables may be necessary upon review of the Contractor's submitted forming details.

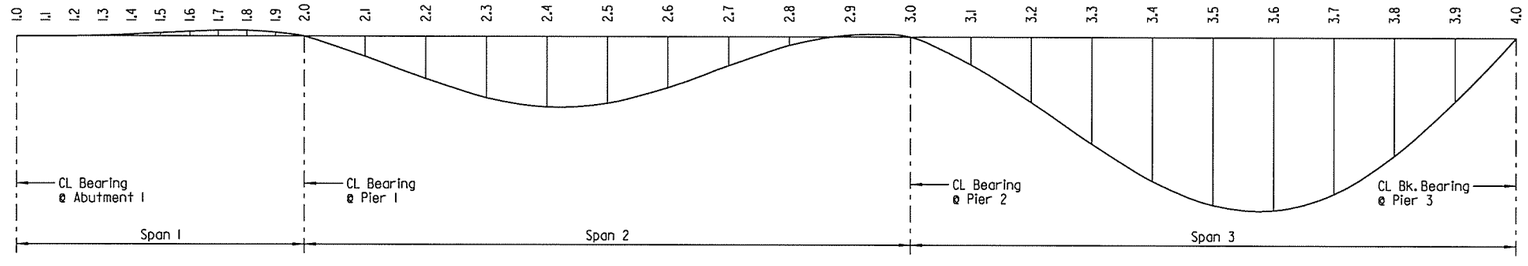

DEAD LOAD DEFLECTION DIAGRAM

No Scale

Note:
Camber for Dead Load Deflection plus vertical curve +/- 1/4" tolerance. Deflections shown are from a chord from CL Bearing to CL Bearing. Vertical curve corrections are not included. Negative sign (-) indicates point above chord.

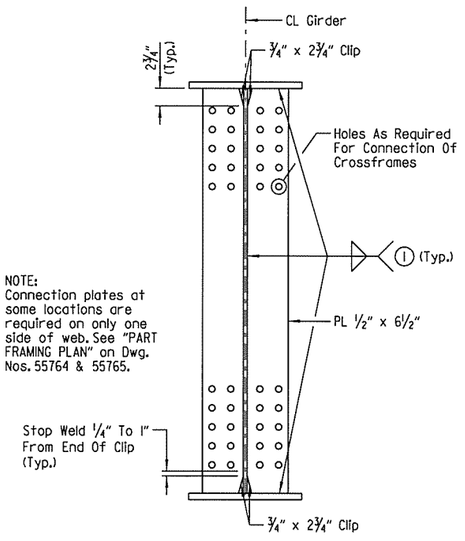

NOTE:
Connection plates at some locations are required on only one side of web. See "PART FRAMING PLAN" on Dwg. Nos. 55764 & 55765.

CONNECTION PLATE DETAIL

Scale: 1" = 1'-0"

STATE OF ARKANSAS
LICENSED PROFESSIONAL ENGINEER
No. 14498
ADAM B. HAIL
7-18-14
BRIDGE ENGINEER

SHEET 6 OF 15
DETAILS OF 398'-7" CONTINUOUS COMPOSITE PLATE GIRDER UNIT
RAMP 4 OVER I-40
PULASKI COUNTY

ROUTE 430 SEC. 21

ARKANSAS STATE HIGHWAY COMMISSION

LITTLE ROCK, ARK.

DRAWN BY: CWT DATE: FEB. 2014 FILENAME: BCA0609x6_S6.DGN
CHECKED BY: BWS DATE: APR. 2014 SCALE: AS SHOWN
DESIGNED BY: ABH DATE: FEB. 2014

BRIDGE NO. 05324 DRAWING NO. 55767

SRYancey 7/18/2014 8:44:45 AM
WORKSPACE: ANTD 8.1 Edge
LEVELS: NOT709 I-40 at I-430 Interchange Modifications\Drawings\BCA0609x1_S6 (Unit 1 - Deflections).dgn
REVISED DATE:

DATE REVISED	DATE FILMED	DATE REVISED	DATE FILMED	FED. ROAD DIST. NO.	STATE	FED. AID PROJ. NO.	SHEET NO.	TOTAL SHEETS
				6	ARK.			
				JOB NO.		CA0609	323	693
				(1) 05324		398'-7" UNIT		55768

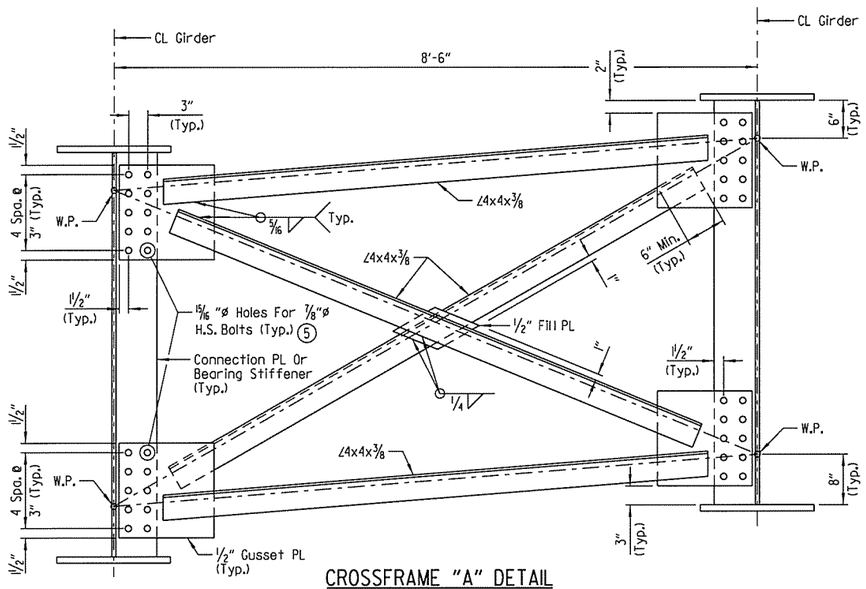

CROSSFRAME "A" DETAIL

(Looking Forward)
Scale: 1" = 1'-0"

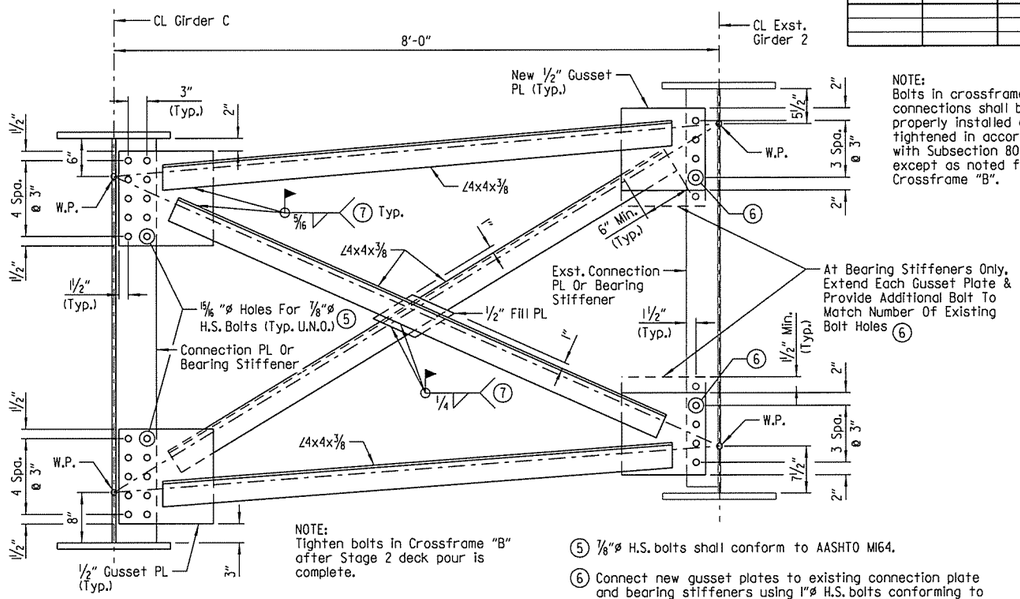

NOTE:
Tighten bolts in Crossframe "B" after Stage 2 deck pour is complete.

CROSSFRAME "B" DETAIL

(Looking Forward)
Scale: 1" = 1'-0"

NOTE:
Bolts in crossframe connections shall be properly installed and tightened in accordance with Subsection 807.7.1 except as noted for Crossframe "B".

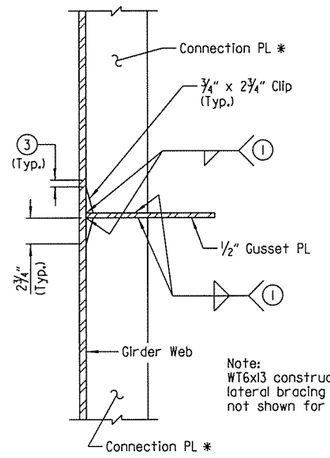

SECTION A-A

Scale: 1 1/2" = 1'-0"

(5) 7/8"ø H.S. bolts shall conform to AASHTO M164.

(6) Connect new gusset plates to existing connection plate and bearing stiffeners using 1"ø H.S. bolts conforming to AASHTO M253. In accordance with Section 807, ream existing 15/16 "ø holes in connection plate and bearing stiffeners to 1 1/16"ø to allow for installation of 1"ø bolts. Modification of existing connection plates and bearing stiffeners shall be considered subsidiary to the item "MODIFICATION OF EXISTING BRIDGE STRUCTURE (BRIDGE NO. 05324)". New 1"ø H.S. bolts shall be paid for as "STRUCTURAL STEEL IN PLATE GIRDER SPANS (M270, Gr. 50)".

(7) Crossframe "B" bracing members shall be field welded after existing crossframes between Girders 2 & 3 and between Girders 3 & 4 have been re-erected and prior to the Stage 2 deck pour.

Note:
At the Contractor's option, 15/16 "ø holes may be field drilled in one end of each WT6x13 member.

Note:
See "PART FRAMING PLAN" on Dwg. Nos. 55764 & 55765 for locations of construction lateral bracing.

Note:
WT6x13 construction lateral bracing member not shown for clarity.

Stations Increasing

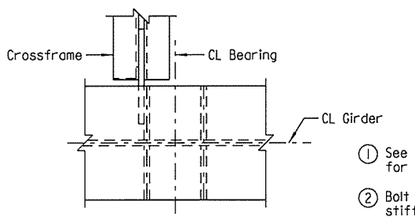

PLAN AT PIERS 1 & 2

(1) See "TABLE FOR WELDS" On Dwg. No. 55765 for min. weld size.

(2) Bolt holes are not required on bearing stiffeners located on outside of exterior girders and on forward station bearing stiffeners at Piers 1 & 2. See "PLAN AT PIERS 1 & 2".

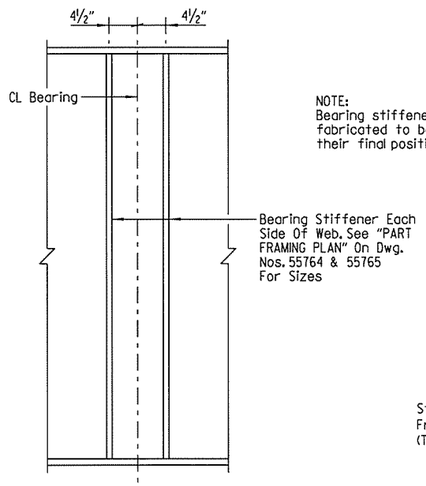

ELEVATION AT PIERS 1 & 2

NOTE:
Bearing stiffeners shall be fabricated to be vertical in their final positions.

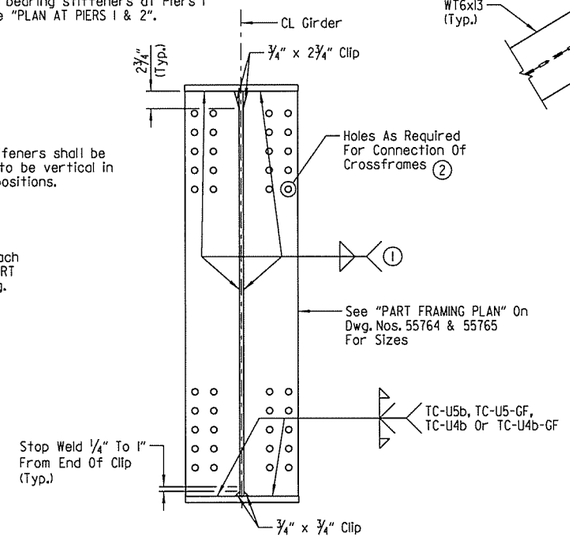

SECTION AT ABUTMENT 1 & PIERS 1-3

BEARING STIFFENER DETAIL

Scale: 1" = 1'-0"

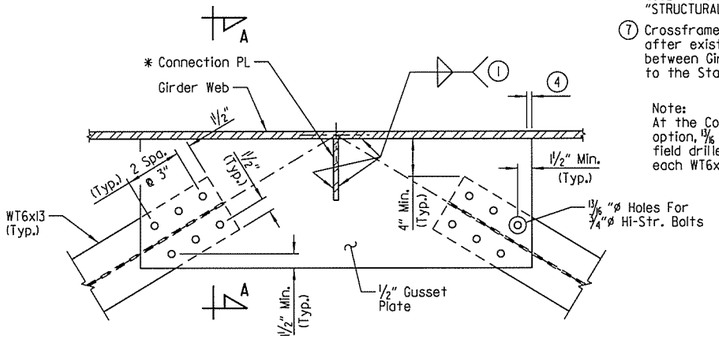

DETAIL A

No Scale

* Connection plates shall be discontinuous at lateral bracing gusset plates. See "SECTION A-A".

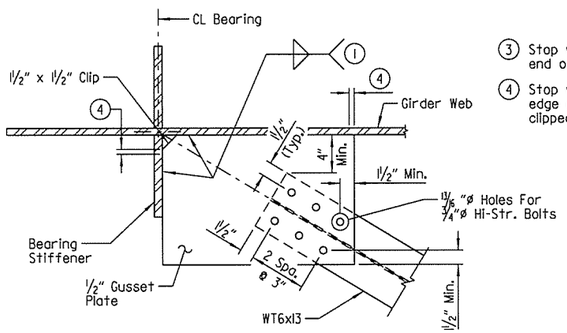

DETAIL B

No Scale

(3) Stop weld 1/4" to 1" from end of clip

(4) Stop weld 1/4" from the edge of all corners, both clipped and unclipped

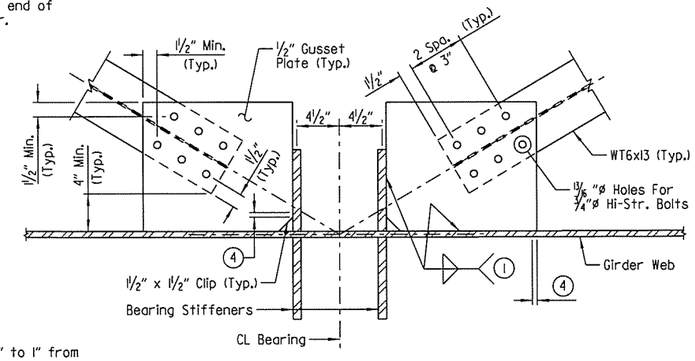

DETAIL C

No Scale

LEGEND

U.N.O. = Unless Noted Otherwise

STATE OF ARKANSAS
LICENSED PROFESSIONAL ENGINEER
No. 14498
ADAM B. HALL
7-18-14
BRIDGE ENGINEER

SHEET 7 OF 15
DETAILS OF 398'-7" CONTINUOUS COMPOSITE PLATE GIRDER UNIT RAMP 4 OVER I-40 PULASKI COUNTY

ROUTE 430 SEC. 21

ARKANSAS STATE HIGHWAY COMMISSION

LITTLE ROCK, ARK.

DRAWN BY: ABH DATE: FEB. 2014 FILENAME: BCA0609x6_S7.DGN
CHECKED BY: BWS DATE: MAR. 2014 SCALE: AS SHOWN
DESIGNED BY: ABH DATE: FEB. 2014

BRIDGE NO. 05324 DRAWING NO. 55768

SRYancey 7/8/2014 8:44:45 AM
WORKSPACE: AHTD Bridge
L:\ROW\NO7709 - I-40 at I-430 Interchange Modifications\Drawings\BCA0609x1.S7 (Unit 1 - Steel Dtls).dgn
REVISED DATE:

DATE REVISED	DATE FILMED	DATE REVISED	DATE FILMED	FED. ROAD DIST. NO.	STATE	FED. AID PROJ. NO.	SHEET NO.	TOTAL SHEETS
				6	ARK.			
				JOB NO.		CA0609	324	693
				(1) 05324		398'-7" UNIT		55769

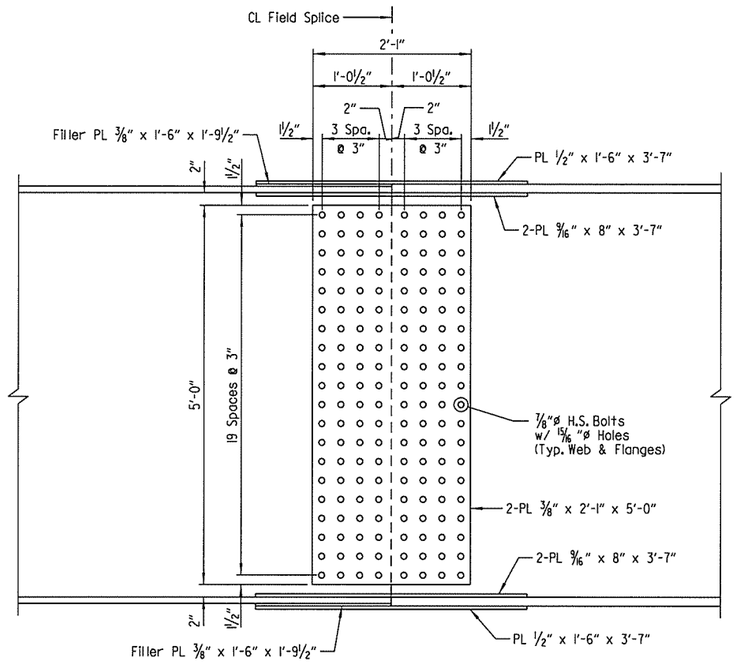

ELEVATION OF FIELD SPLICES 1 & 2

(Field Splice 1 Shown, Field Splice 2 Similar By Symmetry)

Scale: 1" = 1'-0"

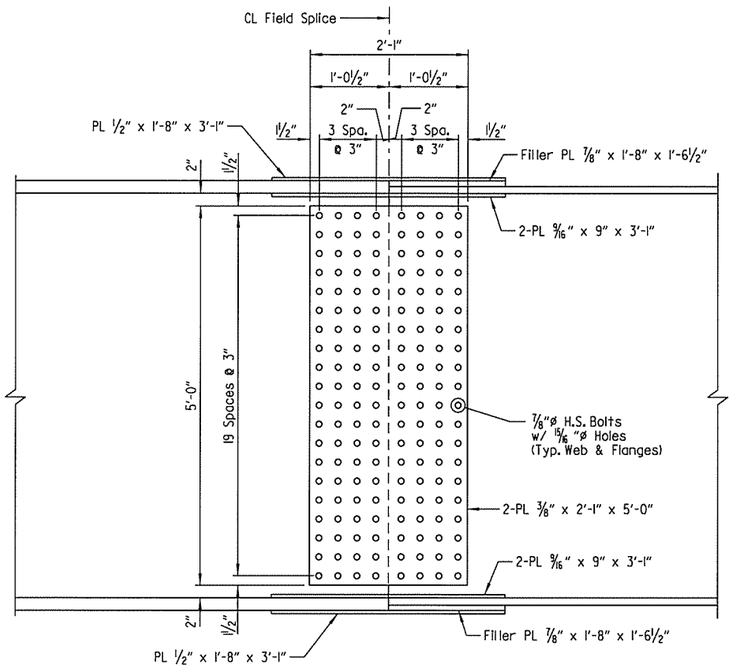

ELEVATION OF FIELD SPLICE 4

Scale: 1" = 1'-0"

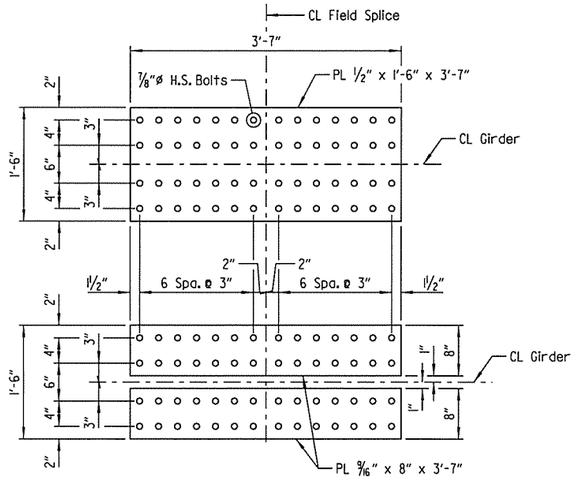

TOP & BOTTOM FLANGE SPLICE - FIELD SPLICES 1, 2 & 3

Scale: 1" = 1'-0"

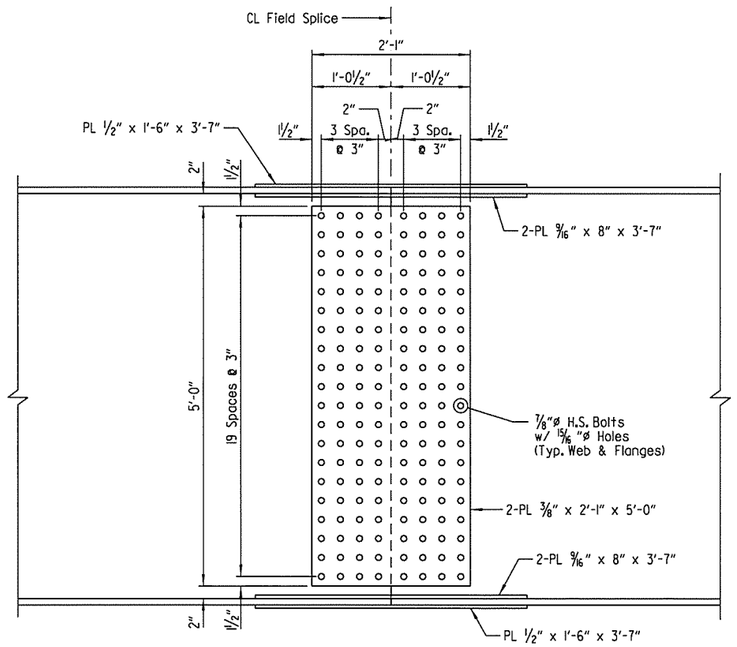

ELEVATION OF FIELD SPLICE 3

Scale: 1" = 1'-0"

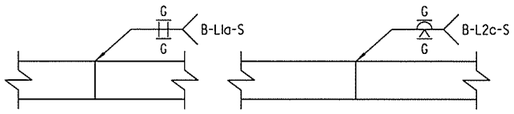

DETAILS OF WELDED SPLICES

No Scale

NOTES:

All field splice bolts shall be ⅞"ø H.S. bolts.

All holes for splice bolts shall be 15/16 "ø.

All field splice plates shall be AASHTO M270, Gr. 50 steel.

Bolted field splices shown may be eliminated or shop welded splices may be substituted with approval of the Engineer. Payment will be made on the basis of the plan quantities.

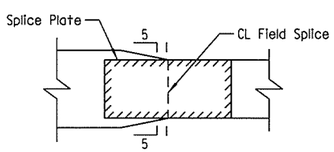

DETAIL OF BOTTOM FLANGE TRANSITION

No Scale

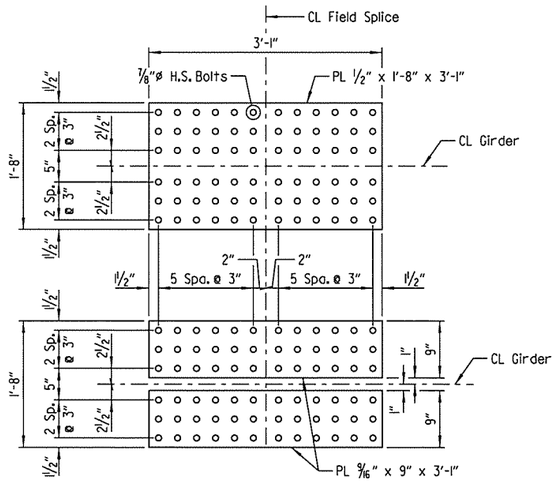

TOP & BOTTOM FLANGE SPLICE - FIELD SPLICE 4

Scale: 1" = 1'-0"

STATE OF ARKANSAS
LICENSED PROFESSIONAL ENGINEER
No. 14498
ADAM B. HALL
7-18-14
BRIDGE ENGINEER

SHEET 8 OF 15
DETAILS OF 398'-7" CONTINUOUS COMPOSITE PLATE GIRDER UNIT RAMP 4 OVER I-40 PULASKI COUNTY

ROUTE 430 SEC. 21

ARKANSAS STATE HIGHWAY COMMISSION

LITTLE ROCK, ARK.

DRAWN BY: ABH DATE: FEB. 2014 FILENAME: BCA0609x6_S8.DGN
CHECKED BY: BWS DATE: MAR. 2014 SCALE: AS SHOWN
DESIGNED BY: ABH DATE: FEB. 2014

BRIDGE NO. 05324 DRAWING NO. 55769

SRYancey 7/18/2014 8:44:46 AM
WORKSPACE: AHTD Bridge
L:\ZDIN\IDIT709 - I-40 at I-430 Interchange Modifications\Drawings\BCA0609x6_S8 (Unit 1 - Splice).dgn
REVISED DATE:

DATE REVISED	DATE FILMED	DATE REVISED	DATE FILMED	FED. ROAD DIST. NO.	STATE	FED. AID PROJ. NO.	SHEET NO.	TOTAL SHEETS
				6	ARK.			
				JOB NO.		CA0609	325	693
				(1) 05324		398'-7" PL GIRDER UNIT		55770

(1) Parapet joint spacing measured along gutterline. Parapet joints designated with symbol (F) shall be stopped 4" from top of slab. All other parapet joints with symbol (P) shall be partial depth joints stopped 1'-6" from top of slab.

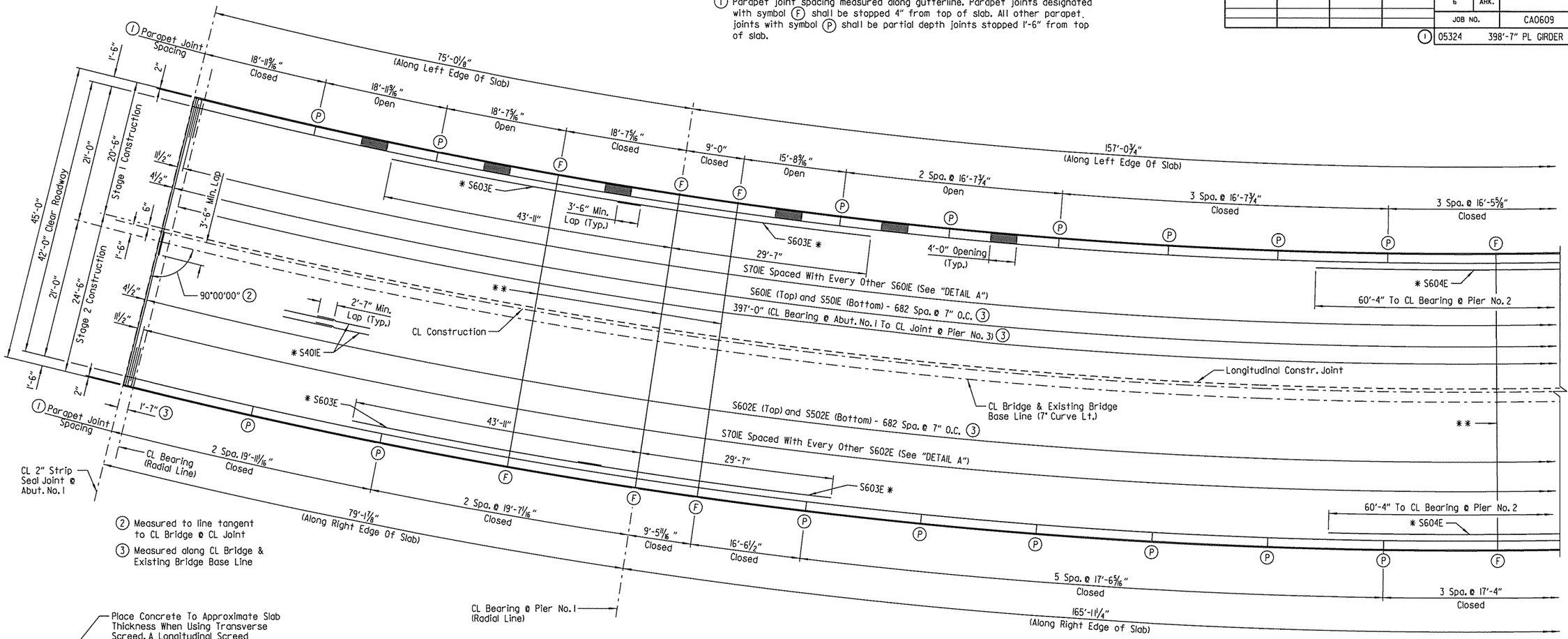

(2) Measured to line tangent to CL Bridge @ CL Joint

(3) Measured along CL Bridge & Existing Bridge Base Line

* Refer to "TYPICAL ROADWAY SECTION" on Dwg. No. 55762 for placement.

** Required Slab Joint, see "SLAB JOINT DETAIL"

PART REINFORCING PLAN

Scale: 1/8" = 1'-0"

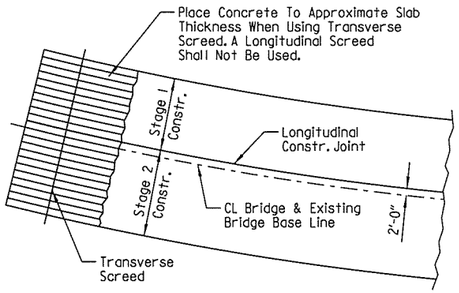

CONCRETE PLACEMENT PROCEDURE

No Scale

NOTES:
For each stage of construction, concrete placement for entire unit shall be made in one continuous deck pour, beginning at Abutment No. 1 and ending at Pier No. 3. For each stage of construction, 72 hours shall elapse between the completion of the entire deck and the pouring of the parapet.

The Contractor must obtain approval from the Engineer for any deviations from the pouring sequence noted.

Concrete in bridge superstructure shall be consolidated for the entire pour before any concrete has taken its initial set. This may require the use of a retarding agent.

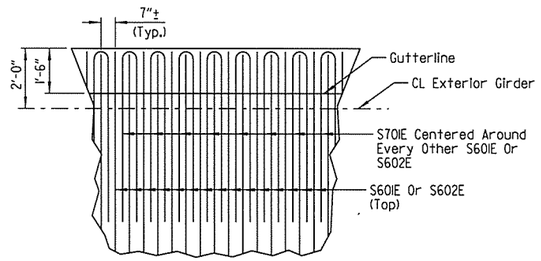

DETAIL A

No Scale

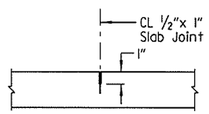

The 1/2" x 1" Poured Joint Sealer (Type 3 or 4) in slab shall conform to Subsection 501.02(h) and 501.05(j). Backer Rod filler will not be required. The Poured Joint Sealer shall be paid for as "CLASS S(AE) CONCRETE-BRIDGE". Slab joints shall extend to the outside edge of the deck slab. Slab joints shallbe installed before the parapet railing is poured. If slab joints are to be sawed, they shall be sawed as soon as the concrete has sufficiently set to allow sawing of the joint without damage to the slab. Slab joints shall be placed at all required slab joint locations. The joint sealer shall extend across the deck slab. No joint sealer shall be placed on the deck slab under the parapet rail. Slab joints shall align with parapet open joints.

SLAB JOINT DETAIL

No Scale

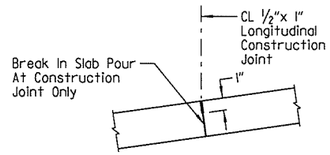

The 1/2" x 1" Poured Joint Sealer (Type 3 or 4) in slab shall conform to Subsection 501.02(h) and 501.05(j). Backer Rod filler will not be required. Joint Sealer shall be paid for as "CLASS S(AE) CONCRETE-BRIDGE". This joint shall be formed. Seal must be gray or other color similar to concrete.

LONGITUDINAL CONSTRUCTION JOINT DETAIL

No Scale

NOTES:
Unless noted otherwise, spacing shown for all transverse reinforcing is measured along CL Bridge & Existing Bridge Base Line. All transverse reinforcing shall be placed on lines radial to Existing Bridge Base Line.

All longitudinal lines and longitudinal slab reinforcing shall be placed along curves concentric with Existing Bridge Base Line (7° curve).

Unless noted otherwise, all transverse lines are radial to Existing Bridge Base Line.

Required slab joints shall align with the parapet open joints at the gutterlines.

See Dwg. Nos. 55772-55776 for parapet reinforcing details.

STATE OF ARKANSAS
LICENSED PROFESSIONAL ENGINEER
No. 14498
ADAM B. HALL
1-18-14
BRIDGE ENGINEER

SHEET 9 OF 15
DETAILS OF 398'-7" CONTINUOUS COMPOSITE PLATE GIRDER UNIT
RAMP 4 OVER I-40
PULASKI COUNTY

ROUTE 430 SEC. 21

ARKANSAS STATE HIGHWAY COMMISSION

LITTLE ROCK, ARK.

DRAWN BY: JLH DATE: FEB. 2014 FILENAME: BCA0609x6_S9.DGN
CHECKED BY: SRY DATE: MAR. 2014 SCALE: AS SHOWN
DESIGNED BY: ABH DATE: FEB. 2014

BRIDGE NO. 05324 DRAWING NO. 55770

SRYancey 7/18/2014 8:44:47 AM
WORKSPACE: AHTD Bridge
L:\20II\II0I709 - I-40 at I-430 Interchange Modifications\Drawings\BCA0609x1_S9 (Unit 1 - Slab).dgn
REVISED DATE:

NOTES:
Unless noted otherwise, spacing shown for all transverse reinforcing is measured along CL Bridge & Existing Bridge Base Line. All transverse reinforcing shall be placed on lines radial to Existing Bridge Base Line.

All longitudinal lines and longitudinal slab reinforcing shall be placed along curves concentric with Existing Bridge Base Line (7° curve).

Unless noted otherwise, all transverse lines are radial to Existing Bridge Base Line.

Required slab joints shall align with the parapet open joints at the gutterlines.

See Dwg. Nos. 55772-55776 for parapet reinforcing details.

* Refer to "TYPICAL ROADWAY SECTION" on Dwg. No. 55762 for placement.

** Required Slab Joint, see "SLAB JOINT DETAIL" On Dwg. No. 55770

(1) Parapet joint spacing measured along gutterline. Parapet joints designated with symbol (F) shall be stopped 4" from top of slab. All other parapet joints with symbol (P) shall be partial depth joints stopped 1'-6" from top of slab.

DATE REVISED	DATE FILMED	DATE REVISED	DATE FILMED

FED. ROAD DIST. NO.	STATE	FED. AID PROJ. NO.	SHEET NO.	TOTAL SHEETS
6	ARK.			
JOB NO.		CA0609	326	693
(1) 05324		398'-7" PL GIRDER UNIT		55771

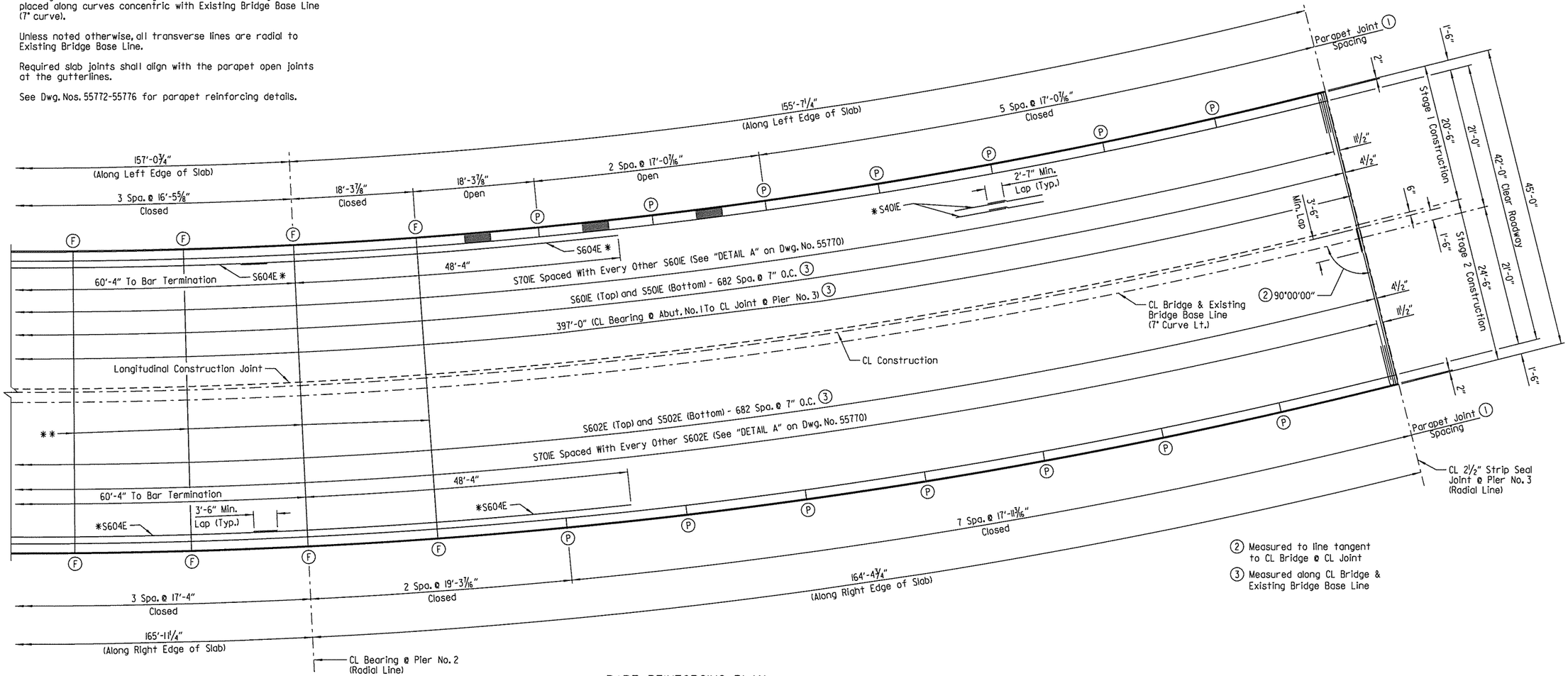

(2) Measured to line tangent to CL Bridge @ CL Joint

(3) Measured along CL Bridge & Existing Bridge Base Line

PART REINFORCING PLAN
Scale: ⅛" = 1'-0"

BAR LIST

MARK	NO. REQ'D	LENGTH	P.D.
S401E	1309	39'-7"	Str.
S402E	41	4'-2"	2"
S501E	683	23'-10"	Str.
S502E	683	24'-0"	Str.
S601E	683	23'-10"	Str.
S602E	683	24'-0"	Str.
S603E	98	38'-5"	Str.
S604E	98	56'-1"	Str.
S605E	3	23'-10"	Str.
S606E	4	1'-8"	Str.
S607E	4	8'-2"	Str.
S608E	2	4'-10"	Str.
S609E	3	24'-2"	Str.
S610E	2	6'-2"	Str.
S611E	4	7'-8"	Str.
S701E	682	14'-3"	5¼"

BAR LIST (CONTINUED)

MARK	NO. REQ'D	LENGTH	P.D.
P401E	12	29'-5"	Str.
P402E	16	18'-3"	Str.
P403E	11	8'-8"	Str.
P404E	36	30'-11"	Str.
P405E	27	16'-1"	Str.
P406E	16	18'-0"	Str.
P407E	24	36'-3"	Str.
P408E	10	18'-7"	Str.
P409E	5	15'-4"	Str.
P410E	25	16'-3"	Str.
P411E	35	16'-8"	Str.
P412E	24	38'-1"	Str.
P413E	16	18'-11"	Str.
P414E	27	17'-0"	Str.
P415E	24	32'-3"	Str.
P416E	11	9'-1"	Str.
P417E	16	19'-3"	Str.
P418E	35	17'-7"	Str.
P419E	25	17'-2"	Str.

BAR LIST (CONTINUED)

MARK	NO. REQ'D	LENGTH	P.D.
P420E	5	16'-2"	Str.
P421E	10	19'-7"	Str.
P501E	1557	6'-8"	3¾"
P502E	729	5'-4"	3¾", 6"
P503E	64	6'-0"	3¾"
P504E	828	5'-4"	3¾", 6"

BAR BENDING DIAGRAMS

NOTES:
Dimensions of bars are out-to-out.

Bar designations ending with "E" indicate epoxy coated bars.

STATE OF ARKANSAS
LICENSED PROFESSIONAL ENGINEER
No. 14498
ADAM B. HALL
7-18-14
BRIDGE ENGINEER

SHEET 10 OF 15
DETAILS OF 398'-7" CONTINUOUS COMPOSITE PLATE GIRDER UNIT
RAMP 4 OVER I-40
PULASKI COUNTY
ROUTE 430 SEC. 21

ARKANSAS STATE HIGHWAY COMMISSION
LITTLE ROCK, ARK.

DRAWN BY: JLH DATE: FEB. 2014 FILENAME: BCA0609x6_S10.DGN
CHECKED BY: SRY DATE: MAR. 2014 SCALE: AS SHOWN
DESIGNED BY: ABH DATE: FEB. 2014
BRIDGE NO. 05324 DRAWING NO. 55771

SRYancey 7/18/2014 8:44:47 AM
WORKSPACE: AHTD Bridge
L:\2011\11017109 - I-40 at I-430 Interchange Modifications\Drawings\BCA0609x1_S10 (Unit 1 - Slab2).dgn
REVISED DATE:

DATE REVISED	DATE FILMED	DATE REVISED	DATE FILMED	FED. ROAD DIST. NO.	STATE	FED. AID PROJ. NO.	SHEET NO.	TOTAL SHEETS
				6	ARK.			
				JOB NO.		CA0609	327	693
				(1) 05324		398'-7" PL GIRDER UNIT		55772

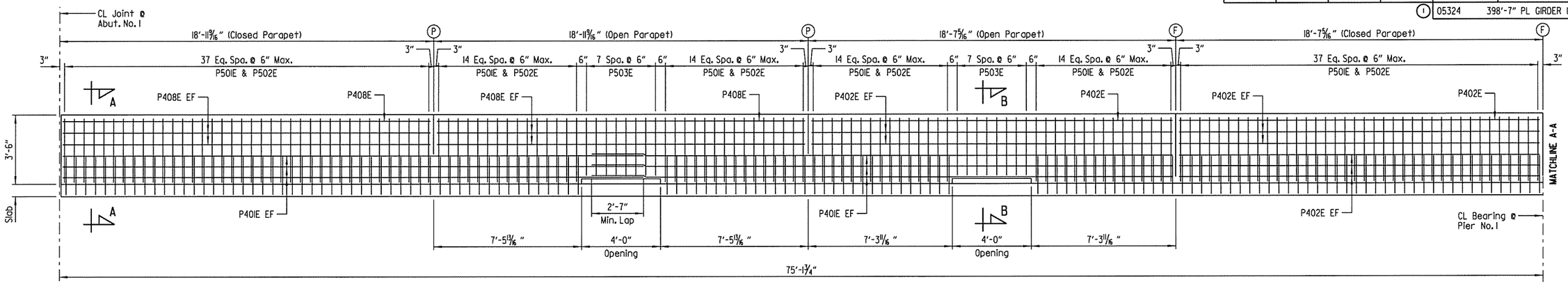

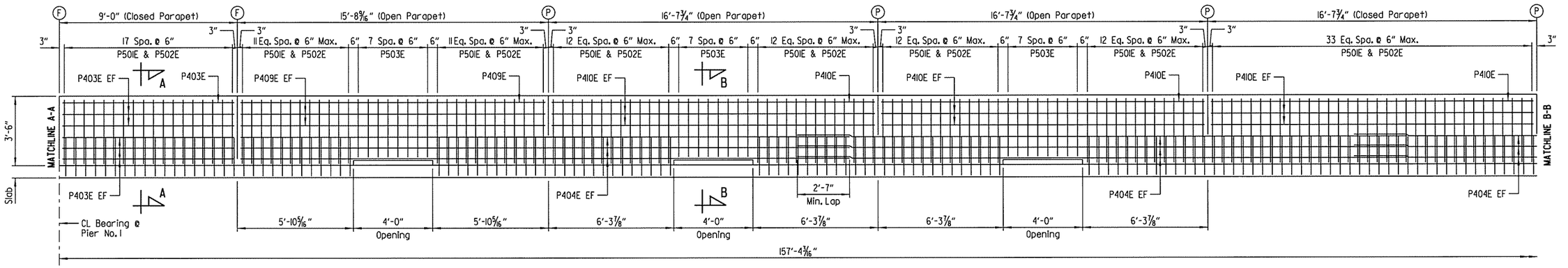

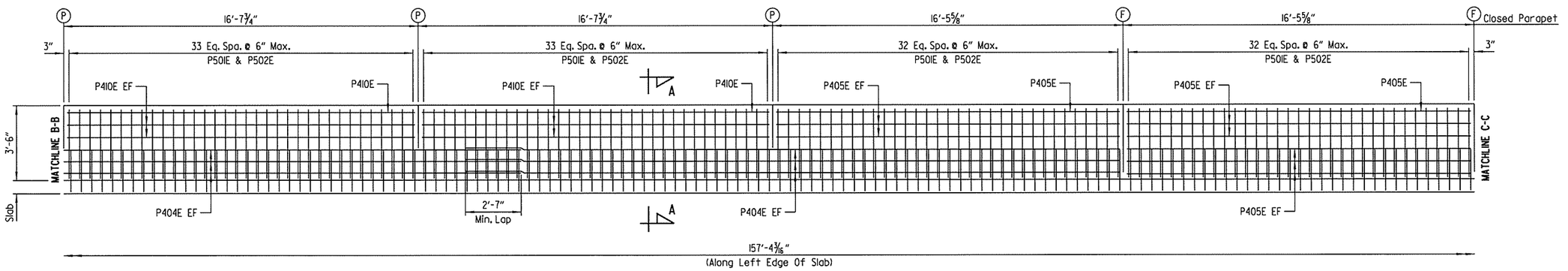

(P) CL Partial-Depth Parapet Joint (1/4" to 1" Max.) as shown on "PART REINFORCING PLAN" on Dwg. Nos. 55770 & 55771. Stop 1'-6" from top of slab.

(F) CL Full-Depth Parapet Joint (1/4" to 1" Max.) as shown on "PART REINFORCING PLAN" on Dwg. Nos. 55770 & 55771. Stop 4" from top of slab.

LEGEND

EF = Each Face

LEFT PARAPET - ELEVATION

(Looking At Inside Face Of Parapet Rail)
Scale: 3/8" = 1'-0"

NOTES:
All dimensions shown are measured along left gutterline.

For "BAR LIST" and "BAR BENDING DIAGRAMS", see Dwg. No. 55771.

For "SECTION A-A" and "SECTION B-B", see Dwg. No. 55773.

STATE OF ARKANSAS
LICENSED PROFESSIONAL ENGINEER
No. 14498
ADAM B. HALL
1-28-14
BRIDGE ENGINEER

SHEET 11 OF 15
DETAILS OF 398'-7" CONTINUOUS COMPOSITE PLATE GIRDER UNIT RAMP 4 OVER I-40 PULASKI COUNTY

ROUTE 430 SEC. 21

ARKANSAS STATE HIGHWAY COMMISSION
LITTLE ROCK, ARK.

DRAWN BY: JLH DATE: FEB. 2014 FILENAME: BCA0609x6_SII.DGN
CHECKED BY: SRY DATE: MAR. 2014 SCALE: AS SHOWN
DESIGNED BY: ABH DATE: FEB. 2014

BRIDGE NO. 05324 DRAWING NO. 55772

SRYancey 7/18/2014 8:44:48 AM
WORKSPACE: AHTD Bridge
L:\ZDRIVE\DIT709 - I-430 Interchange Modifications\Drawings\BCA0609x1_SII(Unit 1 - Parapet - Left1).dgn
REVISED DATE:

DATE REVISED	DATE FILMED	DATE REVISED	DATE FILMED

FED. ROAD DIST. NO.	STATE	FED. AID PROJ. NO.	SHEET NO.	TOTAL SHEETS
6	ARK.			
JOB NO.		CA0609	328	693
(I) 05324		398'-7" PL GIRDER UNIT		55773

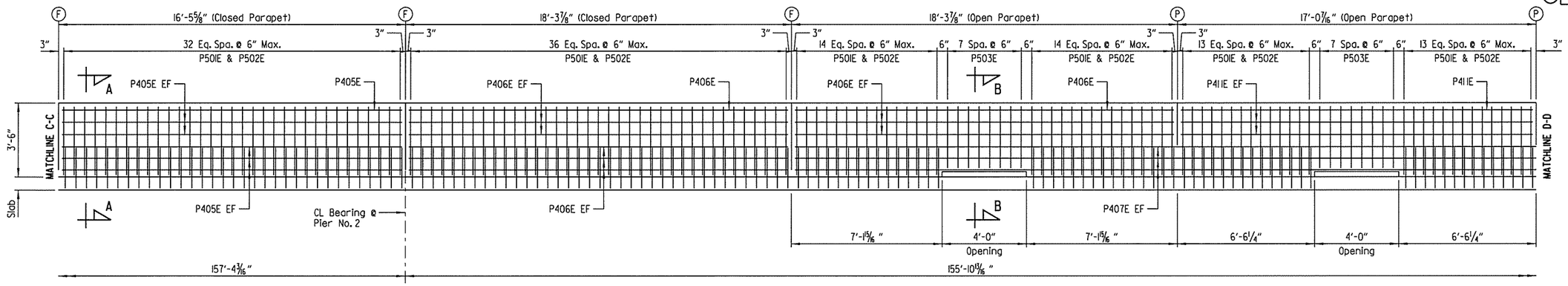

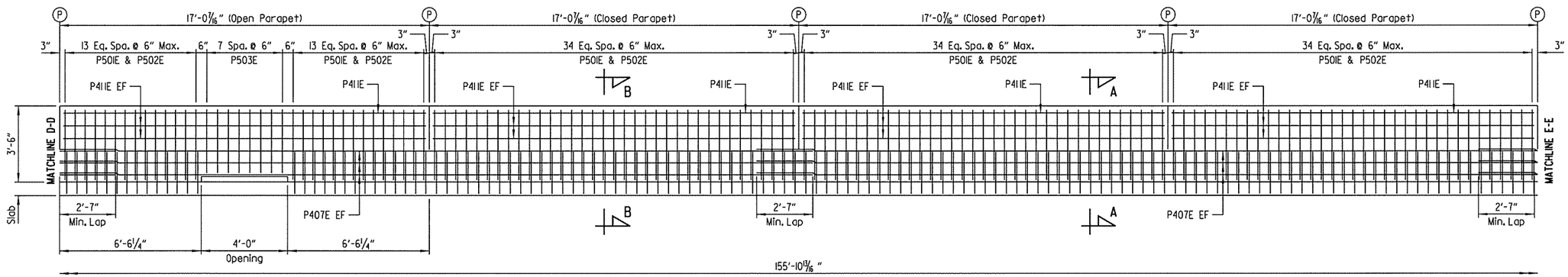

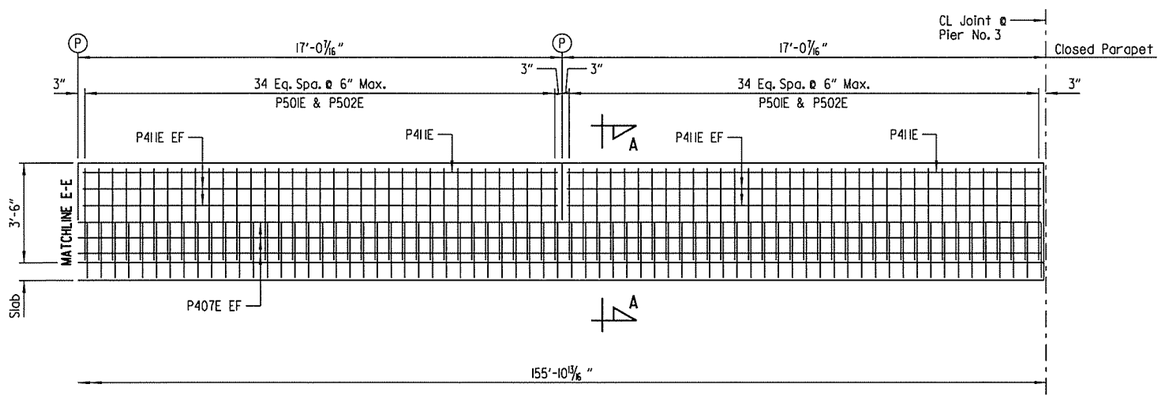

(P) CL Partial-Depth Parapet Joint (1/4" to 1" Max.) as shown on "PART REINFORCING PLAN" on Dwg. Nos. 55770 & 55771. Stop 1'-6" from top of slab.

(F) CL Full-Depth Parapet Joint (1/4" to 1" Max.) as shown on "PART REINFORCING PLAN" on Dwg. Nos. 55770 & 55771. Stop 4" from top of slab.

NOTES:
All dimensions shown are measured along left gutterline.

For "BAR LIST" and "BAR BENDING DIAGRAM", see Dwg. No. 55771.

LEGEND
EF = Each Face

LEFT PARAPET - ELEVATION
(Looking At Inside Face Of Parapet Rail)
Scale: 3/8" = 1'-0"

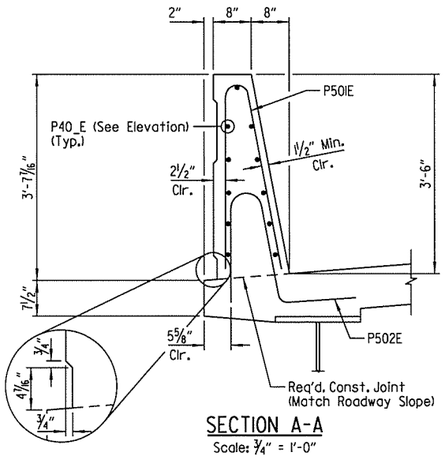

SECTION A-A
Scale: 3/4" = 1'-0"

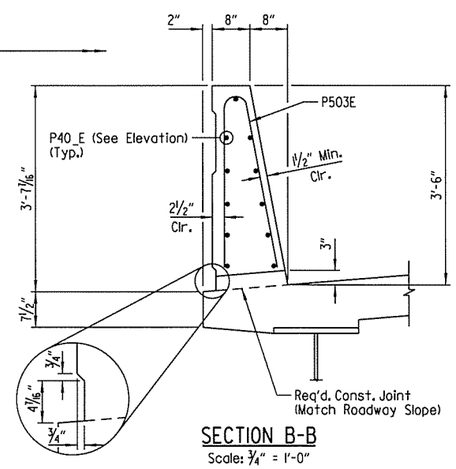

SECTION B-B
Scale: 3/4" = 1'-0"

STATE OF ARKANSAS
LICENSED PROFESSIONAL ENGINEER
No. 14498
ADAM B. HALL
BRIDGE ENGINEER

SHEET 12 OF 15
DETAILS OF 398'-7" CONTINUOUS COMPOSITE PLATE GIRDER UNIT
RAMP 4 OVER I-40
PULASKI COUNTY
ROUTE 430 SEC. 21

ARKANSAS STATE HIGHWAY COMMISSION
LITTLE ROCK, ARK.

DRAWN BY: JLH DATE: FEB. 2014 FILENAME: BCA0609x6_SI2.DGN
CHECKED BY: SRY DATE: MAR. 2014 SCALE: AS SHOWN
DESIGNED BY: ABH DATE: FEB. 2014
BRIDGE NO. 05324 DRAWING NO. 55773

SRYancey 7/18/2014 8:44:49 AM
WORKSPACE: AHTD Bridge I-40 at I-430 Interchange Modifications\Drawings\BCA0609xl_SI2 Unit 1 - Parapet - Left2l.dgn
L:\ICON\JOT709 - I-40 at I-430 Interchange Modifications\Drawings\BCA0609xl_SI2 Unit 1 - Parapet - Left2l.dgn
REVISED DATE:

DATE REVISED	DATE FILMED	DATE REVISED	DATE FILMED

FED. ROAD DIST. NO.	STATE	FED. AID PROJ. NO.	SHEET NO.	TOTAL SHEETS
6	ARK.			
JOB NO.		CA0609	329	693
① 05324		398'-7" PL GIRDER UNIT		55774

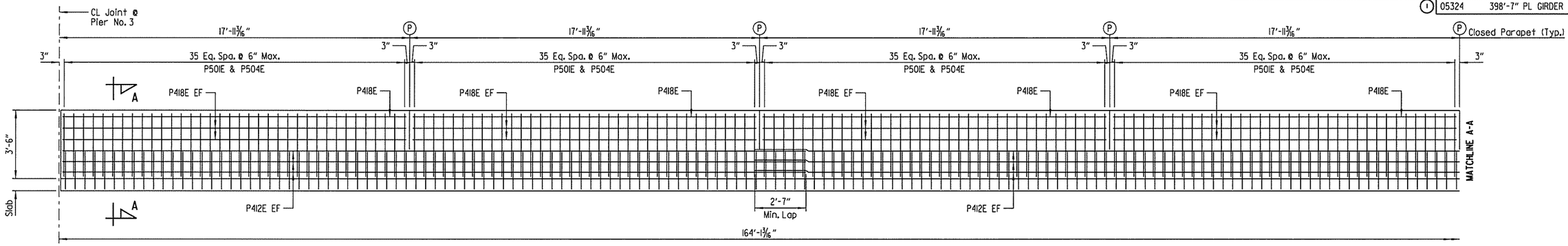

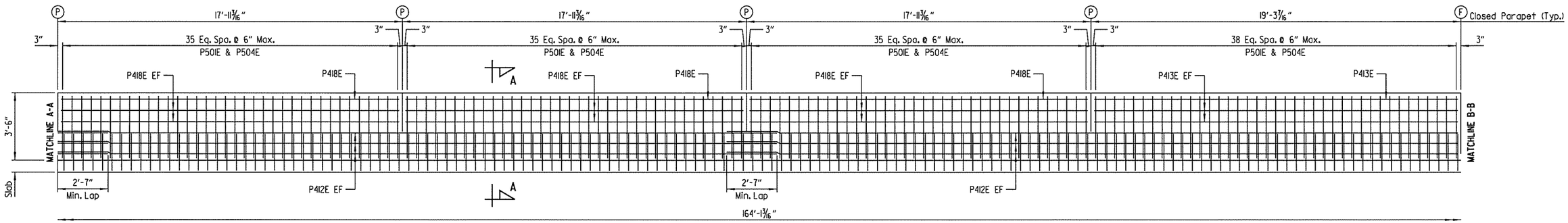

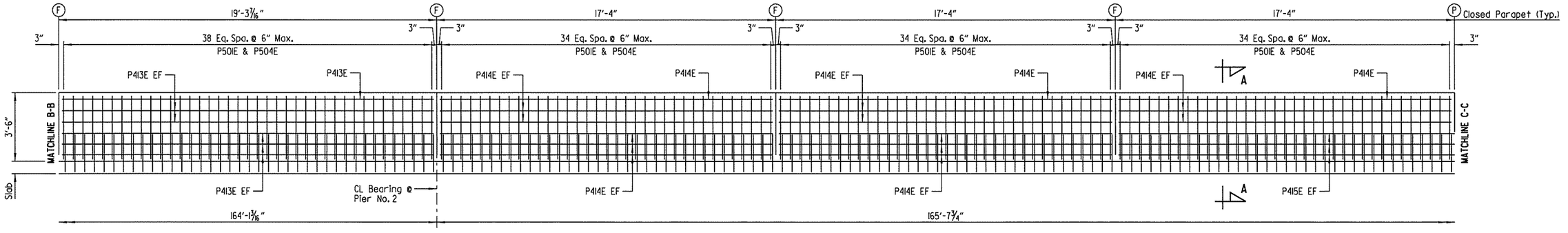

RIGHT PARAPET - ELEVATION

(Looking At Inside Face Of Parapet Rail)
Scale: 3/8" = 1'-0"

(P) CL Partial-Depth Parapet Joint (1/4" to 1" Max.) as shown on "PART REINFORCING PLAN" on Dwg. Nos. 55770 & 55771. Stop 1'-6" from top of slab.

(F) CL Full-Depth Parapet Joint (1/4" to 1" Max.) as shown on "PART REINFORCING PLAN" on Dwg. Nos. 55770 & 55771. Stop 4" from top of slab.

LEGEND
EF = Each Face

NOTES:
All dimensions shown are measured along right gutterline.

For "BAR LIST" and "BAR BENDING DIAGRAMS", see Dwg. No. 55771.

For "SECTION A-A", see Dwg. No. 55775.

STATE OF ARKANSAS
LICENSED PROFESSIONAL ENGINEER
No. 14498
ADAM B. HALL
7-18-14
BRIDGE ENGINEER

SHEET 13 OF 15
DETAILS OF 398'-7" CONTINUOUS COMPOSITE PLATE GIRDER UNIT
RAMP 4 OVER I-40
PULASKI COUNTY
ROUTE 430 SEC. 21
ARKANSAS STATE HIGHWAY COMMISSION
LITTLE ROCK, ARK.

DRAWN BY: JLH DATE: FEB. 2014 FILENAME: BCA0609x6_SI3.DGN
CHECKED BY: SRY DATE: MAR. 2014 SCALE: AS SHOWN
DESIGNED BY: ABH DATE: FEB. 2014
BRIDGE NO. 05324 DRAWING NO. 55774

SRYancey 7/18/2014 8:44:49 AM
WORKSPACE: AHTD Bridge
L:\2014\14017709 - I-40 at I-430 Interchange Modifications\Drawings\BCA0609x1_SI3 (Unit 1- Parapet - Right1).dgn
REVISED DATE:

DATE REVISED	DATE FILMED	DATE REVISED	DATE FILMED

FED. ROAD DIST. NO.	STATE	FED. AID PROJ. NO.	SHEET NO.	TOTAL SHEETS
6	ARK.			
JOB NO.		CA0609	330	693
(1) 05324		398'-7" PL GIRDER UNIT		55775

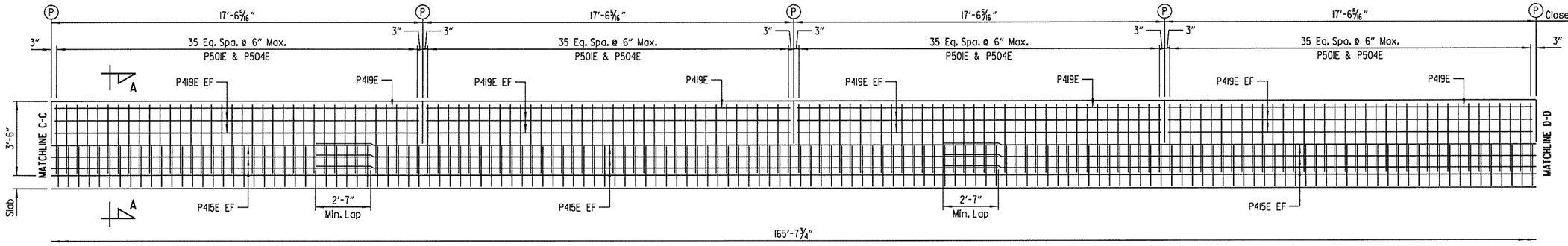

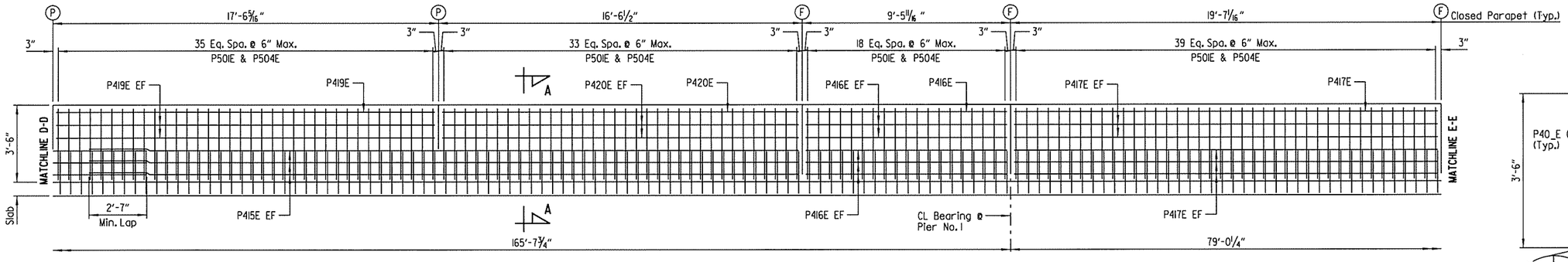

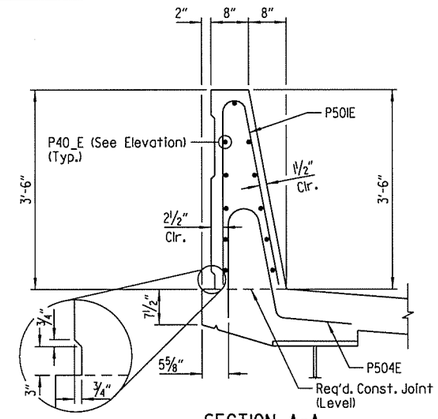

SECTION A-A
Scale: 3/4" = 1'-0"

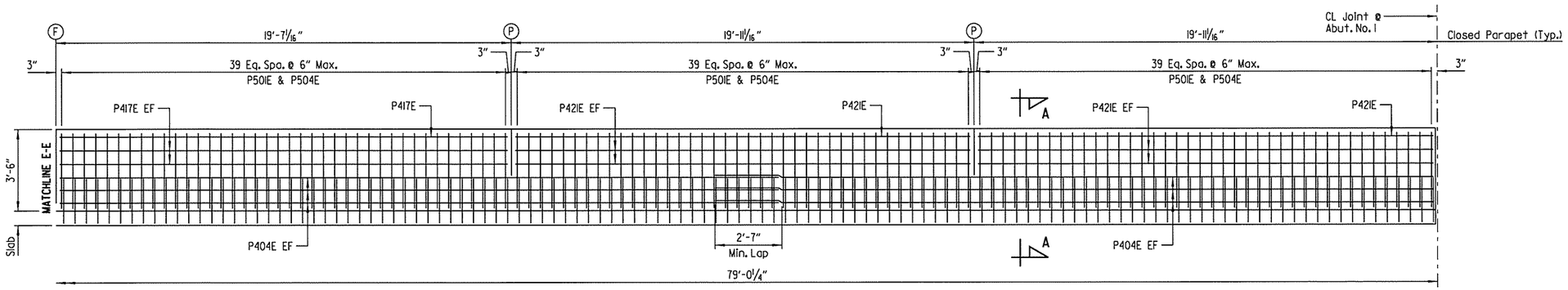

(P) CL Partial-Depth Parapet Joint (1/4" to 1" Max.) as shown on "PART REINFORCING PLAN" on Dwg. Nos. 55770 & 55771. Stop 1'-6" from top of slab.

(F) CL Full-Depth Parapet Joint (1/4" to 1" Max.) as shown on "PART REINFORCING PLAN" on Dwg. Nos. 55770 & 55771. Stop 4" from top of slab.

LEGEND
EF = Each Face

RIGHT PARAPET - ELEVATION
(Looking At Inside Face Of Parapet Rail)
Scale: 3/8" = 1'-0"

NOTES:
All dimensions shown are measured along right gutterline.

For "BAR LIST" and "BAR BENDING DIAGRAM", see Dwg. No. 55771.

STATE OF ARKANSAS
LICENSED PROFESSIONAL ENGINEER
No. 14498
ADAM B. HALL
7-18-14
BRIDGE ENGINEER

SHEET 14 OF 15
DETAILS OF 398'-7" CONTINUOUS COMPOSITE PLATE GIRDER UNIT
RAMP 4 OVER I-40
PULASKI COUNTY
ROUTE 430 SEC. 21
ARKANSAS STATE HIGHWAY COMMISSION
LITTLE ROCK, ARK.

DRAWN BY: JLH DATE: FEB. 2014 FILENAME: BCA0609x6_SI4.DGN
CHECKED BY: SRY DATE: MAR. 2014 SCALE: AS SHOWN
DESIGNED BY: ABH DATE: FEB. 2014
BRIDGE NO. 05324 DRAWING NO. 55775

SRYancey 7/8/2014 8:44:50 AM
WORKSPACE: AHTD Bridge
L:\20IN\01\7709 - I-40 at I-430 Interchange Modifications\Drawings\BCA0609xl_SI4 (Unit 1- Parapet - Right2).dgn
REVISED DATE:

DATE REVISED	DATE FILMED	DATE REVISED	DATE FILMED	FED. ROAD DIST. NO.	STATE	FED. AID PROJ. NO.	SHEET NO.	TOTAL SHEETS
				6	ARK.			
				JOB NO.		CA0609	331	693
				(1) 05324		398'-7" PL GIRDER UNIT		55776

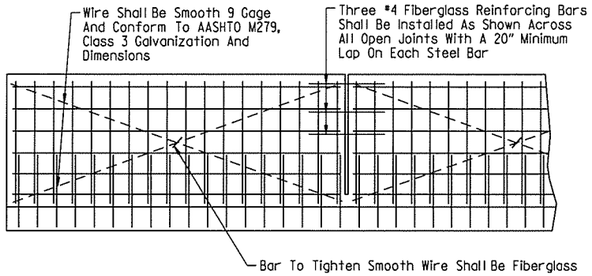

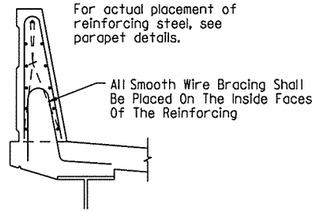

All panels shall be braced as shown to prevent racking. All open joints shall be sawed as soon as practical to a minimum width of 1/4". To control cracking before sawing, all joints must be grooved before the concrete is set. Sawing of the joints must be controlled so it will follow the grooved joint.

The extruded parapet shall conform to the horizontal and vertical lines shown on the plans or as directed by the Engineer and shall present a smooth, uniform appearance and texture.

DETAILS OF OPTIONAL SLIPFORMING OF CONCRETE PARAPET RAIL
No Scale

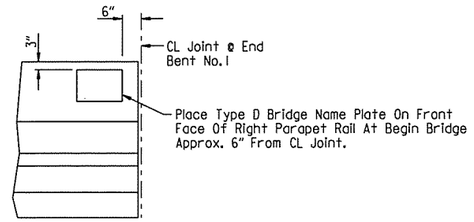

VIEW SHOWING LOCATION OF NAME PLATE
No Scale

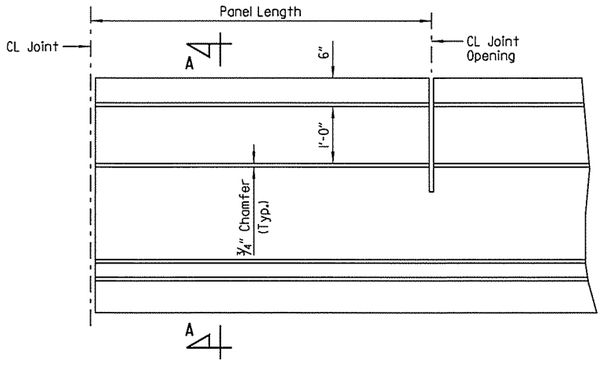

PANEL ENHANCEMENT DETAIL
Scale: 3/4" = 1'-0"

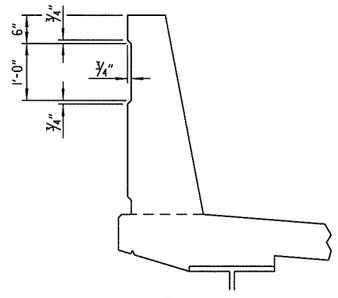

SECTION A-A
Scale: 3/4" = 1'-0"

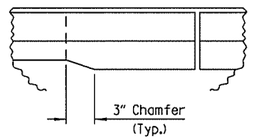

PLAN OF RAIL POST CHAMFER
(Typ. for Open Drain Panels Only)
No Scale

STATE OF ARKANSAS
LICENSED PROFESSIONAL ENGINEER
No.14498
ADAM B. HALL
7-18-14
BRIDGE ENGINEER

SHEET 15 OF 15
DETAILS OF 398'-7" CONTINUOUS
COMPOSITE PLATE GIRDER UNIT
RAMP 4 OVER I-40
PULASKI COUNTY
ROUTE 430 SEC. 21
ARKANSAS STATE HIGHWAY COMMISSION
LITTLE ROCK, ARK.

DRAWN BY: JLH DATE: FEB. 2014 FILENAME: BCA0609x6_SI5.DGN
CHECKED BY: SRY DATE: MAR. 2014 SCALE: AS SHOWN
DESIGNED BY: ABH DATE: FEB. 2014
BRIDGE NO. 05324 DRAWING NO. 55776

SRYancey 7/8/2014 8:44:50 AM
WORKSPACE: AHTD Bridge
L:\20IN\I0I709 - I-40 at I-430 Interchange Modifications\Drawings\BCA0609xl_SI5 (Unit 1 - Parapet Gen Dtls.dgn
REVISED DATE:

DATE REVISED	DATE FILMED	DATE REVISED	DATE FILMED	FED. ROAD DIST. NO.	STATE	FED. AID PROJ. NO.	SHEET NO.	TOTAL SHEETS
				6	ARK.			
				JOB NO.		CA0609	332	693

(1) 05324 398'-7" PL GIRDER UNIT 55777

GENERAL NOTES

CONCRETE:

Concrete shall be poured in the dry, and all exposed corners shall be chamfered $\frac{3}{4}$" unless otherwise noted. All concrete shall be Class S(AE) with a minimum 28 day compressive strength f'c = 4,000 psi.

The superstructure details shown are for use when removable deck forming is used and are the basis for measurements of Class S(AE) Concrete. See Standard Drawing No. 55005 for allowable modifications when permanent steel bridge deck forms are used. See Dwg. Nos. 55762 & 55778 for additional details.

Concrete in bridge superstructure shall be placed, consolidated and screeded off for the entire pour before any concrete has taken its initial set. This may require the use of a retarding agent.

The concrete deck shall be given a tine finish in accordance with Subsubsection 802.19 for Class 5 Tined Bridge Roadway Surface Finish. Movement of the finishing machine across new concrete shall be on planks placed on the surface and shall be prohibited for 72 hours after finishing the pour. Sufficient concrete must be placed ahead of the strike-off to fully load the girder. A minimum of 72 hours shall elapse between completion of the bridge deck slab and the pouring of the parapet railing. Any railing pours made before the entire slab has been placed and cured must be approved by the Engineer. The use of a longitudinal screed is prohibited.

REINFORCING STEEL:

All reinforcing steel shall be Grade 60 (Yield Strength = 60,000 psi) conforming to AASHTO M31 or M322, Type A, with mill test reports. The reinforcing steel is to be accurately located in the forms and firmly held in place by steel wire supports, sufficient in number and size to prevent displacement during the course of construction. The wire supports will not be paid for directly but will be considered subsidiary to the item "EPOXY COATED REINFORCING STEEL (GRADE 60)".

NEW STRUCTURAL STEEL:

All new structural steel shall be AASHTO M270, Gr. 50 unless noted otherwise and shall be paid for at the unit price per pound bid for "STRUCTURAL STEEL IN PLATE GIRDER SPANS (M270, GR. 50)". All exposed surfaces shall be cleaned in accordance with Subsection 807.84 unless noted otherwise. Structural steel completely embedded in concrete may be AASHTO M270 Gr. 36 unless noted otherwise. See Drawing No. 55795 for cleaning requirements of external load plates on elastomeric bearings.

All new structural steel, except galvanized steel and steel which is completely encased in concrete, shall be painted in accordance with Subsection 807.75. The color of paint shall conform to Federal Standard 595B, Color Chip No. 37200, Aluminum. All structural steel painted in accordance with Subsection 807.75 shall receive its final urethane coat and shall have a minimum of 72 hours dry time prior to applying calcium sulfonate paint to the existing structural steel, unless otherwise directed by the Engineer.

Requests for substitution of structural steel shapes shown with shapes of greater size must be submitted by the Contractor to the Engineer for approval. Steels of equal or greater strengths will be accepted only when shown on approved shop drawings. Shapes and materials shown in the plans will be the basis of payment, and no additional compensation will be made for any adjustments due to substitutions.

Drawings show general features of design only. Shop drawings shall be prepared in accordance with Subsection 807.04, submitted and approved before fabrication is begun.

Bolted field splices shown may be eliminated or shop welded splices may be substituted with approval of the Engineer. Payment will be made on the basis of plan quantities.

All girder webs, flanges of plate girders, splice plates, crossframes and connection plates are considered main load carrying members and shall meet the Longitudinal Charpy V-Notch Test specified in Subsection 807.05. This work and material will not be paid for directly but are considered as subsidiary to the item "STRUCTURAL STEEL IN PLATE GIRDER SPANS (M270, GR. 50)".

Steel plates for main load carrying members shall be cut and fabricated so that the primary direction of rolling is parallel to the direction of the main tensile and/or compressive stresses.

Girder webs may be made by shop splicing with a minimum length of 25'-0" for sections. Flange plates longer than 50'-0" may be made by shop splicing with a minimum length of 25'-0" for sections. Material specifications and locations of shop-welded splices, if any, shall be shown on the shop drawings. No additional payment for these welded splices will be made.

All welding that is to be done during fabrication of structural steel, including temporary welds, shall be detailed on the shop drawings and submitted for approval. If additional welds are required, whether temporary or permanent, a formal request with detailed drawings shall be submitted to the Engineer for approval; however, additional welds used for attaching falsework support devices or screed rail supports to the structural steel that do not exceed the limitations of Subsection 802.13 will not require approval prior to construction. Field welding of new crossframe members for Crossframe "B" shall be as shown in the plans. All welding shall conform to Subsection 807.26.

All girders shall be blocked in their true positions with webs horizontal in the shop as specified in Subsection 807.54 (b)(2). The camber, length of sections, distance between bearings and openings of joints shall be measured with the girders in their true positions, and this information shall become a part of the permanent records of this job. The component parts shall be match marked in this assembly, and these marks shall be shown on the erection diagram. All girder dimensions are based on a temperature of 60°F. A tolerance of +/- $\frac{1}{4}$" is allowed for camber.

Groove welds in flange and web plates shall be Quality Control (Q.C.) tested by nondestructive testing, as required by the Standard Specifications. Fillet welds at flange to web plate connections shall be Quality Control (Q.C.) tested by the magnetic particle method. All Quality Control (Q. C.) testing is at the Contractor's expense.
All connection plates and transverse stiffeners shall be fabricated normal to the top flange and on the side of the girder web as indicated on the framing plan. No intermediate stiffeners are to be placed on the outside of the exterior girders except as noted. All bearing stiffeners shall be fabricated to be plumb in their final positions.

Crossframes shall be installed as girders are erected. Unless noted otherwise, all bolts in crossframes and field splices shall be installed and tightened in accordance with Subsection 807.71 prior to pouring of the concrete deck.

Field connections shall be bolted with high-strength bolts and shall be $\frac{7}{8}$"ø bolts conforming to AASHTO M164 unless otherwise noted. Open holes shall be $\frac{15}{16}$"ø unless otherwise noted. Bolts shall be placed with heads on the outside face of the exterior girder webs and on the bottom of the girder flanges. Any existing bolts that are removed or loosened during construction shall be replaced with new bolts, nuts and washers.

All contact surfaces between plates at field splices shall be free of oil, rust or scale before assembly.

All stud shear connectors shall be granular flux filled, solid fluxed or equal and shall be automatically end welded in accordance with recommendations of the Manufacturer.

Bearings shall be firmly seated in accordance with Subsection 808.08. This work is to be considered subsidiary to the item "STRUCTURAL STEEL IN PLATE GIRDER SPANS (M270, GR. 50)" and will not be paid for directly.

Anchor bolts shall be AASHTO designation M314 Gr. 55, including supplemental requirement S1, and shall be galvanized to conform to AASHTO M232, Class C or ASTM B695 Class 50. Anchor bolts will be paid for at the contract unit price bid for "STRUCTURAL STEEL IN PLATE GIRDER SPANS (M270, GR. 50)".

EXISTING STRUCTURAL STEEL:

The paint system used on the existing girders consists of a lead based paint system. The Contractor shall take all necessary steps to protect the workers modifying the existing girders. The existing structural steel shall be cleaned and painted in accordance with SP JOB NO. CA0609 "CLEANING AND PAINTING EXISTING STRUCTURAL STEEL" and SP JOB NO. CA0609 "CALCIUM SULFONATE PAINT". The color of paint shall conform to Federal Standard 595B, Color Chip No. 37200, Aluminum.

The existing girder bottom flanges where new elastomeric bearing pads will be field welded shall be cleaned and painted in accordance with Section 807.

Any existing bolt that is loosened or removed shall be replaced by a new high-strength bolt. All new high-strength bolts shall be paid for as "STRUCTURAL STEEL IN PLATE GIRDER SPANS (M270, GR. 50)".

REMOVAL OF EXISTING DECK:

The existing concrete deck shall be completely removed to the top flange of the existing girders. Care shall be excercised during the removalof the existing deck to ensure that the existing shear connectors are not damaged. Any existing shear connectors damaged during the removal of the deck shall be replaced as directed by the Engineer, at the Contractor's expense. The portions of the top flange that will be embedded in new concrete shall be cleaned and free of laitance and protected until the new deck is placed for the respective Stage of Construction. This work will not be paid for directly but will be considered subsidiary to the item "MODIFICATION OF EXISTING BRIDGE STRUCTURE (BRIDGE NO. 05324)".

METHOD OF WORK:

The Contractor shall remove a portion of the existing deck as shown in "DETAILS OF STAGE CONSTRUCTION" Dwg. No. 55750. The Contractor shall then disassemble and remove Girder 1, including attached crossframes, to facilitate Stage 1 Construction. After Stage 1 Construction has been performed to the satisfaction of the Engineer, the Contractor shall begin Stage 2 Construction. The Contractor shall temporarily disassemble and remove Girders 2-4 to facilitate Stage 2 Construction of all bents. After Stage 2 Construction of the bents, the Contractor shall place new bearings and re-erect existing Girders 2-4, including existing lateral bracing and existing crossframes connecting Girders 2 & 3 and Girders 3 & 4. The Contractor shall then erect the new crossframes connecting Girder C to Girder 2. All existing steel shall be re-assembled using new high strength bolts, washers and nuts. Once all Stage 2 steel is erected, assembled and connected to the Stage 1 structure, the Contractor shall make the Stage 2 deck pour and complete Stage 2 Construction. Unless noted otherwise in the plans, all work, materials and labor required for the disassembly, removal, transport, modification, re-erection and re-assembly of the structural steel will not be paid for directly but will be considered subsidiary to the item "MODIFICATION OF EXISTING BRIDGE STRUCTURE (BRIDGE NO. 05324)".

All applicable provisions of Section 807, as determined by the Engineer, shall be followed. See SP JOB NO. CA0609 "SPECIAL SAFETY REQUIREMENTS FOR BRIDGES" for additional information.

The Contractor may submit an alternate Method of Work. The plan shall be submitted to the Engineer for information and record keeping purposes at least three weeks prior to any work being performed. The submittal shall be prepared and/or approved by an Arkansas Professional Engineer and shall include sufficient details and information to the Engineer's satisfaction. The Contractor shall be responsible for the results obtained by the use of the alternate Method of Work. Allwork, materials, and labor required for the Contractor to develop and execute the plan will not be paid for directly but will be considered subsidiary to the item "MODIFICATION OF EXISTING BRIDGE STRUCTURE (BRIDGE NO. 05324)".

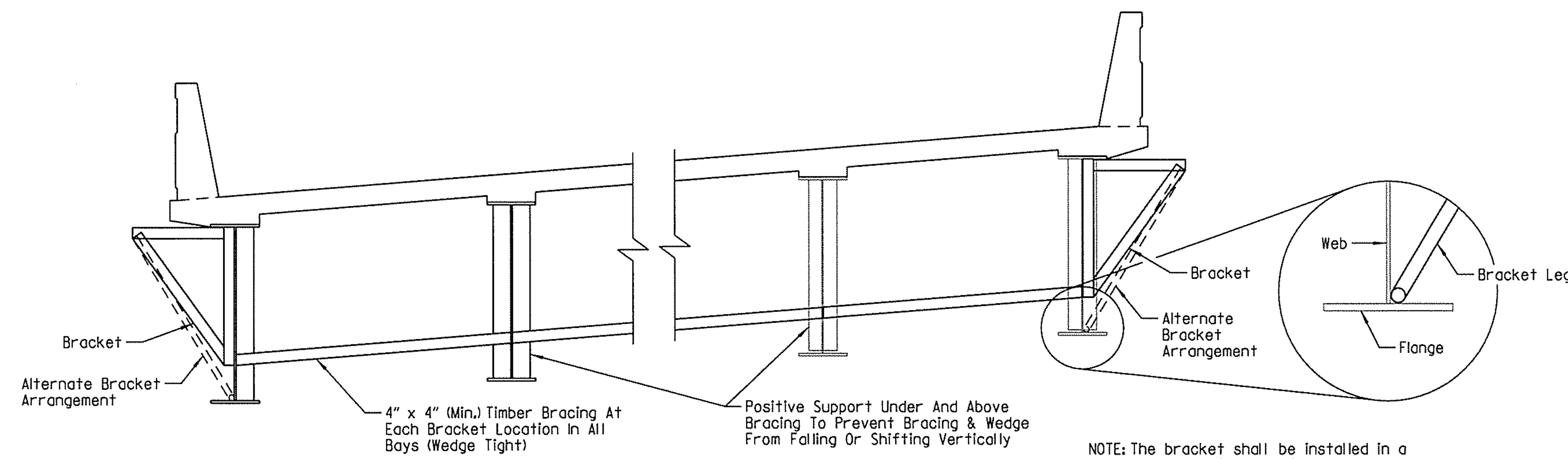

NOTE: The bracket shall be installed in a manner that avoids any nicks or gouges in the flange, web and weld.

SCREED RAIL SUPPORT DETAIL

No Scale

NOTE:
The transverse finishing machine rail shall be supported directly over the exterior girders, or as an alternate, the rail may be supported by the overhang brackets if the above strutting system is used. The strutting system may be omitted if $\frac{1}{2}$" x 6$\frac{1}{2}$" web stiffeners are welded to the insides of the exterior girders at the location of each bracket or if the alternate bracket shown above is used. The alternate bracket arrangement shall extend down to the junction of the web and bottom flange. The stiffeners shall conform to the details for crossframe connection plates shown on Dwg. Nos. 55767, 55768, 55783 & 55784. No direct payment will be made for brackets, timber bracing, supports, or welded stiffeners. Payment shall be subsidiary to "STRUCTURAL STEEL IN PLATE GIRDER SPANS (M270, GR. 50)."

STATE OF ARKANSAS LICENSED PROFESSIONAL ENGINEER No. 14498 ADAM B. HALL
7-18-14
BRIDGE ENGINEER

GENERAL NOTES FOR
398'-7" & 354'-7" CONTINUOUS
COMPOSITE PLATE GIRDER UNITS
RAMP 4 OVER I-40
PULASKI COUNTY

ROUTE 430 SEC. 21

ARKANSAS STATE HIGHWAY COMMISSION

LITTLE ROCK, ARK.

DRAWN BY: ABH DATE: FEB. 2014 FILENAME: BCA0609x6_S16.DGN
CHECKED BY: BWS DATE: APR. 2014 SCALE: AS SHOWN
DESIGNED BY: ABH DATE: FEB. 2014

BRIDGE NO. 05324 DRAWING NO. 55777

SRYancey 7/18/2014 8:44:51 AM
WORKSPACE: AHTD Bridge
L:\2011\1017709 - I-40 at I-430 Interchange Modifications\Drawings\BCA0609x1_S16 (Unit 1- Gen Notes).dgn
REVISED DATE:

DATE REVISED	DATE FILMED	DATE REVISED	DATE FILMED	FED. ROAD DIST. NO.	STATE	FED. AID PROJ. NO.	SHEET NO.	TOTAL SHEETS
				6	ARK.			
				JOB NO.		CA0609	333	693
				(1) 05324		354'-7" PL GIRDER UNIT		55778

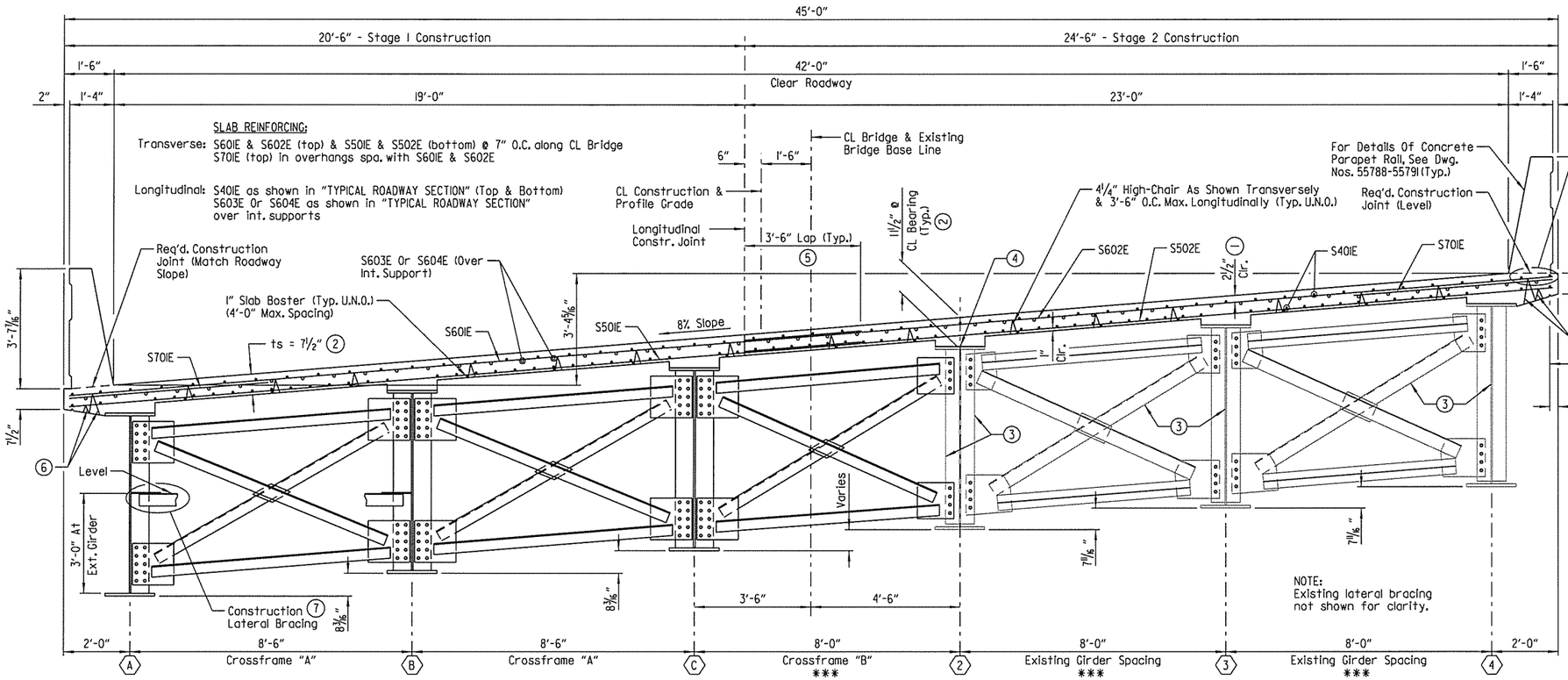

TYPICAL ROADWAY SECTION

(Looking Forward)
Scale: ½" = 1'-0"

NOTE:
For "GENERAL NOTES", see Dwg. No. 55777.

NOTE:
An external means of supporting the Stage 1 overhang shall be provided and shall remain in place until after completion of the Stage 2 deck pour. See "DECK SUPPORT AT LONGITUDINAL CONSTRUCTION JOINT" on Dwg. No. 55779.

*** NOTE:
See Dwg. Nos. 55750, 55751, 55780, 55781 & 55784 for notes relating to sequence of erection of crossframes.

NOTE:
Class 1 Protective Surface Treatment shall be applied to the roadway surface and the face and top of concrete parapet rails.

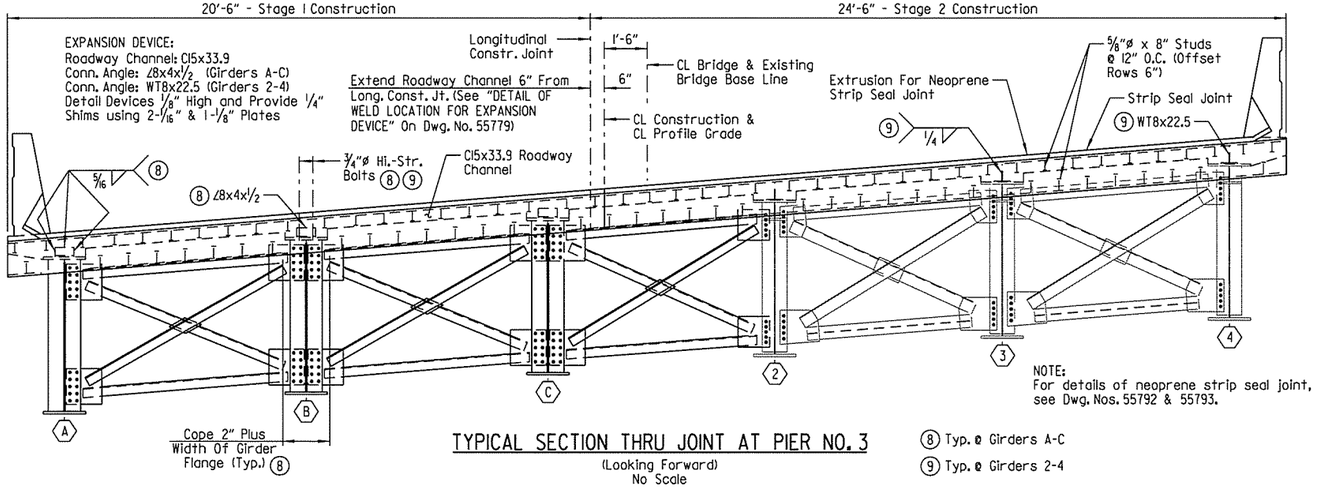

NOTE:
For details of neoprene strip seal joint, see Dwg. Nos. 55792 & 55793.

TYPICAL SECTION THRU JOINT AT PIER NO. 3

(Looking Forward)
No Scale

8 Typ. @ Girders A-C

9 Typ. @ Girders 2-4

LEGEND

U.N.O. = Unless Noted Otherwise

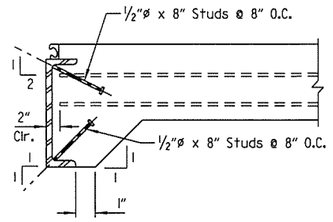

DETAIL OF ALTERNATE ANCHORS

(Shown At Pier 3, Similar At Abutment 2)
No Scale

NOTE:
As an alternate to ⅝"ø studs, ½"ø x 8" studs spaced as shown may be used. Use weight of ⅝"ø stud as basis of measurement of structural steel.



Note: t_s = Slab Thickness as shown on "TYPICAL ROADWAY SECTION"

* Measured to bottom of top flange.

** Tolerance when removable deck forming is used is + ½", - ¼". Haunch forming is required and shall be adjusted to maintain slab thickness tolerance.

ADJUSTMENT FOR SLAB THICKNESS TOLERANCE

No Scale

Haunch dimension may vary within the following limits to maintain the grade and slab thickness tolerance: minimum (for new Girders A-C) - occurs when the top edge of the top flange contacts the bottom of the 7½" slab; minimum (for existing Girders 2-4) - occurs when the top edge of the top flange is positioned ⅞" below the bottom of the 7½" slab; maximum - top flange thickness plus 3¼". No increase in concrete and structural steel quantities will be made to maintain tolerances.

Tolerances shown are applicable when removable deck forming or permanent steel deck forms are used. Payment for concrete shall be based on removable deck forming.

(1) TOLERANCE:
Minus = ¼"
Plus = Amount of slab thickening used to meet slab thickness tolerance - see "ADJUSTMENT FOR SLAB THICKNESS TOLERANCE".

(2) See "ADJUSTMENT FOR SLAB THICKNESS TOLERANCE".

(3) Existing girders and crossframes shall be temporarily removed for Stage 2 Construction. At Girder 2, existing bolts shall be replaced with new 1"ø high-strength bolts conforming to AASHTO M253. At Girder 2 only, existing ⅝"ø holes in gusset, connection plates and bearing stiffeners shall be reamed in accordance with Section 807 to 1⁵/₁₆"ø to allow for installation of 1"ø bolts. At Girders 3 & 4, existing bolts shall be replaced with new ⅞"ø high-strength bolts conforming to AASHTO M164. Modification of existing connection plates, gusset plates and bearing stiffeners shall be considered subsidiary to the item "MODIFICATION OF EXISTING BRIDGE STRUCTURE (BRIDGE NO. 05324)". All new high-strength bolts shall be paid for as "STRUCTURAL STEEL IN PLATE GIRDER SPANS (M270, Gr. 50)".

(4) After deck removal and prior to installation of new shear connectors, the existing tops of girders and shear connectors shall be cleaned. Any damaged shear connectors shall be replaced as directed by the Engineer at the Contractor's expense. Payment will not be paid for directly but shall be considered subsidiary to the item "MODIFICATION OF EXISTING BRIDGE STRUCTURE (BRIDGE NO. 05324)".

(5) Stage 2 transverse reinforcing steel shall not be tied to Stage 1 transverse reinforcing steel.

(6) Height of Hi-chairs and bolsters in overhang shall be set as necessary to maintain clear cover. 4'-0" max. spacing.

(7) See "PART FRAMING PLAN" on Dwg. Nos. 55780 & 55781 for locations of construction lateral bracing. For construction lateral bracing details, see Dwg. No. 55784.

STATE OF ARKANSAS
LICENSED PROFESSIONAL ENGINEER
No. 14498
ADAM B. HALL
7-18-14
BRIDGE ENGINEER

SHEET 1 OF 14
DETAILS OF 354'-7" CONTINUOUS COMPOSITE PLATE GIRDER UNIT
RAMP 4 OVER I-40
PULASKI COUNTY

ROUTE 430 SEC. 21

ARKANSAS STATE HIGHWAY COMMISSION

LITTLE ROCK, ARK.

DRAWN BY: JLH DATE: FEB. 2014 FILENAME: BCA0609x6_S17.DGN
CHECKED BY: SRY DATE: MAR. 2014 SCALE: AS SHOWN
DESIGNED BY: ABH DATE: FEB. 2014

BRIDGE NO. 05324 DRAWING NO. 55778

SRYancey 7/18/2014 8:44:51 AM
WORKSPACE: AHTD_Bridge
L:\ROW\DOT709 - I-40 at I-430 Interchange Modifications\Drawings\BCA0609x1_S17 (Unit 2 - Typ Sect).dgn
REVISED DATE:

DATE REVISED	DATE FILMED	DATE REVISED	DATE FILMED	FED. ROAD DIST. NO.	STATE	FED. AID PROJ. NO.	SHEET NO.	TOTAL SHEETS
				6	ARK.			
				JOB NO.		CA0609	334	693
				(1) 05324		354'-7" PL GIRDER UNIT		55779

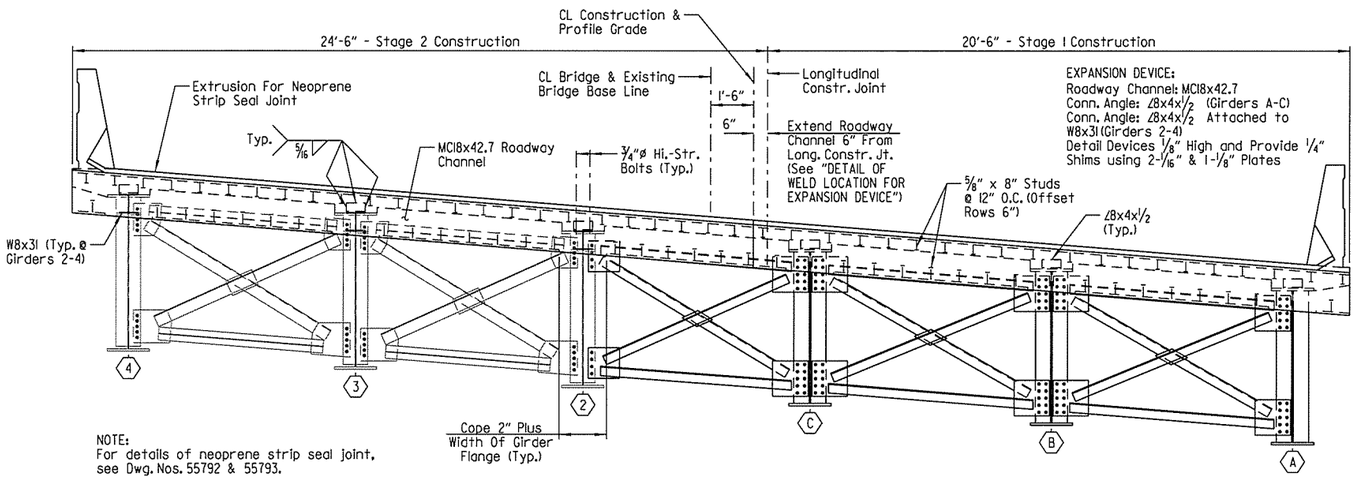

NOTE:
For details of neoprene strip seal joint, see Dwg. Nos. 55792 & 55793.

TYPICAL SECTION THRU JOINT AT ABUTMENT NO. 2

(Looking Back)
No Scale

NOTE:
For "DETAIL OF ALTERNATE ANCHORS", see Dwg. No. 55779.

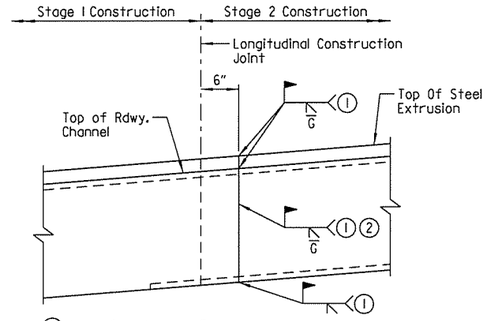

(1) Weld after Stage 1 Pour & prior to Stage 2 Pour

(2) Grind flush 5" from top of deck

DETAIL OF WELD LOCATION FOR EXPANSION DEVICE

(Looking Forward)
No Scale

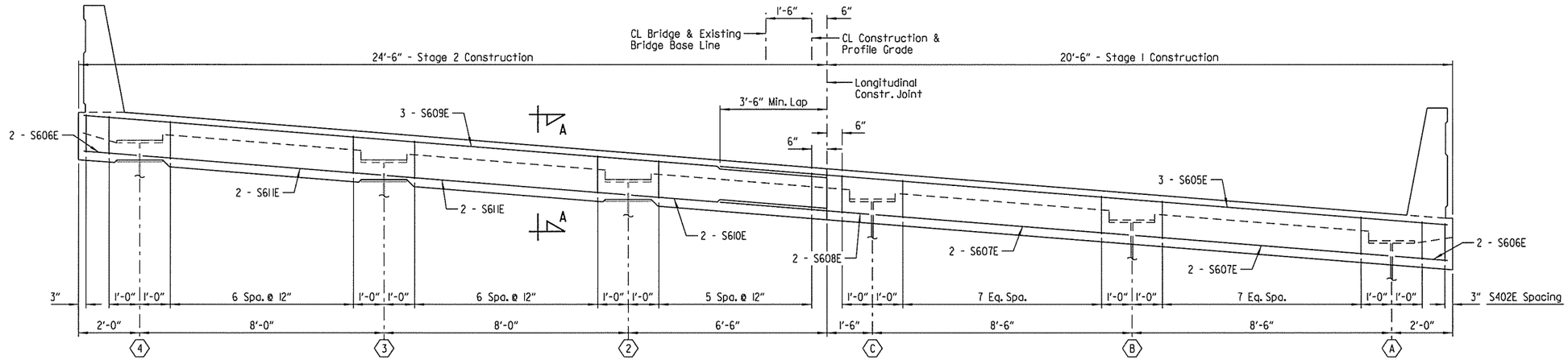

TURNDOWN REINFORCING AT ABUTMENT NO. 2

(Looking Back)
No Scale

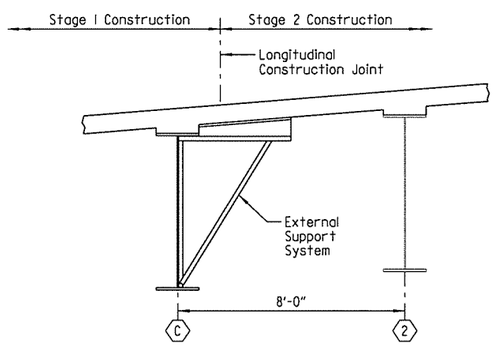

NOTE:
Stage 1 external supports in this bay shall remain in place until after completion of the Stage 2 deck pour. See Subsection 802.15 for additional information regarding the removal of the support system.

DECK SUPPORT AT LONGITUDINAL CONSTRUCTION JOINT

(Looking Forward)
No Scale

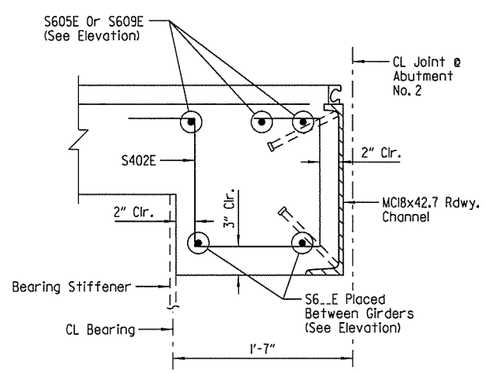

SECTION A-A

Scale: 1 1/2" = 1'-0"

STATE OF ARKANSAS
LICENSED PROFESSIONAL ENGINEER
No. 14498
ADAM B. HALL
7-18-14
BRIDGE ENGINEER

SHEET 2 OF 14
DETAILS OF 354'-7" CONTINUOUS COMPOSITE PLATE GIRDER UNIT
RAMP 4 OVER I-40
PULASKI COUNTY
ROUTE 430 SEC. 21
ARKANSAS STATE HIGHWAY COMMISSION
LITTLE ROCK, ARK.

DRAWN BY: JLH DATE: FEB. 2014 FILENAME: BCA0609x6_S18.DGN
CHECKED BY: BWS DATE: APR. 2014 SCALE: AS SHOWN
DESIGNED BY: ABH DATE: FEB. 2014
BRIDGE NO. 05324 DRAWING NO. 55779

SRYancey 7/18/2014 8:44:52 AM
WORKSPACE: AHTD Bridge
L:\2011\11017709 - I-40 at I-430 Interchange Modifications\Drawings\BCA0609x1_S18 (Unit 2 - Typ Sec-2).dgn
REVISED DATE:

DATE REVISED	DATE FILMED	DATE REVISED	DATE FILMED

FED. ROAD DIST. NO.	STATE	FED. AID PROJ. NO.	SHEET NO.	TOTAL SHEETS
6	ARK.			
JOB NO.		CA0609	335	693
(1) 05324		354'-7" PL GIRDER UNIT		55780

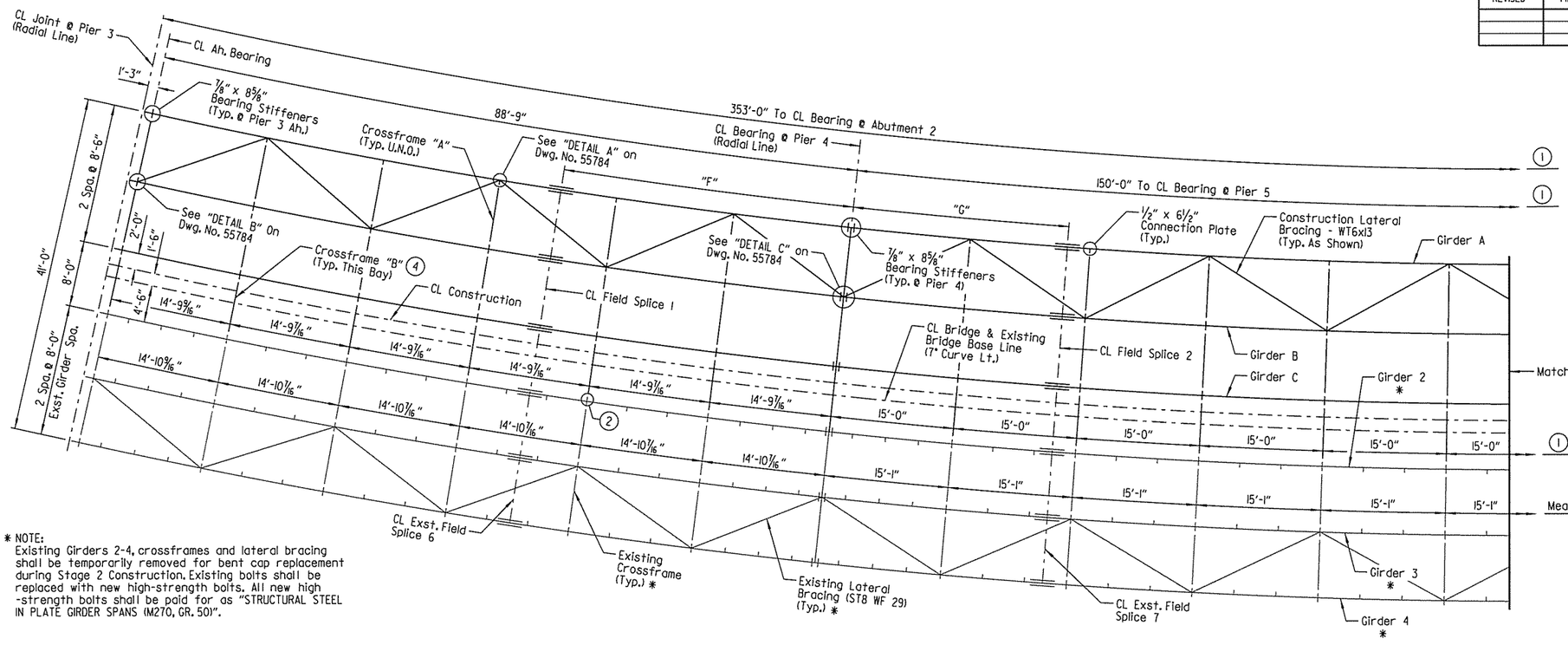

(1) Measured Along CL Bridge & Existing Bridge Base Line

(2) Existing 3/8" x 5" stiffener and bearing stiffeners shall be used for connection of Crossframe "B" to Girder 2 during Stage 2 Construction.

* NOTE:
Existing Girders 2-4, crossframes and lateral bracing shall be temporarily removed for bent cap replacement during Stage 2 Construction. Existing bolts shall be replaced with new high-strength bolts. All new high-strength bolts shall be paid for as "STRUCTURAL STEEL IN PLATE GIRDER SPANS (M270, GR. 50)".

(4) Install Crossframe "B" during Stage 2 Construction. Tighten bolts in Crossframe "B" after Stage 2 deck pour is complete.

PART FRAMING PLAN

Scale: 1/8" = 1'-0"

NOTE:
Information and dimensions shown are based on existing bridge plans. See Section 821 for geometry verification requirements. Fabrication of new girders shall be adjusted as necessary to fit the proposed work to the existing structure.

NOTES:
All girders are oriented along curves concentric with CL Bridge & Existing Bridge Base Line.

Except for crossframes shown along CL Ah. Bearing, all crossframes are oriented along lines radial to CL Bridge & Existing Bridge Base Line.

For "BEARING STIFFENER DETAIL" and crossframe details, see Dwg. No. 55784.

For "CONNECTION PLATE DETAIL, See Dwg. No. 55783.

For "GENERAL NOTES", see Dwg. No. 55777.

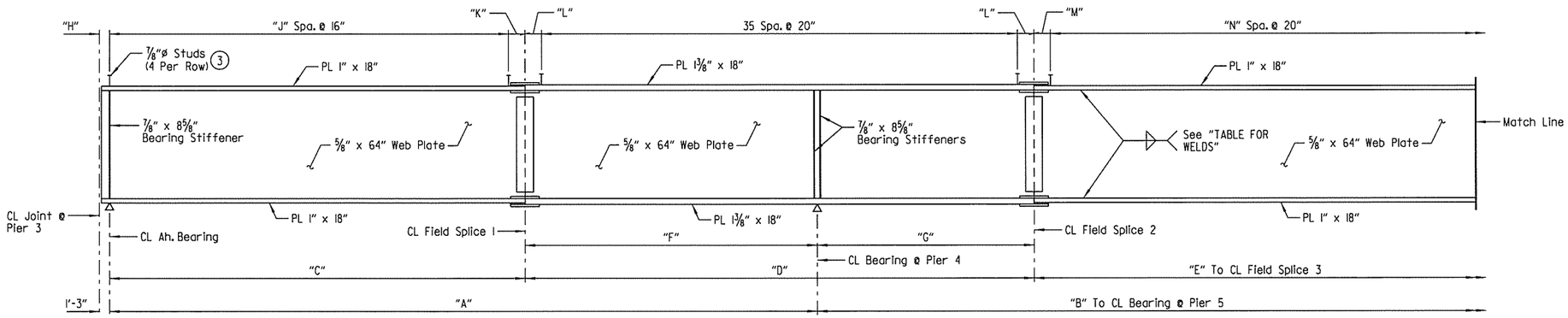

PART GIRDER ELEVATION

New Girders A, B & C
(Dimensions measured along CL Girder)
No Scale

(3) For heights of new shear studs, see "NEW SHEAR CONNECTOR DETAIL" on Dwg. No. 55782.

TABLE FOR WELDS		
Material Thickness Of Thicker Part Joined (Inches)	Minimum Size Of Fillet Weld (Inches)	Single Pass Weld Must Be Used
To 3/4" Inclusive	1/4"	
Over 3/4"	5/16"	

Note:
When a fillet weld size, as shown on the plans, is larger than the minimum, the first pass shall be that specified for minimum size of fillet weld.

TABLE OF VARIABLES													
GIRDER	"A"	"B"	"C"	"D"	"E"	"F"	"G"	"H"	"J"	"K"	"L"	"M"	"N"
A	86'-5 5/16"	146'-2 15/16"	50'-9 1/2"	62'-2 3/16"	87'-10 3/4"	35'-8 7/16"	26'-5 3/4"	1'-6 1/2"	36	2'-6"	1'-11 1/8"	2'-3 3/8"	50
B	87'-5 1/8"	147'-9 9/16"	51'-4 1/8"	62'-10 1/8"	88'-9 5/16"	36'-1"	26'-9 1/8"	1'-3"	37	2'-0 1/8"	2'-3 1/16"	1'-11	51
C	88'-4 1/4"	149'-4 5/16"	51'-10 11/16"	63'-6 1/16"	89'-9 3/16"	36'-5 5/16"	27'-0 1/2"	1'-5 11/16"	37	2'-4"	2'-7 1/16"	2'-4 5/8"	51

LEGEND
U.N.O. = Unless Noted Otherwise

STATE OF ARKANSAS
LICENSED PROFESSIONAL ENGINEER
No. 14498
ADAM B. HALL
7-18-14
BRIDGE ENGINEER

SHEET 3 OF 14
DETAILS OF 354'-7" CONTINUOUS COMPOSITE PLATE GIRDER UNIT
RAMP 4 OVER I-40
PULASKI COUNTY

ROUTE 430 SEC. 21

ARKANSAS STATE HIGHWAY COMMISSION
LITTLE ROCK, ARK.

DRAWN BY: CWT DATE: FEB. 2014 FILENAME: BCA0609x6_SI9.DGN
CHECKED BY: BWS DATE: APR. 2014 SCALE: AS SHOWN
DESIGNED BY: ABH DATE: FEB. 2014
BRIDGE NO. 05324 DRAWING NO. 55780

SRYancey 7/18/2014 8:44:53 AM
WORKSPACE: AHTD Bridge
L:\20\N\10\7709 - I-40 at I-430 Interchange Modifications\Drawings\BCA0609xl_SI9 (Unit 2 - Framing).dgn
REVISED DATE:

DATE REVISED	DATE FILMED	DATE REVISED	DATE FILMED	FED. ROAD DIST. NO.	STATE	FED. AID PROJ. NO.	SHEET NO.	TOTAL SHEETS
				6	ARK.			
				JOB NO.		CA0609	336	693
				(1) 05324		354'-7" PL GIRDER UNIT		55781

* NOTE:
Existing Girders 2-4, crossframes and lateral bracing shall be temporarily removed for bent cap replacement during Stage 2 Construction. Existing bolts shall be replaced with new high-strength bolts. All new high-strength bolts shall be paid for as "STRUCTURAL STEEL IN PLATE GIRDER SPANS (M270, GR. 50)".

(1) Measured Along CL Bridge & Existing Bridge Base Line

(2) Existing 3/8" x 5" stiffener and bearing stiffeners shall be used for connection of Crossframe "B" to Girder 2 during Stage 2 Construction.

** Intermediate Transverse Stiffener Spacing (Typ. For Girders A-C)

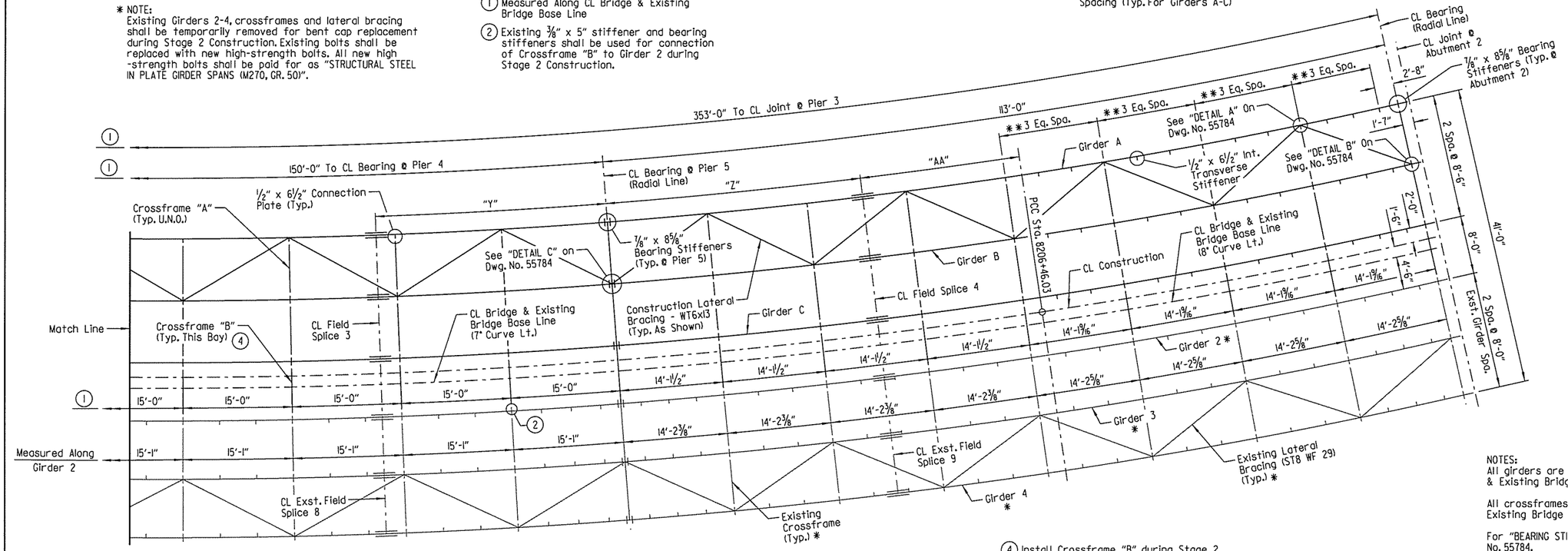

PART FRAMING PLAN

Scale: 1/8" = 1'-0"

(4) Install Crossframe "B" during Stage 2 Construction. Tighten bolts in Crossframe "B" after Stage 2 deck pour is complete.

NOTES:
All girders are oriented along curves concentric with CL Bridge & Existing Bridge Base Line.

All crossframes are oriented along lines radial to CL Bridge & Existing Bridge Base Line.

For "BEARING STIFFENER DETAIL" and crossframe details, see Dwg. No. 55784.

For "CONNECTION PLATE DETAIL" and "INTERMEDIATE TRANSVERSE STIFFENER DETAIL", see Dwg. No. 55783.

For "GENERAL NOTES", see Dwg. No. 55777.

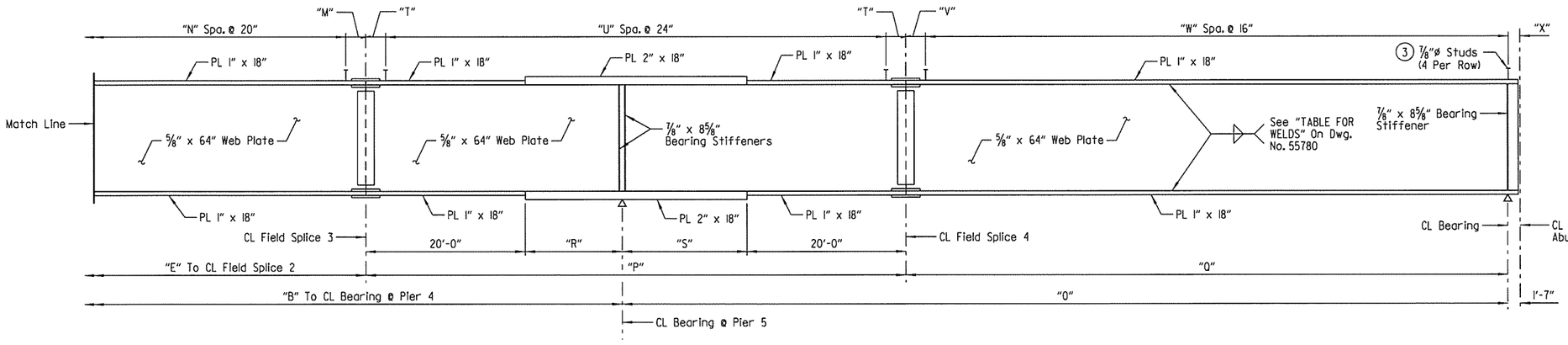

PART GIRDER ELEVATION

New Girders A, B & C
(Dimensions measured along CL Girder)
No Scale

NOTE:
Information and dimensions shown are based on existing bridge plans. See Section 821 for geometry verification requirements. Fabrication of new girders shall be adjusted as necessary to fit the proposed work to the existing structure.

(3) For heights of new shear studs, see "NEW SHEAR CONNECTOR DETAIL" on Dwg. No. 55782.

LEGEND

U.N.O. = Unless Noted Otherwise

TABLE OF VARIABLES

GIRDER	"O"	"P"	"Q"	"R"	"S"	"T"	"U"	"V"	"W"	"X"	"Y"	"Z"	"AA"
A	109'-11 7/8"	67'-1 5/8"	74'-8 11/16"	11'-10 7/16"	15'-3 3/16"	2'-6 13/16"	31	2'-3 11/16"	54	2'-0"	31'-10 7/16"	35'-3 3/16"	22'-1 1/4"
B	111-2 7/8"	67'-10 3/16"	75'-7 3/16"	12'-2 1/2"	15'-7 11/16"	1'-11 1/8"	32	2'-3 3/16"	55	1'-7"	32'-2 1/2"	35'-7 11/16"	22'-4 1/16"
C	112'-5 5/16"	68'-6 13/16"	76'-5 3/4"	12'-6 5/8"	16'-0 3/16"	2'-3 7/16"	32	2'-0 3/4"	56	1'-4"	32'-6 5/8"	36'-0 3/16"	22'-6 7/8"

NOTE:
For dimensions "B", "E", "M" & "N", see "TABLE OF VARIABLES" on Dwg. No. 55780.

STATE OF ARKANSAS
LICENSED PROFESSIONAL ENGINEER
No. 14498
ADAM B. HALL
BRIDGE ENGINEER

SHEET 4 OF 14
DETAILS OF 354'-7" CONTINUOUS COMPOSITE PLATE GIRDER UNIT
RAMP 4 OVER I-40
PULASKI COUNTY

ROUTE 430 SEC. 21

ARKANSAS STATE HIGHWAY COMMISSION

LITTLE ROCK, ARK.

DRAWN BY: HEW DATE: FEB. 2014 FILENAME: BCA0609x6_S20.DGN
CHECKED BY: BWS DATE: APR. 2014 SCALE: AS SHOWN
DESIGNED BY: ABH DATE: FEB. 2014
BRIDGE NO. 05324 DRAWING NO. 55781

SRYancey 7/18/2014 8:44:54 AM
WORKSPACE: AHTD Bridge
L:\20IN\I0I709 - I-40 at I-430 Interchange Modifications\Drawings\BCA0609x1_S20 (Unit 2 - Framing2).dgn
REVISED DATE:

DATE REVISED	DATE FILMED	DATE REVISED	DATE FILMED	FED. ROAD DIST. NO.	STATE	FED. AID PROJ. NO.	SHEET NO.	TOTAL SHEETS
				6	ARK.			
				JOB NO.		CA0609	337	693
				(1)	05324	354'-7" PL GIRDER UNIT		55782

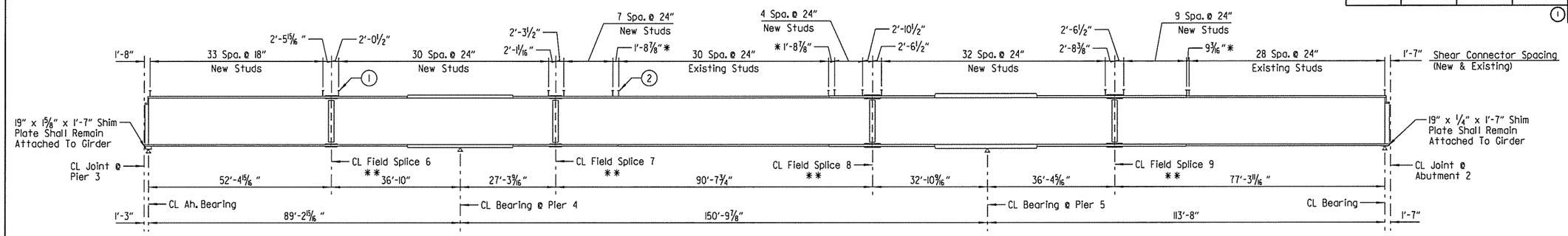

EXISTING GIRDER ELEVATION - GIRDER 2

(Dimensions measured along CL Girder)
No Scale

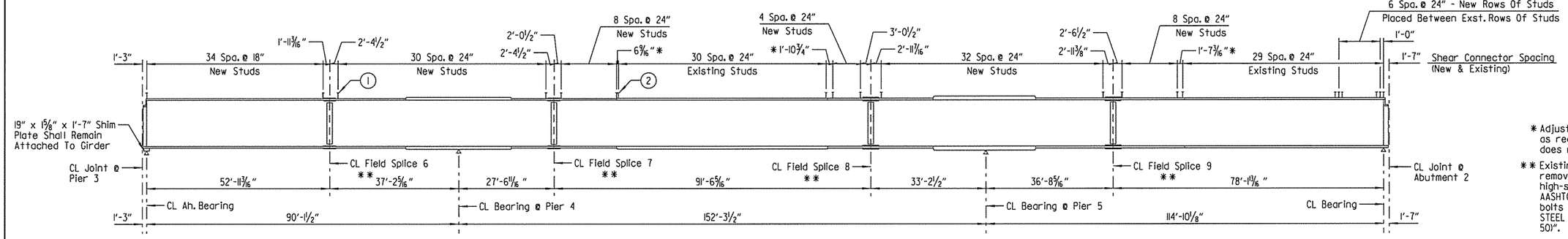

EXISTING GIRDER ELEVATION - GIRDER 3

(Dimensions measured along CL Girder)
No Scale

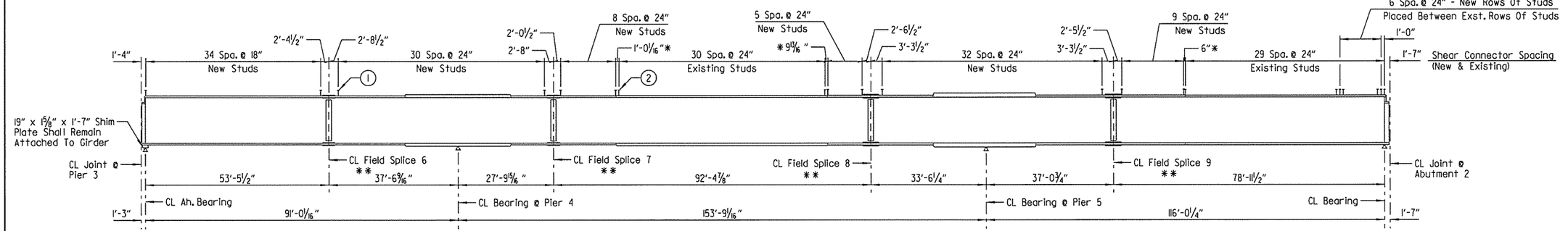

EXISTING GIRDER ELEVATION - GIRDER 4

(Dimensions measured along CL Girder)
No Scale

* Adjust region of new stud placement as required such that this dimension does not exceed 2'-0".

** Existing bolts in splice plates shall be removed and replaced with new 7/8"ø high-strength bolts conforming to AASHTO M164. All new high-strength bolts shall be paid for as "STRUCTURAL STEEL IN PLATE GIRDER SPANS (M270, GR. 50)".

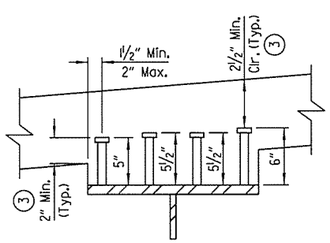

NEW SHEAR CONNECTOR DETAIL

(Looking Forward)
No Scale

(3) The Contractor shall verify the existing girder camber before placement of new shear studs on existing girders. Adjustments to all new shear stud lengths shall be made if the minimum 2 1/2" cover is violated. New shear studs shall be embedded a minimum of 2" into deck. This work will not be paid for directly but will be considered subsidiary to the item "MODIFICATION OF EXISTING BRIDGE STRUCTURE (BRIDGE NO. 05324)". All new shear studs shall be paid for as "STRUCTURAL STEEL IN PLATE GIRDER SPANS (M270, GR. 50)".

NOTE:
New stud shear connectors shown shall be 7/8"ø, granular flux filled, solid fluxed or equal, and automatically end welded to the girder flange in accordance with the recommendations of the Manufacturer. 3/4"ø studs may be used in place of the 7/8"ø studs shown, at the ratio of 1.361- 3/4"ø studs in place of one 7/8"ø stud. 7/8"ø studs will be used as basis for measurement of structural steel.

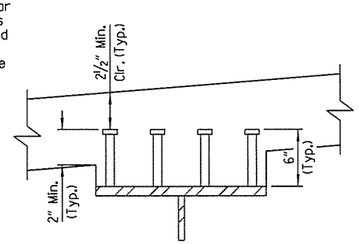

EXISTING SHEAR CONNECTOR DETAIL

(Looking Forward)
No Scale

(1) New studs shall be 7/8"ø, 4 per row. See "NEW SHEAR CONNECTOR DETAIL".

(2) Existing studs are 7/8"ø x 6", 4 per row. See "EXISTING SHEAR CONNECTOR DETAIL".

NOTE:
After deck removal and prior to installation of new shear connectors, the existing tops of girders and shear connectors shall be cleaned. Any damaged shear connectors shall be replaced as directed by the Engineer at the Contractor's expense. Payment will not be paid for directly but shall be considered subsidiary to the item "MODIFICATION OF EXISTING BRIDGE STRUCTURE (BRIDGE NO. 05324)".

NOTE:
Information and dimensions shown are based on existing plans. See Section 821 for geometry verification requirements. Placement of new studs shall be adjusted as necessary to fit existing conditions. Spacings shown in girder elevations are maximum dimensions.

STATE OF ARKANSAS
LICENSED PROFESSIONAL ENGINEER
No. 14498
ADAM B. HALL
7-18-14
BRIDGE ENGINEER

SHEET 5 OF 14
DETAILS OF 354'-7" CONTINUOUS COMPOSITE PLATE GIRDER UNIT
RAMP 4 OVER I-40
PULASKI COUNTY

ROUTE 430 SEC. 21

ARKANSAS STATE HIGHWAY COMMISSION

LITTLE ROCK, ARK.

DRAWN BY: CWT DATE: FEB. 2014 FILENAME: BCA0609x6_S21.DGN
CHECKED BY: BWS DATE: APR. 2014 SCALE: AS SHOWN
DESIGNED BY: ABH DATE: FEB. 2014

BRIDGE NO. 05324 DRAWING NO. 55782

SRYancey 7/18/2014 8:44:54 AM
WORKSPACE: AHTD Bridge
L:\ZDWN\0DT709 - I-40 at I-430 Interchange Modifications\Drawings\BCA0609x6_S21(Unit 2 - Existing Girder).dgn
REVISED DATE:

DATE REVISED	DATE FILMED	DATE REVISED	DATE FILMED	FED. ROAD DIST. NO.	STATE	FED. AID PROJ. NO.	SHEET NO.	TOTAL SHEETS
				6	ARK.			
				JOB NO.		CA0609	338	693
				①	05324	354'-7" PL GIRDER UNIT		55783

TABLE OF DEAD LOAD DEFLECTIONS (INCHES) - GIRDERS A, B, & C

	Point Of Deflection	Girder A			Girder B			Girder C		
		Wt. Of Girder And Cross-Frames	Wt. Of Girder, Cross-Frames And Slab	Wt. Of Girder, Cross-Frames, Slab And Parapet	Wt. Of Girder And Cross-Frames	Wt. Of Girder, Cross-Frames And Slab	Wt. Of Girder, Cross-Frames, Slab And Parapet	Wt. Of Girder And Cross-Frames	Wt. Of Girder, Cross-Frames And Slab	Wt. Of Girder, Cross-Frames, Slab And Parapet
SPAN 4	1.0	0.000	0.000	0.000	0.000	0.000	0.000	0.000	0.000	0.000
	1.1	0.024	0.083	0.090	0.021	0.069	0.076	0.017	0.059	0.066
	1.2	0.043	0.147	0.159	0.037	0.116	0.128	0.029	0.096	0.108
	1.3	0.052	0.176	0.190	0.043	0.128	0.142	0.031	0.095	0.109
	1.4	0.051	0.169	0.182	0.038	0.102	0.114	0.023	0.053	0.064
	1.5	0.038	0.126	0.135	0.023	0.043	0.051	0.006	-0.025	-0.019
	1.6	0.020	0.064	0.067	0.004	-0.027	-0.026	-0.016	-0.117	-0.118
	1.7	0.001	-0.001	-0.004	-0.016	-0.096	-0.101	-0.035	-0.193	-0.201
	1.8	-0.014	-0.050	-0.058	-0.029	-0.134	-0.144	-0.045	-0.225	-0.237
	1.9	-0.018	-0.061	-0.069	-0.027	-0.116	-0.125	-0.038	-0.177	-0.188
SPAN 5	2.0	0.000	0.000	0.000	0.000	0.000	0.000	0.000	0.000	0.000
	2.1	0.090	0.299	0.334	0.116	0.457	0.496	0.139	0.614	0.656
	2.2	0.221	0.732	0.816	0.276	1.078	1.169	0.329	1.439	1.538
	2.3	0.348	1.149	1.278	0.429	1.672	1.813	0.510	2.226	2.378
	2.4	0.432	1.430	1.590	0.531	2.067	2.242	0.631	2.752	2.940
	2.5	0.453	1.499	1.668	0.557	2.167	2.351	0.660	2.878	3.075
	2.6	0.405	1.340	1.494	0.498	1.942	2.109	0.593	2.586	2.765
	2.7	0.302	1.001	1.120	0.373	1.459	1.587	0.444	1.942	2.078
	2.8	0.170	0.567	0.638	0.213	0.839	0.915	0.254	1.117	1.198
	2.9	0.054	0.181	0.207	0.069	0.280	0.307	0.085	0.382	0.411
	3.0	0.000	0.000	0.000	0.000	0.000	0.000	0.000	0.000	0.000
SPAN 6	3.1	0.007	0.018	0.018	0.002	-0.007	-0.007	-0.004	-0.032	-0.033
	3.2	0.042	0.131	0.142	0.037	0.118	0.130	0.031	0.105	0.117
	3.3	0.098	0.314	0.343	0.099	0.345	0.376	0.098	0.381	0.413
	3.4	0.156	0.507	0.555	0.165	0.591	0.643	0.174	0.696	0.750
	3.5	0.200	0.654	0.716	0.217	0.788	0.855	0.234	0.951	1.022
	3.6	0.219	0.719	0.787	0.243	0.887	0.961	0.265	1.084	1.162
	3.7	0.205	0.675	0.739	0.229	0.842	0.911	0.253	1.041	1.115
	3.8	0.160	0.526	0.576	0.179	0.660	0.714	0.198	0.816	0.874
	3.9	0.088	0.291	0.318	0.098	0.363	0.393	0.109	0.450	0.482
	4.0	0.000	0.000	0.000	0.000	0.000	0.000	0.000	0.000	0.000

TABLE OF DEAD LOAD DEFLECTIONS (INCHES) - GIRDERS 2, 3, & 4

	Point Of Deflection	Girder 2		Girder 3		Girder 4	
		Weight Of Slab	Weight Of Slab And Parapet	Weight Of Slab	Weight Of Slab And Parapet	Weight Of Slab	Weight Of Slab And Parapet
SPAN 4	1.0	0.000	0.000	0.000	0.000	0.000	0.000
	1.1	0.038	0.045	0.052	0.060	0.059	0.068
	1.2	0.066	0.078	0.092	0.105	0.101	0.115
	1.3	0.076	0.090	0.106	0.120	0.110	0.126
	1.4	0.064	0.076	0.088	0.100	0.079	0.092
	1.5	0.031	0.036	0.038	0.043	0.009	0.014
	1.6	-0.015	-0.018	-0.029	-0.033	-0.078	-0.083
	1.7	-0.060	-0.071	-0.095	-0.108	-0.157	-0.172
	1.8	-0.082	-0.097	-0.127	-0.144	-0.191	-0.211
	1.9	-0.064	-0.076	-0.097	-0.111	-0.136	-0.151
SPAN 5	2.0	0.000	0.000	0.000	0.000	0.000	0.000
	2.1	0.226	0.271	0.321	0.370	0.412	0.466
	2.2	0.527	0.632	0.741	0.855	0.939	1.063
	2.3	0.811	0.973	1.131	1.305	1.417	1.604
	2.4	0.990	1.189	1.365	1.577	1.715	1.942
	2.5	1.025	1.234	1.409	1.629	1.773	2.010
	2.6	0.918	1.107	1.262	1.461	1.579	1.793
	2.7	0.691	0.835	0.952	1.105	1.183	1.347
	2.8	0.398	0.484	0.556	0.648	0.692	0.789
	2.9	0.135	0.165	0.193	0.226	0.264	0.301
	3.0	0.000	0.000	0.000	0.000	0.000	0.000
SPAN 6	3.1	-0.002	-0.003	-0.011	-0.013	-0.040	-0.043
	3.2	0.057	0.069	0.062	0.073	0.036	0.046
	3.3	0.161	0.194	0.204	0.238	0.210	0.245
	3.4	0.275	0.331	0.366	0.424	0.418	0.479
	3.5	0.367	0.441	0.498	0.575	0.593	0.675
	3.6	0.416	0.498	0.567	0.652	0.689	0.781
	3.7	0.402	0.479	0.549	0.630	0.675	0.762
	3.8	0.319	0.380	0.438	0.501	0.537	0.605
	3.9	0.178	0.212	0.244	0.279	0.297	0.335
	4.0	0.000	0.000	0.000	0.000	0.000	0.000

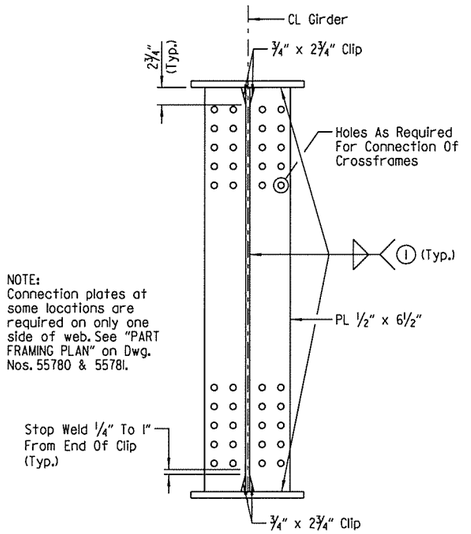

NOTE:
Connection plates at some locations are required on only one side of web. See "PART FRAMING PLAN" on Dwg. Nos. 55780 & 55781.

CONNECTION PLATE DETAIL
Scale: 1" = 1'-0"

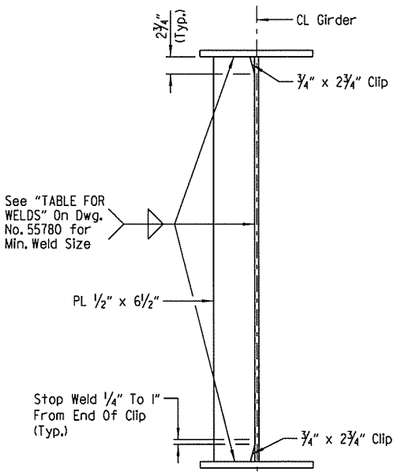

INTERMEDIATE TRANSVERSE STIFFENER DETAIL
Scale: 1" = 1'-0"

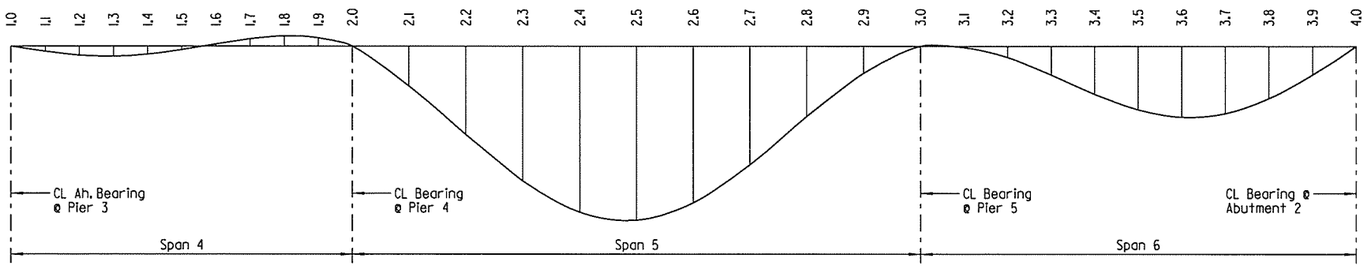

DEAD LOAD DEFLECTION DIAGRAM
No Scale

Note:
Camber for Dead Load Deflection plus vertical curve +/- ¼" tolerance. Deflections shown are from a chord from CL Bearing to CL Bearing. Vertical curve corrections are not included. Negative sign (-) indicates point above chord.

Note:
Dead load deflections shown are based on removable deck forms.

If permanent steel deck forms are used, the corrugations shall be non-matching and shall be filled with styrofoam.

Revision to the deflection tables may be necessary upon review of the Contractor's submitted forming details.

STATE OF ARKANSAS
LICENSED PROFESSIONAL ENGINEER
No. 14498
ADAM B. HALL
7-18-14
BRIDGE ENGINEER

SHEET 6 OF 14
DETAILS OF 354'-7" CONTINUOUS COMPOSITE PLATE GIRDER UNIT
RAMP 4 OVER I-40
PULASKI COUNTY
ROUTE 430 SEC. 21
ARKANSAS STATE HIGHWAY COMMISSION
LITTLE ROCK, ARK.

DRAWN BY: CWT DATE: FEB. 2014 FILENAME: BCA0609x6_S22.DGN
CHECKED BY: BWS DATE: APR. 2014 SCALE: AS SHOWN
DESIGNED BY: ABH DATE: FEB. 2014
BRIDGE NO. 05324 DRAWING NO. 55783

SRYancey 7/18/2014 8:44:55 AM
WORKSPACE: AHTD Bridge
L:\2011\11017\09 - I-40 at I-430 Interchange Modifications\Drawings\BCA0609x1_S22 (Unit 2 - Deflections).dgn
REVISED DATE:

DATE REVISED	DATE FILMED	DATE REVISED	DATE FILMED	FED. ROAD DIST. NO.	STATE	FED. AID PROJ. NO.	SHEET NO.	TOTAL SHEETS
				6	ARK.			
				JOB NO.		CA0609	339	693
				(1) 05324		354'-7" PL GIRDER UNIT		55784

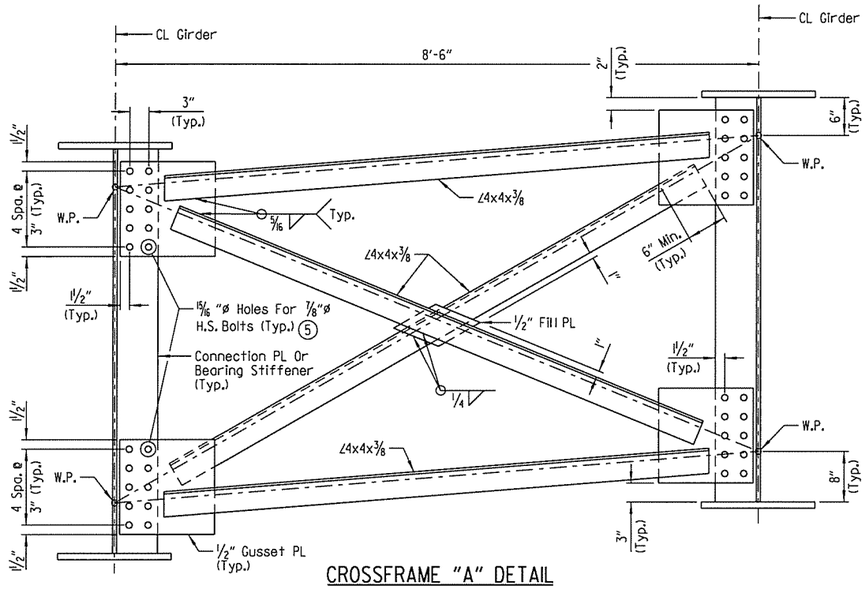

CROSSFRAME "A" DETAIL

(Looking Forward)
Scale: 1" = 1'-0"

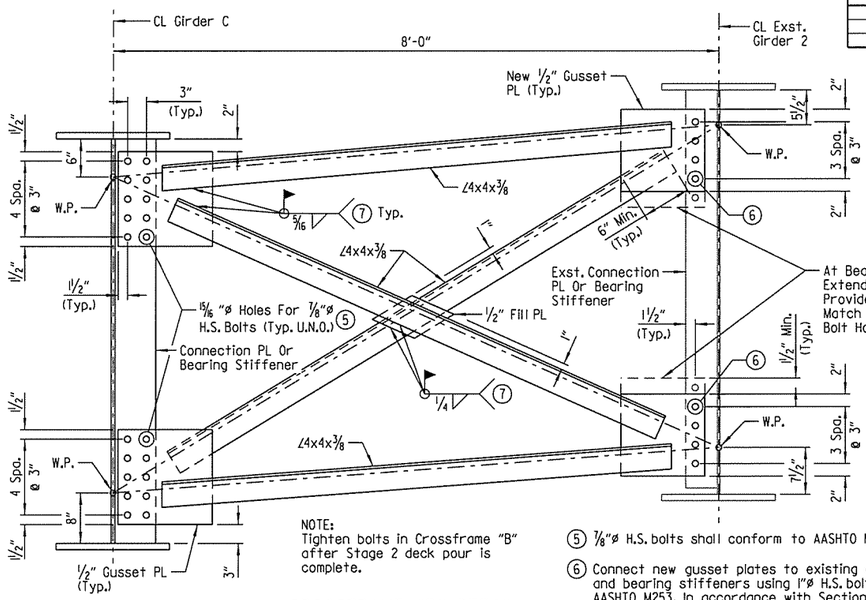

NOTE:
Tighten bolts in Crossframe "B" after Stage 2 deck pour is complete.

CROSSFRAME "B" DETAIL

(Looking Forward)
Scale: 1" = 1'-0"

NOTE:
Bolts in crossframe connections shall be properly installed and tightened in accordance with Subsection 807.7.1 except as noted for Crossframe "B".

(5) 7/8"ø H.S. bolts shall conform to AASHTO M164.

(6) Connect new gusset plates to existing connection plate and bearing stiffeners using 1"ø H.S. bolts conforming to AASHTO M253. In accordance with Section 807, ream existing 15/16 "ø holes in connection plate and bearing stiffeners to 1 1/16"ø to allow for installation of 1"ø bolts. Modification of existing connection plates and bearing stiffeners shall be considered subsidiary to the item "MODIFICATION OF EXISTING BRIDGE STRUCTURE (BRIDGE NO. 05324)". New 1"ø H.S. bolts shall be paid for as "STRUCTURAL STEEL IN PLATE GIRDER SPANS (M270, Gr. 50)".

(7) Crossframe "B" bracing members shall be field welded after existing crossframes between Girders 2 & 3 and between Girders 3 & 4 have been re-erected and prior to the Stage 2 deck pour.

Note:
At the Contractor's option, 13/16 "ø holes may be field drilled in one end of each WT6x13 member.

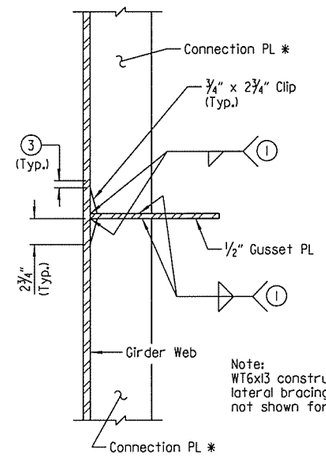

SECTION A-A

Scale: 1 1/2" = 1'-0"

Note:
WT6x13 construction lateral bracing member not shown for clarity.

Note:
See "PART FRAMING PLAN" on Dwg. Nos. 55780 & 55781 for locations of construction lateral bracing.

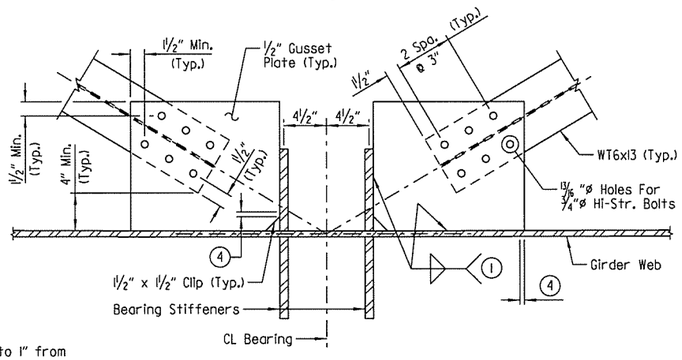

DETAIL C

No Scale

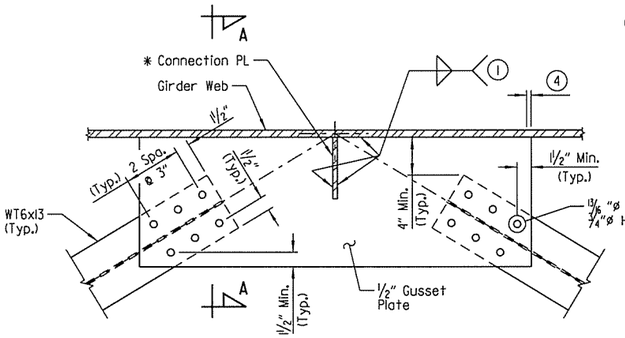

DETAIL A

No Scale

* Connection plates shall be discontinuous at lateral bracing gusset plates. See "SECTION A-A".

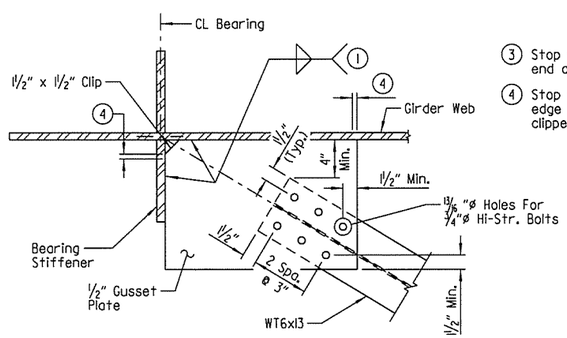

DETAIL B

No Scale

(3) Stop weld 1/4" to 1" from end of clip

(4) Stop weld 1/4" from the edge of all corners, both clipped and unclipped

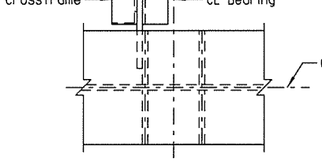

PLAN AT PIERS 4 & 5

(1) See "TABLE FOR WELDS" On Dwg. No. 55780 for min. weld size.

(2) Bolt holes are not required on bearing stiffeners located on outside of exterior girders and on forward station bearing stiffeners at Piers 4 & 5. See "PLAN AT PIERS 4 & 5".

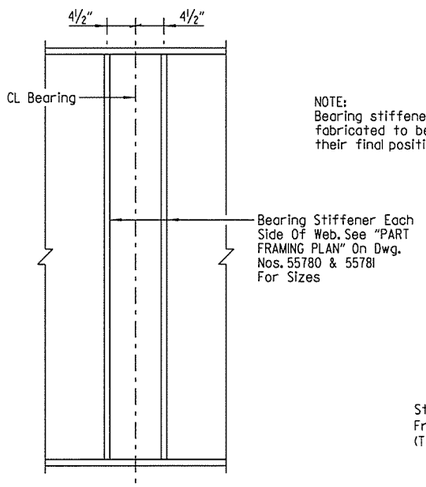

ELEVATION AT PIERS 4 & 5

NOTE:
Bearing stiffeners shall be fabricated to be vertical in their final positions.

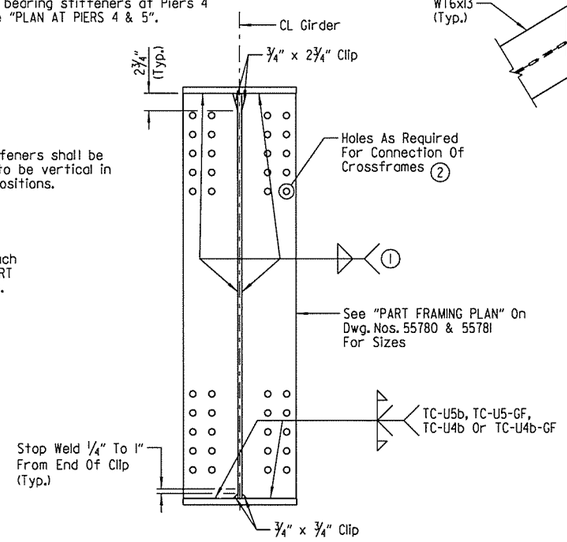

SECTION AT PIERS 3-5 & ABUTMENT 2

BEARING STIFFENER DETAIL

Scale: 1" = 1'-0"

LEGEND

U.N.O. = Unless Noted Otherwise

STATE OF ARKANSAS
LICENSED PROFESSIONAL ENGINEER
No. 14498
ADAM B. HALL
7-18-14
BRIDGE ENGINEER

SHEET 7 OF 14
DETAILS OF 354'-7" CONTINUOUS COMPOSITE PLATE GIRDER UNIT RAMP 4 OVER I-40 PULASKI COUNTY

ROUTE 430 SEC. 21

ARKANSAS STATE HIGHWAY COMMISSION

LITTLE ROCK, ARK.

DRAWN BY: ABH DATE: FEB. 2014 FILENAME: BCA0609x6_S23.DGN
CHECKED BY: BWS DATE: APR. 2014 SCALE: AS SHOWN
DESIGNED BY: ABH DATE: FEB. 2014

BRIDGE NO. 05324 DRAWING NO. 55784

SRYancey 7/18/2014 8:44:55 AM
WORKSPACE: AHTD Bridge
L:\ROW\UNITS\I-40 at I-430 Interchange Modifications\Drawings\BCA0609x6_S23 (Unit 2 - Steel).dgn
REVISED DATE:

DATE REVISED	DATE FILMED	DATE REVISED	DATE FILMED	FED. ROAD DIST. NO.	STATE	FED. AID PROJ. NO.	SHEET NO.	TOTAL SHEETS
				6	ARK.			
				JOB NO.		CA0609	340	693
				1	05324	354'-7" PL GIRDER UNIT		55785

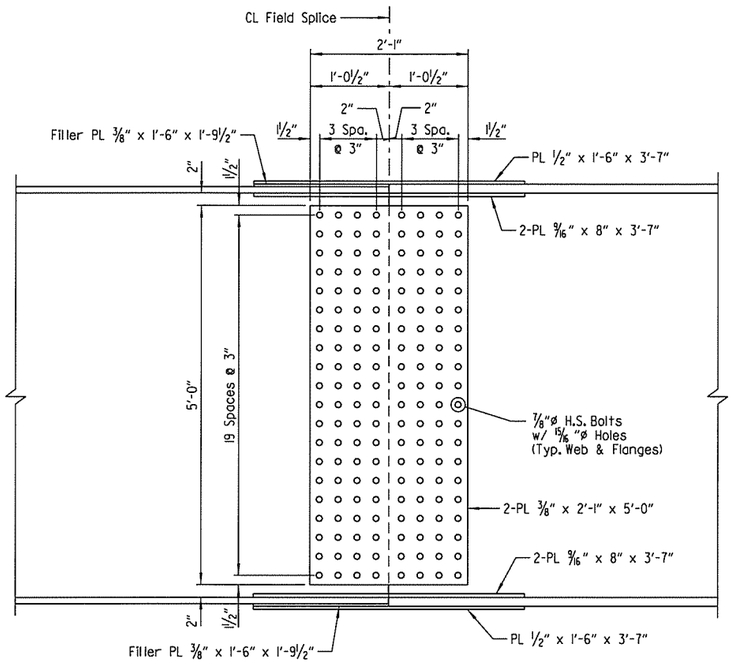

ELEVATION OF FIELD SPLICES 1 & 2

(Field Splice 1 Shown, Field Splice 2 Similar By Symmetry)
Scale: 1" = 1'-0"

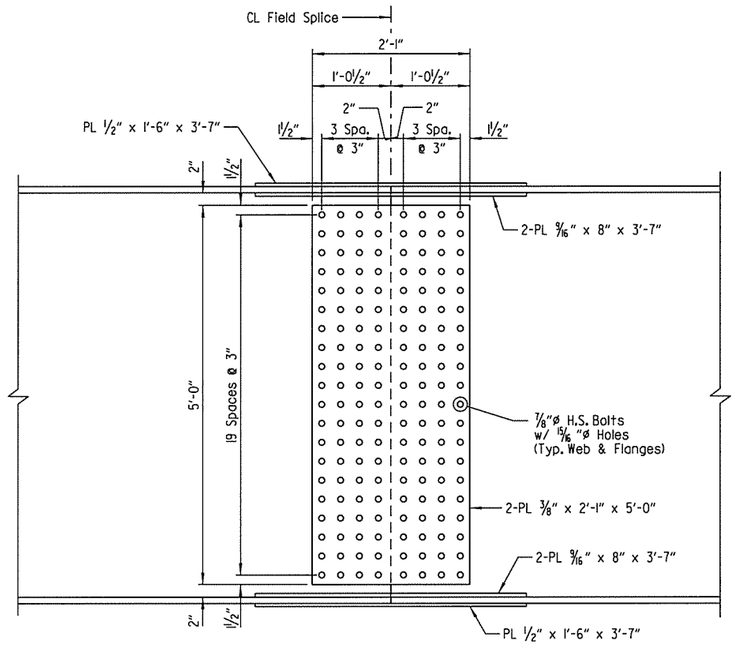

ELEVATION OF FIELD SPLICES 3 & 4

Scale: 1" = 1'-0"

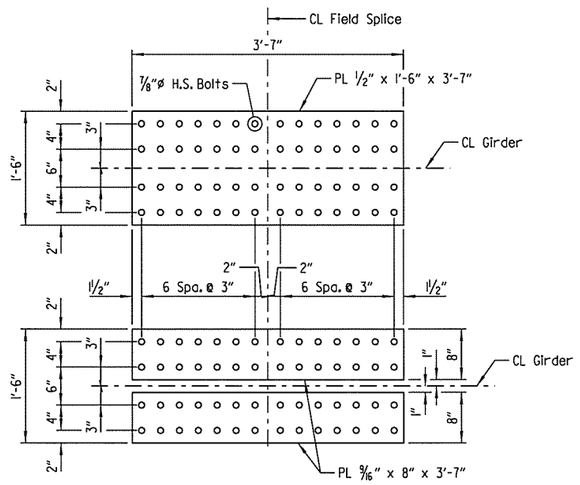

TOP & BOTTOM FLANGE SPLICE - FIELD SPLICES 1-4

Scale: 1" = 1'-0"

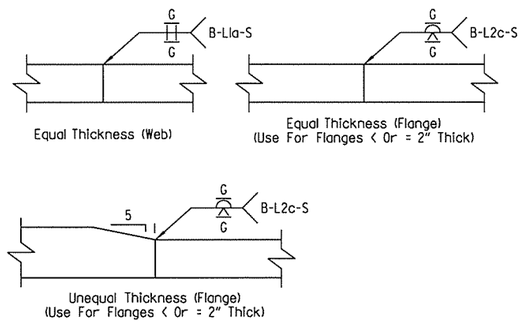

Equal Thickness (Web)

Equal Thickness (Flange)
(Use For Flanges < 0r = 2" Thick)

Unequal Thickness (Flange)
(Use For Flanges < 0r = 2" Thick)

DETAILS OF WELDED SPLICES

No Scale

NOTES:

All field splice bolts shall be ⅞"ø H.S. bolts.

All holes for splice bolts shall be 15/16"ø.

All field splice plates shall be AASHTO M270, Gr. 50 steel.

Bolted field splices shown may be eliminated or shop welded splices may be substituted with approval of the Engineer. Payment will be made on the basis of the plan quantities.

SHEET 8 OF 14
DETAILS OF 354'-7" CONTINUOUS
COMPOSITE PLATE GIRDER UNIT
RAMP 4 OVER I-40
PULASKI COUNTY
ROUTE 430 SEC. 21

ARKANSAS STATE HIGHWAY COMMISSION
LITTLE ROCK, ARK.

STATE OF ARKANSAS
LICENSED PROFESSIONAL ENGINEER
No. 14498
ADAM B. HALL
7-18-14
BRIDGE ENGINEER

DRAWN BY: ABH DATE: FEB. 2014 FILENAME: BCA0609x6_S24.DGN
CHECKED BY: BWS DATE: APR. 2014 SCALE: AS SHOWN
DESIGNED BY: ABH DATE: FEB. 2014
BRIDGE NO. 05324 DRAWING NO. 55785

SRYancey 7/18/2014 8:44:56 AM
WORKSPACE: AHTD Bridge
L:\2011\11017\09 - I-40 at I-430 Interchange Modifications\Drawings\BCA0609x1_S24 (Unit 2 - Splice).dgn
REVISED DATE:

DATE REVISED	DATE FILMED	DATE REVISED	DATE FILMED	FED. ROAD DIST. NO.	STATE	FED. AID PROJ. NO.	SHEET NO.	TOTAL SHEETS
				6	ARK.			
				JOB NO.		CA0609	341	693
				(1) 05324		354'-7" PL GIRDER UNIT		55786

(1) Parapet joint spacing measured along gutterline. Parapet joints designated with symbol (F) shall be stopped 4" from top of slab. All other parapet joints with symbol (P) shall be partial depth joints stopped 1'-6" from top of slab.

* Refer to "TYPICAL ROADWAY SECTION" on Dwg. No. 55778 for placement.

** Required Slab Joint, see "SLAB JOINT DETAIL"

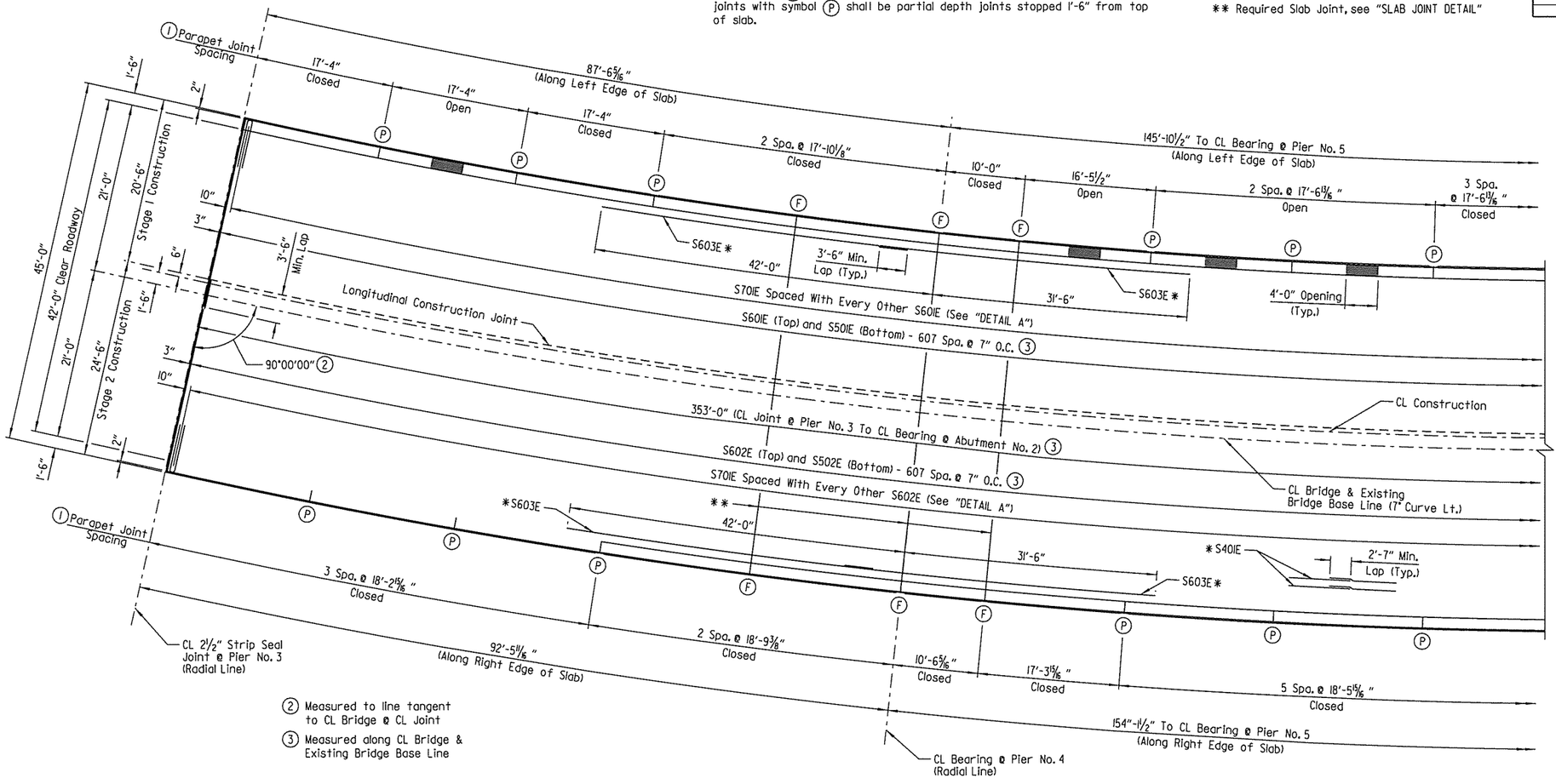

(2) Measured to line tangent to CL Bridge @ CL Joint

(3) Measured along CL Bridge & Existing Bridge Base Line

PART REINFORCING PLAN

Scale: 1/8" = 1'-0"

NOTES:
Unless noted otherwise, spacing shown for all transverse reinforcing is measured along CL Bridge & Existing Bridge Base Line. All transverse reinforcing shall be placed on lines radial to Existing Bridge Base Line.

All longitudinal lines and longitudinal slab reinforcing shall be placed along curves concentric with Existing Bridge Base Line (7° curve before PCC, 8° curve after PCC).

Unless noted otherwise, all transverse lines are radial to Existing Bridge Base Line.

Required slab joints shall align with the parapet open joints at the gutterlines.

See Dwg. Nos. 55788-55791 for parapet reinforcing details.

CONCRETE PLACEMENT PROCEDURE

No Scale

NOTES:
For each stage of construction, concrete placement for entire unit shall be made in one continuous deck pour, beginning at Pier No. 3 and ending at Abutment No. 2. For each stage of construction, 72 hours shall elapse between the completion of the entire deck and the pouring of the parapet.

The Contractor must obtain approval from the Engineer for any deviations from the pouring sequence noted.

Concrete in bridge superstructure shall be consolidated for the entire pour before any concrete has taken its initial set. This may require the use of a retarding agent.

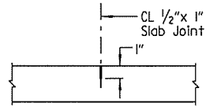

The 1/2" x 1" Poured Joint Sealer (Type 3 or 4) in slab shall conform to Subsection 501.02(h) and 501.05(j). Backer Rod filler will not be required. The Poured Joint Sealer shall be paid for as "CLASS S(AE) CONCRETE-BRIDGE". Slab joints shall extend to the outside edge of the deck slab. Slab joints shall be installed before the parapet railing is poured. If slab joints are to be sawed, they shall be sawed as soon as the concrete has sufficiently set to allow sawing of the joint without damage to the slab. Slab joints shall be placed at all required slab joint locations. The joint sealer shall extend across the deck slab. No joint sealer shall be placed on the deck slab under the parapet rail. Slab joints shall align with parapet open joints.

SLAB JOINT DETAIL

No Scale

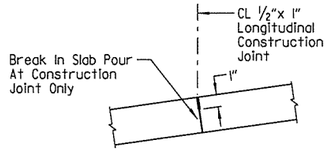

The 1/2" x 1" Poured Joint Sealer (Type 3 or 4) in slab shall conform to Subsection 501.02(h) and 501.05(j). Backer Rod filler will not be required. Joint Sealer shall be paid for as "CLASS S(AE) CONCRETE-BRIDGE". This joint shall be formed. Seal must be gray or other color similar to concrete.

LONGITUDINAL CONSTRUCTION JOINT DETAIL

No Scale

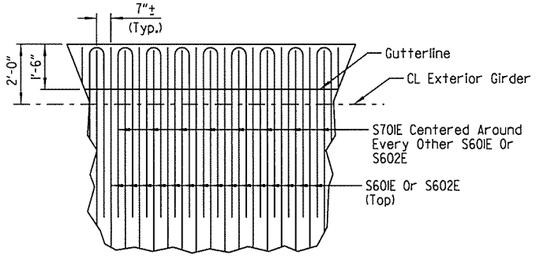

DETAIL A

No Scale

STATE OF ARKANSAS
LICENSED PROFESSIONAL ENGINEER
No. 14498
ADAM B. HALL
7-18-14
BRIDGE ENGINEER

SHEET 9 OF 14
DETAILS OF 354'-7" CONTINUOUS COMPOSITE PLATE GIRDER UNIT
RAMP 4 OVER I-40
PULASKI COUNTY

ROUTE 430 SEC. 21

ARKANSAS STATE HIGHWAY COMMISSION

LITTLE ROCK, ARK.

DRAWN BY: JLH DATE: FEB. 2014 FILENAME: BCA0609x6_S25.DGN
CHECKED BY: SRY DATE: MAR. 2014 SCALE: AS SHOWN
DESIGNED BY: ABH DATE: FEB. 2014

BRIDGE NO. 05324 DRAWING NO. 55786

SRYancey 7/18/2014 8:44:57 AM
WORKSPACE: AHTD Bridge
L:\ZDATA\07709 - I-430 Interchange Modifications\Drawings\BCA0609x1_S25 (Unit 2 - Slab).dgn
REVISED DATE:

DATE REVISED	DATE FILMED	DATE REVISED	DATE FILMED

FED. ROAD DIST. NO.	STATE	FED. AID PROJ. NO.	SHEET NO.	TOTAL SHEETS
6	ARK.			
JOB NO.		CA0609	342	693
(1) 05324		354'-7" PL GIRDER UNIT		55787

* Refer to "TYPICAL ROADWAY SECTION" on Dwg. No. 55778 for placement.

** Required Slab Joint, see "SLAB JOINT DETAIL" on Dwg. No. 55786.

(1) Parapet joint spacing measured along gutterline. Parapet joints designated with symbol (F) shall be stopped 4" from top of slab. All other parapet joints with symbol (P) shall be partial depth joints stopped 1'-6" from top of slab.

(2) Measured to line tangent to CL Bridge @ CL Joint

(3) Measured along CL Bridge & Existing Bridge Base Line

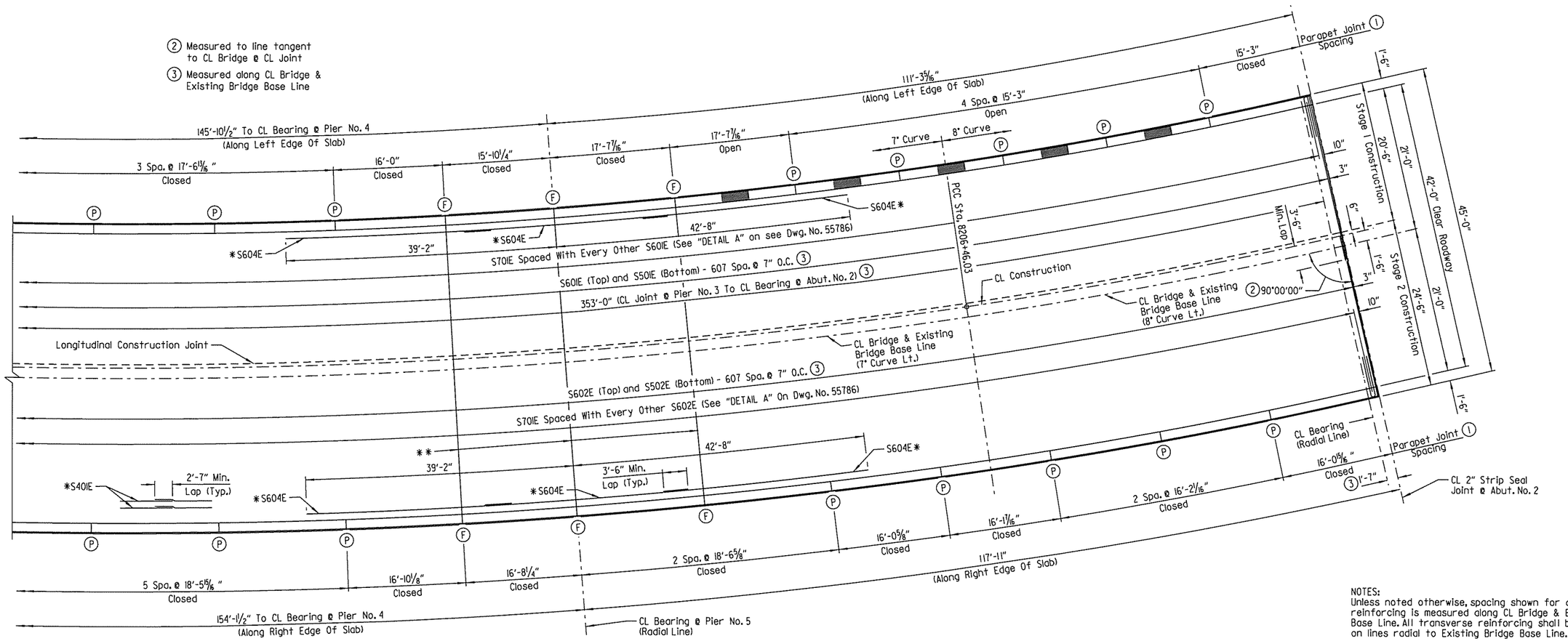

PART REINFORCING PLAN

Scale: ⅛" = 1'-0"

BAR LIST				BAR LIST (CONTINUED)				BAR LIST (CONTINUED)			
MARK	NO. REQ'D	LENGTH	P.D.	MARK	NO. REQ'D	LENGTH	P.D.	MARK	NO. REQ'D	LENGTH	P.D.
S401E	1190	38'-10"	Str.	P401E	12	36'-1"	Str.	P420E	10	15'-9"	Str.
S402E	41	4'-2"	2"	P402E	16	17'-6"	Str.	P421E	10	15'-10"	Str.
				P403E	11	9'-8"	Str.	P422E	5	16'-6"	Str.
S501E	608	23'-10"	Str.	P404E	24	32'-0"	Str.	P423E	15	17'-11"	Str.
S502E	608	24'-0"	Str.	P405E	11	15'-6"	Str.				
				P406E	16	17'-3"	Str.	P501E	1373	6'-8"	3¾"
S601E	608	23'-10"	Str.	P407E	18	33'-0"	Str.	P502E	635	5'-4"	3¾", 6"
S602E	608	24'-0"	Str.	P408E	20	17'-0"	Str.	P503E	72	6'-0"	3¾"
S603E	98	38'-8"	Str.	P409E	5	16'-1"	Str.	P504E	738	5'-4"	3¾", 6"
S604E	147	29'-10"	Str.	P410E	25	17'-2"	Str.				
S605E	3	23'-10"	Str.	P411E	10	15'-8"	Str.				
S606E	4	1'-8"	Str.	P412E	25	14'-11"	Str.				
S607E	4	8'-2"	Str.	P413E	18	34'-8"	Str.				
S608E	2	4'-10"	Str.	P414E	41	18'-2"	Str.				
S609E	3	24'-2"	Str.	P415E	11	16'-4"	Str.				
S610E	2	6'-2"	Str.	P416E	24	33'-7"	Str.				
S611E	4	7'-8"	Str.	P417E	11	10'-2"	Str.				
				P418E	16	18'-5"	Str.				
S701E	607	14'-3"	5¼"	P419E	12	37'-11"	Str.				

BAR BENDING DIAGRAMS

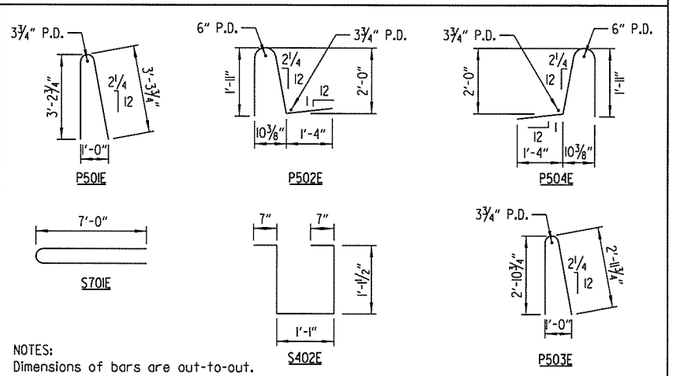

NOTES:
Dimensions of bars are out-to-out.

Bar designations ending with "E" indicate epoxy coated bars.

NOTES:
Unless noted otherwise, spacing shown for all transverse reinforcing is measured along CL Bridge & Existing Bridge Base Line. All transverse reinforcing shall be placed on lines radial to Existing Bridge Base Line.

All longitudinal lines and longitudinal slab reinforcing shall be placed along curves concentric with Existing Bridge Base Line (7° curve before PCC, 8° curve after PCC).

Unless noted otherwise, all transverse lines are radial to Existing Bridge Base Line.

Required slab joints shall align with the parapet open joints at the gutterlines.

See Dwg. Nos. 55788-55791 for parapet reinforcing details.

STATE OF ARKANSAS
LICENSED PROFESSIONAL ENGINEER
No. 14498
ADAM B. HALL
7-18-14
BRIDGE ENGINEER

SHEET 10 OF 14
DETAILS OF 354'-7" CONTINUOUS COMPOSITE PLATE GIRDER UNIT
RAMP 4 OVER I-40
PULASKI COUNTY

ROUTE 430 SEC. 21

ARKANSAS STATE HIGHWAY COMMISSION

LITTLE ROCK, ARK.

DRAWN BY: JLH DATE: FEB. 2014 FILENAME: BCA0609x6_S26.DGN
CHECKED BY: SRY DATE: MAR. 2014 SCALE: AS SHOWN
DESIGNED BY: ABH DATE: FEB. 2014
BRIDGE NO. 05324 DRAWING NO. 55787

SRYancey 7/18/2014 8:44:57 AM
WORKSPACE: AHTD Bridge
L:\ZOIN\I0I709 - I-430 at I-430 Interchange Modifications\Drawings\BCA0609x1_S26 (Unit 2 - Slab2).dgn
REVISED DATE:

DATE REVISED	DATE FILMED	DATE REVISED	DATE FILMED

FED. ROAD DIST. NO.	STATE	FED. AID PROJ. NO.	SHEET NO.	TOTAL SHEETS
6	ARK.			
JOB NO.		CA0609	343	693
1 05324	354'-7" PL GIRDER UNIT			55788

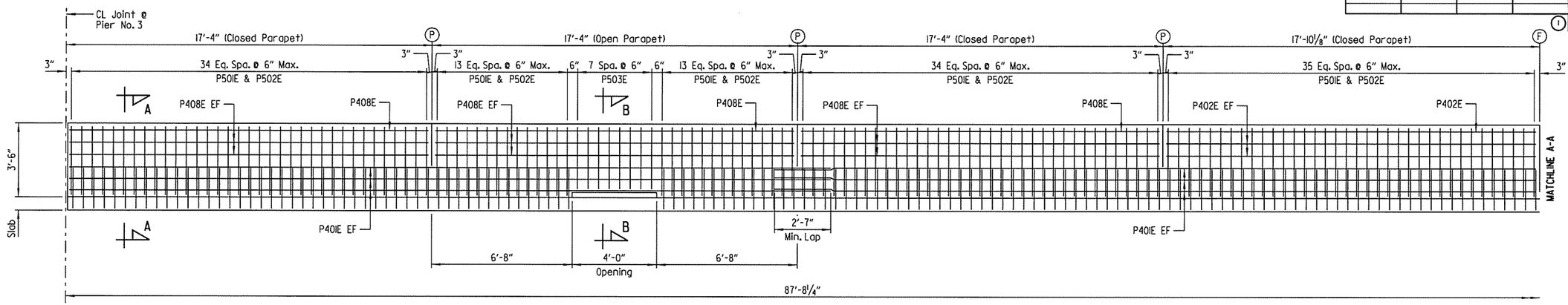

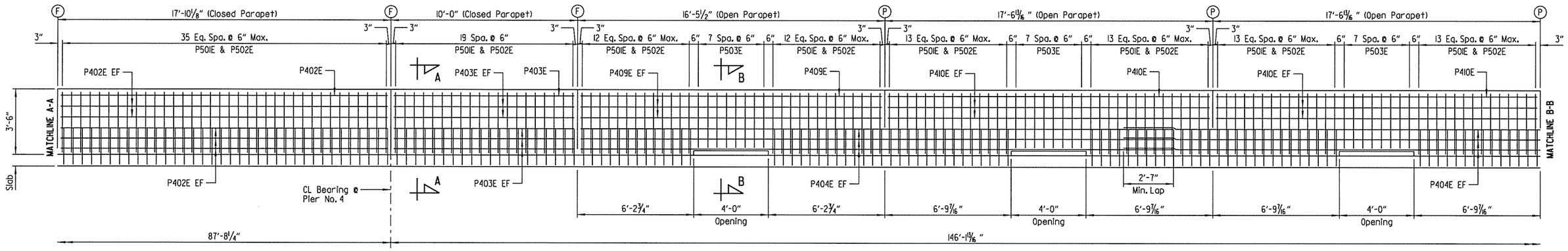

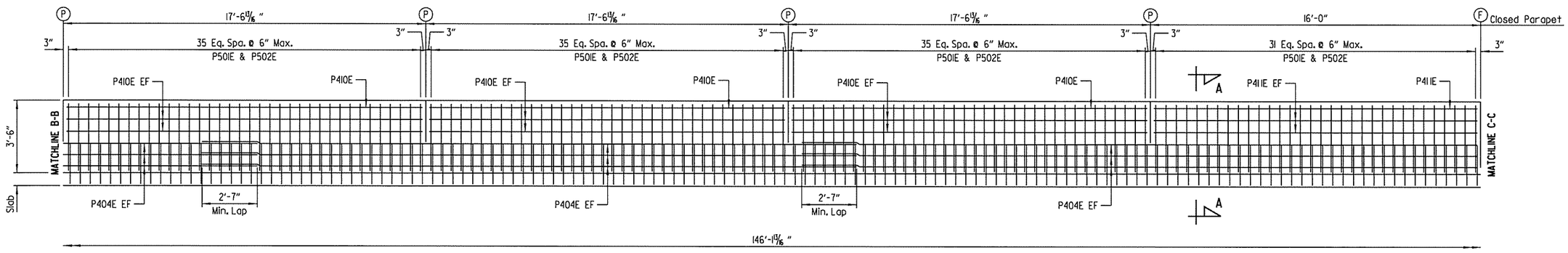

Ⓟ CL Partial-Depth Parapet Joint (¼" to 1" Max.) as shown on "PART REINFORCING PLAN" on Dwg. Nos. 55786 & 55787. Stop 1'-6" from top of slab.

Ⓕ CL Full-Depth Parapet Joint (¼" to 1" Max.) as shown on "PART REINFORCING PLAN" on Dwg. Nos. 55786 & 55787. Stop 4" from top of slab.

LEGEND
EF = Each Face

LEFT PARAPET - ELEVATION
(Looking At Inside Face Of Parapet Rail)
Scale: ⅜" = 1'-0"

NOTES:
All dimensions shown are measured along left gutterline.

For "BAR LIST" and "BAR BENDING DIAGRAM", see Dwg. No. 55787.

For "SECTION A-A" and "SECTION B-B", see Dwg. No. 55789.

STATE OF ARKANSAS
LICENSED PROFESSIONAL ENGINEER
No. 14498
ADAM B. HALL
7-18-14
BRIDGE ENGINEER

SHEET 11 OF 14
DETAILS OF 354'-7" CONTINUOUS COMPOSITE PLATE GIRDER UNIT
RAMP 4 OVER I-40
PULASKI COUNTY
ROUTE 430 SEC. 21
ARKANSAS STATE HIGHWAY COMMISSION
LITTLE ROCK, ARK.

DRAWN BY: JLH DATE: FEB. 2014 FILENAME: BCA0609x6_S27.DGN
CHECKED BY: SRY DATE: MAR. 2014 SCALE: AS SHOWN
DESIGNED BY: ABH DATE: FEB. 2014
BRIDGE NO. 05324 DRAWING NO. 55788

SRYancey 7/18/2014 8:44:58 AM
WORKSPACE: AHTD Bridge
L:\2ONIDIT09 - I-40 at I-430 Interchange Modifications\Drawings\BCA0609xl_S27 (Unit 2 - Parapet - Left).dgn
REVISED DATE:

DATE REVISED	DATE FILMED	DATE REVISED	DATE FILMED	FED. ROAD DIST. NO.	STATE	FED. AID PROJ. NO.	SHEET NO.	TOTAL SHEETS
				6	ARK.			
				JOB NO.		CA0609	344	693
				(1) 05324		354'-7" PL GIRDER UNIT		55789

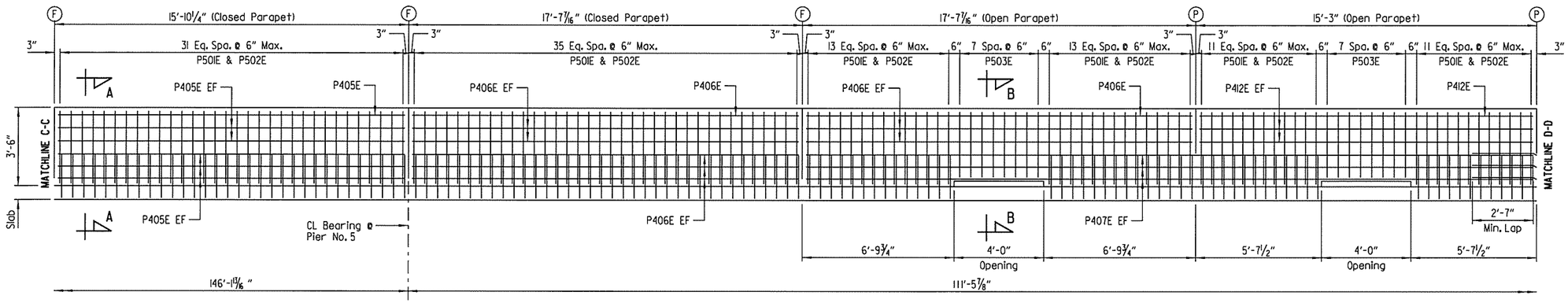

LEFT PARAPET - ELEVATION

(Looking At Inside Face Of Parapet Rail)
Scale: ⅜" = 1'-0"

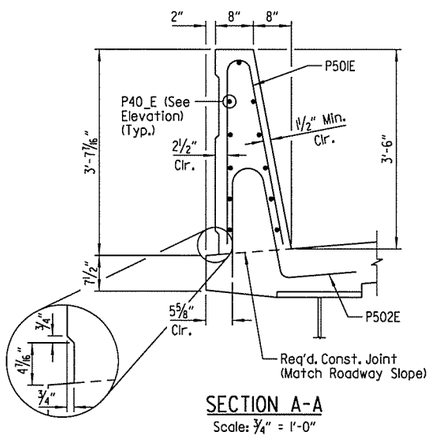

SECTION A-A

Scale: ¾" = 1'-0"

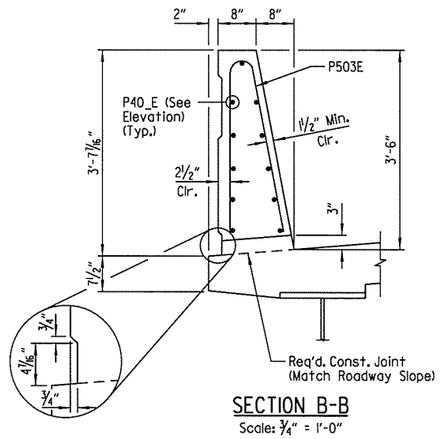

SECTION B-B

Scale: ¾" = 1'-0"

NOTES:
All dimensions shown are measured along left gutterline.

For "BAR LIST" and "BAR BENDING DIAGRAM", see Dwg. No. 55787.

(P) CL Partial-Depth Parapet Joint (¼" to 1" Max.) as shown on "PART REINFORCING PLAN" on Dwg. Nos. 55786 & 55787. Stop 1'-6" from top of slab.

(F) CL Full-Depth Parapet Joint (¼" to 1" Max.) as shown on "PART REINFORCING PLAN" on Dwg. Nos. 55786 & 55787. Stop 4" from top of slab.

LEGEND

EF = Each Face

STATE OF ARKANSAS
LICENSED PROFESSIONAL ENGINEER
No. 14498
ADAM B. HALL
2-18-14
BRIDGE ENGINEER

SHEET 12 OF 14
DETAILS OF 354'-7" CONTINUOUS COMPOSITE PLATE GIRDER UNIT RAMP 4 OVER I-40 PULASKI COUNTY

ROUTE 430 SEC. 21

ARKANSAS STATE HIGHWAY COMMISSION

LITTLE ROCK, ARK.

DRAWN BY: JLH DATE: FEB. 2014 FILENAME: BCA0609x6_S28.DGN
CHECKED BY: SRY DATE: MAR. 2014 SCALE: AS SHOWN
DESIGNED BY: ABH DATE: FEB. 2014
BRIDGE NO. 05324 DRAWING NO. 55789

SRYancey 7/18/2014 8:44:58 AM
WORKSPACE: AHTD Bridge
L:\2014\0171709 - I-40 at I-430 Interchange Modifications\Drawings\BCA0609x6_S28 Unit 2 - Parapet - Left2i.dgn
REVISED DATE:

DATE REVISED	DATE FILMED	DATE REVISED	DATE FILMED

FED. ROAD DIST. NO.	STATE	FED. AID PROJ. NO.	SHEET NO.	TOTAL SHEETS
6	ARK.			
JOB NO.		CA0609	345	693
(I) 05324		354'-7" PL GIRDER UNIT		55790

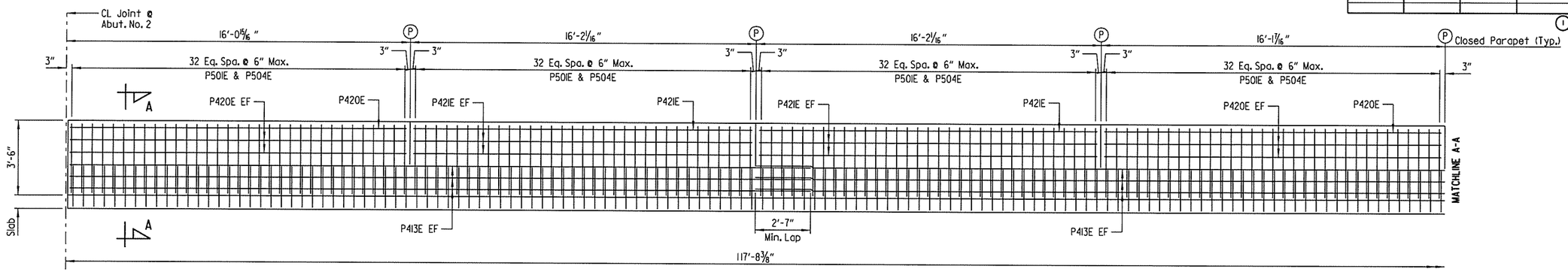

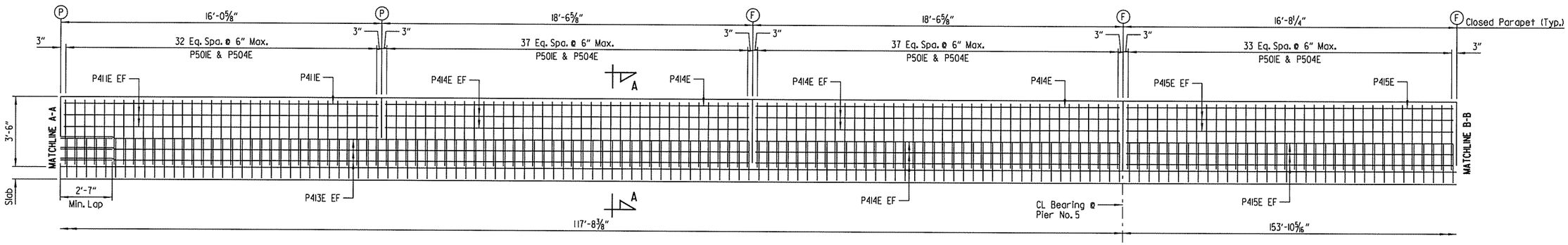

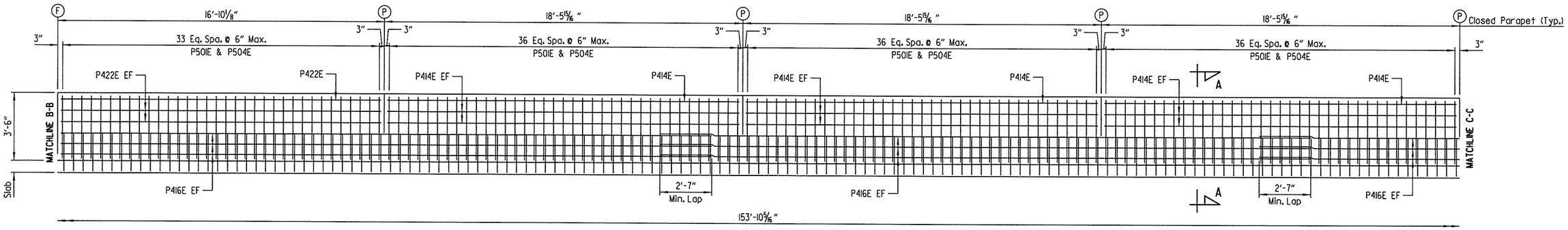

Ⓟ CL Partial-Depth Parapet Joint (1/4" to 1" Max.) as shown on "PART REINFORCING PLAN" on Dwg. Nos. 55786 & 55787. Stop 1'-6" from top of slab.

Ⓕ CL Full-Depth Parapet Joint (1/4" to 1" Max.) as shown on "PART REINFORCING PLAN" on Dwg. Nos. 55786 & 55787. Stop 4" from top of slab.

RIGHT PARAPET - ELEVATION

(Looking At Inside Face Of Parapet Rail)
Scale: 3/8" = 1'-0"

LEGEND

EF = Each Face

NOTES:
All dimensions shown are measured along right gutterline.

For "BAR LIST" and "BAR BENDING DIAGRAM", see Dwg. No. 55787.

For "SECTION A-A", see Dwg. No. 55791.

STATE OF ARKANSAS
LICENSED PROFESSIONAL ENGINEER
No. 14498
ADAM B. HALL
7-18-14
BRIDGE ENGINEER

SHEET 13 OF 14
DETAILS OF 354'-7" CONTINUOUS COMPOSITE PLATE GIRDER UNIT
RAMP 4 OVER I-40
PULASKI COUNTY

ROUTE 430 SEC. 21

ARKANSAS STATE HIGHWAY COMMISSION

LITTLE ROCK, ARK.

DRAWN BY: JLH DATE: FEB. 2014 FILENAME: BCA0609x6_S29.DGN
CHECKED BY: SRY DATE: MAR. 2014 SCALE: AS SHOWN
DESIGNED BY: ABH DATE: FEB. 2014
BRIDGE NO. 05324 DRAWING NO. 55790

SRYancey 7/18/2014 8:44:59 AM
WORKSPACE: AHTD Bridge
L:\SDM\MOT709 I-40 of I-430 Interchange Modifications\Drawings\BCA0609x1_S29 Unit 2 - Parapet - Right1.dgn
REVISED DATE:

DATE REVISED	DATE FILMED	DATE REVISED	DATE FILMED

FED. ROAD DIST. NO.	STATE	FED. AID PROJ. NO.	SHEET NO.	TOTAL SHEETS
6	ARK.			
JOB NO.		CA0609	346	693
(1) 05324		354'-7" PL GIRDER UNIT		55791

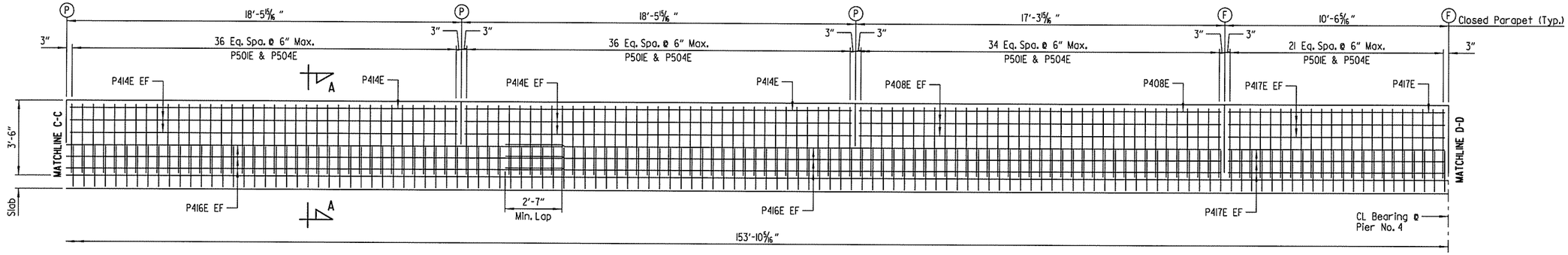

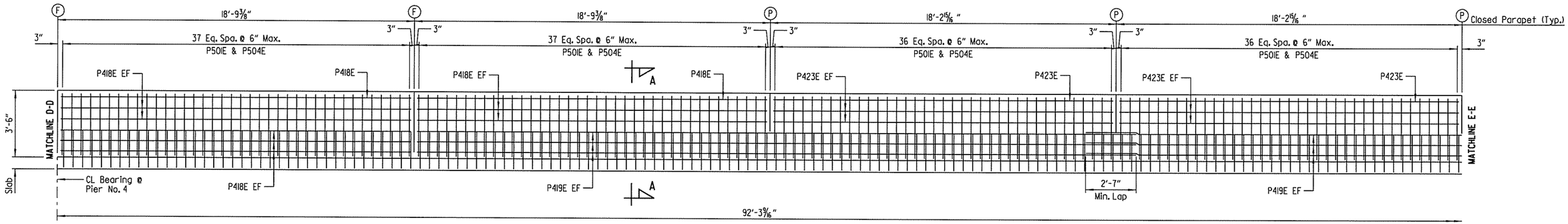

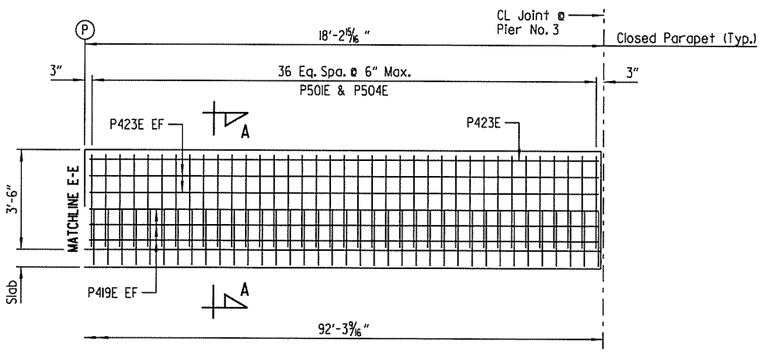

RIGHT PARAPET - ELEVATION

(Looking At Inside Face Of Parapet Rail)
Scale: 3/8" = 1'-0"

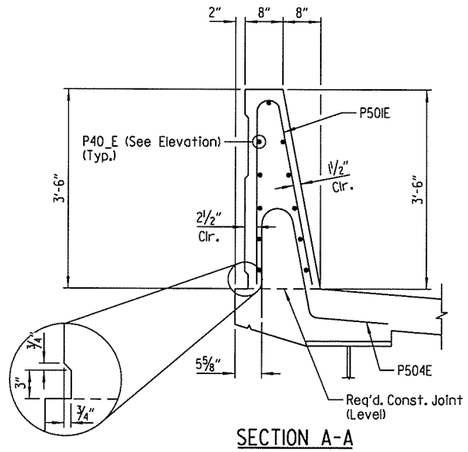

SECTION A-A

Scale: 3/4" = 1'-0"

(P) CL Partial-Depth Parapet Joint (1/4" to 1" Max.) as shown on "PART REINFORCING PLAN" on Dwg. Nos. 55786 & 55787. Stop 1'-6" from top of slab.

(F) CL Full-Depth Parapet Joint (1/4" to 1" Max.) as shown on "PART REINFORCING PLAN" on Dwg. Nos. 55786 & 55787. Stop 4" from top of slab.

LEGEND

EF = Each Face

NOTES:
All dimensions shown are measured along right gutterline.

For "BAR LIST" and "BAR BENDING DIAGRAM", see Dwg. No. 55787.

For additional parapet details, see Dwg. No. 55776.

STATE OF ARKANSAS
LICENSED PROFESSIONAL ENGINEER
No. 14498
ADAM B. HALL
7-18-14
BRIDGE ENGINEER

SHEET 14 OF 14
DETAILS OF 354'-7" CONTINUOUS COMPOSITE PLATE GIRDER UNIT
RAMP 4 OVER I-40
PULASKI COUNTY

ROUTE 430 SEC. 21

ARKANSAS STATE HIGHWAY COMMISSION

LITTLE ROCK, ARK.

DRAWN BY: JLH DATE: FEB. 2014 FILENAME: BCA0609x6_S30.DGN
CHECKED BY: SRY DATE: MAR. 2014 SCALE: AS SHOWN
DESIGNED BY: ABH DATE: FEB. 2014

BRIDGE NO. 05324 DRAWING NO. 55791

SRYancey 7/18/2014 8:44:59 AM
WORKSPACE: AHTD_Bridge
L:\ROW\NOT709 - I-40 at I-430 Interchange Modifications\Drawings\BCA0609x1.530 (Unit 2 - Parapet - Right21.dgn
REVISED DATE:

DATE REVISED	DATE FILMED	DATE REVISED	DATE FILMED	FED. ROAD DIST. NO.	STATE	FED. AID PROJ. NO.	SHEET NO.	TOTAL SHEETS
				6	ARK.			
				JOB NO.		CA0609	347	693
				(1) 05324		JOINT DETAILS		55792

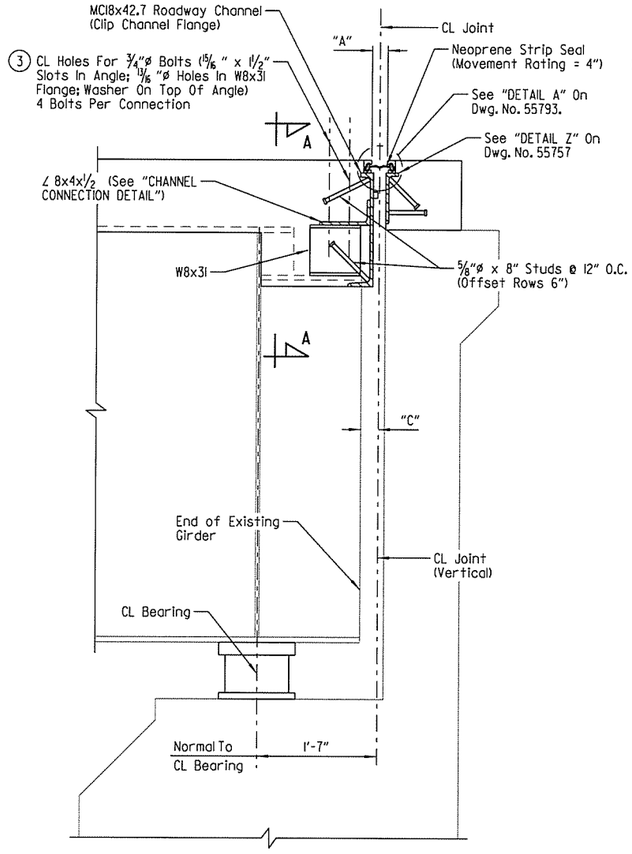

SECTION THRU JOINT AT ABUTMENT NOS. 1 & 2 (GIRDERS 2-4)

Note: Section Taken Normal To CL Bearing
No Scale

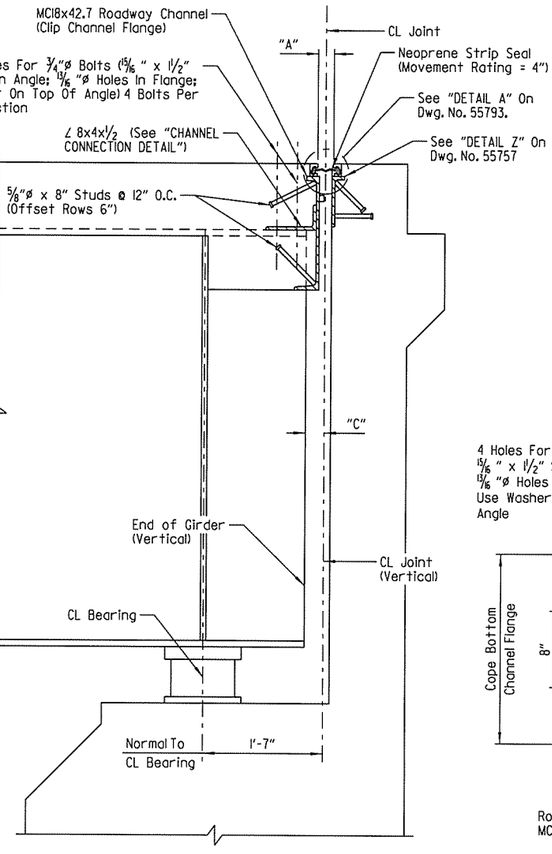

SECTION THRU JOINT AT ABUTMENT NO. 1 & 2 (GIRDERS A-C)

Note: Section Taken Normal To CL Bearing
No Scale

NOTE:
For "SECTION A-A", see Dwg. No. 55793.

(3) Holes in W8x31 and Girder Flange may be field drilled. Field drilling shall be shown on the approved shop drawings.

GENERAL NOTES

EXPANSION NEOPRENE STRIP SEAL: The expansion device shall provide a movement as shown in the "STRIP SEAL JOINT DATA" table. The expansion joint shall be capable of sealing the deck surface and parapet area to prevent moisture and other contaminants from descending through the joint.

All structural steel shall be AASHTO M270, Grade 50 unless noted otherwise. Structural steel completely embedded in concrete need not be painted.

All structural steel, except for the steel extrusion for the strip seal, shall be paid for as "STRUCTURAL STEEL IN PLATE GIRDER SPANS (M270, GR. 50)". The steel extrusion and neoprene strip seal shall be paid for in accordance with Section 809.

Details of the proposed slider plate assembly shall be submitted to and approved by the Engineer prior to fabrication of the structural steel at the expansion device.

All exposed surfaces are to be cleaned and painted in accordance with Section 638 or as directed by the Engineer. Painting shall not be paid for directly but shall be considered subsidiary to "STRUCTURAL STEEL IN PLATE GIRDER SPANS (M270, GR. 50)".

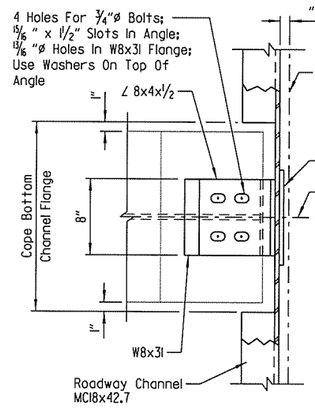

ABUT. NOS. 1 & 2 GIRDERS 2-4

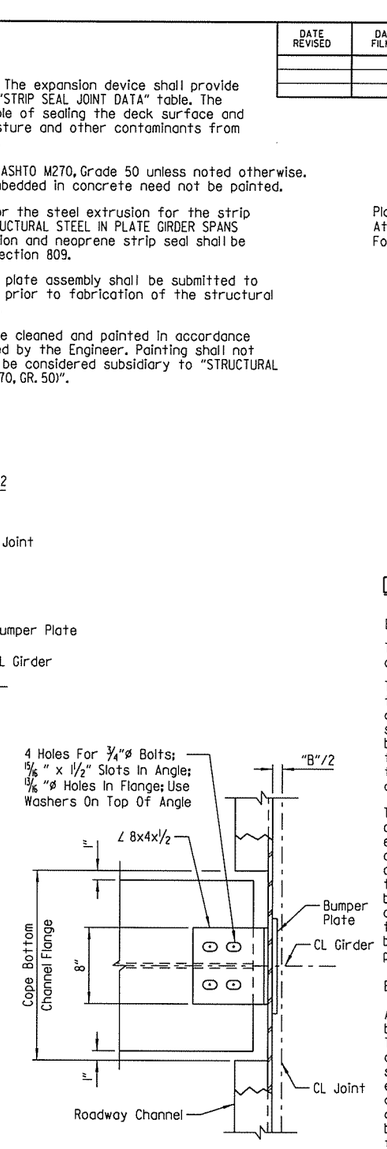

ABUT. NOS. 1 & 2 & PIER NO. 3 GIRDERS A-C

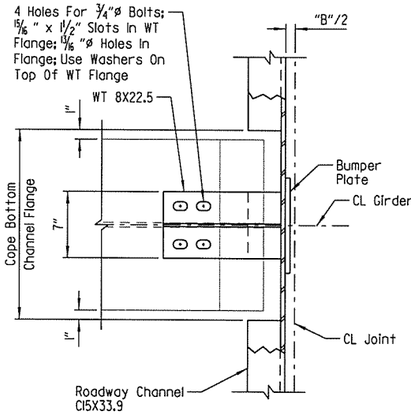

PIER NO. 3 GIRDERS 2-4

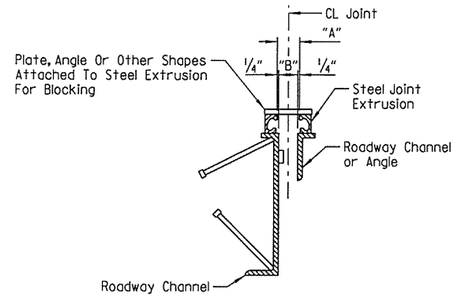

Note:
Each expansion joint device shall be blocked in the shop by the Fabricator to the dimension shown for 60°F, and the blocking details shall be shown on the shop drawings. Blocking shall be placed within 2' of each end of the device and with a maximum spacing of 8'.

DETAILS FOR BLOCKING EXPANSION JOINT DEVICE

EXPANSION DEVICE INSTALLATION AT ABUTMENT NOS. 1 & 2:

The Contractor may elect to install the expansion device using one of the following two alternatives.

The concrete span pour adjacent to joint shall be placed before the abutment backwall is placed. After the abutment backwall forms are in place and the girders erected, the blocked expansion device shall be installed and adjusted for grade. All connection bolts shall be fully tightened prior to placing the deck concrete adjacent to the abutment. Immediately prior to pouring the backwall concrete, the blocking shall be removed, the opening adjusted for temperature and grade, and the backwall constructed.

The backwall portion of Stage I Construction shall be poured to the optional construction joint after girders are erected. The blocked expansion device shall be installed and adjusted for grade. All connection bolts shall be fully tightened prior to placing the deck concrete adjacent to the abutment. The concrete span pour adjacent to joint shall be placed prior to pouring the remainder of the backwall. Immediately prior to pouring the remainder of the backwall concrete, the blocking shall be removed and the opening adjusted for temperature and grade. Backfill shall not be placed behind the backwall until the deck concrete on the adjacent span has been placed.

EXPANSION DEVICE INSTALLATION AT PIER NO. 3:

After all girders on both sides of the joint are erected, the blocked expansion device shall be installed and adjusted for grade. The connection bolts shall be tightened only on the unit whose concrete will be poured first. Connection bolts on the second unit shall be loosely installed to allow for thermal movements and for end rotation of the girders of the first unit while the concrete deck is poured. After the concrete on the first unit has hardened and immediately prior to pouring concrete for the second unit, the blocking shall be removed and the joint width shall be adjusted for temperature and grade. After the joint width has been set, the connection bolts on the second unit shall be tightened, and concrete in the second unit can then be poured. A joint opening adjustment is not required for end rotation of the girders caused by the weight of the slab and parapets.

STRIP SEAL JOINT DATA

Location	Girders	Movement Rating	"A" Width Perpendicular To Joint At 24 Hour Average Temperature (1) Of:			"B" Width Perpendicular To Joint At 24 Hour Average Temperature (1) Of:			"C" Perpendicular To Joint At 24 Hour Average Temperature Of 60°F
			40°F	60°F	80°F	40°F	60°F	80°F	
Abut. No. 1	A-C	4"	2 1/8"	2 1/2"	2 1/8"	2 3/8"	2"	1 5/8"	3"
Abut. No. 1	2-4	4"	2 1/8"	2 1/2"	2 1/8"	2 3/8"	2"	1 5/8"	3 3/4" (2)
Pier No. 3	A-C	5"	3 5/8"	3"	2 3/8"	3 1/8"	2 1/2"	1 7/8"	3"
Pier No. 3	2-4	5"	3 5/8"	3"	2 3/8"	3 1/8"	2 1/2"	1 7/8"	3 1/4" (2)
Abut. No. 2	A-C	4"	2 11/16 "	2 1/2"	2 5/16 "	2 3/16 "	2"	1 13/16 "	3"
Abut. No. 2	2-4	4"	2 11/16 "	2 1/2"	2 5/16 "	2 3/16 "	2"	1 13/16 "	2 3/4" (2)

(1) The temperature used to set the joint opening shall be the approximate average air temperature during the 24 hour period immediately before the bolts are tightened. The Engineer shall establish the temperature. Installation is limited to 40°F min. and 80°F max. Interpolation of the table may be necessary. The temperature limitations of the lubricant-adhesive Manufacturer shall be observed.

(2) Dimensions determined by existing plans, Contractor to field verify the location of existing girders.

CHANNEL CONNECTION DETAIL

No Scale

STATE OF ARKANSAS
LICENSED PROFESSIONAL ENGINEER
No. 14058
SETH R. YANCEY
7-10-14
BRIDGE ENGINEER

SHEET 1 OF 2
DETAILS OF STRIP SEAL JOINT
RAMP 4 OVER I-40
PULASKI COUNTY

ROUTE 430 SEC. 21

ARKANSAS STATE HIGHWAY COMMISSION
LITTLE ROCK, ARK.

DRAWN BY: JLH DATE: FEB. 2014 FILENAME: BCA0609x6_JI.DGN
CHECKED BY: SRY DATE: MAR. 2014 SCALE: AS SHOWN
DESIGNED BY: JLH DATE: FEB. 2014
BRIDGE NO. 05324 DRAWING NO. 55792

SRYancey 7/18/2014 8:45:00 AM
WORKSPACE: AHTD Bridge
L:\ZOMNOT709 - I-40 at I-430 Interchange Modifications\Drawings\BCA0609xJI\Strip Seal Joint 1 of 2i.dgn
REVISED DATE:

DATE REVISED	DATE FILMED	DATE REVISED	DATE FILMED	FED. ROAD DIST. NO.	STATE	FED. AID PROJ. NO.	SHEET NO.	TOTAL SHEETS
				6	ARK.			
				JOB NO.		CA0609	348	693
				(1) 05324		JOINT DETAILS		55793

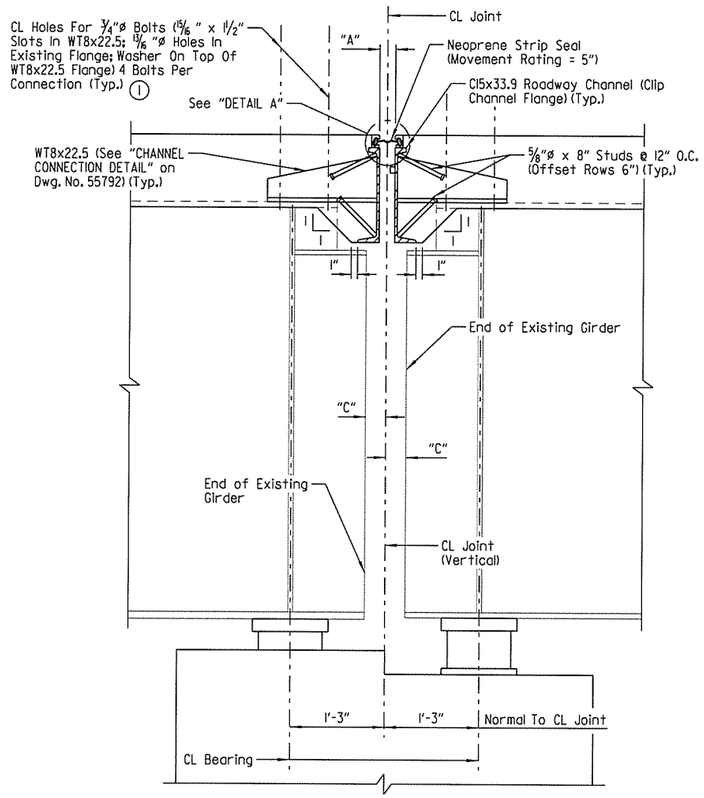

SECTION THRU JOINT AT PIER NO. 3 (GIRDERS 2-4)

Note: Section Taken Normal To CL Joint
No Scale

NOTE:
For variables "A" "B", and "C", see "STRIP SEAL JOINT DATA" on Dwg. No. 55792.

For "GENERAL NOTES", see Dwg. No. 55792.

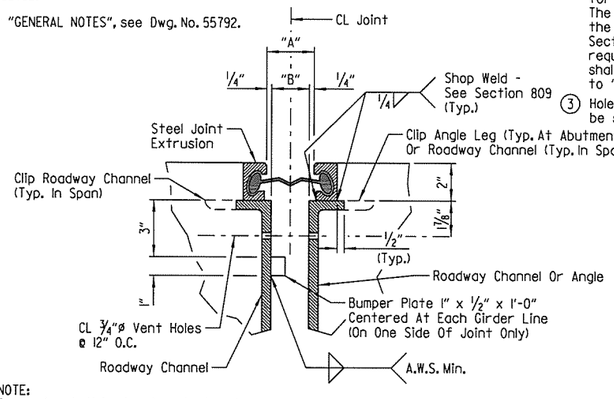

NOTE:
Concrete shall be hand packed under the joint armor in the backwall and in the span.

DETAIL A

Scale: 3" = 1'-0"

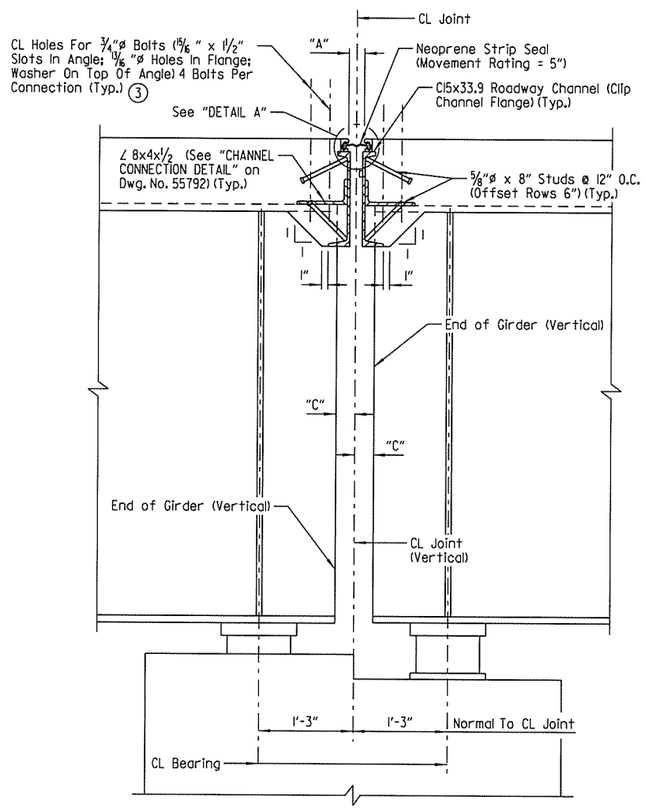

SECTION THRU JOINT AT PIER NO. 3 (GIRDERS A-C)

Note: Section Taken Normal To CL Joint
No Scale

(1) In the event that 15/16"ø holes are drilled in the field, the Contractor shall provide the fabricator with the locations of the holes so as to properly align with slots in the WT8x22.5.

(2) Slider plates shall be AASHTO M270 - Gr. 36 and shall be paid for as "STRUCTURAL STEEL IN PLATE GIRDER SPANS (M270, Gr. 50)". The surfaces of the plates which will not be in contact with the concrete shall be cleaned and painted in accordance with Section 638, or as directed by the Engineer. Only one coat is required and shall be applied in the fabricator's shop. Painting shall not be paid for directly but will be considered subsidiary to "STRUCTURAL STEEL IN PLATE GIRDER SPANS (M270, Gr. 50).

(3) Holes in Girder Flange may be field drilled. Field drilling shall be shown on the approved shop drawings.

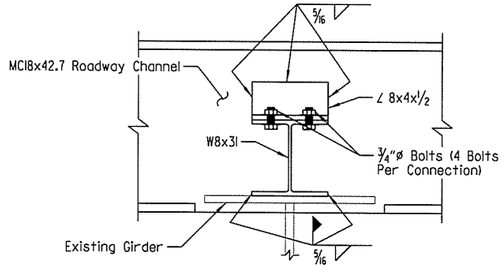

SECTION A-A

Scale: 1½" = 1'-0"

NOTE:
Concrete turndown not shown for clarity.

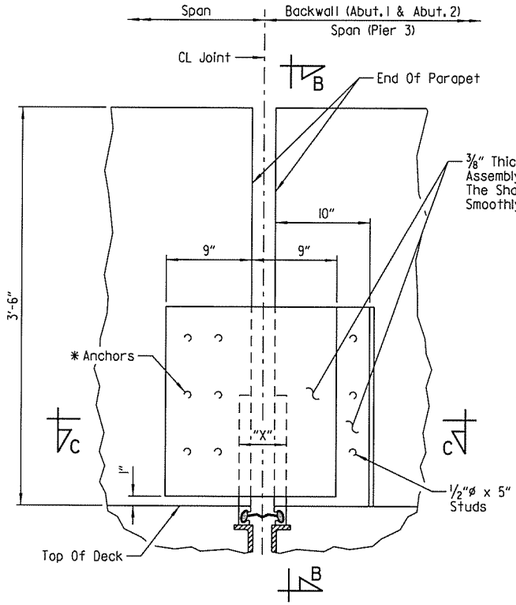

DETAIL OF STRIP SEAL AT PARAPET GUTTERLINE

No Scale

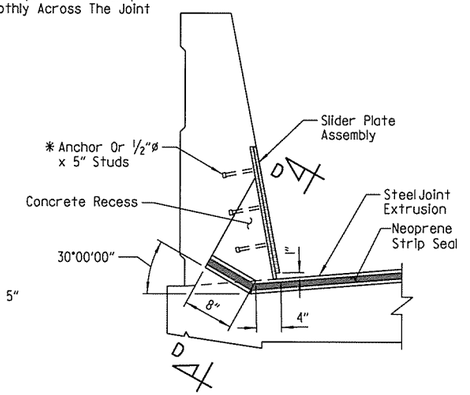

SECTION B-B

Scale: 1" = 1'-0"

NOTE:
Dimension "X" equals the width of the recess in parapet at gutterline to allow for removal or repair of joint.

* The method of attachment of the slider plate assembly or similar device must be such that it may be removed in order to provide for future replacement of the neoprene seal.

Method of installation and fabrication shall be determined by the Manufacturer.

Anchors will not be paid for directly but will be considered subsidiary to "STRUCTURAL STEEL IN PLATE GIRDER SPANS (M270, GR. 50)".

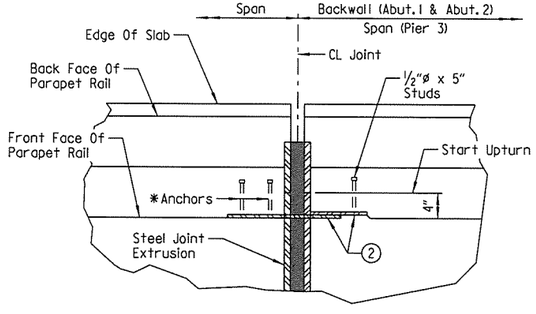

SECTION C-C

Scale: 1" = 1'-0"

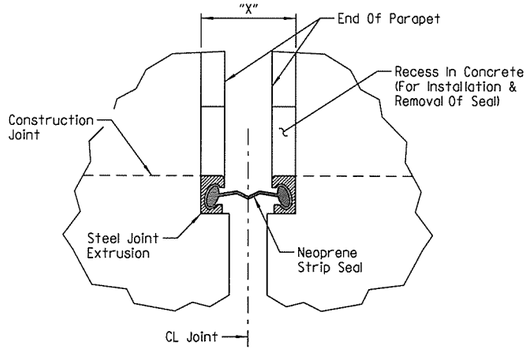

SECTION D-D

No Scale

STATE OF ARKANSAS
LICENSED PROFESSIONAL ENGINEER
No. 14058
SETH R. YANCEY
7-18-14
BRIDGE ENGINEER

SHEET 2 OF 2
DETAILS OF STRIP SEAL JOINT
RAMP 4 OVER I-40
PULASKI COUNTY

ROUTE 430 SEC. 21

ARKANSAS STATE HIGHWAY COMMISSION
LITTLE ROCK, ARK.

DRAWN BY: JLH DATE: FEB. 2014 FILENAME: BCA0609x6_J2.DGN
CHECKED BY: SRY DATE: MAR. 2014 SCALE: AS SHOWN
DESIGNED BY: JLH DATE: FEB. 2014

BRIDGE NO. 05324 DRAWING NO. 55793

SRYancey 7/18/2014 8:45:00 AM
WORKSPACE: AHTD Bridge
L:\X2011\11001709 - I-40 at I-430 Interchange Modifications\Drawings\BCA0609x6_J2 (Strip Seal Joint 2 of 2).dgn
REVISED DATE:

DATE REVISED	DATE FILMED	DATE REVISED	DATE FILMED	FED. ROAD DIST. NO.	STATE	FED. AID PROJ. NO.	SHEET NO.	TOTAL SHEETS
				6	ARK.			
				JOB NO.		CA0609	349	693
				(1) 05324		ELASTOMERIC BEARINGS		55794

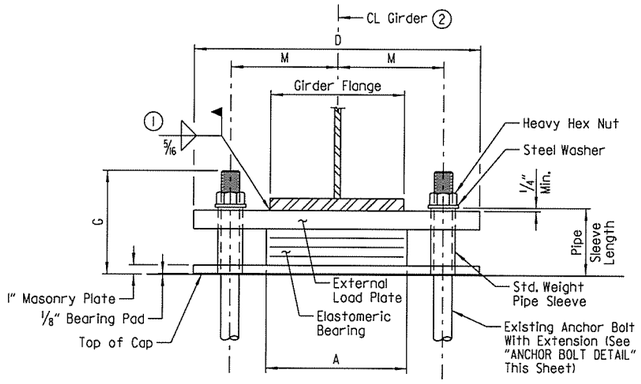

FRONT VIEW - AT ABUTMENT NOS. 1 & 2 (BEAM 4)

(1) Care shall be taken to ensure that the external load plate is in full and complete contact with the girder flange before welding begins.

(2) Centerline elastomeric pad shall be aligned with centerline girder.

(3) Remove existing anchor bolts 1½" below the top of cap and fill holes with approved non-shrink grout. New anchor bolts have been positioned to provide 1" clearance between new and existing anchor bolts. The Contractor shall verify the location of existing anchor bolts and the cap reinforcing for the abutments. The existing reinforcing for the abutments may be drilled.

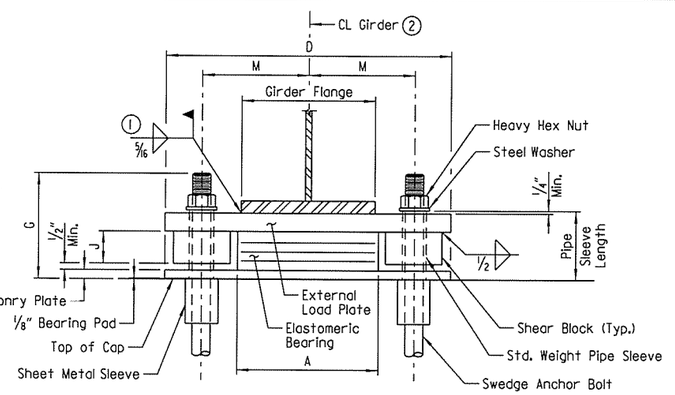

FRONT VIEW - AT ABUTMENT NOS. 1 & 2 (BEAM A, B, C, 2 & 3) AND PIER NO. 3 (AHEAD)

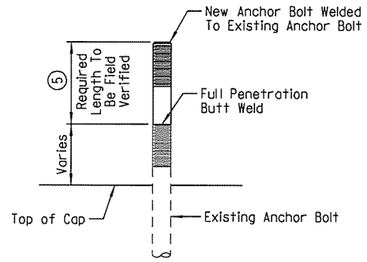

ANCHOR BOLT DETAIL
(For Extending Existing Anchor Bolts)

(5) Bolt extensions shall begin at or below existing bolt threads.

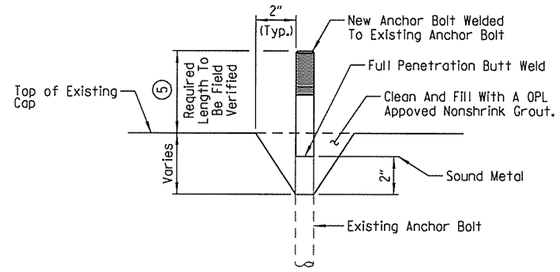

ALTERNATE ANCHOR BOLT DETAIL
(For Extending Existing Anchor Bolts)

(This detail shall be used when existing anchor bolt has broken off in the bent cap, threads are located in the bent cap or a section loss of 30 percent or greater of existing anchor bolt has occured, determined by the Engineer.)

NOTE:
If existing anchor bolts are sound and length is sufficient to fully thread the nut with new steel in place, no extension is required.

NOTE:
For "GENERAL NOTES", See Dwg. No. 55795.

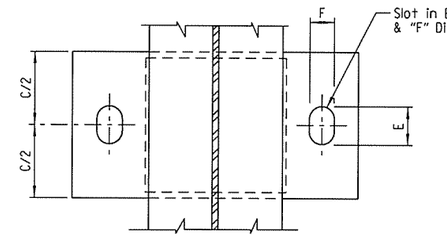

PLAN VIEW - AT ABUTMENT NOS. 1 & 2 (BEAM 4)

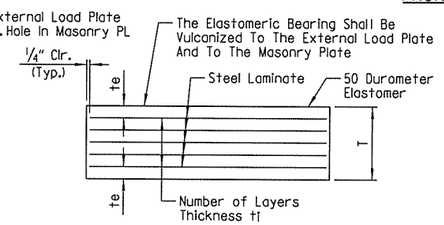

t_e = Thickness Of Elastomer Cover On Top And Bottom Of Pad
t_i = Thickness Of Elastomer Between Steel Laminae
N = Number Of Elastomer Layers Of Thickness t_i

ELASTOMERIC BEARING

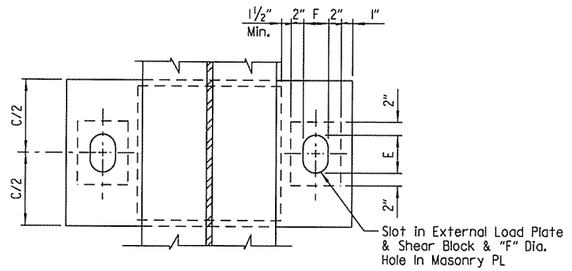

PLAN VIEW - AT ABUTMENT NOS. 1 & 2 (BEAM A, B, C, 2 & 3) AND PIER NO. 3 (AHEAD)

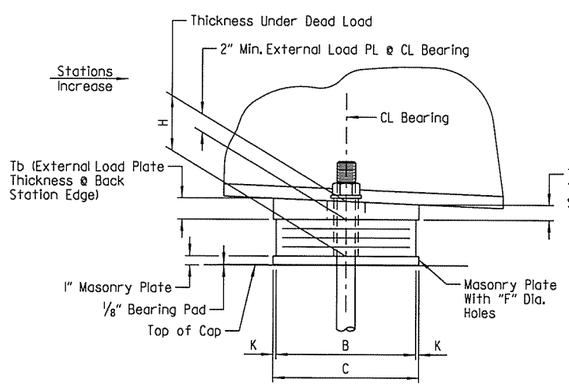

SIDE VIEW - AT ABUTMENT NOS. 1 & 2 (BEAM 4)

NOTE:
The direction of the bevel of the external load plate may not be accurately depicted with respect to Ta and Tb values shown in "TABLE OF FABRICATOR VARIABLES".

Unless otherwise approved by the Engineer, welding of the external load plate at expansion bearings to the girder will be allowed only when: 1) The approximate average air temperature during the 24 hour period immediately preceding welding is between 40°F and 80°F; and 2) The slots in the external load plate are positioned to center on the anchor bolts; and 3) No horizontal deformation of the elastomeric pad is evident. If welding at other temperatures is required, the Engineer will provide adjustment data.

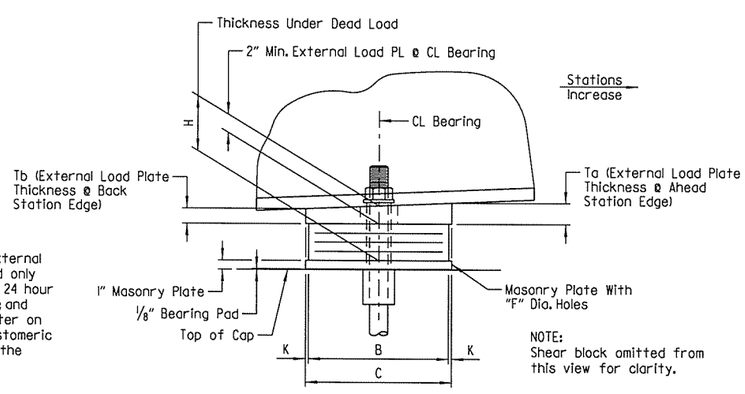

NOTE:
Shear block omitted from this view for clarity.

SIDE VIEW - AT ABUTMENT NOS. 1 & 2 (BEAM A, B, C, 2 & 3) AND PIER NO. 3 (AHEAD)

TABLE OF FABRICATOR VARIABLES

Bridge No.	Location: Bent No.(s)	Location: Beam Or Girder No.	Bearing Type	No. Of Bearings Each Bent	*Maximum Design Load (Kips)	G	H	Elastomeric Pad: A	B	N	t_i	t_e	No. & Thickness Of Steel Laminate	T	External Load Plate: C	D	E	F	J	K	M	T_a	T_b	Anchor Bolt: (Dia. x L)	Grade	Pipe Sleeve Size (Dia. x L)	Sheet Metal Sleeve Size (Dia. x L)	Steel Washer Size (O.D.)
05324	Abut. 1	A, B, C	Exp.	3	80	9 7/16"	6 11/16"	18"	8"	5	1/2"	1/4"	6 @ 12 Ga.	3 5/8"	9"	35 1/2"	6"	2 1/4"	3"	1/2"	13 5/8"	2.09"	1.91"	1 1/2" x 27"	55	1 1/2" x 6 5/16"	3" x 7"	3"
	(3) Abut. 1	2-3	Exp.	2	80	9 7/16"	6 11/16"	18"	8"	5	1/2"	1/4"	6 @ 12 Ga.	3 5/8"	9"	35 1/2"	6"	2 1/4"	3"	1/2"	13 5/8"	2.09"	1.91"	1 1/2" x 27"	55	1 1/2" x 6 5/16"	3" x 7"	3"
	(4) Abut. 1	4	Exp.	1	80	9 7/16"	6 11/16"	18"	8"	5	1/2"	1/4"	6 @ 12 Ga.	3 5/8"	9"	28 1/2"	6"	2 1/4"	-	1/2"	11"	2.09"	1.91"	1 1/2" x 10"	36	1 1/2" x 6 5/16"	-	-
	3 Ahead	All	Exp.	6	111	9 7/16"	6 11/16"	18"	8"	5	1/2"	1/4"	6 @ 12 Ga.	3 5/8"	9"	35 1/2"	6"	2 1/4"	3"	1/2"	13 5/8"	1.99"	2.01"	1 1/2" x 29"	55	1 1/2" x 6 5/16"	3" x 15"	3"
	Abut. 2	A, B, C	Exp.	3	133	9 1/4"	6 1/2"	18"	8"	4	1/2"	1/4"	5 @ 12 Ga.	3"	9"	35 1/2"	4"	2 1/4"	2 1/2"	1/2"	13 5/8"	2.33"	2.55"	1 1/2" x 26"	55	1 1/2" x 6 3/4"	3" x 7"	3"
	(3) Abut. 2	2-3	Exp.	2	133	9 1/4"	6 1/2"	18"	8"	4	1/2"	1/4"	5 @ 12 Ga.	3"	9"	35 1/2"	4"	2 1/4"	2 1/2"	1/2"	13 5/8"	2.33"	2.55"	1 1/2" x 26"	55	1 1/2" x 6 3/4"	3" x 7"	3"
	(4) Abut. 2	4	Exp.	1	133	9 1/4"	6 1/2"	18"	8"	4	1/2"	1/4"	5 @ 12 Ga.	3"	9"	28 1/2"	4"	2 1/4"	-	1/2"	11"	2.33"	2.55"	1 1/2" x 10"	36	1 1/2" x 6 3/4"	-	-

* Maximum Design Load = Service I Limit State

** The Dimension "E" Does Not Apply To Masonry Plates. See "PLAN VIEW - AT ABUTMENT NOS. 1 & 2 AND PIER NO. 3 (AHEAD)"

(4) Anchor bolt length is for estimating purposes only. Actual length will be determined in the field by the Engineer.

STATE OF ARKANSAS
LICENSED PROFESSIONAL ENGINEER
No. 13418
MASON R. ATKINSON
7/18/14
BRIDGE ENGINEER

SHEET 1 OF 2
DETAILS OF ELASTOMERIC BEARINGS
RAMP 4 OVER I-40
PULASKI COUNTY
ROUTE 430 SEC. 21
ARKANSAS STATE HIGHWAY COMMISSION
LITTLE ROCK, ARK.

DRAWN BY: HEW DATE: FEB. 2014 FILENAME: BCA0609x6_El.DGN
CHECKED BY: JES DATE: APR. 2014 SCALE: NO SCALE
DESIGNED BY: MRA DATE: FEB. 2014
BRIDGE NO. 05324 DRAWING NO. 55794

SRYancey 7/8/2014 8:45:01 AM
WORKSPACE: AHTD Bridge
L:\2011\11007709 - I-40 at I-430 Interchange Modifications\Drawings\BCA0609x1_El(Elastomeric Bearing Details 1 of 2).dgn
REVISED DATE:

DATE REVISED	DATE FILMED	DATE REVISED	DATE FILMED	FED. ROAD DIST. NO.	STATE	FED. AID PROJ. NO.	SHEET NO.	TOTAL SHEETS
				6	ARK.			
				JOB NO.		CA0609	350	693
				①	05324	ELASTOMERIC BEARINGS		55795

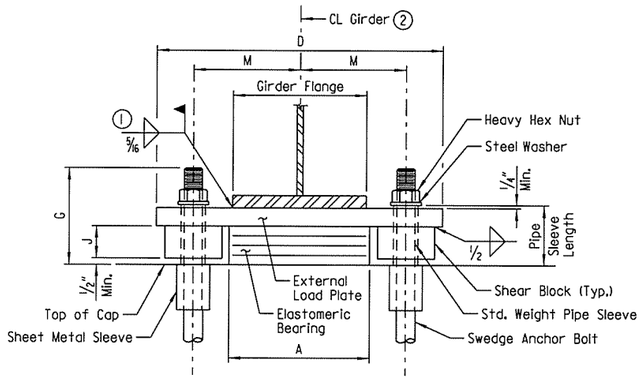

FRONT VIEW - AT PIER NOS. 2 & 5

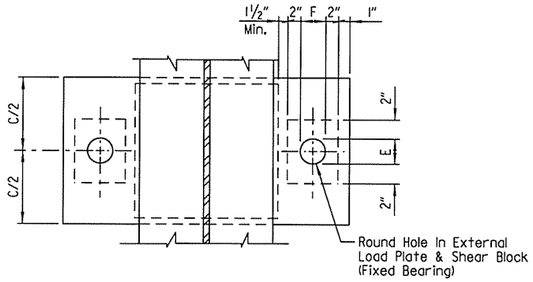

PLAN VIEW - AT PIER NOS. 2 & 5

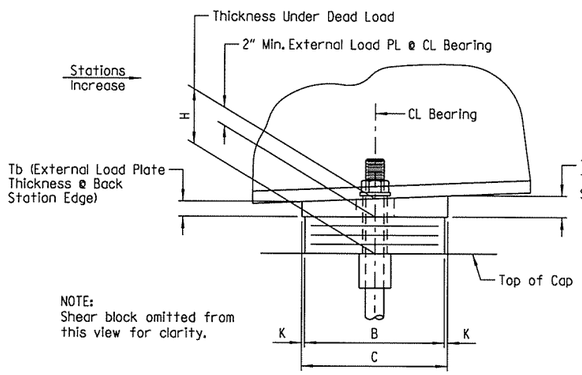

SIDE VIEW - AT PIER NOS. 2 & 5

① Care shall be taken to ensure that the external load plate is in full and complete contact with the girder flange before welding begins.

② Centerline elastomeric pad shall be aligned with centerline girder.

NOTES:
For "ELASTOMERIC BEARING", see Dwg. No. 55794.

NOTE:
The deflection of the bevel of the external load plate may not be accurately depicted with respect to Ta and Tb values shown in "TABLE OF FABRICATOR VARIABLES".

Unless otherwise approved by the Engineer, welding of the external load plate at expansion bearings to the girder will be allowed only when: 1) The approximate average air temperature during the 24 hour period immediately preceding welding is between 40°F and 80°F; and 2) The slots in the external load plate are positioned to center on the anchor bolts; and 3) No horizontal deformation of the elastomeric pad is evident. If welding at other temperatures is required, the Engineer will provide adjustment data.

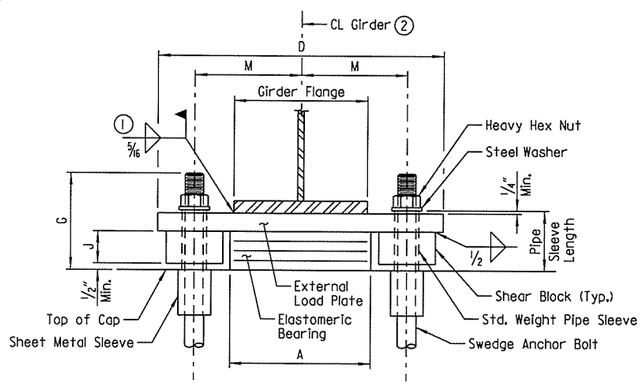

FRONT VIEW - AT PIER NOS. 1, 3 (BACK) & 4

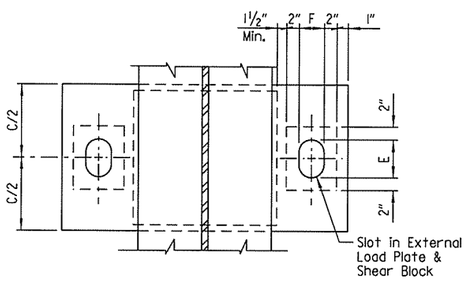

PLAN VIEW - AT PIER NOS. 1, 3 (BACK) & 4

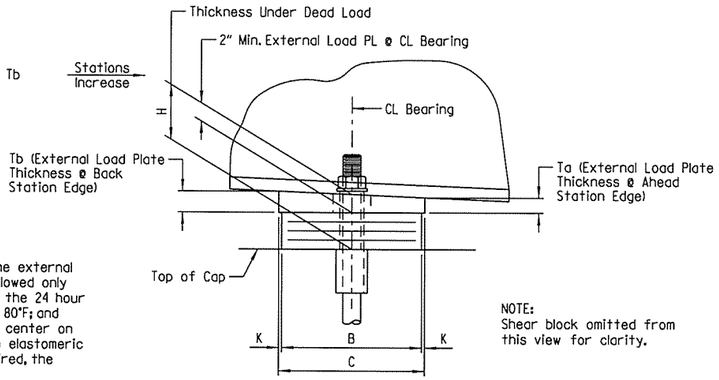

SIDE VIEW - AT PIER NOS. 1, 3 (BACK) & 4

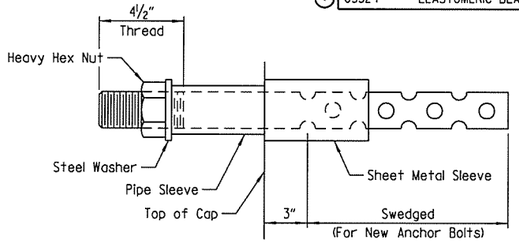

ANCHOR BOLT DETAIL
(For New Anchor Bolts)

NOTE:
Anchor bolts may be cast in place or drilled and grouted into place. If anchor bolts are to be cast in place, the galvanized sheet metal sleeves will not be required.

If anchor bolts are to be drilled and grouted in place, the galvanized sheet metal sleeves shall be cast in place as shown. Sleeves shall be dry packed with styrofoam, urethane foam or approved equal prior to pouring of concrete. After pouring of the cap and prior to erection of structural steel, the dry pack shall be removed and holes for the anchor bolts shall be accurately drilled into the masonry. Bolts placed in drilled holes shall be accurately set and fixed using a QPL approved epoxy or non-shrink grout that completely fills the holes. Galvanized sheet metal sleeves will not be paid for directly but will be considered subsidiary to the item "STRUCTURAL STEEL IN PLATE GIRDER SPANS (M270-GR. 50)".

GENERAL NOTES

Hex nuts, steel washers and pipe sleeves on all existing anchor bolts shall be removed and discarded. New hex nuts, steel washers and pipe sleeves shall be used on all new anchor bolts and extensions. Existing elastomeric bearings and load plates shall be removed and replaced as shown in the details.

Work required to remove and dispose of portions of the existing bridge and extend existing anchor bolts will not be paid for directly but will be considered subsidiary to the item "MODIFICATION OF EXISTING BRIDGE STRUCTURE (BRIDGE NO. 05324)". Elastomeric bearings shall conform to Section 808 and shall be paid for at the unit price bid for "ELASTOMERIC BEARINGS."

External load plates and shear blocks shall conform to AASHTO M270, Grade 50. Pipe sleeves shall be ASTM A53, Grade B, and shall be galvanized to conform to AASHTO M232, Class C or ASTM B695, Class 50.

External load plates, masonry plates, and shear blocks shall be completely fabricated (including bevel and bolt holes) and shall be cleaned before vulcanizing to the elastomeric bearing. The surfaces in contact with the elastomeric bearing shall be cleaned in accordance with Subsection 808.03. Other surfaces shall be blast cleaned in accordance with Subsection 807.84(b) for painted steel and painted in accordance with Subsection 807.75. Mask areas of field welding. Painting will not be paid for directly but will be considered subsidiary to the item "ELASTOMERIC BEARINGS".

New anchor bolts, washers and nuts shall conform to Subsection 807.07. The anchor bolt grade of steel shall be as specified in the "TABLE OF FABRICATOR VARIABLES". Indentations shall be circular with rounded bottoms and staggered as shown in the details.

Pipe sleeves, anchor bolts, washers and nuts shall be paid for at the unit price bid for "STRUCTURAL STEEL IN PLATE GIRDER SPANS (M270, GR. 50)". External load plates, masonary plates, 18" bearing pad and shear blocks will not be measured or paid for separately but will be included in the unit price bid for "ELASTOMERIC BEARINGS".

Bearings with masonry plates shall be seated in accordance with Subsection 807.66. Bearings without masonry plates shall be seated in accordance with Subsection 808.08. This work and materials are considered subsidiary to the item "ELASTOMERIC BEARINGS" and will not be paid for directly.

Anchor bolt extensions shall be the same diameter as the existing anchor bolt, ASTM A36 and galvanized. Repair damaged galvanized surfaces in accordance with Subsection 807.88.

At Abutment Nos. 1 & 2 the Contractor shall field verify anchor bolt locations and plate dimensions prior to fabrication.

TABLE OF FABRICATOR VARIABLES

Bridge No.	Location: Bent No.(s)	Location: Beam Or Girder No.	Bearing Type	No. Of Bearings Each Bent	*Maximum Design Load (Kips)	G	H	Elastomeric Pad: A	B	N	t_i	t_e	No. & Thickness Of Steel Laminate	T	External Load Plate: C	D	E	F	J	K	M	T_a	T_b	Anchor Bolt: (Dia. x L)	Anchor Bolt: Grade	Pipe Sleeve Size (Dia. x L)	Sheet Metal Sleeve Size (Dia. x L)	Steel Washer Size (O.D.)
05324	Pier 1	All	Exp.	6	273	8 5/16"	5 5/16"	18"	12"	5	1/2"	1/4"	6 @ 12 Ga.	3 5/8"	13"	35 1/2"	4 3/4"	2 1/4"	3"	1/2"	13 5/8"	2.12"	1.88"	1 1/2" x 28"	55	1 1/2" x 5 5/16"	3" x 15"	3"
	Pier 2	All	Fixed	6	482	8 3/16"	4 5/16"	22"	13"	4	1/2"	1/4"	5 @ 12 Ga.	3"	14"	41 1/4"	3 1/8"	3 1/8"	2 1/2"	1/2"	16 1/16"	2.06"	1.94"	2" x 32"	55	2 1/2" x 5 3/16"	4" x 15"	3 3/4"
	3 Back	All	Exp.	6	173	8 5/16"	5 5/16"	20"	8"	5	1/2"	1/4"	6 @ 12 Ga.	3 5/8"	9"	37 1/2"	4 3/4"	2 1/4"	3"	1/2"	14 5/8"	2.01"	1.99"	1 1/2" x 28"	55	1 1/2" x 5 1/16"	3" x 15"	3"
	Pier 4	All	Exp.	6	318	7 11/16"	4 5/16"	20"	12"	4	1/2"	1/4"	5 @ 12 Ga.	3"	13"	37 1/2"	4 1/2"	2 1/4"	2 1/2"	1/2"	14 5/8"	1.95"	2.05"	1 1/2" x 27"	55	1 1/2" x 5 3/16"	3" x 15"	3"
	Pier 5	All	Fixed	6	365	8 3/16"	4 5/16"	18"	12"	4	1/2"	1/4"	5 @ 12 Ga.	3"	13"	37 1/4"	3 1/8"	3 1/8"	2 1/2"	1/2"	14 1/16"	1.89"	2.11"	2" x 32"	55	2 1/2" x 5 3/16"	4" x 15"	3 3/4"

* Maximum Design Load = Service Load

STATE OF ARKANSAS
LICENSED PROFESSIONAL ENGINEER
No. 13418
MASON R. ATKINSON
BRIDGE ENGINEER

SHEET 2 OF 2
DETAILS OF ELASTOMERIC BEARINGS
RAMP 4 OVER I-40
PULASKI COUNTY
ROUTE 430 SEC. 21
ARKANSAS STATE HIGHWAY COMMISSION
LITTLE ROCK, ARK.

DRAWN BY: HEW DATE: FEB. 2014 FILENAME: BCA0609x6_E2.DGN
CHECKED BY: JES DATE: APR. 2014 SCALE: NO SCALE
DESIGNED BY: MRA DATE: FEB. 2014
BRIDGE NO. 05324 DRAWING NO. 55795

SRYancey 7/18/2014 8:45:02 AM
WORKSPACE: AHTD Bridge
L:\CON\BDIT09 - I-40 at I-430 Interchange Modifications\Drawings\BCA0609x1_E2 (Elastomeric Bearing Details 2 of 2).dgn
REVISED DATE:

DATE REVISED	DATE FILMED	DATE REVISED	DATE FILMED

FED. ROAD DIST. NO.	STATE	FED. AID PROJ. NO.	SHEET NO.	TOTAL SHEETS
6	ARK.			
JOB NO.		CA0609	351	693
(1) BM 040-60-47 SIGN STRUCTURE				55796

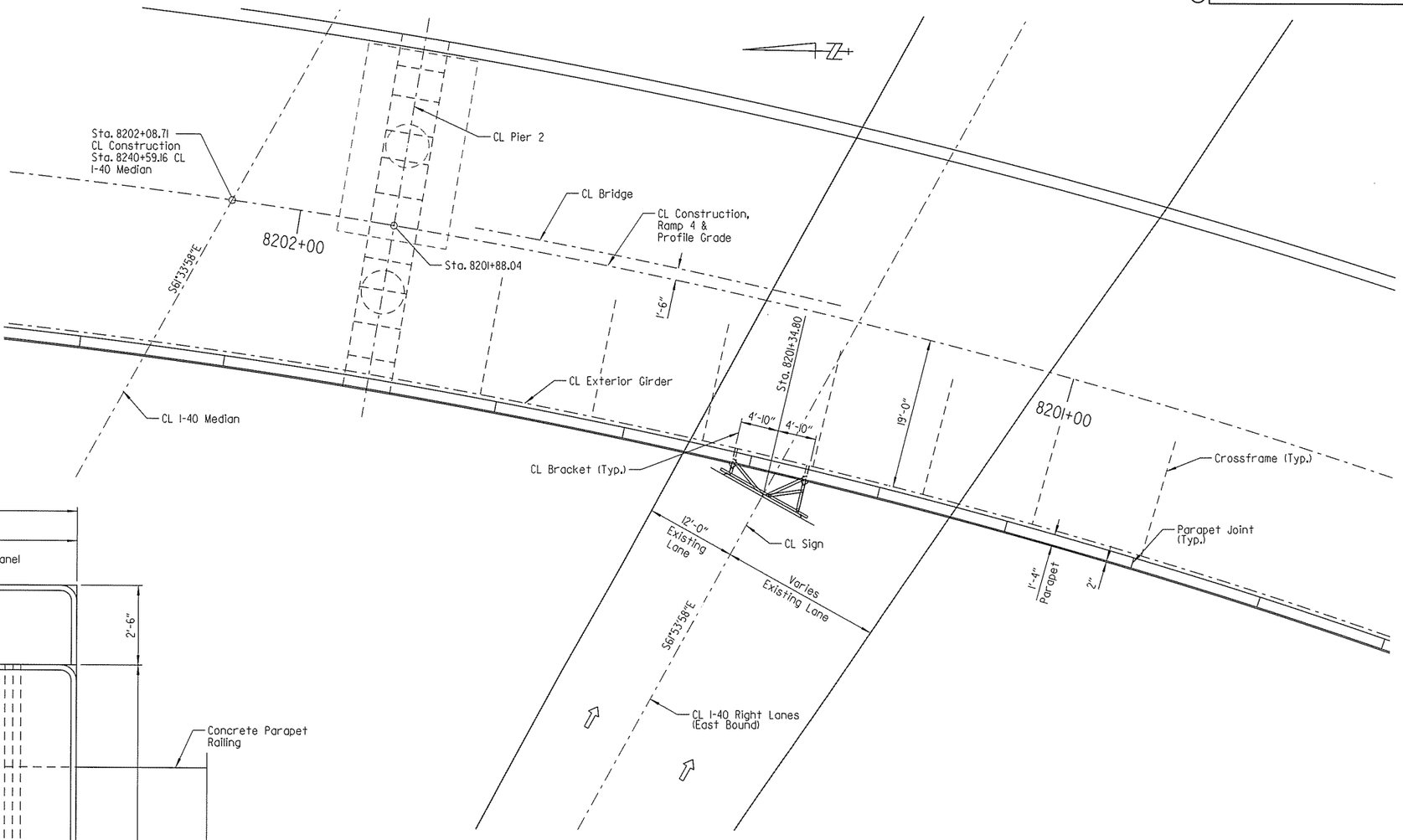

LOCATION SKETCH
Scale: 1/8" = 1'-0"

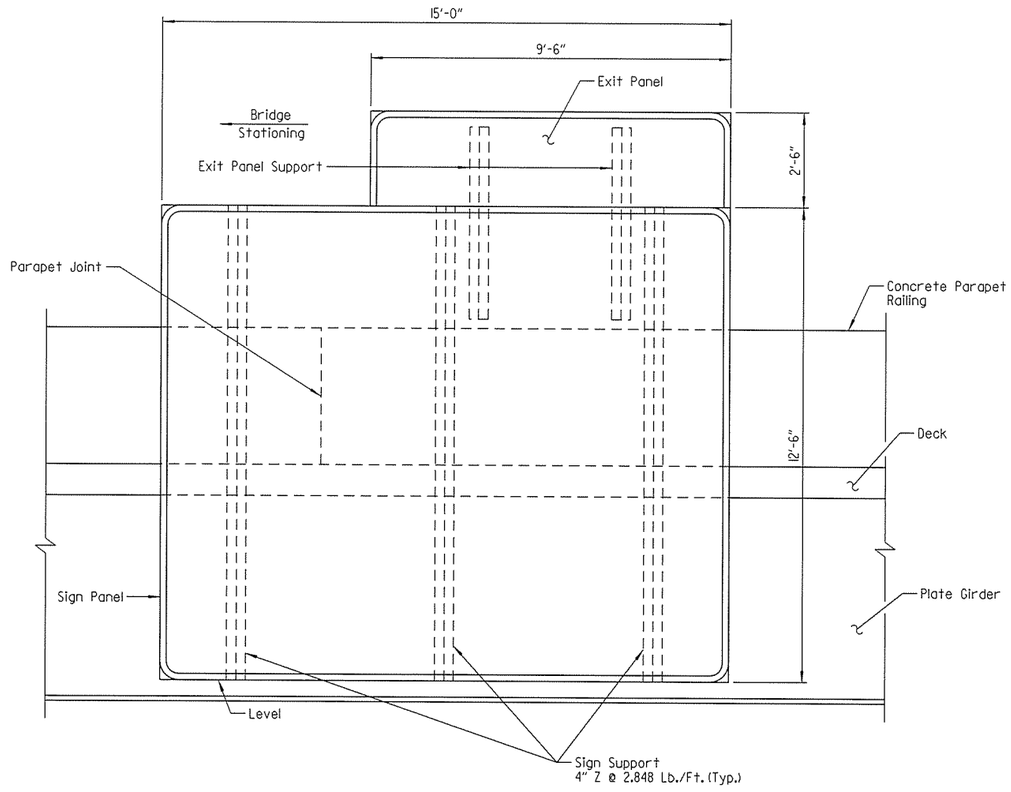

ELEVATION OF SIGN
(Normal To Sign)
Scale: 1/2" = 1'-0"

STATE OF ARKANSAS
LICENSED
PROFESSIONAL
ENGINEER
No. 8017
JOHN H. RUDDELL
7-29-14

BRIDGE ENGINEER

SHEET 1 OF 3
DETAILS OF BRIDGE MOUNTED SIGN STRUCTURE RAMP 4 OVER I-40
PULASKI COUNTY
ROUTE 40 SEC. 33

ARKANSAS STATE HIGHWAY COMMISSION
LITTLE ROCK, ARK.

DRAWN BY: HEW DATE: MAR. 2014 FILENAME: BCA0609x6_T1.DGN
CHECKED BY: JES DATE: MAY 2014 SCALE: As Shown
DESIGNED BY: DRG DATE: MAR. 2014

STR. NO. BM 040-60-47 DRAWING NO. 55796

pccampbell 7/29/2014 4:25:25 PM
WORKSPACE: AHTD Bridge
L:\20II\II0I709 - I-40 at I-430 Interchange Modifications\Drawings\BCA0609x6_T1Sign 1of 3i.dgn
REVISED DATE:

DATE REVISED	DATE FILMED	DATE REVISED	DATE FILMED	FED. ROAD DIST. NO.	STATE	FED. AID PROJ. NO.	SHEET NO.	TOTAL SHEETS
				6	ARK.			
				JOB NO.		CA0609	352	693
				(1) BM 040-60-47 SIGN STRUCTURE				55797

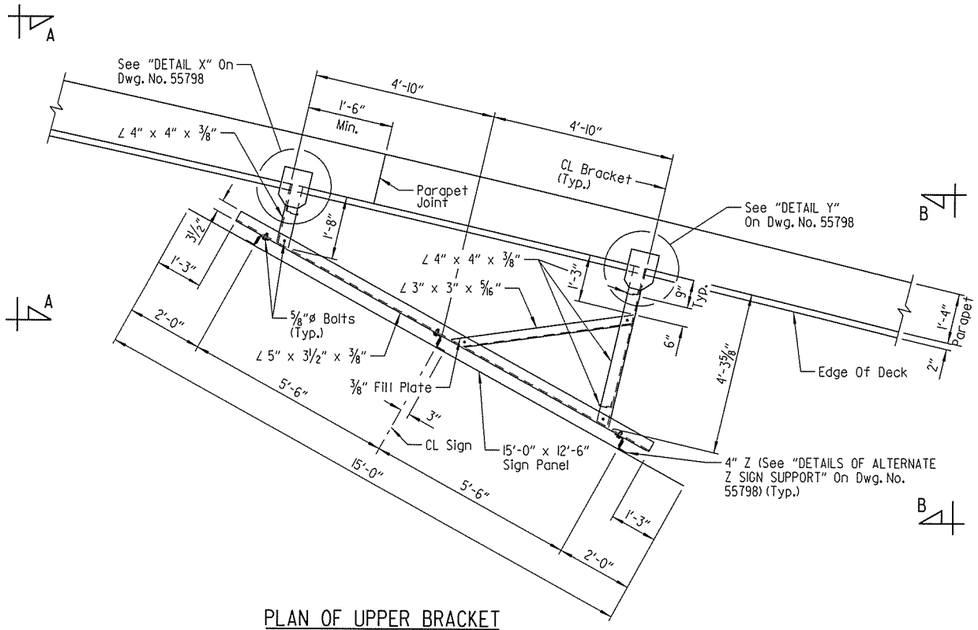

PLAN OF UPPER BRACKET
Scale: 1/2" = 1'-0"

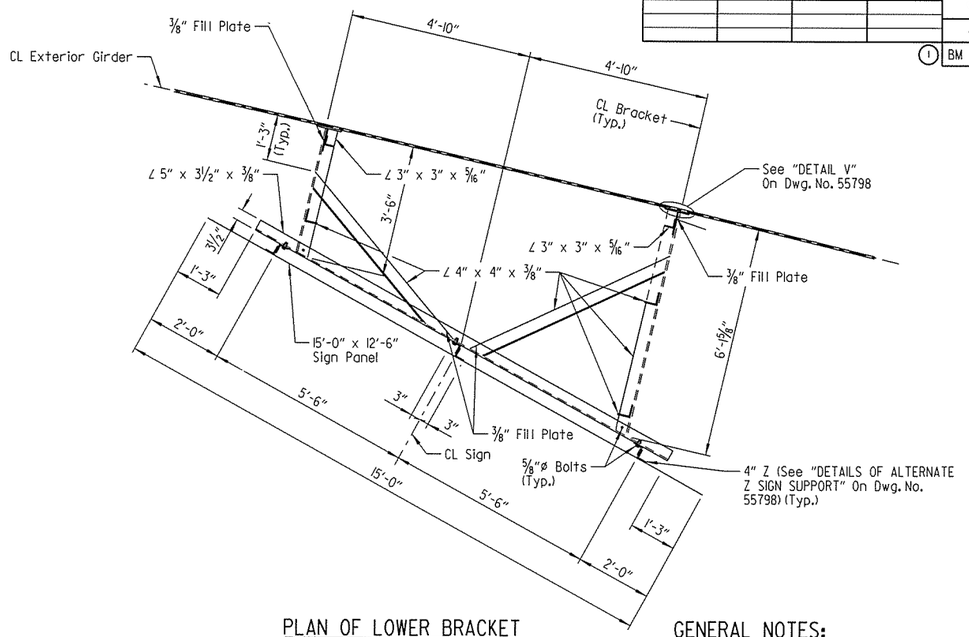

PLAN OF LOWER BRACKET
Scale: 1/2" = 1'-0"

GENERAL NOTES:

CONSTRUCTION SPECIFICATIONS: Arkansas State Highway and Transportation Department Standard Specifications For Highway Construction (2014 Edition) with Applicable Supplemental Specifications And SP Job No. CA0609 "STEEL SIGN STRUCTURES".

DESIGN SPECIFICATIONS: AASHTO Standard Specifications for Structural Supports for Highway Signs, Luminaires, and Traffic Signals, Fifth Edition 2009 (2011 Interim Revisions).

BASIC WIND SPEED: 90 m.p.h.

MATERIALS AND STRENGTHS:
Structural Steel (AASHTO M 270, GR. 36, Fy = 36,000 psi)
Bolts (ASTM A325, Type 1)
Nuts (ASTM A563 or AASHTO M 292, Grade 2H Or Grade DH)
Washers (ASTM F436)
Locknuts (Approved Type, meeting or exceeding AASHTO M 292)

Structral members of sign support shall be galvanized in accordance with Subsection 807.19.

Bolts, nuts and washers shall be galvanized in accordance with Subsection 807.06.

Locknuts to be equipped with nylon locking inserts or other approved locking system. Locknuts to be installed according to Manufacturers recommendations.

The Contractor shall make check measurements in the field and make any adjustments necessary to avoid any diaphragms, splice plates and joints in parapet on the bridge. This may include shifting the sign structure with approval from the Engineer.

The cost of all labor, materials and equipment required for the fabrication and installation of the bridge mounted sign structure shall be included in the item "STEEL SIGN STRUCTURES".

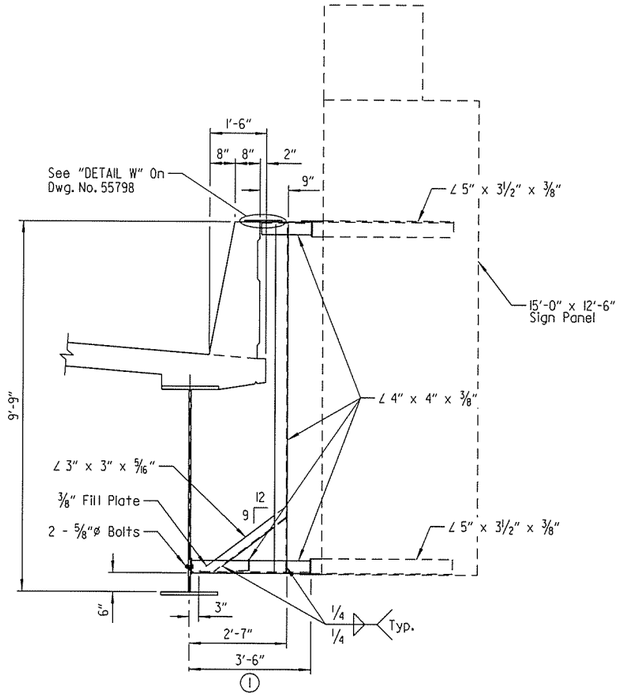

VIEW A-A
Scale: 1/2" = 1'-0"

(1) Measured along inside edge of angle

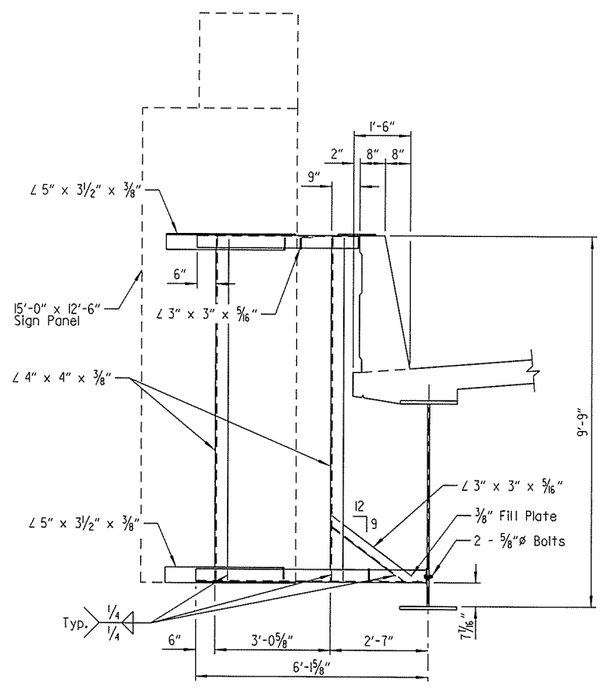

VIEW B-B
Scale: 1/2" = 1'-0"

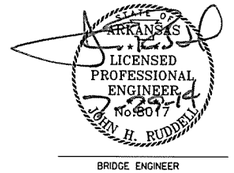

BRIDGE ENGINEER

SHEET 2 OF 3
DETAILS OF BRIDGE MOUNTED SIGN STRUCTURE
RAMP 4 OVER I-40
PULASKI COUNTY
ROUTE 40 SEC. 33
ARKANSAS STATE HIGHWAY COMMISSION
LITTLE ROCK, ARK.

DRAWN BY: HEW DATE: MAR. 2014 FILENAME: BCA0609x6_T2.DGN
CHECKED BY: JES DATE: MAY 2014 SCALE: AS SHOWN
DESIGNED BY: DRG DATE: MAR. 2014
STR. NO. BM 040-60-47 DRAWING NO. 55797

pccampbell 7/29/2014 4:25:25 PM
WORKSPACE: AHTD Bridge
L:\CON\NOI1709 - I-40 at I-430 Interchange Modifications\Drawings\BCA0609x1_T2 (Sign 2 of 3).dgn
REVISED DATE:

DATE REVISED	DATE FILMED	DATE REVISED	DATE FILMED	FED. ROAD DIST. NO.	STATE	FED. AID PROJ. NO.	SHEET NO.	TOTAL SHEETS
				6	ARK.			
				JOB NO.		CA0609	353	693

(1) BM 040-60-47 SIGN STRUCTURE 55798

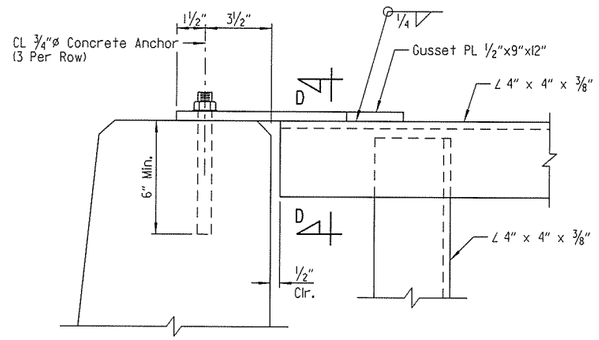

DETAIL W
Scale: 3" = 1'-0"

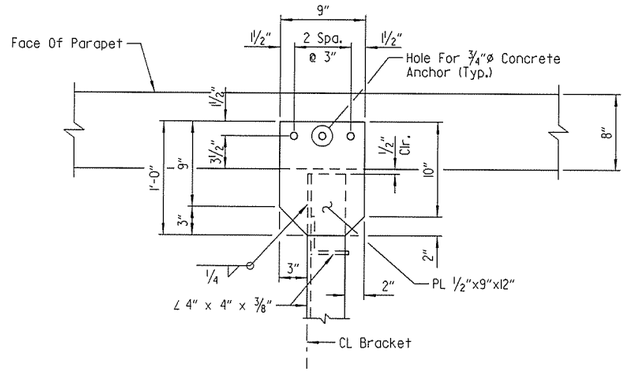

DETAIL X
Scale: 1½" = 1'-0"

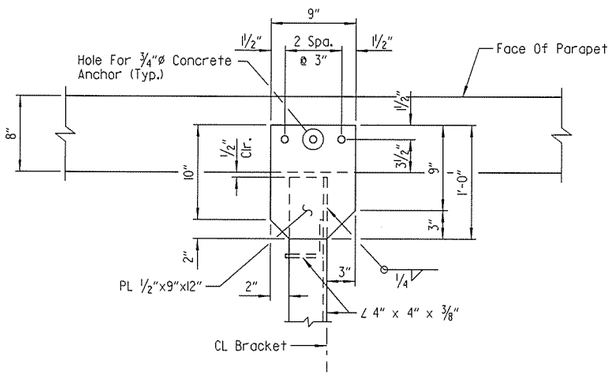

DETAIL Y
Scale: 1½" = 1'-0"

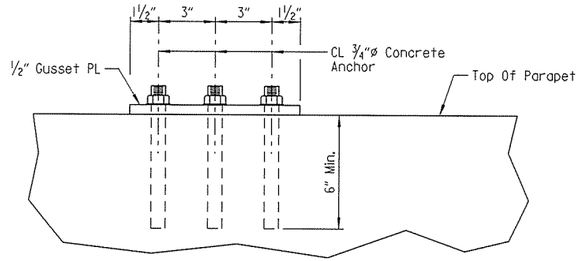

VIEW D-D
Scale: 3" = 1'-0"

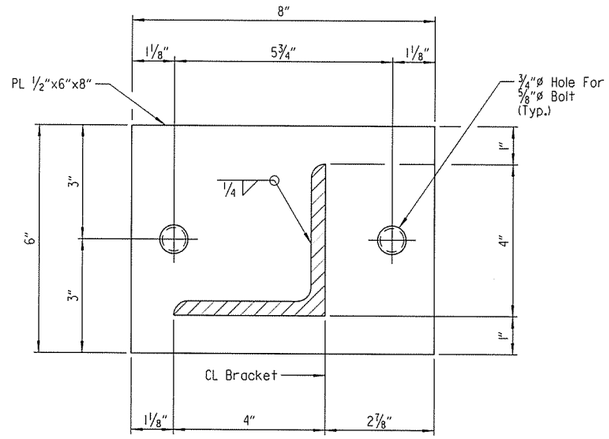

DETAIL V
Scale: 6" = 1'-0"

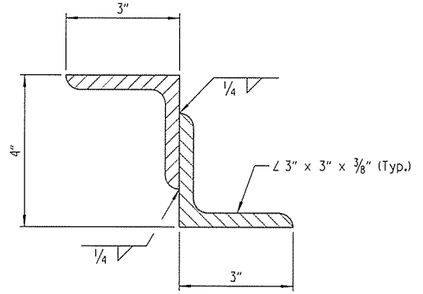

NOTE:
Structural Z Sign Support may be fabricated from angles as shown.

DETAILS OF ALTERNATE Z SIGN SUPPORT
Scale: 6" = 1'-0"

NOTE:
For "GENERAL NOTES", see Dwg. No. 55797.

STATE OF ARKANSAS
LICENSED PROFESSIONAL ENGINEER
No. 8017
JOHN H. RUDDELL
7-29-14

BRIDGE ENGINEER

SHEET 3 OF 3
DETAILS OF BRIDGE MOUNTED SIGN STRUCTURE
RAMP 4 OVER I-40
PULASKI COUNTY

ROUTE 40 SEC. 33

ARKANSAS STATE HIGHWAY COMMISSION
LITTLE ROCK, ARK.

DRAWN BY: HEW DATE: MAR. 2014 FILENAME: BCA0609x6_T3.DGN
CHECKED BY: JES DATE: MAY 2014 SCALE: AS SHOWN
DESIGNED BY: DRC DATE: MAR. 2014

STR. NO. BM 040-60-47 DRAWING NO. 55798

pccampbell 7/29/2014 4:25:25 PM
WORKSPACE: AHTD Bridge
L:\CON\001709 - I-40 at I-430 Interchange Modifications\Drawings\BCA0609x1_T3 (Sign 3 of 3).dgn
REVISED DATE:

DATE REVISED	DATE FILMED	DATE REVISED	DATE FILMED	FED. ROAD DIST. NO.	STATE	FED. AID PROJ. NO.	SHEET NO.	TOTAL SHEETS
				6	ARK.			
				JOB NO.		CA0609	354	693

(1)	05324	APPROACH SLAB 55799

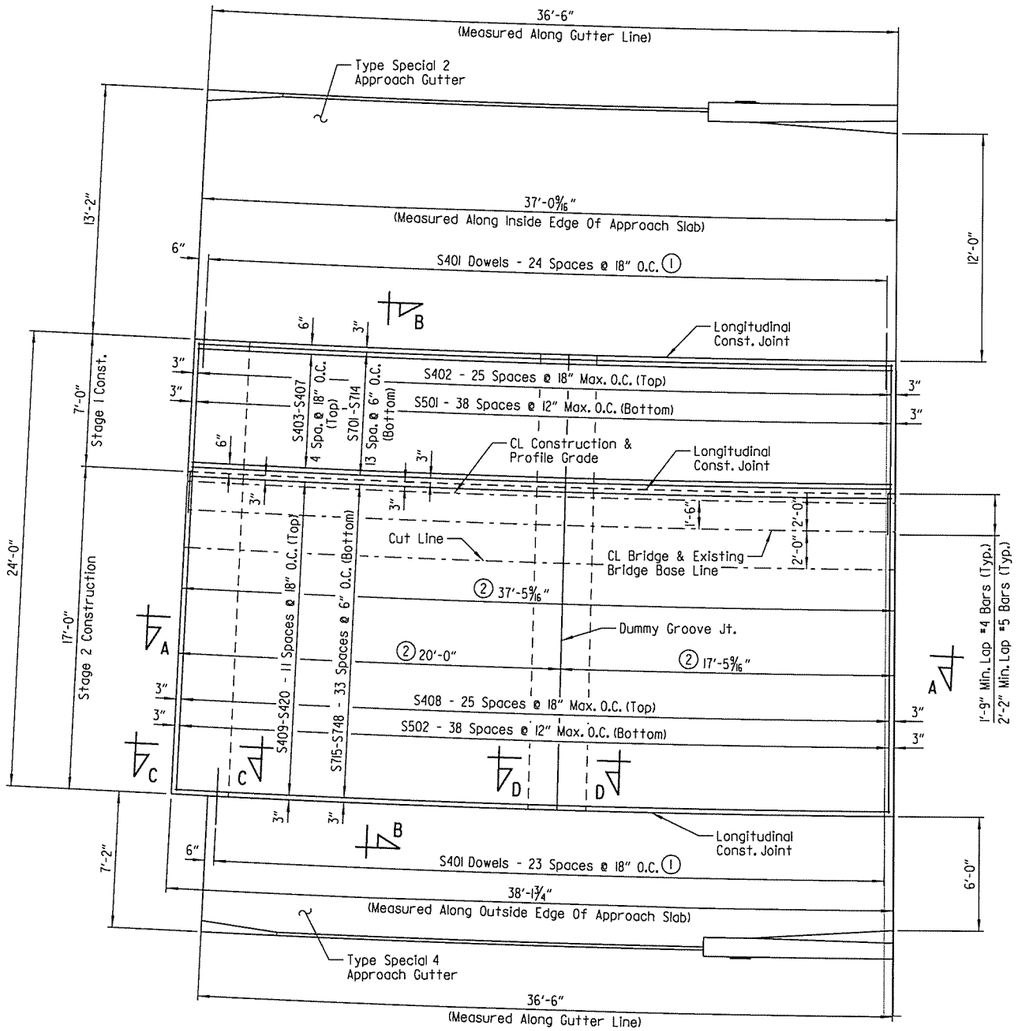

PLAN - APPROACH SLAB

(Beg. Bridge)
Scale: 1/4" = 1'-0"

Stations
Increasing

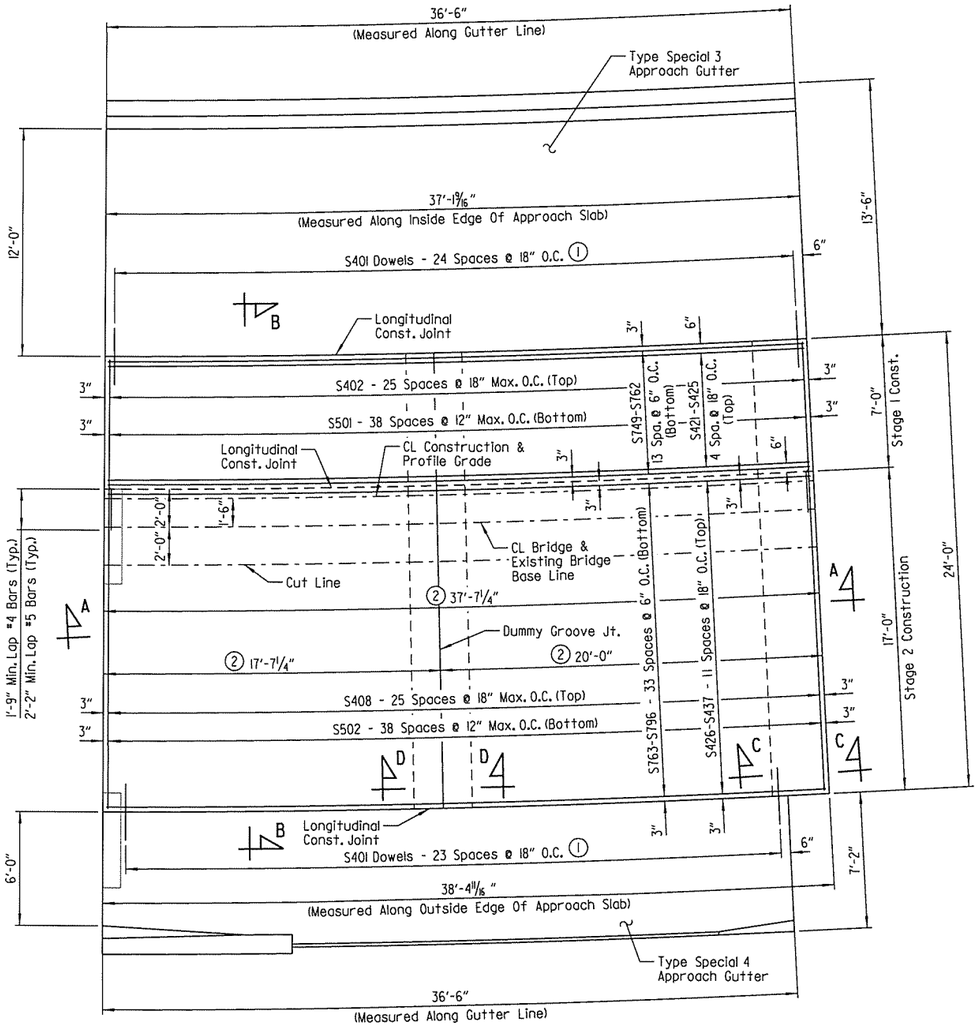

PLAN - APPROACH SLAB

(End Bridge)
Scale: 1/4" = 1'-0"

(2) Dimension measured along CL Bridge & Existing Bridge Base Line

NOTES:
All longitudinal lines and longitudinal reinforcing steel shall be placed along curves concentric with CL Bridge & Existing Bridge Base Line.

Unless noted otherwise, spacing shown for all transverse reinforcing steel is measured along CL Bridge & Existing Bridge Base Line. All transverse reinforcing steel shall be placed on lines radial to CL Bridge & Existing Bridge Base Line.

(1) DOWELING NOTE:
Prior to pouring concrete for approach slab, place dowels into approach slab using 18" embedment.

As an alternate to using cast-in-place dowels during approach slab construction, dowels may be drilled and grouted 18" into the previously cured approach slab. Work for drilling and grouting will not be paid for separately but will be considered subsidiary to "APPROACH GUTTERS".

NOTES:
Surface finish for approach slabs shall match that used on the bridge deck.

For "GENERAL NOTES", "SECTION A-A", "SECTION B-B", "SECTION C-C", "SECTION D-D", "BAR LIST" and additional details, see Dwg. No. 55800.

For details of Type Special 2, Type Special 3, and Type Special 4 Approach Gutters, see Dwg. Nos. 55801-55803.

STATE OF ARKANSAS
LICENSED PROFESSIONAL ENGINEER
No. 8017
JOHN H. RUDDELL
BRIDGE ENGINEER

SHEET 1 OF 2
DETAILS OF TYPE SPECIAL APPROACH SLABS
RAMP 4 OVER I-40
PULASKI COUNTY
ROUTE 430 SEC. 21

ARKANSAS STATE HIGHWAY COMMISSION
LITTLE ROCK, ARK.

DRAWN BY: JLH DATE: FEB. 2014 FILENAME: BCA0609x6_ASI.DGN
CHECKED BY: DRG DATE: MAR. 2014 SCALE: AS SHOWN
DESIGNED BY: JLH DATE: FEB. 2014

BRIDGE NO. 05324 DRAWING NO. 55799

SRYancey 7/8/2014 8:45:04 AM
WORKSPACE: AHTD Bridge
L:\ROW\DOT\09 - I-40 at I-430 Interchange Modifications\Drawings\BCA0609x6_ASI(Approach Slab 1 of 2).dgn
REVISED DATE:

DATE REVISED	DATE FILMED	DATE REVISED	DATE FILMED

FED. ROAD DIST. NO.	STATE	FED. AID PROJ. NO.	SHEET NO.	TOTAL SHEETS
6	ARK.			
JOB NO.		CA0609	355	693
(1) 05324		APPROACH SLAB		55800

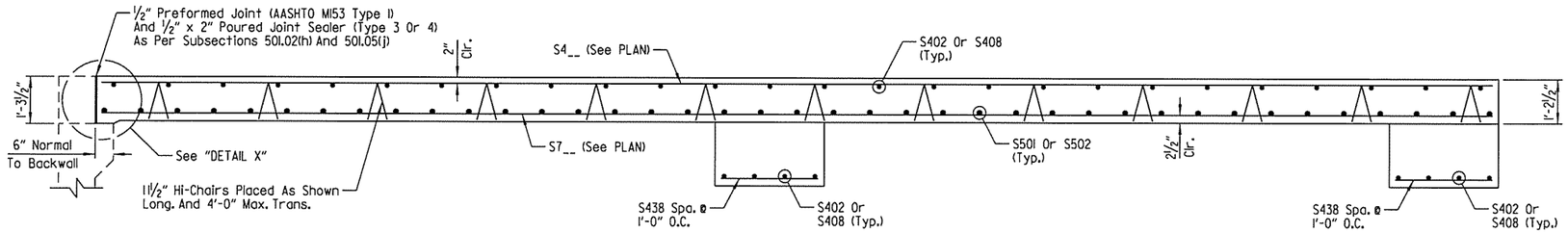

SECTION A-A
No Scale

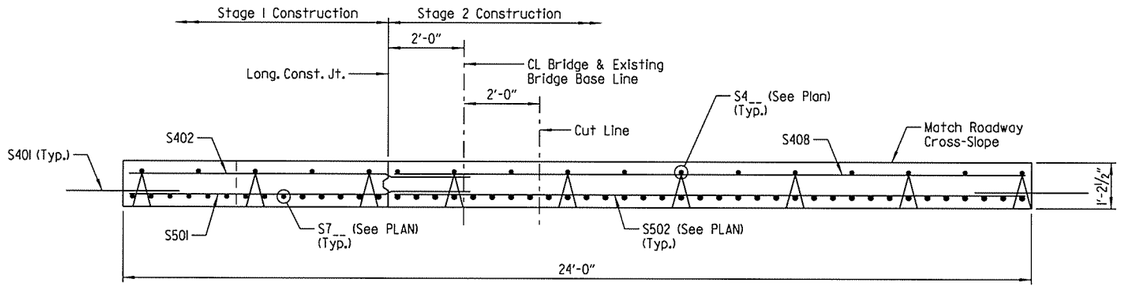

SECTION B-B
No Scale

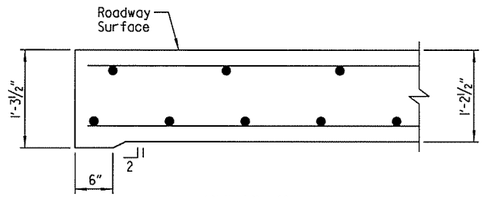

DETAIL X
Scale: 1" = 1'-0"

BAR LIST				
Mark	No. Req'd. Beg. Br.	No. Req'd. End Br.	Length	P.D.
S401	49	49	3'-0"	Str.
S402	34	34	8'-9"	Str.
S403 To S407	1 Each	-	37'-0" To 36'-9"	Str.
S408	34	34	16'-8"	Str.
S409 To S420	1 Each	-	37'-9" To 37'-0"	Str.
S421 To S425	-	1 Each	37'-1" To 36'-10"	Str.
S426 To S437	-	1 Each	37'-2" To 38'-0"	Str.
S438	48	48	2'-8"	Str.
S501	39	39	9'-2"	Str.
S502	39	39	16'-8"	Str.
S701 To S714	1 Each	-	37'-0" To 36'-9"	Str.
S715 To S748	1 Each	-	37'-9" To 37'-0"	Str.
S749 To S762	-	1 Each	36'-9" To 37'-2"	Str.
S763 To S796	-	1 Each	37'-2" To 38'-0"	Str.

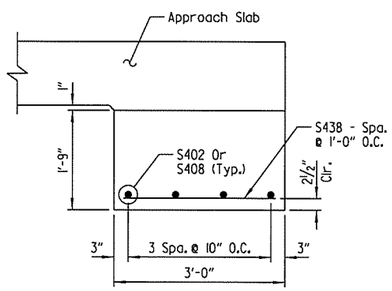

SECTION C-C
Scale: ¾" = 1'-0"

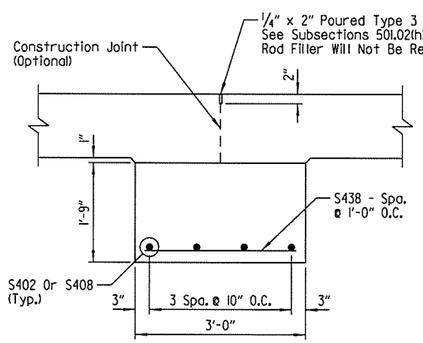

SECTION D-D
Scale: ¾" = 1'-0"

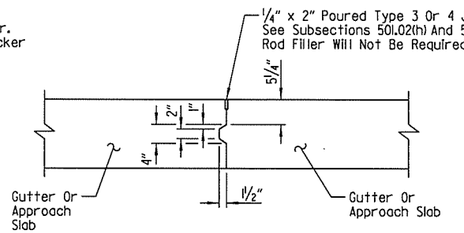

DETAILS OF LONGITUDINAL CONSTRUCTION JOINT
Scale: ¾" = 1'-0"

NOTE:
For details of longitudinal construction joint, see "PLAN - APPROACH SLAB", Dwg. No. 55799.

TABLE OF QUANTITIES FOR TYPE SPECIAL APPROACH SLABS
(For Information Only)

Location	Slab Width	Reinforcing Steel (Lbs.)	Concrete (Cu. Yds.)
Beg. Br.	24'-0"	5887	49.76
End Br.	24'-0"	5906	49.94

GENERAL NOTES:

Concrete shall be Class S(AE) (f'c = 4,000 psi).

All reinforcing steel shall conform to AASHTO M31 or M322, Type A, Grade 60 (fy = 60,000 psi).

Approach Slabs will be measured and paid for in accordance with Section 504.

Preformed joint and joint sealer shall be included in the pay item "APPROACH SLABS".

STATE OF ARKANSAS
LICENSED PROFESSIONAL ENGINEER
No. 8017
JOHN H. RUDDELL
7-18-14
BRIDGE ENGINEER

SHEET 2 OF 2
DETAILS OF TYPE SPECIAL APPROACH SLABS
RAMP 4 OVER I-40
PULASKI COUNTY
ROUTE 430 SEC. 21

ARKANSAS STATE HIGHWAY COMMISSION
LITTLE ROCK, ARK.

DRAWN BY: CWT DATE: FEB. 2014 FILENAME: BCA0609x6_AS2.DGN
CHECKED BY: DRG DATE: MAR. 2014 SCALE: AS SHOWN
DESIGNED BY: JLH DATE: FEB. 2014
BRIDGE NO. 05324 DRAWING NO. 55800

SRYancey 7/8/2014 8:45:05 AM
WORKSPACE: AHTD Bridge
L:\V20\NDOT709 - I-40 at I-430 Interchange Modifications\Drawings\BCA0609xl_AS2 (Approach Slab 2 of 2).dgn
REVISED DATE:

DATE REVISED	DATE FILMED	DATE REVISED	DATE FILMED	FED. ROAD DIST. NO.	STATE	FED. AID PROJ. NO.	SHEET NO.	TOTAL SHEETS
				6	ARK.			
				JOB NO.		CA0609	356	693
				(1) 05324		APPROACH GUTTERS		55801

NOTE:
All reinforcing steel shall maintain a minimum of 2" clr. cover unless noted otherwise.

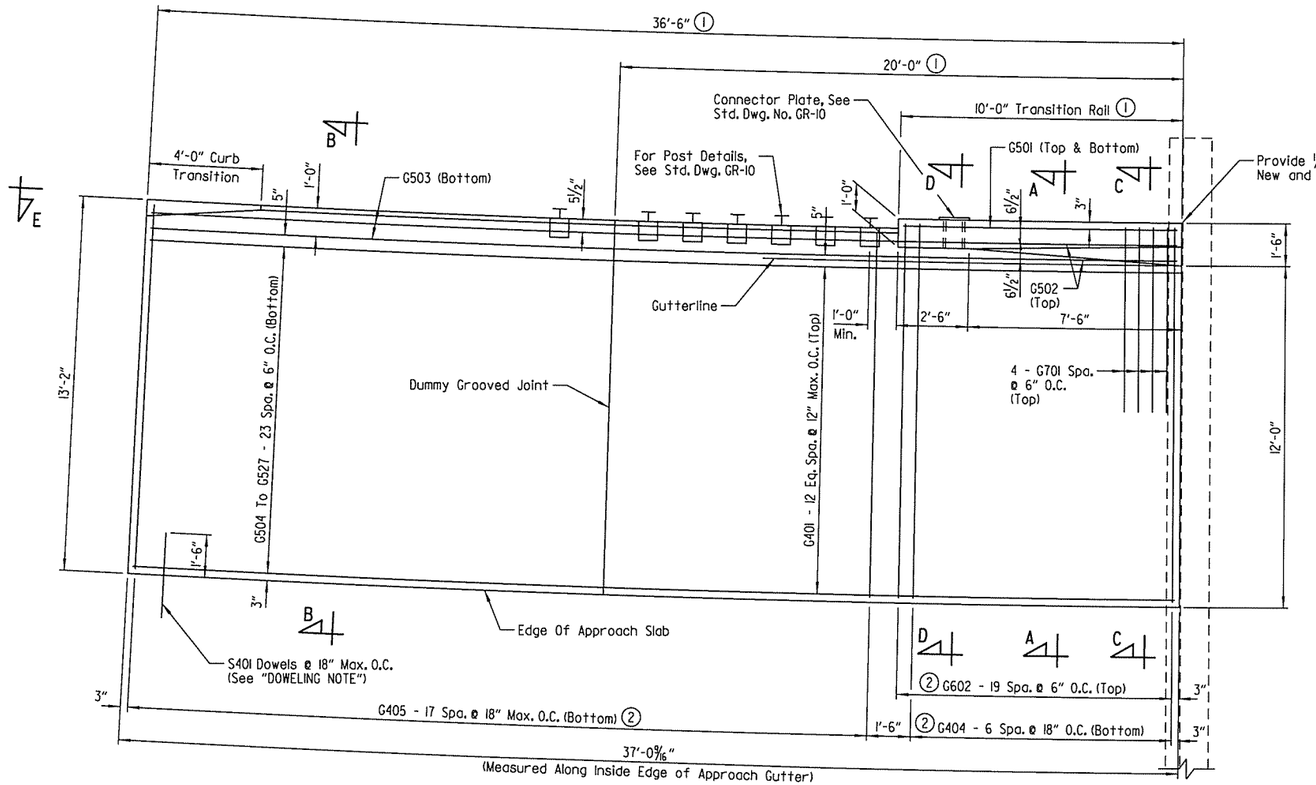

PLAN - TYPE SPECIAL 2 APPROACH GUTTER

Left Begin Bridge
Scale: 3/8" = 1'-0"

QUANTITIES FOR TYPE SPECIAL 2 APPROACH GUTTER AT BEGIN BRIDGE

(For Information Only)

Reinforcing Steel (Lb.)	Concrete (Cu. Yds.)
2080	23.19

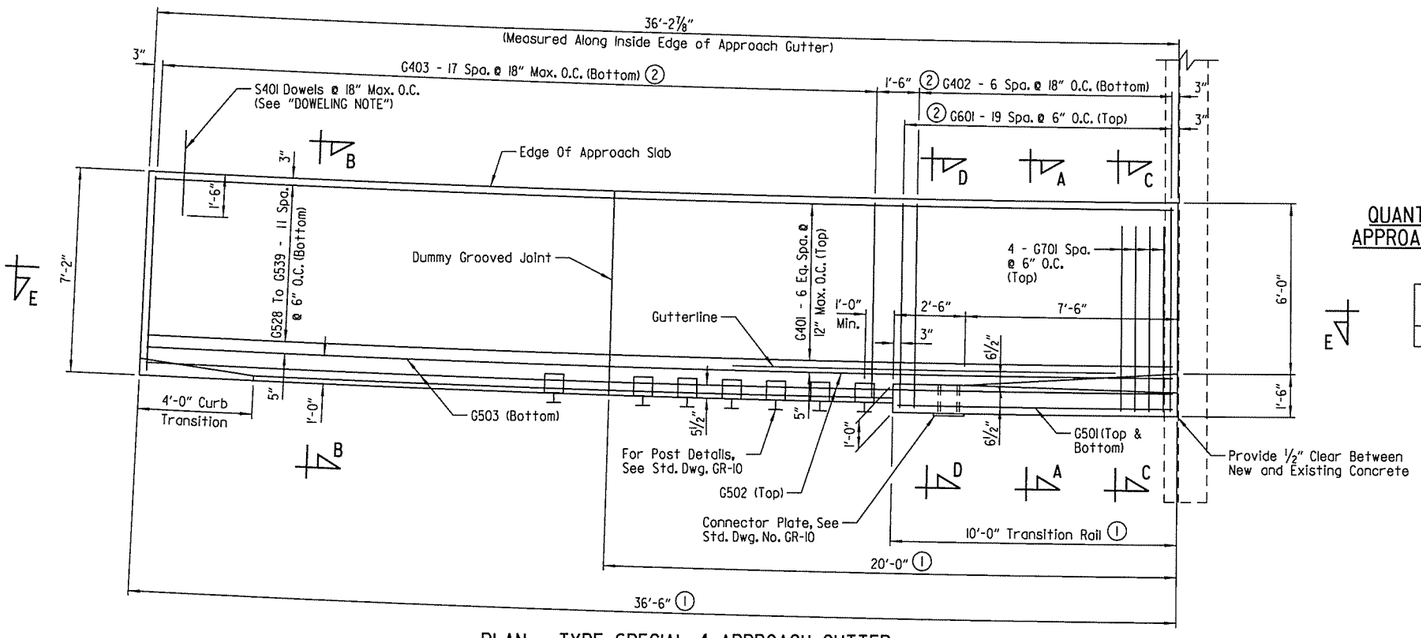

PLAN - TYPE SPECIAL 4 APPROACH GUTTER

Right Begin Bridge
Scale: 3/8" = 1'-0"

QUANTITIES FOR TYPE SPECIAL 4 APPROACH GUTTER AT BEGIN BRIDGE

(For Information Only)

Reinforcing Steel (Lb.)	Concrete (Cu. Yds.)
1295	13.38

GENERAL NOTES

Concrete shall be Class S(AE) (f'c = 4,000 psi).

All reinforcing steel shall conform to AASHTO M31 or M322 Type A, Grade 60 (fy = 60,000 psi).

Approach Gutters will be measured and paid for in accordance with Section 504.

For "SECTION A-A", "SECTION B-B", "SECTION C-C", "SECTION D-D", & "SECTION E-E", see Dwg. No. 55803.

For "BAR LIST" & "BAR BENDING DIAGRAMS", see Dwg. No. 55802.

Class I Protective Surface Treatment shall be applied to the roadway surface and the face and top of the roadway barrier.

NOTES:
All longitudinal lines and longitudinal slab reinforcing shall be placed along curves concentric with Existing Bridge Base Line.

Unless noted otherwise, spacing shown for all transverse reinforcing steel is measured along CL Bridge & Existing Bridge Base Line. All transverse reinforcing shall be placed on lines radial to Existing Bridge Base Line.

(1) Measured along gutterline

(2) All transverse reinforcing steel shall be placed on lines radial to CL Bridge & Existing Bridge Base Line.

STATE OF ARKANSAS
LICENSED PROFESSIONAL ENGINEER
No. 8017
JOHN H. RUDDELL
2-18-14
BRIDGE ENGINEER

SHEET 1 OF 3
DETAILS OF TYPE SPECIAL APPROACH GUTTERS
RAMP 4 OVER I-40
PULASKI COUNTY
ROUTE 430 SEC. 21
ARKANSAS STATE HIGHWAY COMMISSION
LITTLE ROCK, ARK.

DRAWN BY: JLH DATE: FEB. 2014 FILENAME: BCA0609x6_AGI.DGN
CHECKED BY: DRG DATE: MAR. 2014 SCALE: AS SHOWN
DESIGNED BY: JLH DATE: FEB. 2014
BRIDGE NO. 05324 DRAWING NO. 55801

SRYancey 7/18/2014 8:45:05 AM
WORKSPACE: AHTD Bridge
L:\2011\1017709 - I-40 at I-430 Interchange Modifications\Drawings\BCA0609x1_AGI(Special Approach Gutters 1 of 3).dgn
REVISED DATE:

DATE REVISED	DATE FILMED	DATE REVISED	DATE FILMED	FED. ROAD DIST. NO.	STATE	FED. AID PROJ. NO.	SHEET NO.	TOTAL SHEETS
				6	ARK.			
				JOB NO.		CA0609	357	693
				(1) 05324		APPROACH GUTTERS		55802

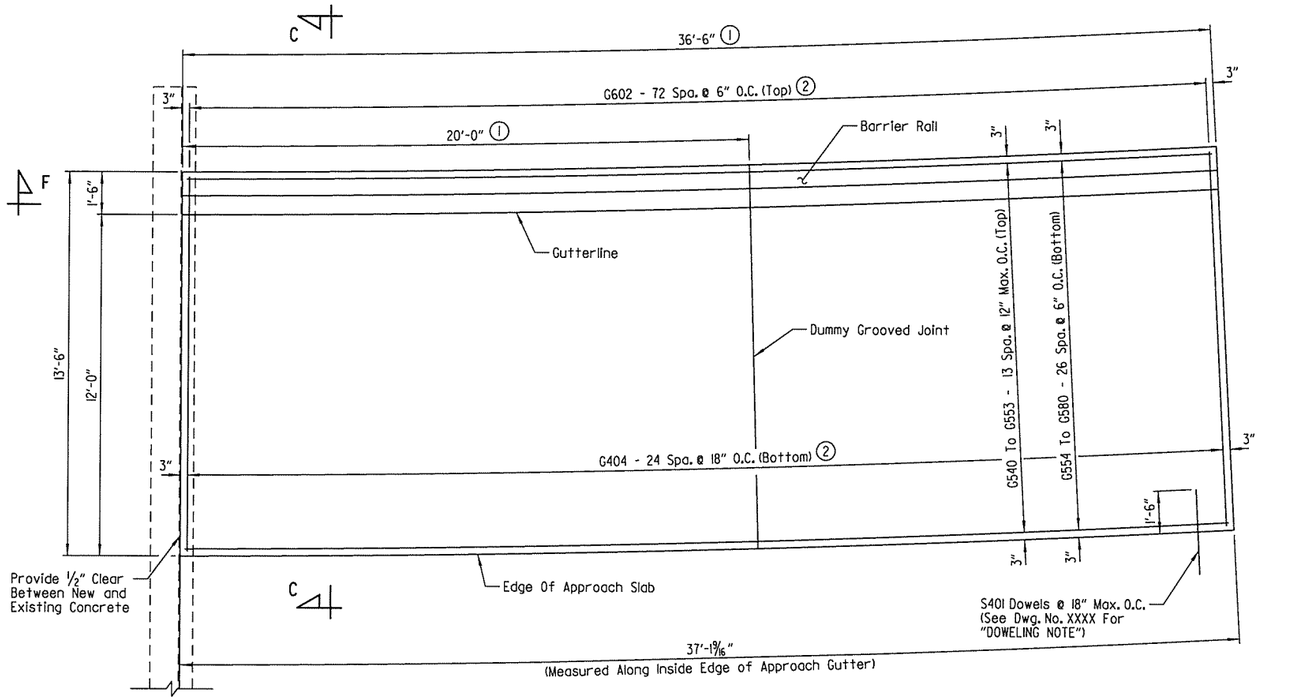

PLAN - TYPE SPECIAL 3 APPROACH GUTTER

Left End Bridge
Scale: 3/8" = 1'-0"

QUANTITIES FOR TYPE SPECIAL 3 APPROACH GUTTER AT END BRIDGE

(For Information Only)

Reinforcing Steel (Lb.)	Concrete (Cu. Yds.)
4199	27.65

BAR LIST

MARK	NO. REQ'D	LENGTH	P.D.
G401	27	11'-0"	Str.
G402	14	7'-2"	Str.
G403	36	6'-10"	Str.
G404	32	13'-2"	Str.
G405	18	12'-10"	Str.
G501	6	9'-8"	Str.
G502	6	11'-0"	Str.
G503	6	36'-1"	Str.
G504 To G527	1 Each	36'-2" To 36'-8"	Str.
G528 To G539	2 Each	35'-10" To 36'-1"	Str.
G540 To G553	1 Each	36'-1" To 36'-9"	Str.
G554 To G580	1 Each	36'-1" To 36'-9"	Str.
G601	40	8'-3"	4 1/2"
G602	93	14'-3"	4 1/2"
G701	12	7'-9"	5 1/4"
R401	36	9'-8"	Str.
R402	12	36'-1"	Str.
R601	70	4'-10"	4 1/2"
R602	70	5'-5"	4 1/2"

BAR BENDING DIAGRAMS

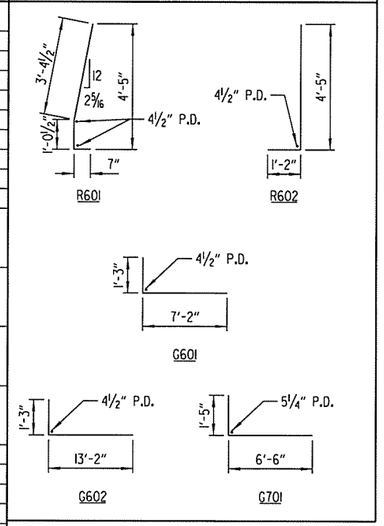

NOTES:
Dimensions of bars are out-to-out.

Number of bars shown is for all approach gutters.

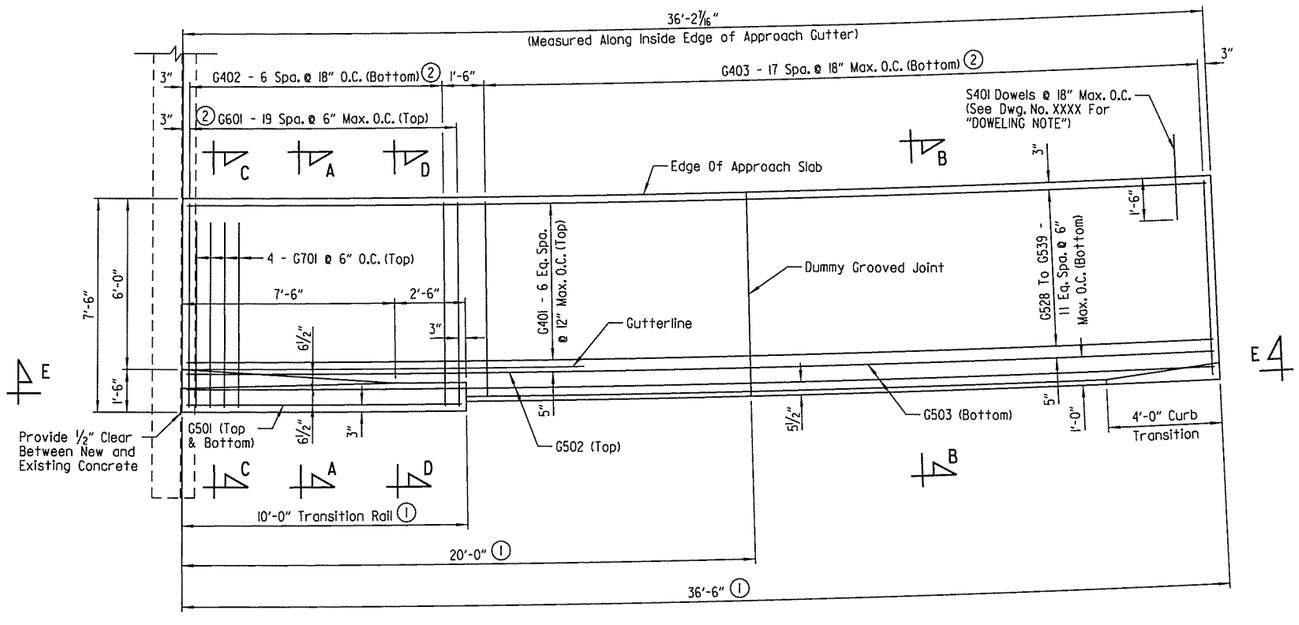

PLAN - TYPE SPECIAL 4 APPROACH GUTTER

Right End Bridge
Scale: 3/8" = 1'-0"

QUANTITIES FOR TYPE SPECIAL 4 APPROACH GUTTER AT END BRIDGE

(For Information Only)

Reinforcing Steel (Lbs.)	Concrete (Cu. Yds.)
1295	13.38

NOTE:

All longitudinal lines and longitudinal slab reinforcing shall be placed along curves concentric with Existing Bridge Base Line.

Unless noted otherwise, spacing shown for all transverse reinforcing steel is measured along CL Bridge & Existing Bridge Base Line. All transverse reinforcing shall be placed on lines radial to Existing Bridge Base Line.

For "GENERAL NOTES", see Dwg. No. 55801.

For "DOWELING NOTE", see Dwg. No. 55799.

For "SECTION A-A", "SECTION B-B", "SECTION C-C", "SECTION D-D", "SECTION E-E" and "SECTION F-F", see Dwg. No. 55803.

(1) Measured along gutterline

(2) All transverse reinforcing steel shall be placed on lines radial to CL Bridge & Existing Bridge Base Line.

STATE OF ARKANSAS
LICENSED PROFESSIONAL ENGINEER
No. 8017
JOHN H. RUDDELL
7-18-14
BRIDGE ENGINEER

SHEET 2 OF 3
DETAILS OF TYPE SPECIAL APPROACH GUTTERS RAMP 4 OVER I-40 PULASKI COUNTY

ROUTE 430 SEC. 21

ARKANSAS STATE HIGHWAY COMMISSION

LITTLE ROCK, ARK.

DRAWN BY: JLH DATE: FEB. 2014 FILENAME: BCA0609x6_AG2.DGN
CHECKED BY: DRG DATE: MAR. 2014 SCALE: AS SHOWN
DESIGNED BY: JLH DATE: FEB. 2014

BRIDGE NO. 05324 DRAWING NO. 55802

SRYancey 7/18/2014 8:45:06 AM
WORKSPACE: AHTD_Bridge
L:\ROW\NOT709 - I-430 at I-430 Interchange Modifications\Drawings\BCA0609xl_AG2 (Special Approach Gutters 2 of 3).dgn
REVISED DATE:

DATE REVISED	DATE FILMED	DATE REVISED	DATE FILMED	FED. ROAD DIST. NO.	STATE	FED. AID PROJ. NO.	SHEET NO.	TOTAL SHEETS
				6	ARK.			
				JOB NO.		CA0609	358	693
				(1) 05324		APPROACH GUTTERS		55803

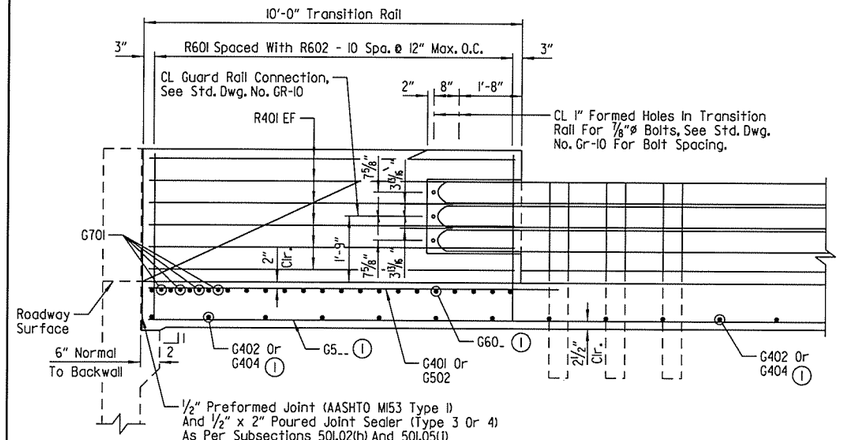

SECTION E-E
Scale: ½" = 1'-0"

NOTE:
Guardrail attachment not included for Right Lane - End Bridge Approach Gutter.

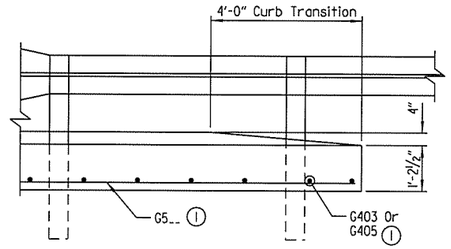

(1) See approach gutter plan views on Dwg. Nos. 55801 & 55802 for bar designations.

NOTE:
For "GENERAL NOTES", See Dwg. No. 55801.

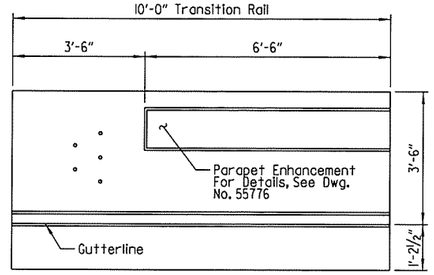

ENHANCEMENT DETAIL
Scale: ½" = 1'-0"

"S" = Distance from gutterline to edge of approach slab.

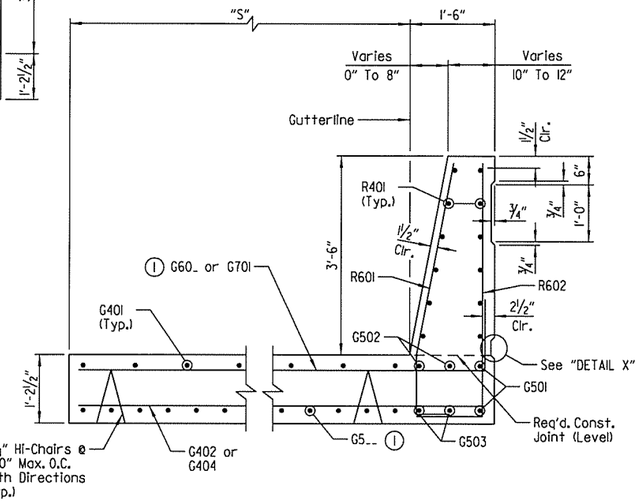

SECTION A-A
Scale: ¾" = 1'-0"

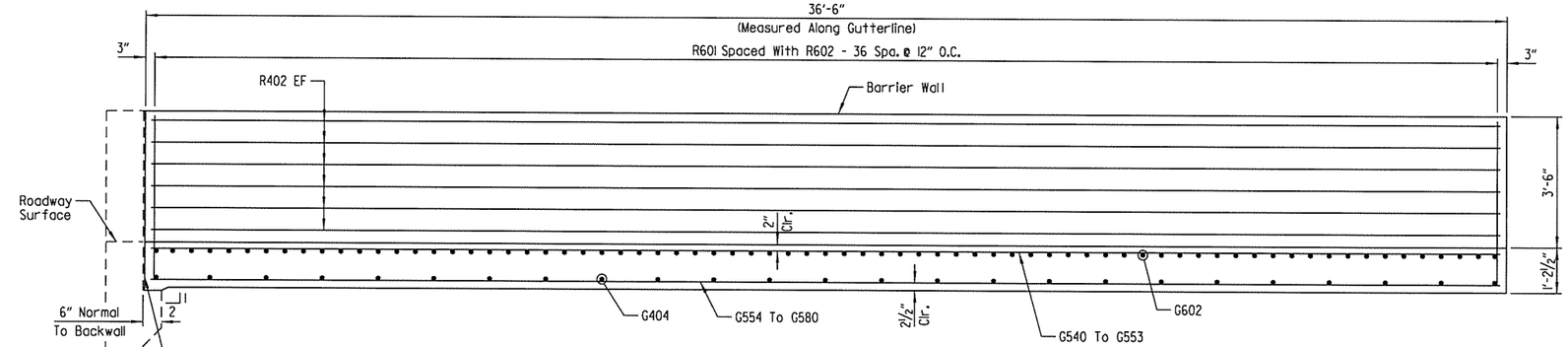

SECTION F-F
Scale: ½" = 1'-0"

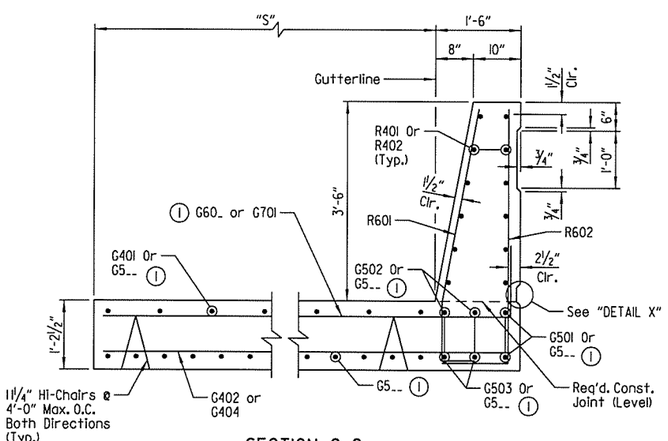

SECTION C-C
Scale: ¾" = 1'-0"

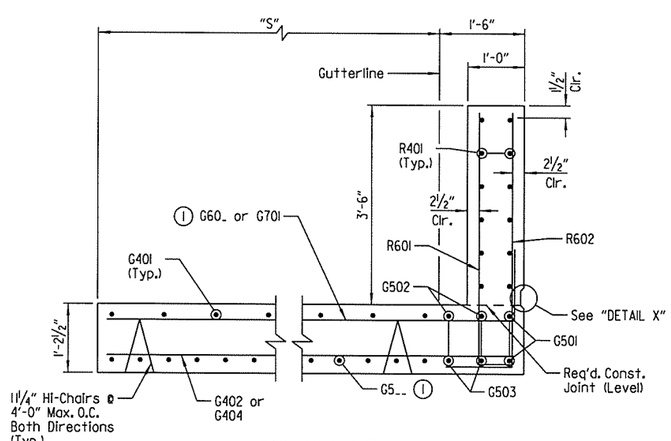

SECTION D-D
Scale: ¾" = 1'-0"

TABLE OF VARIABLES	
Location	"S"
Begin, Left	12'-0"
Begin, Right	6'-0"
End, Left	12'-0"
End, Right	6'-0"

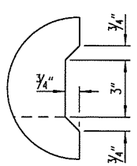

DETAIL X
Scale: 3" = 1'-0"

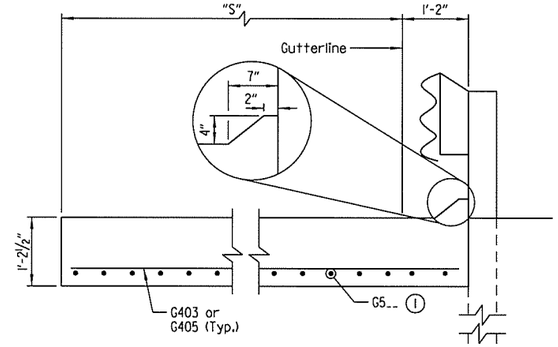

SECTION B-B
Scale: ¾" = 1'-0"

STATE OF ARKANSAS
LICENSED PROFESSIONAL ENGINEER
No. 8017
JOHN H. RUDDELL
BRIDGE ENGINEER
7-15-14

SHEET 3 OF 3
DETAILS OF TYPE SPECIAL APPROACH GUTTERS RAMP 4 OVER I-40 PULASKI COUNTY

ROUTE 430 SEC. 21

ARKANSAS STATE HIGHWAY COMMISSION
LITTLE ROCK, ARK.

DRAWN BY: JLH DATE: FEB. 2014 FILENAME: BCA0609x6_AG3.DGN
CHECKED BY: DRG DATE: MAR. 2014 SCALE: AS SHOWN
DESIGNED BY: JLH DATE: FEB. 2014

BRIDGE NO. 05324 DRAWING NO. 55803

SRYancey 7/18/2014 8:45:06 AM
WORKSPACE: AHTD Bridge
L:\ROW\DIT\09 - I-40 at I-430 Interchange Modifications\Drawings\BCA0609x1_AG3 (Special Approach Gutters 3 of 3).dgn
REVISED DATE:

DATE REVISED	DATE FILMED	DATE REVISED	DATE FILMED	FED. ROAD DIST. NO.	STATE	FED. AID PROJ. NO.	SHEET NO.	TOTAL SHEETS
				6	ARK.			
				JOB NO.		CA0609	359	693
				①		SIGN STRUCTURE		55804

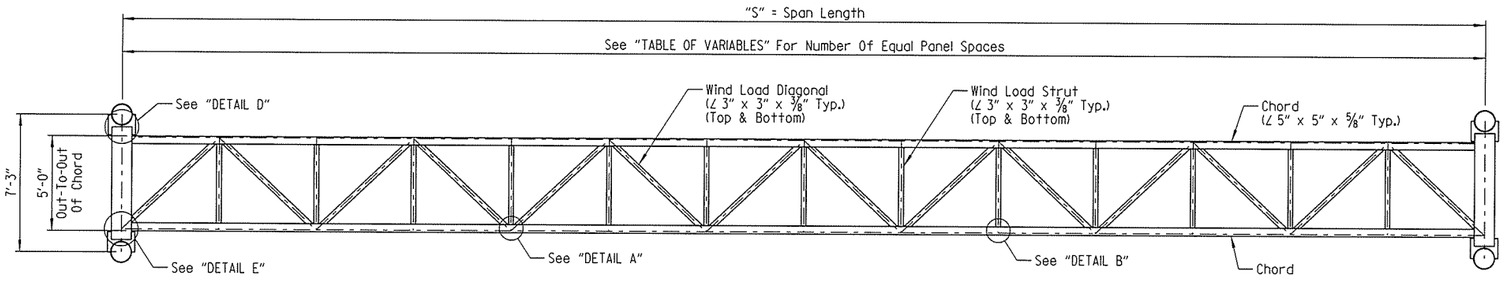

PLAN

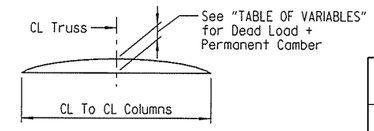

TRUSS CAMBER DIAGRAM

TABLE OF VARIABLES

Span (ft)	No. of Equal Panel Spaces	Dead Load + Permanent Camber
60' thru 65'	12	1"
66' thru 75'	14	1 1/4"
76' thru 85'	16	1 1/2"

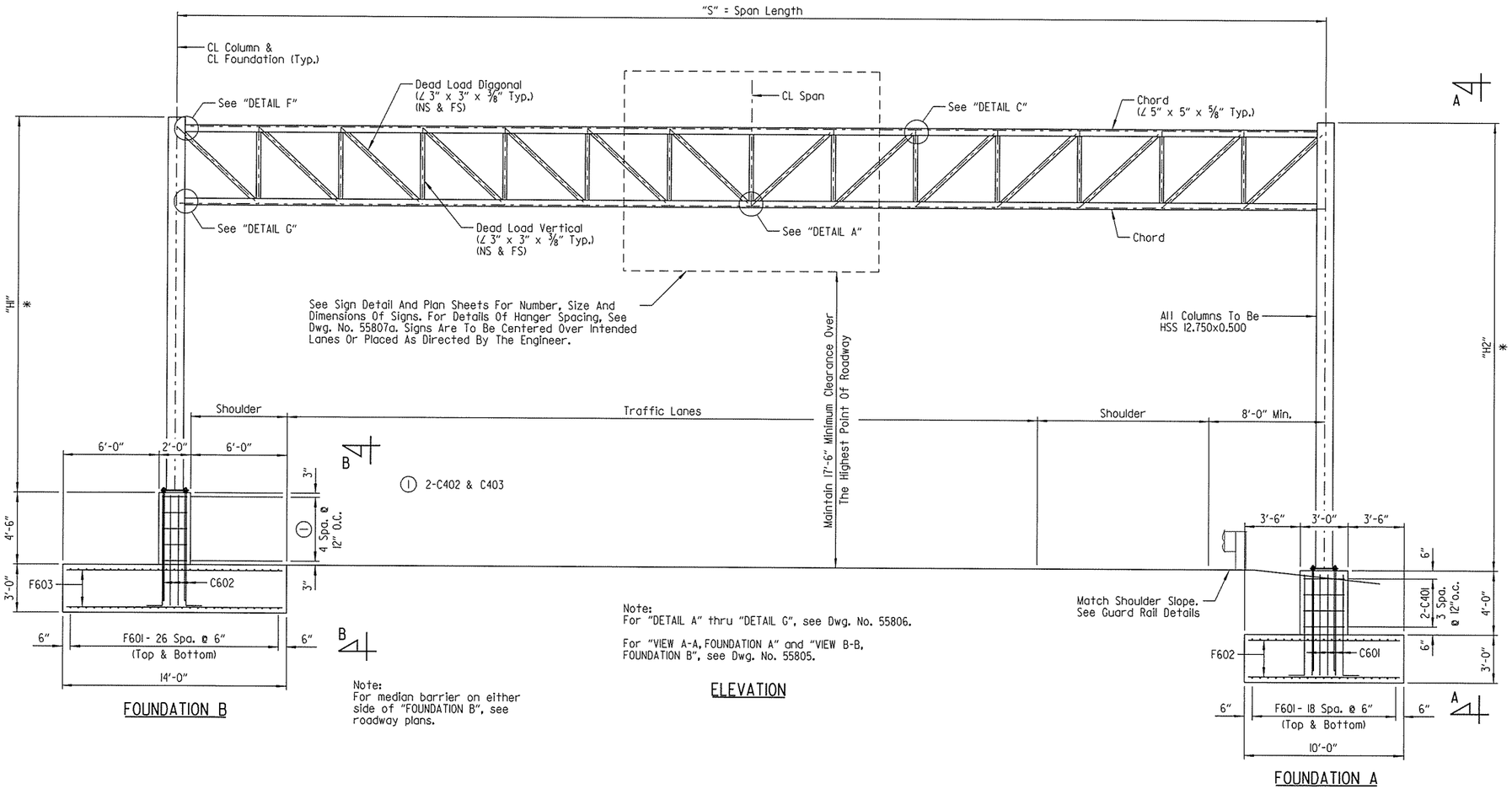

FOUNDATION B

ELEVATION

FOUNDATION A

* Note:
The Contractor shall make field measurements to determine the Column heights "H1" and "H2" that are required to maintain the minimum vertical clearance with the centerline of the sign located at the centerline of the truss. These column heights shall be shown on the shop drawings with a note stating that the Contractor has made the required field measurements. If the structure height ("H1" or "H2") exceeds 30'-0" contact the Engineer. The Contractor shall also verify that the variable span length (60'-0" to 85'-0") is sufficient to meet the minimum clearances and to fit the new structure to the existing and/or proposed conditions.

SPAN LENGTH TABLE

Structure No.	"S"
0H-040-60-01	72'-0"
0H-040-60-02	80'-0"
0H-040-60-17	80'-0"
0H-040-60-18	72'-0"
0H-040-60-41	72'-0"
0H-040-60-43	72'-0"
0H-040-60-44	80'-0"
0H-430-60-13	72'-0"
0H-430-60-35	72'-0"
0H-430-60-36	72'-0"
0H-430-60-38	68'-0"
0H-430-60-39	61'-0"

APPROXIMATE QUANTITIES FOR FOUNDATION FOR INFORMATION ONLY

FOUNDATION	CLASS S CONCRETE (Cu. Yards)	REINFORCING STEEL (Lbs.)	EXCAVATION (Cu. Yards)
A	27.6	2946	78
B	37.8	4343	-

BAR LIST - FOUNDATION A

MARK	NO. REQ'D	LENGTH	P.D.
C401	8	20'-8"	2"
C601	56	7'-3"	4 1/2"
F601	38	19'-6"	Str.
F602	78	9'-6"	Str.

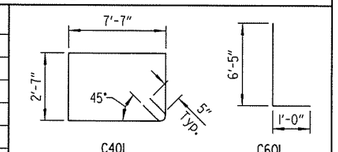

NOTE: Dimensions of bars are out-to-out.

BAR LIST - FOUNDATION B

MARK	NO. REQ'D	LENGTH	P.D.
C402	10	19'-2"	2"
C403	5	26'-2"	2"
C602	82	7'-10"	4 1/2"
F601	54	19'-6"	Str.
F603	78	13'-6"	Str.

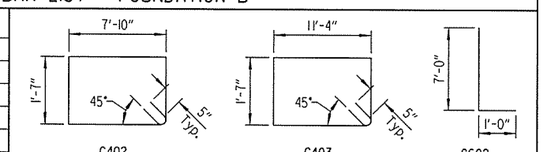

NOTE: Dimensions of bars are out-to-out.

STATE OF ARKANSAS
LICENSED PROFESSIONAL ENGINEER
No. 15902
PRESTON C. CAMPBELL
7-29-14
BRIDGE ENGINEER

SHEET 1 OF 5
DETAILS FOR 60' TO 85'
STEEL OVERHEAD SIGN STRUCTURES
WITH MEDIAN FOUNDATION
PULASKI COUNTY

ROUTE SEC.

ARKANSAS STATE HIGHWAY COMMISSION

LITTLE ROCK, ARK.

DRAWN BY: HEW DATE: JAN. 2014 FILENAME: BCA0609x3_T1.DGN
CHECKED BY: AJK DATE: JAN. 2014 SCALE: NOT TO SCALE
DESIGNED BY: PCC DATE: JAN. 2014
STR. NO. 0H-040-60-01, -02, -17, -18, -41, -43, -44 0H-430-60-13, -35, -36, -38, -39 DRAWING NO. 55804

pccampbell 7/29/2014 2:58:02 PM
WORKSPACE: AHTD Bridge
L:\2011\11D1T709 - I-40 at I-430 Interchange Modifications\Drawings\BCA0609x3_T1OSS 1of 5.dgn
REVISED DATE:

DATE REVISED	DATE FILMED	DATE REVISED	DATE FILMED	FED. ROAD DIST. NO.	STATE	FED. AID PROJ. NO.	SHEET NO.	TOTAL SHEETS
				6	ARK.			
				JOB NO.		CA0609	360	693
				①		SIGN STRUCTURE		55805

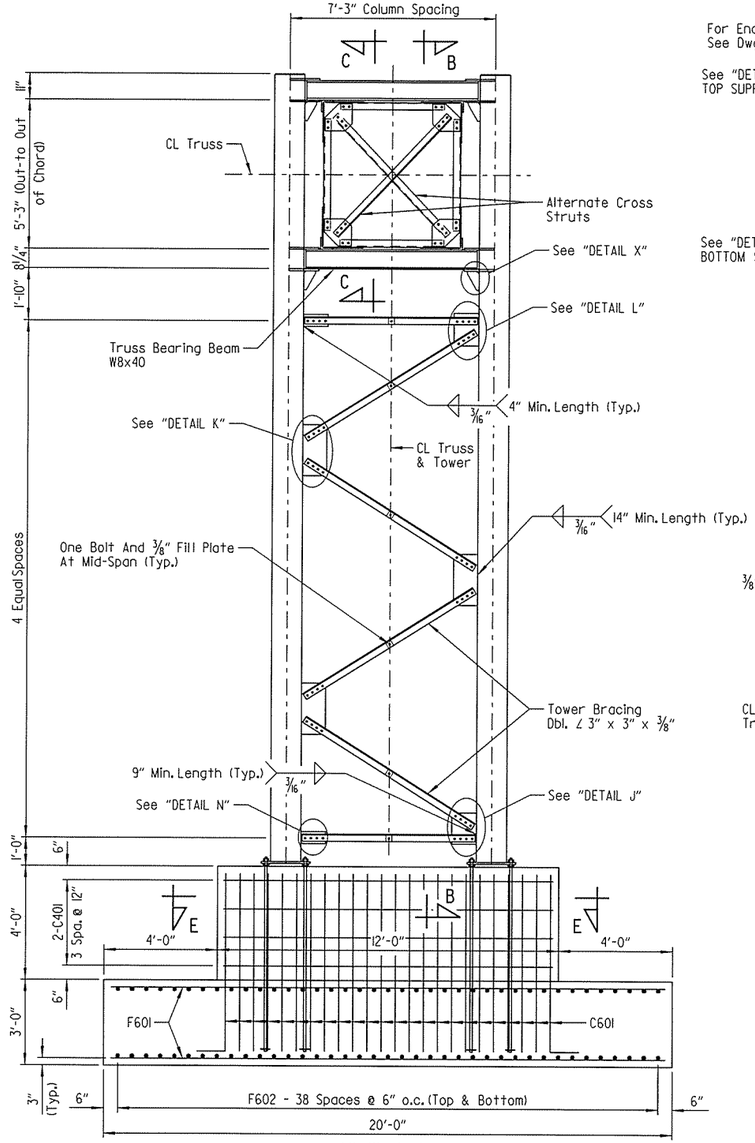

VIEW A-A

① 2-C402 & C403 - 4 Spa. @ 1'-0"

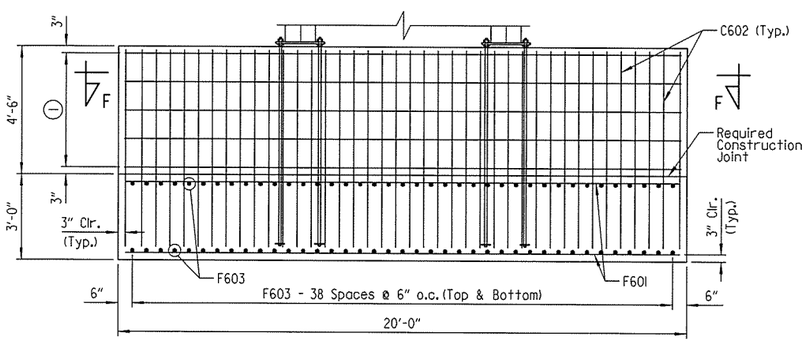

VIEW B-B

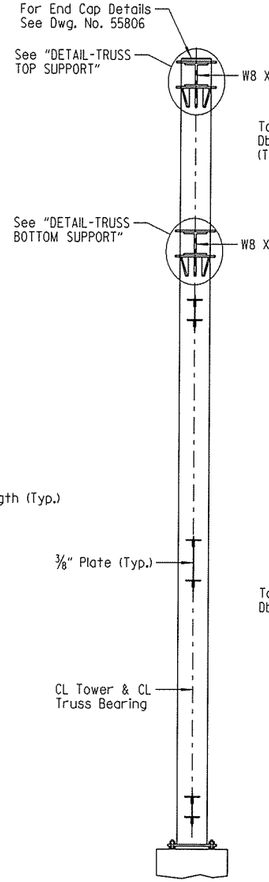

SECTION B-B
Scale: 3/8" = 1'-0"

Note:
For "SECTION E-E" and "SECTION F-F", see Dwg. No. 55806.

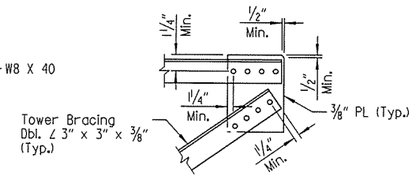

DETAIL L

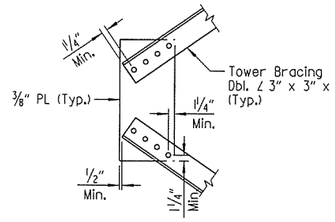

DETAIL K

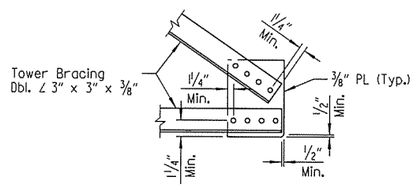

DETAIL J

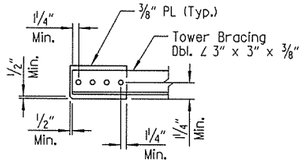

DETAIL N

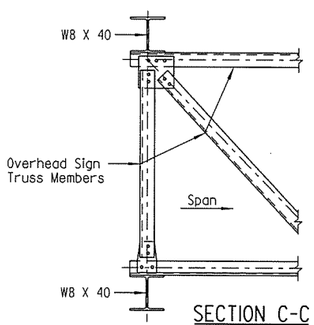

SECTION C-C

① Bolts shall be 1" dia. and slotted hole in chord angle 1 1/16" x 2½". Use plate washer on chord angle side.

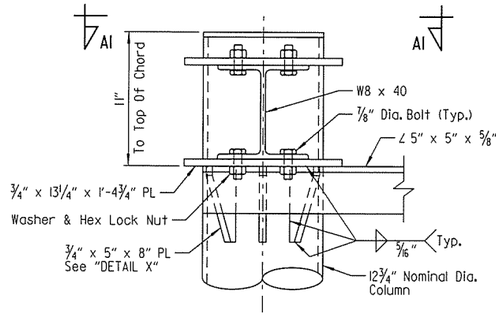

DETAIL - TRUSS TOP SUPPORT

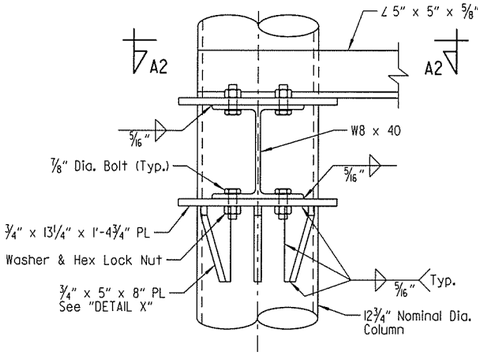

DETAIL - TRUSS BOTTOM SUPPORT

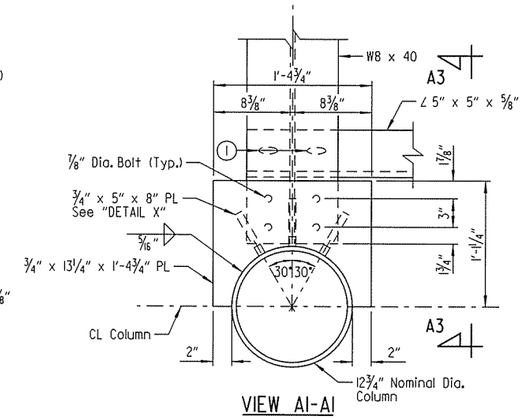

VIEW A1-A1

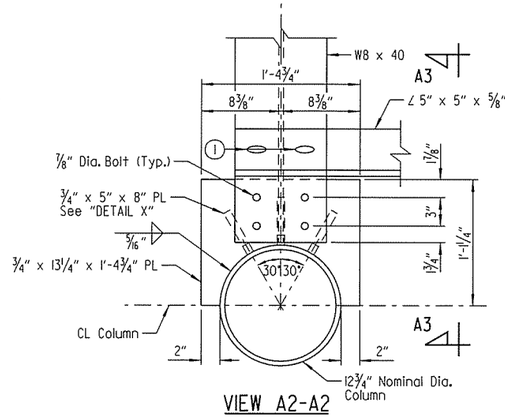

VIEW A2-A2

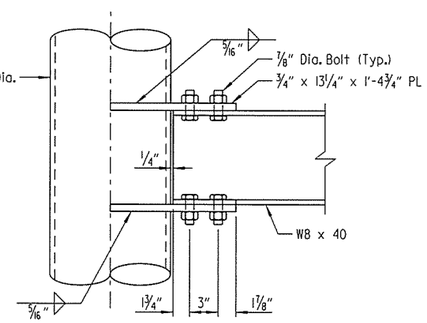

VIEW A3-A3
¾" x 5" x 8" Plates
(Not Shown For Clarity)

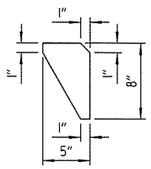

DETAIL X

STATE OF ARKANSAS
LICENSED PROFESSIONAL ENGINEER
No. 15902
PRESTON C CAMPBELL
BRIDGE ENGINEER

SHEET 2 OF 5
DETAILS FOR 60' TO 85' STEEL OVERHEAD SIGN STRUCTURES WITH MEDIAN FOUNDATION
PULASKI COUNTY

ROUTE SEC.

ARKANSAS STATE HIGHWAY COMMISSION

LITTLE ROCK, ARK.

DRAWN BY: HEW DATE: JAN. 2014 FILENAME: BCA0609x3_T2.DGN
CHECKED BY: AJK DATE: JAN. 2014 SCALE: NOT TO SCALE
DESIGNED BY: PCC DATE: JAN. 2014
STR. NO. OH-040-60-01, -02, -17, -18, -41, -43, -44 OH-430-60-13, -35, -36, -38, -39 DRAWING NO. 55805

pccampbell 7/29/2014 2:58:02 PM
WORKSPACE: AHTD Bridge
L:\ZOR\IOI709 - I-40 at I-430 Interchange Modifications\Drawings\BCA0609x3_T2 IOSS 2 of 5.dgn
REVISED DATE:

DATE REVISED	DATE FILMED	DATE REVISED	DATE FILMED	FED. ROAD DIST. NO.	STATE	FED. AID PROJ. NO.	SHEET NO.	TOTAL SHEETS
				6	ARK.			
				JOB NO.		CA0609	361	693
				①		SIGN STRUCTURE		55806

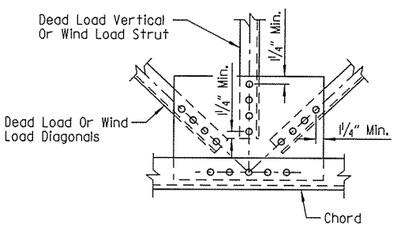

DETAIL "A"

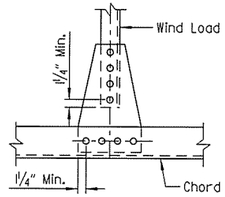

DETAIL "B"

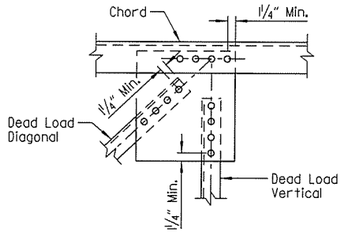

DETAIL "C"

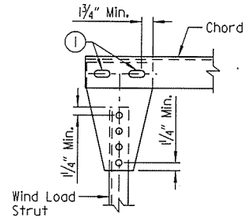

DETAIL "D"

① Bolts shall be 1" dia. and slotted holes in gusset plate and chord angle 1 1/16" x 2½". Use plate washer on gusset plate side.

NOTE:
Thickness of all gusset plates shall be ⅜".

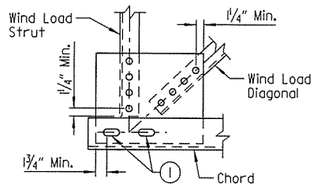

DETAIL "E"

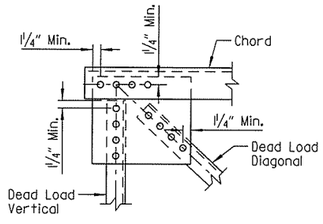

DETAIL "F"

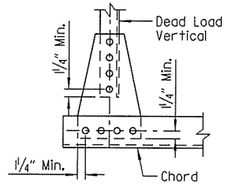

DETAIL "G"

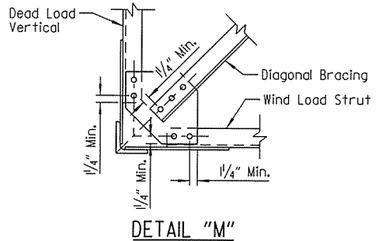

DETAIL "M"

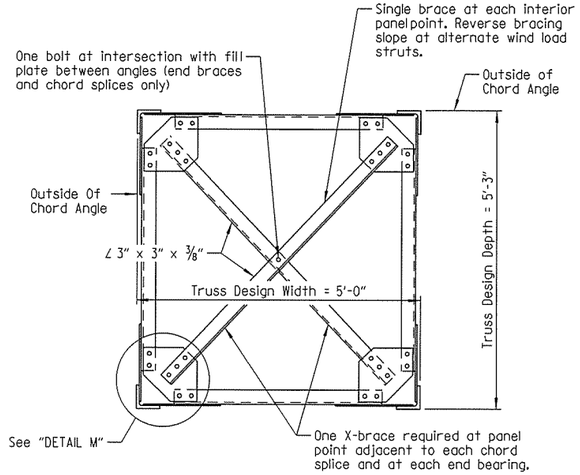

TRUSS SECTION

SECTION ON CL SPLICE

CHORD SPLICE USING PLATE ②

② Bolts shall be ¾" Dia. and open holes shall be 1 1/16". Minimum spacing shall be 2¼".

END CAP DETAILS
Scale: 1½" = 1'-0"

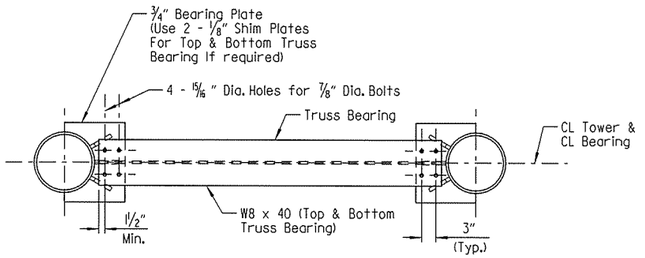

PLAN AT TRUSS BEARING

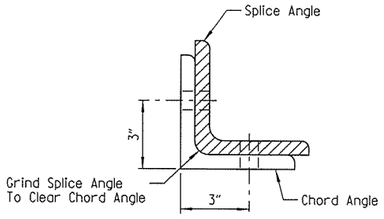

SECTION ON CL SPLICE

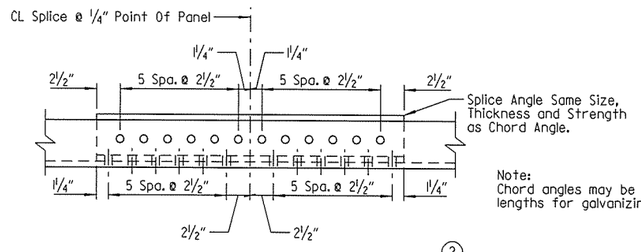

OPTIONAL CHORD SPLICE USING ANGLES ②
Place Splice Angle on Inside of Truss

Note:
Chord angles may be spliced in convenient lengths for galvanizing and sign placement.

SECTION "E-E"
Foundation A

SECTION "F-F"
Foundation B

STATE OF ARKANSAS
LICENSED PROFESSIONAL ENGINEER
No. 15902
PRESTON C. CAMPBELL
7-29-14
BRIDGE ENGINEER

SHEET 3 OF 5
DETAILS FOR 60' TO 85'
STEEL OVERHEAD SIGN STRUCTURES
WITH MEDIAN FOUNDATION
PULASKI COUNTY
ROUTE SEC.
ARKANSAS STATE HIGHWAY COMMISSION
LITTLE ROCK, ARK.

DRAWN BY: HEW DATE: JAN. 2014 FILENAME: BCA0609x3_T3.DGN
CHECKED BY: AJK DATE: JAN. 2014 SCALE: AS SHOWN
DESIGNED BY: PCC DATE: JAN. 2014
STR. NO. OH-040-60-01, -02, -17, -18, -41, -43, -44 DRAWING NO. 55806
OH-430-60-13, -35, -36, -38, -39

pccampbell 7/29/2014 2:58:03 PM
WORKSPACE: AHTD Bridge
L:\2014\101709 - I-40 at I-430 Interchange Modifications\Drawings\BCA0609x3_T3 (OSS 3 of 5).dgn
REVISED DATE:

DATE REVISED	DATE FILMED	DATE REVISED	DATE FILMED	FED. ROAD DIST. NO.	STATE	FED. AID PROJ. NO.	SHEET NO.	TOTAL SHEETS
				6	ARK.			
				JOB NO.		CA0609	362	693
				①		SIGN STRUCTURE		55807

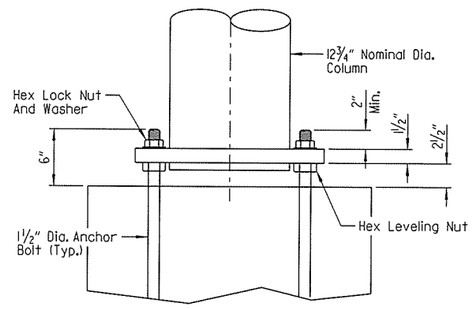

ELEVATION - COLUMN BASE

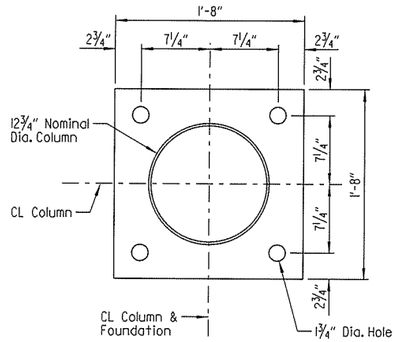

PLAN - COLUMN BASE

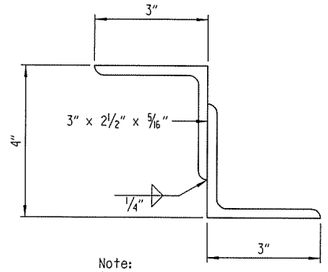

Note:
Structural Z support may be fabricated from angles as shown.

SECTION ON CL SPLICE

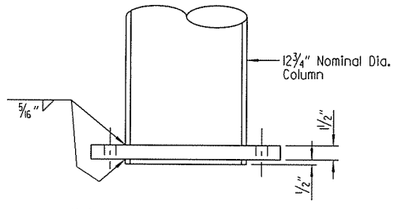

Note:
Diameter of hole in base plate to be ⅛" larger than column diameter.

DETAIL OF COLUMN CONNECTION TO BASE PLATE

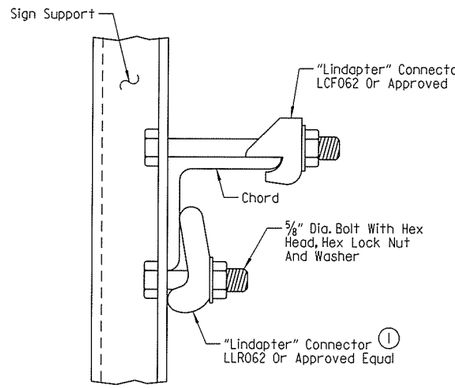

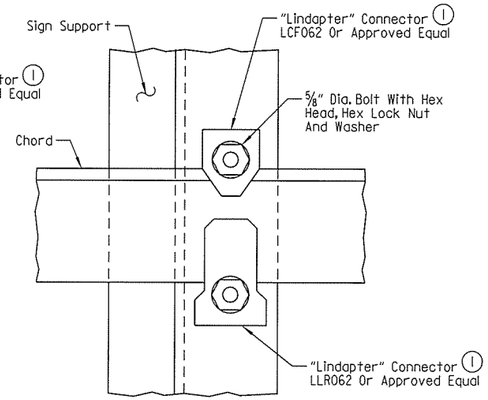

TOP CHORD

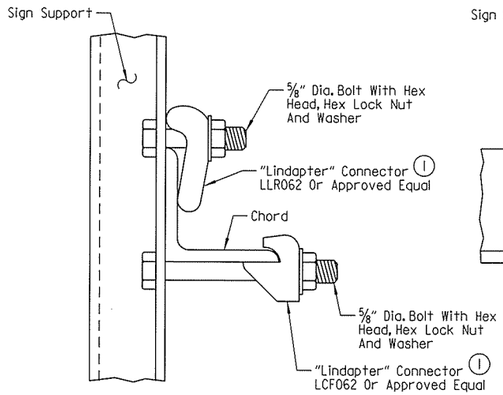

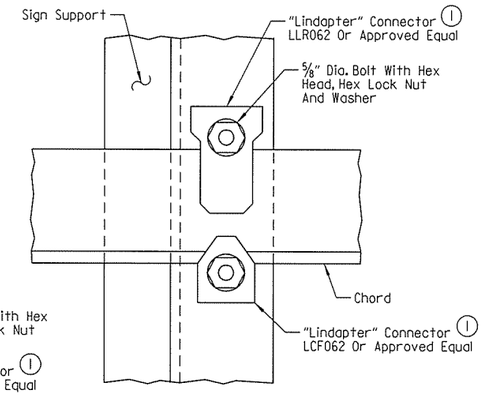

BOTTOM CHORD

① Note:
All "Lindapter" connectors or approved equal shall be installed according to manufacturer's recommendations. All connectors, bolts, nuts and washers shall be galvanized.

Note:
Install all support connectors clear of the gusset plates and splice locations.

DETAILS OF SIGN SUPPORT CONNECTED TO TRUSS

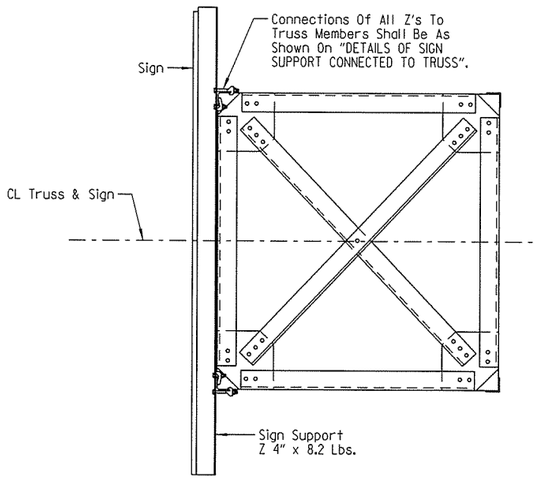

SECTION THRU TRUSS

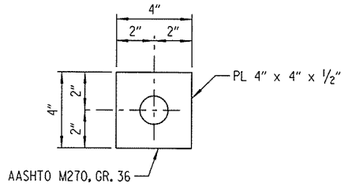

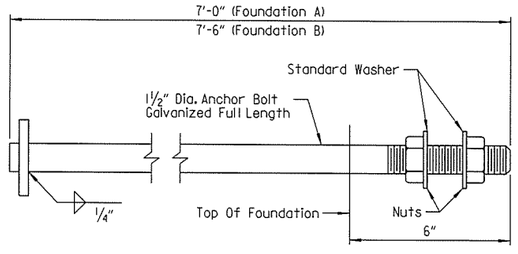

Anchor bolts shall comply with AASHTO M34, Grade 55, with Supplementary Requirement S1and galvanized according to Section 807.07. Nuts for bolts shall be as specified in Section 807.07.

ANCHOR BOLT DETAIL

STATE OF ARKANSAS
LICENSED PROFESSIONAL ENGINEER
No. 15902
PRESTON C. CAMPBELL
7-27-14
BRIDGE ENGINEER

SHEET 4 OF 5
DETAILS FOR 60' TO 85'
STEEL OVERHEAD SIGN STRUCTURES
WITH MEDIAN FOUNDATION
PULASKI COUNTY
ROUTE SEC.

ARKANSAS STATE HIGHWAY COMMISSION
LITTLE ROCK, ARK.

DRAWN BY: HEW DATE: JAN. 2014 FILENAME: BCA0609x3_T4.DGN
CHECKED BY: AJK DATE: JAN. 2014 SCALE: NOT TO SCALE
DESIGNED BY: PCC DATE: JAN. 2014
STR. NO. 041-040-60-01, -02, -17, -18, -41, -43, -44 041-430-60-13, -35, -36, -38, -39 DRAWING NO. 55807

pccampbell 7/29/2014 2:58:03 PM
WORKSPACE: AHTD Bridge
L:\2014\14017109 - I-40 at I-430 Interchange Modifications\Drawings\BCA0609x3_T4 (OSS 4 of 5).dgn
REVISED DATE:

DATE REVISED	DATE FILMED	DATE REVISED	DATE FILMED	FED. ROAD DIST. NO.	STATE	FED. AID PROJ. NO.	SHEET NO.	TOTAL SHEETS
				6	ARK.			
				JOB NO.		CA0609	363	693
				(1)		SIGN STRUCTURE		55807a

GENERAL NOTES:

CONSTRUCTION SPECIFICATIONS: Arkansas State Highway and Transportation Department Standard Specifications for Highway Construction, 2003 Edition, with applicable supplemental specifications and special provisions. Section and subsection refer to the Standard Construction Specifications unless otherwise noted in the plans.

DESIGN SPECIFICATIONS: AASHTO Standard Specifications for Structural Supports for Highway Signs, Luminaires and Traffic Signals, Fifth Edition, 2009.

Basic Wind Speed = 90 mph.
Fatigue Category: I

This structure is approved for a maximum sign area equal to 75% of the span length times a sign height of 15 feet with a weight of 2.5 lbs. per sq. foot and an additional load of 1200 lbs. for a Variable Message Sign panel when required under this contract or for future installation. Use of additional sign area must be approved by the Engineer. If the structure height ("H1" or "H2") exceeds 30'-0" contact the Engineer.

FOUNDATION MATERIALS AND STRENGTHS:
Class S Concrete f'c = 3,500 psi
Reinforcing Steel (Grade 60, AASHTO M 31 or M 322, Type A) fy = 60,000 psi

Structural steel sign support members shall comply with the following specifications:

(1)

Angles:	AASHTO M 270, Grade 36 (Fy = 36,000 psi)
Plate, W-Section:	AASHTO M 270, Grade 50 (Fy = 50,000 psi)
Pipe:	ASTM A 139, Gr. C, straight-seam welded (Fy = 42,000 psi) ASTM A 500, Gr. B (Fy = 42,000 psi) ASTM A 501, Gr. B (Fy = 50,000 psi) ASTM A 714, Class 2, Grade II, Type E or S (Fy = 50,000 psi)
Z-Shapes:	AASHTO M 270, Grade 36 (Fy = 36,000 psi)
Shim Plates:	ASTM A 1011, SS, Grade 36, Type 2 or Grade 40
Bolts:	ASTM A 325, Type 1
Locknuts - Approved Type:	Meeting or exceeding AASHTO M 292
Washers:	ASTM F 436
Nuts:	ASTM A 563 or AASHTO M 292, Grade DH or Grade 2H

The Contractor shall make check measurements in the field and make any adjustments necessary to meet the required clearances and to fit the new structure to the existing conditions.

Drawings show general features of design only. Shop drawings shall be made in accordance with Subsection 807.04, submitted and approval secured before fabrication is begun.

Requests for substitution of structural steel shapes shown with shapes of greater size must be submitted by the Contractor to the Engineer for approval. Steels of equal or greater strengths will be accepted only when shown on the approved shop drawings. Shapes and materials shown in the plans will be the basis of payment and no additional compensation will be made for any adjustments due to substitutions.

All steel shall be galvanized according to Subsection 807.19. Steel completely encased in concrete may not be galvanized. Galvanized coating damaged during transport, handling or erection shall be field repaired in accordance with Subsection 807.88.

All main load carrying tension members greater than ½" in thickness shall confrom to the requirements of the Longitudinal Charpy V-Notch test specified for Zone 1 minimum service temperature. This work and materials shall be paid for in accordance with Job Special Provision "STEEL OVERHEAD SIGN STRUCTURE".

Field splices shall be located in order to avoid sign panel connections. There shall be a maximum of two field splices and they shall be spaced a minimum of 15' apart.

Truss field sections shall be shop assembled. Entire truss shall be fully assembled and lifted into place as one unit on to tower supports. All truss member connections shall be bolted connections.

All welding that is to be done during fabrication of structural steel, including temporary welds, shall be detailed on the shop drawings and submitted for approval. If additional welds are required, wether temporary or permanent, a formal request with detailed drawings shall be subnitted to the Engineer for approval. All welding shall conform to Subsection 807.26.

No circumferential butt welds will be allowed in any pipe sections.

All fillet welds of critical members shall be tested according to AWS D1.1 Structural Welding Code - Steel using the magnetic particle method. Critical welds shall include: column to base plate and truss bottom support to column.

Connections shall be bolted with high-strength bolts. Unless otherwise noted, bolts shall be ¾" diameter and open holes shall be 11/16". Bolt spacing shall be 2½" for ¾" diameter bolts unless otherwise noted. Bolts shall be placed with heads on the outside face of all members.

All truss frame bolts shall comply with AASHTO M 164 Type 1, galvanized according to Subsection 807.06. Nuts and washers for AASHTO M 164 Type 1 bolts shall be furnished and galvanized in accordance with Subsection 807.06.

Lock nuts to be equipped with nylon locking inserts or other approved type locking system. Lock nuts to be installed according to manufacturer's recommendations.

Anchor bolts shall comply with AASHTO M 314, Grade 55 including Supplementary Requirement S1, and galvanized according to Subsection 807.07. Nuts and washers for anchor bolts shall be furnished and galvanized in accordance with Subsection 807.07.

Shoring may be required to protect existing shoulders during excavation. Any shoring required shall not be paid for directly, but shall be considered incidental to the item "STEEL OVERHEAD SIGN STRUCTURE". The excavations for the footings shall be backfilled before the structure is attached to the foundations.

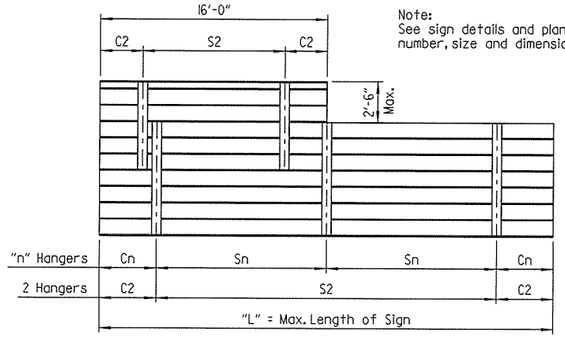

HANGER SPACING DETAILS FOR EXTRUDED PANEL SIGNS

Note:
See sign details and plan sheets for number, size and dimensions of signs.

HANGER VARIABLES			
Max. Length of Sign = "L"	"n" Hangers	Cantilever Length "Cn"	Hanger Spacing "Sn"
15'-0"	2 Hangers	0.21 x "L"	0.58 x "L"
30'-0"	3 Hangers	0.145 x "L"	0.355 x "L"
45'-0"	4 Hangers	0.107 x "L"	0.262 x "L"

(1) In addition to material requirements all pipe used for welded applications shall have a maximum carbon equivalency (CE) of 0.4 using the following equation: CE = %C + %Mn/6 + %Cu/40 + %Ni/20 + %Cr/10 - %Mo/50 - %V/10

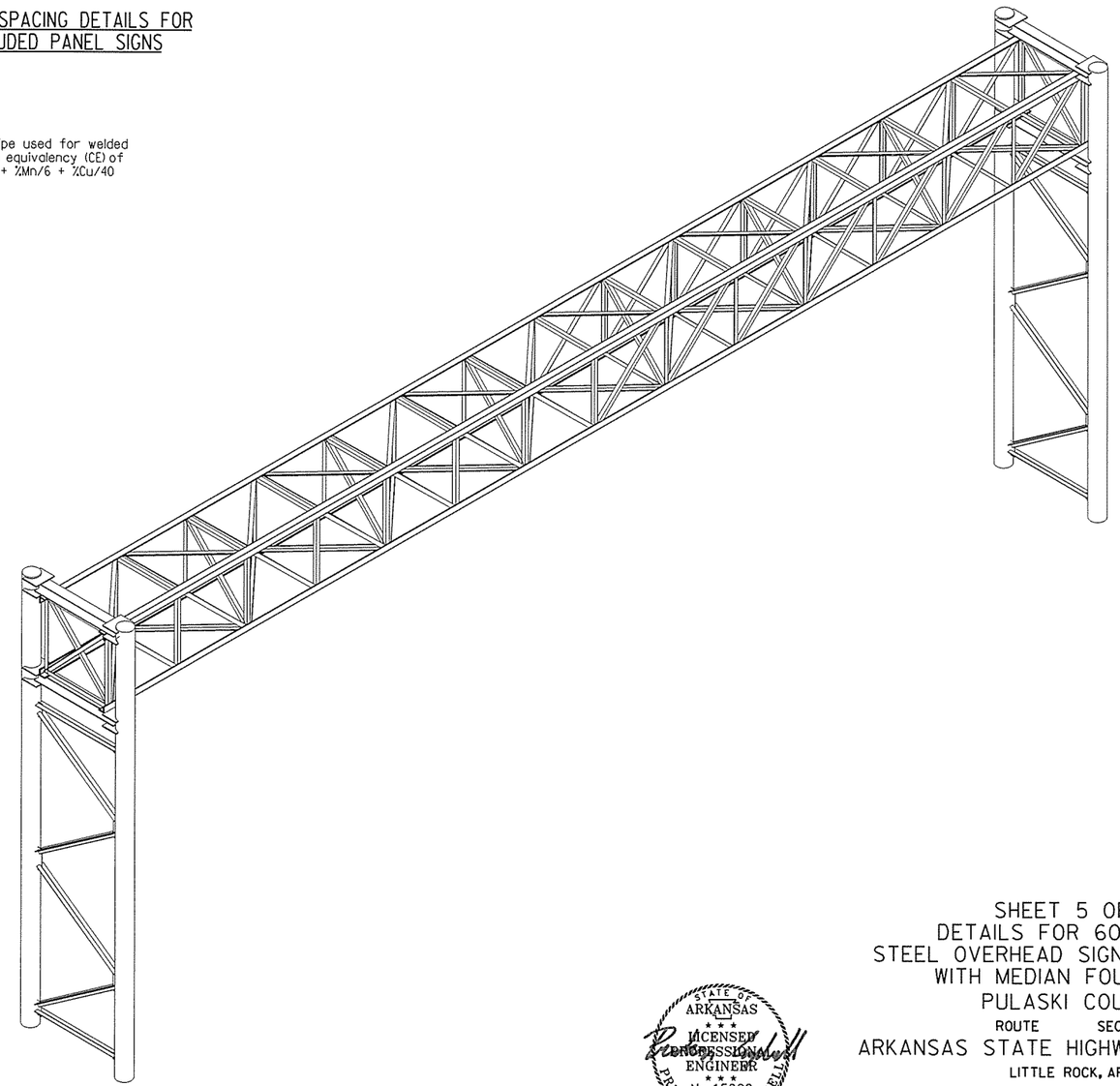

STATE OF ARKANSAS
LICENSED PROFESSIONAL ENGINEER
No. 15902
PRESTON C. CAMPBELL
7-29-14
BRIDGE ENGINEER

SHEET 5 OF 5
DETAILS FOR 60' TO 85'
STEEL OVERHEAD SIGN STRUCTURES
WITH MEDIAN FOUNDATION
PULASKI COUNTY
ROUTE SEC.
ARKANSAS STATE HIGHWAY COMMISSION
LITTLE ROCK, ARK.

DRAWN BY: HEW DATE: JAN. 2014 FILENAME: BCA0609x3_T5.DGN
CHECKED BY: AJK DATE: JAN. 2014 SCALE: NOT TO SCALE
DESIGNED BY: PCC DATE: JAN. 2014
STR. NO. CH-040-60-01, -02, -17, -18, -41, -43, -44 CH-430-60-13, -35, -36, -38, -39 DRAWING NO. 55807a

pccampbell 7/29/2014 2:58:03 PM
WORKSPACE: AHTD Bridge
L:\CON\HDT709 - I-40 at I-430 Interchange Modifications\Drawings\BCA0609x3_T5 (OSS 5 of 5).dgn
REVISED DATE:

DATE REVISED	DATE FILMED	DATE REVISED	DATE FILMED	FED. ROAD DIST. NO.	STATE	FED. AID PROJ. NO.	SHEET NO.	TOTAL SHEETS
				6	ARK.			
				JOB NO.		CA0609	364	693
				①		SIGN STRUCTURE		55808

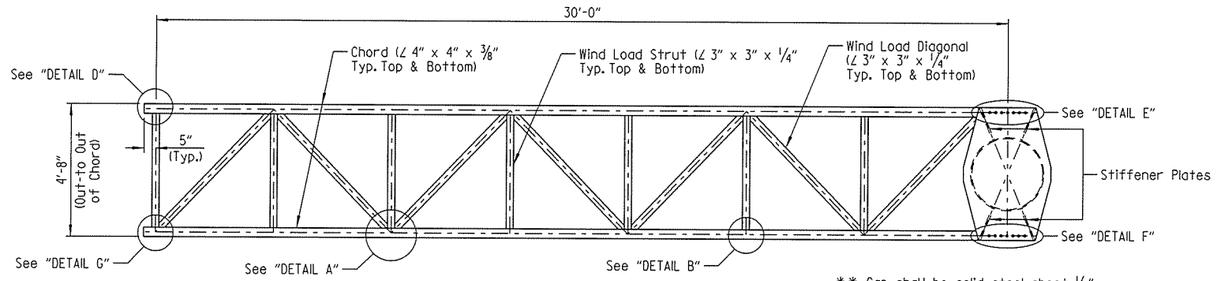

NOTE:
For "DETAIL A" thru "DETAIL G", See Dwg. No. 55808a.

PLAN
Scale: 3/8" = 1'-0"

** Cap shall be solid steel sheet 1/2" nominal thickness. Drill, tap and plug galvanizing vent.

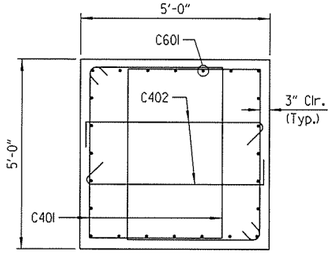

SECTION A-A
Scale: 1/2" = 1'-0"

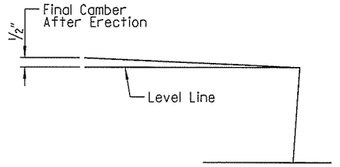

TRUSS CAMBER DIAGRAM

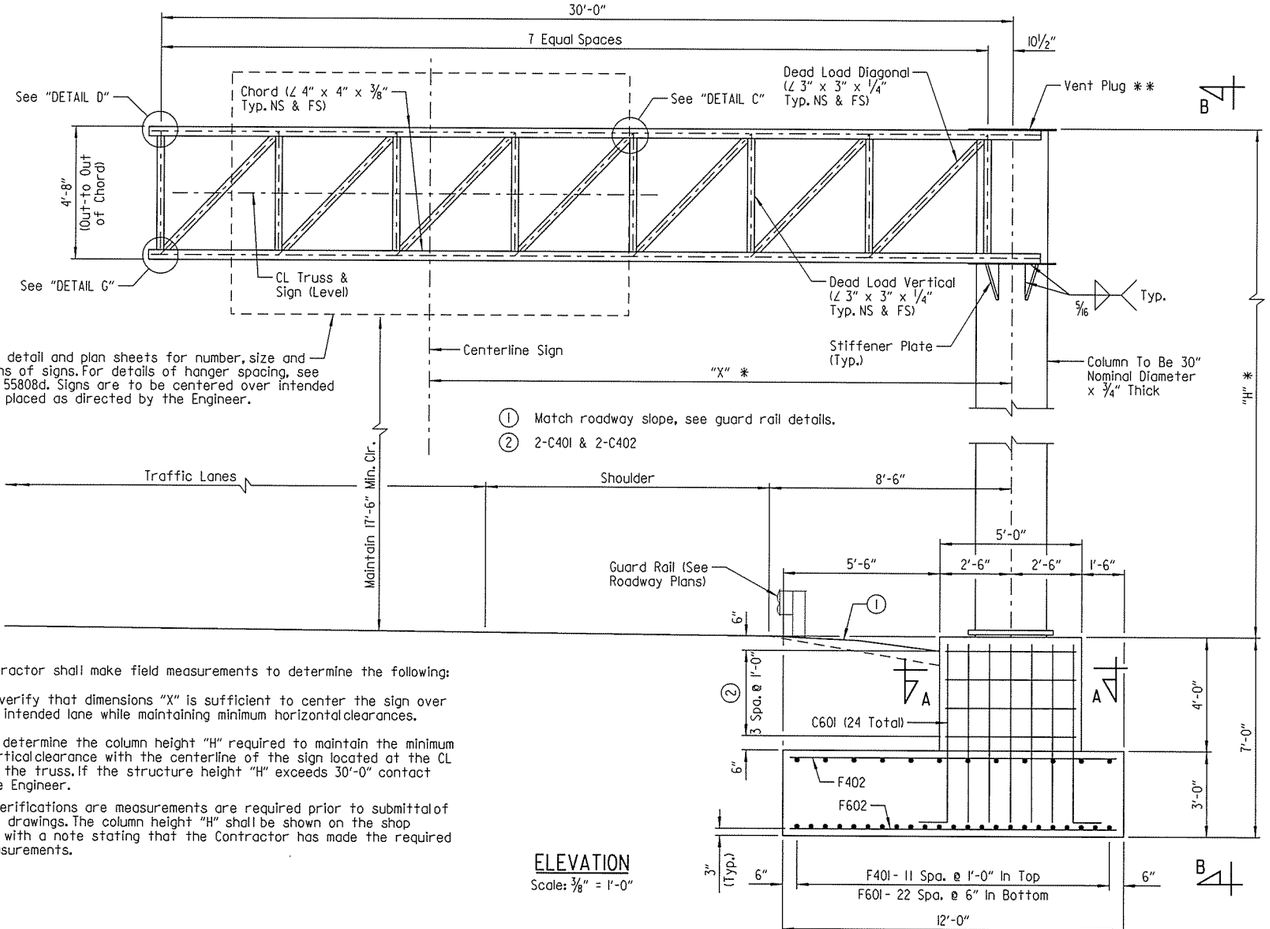

NOTE:
The Contractor shall make field measurements to determine the following:

1.) To verify that dimensions "X" is sufficient to center the sign over the intended lane while maintaining minimum horizontal clearances.

2.) To determine the column height "H" required to maintain the minimum vertical clearance with the centerline of the sign located at the CL of the truss. If the structure height "H" exceeds 30'-0" contact the Engineer.

Theses verifications are measurements are required prior to submittal of the shop drawings. The column height "H" shall be shown on the shop drawings with a note stating that the Contractor has made the required field measurements.

ELEVATION
Scale: 3/8" = 1'-0"

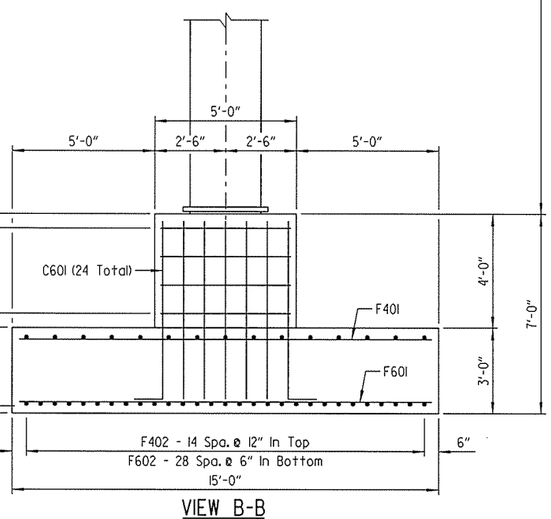

VIEW B-B

BAR LIST - PER SIGN STRUCTURE

MARK	NO. REQ'D	LENGTH	P.D.
C401	8	15'-8"	3"
C402	8	5'-5"	3"
C601	24	7'-2"	4 1/2"
F401	12	14'-6"	Str.
F402	15	11'-6"	Str.
F601	23	14'-6"	Str.
F602	29	11'-6"	Str.

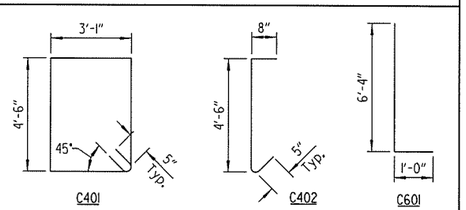

NOTE: Dimensions of bars are out-to-out.

APPROXIMATE QUANTITIESFOR INFORMATION ONLY

STRUCTURE NUMBER	CLASS S CONCRETE (Cu. Yards)	REINFORCING STEEL (Lbs.)	EXCAVATION (Cu. Yards)
0C-430-60-37	23.70	1604	61

TABLE OF VARIABLES

STRUCTURE NUMBER	"X"
0C-430-60-37	20'-6"

STATE OF ARKANSAS
LICENSED PROFESSIONAL ENGINEER
No. 15902
PRESTON C. CAMPBELL
7-29-14
BRIDGE ENGINEER

SHEET 1 OF 5
DETAILS OF 30' STEEL CANTILEVER SIGN STRUCTURE
PULASKI COUNTY
ROUTE SEC.
ARKANSAS STATE HIGHWAY COMMISSION
LITTLE ROCK, ARK.

DRAWN BY: HEW DATE: MAR. 2014 FILENAME: BCA0609x3_T6.DGN
CHECKED BY: AJK DATE: MAR. 2014 SCALE: NOT TO SCALE
DESIGNED BY: PCC DATE: MAR. 2014
STR. NO. 0C-430-60-37 DRAWING NO. 55808

pccampbell 7/29/2014 2:58:04 PM
WORKSPACE: AHTD Bridge
L:\ZOR\ROUTE\09 - I-40 at I-430 Interchange Modifications\Drawings\BCA0609x3_T6 (CSS 1 of 5).dgn
REVISED DATE:

DATE REVISED	DATE FILMED	DATE REVISED	DATE FILMED	FED. ROAD DIST. NO.	STATE	FED. AID PROJ. NO.	SHEET NO.	TOTAL SHEETS
				6	ARK.			
				JOB NO.		CA0609	365	693
				①		SIGN STRUCTURE		55808a

NOTE:
Thickness of all gusset plates shall be 3/8".

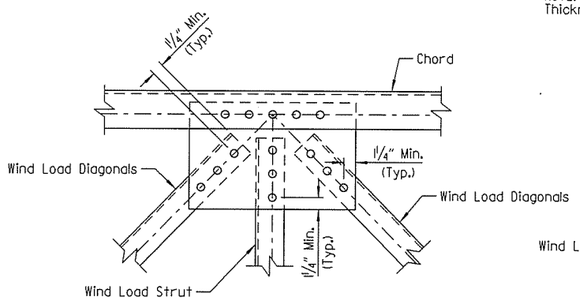

DETAIL A
Scale: 1½" = 1'-0"

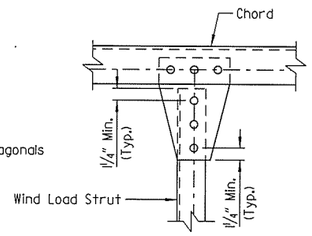

DETAIL B
Scale: 1½" = 1'-0"

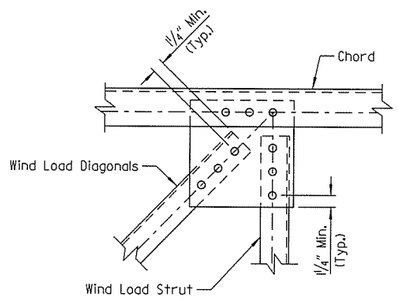

DETAIL C
Scale: 1½" = 1'-0"

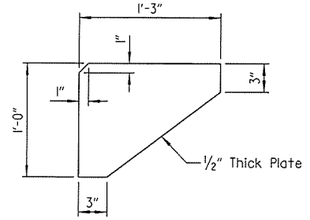

STIFFENER DETAIL
Scale: 1½" = 1'-0"

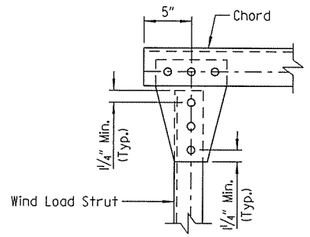

DETAIL D
Scale: 1½" = 1'-0"

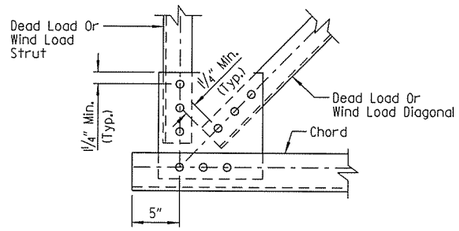

DETAIL G
Scale: 1½" = 1'-0"

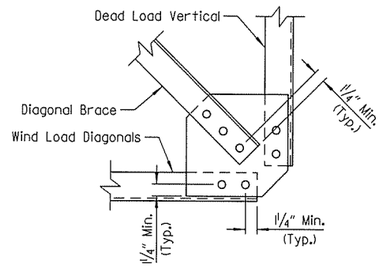

DETAIL H
Scale: 1½" = 1'-0"

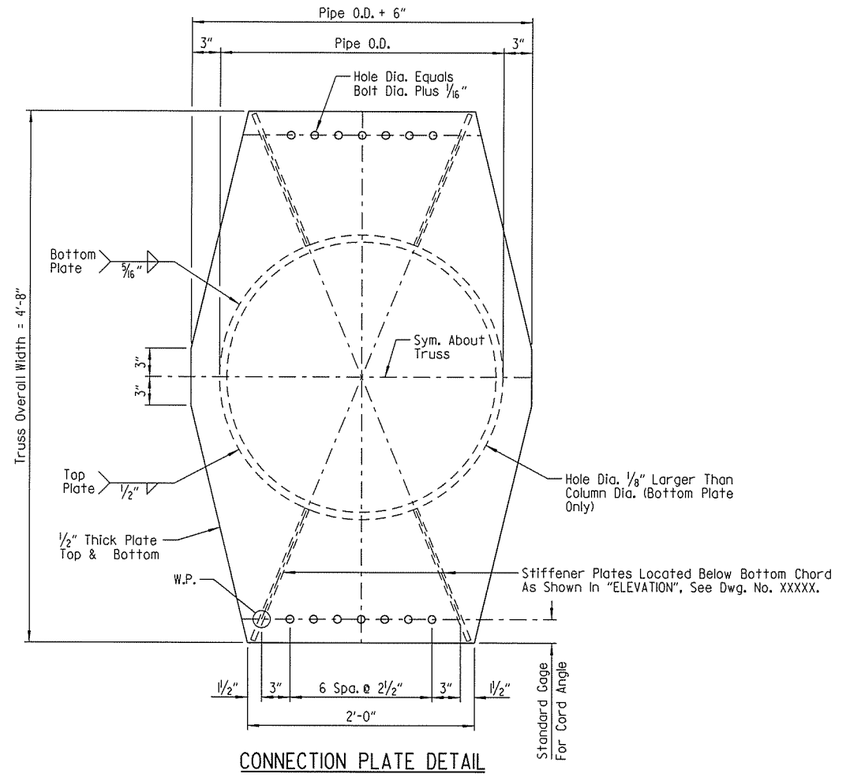

CONNECTION PLATE DETAIL
Scale: 1½" = 1'-0"

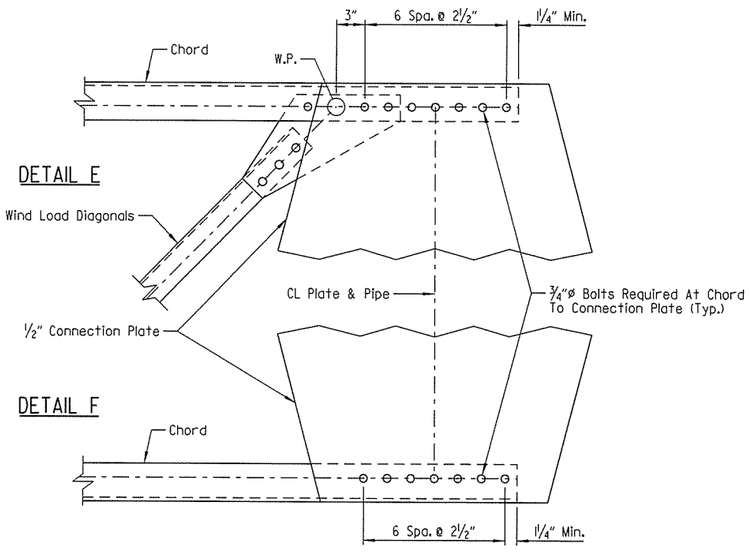

CONNECTION DETAIL
Scale: 1½" = 1'-0"

STATE OF ARKANSAS
LICENSED PROFESSIONAL ENGINEER
No. 15902
PRESTON C. CAMPBELL
7-29-14
BRIDGE ENGINEER

SHEET 2 OF 5
DETAILS OF 30' STEEL
CANTILEVER SIGN STRUCTURE
PULASKI COUNTY
ROUTE SEC.
ARKANSAS STATE HIGHWAY COMMISSION
LITTLE ROCK, ARK.

DRAWN BY: HEW DATE: FEB. 2014 FILENAME: BCA0609x3_T7.DGN
CHECKED BY: AJK DATE: FEB. 2014 SCALE: NOT TO SCALE
DESIGNED BY: PCC DATE: FEB. 2014
STR. NO. OC-430-60-37 DRAWING NO. 55808a

pacampbell 7/29/2014 2:58:04 PM
WORKSPACE: AHTD Bridge
L:\2014\0014709 - I-430 Interchange Modifications\Drawings\BCA0609x3_T7 (CSS 2 of 5).dgn
REVISED DATE:

DATE REVISED	DATE FILMED	DATE REVISED	DATE FILMED	FED. ROAD DIST. NO.	STATE	FED. AID PROJ. NO.	SHEET NO.	TOTAL SHEETS
				6	ARK.			
				JOB NO.		CA0609	366	693
				①		SIGN STRUCTURE		55808b

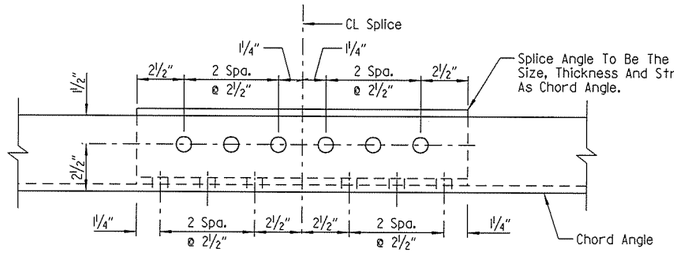

NOTE:
Place splice angles on inside of truss. Bolts shall be ¾"ø and open holes shall be 13/16 "ø.

OPTIONAL CHORD SPLICE USING ANGLES

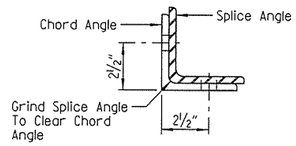

SECTION AT CL SPLICE

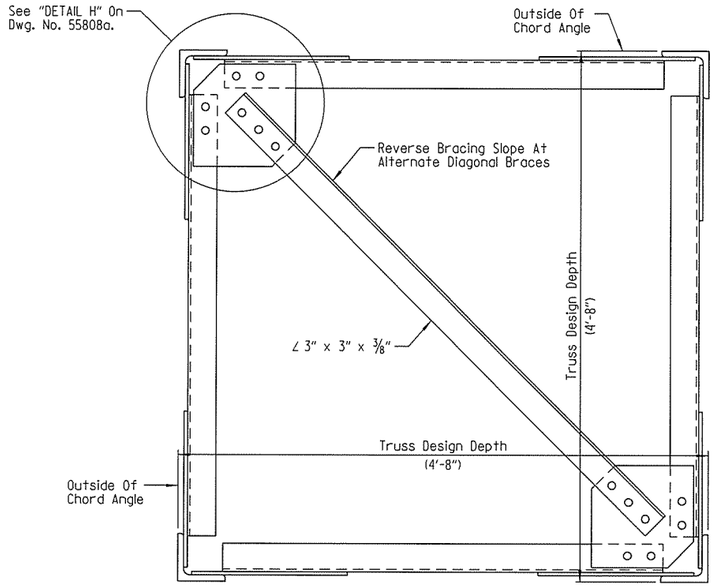

TRUSS SECTION
Scale: 1½" = 1'-0"

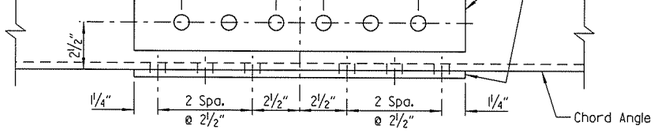

NOTE:
Bolts shall be ¾"ø and open holes shall be 13/16 "ø.

OPTIONAL CHORD SPLICE USING PLATES

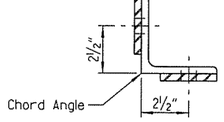

SECTION AT CL SPLICE

SPLICE DETAILS
No Scale

STATE OF ARKANSAS
LICENSED PROFESSIONAL ENGINEER
No. 15902
PRESTON C. CAMPBELL
7-29-14
BRIDGE ENGINEER

SHEET 3 OF 5
DETAILS OF 30' STEEL
CANTILEVER SIGN STRUCTURE
PULASKI COUNTY
ROUTE SEC.
ARKANSAS STATE HIGHWAY COMMISSION
LITTLE ROCK, ARK.

DRAWN BY: HEW DATE: FEB. 2014 FILENAME: BCA0609x3_T8.DGN
CHECKED BY: AJK DATE: FEB. 2014 SCALE: NOT TO SCALE
DESIGNED BY: PCC DATE: FEB. 2014
STR. NO. OC-430-60-37 DRAWING NO. 55808b

pccampbell 7/29/2014 2:58:05 PM
WORKSPACE: AHTD Bridge
L:\2011\011709 - I-40 at I-430 Interchange Modifications\Drawings\BCA0609x3_T8 (CSS 3 of 5).dgn
REVISED DATE:

DATE REVISED	DATE FILMED	DATE REVISED	DATE FILMED	FED. ROAD DIST. NO.	STATE	FED. AID PROJ. NO.	SHEET NO.	TOTAL SHEETS
				6	ARK.			
				JOB NO.		CA0609	367	693
				①		SIGN STRUCTURE		55808c

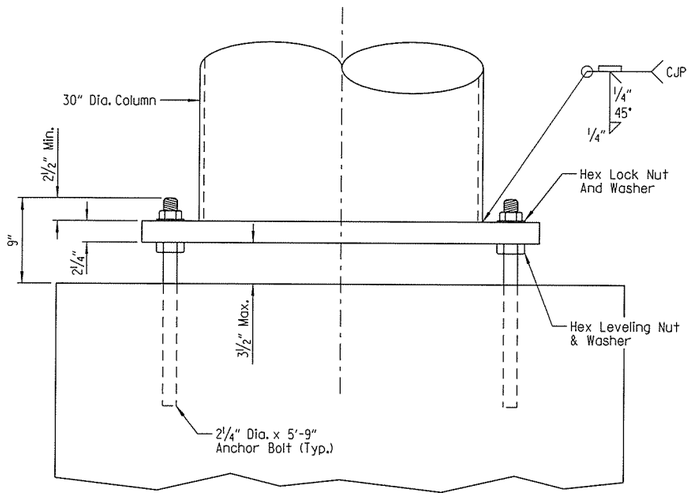

ELEVATION - COLUMN BASE

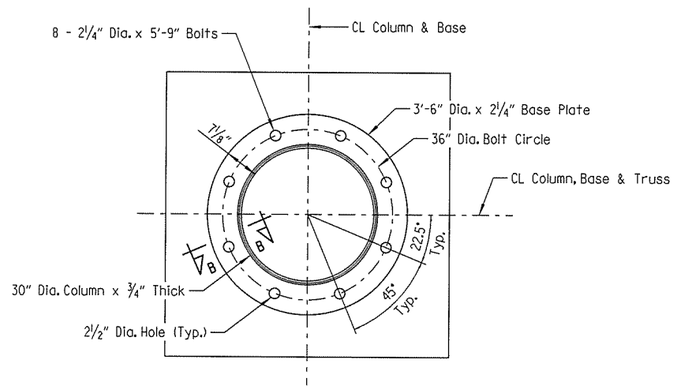

PLAN - COLUMN BASE

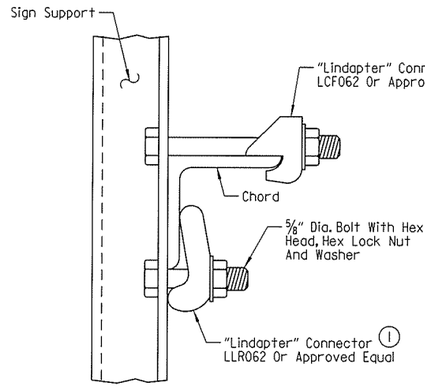

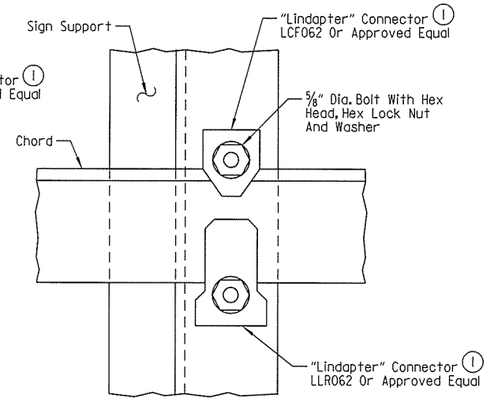

TOP CHORD

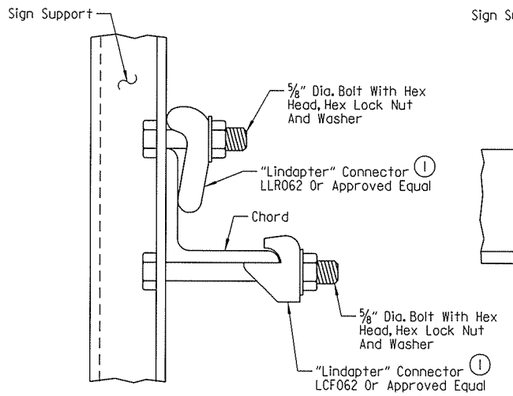

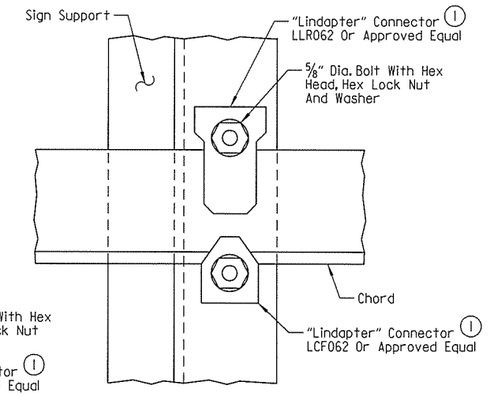

BOTTOM CHORD

① Note:
All "Lindapter" connectors or approved equal shall be installed according to manufacturer's recommendations. All connectors, bolts, nuts and washers shall be galvanized.

Note:
Install all support connectors clear of the gusset plates and splice locations.

DETAILS OF SIGN SUPPORT CONNECTED TO TRUSS

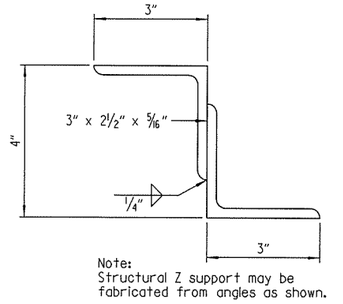

Note:
Structural Z support may be fabricated from angles as shown.

DETAILS OF ALTERNATE Z SUPPORT

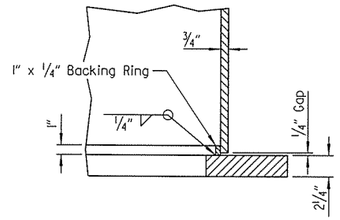

SECTION B-B

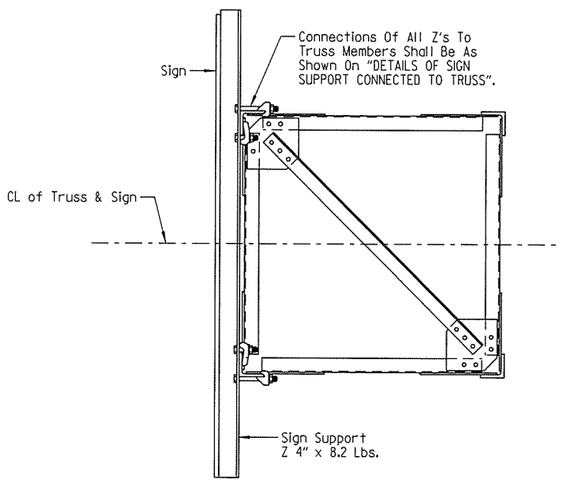

SECTION THRU TRUSS

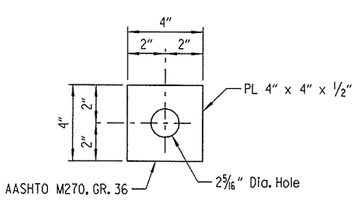

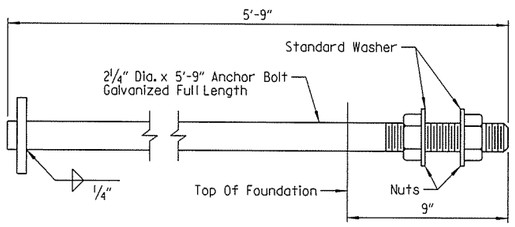

Anchor bolts shall comply with AASHTO M34, Grade 55. with Supplementary Requirement S and galvanized according to Section 807.07. Nuts for bolts shall be as specified in Section 807.07.

ANCHOR BOLT DETAIL

STATE OF ARKANSAS
LICENSED PROFESSIONAL ENGINEER
No. 15902
PRESTON C. CAMPBELL
7-22-14
BRIDGE ENGINEER

SHEET 4 OF 5
DETAILS OF 30' STEEL
CANTILEVER SIGN STRUCTURE
PULASKI COUNTY
ROUTE SEC.
ARKANSAS STATE HIGHWAY COMMISSION
LITTLE ROCK, ARK.

DRAWN BY: HEW DATE: FEB. 2014 FILENAME: BCA0609x3_T9.DGN
CHECKED BY: AJK DATE: FEB. 2014 SCALE: NOT TO SCALE
DESIGNED BY: PCC DATE: FEB. 2014
STR. NO. OC-430-60-37 DRAWING NO. 55808c

pcampbell 7/29/2014 2:58:05 PM
WORKSPACE: AHTD Bridge
L:\20\NO\T709 - I-40 at I-430 Interchange Modifications\Drawings\BCA0609x3_T9 (CSS 4 of 5).dgn
REVISED DATE:

DATE REVISED	DATE FILMED	DATE REVISED	DATE FILMED	FED. ROAD DIST. NO.	STATE	FED. AID PROJ. NO.	SHEET NO.	TOTAL SHEETS
				6	ARK.			
				JOB NO.		CA0609	368	693
				(1)		SIGN STRUCTURE		55808d

GENERAL NOTES:

CONSTRUCTION SPECIFICATIONS: Arkansas State Highway and Transportation Department Standard Specifications for Highway Construction, 2003 Edition, with applicable supplemental specifications and special provisions. Section and subsection refer to the Standard Construction Specifications unless otherwise noted in the plans.

DESIGN SPECIFICATIONS: AASHTO Standard Specifications for Structural Supports for Highway Signs, Luminaires and Traffic Signals, Fifth Edition, 2009.

Basic Wind Speed = 90 mph.
Fatigue Category: I

This structure is approved for 235 square feet of sign area. Use of additional area must be approved by the Engineer.

FOUNDATION MATERIALS AND STRENGTHS:

Class S Concrete	f'c = 3,500 psi
Reinforcing Steel (Grade 60, AASHTO M 31 or M 322, Type A)	fy = 60,000 psi

Structural steel sign support members shall comply with the following specifications:

Angles:	AASHTO M 270, Grade 36 (Fy = 36,000 psi)
Plate:	AASHTO M 270, Grade 50 (Fy = 50,000 psi)
(1) Pipe:	ASTM A 139, Gr. C (Fy = 42,000 psi) ASTM A 500, Gr. B (Fy = 42,000 psi) ASTM A 501, Gr. B (Fy = 50,000 psi) ASTM A 714, Class 2, Grade II, Type E or S (Fy = 50,000 psi)
Z-Shapes:	AASHTO M 270, Grade 36 (Fy = 36,000 psi)
Bolts:	ASTM A 325, Type I
Locknuts - Approved Type:	Meeting or exceeding AASHTO M 292
Washers:	ASTM F 436
Nuts:	ASTM A 563 or AASHTO M 292, Grade DH or Grade 2H

All steel shall be galvanized according to Subsection 807.19. Steel completely encased in concrete may not be galvanized.

Drawings show general features of design only. Shop drawings shall be made in accordance with Subsection 807.04, submitted and approval secured before fabrication is begun.

Requests for substitution of structural steel shapes shown with shapes of greater size must be submitted by the Contractor to the Engineer for approval. Steels of equal or greater strengths will be accepted only when shown on the approved shop drawings. Shapes and materials shown in the plans will be the basis of payment and no additional compensation will be made for any adjustments due to substitutions.

Connections shall be bolted with high-strength bolts. Unless noted otherwise, bolts shall be $\frac{5}{8}$" dia. and open holes shall be $\frac{11}{16}$" dia. Bolt spacing shall be $2\frac{1}{4}$" for $\frac{5}{8}$" dia. bolts unless otherwise noted. Bolts shall be placed with heads on the outside face of all members.

All welding that is to be done during fabrication of structural steel, including temporary welds, shall be detailed on the shop drawings and submitted for approval. If additional welds are required, wether temporary or permanent, a formal request with detailed drawings shall be subnitted to the Engineer for approval. All welding shall conform to Subsection 807.26.

Anchor bolts shall comply with AASHTO M 314, Grade 55 including Supplementary Requirement S1, and galvanized according to Subsection 807.07. Nuts and washers for anchor bolts shall be furnished and galvanized in accordance with Subsection 807.07.

All truss frame bolts shall comply with ASTM A325 Type I, galvanized according to Subsection 807.06. Nuts and washers for ASTM A325 Type I bolts shall be furnished and galvanized in accordance with Subsection 807.06.

Field splices shall be located in order to avoid sign panel connections. Only one chord splice is permitted with a minimum section length of 15 feet.

All main load carrying tension members greater than $\frac{1}{2}$" in thickness shall confrom to the requirements of the Longitudinal Charpy V-Notch test specified for Zone I minimum service temperature. This work and materials shall be paid for in accordance with Job Special Provision "STEEL SIGN STRUCTURE".

All fillet welds of critical members shall be tested according to AWS D1.1 Structural Welding Code - Steel using the magnetic particle method. Critical welds shall include: column to truss connection plate welds.

All CJP groove welds shall be tested according to AWS D1.1 Structural Welding Code - Steel.

Truss field sections shall be shop assembled. Entire truss shall be fully assembled and lifted into place as one unit on to support. All truss member connections shall be bolted connections.

All truss member connections shall be bolted connections.

Lock nuts to be equipped with nylon locking inserts or other approved type locking system. Lock nuts to be installed according to manufacturer's recommendations.

Shoring may be required to protect existing shoulders during excavation. Any shoring required shall not be paid for directly, but shall be considered incidental to the item "STEEL CANTILEVER SIGN STRUCTURE". The excavations for the footings shall be backfilled before the structure is attached to the foundations.

Galvanized coating damaged during transport, handling or erection shall be field repaired in accordance with Subsection 807.88.

The Contractor shall make check measurements in the field and make any adjustments necessary to meet the required clearances and to fit new structures to the existing conditions.

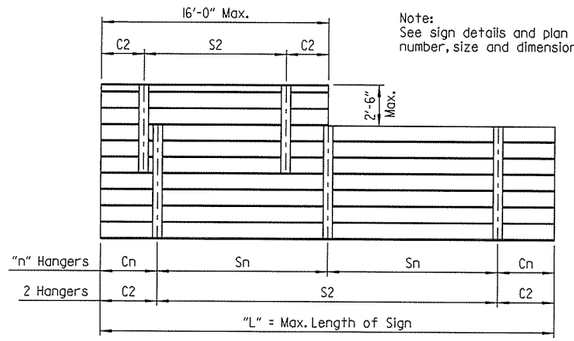

HANGER SPACING DETAILS FOR EXTRUDED PANEL SIGNS

Note:
See sign details and plan sheets for number, size and dimensions of signs.

HANGER VARIABLES

Max. Length of Sign = "L"	"n" Hangers	Cantilever Length "Cn"	Hanger Spacing "Sn"
15'-0"	2 Hangers	0.21 x "L"	0.58 x "L"
30'-0"	3 Hangers	0.145 x "L"	0.355 x "L"

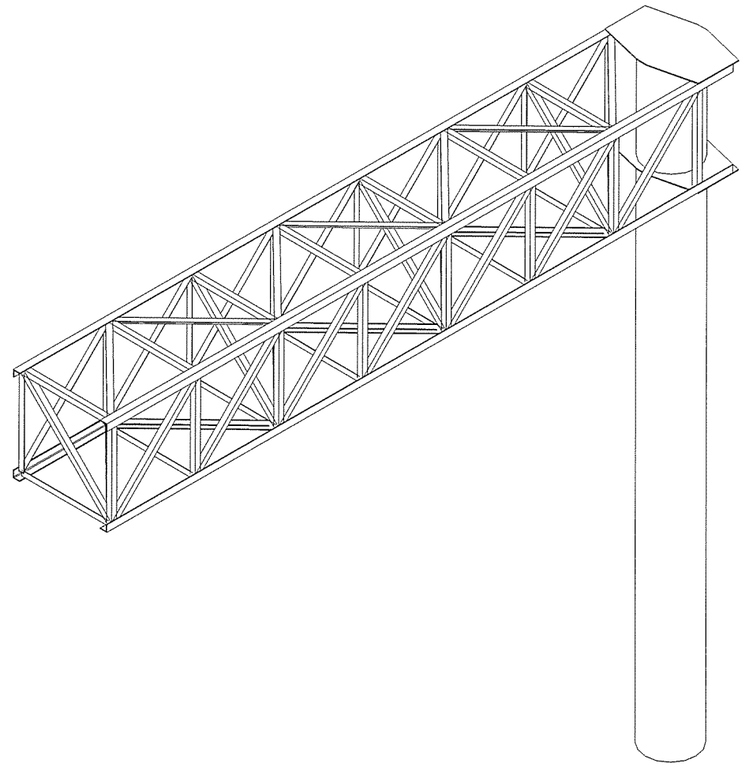

ISOMETRIC VIEW
No Scale

(1) In addition to material requirements all pipe used for welded applications shall have a maximum carbon equivalency (CE) of 0.4 using the following equation: CE = %C + %Mn/6 + %Cu/40 + %Ni/20 + %Cr/10 - %Mo/50 - %V/10

STATE OF ARKANSAS
LICENSED PROFESSIONAL ENGINEER
No. 15902
PRESTON C. CAMPBELL
7-29-14
BRIDGE ENGINEER

SHEET 5 OF 5
DETAILS OF 30' STEEL CANILEVER SIGN STRUCTURE
PULASKI COUNTY

ROUTE SEC.

ARKANSAS STATE HIGHWAY COMMISSION
LITTLE ROCK, ARK.

DRAWN BY: HEW DATE: FEB. 2014 FILENAME: BCA0609x3_T10.DGN
CHECKED BY: AJK DATE: FEB. 2014 SCALE: NOT TO SCALE
DESIGNED BY: PCC DATE: FEB. 2014

STR. NO. OC-430-60-37 DRAWING NO. 55808d

pccampbell 7/29/2014 2:58:06 PM
WORKSPACE: AHTD Bridge
L:\CON\DOT709 - I-430 at I-430 Interchange Modifications\Drawings\BCA0609x3_T10 (CSS 5 of 5).dgn
REVISED DATE:

DATE REVISED	DATE FILMED	DATE REVISED	DATE FILMED	FED. ROAD DIST. NO.	STATE	FED. AID PROJ. NO.	SHEET NO.	TOTAL SHEETS
				6	ARK.		369	
				JOB NO.				

(1) EMBANKMENT & BACKFILL 55000

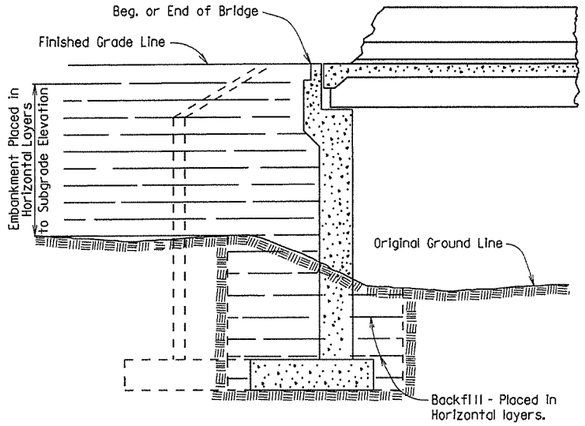

EMBANKMENT CONSTRUCTION AND FOOTING BACKFILL AT VERTICAL WALL ABUTMENTS

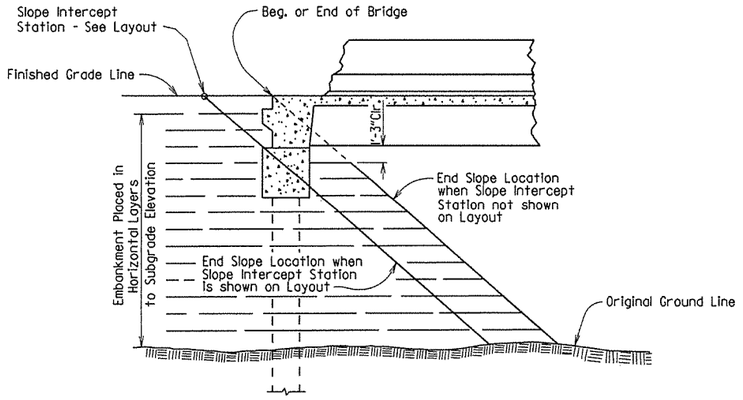

EMBANKMENT CONSTRUCTION AT SPILL-THROUGH PILE END BENTS

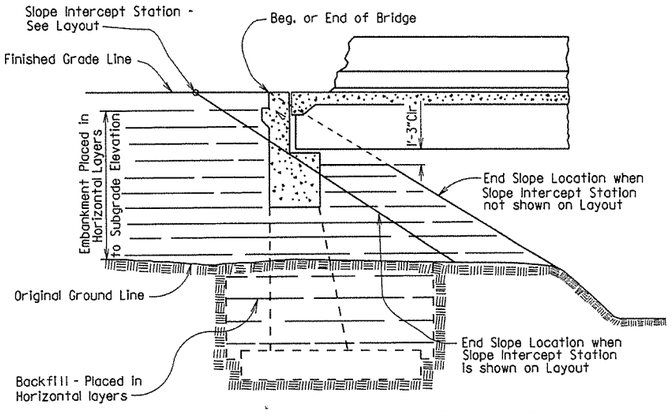

EMBANKMENT CONSTRUCTION AND FOOTING BACKFILL AT SPILL-THROUGH END BENTS

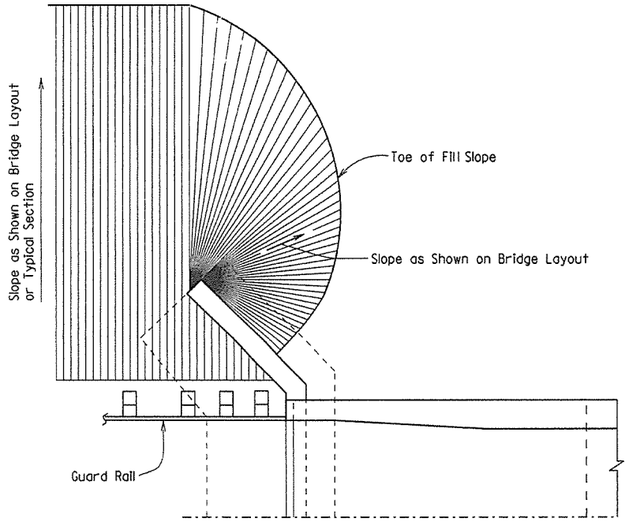

VERTICAL WALL ABUTMENTS

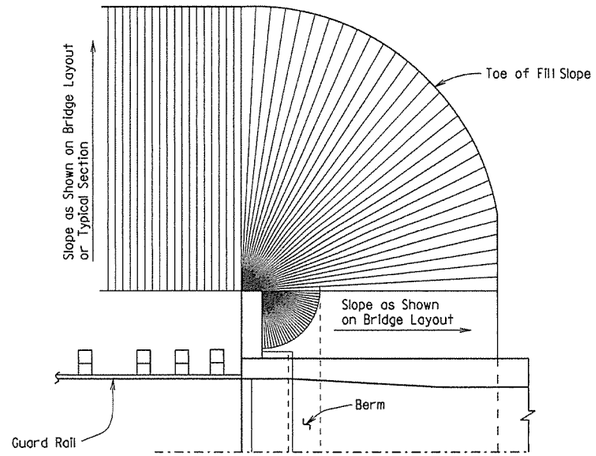

SPILL-THROUGH END BENTS WITH STUB WING

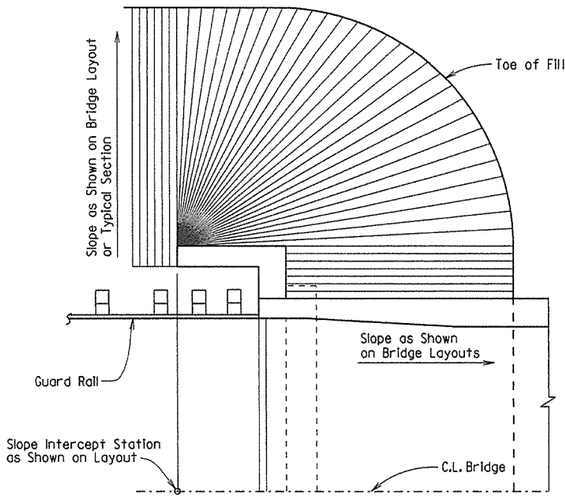

SPILL-THROUGH END BENTS WITH TURNBACK WING

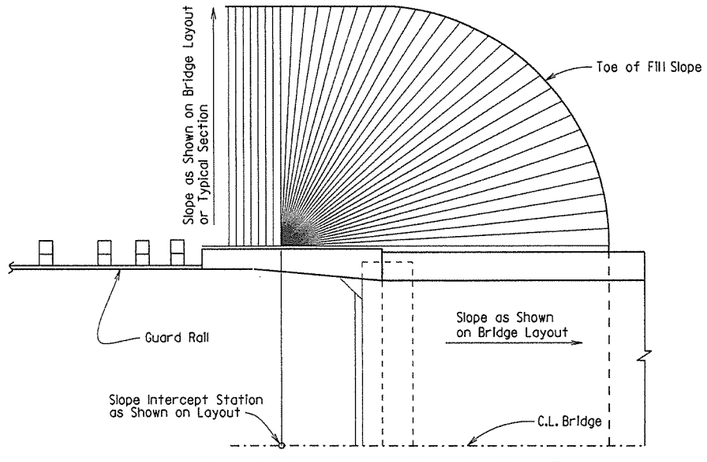

SPILL-THROUGH END BENTS WITH TRANSITION WING

METHOD OF DETERMINING FILL SLOPE LOCATION AT BRIDGE ENDS

GENERAL NOTES

The Bridge End Embankment shall be defined as a section of embankment, not less than 20 feet long adjacent to the bridge end, together with the side slopes and slopes under the bridge end including around the end of wingwalls. Embankment adjacent to structures shall be constructed in 6 inch horizontal layers (loose measure) and compacted by the use of mechanical equipment to the satisfaction of the Engineer. Refer to Subsections 210.09, 210.10 and 801.08 for construction requirements.

STANDARD DETAILS FOR EMBANKMENT CONSTRUCTION AND BACKFILL AT BRIDGE ENDS

ARKANSAS STATE HIGHWAY COMMISSION
LITTLE ROCK, ARK.

DRAWN BY: KDH DATE: 2-27-2014 FILENAME: b55000.dgn
CHECKED BY: BEF DATE: 2-27-2014 SCALE: NO SCALE
DESIGNED BY: STD. DATE: -

DRAWING NO. 55000

DATE REVISED	DATE FILMED	DATE REVISED	DATE FILMED	FED. ROAD DIST. NO.	STATE	FED. AID PROJ. NO.	SHEET NO.	TOTAL SHEETS
				6	ARK.		370	
				JOB NO.				

① CONCRETE RIPRAP 55002

Note:
Sloped surfaces of concrete riprap to be marked off into blocks (construction joints optional) with an approved grooving tool, spacing the grooved lines about 5' apart.

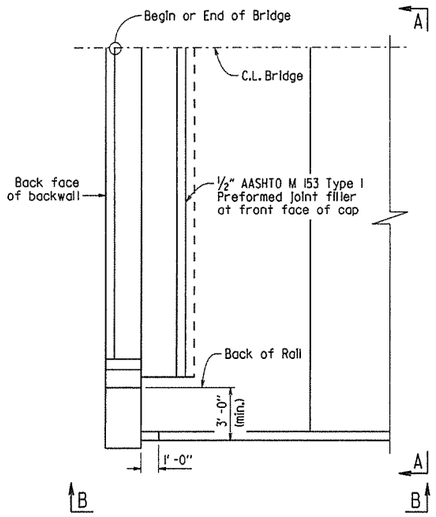

PLAN OF CONCRETE RIPRAP
PERPENDICULAR TO WING
¼" = 1'-0"

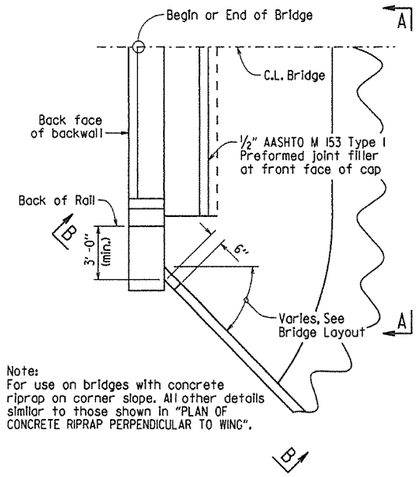

Note:
For use on bridges with concrete riprap on corner slope. All other details similar to those shown in "PLAN OF CONCRETE RIPRAP PERPENDICULAR TO WING".

PLAN OF CONCRETE RIPRAP
AT ANGLE TO WING
¼" = 1'-0"

Note:
For use on bridges with turned back wings. All other details similar to those shown in "PLAN OF CONCRETE RIPRAP PERPENDICULAR TO WING".

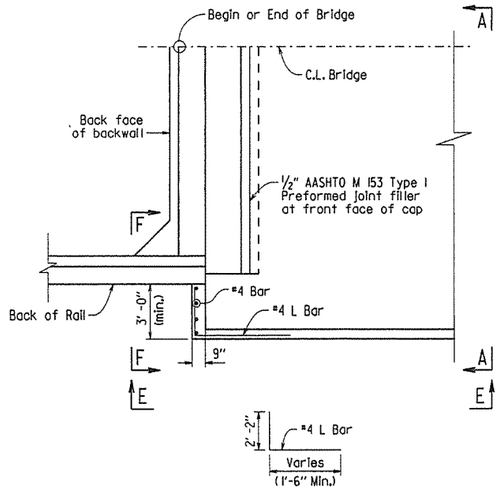

PLAN OF CONCRETE RIPRAP
PERPENDICULAR TO TURNED BACK WING
¼" = 1'-0"

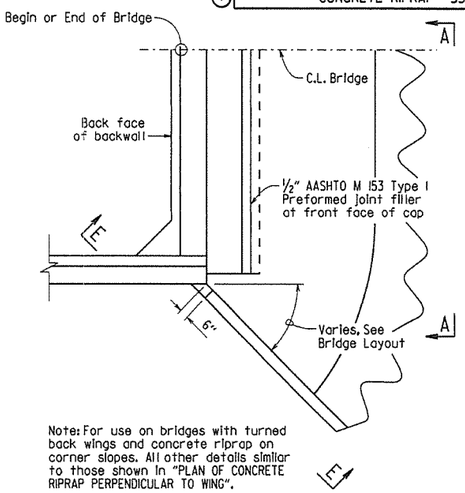

Note: For use on bridges with turned back wings and concrete riprap on corner slopes. All other details similar to those shown in "PLAN OF CONCRETE RIPRAP PERPENDICULAR TO WING".

PLAN OF CONCRETE RIPRAP
AT ANGLE FROM TURNED BACK WING
¼" = 1'-0"

Note:
Wing is shown perpendicular to concrete riprap. Details are similar when wing is at an angle to riprap.

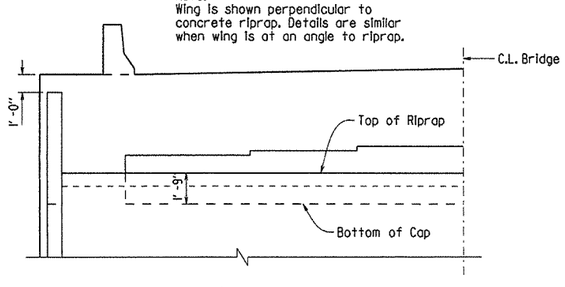

VIEW A-A
¼" = 1'-0"

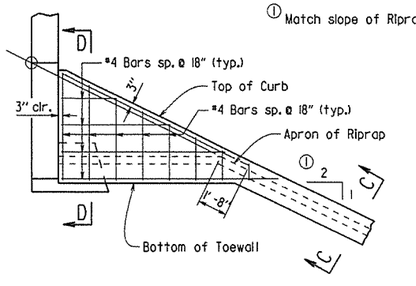

VIEW B-B
¼" = 1'-0"

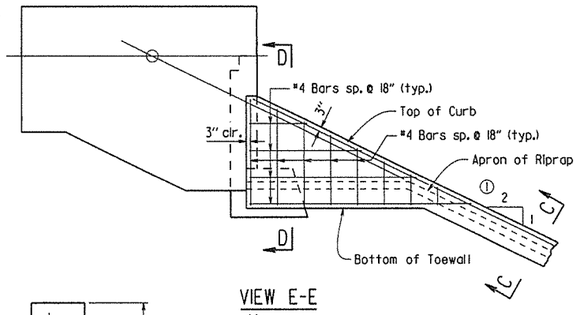

VIEW E-E
¼" = 1'-0"

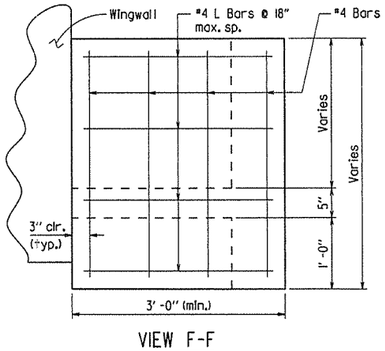

VIEW F-F
1" = 1'-0"

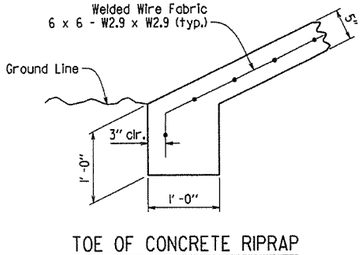

TOE OF CONCRETE RIPRAP
1" = 1'-0"

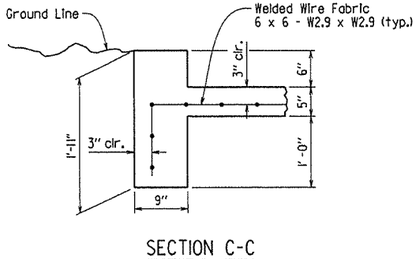

SECTION C-C
1" = 1'-0"

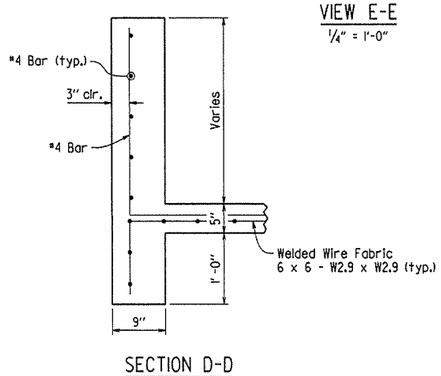

SECTION D-D
1" = 1'-0"

GENERAL NOTES

All concrete shall be Class A with a minimum compressive strength, f'c = 2,100 psi.

Welded wire fabric shall conform to AASHTO M55 or M221.

STANDARD DETAILS FOR CONCRETE RIPRAP

ARKANSAS STATE HIGHWAY COMMISSION

LITTLE ROCK, ARK.

DRAWN BY: ACP DATE: 2/27/2014 FILENAME: b55002.dgn
CHECKED BY: BEF DATE: 2/27/2014 SCALE: AS SHOWN
DESIGNED BY: Std. DATE: ---

DRAWING NO. 55002

DATE REVISED	DATE FILMED	DATE REVISED	DATE FILMED	FED. ROAD DIST. NO.	STATE	FED. AID PROJ. NO.	SHEET NO.	TOTAL SHEETS
				6	ARK.		371	
				JOB NO.				
				①	BRIDGE DECK FORMS		55005	

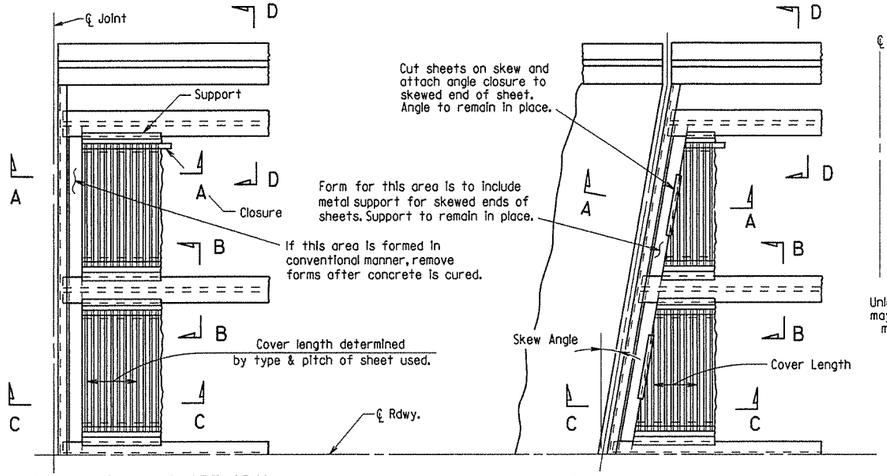

PART PLAN - SQUARE SPAN

3/8" = 1'-0"

PART PLAN - SKEWED SPAN

3/8" = 1'-0"

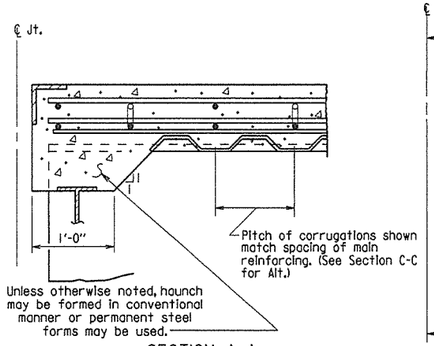

SECTION A-A

N.T.S.

(Angle at end of span)

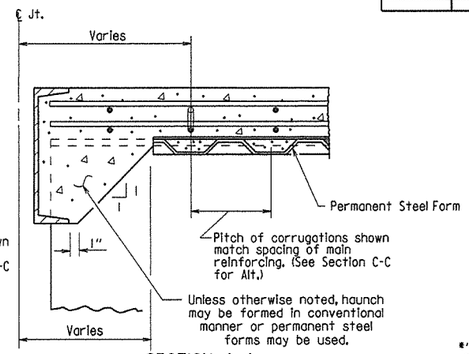

SECTION A-A

N.T.S.

(Channel at end of span)

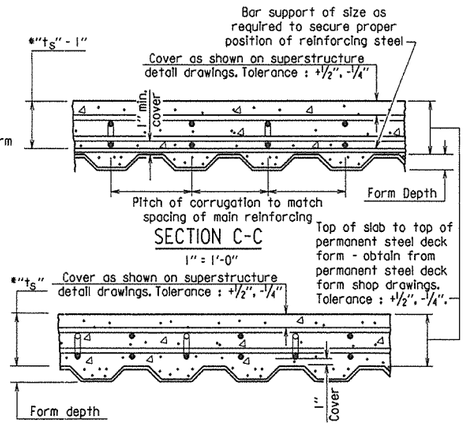

SECTION C-C - ALTERNATE

1" = 1'-0"

(Applicable when corrugations do not match spacing of main reinforcement)

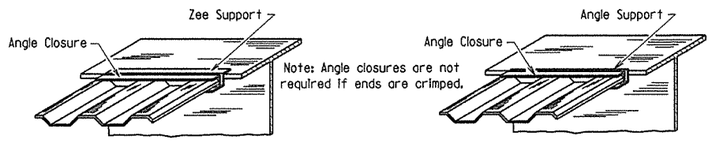

SKETCH OF PERMISSIBLE SUPPORTS

N.T.S.

*t_s = slab thickness as shown on superstructure detail drawings.

GENERAL NOTES

Permanent steel deck forms may be used at the Contractor's option and shall be at no additional cost to the Department. Such use may result in changes to the dead load deflection of the girder. Any cost for adjustments due to a change in the dead load deflection will be borne by the Contractor. Payment for deck concrete and structural steel will not be increased due to use of permanent steel deck forms.

Permanent steel deck forms shall conform to Subsection 802.14(b). Detailed plans, including detailed calculations and manufacturer's technical brochure, shall be submitted to and approved by the Engineer before work of forming the bridge deck is started.

Welding of form supports to the tension flange of steel girders will be permitted only in areas where shear connectors are used. When welding is not allowed, the method of fastening Z or ∠ supports to the flange must be approved by the Engineer.

Form sheets shall be fastened to supporting members and to each other with galvanized metal screws sufficient in size and number to provide a secure attachment. Alternate methods of attachment must be approved by the Engineer.

When the pitch of form corrugations match the reinforcing spacing, transversely align form sheets across the bridge to maintain the correct orientation of continuous reinforcing bars in the corrugations.

Bar support rods, when used, shall be sized and spaced to adequately support the bottom reinforcing mat at the required position.

High chairs shall be sized to support the top mat of reinforcing at the proper position. High chairs shall be placed at locations shown on the detail drawings.

Specifications: Arkansas State Highway and Transportation Department Standard Specifications for Highway Construction (2014 Edition), with applicable Supplemental Specifications and Special Provisions.

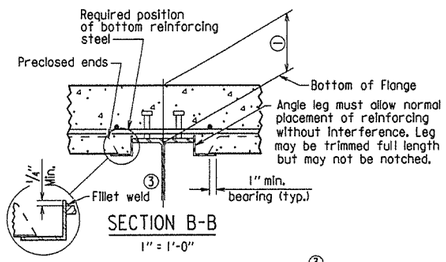

SECTION B-B

1" = 1'-0"

(Showing permissible support for tension flange where shear connectors are used, and for all compression flanges)

③ Minimum weld: ⅛" x 1' @ 18". More weld may be required; maximum length per weld = 1½" (typ.)

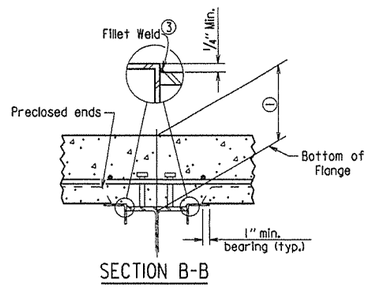

SECTION B-B

1" = 1'-0"

(Showing permissible support for tension flange where shear connectors are used and for all compression flanges)

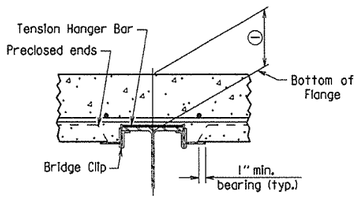

SECTION B-B

1" = 1'-0"

(Showing permissible support for tension flange where shear connectors are not used)

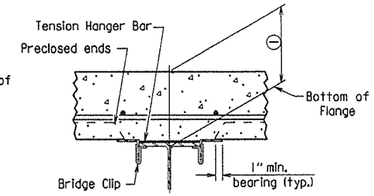

SECTION B-B

1" = 1'-0"

(Showing permissible support for tension flange where shear connectors are not used)

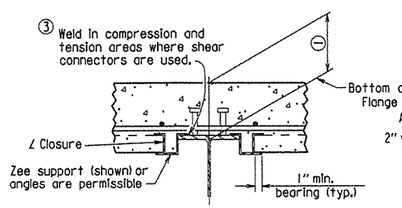

SECTION B-B

1" = 1'-0"

(Showing ∠ Closure)

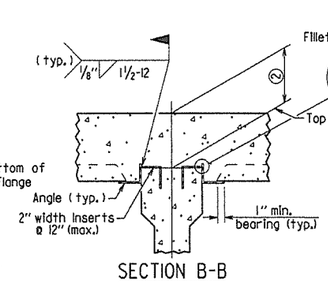

SECTION B-B

(FOR CONCRETE GIRDERS)

1" = 1'-0"

(Showing support by insert cast in girder)

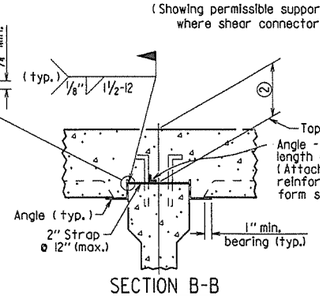

SECTION B-B

(FOR CONCRETE GIRDERS)

1" = 1'-0"

(Showing support by Strap)

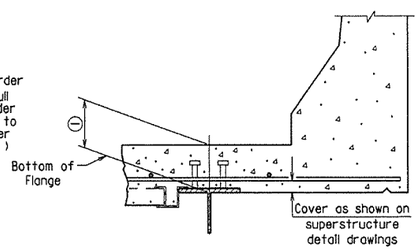

SECTION D-D

1" = 1'-0"

Note: Only Bottom Reinforcing is shown.

① Distance from top of slab to bottom of top flange as measured at centerline girder and as shown on superstructure detail drawings. This dimension may vary within the following limits to maintain the grade and slab thickness tolerances : Minimum - occurs when either the top flange or the support angle leg contacts the bottom reinforcing steel; Maximum = t_s + 1¼" + flange thickness. See Section C-C for slab thickness tolerance between adjacent girder flanges.

② Distance from top of slab to top of girder as measured at centerline girder and as shown on superstructure detail drawings. This dimension may vary within the following limits to maintain the grade and slab thickness tolerances : Minimum - occurs when either the top of girder or the support angle leg contacts the bottom reinforcing steel; Maximum - value shown on the superstructure detail drawings when removable forms are used. See Section C-C for slab thickness tolerance between adjacent girder flanges.

STANDARD DETAILS FOR PERMANENT STEEL BRIDGE DECK FORMS FOR STEEL & CONCRETE GIRDER SPANS

ARKANSAS STATE HIGHWAY COMMISSION

LITTLE ROCK, ARK.

DRAWN BY: KDH DATE: 2-27-2014 FILENAME: b55005.dgn

CHECKED BY: BEF DATE: 2-27-2014 SCALE: NONE

DESIGNED BY: STD. DATE: —

DRAWING NO. 55005

DATE REVISED	DATE FILMED	DATE REVISED	DATE FILMED	FED. ROAD DIST. NO.	STATE	FED. AID PROJ. NO.	SHEET NO.	TOTAL SHEETS
				6	ARK.		37a	
				JOB NO.				

① TYPE D NAME PLATE 55010

The name of the bridge as shown on the plans shall be placed on Lines 1 - 3 using 1/8" raised letters and numerals 3/8" high.

	Example 1	Example 2	Example 3	Example 4
Line 1	Red River	Southern	Saline	
Line 2	Relief	Railroad	River	Highway 5
Line 3		Overpass	Relief	

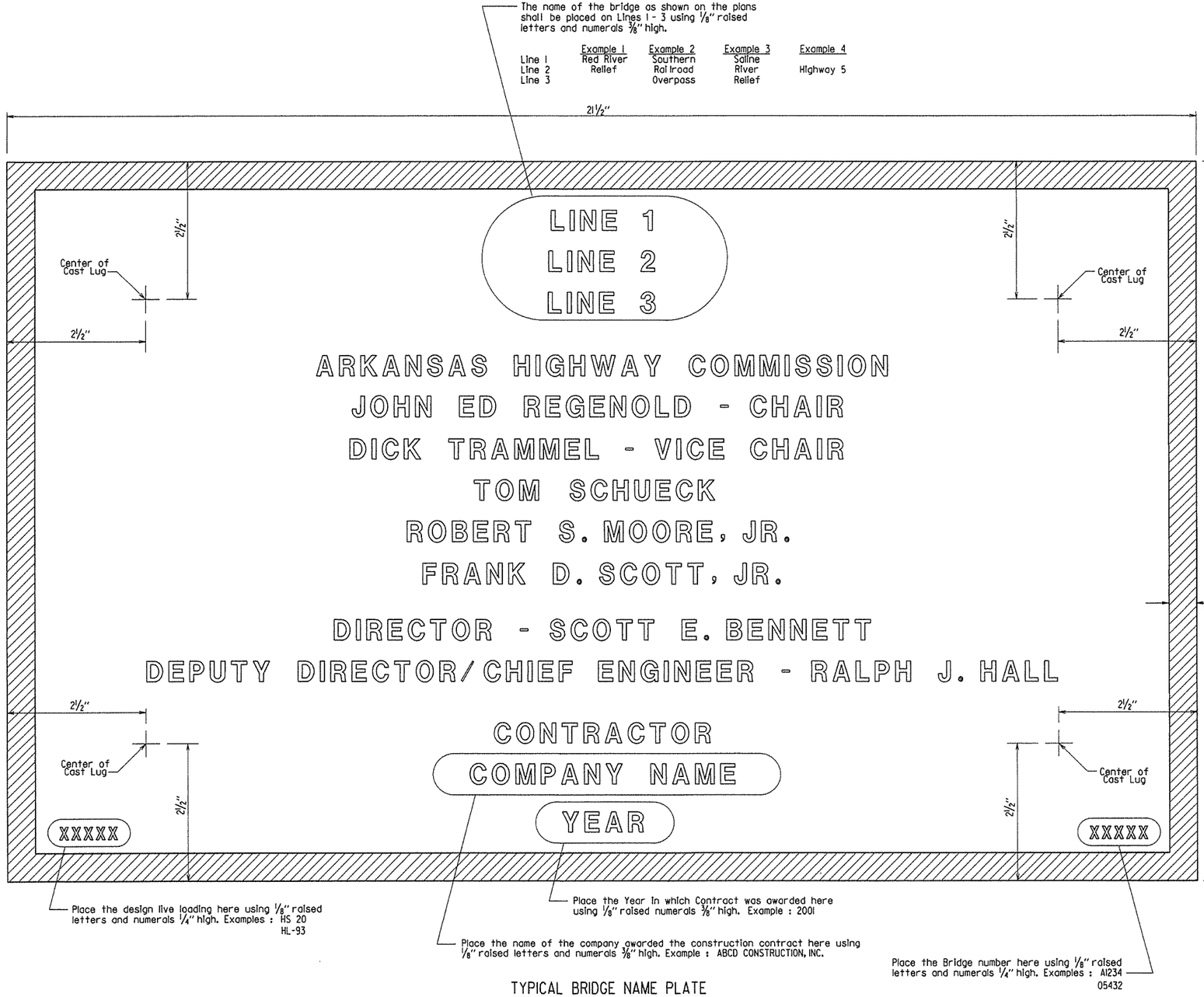

Place the design live loading here using 1/8" raised letters and numerals 1/4" high. Examples : HS 20
HL-93

Place the name of the company awarded the construction contract here using 1/8" raised letters and numerals 3/8" high. Example : ABCD CONSTRUCTION, INC.

Place the Year in which Contract was awarded here using 1/8" raised numerals 3/8" high. Example : 2001

Place the Bridge number here using 1/8" raised letters and numerals 1/4" high. Examples : A1234
05432

TYPICAL BRIDGE NAME PLATE

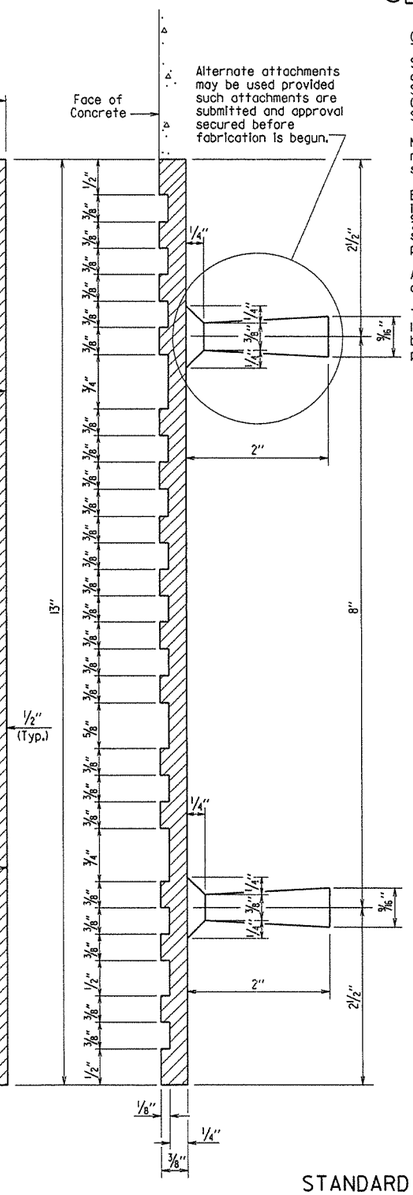

GENERAL NOTES

Specifications: Arkansas State Highway and Transportation Department Standard Specifications for Highway Construction, (2014 Edition) with applicable Supplemental Specifications and Special Provisions.

Name plates shall be cast bronze and shall meet the material requirements as specified in Section 812.

Body of plate shall be 1/4" thick and shall include four tapering cone lugs 3/8" to 9/16" x 2" long. The border and all lettering shall be raised 1/8" above the face of plate and shall be polished.

All lettering shall be plain gothic, square cut and not tapered.

The number of plates required and the location and name on the plate for each bridge shall be as designated on the plans.

STANDARD DETAILS FOR
TYPE D BRIDGE NAME PLATE

ARKANSAS STATE HIGHWAY COMMISSION
LITTLE ROCK, ARK.

DRAWN BY: KDH DATE: 2-27-2014 FILENAME: b55010.dgn
CHECKED BY: BEF DATE: 2-27-2014 SCALE: NO SCALE
DESIGNED BY: STD. DATE: ——

DRAWING NO. 55010

DATE REVISED	DATE FILMED	DATE REVISED	DATE FILMED	FED. ROAD DIST. NO.	STATE	FED. AID PROJ. NO.	SHEET NO.	TOTAL SHEETS
				6	ARK.		373	
				JOB NO.				
				①		STEEL H-PILES		55020

GENERAL NOTES FOR STEEL H-PILES:

Steel H-Piles shall conform to AASHTO M 270, Grade 36 or greater.

See Bridge Layout and Bent Details for pile size, estimated length, spacing, pile anchorage (if required) and for driving information.

Steel H-Piles that extend above the ground and are not protected by pile encasement shall be painted in accordance with Subsection 805.02.

Brackets, lugs, cap plates, pile tips, driving points, pile painting, splicing and welding shall not be paid for directly, but shall be considered subsidiary to the item "Steel Piling".

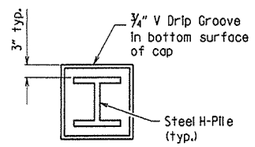

VIEW X-X

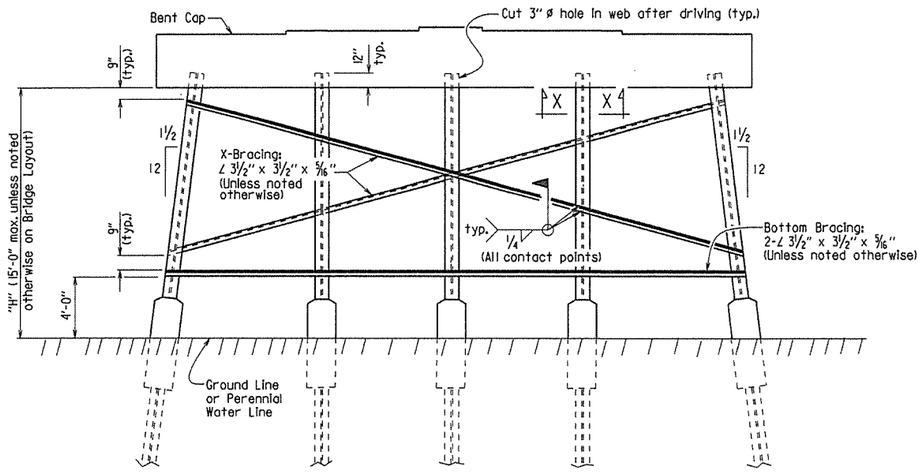

Notes:
All bracing shall be cut and welded in the field. Each brace shall be furnished in one piece. Payment shall be made under Item 807.

Unless noted otherwise, omit X-Bracing when "H" is less than 8 feet.

Omit X-Bracing and Bottom Bracing when "H" is 5 feet or less.

When required on the Bridge Layout sheet, pile encasements shall be constructed. See Notes and Details for H-Pile Encasements.

Omit all bracing (and V-groove in cap) when pile encasement is extended to bottom of bent cap.

TYPICAL DETAILS OF H-PILE TRESTLE INTERMEDIATE BENT

(Shown with Partial Height Encasement)

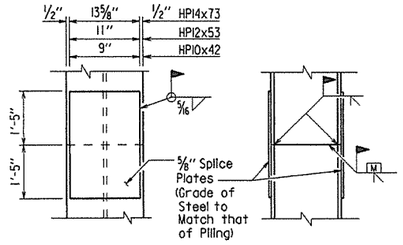

Note:
The Contractor may for his own convenience and at his own expense provide as many as three splices per pile. Minimum spacing between splices shall be 5 feet.

TYPICAL SPLICE DETAILS

Notes:
Steel pile tip reinforcing not required when approved H-Pile driving points are used.

Steel pile tip reinforcing shall not be paid for directly, but shall be considered subsidiary to the item "Steel Piling".

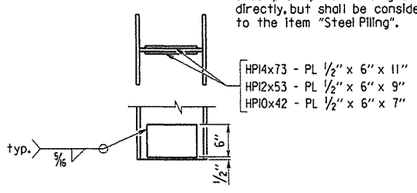

REINFORCING DETAIL FOR STEEL H-PILE TIP

GENERAL NOTES FOR H-PILE ENCASEMENTS:

See Bridge Layout for additional notes and required location of pile encasements.

All concrete shall be Class S with a minimum 28-day compressive strength, f'c = 3,500 psi. If concrete cannot be placed in the dry, Seal Concrete may be used from top to bottom of encasement.

Reinforcing steel shall be Grade 60 conforming to AASHTO M 31 or M 322, Type A.

Welded Wire Fabric shall conform to AASHTO M 55 or M 221. Galvanized Corrugated Steel Pipe shall conform to AASHTO M 36 and M 218.

Concrete, welded wire fabric or reinforcing steel and galvanized pipe shall not be paid for directly, but shall be considered subsidiary to the item "Pile Encasement".

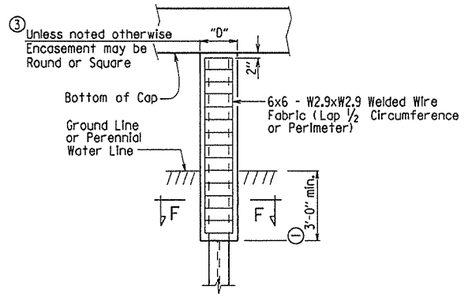

PILE ENCASEMENT DETAIL FOR STEEL H-PILES

④ (Shown with Encasement to Bottom of Cap)

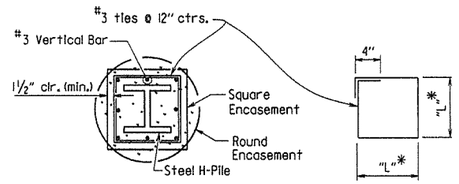

SECTION F-F

*Measured out-to-out of bar.

TABLE OF VARIABLES FOR PILE ENCASEMENT

Pile Size	"D" Square Encsmt.	"D" Round Encsmt.	"L"*
HP10x42	1'-7"	2'-0"	1'-4"
HP12x53	1'-8"	2'-2"	1'-5"
HP14x73	1'-11"	2'-6"	1'-8"

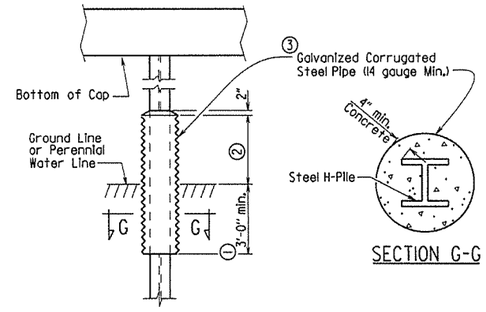

SECTION G-G

⑤ ALTERNATE PILE ENCASEMENT DETAIL FOR STEEL H-PILES

(Shown with Partial Height Encasement)

① Unless otherwise noted on Bridge Layout.

② 3'-0" minimum or as shown on Bridge Layout.

③ Encasement dimensions shall be sized to maintain a minimum concrete cover of 4" from the H-Pile. Reinforcement shall be sized to provide a minimum concrete cover of 1½" and a minimum clearance of 1¼" from the pile.

④ Alternate pile encasement, when not extended to bottom of cap, shall have 2" concrete taper for water runoff as shown in the Partial Height Encasement detail.

⑤ Alternate pile encasement may not be allowed. See Bridge Layout.

This document was originally issued and sealed by Carl J. Fuselier, PE No. 7510, on February 27, 2014. This copy is not a signed and sealed document.

STATE OF ARKANSAS
REGISTERED PROFESSIONAL ENGINEER
No. 7510
CARL J. FUSELIER

BRIDGE ENGINEER

STANDARD DETAILS FOR STEEL H-PILES AND PILE ENCASEMENTS

ARKANSAS STATE HIGHWAY COMMISSION
LITTLE ROCK, ARK.

DRAWN BY: A.M.S. DATE: 2/27/2014 FILENAME: b55020.dgn
CHECKED BY: B.E.F. DATE: 2/27/2014 SCALE: NO SCALE
DESIGNED BY: STD. DATE: —

DRAWING NO. 55020

DATE REVISED	DATE FILMED	DATE REVISED	DATE FILMED	FED. ROAD DIST. NO.	STATE	FED. AID PROJ. NO.	SHEET NO.	TOTAL SHEETS
				6	ARK.		374	
				JOB NO.				

① TYPE A GUTTERS 55030A

② See End Bent Details for actual wingwall length. New Jersey Parapet shown, other rail types similar.

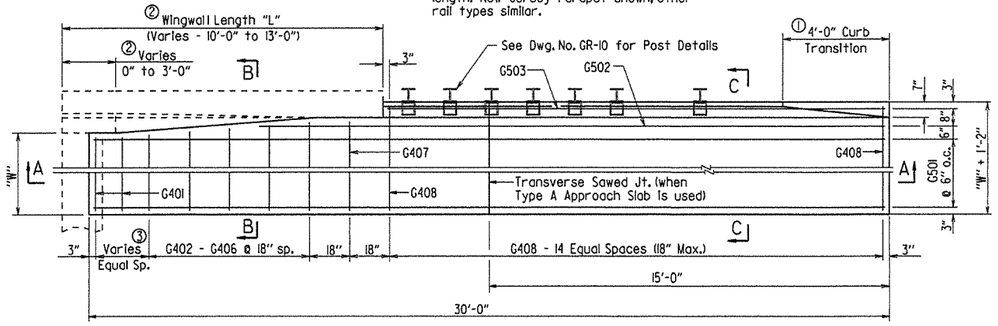

③ Number of G401 bars vary with wingwall length - See Bar List

HALF PLAN OF APPROACH GUTTERS FOR SQUARE BRIDGE

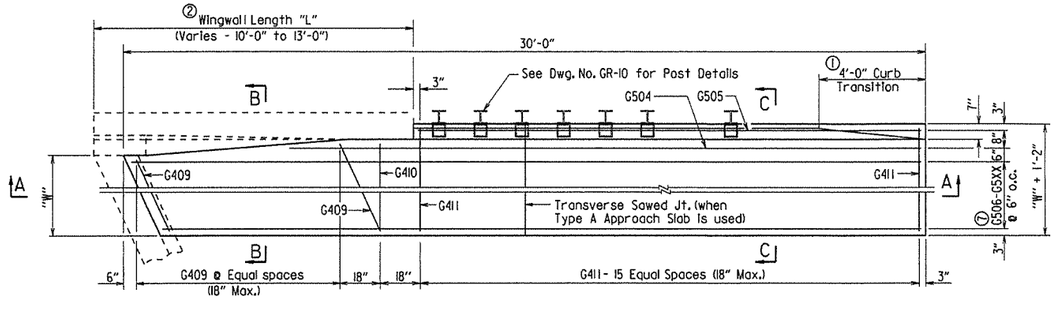

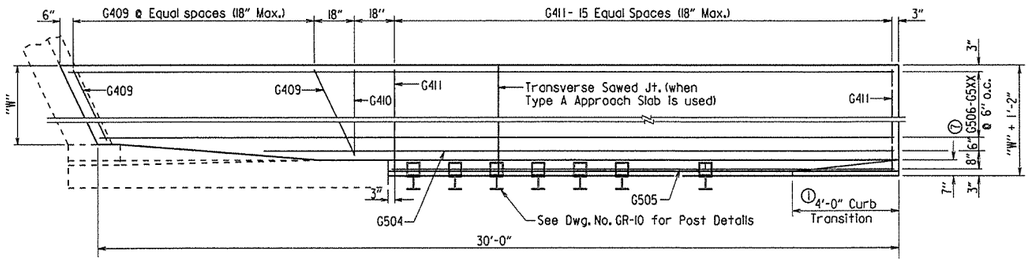

PLAN OF APPROACH GUTTERS FOR SKEWED BRIDGE

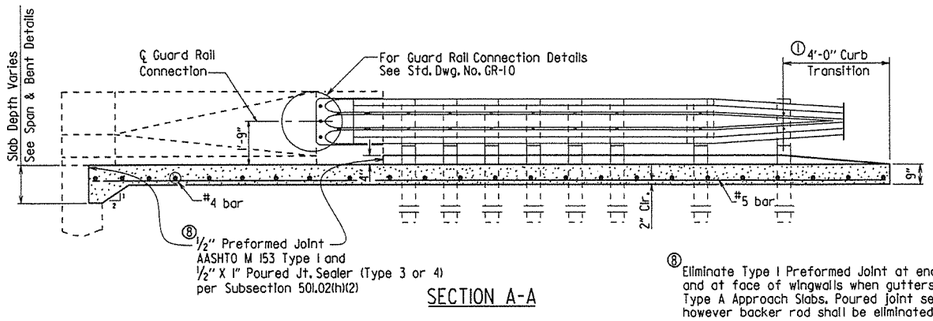

SECTION A-A

① Construct gutter curb with height-transition as shown if drop inlet is not placed at end of gutter.

Construct gutter curb full height (no height-transition) if drop inlet is placed at end of gutter. Curb height transition placed on drop inlet. See drop inlet details.

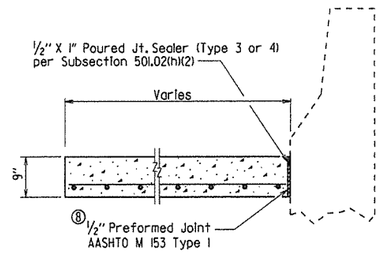

SECTION B-B
N.T.S.

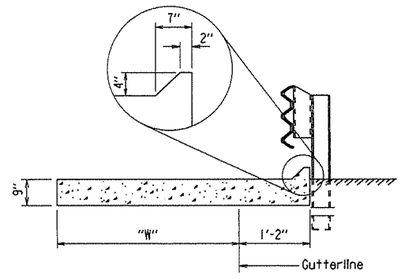

SECTION C-C
N.T.S.

Note:
All longitudinal lines within the limits of horizontal curves shall be on curves concentric to C.L. Bridge. Adjustment to longitudinal bar lengths may be required. Transverse reinforcing shall be placed on radial lines to C.L. Bridge.

⑧ Eliminate Type I Preformed Joint at end bent backwall and at face of wingwalls when gutters used with Type A Approach Slabs. Poured joint sealer is required, however backer rod shall be eliminated.

BAR LIST FOR ONE TYPE A GUTTER

	Mark	No. Req'd. for Width "W" 3'-0"	4'-0"	6'-0"	8'-0"	Length
Square Bridge	G401	④	④	④	④	"W"- 4"
	G402-G406	1 each	1 each	1 each	1 each	"W"-3" to "W"+2"
	G407	1	1	1	1	"W"+3"
	G408	15	15	15	15	"W"+ 10"
	G501	6	8	12	16	29'-8"
	G502	1	1	1	1	(35'-5") - "L"
	G503	1	1	1	1	30'-8"-"L"
Skewed Bridge	G409	⑥	⑥	⑥	⑥	⑤
	G410	1	1	1	1	"W"+3"
	G411	16	16	16	16	"W"+ 10"
	G504	1	1	1	1	⑤
	G505	1	1	1	1	⑤
	G506 - G5XX ⑦	1 each	1 each	1 each	1 each	⑤

④ 0 for "L" = 10'
1 for "L" = 11'
2 for "L" = 12'
2 for "L" = 13'

⑦ G511 for "W" = 3'
G513 for "W" = 4'
G517 for "W" = 6'
G521 for "W" = 8'

⑤ Bar Lengths vary with Skew and Wingwall Length.

⑥ No. Req'd. varies with Skew and Wingwall length.

QUANTITIES FOR ONE SQUARE APPROACH GUTTER

(FOR INFORMATION ONLY)

"W" Width (ft.)	Reinforcing Steel (Lbs.)	Concrete (Cu. Yds.)
3	285	3.40
4	360	4.25
6	515	5.90
8	665	7.55

Quantities are based on "L" = 10'-0".

GENERAL NOTES

All concrete shall be Class S or Class S(AE) or mixture used for Portland Cement Concrete Pavement and shall be poured in the dry.

All reinforcing steel shall be Grade 60 (yield strength = 60,000 psi) conforming to AASHTO M 31 or M 322, Type A, with mill test reports.

Approach Gutters will be measured and paid for in accordance with Section 504.

STANDARD DETAILS FOR TYPE A APPROACH GUTTERS

ARKANSAS STATE HIGHWAY COMMISSION

LITTLE ROCK, ARK.

DRAWN BY: A.M.S. DATE: 2/27/2014
CHECKED BY: K.W.Y. DATE: 2/27/2014
DESIGNED BY: STD. DATE:

FILENAME: b55030a.dgn
SCALE: 3/8" = 1'-0" or As Shown

DRAWING NO. 55030A

DATE REVISED	DATE FILMED	DATE REVISED	DATE FILMED	FED. ROAD DIST. NO.	STATE	FED. AID PROJ. NO.	SHEET NO.	TOTAL SHEETS
				6	ARK.		375	
				JOB NO.				
				①	TYPE AT GUTTERS		55036	

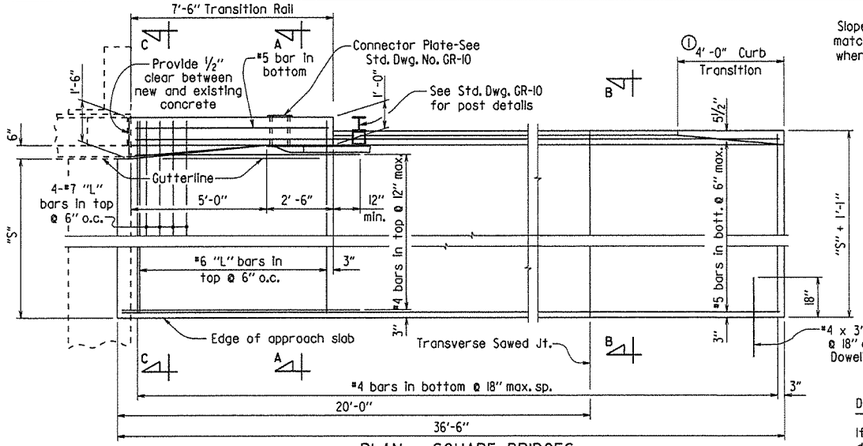

PLAN - SQUARE BRIDGES

⅜" = 1'-0"

"S" = Distance from gutterline to edge of approach slab.

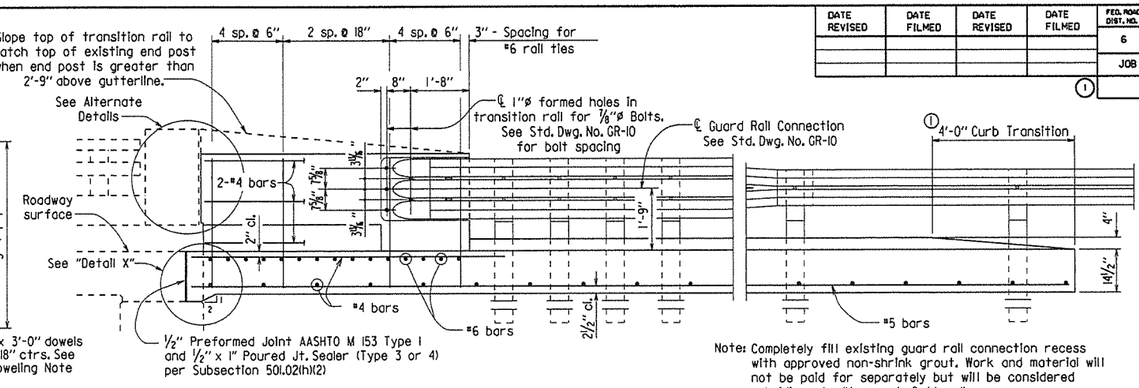

Note: Completely fill existing guard rail connection recess with approved non-shrink grout. Work and material will not be paid for separately but will be considered subsidiary to "Approach Gutters".

① Construct curb with height-transition as shown if drop inlet is not used at end of gutter.

Construct curb full height (no height-transition) if drop inlet is used at end of gutter. Curb height transition placed on drop inlet. See drop inlet details.

DOWELING NOTE

If new approach slab is used, place dowels into approach slab using 18" embedment.

If existing approach slab is retained, dowels shall be drilled and grouted 18" into existing slab. At the Contractor's option, existing dowels may be retained, cleaned and incorporated into new gutters. Work for drilling and grouting, or retaining and cleaning will not be paid for separately but will be considered subsidiary to "Approach Gutters".

LONGITUDINAL SECTION THRU GUTTER

½" = 1'-0"

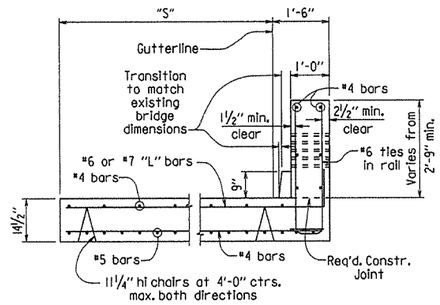

SECTION A-A

½" = 1'-0"

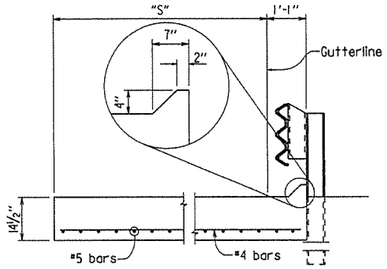

SECTION B-B

½" = 1'-0"

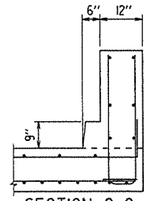

SECTION C-C

At end of Transition Rail

½" = 1'-0"

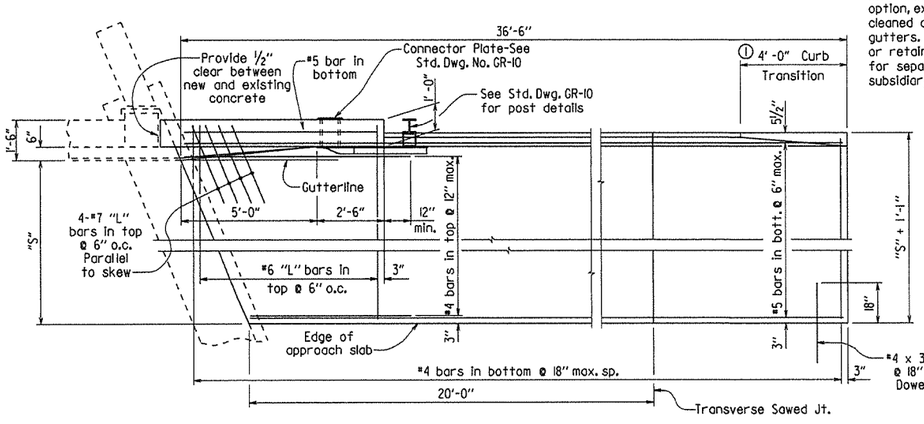

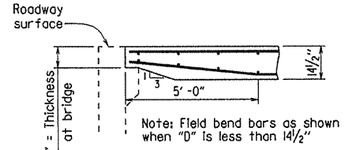

Note: Field bend bars as shown when "D" is less than 14½"

DETAIL X

⅜" = 1'-0"

BENDING DIAGRAMS

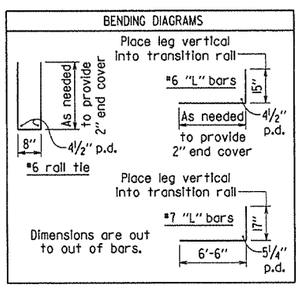

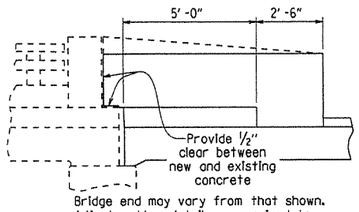

Bridge end may vary from that shown. Adjust gutter details as required to provide similar railing transition.

ALTERNATE DETAILS

N.T.S.

QUANTITIES FOR ONE SQUARE APPROACH GUTTER

(FOR INFORMATION ONLY)

"S"	Concrete	Reinforcing Steel
5'-6"	12.06 cu.yd.	1091 lb.
9'-6"	18.78 cu.yd.	1573 lb.

GENERAL NOTES

All concrete shall be Class S or S(AE) or mixture used for Portland Cement Concrete Pavement and shall be poured in the dry.

All reinforcing steel shall be Grade 60 (yield strength = 60,000 psi) conforming to AASHTO M 31 or M 322, Type A, with mill test reports. Fabricate bar lengths to provide 2" minimum cover at each end.

Approach gutters will be measured and paid for in accordance with Section 504.

This document was originally issued and sealed by Carl J. Fuselier, PE No. 7510, on February 27, 2014. This copy is not a signed and sealed document.

STATE OF ARKANSAS
REGISTERED PROFESSIONAL ENGINEER
No. 7510
CARL J. FUSELIER

BRIDGE ENGINEER

STANDARD DETAILS FOR TYPE 'AT' APPROACH GUTTERS (BRIDGES WITH 6" CURB WIDTH & TYPE A RAILING)

ARKANSAS STATE HIGHWAY COMMISSION

LITTLE ROCK, ARK.

DRAWN BY: KDH DATE: 2/27/2014 FILENAME: b55036.dgn

CHECKED BY: KWY DATE: 2/27/2014 SCALE: AS SHOWN

DESIGNED BY: STD. DATE:

DRAWING NO. 55036

REFER TO TABULATION OF QUANTITIES FOR 'W' & 'B' DIMENSIONS

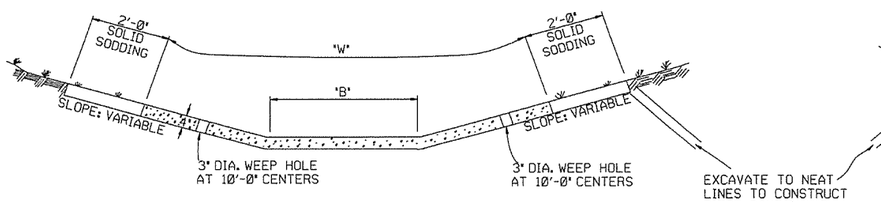

TYPE A

REFER TO TABULATION OF QUANTITIES FOR 'W' DIMENSIONS

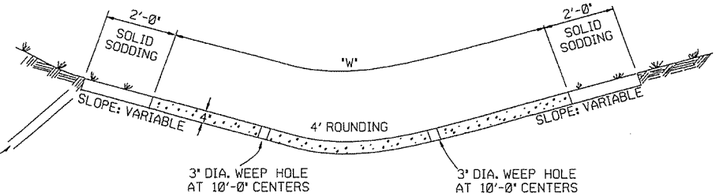

TYPE B

THE STEEL AND ADDITIONAL CONCRETE FOR THE WALLS SHALL NOT BE PAID FOR DIRECTLY, BUT SHALL BE CONSIDERED TO BE INCLUDED IN THE PRICE BID FOR 'CONCRETE DITCH PAVING.'

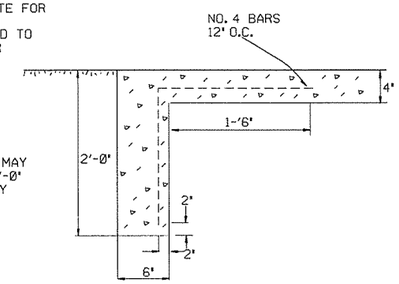

TOE WALL DEPTH MAY BE ALTERED TO 1'-0" WHEN DIRECTED BY THE ENGINEER IN ROCK EXCAVATION

TOE WALL DETAIL FOR CONCRETE DITCH PAVING

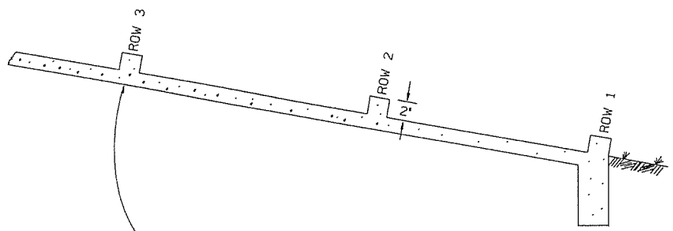

NUMBER OF ELEMENTS PER ROW VARIES WITH WIDTH OF PAVING SPECIFIED

ENERGY DISSIPATORS TO BE USED FOR THE ENTIRE LENGTH OF DITCH WHEN SLOPE OF DITCH PAVING EXCEEDS 7%. THE DISSIPATORS WILL NOT BE PAID FOR DIRECTLY, BUT SHALL BE CONSIDERED TO BE UNCLUDED IN THE PRICE BID FOR CONCRETE DITCH PAVING.

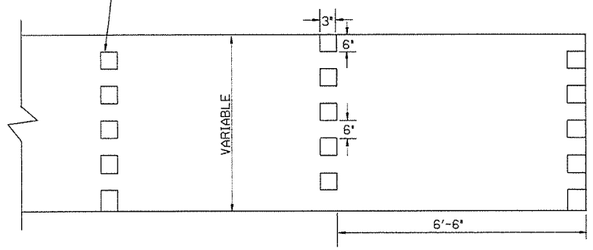

ENERGY DISSIPATORS
(NO SCALE)

GENERAL NOTES:

THE FULL WIDTH OF EACH SECTION SHALL BE POURED MONOLITHICALLY.

TOE WALLS TO BE CONSTRUCTED FULL WIDTH AT EACH END OF DITCH PAVING, AND POURED MONOLITHICALLY.

SOLID SOD ALONG DITCH PAVING TO BE PLACED WITHIN 14 DAYS OF DITCH PAVING CONSTRUCTION.

1" WIDE TRANSVERSE EXPANSION JOINTS SHALL BE PLACED IN CONCRETE DITCH PAVING AT 45' INTERVALS. THE SPACE SHALL BE FILLED WITH APPROVED JOINT FILLER COMPLYING WITH AASHTO M213.

DATE	REVISION	DATE FILM'D
11-17-10	ADDED GENERAL NOTE	
6-2-94	ADDED GENERAL NOTE ABOUT SOLID SODDING	
11-30-8	ELIMINATED MIN. ROWS OF ELEMENTS	111-30-89
7-15-88	REVISED DISSIPATOR NOTE	653-7-15-88
4-3-87	REVISED ENERGY DISSIPATOR	671-4-3-87
1-9-87	MODIFIED NOTE ON ENERGY DISS.	532-1-9-87
11-3-86	ADDED NOTE TO ENERGY DISS.	599-12-1-86
11-1-84	ENERGY DISSIPATOR DETAILS ADDED	508-11-1-84
11-1-84	EXCAVATION DETAILS ADDED TYPED A & B	
10-2-72	REVISED AND REDRAWN	508-10-2-72

ARKANSAS STATE HIGHWAY COMMISSION

CONCRETE DITCH PAVING

STANDARD DRAWING CDP-1

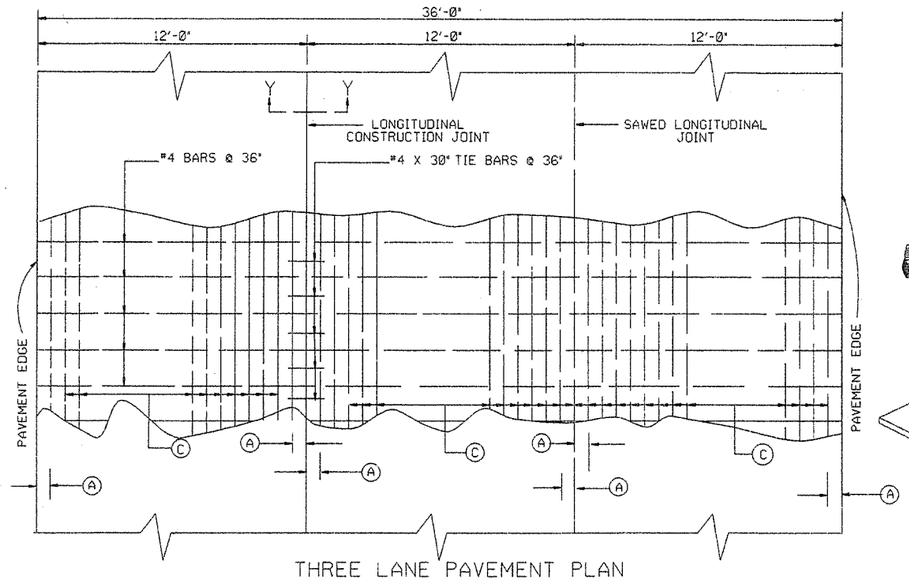

THREE LANE PAVEMENT PLAN

(12 FT. AND 24 FT. PLACEMENT) •

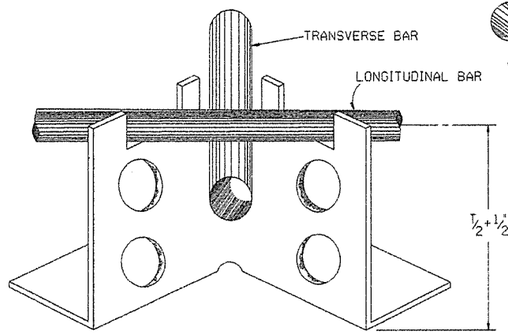

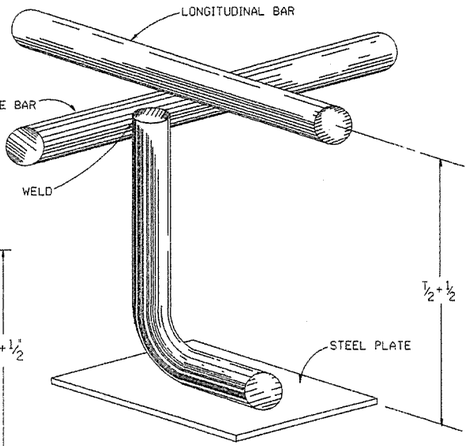

SUGGESTED CHAIR DETAILS

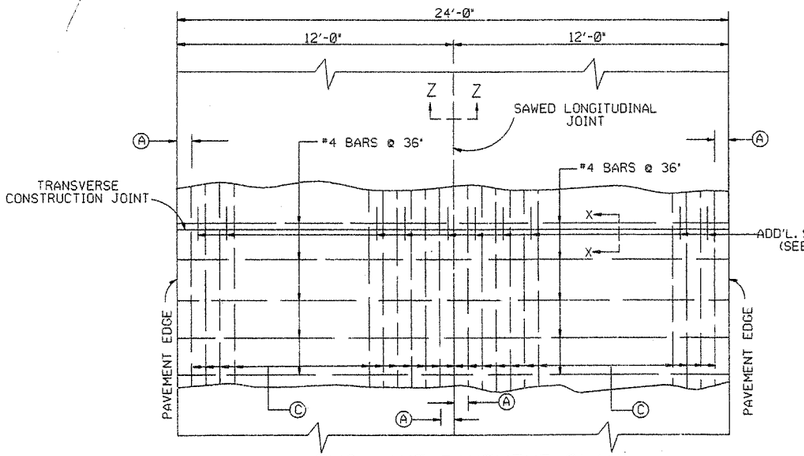

TWO LANE PAVEMENT PLAN

(24 FT. PLACEMENT) •

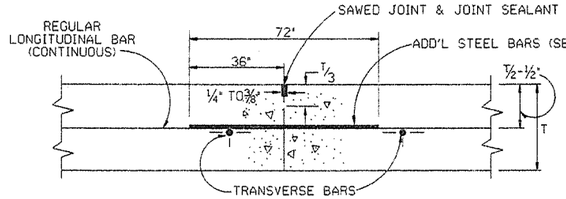

TRANSVERSE CONSTRUCTION JOINT

SECTION X-X

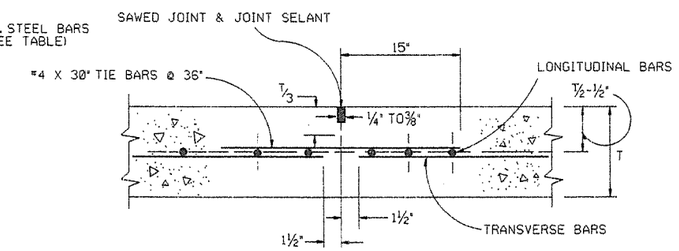

LONGITUDINAL CONSTRUCTION JOINT

SECTION Y-Y

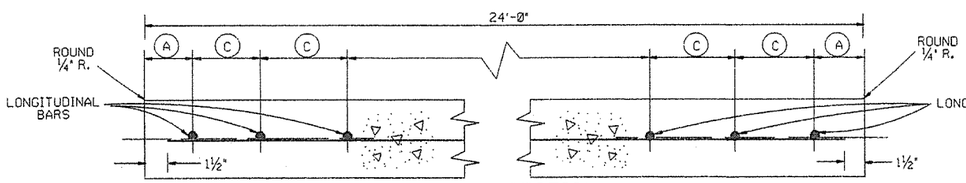

TYPICAL SECTION

(24 FT. PLACEMENT) •

• LANE WIDTHS ARE FOR ILLUSTRATIVE PURPOSES ONLY AND SHOULD NOT BE USED IF IN CONFLICT WITH TYPICAL CROSS SECTIONS SHOWN ELSEWHERE IN THE PLANS.

NOTE: FOR DIMENSIONS A & C SEE TABLE ON RT.

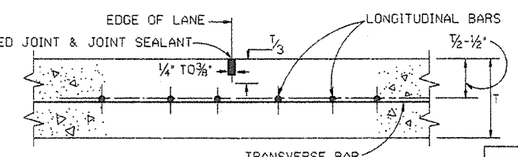

SAWED LONGITUDINAL JOINT

SECTION Z-Z

JOINT DETAILS

• GENERAL NOTES•

SAWED JOINT AND JOINT SEALANT FOR TRANSVERSE CONSTRUCTION JOINT, LONGITUDINAL CONSTRUCTION JOINT AND SAWED LONGITUDINAL JOINT SHALL CONFORM TO THE DETAILS SHOWN FOR SAWED LONGITUDINAL JOINT ON STANDARD DRAWING CPTJ-6A.

NO EXPANSION JOINTS WILL BE USED EXCEPT AT STRUCTURE ENDS OR FIXED OBJECTS AS SHOWN ELSEWHERE IN THE PLANS.

FOR FURTHER INFORMATION REGARDING THE PLACEMENT OF CONCRETE AND REINFORCEMENT REFER TO THE GOVERNING SPECIFICATIONS FOR "CONTINUOUSLY REINFORCED CONCRETE PAVEMENT."

FOR DETAILS OF PAVEMENT WIDTH, PAVEMENT THICKNESS AND THE CROWN CROSS-SLOPE REFER TO TYPICAL SECTIONS.

WITHIN ANY AREA BOUNDED BY TWO FEET PAVEMENT LENGTH, MEASURED PARALLEL TO THE CENTERLINE: AND TWELVE FEET OF PAVEMENT WIDTH, MEASURED PERPENDICULAR TO THE PAVEMENT CENTERLINE, NOT OVER 33% OF THE REGULAR LONGITUDINAL STEEL SHALL BE SPLICED.

MNINMUM SPLICE REQUIREMENT: 25 TIMES THE NOMINAL DIAMETER OF THE BAR OR 16 INCHES WHICHEVER IS LONGER.

AT TRANSVERSE CONSTRUCTION JOINTS THE REGULAR LONGITUDINAL BARS SHALL EXTEND EITHER SIDE OF THE JOINT SUCH THAT THE BAR SPLICES FOR THE REGULAR LONGITUDINAL BARS SHALL BE A MINIMUM OF FOUR FEET FROM THE CONSTRUCTION JOINT. AT LONGITUDINAL CONSTRUCTION JOINT, IF THE CONTRACTOR ELECTS TO CONTINUE THE REGULAR TRANSVERSE STEEL THROUGH THE JOINTS, THE #4 TIE BARS SHOWN HEREON MAY BE DELETED.

CHAIR DETAILS SHOWN HEREON ARE EXAMPLES ONLY; OTHER APPROVED TYPES WHICH WILL SATISFY THE REQUIREMENTS NOTED HEREIN, WILL BE PERMITTED. CHAIR SPACINGS SHALL NOT BE GREATER THAN 36" C-C (LONGITUDINAL) AND 48" C-C (TRANSVERSE). ADDITIONAL CHAIRS SHALL BE USED IF NECESSARY TO MEET PLACEMENT REQUIREMENTS.

AT ALL LAP SPLICES OCCURRING WITHIN 8 FEET BEYOND THE CONSTRUCTION JOINTS, IN THE DIRECTION OF PAVING AND 4 FEET BACK OF THE CONSTRUCTION JOINTS, THE LENGTH OF LAP SHALL BE DOUBLE THAT NORMALLY SPECIFIED OR EACH SPLICE SHALL BE STRENGTHENED BY SPLICING IN, SYMMETRICALLY WITH THE LAP, A 6 FOOT LENGTH OF DEFORMED BAR OF THE SAME NOMINAL SIZE AS THE LONGITUDINAL REINFORCEMENT.

TABLE OF EQUIVALENT LONGITUDINAL REINFORCEMENT

PAVEMT. THICKNESS	BAR SIZE	24'-0" PLACEMENT WIDTH				12'-0" PLACEMENT WIDTH				ADD'L STEEL② TRANS. CONSTR. JOINT			
		SPACING (C-C)		BARS PER PLACE-MENT	STEEL ①	SPACING (C-C)		BARS PER PLACE-MENT	STEEL ①	SIZE	AVG. SPACING	NO. ② PER LANE	WEIGHT
		A	C		LBS./ SQ. YD.	A	C		LBS./ SQ. YD.				LBS. PER FOOT
INCHES		INCHES				INCHES					INCHES		
6	#5	5½	7	40	18.28	5½	7	20	18.26	⅝" X 72"	14	10	5.22
8	#6	4½	7½	38	24.55	4½	7½	19	24.41	¾" X 72"	15	10	7.51
9	#6	3¾	6½	44	27.98	3¾	6½	22	27.95	¾" X 72"	13	11	8.26
10	#7	4	8½	34	29.53	4	8½	17	29.51	⅞" X 72"	17	8	8.18
11	#7	4½	7½	38	32.78	4½	7½	19	32.75	⅞" X 72"	15	10	10.22
12	#7	5½	7	40	34.39	5½	7	20	34.37	⅞" X 72"	14	10	10.22

NOTE: WHERE THE PROPOSED PLACEMENT WIDTHS VARY FROM THE BASIC DESIGN WIDTH SHOWN, THE SPACING 'A' AND THE ADJACENT SPACING 'C' SHALL BE ADJUSTED TO ACCOMODATE A REINFORCEMENT ARRANGEMENT EQUAL TO OR SLIGHTLY HEAVIER THAN THAT SHOWN AS DIRECTED BY THE ENGINEER.

① INCLUDES BOTH REGULAR LONGITUDINAL AND TRANSVERSE BARS. BASED UPON 1 FOOT PAVEMENT FOR THE WIDTH INDICATED. ALL TRANSVERSE STEEL IS #4 BARS AT 36" CENTERS. FOR ESTIMATING PURPOSES IT IS ASSUMED THAT LONGITUDINAL BARS ARE SPLICED AT 32' INTERVALS.

② THIS SHALL BE THE MINIMUM NUMBER OF ADDITIONAL STEEL BARS TO BE PLACED PER LANE. THE SPACING OF THE ADDITIONAL STEEL BARS SHALL BE VARIED AS DIRECTED IN ORDER TO PROVIDE A MINIMUM CLEARANCE OF 2½" FROM EACH REGULAR LONGITUDINAL REINFORCING BAR.

DATE	REVISION	DATE FILMED
10-18-96	CORRECTED SPELLING	10-18-96
10-1-92	REVISED REINFORCING	
8-15-91	REV. A SPACING FOR 24' PAV'T.	
3-23-89	ALTERED SAWED JOINT & ADDED GEN. NOTES	
11-3-86	DIMEN'S. OF LONG. JTS.	
1-4-83	DEPTH OF SAWED TRANSVERSE CONST. JOINT	
9-15-78	53 TO 52 #4 BARS (24' PL.)	
10-2-72	REVISED AND REDRAWN	

ARKANSAS STATE HIGHWAY COMMISION

CONCRETE PAVEMENT DETAILS CONTINUOUSLY REINFORCED

STANDARD DRAWING CPCR-1

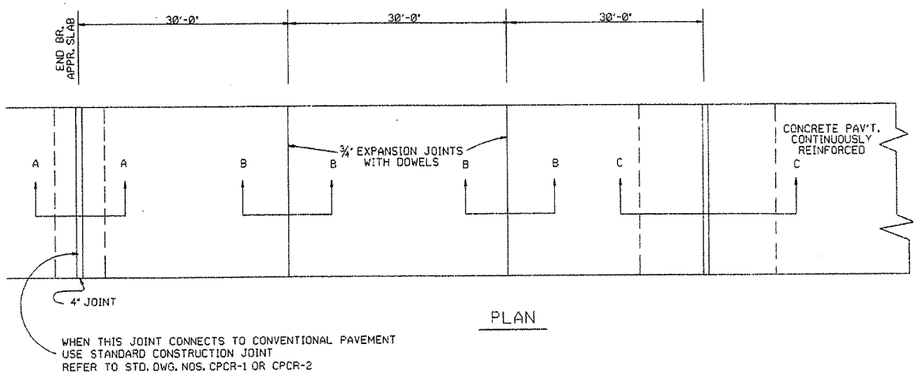

PLAN

GENERAL NOTES

OTHER TYPES OF EXPANSION JOINTS MAY BE CONSTRUCTED AT THE OPTION OF THE CONTRACTOR AFTER APPROVAL BY THE ENGINEER.

LOAD TRANSMISSION UNITS AND DOWELS SHALL BE SECURED PARALLEL TO THE PAVEMENT SURFACE AND CENTERLINE.

ALL EXPANSION JOINTS, INCLUDING ALL MATERIALS, DEVICES, AND WORK REQUIRED SHALL BE CONSIDERED AS SUBSIDIARY WORK AND SHALL BE INCLUDED IN THE UNIT PRICE BID FOR PORTLAND CEMENT CONCRETE PAVEMENT. NO DIRECT PAYMENT WILL BE MADE FOR ANY MATERIAL, BAR CHAIR, STEEL OR ANY OTHER DEVICE SHOWN NOR FOR ITS INSTALLATION.

'T' DENOTES THICKNESS OF SLAB.

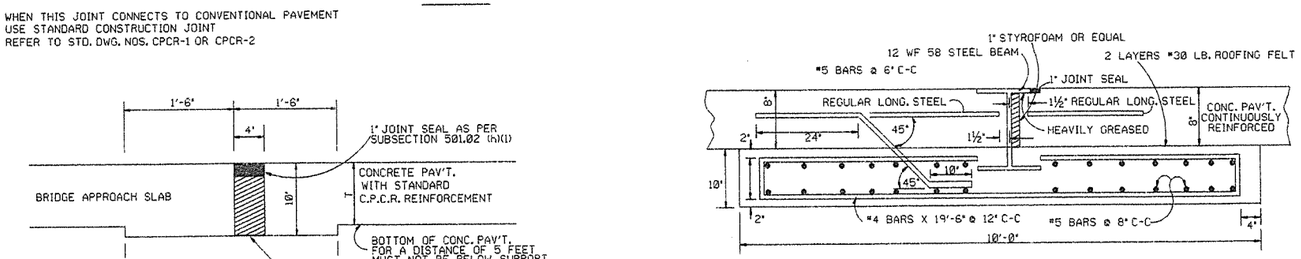

SECTION A-A

SECTION C-C

DETAIL OF WIDE FLANGE BEAM & JOINT SUPPORT

NOTE: WELD 12" X 10" X½" STEEL PLATE TO ENDS OF BEAM AFTER PLACEMENT OF CONCRETE PAVEMENT.

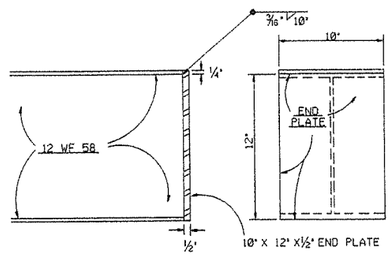

DETAIL OF END PLATE ATTACHMENT TO WIDE FLANGE BEAM

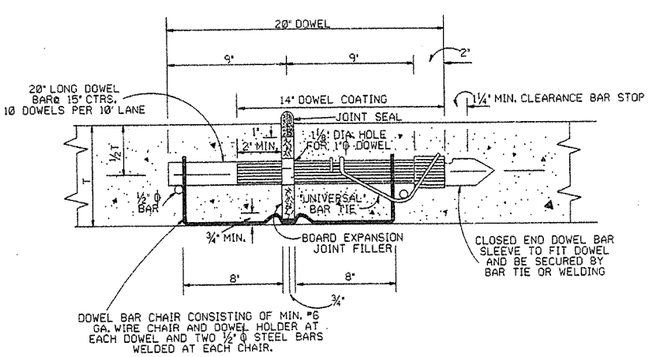

SECTION B-B
DETAIL OF EXPANSION JOINT

STRUCTURAL EXCAVATION	CLASS A CONCRETE	REINFORCING STEEL	STRUCTURAL STEEL
CU. YD.		LB.	
0.3!	0.3!	46.2	58.0

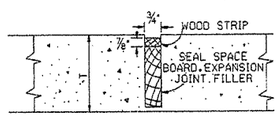

SEAL SPACE FOR EXPANSION JOINT

NOTE: BOARD JOINT FILLER OF SPECIFIED TYPE SHALL BE SECURED ON SUBGRADE IN EXACT POSITION AND LINE AS ILLUSTRATED OR BY OTHER APPROVED DEVICE.
JOINT ASSEMBLY SHALL BE SECURELY FASTENED INTO PLACE PRIOR TO PLACING CONCRETE.
AFTER SECOND PASSAGE OF FINISHING MACHINE REMOVE CONCRETE TO 1" BELOW TOP OF BOARD AND NAIL ¾" X ⅞" WOOD STRIP TO TOP OF BOARD FILLER TO FORM JOINT SEAL SPACE.
REPLACE CONCRETE AND FINISH WITH LONGITUDINAL FLOAT.
THE WOOD STRIP SHALL NOT BE REMOVED UNTIL IMMEDIATELY PRIOR TO POURING JOINT SEAL.

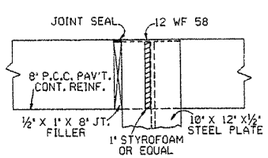

ELEVATION

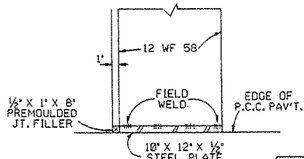

PLAN

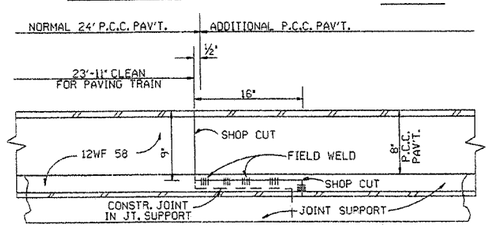

TRANSVERSE SECTION THROUGH WF BEAM AND JOINT SUPPORT

DATE	REVISION	DATE FILM'D
10-18-96	CORRECTED SUBSECTION AND SPELLING	10-19-96
4-26-96	DELETE DOWEL BAR NOTE	
7-15-88	SUB-SECT. 501.03 (f)(1) TO 501.03 (h)(1)	
8-22-75	REVISED 4" EXP. JOINT MAT'L	
11-1-73	REVISED JOINT SEAL A-A	
10-2-72	REVISED AND REDRAWN	

ARKANSAS STATE HIGHWAY COMMISION

DETAILS OF TERMINAL JOINTS FOR CONCRETE PAVEMENT

CONTINUOUSLY REINFORCED

STANDARD DRAWING CPCR-3

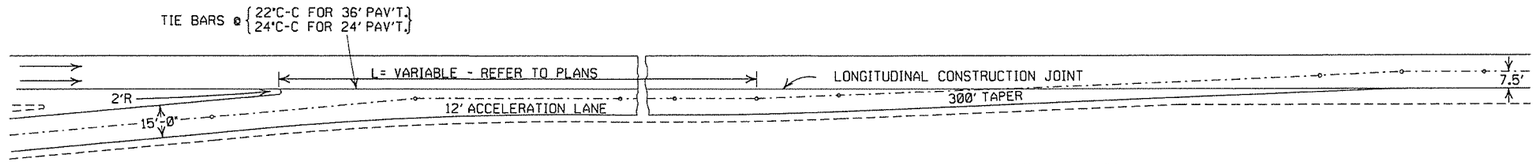

ENTRANCE RAMP

RETURN CURVES
Δ =2°17'30"
D = 3°00'
T =38.2'
L =76.4'

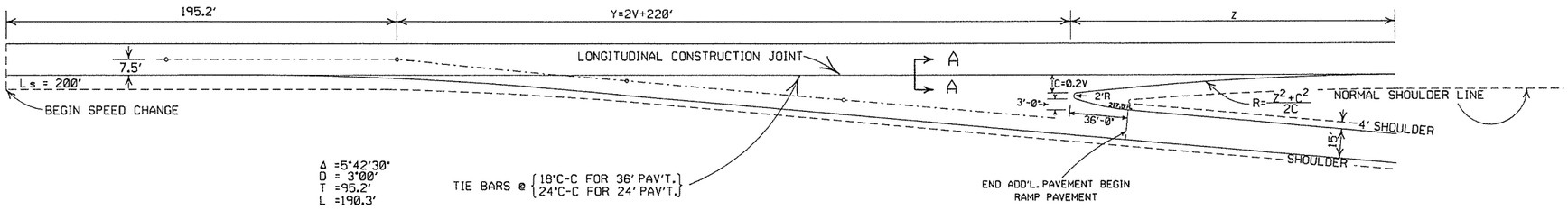

EXIT RAMP

DESIGN SPEED V	Y	NOSE OFFSET C	LENGTH NOSE TAPER Z	RETURN RADIUS R	ADD'L. SURFACING SQ. YDS.
40	300.0	8.0	96.0	580.0	602.43
50	320.0	10.0	120.0	725.0	687.29
60	340.0	12.0	168.0	1182.0	790.55
70	360.0	14.0	210.0	1582.0	902.27

NOTE: ON GRADES IN EXCESS OF 4%, THE LENGTHS "Y" & "L" MAY BE VARIED TO FIT THE CASE IN THE RATION OF $\frac{1 \pm \%GRADE}{2}$ (LENGTH AS SHOWN).

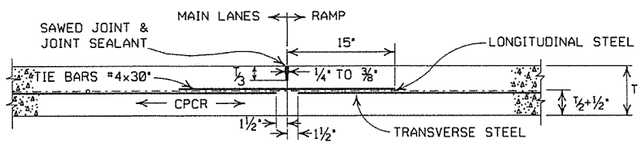

LONGITUDINAL CONSTRUCTION JOINT

SECTION A - A

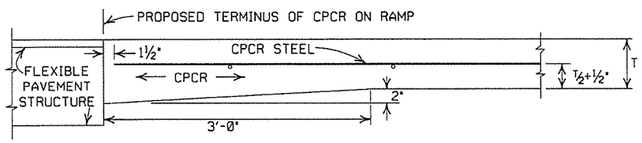

DETAIL FOR JUNCTION WITH FLEXIBLE TYPE PAVEMENT STRUCTURE

GENERAL NOTES

THE SEQUENCE OF OPERATION ON PLACING THE RAMP SHALL BE AS DIRECTED BY THE ENGINEER. THE LONGITUDINAL STEEL SHALL BE PLACED IN A DIRECTION APPROXIMATELY PARALLEL TO THE DIRECTION OF THE RAMP.

SAWED JOINT AND JOINT SEALANT FOR LONGITUDINAL CONSTRUCTION JOINT SHALL CONFORM TO THE DETAILS SHOWN FOR SAWED LONGITUDINAL JOINT ON STANDARD DRAWING CPTJ-6A.

DATE	REVISION	DATE FILMED
2-27-14	CORRECTED SPELLING	
3-23-89	ALTERED SAWED JOINT & ADDED NOTE	510-3-23-89
11-3-86	DIMEN'S. OF LONG. JTS.	652-11-1-86
10-2-72	REVISED AND REDRAWN	507-10-2-72

ARKANSAS STATE HIGHWAY COMMISSION

DETAILS OF ENTRANCE & EXIT RAMPS FOR CONCRETE PAVEMENT CONTINUOUSLY REINFORCED

STANDARD DRAWING CPCR-4

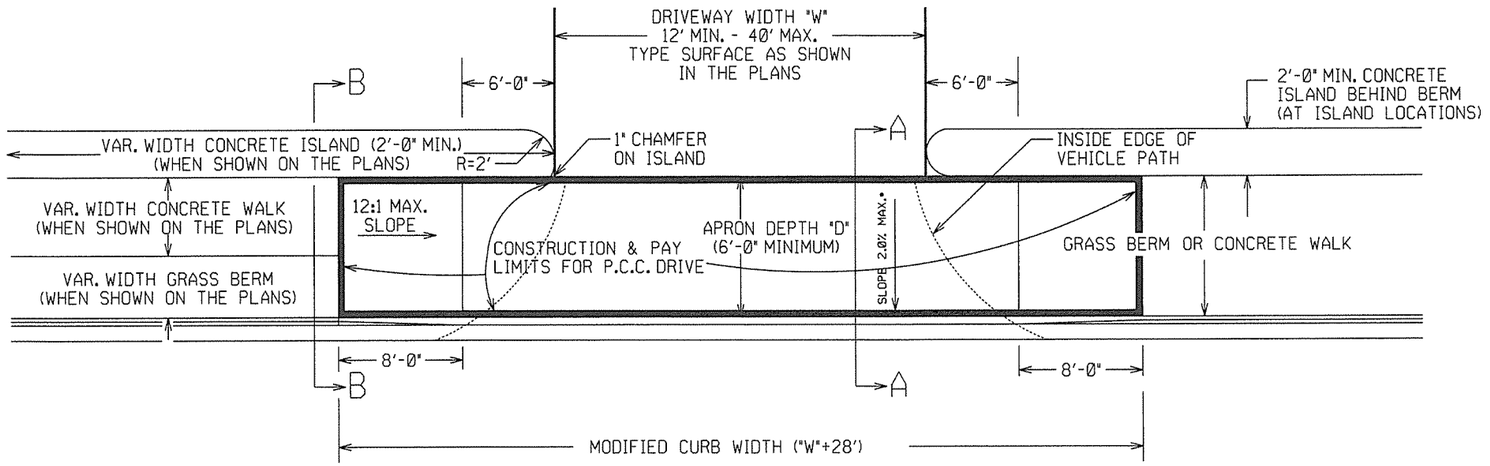

PLAN VIEW

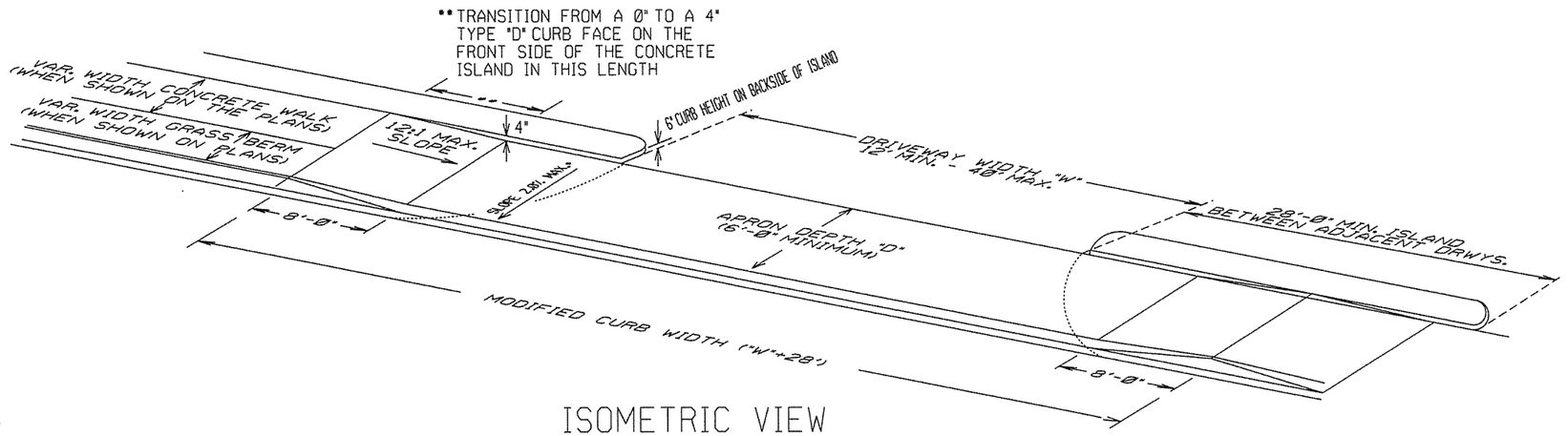

ISOMETRIC VIEW

REFER TO PLANS FOR TYPE OF CURB FACE TO BE USED. NO DIRECT PAYMENT WILL BE MADE FOR THE CURB FACES SHOWN ON THE ISLAND DETAILS. PAYMENT FOR THE CURB FACE WILL BE INCLUDED IN THE UNIT PRICE BID FOR THE ITEM "CONCRETE ISLAND".

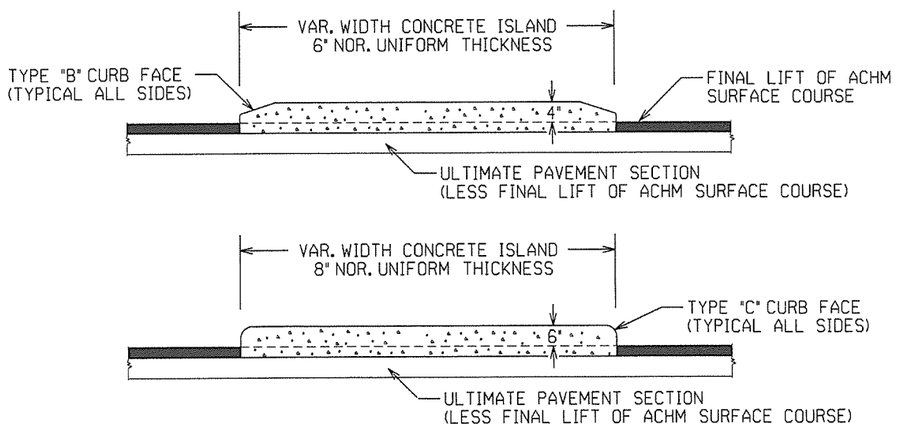

CURBED ISLANDS FOR CHANNELIZATION

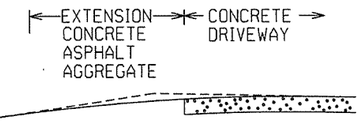

EXTENSION TYPICAL SECTIONS

1: CONCRETE - 6" P.C. CONCRETE DRIVEWAY

2: ASPHALT - 2" ACHM SURFACE COURSE (1/2")
4" ACHM BINDER COURSE.(1") OR
4" ACHM BASE COURSE (1-1/2")

3: ASPHALT - 2" ACHM SURFACE COURSE (1/2")
7" AGGREGATE BASE COURSE

4: AGGREGATE - 6" AGGREGATE BASE COURSE

THE TYPE OF EXTENSION SHALL BE AS SHOWN IN THE PLANS. THE CONTRACTOR MAY, WITH THE APPROVAL OF THE ENGINEER, SUBSTITUTE A LOWER NUMBERED TYPE OF EXTENSION IN LIEU OF THE TYPE SPECIFIED IN THE PLANS, BUT AT NO ADDITIONAL COST TO THE DEPARTMENT.

DRIVEWAY EXTENSION DETAILS

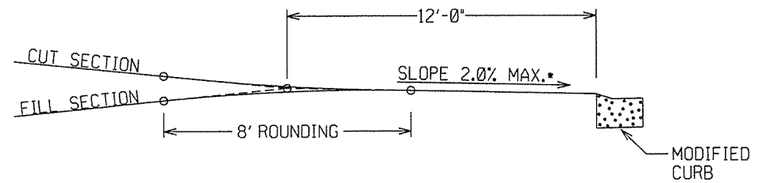

DRIVEWAY VERTICAL ALIGNMENT DETAILS

* NOTE: DRIVEWAYS MAY NOT BE SLOPED AWAY FROM THE ROADWAY UNLESS APPROVED BY THE ENGINEER.

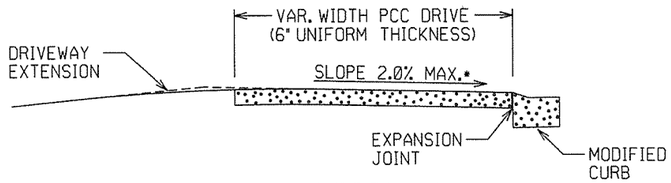

SECTION A-A

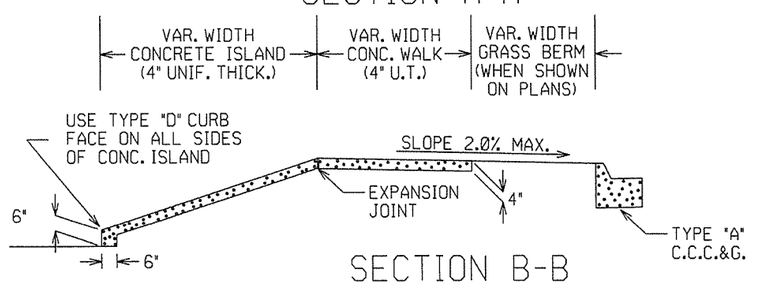

SECTION B-B
CURBED ISLAND BEHIND WALK

2-27-14		REVISED PLAN & ISOMETRIC VIEW
11-29-07		ADDED CHANNELIZATION ISLAND WITH TYPE C CURB FACE & REVISED DRIVEWAY SLOPE NOTE & VERTICAL ALIGNMENT DETAIL
11-10-05		REV. APRON SLOPE & DEPTH OF AGG. BASE.
8-22-02		ADDED ISLAND DETAILS & NOTES
3-30-00		REV. MOD. CURB WIDTH & TRANS. NOTE
11-19-98		REVISED NOTES
11-18-98		REDRAWN AND REISSUED

ARKANSAS STATE HIGHWAY COMMISSION
DETAILS OF DRIVEWAYS & ISLANDS
STANDARD DRAWING DR-1

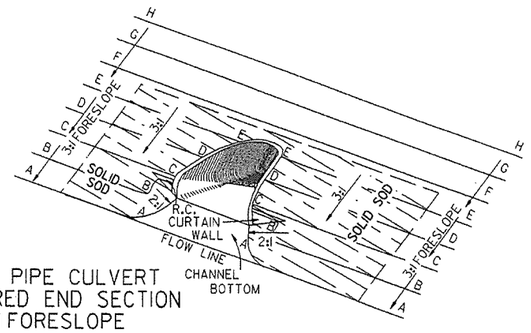

TYPICAL PIPE CULVERT
WITH FLARED END SECTION
& 3:1 FORESLOPE

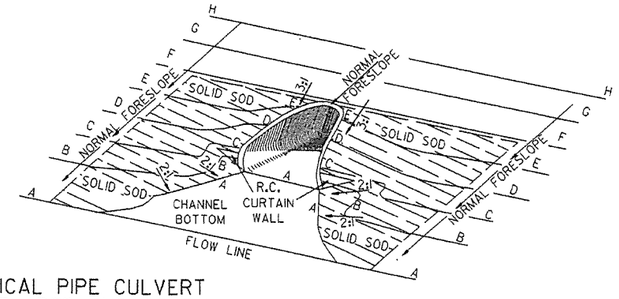

TYPICAL PIPE CULVERT
WITH FLARED END SECTION
& FLATTENED ADJACENT SLOPES

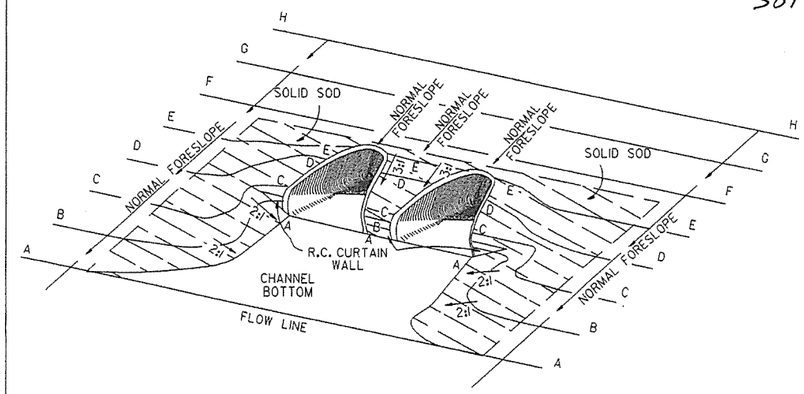

TYPICAL MULTIPLE PIPE CULVERT
WITH FLARED END SECTIONS
& FLATTENED ADJACENT SLOPES

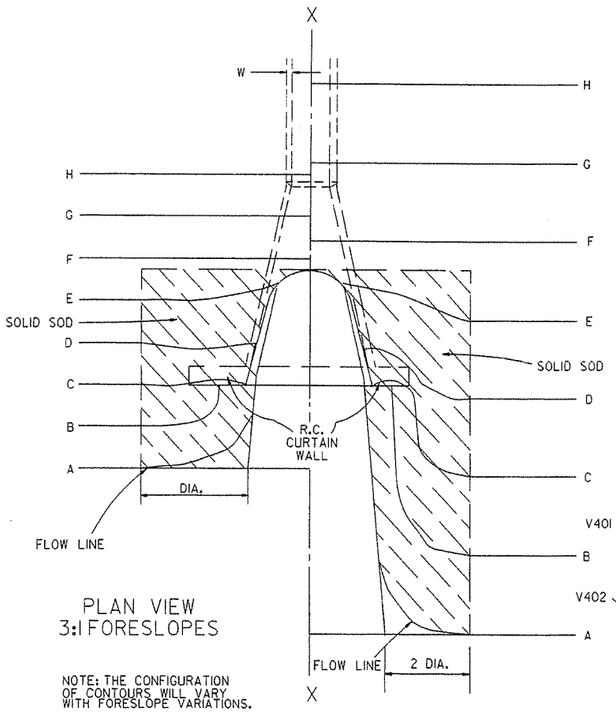

NOTE: THE CONFIGURATION OF CONTOURS WILL VARY WITH FORESLOPE VARIATIONS.

PLAN VIEW
FLATTENED FORESLOPES

R.C. CURTAIN WALL
DIMENSIONS & QUANTITIES

PIPE DIA.	H_1	L_1	L	L (DBL.)/2	SINGLE R.C.P.C. CONC. CU. YDS.	SINGLE R.C.P.C. REINF. STEEL LBS.	DOUBLE R.C.P.C. CONC. CU. YDS.	DOUBLE R.C.P.C. REINF. STEEL LBS.
18"	11½"	3'-5"	8'-0"	6'-3"	0.31	27.7	0.45	39.5
24"	1'-0½"	4'-6"	9'-6"	7'-6"	0.37	33.4	0.53	48.0
30"	1'-3½"	5'-7"	11'-0"	9'-0"	0.45	39.0	0.67	59.0
36"	1'-7"	6'-8"	13'-0"	10'-6"	0.58	52.6	0.83	73.9
42"	2'-1½"	7'-3"	15'-6"	12'-0"	0.82	77.1	1.10	100.7
48"	2'-5"	7'-10"	17'-0"	13'-0"	0.98	94.9	1.27	120.4
54"	2'-9½"	8'-5"	18'-6"	14'-0"	1.16	115.8	1.47	143.7
60"	3'-4"	9'-0"	20'-6"	15'-6"	1.47	149.7	1.84	180.3
72"	4'-5"	10'-2"	25'-6"	18'-6"	2.31	232.6	2.73	271.0

NOTE: QUANTITIES SHOWN ARE FOR ONE (1) CURTAIN WALL.

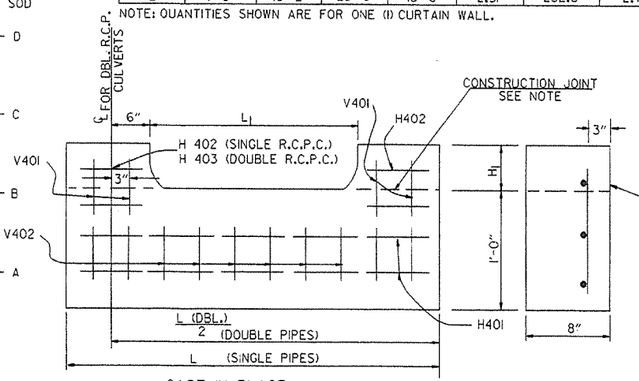

CAST-IN-PLACE

NOTE: THE PORTION OF THE R.C. CURTAIN WALL BENEATH THE FLARED END SECTION (LOWER 1'-0") SHALL BE PLACED MONOLITHICALLY. THE FLARED END SECTION SHALL THEN BE SET IN PLACE & THE REMAINING PORTIONS OF THE R.C. CURTAIN WALL PLACED.

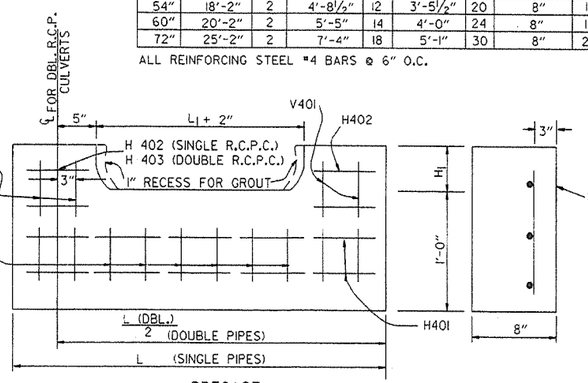

PRECAST

NOTE: THE PRECAST CURTAIN WALL WILL BE SET AND BACKFILLED WITH COMPACTED MATERIAL. THE FLARED END SECTION SHALL THEN BE SET IN PLACE AND THE 1" RECESS FILLED WITH GROUT. WHERE "L" EXCEEDS 11' THE CURTAIN WALL MAY BE CAST IN TWO (2) OR MORE SECTIONS. THE METHOD OF JOINING THE SECTIONS FOR INSTALLATION SHALL BE APPROVED BY THE ENGINEER.

R.C. CURTAIN WALL DETAILS

REINFORCING STEEL SCHEDULE

PIPE DIA.	SINGLE R.C. PIPE CULVERT H401 L	NO.	H402 L	NO.	V401 L	NO.	V402 L	NO.	DOUBLE R.C. PIPE CULVERT H401 L	NO.	H402 L	NO.	H403 L	NO.	V401 L	NO.	V402 L	NO.
18"	7'-8"	2	1'-11½"	4	1'-7½"	8	8"	8	12'-2"	2	1'-11½"	4	8"	2	1'-7½"	10	8"	14
24"	9'-2"	2	2'-2"	4	1'-8½"	10	8"	9	14'-8"	2	2'-2"	4	8"	2	1'-8½"	12	8"	18
30"	10'-8"	2	2'-4½"	4	1'-11½"	10	8"	12	17'-8"	2	2'-4½"	4	8"	2	1'-11½"	14	8"	22
36"	12'-8"	2	2'-10"	6	2'-3"	12	8"	14	20'-8"	2	2'-10"	6	8"	3	2'-3"	14	8"	28
42"	15'-2"	2	3'-9½"	8	2'-9½"	16	8"	15	23'-8"	2	3'-9½"	8	8"	4	2'-9½"	18	8"	30
48"	16'-8"	2	4'-3"	10	3'-1"	18	8"	16	25'-8"	2	4'-3"	10	8"	5	3'-1"	20	8"	32
54"	18'-2"	2	4'-8½"	12	3'-5½"	20	8"	17	27'-8"	2	4'-9"	12	8"	6	3'-5½"	22	8"	34
60"	20'-2"	2	5'-5"	14	4'-0"	24	8"	18	30'-8"	2	5'-5"	14	8"	7	4'-0"	26	8"	36
72"	25'-2"	2	7'-4"	18	5'-1"	30	8"	20	36'-8"	2	7'-4"	18	8"	9	5'-1"	33	8"	40

ALL REINFORCING STEEL #4 BARS @ 6" O.C.

SOLID SODDING

PIPE DIA.	SINGLE R.C.P.C. 3:1	4:1	6:1	DOUBLE R.C.P.C. 3:1	4:1	6:1
	SQ. YDS.			SQ. YDS.		
18"	5	7	12	6	8	13
24"	8	12	19	9	13	20
30"	13	18	29	14	19	30
36"	17	26	41	18	28	43
42"	23	35	55	25	37	57
48"	29	46	68	31	48	70
54"	35	57	85	37	59	87
60"	45	62	104	48	65	107
72"	64	92	156	67	95	159

NOTE: QUANTITIES SHOWN ABOVE ARE FOR ONE (1) END OF F.E.S.

GENERAL NOTES

1. A CAST-IN-PLACE OR PRECAST CURTAIN WALL MAY BE USED. PAYMENT FOR THE CURTAIN WALL SHALL BE CONSIDERED TO BE INCLUDED IN THE UNIT PRICE BID EACH FOR FLARED END SECTIONS OF THE SEVERAL SIZES, WHICH PRICE SHALL BE FULL COMPENSATION FOR FURNISHING ALL MATERIALS INCLUDING REINFORCING STEEL AND CONCRETE: FOR FORMS, MIXING AND PLACING; FOR EXCAVATION AND BACKFILL, AND FOR ALL LABOR, TOOLS, EQUIPMENT AND INCIDENTALS NECESSARY TO COMPLETE THE WORK.
2. ALL EXPOSED EDGES SHALL BE CHAMFERED ¾".
3. CONCRETE FOR CURTAIN WALL SHALL MEET THE REQUIREMENTS FOR CLASS A OR S CONCRETE AS PROVIDED IN SECTION 802 OF THE STANDARD SPECIFICATIONS OR FOR PAVING CONCRETE AS PROVIDED IN SECTION 501 OF THE STANDARD SPECIFICATIONS.
4. WELDED WIRE MESH 3 x 3 W/10 x W10 MAY BE USED IN LIEU OF REINFORCING BARS.

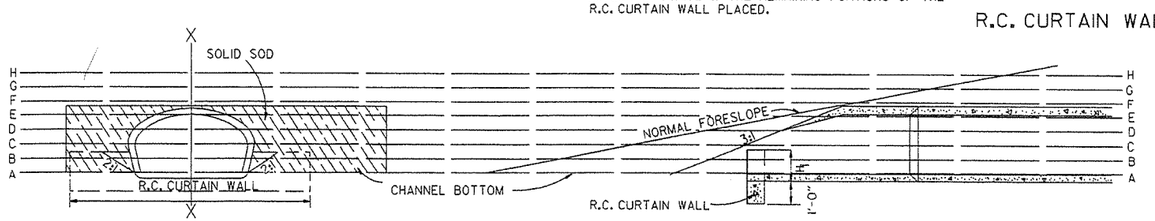

END VIEW

SECTIONAL VIEW "X-X"

DATE	REVISION	FILMED
10-18-96	ADDED NOTE TO SOLID SODDING	10-18-96
10-12-95	CORRECTED SPELLING	
11- 3-94	ADDED GENERAL NOTE NO. 4	
8-15-91	REV. CURTAIN WALL QUANT. STEEL SCH. & SOLID SOD QUANT.	
3-2-81	ALLOW PRECAST IN 2 OR MORE PIECES CHAMFER EDGES	
5-15-80	ADDED PRECAST WALL & GENERAL NOTES	
10-2-72	REVISED AND REDRAWN	

ARKANSAS STATE HIGHWAY COMMISSION

FLARED END SECTION

STANDARD DRAWING FES-1

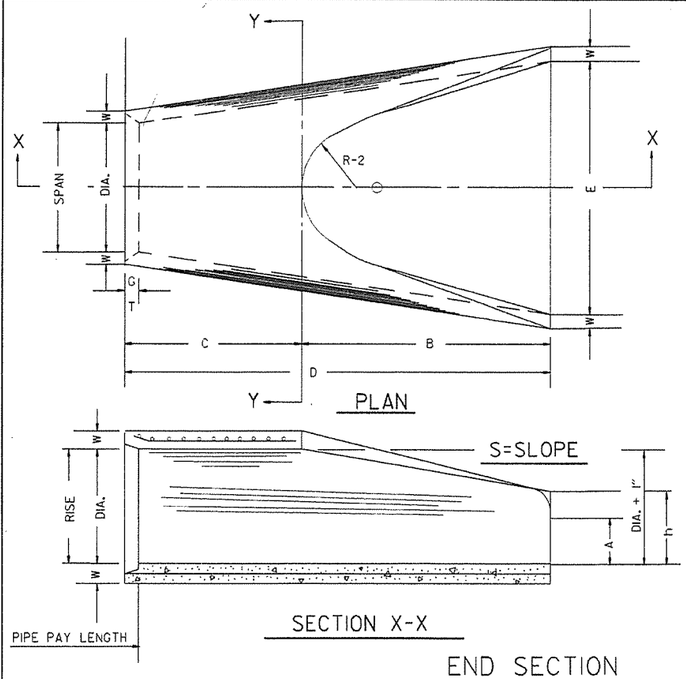

END SECTION FOR REINFORCED CONCRETE PIPE CULVERTS

TABLE OF DIMENSIONS

DIA.	WALL	A	B	C	D	E	S	DIA. - 1"	P	R-1	R-2	G-T	WT.	h
18"	2½"	9"	2'-3"	3'-10"	6'-1"	3'-0"	3:1	19"	29"	15½"	12"	2"	1000	1'-0½"
24"	3"	9½"	3'-7½"	2'-6"	6'-11½"	4'-0"	3:1	25"	33 3/16"	16 13/16"	14"	2½"	1600	1'-11½"
30"	3½"	1'-0"	4'-6"	1'-7¾"	6'-1¾"	5'-0"	3:1	31"	37"	18½"	15"	3¼"	1940	1'-4⅜"
36"	4"	1'-3"	5'-3"	2'-10¾"	8'-1¾"	6'-0"	3:1	37"	47 1/16"	24 5/16"	20"	3½"	4100	1'-8"
42"	4½"	1'-9"	5'-3"	2'-11"	8'-2"	6'-6"	3:1	43"	53⅞"	27½"	22"	3½"	5380	2'-2½"
48"	5"	2'-0"	6'-0"	2'-2"	8'-2"	7'-0"	3:1	49"	56½"	28½"	22"	3½"	6550	2'-6"
54"	5½"	2'-4"	6'-6"	1'-10"	8'-4"	7'-6"	3:1	55"	65½"	33⅛"	24"	4"	8750	2'-10½"
60"	6"	2'-10"	6'-6"	1'-10"	8'-4"	8'-0"	3:1	61"	72½"	36 11/16"	24"	4"	9270	3'-5"
72"	7"	3'-10"	6'-6"	1'-10"	8'-4"	9'-0"	3:1	73"	77 11/16"	38 13/16"	24"	5"	13250	4'-6"

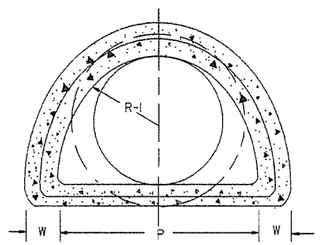

SECTION Y-Y

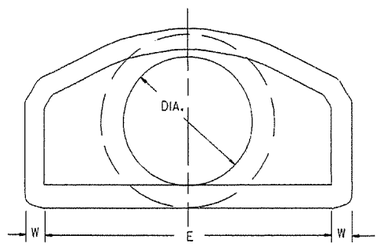

END VIEW

NOTE: TONGUE END ON UPSTREAM SECTION
GROOVE END ON DOWNSTREAM SECTION

ARCH PIPE

EQUIV. DIA.	• SPAN AASHTO M 206	• SPAN AHD NOMINAL	• RISE AASHTO M 206	• RISE AHD NOMINAL	W	A	B	C	D	E	P	R2	G-T	S
	INCHES													
15	18	18	11	11	2"	4"	2'-0"	4'-0"	6'-0"	3'-0"	29"	12"	1½"	2½:1
18	22	22	13½	14	2½"	5"	2'-0"	4'-1"	6'-1"	3'-6"	32⅛"	13"	2½"	2½:1
21	26	26	15½	16	2¾"	7"	2'-3"	3'-10"	6'-1"	4'-0"	34⅛"	14"	2½"	2½:1
24	28½	29	18	18	3"	9"	2'-3"	3'-10"	6'-1"	5'-0"	36 1/16"	15"	2½"	2½:1
30	36¼	36	22½	23	3½"	10"	3'-1"	3'-0½"	6'-1½"	6'-0"	47 1/16"	20"	3"	2½:1
36	43¾	44	26⅝	27	4"	10½"	4'-0"	2'-1½"	6'-1½"	6'-6"	54 1/16"	22"	3½"	2½:1
42	51⅛	51	31 1/16	31	4½"	11½"	4'-7"	1-10¼"	6'-5¼"	7'-2"	59½"	23"	3¾"	2½:1
48	58½	59	36	36	5"	1'-3"	5'-3"	2'-10¾"	8'-1¾"	7'-10"	70 1/16"	24"	4¼"	2½:1
54	65	65	40	40	5½"	1'-7"	5'-3"	2'-11"	8'-2"	8'-6"	72 1/16"	24"	4¾"	2¼:1
60	73	73	45	45	6"	1'-10"	5'-6"	2'-8"	8'-2"	9'-0"	77 1/16"	24"	5"	2¼:1

• THE MEASURED SPAN AND RISE SHALL NOT VARY MORE THAN ± 2 PER CENT FROM THE VALUES SPECIFIED BY AASHTO M 206.

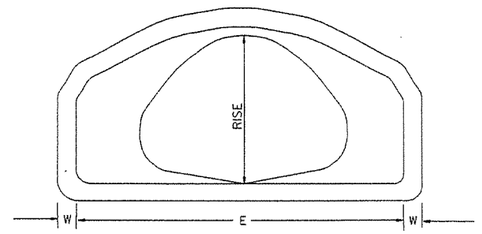

END VIEW
CONCRETE ARCH PIPE

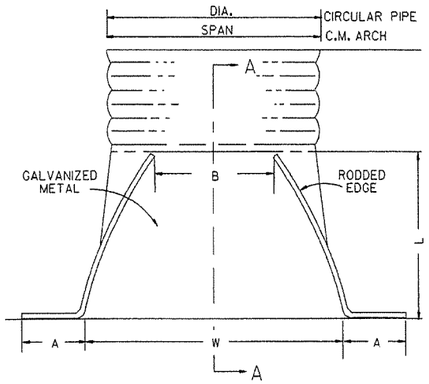

PLAN

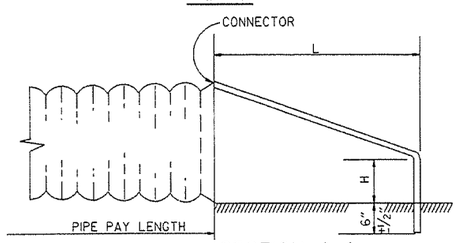

SECTION A-A

NOTE: ALTERNATE CONNECTIONS TO THE PIPE CULVERTS, IN ACCORDANCE WITH MANUFACTURER'S STANDARD PRACTICES, MAY BE MADE SUBJECT TO THE APPROVAL OF THE ENGINEER.

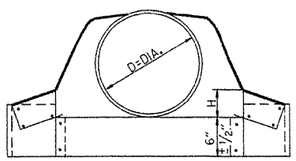

CIRCULAR PIPE

CIRCULAR PIPE

D. DIA.	GAUGE	A 1" ±	B. MAX.	H 1" ±	L 1½" ±	W 2" ±	S
		INCHES					
12	16	6	6	6	21	24	2½:1
15	16	7	8	6	26	30	2½:1
18	16	8	10	6	31	36	2½:1
21	16	9	12	6	36	42	2½:1
24	16	10	13	6	41	48	2½:1
30	14	12	16	8	51	60	2½:1
36	14	14	19	9	60	72	2½:1
42	12	16	22	11	69	84	2½:1
48	12	18	27	12	78	90	2½:1
54	12	18	30	12	84	102	2:1
60	12	18	33	12	87	114	1¾:1
66	12	18	36	12	87	120	1½:1
72	12	18	39	12	87	126	1 1/3:1

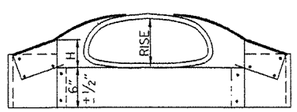

C.M. ARCH PIPE

C.M. ARCH PIPE

EQUIV. DIA.	SPAN	RISE	A 1" ±	B MAX.	H 1" ±	L 1½" ±	W 2" ±	S	GAUGE
	INCHES								
15"	17	13	7	9	6	19	30	2½:1	16
18"	21	15	7	10	6	23	36	2½:1	16
21"	24	18	8	12	6	28	42	2½:1	16
24"	28	20	9	14	6	32	48	2½:1	16
30"	35	24	10	16	6	39	60	2½:1	14
36"	42	29	12	18	8	46	75	2½:1	14
42"	49	33	13	21	9	53	85	2½:1	12
48"	57	38	18	26	12	63	90	2½:1	12
54"	64	43	18	30	12	70	102	2¼:1	12
60"	71	47	18	33	12	77	114	2¼:1	12

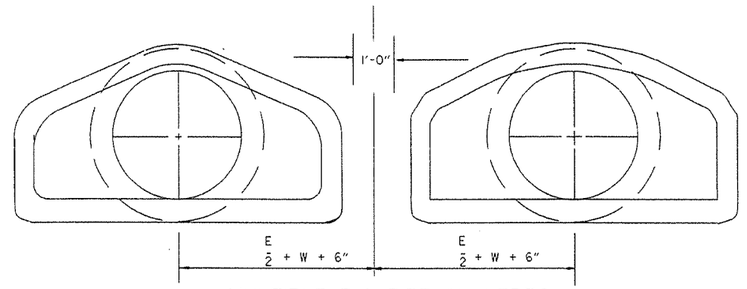

MULTIPLE R.C. PIPE CULVERTS

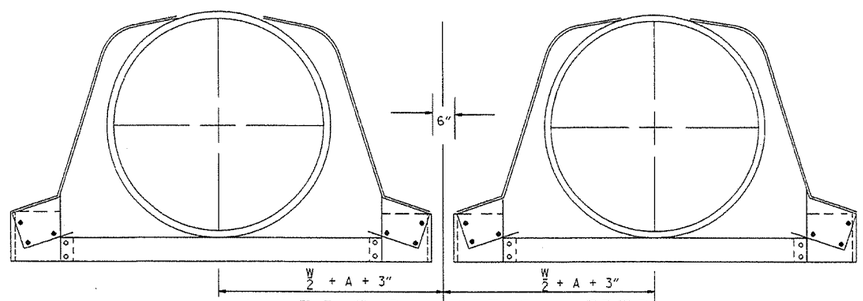

MULTIPLE C.M. PIPE CULVERTS

END SECTIONS FOR CORRUGATED METAL PIPE CULVERTS

DATE	REVISION	FILMED
10-18-96	REVISED ASTM REF. TO AASHTO	10-18-96
5-15-80	REVISED DISTANCE BETWEEN MULTIPLE R.C.P. F.E.S.	664-5-15-80
7-14-78	C.M. ARCH SIZES TO CONFORM WITH AASHTO SIZES	752-7-14-78
8-22-75	ADDED MULTIPLE PIPE CULVERTS	517-8-22-75
12-5-74	REMOVED NOTE RE REINF. FOR R.C. F.E.S.	500-12-5-74
5-24-73	CMP END SECTION, SHOW PIPE PAY LENGTH	627-5-24-73
10-2-72	REVISED AND REDRAWN	760-10-2-72

ARKANSAS STATE HIGHWAY COMMISION

FLARED END SECTION

STANDARD DRAWING FES-2

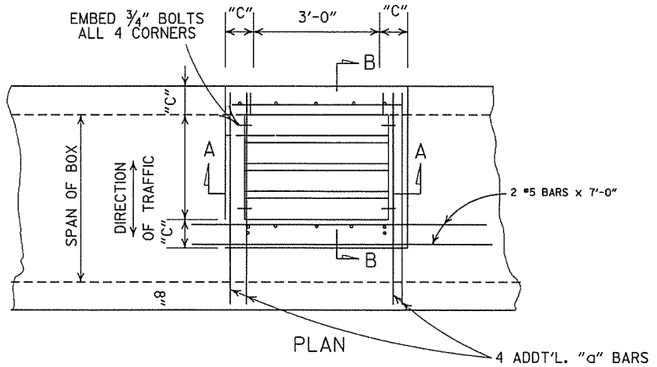

PLAN

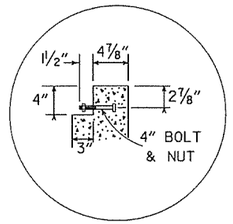

DETAIL A

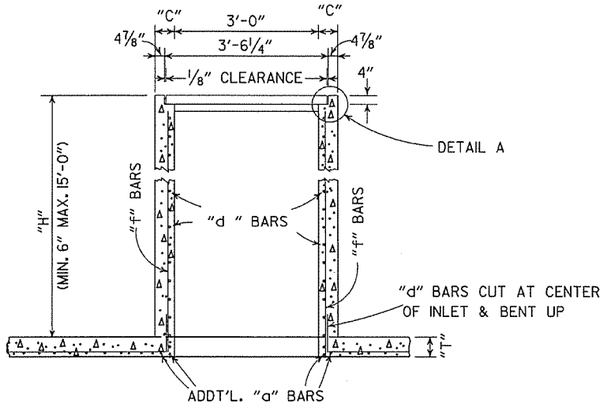

SECTION A-A

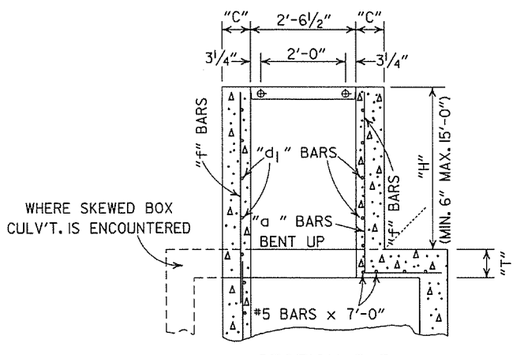

SECTION B-B

NOTE: ADDT'L.REINF. STEEL TO BE INCLUDED IN UNIT PRICE BID PER TYPE "TM" D.I.

DIMENSIONS & REINF. BARS FOR D.I. TO BE THE SAME AS THOSE SHOWN ON APPLICABLE STD. BARREL DRAWING FOR R.C. BOX CULVERTS.

DROP INLET TYPE "TM" FOR REINFORCED CONC. BOX CULVERTS

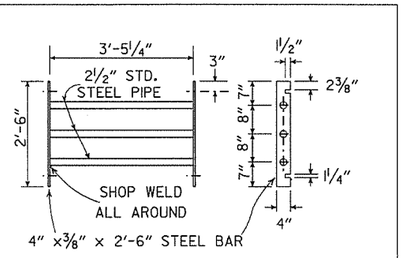

GRATE DETAIL

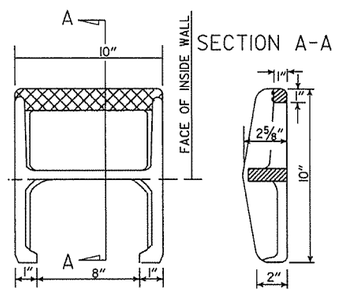

APPROX. WEIGHT = 11 LBS. (CAST IRON)

PLAN

NOTE: THIS DETAIL IS TYPICAL. OTHERS MAY BE USED WITH PRIOR APPROVAL OF THE ENGINEER.

DETAIL OF STEP FOR DROP INLET

GENERAL NOTES:

1. STEEL PIPE FOR GRATES AND BOLTS SHALL CONFORM TO THE REQUIREMENTS OF SECTION 807. BOLTS SHALL CONFORM TO ONE OF THE FOLLOWING: ASTM A193, GRADE BB CLASS 1 OR 2, ASTM A307 OR AASHTO M 164.
2. STEEL PIPE FOR GRATES SHALL BE "STANDARD WEIGHT" PIPE CONFORMING TO ASTM A53 NATIONAL STANDARD PIPE.
3. BOLTS, NUTS, WASHERS SHALL BE GALVANIZED IN ACCORDANCE WITH AASHTO M 232 OR AASHTO M 298, CLASS 40 OR 50.
4. ALL EXPOSED CORNERS TO HAVE ¾" CHAMFER.
5. ALL #4 AND #5 REINFORCING BARS TO HAVE 1½" COVER. LARGER SIZES TO HAVE 2" COVER.
6. THE COMPLETE PIPE GRATE SHALL BE PAINTED IN ACCORDANCE WITH THE STANDARD SPECIFICATIONS.

TABLE OF "W" DIMENSIONS

I.D. PIPE	SKEW OF CROSS DRAIN		
	STRAIGHT	30°	45°
	"W"	"W"	"W"
24"	4'-0"	4'-0"	4'-0"
30"	4'-0"	4'-0"	4'-5"
36"	4'-0"	4'-3"	5'-3"
42"	4'-3"	4'-11"	6'-1"
48"	4'-10"	5'-7"	6'-11"

NOTE: DIMENSIONS SHOWN ABOVE ARE FOR PIPES INTERSECTING DROP INLET ON ONE SIDE ONLY. FOR SKEWED PIPES INTERSECTING BOTH SIDES OF DROP INLET, "W" WILL NEED TO BE INCREASED OR AXIS OF INTERSECTING PIPES WILL NEED TO BE SHIFTED.

383

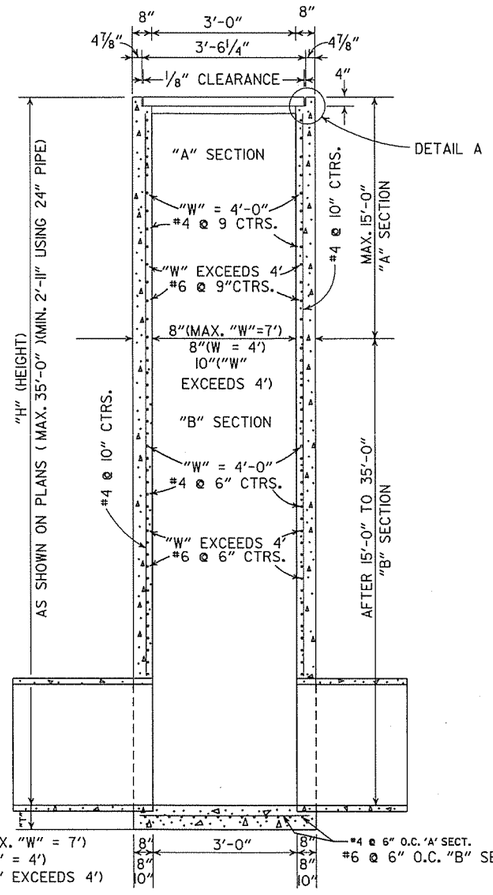

SECTION B-B

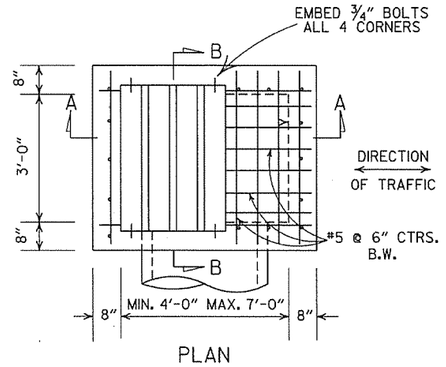

PLAN

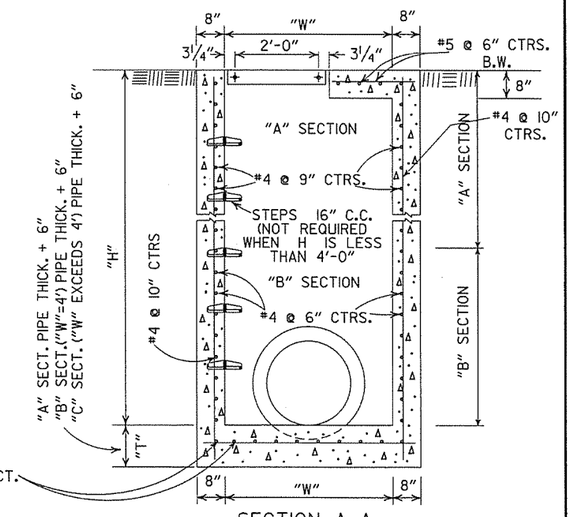

SECTION A-A

DROP INLET(TYPE RM)

8-22-02	ADDED & REVISED DIMENSION TO SECTION A-A	
1-12-00	CORRECTED DIMENSION ON SECTION B-B	
11-06-97	ADDED DIMENSION TO SECTION A-A	
10-18-96	REVISED ASTM REF. TO AASHTO AND ADDED NOTE TO TABLE OF "W" DIMENSIONS	
10-1-92	ADDED DIRECTION OF TRAFFIC	10-1-92
8-15-91	ADDED NOTE ABOUT PAINTING OF GRATE	8-15-91
11-30-89	ALTERED DETAIL A	11-30-89
7-15-88	REVISED STEP DETAIL,TM & RM D.I. & GRATE DETAIL	719-7-15-88
10-2-72	REVISED AND REDRAWN	542-10-2-72
REVISED		DATE FILMED

ARKANSAS STATE HIGHWAY COMMISSION

DETAILS OF DROP INLETS

STANDARD DRAWING FPC-9D

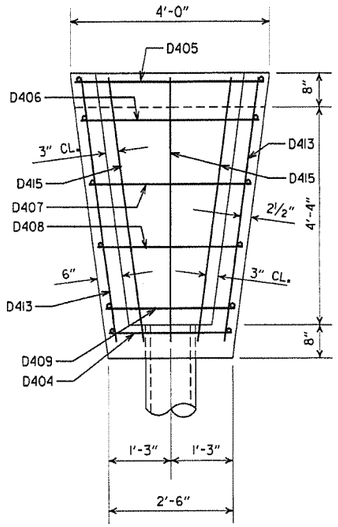

PLAN

BAR LIST (CONCRETE SPILLWAY)

MARK	NO. REQ'D.	LENGTH	BENDING DIAGRAM
D404	3	2'-2"	5'-4"
D405	2	3'-8"	
D406	1	3'-5"	
D407	1	3'-1"	
D408	1	2'-9"	
D409	1	2'-5"	1'-2"
D410	2	2'-5"	2" P.D.
D411	2	2'-2"	D415
D412	2	1'-9"	
D413	2	5'-6"	
D414	2	1'-2"	
D415	3	6'-5"	

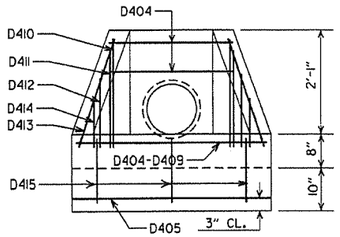

FRONT ELEVATION

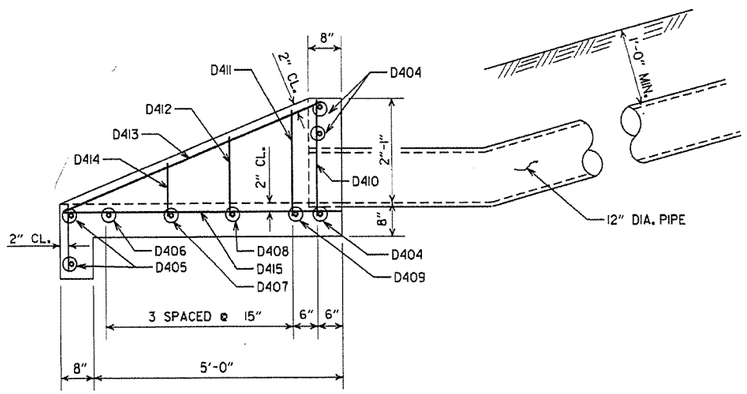

SIDE ELEVATION
CONCRETE SPILLWAY

DETAILS OF CONCRETE SPILLWAY (TYPE A)

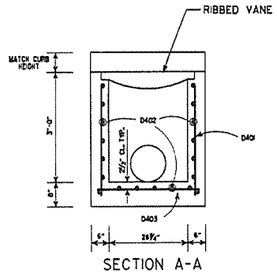

SECTION A-A

BAR LIST (DROP INLET)

MARK	TYPE N-1		TYPE N-2		TYPE N-3	
	NO. REQ'D.	LENGTH	NO. REQ'D.	LENGTH	NO. REQ'D.	LENGTH
D401	20	3'-0"	26	3'-0"	32	3'-0"
D402	19	2'-2"	19	3'-8"	19	5'-2"
D403	17	2'-11"	20	2'-11"	23	2'-11"

ALL BARS #4 @ 6" SPACING

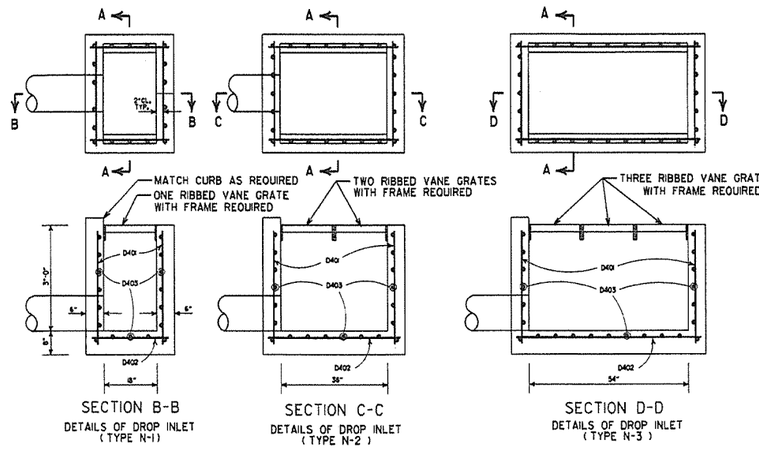

SECTION B-B
DETAILS OF DROP INLET
(TYPE N-1)

SECTION C-C
DETAILS OF DROP INLET
(TYPE N-2)

SECTION D-D
DETAILS OF DROP INLET
(TYPE N-3)

DETAILS OF DROP INLET

GENERAL NOTES (GRATE & FRAME)

1. RIBBED VANE GRATE AND FRAME SHALL BE CONSTRUCTED OF CAST IRON AND SHALL CONFORM TO THE REQUIREMENTS OF THE STANDARD SPECIFICATIONS FOR GRAY IRON CASTINGS AASHTO M 105 CLASS 35B & AASHTO M 306.
2. GRATE AND FRAME SHALL NOT BE PAINTED.
3. GRATE AND FRAME SHALL BE INSTALLED IN DROP INLET IN ASSEMBLED POSITION.
4. APPROXIMATE WEIGHT OF GRATE SHALL BE 170 LBS.

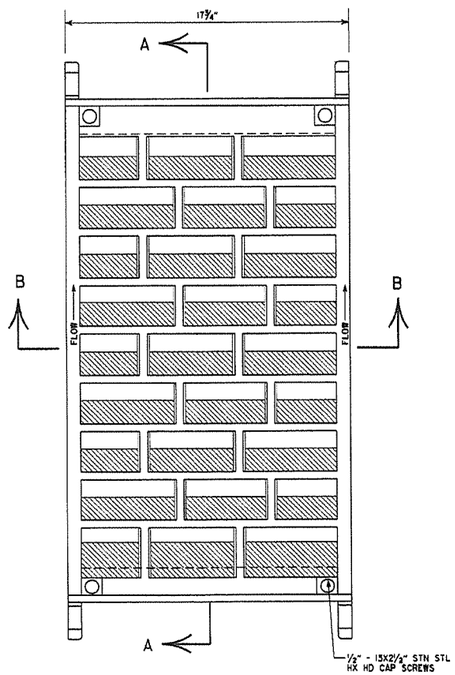

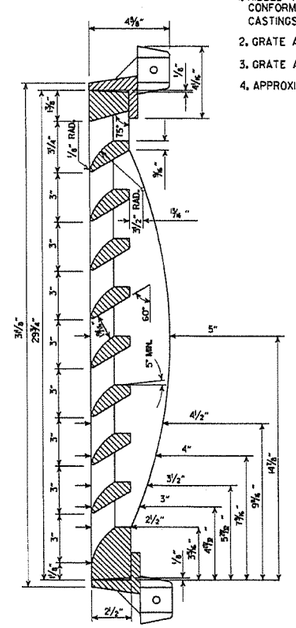
4⅝"
1⅛"
1⅛"
15°
¾"
1¾"
3½" RAD.
1⅛" RAD.
3¼"
3"
3"
3



PLAN

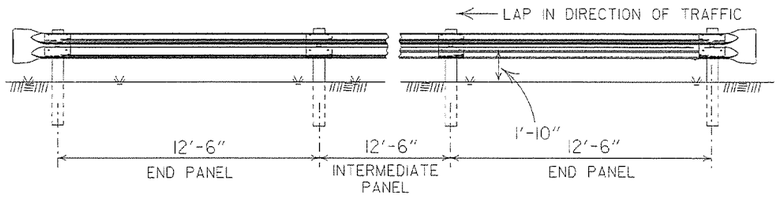

ELEVATION

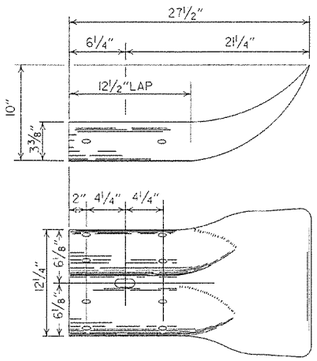

TERMINAL SECTION

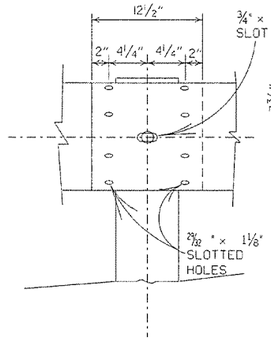

RAIL SPLICE

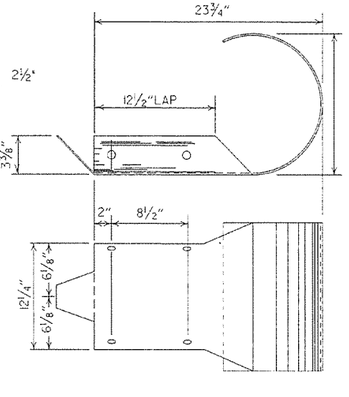

TERMINAL SECTION

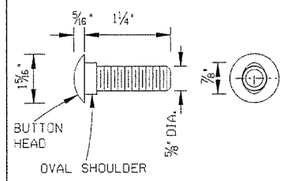

SPLICE BOLT

NOTE: POST BOLT SAME EXCEPT LENGTH.

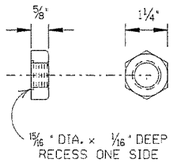

NUT

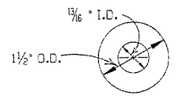

CUT STEEL WASHER

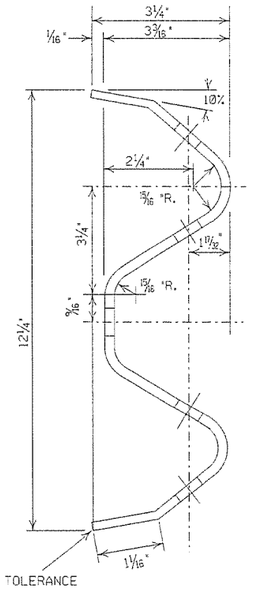

SECTION THRU RAIL

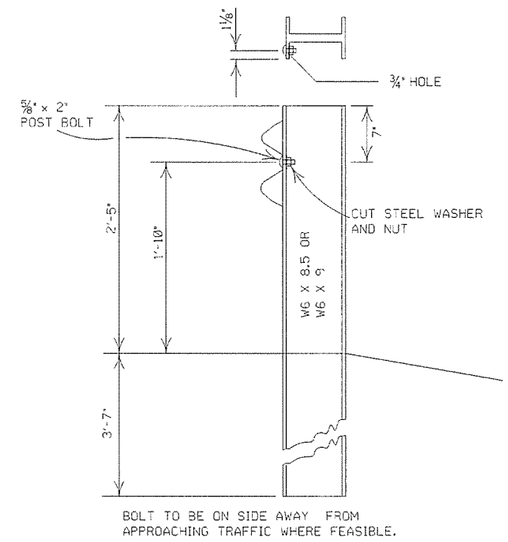

BOLT TO BE ON SIDE AWAY FROM APPROACHING TRAFFIC WHERE FEASIBLE.

STEEL POST

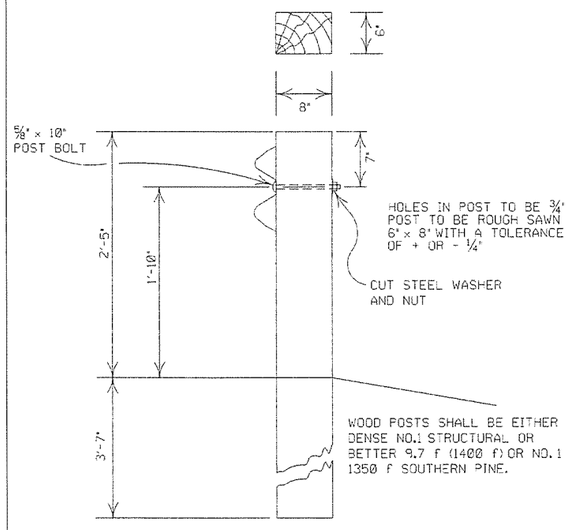

WOOD POST

DETAILS OF POST CONNECTIONS

DATE	REVISION	DATE FILM
7-14-10	RAISED HEIGHT OF GUARD RAIL 1"	
8-22-22	REVISED DIMENSION ON STEEL POST	
11-16-01	REVISED STEEL AND WOOD POST	
8-12-98	REMOVED CONCRETE POST	
10-18-96	CHANGED WOOD POST NOTE	10-18-96
6-2-94	ADDED ALTERNATE STEEL POST SIZE	
8-5-93	REVISED STEEL POSTS SIZE	8-5-93
8-15-91	DELETE STEEL PLATE WASHER & ADDED TYPE C TO TITLE	8-15-91
10-30-87	REMOVED DET. PLCMNT. ON HWY.	555-11-20-87
1-4-83	GRADE FOR WOOD POSTS	679-1-4-83
10-1-77	HARDENED WASHER	922-10-1-72
10-2-72	REVISED & REDRAWN	521-10-2-72

ARKANSAS STATE HIGHWAY COMMISSION

GUARD RAIL DETAILS (TYPE C)

STREET / ROAD BARRICADE OR TEMPORARY INSTALLATION

STANDARD DRAWING GR-7

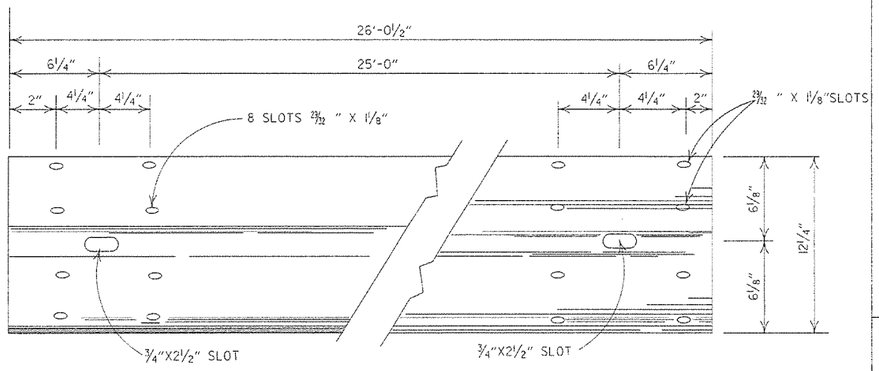

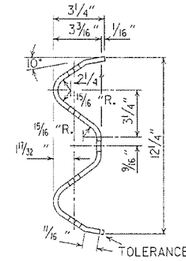

DETAILS OF W-BEAM GUARD RAIL

RAIL SECTION OF CLOSELY SIMILAR DIMENSIONS AND COMPARABLE STRENGTH MAY BE SUBSTITUTED IF APPROVED BY THE ENGINEER.

SPLICE BOLT
POST BOLT - SAME EXCEPT LENGTH

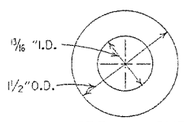

CUT STEEL WASHER

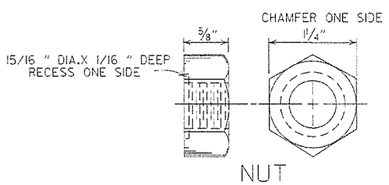

NUT

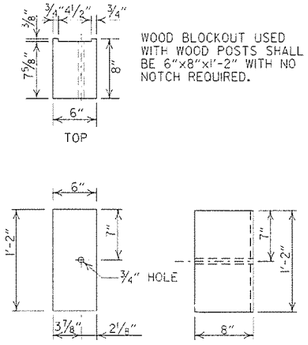

WOOD BLOCKOUT USED WITH WOOD POSTS SHALL BE 6"x8"x1'-2" WITH NO NOTCH REQUIRED.

WOOD BLOCKOUT (W-BEAM)

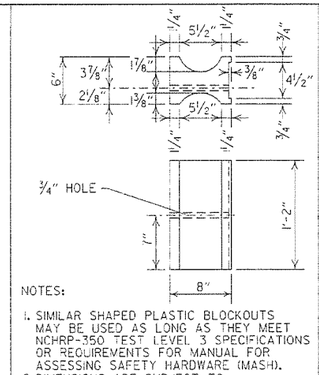

NOTES:
1. SIMILAR SHAPED PLASTIC BLOCKOUTS MAY BE USED AS LONG AS THEY MEET NCHRP-350 TEST LEVEL 3 SPECIFICATIONS OR REQUIREMENTS FOR MANUAL FOR ASSESSING SAFETY HARDWARE (MASH).
2. DIMENSIONS ARE SUBJECT TO MANUFACTURERS TOLERANCES.

PLASTIC BLOCKOUT (W-BEAM)

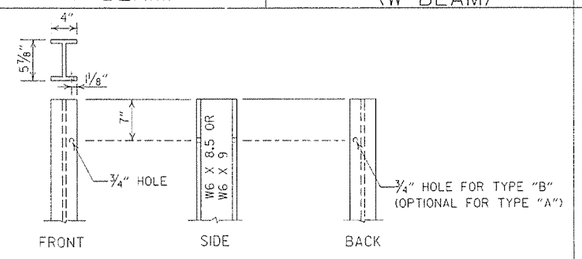

STEEL POST

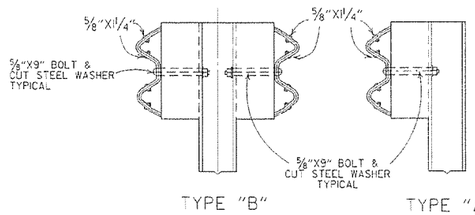

TYPE "B" TYPE "A"

DETAILS OF STEEL LINE POST CONNECTIONS (W-BEAM)

-GENERAL NOTES-

ALL BOLTS SHALL BE SUFFICIENT LENGTH TO EXTEND THROUGH THE FULL THICKNESS OF THE NUT AND NO MORE THAN 3/4" BEYOND IT.

WHERE W-BEAM GUARD RAIL CONTINUES, THE INTERMEDIATE SECTIONS SHALL HAVE A POST SPACING OF 6'-3" UNLESS OTHERWISE NOTED.

W-BEAM GUARD RAIL REPRESENTING INTERMEDIATE SECTIONS WILL BE MEASURED ALONG THE ROADWAY FACE FROM CENTERLINE OF POST TO CENTERLINE OF POST.

USE W-BEAM GUARD RAIL COMPONENTS OF SAME MATERIAL FOR ENTIRE JOB. FOR EXTENSIONS OR MODIFICATION OF EXISTING GUARD RAIL, W-BEAM GUARD RAIL COMPONENTS OF THE SAME TYPE AS THOSE EXISTING SHALL BE USED.

ANY BACKFILLING UNDER OR AROUND POST SHALL BE DAMP SAND THOROUGHLY TAMPED IN PLACE.

WOOD POSTS & WOOD BLOCKS SHALL BE EITHER DENSE NO.1 STRUCTURAL OR BETTER 9.7# (1400 f) OR NO.1 1350 f SOUTHERN PINE.

CONTRACTOR SHALL HAVE THE OPTION OF USING WOOD BLOCKOUTS FOR W-BEAM GUARD RAIL OR PLASTIC BLOCKOUTS, AS LONG AS BLOCKOUT USED MEETS NCHRP-350 TEST LEVEL 3 SPECIFICATIONS OR REQUIREMENTS FOR MANUAL FOR ASSESSING SAFETY HARDWARE (MASH) FOR W-BEAM GUARD RAIL.

HOLES IN POSTS AND BLOCKS TO BE 3/4" DIA.

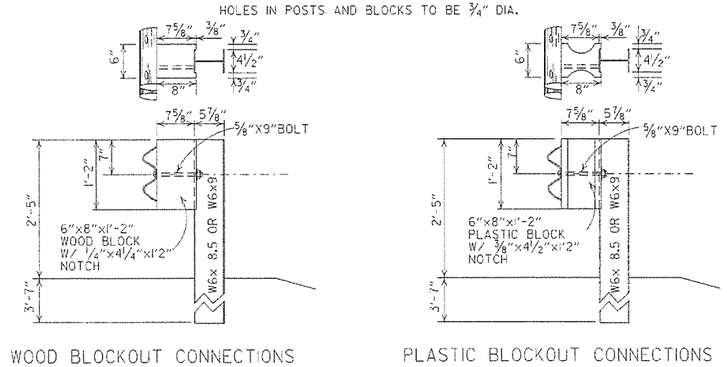

WOOD BLOCKOUT CONNECTIONS PLASTIC BLOCKOUT CONNECTIONS

DETAILS OF STEEL LINE POST CONNECTIONS (W-BEAM)

HOLES IN POSTS AND BLOCKS TO BE 3/4" DIA.



POSTS AND BLOCKS TO BE ROUGH SAWN 6"X8" WITH A TOLERANCE OF + OR - 1/4".

WOOD BLOCKOUT CONNECTIONS PLASTIC BLOCKOUT CONNECTIONS

DETAILS OF WOOD LINE POST CONNECTIONS (W-BEAM)

DATE	REVISION	DATE FILM
7-4-10	RAISED HEIGHT OF GUARD RAIL 1"	
10-15-09	ADDED REFERENCE TO MASH	
4-10-03	REVISED GENERAL NOTES	
9-22-02	REVISED DIMENSION ON WOOD & PLASTIC BLOCKOUT CONNECTIONS & ON STEEL POST	
11-16-01	REVISED WOOD BLOCKOUT & DETAILS OF WOOD LINE POST CONNECTIONS	
3-30-00	REMOVED GUARD RAIL AT BRIDGE ENDS	
1-12-00	ADDED PLASTIC BLOCKOUT	
8-12-98	REV. BLOCKOUTS TO WOOD, DELETED CONC. POST & REV. GENERAL NOTE, DELETED DET. OF GUARD RAIL REPLACE. BEHIND CURB & DET. OF POST PLACE. IN SOLID ROCK, & ADDED DETAILS OF STEEL LINE POST CONN. REMOVED BACK-UP PLATE, REVISED HOLES IN STEEL POLES	
4-3-97	REMOVED "LAP IN DIRECTION OF TRAFFIC" NOTE & PLACED ARROWS ON WASHERS	
10-18-96	REVISED WOOD POST NOTE	
6-2-94	ADDED ALT. STEEL POST SIZE	
8-5-93	REVISED STEEL POST SIZE	8-5-93
10-1-92	REDRAWN & REVISED	10-1-92
8-15-91	REVISED WASHER NOTE	8-15-91
8-2-90	REV. GEN. NOTE & DEPHT OF ANC. POST IN ROCK	8-2-90
7-15-88	REVISED SECTION 3 & GENERAL NOTES	
3-4-88	REV. ANCHOR POST, ELEV. NOTES & POST IN ROCK	780-3-4-88
10-30-87	REVISED WOOD LINE POST DETAIL	546-10-30-87
10-9-87	REDRAWN & REVISED	802-10-9-87

ARKANSAS STATE HIGHWAY COMMISSION

GUARD RAIL DETAILS

STANDARD DRAWING GR-8

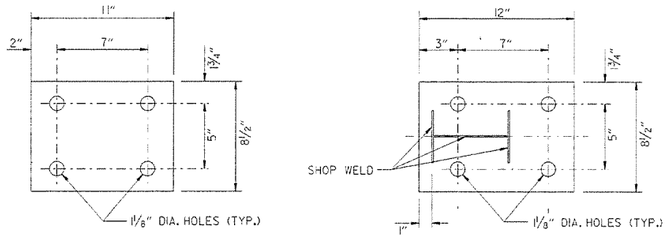

WASHER PLATE

BASE PLATE

Note: Bolts, nuts, washers and plates shall be galvanized in accordance with Section 807 of the Standard Specifications.

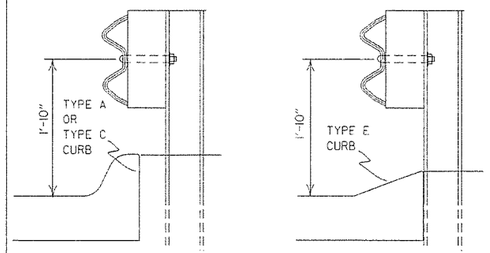

FOR DESIGN SPEEDS OF 50 MPH OR LESS

ALIGN FACE OF GUARD RAIL WITH FACE OF CURB.

FOR DESIGN SPEEDS OF 55 MPH OR MORE

PLACE GUARD RAIL POSTS AGAINST BACK OF CURB.

DETAIL OF GUARD RAIL PLACEMENT BEHIND CURB (W-BEAM)

FOR DESIGN SPEEDS OF 50 MPH OR LESS ALL CURB FACES, AS SHOWN ON STD. DRWG. CG-1, MAY BE USED. FOR DESIGN SPEEDS OF 55 MPH OR MORE TYPE "E" CURB FACE SHALL BE USED.

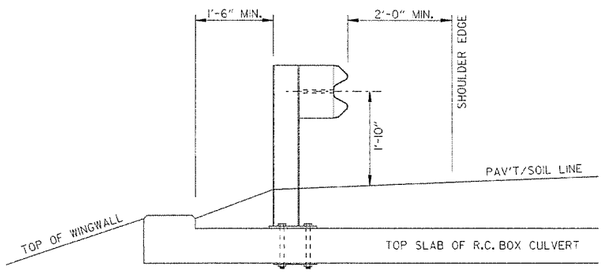

SECTION A-A

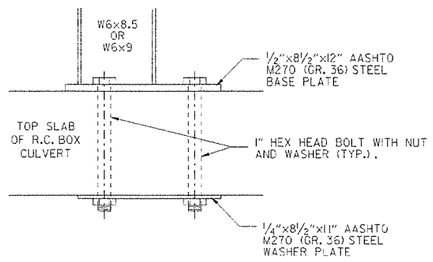

DETAIL OF CONNECTION

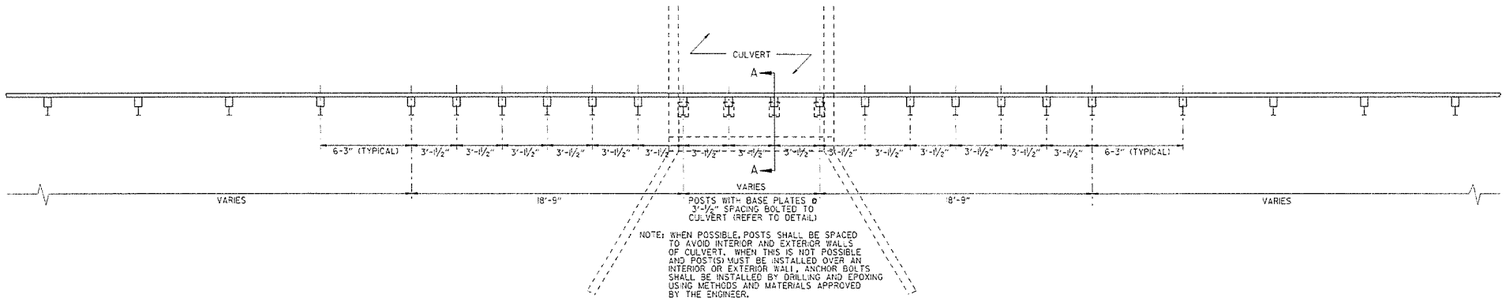

NOTE: WHEN POSSIBLE, POSTS SHALL BE SPACED TO AVOID INTERIOR AND EXTERIOR WALLS OF CULVERT. WHEN THIS IS NOT POSSIBLE AND POST(S) MUST BE INSTALLED OVER AN INTERIOR OR EXTERIOR WALL, ANCHOR BOLTS SHALL BE INSTALLED BY DRILLING AND EPOXING USING METHODS AND MATERIALS APPROVED BY THE ENGINEER.

PLAN LAYOUT OF TYPE A GUARD RAIL AT LOW-FILL CULVERTS

NOTE: THIS DETAIL IS TO BE USED ONLY WHEN THE COVER OVER THE CULVERT DOES NOT PERMIT FULL EMBEDMENT OF GUARD RAIL POSTS AS SHOWN ON STD. DWG. GR-8.

Case 1

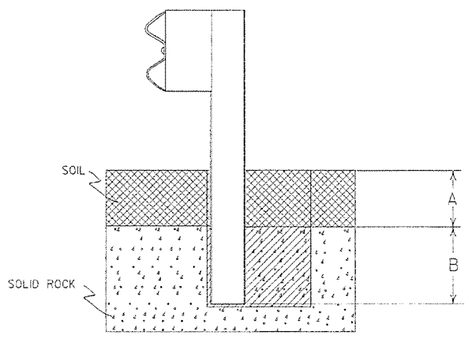

Case 2

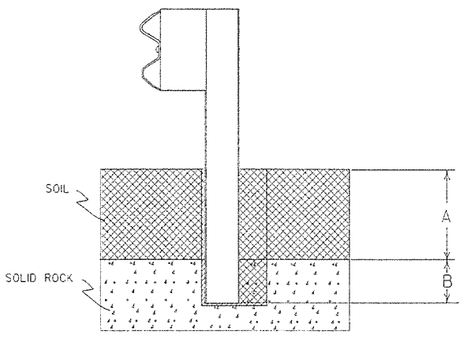

Plan View Steel Posts

Either hole configuration acceptable

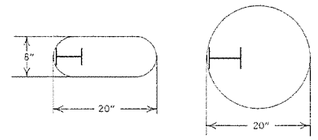

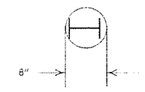

Plan View Wood Posts

Either hole configuration acceptable

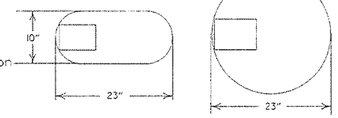

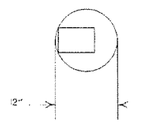

Notes: For overlying soil depths (A) ranging from 0 to 18", the depth of required drilling (B) is equal to 24".

Zone A:
Backfill according to Section 617.03(a).

Zone B:
Backfill hole in 6" lifts with material meeting the requirements of Section 802.02(c) - Alternate gradation. Compact to 95% maximum dry density per ASTM D-698.

Notes: For overlying soil depths (A) ranging from 18" to 44", the depth of required drilling (B) is equal to either 12" or 44" minus the depth of soil whichever is less.

Zone A & B:
Backfill according to Section 617.03(a).

DETAIL OF POST PLACEMENT IN SOLID ROCK (W-BEAM)

DATE	REVISION	DATE FILM
7-14-10	RAISED HEIGHT OF GUARD RAIL 1"	
4-12-07	REVISED DETAIL OF GUARD RAIL PLACEMENT BEHIND CURB	
11-10-05	ADDED GUARD RAIL PLACEMENT BEHIND CURB; REVISED DETAIL OF CONNECTION	
11-18-04	REVISED POST PLACEMENT IN ROCK & CULVERT CONNECTION DETAILS. ADDED DETAIL FOR GUARD RAIL PLACEMENT AT LOW-FILL CULVERTS	
3-30-00	REMOVED CONCRETE INSERT ANCHOR	
8-12-98	CHANGED STEEL SPACER BLOCK TO WOOD BLOCKOUT, ADD. DET. OF GUARD RAIL CONNECTION TO R.C. BOX CULVT. DELETED DET. OF STEEL LINE POST CONN.& ADDED DET. OF GUARD RAIL PLACE. BEHIND CURB & DET. OF POST PLACE. IN SOLID ROCK	
4-3-96	PLACED ARROWS AT CUT STEEL WASHERS	4-3-96
10-18-96	REV. ASTM REF. TO AASHTO	
11-22-95	ADDED OPTIONAL HOLES	
6-2-94	REVISED ALTERNATE POST SIZE	
8-5-93	REVISED STEEL POST SIZE	
10-1-92	REDRAWN & REVISED	10-1-92
8-2-90	DEL. WASHER ON ANCHOR ASSEMBLY	8-2-90
7-15-88	CONFORMED TO 1988 SPECS	
3-4-88	REVISED ANCHOR NOTE	
10-30-87	REVISED ANCHOR ASSEMBLY	712-10-30-87
10-30-87	REVISED PLACEMENT BEHIND CURB	547-10-30-87
10-9-87	REDRAWN & REVISED	803-10-9-87

ARKANSAS STATE HIGHWAY COMMISSION

GUARD RAIL DETAILS

STANDARD DRAWING GR-8A

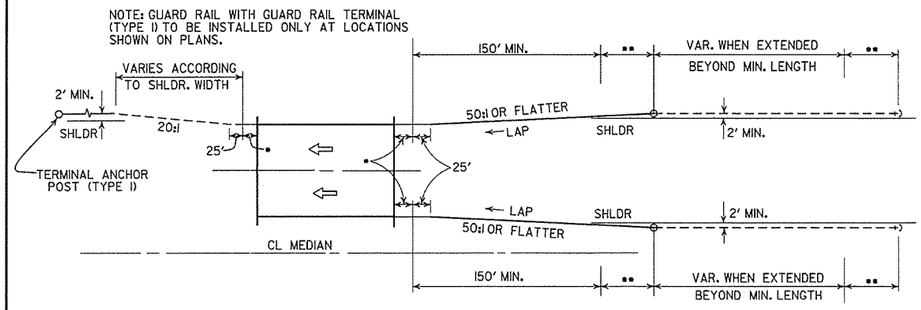

ONE-WAY TRAFFIC

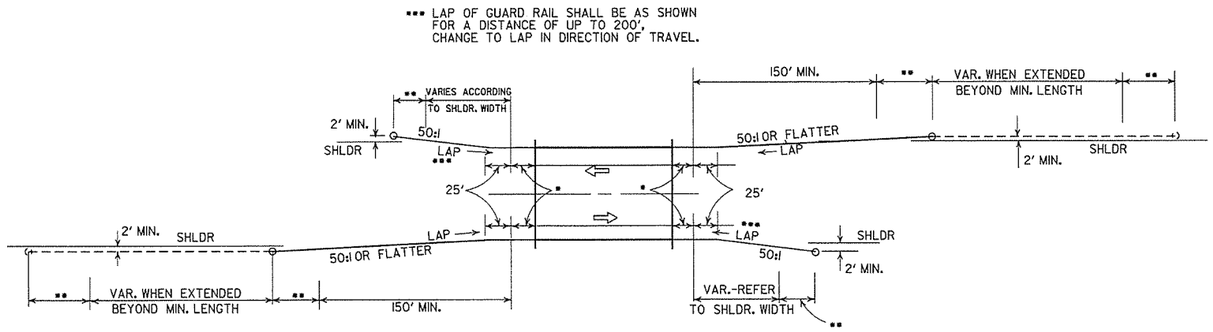

TWO-WAY TRAFFIC

METHODS OF INSTALLATION OF GUARD RAIL AT LESS THAN FULL SHOULDER WIDTH BRIDGES USING GUARD RAIL TERMINAL (TYPE 2)

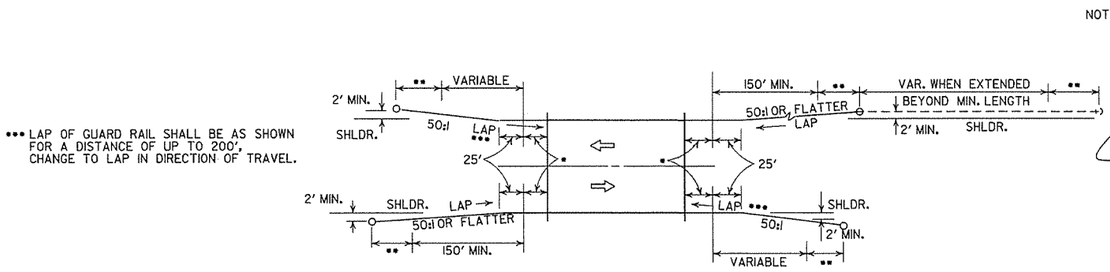

TWO-WAY TRAFFIC

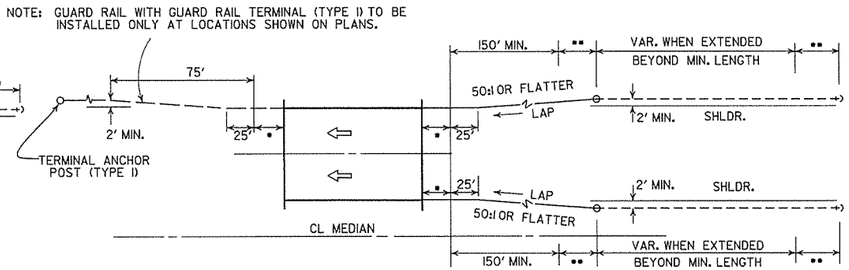

ONE-WAY TRAFFIC

METHOD OF INSTALLATION OF GUARD RAIL AT FULL SHOULDER WIDTH BRIDGES USING GUARD RAIL TERMINAL (TYPE 2)

••• LAP OF GUARD RAIL SHALL BE AS SHOWN FOR A DISTANCE OF UP TO 200', CHANGE TO LAP IN DIRECTION OF TRAVEL.

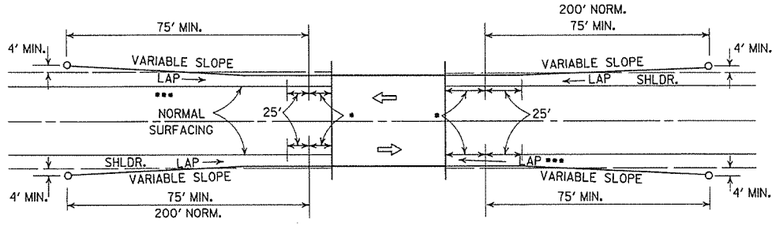

LEGEND

- ▪ THRIE BEAM GUARD RAIL TERMINAL
- ▪▪ GUARD RAIL TERMINAL (TYPE 2)

METHOD OF INSTALLATION OF GUARD RAIL USING GUARD RAIL TERMINAL (TYPE I) (FULL SHOULDER WIDTH OR LESS BRIDGES)

DATE	REVISION	DATE FILM
4-17-08	REVISED LAYOUTS	
11-10-05	REMOVED GUARD RAIL NOTES AND DETAILS	
11-16-01	DELETED NOTE-METHOD OF INSTALLATION OF GUARD RAIL USING GUARD RAIL TERM. (TY. I)	
1-12-00	ADDED CONSTRUCTION NOTE	1-12-00
6-26-97	REVISED LAYOUT	
10-1-92	REDRAWN & REVISED	10-1-92
	ADDED NOTE	
10-9-87	REDRAWN & REVISED	

ARKANSAS STATE HIGHWAY COMMISSION

GUARD RAIL DETAILS

STANDARD DRAWING GR-9

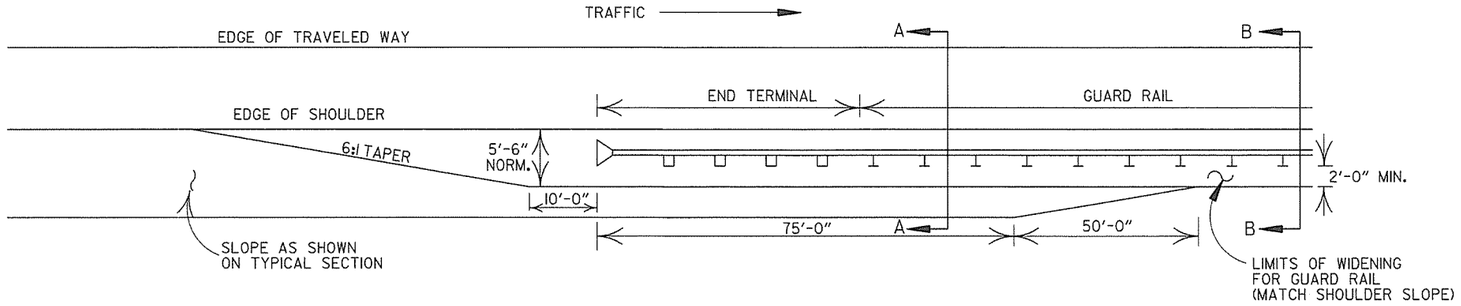

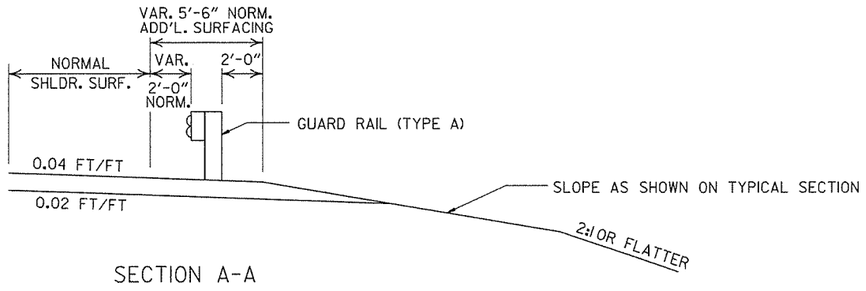

SECTION A-A

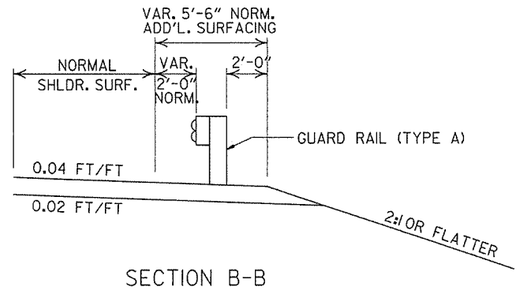

SECTION B-B

DETAILS OF WIDENING FOR GUARD RAIL

NOTE: NORMAL SECTION TO BE WIDENED APPROX. 5'-6" EACH SIDE TO SUPPORT GUARD RAIL.

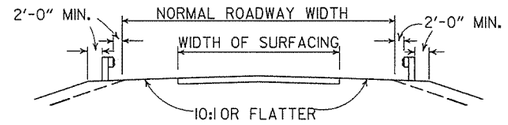

SECTION ON TANGENT

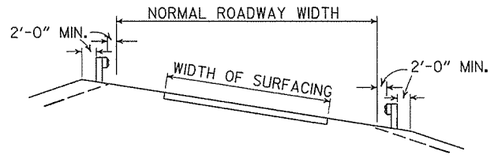

SECTION ON CURVE

DETAILS SHOWING POSITION OF GUARD RAIL ON HIGHWAY

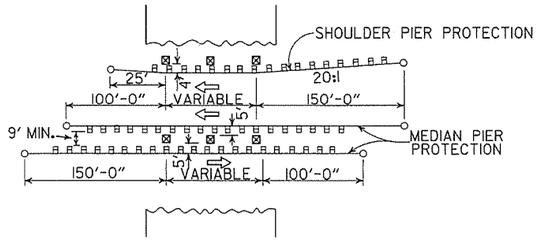

METHOD OF INSTALLATION OF GUARD RAIL AT FIXED OBSTACLE

DATE	REVISION	DATE FILM
4-17-08	MINOR REVISION	
11-10-05	DRAWN	

ARKANSAS STATE HIGHWAY COMMISSION

GUARD RAIL DETAILS

STANDARD DRAWING GR-9A

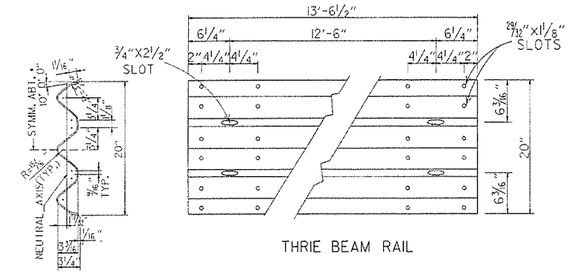

THRIE BEAM RAIL

SECTION THRU THRIE BEAM RAIL

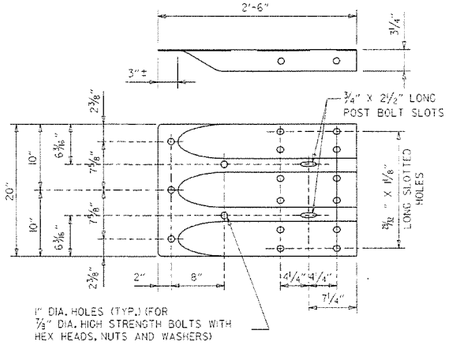

1" DIA. HOLES (TYP.) (FOR ⅞" DIA. HIGH STRENGTH BOLTS WITH HEX HEADS, NUTS AND WASHERS)

SPECIAL END SHOE

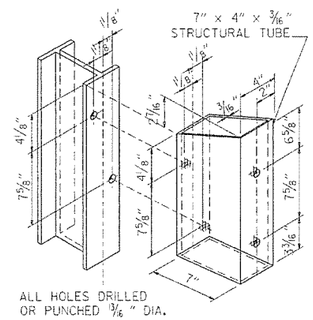

ALL HOLES DRILLED OR PUNCHED 13/16" DIA.

ATTACH BLOCKOUT TO POST USING ⅝" DIA. HEX HEAD BOLTS WITH 1½" O.D. CUT STEEL WASHERS AND NUT.

STRUCTURAL STEEL TUBING BLOCKOUT DETAIL

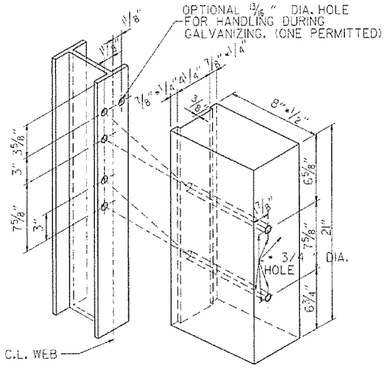

ALL HOLES 13/16" DIAMETER EXCEPT AS NOTED

HOLE PUNCHING DETAIL FOR STEEL POST & WOOD OR PLASTIC BLOCKOUTS

NOTE: BLOCKS SHALL BE THE SAME TYPE THROUGHOUT THE PROJECT LIMITS.

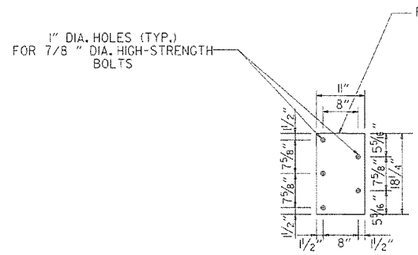

CONNECTOR PLATE

CONNECTOR PLATE SHALL BE AASHTO M270, GR. 36 AND SHALL BE GALVANIZED AFTER FABRICATION. GALVANIZING SHALL CONFORM TO SUBSECTION 807.19 OF THE STANDARD SPECIFICATIONS. CONNECTOR PLATE TO BE BOLTED TO SPECIAL END SHOE USING ⅞" DIA. HIGH STRENGTH BOLTS, WITH THE HEADS PLACED ON THE TRAFFIC FACE. WASHERS SHALL BE USED UNDER THE HEAD AND NUT. BOLTS, NUTS AND WASHERS SHALL BE GALVANIZED AND SHALL CONFORM TO SUBSECTION 807.06.

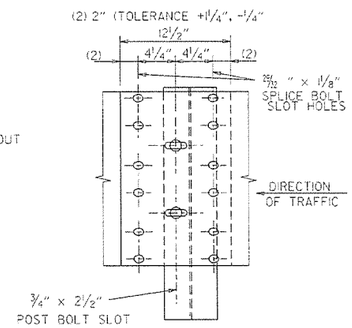

THRIE BEAM RAIL SPLICE AT POST

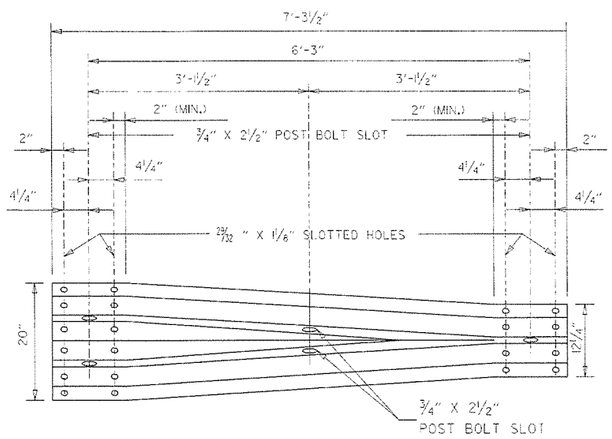

TRANSITION SECTION

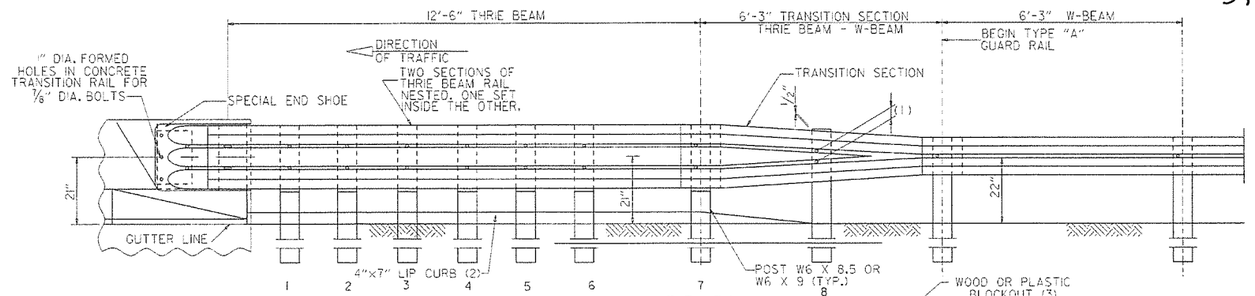

ELEVATION

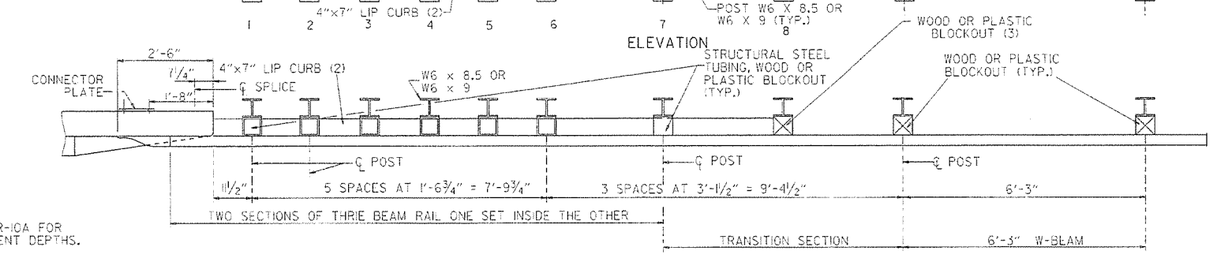

PLAN

NOTE:
SEE STANDARD DRAWING GR-10A FOR GUARD RAIL POST EMBEDMENT DEPTHS.

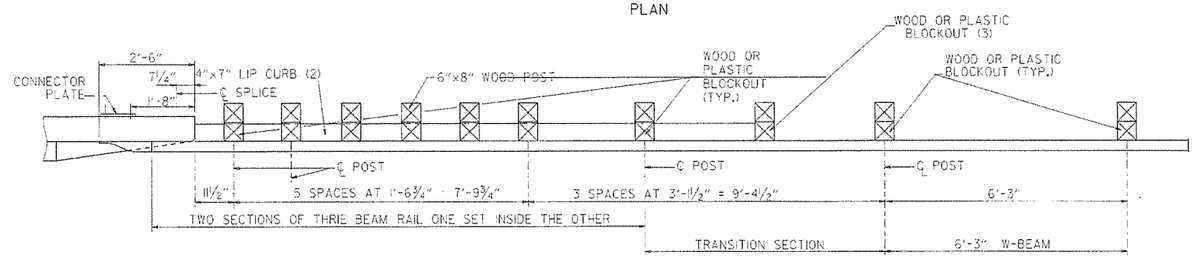

PLAN

(1) VERIFY BOLT SPACING FROM RAIL TRANSITION PRODUCER.
(2) REFER TO APPROACH GUTTER DETAILS.
(3) LENGTH OF BLOCKOUT ON POST 8 TO BE MODIFIED TO FIT RAIL WIDTH.

THRIE BEAM GUARD RAIL CONNECTION AT BRIDGE ENDS

GENERAL NOTES:

THE THRIE BEAM RAIL, SPECIAL END SHOE, AND THE TRANSITION SECTION SHALL BE MADE OF STEEL AND SHALL BE 12 GAGE. ZINC COATING SHALL BE TYPE I.

RAIL POSTS SHALL BE SET PERPENDICULAR TO THE ROADWAY PROFILE GRADE AND VERTICALLY IN CROSS SECTION.

ALL BOLTS SHALL BE SUFFICIENT LENGTH TO EXTEND THROUGH THE FULL THICKNESS OF THE NUT AND NO MORE THAN ¾" BEYOND IT.

ALL LAP SPLICES, INCLUDING SPECIAL END SHOES, SHALL BE MADE IN THE DIRECTION SHOWN ON STANDARD DRAWINGS GR-9 & GR-11.

WOOD POSTS & WOOD BLOCKS SHALL BE EITHER DENSE NO. 1 STRUCTURAL OR BETTER 9.7# (1400 F) OR NO. 1 1350 F SOUTHERN PINE.

REFER TO STD. DRWG. GR-10A FOR POST DETAILS.

USE THRIE BEAM GUARD RAIL COMPONENTS OF SAME MATERIAL FOR ENTIRE JOB.

THRIE BEAM POSTS SHALL BE SAME MATERIAL AS W-BEAM POSTS FOR ENTIRE JOB.

DATE	REVISION	DATE FILM
7-14-10	RAISED HEIGHT OF W-BEAM 1"	
11-29-07	ADDED PLASTIC BLOCKOUTS	
11-10-05	ADDED NOTE FOR ATTACHING STEEL BLOCKOUT	
11-18-04	REVISED GENERAL NOTES	
10-9-03	REVISED GENERAL NOTES	
4-10-03	REVISED GENERAL NOTES	
8-22-02	REVISED NOTE (2)	
6-29-00	MOVED DIMENSION LINES	
5-18-00	ADDED NOTE	
3-30-00	DRAWN & ISSUED	

ARKANSAS STATE HIGHWAY COMMISSION

GUARD RAIL DETAILS

STANDARD DRAWING GR-10

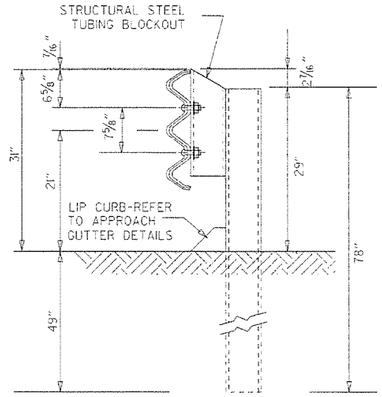

THRIE BEAM RAIL WITH STEEL TUBING BLOCKOUT
AND STEEL POST
POSTS 1-7

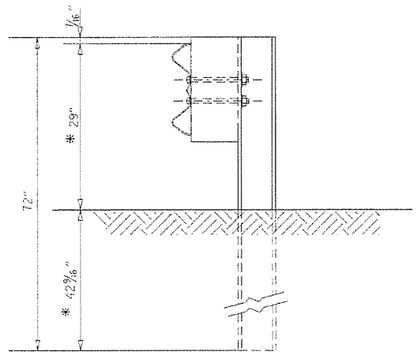

W-BEAM TO THRIE BEAM TRANSITION RAIL
WITH WOOD OR PLASTIC BLOCKOUT AND STEEL POST
POST 8

* NOTE:
THESE DIMENSIONS WILL NEED TO BE ADJUSTED IN THE FIELD TO MAKE THE TRANSITION FROM 21" MID POINT OF THRIE BEAM TO 22" MID POINT OF W-BEAM.

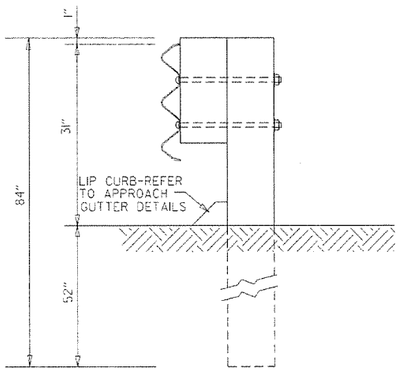

THRIE BEAM RAIL
WITH WOOD OR PLASTIC
BLOCKOUTS & WOOD POSTS
POSTS 1-6

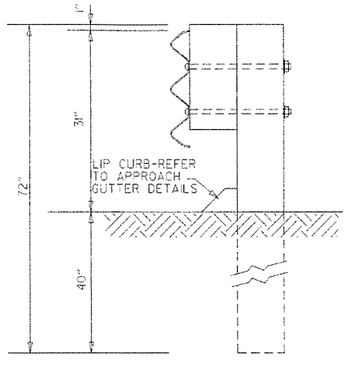

THRIE BEAM RAIL
WITH WOOD OR PLASTIC
BLOCKOUT & WOOD POST
POST 7

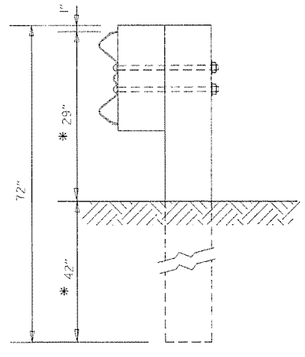

W-BEAM TO THRIE BEAM
TRANSITION RAIL WITH WOOD OR
PLASTIC BLOCKOUT & WOOD POST
POST 8

GENERAL NOTES:

RAIL POSTS SHALL BE SET PERPENDICULAR TO THE ROADWAY PROFILE GRADE AND VERTICALLY IN CROSS SECTION.

WOOD POSTS & WOOD BLOCKS SHALL BE EITHER DENSE NO. 1 STRUCTURAL OR BETTER 9.7 f (1400 f) OR NO. 1 1350 f SOUTHERN PINE.

DATE	REVISION	DATE FILM
7-14-10	REVISED POST 8 DIMENSIONS	
11-29-07	ADDED PLASTIC BLOCKOUTS	
8-22-02	REVISED LIP CURB NOTE	
3-30-00	DRAWN & ISSUED	

ARKANSAS STATE HIGHWAY COMMISSION

GUARD RAIL DETAILS

STANDARD DRAWING GR-10A

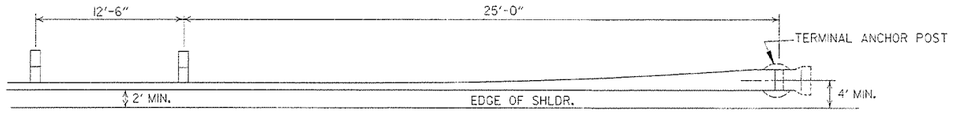

PLAN - GUARD RAIL TERMINAL (TYPE I)

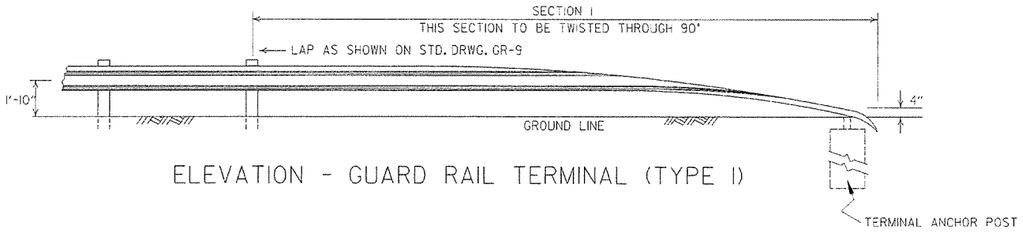

ELEVATION - GUARD RAIL TERMINAL (TYPE I)

NOTE:
SECTIONS 1 AND 2 OF GUARD RAIL TERMINAL SHALL BE PAID FOR AT THE PRICE BID PER LINEAR FOOT OF THE TYPE OF GUARD RAIL SPECIFIED.

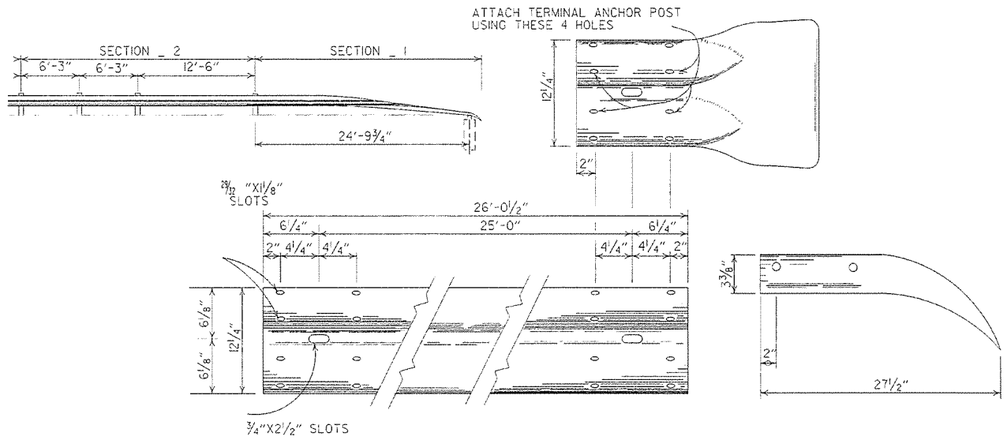

SECTION I

TERMINAL SECTION

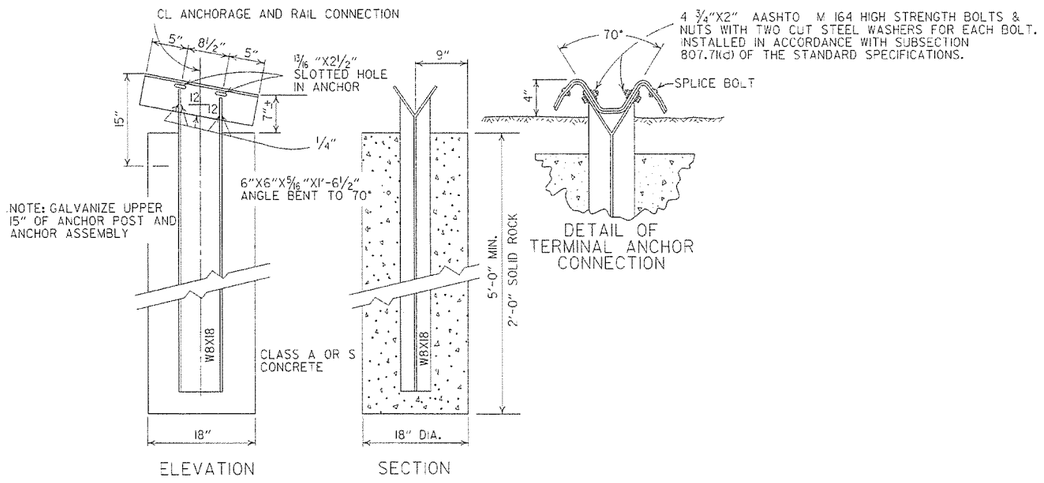

NOTE: RAIL MEMBERS MAY BE BOLTED TO ANGLE AT TERMINAL ANCHOR AND THE TWO ASSEMBLIES POSITIONED TO PROPER ALIGNMENT PRIOR TO PLACING CONCRETE AROUND 8 WF 17 POST IF CONTRACTOR SO DESIRES.

DETAIL OF TERMINAL ANCHOR POST (TYPE I)

DATE	REVISION	DATE FILM
7-14-10	RAISED HEIGHT OF GUARD RAIL 1"	
6-26-97	REVISED LAP NOTE	
10-18-96	REVISED ASTM REF. TO AASHTO	
11-3-94	DIMENSION TERMINAL DETAIL	
11-11-92	ADDED NOTE FOR PAYMENT	11-11-92
10-1-92	DRAWN & ISSUED	10-1-92

ARKANSAS STATE HIGHWAY COMMISSION

GUARD RAIL DETAILS

STANDARD DRAWING GRT-1

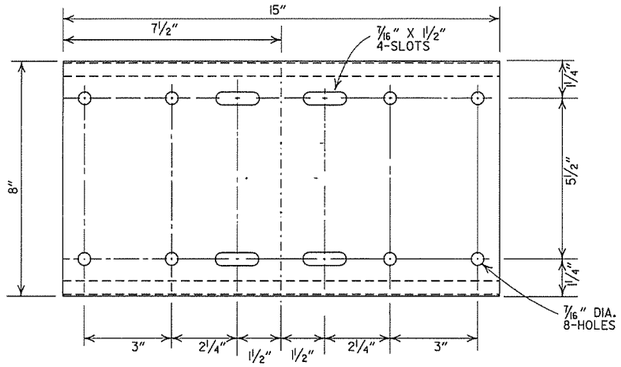

SHELF

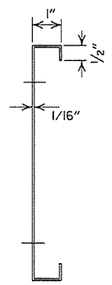

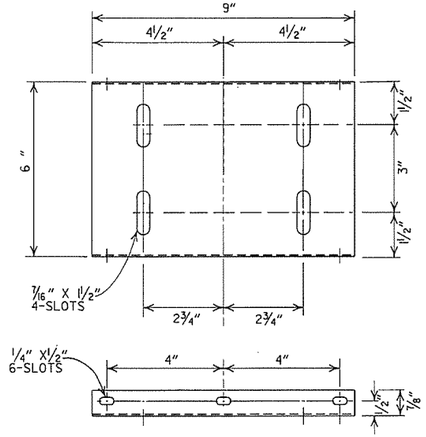

PLATFORM

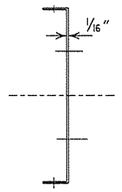

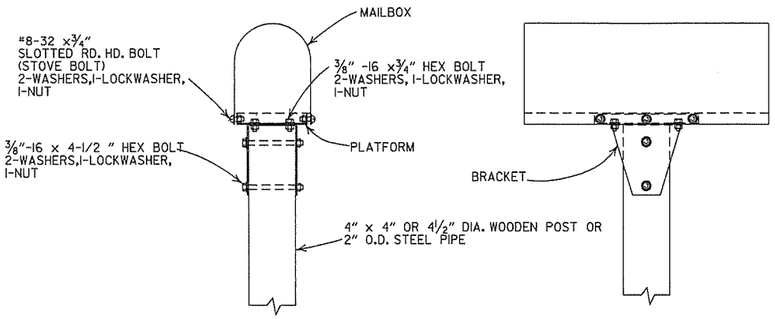

SINGLE INSTALLATION

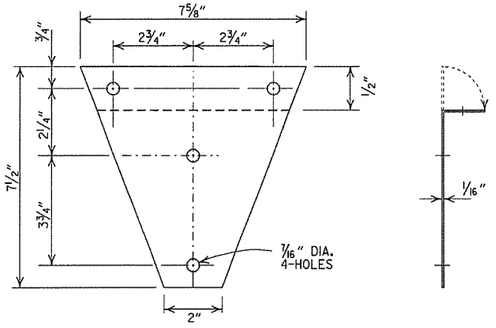

BRACKET

GENERAL NOTES

1. MAILBOX POSTS MAY BE WOOD OR METAL. WOOD POSTS SHALL BE PRESSURE TREATED FOR GROUND CONTACT IN ACCORDANCE WITH SECTION 637.02 OF THE STANDARD SPECIFICATIONS.
2. ANTI-TWIST PLATES SHALL BE USED ONLY ON METAL POSTS.
3. MAILBOX SHELF, BRACKET & PLATFORM SHALL BE GALVANIZED OR PAINTED STEEL, HOWEVER TREATED WOOD MAY BE USED WITH WOODEN POSTS. THE WOODEN SHELF, BRACKET & PLATFORM SHALL BE A MINIMUM OF ¾" THICK AND SHALL BE ASSEMBLED WITH BOLTS OF THE APPROPRIATE LENGTH WITH SIX 8 X 2¼" FLATHEAD WOOD SCREWS USED TO ATTACH THE MAILBOX TO THE PLATFORM.
4. THE MAILBOX SHELF AND PLATFORM THAT IS SHOWN IS FOR STANDARD SIZE MAILBOXES. THE SHELF AND PLATFORM SIZE SHALL BE MODIFIED TO FIT MAILBOXES OF A DIFFERENT SIZE.
5. METAL PIPE FOR MAILBOX SUPPORT SHALL BE 2" OUTSIDE DIAMETER STEEL WITH A WALL THICKNESS OF 0.145" AND A WEIGHT OF 2.72 LBS PER FT. OUTSIDE DIAMETER AND WEIGHT SHALL HAVE A TOLERANCE OF +/- 5% ACCORDING TO AASHTO M 181.
6. MAILBOX SUPPORT SYSTEM DIFFERING FROM THOSE SHOWN MAY BE USED, PROVIDED THEY ARE ON THE AHTD QUALIFIED PRODUCTS LIST FOR MAILBOX SUPPORTS.

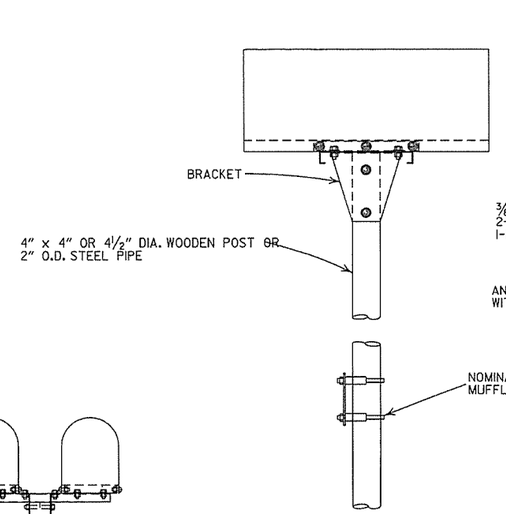

DOUBLE INSTALLATION

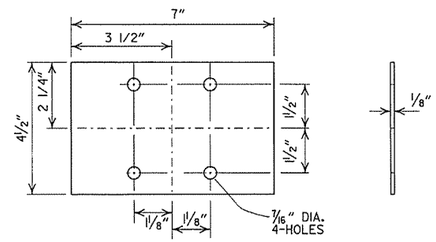

ANTI-TWIST PLATE

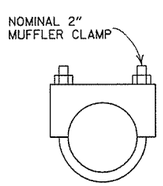

CLAMP

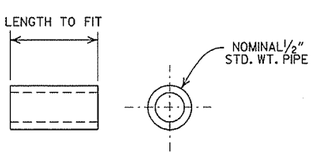

SPACER

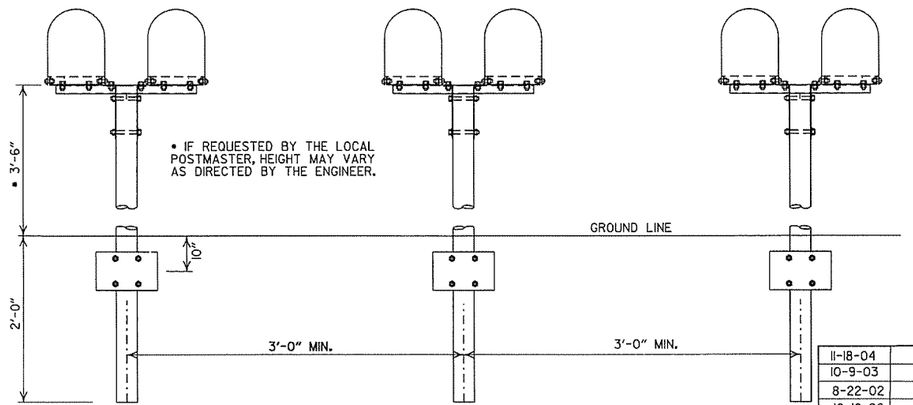

SPACING FOR MULTIPLE POST INSTALLATION

DATE	FILMED	REVISION
11-18-04		REVISED NOTES
10-9-03		REVISED NOTE 6
8-22-02		REVISED NOTE 6
10-18-96		CORRECTED AASHTO
10-1-92		CORRECTED SPELLING
9-26-91		NEW PHONE NUMBER
8-15-91		ADDED NOTE
11-30-89		ADJUSTED HEIGHT & ADDED NOTE
2-16-89		DELETED SLOTS FROM SHELF & PLTF
11-17-88	10-1-92	ADJUSTED DIMENSIONS OF STEEL POSTS
7-15-88	20-7-15-88	ISSUED

ARKANSAS STATE HIGHWAY COMMISSION

MAILBOX DETAILS

STANDARD DRAWING MB-1

REINFORCED CONCRETE ARCH PIPE DIMENSIONS

EQUIV. DIA.	SPAN		RISE	
	AASHTO M 206	AHTD NOMINAL	AASHTO M 206	AHTD NOMINAL
INCHES	INCHES			
15	18	18	11	11
18	22	22	13½	14
21	26	26	15½	16
24	28½	29	18	18
30	36¼	36	22½	23
36	43⅜	44	26⅝	27
42	51⅛	51	31 5/16	31
48	58½	59	36	36
54	65	65	40	40
60	73	73	45	45
72	88	88	54	54
84	102	102	62	62
90	115	115	72	72
96	122	122	77½	77
108	138	138	87⅛	87
120	154	154	96⅞	97
132	168¾	169	106½	107

THE MEASURED SPAN AND RISE SHALL NOT VARY MORE THAN ± 2 PERCENT FROM THE VALUES SPECIFIED BY AASHTO M206.

REINFORCED CONCRETE HORIZONTAL ELLIPTICAL PIPE DIMENSIONS

EQUIV. DIA.	AASHTO M 207	
	SPAN	RISE
INCHES	INCHES	
18	23	14
24	30	19
27	34	22
30	38	24
33	42	27
36	45	29
39	49	32
42	53	34
48	60	38
54	68	43
60	76	48
66	83	53
72	91	58
78	98	63
84	106	68

THE MEASURED SPAN AND RISE SHALL NOT VARY MORE THAN ± 2 PERCENT FROM THE VALUES SPECIFIED BY AASHTO M207.

CONSTRUCTION SEQUENCE

1. PLACE STRUCTURAL BEDDING MATERIAL TO GRADE. DO NOT COMPACT.
2. INSTALL PIPE TO GRADE.
3. COMPACT STRUCTURAL BEDDING OUTSIDE THE MIDDLE THIRD OF THE PIPE.
4. PLACE AND COMPACT THE HAUNCH AREA UP TO THE MIDDLE OF THE PIPE.
5. COMPLETE BACKFILL ACCORDING TO SUBSECTION 606.03.(f)(1).

NOTE: HAUNCH AND STRUCTURAL BEDDING MATERIAL WILL NOT BE PAID FOR SEPARATELY, BUT COMPENSATION WILL BE CONSIDERED TO BE INCLUDED IN THE PRICE BID PER LINEAR FOOT OF CONCRETE PIPE.

- LEGEND -

D_1 = NORMAL INSIDE DIAMETER OF PIPE
D_O = OUTSIDE DIAMETER OF PIPE
H = FILL COVER HEIGHT OVER PIPE (FEET)
MIN. = MINIMUM
= UNDISTURBED SOIL

INSTALLATION TYPE	MATERIAL REQUIREMENTS FOR HAUNCH AND STRUCTURAL BEDDING
TYPE 1	AGGREGATE BASE COURSE (CLASS 5 OR CLASS 7)
TYPE 2	SELECTED MATERIALS (CLASS SM-1, SM-2, OR SM-4) OR TYPE 1 INSTALLATION MATERIAL*
TYPE 3**	AASHTO CLASSIFICATION A-1 THRU A-6 SOIL OR TYPE 1 OR 2 INSTALLATION MATERIAL

*SM-3 WILL NOT BE ALLOWED.

**MATERIALS SHALL NOT INCLUDE ORGANIC MATERIALS OR STONES LARGER THAN 3 INCHES.

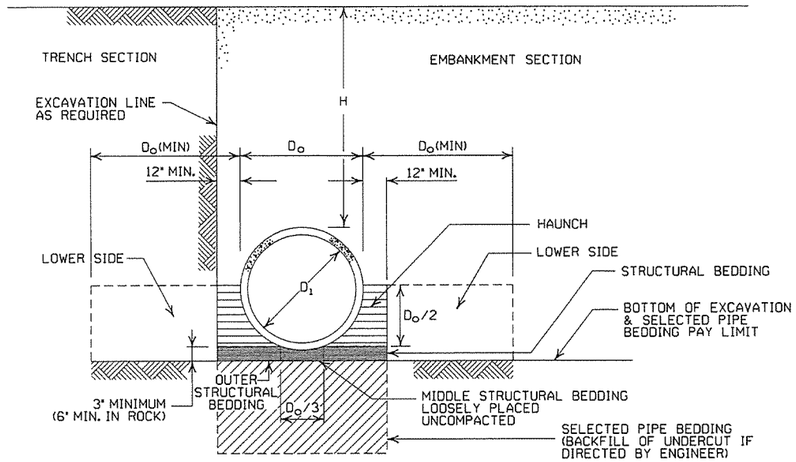

EMBANKMENT AND TRENCH INSTALLATIONS

1. MATERIAL IN THE HAUNCH AND OUTER STRUCTURAL BEDDING SHALL BE COMPACTED TO 95% OF THE MAXIMUM DENSITY ACCORDING TO THE TYPE OR CLASS OF MATERIAL USED.
2. FOR TRENCHES WITH WALLS OF NATURAL SOIL, THE DENSITY OF THE SOIL IN THE LOWER SIDE ZONE SHALL BE AS FIRM AS THE 95% DENSITY REQUIRED FOR THE HAUNCH. IF THE EXISTING SOIL DOES NOT MEET THIS CRITERIA, IT SHALL BE REMOVED AND RECOMPACTED TO 95% OF THE MAXIMUM DENSITY ACCORDING TO THE TYPE OF MATERIAL USED.
3. FOR EMBANKMENTS, THE MATERIAL IN THE LOWER SIDE ZONE SHALL BE COMPACTED TO 95% OF THE MAXIMUM DENSITY ACCORDING TO THE TYPE OR CLASS OF MATERIAL USED.

GENERAL NOTES

1. CONCRETE PIPE CULVERT CONSTRUCTION SHALL CONFORM TO ARKANSAS STATE HIGHWAY AND TRANSPORTATION DEPARTMENT STANDARD SPECIFICATIONS FOR HIGHWAY CONSTRUCTION (CURRENT EDITION), WITH APPLICABLE SUPPLEMENTAL SPECIFICATIONS AND SPECIAL PROVISIONS. UNLESS OTHERWISE NOTED IN THE PLANS, SECTION AND SUBSECTION REFER TO THE STANDARD CONSTRUCTION SPECIFICATIONS.
2. CONCRETE PIPE CULVERT DESIGN SHALL CONFORM TO AASHTO LRFD BRIDGE DESIGN SPECIFICATIONS, FIFTH EDITION (2010) WITH 2010 INTERIMS.
3. ALL PIPE SHALL CONFORM TO SECTION 606. CIRCULAR R.C. PIPE CULVERTS SHALL CONFORM TO AASHTO M170, R.C. ARCH PIPE CULVERTS SHALL CONFORM TO AASHTO M206 AND HORIZONTAL ELLIPTICAL PIPE CULVERTS SHALL CONFORM TO AASHTO M207.
4. ALL PIPE SHALL BE PROTECTED DURING CONSTRUCTION BY A COVER SUFFICIENT TO PREVENT DAMAGE FROM PASSAGE OF EQUIPMENT.
5. THE MINIMUM TRENCH WIDTH SHALL BE THE OUTSIDE DIAMETER OF THE PIPE PLUS 24 INCHES. THE MAXIMUM ALLOWABLE TRENCH WIDTH SHALL BE THE MINIMUM WIDTH PRACTICABLE FOR WORKING CONDITIONS.
6. MULTIPLE PIPE CULVERTS SHALL BE INSTALLED WITH A MINIMUM CLEARANCE OF 24 INCHES BETWEEN STRINGS OF PIPE. REFER TO STD. DWG. FES-2 FOR MINIMUM CLEARANCE WHERE FLARED END SECTIONS ARE USED.
7. IMPERVIOUS MATERIAL SHOULD BE PLACED AS DIRECTED BY THE ENGINEER AT THE ENDS OF THE CULVERT TO PREVENT LOSS OF STRUCTURAL BEDDING WHEN PERVIOUS MATERIAL IS USED FOR STRUCTURAL BEDDING AND/OR BACKFILL.
8. NOT MORE THAN ONE LIFTING HOLE MAY BE PROVIDED IN CONCRETE PIPE TO FACILITATE HANDLING. HOLE MAY BE CAST IN PLACE, CUT INTO THE FRESH CONCRETE AFTER FORMS ARE REMOVED, OR DRILLED. THE HOLE SHALL NOT BE MORE THAN TWO INCHES IN DIAMETER OR TWO INCHES SQUARE. CUTTING OR DISPLACEMENT OF REINFORCEMENT WILL NOT BE PERMITTED. SPALLED AREAS AROUND THE HOLE SHALL BE REPAIRED IN A WORKMANLIKE MANNER. LIFTING HOLE SHALL BE FILLED WITH MORTAR, CONCRETE, OR OTHER METHOD AS APPROVED BY THE ENGINEER.
9. WHEN DIRECTED BY THE ENGINEER, UNSUITABLE MATERIAL THAT IS ENCOUNTERED AT THE BOTTOM OF THE EXCAVATED TRENCH (BELOW THE AREA IDENTIFIED AS "STRUCTURAL BEDDING" ABOVE) WILL BE EXCAVATED AND REPLACED WITH SELECTED PIPE BEDDING. THE QUANTITY OF MATERIAL REQUIRED TO BACKFILL THE UNDERCUT AREA UP TO THE SELECTED PIPE BEDDING PAY LIMIT DESIGNATED ABOVE WILL BE MEASURED AND PAID FOR AS "SELECTED PIPE BEDDING."
10. WHEN THE EXISTING MATERIAL EXCAVATED FOR THE PIPE TRENCH IS DETERMINED BY THE ENGINEER TO BE UNSUITABLE FOR BACKFILLING THE PIPE (ABOVE THE AREA IDENTIFIED ABOVE AS THE HAUNCH), BORROW MATERIAL OR MATERIAL FROM THE ROADWAY EXCAVATION WILL BE USED TO BACKFILL THE PIPE. IF SUITABLE MATERIAL IS NOT AVAILABLE, THE ENGINEER MAY AUTHORIZE THE USE OF "SELECTED PIPE BACKFILL."

MINIMUM HEIGHT OF FILL "H" OVER CIRCULAR R.C. PIPE CULVERTS

	CLASS OF PIPE			
	CLASS III		CLASS IV	CLASS V
INSTALLATION TYPE	TYPE 1 OR 2	TYPE 3	ALL	ALL
PIPE ID (IN.)	FEET			
12-15	2	2.5	2	1
18-24	2.5	3	2	1
27-33	3	4	2	1
36-42	3.5	5	2	1
48	4.5	5.5	2	1
54-60	5	7	2	1
66-78	6	8	2	1
84-108	7.5	8	2	1

NOTE: FOR MINIMUM COVER VALUES, "H" SHALL INCLUDE A MINIMUM OF 12" OF PAVEMENT AND/OR BASE.

MAXIMUM HEIGHT OF FILL "H" OVER CIRCULAR R.C. PIPE CULVERTS

INSTALLATION TYPE	CLASS OF PIPE		
	CLASS III	CLASS IV	CLASS V
	FEET		
TYPE 1	21	32	50
TYPE 2	16	25	39
TYPE 3	12	20	30

NOTE: IF FILL HEIGHT EXCEEDS 50 FEET, A SPECIAL DESIGN CONCRETE PIPE WILL BE REQUIRED USING TYPE 1 INSTALLATION.

MINIMUM HEIGHT OF FILL "H" OVER R.C. ARCH & HORIZONTAL ELLIPTICAL PIPE CULVERTS

INSTALLATION TYPE	CLASS OF PIPE	
	CLASS III	CLASS IV
	FEET	
TYPE 2 OR TYPE 3	2.5	1.5

NOTE: TYPE 1 INSTALLATION WILL NOT BE ALLOWED FOR ARCH & HORIZONTAL ELLIPTICAL PIPE CULVERTS.

NOTE: FOR MINIMUM COVER VALUES, "H" SHALL INCLUDE A MINIMUM OF 12" OF PAVEMENT AND/OR BASE.

MAXIMUM HEIGHT OF FILL "H" OVER R.C. ARCH & HORIZONTAL ELLIPTICAL PIPE CULVERTS

INSTALLATION TYPE	CLASS OF PIPE	
	CLASS III	CLASS IV
	FEET	
TYPE 2	13	21
TYPE 3	10	16

NOTE: TYPE 1 INSTALLATION WILL NOT BE ALLOWED FOR ARCH & HORIZONTAL ELLIPTICAL PIPE CULVERTS.

DATE	REVISION	DATE FILMED
2-27-14	REVISED GENERAL NOTE 1.	
12-15-11	REVISED FOR LRFD DESIGN SPECIFICATIONS	
5-18-00	REVISED TYPE 3 BEDDING & ADDED NOTE	
3-30-00	REVISED INSTALLATIONS	
11-06-97	ISSUED	

ARKANSAS STATE HIGHWAY COMMISSION

CONCRETE PIPE CULVERT FILL HEIGHTS & BEDDING

STANDARD DRAWING PCC-1

CORRUGATED STEEL PIPE (ROUND)

PIPE DIAMETER (INCHES)	① MINUMUM COVER TOP OF PIPE TO TOP OF GROUND "H" (FEET)	MAX. FILL HEIGHT "H" ABOVE TOP OF PIPE (FEET)				
		METAL THICKNESS (INCHES)				
		0.064	0.079	0.109	0.138	0.168
2⅔ INCH BY ½ INCH CORRUGATION RIVETED, WELDED, OR HELICAL LOCK-SEAM						
12	1	84	91			
15	1	67	73			
18	1	56	61			
24	1	42	46	59		
30	2	34	36	47		
36	2		30	39	41	
42	2		43	67	70	73
48	2		37	58	61	64
② 3 INCH BY 1 INCH OR 5 INCH BY 1 INCH CORRUGATION RIVETED, WELDED, BOLTED, OR HELICAL LOCK-SEAM						
36	1	48	60	88	111	118
42	1	41	51	72	90	102
48	1	36	45	64	77	85
54	2	32	40	59	71	79
60	2	29	36	53	64	71
66	2	26	33	47	58	64
72	2	24	30	44	53	59
78	2		28	41	49	54
84	2		26	38	45	51
90	2		24	35	43	45
96	2		22	33	40	44
102	2			31	38	42
108	2			30	35	39
114	2			28	34	37
120	2			27	32	35

CORRUGATED ALUMINUM PIPE (ROUND)

PIPE DIAMETER (INCHES)	①MINUMUM COVER TOP OF PIPE TO TOP OF GROUND "H" (FEET)	MAX. FILL HEIGHT "H" ABOVE TOP OF PIPE (FEET)				
		METAL THICKNESS IN INCHES				
		0.060	0.075	0.105	0.135	0.164
		2 ⅔ INCH BY ½ INCH CORRUGATION RIVETED OR HELICAL LOCK-SEAM				
12	1	45	45			
18	2	30	30	52		
24	2	22	22	39	41	
30	2		18	31	32	34
36	2.5		15	26	27	28
42	2			43	43	44
48	2			40	41	43
54	2			35	37	38
60	2				33	34
66	2					31
72	2					29

CORRUGATED METAL PIPE ARCHES

EQUIV. DIA. (INCHES)	PIPE DIMENSION SPAN X RISE (INCHES)	MINUMUM CORNER RADIUS (INCHES)	STEEL				ALUMINUM			
			MIN. THICKNESS REQUIRED INCHES	① MIN. HEIGHT OF FILL, "H" (FT.)		MAX. HEIGHT OF FILL, "H" (FT.)	MIN. THICKNESS REQUIRED INCHES	① MIN. HEIGHT OF FILL, "H" (FT.)		MAX. HEIGHT OF FILL, "H" (FT.)
				INSTALLATION		INSTALLATION		INSTALLATION		INSTALLATION
				TYPE 1		TYPE 1		TYPE 1		TYPE 1
			2 ⅔ INCH BY ½ INCH CORRUGATION RIVETED, WELDED, OR HELICAL LOCK-SEAM				2 ⅔ INCH BY ½ INCH CORRUGATION RIVETED OR HELICAL LOCK-SEAM			
15	17x13	3	0.064	2		15	0.060	2		15
18	21x15	3	0.064	2		15	0.060	2		15
21	24x18	3	0.064	2.25		15	0.060	2.25		15
24	28x20	3	0.064	2.5		15	0.075	2.5		15
30	35x24	3	0.079	3		12	0.075	3		12
36	42x29	3½	0.079	3		12	0.105	3		12
42	49x33	4	0.079	3		12	0.105	3		12
48	57x38	5	0.109	3		13	0.135	3		13
54	64x43	6	0.109	3		14	0.135	3		14
60	71x47	7	0.138	3		15	0.164	3		15
66	77x52	8	0.168	3		15				
72	83x57	9	0.168	3		15				
			② 3 INCH BY 1 INCH OR 5 INCH BY 1 INCH CORRUGATION RIVETED, WELDED, OR HELICAL LOCK-SEAM							
				INSTALLATION		INSTALLATION				
				TYPE 2	TYPE 1	TYPE 2	TYPE 1			
36	40x31	5	0.079	3	2	12	15			
42	46x36	6	0.079	3	2	13	15			
48	53x41	7	0.079	3	2	13	15			
54	60x46	8	0.079	3	2	13	15			
60	66x51	9	0.079	3	2	13	15			
66	73x55	12	0.079	3	2	15	15			
72	81x59	14	0.079	3	2	15	15			
78	87x63	14	0.079	3	2	15	15			
84	95x67	16	0.109	3	2	15	15			
90	103x71	16	0.109	3	2	15	15			
96	112x75	18	0.109	3	2	15	15			
102	117x79	18	0.109	3	2	15	15			
108	128x83	18	0.138	3	2	15	15			

CONSTRUCTION SEQUENCE

1. PLACE STRUCTURAL BEDDING MATERIAL TO GRADE. DO NOT COMPACT.
2. INSTALL PIPE TO GRADE.
3. COMPACT STRUCTURAL BEDDING OUTSIDE THE MIDDLE THIRD OF THE PIPE.
4. COMPLETE STRUCTURAL BACKFILL OPERATION BY WORKING FROM SIDE TO SIDE OF THE PIPE. THE SIDE TO SIDE STRUCTURAL BACKFILL DIFFERENTIAL SHALL NOT EXCEED 24 INCHES OR 1/3 THE SIZE OF THE PIPE, WHICHEVER IS LESS.

NOTE: STRUCTURAL BACKFILL AND STRUCTURAL BEDDING MATERIAL WILL NOT BE PAID FOR SEPARATELY, BUT COMPENSATION WILL BE CONSIDERED TO BE INCLUDED IN THE PRICE BID PER LINEAR FOOT OF METAL PIPE.

INSTALLATION TYPE	MATERIAL REQUIREMENTS FOR STRUCTURAL BACKFILL AND STRUCTURAL BEDDING
TYPE 1	AGGREGATE BASE COURSE (CLASS 4, 5, 6, OR 7)
TYPE 2	SELECTED MATERIALS (CLASS SM-1, SM-2, OR SM-4) OR TYPE 1 INSTALLATION MATERIAL ③

③ SM-3 WILL NOT BE ALLOWED.

EQUIVALENT METAL THICKNESSES AND GAUGES

METAL THICKNESS IN INCHES			GAUGE NUMBER
STEEL			
ZINC COATED	UNCOATED	ALUMINUM	
0.064	0.0598	0.060	16
0.079	0.0747	0.075	14
0.109	0.1046	0.105	12
0.138	0.1345	0.135	10
0.168	0.1644	0.164	8

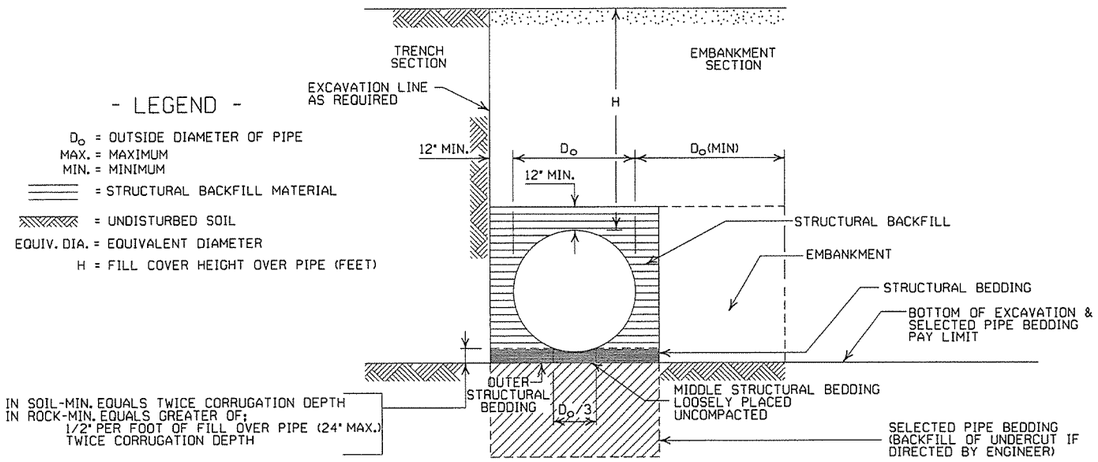

EMBANKMENT AND TRENCH INSTALLATIONS

1. STRUCTURAL BACKFILL, EMBANKMENT, AND OUTER STRUCTURAL BEDDING MATERIAL SHALL BE COMPACTED TO 95% OF THE MAXIMUM DENSITY ACCORDING TO THE TYPE OR CLASS OF MATERIAL USED.
2. INSTALLATION TYPE 1 OR 2 MAY BE USED FOR CORRUGATED STEEL OR ALUMINUM PIPE (ROUND).
3. INSTALALTION TYPE 1 SHALL BE USED FOR CORRUGATED STEEL OR ALUMINUM PIPE ARCHES WITH 2⅔" X ½" CORRUGATION.
4. INSTALLATION TYPE 1 OR 2 MAY BE USED FOR CORRUGATED STEEL OR ALUMINUM PIPE ARCHES WITH 3" X 1" OR 5" X 1" CORRUGATION.

GENERAL NOTES

1. METAL PIPE CULVERT CONSTRUCTION SHALL CONFORM TO ARKANSAS STATE HIGHWAY AND TRANSPORTATION DEPARTMENT STANDARD SPECIFICATIONS FOR HIGHWAY CONSTRUCTION (CURRENT EDITION), WITH APPLICABLE SUPPLEMENTAL SPECIFICATIONS AND SPECIAL PROVISIONS. UNLESS OTHERWISE NOTED IN THE PLANS, SECTION AND SUBSECTION REFER TO THE STANDARD CONSTRUCTION SPECIFICATIONS.
2. METAL PIPE CULVERT DESIGN SHALL CONFORM TO AASHTO LRFD BRIDGE DESIGN SPECIFICATIONS, FIFTH EDITION (2010) WITH 2010 INTERIMS.
3. METAL PIPE CULVERT MATERIALS AND INSTALLATIONS SHALL CONFORM TO SECTION 606 AND JOB SPECIAL PROVISION "METAL PIPE".
4. ALL PIPE SHALL BE PROTECTED DURING CONSTRUCTION BY A COVER SUFFICIENT TO PREVENT DAMAGE FROM PASSAGE OF EQUIPMENT.
5. THE MINIMUM TRENCH WIDTH SHALL BE THE OUTSIDE DIAMETER OF THE PIPE PLUS 24 INCHES. THE MAXIMUM ALLOWABLE TRENCH WIDTH SHALL BE THE MINIMUM WIDTH PRACTICABLE FOR WORKING CONDITIONS.
6. MULTIPLE PIPE CULVERTS SHALL BE INSTALLED WITH A MINIMUM CLEARANCE OF 24 INCHES BETWEEN STRINGS OF PIPE. REFER TO STD. DWG. FES-2 FOR MINIMUM CLEARANCE WHERE FLARED END SECTIONS ARE USED.
7. IMPERVIOUS MATERIAL SHOULD BE PLACED AS DIRECTED BY THE ENGINEER AT THE ENDS OF THE CULVERT TO PREVENT LOSS OF STRUCTURAL BEDDING WHEN PERVIOUS MATERIAL IS USED FOR STRUCTURAL BEDDING AND/OR BACKFILL.
8. WHEN DIRECTED BY THE ENGINEER, UNSUITABLE MATERIAL THAT IS ENCOUNTERED AT THE BOTTOM OF THE EXCAVATED TRENCH (BELOW THE AREA IDENTIFIED AS "STRUCTURAL BEDDING" ABOVE) WILL BE EXCAVATED AND REPLACED WITH SELECTED PIPE BEDDING. THE QUANTITY OF MATERIAL REQUIRED TO BACKFILL THE UNDERCUT AREA UP TO THE SELECTED PIPE BEDDING PAY LIMIT DESIGNATED ABOVE WILL BE MEASURED AND PAID FOR AS "SELECTED PIPE BEDDING."
9. WHEN THE EXISTING MATERIAL EXCAVATED FOR THE PIPE TRENCH IS DETERMINED BY THE ENGINEER TO BE UNSUITABLE FOR BACKFILLING THE PIPE (ABOVE THE AREA IDENTIFIED AS STRUCTURAL BACKFILL), BORROW MATERIAL OR MATERIAL FROM THE ROADWAY EXCAVATION WILL BE USED TO BACKFILL THE PIPE. IF SUITABLE MATERIAL IS NOT AVAILABLE, THE ENGINEER MAY AUTHORIZE THE USE OF "SELECTED PIPE BACKFILL."

① FOR MINIMUM COVER VALUES, "H" SHALL INCLUDE A MINIMUM 12" OF PAVEMENT AND/OR BASE.

② WHERE THE STANDARD 2 2/3"x ½" CORRUGATION AND GAUGE IS SPECIFIED FOR A GIVEN DIAMETER, A PIPE OF THE SAME DIAMETER WITH A 3" x 1" OR 5" x 1" CORRUGATION MAY BE SUBSTITUTED, PROVIDING IT IS GAUGED FOR A FILL HEIGHT CONDITION EQUAL TO OR GREATER THAN THE MAXIMUM FILL HEIGHT CONDITION FOR THE SPECIFIED GAUGE AND CORRUGATION.

DATE	REVISION	DATE FILMED
2-27-14	REVISED GENERAL NOTE 1.	
12-15-11	REVISED FOR LRFD DESIGN SPECS	
3-30-00	REVISED INSTALLATIONS	
11-06-97	ISSUED	

ARKANSAS STATE HIGHWAY COMMISSION

METAL PIPE CULVERT FILL HEIGHTS & BEDDING

STANDARD DRAWING PCM-1

NOTES:

1. ALL LINES SHALL HAVE A WIDTH OF 4 INCHES.
2. THE THICKNESS AND RATE OF PAINT APPLICATION SHALL BE AS SPECIFIED IN SECTION 718 OF THE STANDARD SPECIFICATIONS.
3. THIS DRAWING SHALL BE USED IN CONJUNCTION WITH THE LATEST REVISED ADDITION OF THE "MANUAL ON UNIFORM TRAFFIC CONTROL DEVICES."
4. RAISED PAVEMENT MARKERS SHALL BE CENTERED BETWEEN SKIP LINES ON 40 FEET SPACING UNLESS OTHERWISE SHOWN ON THE PLANS.

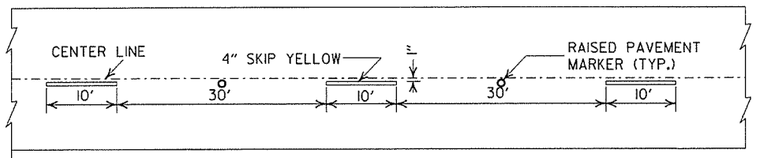

CONCRETE PAVEMENT

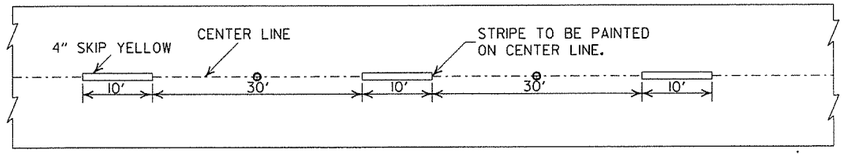

ASPHALT PAVEMENT

BROKEN LINE STRIPING

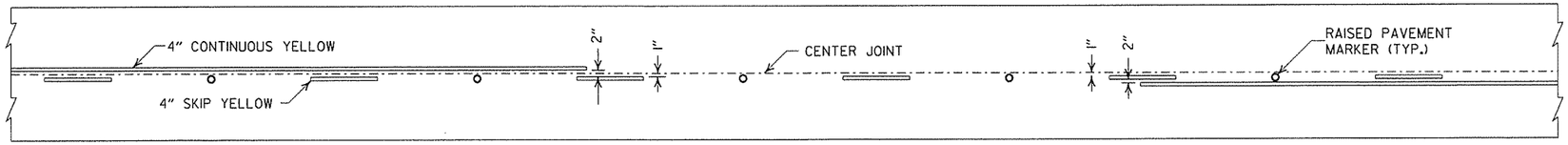

SOLID LINE STRIPING ON CONCRETE PAVEMENT

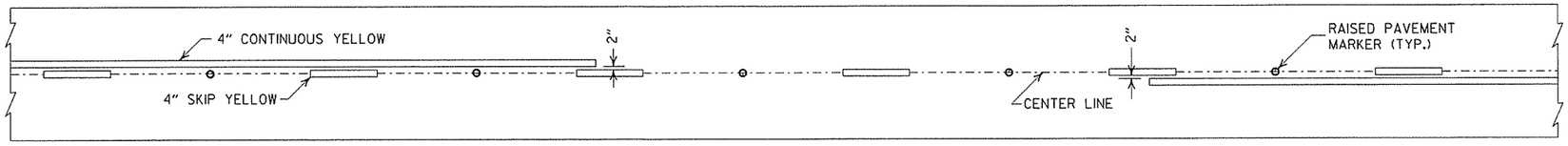

SOLID LINE STRIPING ON ASPHALT PAVEMENT

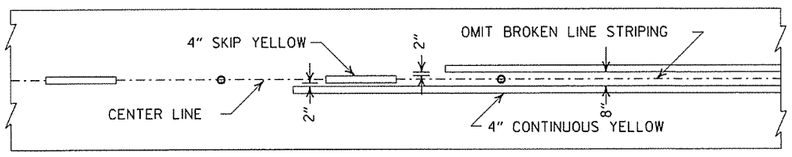

ASPHALT PAVEMENT

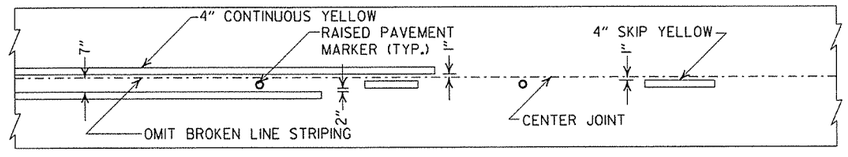

CONCRETE PAVEMENT

2" FOR ASPHALT OR CONCRETE PAVEMENT
6" FOR BITUMINOUS SURFACE TREATMENT

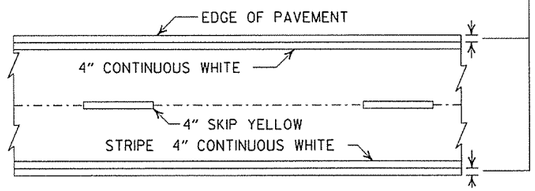

PAVEMENT EDGE LINE MARKING

NOTE:
THE RED LENS OF THE TYPE II R.P.M. SHALL FACE THE INCORRECT TRAFFIC MOVEMENT.

DETAIL OF STANDARD RAISED PAVEMENT MARKERS

GENERAL NOTES:

THIS DRAWING SHOULD BE CONSIDERED AS TYPICAL ONLY AND THE FINAL LOCATION OF THE STRIPING AND RAISED PAVEMENT MARKERS SHALL BE DETERMINED BY THE ENGINEER.

THIS DRAWING SHOULD BE USED IN CONJUNCTION WITH THE "MANUAL ON UNIFORM TRAFFIC CONTROL DEVICES", LATEST REVISION.

NOTE:

DIMENSIONS SHOWN FOR RAISED PAVEMENT MARKERS ARE TYPICAL. THE CONTRACTOR MAY SUBSTITUTE SIMILAR MARKERS WITH THE APPROVAL OF THE ENGINEER. REQUESTING APPROVAL FOR SIMILAR MARKERS MAY BE MADE BY REFERRING TO THE AHTD QUALIFIED PRODUCTS LIST.

STRIPING AT ADJACENT NO PASSING LANES

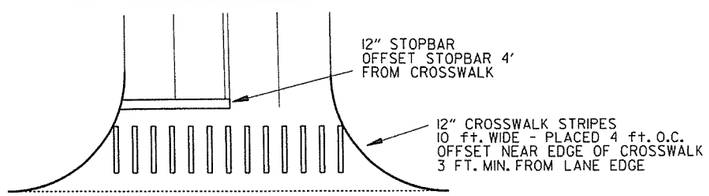

CROSSWALK AND STOPBAR DETAILS

DATE	REVISION	FILMED
9-12-13	REVISED DETAIL OF STANDARD RAISED PAVEMENT MARKERS	
11-17-10	REVISED GENERAL NOTES & REMOVED PLOWABLE PVMT MRKRS	
11-18-04	REVISED NOTE 2 & GENERAL NOTES	
8-22-02	ADDED CROSSWALK & STOPBAR DTLS.	
7-02-98	ADDED DETAILS OF STD. RAISED PAV'T. MARKERS	
4-26-96	REV. NOTES 3&4; ADDED R.P.M.	
9-30-80	DRAWN	1-9-30-80

ARKANSAS STATE HIGHWAY COMMISSION

PAVEMENT MARKING DETAILS

STANDARD DRAWING PM-1

PAVEMENT MARKING QUANTITIES
(BASED ON 700' ACCEL. LANE + 300' TAPER)

ENTRANCE RAMP

8" WHITE = 228 LIN. FT.
RAISED PAVEMENT MARKERS TYPE II (WHITE/RED) = 38 EACH

EXIT RAMP

4" WHITE = 280 LIN. FT.
8" WHITE = 655 LIN. FT.
RAISED PAVEMENT MARKERS TYPE II (WHITE/RED) = 38 EACH
RAISED PAVEMENT MARKERS TYPE II (WHITE/RED) = 48 EACH
RAISED PAVEMENT MARKERS TYPE II (WHITE/RED) = 38 EACH

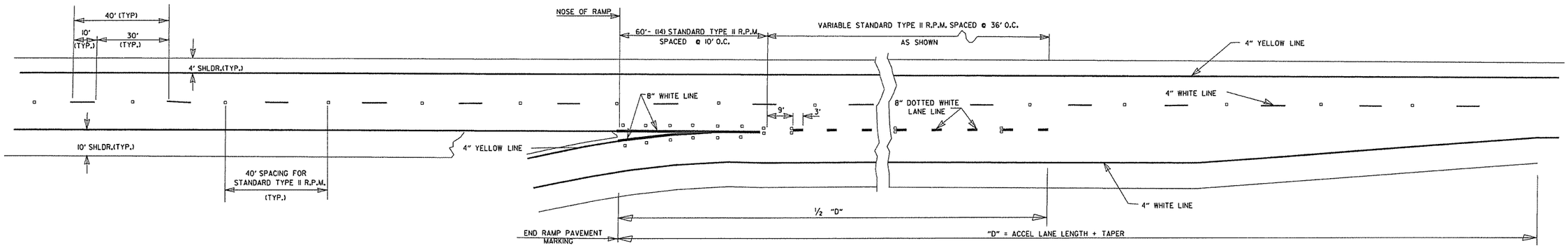

ENTRANCE RAMPS

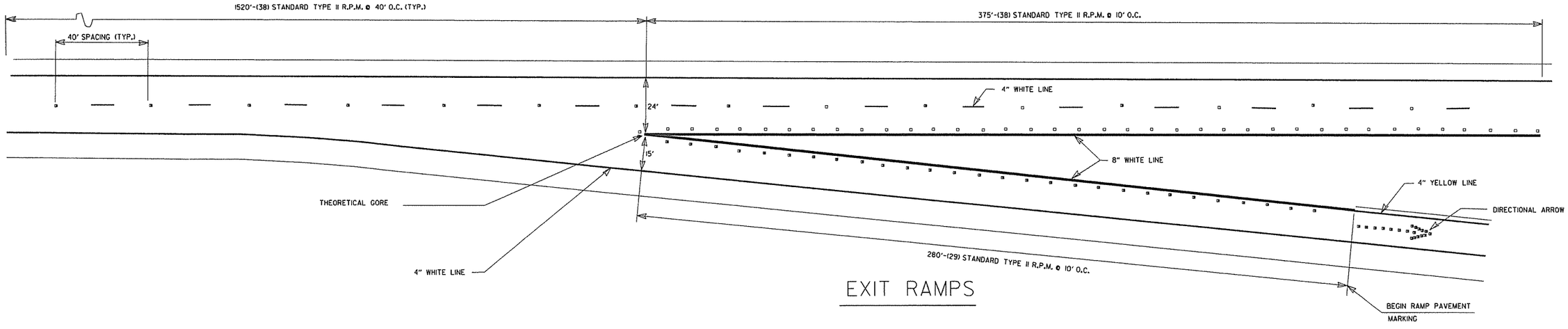

EXIT RAMPS

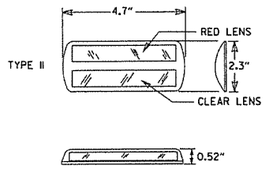

DETAIL OF
STANDARD
RAISED PAVEMENT MARKERS

NOTE:
THE RED LENS OF THE TYPE II R.P.M. SHALL FACE THE INCORRECT TRAFFIC MOVEMENT.

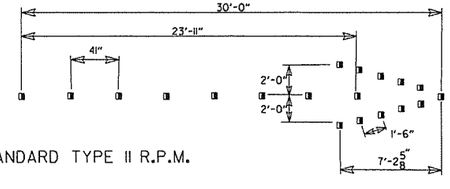

(19) STANDARD TYPE II R.P.M.

DIRECTIONAL ARROWS

GENERAL NOTES:

THIS DRAWING SHOULD BE CONSIDERED AS TYPICAL ONLY AND THE FINAL LOCATION OF THE STRIPING AND PAVEMENT MARKERS SHALL BE DETERMINED BY THE ENGINEER.

THIS DRAWING SHOULD BE USED IN CONJUNCTION WITH THE "MANUAL ON UNIFORM TRAFFIC CONTROL DEVICES", LATEST REVISION.

NOTE:
DIMENSIONS SHOWN FOR RAISED PAVEMENT MARKERS ARE TYPICAL. THE CONTRACTOR MAY SUBSTITUTE SIMILAR MARKERS WITH THE APPROVAL OF THE ENGINEER. REQUESTING APPROVAL FOR SIMILAR MARKERS MAY BE MADE BY REFERRING TO THE AHTD QUALIFIED PRODUCTS LIST.

DATE	REVISION	FILMED
9-12-13	REVISED DETAIL OF STANDARD RAISED PAVEMENT MARKERS	
7-26-12	REVISED RPM NOTATION	
12-15-11	REVISED RPMs ACCORDING TO LATEST POLICY	
11-17-10	REMOVED PLOWABLE PAVEMENT MARKERS	
6-3-10	REVISED PER 2009 MUTCD	
11-18-04	REVISED NOTES	
8-22-02	ADDED & REVISED NOTES; REV. ENTRANCE & EXIT RAMPS	
5-18-00	REMOVED HASHMARKS	
7-02-98	CHANGED TYPES TO ROMAN NUMERALS	
4-26-96	ADDED DIMENSIONS & QUANTITIES; REVISED LANE WIDTH ON EXIT RAMP	
2-2-95	PLACED IN USE	2-2-95

ARKANSAS STATE HIGHWAY COMMISSION

PERMANENT PAVEMENT MARKING ON ACCESS CONTROLLED ROADWAYS

STANDARD DRAWING PM-2

NOTE:
1. GRANULAR BACKFILL TO BE SUBSIDIARY TO PIPE UNDERDRAIN.

2. UNLESS OTHERWISE SPECIFIED ON THE PLANS, THE UNDERDRAIN COVER SHALL BE THOROUGHLY COMPACTED EARTH AND SHALL BE SUBSIDIARY TO PIPE UNDERDRAIN.

3. GRANULAR MATERIAL SHALL BE WRAPPED WITH GEOTEXTILE FABRIC. LAP FABRIC 12" OR THE WIDTH OF THE TRENCH AT THE TOP.

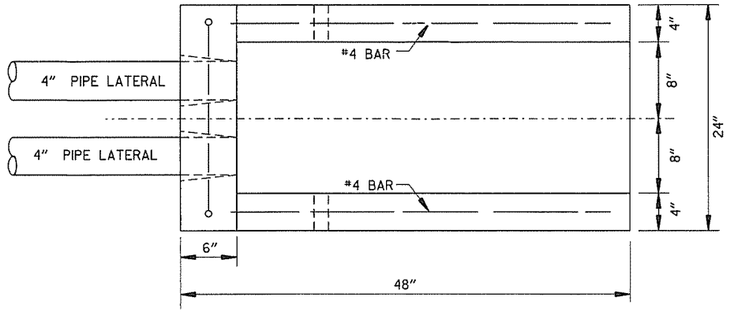

PLAN VIEW

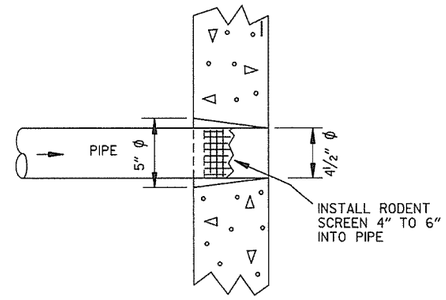

DETAIL OF HOLE FOR 4" PIPE

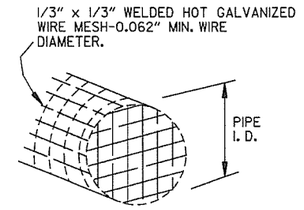

DETAIL OF RODENT SCREEN

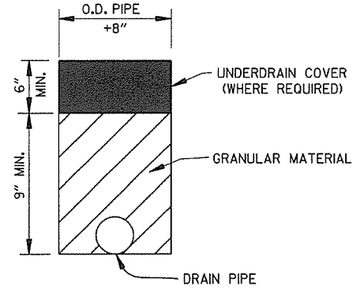

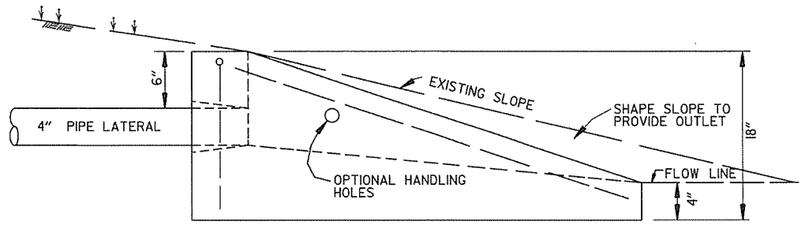

SIDE VIEW

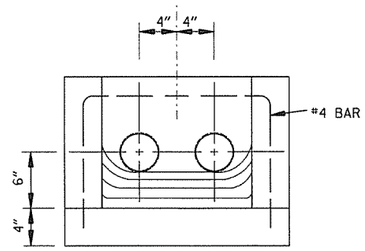

FRONT VIEW

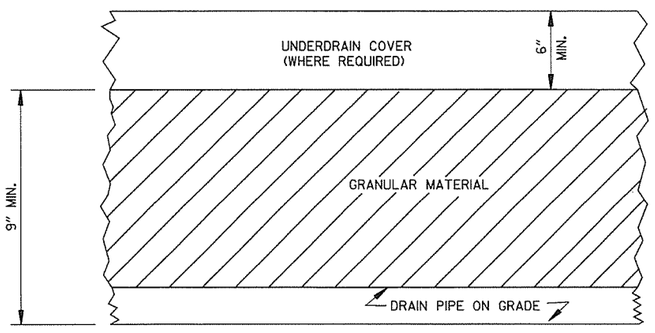

DETAILS OF PIPE UNDERDRAIN

UNDERDRAIN OUTLET PROTECTORS

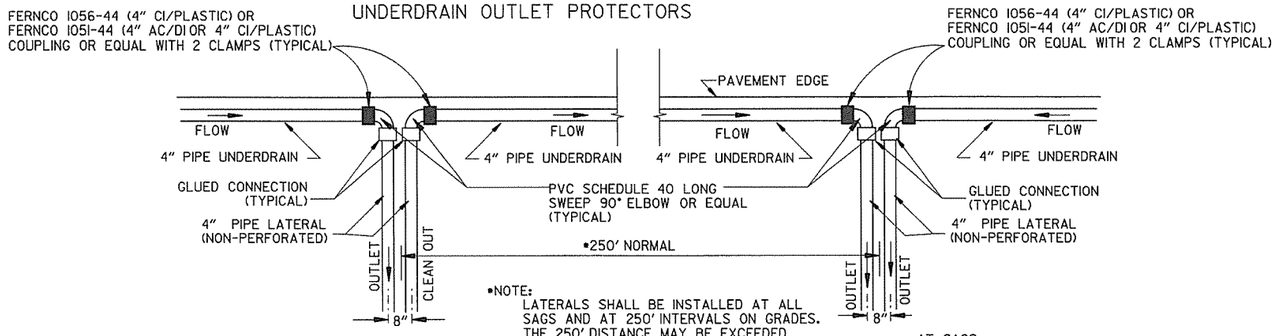

DETAIL OF PIPE UNDERDRAIN LATERALS WHEN PLACED ALONG PAVEMENT EDGE

NOTE: PVC PIPE FOR LATERALS SHALL MEET THE REQUIREMENTS OF ASTM D 1785 (LATEST REVISION) FOR SCHEDULE 40 PIPE.

DATE	REVISION	DATE FILMED
4-10-03	REVISED NOTE 3	
1-12-00	REVISED DETAIL OF UNDERDRAIN LATERALS	
11-18-98	REVISED NOTE	
10-18-96	REVISED MIN. DEPTH & GEOTEXTILE FABRIC	
4-26-96	ADDED LATERAL NOTE; 5½" TO 5"	
11-22-95	REVISED LATERALS	
7-20-95	REVISED LATERALS & ADDED NOTE	
11- 3-94	REVISED FOR DUAL LATERALS	11- 3-94
10- 1-92	SUBSTITUTED GEOTEXTILE	10- 1-92
8-15-91	ADDED POLYEDTHYLENE PIPE	8-15-91
11- 8-90	DELETED ALTERNATE NOTE	11- 8-90
1-25-90	ADDED 4" SNAP ADAPTER	1-25-90
11-30-89	DEL. (SUBGRADE); ADDED (WHERE REQUIRED)	11-30-89
7-15-88	ISSUED P.L.M.	647-7-15-88

ARKANSAS STATE HIGHWAY COMMISSION

DETAILS OF PIPE UNDERDRAIN

STANDARD DRAWING PU-1

7-20-95 INSTD.PUI

STEEL FABRICATION: REINFORCING STEEL FABRICATION SHALL CONFORM TO THE DIMENSIONS LISTED IN THE TABLE BELOW:

BAR SIZE	PIN DIAMETER	HOOK EXTENSION "K"
3	2¼"	4"
4	3 "	4½"
5	3¾"	5"
6	4½"	6"
7	5¼"	7"
8	6"	8"

IF THE OVERALL HEIGHT OF THE HOOK (SEE DIAGRAM BELOW) FOR A "b", "b1", "b2" or "b3" BENT BAR IS GREATER THAN THE CORRESPONDING TOP OR BOTTOM SLAB THICKNESS, LESS 2¾ INCHES, EACH BENT BAR SHALL BE REPLACED WITH ONE HOOKED BAR AND ONE STRAIGHT BAR, USING LENGTHS AS SHOWN IN THE TABLE BELOW. THE TWO BARS SHALL BE THE SAME DIAMETER AS, AND PLACED AT THE SAME SPACING AS, THE "b", "b1", "b2" OR "b3" BENT BARS THEY REPLACE.

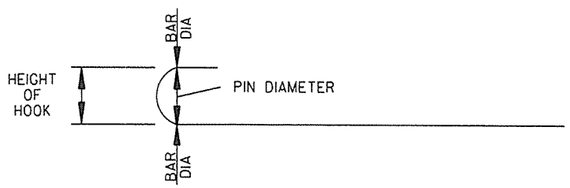

NOTE: DIMENSIONS OF BARS ARE MEASURED OUT TO OUT OF BARS.

OVERALL HEIGHT OF HOOKED BAR DIAGRAM

THE HOOKED BARS SHALL BE PLACED IN THE BOTTOM OF THE TOP SLAB AND THE TOP OF THE BOTTOM SLAB. THE STRAIGHT BARS SHALL BE PLACED IN THE TOP OF THE TOP SLAB AND THE BOTTOM OF THE BOTTOM SLAB. SEE TABLE BELOW FOR LENGTHS OF REPLACEMENT HOOKED AND STRAIGHT BARS.

FOR SKEWED CULVERTS, THE REPLACEMENT STRAIGHT BAR MAY HAVE TO BE CUT IN FIELD TO FIT.

REPLACEMENT BAR LENGTHS TABLE

BAR SIZE: "b", "b1", "b2" OR "b3"	LENGTH OF HOOKED BAR	LENGTH OF STRAIGHT BAR
#4	L + 1' - 0"	SEE "c" BAR LENGTH
#5	L + 1' - 2"	SEE "c" BAR LENGTH
#6	L + 1' - 4"	SEE "c" BAR LENGTH
#7	L + 1' - 8"	SEE "c" BAR LENGTH
#8	L + 1' - 10"	SEE "c" BAR LENGTH
#9	L + 2' - 6"	SEE "c" BAR LENGTH

L = "OW" - 3 INCHES

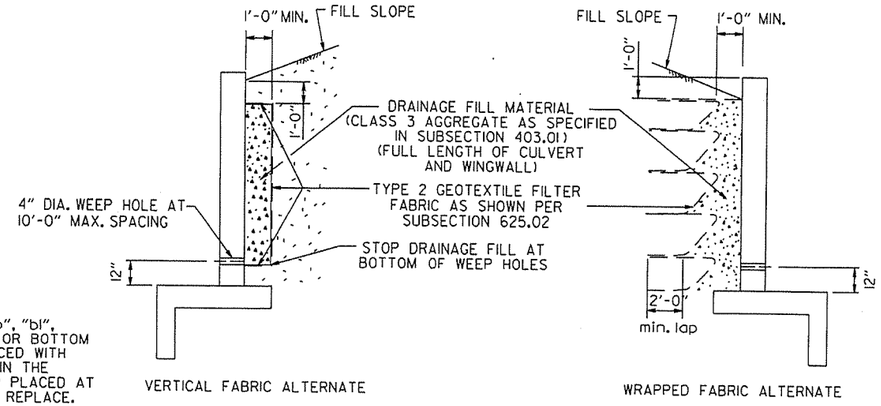

WINGWALL & CULVERT DRAINAGE DETAIL

REINFORCED CONCRETE BOX CULVERT GENERAL NOTES

CONCRETE SHALL BE CLASS S WITH A MINIMUM 28 DAY COMPRESSIVE STRENGTH OF 3500 PSI.

REINFORCING STEEL SHALL BE AASHTO M 31 OR M 53, GRADE 60.

CONSTRUCTION AND MATERIALS FOR WINGWALL & CULVERT DRAINAGE, INCLUDING WEEP HOLES AND GRANULAR MATERIAL, SHALL BE SUBSIDIARY TO THE BID ITEM, "CLASS S CONCRETE".

MEMBRANE WATERPROOFING SHALL CONFORM TO THE REQUIREMENTS OF SECTION 815 OF THE STANDARD SPECIFICATIONS.

MEMBRANE WATERPROOFING SHALL BE APPLIED TO ALL CONSTRUCTION JOINTS IN THE TOP SLAB AND THE SIDEWALLS OF R.C. BOX CULVERTS AS DIRECTED BY THE ENGINEER. NO PAYMENT SHALL BE MADE FOR THIS ITEM, BUT PAYMENT WILL BE CONSIDERED TO BE INCLUDED IN THE VARIOUS ITEMS BID FOR THE R.C. BOX CULVERT.

REINFORCING STEEL TOLERANCES: THE TOLERANCES FOR REINFORCING STEEL SHALL MEET THOSE LISTED IN "MANUAL OF STANDARD PRACTICE" PUBLISHED BY CONCRETE REINFORCING STEEL INSTITUTE (CRSI) EXCEPT THAT THE TOLERANCE FOR TRUSS BARS SUCH AS FIGURE 3 ON PAGE 7-4 OF THE CRSI MANUAL SHALL BE MINUS ZERO TO PLUS ½ INCH.

WEEP HOLES IN BOX CULVERT WALLS SHALL HAVE A MAXIMUM HORIZONTAL SPACING OF 10'-0" AND SHALL BE SPACED TO CLEAR ALL REINFORCING STEEL. THE DRAIN OPENING SHALL BE 4" DIAMETER AND SHALL BE PLACED 12" ABOVE THE TOP OF THE BOTTOM SLAB.

WEEP HOLES IN WINGWALLS SHALL HAVE A MAXIMUM HORIZONTAL SPACING OF 10'-0" AND SHALL BE SPACED TO CLEAR ALL REINFORCING STEEL. THERE SHALL BE A MINIMUM OF TWO (2) WEEP HOLES IN EACH WINGWALL. THE DRAIN OPENING SHALL BE 4" DIAMETER AND SHALL BE PLACED 12" ABOVE THE TOP OF THE WINGWALL FOOTING.

THE REQUIREMENTS SHOWN ON THIS DRAWING SHALL SUPERCEDE THE CORRESPONDING REQUIREMENTS ON ALL REINFORCED CONCRETE BOX CULVERT STANDARD DRAWINGS.

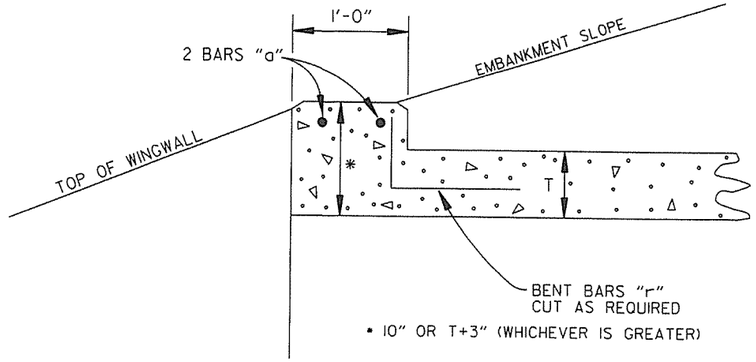

NOTE: FOR ALL SKEWED R.C. BOX CULVERTS THE LENGTH "K" OF THE MODIFIED HEADWALL SHALL BE EQUAL TO THE ROADWAY LENGTH "RL". THE ENDS OF THE HEADWALL SHALL BE CONSTRUCTED PARALLEL TO THE SKEW ANGLE OF THE BOX CULVERT.

R.C. BOX CULVERT HEADWALL MODIFICATIONS

DATE	REVISION	DATE FILMED
7/26/12	REV. DRAINAGE FILL MATERIAL & DETAIL	
12/15/11	REQUIRE WEEP HOLES IN BOX CULVERT WALLS	
5-25-06	REV. GEN. NOTES AND DETAILS FOR WEEP HOLES; BAR DIAGRAM	
11-16-01	ADDED WINGWALL DRAINAGE DETAIL/EDITED GEN. NOTES	
10-18-96	REV. ASTM REF. TO AASHTO & ADDED BAR DIAGRAM	
10-12-95	MOVED SOLID SODDING DETAIL TO RCB-2	
6-2-94	ADDED SOLID SODDING PLAN DETAIL	
8-5-93	REVISED PIN DIAMETER TO SPECS.	
8-15-91	DRAWN AND ISSUED	

ARKANSAS STATE HIGHWAY COMMISSION

REINFORCED CONCRETE BOX CULVERT DETAILS

STANDARD DRAWING RCB-1

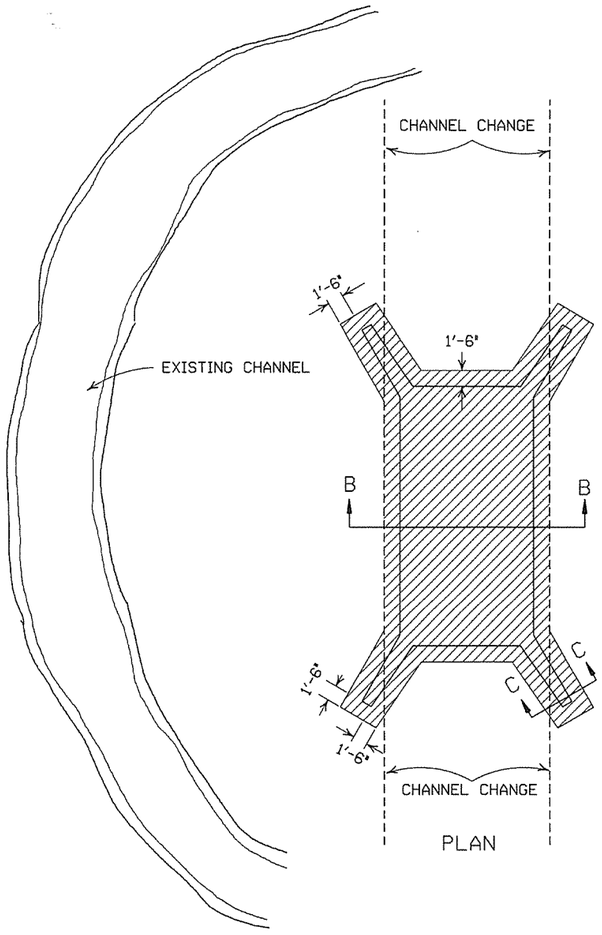

PLAN

SOLID SODDING

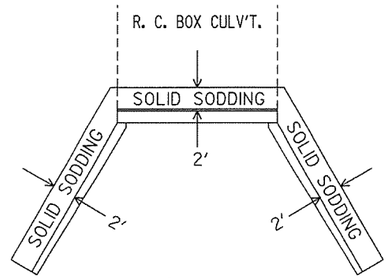

PLAN

PARTIAL SECTION SHOWING SOLID SODDING AT HEADWALLS AND WING WALLS

NOTE: LENGTH MEASURED ALONG THE CENTER OF 2' STRIP OF SOLID SODDING.

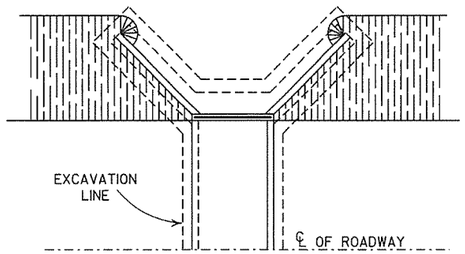

PLAN

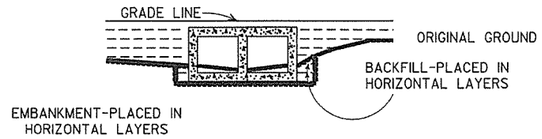

LONGITUDINAL SECTION

BACKFILL DETAILS FOR BOX CULVERT

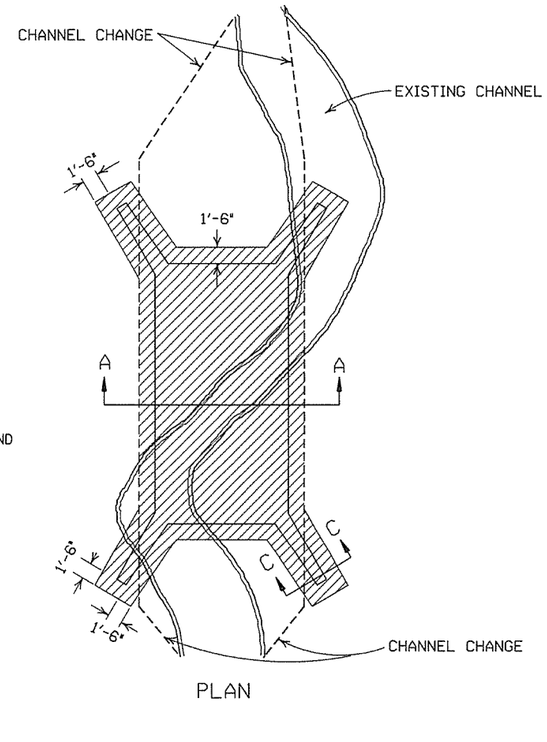

PLAN

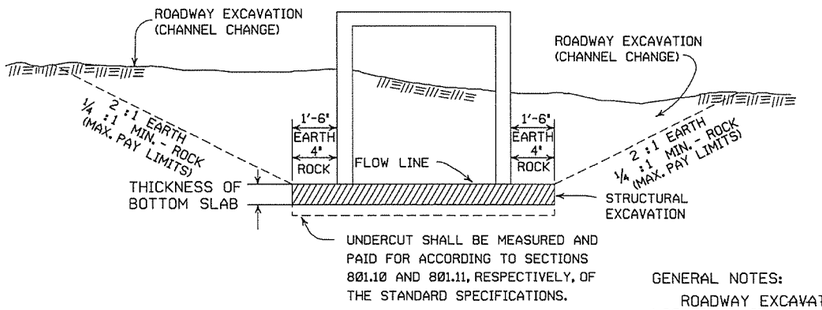

SECTION B-B

DETAILS FOR NEW CHANNELS

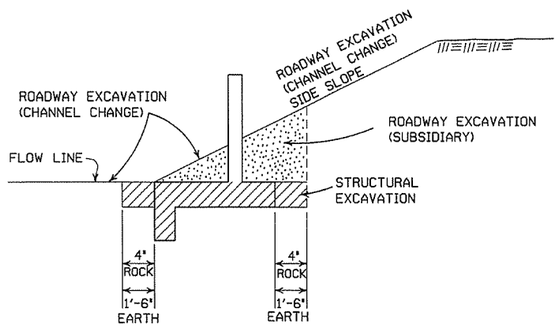

SECTION C-C

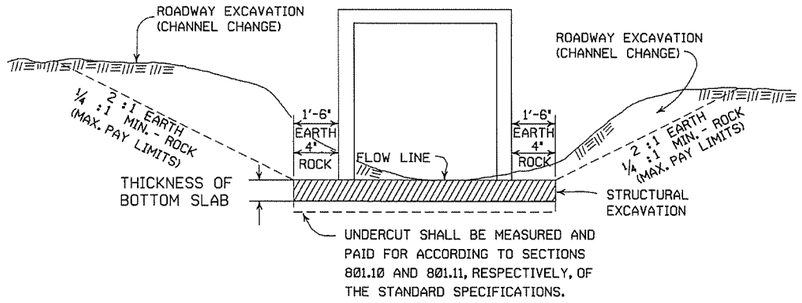

SECTION A-A

DETAILS THROUGH EXISTING CHANNELS

GENERAL NOTES:

ROADWAY EXCAVATION (CHANNEL CHANGE) WILL BE PAID FOR AT R.C. BOX CULVERT LOCATIONS. IT WILL BE PAID TO THE LIMITS ACTUALLY CUT AND WILL BE CONFINED TO THAT PORTION OF THE INDICATED AREA THAT IS ABOVE THE FLOW LINE. ROADWAY EXCAVATION (CHANNEL CHANGE) SHALL BE MEASURED BY CROSS SECTIONS AND VOLUMES COMPUTED BY AVERAGE END AREA METHOD. ALL CHANNEL CHANGES SHALL BE BROUGHT TO GRADE PRIOR TO MAKING ANY EXCAVATION FOR STRUCTURES.

EXCAVATION FOR STRUCTURES WILL BE PAID FOR AT ALL R.C. BOX CULVERT LOCATIONS. IT WILL BE PAID TO THE LIMITS SHOWN AND SHALL BE CONFINED TO THAT PORTION OF THE INDICATED AREA THAT IS BELOW THE CHANNEL FLOW LINE.

ROADWAY EXCAVATION SHOWN IN SECTION C-C ABOVE AS SUBSIDIARY WILL NOT BE MEASURED OR PAID FOR DIRECTLY, BUT PAYMENT WILL BE CONSIDERED TO BE INCLUDED IN THE VARIOUS ITEMS OF EXCAVATION.

DATE	REVISION	FILMED
11-20-03	REVISED SECTION A-A NOTE	
8-22-02	REVISED SECTION B-B NOTE	
10-12-95	COMBINED 1891B AND 1888A	
1-4-83	REVISED GENERAL NOTES	674-1-4-83
	AND ADDED MAXIMUM PAY	
	LIMIT NOTES.	
2-2-76	EXCAV. PAY LIMITS	917-2-2-76
10-2-72	REVISED AND REDRAWN	564-10-16-72

ARKANSAS STATE HIGHWAY COMMISSION

EXCAVATION PAY LIMITS, BACKFILL, & SOLID SODDING FOR BOX CULVERTS

STANDARD DRAWING RCB-2

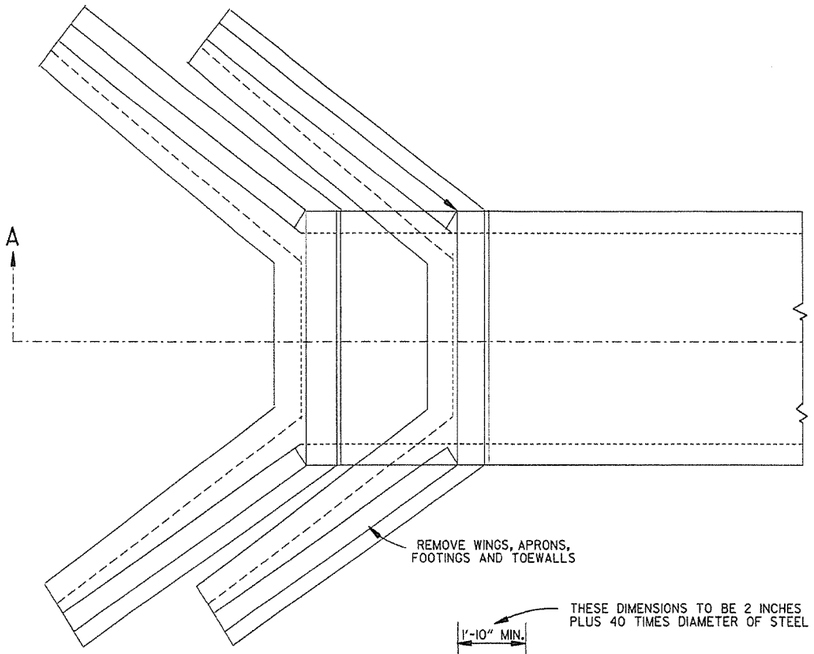

TOP VIEW
R.C. BOX CULVERT

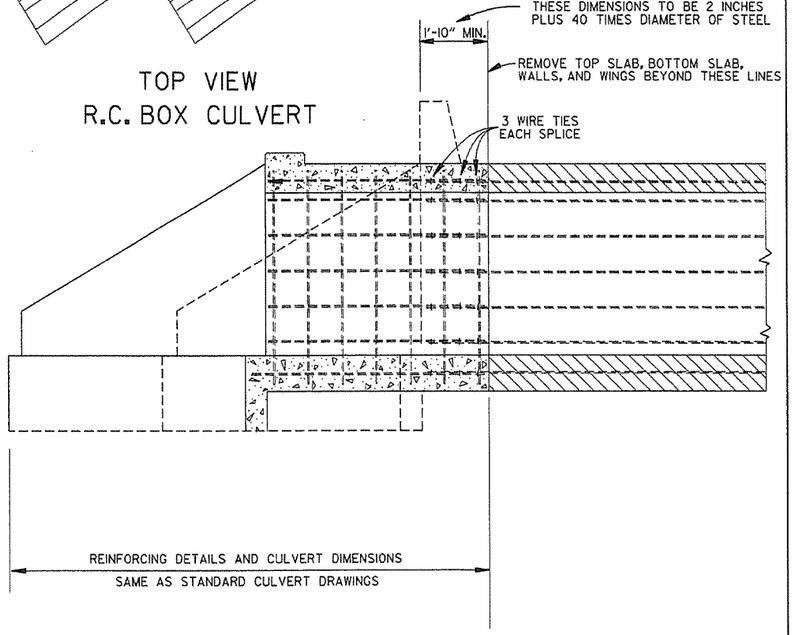

SECTION A-A

METHOD 1

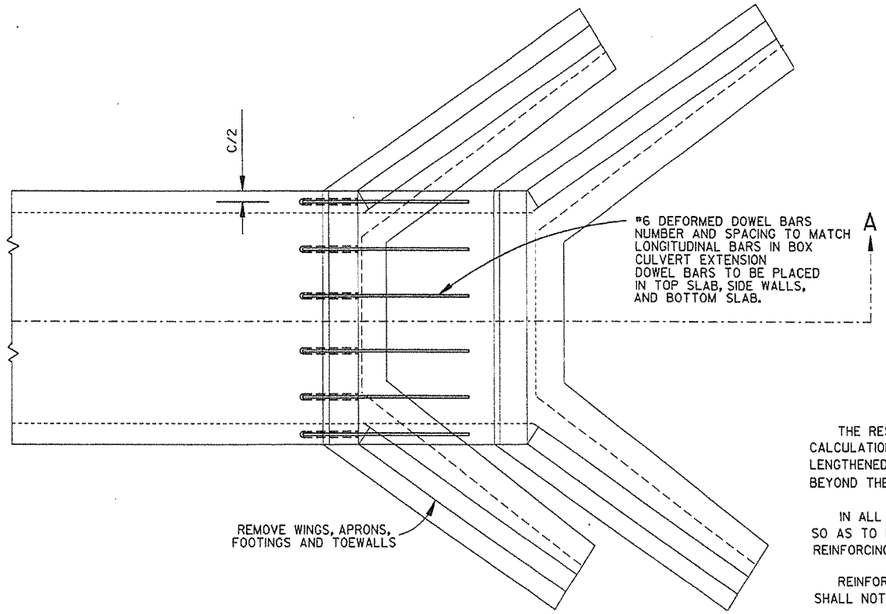

TOP VIEW
R.C. BOX CULVERT

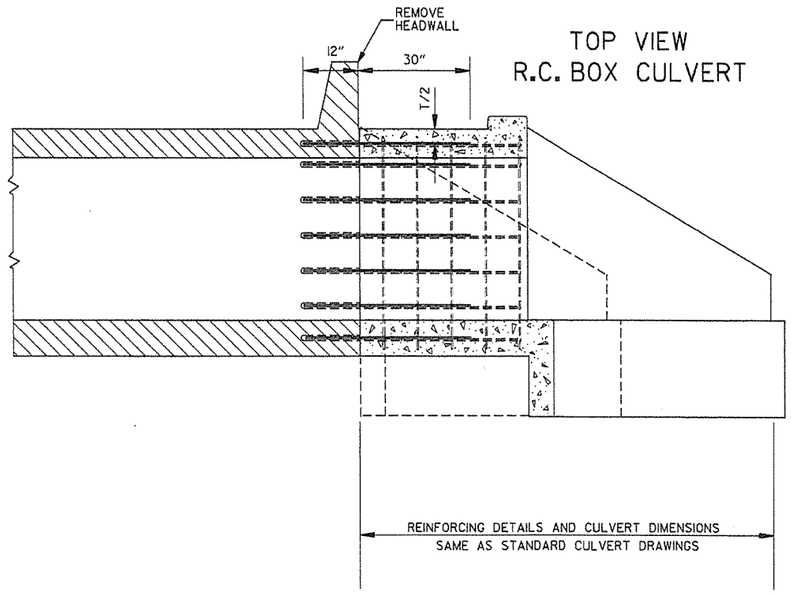

SECTION A-A

METHOD 2

GENERAL NOTES

	USE FOR METHOD
THE RESIDENT ENGINEER WILL MAKE INDIVIDUAL CALCULATIONS OF QUANTITIES FOR EACH STRUCTURE LENGTHENED, MAKING NO ALLOWANCE FOR OVERBREAKAGE BEYOND THE LINES INDICATED.	1
IN ALL INSTANCES CONCRETE SHALL BE REMOVED SO AS TO PERMIT FULL 40 DIAMETER SPLICE OF REINFORCING STEEL.	1
REINFORCING STEEL REMOVED FROM EXISTING STRUCTURE SHALL NOT BE REUSED IN CONSTRUCTING EXTENSION.	1&2
ON R.C. BOX CULVERTS THAT HAVE AN EXISTING CONCRETE APRON; THE CONCRETE APRON SHALL BE REMOVED WITH THE WINGS. THE COST OF REMOVING ALL OLD CONCRETE WILL BE INCLUDED IN THE PRICE BID PER CUBIC YARD FOR NEW CONCRETE OF THE CLASS SPECIFIED AND NO ADDITIONAL COMPENSATION WILL BE ALLOWED.	1&2
MATERIALS FOR SECURING DOWEL BARS SHALL MEET THE REQUIREMENTS OF SECTION 507.02 OF THE STANDARD SPECIFICATIONS.	2
DOWEL BARS SHALL BE INSTALLED AS FOLLOWS: THE DRILLING PROCEDURE SHALL BE APPROVED BY THE ENGINEER, THE FILLING SYSTEM SHALL BE APPROVED BY THE ENGINEER. AND SHALL BE AN INJECTION-TYPE SYSTEM WHICH WILL INSURE THAT SUFFICIENT MATERIAL IS INJECTED SO IT COMPLETELY SURROUNDS THE BARS AND FILLS THE HOLES.	2
THE CONTRACTOR SHALL HAVE THE OPTION OF USING EITHER METHOD 1 OR METHOD 2. REGARDLESS OF WHICH METHOD IS USED, PAY QUANTITIES WILL BE CALCULATED BASED ON METHOD 1.	1&2

NOTE:
NO PART OF THIS STANDARD IS TO BE USED FOR ANY DETAILS RELATIVE TO NEW CONSTRUCTION.

SEE STANDARD DRAWING LISTED IN TABULATION OF STRUCTURES FOR ALL NEW CONSTRUCTION DETAILS.

DATE	REVISION	DATE FILM
10-12-95	CHANGED DRAWING # FROM 144-A	
4-1-93	ADDED GENERAL NOTE	
10-1-92	ADDED ALT. METHOD OF EXTENSION	
11-30-89	REDRAWN	
1-4-83	ELIMINATED CONCRETE CLASS	
12-20-56	RETRACED	

ARKANSAS STATE HIGHWAY COMMISSION

METHOD OF EXTENDING EXISTING R.C. BOX CULVERTS

STANDARD DRAWING RCB-3

SUPERELEVATION TABLE FOR ONE - WAY TRAFFIC

DEGREE OF CURVE	30 MPH e	30 MPH Ls (FT) MINIMUM	30 MPH Ls (FT) DESIRABLE	40 MPH e	40 MPH Ls (FT) MINIMUM	40 MPH Ls (FT) DESIRABLE	50 MPH e	50 MPH Ls (FT) MINIMUM	50 MPH Ls (FT) DESIRABLE	55 MPH e	55 MPH Ls (FT) MINIMUM	55 MPH Ls (FT) DESIRABLE	60 MPH e	60 MPH Ls (FT) MINIMUM	60 MPH Ls (FT) DESIRABLE	65 MPH e	65 MPH Ls (FT) MINIMUM	65 MPH Ls (FT) DESIRABLE	70 MPH e	70 MPH Ls (FT) MINIMUM	70 MPH Ls (FT) DESIRABLE
0° 15′	N. C.			N. C.			N. C.			N. C.			N. C.			N. C.			N. C.		
0° 30′	N. C.			N. C.			N. C.			N. C.			N. C.			N. C.			N. C.		
0° 45′	N. C.			N. C.			R. C.			0.022			0.023			0.025			0.028		
1° 00′	N. C.			N. C.			0.021			0.026			0.030			0.033	250		0.037	275	
1° 15′	N. C.			R. C.			0.026			0.032			0.037			0.041			0.046		
1° 30′	N. C.			0.021			0.031	200		0.037	225		0.043	250		0.048		350	0.054		350
1° 45′	R. C.			0.025	175		0.036			0.043			0.049			0.055			0.062		
2° 00′	R. C.			0.028			0.040			0.048			0.055			0.062			0.070		
2° 15′	R. C.			0.031			0.045		300	0.053			0.061			0.069	265		0.078	300	
2° 30′	0.021			0.034			0.049			0.058			0.067			0.075	280		0.085	315	400
2° 45′	0.023			0.037			0.053			0.063			0.072			0.081	300		0.091	335	
3° 00′	0.025	150		0.040		250	0.057			0.067	230		0.077	260		0.087	315		0.096	350	
3° 15′	0.027			0.043			0.061			0.072	245		0.082	275		0.090	325	400	0.098	360	450
3° 30′	0.029			0.046			0.065	205		0.076	255		0.086	285		0.095	340		0.100	360	
3° 45′	0.031		250	0.049			0.069	215		0.080	265		0.090	295	400	0.097	345				
4° 00′	0.033			0.051			0.072	225		0.083	270		0.093	305		0.099	350				
4° 30′	0.037			0.056			0.078	240		0.087	280	400	0.096	315							
5° 00′	0.040			0.061			0.083	250		0.091	295		0.098	320							
5° 30′	0.043			0.066	185		0.088	260		0.094	300										
6° 00′	0.046			0.070	190		0.092	270		0.096	305										
6° 30′	0.050			0.074	200		0.095	280	350	0.100	315										
7° 00′	0.053			0.078	210		0.098	285													
7° 30′	0.056			0.081	215		0.099	290													
8° 00′	0.058			0.084	220	300	0.100	290													
8° 30′	0.061			0.087	225																
9° 00′	0.063			0.089	230																
10° 00′	0.068	160		0.094	235																
11° 00′	0.072	170		0.097	250																
12° 00′	0.076	175		0.099	250																
13° 00′	0.080	180		0.100	250																
14° 00′	0.083	190																			
15° 00′	0.086	195																			
16° 00′	0.089	200																			
17° 00′	0.091	200																			
18° 00′	0.093	205																			
19° 00′	0.095	210																			
20° 00′	0.097	215	300																		
21° 00′	0.098	215																			
22° 00′	0.099	215																			
23° 00′	0.099	215																			
24° 00′	0.100	220																			

D MAX = 24° 45′ | D MAX = 13° 15′ | D MAX = 8° 15′ | D MAX = 6° 30′ | D MAX = 5° 15′ | D MAX = 4° 15′ | D MAX = 3° 30′

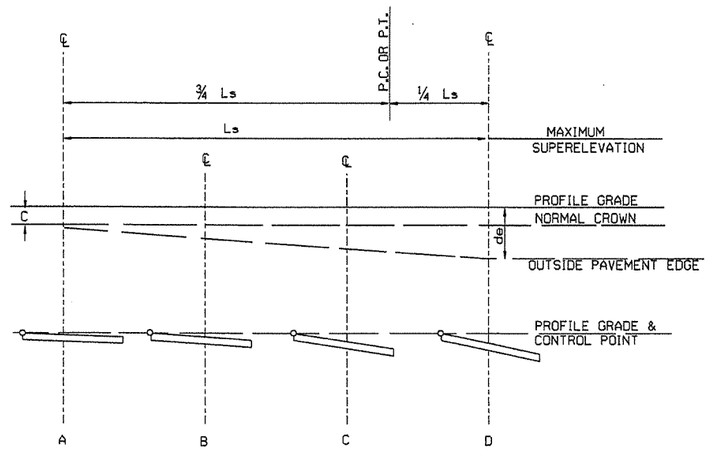

ONE-WAY TRAFFIC
INSIDE LANE

SUPERELEVATION FORMULA = $S = -\frac{L(de-C)}{Ls} - C$

ABBREVIATIONS

NC - NORMAL CROWN
RC - REVERSE CROWN, SUPERELEVATION AT NORMAL CROWN SLOPE
S - SUPERELEVATION
L - DISTANCE FROM BEGINNING OF SUPERELEVATION TRANSITION TO ANY POINT (FT.)
d - WIDTH OF PAVEMENT
e - MAXIMUM RATE OF SUPERELEVATION (FT. PER FT.)
Ls - LENGTH OF SUPERELEVATION TRANSITION (FT.)
C - NORMAL CROWN (FT.)

GENERAL NOTES

1. ON PAVEMENT WITH ONE-WAY TRAFFIC, THE SUPERELEVATION SHALL BE REVOLVED ON THE PROFILE GRADE POINT.
2. SUPERELEVATION VALUES SHOWN ON THE CROSS SECTIONS ARE VALUES (+) OR (-) TO BE ADDED OR SUBTRACTED FROM THE POINT OF CONTROL.
3. LENGTHS FOR Ls MAY BE ROUNDED IN MULTIPLES OF 25 FT. OR 50 FT. TO PERMIT SIMPLER CALCULATIONS.
4. MINIMUM Ls VALUES MAY BE USED FOR RAMPS; DESIRABLE VALUES SHALL APPLY TO MAIN LANES.
5. DIVIDED PAVEMENTS WIDER THAN 4 LANES SHALL HAVE ADDITIONAL TRANSITION LENGTHS AS FOLOWS:

6 LANE DIVIDED---------+20%
8 LANE DIVIDED---------+50%

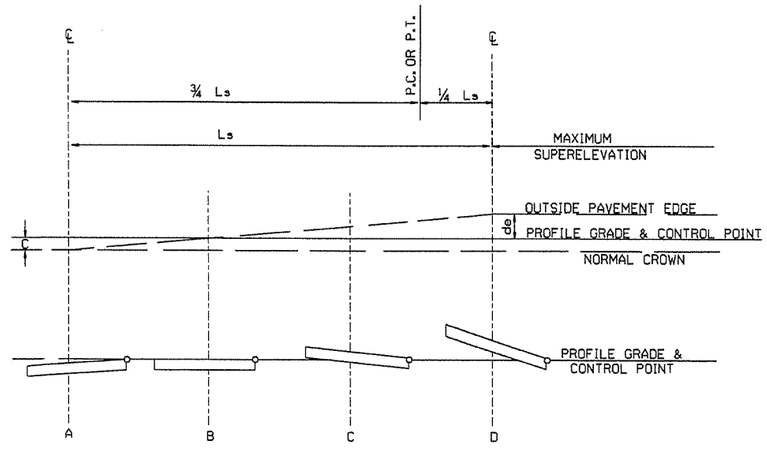

ONE-WAY TRAFFIC
OUTSIDE LANE

SUPERELEVATION FORMULA = $S = +\frac{L(de+C)}{Ls} - C$

DATE	REVISION	DATE FILMED
01-09-87	ISSUED	578-1-15-87

ARKANSAS STATE HIGHWAY COMMISSION

TABLES AND METHOD OF SUPERELEVATION FOR ONE-WAY TRAFFIC

STANDARD DRAWING SE-1

SUPERELEVATION TABLE FOR TWO - WAY TRAFFIC

DEGREE OF CURVE	30 MPH e	30 MPH Ls (FT) MINIMUM	30 MPH Ls (FT) DESIRABLE	40 MPH e	40 MPH Ls (FT) MINIMUM	40 MPH Ls (FT) DESIRABLE	50 MPH e	50 MPH Ls (FT) MINIMUM	50 MPH Ls (FT) DESIRABLE	55 MPH e	55 MPH Ls (FT) MINIMUM	55 MPH Ls (FT) DESIRABLE	60 MPH e	60 MPH Ls (FT) MINIMUM	60 MPH Ls (FT) DESIRABLE	70 MPH e	70 MPH Ls (FT) MINIMUM	70 MPH Ls (FT) DESIRABLE
0° 15′	N.C.			N.C.			N.C.			N.C.			N.C.			N.C.		
0° 30′	N.C.			N.C.			N.C.			N.C.			N.C.			N.C.		
0° 45′	N.C.			N.C.			R.C.			0.022			0.023			0.028		
1° 00′	N.C.			N.C.			0.021			0.026			0.030			0.037	275	300
1° 15′	N.C.			R.C.			0.026			0.032			0.037	250	300	0.046		
1° 30′	N.C.			0.021			0.031	200		0.037	225		0.043			0.054		
1° 45′	N.C.			0.025	175		0.036			0.043		300	0.049			0.062		
2° 00′	R.C.			0.028			0.040			0.048			0.055			0.070		
2° 15′	R.C.			0.031			0.045		250	0.053			0.061			0.078	300	350
2° 30′	0.021			0.034			0.049			0.058			0.067			0.085	315	
2° 45′	0.023			0.037			0.053			0.063			0.072			0.091	335	
3° 00′	0.025			0.040		200	0.057			0.057	230		0.077	260		0.096	350	400
3° 15′	0.027	150		0.043			0.061			0.072	245		0.082	275		0.098	360	
3° 30′	0.029			0.046			0.065	205		0.076	255		0.086	285		0.100	360	
3° 45′	0.031		200	0.049			0.069	215		0.080	265		0.090	295		D MAX = 3° 30′		
4° 00′	0.033			0.051			0.072	225		0.083	270		0.093	305	350			
4° 30′	0.037			0.056			0.078	240		0.087	280		0.096	315				
5° 00′	0.040			0.061			0.083	250		0.091	295	350	0.098	320				
5° 30′	0.043			0.066	185		0.088	260		0.094	300		D MAX = 5° 15′					
6° 00′	0.046			0.070	190		0.092	270		0.096	305							
6° 30′	0.050			0.074	200		0.095	280	300	0.100	315							
7° 00′	0.053			0.078	210		0.098	285		D MAX = 6° 30′								
7° 30′	0.056			0.081	215		0.099	290										
8° 00′	0.058			0.084	220		0.100	290										
8° 30′	0.061			0.087	225	250	D MAX = 8° 15′											
9° 00′	0.063			0.089	230													
10° 00′	0.068	160		0.094	235													
11° 00′	0.072	170		0.097	250													
12° 00′	0.076	175		0.099	250													
13° 00′	0.080	180		0.100	250													
14° 00′	0.083	190		D MAX = 13° 15′														
15° 00′	0.086	195																
16° 00′	0.089	200																
17° 00′	0.091	200																
18° 00′	0.093	205																
19° 00′	0.095	210																
20° 00′	0.097	215	250															
21° 00′	0.098	215																
22° 00′	0.099	215																
23° 00′	0.099	215																
24° 00′	0.100	220																

D MAX = 24° 45′

ABBREVIATIONS

NC - NORMAL CROWN
RC - REVERSE CROWN, SUPERELEVATION AT NORMAL CROWN SLOPE
e - RATE OF SUPERELEVATION (FT. PER FT.)
Ls - LENGTH OF SUPERELEVATION TRANSITION (FT.)
L - DISTANCE FROM BEGINNING OF SUPERELEVATION TRANSITION TO ANY POINT (FT.)
d - WIDTH OF PAVEMENT (FT.) OR WIDTH OF SUBGRADE (FT.)
C - NORMAL CROWN (FT.)

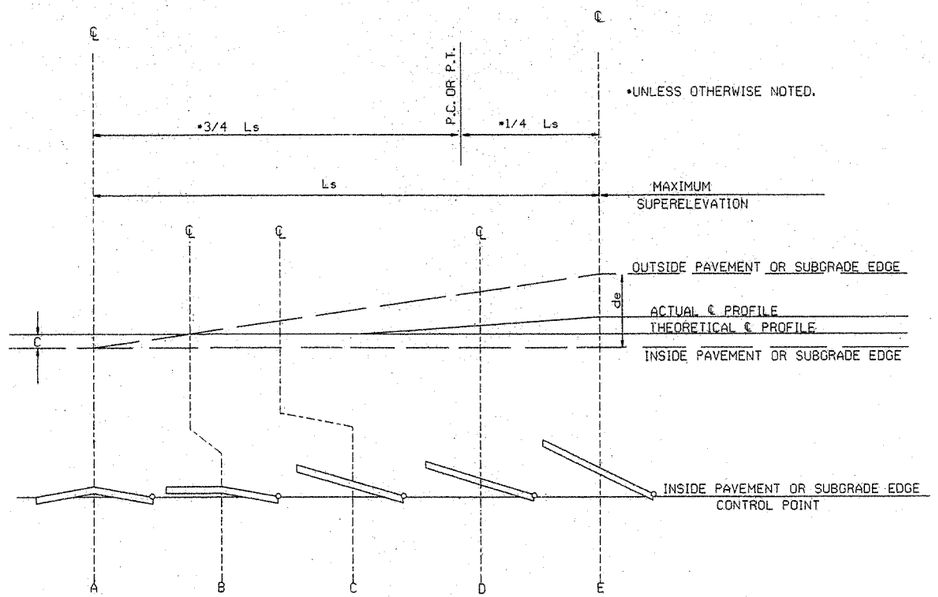

STANDARD METHOD WHEN SUPERELEVATION REVOLVES AROUND INNER SUBGRADE POINT OR INNER PAVEMENT EDGE

NOTE: MAINTAIN NORMAL CROWN ON INSIDE UNTIL SUPERELEVATION EXCEEDS 2C.

GENERAL NOTES

1. ON PAVEMENT WITH TWO-WAY TRAFFIC, THE SUPERELEVATION SHALL BE REVOLVED ON THE INSIDE PAVEMENT EDGE UNLESS OTHERWISE NOTED ON THE PLANS
2. SUPERELEVATION VALUES SHOWN ON THE CROSS SECTIONS ARE VALUES (+) OR (-) TO BE ADDED TO OR SUBTRACTED FROM THE POINT OF CONTROL.
3. LENGTHS FOR L MAY BE ROUNDED IN MULTIPLES OF 25 FT. OR 50 FT. TO PERMIT SIMPLER CALCULATIONS.
4. PAVEMENTS WIDER THAN 2 LANES SHALL HAVE ADDITIONAL TRANSITION LENGTHS AS FOLLOWS:

3 LANE UNDIVIDED - - - - - +20%
4 LANE UNDIVIDED - - - - - +50%
5 LANE UNDIVIDED - - - - - +80%
6 LANE UNDIVIDED - - - - - +100%

NOTE: MAINTAIN NORMAL CROWN ON INSIDE UNTIL SUPERELEVATION EXCEEDS 2C.

RATE OF SUPERELEVATION SHALL BE COMPUTED ON STRAIGHT LINE METHOD USING APPLICABLE Ls.

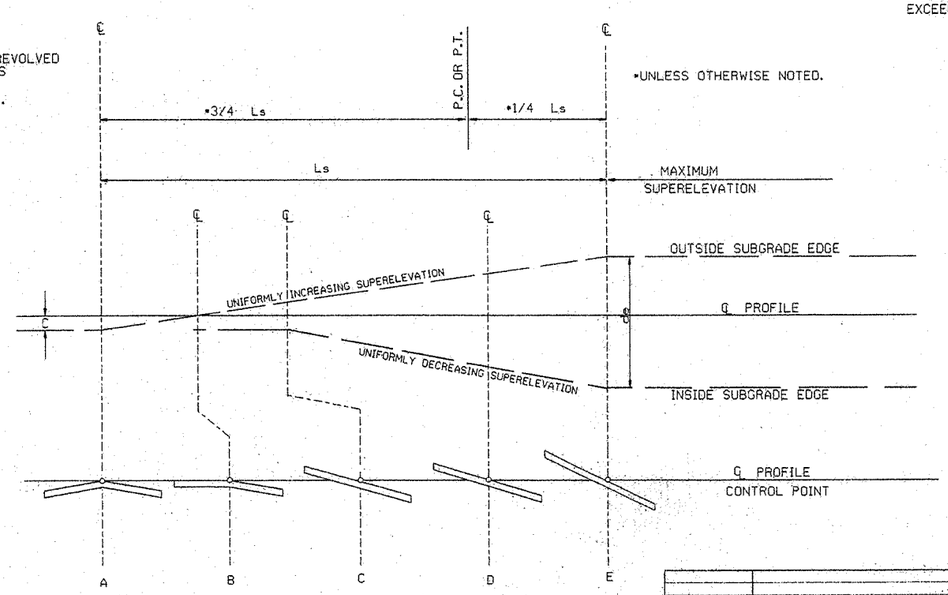

STANDARD METHOD WHEN SUPERELEVATION REVOLVES AROUND CENTER LINE

SUPERELEVATION FORMULA = $\frac{Lde}{Ls}$

DATE	REVISION	DATE FILMED
10-18-96	ADDED FORMULA	10-18-96
01-09-87	ISSUED	534-1-9-87

ARKANSAS STATE HIGHWAY COMMISSION

TABLES AND METHOD OF SUPERELEVATION FOR TWO-WAY TRAFFIC

STANDARD DRAWING SE-2

FILE STDSE2.DGN



R1-1
30"X30"



W1-3
30"X30"
(LT. OR RT.)

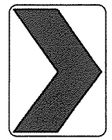

W1-8
18"X24"



W2-5
30"X30"



W3-1
36"X36"



W5-1
36"X36"

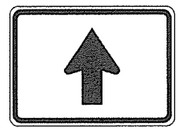

M6-3
21"X15"



R1-2
36"X36"X36"



W1-4
30"X30"
(LT. or RT.)



W2-1
30"X30"



S1-1
36"X36"



W3-2
36"X36"



County
Route Marker
M1-6
24"X24"

NOTE: REFLECTORIZED YELLOW LEGEND (COUNTY NAME, ROUTE LETTER & NUMBER) & BORDER ON A BLUE BACKGROUND.

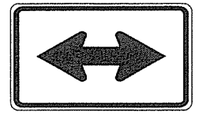

M6-4
21"X15"

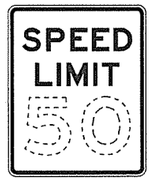

R2-1
24"X30"



W1-5
30"X30"
(LT. or RT.)



W2-2
30"X30"



W5-2
36"X36"



W8-3
36"X36"



R1-3P
18"X6"

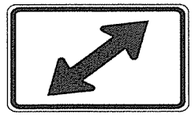

M6-5
21"X15"



W1-1
30"X30"
(LT. or RT.)

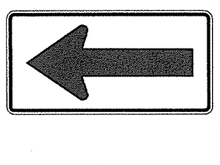

W1-6
48"X24"

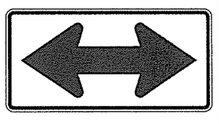

W1-7
48"X24"

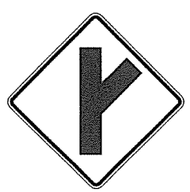

W2-3
30"X30"
(LT. or RT.)



W5-3
36"X36"

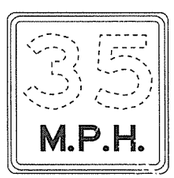

W13-1P
18"X18"

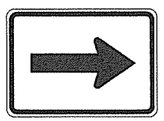

M6-1
21"X15"

NOTE: ALL M6 SIGNS TO BE MADE WITH REFLECTORIZED YELLOW ARROW & BORDER WITH BLUE BACKGROUND.

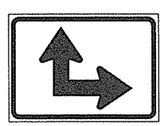

M6-6
21"X15"



W1-2
30"X30"
(LT. or RT.)

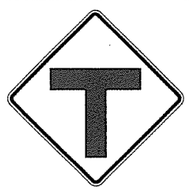

W2-4
30"X30"



W10-1
36" DIAMETER

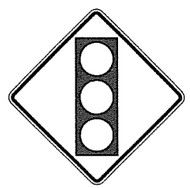

W3-3
36"X36"

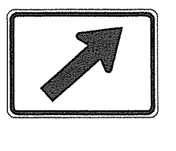

M6-2
21"X15"

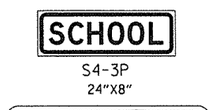

S4-3P
24"X8"



S4-2P
24"X10"

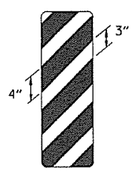

OM-3
12"X36"
(LT. or RT.)

MINIMUM DIMENSIONS SHOWN

SUPPORT SECTION

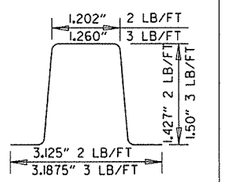

(U-CHANNEL)
STANDARD SUPPORT
ASSEMBLIES

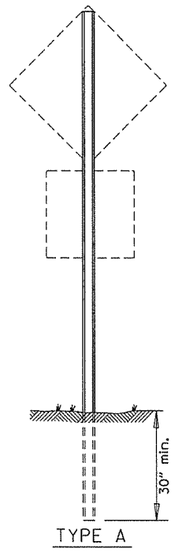

TYPE A

NOTE: LENGTH OF SIGN POSTS SHALL BE DETERMINED SO AS TO PROVIDE FOR MINIMUM VERTICAL CLEARANCES AS CALLED FOR IN THE SPECIFICATIONS PLUS A MINIMUM VERTICAL PENETRATION OF 30" IN THE SOIL.

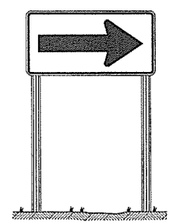

TYPE B

TYPE C

MINIMUM WEIGHT

TYPE A & B = 3 LBS./FT.
TYPE C = 2 LBS./FT.

STANDARD HIGHWAY SIGNS

SUPPORT ASSEMBLIES

DATE	REVISION	DATE FILMED
9-12-13	DELETED JOB NO. BLOCK; REVISED RI-3 TO RI-3P	
4-17-08	REVISED SIGN DESIGNATION - W3-1& W3-2	
4-10-03	REVISED W5-2, W8-3, OM-3; ADDED WI-8	
1-5-81	REDRAWN	960-1-15-81
9-15-78	ADDED W14-3	877-9-15-78
9-2-76	POST WT.	623-9-3-76
5-3-76	STEEL POST WT. FROM 2"-3"; ADDED S4-2 & S4-3	504-5-3-76
8-12-74	REV. HT. TYPE "C" ASSEMBLY	500-8-21-74
12-21-72	ADDED M6-2,3,4,5,6	500-12-21-72
12-1-72	ISSUED	562-12-1-72

ARKANSAS STATE HIGHWAY COMMISSION

STANDARD HIGHWAY SIGNS
AND SUPPORT ASSEMBLIES

STANDARD DRAWING SHS-1

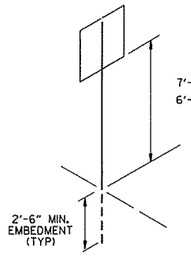

U-1

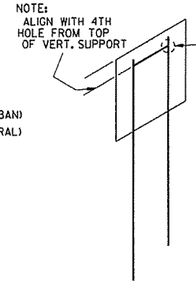

U-2

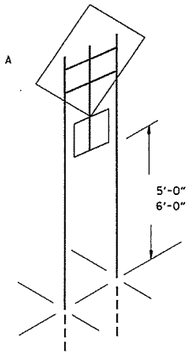

U-2 (A)

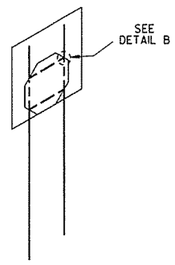

U-2 (B)

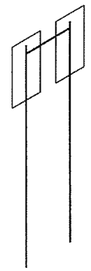
U-2 (1)

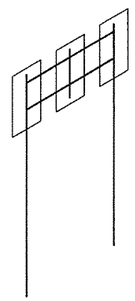
U-2 (2)

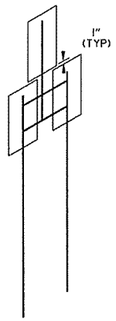

U-2 (3)

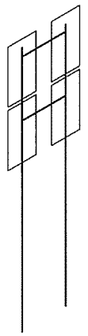
U-2 (4)

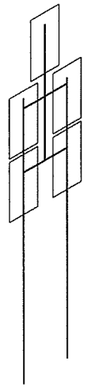
U-2 (5)

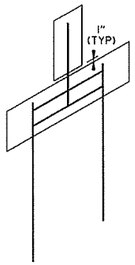

U-2 (6)

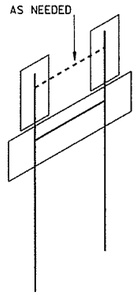

U-2 (7)

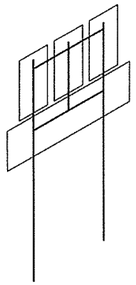
U-2 (8)

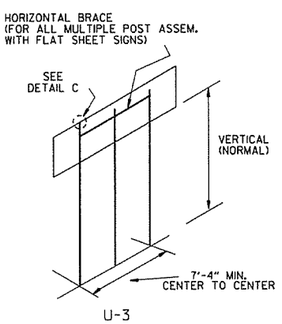

U-3

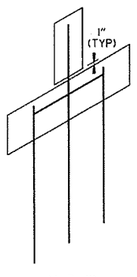

U-3 (1)

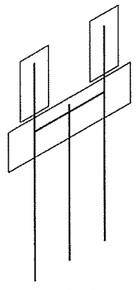
U-3 (2)

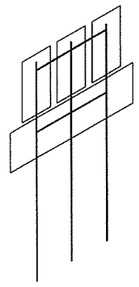
U-3 (3)

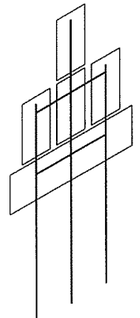
U-3 (4)

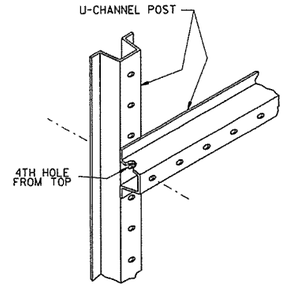

DETAIL A
SHOWING HORIZONTAL BRACE

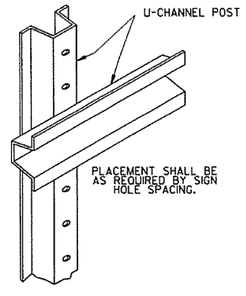

DETAIL B
SHOWING BACK-TO-BACK INSTALLATION

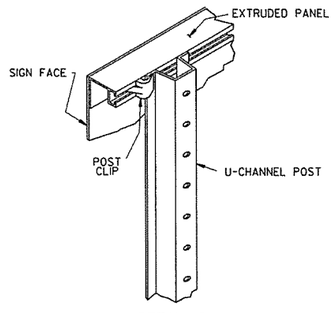

DETAIL C
SHOWING GUIDE SIGN MOUNTING WITH EXTRUDED PANELS

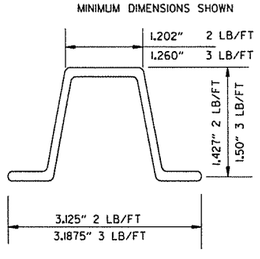

DETAIL C
U-CHANNEL POST

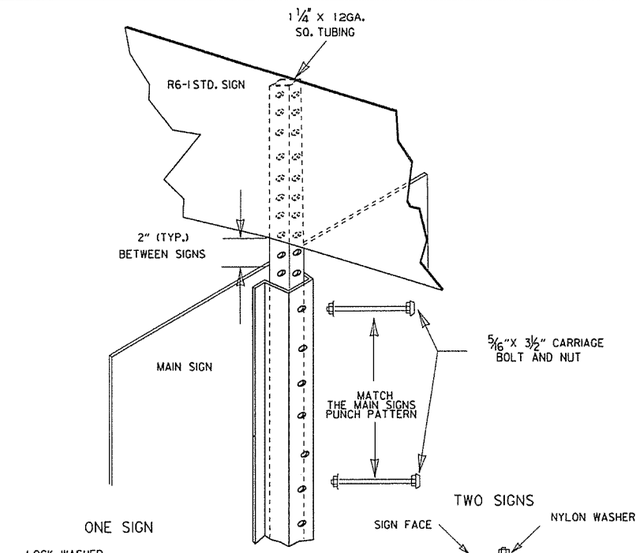

DETAIL E
R6-1 EXTENSION
FOR U-CHANNEL POST

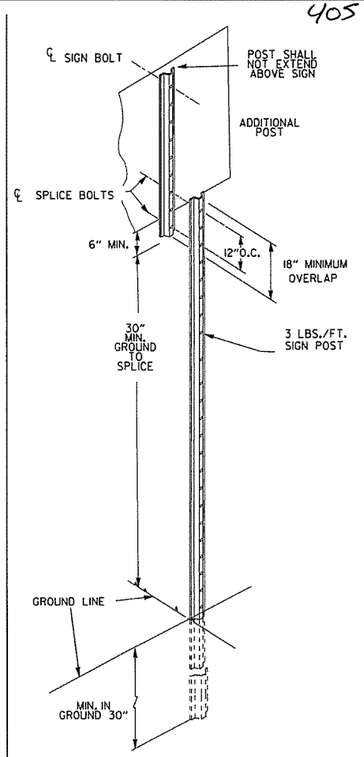

DETAIL F
DETAIL OF SPLICES

NOTES:

SIGNS AT LEAST 8' IN LENGTH MAY BE INSTALLED ON THREE 3 LB. POST. IN NO CASE SHALL THERE BE MORE THAN TWO 3 LB. POSTS WITHIN A 7' PATH.

SPLICES NECESSARY TO ATTAIN PROPER MOUNTING HEIGHT SHALL BE AS SHOWN IN DETAIL (F).

NORMAL INSTALLATIONS WILL REQUIRE $\frac{5}{16}$" DIA. CARRIAGE BOLTS TO MOUNT SIGNS TO POST AND TO ASSEMBLE THE VARIOUS POST SUPPORTS.

ALL SIGN POSTS SHALL BE PLUMB.

THE POST FOR "TYPE U" SUPPORTS SHALL BE HOT DIP GALVANIZED.

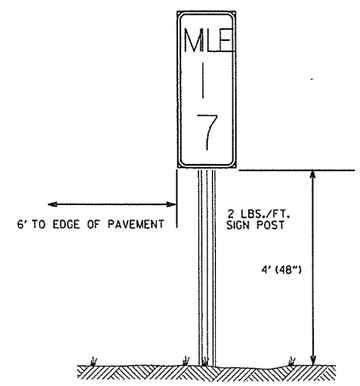

TYPICAL MILE MARKER INSTALLATION

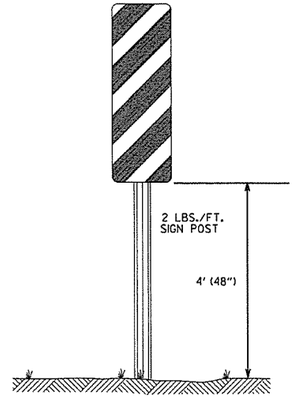

TYPICAL OM-3 INSTALLATION AT EDGE OF OBSTRUCTION

DATE	REVISION	FILMED
9-12-13	REVISED U-2(3), U-2(6), U-3(1), DETAIL D; ADDED DETAILS E & F; ADDED TYPICAL MARKERS	
10-9-03	REMOVED ROUND POST & REVISED SPACING	
10-12-95	MOVED UPPER SPLICE	
6-8-95	REVISED SPLICE DETAIL	6-8-95
2-2-95	REDRAWN	2-2-95

ARKANSAS STATE HIGHWAY COMMISSION

U-CHANNEL POST ASSEMBLIES

STANDARD DRAWING SHS-2

POST SIZE	BASE CONNECTION DATA											FUSE PLATE DATA									WT. OF EACH FUSE PLATE LBS.
	BOLT SIZE	BOLT TORQUE (INCH/LBS)	A	B	C	D	E	t_1	t_2	W	R	F	G		J	K	M	d_1	d_2	t_3	BOLT SIZE	
W 6X9												4 1/4"	2"		4"	2 1/4"	1"	9/16"	3/4"	1/4"	1/2" x 1 1/2"	1.01
W 6X12	5/8" x 2 3/4"	450"-680"	5"	2"	1 1/4"	2 3/4"	1 1/8"	3/4"	1/2"	1/4"	11/32"	5"	2 1/2"		6"	3 1/2"	1 1/2"	11/16"	1 1/4"	3/8"	5/8" x 2 1/4"	2.51
W 6X15												5 1/2"	2 1/2"		6"	3 1/2"	1 1/2"	11/16"	1 1/4"	3/8"	5/8" x 2 1/4"	2.51
W 8X18												5"	2 1/2"		5 1/4"	2 3/4"	1 1/4"	13/16"	1 1/16"	3/8"	3/4" x 2 1/4"	2.26
W 8X21												5 1/2"	2 1/2"		5 1/4"	2 3/4"	1 1/4"	13/16"	1"	1/2"	3/4" x 2 1/4"	3.35
W 10X22	3/4" x 3 1/2"	750"-1050"	6"	2 1/4"	1 7/8"	3 1/2"	1 1/4"	1"	3/4"	5/16"	11/32"	6"	3"		5 3/4"	2 3/4"	1 7/8"	13/16"	1 1/8"	1/2"	3/4" x 2 1/4"	4.03
W 10X26																						
W 12X26												6"	3"		6 1/2"	3 1/2"	1 5/8"	13/16"	1 5/16"	1/2"	3/4" x 2 1/4"	4.47

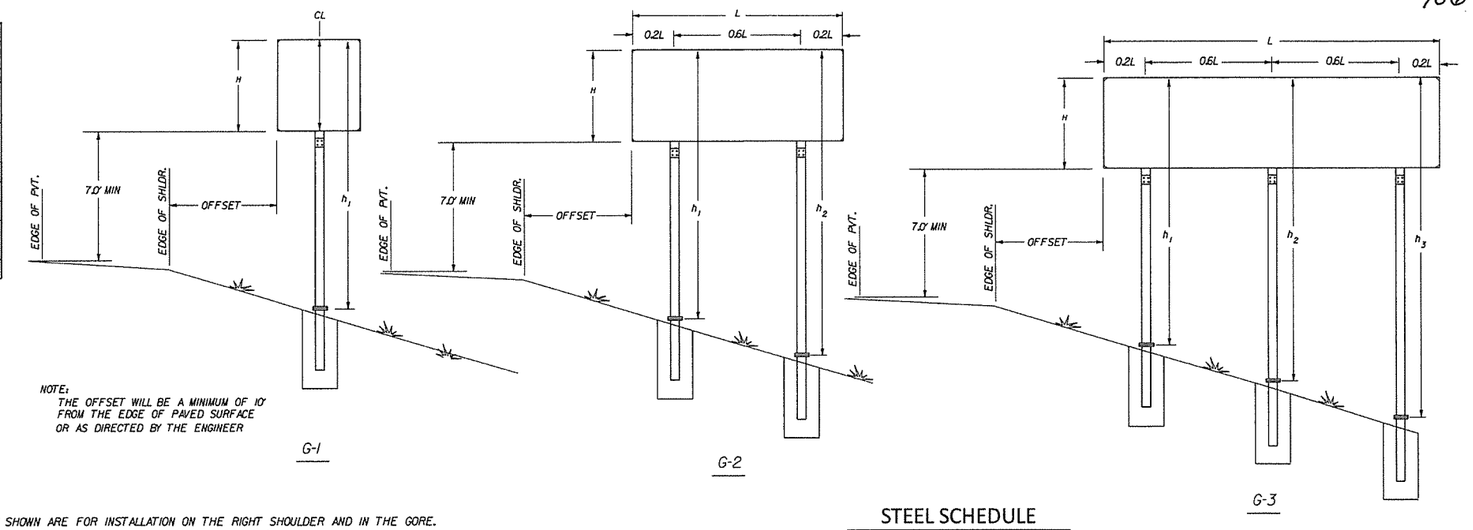

NOTE:
THE OFFSET WILL BE A MINIMUM OF 10' FROM THE EDGE OF PAVED SURFACE OR AS DIRECTED BY THE ENGINEER

G-1 G-2 G-3

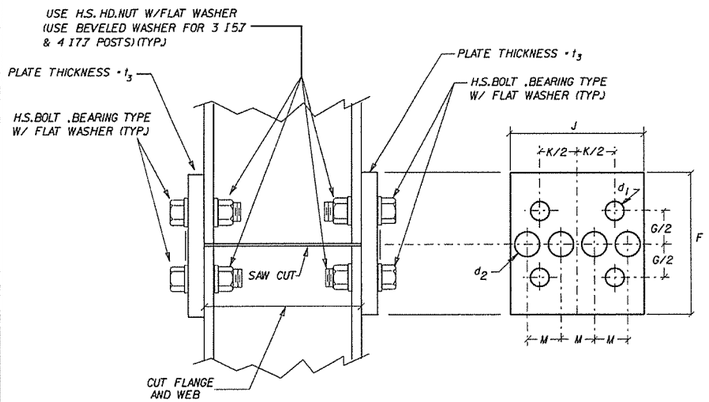

NOTE: SECTIONS SHOWN ARE FOR INSTALLATION ON THE RIGHT SHOULDER AND IN THE GORE. BOLT HOLES IN BASE PLATE ARE SLOTTED AND BEVELED AS SHOWN. USE H.S. BOLTS WITH HEX HD., HEX NUT AND THREE FLAT WASHERS FOR EACH BOLT. SEE TABLE FOR BOLT DIA. AND TORQUE.
NOTE: ASSEMBLE SIGN POST TO STUB POST USING THE BOLTS SPEC. IN THE TABLE AND AS SHOWN IN THE ELEVATION DETAILS. THERE SHALL BE THREE FLAT WASHERS ON EACH BOLT LOCATED AS SHOWN IN THE ELEVATIONS. USE A SHIM TO PLUMB THE SIGN POST. THEN TIGHTEN THE BOLTS USING A 12" TO 15" WRENCH UNTIL THE WASHERS AND SHIMS ARE SEATED AND THE BOLT THREADS ARE CLEAR, THEN LOOSEN EACH BOLT IN TURN AND RETIGHTEN IN A SYSTEMATIC ORDER TO THE PRESCRIBED TORQUE (SEE TABLE). THE BURR THREADS ADJACENT TO THE BACK SIDE OF THE NUT TO PREVENT LOOSENING.

NOTE: USE H.S. HEX HEAD BOLTS, HEX HEAD NUTS AND BEVEL OR FLAT WASHERS (WHERE REQ.) UNDER NUTS. ALL HOLES SHALL BE DRILLED. ALL PLATE CUTS SHALL PREFERABLY BE SAW CUTS. HOWEVER FLAME CUTTING WILL BE PERMITTED PROVIDED ALL EDGES ARE GROUND. METAL PROJECTING BEYOND THE PLANE OF THE PLATE FACE WILL NOT BE PERMITTED. STEEL FUSE PLATES SHALL CONFORM TO THE REQUIREMENTS OF ASTM-A36, ASTM-A441, ASTM-572 GRADE 50, OR ASTM-A588 MAY BE SUBSTITUTED FOR A36 AT THE OPTION OF THE FABRICATOR. STEEL USED SHALL HAVE AN ULTIMATE TENSILE STRENGTH NOT TO EXCEED 80 KSI.

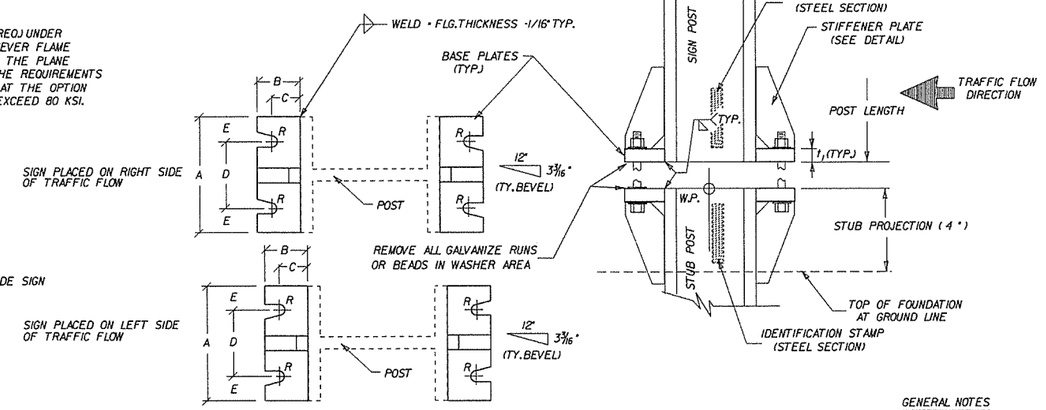

NOTE: BOLT HOLES, USED IN THE MOUNTING OF STANDARD SIGNS SHALL BE LOCATED IN THE FLANGE ADJACENT TO THE NEAR EDGE OF PAVEMENT FOR SINGLE POST ASSEMBLIES AND IN THE OUTSIDE FLANGES FOR MULTIPLE POST ASSEMBLIES.

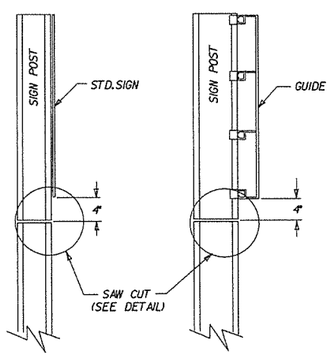

NOTE: POST SHALL BE SAW CUT AFTER GALVANIZING AND THE CUT SURFACE TREATED, AFTER PLATE IS INSTALLED AND ALL BOLTS FULLY TIGHTENED, WITH AN APPROVED ZINC SOLDER MEETING THE FEDERAL SPEC. O-G-93 (STICK ONLY).

STANDARD SIGNS GUIDE SIGNS

FUSE PLATE DETAILS

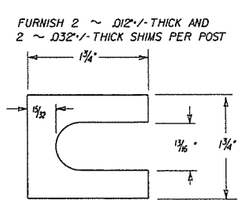

SHIM DETAIL

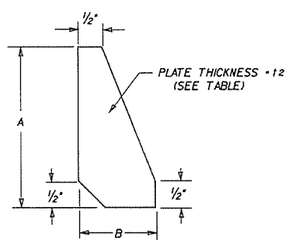

STIFFENER PLATE DETAIL

STEEL SCHEDULE

FOOTING DIAMETER	#3 TIE BARS		
	DIAMETER	BAR LENGTH	POUNDS
INCHES	INCHES	FEET	
18	12	4.39	1.65
24	18	5.96	2.24
30	24	7.53	2.83
36	30	9.1	3.42

FOOTINIG DEPTH	#6 STRAIGHT BARS		
	BAR LENGTH	NUMBER REQ'D.	POUNDS
FEET	FEET		
2.50	2.00	8	24.03
3.00	2.50	8	30.04
3.50	3.00	8	36.05
4.00	3.50	8	42.06
4.50	4.00	8	48.06
5.00	4.50	8	54.07
5.50	5.00	8	60.08
6.00	5.50	8	66.09
6.50	6.00	8	72.10
7.00	6.50	8	78.10
7.50	7.00	8	84.11
8.00	7.50	8	90.12

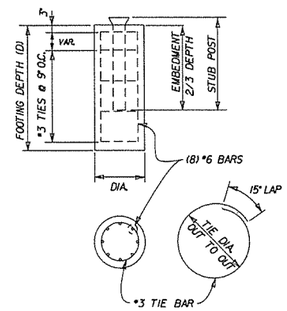

FOOTING QUANTITIES

FOOTINIG DEPTH	NUMBER TIE BARS REQ'D	18" DIAMETER		24" DIAMETER		30" DIAMETER		36" DIAMETER	
		CLASS S CONCRETE	REINF STEEL	CLASS S CONCRETE	REINF STEEL	CLASS S CONCRETE	REINF STEEL	CLASS S CONCRETE	REINF STEEL
FEET		CU. YD.	(GRADE 60)	CU. YD.	(GRADE 60)	CU. YD.	(GRADE 60)	CU. YD.	(GRADE 60)
2.50	4	0.16	31						
3.00	4	0.20	37						
3.50	5	0.23	44						
4.00	6	0.26	52	0.47	56				
4.50	6	0.29	58	0.52	62				
5.00	7	0.33	66	0.58	70	0.91	74		
5.50	8			0.64	78	1.00	83		
6.00	8			0.70	84	1.09	89	1.57	93
6.50	9					1.18	98	1.70	103
7.00	10					1.27	106	1.83	112
7.50	10							1.96	118
8.00	11							2.09	128

GENERAL NOTES

TIGHTEN THE HIGH STRENGTH BOLTS IN THE BASE CONNECTION ONLY TO THE TORQUE SHOWN. DO NOT OVERTIGHTEN.

BASE PLATES AND STIFFENER PLATES SHALL BE OF THE SAME MATERIAL AS THE PRIMARY SUPPORT POSTS WHICH THEY ARE WELDED.

REFER TO THE PLANS FOR FOOTING DIMENSIONS.

EACH STUB POST AND SIGN POST SHALL HAVE A PERMANENT IDENTIFYING STAMP WHICH SPECIFIES THE STEEL SECTION USED. IF THE CONTRACTOR ELECTS TO SHIP THE STUB POST SEPARATE FROM THE SIGN POST A MATCH MARK SYSTEM WILL BE REQUIRED.

SIGN POST AND STUB POST

			ARKANSAS STATE HIGHWAY COMMISSION
			DETAIL OF BREAKAWAY SIGN SUPPORTS FOR GUIDE SIGNS
9-12-13	ISSUED		STANDARD DRAWING SHS-3
DATE	REVISION	FILMED	

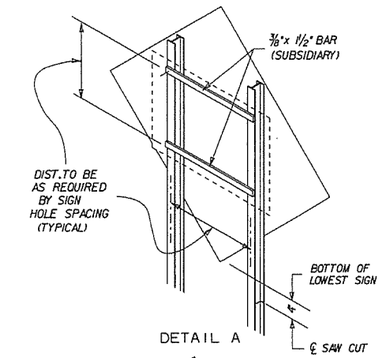

DETAIL A

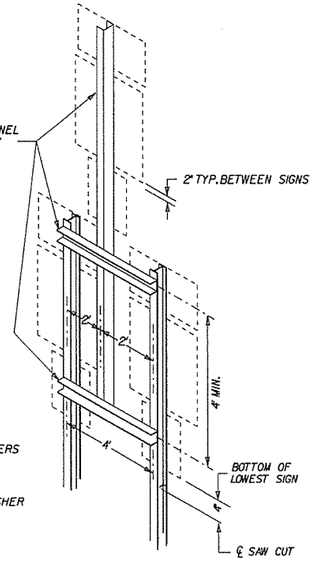

DETAIL D

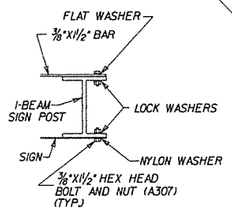

DETAIL F

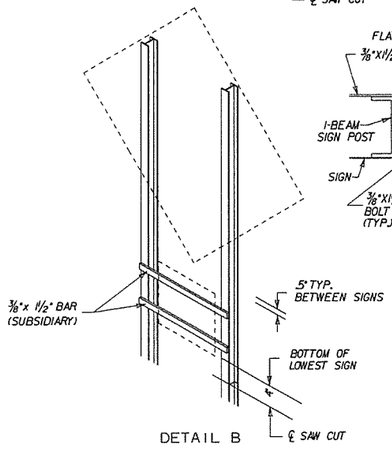

DETAIL B

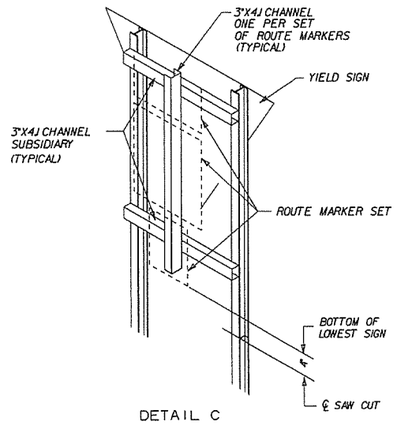

DETAIL C

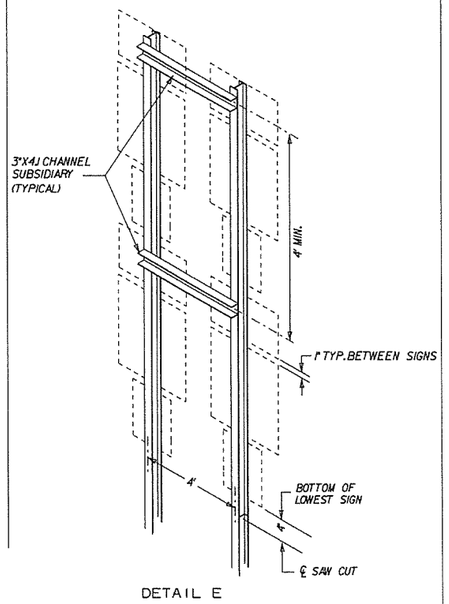

DETAIL E

NOTE

ALL ADDITIONAL MOUNTING HARDWARE, BOLTS, NUTS, CHANNELS AND BAR STRAPS REQUIRED TO MOUNT SECONDARY SIGNS WILL BE CONSIDERED TO BE SUPPLEMENTAL TO THE MAIN SIGN SUPPORT SPECIFIED. PAYMENT WILL BE CONSIDERED SUBSIDIARY TO THE MAIN SUPPORT.

THE GALVANIZED STEEL CHANNEL AND BAR SUPPORTS MAY BE AST M A-36.

REFER TO THE P.C. RUTLEDGE FORMULA ON PAGE 58 OF THE AASHTO PUBLICATION "STANDARD SPECIFICATIONS FOR STRUCTURAL SUPPORTS FOR HIGHWAY SIGNS, LUMINAIRES, AND TRAFFIC SIGNALS.

ALL BOLT HOLES SHALL BE 1/8" DIA. UNLESS OTHERWISE SHOWN.

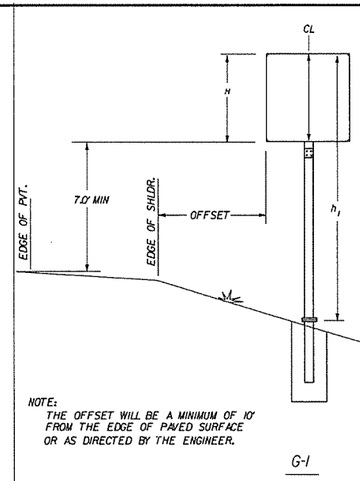

G-1

NOTE:
THE OFFSET WILL BE A MINUTE OF 10' FROM THE EDGE OF PAVED SURFACE OR AS DIRECTED BY THE ENGINEER.

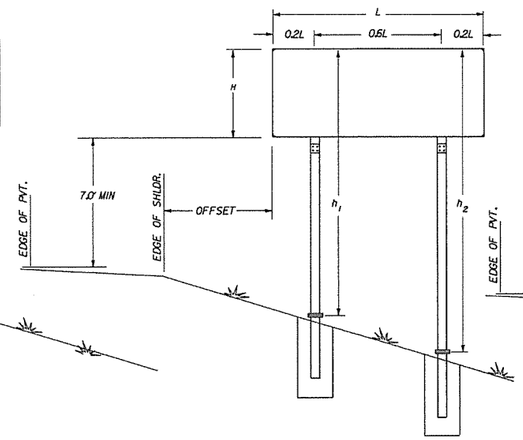

G-2

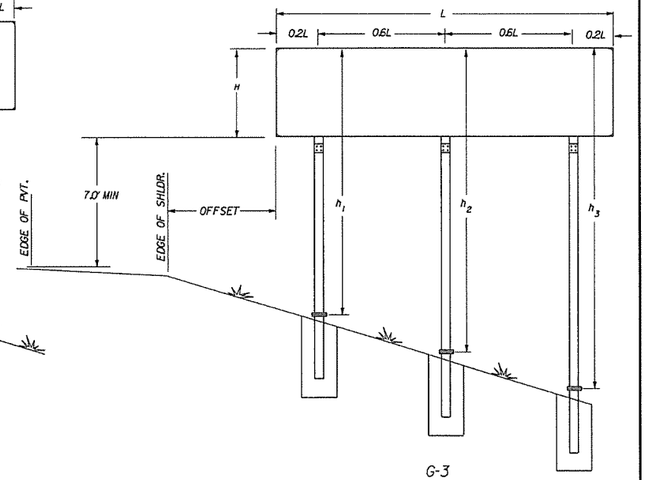

G-3

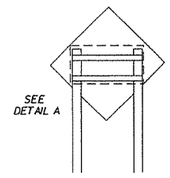

G2-1

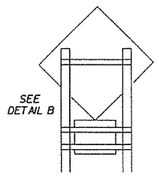

G2-2

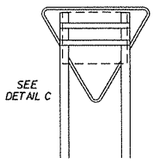

G2-3

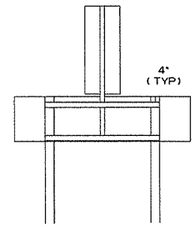

G2-4

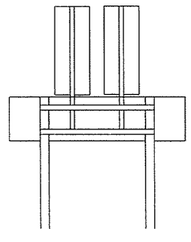

G2-5

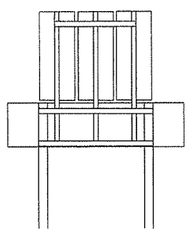

G2-6

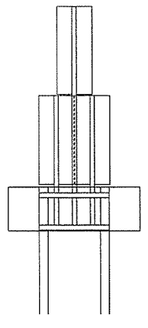

G2-7

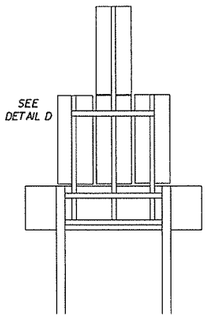

G2-8

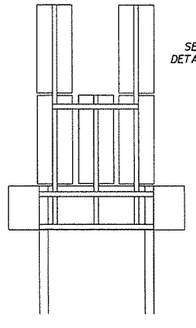

G2-9

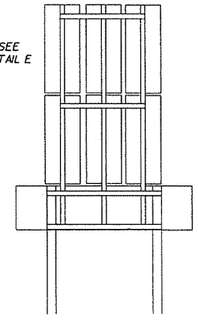

G2-10

			ARKANSAS STATE HIGHWAY COMMISSION
			DETAIL OF BREAKAWAY SIGN SUPPORTS FOR STANDARD SIGNS
9-12-13	ISSUED		STANDARD DRAWING SHS-4
DATE	REVISION	FILMED	



TYPICAL DETAIL

TYPE A

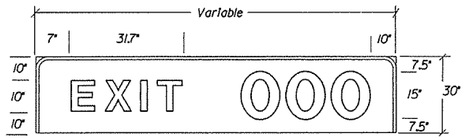

EXIT WITH 1 DIGIT 84"X30"=17.50 SF
EXIT WITH 2 DIGITS 96"X30"=20.0 SF
EXIT WITH 3 DIGITS 114"X30"=23.57 SF

TYPE B

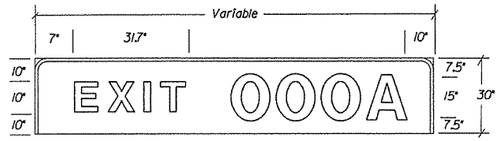

EXIT WITH 1 DIGIT PLUS "A"OR"B" 96"X30"=20.0 SF
EXIT WITH 2 DIGITS PLUS "A"OR"B" 114"X30"=23.57 SF
EXIT WITH 3 DIGITS PLUS "A"OR"B" 126"X30"=26.25 SF

TYPE C

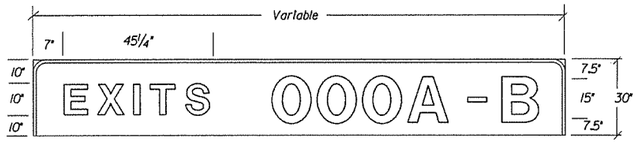

EXITS WITH 1 DIGIT PLUS "A"&"B" 132"X30"=27.50 SF
EXITS WITH 2 DIGITS PLUS "A"&"B" 150"X30"=31.25 SF
EXITS WITH 3 DIGITS PLUS "A"&"B" 168"X30"=35.00 SF

TYPE D

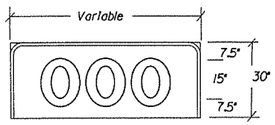

1 DIGIT 24"X30" =5.0 SF
2 DIGITS 42"X30" =8.75 SF
3 DIGITS 60"X30" =12.50 SF

TYPE E

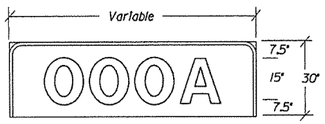

1 DIGIT PLUS "A"OR"B" 42"X30"=8.75 SF
2 DIGITS PLUS "A"OR"B" 60"X30"=12.50 SF
3 DIGITS PLUS "A"OR"B" 78"X30"=16.25 SF

EXIT PANEL DETAILS

NOTE: EXIT NUMBER PANELS SHALL HAVE WHITE LEGENDS AND BORDERS. THE BACK GROUND COLOR WILL BE AS USE SPECIFIES. SHEETING TYPE WILL BE THE SAME AS THE GUIDE SIGN WHICH THE EXIT PANEL IS ATTACHED OR AS SPECIFIED IN THE PLANS. PAYMENT FOR ALL POST CLIPS, BOLTS, AND ANGLES SHALL BE SUBSIDIARY TO THE ITEM "EXIT NUMBER PANEL".

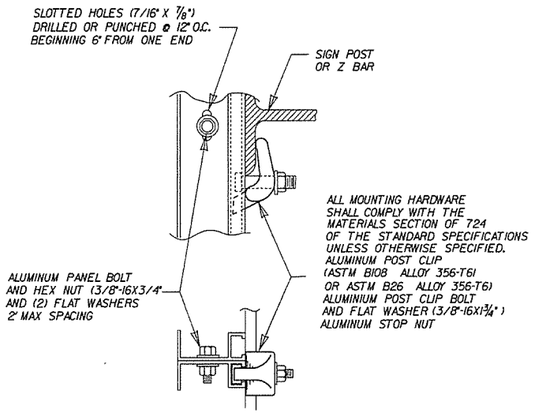

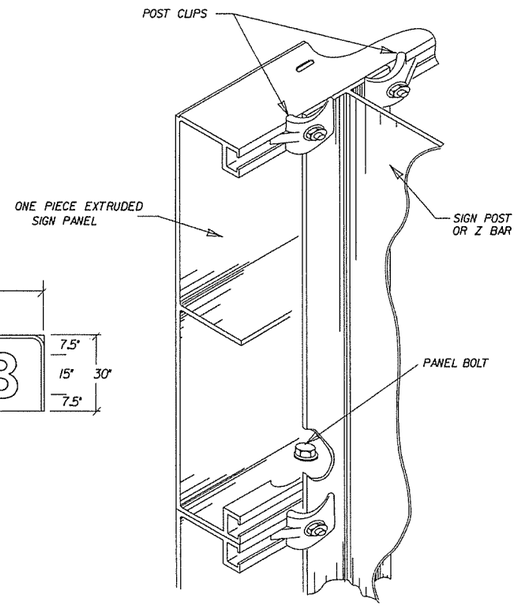

MOUNTING HARDWARE

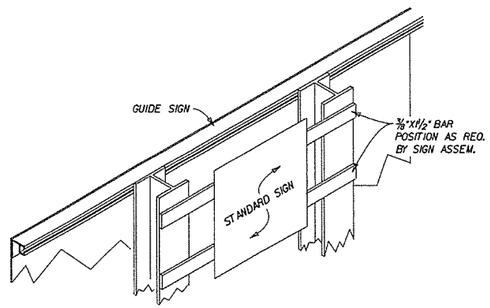

SECONDARY SIGN INSTALLATION ON BACKSIDE OF GUIDE SIGN

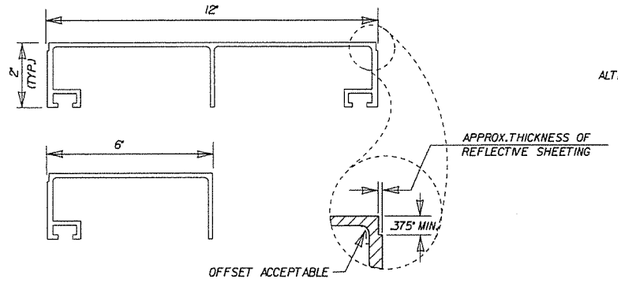

ONE PIECE EXTRUDED SIGN PANELS

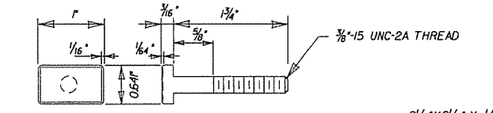

POST CLIP BOLT

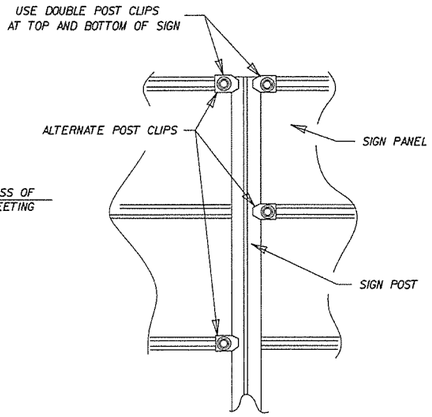

POST CLIP PLACEMENT

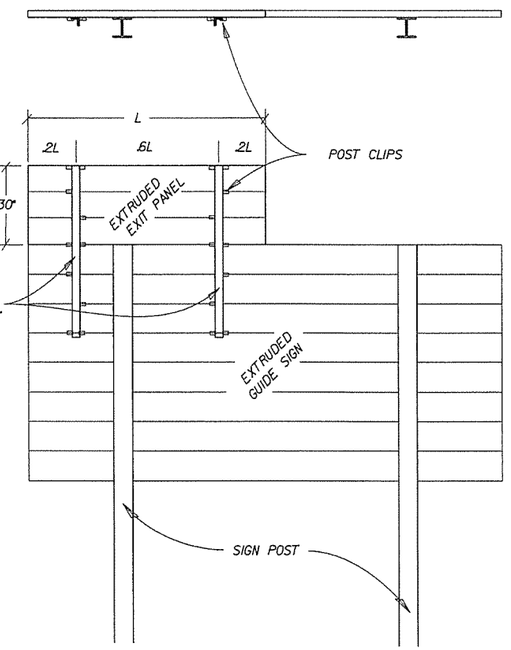

			ARKANSAS STATE HIGHWAY COMMISSION
			DETAILS OF GUIDE SIGN PANELS
9-12-13	ISSUED		STANDARD DRAWING SHS-5
DATE	REVISION	FILMED	

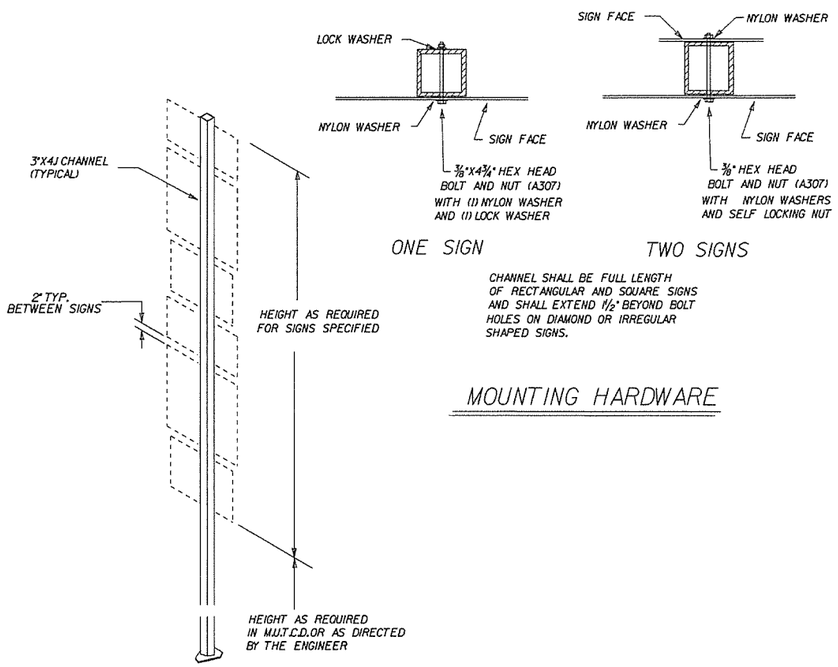

CHANNEL SHALL BE FULL LENGTH OF RECTANGULAR AND SQUARE SIGNS AND SHALL EXTEND 1½" BEYOND BOLT HOLES ON DIAMOND OR IRREGULAR SHAPED SIGNS.

MOUNTING HARDWARE

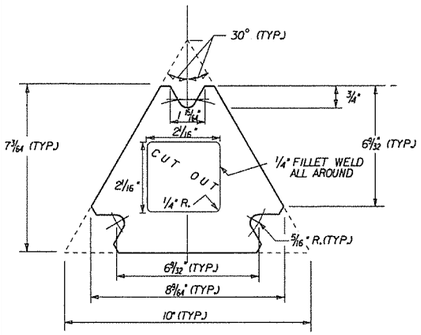

TOP PLATE

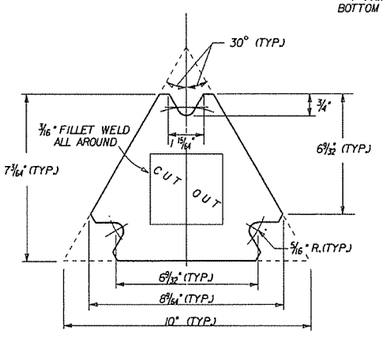

BOTTOM PLATE

GENERAL NOTES:

THE TOP PLATE OF TRIANGULAR SLIP BASES SHALL HAVE THE SAME EXTERIOR DIMENSIONS AS THE BOTTOM PLATE.

INSIDE DIAMETER OF THE SIGN POST SHALL BE CUT THROUGH THE CENTER OF THE TOP PLATE WITH THE HOLE EDGE BEVELED AS SHOWN. THE BEVEL END SHALL BE TANGENT TO THE BOLT HOLE. ANY MISALIGNMENT SHALL BE REMOVED BY GRINDING. FACE OF BEVEL SHALL BE FINISHED TO A MINIMUM SMOOTHNESS OF 1·500.

OTHER MASH COMPLIANT BREAKAWAY SIGN SUPPORTS THAT HAVE THE SAME TOP PLATE DIMENSIONS AND SUPPORT 2¼" X 2¼" SQUARE TUBE SIGN POSTS MAY BE SUBSTITUTED AS APPROVED BY THE ENGINEER.

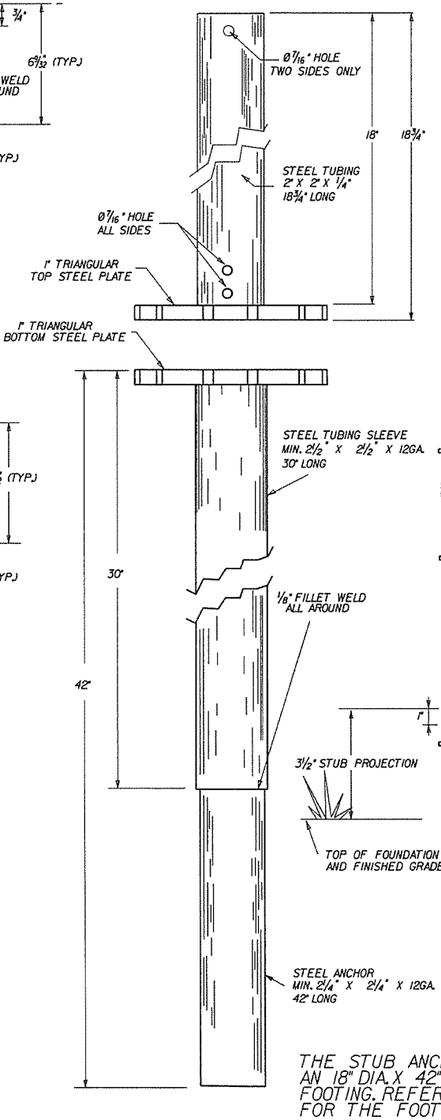

THE STUB ANCHOR SHALL BE SET IN AN 18" DIA. X 42" DEEP CONCRETE FOOTING. REFER TO STD. DRWG. SHS-3 FOR THE FOOTING DETAILS.

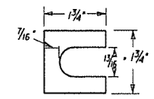

FURNISH (2) .012" THICK AND (2) .032" THICK SHIMS PER POST

SHIM DETAIL

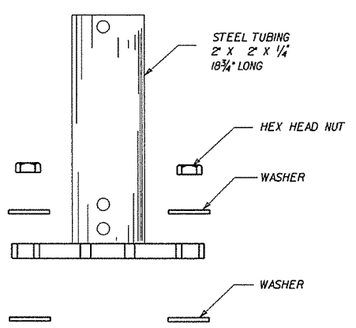

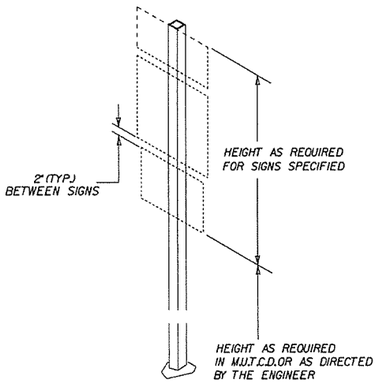

TYPE-I

BASIS OF ESTIMATE
APPROX. 100 lbs STEEL

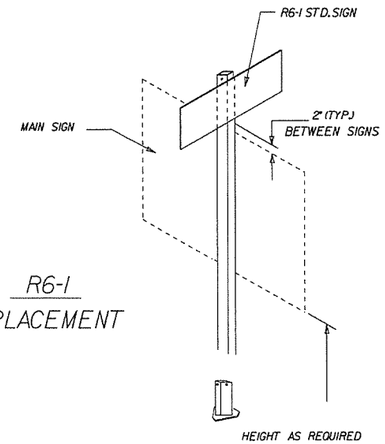

R6-1 PLACEMENT

			ARKANSAS STATE HIGHWAY COMMISSION
			DETAIL OF OMNI-DIRECTIONAL BREAKAWAY SIGN SUPPORTS
9-12-13	ISSUED		STANDARD DRAWING SHS-7
DATE	REVISION	FILMED	

LEGEND

⇦ DIRECTION OF TRAVEL DELINEATOR

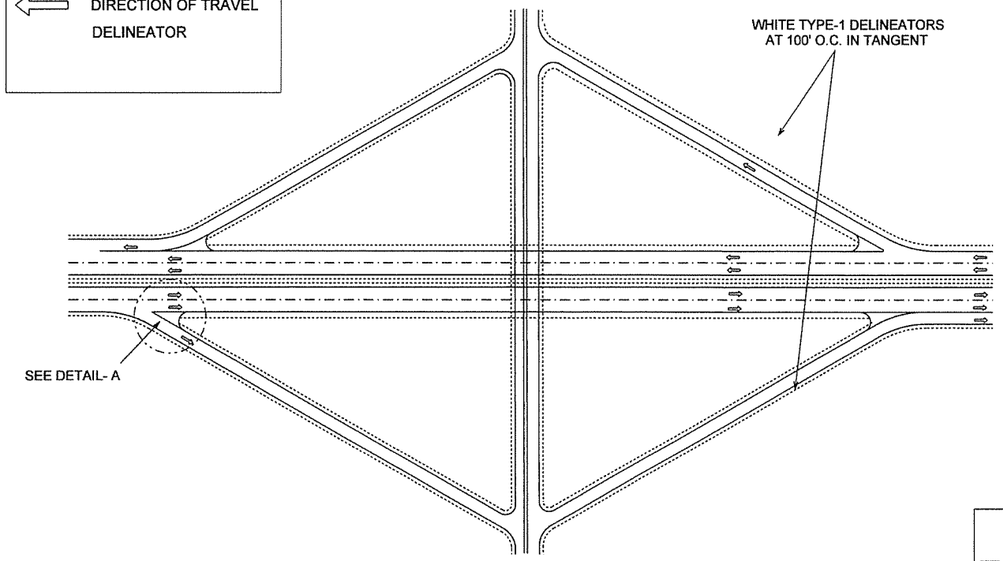

TYPICAL DIAMOND INTERCHANGE
(ALL RAMPS)

DELINEATORS PLACEMENT DETAIL

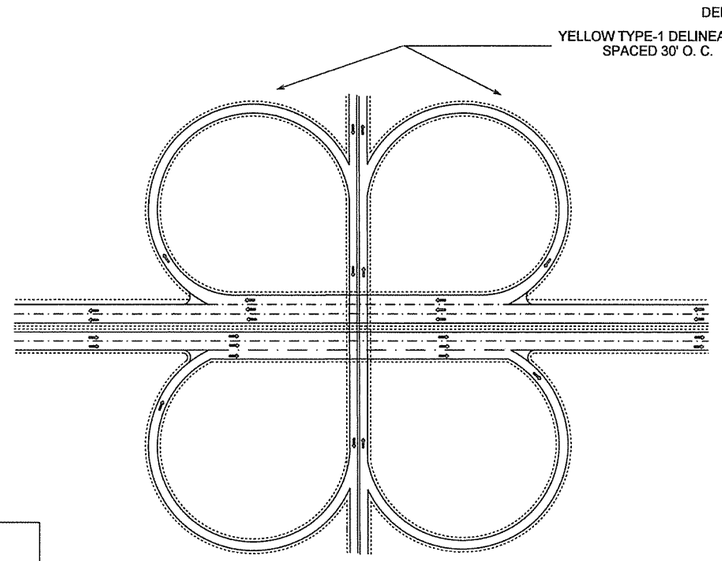

TYPICAL CLOVERLEAF INTERCHANGE
(ALL RAMPS)

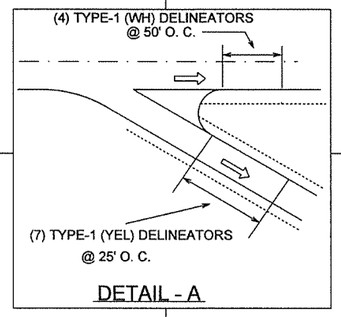

DETAIL - A

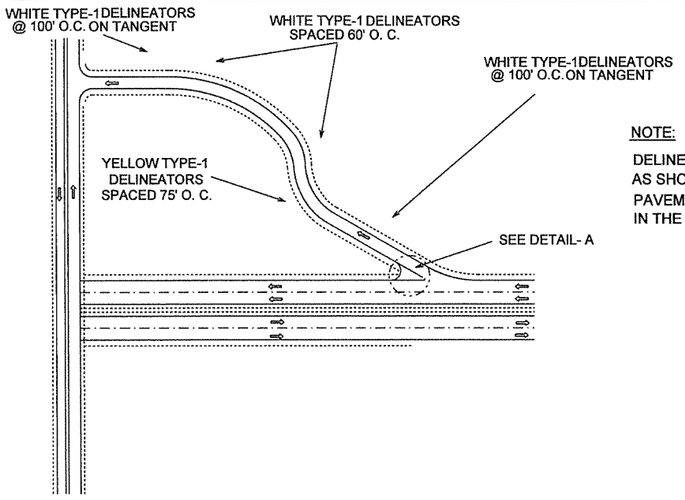

MODIFIED DIAMOND INTERCHANGE

NOTE:

DELINEATORS SHALL ONLY BE INSTALLED AS SHOWN IN DETAIL-A IF RAISED PAVEMENT MARKERS ARE NOT PRESENT IN THE GORE OF THE OFF RAMPS.

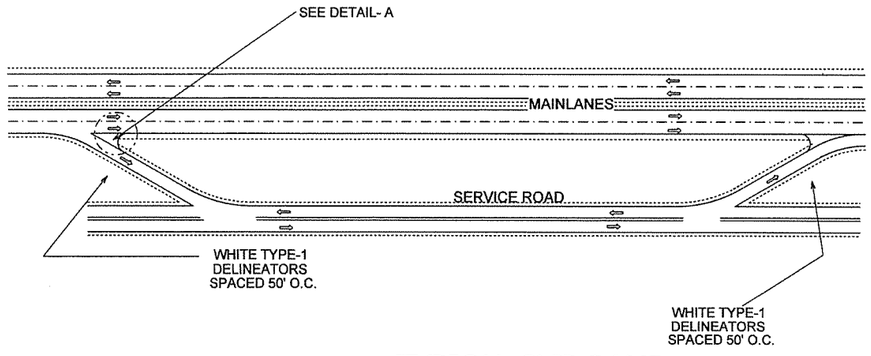

TYPICAL SLIP RAMP

GUIDANCE:

DELINEATORS SHOULD BE MOUNTED ON SUITABLE SUPPORTS SO THAT THE TOP OF THE HIGHEST RETROREFLECTOR IS 1.2 M (4 FT) ABOVE THE NEAR ROADWAY EDGE. THEY SHOULD BE PLACED 0.6 TO 2.4 M (2 TO 8 FT) OUTSIDE THE OUTER EDGE OF THE SHOULDER, OR IF APPROPRIATE, IN LINE WITH THE ROADSIDE BARRIER THAT IS 2.4 M (8 FT) OR LESS OUTSIDE THE OUTER EDGE OF THE SHOULDER.

			ARKANSAS STATE HIGHWAY COMMISSION
			TYPICAL DELINEATOR PLACEMENT ALONG THE INTERSTATE SYSTEM
9-12-13	ISSUED		STANDARD DRAWING SHS-8
DATE	REVISION	FILMED	

R1-1



STANDARD 30"X30"
EXPRESSWAY 36"X36"
SPECIAL 48"X48"

R1-2



STD. 36"X36"X36"
EXPWY. 48"X48"X48"
FWY. 60"X60"X60"

R2-1

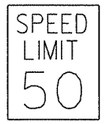

STD. 24"X30"
EXPWY. 36"X48"
FWY. 48"X60"

R2-5A

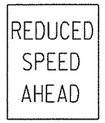

STD. 24"X30"
EXPWY. 36"X48"
FWY. 48"X60"

R2-5C



STD. 24"X30"
EXPWY. 36"X48"
FWY. 48"X60"

R4-1



STD. 24"X30"
EXPWY. 36"X48"
FWY. 48"X60"

R4-2



STD. 24"X30"
EXPWY. 36"X48"
FWY. 48"X60"

R5-1



STD. 30"X30"
EXPWY. 36"X36"
SPECIAL 48"X48"

RII-2



48"X30"

RII-3A

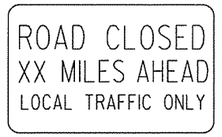

60"X30"

RII-4

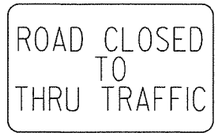

60"X30"

RSP-1



48"X30"

WI-1

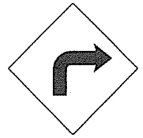

STD. 36"X36"
FWY. 48"X48"

WI-2



STD. 36"X36"
FWY. 48"X48"

WI-3



STD. 48"X48"

WI-4



STD. 48"X48"

WI-6

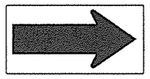

STD. 48"X24"
SPECIAL 60"X30"

WI-8

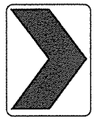

STD. 18"X24"
SPECIAL 24"X30"
EXPWY. 30"X36"
FWY. 36"X48"

W3-1

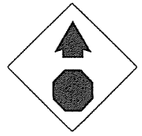

STD. 36"X36"
SPECIAL 48"X48"

W3-2



STD. 36"X36"
SPECIAL 48"X48"

W4-2

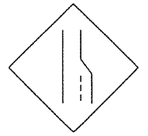

STD. 36"X36"
FWY. 48"X48"

W5-1



STD. 36"X36"
SPECIAL 48"X48"

W6-3



EXPWY. 36"X36"
SPECIAL 48"X48"

W8-7



EXPWY. 36"X36"
FWY. 48"X48"

W9-2



STD. 36"X36"
FWY. 48"X48"

WI3-1



STD. 24"X24"

W20-1



STD. 48"X48"

W20-2



STD. 48"X48"

W20-3



STD. 48"X48"

W20-4



STD. 48"X48"

W20-5



STD. 48"X48"

W20-7a



STD. 36"X36"
FWY. 48"X48"

W21-2



STD. 30"X30"
SPECIAL 36"X36"

W21-5



STD. 30"X30"
SPECIAL 36"X36"

W24-1



STD. 36"X36"

WI-4b



STD. 48"X48"

R56-1



STD. 18"X18"

W8-11



STD. 36"X36"
FWY. 48"X48"

W8-9



STD. 36"X36"
FWY. 48"X48"

G20-1

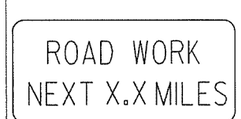

60"X24"

G20-2

48"X24"

OM-3L OM-3R

12"X36"

M4-9

STD. 30"X24"
SPECIAL 48"X36"
SPECIAL 60"X48"

M4-10

48"X18"

R55-1

36"X60"

* USE 6" C LETTERS
** USE 4" D LETTERS

ADVANCE DISTANCES
(XXXX)

500 FT	½ MILE
1000 FT	¾ MILE
1500 FT	1 MILE
	AHEAD

GENERAL NOTES:

1. ALL TRAFFIC CONTROL DEVICES USED ON ROAD CONSTRUCTION SHALL CONFORM TO THE MANUAL ON UNIFORM TRAFFIC CONTROL DEVICES, LATEST EDITION, AND TO THE STANDARD HIGHWAY SIGNS, LATEST EDITION, OR AS APPROVED BY THE FEDERAL HIGHWAY ADMINISTRATION.

2. TRAFFIC CONTROL DEVICES SHALL BE SET UP JUST BEFORE THE START OF CONSTRUCTION OPERATIONS AND SHALL BE PROPERLY MAINTAINED DURING THE TIME SUCH CONDITIONS EXIST. THEY SHALL REMAIN IN PLACE ONLY AS LONG AS NEEDED AND REMOVED THEREAFTER.

3. EXISTING SIGNS AND CONSTRUCTION SIGNS SHALL BE KEPT IN PROPER POSITION, AND BE CLEAN AND LEGIBLE AT ALL TIMES. SIGNS THAT DO NOT APPLY TO EXISTING CONDITIONS SHALL BE REMOVED. SIGNS THAT ARE DAMAGED, DEFACED, OR THAT ACCUMULATE DIRT DURING CONSTRUCTION SHALL BE CLEANED, REPAIRED, OR REPLACED.

• 4. SIGNS ARE USUALLY MOUNTED ON A SINGLE POST, ALTHOUGH THOSE WIDER THAN 36" OR LARGER THAN 10 SQ. FT. SHALL BE MOUNTED ON TWO POSTS OR ABOVE A TYPE III BARRICADE.

• 5. SIGN POSTS DIRECT BURIED IN SOIL SHALL BE 2 LB. MINIMUM CHANNEL POST OR 4"x4" WOOD POSTS. CHANNEL POSTS SHALL BE PAINTED GREEN. WOOD POSTS SHALL BE PAINTED WHITE. ALL POSTS SHALL BE NEATLY CONSTRUCTED, AND SHALL BE REPLUMBED, CLEANED, OR REPAIRED AS NEEDED FOR THE DURATION OF THE JOB. THERE SHALL NOT BE MORE THAN 2 POSTS IN A 7' PATH FOR WOOD OR CHANNEL POSTS. ANY CHANNEL POST SPLICE SHALL BE IN ACCORDANCE WITH STANDARD DRAWING TC-3.

6. POST MOUNTED SIGNS IN RURAL AREAS SHALL BE CONSTRUCTED WITH THE NEAR EDGE OF THE SIGN FROM 6 TO 12 FEET FROM THE PAVEMENT EDGE. SIGNS IN URBAN AREAS AND BARRICADE MOUNTED SIGNS SHALL BE MOUNTED A MINIMUM OF 2 FEET FROM THE PAVEMENT EDGE.

7. ALL POST AND BARRICADE MOUNTED SIGNS MOUNTED IN URBAN AREAS SHALL BE MOUNTED A MINIMUM DISTANCE OF 7' FROM THE BOTTOM OF THE SIGN TO THE ROADWAY SURFACE. ALL POST AND BARRICADE MOUNTED SIGNS MOUNTED IN RURAL AREAS SHALL BE MOUNTED A MINIMUM DISTANCE OF 7' FROM THE BOTTOM OF THE SIGN TO THE ROADWAY SURFACE, EXCEPT A MINIMUM OF 6' SHALL BE USED WHEN MOUNTING AN ADVISORY SIGN BELOW A WARNING SIGN. TEMPORARY SIGNS MAY BE MOUNTED ON PORTABLE SUPPORTS FOR INTERMEDIATE TERM STATIONARY WORK CONDITIONS. THE SIGNS MINIMUM MOUNTING HEIGHT SHALL BE 5'. RETROREFLECTIVE DEVICES SHALL BE USED. TEMPORARY SIGNS MAY BE MOUNTED ON PORTABLE SUPPORTS FOR SHORT-TERM, SHORT DURATION, AND MOBILE CONDITIONS. THEY SHALL BE NO LESS THAN ONE (1) FOOT ABOVE THE TRAVELED WAY. LONG-TERM STATIONARY SIGNS SHALL BE DIRECT BURIED IN SOIL, UNLESS CONDITIONS NECESSITATE THE USE OF PORTABLE SIGNS, OR AS APPROVED BY THE ENGINEER. CONCRETE PADS, CONCRETE OR ROCK BALLAST, OR OTHER SOLID MATERIALS SHALL NOT BE UTILIZED WITH PORTABLE SIGN SUPPORTS.

8. FLAGGERS SHALL USE REFLECTORIZED STOP-SLOW PADDLES. FLAGS MAY BE USED ONLY FOR EMERGENCY SITUATIONS.

9. MOST OF THE SIGNS SHOWN ARE ORIENTED TO THE RIGHT. HOWEVER, THIS DOES NOT PRECLUDE THE USE OF MIRROR IMAGES OF THESE SIGNS WHERE THE REVERSE ORIENTATION MIGHT BETTER CONVEY TO MOTORISTS THE PROPER DIRECTION OF MOVEMENT.

10. R55-1 SIGNS SHALL BE PLACED AT LEAST 1500' BUT NOT MORE THAN 1 MILE IN ADVANCE OF THE WORK ZONE. IF A SPEED LIMIT REDUCTION IS IN EFFECT, THE SIGN SHALL BE PLACED A MINIMUM OF 500' IN ADVANCE OF THE "REDUCED SPEED AHEAD" SIGN.

• NOTE: SUPPORTS FOR SIGNS, BARRICADES, AND VERTICAL PANELS THAT ARE DIFFERENT FROM THE REQUIREMENTS SHOWN IN NOTES 4 & 5, BUT MEET THE REQUIREMENTS OF NCHRP-350 OR MANUAL FOR ASSESSING SAFETY HARDWARE (MASH), WILL BE ACCEPTED. COMPLIANCE WITH THE REQUIREMENTS OF NCHRP-350 OR MANUAL FOR ASSESSING SAFETY HARDWARE (MASH) IS REQUIRED FOR ALL PROJECTS.

DATE	REVISION	FILMED
12-15-11	REVISED W24-1	
11-17-10	DELETED W8-9a & ADDED W8-9	
10-15-09	ADDED REFERENCE TO MASH & ADDED SIGN W24-1	
4-17-08	REVISED SIGN DESIGNATIONS	
11-18-04	REVISED NOTES	
10-9-03	REVISED NOTE 1	
11-16-01	REVISED NOTE 7	
9-28-00	REVISED NOTE	
11-18-98	ADDED NOTE	
6-26-97	REVISED NOTE 5	
4-03-97	REVISED NOTE 5	
10-18-96	ADDED CONTROLLED ACCESS HWY. SIGN & TO NOTE 7	
10-12-95	ADDED R55-1	
6-8-95	REVISED TO CORRECT SIGN ILLUSTRATIONS	6-8-95
2-2-95	REVISED PER PART VI, MUTCD SEPT. 3, 1993	
8-15-91	DRAWN AND PLACED IN USE	

ARKANSAS STATE HIGHWAY COMMISSION

STANDARD TRAFFIC CONTROLS FOR HIGHWAY CONSTRUCTION

STANDARD DRAWING TC-1

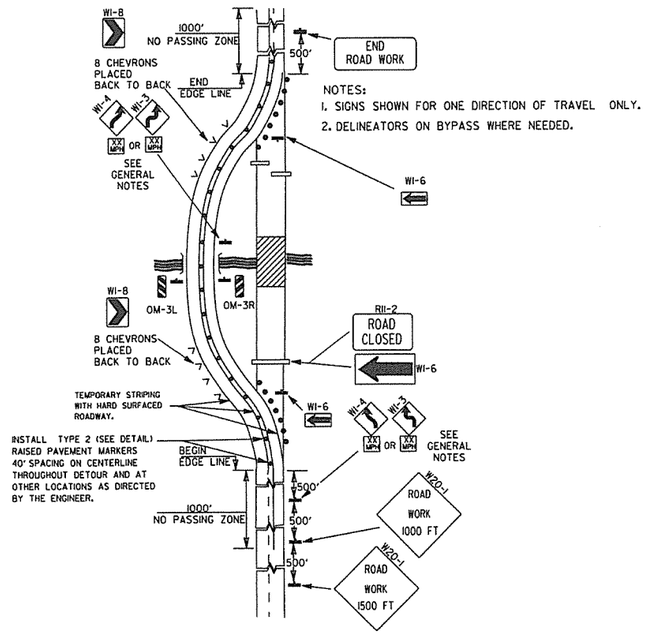

NOTES:
1. SIGNS SHOWN FOR ONE DIRECTION OF TRAVEL ONLY.
2. DELINEATORS ON BYPASS WHERE NEEDED.

(A) TYPICAL APPLICATION OF TRAFFIC CONTROL DEVICES ON A 2-LANE HIGHWAY WHERE THE ENTIRE ROADWAY IS CLOSED AND A BYPASS DETOUR IS PROVIDED.

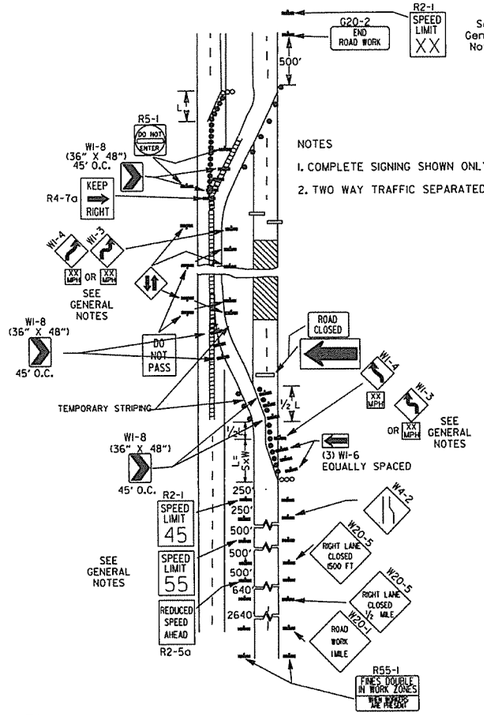

NOTES
1. COMPLETE SIGNING SHOWN ONLY IN CROSSOVER DIRECTION.
2. TWO WAY TRAFFIC SEPARATED WITH POSITIVE BARRIER.

(B) TYPICAL APPLICATION - 4-LANE DIVIDED ROADWAY WHERE ONE ROADWAY IS CLOSED.

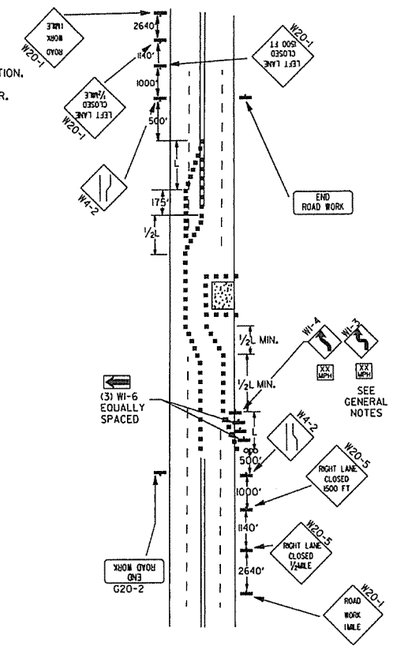

(C) TYPICAL APPLICATION - 4-LANE UNDIVIDED ROADWAY WHERE HALF OF THE ROADWAY IS CLOSED.

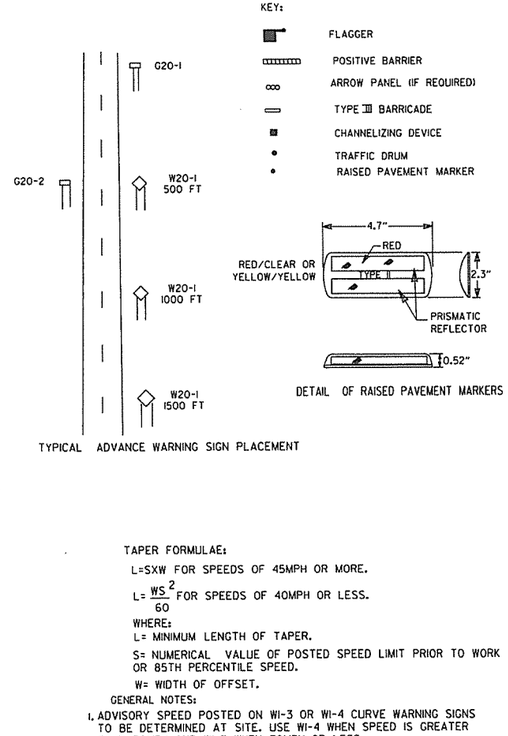

DETAIL OF RAISED PAVEMENT MARKERS

TYPICAL ADVANCE WARNING SIGN PLACEMENT

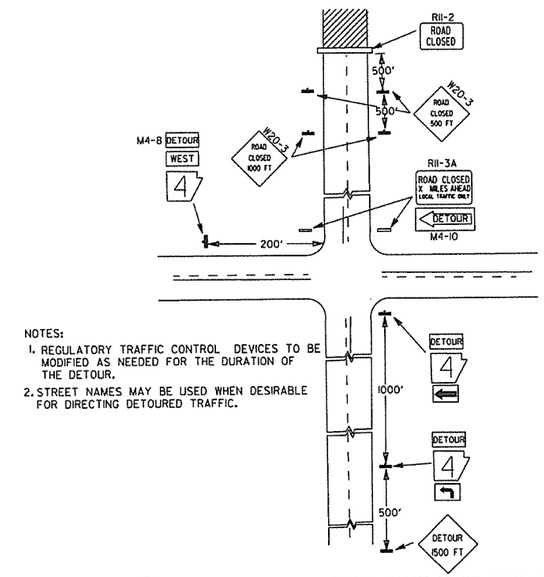

NOTES:
1. REGULATORY TRAFFIC CONTROL DEVICES TO BE MODIFIED AS NEEDED FOR THE DURATION OF THE DETOUR.
2. STREET NAMES MAY BE USED WHEN DESIRABLE FOR DIRECTING DETOURED TRAFFIC.

(D) TYPICAL APPLICATION - ROADWAY CLOSED BEYOND DETOUR POINT.

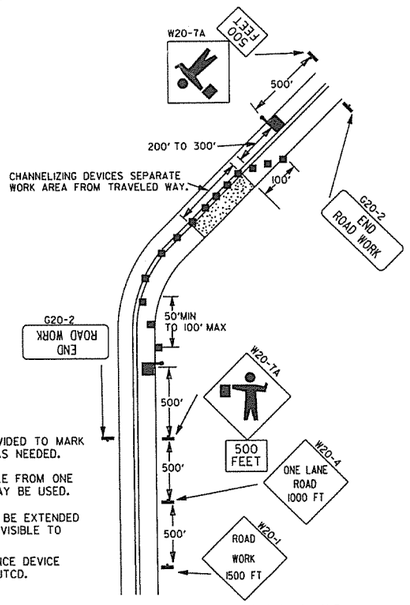

NOTES:
1. FLOOD LIGHTS SHOULD BE PROVIDED TO MARK FLAGGER STATIONS AT NIGHT AS NEEDED.
2. IF ENTIRE WORK AREA IS VISIBLE FROM ONE STATION, A SINGLE FLAGGER MAY BE USED.
3. CHANNELIZING DEVICES ARE TO BE EXTENDED TO A POINT WHERE THEY ARE VISIBLE TO APPROACHING TRAFFIC.
4. AUTOMATED FLAGGER ASSISTANCE DEVICE (AFAD) OPTIONAL. REFER TO MUTCD.

(E) TYPICAL APPLICATION OF TRAFFIC CONTROL DEVICES ON 2-LANE HIGHWAY WHERE ONE LANE IS CLOSED AND FLAGGING IS PROVIDED.

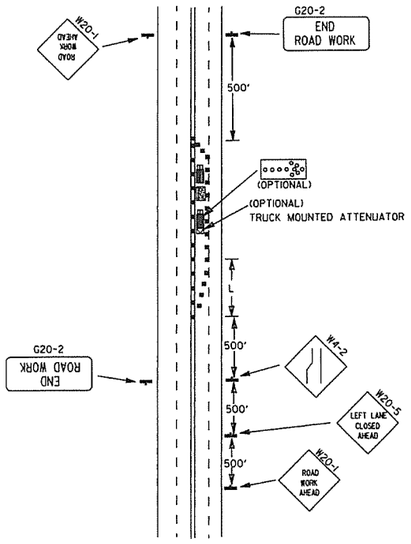

(F) TYPICAL APPLICATION - 4-LANE UNDIVIDED ROADWAY WITH INSIDE LANE CLOSED.

TAPER FORMULAE:

L=SXW FOR SPEEDS OF 45MPH OR MORE.

$L = \frac{WS^2}{60}$ FOR SPEEDS OF 40MPH OR LESS.

WHERE:
L= MINIMUM LENGTH OF TAPER.
S= NUMERICAL VALUE OF POSTED SPEED LIMIT PRIOR TO WORK OR 85TH PERCENTILE SPEED.
W= WIDTH OF OFFSET.

GENERAL NOTES:

1. ADVISORY SPEED POSTED ON W1-3 OR W1-4 CURVE WARNING SIGNS TO BE DETERMINED AT SITE. USE W1-4 WHEN SPEED IS GREATER THAN 30MPH AND W1-3 WHEN 30MPH OR LESS.
2. WHEN THE EXISTING SPEED LIMIT IS 55MPH AND THE PLANS REQUIRE A SPEED LIMIT OF 45MPH, THE R2-1(55) SHALL BE OMITTED AND THE R2-5A SHALL BE INSTALLED AT THAT LOCATION. ADDITIONAL R2-1 45MPH SPEED LIMIT SIGNS SHALL BE INSTALLED AT A MAXIMUM OF 1MILE INTERVALS. AT THE END OF THE WORK AREA A R2-1(XX) SHALL BE INSTALLED TO MATCH ORIGINAL SPEED LIMIT.
3. WHEN THE EXISTING SPEED LIMIT IS 65MPH AND THE PLANS REQUIRE A SPEED LIMIT OF 55MPH, THE R2-1(45) SHALL BE OMITTED. ADDITIONAL R2-1 55MPH SPEED LIMIT SIGNS SHALL BE INSTALLED AT A MAXIMUM OF 1MILE INTERVALS. AT THE END OF THE WORK AREA A R2-1(XX) SHALL BE INSTALLED TO MATCH ORIGINAL SPEED LIMIT.
4. THE MAXIMUM SPACING BETWEEN CHANNELIZING DEVICES IN A TAPER SHOULD BE APPROXIMATELY EQUAL IN FEET TO THE SPEED LIMIT. BEYOND THE TAPER, MAXIMUM SPACING SHALL BE TWO TIMES THE SPEED LIMIT, OR AS DIRECTED BY THE ENGINEER.
5. WARNING LIGHTS AND/OR FLAGS MAY BE MOUNTED TO SIGNS OR CHANNELIZING DEVICES AT NIGHT AS NEEDED.
6. PAVEMENT MARKINGS NO LONGER APPLICABLE WHICH MIGHT CREATE CONFUSION IN THE MINDS OF VEHICLE OPERATORS SHALL BE REMOVED OR OBLITERATED AS SOON AS PRACTICABLE.
7. TRAILER MOUNTED DEVICES SUCH AS ARROW PANELS AND PORTABLE CHANGEABLE MESSAGE SIGNS SHALL BE DELINEATED BY AFFIXING CONSPICUITY MATERIAL IN A CONTINUOUS LINE ON THE FACE OF THE TRAILER. WHEN PLACED ON OR ADJACENT TO THE SHOULDER AND NOT BEHIND A POSITIVE BARRIER, THESE DEVICES SHALL BE DELINEATED BY PLACING FIVE (5) TRAFFIC DRUMS, EQUALLY SPACED ALONG THE TRAFFIC SIDE OF THE DEVICE.

DATE	REVISION	FILMED
9-12-13	REVISED DETAIL OF RAISED PAVEMENT MARKERS	
3-8-10	ADDED (AFAD)	
11-20-08	REVISED SIGN DESIGNATIONS	
11-18-04	ADDED GENERAL NOTE	
10-18-96	ADDED R55-1	
4-26-96	CORRECTED (G) BEHIND G20-2	
6-8-95	CORRECTED SIGN IDENT. ON W1-4A	6-8-95
2-2-95	REVISED PER PART VI, MUTCD, SEPT. 3, 1993	
8-15-91	DRAWN AND PLACED IN USE	

ARKANSAS STATE HIGHWAY COMMISSION

STANDARD TRAFFIC CONTROLS FOR HIGHWAY CONSTRUCTION

STANDARD DRAWING TC-2

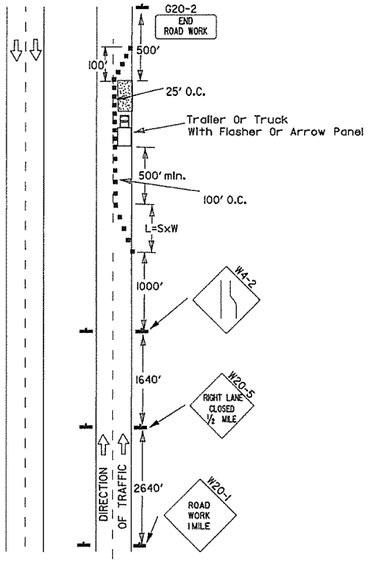

(A) Typical application - daytime maintenance operations of short duration on a 4-lane divided roadway where half of the roadway is closed.

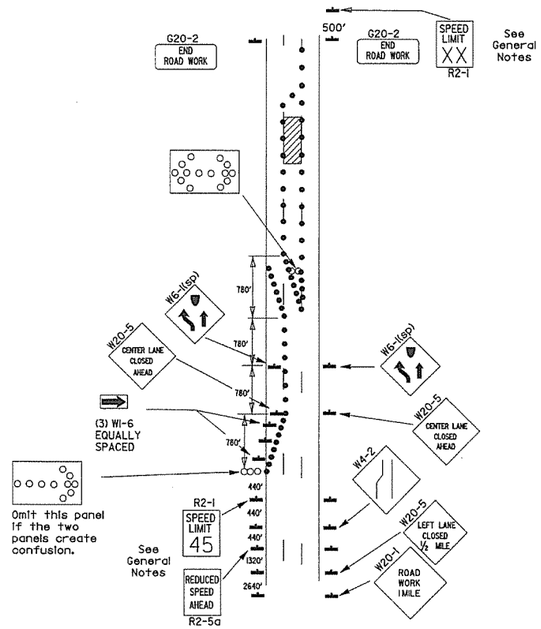

(B) Typical application - 3-lane oneway roadway where center lane is closed.

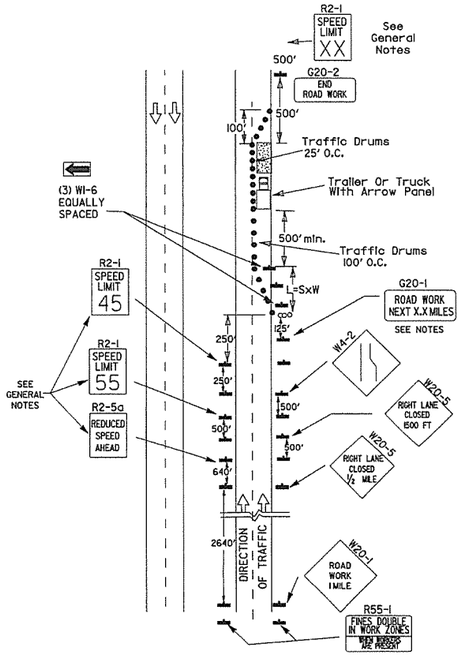

(C) Typical application - construction operations of intermediate to long term duration on a 4-lane divided roadway where half of the roadway is closed.

KEY:

ooo Arrow Panel (If Required)

■ Channelizing Device

● Traffic drum

GENERAL NOTES:

1. A speed limit reduction may be implemented ONLY when designated in the plan or when recommended by the Roadway Design Division.
2. When the existing speed limit is 55mph and the plans require a speed limit of 45mph, the R2-1(55) shall be omitted and the R2-5A shall be installed at that location. Additional R2-1 45mph speed limit signs shall be installed at a maximum of 1 mile intervals. At the end of the work area a R2-1(XX) shall be installed to match original speed limit.
3. When the existing speed limit is 65mph and the plans require a speed limit of 55mph, the R2-1(45) shall be omitted. Additional R2-1 55mph speed limit signs shall be installed at a maximum of 1 mile intervals. At the end of the work area a R2-1(XX) shall be installed to match original speed limit.
4. The maximum spacing between channelizing devices in a taper should be approximately equal in feet to the speed limit. Beyond the taper, maximum spacing shall be two times the speed limit or as directed by the Engineer.
5. Warning lights and/or flags may be mounted to signs or channelizing devices at night as needed.
6. Pavement markings no longer applicable which might create confusion in the minds of vehicle operators shall be removed or obliterated as soon as practicable.
7. The G20-1 sign will be required on jobs of over two miles in length. When the lane closure is not at the beginning of the project, the G20-1 sign shall be erected 125' in advance of the job limit. Additional W20-1 (1 MILE) signs are not required in advance of lane closures that begin inside the project limits.
8. Flaggers shall use STOP/SLOW paddles for controlling traffic through work zones. Flags may be used only for emergency situations.
9. All plastic drums and cones shall meet the requirements of NCHRP-350 or Manual For Assessing Safety Hardware (MASH).
10. Trailer mounted devices such as arrow panels and portable changeable message signs shall be delineated by affixing conspicuity material in a continuous line on the face of the trailer. When placed on or adjacent to the shoulder and not behind a positive barrier, these devices shall be delineated by placing five (5) traffic drums, equally spaced along the traffic side of the device.

Channelizing devices

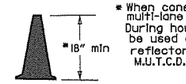

* When cones are used on freeways and multi-lane highways, they shall be 28" min. During hours of darkness, 28" cones shall be used on all roadways, and shall be reflectorized in accordance with the M.U.T.C.D.

CONES

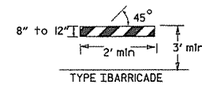

TYPE I BARRICADE

PLASTIC DRUM

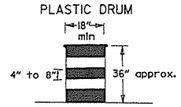

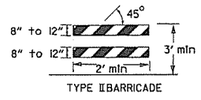

TYPE II BARRICADE

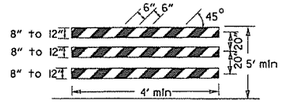

TYPE III BARRICADE

NOTE:
For all road closures, the Type III barricades shall be of sufficient length to extend across entire roadway.

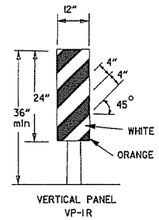

VERTICAL PANEL
VP-1R

VERTICAL PANEL PLACEMENT

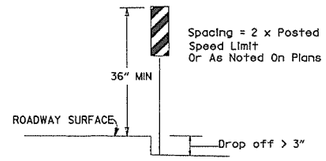

TRAFFIC CONTROL DEVICES
FOR
VERTICAL PAVEMENT DIFFERENTIALS

VERTICAL DIFFERENTIAL	LOCATIONS	TRAFFIC CONTROL
1" to 3"	Centerline, lane lines	W8-11
1" to 3"	Edge of shoulder	W8-9
Greater than 3"	Lane lines	Standard lane closure required
Greater than 3"	Edge of traveled lane	*RSP-1 and vertical panels, drums or concrete barrier
Greater than 3"	Edge of shoulder	*Vertical panels, drums or concrete barrier

* When shown on the plans concrete barrier will be used.

When the shoulder area is used as part of the traveled lane and there is insufficient width to place drums on the remaining shoulder width, then vertical panels shall be used.

FLAG

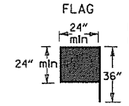

Flag shall be of good grade red material

STOP SLOW PADDLE

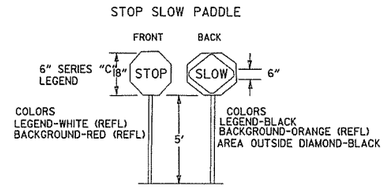

DETAIL OF SPLICES

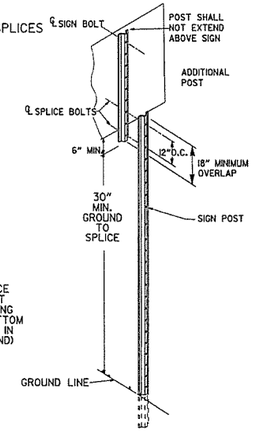

NOTES: USE SPLICES ONLY WHEN NECESSARY FOR INSTALLATION. TYPICAL INSTALLATION SHOULD HAVE NO SPLICES (SEE STD. DRAWING NO. SHS-21)

NORMAL INSTALLATIONS WILL REQUIRE 1/4" DIA. BOLTS TO MOUNT SIGNS TO POST AND 5/16" DIA. BOLTS TO ASSEMBLE THE VARIOUS POST SUPPORTS. EACH OF THESE BOLTS SHALL BE CARRIAGE BOLTS.

SIGN POSTS SHALL BE PAINTED GREEN; SIGNS SHALL NOT BE PAINTED, AND ALL SIGN POSTS SHALL BE PLUMB.

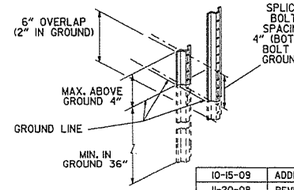

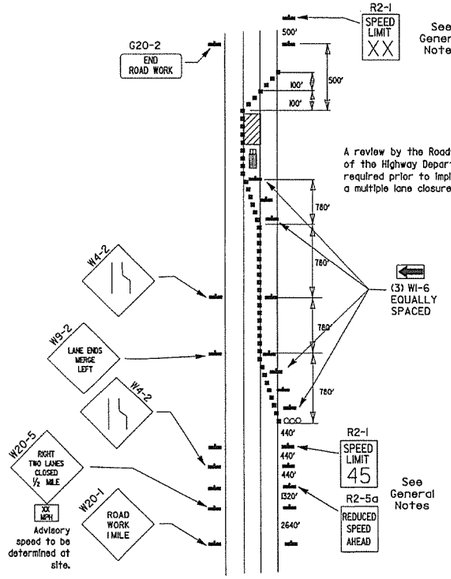

(D) Typical application - closing multiple lanes of a multilane highway.

DATE	REVISION	FILMED
10-15-09	ADDED REFERENCE TO MASH	
11-20-08	REVISED SIGN DESIGNATIONS	
11-18-04	ADDED NOTE	
10-1-98	ADDED NOTE	
4-03-97	ADDED (SP) TO W6-1 & REVISED TRAFFIC CONTROL DEVICES NOTE	
10-18-96	ADDED R55-1	
10-12-95	MOVED UPPER SPLICE	
6-8-95	REVISED SPLICE DETAIL, TEXT	6-8-95
2-2-95	REVISED PER PART VI, MUTCD, SEPT. 3, 1993	
8-15-91	DRAWN AND PLACED IN USE	

ARKANSAS STATE HIGHWAY COMMISSION

STANDARD TRAFFIC CONTROLS FOR HIGHWAY CONSTRUCTION

STANDARD DRAWING TC-3

REINFORCING BAR TABLE PER BARRIER UNIT

MARK	LOCATION	BAR SIZE	(NO. BARS)	SKETCH
H-1	HORIZONTAL IN BARRIER TIED INSIDE V-1 BARS	#5	(6)	19'-3"
H-2	CENTERED ABOVE DRAIN SLOTS LONG. & TRANSVERSELY	#5	(6)	6'-6"
H-3	TIED ABOVE H-1 BARS TO SUPPORT H-2, TIED TO V-1	#4	(2)	1'-6"
S-1	OVER LIFT HOLES	#4	(2)	2'-5", LIFTING HOLE, 90°, 3 3/8" R
S-2	HORIZ. AROUND SLOTS BETWEEN V-1'S & DRAIN SLOTS	#4	(2)	1 1/2" R, SLOTS, 7", 1'-6", 1" MIN. CLEAR TO BAR; 5'-1" BAR W/(4) 1 1/2" R BENDS & MIN. 1'-0" OVERLAP
V-1	VERTICAL IN BARRIER(3) EACH END & (2) AT EACH DRAIN SLOTS	#5	(16)	TOTAL LENGTH 4'-9", 2 3/16" R, 12°, 9 1/2", 2'-1 3/8", 4 3/8"

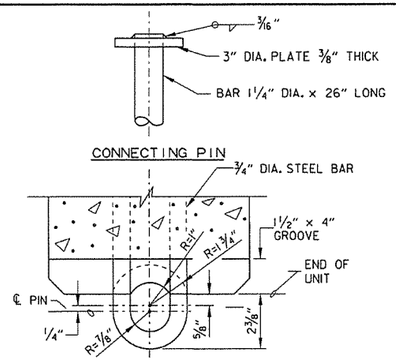

CONNECTION DETAILS

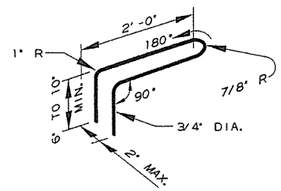

CONNECTION LOOP

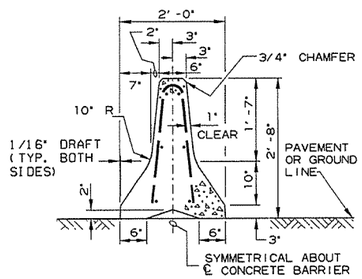

SECTION A-A

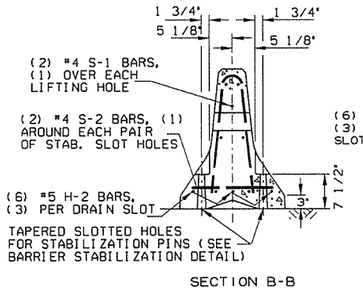

SECTION B-B

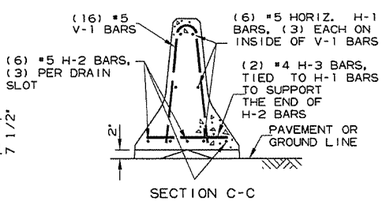

SECTION C-C

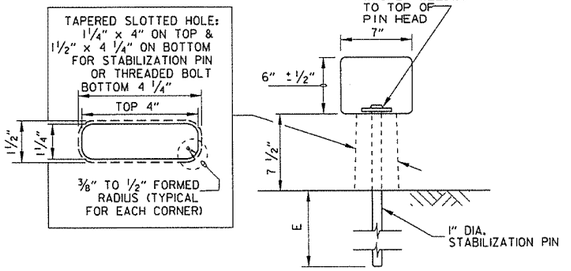

BARRIER STABILIZATION DETAIL

ROADWAY SECTION

(E) 4" - Concrete Pavement
8" - Asphalt Pavement
12" - Shoulder Areas

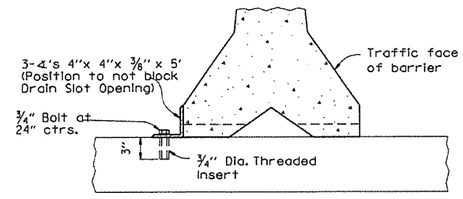

NOTE: 3/4" Threaded Inserts shall be cast in place for all new bridge decks and drilled and grouted for existing bridge decks. Inserts shall have a minimum ultimate load capacity of 8000 lbs. in tension. After removal of barrier, bolts, and angles, the inserts shall be filled with approved non-shrink epoxy.

BARRIER STABILIZATION DETAIL

BRIDGE DECKS

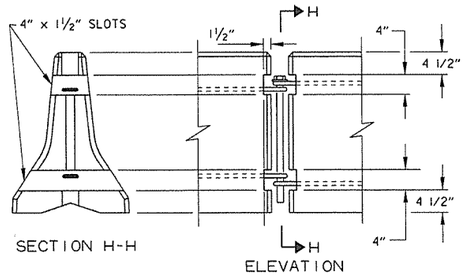

BARRIER REMOVAL SLOT DETAILS

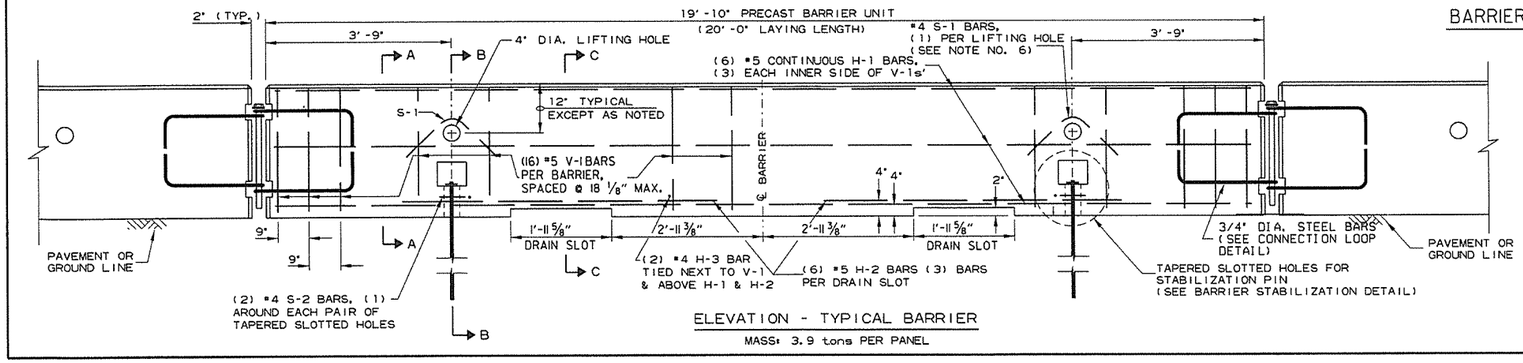

ELEVATION - TYPICAL BARRIER

MASS: 3.9 tons PER PANEL

General Notes

1. The contractor shall furnish the Precast Concrete Barrier Units and shall be responsible for the manufacture, shipment, storage, placement and removal. At the completion of the project, the precast units will remain the property of the contractor.
2. Materials shall meet the following minimum requirements:
   Concrete: 2500 psi compressive strength at 28 days.
   Reinforcing Steel: AASHTO M 31 or M 53, Grade 60
   Structural Steel: AASHTO-M270 Grade 36 shall be used for the Connection Pin, Connection Loops, and Stabilization Pins. A One Piece Pin with a 3" rounded top may be used in place of the detailed Connection Pin.
   Delineators: Delineators shall be mounted at 10' spacing on top of precast barrier.

   In applications where barrier wall is within 6 feet of a traffic lane, additional delineators shall be placed on the barrier at 10' spacing approximately one (1) foot from the top of the barrier. Delineators shall be on the AHTD Qualified Products List for Construction Concrete Barrier Markers.
   Delineator color shall be in accordance with the Manual on Uniform Traffic Control Devices.
   Payment for delineators shall be considered included in the price bid per Lin. Ft. for "Furnishing and Installing Precast Concrete Barrier". The contractor shall certify to the Engineer that the material and the design used in the precast barrier units meets the requirements as shown on this standard drawing.
3. Other Precast Concrete Barriers that have been crash tested and approved by the Federal Highway Administration to meet the requirements of NCHRP-350 test level 3 or Manual For Assessing Safety Hardware (MASH) will be accepted in lieu of the barrier shown. Drain slots shall be provided as needed or as directed by the Engineer. The Contractor shall furnish a certification of NCHRP Report 350 or Manual For Assessing Safety Hardware (MASH) compliance for any other types of precast barrier to be used. The certification shall state that the precast concrete barrier meets the requirements of NCHRP Report 350 or Manual For Assessing Safety Hardware (MASH) and include a copy of the Federal Highway Administration's (FHWA) approval letter with all attachments. Precast concrete barrier units shall be fabricated and installed in accordance with crash testing and documentation provided in the FHWA approval letter. Mixing of shapes will not be allowed in a continuous line of units.
4. Dowel holes in pavement or bridge slabs that are to remain in place shall be filled. Holes in concrete pavement and bridge slabs shall be filled with an approved non-shrink epoxy grout. Holes in asphalt pavement shall be filled with an approved asphalt joint filler. Payment for drilling and filling holes to be included in the price for various barrier items.
5. Attach Units To Roadway Surface with Stabilization Pins and to Deck Slabs using bolts when required.
6. A 4" White PVC Sleeve may be used to form the Lifting Hole and if used the Sleeve is to be left in place.

DATE	REVISION	FILMED
2-27-14	REVISED BARRIER STABILIZATION DETAIL	
10-15-09	ADDED REFERENCE TO MASH	
8-5-09	REV. NOTE 3 CONCERNING DRAIN SLOTS	
11-29-07	REVISED NOTE 3	
5-25-06	DELETED GENERAL NOTE 7	
11-18-04	REVISED BARRIER STABILIZATION DETAIL BRIDGE DECKS	
4-10-03	REVISED GENERAL NOTE 2	
8-22-02	ISSUED NEW DRAWING	

ARKANSAS STATE HIGHWAY COMMISSION

STANDARD TRAFFIC CONTROLS FOR HIGHWAY CONSTRUCTION - TEMPORARY PRECAST BARRIER

STANDARD DRAWING TC-4

Ⓐ 4 feet or greater preferred. If less than 4 feet, Precast Units shall be connected to slab (SEE BARRIER STABILIZATION DETAIL-BRIDGE DECKS STD. DRWG. TC-4)

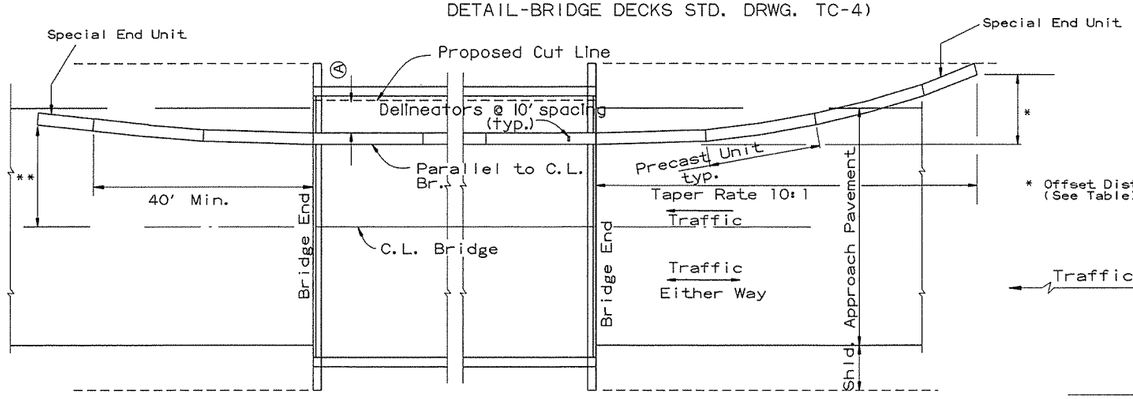

BARRIER PLACEMENT ALONG BRIDGE WITH OFFSET

No Scale

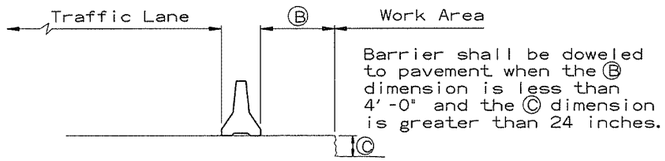

Barrier shall be doweled to pavement when the Ⓑ dimension is less than 4'-0" and the Ⓒ dimension is greater than 24 inches.

SECTION J-J

No Scale

** Offset Distance for Two Way Traffic Only

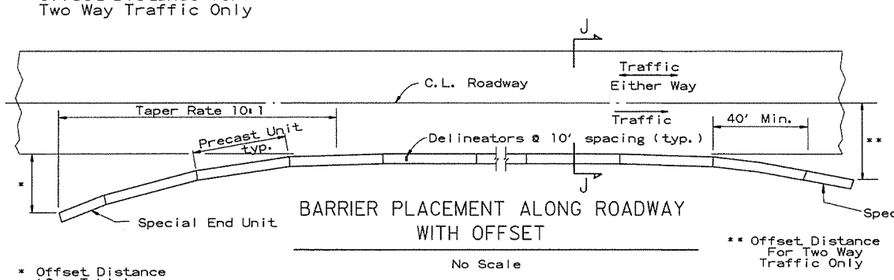

BARRIER PLACEMENT ALONG ROADWAY WITH OFFSET

No Scale

** Offset Distance For Two Way Traffic Only

* Offset Distance (See Table)

Offset Distance Table

Speed (MPH)	Offset Distance (FT.)
≤ 45	12
> 45	18

If offset distance is not attainable, then see 'Barrier Placement With Attenuator' Detail shown below.

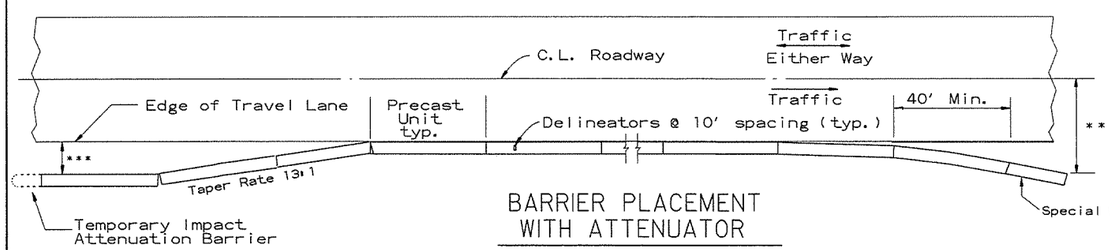

BARRIER PLACEMENT WITH ATTENUATOR

No Scale

*** Min. 3'-0" From Edge of Travel Lane to Nearest Edge of Attenuator

** Offset Distance For Two Way Traffic Only

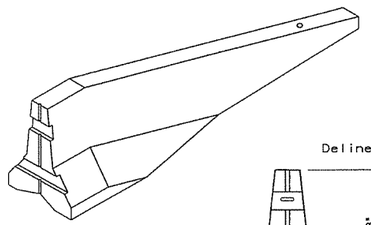

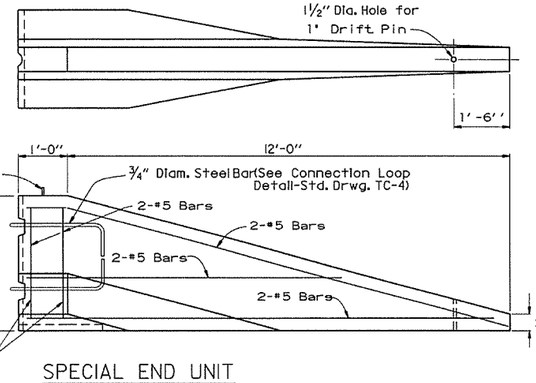

SPECIAL END UNIT

No Scale

General Notes

When shown on the Plans, the ends of the Temporary Precast Concrete Barrier shall be protected with an NCHRP-350 or Manual For Assessing Safety Hardware (MASH) approved Crash Cushion. Payment for Crash Cushions shall be made under the item of "Temporary Impact Attenuation Barrier."

DATE	REVISION	FILMED
10-15-09	ADDED REFERENCE TO MASH	
5-25-06	REVISED BARRIER PLACEMENT	
8-22-02	ISSUED NEW DRAWING	

ARKANSAS STATE HIGHWAY COMMISSION

STANDARD TRAFFIC CONTROLS FOR HIGHWAY CONSTRUCTION - TEMPORARY PRECAST BARRIER

STANDARD DRAWING TC-5

GENERAL NOTES

INSTALL A MINIMUM OF 2 UPSLOPE STAKES AND 4 DOWNSLOPE STAKES AT AN ANGLE TO WEDGE WATTLE TO BOTTOM OF DITCH.

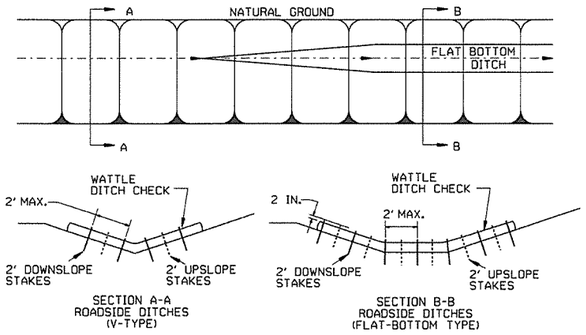

WATTLE DITCH CHECK (E-1)

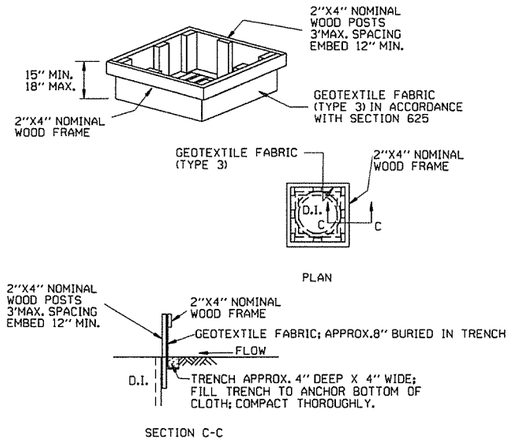

DROP INLET SILT FENCE (E-7)

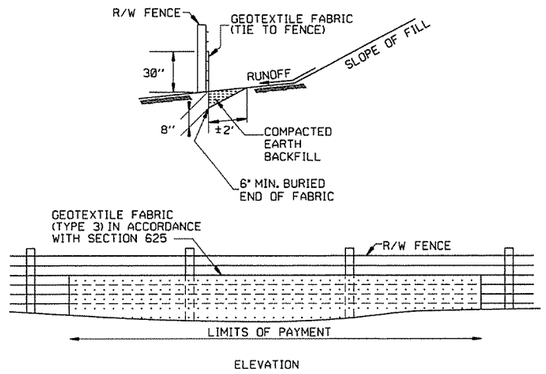

SILT FENCE ON R/W FENCE (E-4)

GENERAL NOTES

GEOTEXTILE FABRIC SHALL BE SPLICED TOGETHER WITH A SEWN SEAM ONLY AT A SUPPORT POST, OR TWO SECTIONS OF FENCE MAY BE OVERLAPPED INSTEAD. PAYMENT OF ADDITIONAL MATERIAL FOR OVERLAP WILL NOT BE MADE.

GENERAL NOTES

1. STRAW BALES SHALL BE INSTALLED SO THAT THE BINDINGS ARE ORIENTED AROUND THE SIDES RATHER THAN ALONG THE TOPS AND BOTTOMS OF THE BALES. THE BALES SHALL BE A MINIMUM OF 30 INCHES IN LENGTH.

2. NO GAPS SHALL BE LEFT BETWEEN BALES.

3. BALED STRAW FILTER BARRIERS COMPLETED AND ACCEPTED WILL BE MEASURED BY THE BALE IN PLACE AS AUTHORIZED BY THE ENGINEER AND WILL BE PAID FOR AT THE CONTRACT UNIT PRICE BID PER BALE FOR BALED STRAW DITCH CHECKS.

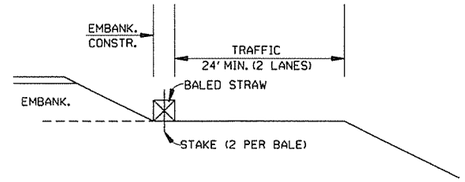

BALED STRAW FILTER BARRIER (E-2)

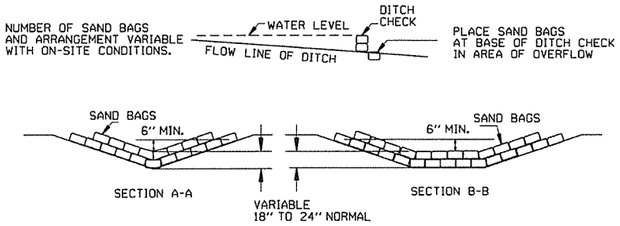

SAND BAG DITCH CHECK (E-5)

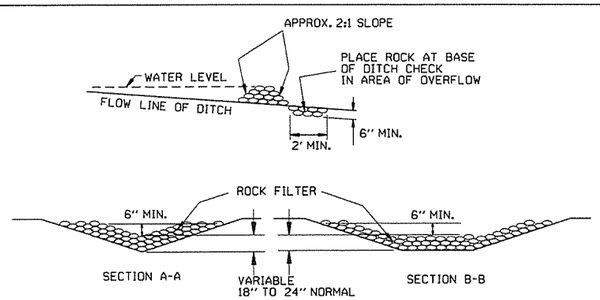

ROCK DITCH CHECK (E-6)

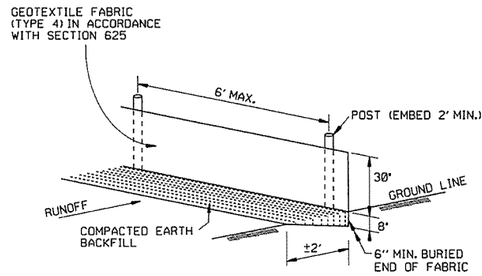

SILT FENCE (E-11)

GENERAL NOTES

GEOTEXTILE FABRIC SHALL BE SPLICED TOGETHER WITH A SEWN SEAM ONLY AT A SUPPORT POST OR TWO SECTIONS OF FENCE MAY BE OVERLAPPED INSTEAD. PAYMENT OF ADDITIONAL MATERIAL FOR OVERLAP WILL NOT BE MADE.

DATE	REVISION	FILMED
12-15-11	DELETED BALED STRAW DITCH CHECK & ADDED WATTLE DITCH CHECK	
11-18-98	ADDED NOTES	
7-02-98	ADDED BALED STRAW FILTER BARRIER (E-2)	
7-20-95	REVISED SILT FENCE E-4 AND E-11	7-20-95
7-15-94	REV. E-4 & E-11 MIN. 13" BURIED END OF FABRIC	
6-2-94	REVISED E-1,4,7 & 11; DELETED E-2 & 3	6-2-94
4-1-93	REDRAWN	
10-1-92	REDRAWN	
8-2-76	ISSUED R.D.M.	298-7-28-76

ARKANSAS STATE HIGHWAY COMMISSION

TEMPORARY EROSION CONTROL DEVICES

STANDARD DRAWING TEC-1

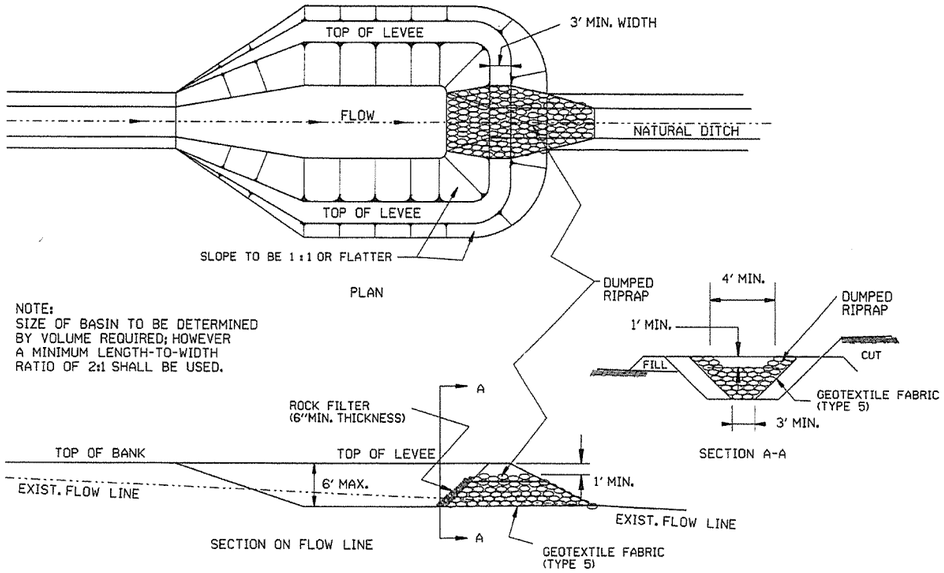

SEDIMENT BASIN WITH RIPRAP OUTLET (E-9)

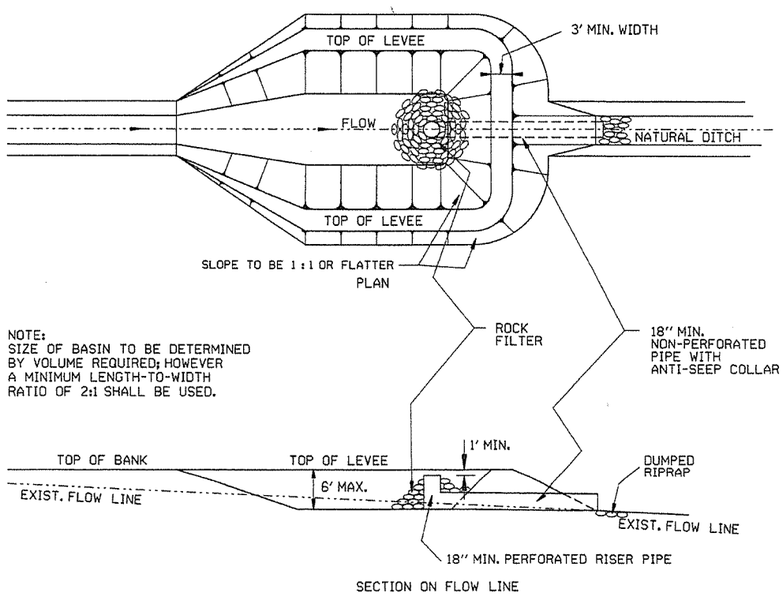

SEDIMENT BASIN WITH PIPE OUTLET (E-10)

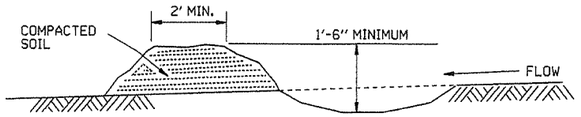

DIVERSION DITCH (E-8)

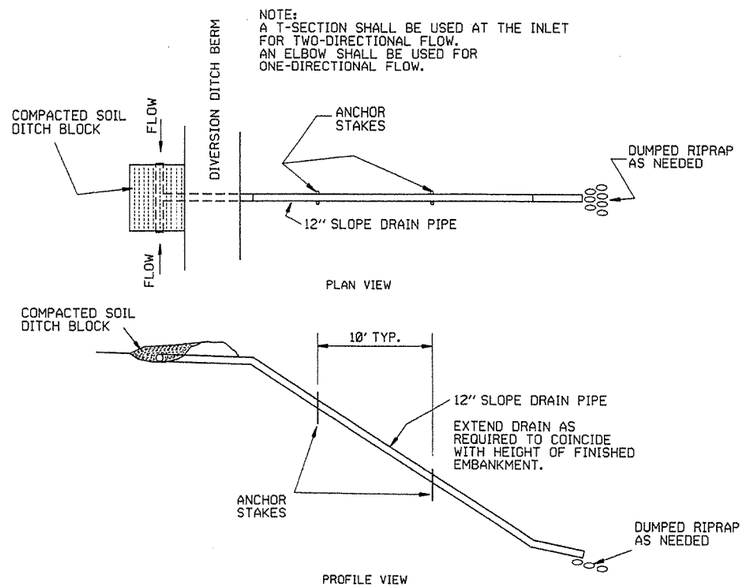

SLOPE DRAIN (E-12)

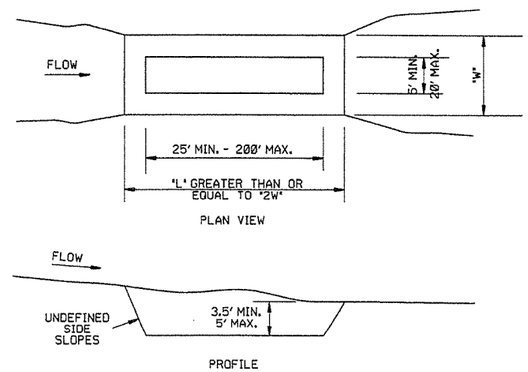

SEDIMENT BASIN (E-14)

DATE	REVISION	FILMED
6-2-94	Revised E-8 & E-12; Added E-14 & Deleted E-13	
4-1-93	ISSUED	

ARKANSAS STATE HIGHWAY COMMISSION

TEMPORARY EROSION CONTROL DEVICES

STANDARD DRAWING TEC-2

CLEARING AND GRUBBING

CONSTRUCTION SEQUENCE

1. PLACE PERIMETER CONTROLS (I.E. SILT FENCES , DIVERSION DITCHES, SEDIMENT BASINS, ETC.)
2. PERFORM CLEARING AND GRUBBING OPERATION.

EXCAVATION

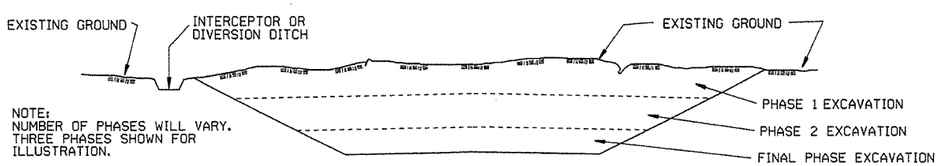

GENERAL NOTE

ALL CUT SLOPES SHALL BE DRESSED, PREPARED, SEEDED, AND MULCHED AS THE WORK PROGRESSES. SLOPES SHALL BE EXCAVATED AND STABILIZED IN EQUAL INCREMENTS NOT TO EXCEED 25 FEET, MEASURED VERTICALLY.

CONSTRUCTION SEQUENCE

1. EXCAVATE AND STABILIZE INTERCEPTOR AND/OR DIVERSION DITCHES.
2. PERFORM PHASE 1 EXCAVATION. PLACE PERMANENT OR TEMPORARY SEEDING.
3. PERFORM PHASE 2 EXCAVATION. PLACE PERMANENT OR TEMPORARY SEEDING.
4. PERFORM FINAL PHASE OF EXCAVATION, PLACE PERMANENT OR TEMPORARY SEEDING. STABILIZE DITCHES. CONSTRUCT DITCH CHECKS, DIVERSION DITCHES, SEDIMENT BASINS, OR OTHER EROSION CONTROL DEVICES AS REQUIRED.

EMBANKMENT

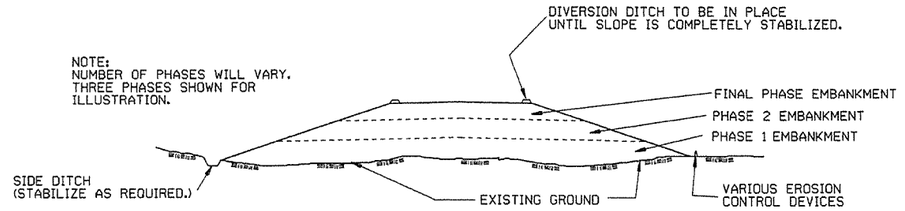

GENERAL NOTE

ALL EMBANKMENT SLOPES SHALL BE DRESSED, PREPARED, SEEDED, AND MULCHED AS THE WORK PROGRESSES. SLOPES SHALL BE CONSTRUCTED AND STABILIZED IN EQUAL INCREMENTS NOT TO EXCEED 25 FEET, MEASURED VERTICALLY.

CONSTRUCTION SEQUENCE

1. CONSTRUCT DIVERSION DITCHES, DITCH CHECKS, SEDIMENT BASINS, SILT FENCES, OR OTHER EROSION CONTROL DEVICES AS SPECIFIED.
2. PLACE PHASE 1 EMBANKMENT WITH PERMANENT OR TEMPORARY SEEDING. PROVIDE DIVERSION DITCHES AND SLOPE DRAINS IF EMBANKMENT CONSTRUCTION IS TO BE TEMPORARILY ABANDONED FOR A PERIOD OF GREATER THAN 21 DAYS.
3. PLACE PHASE 2 EMBANKMENT WITH PERMANENT OR TEMPORARY SEEDING. PROVIDE DIVERSION DITCHES AND SLOPE DRAINS IF EMBANKMENT CONSTRUCTION IS TO BE TEMPORARILY ABANDONED FOR A PERIOD OF GREATER THAN 21 DAYS.
4. PLACE FINAL PHASE OF EMBANKMENT WITH PERMANENT OR TEMPORARY SEEDING. PLACE DIVERSION DITCHES AND SLOPE DRAINS AND MAINTAIN UNTIL ENTIRE SLOPE IS STABILIZED.

DATE	REVISION	FILMED
11-03-94	CORRECTED SPELLING	
6-2-94	Drawn & Issued	6-2-94

ARKANSAS STATE HIGHWAY COMMISSION

TEMPORARY EROSION CONTROL DEVICES

STANDARD DRAWING TEC-3

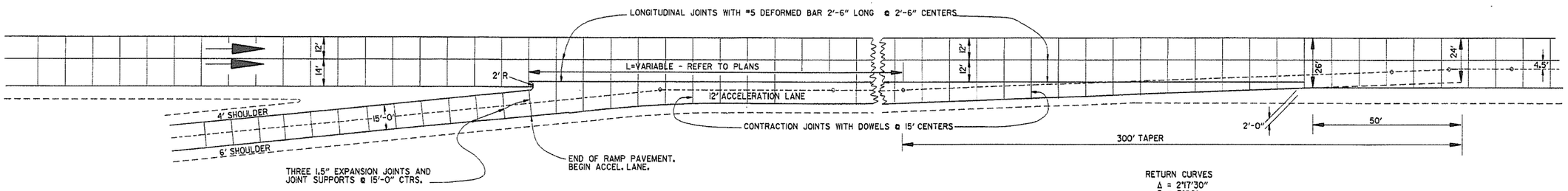

ENTRANCE RAMP

RETURN CURVES
Δ = 2°17'30"
D = 3°00'
T = 38.2'
L = 76.4'

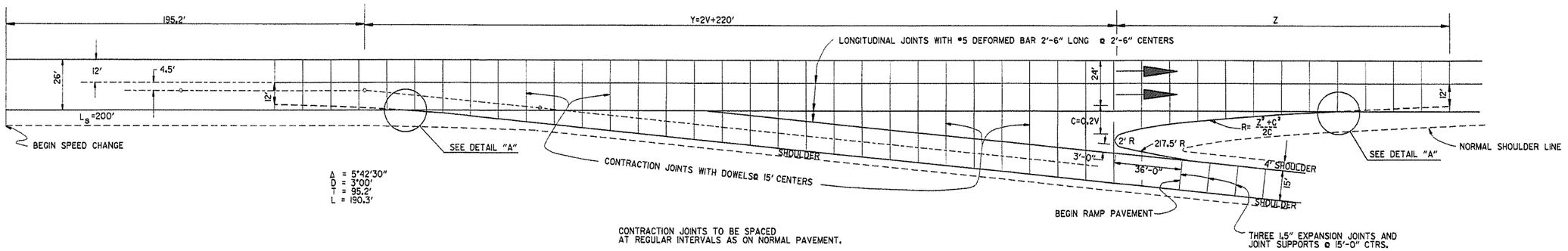

Δ = 5°42'30"
D = 3°00'
T = 95.2'
L = 190.3'

CONTRACTION JOINTS TO BE SPACED AT REGULAR INTERVALS AS ON NORMAL PAVEMENT.

EXIT RAMP

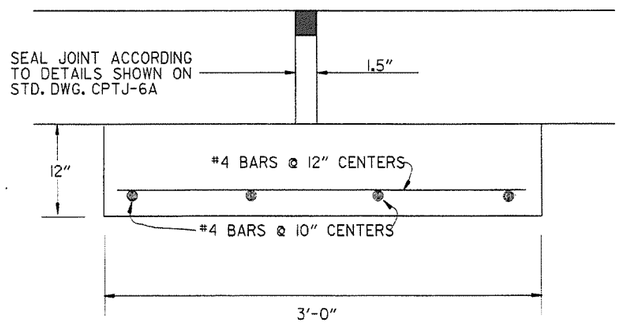

DETAIL OF EXPANSION JOINT & JOINT SUPPORT

NOTE: THE EXPANSION JOINTS SHALL BE MEASURED AND PAID FOR AS P.C.C. PAVEMENT (RAMP THICKNESS).
THE JOINT SUPPORT MAY BE CONSTRUCTED WITH CLASS "A", "S", OR PAVING CONCRETE. PAYMENT FOR THE JOINT SUPPORT SHALL BE FOR THE CONTRACT UNIT PRICE BID FOR THE CLASS OF CONCRETE USED. ALL OTHER WORK AND MATERIALS REQUIRED FOR THE CONSTRUCTION OF THE JOINT SUPPORT SHALL BE SUBSIDIARY TO THE ABOVE ITEMS.

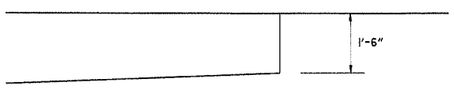

DETAIL "A"

EXIT RAMP

DESIGN SPEED V	Y	NOSE OFFSET C	LENGTH NOSE TAPER Z	RETURN RADIUS R
40	300.0	8.0	96.0	580.0
50	320.0	10.0	120.0	725.0
60	340.0	12.0	168.0	1182.0
70	360.0	14.0	210.0	1582.0

1-12-00	REDRAWN & REISSUED	1-12-00
DATE	REVISION	DATE FILM'D

ARKANSAS STATE HIGHWAY COMMISSION

DETAILS OF STANDARD TURNOUT FOR ENTRANCE & EXIT RAMPS

STANDARD DRAWING TR-1

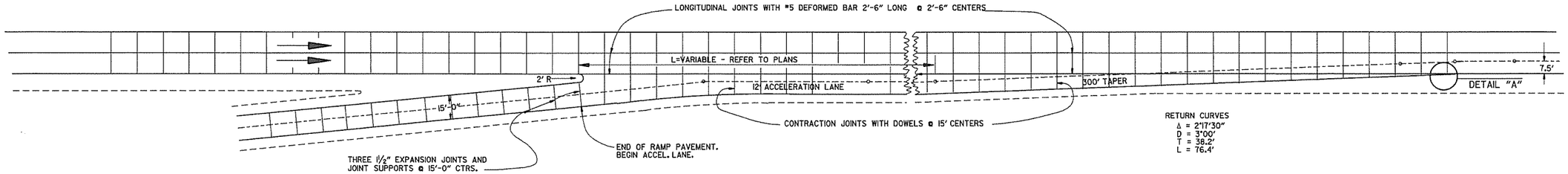

ENTRANCE RAMP

NOTE: JOINT SPACING ON THE MAIN LANES SHALL BE ADJUSTED AS NECESSARY TO CONFORM TO THESE JOINT LAYOUTS. THE MAIN LANE JOINT SPACING MAY BE REDUCED TO A 12' MINIMUM.

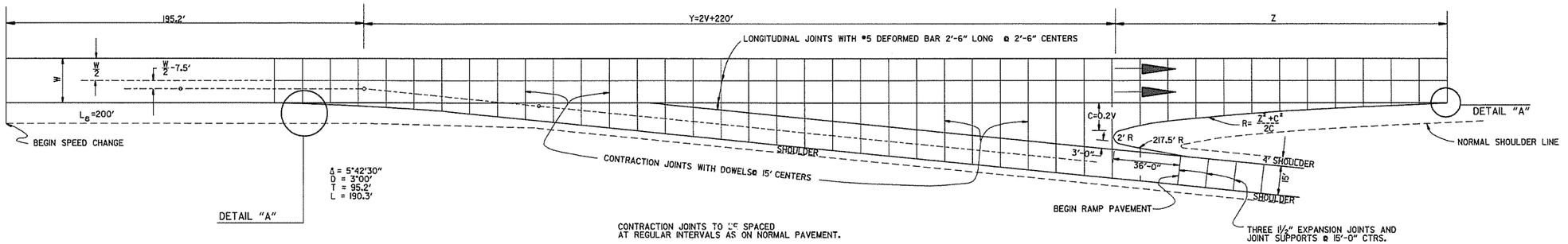

EXIT RAMP

EXIT RAMP

DESIGN SPEED V	Y	NOSE OFFSET C	LENGTH NOSE TAPER Z	RETURN RADIUS R	ADDITIONAL SURFACING SQ. YDS.
40	300.0	8.0	96.0	580.0	602.43
50	320.0	10.0	120.0	725.0	687.29
60	340.0	12.0	168.0	1182.0	790.55
70	360.0	14.0	210.0	1582.0	902.27

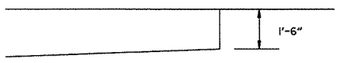

DETAIL "A"

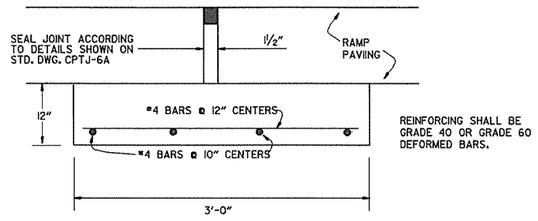

DETAIL OF EXPANSION JOINT & JOINT SUPPORT

NOTE: THE EXPANSION JOINTS SHALL BE MEASURED AND PAID FOR AS P.C.C. PAVEMENT (RAMP THICKNESS). WHEN RAMP PAVING IS ASPHALT, EXPANSION JOINT IS NOT REQUIRED.
THE JOINT SUPPORT MAY BE CONSTRUCTED WITH CLASS "A", "S", OR PAVING CONCRETE. PAYMENT FOR THE JOINT SUPPORT SHALL BE FOR THE CONTRACT UNIT PRICE BID FOR THE CLASS OF CONCRETE USED. ALL OTHER WORK AND MATERIALS REQUIRED FOR THE CONSTRUCTION OF THE JOINT SUPPORT SHALL BE INCLUDED IN THE PRICE BID FOR THE ABOVE ITEMS.

DATE	REVISION	DATE FILM'D
8-22-02	DELETED NOTE	
11-16-01	CORRECTED SPELLING ON ENTRANCE RAMP NOTE	
5-13-99	ADDED, EDITED AND DELETED NOTES	
11-03-94	ADDED NOTE RE: REINF. BARS	
10-1-92	ADDED DETAIL A & OTHER MINOR CHANGES	10-1-92
1-25-90	REVISED EXPANSION JOINT	1-25-90
7-15-88	CONFORM'D TO 1988 SPECIFICATIONS	65C-7-15-88
3-2-81	ISSUED	511-10-2-72

ARKANSAS STATE HIGHWAY COMMISSION

DETAILS OF STANDARD TURNOUT FOR ENTRANCE & EXIT RAMPS (NON-REINFORCED)

STANDARD DRAWING TR-1A

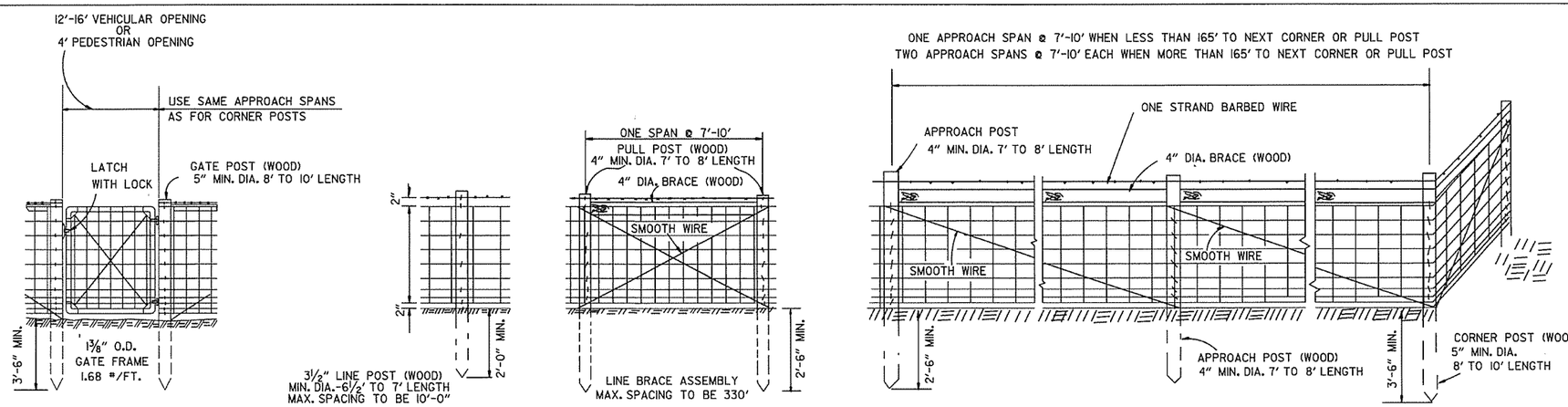

NOTE: STAPLE AT LEAST TOP, BOTTOM AND ALTERNATE WIRES OF WOVEN FABRIC FOR WOOD LINE POSTS.

TYPE A FENCE (WOOD POSTS)

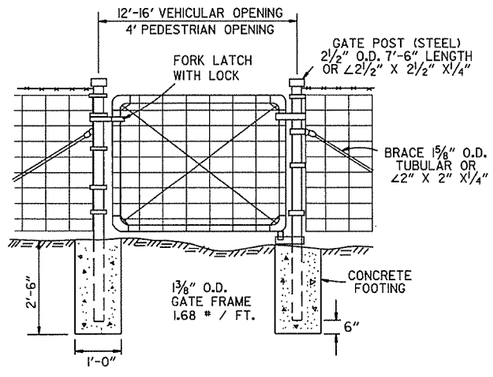

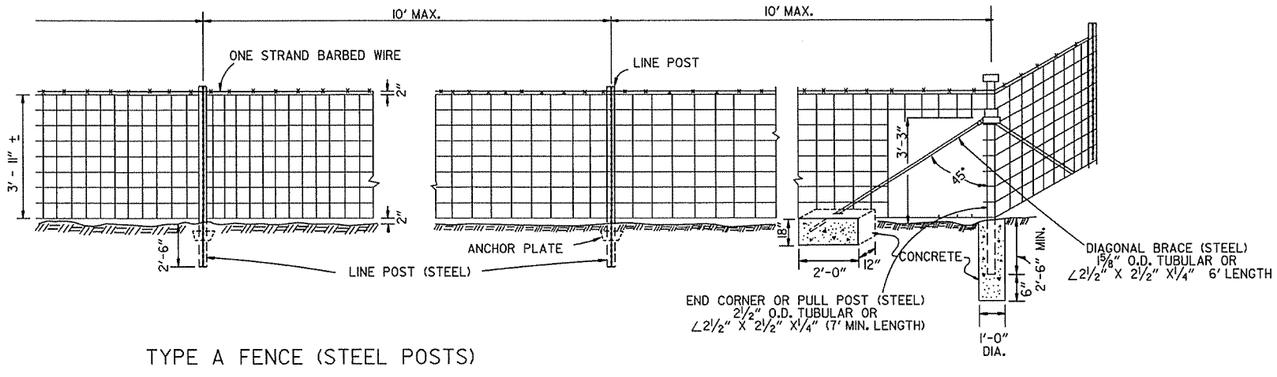

TYPE A FENCE (STEEL POSTS)

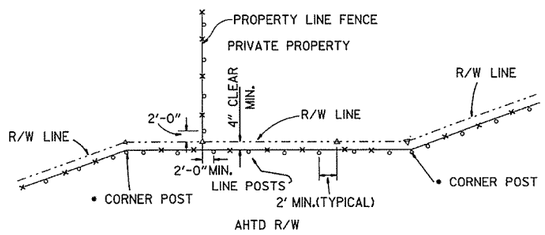

•NOTE: RIGHT-OF-WAY MONUMENTS SHALL NOT BE DISTURBED BY FENCE CONSTRUCTION. CORNER POSTS SHALL BE CONSTRUCTED 2' FROM THE RIGHT-OF-WAY MONUMENT OR AS DIRECTED BY THE ENGINEER.

△ - R/W MONUMENTS

○ - FENCE POSTS

RIGHT-OF-WAY FENCE LOCATION

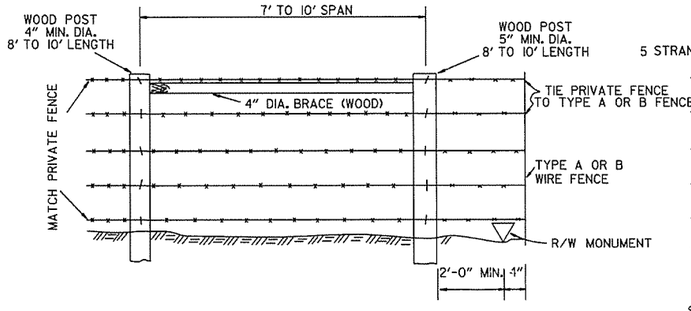

WHERE EXISTING PRIVATE FENCE CONSISTS OF STEEL POSTS, USE END POST ASSEMBLY AS SHOWN WITH TYPE A FENCE OR OTHER END POST ASSEMBLY AS APPROVED BY THE ENGINEER.

PRIVATE FENCE TERMINAL INSTALLATION

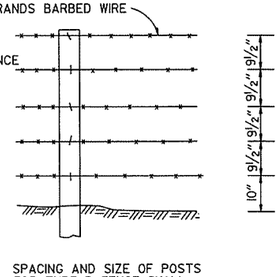

SPACING AND SIZE OF POSTS FOR TYPE B FENCE SHALL BE THE SAME AS TYPE A FENCE.

TYPE B FENCE

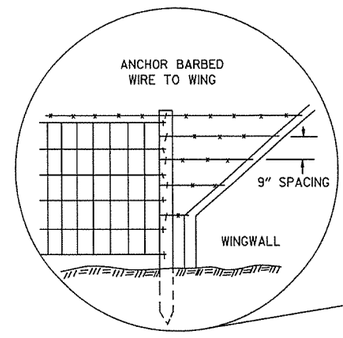

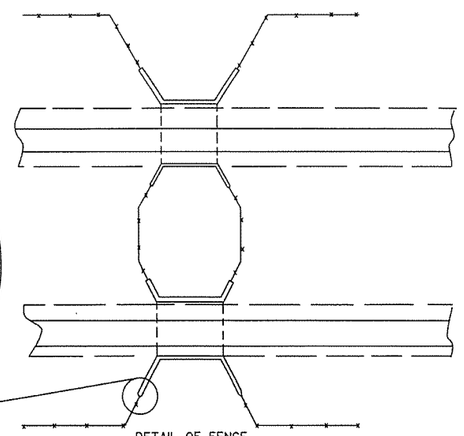

DETAIL OF FENCE CONSTRUCTION AT LARGE CULVERTS (5' IN HEIGHT AND OVER)

GENERAL NOTES:

STEEL LINE POSTS SHALL BE GALVANIZED, 7 FT. IN LENGTH.

TUBULAR END, CORNER, PULL, OR DIAGONAL BRACES MUST CONFORM TO THE DIMENSIONS AND WEIGHTS SPECIFIED ON STANDARD DRAWING WF-3 (CHAIN LINK).

THE CONTRACTOR SHALL FURNISH AT LEAST 25% OF WOOD LINE POSTS OF 7' LENGTHS IN ORDER TO PROVIDE SUFFICIENT SET IN SOFT GROUND OR SMALL DEPRESSIONS.

GATE HINGES AND LATCHES WITH LOCKS TO BE OF A TYPE APPROVED BY THE ENGINEER. DRIVEWAY GATES, EITHER SINGLE 12' OR 16' OR DOUBLE 8' TO 8' OPENINGS OF THE SAME TYPE AS THE PEDESTRIAN GATE, SHALL BE INSTALLED ON THE RIGHT SIDE OF EACH THROUGH LANE ROAD AT LARGE CULVERTS OR BRIDGE CROSS FENCE FOR USE BY MAINTENANCE EQUIPMENT. LOCATION OF GATES TO BE SHOWN ON THE PLANS OR AS DESIGNATED BY THE ENGINEER.

AT STREAM CROSSINGS THE FENCE SHALL NOT BE CONSTRUCTED ACROSS LARGE STREAMS. WHERE CLEARANCE IS SUFFICIENT FROM THE TOP OF BANK TO THE BRIDGE STRUCTURE, A CROSS CONNECTION SHALL BE CONSTRUCTED BETWEEN THE FENCE ON EACH SIDE OF THE ROAD. WHERE THE CLEARANCE IS NOT SUFFIEICNT, THE FENCE SHALL BE TERMINATED WITH CROSS CONNECTIONS AND END POSTS ADJACENT TO THE BRIDGE ABUTMENTS OR CULVERT WINGWALLS.

SPLICE FOR WOVEN WIRE BETWEEN PULL POST SHALL BE BY THE "WESTERN UNION METHOD" AS DESCRIBED AS FOLLOWS: THE VERTICAL WIRES FOR EACH END OF THE FENCE FABRIC SHALL BE PLACED SIDE BY SIDE AND THE PROJECTING HORIZONTAL WIRES SHALL BE WRAPPED A MINIMUM OF 4 TIMES AROUND THE HORIZONTAL WIRES OF THE FIRST WEB.

SPLICE FOR BARBED WIRE BETWEEN PULL POST ASSEMBLY SHALL BE BY THE "EYE METHOD"; AS DESCRIBED AS FOLLOWS: THE ENDS OF THE BARBED WIRE SHALL BE BENT TO FORM A LOOP. THE LOOPS SHALL BE CONNECTED. AFTER THE LOOPS ARE CONNECTED THE ENDS OF THE WIRE SHALL BE WRAPPED AROUND THE PROJECTING WIRE A MINIMUM OF 4 TIMES FOR EACH WIRE LOOP.

DATE	REVISION	DATE FILMED
8-22-02	REVISED GENERAL NOTES	
10-18-96	REVISED ASTM REF. TO AASHTO	
11-22-95	REVISED R-O-W LOCATION DETAIL	
6-2-94	ADDED CORNER POST NOTE	6-2-94
8-5-93	REVISED R-O-W LOCATION DETAIL	8-5-93
10-1-92	ADDED STAPLE NOTE	
8-2-90	REV'D PULL POST LENGTH	
11-30-89	DELETED CLASS CONC.	
7-15-88	ADDED SPLICE NOTES	
7-15-88	ADDED HEIGHT DIMENSION	
4-3-87	REVISED VARIOUS NOTES	
	AND GENERAL NOTES	
11-1-84	MAX. POST SPACING	
1-4-83	MIN. DIA. LINE POST	
10-2-72	REVISED & REDRAWN	

ARKANSAS STATE HIGHWAY COMMISSION

WIRE FENCE
TYPE A AND B

STANDARD DRAWING WF-1

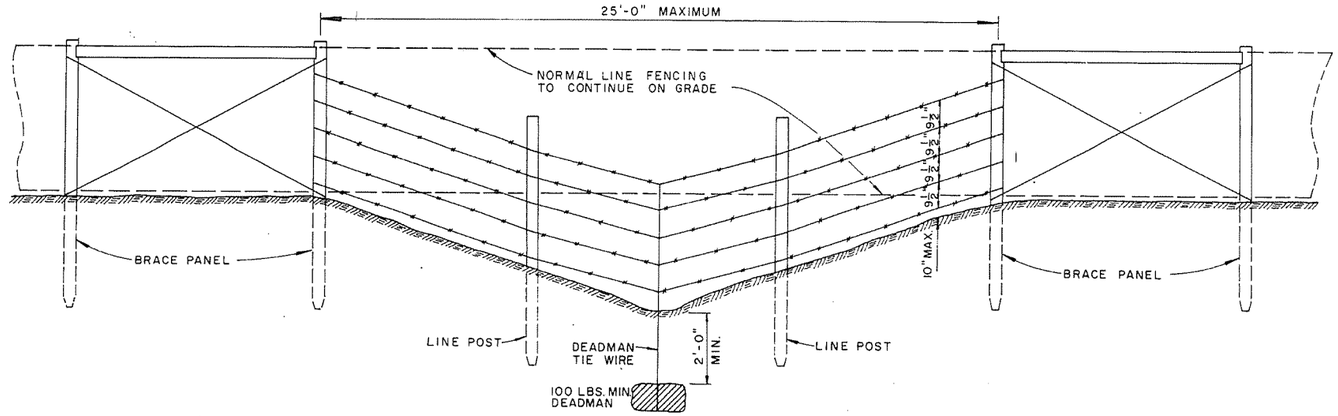

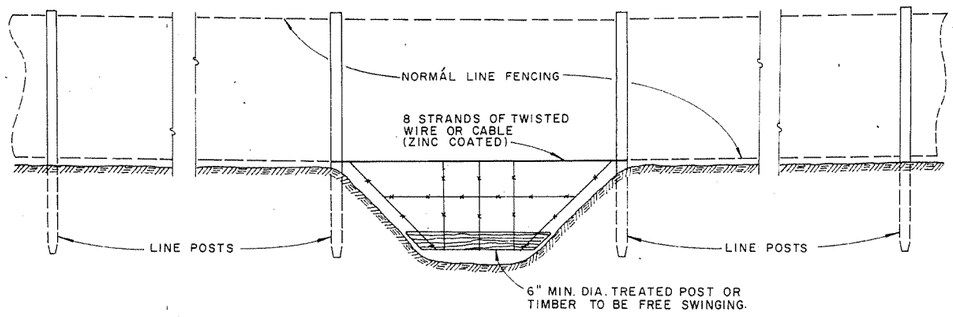

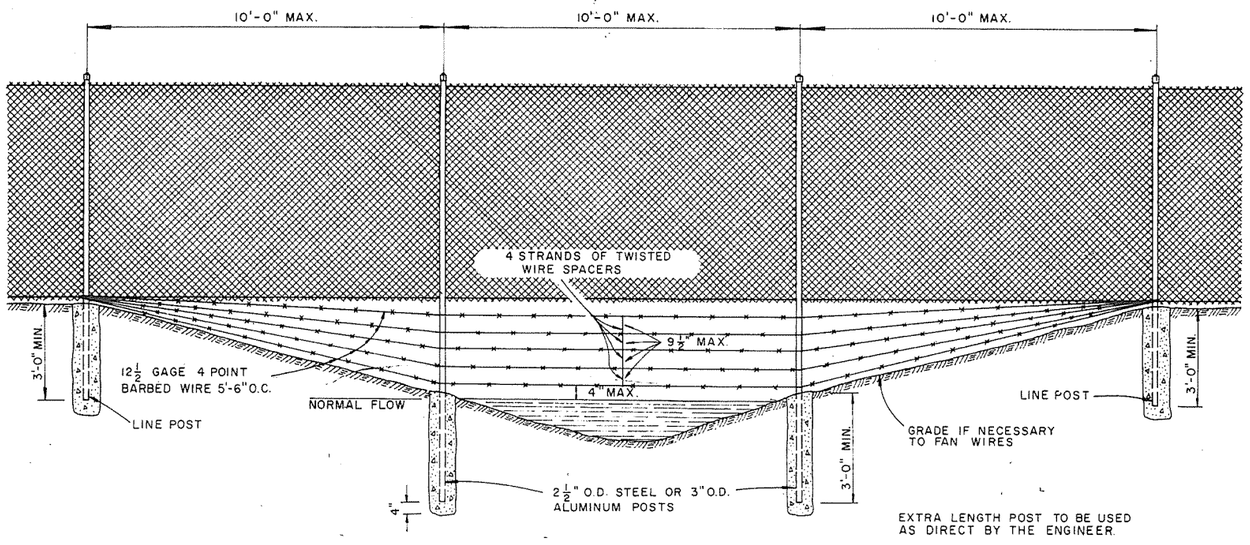

GENERAL NOTES:

THESE INSTALLATIONS TO BE USED WHERE NORMAL FENCING INSTALLATION WOULD CAUSE THE COLLECTING OF DRIFT IN THE CHANNEL OR THE DEPRESSION WILL NOT PERMIT NORMAL INSTALLATION. INSTALLATIONS WILL BE MADE ONLY WHERE DIRECTED BY THE ENGINEER.

WHEN A FENCE LINE APPROACHES A DITCH, GULLY OR DEPRESSION, THE LAST POST ON LEVEL GROUND SHALL BE PLACED CLOSE ENOUGH TO THE EDGE OF THE DROP OFF THAT THE FENCE MAY BE STRUNG TO THE POST IN THE DEPRESSION WITHOUT TOUCHING THE GROUND.

IN TERRAIN OF SUCH EXTREME IRREGULARITY THAT MINOR GRADING WILL NOT BE FEASIBLE, THE NORMAL FENCE SHALL CONTINUE ON GRADE AND THE GULLIES OR DEPRESSIONS TREATED BY AUXILIARY FENCES AS SHOWN.

PAYMENT FOR THE TYPE INSTALLATION USED WILL NOT BE MADE DIRECTLY BUT WILL BE INCLUDED IN THE CONTRACT UNIT PRICE BID FOR WIRE FENCE OR CHAIN LINK FENCE.

DATE	REVISION	DATE FILM'D.
4-20-79	REVISED TOP RAIL & TENSION WIRE	696-4-20-79
10-2-72	REVISED & REDRAWN	529-10-2-72

ARKANSAS STATE HIGHWAY COMMISSION

WIRE FENCE WATER GAPS

STANDARD DRAWING

WF-2

1M—11-71—61001—PPASC

RESHOT 3-4-93 155

FED. ROAD No.	STATE	FED. AID PROJECT	FISCAL YEAR	SHEET No.	TOTAL SHEETS
8	ARK.			423	
JOB No.					

BAR LIST FOR VARIOUS SECTIONS OF BARREL

SECTION & BAR GROUP	LENGTH OF SECTIONS	DEPTH OF COVER	CLEAR SPAN	CLEAR HEIGHT	"a" bars STRAIGHT In Top and Bottom Slabs of Barrel. 2 Add'l in Apron and Headwall - Each. SIZE	SPACING	NUMBER REQ'D 3:1	NUMBER REQ'D 4:1	LENGTH	"b" bars STRAIGHT BENT - See Diagram at Right. In Top and Bottom Slabs of Barrel. Alternate with "a" bars. SIZE	SPACING	NUMBER REQ'D	LENGTH	X	"d" bars STRAIGHT Longitudinal in Top Slab of Barrel SIZE	SPACING	No. REQ'D	LENGTH	"d1" bars STRAIGHT Longitudinal in Sidewalls SIZE	SPACING	No. REQ'D	LENGTH	"e" bars. STRAIGHT Longitudinal in Bottom Slab of Barrel SIZE	SPACING	No. REQ'D	LENGTH	"f" bars STRAIGHT Verticals in Sidewalls SIZE	SPACING	NUMBER REQ'D 3:1	NUMBER REQ'D 4:1	LENGTH
SECTION "A" & BAR GROUP "A"	3:1 = 22'-0" 4:1 = 32'-0"	0' TO 10'-0"	5'	5'-0"	#5	12"	48	68	7'-9"	#5	12"	48	68	8'-10"	7'-8"	#5	12"	8	#5	12"	8	#5	12"	8	#5	12"	8	#4	12"	44	64	6'-1"
			6'	6'-0"			48	68	7'-11"			48	68	9'-0"	7'-10"			44	#4	12"	8	#4	12"	8	#4	12"	8			44	64	7'-1"
			7'	7'-0"			48	68	8'-0"			48	68	9'-1"	7'-11"			44			12	#5	12"	12	#5	12"	12			44	64	8'-1"
			8'	8'-0"			48	68	8'-1"			48	68	9'-2"	8'-0"			44			14			16			16			44	64	9'-1"
			9'	9'-0"			48	68	8'-3"			48	68	9'-4"	8'-2"			44			16			18			18			44	64	10'-1"
			6'	6'-0"			48	68	8'-11"			44	64	10'-0"	8'-10"			44			9			12			9	#4	12"	44	64	7'-8"
			7'	7'-0"			48	68	9'-0"			44	64	10'-1"	8'-11"			44			9			14			9			44	64	8'-3"
			8'	8'-0"			48	68	9'-1"			44	64	10'-2"	9'-0"			44			9			16			9			44	64	9'-3"
			9'	9'-0"			48	68	9'-3"			44	64	10'-4"	9'-2"			44			9			18			9			44	64	10'-3"
			10'	10'-0"			48	68	9'-5"			44	64	10'-6"	9'-4"			44			9			20			9			44	64	11'-3"
			7'	7'-0"			52	74	10'-0"			48	70	11'-3"	9'-11"			44			10			14			10			48	70	10'-5"
			8'	8'-0"			52	74	10'-1"			48	70	11'-4"	10'-0"			44			10			16			10			48	70	10'-7"
			9'	9'-0"			52	74	10'-3"			48	70	11'-6"	10'-2"			44			10			18			10			48	70	10'-9"
			10'	10'-0"			52	74	10'-5"			48	70	11'-8"	10'-4"			44			10			20			10			48	70	11'-0"
			11'	11'-0"			52	74	10'-7"			48	70	11'-10"	10'-6"			44			10			22			10	#6	12"	44	64	12'-5"
			8'	8'-0"			48	68	11'-1"			44	64	12'-4"	11'-0"			44			11			16			11			44	64	9'-7"
			9'	9'-0"			48	68	11'-3"			44	64	12'-6"	11'-2"			44			11			18			11	#5	12"	44	64	10'-7"
			10'	10'-0"	#7	12"	48	68	11'-5"	#7	12"	44	64	12'-8"	11'-4"	#4	12"	11			11			20			11			44	64	11'-7"
			11'	11'-0"			48	68	11'-7"			44	64	12'-10"	11'-6"			44			11			22			11	#6	12"	44	64	12'-7"
			12'	12'-0"			48	68	11'-9"			44	64	13'-0"	11'-8"			44			11			24			11			44	64	13'-7"
			5'	5'-0"			24	36	7'-9"			24	34	8'-10"	7'-8"			24			8			10			8	#4	12"	22	32	6'-3"
			6'	6'-0"			24	36	7'-11"			24	34	9'-0"	7'-10"			24			8			12			8			22	32	7'-3"
			7'	7'-0"			24	36	8'-0"			24	34	9'-1"	7'-11"			24			8			14			8	#5	12"	22	32	8'-3"
			8'	8'-0"			24	36	8'-1"			24	34	9'-2"	8'-0"			24			8			16			8			22	32	9'-3"
			9'	9'-0"			24	36	8'-3"			24	34	9'-4"	8'-2"			24			8			18			8			22	32	10'-3"
			6'	6'-0"			22	32	8'-11"			22	32	10'-0"	8'-10"			22			9			12			9	#4	12"	22	32	7'-5"
			7'	7'-0"			22	32	9'-0"			22	32	10'-1"	8'-11"			22			9			14			9			22	32	8'-5"
			8'	8'-0"			22	32	9'-1"			22	32	10'-2"	9'-0"			22			9			16			9			22	32	9'-5"
			9'	9'-0"			22	32	9'-3"			22	32	10'-4"	9'-2"			22			9			18			9			22	32	10'-5"
			10'	10'-0"			22	32	9'-5"			22	32	10'-6"	9'-4"			22			9			20			9			22	32	11'-5"
			7'	7'-0"			22	32	10'-0"			22	32	11'-3"	9'-11"			22			10			14			10			22	32	9'-1"
			8'	8'-0"			22	32	10'-1"			22	32	11'-4"	10'-0"			22			10			16			10			22	32	9'-10"
			9'	9'-0"			22	32	10'-3"			22	32	11'-6"	10'-2"			22			10			18			10			22	32	10'-7"
			10'	10'-0"			22	32	10'-5"			22	32	11'-8"	10'-4"			22			10			20			10			22	32	11'-4"
			11'	11'-0"			22	32	10'-7"			22	32	11'-10"	10'-6"			22			10			22			10			22	32	12'-1"
			8'	8'-0"			22	32	11'-1"			22	32	12'-4"	11'-0"			22			12			16			12			22	32	10'-9"
			9'	9'-0"			22	32	11'-3"			22	32	12'-6"	11'-2"			22			12			18			12			22	32	10'-11"
			10'	10'-0"	#8	12"	22	32	11'-5"	#7	12"	22	32	12'-8"	11'-4"	#4	11"	12			12			20			12			22	32	11'-1"
			11'	11'-0"			22	32	11'-7"			22	32	12'-10"	11'-6"			22			12			22			12			22	32	12'-3"
			12'	12'-0"			22	32	11'-9"			22	32	13'-0"	11'-8"			22			12			24			12			22	32	13'-5"
			5'	5'-0"			20	30	9'-0"			20	30	9'-0"	7'-8"			20			8			10			8	#4	12"	22	32	6'-5"
			6'	6'-0"			20	30	9'-1"			20	30	9'-2"	7'-10"			20			8			12			8			22	32	7'-5"
			7'	7'-0"			20	30	9'-3"			20	30	9'-4"	8'-0"			20			8			14			8			22	32	8'-3"
			8'	8'-0"			20	30	9'-4"			20	30	9'-6"	8'-2"			20			8			16			8			22	32	9'-2"
			9'	9'-0"			20	30	9'-6"			20	30	9'-8"	8'-4"			20			8			18			8			22	32	10'-1"
			6'	6'-0"			22	32	10'-2"			22	32	10'-3"	8'-10"			22			10			12			10			22	32	7'-9"
			7'	7'-0"			22	32	10'-3"			22	32	10'-4"	8'-11"			22			10			14			10			22	32	8'-7"
			8'	8'-0"			22	32	10'-4"			22	32	10'-5"	9'-0"			22			10			16			10			22	32	9'-4"
			9'	9'-0"			22	32	10'-5"			22	32	10'-7"	9'-2"			22			10			18			10			22	32	10'-0"
			10'	10'-0"			22	32	10'-7"			22	32	10'-8"	9'-4"			22			10			20			10			22	32	10'-8"
			11'	11'-0"			22	32	10'-9"			22	32	10'-10"	9'-6"			22			10			22			10			22	32	11'-5"
			7'	7'-0"			22	32	10'-11"			22	32	11'-0"	9'-11"			22			11			14			11			22	32	9'-1"
			8'	8'-0"			22	32	11'-0"			22	32	11'-1"	10'-0"			22			11			16			11			22	32	9'-10"
			9'	9'-0"			22	32	11'-2"			22	32	11'-3"	10'-2"			22			11			18			11			22	32	10'-7"
			10'	10'-0"			22	32	11'-4"			22	32	11'-5"	10'-4"			22			11			20			11			22	32	11'-4"
			11'	11'-0"			22	32	11'-6"			22	32	11'-7"	10'-6"			22			11			22			11			22	32	12'-1"
			8'	8'-0"			22	32	11'-11"			22	32	12'-0"	11'-0"			22			13			16			13			22	32	10'-9"
			9'	9'-0"			22	32	12'-1"			22	32	12'-2"	11'-2"			22			13			18			13			22	32	10'-11"
			10'	10'-0"			22	32	12'-3"			22	32	12'-4"	11'-4"			22			13			20			13			22	32	11'-11"
			11'	11'-0"			22	32	12'-5"			22	32	12'-6"	11'-6"			22			13			22			13			22	32	13'-0"
			5'	5'-0"			22	32	7'-10"			22	32	9'-1"	7'-9"			22			9			10			9			22	32	6'-7"
			6'	6'-0"			22	32	8'-0"			22	32	9'-3"	7'-11"			22			9			12			9			22	32	7'-7"
			7'	7'-0"			22	32	8'-1"			22	32	9'-4"	8'-1"			22			9			14			9			22	32	8'-7"
			8'	8'-0"			22	32	8'-3"			22	32	9'-6"	8'-3"			22			9			16			9			22	32	9'-6"
			9'	9'-0"			22	32	8'-5"			22	32	9'-8"	8'-5"			22			9			18			9			22	32	10'-5"
			6'	6'-0"			22	32	10'-2"			22	32	11'-5"	10'-1"			22			12			14			12			22	32	9'-0"
			7'	7'-0"			22	32	10'-4"			22	32	11'-6"	10'-3"			22			12			16			12			22	32	9'-8"
			8'	8'-0"			22	32	10'-5"			22	32	11'-10"	10'-4"			22			12			18			12			22	32	10'-3"
			9'	9'-0"			22	32	10'-7"			22	32	12'-0"	10'-6"			22			12			20			12			22	32	10'-11"
			10'	10'-0"			22	32	10'-9"			22	32	12'-2"	10'-8"			22			12			22			12			22	32	11'-6"
			8'	8'-0"			22	32	11'-4"			22	32	12'-9"	11'-0"			22			14			16			14			22	32	10'-4"
			9'	9'-0"			22	32	11'-6"			22	32	12'-11"	11'-2"			22			14			18			14			22	32	10'-9"
			10'	10'-0"			22	32	11'-8"			22	32	13'-0"	11'-4"			22			14			20			14			22	32	11'-2"
			11'	11'-0"			22	32	11'-10"			22	32	13'-2"	11'-6"			22			14			22			14			22	32	11'-7"
			12'	12'-0"			22	32	12'-0"			22	32	13'-4"	11'-8"			22			14			24			14			22	32	12'-0"
			5'	5'-0"			20	30	9'-0"			20	30	9'-1"	7'-9"			20			9			10			9			22	32	6'-8"
			6'	6'-0"			20	30	9'-2"			20	30	9'-3"	7'-11"			20			9			12			9			22	32	7'-4"
			7'	7'-0"			20	30	9'-4"			20	30	9'-5"	8'-1"			20			9			14			9			22	32	8'-0"
			8'	8'-0"			20	30	9'-5"			20	30	9'-7"	8'-3"			20			9			16			9			22	32	8'-8"
			9'	9'-0"			20	30	9'-7"			20	30	9'-9"	8'-5"			20			9			18			9			22	32	9'-4"
			6'	6'-0"			22	32	10'-3"			22	32	11'-6"	10'-2"			22			13			14			13			22	32	9'-2"
			7'	7'-0"			22	32	10'-5"			22	32	11'-8"	10'-4"			22			13			16			13			22	32	9'-10"
			8'	8'-0"			22	32	10'-7"			22	32	11'-10"	10'-6"			22			13			18			13			22	32	10'-7"
			9'	9'-0"			22	32	10'-9"			22	32	12'-2"	10'-8"			22			13			20			13			22	32	11'-4"
			10'	10'-0"			22	32	10'-11"			22	32	12'-4"	10'-10"			22			13			22			13			22	32	12'-1"

NOTE:- Bars for each Section to be marked with the Section letter, thus for Section B, the bars should be marked Ba, Bb, Bc, Bd, Be and Bf.

Designed By: W.C.H. 7-18-62.	Checked By:- RMS	7-25-62
Drawn By: W.C.H. 8-3-62.	Checked By:- RMS	8-10-62
Quantities By: W.C.H. 8-1-62.	Checked By:- RMS	8-10-62

DIMENSIONS AND QUANTITIES

MAX. DESIGN DEPTH OF COVER D	CLEAR SPAN S	BARREL DIMENSIONS: CLEAR HEIGHT H	AREA OF OPENING A	OVERALL WIDTH OW	THICKNESS OF TOP SLAB T	THICKNESS OF SIDEWALLS C	THICKNESS OF BOTTOM SLAB B	OVERALL HEIGHT OH	UNIT QUANTITIES: CLASS S CONC. PER LIN.FT OF BARREL CU.YD.	REINFORCING STEEL PER LIN. FT OF BARREL LB.	ADDITIONAL PER LAP LB.	ADDITIONAL TYPE HEADWALLS & APRONS LB
SECTION "A" - 10'-0"	5'	5'-0"	35	8'-0"	6"	6"	6"	6'-6½"	0.593	69.80	2.171	101.42
	6'	6'-0"	42	8'-2"	6"	7"	6½"	7'-6½"	0.675	71.72	23.38	108.61
	7'	7'-0"	49	8'-3"	6"	7½"	6½"	8'-6½"	0.794	75.80	25.05	109.50
	8'	8'-0"	56	8'-4"	6"	8"	6½"	9'-6½"	0.819	86.72	26.72	110.20
	9'	9'-0"	63	8'-6"	6"	9"	6½"	10'-6½"	0.933	90.91	28.39	111.59
	6'	6'-0"	48	9'-2"	7"	7"	7"	7'-6"	0.769	86.55	25.05	157.02
	7'	7'-0"	56	9'-3"	7"	7½"	7"	8'-6"	0.838	89.72	26.72	158.02
	8'	8'-0"	64	9'-4"	7"	8"	7"	9'-6"	0.914	99.84	28.39	159.02
	9'	9'-0"	72	9'-6"	7"	9"	7"	10'-6"	1.028	106.20	30.06	161.03
	10'	10'-0"	80	9'-8"	7"	10"	7"	11'-6"	1.154	113.38	31.73	163.03
	7'	7'-0"	63	10'-3"	7"	7½"	8"	8'-6"	0.957	116.90	28.39	172.61
	8'	8'-0"	72	10'-4"	7"	8"	8"	9'-6"	1.033	127.28	30.06	178.61
	9'	9'-0"	81	10'-6"	7"	9"	8"	10'-6"	1.148	138.37	31.73	180.61
	10'	10'-0"	90	10'-8"	7"	10"	8"	11'-6"	1.276	141.44	33.40	182.62
	11'	11'-0"	99	10'-10"	7"	11"	8"	12'-6"	1.416	152.81	35.07	184.62
	8'	8'-0"	80	11'-2"	7"	8"	9"	9'-10"	1.165	141.10	31.73	249.37
	9'	9'-0"	90	11'-3"	7"	9"	9"	10'-10"	1.281	145.89	33.40	252.10
	10'	10'-0"	100	11'-5"	7"	10"	9"	11'-10"	1.409	155.50	35.07	254.82
	11'	11'-0"	110	11'-7"	7"	11"	9"	12'-10"	1.550	167.01	36.74	257.55
	12'	12'-0"	120	11'-9"	7"	12"	9"	13'-10"	1.704	176.42	38.41	260.27
SECTION "B" - 15'-0"	5'	5'-0"	35	8'-0"	8½"	6"	6"	6'-6"	0.630	80.06	2.171	
	6'	6'-0"	42	8'-2"	8½"	7"	6½"	7'-6"	0.713	88.83	22.38	
	7'	7'-0"	49	8'-3"	8½"	7½"	6½"	8'-6"	0.782	93.23	25.05	
	8'	8'-0"	56	8'-4"	8½"	8"	6½"	9'-6"	0.858	105.69	26.72	
	9'	9'-0"	63	8'-6"	8½"	9"	6½"	10'-6"	0.972	111.13	28.39	
	6'	6'-0"	48	9'-2"	9"	7"	7"	7'-8½"	0.839	96.44	25.05	
	7'	7'-0"	56	9'-3"	9"	7½"	7"	8'-8½"	0.909	106.02	26.72	
	8'	8'-0"	64	9'-4"	9"	8"	7"	9'-8½"	0.986	113.96	28.39	
	9'	9'-0"	72	9'-6"	9"	9"	7"	10'-8½"	1.101	124.20	30.06	
	10'	10'-0"	80	9'-8"	9"	10"	7"	11'-8½"	1.229	136.58	31.73	
	7'	7'-0"	63	10'-3"	9"	7½"	8"	8'-10½"	1.036	127.49	28.39	
	8'	8'-0"	72	10'-4"	9"	8"	8"	9'-10½"	1.115	135.39	30.06	
	9'	9'-0"	81	10'-6"	9"	9"	8"	10'-10½"	1.229	146.03	31.73	
	10'	10'-0"	90	10'-8"	9"	10"	8"	11'-10½"	1.358	158.75	33.40	
	11'	11'-0"	99	10'-10"	9"	11"	8"	12'-10½"	1.499	171.14	35.07	
	8'	8'-0"	80	11'-2"	9"	8"	9"	10'-0½"	1.252	160.73	33.40	
	9'	9'-0"	90	11'-3"	9"	9"	9"	11'-0½"	1.370	171.52	35.07	
	10'	10'-0"	100	11'-5"	9"	10"	9"	12'-0½"	1.499	180.64	36.74	
	11'	11'-0"	110	11'-7"	9"	11"	9"	13'-0½"	1.642	197.17	38.41	
	12'	12'-0"	120	11'-9"	9"	12"	9"	14'-0½"	1.796	203.27	40.08	
SECTION "C" - 20'-0"	5'	5'-0"	35	8'-0"	9½"	6"	6"	6'-8"	0.679	89.15	2.171	
	6'	6'-0"	42	8'-2"	9½"	7"	6½"	7'-8"	0.768	98.64	23.38	
	7'	7'-0"	49	8'-3"	9½"	7½"	6½"	8'-8"	0.833	106.20	25.05	
	8'	8'-0"	56	8'-4"	9½"	8"	6½"	9'-8"	0.924	117.96	26.72	
	9'	9'-0"	63	8'-6"	9½"	9"	6½"	10'-8"	1.041	132.28	28.39	
	6'	6'-0"	48	9'-2"	10"	7"	7"	7'-10"	0.896	111.55	26.72	
	7'	7'-0"	56	9'-3"	10"	7½"	7"	8'-10"	0.966	122.89	28.39	
	8'	8'-0"	64	9'-4"	10"	8"	7"	9'-10"	1.074	132.89	30.06	
	9'	9'-0"	72	9'-6"	10"	9"	7"	10'-10"	1.177	144.27	31.73	
	10'	10'-0"	80	9'-8"	10"	10"	7"	11'-10"	1.307	156.17	33.40	
	7'	7'-0"	63	10'-4"	10"	8"	8"	9'-11"	1.163	162.65	30.06	
	8'	8'-0"	72	10'-5"	10"	9"	8"	10'-11"	1.224	155.88	31.73	
	9'	9'-0"	81	10'-6"	10"	10"	8"	11'-11"	1.327	167.52	33.40	
	10'	10'-0"	90	10'-8"	10"	11"	8"	12'-11"	1.459	178.75	35.07	
	11'	11'-0"	99	10'-10"	10"	12"	8"	13'-11"	1.603	197.24	36.74	
	8'	8'-0"	80	11'-2"	10"	8"	9"	10'-11"	1.405	173.91	35.07	
	9'	9'-0"	90	11'-3"	10"	9"	9"	11'-11"	1.511	196.05	36.74	
	10'	10'-0"	100	11'-5"	10"	10"	9"	12'-11"	1.626	203.28	38.41	
	11'	11'-0"	110	11'-7"	10"	11"	9"	13'-11"	1.772	221.81	40.08	
	12'	12'-0"	120	11'-9"	10"	12"	9"	14'-11"	1.929	241.22	41.75	
SECTION "D" - 25'-0"	5'	5'-0"	35	8'-1"	10"	6"	6"	6'-10"	0.749	96.65	23.38	
	6'	6'-0"	42	8'-3"	10"	7"	6½"	7'-10"	0.838	106.38	25.05	
	7'	7'-0"	49	8'-4"	10"	7½"	6½"	8'-10"	0.925	114.06	26.72	
	8'	8'-0"	56	8'-6"	10"	8"	6½"	9'-10"	1.022	126.68	28.39	
	9'	9'-0"	63	8'-8"	10"	9"	6½"	10'-10"	1.149	191.24	30.06	
	6'	6'-0"	48	9'-3"	11"	7"	7½"	8'-0½"	0.977	128.84	28.39	
	7'	7'-0"	56	9'-4½"	11"	7½"	7½"	9'-0½"	1.065	136.70	30.06	
	8'	8'-0"	64	9'-6½"	12"	8"	7½"	10'-0½"	1.178	146.99	31.73	
	9'	9'-0"	72	9'-8½"	12"	9"	7½"	11'-0½"	1.304	159.36	33.40	
	10'	10'-0"	80	9'-10½"	12"	10"	7½"	12'-0½"	1.441	175.92	35.07	
	7'	7'-0"	63	10'-5"	11"	8½"	8"	9'-9½"	1.251	160.30	31.73	
	8'	8'-0"	72	10'-7"	11"	9½"	8"	10'-3½"	1.367	179.69	33.90	
	9'	9'-0"	81	10'-8½"	12"	10½"	8"	11'-3½"	1.478	186.52	35.07	
	10'	10'-0"	90	10'-10½"	12"	11½"	8"	12'-3½"	1.617	199.04	36.74	
	11'	11'-0"	99	11'-0½"	12"	12½"	8"	13'-3½"	1.769	216.88	38.41	
	8'	8'-0"	80	11'-7"	12"	9½"	9"	10'-6"	1.542	200.20	36.74	
	9'	9'-0"	90	11'-9"	12"	10½"	9"	11'-6"	1.671	214.77	38.41	
	10'	10'-0"	100	11'-10½"	12"	11½"	9"	12'-6"	1.794	230.33	40.08	
	11'	11'-0"	110	12'-0½"	12"	12½"	9"	13'-6"	1.997	248.61	41.75	
	12'	12'-0"	120	12'-2½"	12"	13½"	9"	14'-6"	2.112	263.06	43.42	
SECTION "E" - 30'-0"	5'	5'-0"	35	8'-2"	11"	7"	7"	6'-11½"	0.808	102.90	23.38	
	6'	6'-0"	42	8'-4"	11"	8"	7"	7'-11½"	0.901	113.71	25.05	
	7'	7'-0"	49	8'-5"	11"	9"	7"	8'-11½"	1.005	122.23	26.72	
	8'	8'-0"	56	8'-7"	11"	9¾"	7"	9'-11½"	1.107	134.29	28.39	
	9'	9'-0"	63	8'-9"	11"	10¾"	7"	10'-11½"	1.235	149.09	30.06	
	6'	6'-0"	48	9'-4"	12"	8"	8"	8'-2½"	1.060	138.22	28.39	
	7'	7'-0"	56	9'-5"	12"	9"	8"	9'-2½"	1.166	147.08	30.06	
	8'	8'-0"	64	9'-6"	13"	10"	8"	10'-2½"	1.284	157.60	31.73	
	9'	9'-0"	72	9'-8"	13"	11"	8"	11'-2½"	1.415	170.21	33.40	
	10'	10'-0"	80	10'-0"	13"	12"	8"	12'-2½"	1.559	187.05	35.07	
	7'	7'-0"	63	10'-6"	14"	9"	9"	9'-5½"	1.360	173.52	33.90	
	8'	8'-0"	72	10'-8"	14"	10"	9"	10'-5½"	1.481	188.21	35.07	
	9'	9'-0"	81	10'-10"	14"	11"	9"	11'-5½"	1.597	201.20	36.74	
	10'	10'-0"	90	11'-0"	14"	12"	9"	12'-5½"	1.742	218.49	38.41	
	11'	11'-0"	99	11'-2"	14"	13"	9"	13'-5½"	1.899	232.10	40.08	

W-X002

Reshot 3-8-93

191

FED. ROAD No.	STATE	FED. AID PROJECT	FISCAL YEAR	SHEET No.	TOTAL SHEETS
6	ARK.			424	
JOB No.					

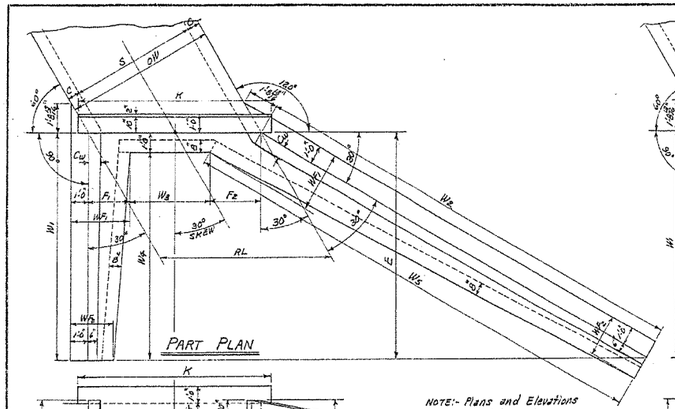

SINGLE BARREL CULVERT-30° SKEW RIGHT FORWARD

Details of Culvert with 30° Skew Left Forward is reversed, see Layout below.

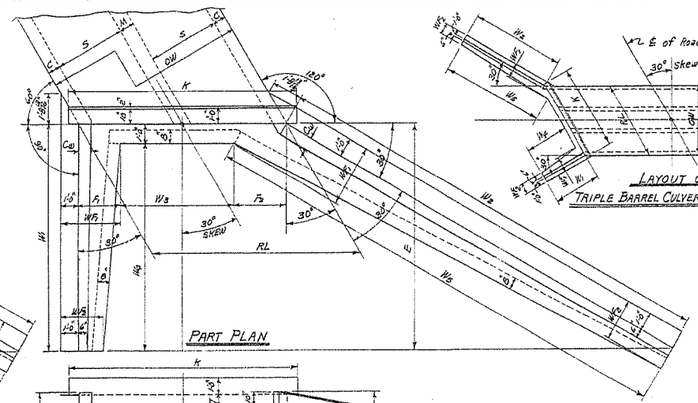

DOUBLE BARREL CULVERT-30° SKEW RIGHT FORWARD

Details of Culvert with 30° Skew Left Forward is reversed, see Layout below.

LAYOUT OF TRIPLE BARREL CULVERT-30° SKEW LEFT FORWARD

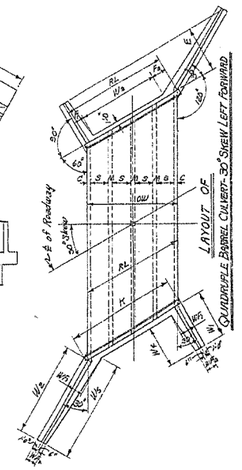

LAYOUT OF QUADRUPLE BARREL CULVERT-30° SKEW LEFT FORWARD

NOTE:- The length of the wings for the Plans, Elevations, and Layouts, as drawn, are proportioned for 3:1 slopes. For 2:1 slopes the wings are proportionally shorter, while for 4:1 slopes they are longer.

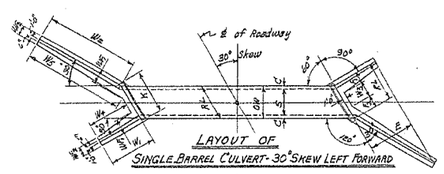

LAYOUT OF SINGLE BARREL CULVERT-30° SKEW LEFT FORWARD

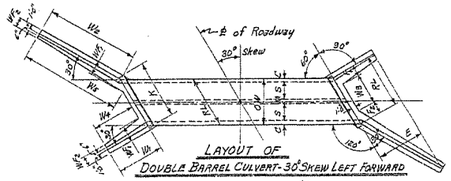

LAYOUT OF DOUBLE BARREL CULVERT-30° SKEW LEFT FORWARD

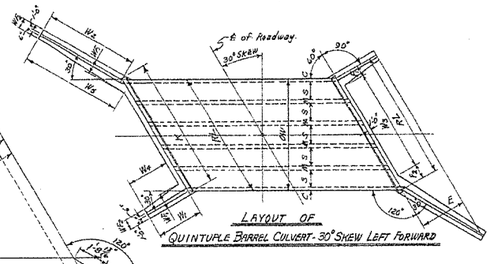

LAYOUT OF QUINTUPLE BARREL CULVERT-30° SKEW LEFT FORWARD

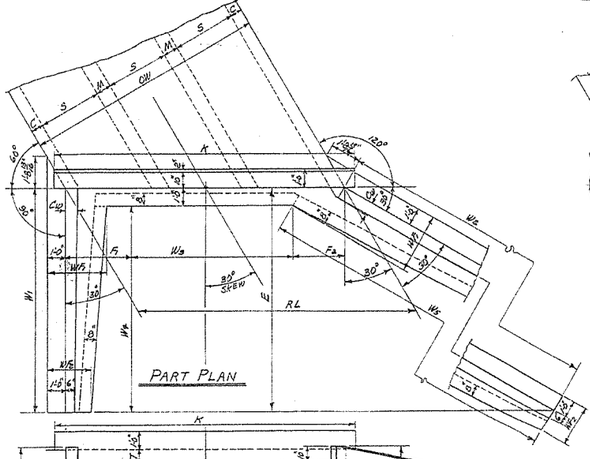

TRIPLE BARREL CULVERT-30° SKEW RIGHT FORWARD

Details of Culvert with 90° Skew Left Forward is reversed, see Layout at top center of sheet.

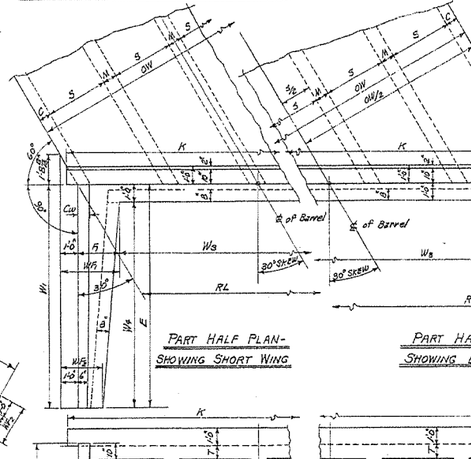

NOTE:-Plans and Elevations are not to scale.

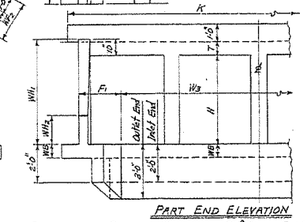

PART END ELEVATION

QUADRUPLE BARREL CULVERT-30° SKEW RT. FWD.

Details of Culvert with 30° Skew Left Forward is reversed, see Layout at above center.

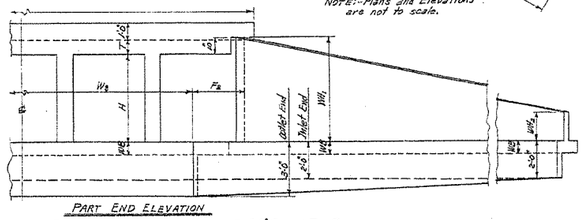

PART END ELEVATION

QUINTUPLE BARREL CULVERT-30° SKEW RT. FWD.

Details of Culvert with 30° Skew Left Forward is reversed, see Layout above.

ROADWAY LENGTH RL — HEADWALL LENGTH K — APRON DIMENSION W_3

$RL = OW \times 1.1547$ — $K = RL + (1' - 1\frac{7}{8}")$ — $W_3 = RL - (F_1 + F_2)$

USE WITH DRAWING No.	CLEAR SPAN	CLEAR HEIGHT	SUM OF FOOTING WIDTHS	SINGLE BARREL CULVERT				DOUBLE BARREL CULVERT				TRIPLE BARREL CULVERT				QUADRUPLE BARREL CULVERT				QUINTUPLE BARREL CULVERT			
	S	H	$F_1 \& F_2$	OW	RL	K	W_3	OW	RL	K	W_3	OW	RL	K	W_3	OW	RL	K	W_3	OW	RL	K	W_3
W-X302-1, W-X303-1 or W-X304-1. (FOR H=8'0 OR LESS)	4'	2'	2'-3⅜"	5'-0"	5'-9⅛"	6'-11⅞"	3'-1⅝"	9'-8"	11'-2"	12'-3⅝"	8'-10⅝"	14'-4"	16'-6⅝"	17'-10⅝"	14'-3⅝"	19'-0"	21'-11⅛"	23'-1"	19'-1⅝"	23'-8"	27'-4"	28'-5⅝"	25'-0⅜"
		3'	2'-3⅜"	5'-0"	"	"	2'-1⅝"	9'-8"	"	"	7'-10⅜"	14'-9"	"	"	13'-3⅜"	19'-0"	"	"	18'-8"	23'-8"	"	"	24'-10⅜"
		4'	4'-3⅜"	5'-0"	"	"	1'-1⅝"	9'-8"	"	"	6'-10⅜"	14'-9"	"	"	12'-3⅜"	19'-0"	"	"	17'-8"	23'-8"	"	"	23'-10⅜"
		5'	5'-3⅜"	5'-0"	5'-9⅛"	6'-11⅞"	0'-1⅝"	9'-8"	11'-2"	12'-3⅝"	5'-10⅜"	14'-4"	16'-6⅝"	17'-10⅝"	11'-3⅜"	19'-0"	21'-11⅛"	23'-1"	16'-8"	23'-8"	27'-4"	28'-5⅝"	22'-0⅜"
		6'	6'-3⅜"	5'-2"	5'-11⅝"	7'-1⅝"	Ⓐ 0"	9'-11"	11'-5¼"	12'-7⅞"	5'-2⅜"	14'-8"	16'-11⅛"	18'-1"	10'-8"	19'-5"	22'-5"	23'-7"	16'-1⅜"	24'-2"	27'-10⅜"	29'-0⅛"	21'-7⅜"
	5'	3'	3'-3⅜"	6'-0"	6'-11⅝"	8'-1"	3'-7⅜"	11'-8"	13'-5⅝"	14'-7⅜"	10'-2⅜"	17'-4"	20'-0⅛"	21'-2"	16'-3"	23'-0"	26'-6⅝"	27'-8⅝"	23'-3⅝"	28'-8"	33'-1⅛"	34'-3"	29'-10"
		4'	4'-3⅜"	6'-0"	"	"	2'-7⅜"	11'-8"	"	"	9'-2⅜"	17'-4"	"	"	15'-9"	23'-0"	"	"	22'-2⅝"	28'-8"	"	"	28'-10"
		5'	5'-3⅜"	6'-0"	6'-11⅝"	8'-1"	1'-7⅜"	11'-8"	13'-5⅝"	14'-7⅜"	8'-2⅜"	17'-4"	20'-0⅛"	21'-2"	14'-9"	23'-0"	26'-6⅝"	27'-8⅝"	21'-3⅛"	28'-8"	33'-1⅛"	34'-3"	27'-10"
		6'	6'-3⅜"	6'-3"	"	"	0'-10⅜"	11'-11"	13'-9½"	14'-11"	7'-5⅜"	17'-8"	20'-4⅝"	21'-6⅜"	14'-1⅝"	23'-5"	27'-0⅝"	28'-2⅝"	20'-3⅝"	29'-2"	33'-9⅛"	34'-10"	27'-5"
		7'	7'-3⅜"	6'-8"	7'-2⅝"	8'-4⅝"	Ⓐ 0"	12'-1"	13'-11⅝"	15'-1⅛"	6'-2⅜"	17'-11"	20'-8⅜"	21'-10"	12'-11"	23'-9"	27'-5⅝"	28'-7"	19'-8"	29'-7"	34'-2"	35'-3⅝"	26'-7⅝"
	6'	3'	3'-3⅜"	7'-0"	8'-1"	9'-2⅞"	4'-3⅜"	13'-8"	15'-9⅜"	16'-11⅝"	12'-6⅜"	20'-0"	23'-0⅛"	24'-2⅝"	21'-0"	27'-0"	31'-2⅝"	32'-4"	27'-1"	33'-8"	38'-1⅛"	40'-0⅝"	33'-7⅝"
		4'	4'-3⅜"	7'-0"	"	"	3'-3⅜"	13'-8"	"	"	11'-6⅜"	20'-0"	"	"	19'-2⅝"	27'-0"	"	"	26'-1"	33'-8"	"	"	33'-7⅝"
		5'	5'-3⅜"	7'-0"	8'-1"	9'-2⅞"	2'-3⅜"	12'-8"	15'-0⅜"	16'-2⅝"	10'-6⅜"	20'-0"	23'-0⅛"	24'-2⅝"	18'-2⅝"	27'-0"	31'-2⅝"	32'-4"	25'-1"	33'-8"	38'-1⅛"	40'-0⅝"	33'-7⅝"
		6'	6'-3⅜"	7'-2"	8'-3"	9'-5⅞"	2'-0"	13'-1"	14'-0⅝"	17'-2⅝"	9'-9⅜"	20'-8"	23'-10⅝"	25'-0⅛"	17'-7⅛"	27'-5"	31'-10⅞"	33'-0⅝"	25'-0⅜"	34'-2"	39'-5⅝"	40'-2⅝"	33'-2⅝"
		7'	7'-3⅜"	7'-3"	8'-4⅛"	9'-6⅞"	0'-10⅝"	13'-1"	14'-3⅝"	17'-5"	8'-6"	20'-11"	24'-1⅝"	25'-3⅜"	16'-4¼"	27'-9"	32'-2⅛"	33'-3⅝"	22'-10⅝"	34'-10"	39'-11⅝"	41'-1"	32'-2"
		8'	9'-3⅜"	7'-4"	8'-5⅝"	9'-7½"	Ⓐ 0"	13'-2"	14'-5⅝"	17'-6⅝"	7'-1"	21'-0"	24'-3"	25'-5⅝"	16'-11⅝"	27'-10"	32'-3⅝"	33'-5"	22'-10⅝"	34'-10"	40'-0⅜"	41'-2⅝"	30'-10⅝"
	7'	4'	4'-3⅜"	8'-0"	9'-2⅜"	10'-5⅝"	4'-1⅜"	15'-8"	18'-1⅛"	19'-5"	13'-9⅜"	23'-5"	26'-11⅜"	28'-1⅛"	22'-8"	31'-0"	35'-5½"	36'-11⅛"	31'-1⅝"	38'-8"	44'-1⅞"	45'-5⅜"	40'-4½"
		5'	5'-3⅜"	8'-0"	9'-2⅜"	10'-5⅝"	3'-1⅝"	15'-8"	18'-1⅛"	19'-5"	12'-9⅜"	23'-5"	26'-11⅜"	28'-1⅛"	21'-8"	31'-0"	35'-5½"	36'-11⅛"	30'-1⅝"	38'-8"	44'-1⅞"	45'-5⅜"	39'-4½"
		6'	6'-3⅜"	8'-2"	9'-4⅜"	10'-7⅞"	2'-2"	15'-11"	18'-4½"	19'-6⅝"	12'-1⅜"	23'-8"	27'-1⅜"	28'-3⅛"	21'-0⅝"	31'-5"	36'-0⅜"	37'-5⅝"	30'-0"	39'-2"	45'-0⅝"	46'-4⅛"	38'-11⅝"
		7'	7'-3⅜"	8'-3"	9'-5⅛"	10'-8½"	1'-1⅜"	16'-1"	18'-6⅛"	19'-8⅝"	10'-3⅜"	23'-11"	27'-3⅜"	28'-5⅛"	19'-10⅛"	31'-9"	36'-3⅜"	37'-8⅝"	28'-10⅛"	39'-7"	45'-3⅛"	46'-6⅝"	37'-11⅛"
		8'	9'-3⅜"	8'-3"	9'-5⅛"	10'-8½"	0'-1⅝"	16'-2"	18'-6"	19'-8⅝"	9'-4⅝"	24'-0"	27'-3⅜"	28'-5⅛"	18'-5⅝"	31'-10"	36'-3⅜"	37'-11"	27'-4"	39'-8"	45'-3⅛"	46'-6⅝"	36'-6⅝"
	8'	4'	4'-3⅜"	9'-0"	10'-4⅝"	11'-8⅛"	4'-1⅛"	17'-8"	20'-4⅜"	21'-6⅝"	14'-1⅝"	26'-4"	30'-0⅜"	31'-2⅝"	24'-1⅝"	35'-0"	40'-0⅝"	41'-4⅝"	36'-1⅝"	43'-8"	50'-0⅝"	51'-5"	44'-1⅜"
		5'	5'-3⅜"	9'-2"	10'-7"	11'-11⅜"	3'-3⅜"	17'-11"	20'-8⅛"	21'-10"	13'-5"	26'-8"	30'-3½"	31'-11⅜"	25'-6⅜"	35'-5"	40'-10⅜"	42'-0⅛"	35'-7⅛"	44'-2"	51'-0"	52'-1⅜"	45'-0⅜"
		6'	6'-3⅜"	9'-2"	10'-7"	11'-11⅜"	4'-3⅜"	17'-11"	20'-8⅛"	21'-10"	14'-5"	26'-8"	30'-3½"	31'-11⅜"	24'-6⅜"	35'-5"	40'-10⅜"	42'-0⅛"	34'-7⅛"	44'-2"	51'-0"	52'-1⅜"	44'-0⅜"
		7'	7'-3⅜"	9'-3"	10'-8⅛"	11'-10"	2'-1"	18'-1"	20'-10⅜"	22'-0⅛"	13'-1⅛"	26'-11"	31'-1"	32'-3⅜"	23'-3⅜"	35'-9"	41'-3⅜"	42'-5⅝"	33'-6⅛"	44'-7"	51'-5⅝"	52'-7⅛"	43'-5⅛"
		8'	9'-3⅜"	9'-4"	10'-9⅜"	11'-11⅝"	1'-1⅝"	18'-2"	20'-11⅜"	22'-1⅝"	11'-8⅜"	27'-0"	31'-2⅜"	32'-4"	21'-11"	35'-10"	41'-4⅜"	42'-6⅝"	32'-1⅝"	44'-8"	51'-7"	52'-8⅝"	42'-6⅝"
	9'	5'	5'-3⅜"	10'-2"	11'-8⅜"	12'-10⅝"	6'-5⅜"	19'-11"	23'-0"	24'-1⅜"	17'-0⅜"	29'-8"	34'-3⅜"	35'-5"	28'-1⅛"	39'-5"	45'-4⅝"	46'-8"	40'-3"	49'-2"	56'-3⅛"	57'-11⅛"	51'-6"
		6'	6'-3⅜"	10'-3"	11'-10"	13'-0"	5'-6⅜"	20'-1"	23'-2⅛"	24'-4⅛"	16'-1"	29'-11"	34'-6⅛"	35'-8⅝"	28'-3⅝"	39'-7"	45'-6⅜"	46'-10⅝"	39'-7⅝"	49'-4"	56'-5⅜"	58'-1⅝"	50'-11⅝"
		7'	7'-3⅜"	10'-3"	11'-10"	13'-0"	4'-0⅜"	20'-1"	23'-2⅛"	24'-4⅛"	15'-5"	29'-11"	34'-6⅛"	35'-8⅝"	26'-9⅜"	39'-10"	45'-9"	47'-0⅛"	38'-1⅛"	49'-5"	57'-0"	58'-5"	49'-5⅜"
		8'	9'-3⅜"	10'-4"	11'-11⅝"	13'-1"	2'-8"	20'-2"	23'-3⅝"	24'-5⅝"	14'-10⅜"	30'-0"	34'-7⅝"	35'-9⅝"	25'-9⅛"	40'-0"	46'-0"	47'-1⅝"	36'-8⅝"	49'-6"	57'-0⅝"	58'-6"	48'-1"
	10'	5'	5'-3⅜"	11'-2"	12'-10⅜"	14'-1⅛"	7'-2⅜"	21'-11"	25'-3⅜"	26'-5⅝"	20'-0⅛"	32'-8"	37'-6⅜"	38'-10⅝"	32'-5⅛"	43'-5"	50'-1⅜"	51'-3⅝"	44'-0⅛"	54'-2"	62'-6⅜"	63'-10⅝"	57'-3⅜"
		6'	6'-3⅜"	11'-3"	12'-11⅜"	14'-2⅛"	6'-1⅜"	22'-1"	25'-4"	26'-7⅜"	18'-6⅜"	32'-11"	38'-0⅜"	39'-3"	31'-0"	43'-10"	50'-6⅜"	51'-8"	42'-9"	54'-7"	63'-0⅜"	64'-3"	56'-7"
		7'	7'-3⅜"	11'-3"	12'-11⅜"	14'-2⅛"	5'-2⅜"	22'-1"	25'-4"	26'-7⅜"	17'-0⅜"	33'-0"	38'-0⅜"	39'-2"	29'-3"	44'-0"	50'-6⅜"	51'-8"	41'-6"	54'-9"	63'-0⅜"	64'-2⅝"	55'-3"
		8'	9'-3⅜"	11'-4"	12'-1"	14'-3"	3'-10⅜"	22'-2"	25'-5⅜"	26'-9"	16'-4"	33'-1"	38'-2⅛"	39'-3"	28'-10"	44'-2"	50'-8⅜"	51'-10⅝"	41'-0⅝"	54'-11"	63'-2⅜"	64'-5"	53'-10⅝"
	11'	6'	6'-3⅜"	12'-4"	14'-2⅝"	15'-6⅛"	7'-11⅝"	24'-2"	27'-10⅛"	29'-0⅝"	21'-7⅜"	36'-0"	41'-6⅜"	42'-8⅛"	35'-3⅝"	48'-10"	55'-2⅛"	56'-6⅝"	48'-11⅝"	—	—	—	—
		7'	7'-3⅜"	12'-5"	"	"	6'-5⅜"	24'-2"	"	"	20'-1⅜"	36'-0"	"	"	33'-9⅝"	49'-10"	"	"	46'-11⅝"	—	—	—	—
		8'	9'-3⅜"	12'-6"	"	"	5'-3⅛"	24'-2"	"	"	18'-7⅜"	36'-0"	"	"	32'-2⅝"	49'-10"	"	"	45'-11⅝"	—	—	—	—
	12'	6'	6'-3⅜"	13'-4"	15'-2⅝"	16'-6⅛"	9'-1⅛"	26'-2"	30'-2⅝"	31'-4⅝"	23'-1⅛"	39'-0"	45'-0⅜"	46'-2⅝"	38'-9⅜"	51'-10"	59'-0⅜"	61'-0"	53'-7"	—	—	—	—
		7'	7'-3⅜"	13'-5"	"	"	7'-7⅛"	26'-2"	"	"	22'-5⅜"	39'-0"	"	"	37'-3⅜"	51'-10"	"	"	52'-1⅛"	—	—	—	—
		8'	9'-3⅜"	13'-6"	"	"	6'-5⅛"	26'-2"	"	"	20'-11⅜"	39'-0"	"	"	35'-9⅜"	51'-10"	"	"	50'-7"	—	—	—	—
W-X302-2, W-X303-2 OR W-X304-2. (FOR H=9'0 & OVER)	7'	9'	10'-3⅝"	9'-6"	9'-9⅜"	10'-11⅝"	Ⓐ 0"	16'-5"	18'-11⅛"	20'-1⅛"	8'-2⅝"	22'-10"	26'-1⅞"	28'-3"	17'-9"	32'-3"	37'-2⅜"	38'-6⅝"	26'-5⅝"	40'-2"	46'-9⅛"	47'-11⅝"	35'-7⅛"
	8'	9'	10'-3⅝"	9'-6"	10'-1⅛"	12'-1½"	0'-2⅜"	18'-5"	21'-3⅝"	22'-5"	10'-6"	27'-9"	31'-11⅜"	32'-8⅛"	26'-9½"	36'-8"	41'-10⅝"	43'-0⅛"	31'-1"	45'-2"	52'-1⅝"	53'-3⅝"	41'-8⅝"
		10'	12'-3⅝"	9'-8"	11'-2"	12'-3⅜"	Ⓐ 0"	18'-8"	21'-6⅝"	22'-8⅝"	9'-3⅜"	27'-8"	31'-11⅜"	33'-1⅛"	19'-8⅜"	36'-8"	42'-1⅝"	43'-3"	30'-10⅜"	45'-8"	52'-8⅝"	53'-10⅝"	40'-5⅝"
	9'	9'	10'-3⅝"	10'-6"	12'-1½"	13'-3⅜"	1'-4⅜"	20'-5"	23'-6⅛"	24'-8⅜"	15'-3⅜"	30'-9"	35'-5⅜"	36'-7⅝"	26'-1"	40'-3"	46'-6⅜"	47'-7⅝"	35'-9⅜"	50'-2"	57'-11⅝"	59'-1"	47'-2"
		10'	12'-3⅝"	10'-8"	12'-3⅜"	13'-5⅝"	0'-10⅝"	20'-8"	23'-10⅝"	25'-0⅛"	11'-7⅛"	30'-11"	35'-4⅞"	36'-6⅝"	23'-1⅝"	40'-8"	46'-11⅝"	48'-1⅛"	34'-9⅛"	50'-8"	58'-4"	59'-6"	46'-2⅝"
		11'	13'-3⅝"	10'-10"	12'-6⅝"	13'-8"	Ⓐ 0"	20'-10"	24'-0⅝"	25'-2⅛"	10'-3⅜"	30'-10"	35'-7⅛"	36'-9"	21'-10"	40'-10"	47'-1⅜"	48'-3⅜"	33'-8⅜"	50'-10"	58'-3⅝"	59'-10⅛"	44'-11⅛"
	10'	9'	10'-3⅝"	11'-6"	13'-2⅝"	14'-5½"	2'-6⅜"	22'-5"	25'-10⅜"	27'-0⅛"	15'-3⅜"	33'-6"	38'-5⅜"	39'-7⅝"	28'-1⅛"	44'-3"	51'-1⅜"	52'-3"	40'-1"	55'-2"	63'-8⅜"	64'-10⅛"	52'-1⅛"
		10'	12'-3⅝"	11'-8"	13'-5⅝"	14'-7⅞"	1'-2⅜"	22'-9"	26'-2⅜"	27'-4"	13'-10⅜"	33'-9"	38'-10⅜"	40'-0⅛"	26'-7⅛"	44'-8"	51'-7"	52'-8⅝"	39'-3⅜"	55'-8"	64'-3⅜"	65'-5½"	52'-6"
		11'	13'-3⅝"	11'-10"	13'-8"	14'-9⅜"	Ⓐ 0"	22'-10"	26'-4⅜"	27'-6⅛"	12'-7⅜"	33'-10"	39'-0⅛"	40'-2⅛"	25'-3⅜"	44'-10"	51'-9½"	52'-11"	38'-5"	55'-10"	64'-5⅜"	65'-7½"	50'-8⅛"
		12'	15'-3⅝"	12'-0"	13'-10⅛"	15'-0⅝"	Ⓐ 0"	23'-0"	26'-6⅝"	27'-8⅛"	11'-3⅜"	34'-0"	39'-3⅛"	40'-5"	24'-0"	45'-0"	51'-11⅝"	53'-1⅛"	36'-8⅛"	56'-0"	64'-8"	65'-9⅜"	49'-3⅜"
	11'	9'	10'-3⅝"	12'-6"	14'-5⅛"	15'-7"	3'-1⅜"	24'-5"	28'-2⅜"	29'-4⅜"	17'-5"	36'-4"	41'-11⅝"	43'-1⅛"	31'-2⅜"	48'-5"	55'-10⅜"	56'-10⅝"	44'-11⅛"	—	—	—	—
		10'	12'-3⅝"	12'-8"	14'-7⅛"	15'-9⅛"	2'-6⅛"	24'-8"	28'-5⅜"	29'-7⅜"	16'-2⅝"	36'-8"	42'-4⅝"	43'-6⅛"	30'-6⅝"	48'-10"	56'-2⅛"	57'-2⅝"	43'-11⅛"	—	—	—	—
		11'	13'-3⅝"	12'-10"	14'-9⅜"	15'-11⅝"	1'-10⅝"	24'-10"	28'-8⅜"	29'-10⅝"	15'-11"	36'-10"	42'-6⅜"	43'-8⅝"	28'-9⅝"	49'-0"	56'-5⅝"	57'-6⅛"	42'-3⅝"	—	—	—	—
		12'	15'-3⅝"	13'-0"	15'-0⅝"	16'-2"	Ⓐ 0"	25'-0"	28'-10⅜"	30'-0⅛"	13'-7⅜"	37'-0"	42'-8⅝"	43'-10⅛"	27'-5⅛"	49'-0"	56'-7"	57'-8⅜"	41'-3⅜"	—	—	—	—
	12'	9'	10'-3⅝"	12'-6"	14'-5⅛"	15'-7⅛"	4'-3⅜"	24'-5"	28'-2⅜"	29'-4⅜"	19'-8⅝"	36'-4"	41'-11⅝"	43'-1⅛"	32'-3"	48'-5"	55'-10⅜"	56'-10⅝"	44'-3⅛"	—	—	—	—
		10'	12'-3⅝"	12'-8"	14'-7⅛"	15'-9⅛"	3'-1⅝"	24'-8"	28'-5⅜"	29'-7⅜"	18'-4⅝"	36'-8"	42'-4⅝"	43'-6⅛"	31'-5⅜"	48'-10"	56'-2⅛"	57'-2⅝"	43'-6⅛"	—	—	—	—
		11'	13'-3⅝"	12'-10"	14'-9⅜"	15'-11⅝"	2'-1⅝"	24'-10"	28'-8⅜"	29'-10⅝"	17'-11⅜"	36'-10"	42'-6⅜"	43'-8⅝"	30'-7⅝"	49'-0"	56'-5⅝"	57'-6⅛"	42'-9⅝"	—	—	—	—
		12'	15'-3⅝"	13'-0"	15'-0⅝"	16'-2"	Ⓐ 0"	25'-0"	28'-10⅜"	30'-0⅛"	17'-3⅜"	37'-0"	42'-8⅝"	43'-10⅛"	30'-11"	49'-0"	56'-7"	57'-8⅜"	43'-0⅜"	—	—	—	—

Ⓐ Special case for these boxes. See Detail 'A' and Table 'A' for revised values of F_1, F_2, W_2 and W_3, when apron width is more than 1'0" and $W_3 = 0$. For Details 'A' and Tables 'A' for each slope, see Drawing Nos. W-X302-1, W-X302-2, or W-X303-1, W-X303-2, or W-X304-1, W-X304-2.

NOTE:- This drawing to be used in conjunction with Standard Wing Drawings for 30° Skews for each slope as listed below.

2:1 Slopes	3:1 Slopes	4:1 Slopes
W-X302-1 or W-X302-2	W-X303-1 or W-X303-2	W-X304-1 or W-X304-2.

NOTE:- This drawing to be used in conjunction with Standard Barrel Sections, Drawing Nos.-

SINGLES	DOUBLES	TRIPLES	QUADRUPLES	QUINTUPLES
R-130X-0	R-230X-01	R-330X-01	R-430X-01	R-530X-01
	R-230X-02	R-330X-02	R-430X-02	R-530X-02
R-130X-1	R-230X-1	R-330X-1	R-430X-1	R-530X-1
	R-230X-2	R-330X-2		

CLASS S CONCRETE

ARKANSAS STATE HIGHWAY COMMISSION
DETAILS OF STANDARD WINGS
FOR
REINFORCED CONCRETE BOX CULVERTS
30° SKEW

4', 5', 6', 7', 8', 9', 10', 11' & 12' SPANS — 2:1, 3:1 & 4:1 SLOPES

SINGLES, DOUBLES, TRIPLES, QUADRUPLES & QUINTUPLES. — ALL DEPTHS OF COVER H=2', 3', 4', 5', 6', 7', 8', 9', 10', 11' & 12'.

STANDARD DRAWING NO. W-X30

Designed by:- W.C.H. 5-16-63 — Checked by:- PAHS - 6-21-63
Drawn by:- W.C.H. 7-15-63 — Checked by:-
Quantities by:- — Checked by:-

Reshot 3-8-93

FED. ROAD No.	STATE	FED. AID PROJECT	FISCAL YEAR	SHEET No.	TOTAL SHEETS
6	ARK.			425	
JOB No.					

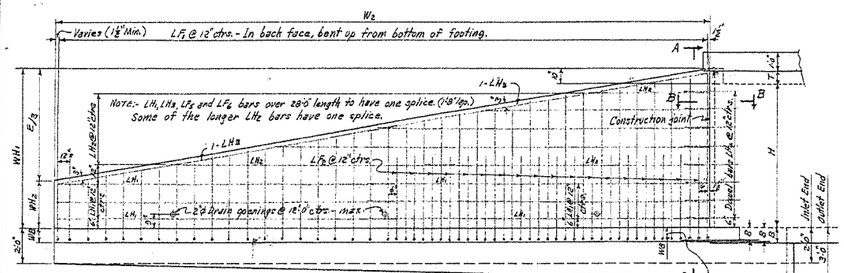

REAR ELEVATION OF LONG WING - 30° SKEW RIGHT FORWARD - SHOWING BACK FACE REINFORCING

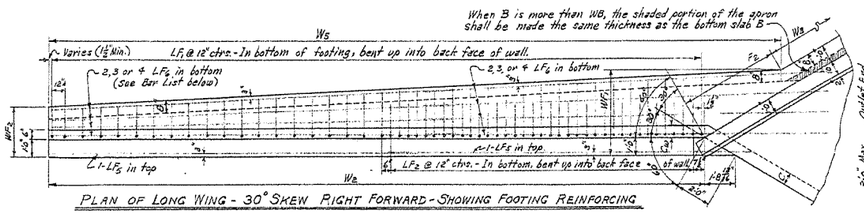

PLAN OF LONG WING - 30° SKEW RIGHT FORWARD - SHOWING FOOTING REINFORCING

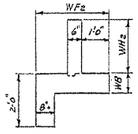

TYPICAL END VIEW OF WING

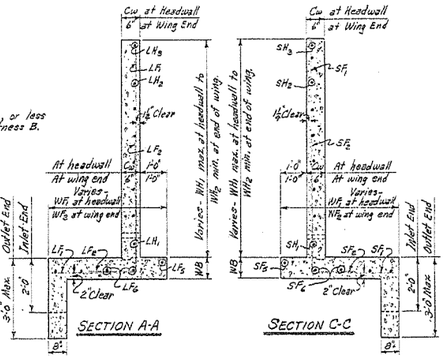

SECTION A-A

SECTION C-C

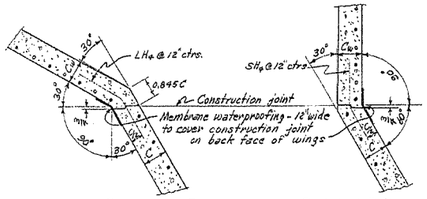

SECTION B-B — SECTION D-D

SECTIONS THRU CONSTRUCTION JOINTS

NOTE:- Payment for membrane waterproofing and roofing felt to be included in the price bid for Class S Concrete.

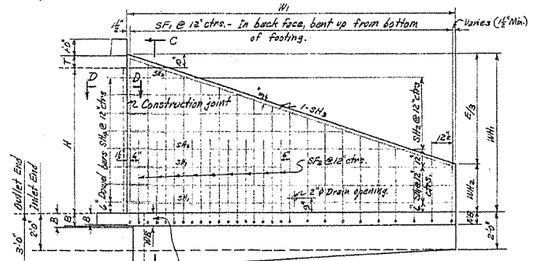

REAR ELEVATION OF SHORT WING - 30° SKEW RIGHT FORWARD SHOWING BACK FACE REINFORCING

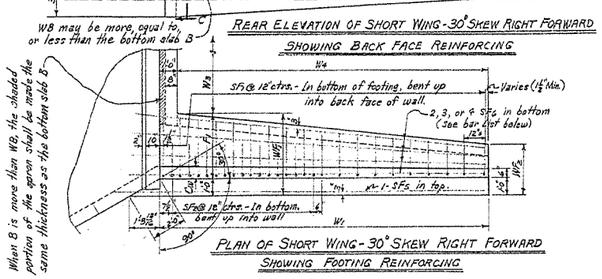

PLAN OF SHORT WING - 30° SKEW RIGHT FORWARD SHOWING FOOTING REINFORCING

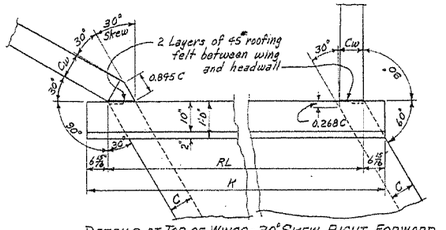

DETAILS AT TOP OF WINGS - 30° SKEW RIGHT FORWARD

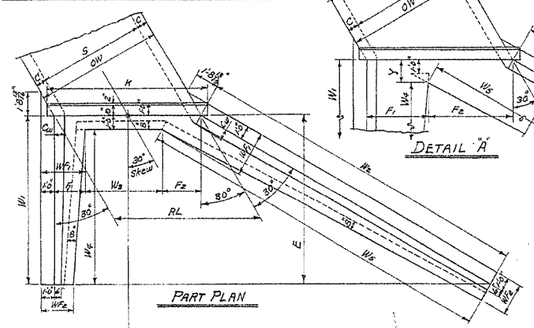

PART PLAN

NOTE:- Plan and Elevation are not to scale.

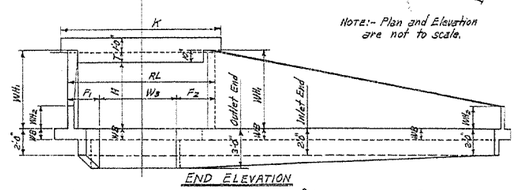

END ELEVATION

SINGLE BARREL CULVERT - 30° SKEW RIGHT FORWARD

Details of Culvert with 30° Skew Left Forward is reversed, see Drawing No. W-X30.

DETAIL 'A'

TYPICAL WING DETAILS

NOTE:- For remainder of General Plans and Elevations of Single, Double, Triple, Quadruple and Quintuple Span Culverts, see Std. Drawing No. W-X30. For values of RL, K and W3 for each box, see above Std. also.

MEMBRANE:- A membrane waterproofing 12" wide, consisting of three moppings of waterproofing asphalt and two alternate layers of treated cotton fabric shall be applied to the back face of wing to cover the construction joints at wings.

REGULAR WING DIMENSIONS - 3:1 SLOPES

CLEAR HEIGHT OF BOX	THICKNESS OF WING FOOTING	THICKNESS OF WING AT HOOK & C.	WINGWALL HEIGHTS: AT HEADWALL	WINGWALL HEIGHTS: AT END OF WING	WIDTHS OF WING FOOTINGS: AT HEADWALL	WIDTHS OF WING FOOTINGS: AT END OF WING	FOOTING DIMENSION-PARALLEL WITH HEADWALL: SHORT WING	FOOTING DIMENSION-PARALLEL WITH HEADWALL: LONG WING	PERPENDICULAR DIST. FROM HDWL. TO END OF WING	LENGTHS OF WINGWALLS: SHORT WING	LENGTHS OF WINGWALLS: LONG WING	INSIDE FOOTING DIMENSION: SHORT WING	INSIDE FOOTING DIMENSION: LONG WING	*QUANTITY PER WING CLASS S CONCRETE: INLET END: SHORT WING	INLET END: LONG WING	OUTLET END: SHORT WING	OUTLET END: LONG WING
H	WB	Cw	WH1	WH2	WF1	WF2	F1	F2	E	W1	W2	W4	W5	CU.YD.	CU.YD.	CU.YD.	CU.YD.
2'	7"	6"	2'-10"	0'-8"	2'-4"	2'-0"	1'-4"	0'-10½"	6'-6"	6'-6"	13'-0"	5'-6"	13'-3⅜"	0.752	1.569	0.836	1.717
3'	7"	6"	3'-10"	1'-0"	2'-8"	2'-1½"	1'-8"	1'-7½"	8'-6"	8'-6"	17'-0"	7'-6"	17'-10⅜"	1.130	2.346	1.239	2.565
4'	7"	6"	4'-10"	1'-0"	3'-0"	2'-3"	2'-0"	2'-3⅜"	10'-6"	10'-6"	21'-0"	9'-6"	22'-5¼"	1.577	3.270	1.711	3.552
5'	7"	6"	5'-10"	1'-0"	3'-4"	2'-4½"	2'-4"	2'-11½"	12'-6"	12'-6"	25'-0"	11'-6"	27'-0½"	2.093	4.391	2.252	4.680
		7"	5'-10"	1'-0"	3'-4"	2'-4½"	2'-4"	2'-11½"	12'-6"	12'-6"	25'-0"	11'-6"	27'-0½"	2.179	4.529	2.337	4.862
° 6'	8"	7"	6'-10"	2'-0"	3'-8"	2'-6"	2'-8"	3'-7½"	14'-6"	14'-6"	29'-0"	13'-6"	31'-7½"	2.908	6.026	3.092	6.419
		7½"	6'-10"	2'-0"	3'-8"	2'-6"	2'-8"	3'-7½"	14'-6"	14'-6"	29'-0"	13'-6"	31'-7½"	2.966	6.147	3.150	6.543
		8"	6'-10"	2'-0"	3'-8"	2'-6"	2'-8"	3'-7½"	14'-6"	14'-6"	29'-0"	13'-6"	31'-7½"	3.025	6.272	3.208	6.667
° 7'	8½"	7½"	7'-10"	2'-0"	4'-2"	2'-7½"	3'-2"	4'-7½"	16'-6"	16'-6"	33'-0"	15'-6"	36'-5⅜"	3.811	7.895	4.019	8.350
		8"	7'-10"	2'-0"	4'-2"	2'-7½"	3'-2"	4'-7½"	16'-6"	16'-6"	33'-0"	15'-6"	36'-5⅜"	3.859	8.057	4.095	8.512
° 8'	9"	8"	8'-10"	2'-8"	4'-8"	2'-9"	3'-8"	5'-7½"	18'-6"	18'-6"	37'-0"	17'-6"	41'-6¼"	4.874	10.097	5.107	10.612

* Quantity per wing does not include headwall or that portion of apron or toewall for the length W8.
° See Table 'A' for special values of F1 & F2 and W4 & W5 for Single 9'x6', 5'x3' and 6'x8' Box Culverts.

TABLE 'A' - DIMENSIONS FOR DETAIL 'A'

S	H	F1	F2	W3	Y	W4	W5
4'	6'	2'-7½"	3'-2⅝"	0"	1'-1⅜"	13'-6⅛"	31'-3⅝"
5'	7'	3'-1⅝"	4'-1"	0"	1'-3⅜"	15'-2⅜"	35'-10⅛"
6'	8'	3'-7½"	4'-10⅜"	0"	1'-5⅜"	17'-1⅛"	40'-6"

QUANTITIES

CLEAR SPAN	CLEAR HEIGHT	THICKNESS OF WING AT HEADWALL	THICKNESS OF WING FOOTING	@ REINFORCING STEEL FOR 4 WINGS	CLASS S CONCRETE - 4 WINGS: HEADWALLS, WINGWALLS, FOOTINGS, TOEWALLS AND APRONS: SINGLE BARREL CULVERT	DOUBLE BARREL CULVERT	TRIPLE BARREL CULVERT	QUADRUPLE BARREL CULVERT	QUINTUPLE BARREL CULVERT
S	H	Cw	WB	LB.	CU.YD.	CU.YD.	CU.YD.	CU.YD.	CU.YD.
4'	2'	6"	7"	141	5.80	6.90	8.01	9.12	10.23
	3'	6"	7"	213	8.08	9.18	10.29	11.40	12.51
	4'	6"	7"	327	10.78	11.88	12.99	14.10	15.21
	5'	6"	7"	460	13.90	15.00	16.11	17.22	18.32
	6'	7"	8"	762	18.85	19.99	21.13	22.27	23.41
5'	3'	6"	7"	213	8.33	9.47	11.01	12.36	13.70
	4'	6"	7"	327	11.03	12.36	13.71	15.06	16.40
	5'	6"	7"	460	16.14	15.98	16.83	18.17	19.52
	6'	7"	8"	762	19.11	20.99	21.86	23.24	24.62
	7'	7½"	8½"	1474	24.51	25.84	27.35	28.75	30.16
6'	3'	6"	7"	213	8.57	10.17	11.73	13.33	14.92
	4'	6"	7"	327	11.27	12.86	14.93	16.09	17.62
	5'	6"	7"	460	14.38	15.98	17.55	19.15	20.73
	6'	7"	8"	762	19.35	20.98	22.59	24.21	25.83
	7'	7½"	8½"	1474	24.79	26.44	28.08	28.73	81.38
	8'	8"	9"	1870	31.15	32.87	34.51	36.17	37.83
7'	4'	6"	7"	327	11.52	13.37	15.19	17.05	18.85
	5'	6"	7"	460	14.63	14.49	18.31	20.16	21.97
	6'	7"	8"	762	19.61	21.98	23.82	25.20	27.04
	7'	7½"	8½"	1474	25.05	26.94	28.82	30.71	32.59
	8'	8"	9"	1870	31.47	33.37	35.25	37.16	39.05
8'	4'	6"	7"	327	11.77	13.89	15.97	18.09	20.12
	5'	7"	7"	460	15.46	17.60	19.70	21.83	23.89
	6'	7"	8"	762	19.86	21.98	24.05	26.17	28.20
	7'	7½"	8½"	1474	25.30	27.96	29.58	31.73	33.81
	8'	8"	9"	1870	31.72	33.98	36.00	38.16	40.27
9'	5'	7"	7"	460	15.72	18.13	20.47	22.87	25.15
	6'	7½"	8"	762	20.50	22.93	25.29	27.71	30.01
	7'	7½"	8½"	1474	25.55	27.98	30.34	32.76	35.07
	8'	8"	9"	1870	31.97	34.39	36.76	39.18	41.49
10'	5'	7"	7"	460	15.98	18.65	21.25	23.80	26.92
	6'	7½"	8"	762	20.76	23.15	26.07	28.64	31.28
	7'	7½"	8½"	1474	25.81	28.50	31.12	33.70	36.84
	8'	8"	9"	1870	32.22	34.91	37.54	40.12	42.76
11'	6'	8"	8"	762	21.39	24.38	27.25	30.11	——
	7'	8"	8½"	1474	26.55	29.53	32.41	35.27	——
	8'	8"	9"	1870	32.47	35.95	38.83	41.19	——
12'	6'	8"	8"	762	21.66	24.93	28.05	31.20	——
	7'	8"	8½"	1474	26.81	30.08	33.21	36.34	——
	8'	8"	9"	1870	32.73	35.99	39.13	42.28	——

@ For reinforcing steel in Headwalls and Aprons, see Drawing Nos. of Barrel Sections listed below.

GENERAL NOTES:-

CONCRETE:- All concrete to be Class S, and shall be poured in the dry. All exposed corners to have ¾" chamfers.

REINFORCING STEEL:- Reinforcing steel to be deformed bars of intermediate or hard grade.

CONSTRUCTION JOINTS:- Construction joints between wingwall, footings and sidewalls shall be only where shown on plans.

SPECIFICATIONS:- Arkansas State Highway Commission Standard Specifications for Highway Construction and applicable special Provisions.

UNIT STRESSES:-

Class S Concrete (n=10) 1200#/sq.in.
Reinforcing Steel 20,000#/sq.in.

NOTE:- This drawing to be used in conjunction with Standard Barrel Sections, Drawing Nos.-

SINGLES	DOUBLES	TRIPLES	QUADRUPLES	QUINTUPLES
R-130X-0	R-230X-01	R-330X-01	R-430X-01	R-530X-01
	R-230X-02	R-330X-02	R-430X-02	R-530X-02
R-130X-1	R-230X-1	R-330X-1	R-430X-1	R-530X-1
	R-230X-2	R-330X-2		

BAR LIST FOR ONE SHORT AND ONE LONG WING - 2 EACH REQUIRED

CLEAR HEIGHT	WING	LOCATION	SF1 & LF1 BENT: In bottom of footing, bent up into back face of wing. One bar (or two bars) of each length: SIZE	SPACING	NO. REQD	LENGTHS VARY MIN.	LENGTHS VARY MAX.	X MIN.	X MAX.	Y MIN.	Y MAX.	SF2 & LF2 BENT: In bottom of footing, bent up into back face of wing. Alt. with F1 bars: SIZE	SPACING	NO. REQD	LENGTH	X	Y	SF5 & LF5 STRAIGHT: Longitudinal in top of wing footing heel: SIZE	NO. REQD	LENGTH	SF6 & LF6 STRAIGHT: Longitudinal in bottom of wing footing toe: SIZE	NO. REQD	LENGTH	SH1 & LH1 STRAIGHT: Horizontal in back face of wing: SIZE	SPACING	NO. REQD	LENGTH	SH2 & LH2 STRAIGHT: Horizontal in back face of wing. One bar of each length.* SIZE	SPACING	NO. REQD	LENGTHS VARY MAX.	LENGTHS VARY MIN.	SH3 & LH3 STRAIGHT: In back face of wing at top- on slope. SIZE	NO. REQD	LENGTH	SH4 & LH4 BENT: Dowels thru construction joint at headwall: SIZE	SPACING	NO. REQD	LENGTH	X
H	SHORT OR LONG		SIZE	SPACING	NO. REQD	MIN.	MAX.	MIN.	MAX.	MIN.	MAX.	SIZE	SPACING	NO. REQD	LENGTH	X	Y	SIZE	NO. REQD	LENGTH	SIZE	NO. REQD	LENGTH	SIZE	NO. REQD	LENGTH	SIZE	SPACING	NO. REQD	LENGTH	SIZE	SPACING	NO. REQD	MAX.	MIN.	SIZE	NO. REQD	LENGTH	SIZE	SPACING	NO. REQD	LENGTH	X
2'	Short	#3	12"	7	1'-5"	2'-11"	0'-8"	1'-0"	1'-0"	3'-0"	—	—	—	—	—	—	#3	1	9'-0"	#3	2	8'-0"	#3	12"	1	6'-3"	#3	12"	1	——	3'-3"	#3	1	6'-7"	#3	12"	2	2'-8"	1'-9"
	Long	#3	12"	19	1'-5"	2'-11"	0'-8"	1'-0"	0'-10"	3'-0"	—	—	—	—	—	—	#3	1	15'-6"	#3	2	15'-6"	#3	12"	1	12'-8"	#3	12"	1	——	6'-6"	#3	1	12'-11"	#3	12"	2	"	"
3'	Short	#3	12"	9	2'-1"	2'-5"	0'-10"	1'-0"	1'-9"	4'-0"	—	—	—	—	—	—	#3	1	11'-0"	#3	2	10'-0"	#3	12"	1	8'-3"	#3	12"	2	6'-3"	3'-3"	#5	1	9'-6"	#3	12"	3	"	"
	Long	#3	12"	18	1'-11"	2'-5"	0'-10"	1'-0"	1'-8"	11'-2"	4'-0"	—	—	—	—	—	—	#3	2	19'-6"	#3	2	20'-2"	#3	12"	1	16'-8"	#3	12"	2	12'-6"	6'-6"	#3	1	14'-11"	#3	12"	3	"	"
4'	Short	#3	12"	11	2'-6"	2'-7"	0'-11"	1'-0"	1'-8"	5'-0"	—	—	—	—	—	—	#3	1	13'-0"	#3	3	12'-0"	#3	12"	1	10'-3"	#3	12"	3	9'-3"	3'-3"	#3	1	10'-9"	#5	12"	4	"	"
	Long	#3	12"	22	2'-6"	2'-7"	0'-11"	1'-0"	1'-7"	5'-0"	—	—	—	—	—	—	#3	1	23'-6"	#3	3	24'-6"	#3	12"	3	18'-6"	#3	12"	3	13'-3"	6'-6"	#3	1	21'-0"	#3	12"	4	"	"
5'	Short	#3	12"	13	2'-11"	2'-11"	1'-0"	2'-0"	2'-0"	6'-0"	#3	12"	3	3'-6"	1'-1"	2'-6"	#3	1	15'-9"	#3	3	14'-0"	#3	12"	2	12'-3"	#3	12"	3	9'-3"	3'-3"	#3	1	12'-11"	#3	12"	5	"	"
	Long	#3	12"	26	2'-11"	2'-11"	1'-0"	1'-0"	1'-11"	6'-0"	#3	12"	6	3'-6"	1'-11"	2'-6"	#3	1	27'-6"	#3	6	28'-0"	#3	12"	4	24'-8"	#3	12"	5	18'-6"	6'-6"	#3	1	25'-1"	#3	12"	5	"	"
6'	Short	#4	12"	15	3'-6"	3'-6"	1'-2"	2'-0"	2'-5"	7'-1"	#3	12"	3	4'-6"	1'-6"	3'-3"	#3	1	17'-0"	#3	3	16'-0"	#3	12"	2	14'-3"	#3	12"	4	12'-3"	3'-3"	#3	1	15'-0"	#3	12"	6	"	"
	Long	#4	12"	30	3'-6"	3'-6"	1'-2"	2'-0"	2'-3"	7'-1"	#3	12"	6	4'-6"	1'-6"	3'-3"	#3	2	16'-8"	#3	6	18'-0"	#3	12"	4	15'-2"	#3	12"	4	24'-6"	6'-6"	#3	2	15'-5"	#3	12"	6	2'-8"	1'-9"
7'	Short	#4	12"	17	3'-11"	10'-10"	1'-3"	2'-0"	2'-9"	8'-1"	#4	12"	6	5'-6"	1'-7"	4'-0"	#4	1	19'-0"	#4	4	18'-0"	#4	12"	2	16'-3"	#4	12"	5	15'-3"	3'-3"	#4	1	17'-1"	#4	12"	7	3'-6"	1'-9"
	Long	#4	12"	34	3'-9"	10'-8"	1'-3"	2'-0"	2'-7"	8'-1"	#4	12"	12	5'-6"	1'-7"	4'-0"	#4	2	18'-8"	#4	8	20'-6"	#4	12"	5	17'-5"	#4	12"	5	30'-6"	6'-6"	#4	2	17'-5"	#4	12"	8	"	"
8'	Short	#4	12"	19	4'-6"	12'-5"	1'-5"	2'-0"	3'-4"	9'-2"	#4	12"	9	6'-6"	1'-10"	4'-9"	#4	1	21'-0"	#4	4	20'-6"	#4	12"	2	18'-3"	#4	12"	6	16'-3"	3'-3"	#4	1	19'-3"	#4	12"	8	"	"
	Long	#4	12"	38	4'-6"	12'-3"	1'-5"	2'-0"	3'-2"	9'-2"	#4	12"	18	6'-6"	1'-10"	4'-9"	#4	2	22'-8"	#4	8	22'-9"	#4	12"	6	19'-2"	#4	12"	5	30'-6"	6'-6"	#4	2	19'-6"	#4	12"	8	3'-6"	1'-9"

BAR BENDING DIAGRAM: SF5 & SF6 LF5 & LF6 — 3" Pin; SH4 & LH4 — 7:12; Note:- Dimensions are to bar centers.

QUANTITY: REINFORCING STEEL PER WING - LBS.	SHORT WING	LONG WING
	24.7	45.6
	37.0	69.5
	56.2	107.2
	78.0	152.2
	127.8	253.1
	267.0	493.8
	312.9	622.3

NOTE:- Bars for short wing shall be marked with prefix letter 'S', while those for long wing shall be marked with letter 'L'.

* Length without splice. Bars over 28'-6" length may be spliced. (1'-8" lap.)

REVISIONS:- Membrane added. 5-10-66 W.C.H.

Designed By:- W.C.H. 5-13-63 Checked By:- TJHS R-13-63
Drawn By:- W.C.H. 7-26-63 Checked By:- DWT 7-15-64
Quantities By:- W.C.H. 1-7-64

CLASS S CONCRETE

ARKANSAS STATE HIGHWAY COMMISSION

DETAILS OF STANDARD WINGS FOR REINFORCED CONCRETE BOX CULVERTS 30° SKEW

4', 5', 6', 7', 8', 9', 10', 11' & 12' SPANS — 3:1 SLOPES.
SINGLES, DOUBLES, TRIPLES, QUADRUPLES & QUINTUPLES. — ALL DEPTHS OF COVER FOR H = 8'-0" OR LESS

STANDARD DRAWING NO. W-X303-1

(53)

RESHOT 3-8-93

178

FED. ROAD No.	STATE	FED. AID PROJECT	FISCAL YEAR	SHEET No.	TOTAL SHEETS
6	ARK.			426	
JOB No.					

BAR LIST FOR BARREL SECTION 60'-0" IN LENGTH - TWO 30° SKEWED ENDS.

NOTE:- For Details of Standard Wings and bar lists, see Drawing No. W-X302-1 or W-X302-2; W-X303-1 or W-X303-2, and W-X304-1 or W-X304-2. Also W-X30.

DEPTH OF COVER D	CLEAR SPAN S	CLEAR HEIGHT H	"a" bars STRAIGHT In Top and Bottom Slabs of Barrel. SIZE	SPACING	NO. REQ'D	LENGTH
0'-0" TO 5'-0" MAXIMUM	1 @ 4'	2'	#5	13"	108	4'-9"
		3'			108	4'-9"
		4'			108	4'-9"
		5'			108	4'-9"
		6'			108	4'-11"
	1 @ 5'	3'	#6	18"	108	5'-9"
		4'			108	5'-9"
		5'			108	5'-9"
		6'			108	5'-11"
		7'			108	6'-0"
	1 @ 6'	4'	#6	12"	114	6'-9"
		5'			114	6'-9"
		6'			114	6'-11"
		7'			114	7'-0"
		8'			114	7'-1"
	1 @ 7'	4'	#6	11"	124	7'-9"
		5'			124	7'-9"
		6'			124	7'-11"
		7'			124	8'-0"
		8'			124	8'-1"
		9'			124	8'-3"
	1 @ 8'	4'	#6	12"	112	8'-0"
		5'			112	8'-0"
		6'			112	8'-11"
		7'	#7	12"	112	9'-0"
		8'			112	9'-1"
		9'			112	9'-3"
		10'			112	9'-5"
	1 @ 9'	5'	#7	11"	122	9'-11"
		6'			122	10'-0"
		7'			122	10'-0"
		8'			122	10'-1"
		9'			120	10'-3"
		10'			120	10'-5"
		11'			120	10'-7"
	1 @ 10'	5'	#7	10"	110	10'-11"
		6'			110	11'-0"
		7'			110	11'-0"
		8'			110	11'-1"
		9'			110	11'-2"
		10'			110	11'-3"
		11'			110	11'-4"
		12'			110	11'-5"
	1 @ 11'	6'	#7	10"	118	12'-1"
		7'			118	12'-1"
		8'			118	12'-1"
		9'			118	12'-2"
		10'			118	12'-3"
		11'			118	12'-3"
		12'			118	12'-3"
	1 @ 12'	6'	#7	10"	128	13'-1"
		7'			128	13'-1"
		8'			128	13'-1"
		9'			128	13'-2"
		10'			128	13'-2"
		11'			128	13'-2"
		12'			128	13'-2"

DEPTH OF COVER D	CLEAR SPAN S	CLEAR HEIGHT H	"a1" bars STRAIGHT In Top and Bottom Slab of Barrel - (Four of each Length) SIZE	SPACING	NO. REQ'D	LENGTH MAX.	LENGTH MIN.
0'-0" TO 5'-0" MAXIMUM	1 @ 4'	2'	#5	13"	4	2'-11"	—
		3'			4	"	—
		4'			4	"	—
		5'			4	"	—
		6'			4	3'-1"	—
	1 @ 5'	3'	#6	18"	4	3'-11"	—
		4'			4	"	—
		5'			4	"	—
		6'			4	4'-1"	—
		7'			4	4'-2"	—
	1 @ 6'	4'	#6	12"	8	5'-0"	3'-3"
		5'			8	"	"
		6'			8	"	"
		7'			8	5'-10"	3'-8"
		8'			8	5'-11"	3'-9"
	1 @ 7'	4'	#6	11"	12	6'-2"	3'-0"
		5'			12	"	"
		6'			12	6'-4"	3'-12"
		7'	#7	12"	12	6'-5"	3'-13"
		8'			12	6'-6"	3'-14"
		9'			12	6'-8"	4'-0"
	1 @ 8'	4'	#6	12"	12	7'-0"	3'-6"
		5'			12	7'-1"	3'-7"
		6'			12	7'-2"	3'-8"
		7'	#7	12"	12	"	"
		8'			12	7'-3"	3'-9"
		9'			12	7'-4"	3'-10"
		10'			12	7'-5"	3'-11"
	1 @ 9'	5'	#7	11"	16	8'-9"	3'-5"
		6'			16	8'-10"	3'-6"
		7'			16	8'-11"	3'-7"
		8'			16	8'-12"	3'-8"
		9'			16	8'-13"	3'-9"
		10'			16	8'-14"	3'-10"
	1 @ 10'	5'	#7	10"	20	9'-8"	3'-4"
		6'			20	9'-9"	3'-5"
		7'			20	9'-10"	3'-6"
		8'			20	9'-11"	3'-7"
		9'			20	10'-0"	3'-8"
		10'			20	10'-1"	3'-9"
		11'			20	10'-2"	3'-10"
	1 @ 11'	6'	#7	10"	20	10'-8"	3'-8"
		7'			20	10'-9"	3'-9"
		8'			20	10'-10"	3'-10"
		9'			20	10'-11"	3'-11"
		10'			20	11'-0"	4'-0"
		11'			20	11'-1"	4'-1"
		12'			20	11'-2"	4'-2"
	1 @ 12'	6'	#7	10"	20	11'-7"	4'-0"
		7'			20	11'-8"	4'-1"
		8'			20	11'-9"	4'-2"
		9'			20	11'-10"	4'-3"
		10'			20	12'-0"	4'-4"
		11'			20	12'-1"	4'-5"
		12'			20	12'-2"	4'-6"

DEPTH OF COVER D	CLEAR SPAN S	CLEAR HEIGHT H	"a2" bars BENT - See Diagrams below In Top and Bottom Slabs of Barrel - Rooted. Alternate with "a" bars SIZE	SPACING	NO. REQ'D	LENGTH
0'-0" TO 5'-0" MAXIMUM	1 @ 4'	2'	#5	13"	108	5'-0"
		3'			108	5'-0"
		4'			108	5'-0"
		5'			108	5'-0"
		6'			108	4'-10"
	1 @ 5'	3'	#6	18"	106	6'-10"
		4'			106	6'-10"
		5'			106	6'-10"
		6'			106	7'-0"
		7'			106	7'-1"
	1 @ 6'	4'	#6	12"	114	7'-10"
		5'			114	7'-10"
		6'			114	7'-10"
		7'			114	8'-0"
		8'			114	8'-2"
	1 @ 7'	4'	#6	11"	122	8'-10"
		5'			122	8'-10"
		6'			122	9'-0"
		7'			122	9'-1"
		8'			122	9'-2"
		9'			122	9'-4"
	1 @ 8'	4'	#6	12"	112	9'-10"
		5'			112	10'-0"
		6'			112	10'-0"
		7'	#7	12"	112	10'-1"
		8'			112	10'-2"
		9'			112	10'-3"
		10'			110	10'-5"
	1 @ 9'	5'	#7	11"	120	11'-0"
		6'			120	11'-1"
		7'			120	11'-2"
		8'			120	11'-2"
		9'			120	11'-3"
		10'			120	11'-4"
		11'			120	11'-5"
	1 @ 10'	5'	#7	10"	110	12'-2"
		6'			110	12'-3"
		7'			110	12'-3"
		8'			110	12'-4"
		9'			110	12'-5"
		10'			108	12'-6"
		11'			108	12'-8"
		12'			108	13'-0"
	1 @ 11'	6'	#7	10"	118	13'-4"
		7'			118	13'-4"
		8'			118	13'-4"
		9'			118	13'-6"
		10'			116	13'-8"
		11'			116	13'-10"
		12'			116	14'-0"
	1 @ 12'	6'	#7	10"	106	14'-6"
		7'			106	14'-6"
		8'			106	14'-8"
		9'			106	14'-8"
		10'			106	14'-10"
		11'			106	14'-10"
		12'			106	15'-0"

DEPTH OF COVER D	CLEAR SPAN S	CLEAR HEIGHT H	"a3" bars In Top and Bottom Slabs of Barrel - (Four of each Length) SIZE	SPACING	NO. REQ'D	LENGTH MAX.	LENGTH MIN.	X
0'-0" TO 5'-0" MAXIMUM	1 @ 4'	2'	#5	13"	4	2'-11"	—	
		3'			4	"	—	
		4'			4	"	—	
		5'			4	"	—	
		6'			4	3'-1"	—	
	1 @ 5'	3'	#6	18"	4	3'-11"	—	
		4'			4	"	—	
		5'			4	"	—	
		6'			4	4'-1"	—	
		7'			4	4'-2"	—	
	1 @ 6'	4'	#6	12"	8	5'-5"	3'-6"	4'-0"
		5'			8	"	"	"
		6'			8	"	"	"
		7'			8	5'-7"	3'-8"	4'-0"
		8'			8	5'-8"	3'-9"	4'-0"
	1 @ 7'	4'	#6	11"	12	6'-4"	3'-0"	4'-0"
		5'			12	"	"	"
		6'			12	6'-5"	3'-12"	4'-0"
		7'	#7	12"	12	6'-6"	3'-13"	4'-0"
		8'			12	6'-7"	3'-14"	4'-0"
		9'			12	6'-8"	4'-0"	4'-0"
	1 @ 8'	4'	#6	12"	12	7'-0"	3'-6"	4'-0"
		5'			12	7'-1"	3'-7"	4'-0"
		6'			12	7'-2"	3'-8"	4'-0"
		7'	#7	12"	12	"	"	"
		8'			12	7'-3"	3'-9"	4'-0"
		9'			12	7'-4"	3'-10"	4'-0"
		10'			12	7'-5"	3'-11"	4'-0"
	1 @ 9'	5'	#7	11"	16	8'-9"	3'-5"	4'-0"
		6'			16	8'-10"	3'-6"	4'-0"
		7'			16	8'-11"	3'-7"	4'-0"
		8'			16	8'-12"	3'-8"	4'-0"
		9'			16	8'-13"	3'-9"	4'-0"
		10'			16	8'-14"	3'-10"	4'-0"
	1 @ 10'	5'	#7	10"	20	9'-8"	3'-4"	4'-0"
		6'			20	9'-9"	3'-5"	4'-0"
		7'			20	9'-10"	3'-6"	4'-0"
		8'			20	9'-11"	3'-7"	4'-0"
		9'			20	10'-0"	3'-8"	4'-0"
		10'			20	10'-1"	3'-9"	4'-0"
		11'			20	10'-2"	3'-10"	4'-0"
	1 @ 11'	6'	#7	10"	20	10'-8"	3'-8"	4'-0"
		7'			20	10'-9"	3'-9"	4'-0"
		8'			20	10'-10"	3'-10"	4'-0"
		9'			20	10'-11"	3'-11"	4'-0"
		10'			20	11'-0"	4'-0"	4'-0"
		11'			20	11'-1"	4'-1"	4'-0"
		12'			20	11'-2"	4'-2"	4'-0"
	1 @ 12'	6'	#7	10"	20	11'-7"	4'-0"	4'-0"
		7'			20	11'-8"	4'-1"	4'-0"
		8'			20	11'-9"	4'-2"	4'-0"
		9'			20	11'-10"	4'-3"	4'-0"
		10'			20	12'-0"	4'-4"	4'-0"
		11'			20	12'-1"	4'-5"	4'-0"
		12'			20	12'-2"	4'-6"	4'-0"

DEPTH OF COVER D	CLEAR SPAN S	CLEAR HEIGHT H	"b" bars In Top and Bottom Slabs of Barrel - one end hooked. (Four of each Length) Alternate with "a" bars. SIZE	SPACING	NO. REQ'D	LENGTH	X
0'-0" TO 5'-0" MAXIMUM	1 @ 4'	2'	#6	18"	4	9'-5"	3'-10"
		3'			4	"	"
		4'			4	"	"
		5'			4	"	"
		6'			4	9'-8"	2'-8"
	1 @ 5'	3'	#6	13"	8	5'-5"	3'-6"
		4'			8	"	"
		5'			8	5'-7"	3'-8"
		6'			8	5'-8"	3'-9"
		7'			8	5'-9"	3'-10"
	1 @ 6'	4'	#6	12"	12	6'-5"	3'-1"
		5'			12	"	"
		6'			12	6'-7"	3'-3"
		7'			12	6'-8"	3'-4"
		8'			12	6'-9"	3'-5"
	1 @ 7'	4'	#6	11"	16	7'-5"	2'-9"
		5'			16	7'-6"	2'-10"
		6'			16	7'-7"	2'-11"
		7'			16	7'-8"	3'-0"
		8'			16	7'-9"	3'-1"
		9'			16	7'-10"	3'-2"
	1 @ 8'	4'	#6	12"	16	8'-5"	3'-2"
		5'			16	8'-6"	3'-3"
		6'			16	8'-7"	3'-4"
		7'			16	8'-8"	3'-5"
		8'			16	8'-9"	3'-6"
		9'			16	8'-10"	3'-7"
	1 @ 9'	5'	#7	11"	20	9'-8"	3'-4"
		6'			20	9'-9"	3'-5"
		7'			20	9'-10"	3'-6"
		8'			20	9'-11"	3'-7"
		9'			20	10'-0"	3'-8"
		10'			20	10'-1"	3'-9"
		11'			20	10'-2"	3'-10"
	1 @ 10'	5'	#7	10"	20	10'-8"	3'-8"
		6'			20	10'-9"	3'-9"
		7'			20	10'-10"	3'-10"
		8'			20	10'-11"	3'-11"
		9'			20	11'-0"	4'-0"
		10'			20	11'-1"	4'-1"
		11'			20	11'-2"	4'-2"
	1 @ 11'	6'	#7	10"	20	11'-7"	4'-0"
		7'			20	11'-8"	4'-1"
		8'			20	11'-9"	4'-2"
		9'			20	11'-10"	4'-3"
		10'			20	12'-0"	4'-4"
		11'			20	12'-1"	4'-5"
		12'			20	12'-2"	4'-6"
	1 @ 12'	6'	#7	10"	20	12'-7"	4'-0"
		7'			20	12'-8"	4'-1"
		8'			20	12'-9"	4'-2"
		9'			20	12'-10"	4'-3"
		10'			20	13'-0"	4'-4"
		11'			20	13'-1"	4'-5"
		12'			20	13'-2"	4'-6"

DEPTH OF COVER D	CLEAR SPAN S	CLEAR HEIGHT H	"b1" bars In Top and Bottom Slabs of Barrel - one end hooked. (Four of each Length) Alternate with "a1" bars. SIZE	SPACING	NO. REQ'D	LENGTH MAX.	LENGTH MIN.	X
0'-0" TO 5'-0" MAXIMUM	1 @ 4'	2'	#6	18"	4	9'-5"	3'-10"	
		3'			4	"	"	
		4'			4	"	"	
		5'			4	"	"	
		6'			4	9'-8"	2'-8"	4'-0"
	1 @ 5'	3'	#6	13"	8	5'-5"	3'-6"	4'-0"
		4'			8	"	"	"
		5'			8	5'-7"	3'-8"	4'-0"
		6'			8	5'-8"	3'-9"	4'-0"
		7'			8	5'-9"	3'-10"	4'-0"
	1 @ 6'	4'	#6	12"	12	6'-5"	3'-1"	4'-0"
		5'			12	"	"	"
		6'			12	6'-7"	3'-3"	4'-0"
		7'			12	6'-8"	3'-4"	4'-0"
		8'			12	6'-9"	3'-5"	4'-0"
	1 @ 7'	4'	#6	11"	16	7'-5"	2'-9"	4'-0"
		5'			16	7'-6"	2'-10"	4'-0"
		6'			16	7'-7"	2'-11"	4'-0"
		7'			16	7'-8"	3'-0"	4'-0"
		8'			16	7'-9"	3'-1"	4'-0"
		9'			16	7'-10"	3'-2"	4'-0"
	1 @ 8'	4'	#6	12"	16	8'-5"	3'-2"	4'-0"
		5'			16	8'-6"	3'-3"	4'-0"
		6'			16	8'-7"	3'-4"	4'-0"
		7'			16	8'-8"	3'-5"	4'-0"
		8'			16	8'-9"	3'-6"	4'-0"
		9'			16	8'-10"	3'-7"	4'-0"
	1 @ 9'	5'	#7	11"	20	9'-8"	3'-4"	4'-0"
		6'			20	9'-9"	3'-5"	4'-0"
		7'			20	9'-10"	3'-6"	4'-0"
		8'			20	9'-11"	3'-7"	4'-0"
		9'			20	10'-0"	3'-8"	4'-0"
		10'			20	10'-1"	3'-9"	4'-0"
		11'			20	10'-2"	3'-10"	4'-0"
	1 @ 10'	5'	#7	10"	20	10'-8"	3'-8"	4'-0"
		6'			20	10'-9"	3'-9"	4'-0"
		7'			20	10'-10"	3'-10"	4'-0"
		8'			20	10'-11"	3'-11"	4'-0"
		9'			20	11'-0"	4'-0"	4'-0"
		10'			20	11'-1"	4'-1"	4'-0"
		11'			20	11'-2"	4'-2"	4'-0"
	1 @ 11'	6'	#7	10"	20	11'-7"	4'-0"	4'-0"
		7'			20	11'-8"	4'-1"	4'-0"
		8'			20	11'-9"	4'-2"	4'-0"
		9'			20	11'-10"	4'-3"	4'-0"
		10'			20	12'-0"	4'-4"	4'-0"
		11'			20	12'-1"	4'-5"	4'-0"
		12'			20	12'-2"	4'-6"	4'-0"
	1 @ 12'	6'	#7	10"	20	12'-7"	4'-0"	4'-0"
		7'			20	12'-8"	4'-1"	4'-0"
		8'			20	12'-9"	4'-2"	4'-0"
		9'			20	12'-10"	4'-3"	4'-0"
		10'			20	13'-0"	4'-4"	4'-0"
		11'			20	13'-1"	4'-5"	4'-0"
		12'			20	13'-2"	4'-6"	4'-0"

DEPTH OF COVER D	CLEAR SPAN S	CLEAR HEIGHT H	"d" bars STRAIGHT Longitudinal in Top Slab of Barrel. SIZE	SPACING	NO. REQ'D	LENGTH
0'-0" TO 5'-0" MAXIMUM	1 @ 4'	2'	#5	10½"	6	
		3'			6	
		4'			6	
		5'			6	
		6'			6	
	1 @ 5'	3'	#5	10½"	7	
		4'			7	
		5'			7	
		6'			7	
		7'			7	
	1 @ 6'	4'	#5	10½"	8	
		5'			8	
		6'			8	
		7'			8	
		8'			8	
	1 @ 7'	4'	#5	10½"	9	
		5'			9	
		6'			9	
		7'			9	
		8'			9	
		9'			9	
	1 @ 8'	4'	#5	10"	11	
		5'			11	
		6'			11	
		7'			11	
		8'			11	
		9'			11	
	1 @ 9'	5'	#5	10"	12	
		6'			12	
		7'			12	
		8'			12	
		9'			12	
		10'			12	
		11'			12	
	1 @ 10'	5'	#5	10"	13	
		6'			13	
		7'			13	
		8'			13	
		9'			13	
		10'			13	
		11'			13	
	1 @ 11'	6'	#5	10"	15	
		7'			15	
		8'			15	
		9'			15	
		10'			15	
		11'			15	
		12'			15	
	1 @ 12'	6'	#5	10"	16	
		7'			16	
		8'			16	
		9'			16	
		10'			16	
		11'			16	
		12'			16	

DEPTH OF COVER D	CLEAR SPAN S	CLEAR HEIGHT H	"d1" bars STRAIGHT Longitudinal in Sidewalls. SIZE	SPACING	NO. REQ'D	LENGTH
0'-0" TO 5'-0" MAXIMUM	1 @ 4'	2'	#5	12"	4	
		3'			4	
		4'			4	
		5'			4	
		6'			4	
	1 @ 5'	3'	#5	12"	6	
		4'			6	
		5'			6	
		6'			6	
		7'			6	
	1 @ 6'	4'	#5	12"	6	
		5'			6	
		6'			6	
		7'			6	
		8'			6	
	1 @ 7'	4'	#5	12"	7	
		5'			7	
		6'			7	
		7'			7	
		8'			7	
		9'			7	
	1 @ 8'	4'	#5	12"	8	
		5'			8	
		6'			8	
		7'			8	
		8'			8	
		9'			8	
	1 @ 9'	5'	#5	12"	9	
		6'			9	
		7'			9	
		8'			9	
		9'			9	
		10'			9	
		11'			9	
	1 @ 10'	5'	#5	12"	10	
		6'			10	
		7'			10	
		8'			10	
		9'			10	
		10'			10	
		11'			10	
	1 @ 11'	6'	#5	12"	11	
		7'			11	
		8'			11	
		9'			11	
		10'			11	
		11'			11	
		12'			11	
	1 @ 12'	6'	#5	12"	12	
		7'			12	
		8'			12	
		9'			12	
		10'			12	
		11'			12	
		12'			12	

DEPTH OF COVER D	CLEAR SPAN S	CLEAR HEIGHT H	"d2" bars STRAIGHT Longitudinal in Bottom Slab of Barrel. SIZE	SPACING	NO. REQ'D	LENGTH
0'-0" TO 5'-0" MAXIMUM	1 @ 4'	2'	#5	12"	5	
		3'			5	
		4'			5	
		5'			5	
		6'			5	
	1 @ 5'	3'	#5	12"	6	
		4'			6	
		5'			6	
		6'			6	
		7'			6	
	1 @ 6'	4'	#5	12"	7	
		5'			7	
		6'			7	
		7'			7	
		8'			7	
	1 @ 7'	4'	#5	12"	8	
		5'			8	
		6'			8	
		7'			8	
		8'			8	
		9'			8	
	1 @ 8'	4'	#5	12"	9	
		5'			9	
		6'			9	
		7'			9	
		8'			9	
		9'			9	
	1 @ 9'	5'	#5	12"	10	
		6'			10	
		7'			10	
		8'			10	
		9'			10	
		10'			10	
		11'			10	
	1 @ 10'	5'	#5	12"	11	
		6'			11	
		7'			11	
		8'			11	
		9'			11	
		10'			11	
		11'			11	
	1 @ 11'	6'	#5	12"	12	
		7'			12	
		8'			12	
		9'			12	
		10'			12	
		11'			12	
		12'			12	
	1 @ 12'	6'	#5	12"	13	
		7'			13	
		8'			13	
		9'			13	
		10'			13	
		11'			13	
		12'			13	

DEPTH OF COVER D	CLEAR SPAN S	CLEAR HEIGHT H	"e" bars STRAIGHT Longitudinal in Sidewalls. SIZE	SPACING	NO. REQ'D	LENGTH
0'-0" TO 5'-0" MAXIMUM	1 @ 4'	2'	#5	12"	5	
		3'			5	
		4'			5	
		5'			5	
		6'			5	
	1 @ 5'	3'	#6	12"	6	
		4'			6	
		5'			6	
		6'			6	
		7'			6	
	1 @ 6'	4'	#6	12"	6	
		5'			6	
		6'			6	
		7'			6	
		8'			6	
	1 @ 7'	4'	#6	12"	7	
		5'			7	
		6'			7	
		7'			7	
		8'			7	
		9'			7	
	1 @ 8'	4'	#6	12"	8	
		5'			8	
		6'			8	
		7'			8	
		8'			8	
		9'			8	
	1 @ 9'	5'	#6	12"	9	
		6'			9	
		7'			9	
		8'			9	
		9'			9	
		10'			9	
		11'			9	
	1 @ 10'	5'	#6	12"	10	
		6'			10	
		7'			10	
		8'			10	
		9'			10	
		10'			10	
		11'			10	
	1 @ 11'	6'	#6	12"	11	
		7'			11	
		8'			11	
		9'			11	
		10'			11	
		11'			11	
		12'			11	
	1 @ 12'	6'	#6	12"	12	
		7'			12	
		8'			12	
		9'			12	
		10'			12	
		11'			12	
		12'			12	

DEPTH OF COVER D	CLEAR SPAN S	CLEAR HEIGHT H	"f" bars STRAIGHT Verticals in Sidewalls. SIZE	SPACING	NO. REQ'D	LENGTH
0'-0" TO 5'-0" MAXIMUM	1 @ 4'	2'	#5	12"	120	2'-11"
		3'			120	3'-11"
		4'			120	4'-11"
		5'			120	5'-11"
		6'			120	6'-11"
	1 @ 5'	3'	#5	12"	120	4'-0"
		4'			120	5'-0"
		5'			120	6'-0"
		6'			120	7'-0"
		7'			120	8'-0"
	1 @ 6'	4'	#5	12"	120	4'-1"
		5'			120	5'-1"
		6'			120	6'-1"
		7'			120	7'-1"
		8'			120	8'-1"
	1 @ 7'	4'	#5	12"	120	4'-2"
		5'			120	5'-2"
		6'			120	6'-2"
		7'			120	7'-2"
		8'			120	8'-2"
		9'			120	9'-2"
	1 @ 8'	4'	#5	12"	120	5'-4"
		5'			120	6'-4"
		6'			120	7'-4"
		7'			120	8'-4"
		8'			120	9'-4"
		9'			120	10'-4"
	1 @ 9'	5'	#5	12"	120	6'-5"
		6'			120	7'-5"
		7'			120	8'-5"
		8'			120

Reshot 3-8-93

199

FED. ROAD No.	STATE	FED. AID PROJECT	FISCAL YEAR	SHEET No.	TOTAL SHEETS
6	ARK.			427	
JOB No.					

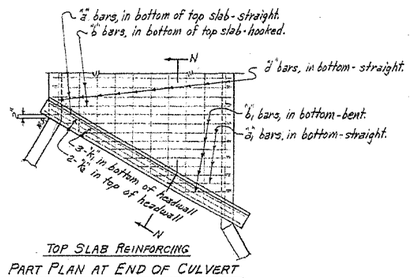

TOP SLAB REINFORCING
PART PLAN AT END OF CULVERT

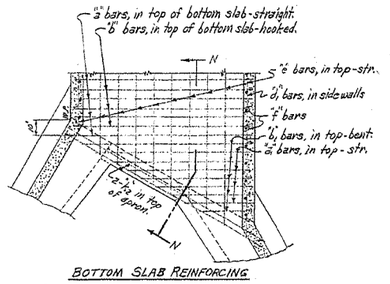

BOTTOM SLAB REINFORCING
PART PLAN AT END OF CULVERT

NOTE:- The "a", "a1" and "a1" bars vary in length. They should extend 1'-8" min. into Section "B".

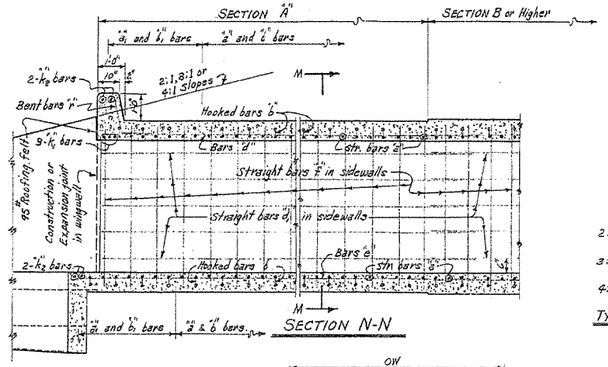

SECTION N-N

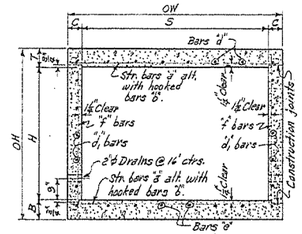

TYPICAL SECTION M-M

BAR LIST FOR SECTION "A" ON 30° SKEW – ONE END ONLY.

| SECTION & BAR GROUP | LENGTH OF SECTION | DEPTH OF COVER | CLEAR SPAN | CLEAR HEIGHT | "a" bars STRAIGHT In Top and Bottom Slabs of Barrel. SIZE | SPACING | NUMBER REQ'D 2:1 | 3:1 | 4:1 | LENGTH | "a1" bars STRAIGHT BENT - See Diagrams at Right. In Top and Bottom Slabs of Barrel - (two of each Length.) SIZE | SPACING | NO. REQ'D | LENGTH | "b" bars In Top and Bottom Slabs of Barrel - hooked. Alternate with "a" bars SIZE | SPACING | NUMBER REQ'D 2:1 | 3:1 | 4:1 | LENGTH | X | "b1" bars In Top and Bottom Slabs of Barrel - one end hooked. (Two of each Length) Alternate with "a1" bars. SIZE | SPACING | NO. REQ'D | LENGTH MAX. | LENGTH MIN. | X MAX. | X MIN. | "d" bars Longitudinal in Top Slab of Barrel. SIZE | SPACING | NO. REQ'D | LENGTH | "d1" bars Longitudinal in Sidewalls SIZE | SPACING | NO. REQ'D | LENGTH | "e" bars Longitudinal in Bottom Slab of Barrel. SIZE | SPACING | NO. REQ'D | LENGTH | "f" bars STRAIGHT Verticals in Sidewalls. SIZE | SPACING | NUMBER REQ'D 2:1 | 3:1 | 4:1 | LENGTH | "h1" bars STRAIGHT In Bottom of Headwall. SIZE | NO. REQ'D | LENGTH | "h2" bars STRAIGHT In Top of Headwall and Apron. (2 Each) SIZE | NO. REQ'D |
|---|---|---|---|---|---

BeShot 3-8-93

FED. ROAD No.	STATE	FED. AID PROJECT	FISCAL YEAR	SHEET No.	TOTAL SHEETS
6	ARK.			426	
JOB No.					

BAR LIST FOR BARREL SECTION 60'-0" IN LENGTH - TWO 30° SKEWED ENDS

DEPTH OF COVER D	CLEAR SPANS S	CLEAR HEIGHT H	'a' bars STRAIGHT In Top and Bottom Slab of Barrel. Size	Spacing	No. Reqd	Length	'a1' bars STRAIGHT In Top and Bottom Slab of Barrel (four of each Length) Size	Spacing	No. Reqd	Length	'b' bars BENT - See Diagrams below. In Bottom of Top Slab bent up over Division Wall - hooked. Alternate with 'a' and 'c' bars. Size	Spacing	No. Reqd	Length	X	Y	Z	'b1' bars BENT - See Diagrams below. In Bottom of Top Slab-some bent up over Division Wall-one end hooked, (2 of Each Length) Alternate with 'a' and 'c' bars. Size	Spacing	No. Reqd	Length Max.	Length Min.	L Max.	L Min.
D	S	H	Size	Spacing	No. Reqd	Length	Size	Spacing	No. Reqd	Length	Size	Spacing	No. Reqd	Length	X	Y	Z	Size	Spacing	No. Reqd	Length Max.	Length Min.	L Max.	L Min.
0'-0" TO 5'-0" MINIMUM	4 @ 6'-0"	2'			112	9'-5"			16	7'-8"	2'-5"			54	10'-6"	0'-3"	2'-2½"	3'-4"			6	9'-2"	3'-6"	8'-6"	3'-0"
		3'			112	9'-5"			16	"	"			54	10'-6"	"	"	"			6	"	"	"	"
		4'	⅝"	12"	112	9'-5"	⅝"	12"	16	"	"	⅝"	12"	54	10'-6"	"	"	"	⅝"	12"	6	"	"	"	"
		5'			112	9'-5"			16	"	"			54	10'-6"	"	"	"			6	"	"	"	"
		6'			112	9'-8"			16	7'-11"	2'-8"			54	10'-9"	0'-3"	2'-3½"	3'-5"			6	9'-5"	3'-9"	8'-9"	3'-3"
	5 @ 6'-0"	3'			110	11'-5"			20	9'-8"	2'-8"			53	12'-7"	0'-3½"	2'-8½"	4'-1"			10	11'-2"	4'-0"	10'-6"	3'-6"
		4'			110	11'-5"			20	"	"			53	12'-7"	"	"	"			10	"	"	"	"
		5'	⅝"	12"	110	11'-5"	⅝"	12"	20	"	"	⅝"	12"	53	12'-7"	"	"	"	⅝"	12"	10	"	"	"	"
		6'			110	11'-8"			20	9'-11"	2'-11"			53	12'-10"	0'-3½"	2'-8½"	4'-2"			10	11'-5"	4'-3"	10'-9"	3'-9"
		7'			110	11'-10"			20	10'-1"	3'-1"			53	13'-0"	0'-3½"	2'-9½"	4'-2½"			10	11'-7"	4'-5"	10'-11"	3'-11"
	6 @ 6'-0"	3'			118	13'-5"			24	11'-0"	3'-4"			56	14'-3"	0'-4"	3'-0½"	4'-6"			14	13'-6"	3'-7"	12'-7"	3'-1"
		4'			118	13'-5"			24	"	"			56	14'-3"	"	"	"			14	"	"	"	"
		5'	⅝"	11"	118	13'-5"	⅝"	11"	24	"	"	⅝"	11"	56	14'-3"	"	3½"	4'-6"	⅝"	11"	14	"	"	"	"
		6'			118	13'-8"			28	12'-1"	2'-7"			56	14'-6"	0'-4"	3½"	4'-11"			14	13'-9"	4'-0"	13'-0"	3'-6"
		7'			118	13'-10"			28	12'-3"	2'-8"			54	15'-0"	"	3'-2½"	4'-9½"			14	13'-9"	4'-1"	13'-2"	3'-7"
		8'			118	13'-11"			28	12'-5"	2'-10"			56	15'-1"	0'-4"	3'-5"	5'-0"			14	13'-10"	4'-1"	13'-3"	3'-7"
	7 @ 6'-0"	4'			106	15'-5"			28	13'-8"	3'-2"			50	16'-9"	0'-4½"	3'-5"	5'-2"			16	15'-6"	4'-7"	14'-6"	4'-0"
		5'			106	15'-5"			28	"	"			50	16'-9"	"	"	"			16	"	"	"	"
		6'	⅝"	12"	106	15'-8"	⅝"	12"	28	13'-1"	3'-5"	⅝"	12"	50	17'-0"	"	3'-6"	5'-3"	⅝"	12"	16	15'-7"	3'-1"	14'-9"	2'-6"
		7'			106	15'-10"			28	14'-1"	3'-7"			50	17'-2"	"	3'-7"	5'-5½"			16	15'-9"	3'-3"	14'-11"	2'-8"
		8'			106	15'-11"			28	14'-2"	3'-8"			50	17'-3"	"	"	5'-6"			16	15'-10"	3'-4"	15'-0"	2'-9"
		9'			106	16'-2"			28	14'-5"	3'-11"			50	17'-6"	0'-4½"	3'-8"	5'-10"			16	16'-1"	3'-7"	15'-3"	3'-0"
	8 @ 6'-0"	4'			112	17'-5"			36	15'-10"	3'-2"			54	18'-10"	0'-5"	3'-10½"	6'-4"			18	17'-6"	4'-6"	16'-7"	3'-11"
		5'			112	17'-8"			36	16'-1"	3'-3"			54	19'-1"	"	3'-11"	6'-5"			20	17'-9"	3'-2"	16'-10"	2'-9"
		6'	⅝"	11"	112	17'-8"	⅝"	11"	36	"	"	⅝"	11"	56	"	"	"	"	⅝"	11"	20	"	"	"	"
		7'			112	17'-10"			36	16'-3"	3'-7"			54	19'-3"	"	4'-0"	6'-5½"			20	17'-11"	3'-4"	17'-0"	2'-9"
		8'			112	17'-11"			36	16'-4"	3'-8"			54	19'-4"	"	"	6'-6"			20	18'-0"	3'-5"	17'-1"	2'-10"
		9'			112	18'-0"			36	16'-7"	3'-11"			53	19'-7"	0'-5"	4'-0½"	6'-7"			20	18'-3"	3'-8"	17'-4"	3'-1"
		10'			112	18'-5"			36	16'-10"	4'-2"			53	19'-10"	0'-5"	4'-2"	6'-8"			20	18'-6"	3'-11"	17'-7"	3'-4"

DEPTH OF COVER D	CLEAR SPANS S	'b1' bars BENT - See Diagrams below. In Top of Bottom Slab-bent down under Division Wall - one end hooked, (2 of Each Length) Alternate with 'a' and 'c' bars. Size	Spacing	No. Reqd	Length Max.	Length Min.	L Max.	L Min.	'b2' bars BENT - See Diagrams below. In Top of Bottom Slab-bent down under Division Wall - hooked. Alternate with 'a' and 'c' bars. Size	Spacing	No. Reqd	Length	X	Y	Z	'b3' bars STRAIGHT In Top and Bottom Slab of Barrel Alternate with 'b' and 'b2' bars. Size	Spacing	No. Reqd	Length	'c' bars STRAIGHT In Top and Bottom Slab of Barrel Alternate with 'b' and 'b2' bars. Size	Spacing	No. Reqd	Length	'c1' bars STRAIGHT In Top and Bottom Slab of Barrel Alt. with 'b', 'b2', 'b3' bars. (Four of each Length.) Size	Spacing	No. Reqd	Length Max.	Length Min.
D	S	Size	Spacing	No. Reqd	Length Max.	Length Min.	L Max.	L Min.	Size	Spacing	No. Reqd	Length	X	Y	Z	Size	Spacing	No. Reqd	Length	Size	Spacing	No. Reqd	Length	Size	Spacing	No. Reqd	Length Max.	Length Min.
0'-0" TO 5'-0" MINIMUM	4 @ 6'-0"																											
		⅝"	12"	6	9'-2"	3'-6"	8'-6"	3'-0"	⅝"	12"	6	"	"	"	"	⅝"	12"	6	"	⅝"	12"	116	4'-8"	⅝"	12"	4	3'-7"	—	—
	5 @ 6'-0"																											
		⅝"	12"	6	9'-5"	3'-9"	8'-9"	3'-3"	⅝"	12"	6	"	"	"	"	⅝"	12"	6	"	⅝"	12"	116	4'-8"	⅝"	12"	4	"	—	—
	6 @ 6'-0"																											
		⅝"	12"	10	11'-2"	4'-0"	10'-6"	3'-6"	⅝"	12"	6	9'-2"	3'-6"	8'-6"	3'-0"	⅝"	12"	6	9'-2"	⅝"	12"	114	5'-8"	⅝"	12"	8	5'-1"	3'-6"	—
	5 @ 6'-0"																											
		⅝"	12"	10	11'-5"	4'-3"	10'-9"	3'-9"	⅝"	12"	10	11'-2"	4'-0"	10'-6"	3'-6"	⅝"	12"	10	11'-5"	⅝"	12"	114	5'-8"	⅝"	12"	8	5'-3"	3'-6"	—
	6 @ 6'-0"																											
		⅝"	12"	10	11'-5"	4'-3"	10'-9"	3'-9"	⅝"	12"	10	11'-2"	4'-0"	10'-6"	3'-6"	⅝"	12"	10	11'-5"	⅝"	12"	114	5'-8"	⅝"	12"	8	5'-3"	3'-6"	—
	7 @ 6'-0"																											
		⅝"	12"	10	11'-7"	4'-5"	10'-11"	3'-11"	⅝"	12"	10	11'-5"	4'-3"	10'-9"	3'-9"	⅝"	12"	10	11'-7"	⅝"	12"	114	5'-8"	⅝"	12"	8	5'-4"	3'-7"	—
	8 @ 6'-0"																											
		⅝"	12"	10	11'-7"	4'-5"	10'-11"	3'-11"	⅝"	12"	10	11'-5"	4'-3"	10'-9"	3'-9"	⅝"	12"	10	11'-7"	⅝"	12"	116	5'-10"	⅝"	12"	8	5'-4"	3'-7"	—
	4 @ 6'-0"																											
		⅝"	12"	14	9'-2"	3'-6"	8'-6"	3'-0"	⅝"	12"	14	"	"	"	"	⅝"	12"	14	"	⅝"	12"	116	4'-8"	⅝"	12"	4	3'-7"	—	—
	5 @ 6'-0"																											
		⅝"	12"	14	9'-5"	3'-9"	8'-9"	3'-3"	⅝"	12"	14	"	"	"	"	⅝"	12"	14	"	⅝"	12"	116	4'-8"	⅝"	12"	4	"	—	—
	6 @ 6'-0"																											
		⅝"	12"	14	9'-5"	3'-9"	8'-9"	3'-3"	⅝"	12"	14	"	"	"	"	⅝"	12"	14	"	⅝"	12"	116	4'-8"	⅝"	12"	4	"	—	—
	7 @ 6'-0"																											
		⅝"	12"	14	9'-5"	3'-9"	8'-9"	3'-3"	⅝"	12"	14	"	"	"	"	⅝"	12"	14	"	⅝"	12"	116	4'-8"	⅝"	12"	4	"	—	—
	8 @ 6'-0"																											
		⅝"	12"	14	9'-5"	3'-9"	8'-9"	3'-3"	⅝"	12"	14	"	"	"	"	⅝"	12"	14	"	⅝"	12"	116	4'-8"	⅝"	12"	4	"	—	—

DEPTH OF COVER D	CLEAR SPANS S	'd' bars STRAIGHT Longitudinal in Top Slab of Barrel. Size	Spacing	No. Reqd	Length	'd1' bars STRAIGHT Longitudinal in Sidewalls and Division Wall. Size	Spacing	No. Reqd	Length	'e' bars STRAIGHT Longitudinal in Bottom Slab of Barrel. Size	Spacing	No. Reqd	Length	'f' bars STRAIGHT Verticals in Sidewalls and Division Wall. Size	Spacing	No. Reqd	Length	'k' bars STRAIGHT In Bottom of Headwalls Size	No. Reqd	Length	'k2' bars STRAIGHT In Top of Headwalls and Aprons (2 Each) Size	No. Reqd
D	S	Size	Spacing	No. Reqd	Length	Size	Spacing	No. Reqd	Length	Size	Spacing	No. Reqd	Length	Size	Spacing	No. Reqd	Length	Size	No. Reqd	Length	Size	No. Reqd
0'-0" TO 5'-0" MINIMUM	4 @ 6'-0"																					
	5 @ 6'-0"																					
	6 @ 6'-0"																					
	7 @ 6'-0"																					
	8 @ 6'-0"																					
	4 @ 6'-0"																					
		⅝"	12"	24	2'-5"	⅝"	12"	8						⅝"	12"	14		⅝"	6	10'-4"	⅝"	8
	5 @ 6'-0"																					
		⅝"	12"	28	2'-6"	⅝"	12"	12						⅝"	12"	16		⅝"	6	"	⅝"	8
	6 @ 6'-0"																					
		⅝"	12"	32	2'-7"	⅝"	12"	16						⅝"	12"	18		⅝"	6	"	⅝"	8
	7 @ 6'-0"																					
		⅝"	12"	36	2'-8"	⅝"	12"	20						⅝"	12"	20		⅝"	6	"	⅝"	8
	8 @ 6'-0"																					
		⅝"	12"	42	2'-9"	⅝"	12"	24						⅝"	12"	22		⅝"	6	"	⅝"	8
	4 @ 6'-0"																					
		¾"	12"	24	2'-5"	¾"	12"	8						¾"	12"	14		⅝"	6	10'-4"	⅝"	8
	5 @ 6'-0"																					
		¾"	12"	28	2'-6"	¾"	12"	12						¾"	12"	16		⅝"	6	"	⅝"	8
	6 @ 6'-0"																					
		¾"	12"	32	2'-7"	¾"	12"	16						¾"	12"	18		⅝"	6	"	⅝"	8
	7 @ 6'-0"																					
		¾"	12"	36	2'-8"	¾"	12"	20						¾"	12"	20		⅝"	6	"	⅝"	8
	8 @ 6'-0"																					
		¾"	12"	42	2'-9"	¾"	12"	24						¾"	12"	22		⅝"	6	"	⅝"	8
	4 @ 6'-0"																					
														⅝"	12"	14		⅝"	6	10'-4"	⅝"	8
	5 @ 6'-0"																					
														⅝"	12"	16		⅝"	6	"	⅝"	8
	6 @ 6'-0"																					
														⅝"	12"	18		⅝"	6	"	⅝"	8
	7 @ 6'-0"																					
														⅝"	12"	20		⅝"	6	"	⅝"	8
	8 @ 6'-0"																					
														⅝"	12"	22		⅝"	6	"	⅝"	8

BAR SIZE	PIN DIAM.	K	ADD FOR 2 HOOKS	BENDING DIAGRAM FOR BARS 'b' AND 'b2'
#5	2⅝"	4¼"	0'-11½"	Pin diam. Z X Y X Z
#6	3"	5"	1'-2"	

BAR SIZE	PIN DIAM.	K	ADD FOR 1 HOOK	BENDING DIAGRAM FOR BARS 'b1' AND 'b3'.
#5	2⅝"	4¼"	0'-5¾"	Pin diameter. Z X Y X Z Less than L. Min. 1.4L. 3X Max. Less than Z. 3X Max.
#6	3"	5"	0'-7"	

SPAN	SIZE	SPACING	No. Reqd	LENGTH	X
4'	#5	12"	24	2'-5"	1'-2½"
5'	#5	12"	28	2'-6"	1'-3"
6'	#5	12"	32	2'-7"	1'-3½"
7'	#5	12"	36	2'-8"	1'-4"
8'	#5	12"	42	2'-9"	1'-4½"

'Dowel bars 'k' in Two Headwalls.

X = 1/2 X

These bars are in the skewed portion of barrel only. The length of 'a' and 'c' bars and overall length L of 'b1' and 'b3' bars vary by 1'-9" for 12" spacing and 1'-7" for 11" spacing.

In the regular portion of the barrel begin and end with a set of 'a' & 'c' bars. If the spacing is such that the last set of bars would be 'b' & 'b2' bars, use a set of 'a' & 'c' bars instead.

Note:- Dimensions are to centers of bars (b, b1, b2, & b3). The X, Y & Z values for 'b' bars are same as for 'b' bars and for 'b3' bars same as for 'b2' bars.

Note:- For Details of Standard Wings and bar lists, see Drawing No. W-X302-1 or W-X302-2; W-X303-1 or W-X303-2, and W-X304-1 or W-X304-2. Also W-X30.

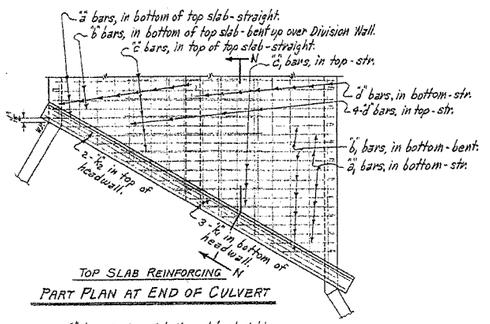

TOP SLAB REINFORCING
PART PLAN AT END OF CULVERT

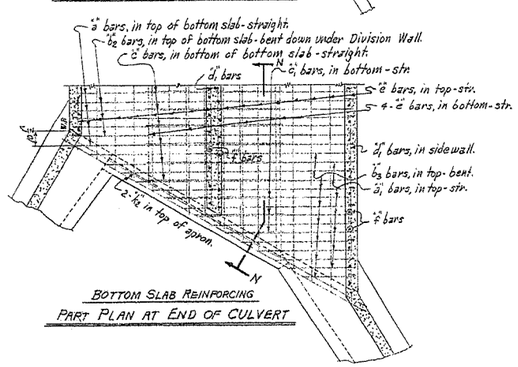

BOTTOM SLAB REINFORCING
PART PLAN AT END OF CULVERT

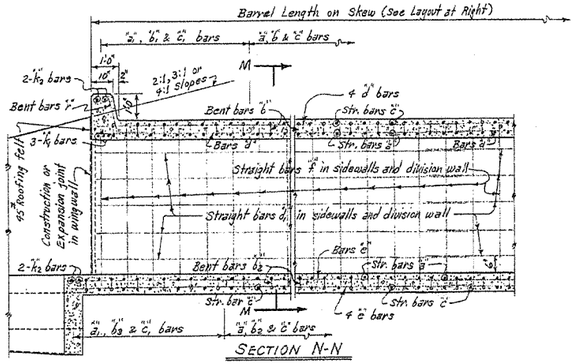

SECTION N-N

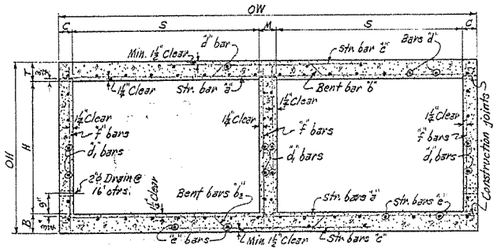

TYPICAL SECTION M-M

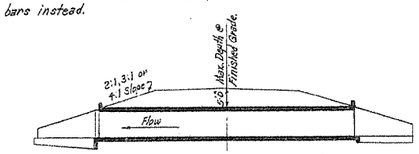

LONGITUDINAL SECTION N'-N'

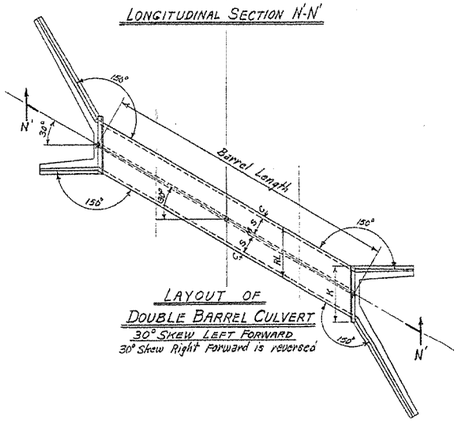

LAYOUT OF
DOUBLE BARREL CULVERT
30° SKEW LEFT FORWARD
30° Skew Right Forward is reversed

BARREL DIMENSIONS

MAX. DESIGN DEPTH OF COVER	CLEAR SPANS	CLEAR HEIGHT	Sq. FT. OPENING	OVERALL WIDTH	THICKNESS OF TOP SLAB	THICKNESS OF SIDEWALLS AND DIVISION WALL	THICKNESS OF BOTTOM SLAB	OVERALL HEIGHT	ROAD WAY LENGTH	LENGTH OF HEADWALLS
D	S	H	A	OW	T	C	M	B	OH	RL	K
5'-0"	2 @ 6'-0"	2'	16	9'-3"	6½"	8"	6½"	6"	3'-0½"	11'-2"	12'-3½"
		3'	24	9'-8"	6"	8"			3'-0½"	"	"
		4'	32	9'-8"	6"	8"			3'-0½"	"	"
		5'	40	9'-8"	6"	8"			4'-0½"	"	"
		6'	48	9'-11"	7"	9"			4'-0½"	11'-5½"	12'-7½"
		7'	56	10'-1"	7"	9"			5'-0½"	11'-8½"	12'-10½"
	3 @ 6'-0"	2'	30	11'-8"	6"	8"	7"	6½"	4'-1½"	13'-5½"	14'-7½"
		3'	45	11'-8"	6"	8"			5'-1½"	"	"
		4'	60	11'-8"	6"	8"			6'-1½"	"	"
		5'	75	11'-8"	7"	9"			7'-1½"	13'-5½"	14'-7½"
		6'	90	11'-11"	7"	9"			8'-1½"	13'-8½"	14'-10½"
		7'	105	12'-1"	7½"	10"			8'-1½"	13'-11½"	15'-1½"
	4 @ 6'-0"	3'	36	13'-8"	6"	8"	7½"	7"	5'-3"	15'-5½"	16'-7½"
		4'	48	13'-8"	6"	8"			6'-3"	"	"
		5'	60	13'-8"	6"	8"			6'-3"	"	"
		6'	72	13'-11"	7"	9"			7'-3"	16'-0½"	17'-2½"
		7'	84	14'-1"	7½"	10"			8'-3"	16'-3½"	17'-5"
		8'	96	14'-2"	8"	10"			9'-3"	16'-4½"	17'-6½"
	5 @ 6'-0"	4'	52	15'-8"	6"	8"	8"	8"	5'-6"	18'-1½"	19'-3"
		5'	70	15'-8"	6"	8"			6'-6"	"	"
		6'	84	15'-11"	7"	9"			7'-6"	18'-4½"	19'-6½"
		7'	98	16'-1"	7½"	10"			8'-6"	18'-6½"	19'-8½"
		8'	112	16'-2"	8"	10"			9'-6"	18'-8"	19'-9½"
		9'	126	16'-5"	9"	11"			10'-6"	19'-1½"	20'-3½"
	6 @ 6'-0"	4'	64	17'-8"	6"	8"	8½"	8½"	5'-9"	20'-6½"	21'-6½"
		5'	80	17'-8"	7"	9"			6'-9"	20'-6½"	21'-10"
		6'	96	17'-11"	7"	9"			7'-9"	"	"
		7'	112	18'-1"	7½"	10"			8'-9"	20'-10½"	22'-1½"
		8'	128	18'-2"	8"	10"			9'-9"	20'-11½"	22'-2½"
		9'	144	18'-5"	9"	11"			10'-9"	21'-3½"	22'-6½"
		10'	160	18'-8"	10"	12"			11'-9"	21'-6½"	22'-9½"

QUANTITIES

CLASS S CONC. PER LIN. FT. OF BARREL	REINFORCING STEEL: TOTAL FOR 60'-0" LENGTH OF BARREL	REINFORCING STEEL: PER LIN. FT. OF BARREL	REINFORCING STEEL: ADDITIONAL PER LAP
CU.YD.	LB.	LB.	LB.
0.496	5523	88.15	42.71
0.558	5846	93.99	46.65
0.620	6170	98.84	49.39
0.682	6493	104.18	52.73
0.809	6897	110.74	56.07
0.671	7618	123.36	51.19
0.733	8192	128.68	54.53
0.795	8465	134.03	57.87
0.922	8899	140.89	61.21
1.044	9291	147.34	64.55
0.818	9398	148.50	56.36
0.880	9721	153.85	59.68
0.941	10,044	159.19	63.02
1.070	10,496	166.20	66.36
1.192	10,903	172.74	69.70
1.298	11,598	183.26	73.05
1.021	11,081	179.15	64.83
1.081	11,405	184.99	68.17
1.212	12,069	196.59	71.51
1.336	12,479	197.19	74.85
1.440	13,084	207.89	78.19
1.616	14,198	225.25	81.53
1.174	13,251	210.87	71.71
1.235	13,721	217.63	75.05
1.346	14,054	222.97	78.39
1.989	14,902	223.68	81.73
1.595	15,131	240.67	85.07
1.772	16,154	256.08	88.41
1.967	16,999	271.07	91.75

* For quantities in wings see Standard Wing Drawings listed below. Total steel quantities listed above include one lap of longitudinal bars.

GENERAL NOTES

CONCRETE:- All concrete to be Class S, and shall be poured in the dry. All exposed corners to have ¾" chamfers.

REINFORCING STEEL:- Reinforcing to be deformed bars of intermediate or hard grade.

BAR LAP:- In computing the quantities of steel from the tables add one lap for each add'l 33'-0" length of barrel over 32'-0". Lap longitudinal bars 30 diam. min.

CONSTRUCTION JOINTS:- Construction joints between wingwalls, sidewalls, division wall and slabs shall be only where shown on plans.

SPECIFICATI