DATE REVISED	DATE FILMED	DATE REVISED	DATE FILMED	FED.RD. DIST.NO.	STATE	FED.AID PROJ.NO.	SHEET NO.	TOTAL SHEETS
				6	ARK.		1	229
				JOB NO.		040478		
				(2) HWY. 71 INTERCHANGE (GR. & STRS.) (F)				

"A FULLY CONTROLLED ACCESS FACILITY"

ARKANSAS STATE HIGHWAY AND TRANSPORTATION DEPARTMENT

CONSTRUCTION PLANS FOR STATE HIGHWAY

HWY. 71 INTERCHANGE (GR. & STRS.) (F)

SEBASTIAN COUNTY

ROUTE 71 SECTION 14

F.A.P. NH-0065(44)

JOB 040478

NOT TO SCALE

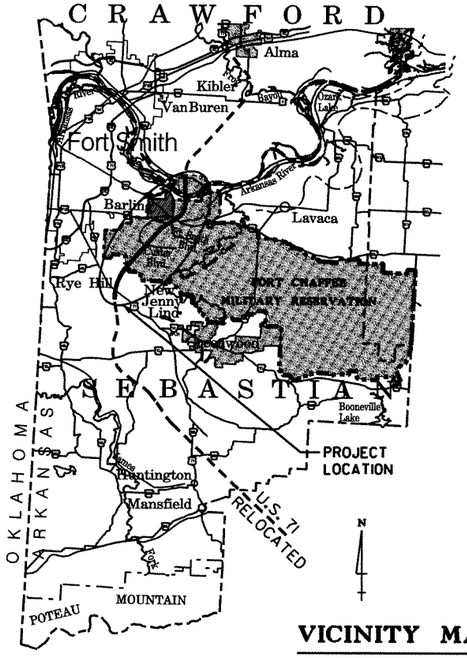

VICINITY MAP

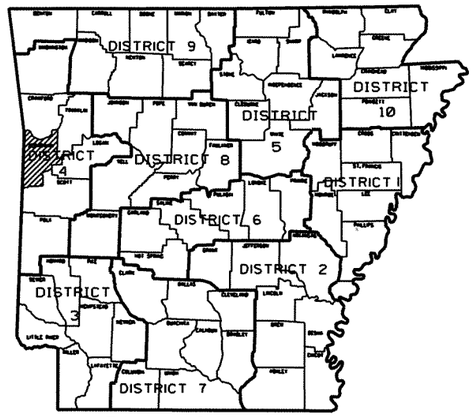

ARK. HWY. DIST. NO. 4

BRIDGE DATA

(1) STA. 55+85.39 CO. RD. 8 - BR. END
BRIDGE NO. 07079
30' - 0" CL. RDWY. - CO. RD. 8
329' - 2" TOTAL LENGTH
327' - 0" CONT. PLATE GIRDER UNIT
STA. 59+14.55 - BR. END

(2A) STA. 1857+06.67 BRIDGE END
320' - 0" CONTINUOUS COMP.
PLATE GIRDER UNIT BRIDGE NO. XXXXX A
74' - 0" CL. ROADWAY WIDTH
322' - 6" BRIDGE LENGTH
STA. 1860+29.17 BRIDGE END
(FOR INFORMATION ONLY)

(2B) STA. 1856+64.46 BRIDGE END
320' - 0" CONTINUOUS COMP.
PLATE GIRDER UNIT BRIDGE NO. XXXXX B
74' - 0" CL. ROADWAY WIDTH
322' - 6" BRIDGE LENGTH
STA. 1859+86.96 BRIDGE END
(FOR INFORMATION ONLY)

STA. 1893+62.58
END JOB 040478=
BEG. JOB 040458

STA. 1860+08.06
BEGIN JOB 040478

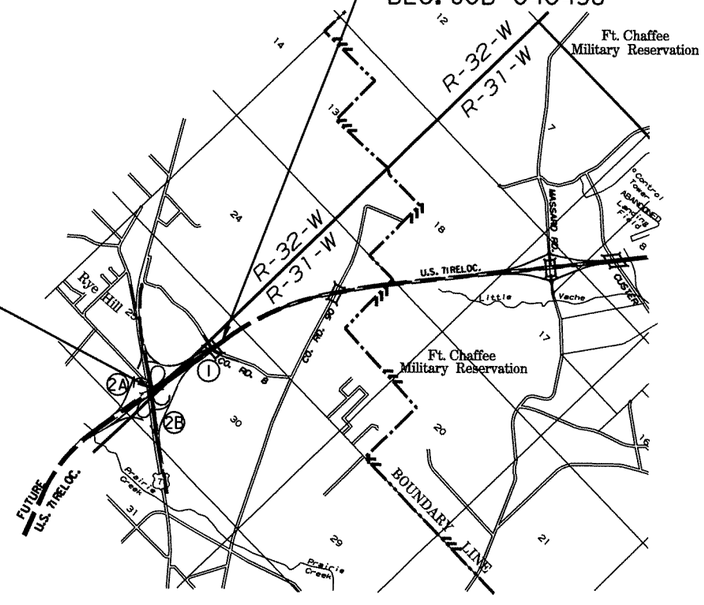

LEGEND

- FUTURE CONSTRUCTION
- PROPOSED CONSTRUCTION
- FORT CHAFFEE MILITARY RESERVE

LENGTH COMPUTED ALONG ℄ MEDIAN

GROSS LENGTH OF PROJECT	3354.52 FT. OR	0.635 MI.
NET LENGTH OF ROADWAY	3354.52 FT. OR	0.635 MI.
NET LENGTH OF BRIDGES	0.00 FT. OR	0.000 MI.
NET LENGTH OF PROJECT	3354.52 FT. OR	0.635 MI.

DESIGN TRAFFIC DATA

DESIGN YEAR		2028
2008	ADT	21213
2028	ADT	37502
2028	DHV	4129
DIRECTIONAL DISTRIBUTION		60%
TRUCKS		21%
DESIGN SPEED		70 MPH

BEGIN JOB
LAT. N35°15'21.8"
LONG. W94°21'16.6"

MID-POINT JOB
LAT. N35°15'38.1"
LONG. W94°21'12.8"

END JOB
LAT. N35°15'54.4"
LONG. W94°21'8.9"

P.E. JOB 040373
NON-PART.

STATE OF ARKANSAS
REGISTERED PROFESSIONAL ENGINEER
STANLEY G. KING
NO. 9065

1/19/12

DATE REVISED	DATE FILMED	DATE REVISED	DATE FILMED	FED.RD. DIST.NO.	STATE	FED.AID PROJ.NO.	SHEET NO.	TOTAL SHEETS
				6	ARK.		2	229
				JOB NO.		040478		

(2) INDEX, GOV. SPECS. AND GENERAL NOTES

INDEX OF SHEETS

SHEET NO.	TITLE	BRIDGE NO.	DRWG. NO.	DATE
1	TITLE SHEET			
2	INDEX OF SHEETS, GOVERNING SPECIFICATIONS, AND GENERAL NOTES			
3-8	TYPICAL SECTIONS OF IMPROVEMENT			
9-11A	SPECIAL DETAILS			
12-14	EROSION CONTROL DETAILS			
15-18	MAINTENANCE OF TRAFFIC DETAILS			
19-23	QUANTITY SHEETS			
24	SCHEDULE OF BRIDGE QUANTITIES	07079	48628	
25	SUMMARY OF QUANTITIES AND REVISIONS			
26-34	SURVEY CONTROL DETAILS			
35-61	PLAN AND PROFILE SHEETS			
62	DRIVEWAY PROFILES			
63-65	CULVERT DIAGRAMS			
66	BRIDGE A LAYOUT OF U.S. ROUTE 71 RELOCATED FUTURE BRIDGE OVER U.S. ROUTE 71 EXISTING (FOR INFORMATION ONLY)		48629	
67	BRIDGE B LAYOUT OF U.S. ROUTE 71 RELOCATED FUTURE BRIDGE OVER U.S. ROUTE 71 EXISTING (FOR INFORMATION ONLY)		48629A	
68	LAYOUT OF COUNTY ROAD 8 BRIDGE OVER U.S. ROUTE 71 RELOCATED	07079	48630	
69	DETAILS OF BENT 1 (SHEET 1 OF 3)	07079	48631	
70	DETAILS OF BENT 1 (SHEET 2 OF 3)	07079	48632	
71	DETAILS OF BENT 1 (SHEET 3 OF 3)	07079	48633	
72	DETAILS OF BENT 2 (SHEET 1 OF 2)	07079	48634	
73	DETAILS OF BENT 2 (SHEET 2 OF 2)	07079	48635	
74	DETAILS OF BENT 3 (SHEET 1 OF 3)	07079	48636	
75	DETAILS OF BENT 3 (SHEET 2 OF 3)	07079	48637	
76	DETAILS OF BENT 3 (SHEET 3 OF 3)	07079	48638	
77	DETAILS OF STANDARD STATE OF ARKANSAS FORM INSERT	07079	48639	
78	DETAILS OF 327'-0" CONTINUOUS COMPOSITE PLATE GIRDER UNIT (SHEET 1 OF 7)	07079	48640	
79	DETAILS OF 327'-0" CONTINUOUS COMPOSITE PLATE GIRDER UNIT (SHEET 2 OF 7)	07079	48641	
80	DETAILS OF 327'-0" CONTINUOUS COMPOSITE PLATE GIRDER UNIT (SHEET 3 OF 7)	07079	48642	
81	DETAILS OF 327'-0" CONTINUOUS COMPOSITE PLATE GIRDER UNIT (SHEET 4 OF 7)	07079	48643	
82	DETAILS OF 327'-0" CONTINUOUS COMPOSITE PLATE GIRDER UNIT (SHEET 5 OF 7)	07079	48644	
83	DETAILS OF 327'-0" CONTINUOUS COMPOSITE PLATE GIRDER UNIT (SHEET 6 OF 7)	07079	48645	
84	DETAILS OF 327'-0" CONTINUOUS COMPOSITE PLATE GIRDER UNIT (SHEET 7 OF 7)	07079	48646	
85	DETAILS OF ARMORED JOINT WITH NEOPRENE STRIP SEAL	07079	48647	
86	DETAILS OF ELASTOMERIC BEARINGS	07079	48648	
87	DETAILS OF TYPE SPECIAL APPROACH GUTTER	07079	48648A	
88	EMBANKMENT CONSTRUCTION AND BACKFILL AT BRIDGE ENDS		I888A	4-10-03
89	DETAILS FOR DUMPED RIPRAP AND FILTER BLANKET AND DETAILS FOR COMPUTING EXCAVATION FOR STRUCTURES		I89IF	4-10-03
90	DETAILS OF STANDARD TYPE D BRIDGE NAME PLATES		2387	9-8-11
91	DETAILS OF PERMISSIBLE TYPE PERMANENT STEEL BRIDGE DECK FORMS FOR STEEL & CONCRETE GIRDER SPANS		1499I	4-10-03
92	CONCRETE DITCH PAVING		CDP-1	11-17-10
93	FLARED END SECTION		FES-1	10-18-96
94	FLARED END SECTION		FES-2	10-18-96
95	DETAILS OF DROP INLETS		FPC-9D	8-22-02
96	DETAILS OF DROP INLETS AND SPILLWAY OUTLET		FPC-9N	7-2-98
97	DETAILS OF DROP INLET & JUNCTION BOX (TYPE ST)		FPC-9S	11-16-01
98	GUARD RAIL DETAILS		GR-8	7-14-10
99	GUARD RAIL DETAILS		GR-8A	7-14-10
100	GUARD RAIL DETAILS		GR-9	4-17-08
101	GUARD RAIL DETAILS		GR-9A	4-17-08
102	GUARD RAIL DETAILS		GR-10	7-14-10
103	GUARD RAIL DETAILS		GR-10A	7-14-10
104	GUARD RAIL DETAILS		GRT-1	7-14-10
105	MAILBOX DETAILS		MB-1	11-18-04
106	PRECAST CONCRETE BOX CULVERTS		PBC-1	12-15-11
107	CONCRETE PIPE CULVERT FILL HEIGHTS & BEDDING		PCC-1	12-15-11
108	METAL PIPE CULVERT FILL HEIGHTS & BEDDING		PCM-1	12-15-11
109	PAVEMENT MARKING DETAILS		PM-1	11-17-10
110	DETAILS OF PIPE UNDERDRAIN		PU-1	4-10-03
111	REINFORCED CONCRETE BOX CULVERT DETAILS		RCB-1	12-15-11
112	EXCAVATION PAY LIMITS, BACKFILL & SOLID SODDING FOR BOX CULVERTS		RCB-2	11-20-03
113	TABLES AND METHOD OF SUPERELEVATION FOR ONE-WAY TRAFFIC		SE-1	1-09-87
114	TABLES AND METHOD OF SUPERELEVATION FOR TWO-WAY TRAFFIC		SE-2	10-18-96
115	SAFETY END SECTION FOR CIRCULAR AND ARCH PIPES		SES-1	10-18-96
116	STANDARD TRAFFIC CONTROLS FOR HIGHWAY CONSTRUCTION		TC-1	12-15-11
117	STANDARD TRAFFIC CONTROLS FOR HIGHWAY CONSTRUCTION		TC-2	3-11-10
118	STANDARD TRAFFIC CONTROLS FOR HIGHWAY CONSTRUCTION		TC-3	10-15-09
119	STANDARD TRAFFIC CONTROLS FOR HIGHWAY CONSTRUCTION - TEMPORARY PRECAST BARRIER		TC-4	10-15-09
120	STANDARD TRAFFIC CONTROLS FOR HIGHWAY CONSTRUCTION - TEMPORARY PRECAST BARRIER		TC-5	10-15-09
121	TEMPORARY EROSION CONTROL DEVICES		TEC-1	12-15-11
122	TEMPORARY EROSION CONTROL DEVICES		TEC-2	6-02-94
123	TEMPORARY EROSION CONTROL DEVICES		TEC-3	11-03-94
124	DETAILS OF STANDARD TURNOUT FOR ENTRANCE & EXIT RAMP (NON-REINFORCED)		TR-1A	8-22-02
125	WIRE FENCE TYPE A AND B		WF-1	8-22-02
126	WIRE FENCE WATER GAPS		WF-2	4-20-79
127	CHAIN LINK FENCE		WF-3	11-17-10
128	WIRE FENCE TYPE C AND D		WF-4	8-22-02
129	DETAILS OF STANDARD BARREL SECTIONS FOR REINFORCED CONCRETE BOX CULVERTS		R-100X-X3	12-11-64
130	DETAILS OF STANDARD BARREL SECTIONS FOR REINFORCED CONCRETE BOX CULVERTS		R-130X-1	1-24-64
131	DETAILS OF STANDARD BARREL SECTIONS FOR REINFORCED CONCRETE BOX CULVERTS		R-200X-X1	10-15-62
132	DETAILS OF STANDARD BARREL SECTIONS FOR REINFORCED CONCRETE BOX CULVERTS		R-215X-1	10-03-63
133	DETAILS OF STANDARD WINGS FOR REINFORCED CONCRETE BOX CULVERTS		W-X003-1	5-10-66
134	DETAILS OF STANDARD WINGS FOR REINFORCED CONCRETE BOX CULVERTS		W-X15	6-13-63
135	DETAILS OF STANDARD WINGS FOR REINFORCED CONCRETE BOX CULVERTS		W-X153-1	5-10-66
136	DETAILS OF STANDARD WINGS FOR REINFORCED CONCRETE BOX CULVERTS		W-X30	7-15-63
137	DETAILS OF STANDARD WINGS FOR REINFORCED CONCRETE BOX CULVERTS		W-X303-1	5-10-66
138-229	CROSS SECTIONS			

NOTE: CROSS SECTIONS NOT NORMALLY INCLUDED IN PLANS SOLD TO PROSPECTIVE BIDDERS, BUT ARE AVAILABLE UPON REQUEST.

GOVERNING SPECIFICATIONS

ARKANSAS STATE HIGHWAY COMMISSION STANDARD SPECIFICATIONS FOR HIGHWAY CONSTRUCTION, EDITION OF 2003, AND THE FOLLOWING SPECIAL PROVISIONS AND SUPPLEMENTAL SPECIFICATIONS:

NUMBER	TITLE
ERRATA	ERRATA FOR THE BOOK OF STANDARD SPECIFICATIONS
FHWA-1273	FHWA-1273 REVISIONS
FHWA-1273	REQUIRED CONTRACT PROVISIONS FEDERAL-AID CONSTRUCTION CONTRACTS
FHWA-1273	SUPPLEMENT - EQUAL EMPLOYMENT OPPORTUNITY - NOTICE TO CONTRACTORS
FHWA-1273	SUPPLEMENT - SPECIFIC EQUAL EMPLOYMENT OPPORTUNITY RESPONSIBILITIES (23 U.S.C. 140)
FHWA-1273	SUPPLEMENT - EQUAL EMPLOYMENT OPPORTUNITY - GOALS AND TIMETABLES
FHWA-1273	SUPPLEMENT - EQUAL EMPLOYMENT OPPORTUNITY - FEDERAL STANDARDS
FHWA-1273	SUPPLEMENT - TRAINING PROGRAM - JOB 040478
FHWA-1273	SUPPLEMENT - POSTERS AND NOTICES REQUIRED FOR FEDERAL-AID PROJECTS
FHWA-1273	SUPPLEMENT - WAGE RATE DETERMINATION
100-2	MANUAL FOR ASSESSING SAFETY HARDWARE (MASH)
102-1	BIDDING REQUIREMENTS AND CONDITIONS
103-1	DETERMINATION OF DBE PARTICIPATION
105-1	CONSTRUCTION CONTROL MARKINGS
105-2	EQUIPMENT AND MATERIAL STORAGE ON BRIDGE STRUCTURES
107-1	WORKER VISIBILITY
108-1	LIQUIDATED DAMAGES
110-1	PROTECTION OF WATER QUALITY AND WETLANDS
303-1	AGGREGATE BASE COURSE
404-1	PRODUCTION VERIFICATION OF ASPHALT CONCRETE HOT MIX
409-1	MINERAL AGGREGATES
410-3	DENSITY TESTING FOR ACHM LEVELING COURSES AND BOND BREAKERS
411-1	ASPHALT CONCRETE COLD PLANT MIX
600-1	WATER FOR VEGETATION
603-1	MAINTENANCE OF TRAFFIC
604-1	RETROREFLECTIVE SHEETING FOR TRAFFIC CONTROL DEVICES IN CONSTRUCTION ZONES
606-2	PIPE CULVERTS
718-2	REFLECTORIZED PAINT PAVEMENT MARKINGS
804-1	INSTALLATION OF DOWEL BARS AND TIE BARS
JOB 040478	ARMORED JOINT WITH NEOPRENE STRIP SEAL
JOB 040478	BROADBAND INTERNET SERVICE FOR ASPHALT CONCRETE PLANT
JOB 040478	BROADBAND INTERNET SERVICE FOR FIELD OFFICE
JOB 040478	COORDINATION OF WORK
JOB 040478	EMBANKMENT CONSTRUCTION
JOB 040478	GOALS FOR DISADVANTAGED BUSINESS ENTERPRISE PARTICIPATION
JOB 040478	HIGH PERFORMANCE PAVEMENT MARKING
JOB 040478	INTERNET BIDDING
JOB 040478	OFF-SITE RESTRAINING CONDITIONS FOR AMERICAN BURYING BEETLE
JOB 040478	PARTNERING REQUIREMENTS
JOB 040478	SOIL STABILIZATION
JOB 040478	STORM WATER POLLUTION PREVENTION PLAN
JOB 040478	SUBMISSION OF ASPHALT CONCRETE HOT MIX ACCEPTANCE TEST RESULTS
JOB 040478	TEXTURED COATING FINISH
JOB 040478	UTILITY ADJUSTMENTS
JOB 040478	VALUE ENGINEERING
JOB 040478	WARM MIX ASPHALT

GENERAL NOTES

1. LEVEL DATUM U.S.C. & G. S.

2. GRADE LINE DENOTES FINISHED GRADE WHERE SHOWN ON PLANS.

3. ALL PIPE LINES, POWER, TELEPHONE AND TELEGRAPH LINES TO BE MOVED OR LOWERED BY THE RESPECTIVE OWNERS AS PER AGREEMENT WITH SUCH OWNERS.

4. ANY EQUIPMENT OR APPURTENANCE THAT INTERFERES WITH THE PROPOSED CONSTRUCTION AND WHICH MAY BE THE PROPERTY OF UTILITY SERVICE ORGANIZATIONS SHALL BE MOVED BY THE OWNERS UNLESS OTHERWISE PROVIDED.

5. THE CONTRACTOR SHALL BE RESPONSIBLE FOR MAINTAINING U.S. MAILBOXES WITHIN THE PROJECT LIMITS IN SUCH A MANNER THAT THE PUBLIC MAY RECEIVE CONTINUED MAIL SERVICE. PAYMENT WILL BE CONSIDERED INCLUDED IN THE PRICE BID FOR THE VARIOUS BID ITEMS.

6. ALL LAND MONUMENTS LOCATED WITHIN THE CONSTRUCTION AREA SHALL BE PROTECTED IN ACCORDANCE WITH SECTION 107.12 OF THE STANDARD SPECIFICATIONS.

7. ALL TREES THAT DO NOT DIRECTLY INTERFERE WITH THE PROPOSED CONSTRUCTION SHALL BE SPARED AS DIRECTED BY THE ENGINEER. CARE AND DISCRETION SHALL BE USED TO INSURE THAT ALL TREES NOT TO BE REMOVED SHALL BE HARMED AS LITTLE AS POSSIBLE DURING THE CONSTRUCTION OPERATIONS.

8. THE CONTRACTOR SHALL BE RESPONSIBLE FOR PROVIDING A FENCE TO CONTROL LIVESTOCK IN AREAS WHERE PASTURES ARE SEVERED. WIRE FENCES MAY BE CONSTRUCTED INITIALLY, OR IN LIEU THEREOF, THE CONTRACTOR, AT HIS OWN EXPENSE, MAY ELECT TO PROVIDE TEMPORARY FENCING SUITABLE TO CONTAIN LIVESTOCK.

9. THIS PROJECT IS COVERED UNDER A NATIONWIDE 14 SECTION 404 PERMIT. REFER TO SECTION 110 OF THE STANDARD SPECIFICATIONS, EDITION 2003, FOR PERMIT REQUIREMENTS.

STATE OF ARKANSAS
REGISTERED PROFESSIONAL ENGINEER
No. 9808
JAMES L. BARR
2/14/12

INDEX OF SHEETS, GOVERNING SPECIFICATIONS, AND GENERAL NOTES

DATE REVISED	DATE FILMED	DATE REVISED	DATE FILMED

FED.RD. DIST.NO.	STATE	FED.AID PROJ.NO.	SHEET NO.	TOTAL SHEETS
6	ARK.		3	229
JOB NO.		040478		

(2) TYPICAL SECTIONS OF IMPROVEMENT

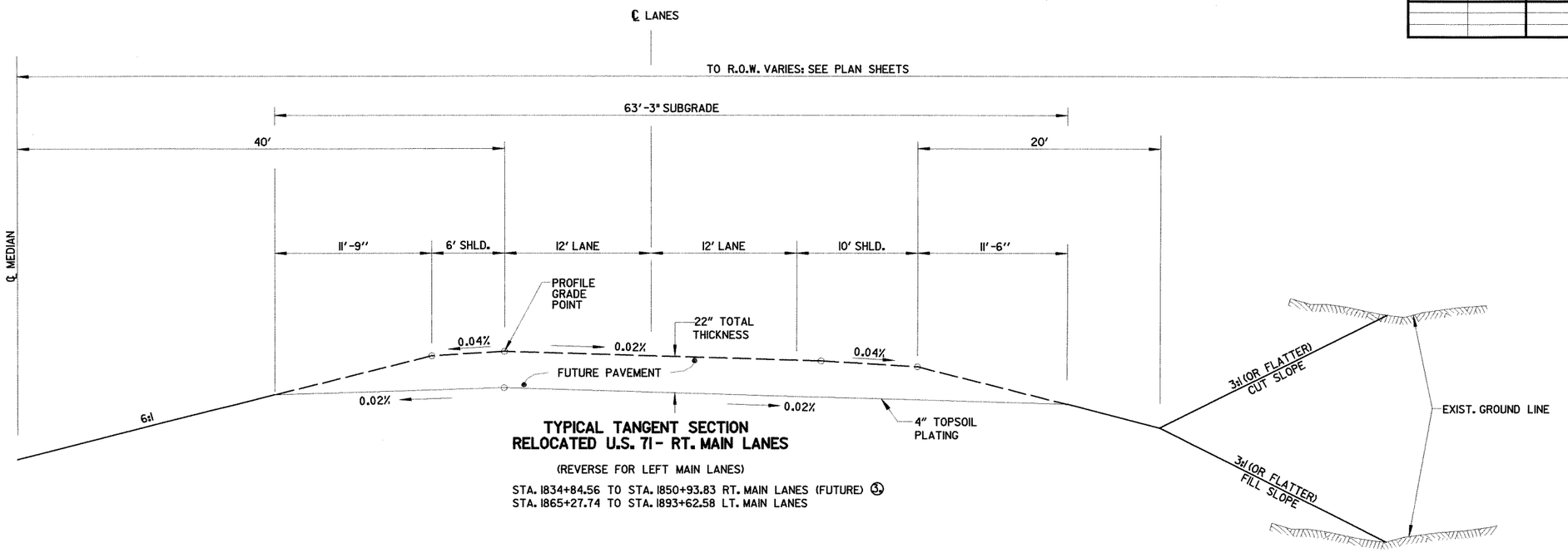

TYPICAL TANGENT SECTION
RELOCATED U.S. 71 - RT. MAIN LANES

(REVERSE FOR LEFT MAIN LANES)

STA. 1834+84.56 TO STA. 1850+93.83 RT. MAIN LANES (FUTURE) (3)
STA. 1865+27.74 TO STA. 1893+62.58 LT. MAIN LANES

NOTE: SEE CROSS SECTIONS FOR TYPE OF DITCH USED.

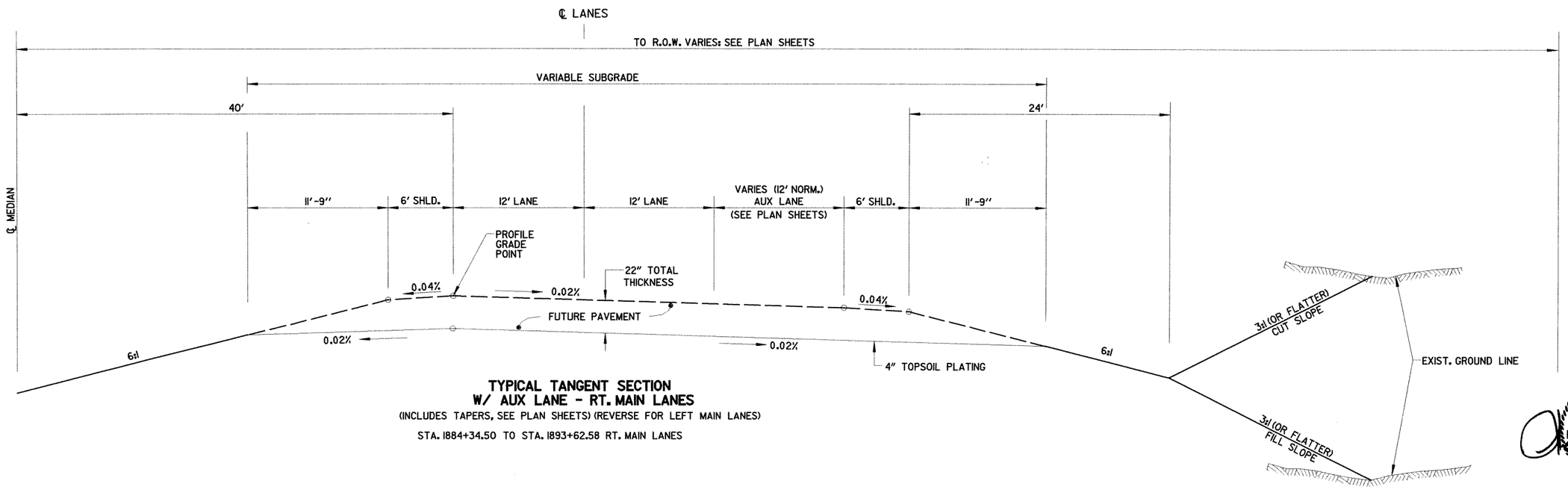

TYPICAL TANGENT SECTION
W/ AUX LANE - RT. MAIN LANES

(INCLUDES TAPERS, SEE PLAN SHEETS) (REVERSE FOR LEFT MAIN LANES)

STA. 1884+34.50 TO STA. 1893+62.58 RT. MAIN LANES

NOTE: SEE CROSS SECTIONS FOR TYPE OF DITCH USED.

NOTES:

(1.) REFER TO CROSS SECTIONS FOR DEVIATION FROM THE NORMAL SLOPES. NO CHANGES SHALL BE MADE FROM THE PLANNED SLOPES WITHOUT THE APPROVAL OF THE ENGINEER.

(2.) IT IS INTENDED THAT THE SUBGRADE SHALL BE FINISHED IN CONFORMITY WITH THE LINES, GRADES, AND CROSS SECTIONS SHOWN ON THE PLANS. HOWEVER, A TOLERANCE OF PLUS OR MINUS ONE-TENTH FOOT WILL BE ALLOWED.

(3.) THOSE SECTIONS NOTED AS "(FUTURE)" TO BE CONSTRUCTED BY OTHERS UNDER FUTURE JOB.

STATE OF ARKANSAS
REGISTERED PROFESSIONAL ENGINEER
No. 9066
STANLEY G. KING

TYPICAL SECTIONS OF IMPROVEMENT

DATE REVISED	DATE FILMED	DATE REVISED	DATE FILMED	FED.RD. DIST.NO.	STATE	FED.AID PROJ.NO.	SHEET NO.	TOTAL SHEETS
				6	ARK.		4	229
				JOB NO.		040478		

(2) TYPICAL SECTIONS OF IMPROVEMENT

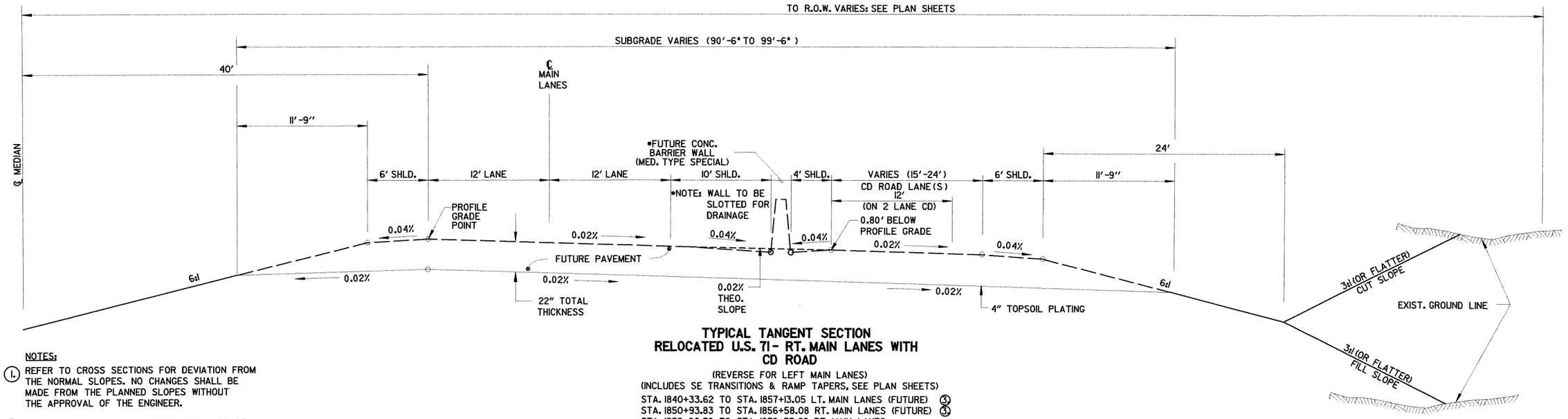

TYPICAL TANGENT SECTION
RELOCATED U.S. 71 - RT. MAIN LANES WITH CD ROAD

(REVERSE FOR LEFT MAIN LANES)
(INCLUDES SE TRANSITIONS & RAMP TAPERS, SEE PLAN SHEETS)

STA. 1840+33.62 TO STA. 1857+13.05 LT. MAIN LANES (FUTURE) (3)
STA. 1850+93.83 TO STA. 1856+58.08 RT. MAIN LANES (FUTURE) (3)
STA. 1859+80.58 TO STA. 1878+33.62 RT. MAIN LANES
STA. 1860+35.55 TO STA. 1865+27.74 LT. MAIN LANES

NOTE: SEE CROSS SECTIONS FOR TYPE OF DITCH USED.

NOTES:

(1.) REFER TO CROSS SECTIONS FOR DEVIATION FROM THE NORMAL SLOPES. NO CHANGES SHALL BE MADE FROM THE PLANNED SLOPES WITHOUT THE APPROVAL OF THE ENGINEER.

(2.) IT IS INTENDED THAT THE SUBGRADE SHALL BE FINISHED IN CONFORMITY WITH THE LINES, GRADES, AND CROSS SECTIONS SHOWN ON THE PLANS. HOWEVER, A TOLERANCE OF PLUS OR MINUS ONE-TENTH FOOT WILL BE ALLOWED.

(3.) THOSE SECTIONS NOTED AS "(FUTURE)" TO BE CONSTRUCTED BY OTHERS UNDER FUTURE JOB.

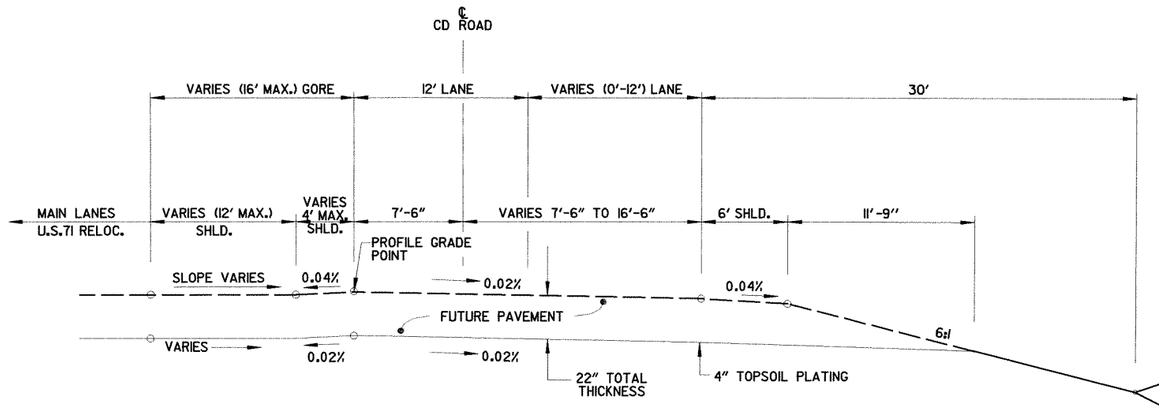

TYPICAL TANGENT SECTION
CD ROAD GORE AREA

(SHOWN IN DIRECTION OF TRAFFIC)
(INCLUDES TRANSITIONS & TAPERS, SEE PLAN SHEETS)

STA. 1834+04.99 TO STA. 1840+33.62 S.B. CD (FUTURE) (3)
STA. 1878+33.62 TO STA. 1884+34.50 N.B. CD
STA. 1885+46.02 TO STA. 1890+00.01 S.B. CD

NOTE: SEE CROSS SECTIONS FOR TYPE OF DITCH USED.

STATE OF ARKANSAS
REGISTERED PROFESSIONAL ENGINEER
No. 9066
STANLEY E. KING

TYPICAL SECTIONS OF IMPROVEMENT

DATE REVISED	DATE FILMED	DATE REVISED	DATE FILMED	FED.RD. DIST.NO.	STATE	FED.AID PROJ.NO.	SHEET NO.	TOTAL SHEETS
				5	ARK.		5	229
				JOB NO.		040478		

(2) TYPICAL SECTIONS OF IMPROVEMENT

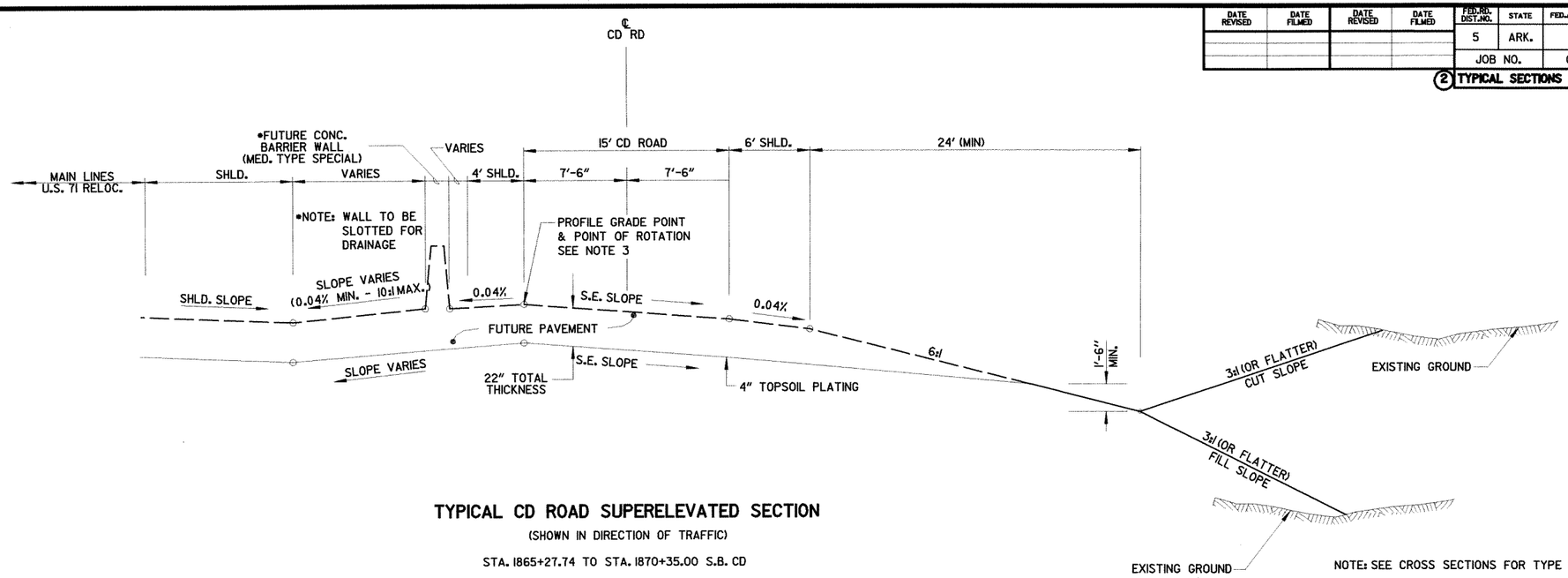

TYPICAL CD ROAD SUPERELEVATED SECTION

(SHOWN IN DIRECTION OF TRAFFIC)

STA. 1865+27.74 TO STA. 1870+35.00 S.B. CD

NOTE: SEE CROSS SECTIONS FOR TYPE OF DITCH USED.

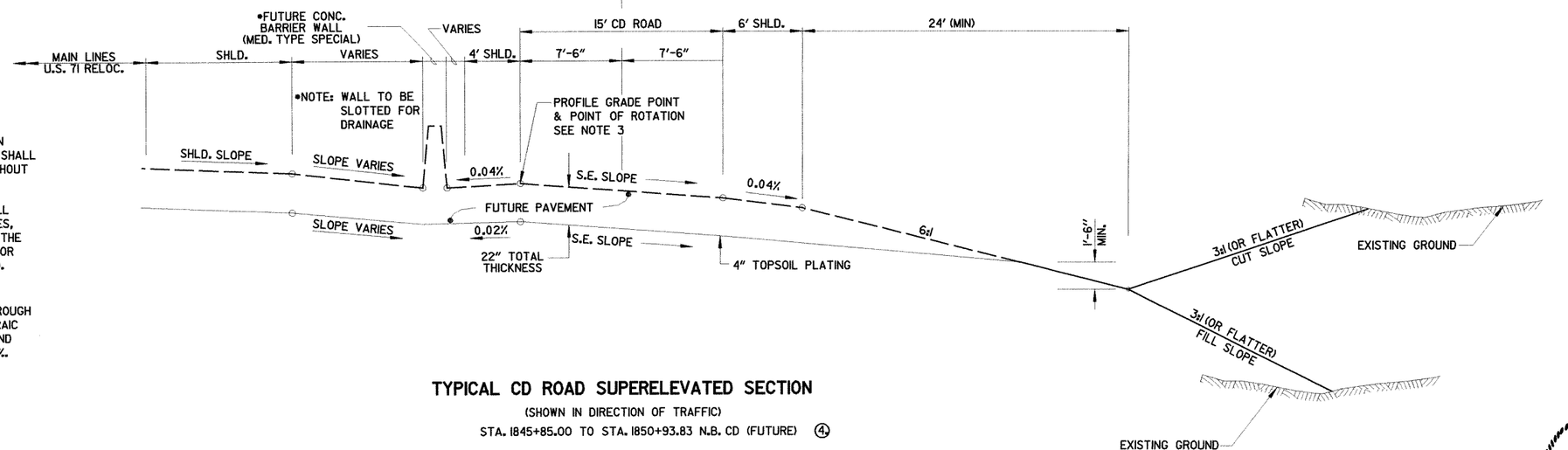

TYPICAL CD ROAD SUPERELEVATED SECTION

(SHOWN IN DIRECTION OF TRAFFIC)

STA. 1845+85.00 TO STA. 1850+93.83 N.B. CD (FUTURE) (4)

NOTE: SEE CROSS SECTIONS FOR TYPE OF DITCH USED.

NOTES:

1. REFER TO CROSS SECTIONS FOR DEVIATION FROM THE NORMAL SLOPES. NO CHANGES SHALL BE MADE FROM THE PLANNED SLOPES WITHOUT THE APPROVAL OF THE ENGINEER.
2. IT IS INTENDED THAT THE SUBGRADE SHALL BE FINISHED IN CONFORMITY WITH THE LINES, GRADES, AND CROSS SECTIONS SHOWN ON THE PLANS. HOWEVER, A TOLERANCE OF PLUS OR MINUS ONE-TENTH FOOT WILL BE ALLOWED.
3. ON ALL SUPERELEVATED CURVES AND THROUGH SUPERELEVATED TRANSITIONS (L_s), ALGEBRAIC DIFFERENCE BETWEEN PAVEMENT SLOPE AND SHOULDER SLOPE SHALL NOT EXCEED 8.0%.
4. THOSE SECTIONS NOTED AS "(FUTURE)" TO BE CONSTRUCTED BY OTHERS UNDER FUTURE JOB.

STATE OF ARKANSAS REGISTERED PROFESSIONAL ENGINEER 9066 STANLEY G. KING

TYPICAL SECTIONS OF IMPROVEMENT

DATE REVISED	DATE FILMED	DATE REVISED	DATE FILMED	FED.RD. DIST.NO.	STATE	FED.AID PROJ.NO.	SHEET NO.	TOTAL SHEETS
				6	ARK.		6	229
				JOB NO.		040478		

(2) TYPICAL SECTIONS OF IMPROVEMENT

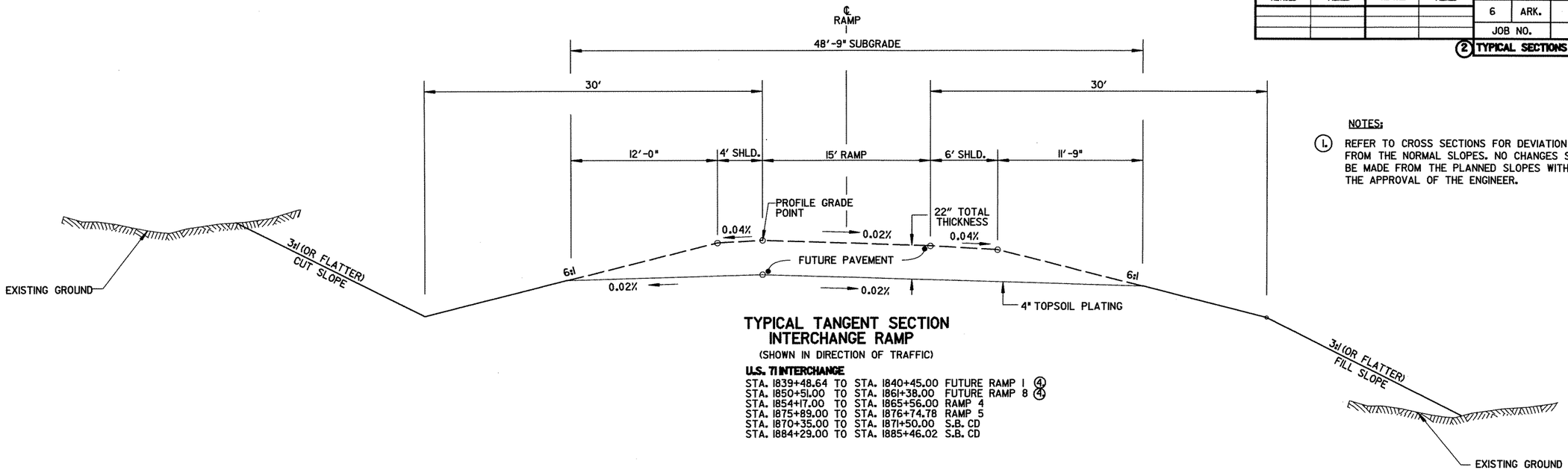

TYPICAL TANGENT SECTION INTERCHANGE RAMP

(SHOWN IN DIRECTION OF TRAFFIC)

U.S. 71 INTERCHANGE

STA. 1839+48.64 TO STA. 1840+45.00 FUTURE RAMP 1 (4)
STA. 1850+51.00 TO STA. 1861+38.00 FUTURE RAMP 8 (4)
STA. 1854+17.00 TO STA. 1865+56.00 RAMP 4
STA. 1875+89.00 TO STA. 1876+74.78 RAMP 5
STA. 1870+35.00 TO STA. 1871+50.00 S.B. CD
STA. 1884+29.00 TO STA. 1885+46.02 S.B. CD

NOTES;

(1.) REFER TO CROSS SECTIONS FOR DEVIATION FROM THE NORMAL SLOPES. NO CHANGES SHALL BE MADE FROM THE PLANNED SLOPES WITHOUT THE APPROVAL OF THE ENGINEER.

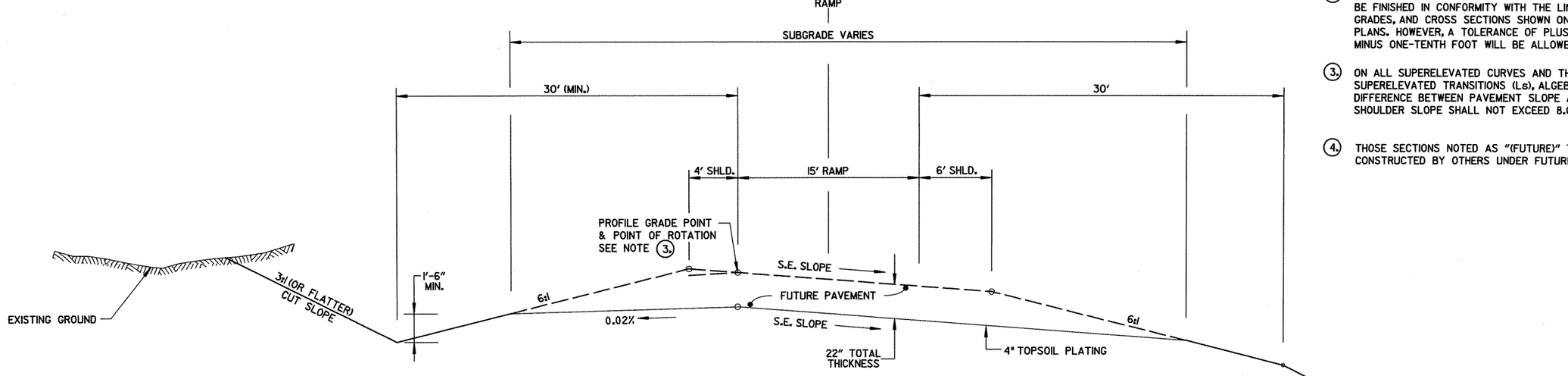

TYPICAL SUPERELEVATED SECTION INTERCHANGE RAMP

(SHOWN IN DIRECTION OF TRAFFIC)

U.S. 71 INTERCHANGE

STA. 1840+86.21 TO STA. 1851+67.89 FUTURE RAMP 2 (4)
STA. 1861+45.14 TO STA. 1875+29.11 FUTURE RAMP 3 (4)
STA. 1857+70.98 TO STA. 1871+42.47 FUTURE RAMP 7 (4)
STA. 1852+48.18 TO STA. 1863+00.00 FUTURE RAMP 6 (4)
STA. 1840+45.00 TO STA. 1859+36.18 FUTURE RAMP 1 (4)
STA. 1842+06.00 TO STA. 1850+51.00 FUTURE RAMP 8 (4)
STA. 1861+38.00 TO STA. 1869+10.03 FUTURE RAMP 8 (4)
STA. 1847+41.92 TO STA. 1849+50.00 RAMP 4 (FUTURE) (4)
STA. 1849+50.00 TO STA. 1854+17.00 RAMP 4
STA. 1865+56.00 TO STA. 1876+33.42 RAMP 4
STA. 1856+68.36 TO STA. 1859+50.00 RAMP 5 (FUTURE) (4)
STA. 1859+50.00 TO STA. 1875+89.00 RAMP 5
STA. 1830+97.48 TO STA. 1845+85.00 N.B. CD (FUTURE) (4)
STA. 1871+50.00 TO STA. 1884+29.00 S.B. CD

(2.) IT IS INTENDED THAT THE SUBGRADE SHALL BE FINISHED IN CONFORMITY WITH THE LINES, GRADES, AND CROSS SECTIONS SHOWN ON THE PLANS. HOWEVER, A TOLERANCE OF PLUS OR MINUS ONE-TENTH FOOT WILL BE ALLOWED.

(3.) ON ALL SUPERELEVATED CURVES AND THROUGH SUPERELEVATED TRANSITIONS (Ls), ALGEBRAIC DIFFERENCE BETWEEN PAVEMENT SLOPE AND SHOULDER SLOPE SHALL NOT EXCEED 8.0%.

(4.) THOSE SECTIONS NOTED AS "(FUTURE)" TO BE CONSTRUCTED BY OTHERS UNDER FUTURE JOB.

STATE OF ARKANSAS REGISTERED PROFESSIONAL ENGINEER No. 9808 JAMES L. BARR 11/29/12

TYPICAL SECTIONS OF IMPROVEMENT

DATE REVISED	DATE FILMED	DATE REVISED	DATE FILMED	FED.RD. DIST.NO.	STATE	FED.AID PROJ.NO.	SHEET NO.	TOTAL SHEETS
				6	ARK.		7	229
				JOB NO.		040478		

(2) TYPICAL SECTIONS OF IMPROVEMENT

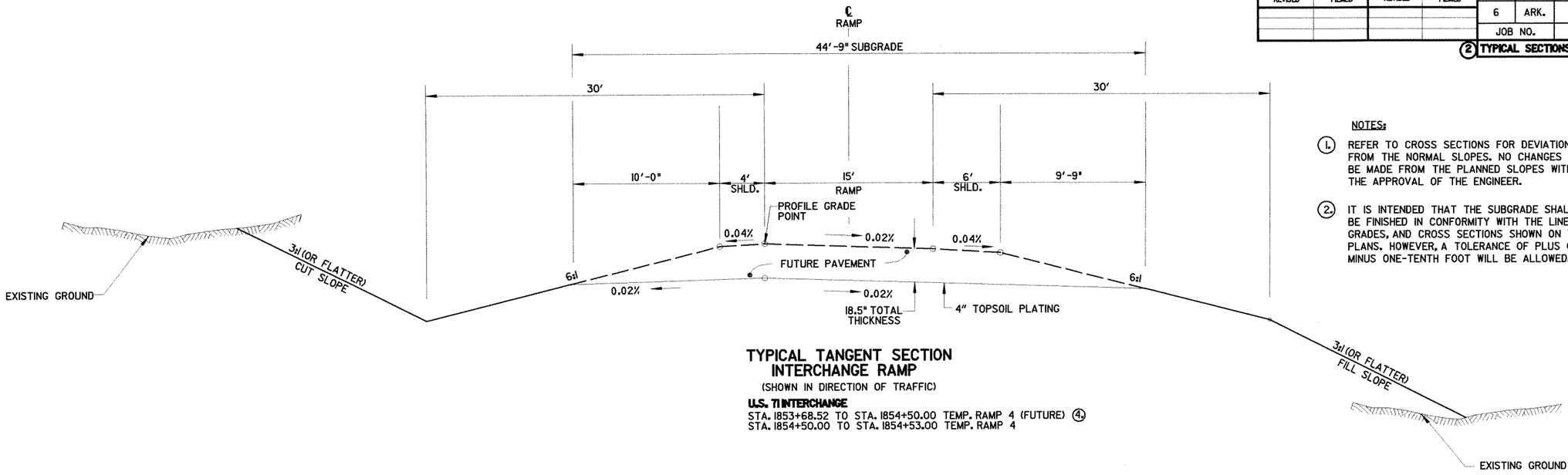

TYPICAL TANGENT SECTION
INTERCHANGE RAMP
(SHOWN IN DIRECTION OF TRAFFIC)

U.S. 71 INTERCHANGE
STA. 1853+68.52 TO STA. 1854+50.00 TEMP. RAMP 4 (FUTURE) (4)
STA. 1854+50.00 TO STA. 1854+53.00 TEMP. RAMP 4

NOTES:

(1) REFER TO CROSS SECTIONS FOR DEVIATION FROM THE NORMAL SLOPES. NO CHANGES SHALL BE MADE FROM THE PLANNED SLOPES WITHOUT THE APPROVAL OF THE ENGINEER.

(2) IT IS INTENDED THAT THE SUBGRADE SHALL BE FINISHED IN CONFORMITY WITH THE LINES, GRADES, AND CROSS SECTIONS SHOWN ON THE PLANS. HOWEVER, A TOLERANCE OF PLUS OR MINUS ONE-TENTH FOOT WILL BE ALLOWED.

(3) ON ALL SUPERELEVATED CURVES AND THROUGH SUPERELEVATED TRANSITIONS (Ls), ALGEBRAIC DIFFERENCE BETWEEN PAVEMENT SLOPE AND SHOULDER SLOPE SHALL NOT EXCEED 8.0%.

(4) THOSE SECTIONS NOTED AS "(FUTURE)" TO BE CONSTRUCTED BY OTHERS UNDER FUTURE JOB.

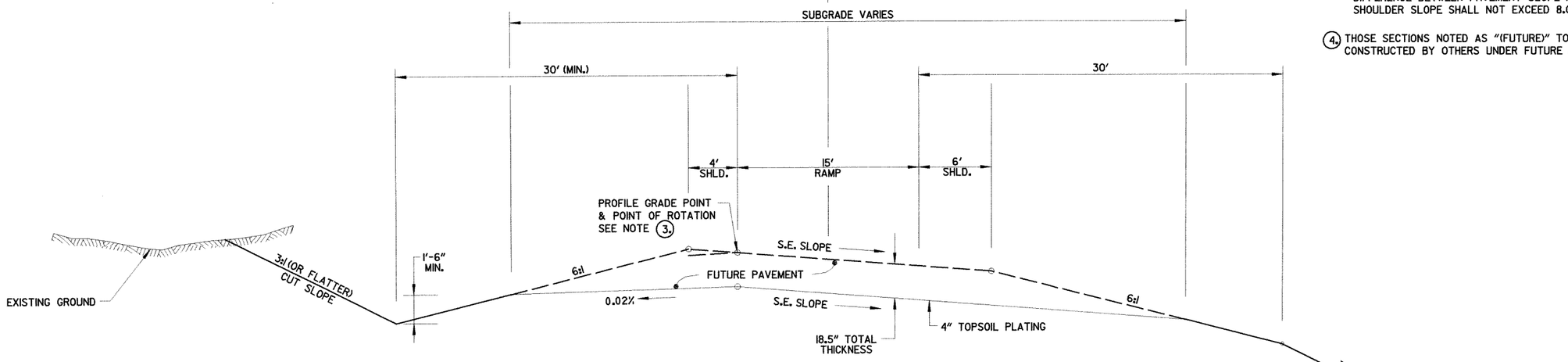

TYPICAL SUPERELEVATED SECTION
INTERCHANGE RAMP
(SHOWN IN DIRECTION OF TRAFFIC)

U.S. 71 INTERCHANGE
STA. 1854+53.00 TO STA. 1859+45.52 TEMP. RAMP 4
STA. 1860+52.20 TO STA. 1861+48.14 TEMP. RAMP 5 (FUTURE) (4)
STA. 1861+48.14 TO STA. 1863+99.33 TEMP. RAMP 5

STATE OF ARKANSAS
REGISTERED PROFESSIONAL ENGINEER
No. 9866
STANLEY G. KING

TYPICAL SECTIONS OF IMPROVEMENT

DATE REVISED	DATE FILMED	DATE REVISED	DATE FILMED	FED.RD. DIST.NO.	STATE	FED.AID PROJ.NO.	SHEET NO.	TOTAL SHEETS
				6	ARK.		8	229
				JOB NO.	040478			

(2) TYPICAL SECTIONS OF IMPROVEMENT

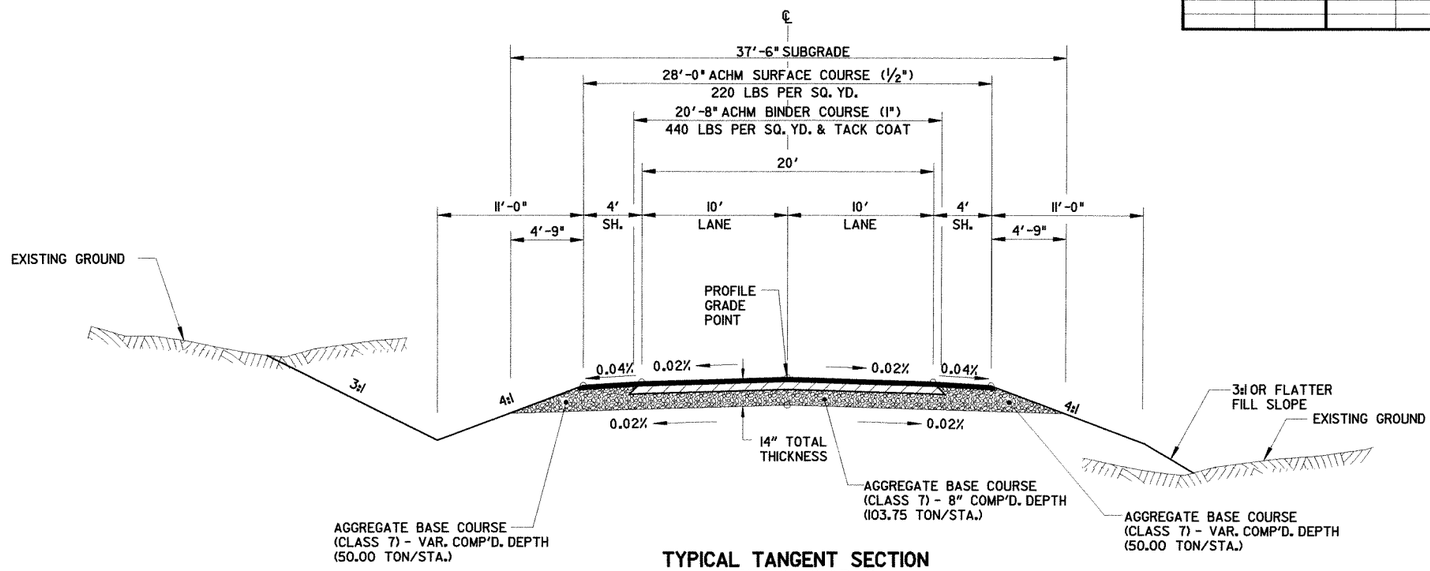

TYPICAL TANGENT SECTION
COUNTY ROAD 8

STA. 64+00.00 TO STA. 64+95.00

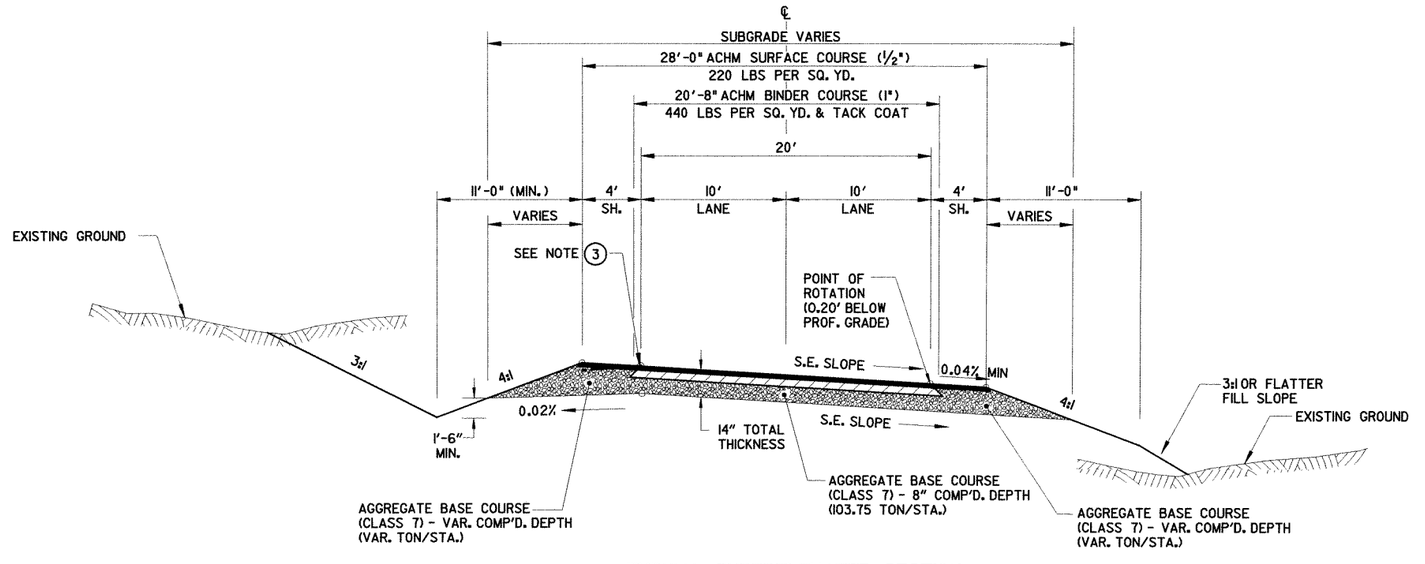

TYPICAL SUPERELEVATED SECTION
COUNTY ROAD 8

STA. 54+00.00 TO STA. 55+85.39
STA. 59+14.55 TO STA. 64+00.00

NOTES:

(1.) REFER TO CROSS SECTIONS FOR DEVIATION FROM THE NORMAL SLOPES. NO CHANGES SHALL BE MADE FROM THE PLANNED SLOPES WITHOUT THE APPROVAL OF THE ENGINEER.

(2.) THE THICKNESS OF AGGREGATE BASE COURSE SHALL BE WITHIN PLUS OR MINUS ONE INCH OF THE PLAN THICKNESS SHOWN. THE CONTRACTOR WILL CORRECT ANY DEFICIENT THICKNESS THAT DOES NOT MEET THE TOLERANCE INDICATED. PAYMENT WILL NOT BE MADE FOR MATERIAL PLACED IN EXCESS OF THE TOLERANCE INDICATED.

(3.) ON ALL SUPERELEVATED CURVES AND THROUGH SUPERELEVATED TRANSITIONS (Ls), ALGEBRAIC DIFFERENCE BETWEEN PAVEMENT SLOPE AND SHOULDER SLOPE SHALL NOT EXCEED 8.0%.

STATE OF ARKANSAS
REGISTERED PROFESSIONAL ENGINEER
STANLEY G. KING

TYPICAL SECTIONS OF IMPROVEMENT

DATE REVISED	DATE FILMED	DATE REVISED	DATE FILMED	FED.RD. DIST.NO.	STATE	FED.AID PROJ.NO.	SHEET NO.	TOTAL SHEETS
				6	ARK.		9	229
				JOB NO.		040478		

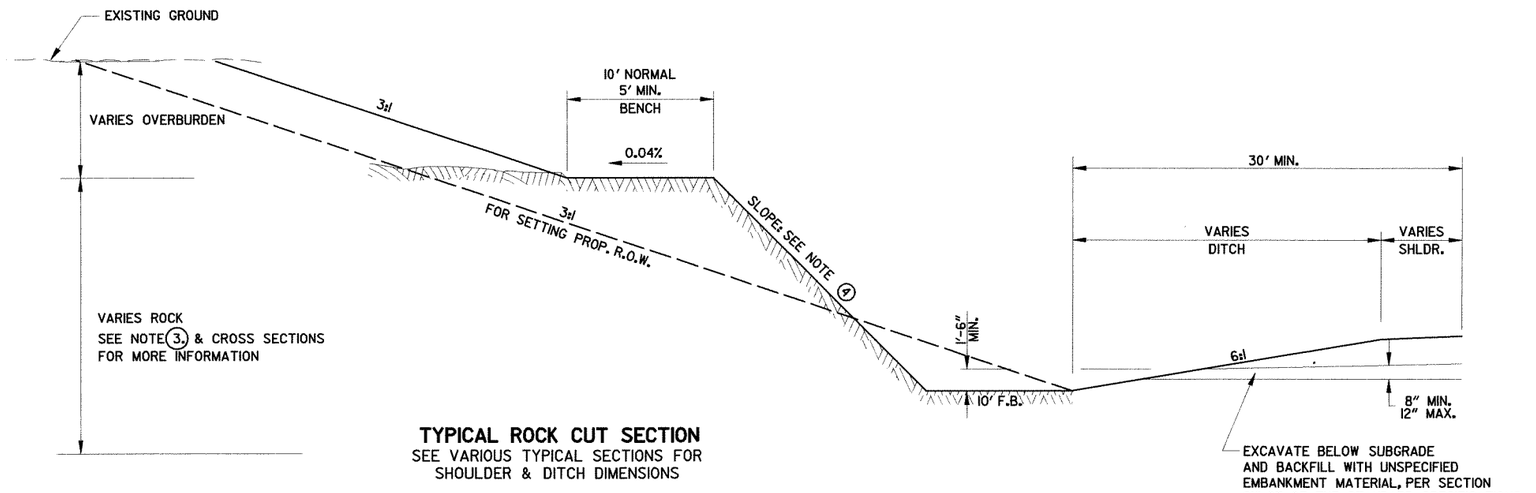

TYPICAL ROCK CUT SECTION
SEE VARIOUS TYPICAL SECTIONS FOR SHOULDER & DITCH DIMENSIONS

EXCAVATE BELOW SUBGRADE AND BACKFILL WITH UNSPECIFIED EMBANKMENT MATERIAL, PER SECTION 210.07 OF THE STANDARD SPECIFICATIONS. QUANTITIES FOR UNCLASSIFIED EXCAVATION AND BACKFILL IN ROCK ARE INCLUDED IN THE EARTHWORK QUANTITY BOX AND NOT SHOWN ON THE CROSS SECTIONS.

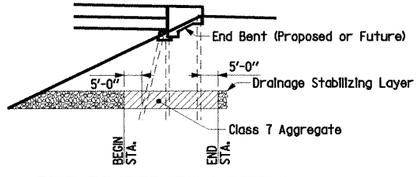

PILE PENETRATION DETAIL

STA. 1859+92.98 TO STA. 1860+12.52 U.S. 71 RELOC.

NOTE: IN ORDER FOR END BENT PILING TO HAVE A ZONE OF PENETRABLE MATERIAL, USE CLASS 7 AGGREGATE BASE COURSE FOR FULL 5.5' DEEP DRAINAGE/STABILIZING LAYER THROUGH STATION LIMITS SHOWN OR AS DIRECTED BY THE ENGINEER.

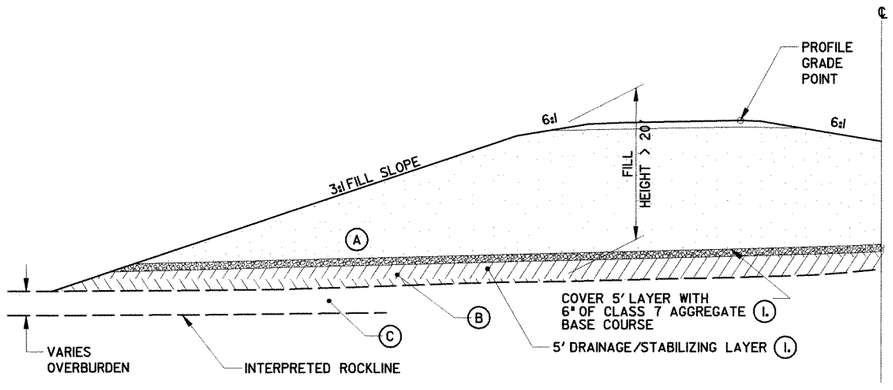

TYPICAL EMBANKMENT SECTION FOR FILL HEIGHTS ≥ 20'

STA. 1860+08.06 TO STA. 1882+43.37 ℄ U.S. 71 RELOCATED
STA. 1863+45.68 TO STA. 1882+50.54 ℄ S.B. CD
STA. 1860+51.57 TO STA. 1876+33.42 ℄ RAMP 4 @ EXIST. U.S. 71
STA. 1866+81.40 TO STA. 1876+74.78 ℄ RAMP 5 @ EXIST. U.S. 71 INTERCHANGE
STA. 1878+35.18 TO STA. 1882+59.42 ℄ N.B. CD

NOTE: STATION LIMITS HAVE BEEN PROVIDED FOR INFORMATIONAL PURPOSES ONLY. ACTUAL SOIL CONDITIONS MAY VARY. THE CONTRACTOR SHALL FIELD VERIFY ALL LOCATIONS.

ASSUMED SOIL STRENGTH PARAMETERS			
SOIL	(A)	(B)	(C)
SHORT TERM	c=800 PSF φ=0° γ=130 PCF	c=0 PSF φ=36° γ=115 PCF	c=2000 PSF φ=0° γ=125 PCF
LONG TERM	c=250 PSF φ=10° γ=130 PCF	c=50 PSF φ=36° γ=115 PCF	c=300 PSF φ=28° γ=125 PCF

(2) SPECIAL DETAILS

EXCAVATION NOTES:

1. SOIL CHARACTERISTICS SHOWN IN SOILS BORINGS AND PRESENTED IN THESE PLANS AND CROSS SECTIONS ARE REPRESENTATIVE AT THE LOCATIONS OF THE VARIOUS SAMPLES AND FROM SURFACE INDICATIONS ARE TYPICAL FOR THE LIMITS SHOWN. THE STATE WILL NOT BE RESPONSIBLE FOR VARIATIONS IN THE SOIL CHARACTERISTICS.

2. SLOPES SHOWN ON THE EXCAVATION DETAILS ARE TYPICAL FOR VARIOUS TYPES OF MATERIALS. THICKNESSES OF MATERIAL LAYERS MAY VARY WITHIN THE LIMITS OF EACH SEGMENT SHOWN. THE EXCAVATION DETAILS ARE SHOWN AS A GUIDE FOR SLOPE CONSTRUCTION AND MAY BE ALTERED AS DIRECTED BY THE ENGINEER.

3. THE MAXIMUM HEIGHT BETWEEN BENCH LEVELS SHALL BE:
   50 FT. - HARD SANDSTONE
   25 FT. - SOFT SANDSTONE OR WEATHERED SHALES.
   25 FT. - SOIL MATERIAL AND SOIL LIKE SHALES (SLAKE DURABILITY INDEX LESS THAN 50%)

4. EXISTING MATERIALS ARE TO BE EXCAVATED TO THE FOLLOWING SLOPES:

   1/4:1 - FOR SANDSTONE AND SHALE (SLAKE DURABILITY INDEX GREATER THAN OR EQUAL TO 95%)

   1:1 - FOR SOFT SANDSTONE AND WEATHERED SHALE (SLAKE DURABILITY INDEX BETWEEN 51% AND 94%)

   3:1 - FOR SOIL MATERIAL AND SOIL LIKE SHALES (SLAKE DURABILITY INDEX LESS THAN 50%)

   IF SANDSTONE AND SHALE (SDI ≥ 95%) EXISTS ABOVE SOFT SANDSTONE AND/OR WEATHERED SHALE (SDI OF 51% TO 94%) IN CUT SECTION, A 10' WIDE INTERMEDIATE BENCH SHALL BE USED BETWEEN THE TWO ROCK LAYERS. FOR THE ABUTMENT SLOPES AT COUNTY ROAD 8, THIS BENCH HAS BEEN ELIMINATED AND THE 1H:1V SLOPE IN WEATHERED SHALE HAS BEEN COVERED WITH CONCRETE PROTECTION, EXTENDED FROM THE DITCHLINE.

5. REFER TO CROSS SECTIONS FOR DEVIATIONS FROM NORMAL SLOPES. NO CHANGES SHALL BE MADE FROM THE PLANNED SLOPES WITHOUT THE APPROVAL OF THE ENGINEER.

6. THE SLOPE CONFIGURATION SHALL BE DETERMINED BY THE ENGINEER BASED ON INFORMATION SUPPLIED BY THE CONTRACTOR. THE INFORMATION REQUIRED SHALL INCLUDE DATA CONCERNING ROCK HARDNESS, SLAKE DURABILITY INDEX, STRATA THICKNESS, ETC. WHICH ARE CONSIDERED NECESSARY FOR ESTABLISHING THE APPROPRIATE SLOPE CONFIGURATIONS. PAYMENT FOR ALL WORK PERFORMED BY THE CONTRACTOR FOR THIS PURPOSE SHALL BE INCLUDED IN THE PRICE BID FOR THE VARIOUS CONTRACT ITEMS.

7. SUBSURFACE INVESTIGATIONS INDICATE ZONES OF HARD SANDSTONE AND SHALE. IN THESE AREAS, FIELD ADJUSTMENTS OF THE RECOMMENDED SLOPES MAY BE REQUIRED FOR EASE OF CONSTRUCTION. WHEN HARD SAND STONE OR HARD SHALE IS ENCOUNTERED, THE CONTRACTOR SHALL DETERMINE THE THICKNESS OF MATERIAL BY EXPLORATORY BORINGS OR OTHER METHODS AS APPROVED BY THE ENGINEER. WHEN THE THICKNESS OF HARD MATERIAL HAS BEEN DETERMINED, A BENCH OF SUFFICIENT WIDTH TO RETAIN THE PLAN SLOPE LINE SHALL BE ESTABLISHED AND A PRESPLIT SLOPE CONSTRUCTED ACCORDING TO THE DETAILS SHOWN HEREON. IF THE THICKNESS OF THE HARD MATERIAL EXCEEDS THE MAXIMUM HEIGHTS SPECIFIED ABOVE, AN INTERMEDIATE BENCH A MINIMUM OF 10 FEET IN WIDTH SHALL BE CONSTRUCTED AT THE SPECIFIED MAXIMUM HEIGHT ABOVE THE BOTTOM OF THE HARD MATERIAL.

8. CROSS SECTIONS AND EXCAVATION QUANTITIES ARE BASED ON THE PLAN SLOPE LINE. PRESPLITTING QUANTITIES ARE ESTIMATED BASED ON BORING LOGS SHOWN IN THE PLANS. ACTUAL SLOPES AND QUANTITIES WILL VARY BASED ON CONDITIONS IN THE FIELD.

EMBANKMENT NOTES:

1. 5' DRAINAGE STABILIZING LAYER COMPRISED OF SANDSTONE, OR SHALE (SDI ≥ 95 AND SIZE LIMIT OF 1.5" TO 30"). THIS 5' LAYER SHALL BE COVERED WITH 6 INCHES OF CLASS 7 AGGREGATE BASE COURSE TO PREVENT THE MIGRATION OF FINES. WHERE PILE DRIVING OPERATIONS ARE PROPOSED, THE 5' DRAINAGE LAYER SHALL BE LIMITED TO CLASS 7 SIZE AGGREGATE ONLY (SEE DETAIL). STABILIZING LAYER & CLASS 7 AGGREGATE SHALL BE PAID FOR AS "COMPACTED EMBANKMENT."

STATE OF ARKANSAS
REGISTERED PROFESSIONAL ENGINEER
No. 9066
STANLEY G. KING

SPECIAL DETAILS

DATE REVISED	DATE FILMED	DATE REVISED	DATE FILMED	FED.RD. DIST.NO.	STATE	FED.AID PROJ.NO.	SHEET NO.	TOTAL SHEETS
				6	ARK.		10	229
				JOB NO.		040478		

(2) SPECIAL DETAILS

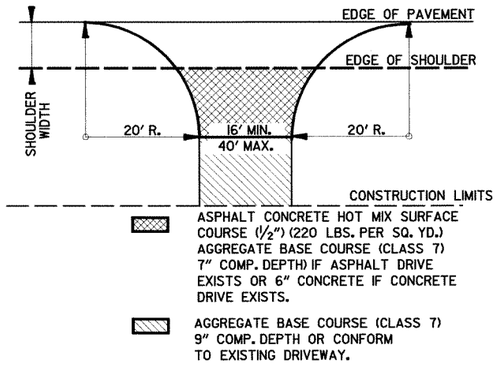

DETAIL FOR DRIVEWAY TURNOUT C.R. 8

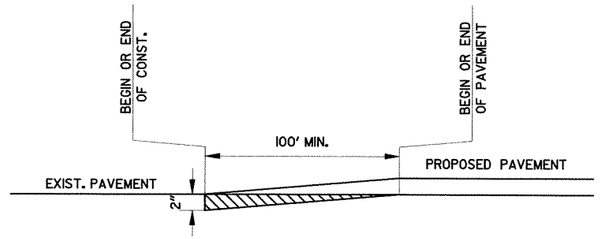

COLD MILLING ASPHALT TAPERS

STA. 54+00.00 TO STA. 55+00.00 C.R. 8
STA. 63+95.00 TO STA. 64+95.00 C.R. 8

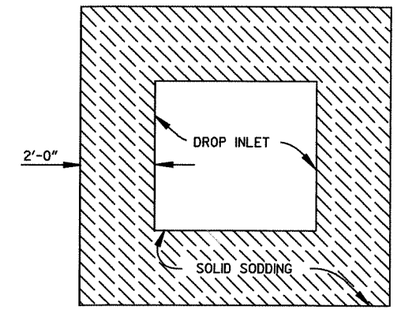

PLAN

DETAIL OF SOLID SODDING AROUND DROP INLET

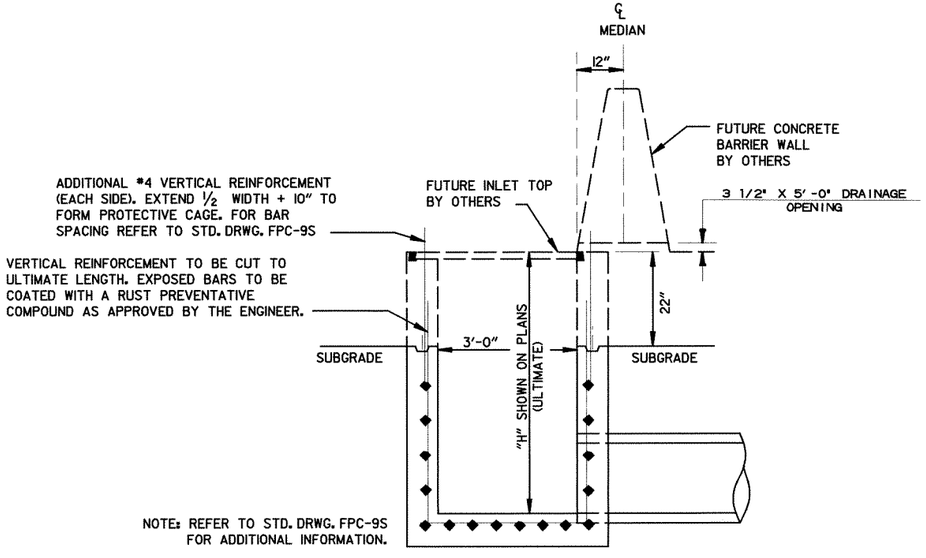

SECTION

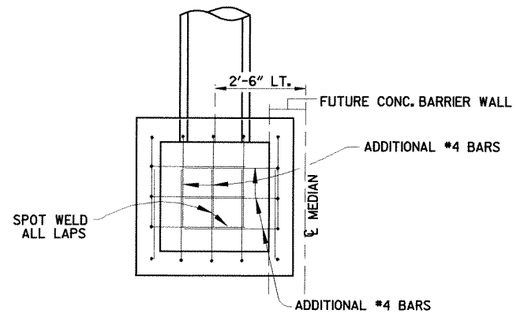

PLAN

DETAILS OF PARTIALLY CONSTRUCTED DROP INLET (TYPE ST)

STATE OF ARKANSAS
REGISTERED PROFESSIONAL ENGINEER
No. 9066
STANLEY K. KING

SPECIAL DETAILS

DATE REVISED	DATE FILMED	DATE REVISED	DATE FILMED	FED.RD. DIST.NO.	STATE	FED.AID PROJ.NO.	SHEET NO.	TOTAL SHEETS
				6	ARK.		II	229
				JOB NO.		040478		

(2) SPECIAL DETAILS

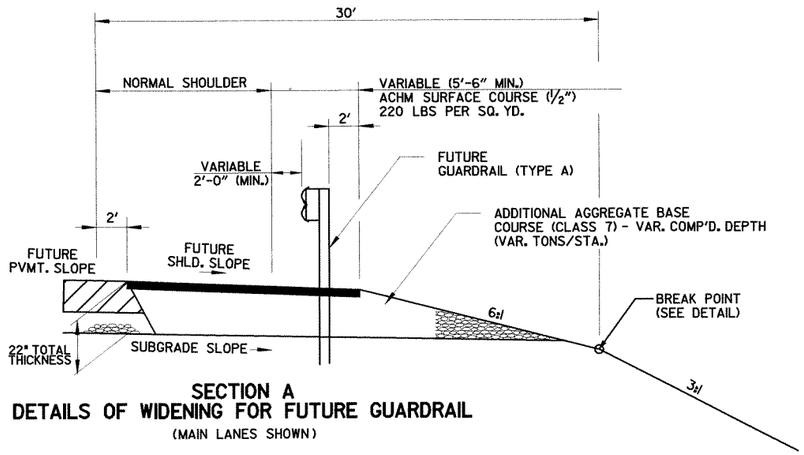

SECTION A
DETAILS OF WIDENING FOR FUTURE GUARDRAIL
(MAIN LANES SHOWN)

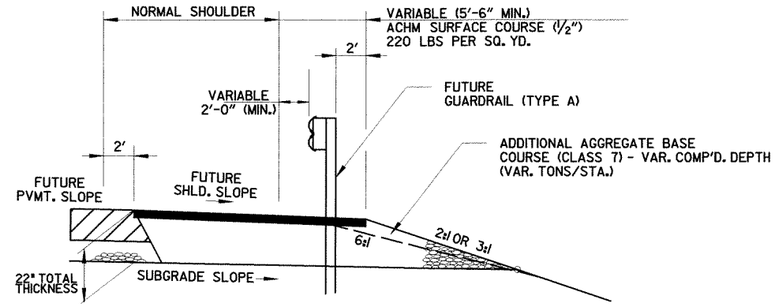

SECTION B
DETAILS OF WIDENING FOR FUTURE GUARDRAIL
(MAIN LANES SHOWN)

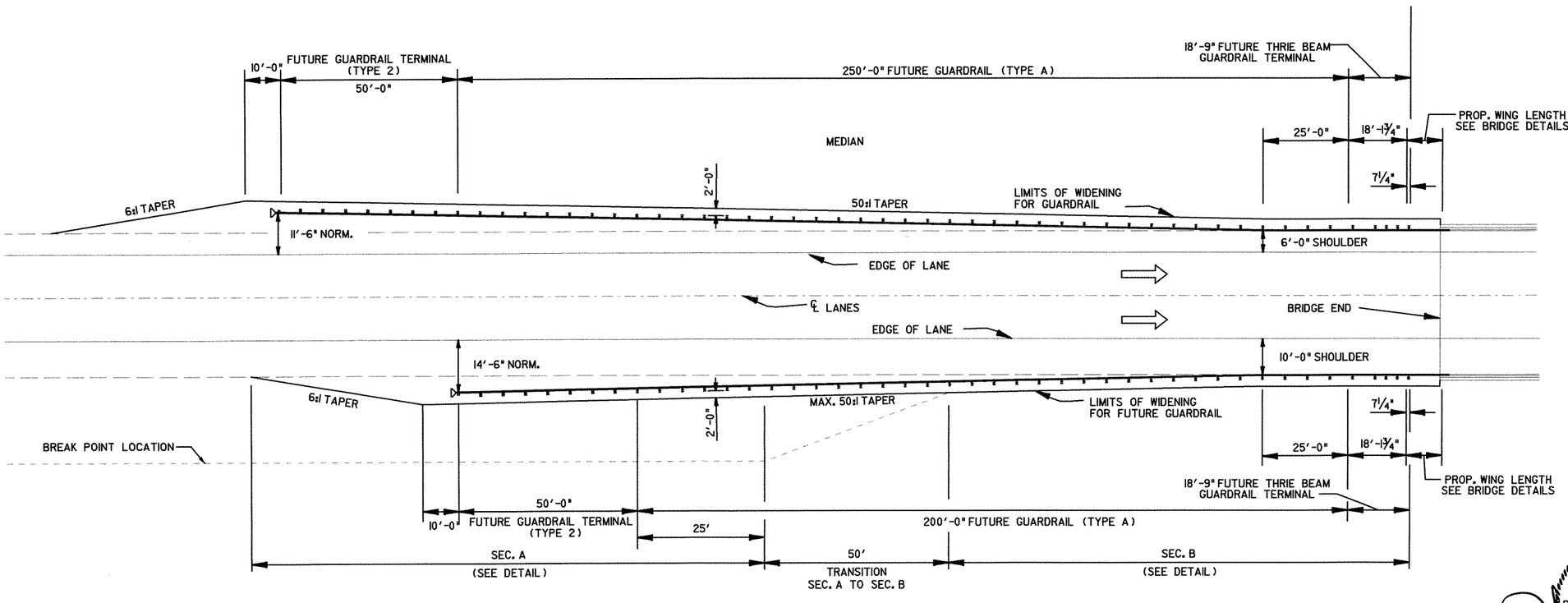

TYPICAL LAYOUT OF FUTURE GUARDRAIL AT BRIDGE ENDS (U.S. 71 RELOC.)
(TO BE USED FOR EMBANKMENT WIDENING ONLY)
NOTE: DETAIL DOES NOT DEPICT AUX. LANES LOCATED AT GUARDRAIL INSTALLATIONS AT EXIST. U.S. 71. SEE PLAN SHEETS FOR MORE INFORMATION.

STATE OF ARKANSAS
REGISTERED PROFESSIONAL ENGINEER
No. 9066
STANLEY G. KING

SPECIAL DETAILS

DATE REVISED	DATE FILMED	DATE REVISED	DATE FILMED	FED.RD. DIST.NO.	STATE	FED.AID PROJ.NO.	SHEET NO.	TOTAL SHEETS
				6	ARK.		IIA	229
				JOB NO.		040478		

(2) SPECIAL DETAILS

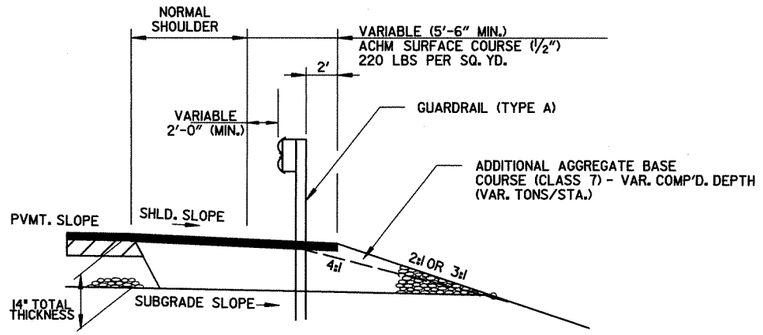

DETAILS OF WIDENING FOR GUARDRAIL

(COUNTY ROAD 8 SHOWN)

STATE OF ARKANSAS
REGISTERED PROFESSIONAL ENGINEER
No. 9808
JAMES L. BARR
1/25/12

DATE REVISED	DATE FILMED	DATE REVISED	DATE FILMED

FED.RD. DIST.NO.	STATE	FED.AID PROJ.NO.	SHEET NO.	TOTAL SHEETS
6	ARK.		12	229
JOB NO.		040478		

(2) EROSION CONTROL DETAILS

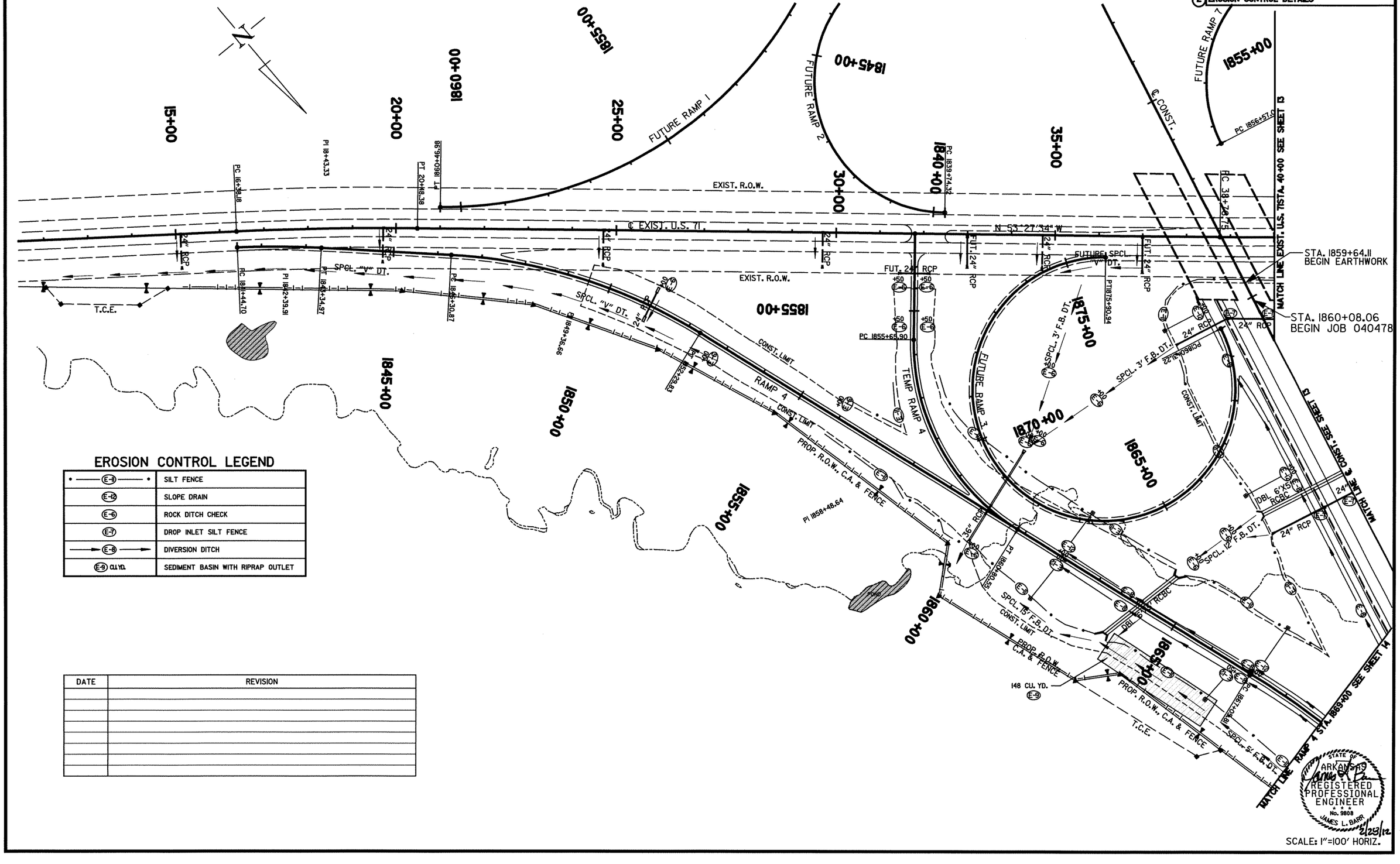

EROSION CONTROL LEGEND

E-11	SILT FENCE
E-12	SLOPE DRAIN
E-6	ROCK DITCH CHECK
E-7	DROP INLET SILT FENCE
E-8	DIVERSION DITCH
E-9 CU.YD.	SEDIMENT BASIN WITH RIPRAP OUTLET

DATE	REVISION

STATE OF ARKANSAS
REGISTERED PROFESSIONAL ENGINEER
No. 9808
JAMES L. BARR
2/29/12

SCALE: 1"=100' HORIZ.

DATE REVISED	DATE FILMED	DATE REVISED	DATE FILMED

FED.RD. DIST.NO.	STATE	FED.AID PROJ.NO.	SHEET NO.	TOTAL SHEETS
6	ARK.		13	229
JOB NO.		040478		

(2) EROSION CONTROL DETAILS

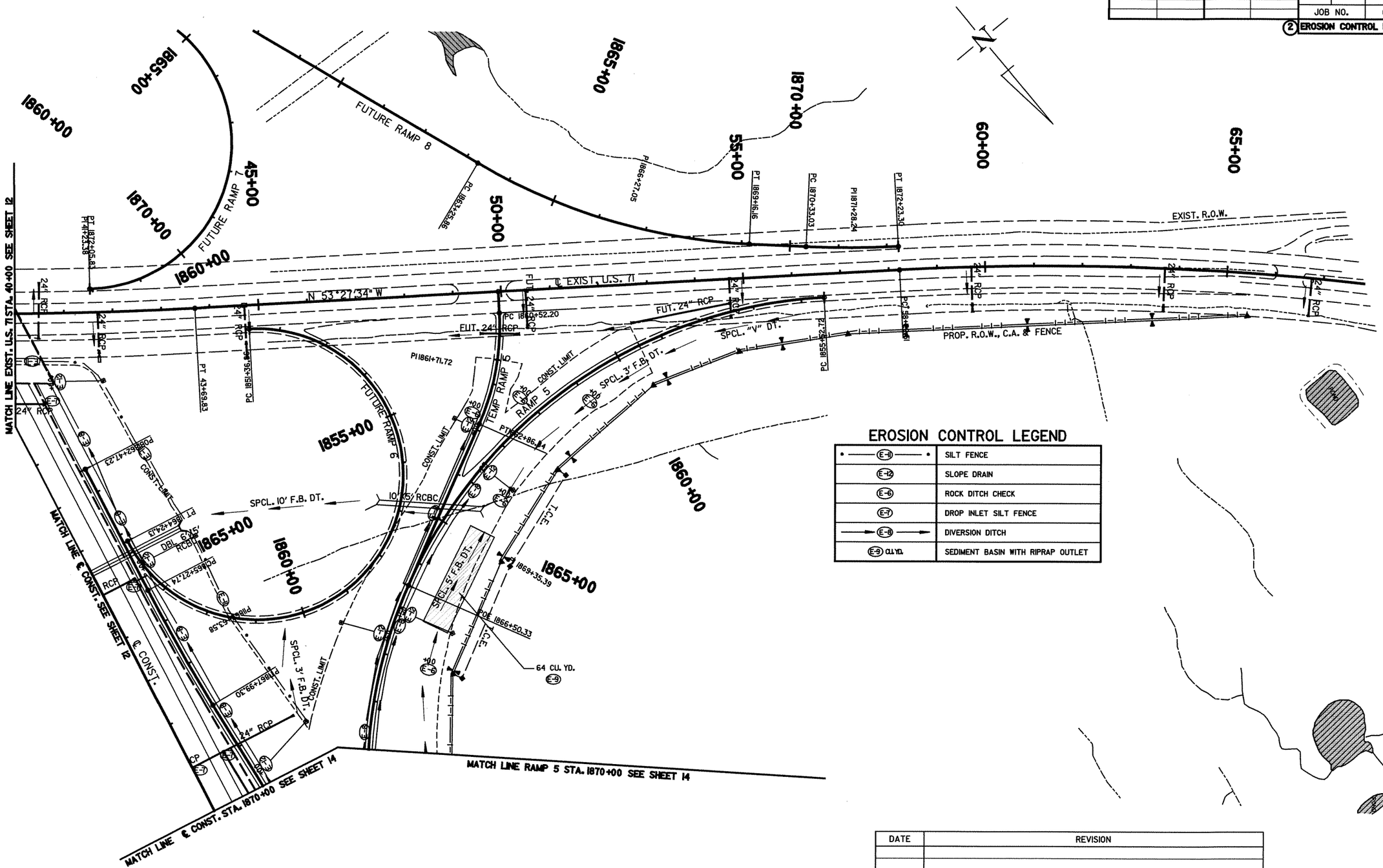

EROSION CONTROL LEGEND

(E-1)	SILT FENCE
(E-2)	SLOPE DRAIN
(E-6)	ROCK DITCH CHECK
(E-7)	DROP INLET SILT FENCE
(E-8)	DIVERSION DITCH
(E-9) CU. YD.	SEDIMENT BASIN WITH RIPRAP OUTLET

DATE	REVISION

STATE OF ARKANSAS
REGISTERED PROFESSIONAL ENGINEER
No. 9808
JAMES L. BARR
2/28/12

SCALE: 1"=100' HORIZ.

DATE REVISED	DATE FILMED	DATE REVISED	DATE FILMED

FED.RD. DIST.NO.	STATE	FED.AID PROJ.NO.	SHEET NO.	TOTAL SHEETS
6	ARK.		14	229
JOB NO.		040478		

(2) EROSION CONTROL DETAILS

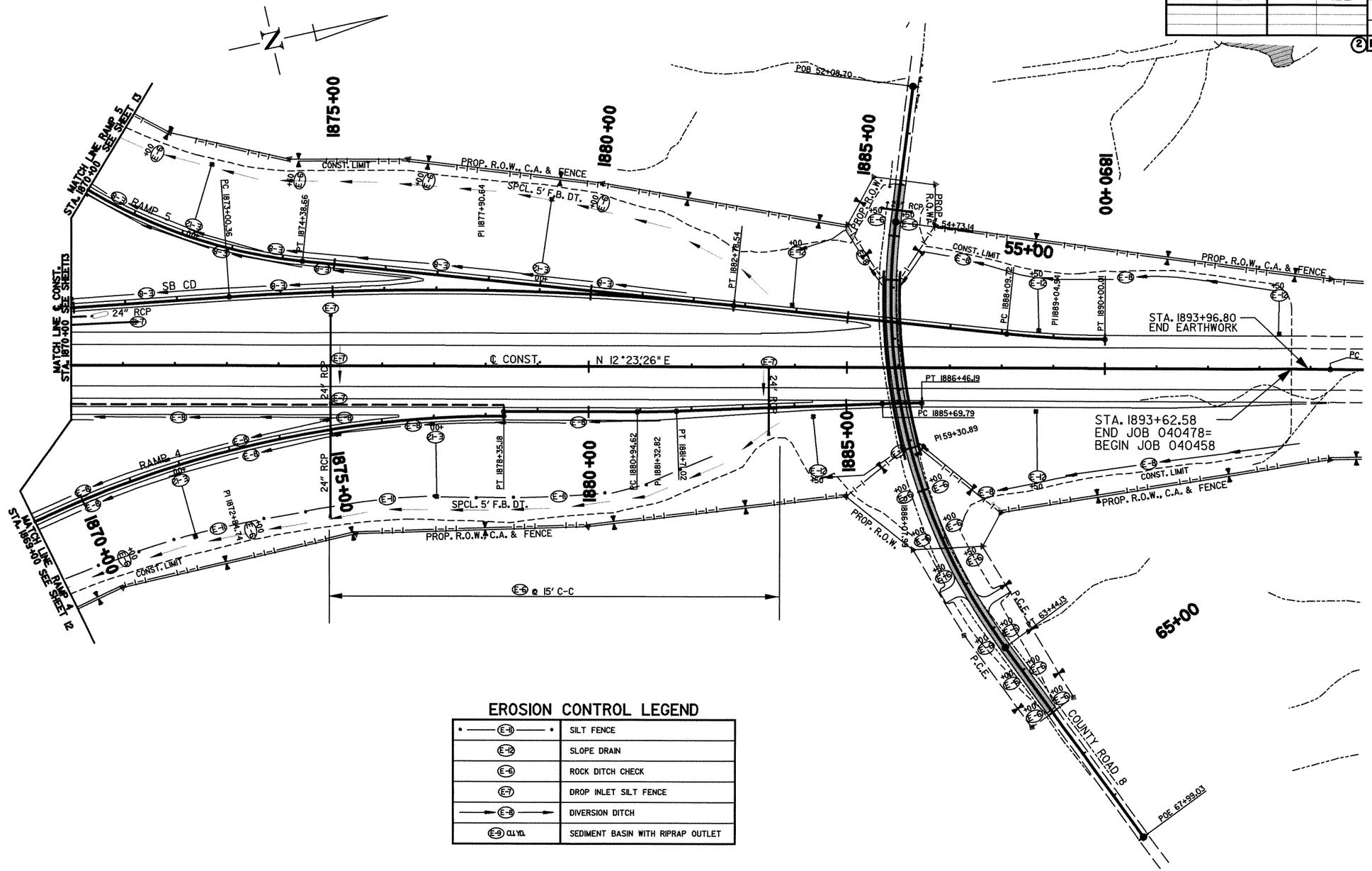

EROSION CONTROL LEGEND

E-11	SILT FENCE
E-12	SLOPE DRAIN
E-6	ROCK DITCH CHECK
E-7	DROP INLET SILT FENCE
E-8	DIVERSION DITCH
E-9 CU.YD.	SEDIMENT BASIN WITH RIPRAP OUTLET

DATE	REVISION

STATE OF ARKANSAS
REGISTERED PROFESSIONAL ENGINEER
No. 9066
JAMEY D. KING

SCALE: 1"=100' HORIZ.

DATE REVISED	DATE FILMED	DATE REVISED	DATE FILMED	FED.RD. DIST.NO.	STATE	FED.AID PROJ.NO.	SHEET NO.	TOTAL SHEETS
				6	ARK.		15	229
				JOB NO.		040478		

(2) MAINT. OF TRAFFIC DETAILS - C.R. 8

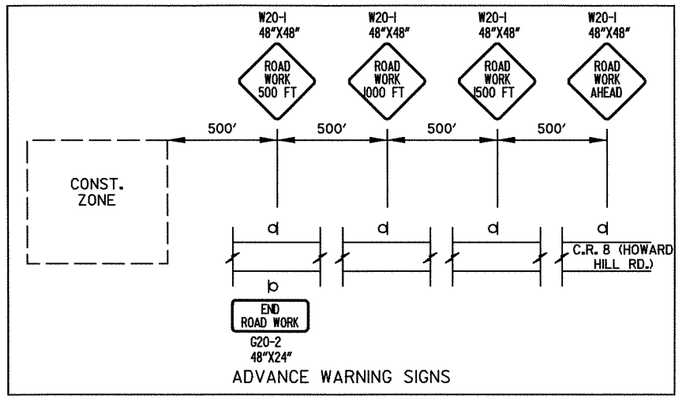

ADVANCE WARNING SIGNS

NOTE: ADVANCE WARNING SIGNS AND DEVICES SHOWN ARE TYPICAL FOR ALL STAGES OF CONSTRUCTION. COORDINATION MUST BE MAINTAINED WITH OTHER CONSTRUCTION ACTIVITIES REQUIRING ADVANCE WARNING SIGNS. SIGN LOCATIONS AND TYPES ARE TO BE MODIFIED WHEN ADDITIONAL SIGNS ARE REQUIRED FOR CHANNELIZATION, SHIFTS OR CLOSURES AS REQUIRED.

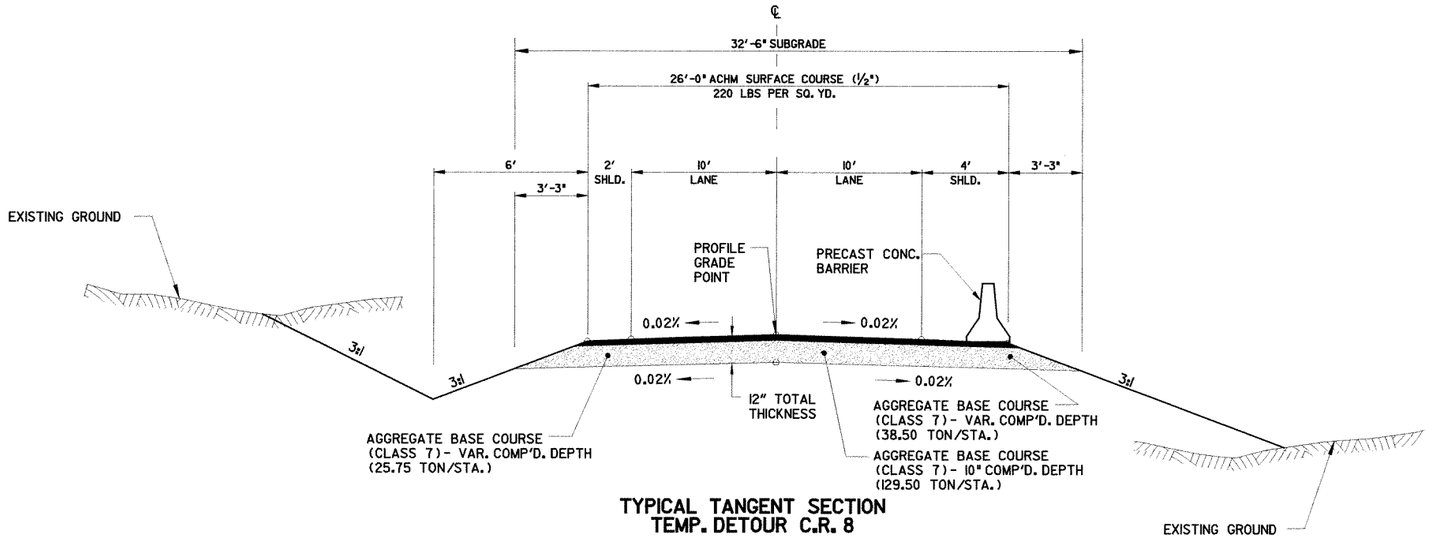

TYPICAL TANGENT SECTION
TEMP. DETOUR C.R. 8

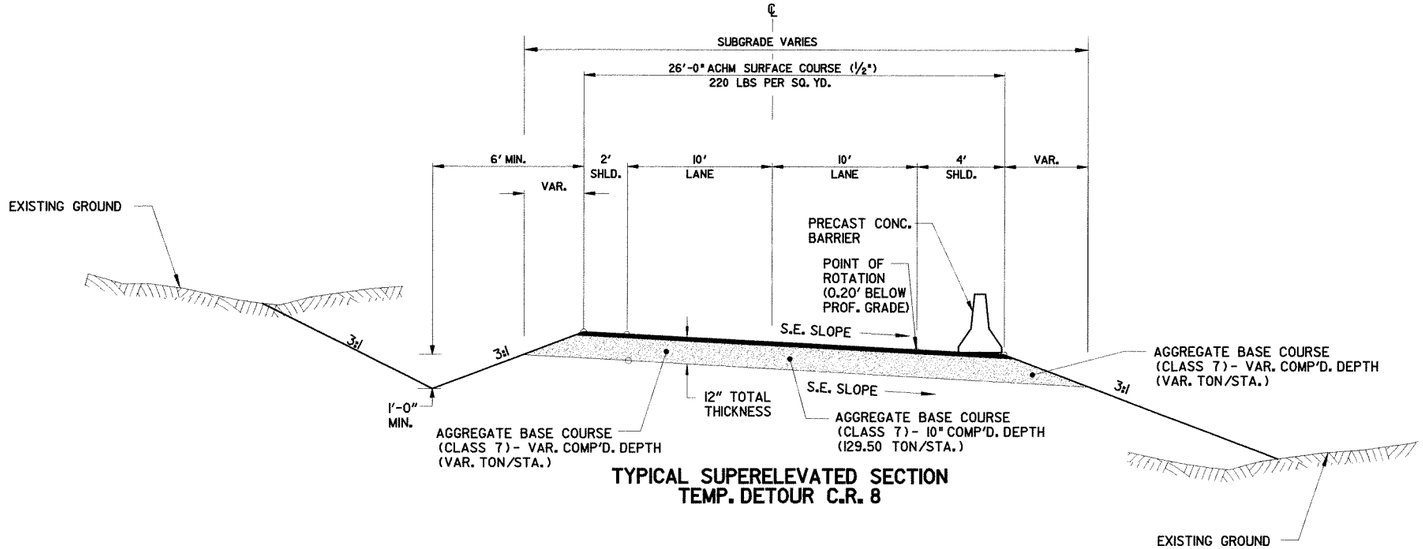

TYPICAL SUPERELEVATED SECTION
TEMP. DETOUR C.R. 8



MAINTENANCE OF TRAFFIC DETAILS C.R. 8 - ADVANCE WARNING & TYPICAL SECTIONS

DATE REVISED	DATE FILMED	DATE REVISED	DATE FILMED	FED.RD. DIST.NO.	STATE	FED.AID PROJ.NO.	SHEET NO.	TOTAL SHEETS
				6	ARK.		16	229
				JOB NO.		040478		

(2) MAINT. OF TRAFFIC DETAILS - C.R. 8

1890+00

SEE SHEET 15 FOR ADVANCE WARNING SIGNS AND DEVICES

TEMP. DETOUR
P.I. 57+38.54
Δ = 29°16'03"
D = 16°
T = 93.50'
L = 182.92'

ROAD CLOSED

(1) R11-2 (48" X 30") 16' BARR. TYP. III LT.

POB 52+08.70

TRAFFIC DRUMS @ 25' C.C. SPACING (TYPICAL) - 9 TOTAL

PC 53+96.91

PT 55+44.48

55+00

P157+38.54

℄ CONST.

TEMP. CONST. LIMIT

TEMP. DETOUR C.R. 8

TEMP. CONST. LIMIT

PC 58+45.04

PT 58+27.96

60+00

PC 60+29.15

ROAD CLOSED

(1) R11-2 (48" X 30") 16' BARR. TYP. III RT.

SEE SHEET 15 FOR ADVANCE WARNING SIGNS AND DEVICES

POE 65+94.52

TRAFFIC DRUMS @ 25' C.C. SPACING (TYPICAL) - 11 TOTAL

PT 63+40.81

65+00

TEMP. DETOUR
P.I. 61+90.76
Δ = 37°23'58"
D = 12°
T = 161.61'
L = 311.66'

TEMP. DETOUR
P.I. 54+73.14
Δ = 35°25'03"
D = 24°
T = 76.23'
L = 147.57'

LIMITS OF TEMP. LANE CLOSURE AS SHOWN ON STD. DWG. TC-2

1885+00

P154+73.14

CO. RD. 8

P161+90.76

LIMITS OF TEMP. LANE CLOSURE AS SHOWN ON STD. DWG. TC-2

SOUTHBOUND C.D. RD.

LT. MAIN LANES

RT. MAIN LANES

NORTHBOUND C.D. RD.

SEQUENCE OF CONSTRUCTION

STAGE I:
CONSTRUCT TEMP. DETOUR.
USE LANE CLOSURE AS SHOWN ON STD. DWG. TC-2 AND AS DIRECTED BY THE ENGINEER TO CONSTRUCT TIES TO C.R. 8.

STATE OF ARKANSAS
REGISTERED PROFESSIONAL ENGINEER
No. 9866
JAMES G. KING

MAINTENANCE OF TRAFFIC DETAILS C.R. 8 - STAGE I

DATE REVISED	DATE FILMED	DATE REVISED	DATE FILMED	FED.RD. DIST.NO.	STATE	FED.AID PROJ.NO.	SHEET NO.	TOTAL SHEETS
				6	ARK.		17	229
				JOB NO.		040478		

(2) MAINT. OF TRAFFIC DETAILS - C.R. 8

1890+00

SEE SHEET 15 FOR ADDITIONAL ADVANCE WARNING SIGNS AND DEVICES

POB 52+08.70

500'

500'

PC 53+96.91

S70°34'18"E

55+00

PT 55+44.48

TEMP. DETOUR
P.I. 57+38.54
Δ = 29°16'03"
D = 16°
T = 93.50'
L = 182.92'

(8) W1-8
(18" X 24")

PI57+38.54

℄ CONST.

TEMP. DETOUR C.R. 8

60+00

PC 60+29.15

CONST. PAVM'T MARKING (DBL. SOLID YELLOW)

TRAFFIC DRUMS @ 25' C.C. SPACING (TYPICAL) - 3 TOTAL

50'

SEE SHEET 15 FOR ADDITIONAL ADVANCE WARNING SIGNS AND DEVICES

TRAFFIC DRUMS @ 25' C.C. SPACING (TYPICAL) - 7 TOTAL

(I) W24-1
(36" X 36")

30 M.P.H.

(I) W13-1
(24" X 24")

DETOUR 1000 FT

(I) W20-2
(48" X 48")

POE 65+94.52

500'

PT 63+40.81

500'

65+00

N65°52'44"E

DETOUR 1000 FT

(I) W20-2
(48" X 48")

(I) W24-1
(36" X 36")

30 M.P.H.

(I) W13-1
(24" X 24")

TRAFFIC DRUMS @ 25' C.C. SPACING (TYPICAL) - 8 TOTAL

PC 54+73.14

PC 56+45.04

PT 58+27.96

CONST. PAVM'T MARKING (SOLID WHITE)

CO. RD. 8

PI 61+90.76

TEMP. DETOUR
P.I. 61+90.76
Δ = 37°23'58"
D = 12°
T = 161.61'
L = 311.66'

666 LIN. FT. PRECAST CONC. BARRIER (SEE SHEET 15 FOR DETAIL)

1885+00

PI54+73.14

TEMP. DETOUR
P.I. 54+73.14
Δ = 35°25'03"
D = 24°
T = 76.23'
L = 147.57'

ROAD CLOSED

(I) R11-2
(48" X 30")

(I) W1-6
(48" X 24")

16' BARR. TYP. III RT.

SOUTHBOUND C.D. RD.

LT. MAIN LANES

RT. MAIN LANES

NORTHBOUND C.D. RD.

S70°34'18"E

PI59+30.89

N65°52'44"E

ROAD CLOSED

(I) R11-2
(48" X 30")

(I) W1-6
(48" X 24")

16' BARR. TYP. III LT.

SEQUENCE OF CONSTRUCTION

STAGE 2:
SHIFT TRAFFIC TO TEMP. DETOUR & CONSTRUCT C.R. 8 BRIDGE & APPROACHES FROM STA. 55+50 TO STA. 61+00.

NOTE:
DRAIN SLOTS SHALL BE REQUIRED ALONG THE ENTIRE LENGTH OF PRECAST CONCRETE BARRIER. EACH DRAIN SLOT SHALL HAVE A MINIMUM OPENING OF 0.33 SQ. FT. AND SHALL BE SPACED NO FURTHER THAN 100 FT. CENTER TO CENTER.

STATE OF ARKANSAS
REGISTERED PROFESSIONAL ENGINEER
No. 9808
JAMES L. BARR
1/25/12

MAINTENANCE OF TRAFFIC DETAILS C.R. 8 - STAGE 2

DATE REVISED	DATE FILMED	DATE REVISED	DATE FILMED	FED.RD. DIST.NO.	STATE	FED.AID PROJ.NO.	SHEET NO.	TOTAL SHEETS
				6	ARK.		18	229
				JOB NO.		040478		

(2) MAINT. OF TRAFFIC DETAILS - C.R. 8

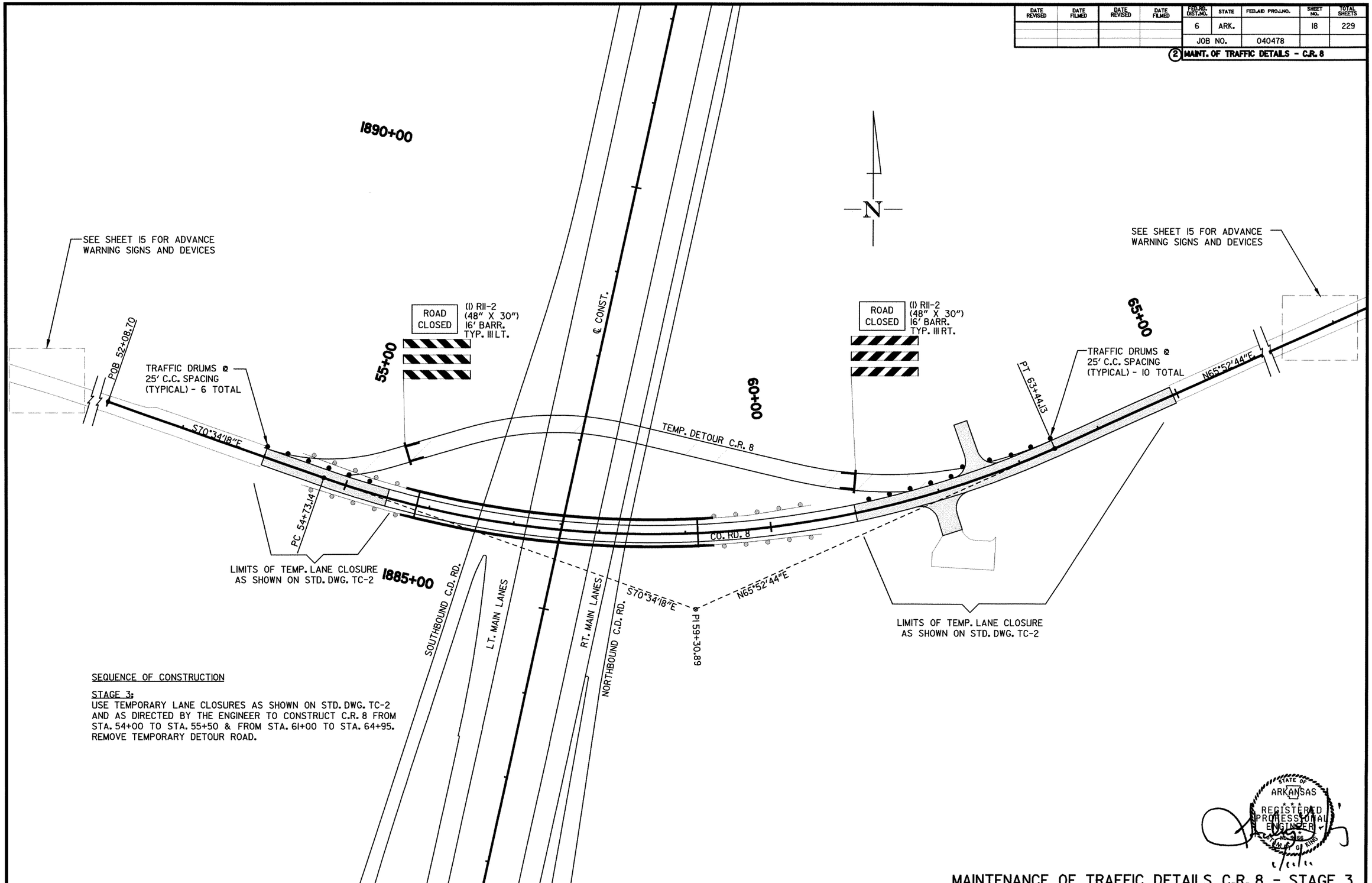

SEQUENCE OF CONSTRUCTION

STAGE 3:
USE TEMPORARY LANE CLOSURES AS SHOWN ON STD. DWG. TC-2 AND AS DIRECTED BY THE ENGINEER TO CONSTRUCT C.R. 8 FROM STA. 54+00 TO STA. 55+50 & FROM STA. 61+00 TO STA. 64+95. REMOVE TEMPORARY DETOUR ROAD.

STATE OF ARKANSAS REGISTERED PROFESSIONAL ENGINEER No. 9466 STANLEY G. KING

MAINTENANCE OF TRAFFIC DETAILS C.R. 8 - STAGE 3

DATE REVISED	DATE FILMED	DATE REVISED	DATE FILMED	FED.RD. DIST.NO.	STATE	FED.AID PROJ.NO.	SHEET NO.	TOTAL SHEETS
				6	ARK.		19	229
				JOB NO.	040478			

(2) QUANTITIES

TRAFFIC CONTROL SIGNS & DEVICES - C.R. 8

SIGN NUMBER	DESCRIPTION	SIGN SIZE	C.R. 8 STAGE 1	C.R. 8 STAGE 2	C.R. 8 STAGE 3	MAXIMUM QUANTITY REQUIRED	TOTAL SIGNS REQUIRED (SQ. FT.)
G20-2	END ROAD WORK	48"X24"	2	2	2	2	16
RII-2	ROAD CLOSED	48"X30"	2	2	2	2	20
W13-1	XX MPH	24"X24"		2		2	8
W24-1	LANE SHIFT	36"X36"		2		2	18
WI-6	DIRECTIONAL ARROW	48"X24"		2		2	16
WI-8	CHEVRON	18"X24"		8		8	24
W20-1	ROAD WORK XX MILE (FT) (AHEAD)	48"X48"	8	6	8	8	128
W20-2	DETOUR XX MILE (FT) (AHEAD)	48"X48"		2		2	32
							262

DEVICES					UNITS
TRAFFIC DRUMS	20	18	16	20	EACH
TYPE III BARRICADE (16' LT.)	1	1	1	16	LIN. FT.
TYPE III BARRICADE (16' RT.)	1	1	1	16	LIN. FT.
FURNISHING AND INSTALLING PRECAST CONCRETE BARRIER		666		666	LIN. FT.

CONSTRUCTION AND PERMANENT PAVEMENT MARKING - C.R. 8

DESCRIPTION	UNITS	STAGE 1	STAGE 2	STAGE 3	FINAL	TOTAL QUANTITY REQUIRED
CONSTRUCTION PAVEMENT MARKINGS	LIN. FT.	4128	884	2192		7204
REFLECTORIZED PAINT PAVEMENT MARKING WHITE (4")	LIN. FT.				2198	2198
REFLECTORIZED PAINT PAVEMENT MARKING YELLOW (4")	LIN. FT.				1538	1538
* INVERTED PROFILE THERMOPLASTIC CONTRAST PAVEMENT MARKING YELLOW (4") - ALTERNATE NO. 1	LIN. FT.		660			660
* HIGH PERFORMANCE CONTRAST MARKING TAPE YELLOW (4") - ALTERNATE NO. 2	LIN. FT.		660			660

* DENOTES ALTERNATE BID ITEMS

NOTE: THIS IS A LOW VOLUME ROAD AS DEFINED IN SECTION 604.03 OF THE STANDARD SPECIFICATIONS FOR HIGHWAY CONSTRUCTION EDITION OF 2003.

SOIL LOG

STATION	LOCATION	DEPTH FT.	A.A.S.H.T.O. CLASSIFICATION	LIQUID LIMIT	PLASTICITY INDEX	REMARKS
1864+00	170' RT	0.6-16.6	A-7-6 (16)	42	20	BR/RD
1882+00	CL	0.9-11	A-4 (3)	25	9	BROWN
1904+00	94' LT.	0.6-2.7	A-2-4 (0)	NP	NP	BR/BEIGE
1928+00	94' LT.	0.6-14	A-6 (5)	31	13	BR/BEIGE
1976+00	94' LT.	0.6-8.2	A-6 (9)	36	16	BR/BEIGE
1964+00	CL	0.6-5	A-4 (3)	25	7	BR/BEIGE
1988+00	CL	0.6-5	A-6 (9)	30	13	BROWN
2000+00	94' LT.	0.9-8	A-4 (5)	30	10	BR/BEIGE
2024+00	CL	0.9-5	A-6 (4)	33	13	BR/BEIGE
2042+00	94' LT.	0.7-8	A-6 (14)	37	18	BR/BEIGE
2060+00	94' RT.	0.9-6	A-6 (11)	37	14	BEIGE
2078+00	CL	0.9-5	A-7-6 (14)	48	23	GRAY/GREEN
2096+00	94' RT	1-6.7	A-4 (4)	26	6	BROWN
2096+00	94' RT.	6.7-14	A-6 (1)	32	12	LT. COPPER
2128+00	94' RT.	1-22	A-6 (11)	36	14	BROWN
2150+00	200' RT.	0.6-7	A-4 (3)	25	7	BEIGE
2188+00	CL	0.6-5.3	A-4 (0)	18	NP	BR/BEIGE
2206+00	CL	0.6-5.3	A-6 (9)	29	12	ORANGE
2218+00	94' LT.	0.6-6	A-7-6 (29)	48	28	BR/BEIGE
2218+00	94' LT.	6-12	A-7-6 (46)	63	42	BROWN
44+00 C.R. 90	20' LT.	0.6-4	A-4 (1)	26	8	COPPER
39+00 MASSARD RD.	43' RT.	0.9-8	A-4 (6)	28	9	BR/COPPER
45+00 MASSARD RD.	110' LT.	6.7-11	A-2-6 (1)	34	13	GRAY/GREEN
45+00 MASSARD RD.	110' LT.	11-15	A-6 (3)	31	12	GRAY
2011+24	47' LT.	0.9-7	A-6 (8)	38	17	BR/COPPER
2024+05	2' LT.	0.9-5	A-4 (1)	27	8	GRAY/BLACK
2024+83	37' LT.	0.9-8	A-4 (6)	28	10	BR/BEIGE
42+00 CUSTER BLVD.	47' LT.	0.9-8	A-7-6 (25)	47	28	BR/BEIGE
45+00 ROBERTS BLVD.	100' RT.	1-6.4	A-7-6 (30	50	27	BROWN
45+00 ROBERTS BLVD.	100' RT.	6.4-10.2	A-6 (3)	38	17	GRAY
2112+79	37' RT.	1-12	A-7-6 (15)	42	19	BEIGE
2106+80	46' RT.	1-17	A-7-6 (16)	48	20	COPPER
17+00 FT. SMITH RELOC.	47' RT.	1-6.2	A-4 (2)	23	7	BL./ORANGE
47+00 FT. SMITH RELOC.	47' LT.	1-10.3	A-6 (7)	30	12	BROWN
43+00 S.H. 22	47' LT.	0.6-12.3	A-6 (7)	31	13	BROWN
2169+73	37' LT.	0.6-5.8	A-4 (4)	26	9	BEIGE
2193+74	2.5' LT.	0.6-4.8	A-4 (1)	22	4	BROWN
2187+26	CL	0.6-5.3	A-6 (10)	31	12	GR/BEIGE
44+16 S.H. 22	76' RT.	0.6-10.3	A-4 (2)	24	6	BROWN
2162+36	37' LT.	0.6-8.7	A-4 (2)	25	7	BR/BEIGE
2185+36	5' LT.	0.6-8	A-6 (4)	39	17	BEIGE
21+00 NW RAMP	160' RT.	0.6-15.3	A-2-6 (1)	37	17	BR/BEIGE
10+00 NE RAMP	37' RT.	0.6-10	A-7-6 (19)	41	23	BEIGE
28+00 NE RAMP	140' LT.	0.6-7	A-7-6 (35)	56	35	BR/BEIGE
28+00 NE RAMP	140' LT.	7-14.6	A-6 (6)	40	19	BR/GRAY

NOTE: SOIL CHARACTERISTICS TABULATED ABOVE ARE REPRESENTATIVE AT THE LOCATION OF THE SAMPLE, AND FROM SURFACE INDICATIONS ARE TYPICAL FOR THE LIMITS SHOWN. THESE DATA ARE SHOWN FOR INFORMATION ONLY. THE STATE WILL NOT BE RESPONSIBLE FOR VARIATIONS IN THE SOIL CHARACTERISTICS AND/OR EXTENT OF SAME DIFFERING FROM THE ABOVE TABULATIONS.

STATE OF ARKANSAS
REGISTERED PROFESSIONAL ENGINEER
No. 9808
JAMES L. BARR
2/29/12

QUANTITIES

DATE REVISED	DATE FILMED	DATE REVISED	DATE FILMED

FED.RD. DIST.NO.	STATE	FED.AID PROJ.NO.	SHEET NO.	TOTAL SHEETS
6	ARK.		20	229
JOB NO.		040478		

(2) QUANTITIES

STRUCTURES

STATION	LOCATION/DESCRIPTION	REINFORCED CONCRETE PIPE CULVERTS CLASS III 24"	REINFORCED CONCRETE PIPE CULVERTS CLASS V 36"	FLARED END SECTIONS FOR R.C. PIPE CULVERTS 24"	FLARED END SECTIONS FOR R.C. PIPE CULVERTS 36"	SAFETY END SECTIONS FOR R.C. PIPE CULVERTS (CLASS 2) 24"	DROP INLETS TYPE ST	DROP INLETS TYPE RM	SOLID SODDING	WATER	STANDARD DRAWING NUMBER
		LIN. FT.				EACH			SQ. YD.	M. GAL.	
1860+55	U.S. 71 RELOCATED - CONST. R.C. PIPE OUTLET W/ MULTIPLE INLETS & F.E.S. RT.	228		1			2	1	14	0.2	FES-1, FES-2, FPC-9D, FPC-9S, PCC-1
1865+00	U.S. 71 RELOCATED - CONST. R.C. PIPE OUTLET W/ MULTIPLE INLETS & F.E.S. RT.	198		1			2	1	14	0.2	FES-1, FES-2, FPC-9D, FPC-9S, PCC-1
1869+00	U.S. 71 RELOCATED - CONST. R.C. PIPE OUTLET W/ MULTIPLE INLETS & F.E.S. LT.	218		1			2	1	14	0.2	FES-1, FES-2, FPC-9D, FPC-9S, PCC-1
1871+25	U.S. 71 RELOCATED - CONST. R.C. PIPE CULVERT W/ DROP INLET 84' LT. (4'-0" X 3'-0" X H=6'-0")	225						1	6	0.1	FPC-9D, PCC-1
1875+00	U.S. 71 RELOCATED - CONST. R.C. PIPE OUTLET W/ MULTIPLE INLETS & F.E.S. RT.	262		1			1	2	20	0.3	FES-1, FES-2, FPC-9D, FPC-9S, PCC-1
1883+50	U.S. 71 RELOCATED - CONST. R.C. PIPE OUTLET W/ MED. INLET (4'-0" X 3'-0" X H=3'-0") & F.E.S. RT.	124		1				1	14	0.2	FES-1, FES-2, FPC-9D, PCC-1
1851+00	RAMP 4 @ EXIST. U.S. 71 - CONST. R.C. PIPE OUTLET W/ S.E.S. LT. & RT.	60				2			75	1.0	SES-1, PCC-1
1860+00	RAMP 4 @ EXIST. U.S. 71 - CONST. R.C. PIPE OUTLET W/ F.E.S. LT. & RT.		230		2				34	0.4	FES-1, FES-2, PCC-1
54+50	C.R. 8 - CONST. R.C. PIPE CULVERT W/ F.E.S. LT. & RT.	49		2					16	0.2	FES-1, FES-2, PCC-1
TOTALS		1364	230	7	2	2	7	7	207	2.8	

BASIS OF ESTIMATE: WATER = 12.6 GAL. PER SQ. YD. SOLID SODDING
NOTE: FOR R.C. PIPE CULVERT INSTALLATIONS USE TYPE 3 BEDDING, UNLESS OTHERWISE SPECIFIED.

R.C. BOX CULVERTS

STATION	LOCATION/DESCRIPTION	SPAN FT.	HEIGHT FT.	LENGTH FT.	CLASS S CONCRETE - ROADWAY	REINFORCING STEEL - ROADWAY (GRADE 60)	UNCLASSIFIED EXCAVATION FOR STRUCTURES - ROADWAY	SOLID SODDING	WATER	STANDARD DRAWING NUMBER
					CU. YDS.	LBS.	CU. YDS.	SQ. YDS.	M. GALLONS	
	R.C. BOX CULVERTS UNDER 20 FT. SPAN									
1864+10	RAMP 4 @ EXIST. U.S. 71 - CONST. DBL. R.C. BOX CULVERT (20° LT. FWD. SKEW)	6	5	209	239.09	31603	112.93	21.39	0.27	R-215X-1, R-200X-X1, RCB-1, RCB-2, W-X153-1, W-X15
1864+50	U.S. 71 RELOC. - CONST. DBL. R.C. BOX CULVERT (NO SKEW)	6	5	409	510.06	68592	237.53	18.91	0.24	R-200X-X1, RCB-1, RCB-2, W-X003-1
1864+66	RAMP 5 @ EXIST. U.S. 71 - CONST. R.C. BOX CULVERT (30° RT. FWD. SKEW)	10	5	215	232.97	29198	127.93	23.88	0.30	R-130X-1, R-100X-X3, RCB-1, RCB-2, W-X303-1, W-X30
TOTALS					982.12	129393	478.39	64.18	0.81	

BASIS OF ESTIMATE: WATER = 12.6 GAL. PER SQ. YD. SOLID SODDING

CONCRETE DITCH PAVING

STATION	STATION	LOCATION	CONCRETE DITCH PAVING (TYPE A)	CONCRETE DITCH PAVING (TYPE B)	SOLID SODDING	WATER
			SQ. YD.			M. GAL.
1860+55		U.S. 71 RELOCATED RT.		25	25	0.3
1865+00		U.S. 71 RELOCATED RT.		32	32	0.4
1869+00		U.S. 71 RELOCATED LT.		36	36	0.5
1875+00		U.S. 71 RELOCATED RT.		56	56	0.7
1885+87	1886+41	U.S. 71 RELOCATED RT.	150			
1885+60	1886+13	U.S. 71 RELOCATED LT.	144			
1876+32	1876+75	RAMP 5		38	19	0.2
* ENTIRE PROJECT - IF AND WHERE DIRECTED BY THE ENGINEER				500	500	6.3
TOTALS			294	687	668	8.4

* QUANTITIES ESTIMATED (SEE SECTION 104.03 OF THE STANDARD SPECIFICATIONS)
BASIS OF ESTIMATE: WATER = 12.6 GAL. PER SQ. YD. SOLID SODDING

FILTER FABRIC AND DUMPED RIPRAP

STATION	STATION	LOCATION	AREA	FILTER BLANKET	DUMPED RIPRAP	DUMPED RIPRAP (GROUTED)
			SQ. YARD		CU. YARD	
1879+50	1885+60	U.S. 71 RELOCATED LT.	2696.2	2696.2		1806.5
1878+00	1886+68	U.S. 71 RELOCATED RT.	2016.8	2016.8		1351.3
*ENTIRE PROJECT			500.0	500.0	333.3	
TOTALS			5213.0	5213.0	333.3	3157.8

* TO BE USED IF & WHERE DIRECTED BY THE ENGINEER
QUANTITIES ESTIMATED (SEE SECTION 104.03 OF THE STANDARD SPECIFICATIONS)

4" PIPE UNDERDRAINS

LOCATION	4" PIPE UNDERDRAINS	UNDERDRAIN OUTLET PROTECTORS
	LIN. FT.	EACH
* ENTIRE PROJECT - IF AND WHERE DIRECTED BY THE ENGINEER	1000	5
TOTALS	1000	5

* QUANTITIES ESTIMATED (SEE SECTION 104.03 OF THE STANDARD SPECIFICATIONS)

SELECTED PIPE BEDDING & BACKFILL

LOCATION	SELECTED PIPE BEDDING	SELECTED PIPE BACKFILL
	CU. YD.	
* ENTIRE PROJECT - IF AND WHERE DIRECTED BY THE ENGINEER	250	500
TOTALS	250	500

* QUANTITIES ESTIMATED (SEE SECTION 104.03 OF THE STANDARD SPECIFICATIONS)

STATE OF ARKANSAS
REGISTERED PROFESSIONAL ENGINEER
No. 9066
JANEY G. KING

QUANTITIES

DATE REVISED	DATE FILMED	DATE REVISED	DATE FILMED	FED.RD. DIST.NO.	STATE	FED.AID PROJ.NO.	SHEET NO.	TOTAL SHEETS
				6	ARK.		21	229
				JOB NO.		040478		

(2) QUANTITIES

EROSION CONTROL

STATION	STATION	LOCATION	LIME	SEEDING	MULCH COVER	WATER	SECOND SEEDING APPLICATION
			TON	ACRE		M. GAL.	ACRE
ENTIRE	PROJECT		110	55.02	55.02	5612.0	55.02
TOTALS			110	55.02	55.02	5612.0	55.02

BASIS OF ESTIMATE: LIME = 2 TONS PER ACRE SEEDING
WATER = 102.0 M.G. PER ACRE SEEDING

GUARDRAIL

STATION	STATION	LOCATION	GUARDRAIL (TYPE A)	TERMINAL ANCHOR POST (TYPE I)	THRIE BEAM GUARDRAIL TERMINAL
			LIN. FT.	EACH	
54+76.74	55+70.49	C.R. 8 - LT.	75	1	1
54+76.74	55+70.49	C.R. 8 - RT.	75	1	1
59+31.45	60+25.20	C.R. 8 - LT.	75	1	1
59+31.45	60+25.20	C.R. 8 - RT.	75	1	1
TOTALS			300	4	4

EARTHWORK

STATION	STATION	LOCATION	UNCLASSIFIED EXCAVATION	COMPACTED EMBANKMENT			TOPSOIL FURNISHED AND PLACED	SOIL STABILIZATION	PRESPLITTING
				UNSPECIFIED COMPACTED EMBANKMENT	COMPACTED EMBANKMENT DRAINAGE STABILIZING LAYER	AGGREGATE BASE COURSE (CLASS 7)			
			CUBIC YARD					TON	SQ. YD.
1859+64.11	1893+62.58	U.S. 71 RELOCATED	307861	682741	121256	11865	5484		4812
1863+45.68	1885+46.02	S.B. C.D. ROAD	14436	249034	48190	4637	769		
1849+49.84	1876+33.42	U.S. 71 INT. RAMP 4	7605	211973	59394	5572	1615		
1854+47.49	1859+45.52	U.S. 71 INT. TEMP. RAMP 4	328	7243			274		
1859+49.30	1876+74.78	U.S. 71 INT. RAMP 5	6499	144016	34465	3251	1038		
1861+48.14	1863+99.33	U.S. 71 INT. TEMP. RAMP 5	195	2212			138		
1861+45.14	1862+87.97	U.S. 71 INT. FUTURE RAMP 3		8459	1936	181	86		
1862+11.35	1863+49.59	U.S. 71 INT. FUTURE RAMP 6		3760	1030	96	83		
54+00.00	56+24.48	COUNTY ROAD #8	825	27					
58+72.52	64+95.00	COUNTY ROAD #8	1679	86					
62+00.00		COUNTY ROAD #8 DRIVEWAY RT.		54					
62+50.00		COUNTY ROAD #8 DRIVEWAY LT.		21					
53+96.91	63+44.13	TEMP. DETOUR C.R. #8	2578	56					
ENTIRE	PROJECT	UNDERCUT & BACKFILL IN ROCK	5773	5773					
* ENTIRE	PROJECT							1000	
SUBTOTAL				1315455	266271	25602			
TOTALS			347779	1607328			9487	1000	4812

* TO BE USED IF & WHERE DIRECTED BY THE ENGINEER.
QUANTITY ESTIMATED (SEE SECTION 104.03 OF THE STANDARD SPECIFICATIONS)

BASIS OF ESTIMATE: QUANTIES FOR TOPSOIL FURNISHED AND PLACED ARE BASED ON A DEPTH OF 4"

CLEARING & GRUBBING

STATION	STATION	LOCATION	CLEARING	GRUBBING
			STATION	
1860+08.06	1893+62.58	US 71 RELOCATED	34	34
TOTALS			34	34

NOTE: ALL AREAS WITHIN RIGHT-OF-WAY INCLUDING U.S. 71 INTERCHANGE & C.R. 8, SHALL BE INCLUDED.

TEMPORARY EROSION CONTROL

LOCATION	TEMPORARY SEEDING	MULCH COVER	WATER	ROCK DITCH CHECKS (TYPE E-6)	DROP INLET SILT FENCE (TYPE E-7)	DIVERSION DITCH (TYPE E-8)	SEDIMENT BASIN (TYPE E-9)	SILT FENCE (TYPE E-11)	PIPE FOR SLOPE DRAINS (TYPE E-12)	SEDIMENT REMOVAL & DISPOSAL	DUMPED RIPRAP	GEOTEXTILE FABRIC (TYPE 5)	ROCK FILTER FOR SEDIMENT BASIN	OBLITERATION OF SEDIMENT BASIN
	ACRE		M. GAL.	CU. YD.	LIN. FT.		CU. YD.	LIN. FT.		CU. YD.		SQ. YD.	TON	CU. YD.
U.S. 71 RELOCATED	83.94	83.94	1712.4	6	336	3739		1501	872		8	22		
S.B. COLLECTOR DISTRIBUTOR						1406		738	308		2	6		
N.B. COLLECTOR DISTRIBUTOR						371		446						
RAMP 4 @ EXIST. U.S. 71				49		2949	148	3009	664	157	56	156	5	148
TEMP RAMP 4				17				384						
RAMP 5 @ EXIST. U.S. 71				29		2788	64		548	68	55	153	5	64
TEMP RAMP 5				9		364			34		1			
C.R. 8				48										
* ENTIRE PROJECT - IF AND WHERE DIRECTED BY THE ENGINEER	25	25	510	50	50	500				1000	10	28	1	
TOTALS	108.94	108.94	2222.4	208	386	12117	212	6078	2426	1225	132	365	11	212

BASIS OF ESTIMATE: WATER = 20.4 M.G. PER ACRE TEMPORARY SEEDING

TEMPORARY EROSION CONTROL DEVICES SHOWN ABOVE AND ON THE PLANS SHALL BE INSTALLED IN SUCH A SEQUENCE AS TO DETER EROSION AND SEDIMENTATION OF U.S. WATERWAYS AS EXPLAINED BY THE NATIONAL POLLUTANT DISCHARGE ELIMINATION SYSTEM PERMIT.

* QUANTITIES ESTIMATED (SEE SECTION 104.03 OF THE STANDARD SPECIFICATIONS)

STATE OF ARKANSAS
REGISTERED PROFESSIONAL ENGINEER
JAMES G. KING

QUANTITIES

DATE REVISED	DATE FILMED	DATE REVISED	DATE FILMED	FED.RD. DIST.NO.	STATE	FED.AID PROJ.NO.	SHEET NO.	TOTAL SHEETS
				6	ARK.		22	229
				JOB NO.		040478		

(2) QUANTITIES

REMOVAL AND DISPOSAL CURB

STATION	STATION	LOCATION	DESCRIPTION	LIN. FT.
54+00	55+55	CR. 8 - LT.	CONCRETE CURB W/WALK	155
TOTAL				155

REMOVAL AND DISPOSAL CONCRETE WALK

STATION	STATION	LOCATION	DESCRIPTION	SQ.YD.
54+00	55+55	CR. 8 - LT.	6' CONCRETE WALK	103
55+12		CR. 8 - LT.	3' CONCRETE WALK	22
TOTAL				125

MAILBOXES

LOCATION	MAILBOXES	MAILBOX SUPPORTS (SINGLE)
	EACH	
C.R. 8 - STA. 62+00 RT.	1	1
TOTALS	1	1

FENCE

STATION	STATION	LOCATION	REMOVAL & DISPOSAL OF FENCE	WIRE FENCE (TYPE D-1)	5' CHAIN LINK FENCE	16' VEHICULAR GATE
			LIN. FT.			EACH
		ENTIRE PROJECT	7960			
1848+61.30	1886+09.29	U.S. 71 RELOC. - RT.			4582	
1870+69.97	1885+69.9	U.S. 71 RELOC. - LT.			3675	1
1886+02.89	1894+38.02	U.S. 71 RELOC. - LT.			900	
1886+41.16	1894+38.02	U.S. 71 RELOC. - RT.			851	1
1846+00.00	1848+61.30	U.S. 71 RELOC. - RT.		556		1
53+92.14	54+89.84	C.R. 8 - RT.		136		
59+66.52	61+70.01	C.R. 8 - RT.		243		
61+00.79	65+00.00	C.R. 8 - LT.		440		1
64+04.28	65+00.00	C.R. 8 - RT.		124		
TOTALS			7960	1499	10008	4

R/W MARKERS & BENCH MARKS

STATION	DESCRIPTION	BENCH MARKS	R/W MARKERS
		EACH	EACH
	U.S. 71 RELOCATED		21
55+85.39	C.R. 8	1	
TOTALS		1	21

NOTE: R/W MARKERS AND BENCH MARKS TO BE FURNISHED AND PLACED BY STATE FORCES.

REMOVAL AND DISPOSAL PIPE CULVERTS

STATION	LOCATION	DESCRIPTION	EACH
54+22	C.R. 8 - RT.	15"X56' R.C. PIPE CULVERT (SD)	1
TOTAL			1

APPROACH GUTTERS

STATION	STATION	LOCATION	TYPE SPECIAL	REINFORCING STEEL ROADWAY (GRADE 60)	AGGREGATE BASE COURSE (CLASS 7)	CONCRETE SPILLWAY (TYPE A)	TYPE N3 DROP INLET	12" ZINC COATED (GALV.) CORR. STEEL PIPE CULVERT (16 GAUGE)
			CU. YD.	LBS.	TON	EACH		LIN. FT.
55+53.89	55+85.39	C.R. 8 - LT. (W = 6'-0")	5.91	517	7.32	1	1	112
55+53.89	55+85.39	C.R. 8 - RT. (W = 4'-0")	4.16	359	5.27			
59+14.55	59+48.05	C.R. 8 - LT. (W = 6'-0")	6.24	550	7.32			
59+14.55	59+48.05	C.R. 8 - RT. (W = 4'-0")	4.38	381	5.27			
TOTALS			20.69	1807	25.18	1	1	112

BASIS OF ESTIMATE: QUANTITIES FOR AGGREGATE BASE COURSE (CLASS 7) ARE BASED ON A DEPTH OF 6"

STATE OF ARKANSAS REGISTERED PROFESSIONAL ENGINEER STANLEY G. KING No. 2066

QUANTITIES

DATE REVISED	DATE FILMED	DATE REVISED	DATE FILMED

FED.RD. DIST.NO.	STATE	FED.AID PROJ.NO.	SHEET NO.	TOTAL SHEETS
6	ARK.		23	229
JOB NO.		040478		

(2) QUANTITIES

BASE & SURFACING - LANES

STATION	STATION	LOCATION	LENGTH	ACHM BINDER COURSE (I")				ACHM SURFACE COURSE (½")				TACK COAT 0.03 GAL./SQ. YD.			AGGREGATE BASE COURSE (CLASS 7)	
			LIN. FT.	AVG. WIDTH FEET	SQ. YD.	LBS. PER SQ. YD.	TON	AVG. WIDTH FEET	SQ. YD.	LBS. PER SQ. YD.	TON	AVG. WIDTH FEET	SQ. YD.	GALLONS	TON/STA.	TON
54+00.0	55+75.0	C.R. 8 - FULL DEPTH - S.E. TRANSITION	175.00	20.67	401.92	440	88.42	20.0	388.89	220	42.78	20.67	401.92	12.06	103.75	181.56
55+75.0	55+85.39	C.R. 8 - FULL DEPTH - S.E.	10.39	20.67	23.86	440	5.25	20.0	23.09	220	2.54	20.67	23.86	0.72	103.75	10.78
59+14.55	62+25.0	C.R. 8 - FULL DEPTH - S.E.	310.45	20.67	713.00	440	156.86	20.0	689.89	220	75.89	20.67	713.00	21.39	103.75	322.09
62+25.0	64+00.0	C.R. 8 - FULL DEPTH - S.E. TRANSITION	175.00	20.67	401.92	440	88.42	20.0	388.89	220	42.78	20.67	401.92	12.06	103.75	181.56
64+00.0	64+95.0	C.R. 8 - FULL DEPTH - TANGENT	95.00	20.67	218.18	440	48.00	20.0	211.11	220	23.22	20.67	218.18	6.55	103.75	98.56
53+50.0	63+77.58	C.R. 8 TEMP. DETOUR	1027.58					20.0	2283.51	220	251.19				129.50	1330.72
TOTALS					1758.88		386.95		3985.38		438.40		1758.88	52.78		2125.27

BASIS OF ESTIMATE : ACHM BINDER COURSE (I") - MINERAL AGGREGATE = 95.3%, ASPHALT BINDER (PG 64-22) = 4.7%
ACHM SURFACE COURSE (1/2") - MINERAL AGGREGATE = 94.3%, ASPHALT BINDER (PG 64-22) = 5.7%
Nmax = 115

BASE & SURFACING - SHOULDERS

STATION	STATION	LOCATION	LENGTH	ACHM SURFACE COURSE (½")				AGGREGATE BASE COURSE (CLASS 7)	
			LIN. FT.	AVG. WIDTH FEET	SQ. YD.	LBS. PER SQ. YD.	TON	TON/STA.	TON
54+00.0	55+75.0	C.R. 8 - FULL DEPTH - S.E. TRANSITION	175.00	8.0	155.56	220	17.11	115.50	202.13
55+75.0	55+85.39	C.R. 8 - FULL DEPTH - S.E.	10.39	8.0	9.24	220	1.02	131.00	13.61
59+14.55	62+25.0	C.R. 8 - FULL DEPTH - S.E.	310.45	8.0	275.96	220	30.36	131.00	406.69
62+25.0	64+00.0	C.R. 8 - FULL DEPTH - S.E. TRANSITION	175.00	8.0	155.56	220	17.11	115.50	202.13
64+00.0	64+95.0	C.R. 8 - FULL DEPTH - TANGENT	95.00	8.0	84.44	220	9.29	100.00	95.00
53+50.0	63+77.58	C.R. 8 TEMP. DETOUR	1027.58	6.0	685.05	220	75.36	64.25	660.22
TOTALS					1365.81		150.25		1579.78

BASIS OF ESTIMATE : ACHM SURFACE COURSE (1/2") - MINERAL AGGREGATE = 94.3%, ASPHALT BINDER (PG 64-22) = 5.7%
Nmax = 115

BASE & SURFACING - DRIVEWAYS

STATION	DESCRIPTION	WIDTH	AGGREGATE BASE COURSE (CLASS 7) 7" COMP. DEPTH		9" COMP. DEPTH		TOTAL TONS	ACHM SURFACE COURSE (½") (220 LBS. PER SQ. YD.)	
		LIN. FT.	SQ. YDS.	TON	SQ. YDS.	TON		SQ. YDS.	TONS
62+00.0	C.R. 8 - RT.	24.0	49.4	20.2	52.2	27.4	47.6	49.4	5.4
62+50.0	C.R. 8 - LT.	16.0	37.5	15.3	67.7	35.5	50.8	37.5	4.1
*ENTIRE	PROJECT - TEMP. DRIVES						250.0		
TOTALS			86.90	35.50	119.90	62.90	348.40	86.90	9.50

BASIS OF ESTIMATE : ACHM SURFACE COURSE (½") - MINERAL AGGREGATE = 94.3% ASPHALT BINDER (PG 64-22) = 5.7%
* TO BE USED IF & WHERE DIRECTED BY THE ENGINEER
QUANTITY ESTIMATED (SEE SECTION 104.03 OF THE STANDARD SPECIFICATIONS)
Nmax = 115

COLD MILLING ASPHALT PAVEMENT

STATION	STATION	LOCATION	AVG. WIDTH	COLD MILLING ASPHALT PAVM'T
			FT.	SQ. YD.
54+00.00	55+00.00	C.R. 8	20	222.22
63+95.00	64+95.00	C.R. 8	20	222.22
TOTAL				444.44

ASPHALT CONCRETE PATCHING FOR MAINTENANCE OF TRAFFIC

STATION	STATION	LOCATION	ASPHALT CONCRETE PATCHING FOR MAINTENANCE OF TRAFFIC	TACK COAT
			TON	GAL.
* ENTIRE PROJECT - IF AND WHERE DIRECTED BY THE ENGINEER				
			25	50
TOTALS			25	50

* ESTIMATED QUANTITY (SEE SECTION 104.03 OF THE STANDARD SPECIFICATIONS)
BASIS OF ESTIMATE: 25 TON PER MILE ASPHALT CONCRETE PATCHING
50 GAL PER MILE TACK COAT

STATE OF ARKANSAS
REGISTERED PROFESSIONAL ENGINEER
[illegible] KING

QUANTITIES

DATE REVISED	DATE FILMED	DATE REVISED	DATE FILMED

FED. ROAD DIST. NO.	STATE	FED. AID PROJ. NO.	SHEET NO.	TOTAL SHEETS
6	ARK.			
JOB NO.		040478	24	229
(1) 07079		QUANTITIES		48628

SCHEDULE OF BRIDGE QUANTITIES - JOB NO. 040478

BRIDGE NUMBER	CODE NUMBER	NAME PLATE TITLE	UNIT OF STRUCTURE	ITEM NUMBER	801	SP & 802	SP & 802	803	SS & 804	807	807	808	SP JOB 040478	812
				ITEM	UNCLASSIFIED EXCAVATION FOR STRUCTURES - BRIDGE	CLASS S CONCRETE - BRIDGE	CLASS S (AE) CONCRETE - BRIDGE	CLASS 1 PROTECTIVE SURFACE TREATMENT	REINFORCING STEEL - BRIDGE (GRADE 60)	STRUCTURAL STEEL IN PLATE GIRDER SPANS (M 270, GR. 50)	[1] PAINTING STRUCTURAL STEEL	ELASTOMERIC BEARINGS	ARMORED JOINT WITH NEOPRENE STRIP SEAL	BRIDGE NAME PLATE (TYPE D)
				UNIT	CUBIC YARD	CUBIC YARD	CUBIC YARD	GALLON	POUND	POUND	TON	CUBIC INCH	LINEAR FOOT	EACH
07079	X771	U.S. HWY. 71	END BENT NOS. 1 AND 3		327	106.20		0.7	9,217	1,145	0.6			1
			INT. BENT NO. 2		111	123.00			19,440					
			327' CONT. PLATE GIRDER UNIT				342.50	26.9	83,873	510,855	255.4	14,703.0	64	
			TOTALS FOR JOB NO. 040478		438 [2]	229.20	342.50	27.6	112,530	512,000	256.0	14,703.0	64	1

[1] For Bridge No. 07079, the color of paint shall conform to Federal Standard 595B, color Chip No. 26176, Gray.

[2] Includes approximately 438 CY of rock excavation.

$$$$date$$$

Florence & Hutcheson, Inc.
CONSULTING ENGINEERS

$$$$dgnspec$$$$$$.

STATE OF ARKANSAS
REGISTERED PROFESSIONAL ENGINEER
No. 12307
PETER J. SIAN
9-[illegible]-2012
BRIDGE ENGINEER

SCHEDULE OF BRIDGE QUANTITIES
HWY. 71 INTERCHANGE (GR. & STRS.) (F)
SEBASTIAN COUNTY

ROUTE 71 SEC.

ARKANSAS STATE HIGHWAY COMMISSION
LITTLE ROCK, ARK.

DRAWN BY: JAP DATE: 12-06 FILENAME: b040478ml_q.dgn
CHECKED BY: PJS DATE: 05-08 SCALE: NONE
DESIGNED BY: PJS DATE: 12-06

BRIDGE NO. 07079 DRAWING NO. 48628

SUMMARY OF QUANTITIES

	ITEM NUMBER	ITEM	QUANTITY	UNIT
	201	CLEARING	34	STA.
	201	GRUBBING	34	STA.
	202	REMOVAL AND DISPOSAL OF CURB	155	LIN. FT.
	202	REMOVAL AND DISPOSAL OF CONCRETE WALK	125	SQ. YD.
	202	REMOVAL AND DISPOSAL OF FENCE	7960	LIN. FT.
	202	REMOVAL AND DISPOSAL OF PIPE CULVERTS	1	EACH
	210	PRESPLITTING	4812	SQ. YD.
	SP & 210	COMPACTED EMBANKMENT	1607328	CU. YD.
	SP & 210	UNCLASSIFIED EXCAVATION	347779	CU. YD.
	SP & 210	SOIL STABILIZATION	1000	TON
	SS & 303	AGGREGATE BASE COURSE (CLASS 7)	4079	TON
	401	TACK COAT	103	GAL.
	SP, SS & 406	MINERAL AGGREGATE IN ACHM BINDER COURSE (1")	369	TON
	SP, SS & 406	ASPHALT BINDER (PG 64-22) IN ACHM BINDER COURSE (1")	18	TON
	SP, SS & 407	MINERAL AGGREGATE IN ACHM SURFACE COURSE (1/2")	564	TON
	SP, SS & 407	ASPHALT BINDER (PG 64-22) IN ACHM SURFACE COURSE (1/2")	34	TON
	412	COLD MILLING ASPHALT PAVEMENT	444	SQ. YD.
	SP, SS & 414	ASPHALT CONCRETE PATCHING FOR MAINTENANCE OF TRAFFIC	25	TON
	504	APPROACH GUTTERS (TYPE SPECIAL)	20.69	CU. YD.
	601	MOBILIZATION	1.00	LUMP SUM
	SP & 602	FURNISHING FIELD OFFICE	1	EACH
	SS & 603	MAINTENANCE OF TRAFFIC	1.00	LUMP SUM
	SS & 604	CONSTRUCTION PAVEMENT MARKINGS	7204	LIN. FT.
	SS & 604	BARRICADES	32	LIN. FT.
	SS & 604	FURNISHING AND INSTALLING PRECAST CONCRETE BARRIER	666	LIN. FT.
	SS & 604	TRAFFIC DRUMS	20	EACH
	SS & 604	SIGNS	262	SQ. FT.
	605	CONCRETE DITCH PAVING (TYPE A)	294	SQ. YD.
	605	CONCRETE DITCH PAVING (TYPE B)	687	SQ. YD.
	606	SELECTED PIPE BACKFILL	500	CU. YD.
	606	SELECTED PIPE BEDDING	250	CU. YD.
	SS & 606	24" REINFORCED CONCRETE PIPE CULVERTS (CLASS III)	1364	LIN. FT.
	SS & 606	36" REINFORCED CONCRETE PIPE CULVERTS (CLASS V)	230	LIN. FT.
	606	24" FLARED END SECTIONS FOR REINFORCED CONCRETE PIPE CULVERTS	7	EACH
	606	36" FLARED END SECTIONS FOR REINFORCED CONCRETE PIPE CULVERTS	2	EACH
	606	24" SAFETY END SECTIONS FOR CROSS DRAIN PIPE CULVERTS (CLASS 2)	2	EACH
	606	12" ZINC COATED (GALVANIZED) CORRUGATED STEEL PIPE CULVERT (16 GAUGE)	112	LIN. FT.
	609	DROP INLETS (TYPE N3)	1	EACH
	609	DROP INLETS (TYPE RM)	7	EACH
	609	DROP INLETS (TYPE ST)	7	EACH
	611	4" PIPE UNDERDRAINS	1000	LIN. FT.
	611	UNDERDRAIN OUTLET PROTECTORS	5	EACH
	614	CONCRETE SPILLWAY (TYPE A)	1	EACH
	SS & 617	GUARDRAIL (TYPE A)	300	LIN. FT.
	SS & 617	TERMINAL ANCHOR POSTS (TYPE 1)	4	EACH
	SS & 617	THRIE BEAM GUARDRAIL TERMINAL	4	EACH
	619	WIRE FENCE (TYPE D-1)	1499	LIN. FT.
*	619	5' STEEL CHAIN LINK FENCE - ALTERNATE NO. 1	10008	LIN. FT.
*	619	5' ALUMINUM CHAIN LINK FENCE - ALTERNATE NO. 2	10008	LIN. FT.
*	619	16' STEEL GATES - ALTERNATE NO. 1	4	EACH
*	619	16' ALUMINUM GATES - ALTERNATE NO. 2	4	EACH
	620	LIME	110	TON
	620	MULCH COVER	163.96	ACRE
	620	SEEDING	55.02	ACRE
	SS & 620	WATER	7846.4	M. GAL.
	621	DIVERSION DITCH	12117	LIN. FT.
	621	DROP INLET SILT FENCE	386	LIN. FT.
	621	OBLITERATION OF SEDIMENT BASIN	212	CU. YD.
	621	PIPE FOR SLOPE DRAINS	2426	LIN. FT.
	621	ROCK DITCH CHECKS	208	CU. YD.
	621	SEDIMENT BASIN	212	CU. YD.
	621	SEDIMENT REMOVAL AND DISPOSAL	1225	CU. YD.
	621	SILT FENCE	6078	LIN. FT.
	621	TEMPORARY SEEDING	108.94	ACRE
	621	ROCK FILTER FOR SEDIMENT BASIN	11	TON
	623	SECOND SEEDING APPLICATION	55.02	ACRE
	624	SOLID SODDING	939	SQ. YD.
	625	GEOTEXTILE FABRIC (TYPE 5)	365	SQ. YD.
	628	TOPSOIL FURNISHED AND PLACED	9487	CU. YD.
	635	ROADWAY CONSTRUCTION CONTROL	1.00	LUMP SUM
	637	MAILBOXES	1	EACH
	637	MAILBOX SUPPORTS (SINGLE)	1	EACH
	SS & 718	REFLECTORIZED PAINT PAVEMENT MARKING YELLOW (4")	1538	LIN. FT.
	SS & 718	REFLECTORIZED PAINT PAVEMENT MARKING WHITE (4")	2198	LIN. FT.
*	SP & 719	INVERTED PROFILE THERMOPLASTIC CONTRAST PAVEMENT MARKING YELLOW (4") - ALTERNATE NO. 1	660	LIN. FT.
*	SP	HIGH PERFORMANCE CONTRAST MARKING TAPE YELLOW (4") - ALTERNATE NO. 2	660	LIN. FT.
	801	UNCLASSIFIED EXCAVATION FOR STRUCTURES - ROADWAY	478	CU. YD.
	SP & 802	CLASS S CONCRETE - ROADWAY	982.12	CU. YD.
	SS & 804	REINFORCING STEEL - ROADWAY (GRADE 60)	131200	LB.
	816	DUMPED RIPRAP	465	CU. YD.
	816	DUMPED RIPRAP (GROUTED)	3158	CU. YD.
	816	FILTER BLANKET	5213	SQ. YD.

*DENOTES ALTERNATE BID ITEMS

STRUCTURES OVER 20' SPAN

ITEM NUMBER	ITEM	QUANTITY	UNIT
636	BRIDGE CONSTRUCTION CONTROL	1.00	LUMP SUM
801	UNCLASSIFIED EXCAVATION FOR STRUCTURES - BRIDGE	438	CU. YD.
SP & 802	CLASS S CONCRETE - BRIDGE	229.20	CU. YD.
SP & 802	CLASS S (AE) CONCRETE - BRIDGE	342.50	CU. YD.
803	CLASS I PROTECTIVE SURFACE TREATMENT	27.6	GALLON
SS & 804	REINFORCING STEEL - BRIDGE (GRADE 60)	112530	POUND
807	STRUCTURAL STEEL IN PLATE GIRDER SPANS (M270-GR50)	512000	POUND
807	PAINTING STRUCTURAL STEEL	256.0	TON
808	ELASTOMERIC BEARINGS	1470.3.0	CU. IN.
SP	ARMORED JOINT WITH NEOPRENE STRIP SEAL	64	LIN. FT.
812	BRIDGE NAME PLATE (TYPE D)	1	EACH

REVISION BOX

DATE	REVISION	SHEET NUMBER

STATE OF ARKANSAS
REGISTERED PROFESSIONAL ENGINEER
JAMES T. BARR
No. 9808
11/26/12

SUMMARY OF QUANTITIES AND REVISIONS

DATE REVISED	DATE FILMED	DATE REVISED	DATE FILMED

(2) SUMMARY OF QUANTITIES AND REVISIONS

FED.NO. DIST.NO.	STATE	FED.AID PROJ.NO.	SHEET NO.	TOTAL SHEETS
6	ARK.		25	229

JOB NO. 040478

DATE REVISED	DATE FILMED	DATE REVISED	DATE FILMED	FED.RD. DIST.NO.	STATE	FED.AID PROJ.NO.	SHEET NO.	TOTAL SHEETS
				6	ARK.		26	229
				JOB NO.		040478		

(2) SURVEY CONTROL DETAILS

FOR INFORMATION ONLY NOT WITHIN JOB 040478 LIMITS

BENCHMARK SUMMARY

BENCHMARK 920
RR SPIKE IN 10" PERSIMMON TREE
456' RIGHT STA. 1855+01
NORTH = 343690.2 +\-
EAST = 609799.0 +\-
ELEVATION = 494.15

FUTURE
NORTH BOUND CD
P.I. 1838+35.17
N = 342127.0020
E = 609159.8490
Δ = 9°46'55" Lt.
D = 1°00'00"
T = 490.28'
L = 978.18'
R = 5729.58'
E = 20.94'
RADIUS POINT
N = 343440.9270
E = 603561.4530

FUTURE
NORTH BOUND CD
P.I. 1849+58.11
N = 343240.4840
E = 609322.6290
Δ = 4°04'25" Rt.
D = 1°30'00"
T = 135.84'
L = 271.57'
R = 3819.72'
E = 2.41'
RADIUS POINT
N = 342553.5397
E = 613082.5240

ALL BEARINGS SHOWN ARE TRUE GRID BEARINGS

68.5' LT. P.O.C. STA. 1831+99.88 FUTURE U.S. HWY. 71 RELOC. =
P.C. STA. 1831+99.88 FUTURE SB CD EXT.

87.5' RT. P.O.T. STA. 1853+76.16 FUTURE U.S. HWY. 71 RELOC. =
P.O.T. STA. 1853+74.33 FUTURE NB CD

P.O.T. STA. 31+80.42 EXIST. U.S. HWY. 71 =
P.O.T. 1853+24.52 TEMP. RAMP 4

48.5' LT. P.O.T. STA. 20+99.95 EXIST. U.S. HWY. 71 =
P.T. STA. 1860+46.98 FUTURE RAMP 1

FUTURE
RELOC. U.S. HWY. 71
P.I. 1817+30.19
N = 340031.8430
E = 608528.1270
Δ = 30°35'06" Rt.
D = 1°00'00"
T = 1566.63'
L = 3058.50'
R = 5729.58'
E = 210.32'
RADIUS POINT
N = 614460.4083
E = 340332.5524

FUTURE
NORTH BOUND CD
P.I. 1828+24.01
N = 341164.5990
E = 608845.3060
Δ = 11°38'05" Rt.
D = 3°00'00"
T = 194.58'
L = 387.82'
R = 1909.86'
E = 9.89'
RADIUS POINT
N = 340756.2352
E = 610721.1160

FUTURE
SOUTH BOUND CD EXT.
P.I. 1832+34.37
N = 341588.4590
E = 608799.8790
Δ = 2°04'09" Lt.
D = 3°00'00"
T = 34.49'
L = 68.97'
R = 1909.86'
E = .31'
RADIUS POINT
N = 341957.3116
E = 606925.6592

FUTURE
SOUTH BOUND CD EXT.
P.I. 1837+07.32
N = 342054.0930
E = 608882.8140
Δ = 2°17'29" Rt.
D = 3°00'00"
T = 38.20'
L = 76.38'
R = 1909.86'
E = .38'
RADIUS POINT
N = 341681.5906
E = 610756.3837

FUTURE RAMP 8
P.I. 1844+73.22
N = 342804.6990
E = 609038.5020
Δ = 32°06'09" Lt.
D = 3°45'00"
T = 439.60'
L = 856.07'
R = 1527.89'
E = 61.98'
RADIUS POINT
N = 342703.1901
E = 607451.8767

FUTURE RAMP 1
P.I. 1856+16.11
N = 343819.8180
E = 609713.1140
Δ = 112°12'30" Rt.
D = 6°15'00"
T = 1364.45'
L = 1795.33'
R = 916.73'
E = 727.08'
RADIUS POINT
N = 342238.0831
E = 610160.6063

TEMPORARY RAMP 4
P.I. 1858+48.64
N = 344072.7860
E = 610300.0970
Δ = 58°58'28" Lt.
D = 11°27'33"
T = 282.74'
L = 514.65'
R = 500.00'
E = 74.41'
RADIUS POINT
N = 344180.6164
E = 609735.9039

RAMP 4
P.I. 1849+36.66
N = 343244.9810
E = 610579.7630
Δ = 28°27'03" Rt.
D = 4°45'00"
T = 305.79'
L = 598.97'
R = 1206.23'
E = 38.16'
RADIUS POINT
N = 343920.7633
E = 611624.6607

RAMP 4
P.I. 1872+84.74
N = 345481.4930
E = 609824.1770
Δ = 31°03'28" Rt.
D = 2°45'00"
T = 578.93'
L = 1129.37'
R = 2083.48'
E = 78.94'
RADIUS POINT
N = 345599.8746
E = 611983.3547

FUTURE RAMP 7
C. C.
N = 344025.3247
E = 608999.5104
Δ = 295°47'42" Rt.
D = 19°05'55"
L = 1548.78'
e = 9.50%
Ls = 210'

FUTURE RAMP 2
C. C.
N = 343450.2070
E = 609685.0730
Δ = 242°11'28" Rt.
D = 19°05'55"
L = 1268.11'
e = 9.50%
Ls = 210'

P.C. 1801+93.56
N= 338543.5418
E= 609017.2929

P.I. 1817+30.19
N 18°11'40" W
N 12°23'26" E
FUTURE U.S. HWY. 71 RELOCATION
N 6°27'52" E
P.C. 1826+29.43
P.I. 1828+24.01
N 18°05'56" E
P.T. 1830+17.25
S 12°10'06" W
N 10°05'57" E
P.C. 1831+99.88
P.I. 1832+34.37
P.T. 1832+68.85
P.T. 1832+22.06
N= 341561.9803
E= 608864.2872
FUTURE SOUTH BOUND CD EXT.
RAMP 1
P.O.T. 1833+44.89
NB CD
P.C. 1833+44.89
P.C. 1836+69.13
P.I. 1837+07.32
P.T. 1837+45.51
P.I. 1838+35.17
P.O.T. 1840+34.25
P.C. 1840+33.62
P.C. 1842+51.65
P.T. 1843+23.07
P.I. 1844+73.22
P.T. 1848+89.69
N 19°42'43" W
N 12°23'26" E
FUTURE NORTH BOUND CD
P.C. 1848+22.27
P.I. 1849+58.11
P.T. 1850+93.84
P.O.T. 1853+74.33
N 8°19'02" E
FUTURE RAMP 8
FUTURE RAMP 7
GPS PT. 101
AHTD GPS
M-L298
P.C. 1856+57.05
P.I. 1872+05.83
FUTURE RAMP 2
P.C. 38+76.75
N= 344123.5457
E= 609430.0359
PT 1852+42.43
N 18°05'56" E
P.O.T. 1853+24.52
BENCHMARK 920
ELEV. = 494.16
PC 1839+74.32
P.I. 1856+16.11
FUTURE RAMP 1
TEMP. RAMP 4
P.C. 1855+65.80
RAMP 4
N 40°18'26" E
EXIST. U.S. HWY. 71
N 49°41'34" W
N 47°07'05" W
N 49°41'34" W
RAMP 4
N 18°40'02" W
P.T. 1852+29.83
P.I. 1849+36.66
P.C. 1846+30.87

CONTROL MONUMENTS AND TRAVERSE POINTS				
POINT	EAST	NORTH	ELEVATION	DESCRIPTION
101	609280.5290	344129.1510	496.449	AHTD GPS MON L298

THE HORIZONTAL DATUM FOR THIS PROJECT IS NAD83(1997) ADJUSTED BY THE AVERAGE PROJECT COMBINED FACTOR OF 0.999938638. TO ACHIEVE ARKANSAS NORTH ZONE STATE PLANE COORDINATES, MULTIPLY THE PROJECT COORDINATES BY THE AVERAGE PROJECT FACTOR. ALL BEARINGS SHOWN ARE ARKANSAS STATE PLANE NORTH ZONE GRID. VERTICAL DATUM IS NAVD88.

STATE OF ARKANSAS
REGISTERED PROFESSIONAL ENGINEER
No. 9808
JAMES L. BARR
1/25/12

HIGHWAY 71 INTERCHANGE
U.S. HWY. 71 RELOCATION
ARKANSAS STATE HIGHWAY COMMISSION
SURVEY CONTROL AND CENTERLINE GEOMETRY
JOB 040478 SEBASTIAN CO.

200 100 0 100 200 400

DATE REVISED	DATE FILMED	DATE REVISED	DATE FILMED	FED.RD. DIST.NO.	STATE	FED.AID PROJ.NO.	SHEET NO.	TOTAL SHEETS
				6	ARK.		27	229
				JOB NO.		040478		

(2) SURVEY CONTROL DETAILS

ALL BEARINGS SHOWN ARE TRUE GRID BEARINGS

FUTURE NORTH BOUND CD
P.I. 1849+58.11
N = 343240.4840
E = 609322.6290
Δ = 4°04'25" Rt.
D = 1°30'00"
T = 135.84'
L = 271.57'
R = 3819.72'
E = 2.41'
RADIUS POINT
N = 342553.5397
E = 613082.5240

TEMPORARY RAMP 5
P.I. 1861+71.72
N = 344933.0210
E = 608639.5610
Δ = 26°53'14" Rt.
D = 11°27'33"
T = 119.52'
L = 234.64'
R = 500.00'
E = 14.09'
RADIUS POINT
N = 344539.2990
E = 608970.1178

FUTURE RAMP 8
P.I. 1866+27.05
N = 344854.0850
E = 608304.2330
Δ = 28°02'21" Lt.
D = 4°45'00"
T = 301.19'
L = 590.30'
R = 1206.23'
E = 37.03'
RADIUS POINT
N = 344163.6989
E = 607270.2780

FUTURE RAMP 8
P.I. 1871+28.24
N = 345199.1790
E = 607924.2980
Δ = 5°42'29" Lt.
D = 3°00'00"
T = 95.21'
L = 190.27'
R = 1909.86'
E = 2.37'
RADIUS POINT
N = 343721.4230
E = 606710.6814

RAMP 5
P.I. 1869+35.39
N = 344416.4700
E = 609143.4270
Δ = 108°26'30" Lt.
D = 5°45'00"
T = 1382.67'
L = 1885.94'
R = 996.45'
E = 707.86'
RADIUS POINT
N = 346040.2794
E = 608625.8177

SOUTH BOUND CD
P.I. 1889+04.94
N = 347124.4640
E = 610028.4780
Δ = 5°42'30" Lt.
D = 3°00'00"
T = 95.22'
L = 190.28'
R = 1909.86'
E = 2.37'
RADIUS POINT
N = 347627.2703
E = 608183.5349

NORTH BOUND CD EXT.
P.I. 1881+32.82
N = 346339.5820
E = 610003.4800
Δ = 2°17'31" Lt.
D = 3°00'00"
T = 38.21'
L = 76.40'
R = 1909.86'
E = .38'
RADIUS POINT
N = 346712.0812
E = 608129.9096

CR 8 (HOWARD HILL RD.)
P.I. 59+30.89
N = 346716.6400
E = 610173.5240
Δ = 43°32'58" Lt.
D = 5°00'00"
T = 457.75'
L = 870.99'
R = 1145.92'
E = 88.04'
RADIUS POINT
N = 347949.5647
E = 610123.0028

SOUTH BOUND CD
P.I. 1866+63.58
N = 344947.7070
E = 609518.5210
Δ = 4°04'25" Lt.
D = 1°30'00"
T = 135.84'
L = 271.57'
R = 3819.72'
E = 2.41'
RADIUS POINT
N = 345634.6502
E = 605758.6258

SOUTH BOUND CD
P.I. 1877+90.64
N = 346063.0300
E = 609681.5700
Δ = 9°46'54" Rt.
D = 1°00'00"
T = 490.28'
L = 978.18'
R = 5729.58'
E = 20.94'
RADIUS POINT
N = 344749.1094
E = 615279.9671

NORTH BOUND CD EXT.
P.I. 1886+07.99
N = 346807.3990
E = 610086.8010
Δ = 2°17'30" Rt.
D = 3°00'00"
T = 38.20'
L = 76.40'
R = 1909.86'
E = .38'
RADIUS POINT
N = 346434.9021
E = 611960.3719

FUTURE RAMP 3
C. C.
N = 344220.6250
E = 609854.3280
Δ = 297°53'04" Rt.
D = 19°05'55"
L = 1559.72'
e = 9.50%
Ls = 210'

FUTURE RAMP 6
C. C.
N = 344774.5410
E = 609164.1080
Δ = 245°51'01" Rt.
D = 19°05'55"
L = 1287.27'
e = 9.50%
Ls = 210'

FUTURE RAMP 7
C. C.
N = 344025.3247
E = 608999.5104
Δ = 295°47'42" Rt.
D = 19°05'55"
L = 1548.78'
e = 9.50%
Ls = 210'

FUTURE RAMP 2
C. C.
N = 343450.2070
E = 609685.0730
Δ = 242°11'28" Rt.
D = 19°05'55"
L = 1268.11'
e = 9.50%
Ls = 210'

FUTURE RAMP 1
P.I. 1856+16.11
N = 343819.8180
E = 609713.1140
Δ = 112°12'30" Rt.
D = 6°15'00"
T = 1364.45'
L = 1795.33'
R = 916.73'
E = 727.08'
RADIUS POINT
N = 342238.0831
E = 610160.6063

RAMP 4
P.I. 1849+36.66
N = 343244.9810
E = 610579.7630
Δ = 28°27'03" Rt.
D = 4°45'00"
T = 305.79'
L = 598.97'
R = 1206.23'
E = 38.16'
RADIUS POINT
N = 343920.7633
E = 611624.6607

TEMPORARY RAMP 4
P.I. 1858+48.64
N = 344072.7860
E = 610300.0970
Δ = 58°58'28" Lt.
D = 11°27'33"
T = 282.74'
L = 514.65'
R = 500.00'
E = 74.41'
RADIUS POINT
N = 344180.6164
E = 609735.9039

RAMP 4
P.I. 1872+84.74
N = 345481.4930
E = 609824.1770
Δ = 31°03'28" Rt.
D = 2°45'00"
T = 578.93'
L = 1129.37'
R = 2083.48'
E = 78.94'
RADIUS POINT
N = 345599.8746
E = 611983.3547

48.5' RT. P.O.T. STA. 56+64.45 EXIST. U.S. HWY. 71 = P.C. STA. 1855+52.72 RAMP 5

56.5' LT. P.O.T. STA. 1890+00.01 U.S. HWY. 71 RELOC. = P.T. STA. 1890+00.01 SB CD

P.O.T. STA. 49+94.16 EXIST. U.S. HWY. 71 = P.O.T. STA. 1860+08.20 TEMP. RAMP. 5

P.O.T. STA. 1858+46.91 FUTURE U.S. HWY. 71 RELOC. = P.O.C. STA. 38+80.06 EXIST. U.S. HWY. 71

P.O.T. STA. 31+80.42 EXIST. U.S. HWY. 71 = P.O.T. STA. 1853+24.52 TEMP. RAMP 4

48.5' LT. P.O.T. STA. 20+99.95 EXIST. U.S. HWY. 71 = P.T. STA. 1860+46.98 FUTURE RAMP 1

P.O.T. STA. 1885+93.77 U.S. HWY. 71 RELOC. = P.O.C. STA. 57+55.47 COUNTY ROAD 8

68.5' RT. P.O.T. STA. 1886+45.83 U.S. HWY. 71 RELOC. = P.O.T. STA. 1886+46.19 NB CD EXT.

U.S. HWY. 71 RELOCATION
STA. 1860+08.06
BEGIN JOB 040478

STA. 1893+62.58
END JOB 040478 =
BEGIN JOB 040458

BENCHMARK 920
ELEV. = 494.16

BENCHMARK 921
ELEV. = 506.13

BENCHMARK 923
ELEV. = 630.38

BENCHMARK 924
ELEV. = 625.31

BENCHMARK SUMMARY

BENCHMARK 920
RR SPIKE IN 10" PERSIMMON TREE
456' RIGHT STA. 1855+01
NORTH = 343690.2 +\-
EAST = 609799.0 +\-
ELEVATION = 494.15

BENCHMARK 921
RR SPIKE IN 12" CHERRY TREE
1004' LEFT STA. 1867+29
NORTH = 345202.9 +\-
EAST = 608635.8 +\-
ELEVATION =

BENCHMARK 923
RR SPIKE IN 12" OAK TREE
239' RIGHT STA. 1885+99
NORTH = 346762.2 +\-
EAST = 610251.4 +\-
ELEVATION = 630.38

BENCHMARK 924
RR SPIKE IN UTILITY POLE
1109' LEFT STA. 1885+91
NORTH = 347044.2 +\-
EAST = 608932.9 +\-
ELEVATION = 625.31

CONTROL MONUMENTS AND TRAVERSE POINTS

POINT	EAST	NORTH	ELEVATION	DESCRIPTION
101	609280.5290	344129.1510	496.449	AHTD GPS MON L298
1	608980.0668	344601.0619	0.00	REBAR & CAP
2	609431.1254	345379.5986	501.530	REBAR & CAP
3	609887.5696	346024.4070	510.578	REBAR & CAP
4	609965.8612	346228.2446	520.095	REBAR & CAP
5	609908.3721	346515.8676	559.331	REBAR & CAP
6	609917.2031	346702.5085	613.601	REBAR & CAP
7	609910.0087	346855.0889	0.00	REBAR & CAP
8	610064.6381	347355.3187	0.00	REBAR & CAP
9	610260.7642	347970.3959	0.00	REBAR & CAP
10	610166.3545	348580.5371	0.00	REBAR & CAP
11	610525.4196	348938.8327	0.00	REBAR & CAP

THE HORIZONTAL DATUM FOR THIS PROJECT IS NAD83(1997) ADJUSTED BY THE AVERAGE PROJECT COMBINED FACTOR OF 0.999938638. TO ACHIEVE ARKANSAS NORTH ZONE STATE PLANE COORDINATES, MULTIPLY THE PROJECT COORDINATES BY THE AVERAGE PROJECT FACTOR. ALL BEARINGS SHOWN ARE ARKANSAS STATE PLANE NORTH ZONE GRID. VERTICAL DATUM IS NAVD88.

BENCHMARK SUMMARY

BENCHMARK 925
RR SPIKE IN 10" ELM TREE
2358' RIGHT STA. 1902+62
NORTH = 347732.5 +\-
EAST = 612661.0 +\-
ELEVATION = 607.71

STATE OF ARKANSAS
REGISTERED PROFESSIONAL ENGINEER
No. 9808
JAMES L. BARR
1/25/12

HIGHWAY 71 INTERCHANGE
U.S. HWY. 71 RELOCATION
ARKANSAS STATE HIGHWAY COMMISSION
SURVEY CONTROL AND CENTERLINE GEOMETRY
JOB 040478 SEBASTIAN CO.

200 100 0 100 200 400

DATE REVISED	DATE FILMED	DATE REVISED	DATE FILMED	FED.RD. DIST.NO.	STATE	FED.AID PROJ.NO.	SHEET NO.	TOTAL SHEETS
				6	ARK.		28	229
				JOB NO.		040478		

(2) SURVEY CONTROL DETAILS

BENCHMARK SUMMARY

BENCHMARK 920
RR SPIKE IN 10" PERSIMMON TREE
456' RIGHT STA. 1855+01
NORTH = 343690.2 +\-
EAST = 609799.0 +\-
ELEVATION = 494.15

BENCHMARK 921
RR SPIKE IN 12" CHERRY TREE
1004' LEFT 1867+29
NORTH = 345202.9 +\-
EAST = 608635.8 +\-
ELEVATION =

RAMP 5
P.I. 1869+35.39
N = 344416.4700
E = 609143.4270
Δ = 108°26'30" Lt.
D = 5°45'00"
T = 1382.67'
L = 1885.94'
R = 996.45'
E = 707.86'
RADIUS POINT
N = 346040.2794
E = 608625.8177

RAMP 4
P.I. 1872+84.74
N = 345481.4930
E = 609824.1770
Δ = 31°03'28" Rt.
D = 2°45'00"
T = 578.93'
L = 1129.37'
R = 2083.48'
E = 78.94'
RADIUS POINT
N = 345599.8746
E = 611983.3547

SOUTH BOUND CD
P.I. 1866+63.58
N = 344947.7070
E = 609518.5210
Δ = 4°04'25" Lt.
D = 1°30'00"
T = 135.84'
L = 271.57'
R = 3819.72'
E = 2.41'
RADIUS POINT
N = 345634.6502
E = 605758.6258

TEMPORARY RAMP 4
P.I. 1858+48.64
N = 344072.7860
E = 610300.0970
Δ = 58°58'28" Lt.
D = 11°27'33"
T = 282.74'
L = 514.65'
R = 500.00'
E = 74.41'
RADIUS POINT
N = 344180.6164
E = 609735.9039

RAMP 4
P.I. 1849+36.66
N = 343244.9810
E = 610579.7630
Δ = 28°27'03" Rt.
D = 4°45'00"
T = 305.79'
L = 598.97'
R = 1206.23'
E = 38.16'
RADIUS POINT
N = 343920.7633
E = 611624.6607

EXIST. U.S. HWY. 71
P.I. 41+23.38
N = 344283.0850
E = 609241.9620
Δ = 3°46'01" Lt.
D = 0°45'50"
T = 246.63'
L = 493.08'
R = 7500.00'
E = 4.05'
RADIUS POINT
N = 338404.1485
E = 604578.3871

FUTURE RAMP 3
C. C.
N = 344220.6250
E = 609854.3280
Δ = 297°53'04" Rt.
D = 19°05'55"
L = 1559.72'
e = 9.50%
Ls = 210'

CONTROL MONUMENTS AND TRAVERSE POINTS

POINT	EAST	NORTH	ELEVATION	DESCRIPTION
100	607805.3170	345241.5720	509.871	AHTD GPS MON 178 FSGIS
101	609280.5290	344129.1510	496.449	AHTD GPS MON L298
1	608980.0668	344601.0619	0.00	REBAR & CAP
2	609431.1254	345379.5986	501.530	REBAR & CAP
3	609887.5696	346024.4070	510.578	REBAR & CAP

48.5' RT. P.O.T. STA. 56+64.45 EXIST. U.S. HWY. 71 =
P.C. STA. 1855+52.72 RAMP 5

36.5' RT. P.C. STA. 16+38.18 EXIST. U.S. HWY. 71=
P.C. STA. 1841+44.70 RAMP 4

FUTURE RAMP 6
C. C.
N = 344774.5410
E = 609164.1080
Δ = 245°51'01" Rt.
D = 19°05'55"
L = 1287.27'
e = 9.50%
Ls = 210'

P.C. 58+22.51
N= 345294.8381
E= 607876.6731

BENCHMARK 921
ELEV. = 506.13

STA. 1860+08.06
BEGIN JOB 040478

GPS PT. 100
AHTD GPS M-178FSGIS

48.5' LT. STA. 58+22.51 EXIST. U.S. HWY. 71 =
P.O.T. STA. 1872+23.30 FUTURE RAMP 8

FUTURE RAMP 7
C. C.
N = 344025.3247
E = 608999.5104
Δ = 295°47'42" Rt.
D = 19°05'55"
L = 1548.78'
e = 9.50%
Ls = 210'

P.O.T. STA. 49+94.16 EXIST. U.S. HWY. 71 =
P.O.T. STA. 1860+08.20 TEMP. RAMP 5

P.O.T. STA. 1858+46.91 FUTURE U.S. HWY. 71 RELOC. =
P.O.T. STA. 38+80.06 EXIST. U.S. HWY. 71

FUTURE RAMP 2
C. C.
N = 343450.2070
E = 609685.0730
Δ = 242°11'28" Rt.
D = 19°05'55"
L = 1268.11'
e = 9.50%
Ls = 210'

P.O.T. STA. 31+80.42 EXIST. U.S. HWY. 71 =
P.O.T. 1853+24.52 TEMP. RAMP 4

48.5' LT. P.O.T. STA. 20+99.95 EXIST. U.S. HWY. 71 =
P.T. STA. 1860+46.98 RAMP 1

EXIST. U.S. HWY. 71	FUTURE RAMP 8	FUTURE RAMP 8	EXIST. U.S. HWY. 71
P.I. 68+71.42	P.I. 1871+28.24	P.I. 1866+27.05	P.I. 41+23.38
N = 345919.3490	N = 345199.1790	N = 344854.0850	N = 344283.0850
E = 607033.9400	E = 607924.2980	E = 608304.2330	E = 609241.9620
Δ = 20°44'54" Rt.	Δ = 5°42'29" Lt.	Δ = 28°02'21" Lt.	Δ = 3°46'01" Lt.
D = 1°00'00"	D = 3°00'00"	D = 4°45'00"	D = 0°45'50"
T = 1048.91'	T = 95.21'	T = 301.19'	T = 246.63'
L = 2074.85'	L = 190.27'	L = 590.30'	L = 493.08'
R = 5729.58'	R = 1909.86'	R = 1206.23'	R = 7500.00'
E = 95.22'	E = 2.37'	E = 37.03'	E = 4.05'
RADIUS POINT	RADIUS POINT	RADIUS POINT	RADIUS POINT
N = 349898.1914	N = 343721.4230	N = 344163.6989	N = 338404.1485
E = 611288.0074	E = 606710.6814	E = 607270.2780	E = 604578.3871

FUTURE RAMP 8	FUTURE NORTH BOUND CD	FUTURE SOUTH BOUND CD EXT.
P.I. 1844+73.22	P.I. 1838+35.17	P.I. 1837+07.32
N = 342804.6990	N = 342127.0020	N = 342054.0930
E = 609038.5020	E = 609159.8490	E = 608882.8140
Δ = 32°06'09" Lt.	Δ = 9°46'55" Lt.	Δ = 2°17'29" Rt.
D = 3°45'00"	D = 1°00'00"	D = 3°00'00"
T = 439.60'	T = 490.28'	T = 38.20'
L = 856.07'	L = 978.18'	L = 76.38'
R = 1527.89'	R = 5729.58'	R = 1909.86'
E = 61.98'	E = 20.94'	E = .38'
RADIUS POINT	RADIUS POINT	RADIUS POINT
N = 342703.1901	N = 343440.9270	N = 341681.5906
E = 607451.8767	E = 603561.4530	E = 610756.3837

FUTURE NORTH BOUND CD	FUTURE RAMP 1	RAMP 4	EXIST. U.S. HWY. 71
P.I. 1849+58.11	P.I. 1856+16.11	P.I. 1842+39.91	P.I. 18+43.33
N = 343240.4840	N = 343819.8180	N = 342770.7460	N = 342808.0860
E = 609322.6290	E = 609713.1140	E = 611090.4230	E = 610980.7740
Δ = 4°04'25" Rt.	Δ = 112°12'30" Rt.	Δ = 5°42'29" Rt.	Δ = 3°08'01" Rt.
D = 1°30'00"	D = 6°15'00"	D = 3°00'00"	D = 0°45'50"
T = 135.84'	T = 1364.45'	T = 95.21'	T = 205.15'
L = 271.57'	L = 1795.33'	L = 190.27'	L = 410.20'
R = 3819.72'	R = 916.73'	R = 1909.86'	R = 7500.00'
E = 2.41'	E = 727.08'	E = 2.37'	E = 2.81'
RADIUS POINT	RADIUS POINT	RADIUS POINT	RADIUS POINTS
N = 342553.5397	N = 342238.0831	N = 344235.0011	N = 348660.1918
E = 613082.5240	E = 610160.6063	E = 612320.2951	E = 615675.9784

THE HORIZONTAL DATUM FOR THIS PROJECT IS NAD83(1997) ADJUSTED BY THE AVERAGE PROJECT COMBINED FACTOR OF 0.999938638. TO ACHIEVE ARKANSAS NORTH ZONE STATE PLANE COORDINATES, MULTIPLY THE PROJECT COORDINATES BY THE AVERAGE PROJECT FACTOR. ALL BEARINGS SHOWN ARE ARKANSAS STATE PLANE NORTH ZONE GRID. VERTICAL DATUM IS NAVD88.

STATE OF ARKANSAS
REGISTERED PROFESSIONAL ENGINEER
No. 9808
JAMES L. BARR
1/25/12

HIGHWAY 71 INTERCHANGE
U.S. HWY. 71 RELOCATION
ARKANSAS STATE HIGHWAY COMMISSION
SURVEY CONTROL AND CENTERLINE GEOMETRY
JOB 040478 SEBASTIAN CO.

200 100 0 100 200 400

DATE REVISED	DATE FILMED	DATE REVISED	DATE FILMED	FED.RD. DIST.NO.	STATE	FED.AID PROJ.NO.	SHEET NO.	TOTAL SHEETS
				6	ARK.		29	229
				JOB NO.		040478		

(2) SURVEY CONTROL DETAILS

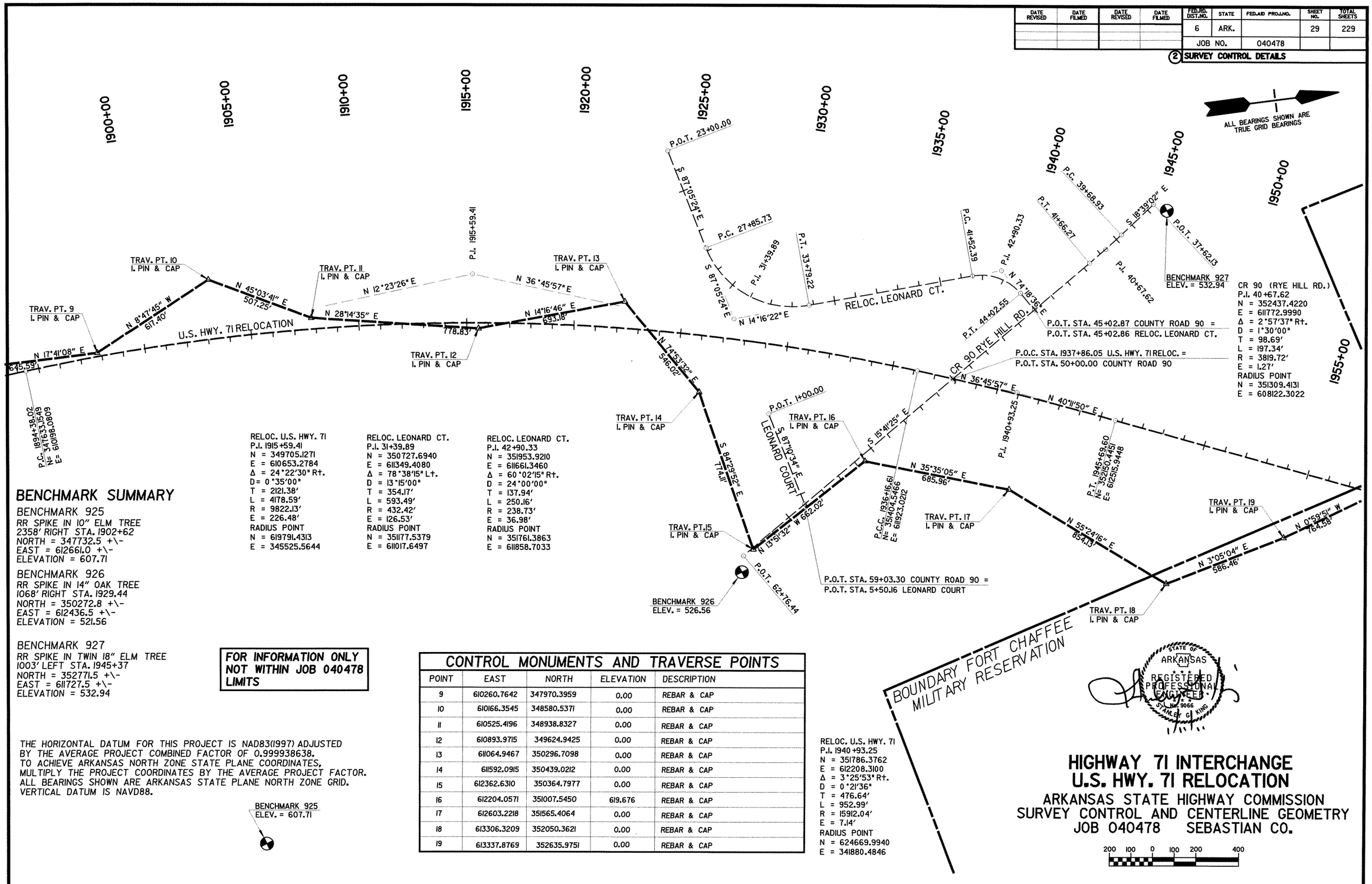

RELOC. U.S. HWY. 71
P.I. 1915+59.41
N = 349705.1271
E = 610653.2784
Δ = 24°22'30" Rt.
D = 0°35'00"
T = 2121.38'
L = 4178.59'
R = 9822.13'
E = 226.48'
RADIUS POINT
N = 619791.4313
E = 345525.5644

RELOC. LEONARD CT.
P.I. 31+39.89
N = 350727.6940
E = 611349.4080
Δ = 78°38'15" Lt.
D = 13°15'00"
T = 354.17'
L = 593.49'
R = 432.42'
E = 126.53'
RADIUS POINT
N = 351177.5379
E = 611017.6497

RELOC. LEONARD CT.
P.I. 42+90.33
N = 351953.9210
E = 611661.3460
Δ = 60°02'15" Rt.
D = 24°00'00"
T = 137.94'
L = 250.16'
R = 238.73'
E = 36.98'
RADIUS POINT
N = 351761.3863
E = 611858.7033

RELOC. U.S. HWY. 71
P.I. 1940+93.25
N = 351786.3762
E = 612208.3100
Δ = 3°25'53" Rt.
D = 0°21'36"
T = 476.64'
L = 952.99'
R = 15912.04'
E = 7.14'
RADIUS POINT
N = 624669.9940
E = 341880.4846

BENCHMARK SUMMARY

BENCHMARK 925
RR SPIKE IN 10" ELM TREE
2358' RIGHT STA. 1902+62
NORTH = 347732.5 +\-
EAST = 612661.0 +\-
ELEVATION = 607.71

BENCHMARK 926
RR SPIKE IN 14" OAK TREE
1068' RIGHT STA. 1929.44
NORTH = 350272.8 +\-
EAST = 612436.5 +\-
ELEVATION = 521.56

BENCHMARK 927
RR SPIKE IN TWIN 18" ELM TREE
1003' LEFT STA. 1945+37
NORTH = 352771.5 +\-
EAST = 611727.5 +\-
ELEVATION = 532.94

FOR INFORMATION ONLY NOT WITHIN JOB 040478 LIMITS

THE HORIZONTAL DATUM FOR THIS PROJECT IS NAD83(1997) ADJUSTED BY THE AVERAGE PROJECT COMBINED FACTOR OF 0.999938638. TO ACHIEVE ARKANSAS NORTH ZONE STATE PLANE COORDINATES, MULTIPLY THE PROJECT COORDINATES BY THE AVERAGE PROJECT FACTOR. ALL BEARINGS SHOWN ARE ARKANSAS STATE PLANE NORTH ZONE GRID. VERTICAL DATUM IS NAVD88.

BENCHMARK 925
ELEV. = 607.71

CONTROL MONUMENTS AND TRAVERSE POINTS

POINT	EAST	NORTH	ELEVATION	DESCRIPTION
9	610260.7642	347970.3959	0.00	REBAR & CAP
10	610166.3545	348580.5371	0.00	REBAR & CAP
11	610525.4196	348938.8327	0.00	REBAR & CAP
12	610893.9715	349624.9425	0.00	REBAR & CAP
13	611064.9467	350296.7098	0.00	REBAR & CAP
14	611592.0915	350439.0212	0.00	REBAR & CAP
15	612362.6310	350364.7977	0.00	REBAR & CAP
16	612204.0571	351007.5450	619.676	REBAR & CAP
17	612603.2218	351565.4064	0.00	REBAR & CAP
18	613306.3209	352050.3621	0.00	REBAR & CAP
19	613337.8769	352635.9751	0.00	REBAR & CAP

STATE OF ARKANSAS
REGISTERED PROFESSIONAL ENGINEER
CHARLES C. KING
P.E. No. 9066

HIGHWAY 71 INTERCHANGE
U.S. HWY. 71 RELOCATION

ARKANSAS STATE HIGHWAY COMMISSION
SURVEY CONTROL AND CENTERLINE GEOMETRY
JOB 040478 SEBASTIAN CO.

200 100 0 100 200 400

DATE REVISED	DATE FILMED	DATE REVISED	DATE FILMED

FED.RD. DIST.NO.	STATE	FED.AID PROJ.NO.	SHEET NO.	TOTAL SHEETS
6	ARK.		30	229
JOB NO.		040478		

(2) SURVEY CONTROL DETAILS

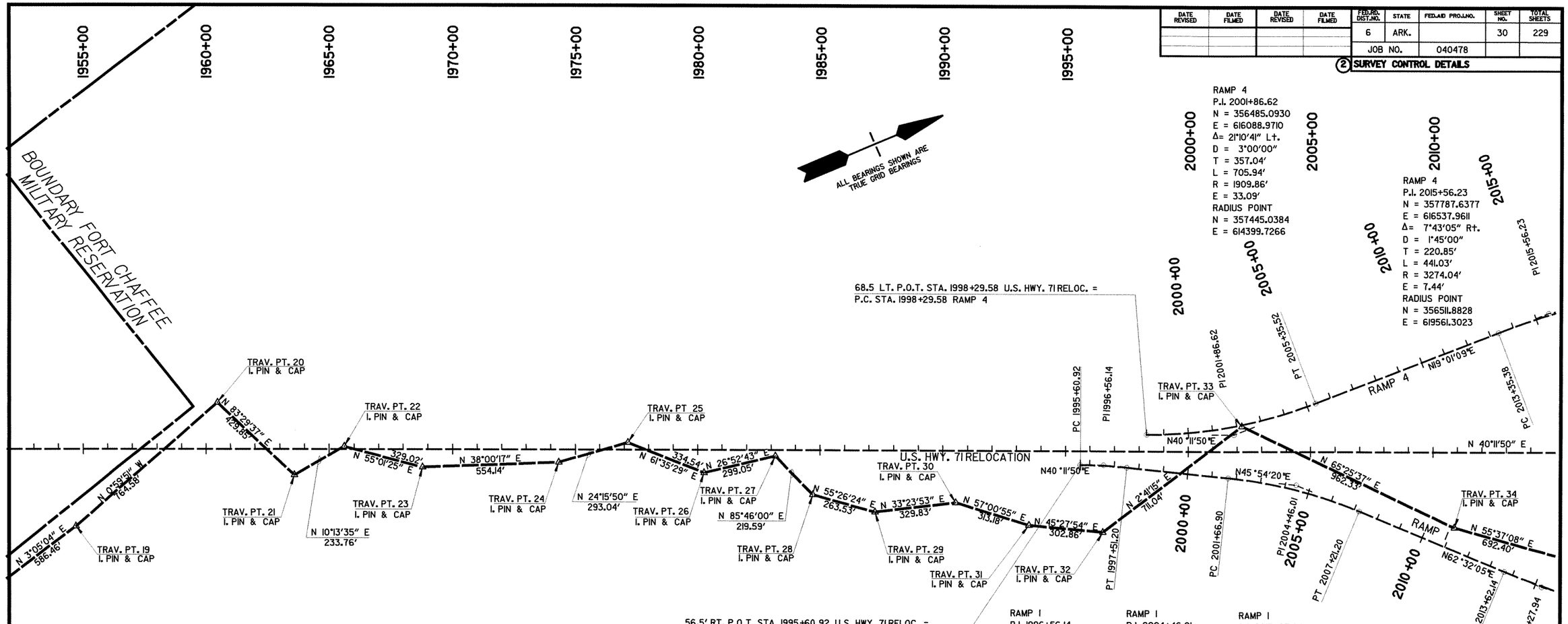

CONTROL MONUMENTS AND TRAVERSE POINTS

POINT	EAST	NORTH	ELEVATION	DESCRIPTION
19	613337.8769	352635.9751	0.00	REBAR & CAP
20	613324.5670	353400.4416	0.00	REBAR & CAP
21	613751.6439	353449.1495	0.00	REBAR & CAP
22	613793.1453	353679.1943	0.00	REBAR & CAP
23	614062.7383	353867.7997	0.00	REBAR & CAP
24	614403.9390	354304.4414	0.00	REBAR & CAP
25	614524.3596	354571.5909	0.00	REBAR & CAP
26	614818.6146	354730.7518	0.00	REBAR & CAP
27	614953.8134	354997.4906	470.470	REBAR & CAP
28	615172.8076	355013.7011	470.246	REBAR & CAP
29	615389.8305	355163.1918	471.414	REBAR & CAP
30	615571.3833	355438.5518	470.799	REBAR & CAP
31	615834.0865	355609.0545	470.178	REBAR & CAP
32	616049.9692	355821.4610	473.659	REBAR & CAP
33	616083.3099	356531.7180	473.220	REBAR & CAP
34	616958.4821	356931.9049	473.994	REBAR & CAP

RAMP 1
P.I. 1996+56.14
N = 355999.1940
E = 615842.0340
Δ= 5°42'30" Rt.
D = 3°00'00"
T = 95.22'
L = 190.28'
R = 1909.86'
E = 2.37'
RADIUS POINT
N = 354693.8015
E = 617239.3814

RAMP 1
P.I. 2004+46.01
N = 356548.9290
E = 616409.4270
Δ= 16°37'45" Rt.
D = 3°00'00"
T = 279.11'
L = 554.30'
R = 1909.86'
E = 20.29'
RADIUS POINT
N = 354983.0602
E = 617537.9313

RAMP 1
P.I. 2015+27.94
N = 357049.7366
E = 617372.8925
Δ= 5°47'53" Lt.
D = 1°45'00"
T = 165.80'
L = 331.31'
R = 3274.04'
E = 4.20'
RADIUS POINT
N = 359878.2958
E = 615715.7537

FOR INFORMATION ONLY NOT WITHIN JOB 040478 LIMITS

THE HORIZONTAL DATUM FOR THIS PROJECT IS NAD83(1997) ADJUSTED BY THE AVERAGE PROJECT COMBINED FACTOR OF 0.999938638. TO ACHIEVE ARKANSAS NORTH ZONE STATE PLANE COORDINATES, MULTIPLY THE PROJECT COORDINATES BY THE AVERAGE PROJECT FACTOR. ALL BEARINGS SHOWN ARE ARKANSAS STATE PLANE NORTH ZONE GRID. VERTICAL DATUM IS NAVD88.

STATE OF ARKANSAS REGISTERED PROFESSIONAL ENGINEER No. 9066 HAMLEY G. KING

HIGHWAY 71 INTERCHANGE
U.S. HWY. 71 RELOCATION

ARKANSAS STATE HIGHWAY COMMISSION
SURVEY CONTROL AND CENTERLINE GEOMETRY
JOB 040478 SEBASTIAN CO.

200 100 0 100 200 400

DATE REVISED	DATE FILMED	DATE REVISED	DATE FILMED	FED.RD. DIST.NO.	STATE	FED.AID PROJ.NO.	SHEET NO.	TOTAL SHEETS
				6	ARK.		31	229
				JOB NO.		040478		

(2) SURVEY CONTROL DETAILS

RAMP 4
P.I. 2015+56.23
N = 357787.6377
E = 616537.9611
Δ= 7°43'05" Rt.
D = 1°45'00"
T = 220.85'
L = 441.03'
R = 3274.04'
E = 7.44'
RADIUS POINT
N = 356511.8828
E = 619561.3023

RAMP 3
P.I. 2021+55.96
N = 358358.3508
E = 617056.7313
Δ = 9°12'22" Rt.
D = 1°45'00"
T = 263.60'
L = 526.06'
R = 3274.04'
E = 10.59'
RADIUS POINT
N = 355476.1398
E = 618632.0758

RAMP 3
P.I. 2030+68.12
N = 358730.6480
E = 617890.6940
Δ = 20°02'16" Lt.
D = 3°00'00"
T = 337.41'
L = 667.93'
R = 1909.86'
E = 29.58'
RADIUS POINT
N = 360337.0765
E = 616804.0493

RAMP 3
P.I. 2037+96.36
N = 359242.1890
E = 618418.6610
Δ = 5°42'29" Lt.
D = 3°00'00"
T = 95.21'
L = 190.26'
R = 1909.86'
E = 29.58'
RADIUS POINT
N = 360547.5797
E = 617021.3125

CUSTER BLVD.
P.I. 42+65.09
N = 359648.6847
E = 617979.1826
Δ = 32°19'17" Lt.
D = 3°52'51"
T = 427.83'
L = 832.84'
R = 1476.38'
E = 60.74'
RADIUS POINT
N = 361006.3671
E = 618699.8898

GPS PT. 106
AHTD GPS M-650008A

BENCHMARK 928
ELEV. = 476.42

MASSARD ROAD

PC 2018+92.36

PI 2021+55.96

PT 2017+76.41

PC 2013+35.38

P.O.T. STA. 43+43.84 MASSARD ROAD =
P.O.T. STA. 2017+42.28 RAMP 3 =
P.O.T. STA. 2019+40.91 RAMP 4

1575.35'

N 48°25'29" W

S 48°15'45" E

N56°44'14"E

N26°44'14"E

N19°01'09"E

RAMP 4

PT 2024+18.42

PC 2027+30.11

N65°56'35"E

RAMP 3

TRAV. PT. 39
I. PIN & CAP

PT 2033+98.63

N 0°20'26" E
719.40'

PC 2037+01.15

PT 2038+91.41

S 8°14'27" E

PT 46+70.11

140.37'

TRAV. PT. 40
I. PIN & CAP

BENCHMARK 931
ELEV. = 462.31

S45°52'42"E

PI 42+65.09

TRAV. PT. 42
I. PIN & CAP

N 21°32'14" E
1131.00'

TRAV. PT. 43
I. PIN & CAP

N 43°50'50" E
1044.49'

N 4°36'23" W
1195.50'

P.O.T. STA. 2041+83.40 U.S. HWY. 71 RELOC. =
P.O.T. STA. 50+00.00 CUSTER BLVD.

ALL BEARINGS SHOWN ARE TRUE GRID BEARINGS

P.O.T. STA. 2018+28.46 U.S. HWY. 71 RELOC. =
P.O.T. STA. 50+00.00 MASSARD ROAD

N 40°11'50" E

U.S. HWY. 71 RELOCATION

TRAV. PT. 34
I. PIN & CAP

N 65°25'37" E
962.33'

GPS PT. 105
AHTD GPS M-650008

N 41°32'33" W
216.05'

TRAV. PT. 35
I. PIN & CAP

N 55°37'08" E
692.40'

RAMP 1

PT 2007+21.20

N62°32'05"E

PC 2013+62.14

PI 2015+27.94

PT 2016+93.45

N56°44'12"E

PC 2018+74.72

PI 2021+84.62

PC 58+16.96

N 5°46'16" E
600.28'

N26°44'14"E

TRAV. PT. 37
I. PIN & CAP

PI 59+73.29

PT 61+28.68

S 50°54'47" E
645.08'

TRAV. PT. 36
I. PIN & CAP

BENCHMARK 929
ELEV. = 454.83

S59°10'22"E

PI 66+20.28

P.O.T. STA. 56+56.17 MASSARD ROAD =
P.O.T. STA. 2019+07.61 RAMP 1 =
P.O.T. STA. 2017+09.44 RAMP 2

TRAV. PT. 38
I. PIN & CAP

PT 2024+90.70

N 2°52'47" E
617.96'

N 2°29'37" E
807.40'

N15°57'28"E

N40°11'50"E

RAMP 2

PI 2033+43.80

PC 2028+53.67

PC 2037+01.15

68.5' RT. P.O.T. STA. 2037+41.66 U.S. HWY. 71 RELOC. =
P.T. STA. 2037+41.66 RAMP 2

68.5' LT. STA. 2038+91.41 U.S. HWY. 71 RELOC. =
P.T. STA. 2038+91.41 RAMP 3

TRAV. PT. 41
I. PIN & CAP

S78°11'59"E

CUSTER BLVD.

BENCHMARK 930
ELEV. = 448.95

CONTROL MONUMENTS AND TRAVERSE POINTS

POINT	EAST	NORTH	ELEVATION	DESCRIPTION
105	617386.6410	357484.6030	465.875	AHTD GPS MON 650008
106	616208.1450	358530.0120	476.315	AHTD GPS MON 650008A
34	616958.4821	356931.9049	473.994	REBAR & CAP
36	617887.3494	357077.8774	458.487	REBAR & CAP
37	617947.7106	357675.1185	464.793	REBAR & CAP
38	617974.1266	358281.9454	461.124	REBAR & CAP
39	618005.1735	358899.1204	457.067	REBAR & CAP
40	618009.4499	359618.5092	459.857	REBAR & CAP
41	618741.1865	359505.7637	458.343	REBAR & CAP
42	618645.1736	360697.4032	0.00	REBAR & CAP
43	619060.3682	361749.4370	0.00	REBAR & CAP

FOR INFORMATION ONLY
NOT WITHIN JOB 040478
LIMITS

RAMP 1
P.I. 2015+27.94
N = 357049.7366
E = 617372.8925
Δ= 5°47'53" Lt.
D = 1°45'00"
T = 165.80'
L = 331.31'
R = 3274.04'
E = 4.20'
RADIUS POINT
N = 359878.2958
E = 615715.7537

MASSARD ROAD
P.I. 59+73.29
N = 357047.0254
E = 617927.2320
Δ = 10°54'36" Lt.
D = 3°30'00"
T = 156.33'
L = 311.72'
R = 1637.02'
E = 7.45'
RADIUS POINT
N = 358372.6494
E = 618900.3725

BENCHMARK SUMMARY

BENCHMARK 928
RR SPIKE IN TWIN 12" OAK TREE
1233' LEFT STA. 2017+95
NORTH = 358465.3 +\-
EAST = 616237.3 +\-
ELEVATION = 476.42

BENCHMARK 929
RR SPIKE IN 14" ASH TREE
1382' RIGHT STA. 2017+59
NORTH = 356750.1 +\-
EAST = 618210.8 +\-
ELEVATION = 454.83

BENCHMARK 930
RR SPIKE IN 10" ELM TREE
1441' RIGHT STA. 2049+34
NORTH = 359136.6 +\-
EAST = 620306.1 +\-
ELEVATION = 448.95

BENCHMARK 931
RR SPIKE IN 14" OAK TREE
817' LEFT STA. 2039+06
NORTH = 359809.4 +\-
EAST = 617918.0 +\-
ELEVATION = 462.31

RAMP 2
P.I. 2021+83.62
N = 357681.6177
E = 617903.9288
Δ = 10°46'46" Lt.
D = 1°45'00"
T = 308.90'
L = 615.98'
R = 3274.04'
E = 14.54'
RADIUS POINT
N = 358878.7373
E = 614840.9742

RAMP 2
P.I. 2033+43.80
N = 358798.8430
E = 618223.3950
Δ = 24°14'22" Rt.
D = 3°00'00"
T = 410.13'
L = 807.98'
R = 1909.86'
E = 43.54'
RADIUS POINT
N = 357879.4472
E = 619946.9027

THE HORIZONTAL DATUM FOR THIS PROJECT IS NAD83(1997) ADJUSTED BY THE AVERAGE PROJECT COMBINED FACTOR OF 0.999938638. TO ACHIEVE ARKANSAS NORTH ZONE STATE PLANE COORDINATES, MULTIPLY THE PROJECT COORDINATES BY THE AVERAGE PROJECT FACTOR. ALL BEARINGS SHOWN ARE ARKANSAS STATE PLANE NORTH ZONE GRID. VERTICAL DATUM IS NAVD88.

STATE OF ARKANSAS
REGISTERED PROFESSIONAL ENGINEER
No. 9808
JAMES L. BARR
1/25/12

HIGHWAY 71 INTERCHANGE
U.S. HWY. 71 RELOCATION
ARKANSAS STATE HIGHWAY COMMISSION
SURVEY CONTROL AND CENTERLINE GEOMETRY
JOB 040478 SEBASTIAN CO.

200 100 0 100 200 400

DATE REVISED	DATE FILMED	DATE REVISED	DATE FILMED	FED.RD. DIST.NO.	STATE	FED.AID PROJ.NO.	SHEET NO.	TOTAL SHEETS
				6	ARK.		32	229
				JOB NO.		040478		

(2) SURVEY CONTROL DETAILS

BENCHMARK 933
ELEV. = 445.09

N 43°50'50" E
1044.49'

TRAV. PT. 44
I. PIN & CAP

N 56°19'26" E
687.33'

N 34°09'58" E
757.06'

TRAV. PT. 45
I. PIN & CAP

GPS PT. 104
AHTD GPS M-650007A

S 86°05'33" E
2391.93'

ROBERTS BLVD.

P.O.T. STA. 43+43+84 ROBERTS BLVD. =
P.O.T. STA. 2087+50.92 RAMP 3 =
P.O.T. STA. 2090+42.20 RAMP 4

RAMP 4
P.I. 2078+94.28
N = 362372.4130
E = 621063.6400
Δ= 22°05'24" Lt.
D = 2°15'00"
T = 497.06'
L = 981.77'
R = 2546.48'
E = 48.06'
RADIUS POINT
N = 363636.2931
E = 618797.7561

68.5' LT. P.O.T. STA. 2073+97.22 U.S. HWY. 71 RELOC. =
P.C. STA. 2073+97.22 RAMP 4

PI 2078+94.28

PT 2083+78.99

PC 2089+42.01

PI 2093+41.47

RAMP 3
P.I. 2093+41.47
N = 364036.5184
E = 621607.7854
Δ = 55°22'12" Rt.
D = 7°00'00"
T = 429.45'
L = 791.00'
R = 818.51'
E = 105.82'
RADIUS POINT
N = 363373.9429
E = 622252.2895

N18°06'26"E

N73°28'38"E

PT 2097+03.01

PC 2101+77.84

RAMP 3
P.I. 2105+25.60
N = 364392.5954
E = 622808.1206
Δ = 13°50'19" Lt.
D = 2°00'00"
T = 347.66'
L = 691.93'
R = 2864.79'
E = 21.02'
RADIUS POINT
N = 367040.2138
E = 621660.0799

RELOC. U.S. HWY. 71
P.I. 2105+96.45
N = 364392.1910
E = 622860.0020
Δ = 18°38'20" Rt.
D = 0°29'56"
T = 1884.41'
L = 3735.53'
R = 11482.92'
E = 153.59'
RADIUS POINT
N = 355541.5147
E = 630414.7296

P.I. 2105+96.45

P.I. 2105+25.60

PT 2108+69.87

RAMP 3
P.I. 2114+60.85
N = 364867.0300
E = 623618.0230
Δ = 5°26'22" Lt.
D = 3°00'00"
T = 90.73'
L = 181.32'
R = 1909.86'
E = 2.15'
RADIUS POINT
N = 364867.0300
E = 623618.0230

56.5' LT. P.O.C. STA. 2115+51.44
U.S. HWY. 71 RELOC. =
P.T. STA. 2115+51.44 RAMP 3

PC 2113+70.12

PI 2114+60.85

TRAV. PT. 50
I. PIN & CAP

N 75°59'30" E
266.42'

TRAV. PT. 51
I. PIN & CAP

N 58°50'47" E
339.20'

TRAV. PT. 53
I. PIN & CAP

N 17°20'12" E
319.75'

TRAV. PT. 52
I. PIN & CAP

N 4°27'42" E
233.25'

68.5' RT. P.O.T. STA. 2113+35.29 U.S. HWY. 71 RELOC. =
P.T. STA. 2113+35.29 RAMP 2

P.T. 2124+47.56
N= 365367.3481
E= 624472.4766

TRAV. PT. 54
I. PIN & CAP

N 40°11'50" E

U.S. HWY. 71 RELOCATION

N 58°50'10" E

N59°38'19"E

N54°11'57"E

P.O.C. STA. 2087+12.04
N= 362952.8262
E= 621643.7641

P.O.C. STA. 2093+65.43 U.S. HWY. 71 RELOC. =
P.O.T. STA. 50+00.00 ROBERTS BLVD.

N40°11'50"E

N18°06'26"E

S86°53'32"E

RAMP 4

P.O.T. STA. 56+56.17 ROBERTS BLVD.
P.O.T. STA. 2098+46.33 RAMP 1 =
P.O.T. STA. 2097+59.34 RAMP 2

N16°03'09"E

N53°17'11"E

N 49°09'27" E
226.33'

PI 56+30.49

RAMP 2

PI 2106+17.98

N 14°57'43" E
320.24'

N 3°17'03" W
475.37'

TRAV. PT. 48
I. PIN & CAP

TRAV. PT. 47
I. PIN & CAP

BENCHMARK 932
ELEV. = 478.22

N 30°32'45" E
411.14'

TRAV. PT. 46
I. PIN & CAP

PC 60+38.62

S88°57'03"E

GPS PT. 103
AHTD GPS M-650007

PI 64+22.42

PT 67+69.98

S45°48'34"E

N57°15'13"E

RAMP 1

N16°03'18"E

PC 2098+45.94

PT 2097+67.46

PI 2096+36.37

PC 2094+92.80

PI 2072+01.76

PT 2072+96.82

PC 2077+26.83

PI 2079+16.59

PT 2081+05.11

56.5' RT. P.O.T. STA. 2071+06.54 U.S. HWY. 71 RELOC. =
P.C. STA. 2071+06.54 RAMP 1

RAMP 1
P.I. 2072+01.76
N = 361762.7700
E = 620712.1580
Δ = 5°42'30" Rt.
D = 3°00'00"
T = 95.22'
L = 190.28'
R = 1909.86'
E = 2.37'
RADIUS POINT
N = 360457.3777
E = 622109.5054

RAMP 1
P.I. 2079+16.59
N = 362260.2920
E = 621225.6600
Δ = 11°20'53" Rt.
D = 3°00'00"
T = 189.76'
L = 378.27'
R = 1909.86'
E = 9.40'
RADIUS POINT
N = 360756.6030
E = 622418.3416

RAMP 1
P.I. 2096+36.37
N = 363191.2280
E = 622673.1650
Δ= 41°11'55" Lt.
D = 15°00'00"
T = 143.57'
L = 274.66'
R = 381.97'
E = 26.09'
RADIUS POINT
N = 363434.8352
E = 622345.7968

ROBERTS BLVD.
P.I. 64+22.42
N = 363390.9610
E = 623500.8100
Δ= 43°08'29" Rt.
D = 5°53'44"
T = 384.20'
L = 731.75'
R = 971.83'
E = 73.19'
RADIUS POINT
N = 362426.3240
E = 623098.8790

RAMP 2
P.I. 2106+17.98
N = 364230.1512
E = 622972.1125
Δ = 37°14'02" Rt.
D = 2°30'00"
T = 772.04'
L = 1489.35'
R = 2291.83'
E = 126.54'
RADIUS POINT
N = 362854.4810
E = 624961.0988

ALL BEARINGS SHOWN ARE TRUE GRID BEARINGS

BENCHMARK SUMMARY

BENCHMARK 932
RR SPIKE IN 18" ASH TREE
804' RIGHT STA. 2100+80
NORTH = 363354.1 +\-
EAST = 623134.7 +\-
ELEVATION = 478.22

BENCHMARK 933
RR SPIKE IN POWER POLE
1537' LEFT STA. 2082+64
NORTH = 363602.7 +\-
EAST = 620180.4 +\-
ELEVATION = 445.09

FOR INFORMATION ONLY NOT WITHIN JOB 040478 LIMITS

THE HORIZONTAL DATUM FOR THIS PROJECT IS NAD83(1997) ADJUSTED BY THE AVERAGE PROJECT COMBINED FACTOR OF 0.999938638. TO ACHIEVE ARKANSAS NORTH ZONE STATE PLANE COORDINATES, MULTIPLY THE PROJECT COORDINATES BY THE AVERAGE PROJECT FACTOR. ALL BEARINGS SHOWN ARE ARKANSAS STATE PLANE NORTH ZONE GRID. VERTICAL DATUM IS NAVD88.

CONTROL MONUMENTS AND TRAVERSE POINTS

POINT	EAST	NORTH	ELEVATION	DESCRIPTION
103	623173.4310	363346.8170	476.997	AHTD GPS MON 650007
104	620781.0710	363510.2320	442.788	AHTD GPS MON 650007A
44	619783.9277	362502.7115	0.00	REBAR & CAP
45	620355.9113	362883.8330	0.00	REBAR & CAP
46	623382.3828	363700.8972	0.00	REBAR & CAP
47	623355.1505	364175.4872	0.00	REBAR & CAP
48	623526.3713	364323.5021	0.00	REBAR & CAP
49	623609.0507	364632.8894	0.00	REBAR & CAP
50	623627.1958	364865.4360	0.00	REBAR & CAP
51	623722.8313	365170.5455	0.00	REBAR & CAP
52	624013.1108	365346.0230	0.00	REBAR & CAP
53	624271.6030	365410.5127	0.00	REBAR & CAP

STATE OF ARKANSAS
REGISTERED PROFESSIONAL ENGINEER
No. 9066
CLAMEY D. KING

HIGHWAY 71 INTERCHANGE
U.S. HWY. 71 RELOCATION

ARKANSAS STATE HIGHWAY COMMISSION
SURVEY CONTROL AND CENTERLINE GEOMETRY
JOB 040478 SEBASTIAN CO.

200 100 0 100 200 400

DATE REVISED	DATE FILMED	DATE REVISED	DATE FILMED

FED.RD. DIST.NO.	STATE	FED.AID PROJ.NO.	SHEET NO.	TOTAL SHEETS
6	ARK.		33	229
JOB NO.		040478		

(2) SURVEY CONTROL DETAILS

STATE OF ARKANSAS REGISTERED PROFESSIONAL ENGINEER No. 9808 JAMES L. BARR 1/25/12

2125+00 2130+00 2135+00 15+00 2140+00 20+00 25+00 2145+00 30+00 2150+00 35+00 40+00 2155+00 45+00 30+00 2165+00 35+00 2170+00 40+00 2175+00 45+00 2180+00 2185+00

FORT SMITH RELOC.
P.I. 23+27.90
N = 366593.9690
E = 625318.2730
Δ = 36°25'27" Lt.
D = 3°00'00"
T = 628.38'
L = 1214.14'
R = 1909.86'
E = 100.72'
RADIUS POINT
N = 368580.8943
E = 625010.7860

FORT SMITH RELOC.
P.I. 40+95.28
N = 367415.9431
E = 626930.8515
Δ = 35°49'04" Lt.
D = 3°30'00"
T = 529.02'
L = 1023.36'
R = 1637.02'
E = 83.36'
RADIUS POINT
N = 368634.1748
E = 625716.1005

RAMP 1
P.I. 2176+47.00
N = 367999.3747
E = 628957.0416
Δ = 40°08'44" Rt.
D = 11°30'00"
T = 182.06'
L = 349.09'
R = 498.22'
E = 32.22'
RADIUS POINT
N = 367478.8375
E = 629059.0849

FOR INFORMATION ONLY NOT WITHIN JOB 040478 LIMITS

S.H. 22
P.I. 37+98.48
N = 368260.4820
E = 627338.7090
Δ = 6°07'48" Lt.
D = 1°00'00"
T = 306.80'
L = 613.01'
R = 5729.58'
E = 8.21'
RADIUS POINT
N = 373335.7514
E = 630015.2420

RAMP 4
P.I. 2163+80.60
N = 368531.9996
E = 628483.5786
Δ = 15°54'32" Rt.
D = 8°00'00"
T = 100.07'
L = 198.86'
R = 716.20'
E = 6.96'
RADIUS POINT
N = 367997.1654
E = 628970.3080

RAMP 4
P.I. 2169+75.86
N = 368868.5964
E = 628976.0948
Δ = 128°38'18" Rt.
D = 24°00'00"
T = 496.47'
L = 535.99'
R = 238.73'
E = 312.16'
RADIUS POINT
N = 368373.5121
E = 628938.9668

P.O.T. STA. 34+34.48 ℄ RELOC. FT. SMITH BLVD. =
P.O.T. STA. 44+71.34 ℄ FT. SMITH CONN.

P.O.T. STA. 50+06.19 ℄ RELOC. FT. SMITH BLVD. =
P.O.C. STA. 38+20.94 ℄ S.H. 22 =
P.O.T. STA. 27+05.22 ℄ S.H. 59

P.O.T. STA. 44+68.47 S.H. 22 =
P.O.T. STA. 2166+61.61 FUTURE RAMP 3

P.O.T. STA. 2149+52.23 U.S. HWY. 71 RELOC. =
P.O.T. STA. 50+00.00 FORT SMITH CONNECTOR

P.O.T. STA. 45+29.57 S.H. 22 =
P.O.T. STA. 2156+29.26 RAMP 4

P.O.T. STA. 2170+69.12 U.S. HWY. 71 RELOC. =
P.O.T. STA. 49+96.29 S.H. 22

PC 16+99.53
PT 29+13.67
PC 35+66.25
PI 40+95.28
PT 45+89.62
PI 37+98.48
PC 34+91.68
PT 41+04.69
PC 2173+22.53
PI 2163+80.60
PC 2162+80.53
PCC 2164+79.39
PT 2174+51.76
PI 2172+51.70
PCC 2170+15.38
PI 2169+75.76
PC 50+33.41
PI 53+50.14
PT 2187+52.73
PT 56+64.30
PC 21+95.89
PI 23+69.63
PT 2178+41.54

S80°35'06"E
N62°59'27"E
N27°10'23"E
S65°15'34"E
N3°29'24"E HWY. 59
N39°44'30"E
N55°39'01"E
N83°04'21"E
S4°17'20"W
S58°50'10"W
N58°50'09"E
S81°01'01"E
N27°11'40"E
N41°38'59"E
N 58°50'10" E
N 23°18'42" E 110.16'
N 29°07'14" E 563.19'
S 68°46'45" E 121.85'
S 68°41'53" E 685.35'
N 28°50'30" E 698.55'
S 31°09'49" E
S 1°35'01" W
S 2°18'47" W

P.I. 23+27.90 — P.T. 2124+47.56 N= 365367.3481 E= 624472.4766

TRAV. PT. 53 I. PIN & CAP — N 87°01'47" E 287.58'
TRAV. PT. 54 I. PIN & CAP — N 59°36'50" E 306.01'
TRAV. PT. 55 I. PIN & CAP — N 59°38'32" E 503.92'
TRAV. PT. 56 I. PIN & CAP — N 7°42'11" E 239.51'
TRAV. PT. 57 I. PIN & CAP — S 89°14'52" E 189.39'
TRAV. PT. 58 I. PIN & CAP
TRAV. PT. 59 I. PIN & CAP — N 18°31'02" E 200.77' — N 51°55'02" E 183.71'
TRAV. PT. 60 I. PIN & CAP — N 45°03'09" E 303.78'
TRAV. PT. 61 I. PIN & CAP — S 79°54'46" E 494.75'
TRAV. PT. 62 I. PIN & CAP
TRAV. PT. 63 I. PIN & CAP
TRAV. PT. 64 I. PIN & CAP
TRAV. PT. 65 I. PIN & CAP
TRAV. PT. 66 I. PIN & CAP
TRAV. PT. 67 I. PIN & CAP
TRAV. PT. 68 I. PIN & CAP
TRAV. PT. 69 I. PIN & CAP

BENCHMARK 934 ELEV.= 430.10
BENCHMARK 935 ELEV. = 413.10
BENCHMARK 936 ELEV. = 417.66
BENCHMARK 937 ELEV. = 410.95
BENCHMARK 938 ELEV. = 406.02
BENCHMARK 939 ELEV. = 404.57

U.S. HWY. 71 RELOCATION
FUTURE RAMP 3
RAMP 4
FUTURE RAMP 2
FUTURE RAMP 1
FUTURE FR. RD. LOCAL ROAD
S.H. 22

FORT SMITH CONN.
P.I. 61+75.13
N = 365657.9291
E = 627223.8151
Δ = 32°44'56" Rt.
D = 8°45'00"
T = 192.40'
L = 374.27'
R = 654.81'
E = 27.68'
RADIUS POINT
N = 365483.7136
E = 626563.9341

PC 59+82.73
P.I. 61+75.13
PT 63+57.00
PI 66+03.90
55+00
65+00
70+00

FUTURE RAMP 3
P.I. 2176+47.68
N = 368738.0661
E = 628578.1461
Δ = 43°19'52" Rt.
D = 7°00'00"
T = 325.16'
L = 619.02'
R = 818.51'
E = 62.22'
RADIUS POINT
N = 367964.7478
E = 628999.6504

S.H. 22
P.I. 53+50.14
N = 367610.8510
E = 628748.4720
Δ = 12°37'04" Rt.
D = 2°00'00"
T = 316.73'
L = 630.89'
R = 2864.79'
E = 17.46'
RADIUS POINT
N = 365141.5703
E = 627261.8705

FUTURE FR. RD. LOCAL RD.
P.I. 23+69.63
N = 367908.7050
E = 629907.6730
Δ = 38°26'58" Rt.
D = 11°30'00"
T = 173.74'
L = 334.34'
R = 498.22'
E = 29.42'
RADIUS POINT
N = 367707.4197
E = 630395.4202

STA. 58+92.27 S.H. 22 =
STA. 2173+17.77
FUTURE RAMP 2

RAMP 1
P.I. INACCESSIBLE
N = N/A
E = N/A
Δ = 206°30'48" Rt.
D = 22°00'00"
T = N/A
L = 938.70'
R = 260.44'
E = N/A
RADIUS POINT
N = 367713.7108
E = 629096.2074

BENCHMARK SUMMARY

BENCHMARK 932
RR SPIKE IN 18" ASH TREE
804' RT. STA. 2100+79.71
NORTH = 363354.1 +\-
EAST = 623134.7 +\-
ELEVATION = 478.22

BENCHMARK 934
RR SPIKE IN 12" ELM TREE
332' RT. STA. 2147+38.27
NORTH = 366268.5 +\-
EAST = 626604.4 +\-
ELEVATION = 430.10

BENCHMARK 935
RR SPIKE IN 12 " ELM TREE
320' LT. 2157+38.57
NORTH = 367344.7 +\-
EAST = 627122.6 +\-
ELEVATION = 413.10

BENCHMARK 936
RR SPIKE IN 6" OAK TREE
260' LT. STA. 2170+43.21
NORTH = 367968.4 +\-
EAST = 628270.1 +\-
ELEVATION = 417.66

BENCHMARK SUMMARY

BENCHMARK 937
RR SPIKE IN TWIN 12" OAK TREE
313' RT. STA. 2173+27.20
NORTH = 367624.8 +\-
EAST = 6288009.8 +\-
ELEVATION = 410.95

BENCHMARK 938
RR SPIKE IN 14" ELM TREE
1140' RT. STA. 2174+08.74
NORTH = 366959.4 +\-
EAST = 629307.4 +\-
ELEVATION = 406.02

BENCHMARK 939
RR SPIKE IN 12" HACKBERRY TREE
1438' RT. STA. 2179+76.33
NORTH = 366997.9 +\-
EAST = 629947.5 +\-
ELEVATION = 404.57

BENCHMARK 940
RR SPIKE IN 36" OAK TREE
84' LT. STA. 2189+94.71
NORTH = 368827.1 +\-
EAST = 630030.9 +\-
ELEVATION = 413.75

CONTROL MONUMENTS AND TRAVERSE POINTS

POINT	EAST	NORTH	ELEVATION	DESCRIPTION
53	624271.6030	365410.5127	0.00	REBAR & CAP
54	624558.8014	365425.4149	0.00	REBAR & CAP
55	624993.6244	365680.0932	0.00	REBAR & CAP
56	625257.6037	365834.8823	0.00	REBAR & CAP
57	625485.0064	365910.0746	0.00	REBAR & CAP
58	625674.3787	365907.5880	0.00	REBAR & CAP
59	625818.9836	366020.9021	0.00	REBAR & CAP
60	625882.7450	366211.2744	0.00	REBAR & CAP
61	626097.7449	366425.8797	0.00	REBAR & CAP
62	626584.8461	366339.2263	427.013	REBAR & CAP
63	626921.8205	366951.1293	420.702	REBAR & CAP
64	627202.8537	367603.3113	420.283	REBAR & CAP
65	627476.9270	368095.3089	431.079	REBAR & CAP
66	628052.1673	367876.7722	417.733	REBAR & CAP
67	628729.5206	367627.2411	411.406	REBAR & CAP
68	629850.6079	367101.2449	405.056	REBAR & CAP
69	629932.8803	368047.4095	405.548	REBAR & CAP

ALL BEARINGS SHOWN ARE TRUE GRID BEARINGS

THE HORIZONTAL DATUM FOR THIS PROJECT IS NAD83(1997) ADJUSTED BY THE AVERAGE PROJECT COMBINED FACTOR OF 0.999938638. TO ACHIEVE ARKANSAS NORTH ZONE STATE PLANE COORDINATES, MULTIPLY THE PROJECT COORDINATES BY THE AVERAGE PROJECT FACTOR. ALL BEARINGS SHOWN ARE ARKANSAS STATE PLANE NORTH ZONE GRID. VERTICAL DATUM IS NAVD88.

HIGHWAY 71 INTERCHANGE
U.S. HWY. 71 RELOCATION
ARKANSAS STATE HIGHWAY COMMISSION
SURVEY CONTROL AND CENTERLINE GEOMETRY
JOB 040478 SEBASTIAN CO.

200 100 0 100 200 400

DATE REVISED	DATE FILMED	DATE REVISED	DATE FILMED	FED.RD. DIST.NO.	STATE	FED.AID PROJ.NO.	SHEET NO.	TOTAL SHEETS
				6	ARK.		34	229
				JOB NO.	040478			

(2) SURVEY CONTROL DETAILS

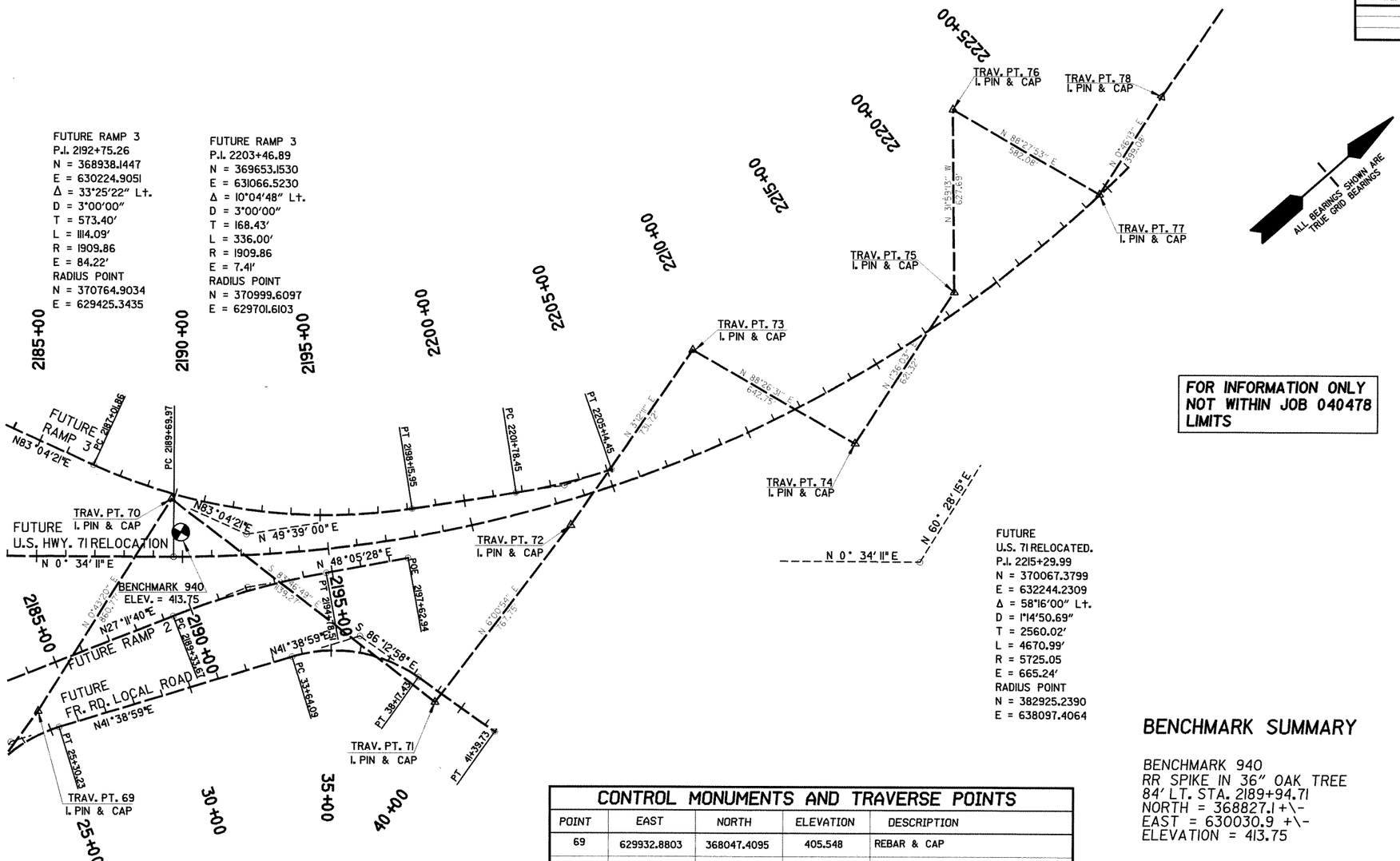

FUTURE RAMP 2	FUTURE FR. RD. LOCAL RD.	FUTURE FR. RD. LOCAL RD.
P.I. 2192+06.91	P.I. 23+69.63	P.I. 36+07.81
N = 368785.1991	N = 367908.7050	N = 368843.7180
E = 630323.4518	E = 629907.6730	E = 630739.2710
Δ = 10°53'48" Rt.	Δ = 38°26'58" Rt.	Δ = 52°08'03" Rt.
D = 2°00'00"	D = 11°30'00"	D = 11°30'00"
T = 273.24'	T = 173.74'	T = 243.72'
L = 544.83'	L = 334.34'	L = 453.34'
R = 2864.79	R = 498.22	R = 498.88
E = 13.00'	E = 29.42'	E = 56.42'
RADIUS POINT	RADUS POINT	RADIUS POINT
N = 366835.7138	N = 367707.4197	N = 36330.4955
E = 632440.3324	E = 630395.4202	E = 630949.5821

THE HORIZONTAL DATUM FOR THIS PROJECT IS NAD83(1997) ADJUSTED BY THE AVERAGE PROJECT COMBINED FACTOR OF 0.999938638. TO ACHIEVE ARKANSAS NORTH ZONE STATE PLANE COORDINATES, MULTIPLY THE PROJECT COORDINATES BY THE AVERAGE PROJECT FACTOR. ALL BEARINGS SHOWN ARE ARKANSAS STATE PLANE NORTH ZONE GRID. VERTICAL DATUM IS NAVD88.

CONTROL MONUMENTS AND TRAVERSE POINTS

POINT	EAST	NORTH	ELEVATION	DESCRIPTION
69	629932.8803	368047.4095	405.548	REBAR & CAP
70	629943.7305	368908.1130	416.109	REBAR & CAP
71	631076.2902	368784.6814	404.599	REBAR & CAP
72	631156.7415	369548.2011	411.025	REBAR & CAP
73	631197.6255	370278.7797	418.216	REBAR & CAP
74	631840.1423	370296.2549	411.940	REBAR & CAP
75	631857.5000	370917.3353	420.238	REBAR & CAP
76	631524.9951	371449.7229	425.451	REBAR & CAP
77	632106.8626	371465.3173	412.836	REBAR & CAP
78	632112.2276	371864.3618	404.419	REBAR & CAP
79	632138.3253	372329.5489	400.764	REBAR & CAP
80	632168.3247	372794.4010	398.001	REBAR & CAP
81	632244.0976	373011.4548	390.967	REBAR & CAP
82	632485.9626	373383.0694	393.411	REBAR & CAP
83	632555.9398	373654.6791	384.109	REBAR & CAP

BENCHMARK SUMMARY

BENCHMARK 940
RR SPIKE IN 36" OAK TREE
84' LT. STA. 2189+94.71
NORTH = 368827.1 +\-
EAST = 630030.9 +\-
ELEVATION = 413.75

STATE OF ARKANSAS
REGISTERED PROFESSIONAL ENGINEER
STANLEY G. KING
No. 9855

HIGHWAY 71 INTERCHANGE
U.S. HWY. 71 RELOCATION
ARKANSAS STATE HIGHWAY COMMISSION
SURVEY CONTROL AND CENTERLINE GEOMETRY
JOB 040478 SEBASTIAN CO.

200 100 0 100 200 400

DATE REVISED	DATE FILMED	DATE REVISED	DATE FILMED	FED.RD. DIST.NO.	STATE	FED.AID PROJ.NO.	SHEET NO.	TOTAL SHEETS
				6	ARK.		35	229
				JOB NO.		040478		

(2) PLAN STA. 1830+00 TO 1858+00

FUTURE GUARDRAIL				FUTURE GUARDRAIL (TYPE A)	FUTURE GUARDRAIL TERMINAL (TYPE 2)	FUTURE THRIE BEAM GUARDRAIL TERMINAL
STA. 1852+99.23	TO	STA. 1856+17.98	(RT. OF N.B. LANES)	= 250 L.F.	1 EACH	1 EACH
STA. 1853+39.64	TO	STA. 1856+58.39	(LT. OF N.B. LANES)	= 250 L.F.	1 EACH	1 EACH

FUTURE CONSTRUCTION
FOR INFORMATION ONLY

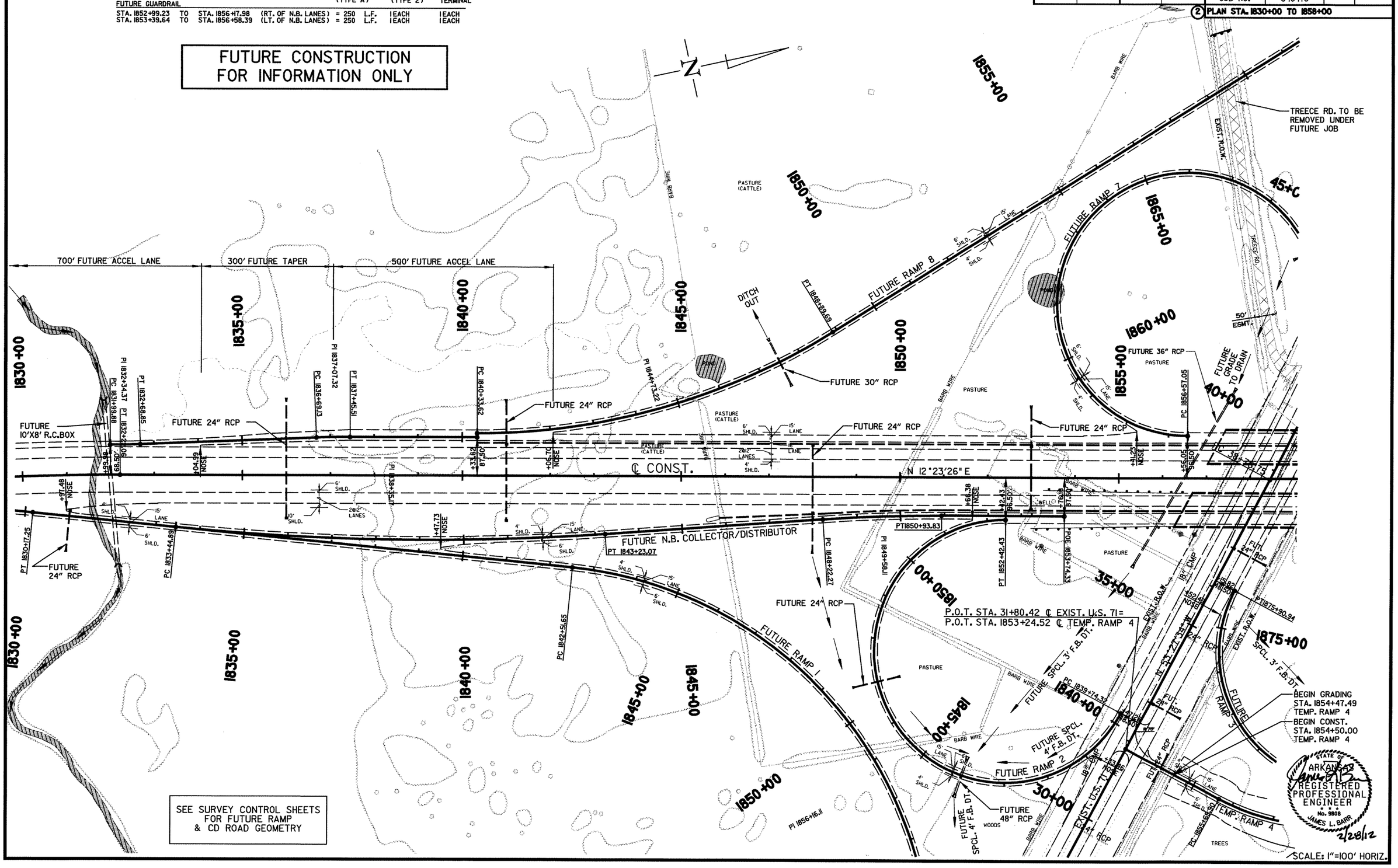

SEE SURVEY CONTROL SHEETS FOR FUTURE RAMP & CD ROAD GEOMETRY

STATE OF ARKANSAS
REGISTERED PROFESSIONAL ENGINEER
No. 9808
JAMES L. BARR
2/28/12

SCALE: 1"=100' HORIZ.

DATE REVISED	DATE FILMED	DATE REVISED	DATE FILMED

FED.RD. DIST.NO.	STATE	FED.AID PROJ.NO.	SHEET NO.	TOTAL SHEETS
6	ARK.		36	229
JOB NO.		040478		

(2) PROFILE STA. 1830+00 TO 1858+00

FUTURE BRIDGE DATA U.S. 71 RELOC./ EXIST. U.S. 71		
	BRIDGE A	BRIDGE B
BEGIN BRIDGE	STA. 1857+06.67	STA. 1856+64.46
END BRIDGE	STA. 1860+29.17	STA. 1859+86.96
LENGTH	322' - 6"	322' - 6"
SPANS	320' - 0" CONT. PLATE GIRDER UNIT (60'-100'-100'-60')	320' - 0" CONT. PLATE GIRDER UNIT (60'-100'-100'-60')

630 620 610 600 590 580 570 560 550 540 530 520 510 500 490 480 470 460

PVT 1830+60.37
EL. 492.09

PROPOSED FUTURE GRADE

EXISTING GROUND

MAX. SUPER. e = +3.7%

+35

350' TRANS. FROM +3.7% TO -2.0%

+85

+00
10'X8' RCBC (FUTURE)

+00
TY. RM D.I. (FUTURE)
W/ 24" RCP
TOP D.I. = 492.00
F.L. D.I. = 487.70
102' RT. OF ℄
TOP D.I. = 492.30
F.L. D.I. = 486.70
F.L. OUTLET 480.50
℄ MEDIAN

+00
TY. RM D.I. (FUTURE)
W/ 24" RCP
TOP D.I. = 497.60
F.L. D.I. = 492.40
104' RT. OF ℄
TOP D.I. = 497.60
F.L. D.I. = 491.90
℄ MAINLINE MEDIAN

+00
TY. ST D.I. (FUTURE)
W/ 24" RCP
TOP D.I. = 502.40
F.L. D.I. = 491.50
F.L. OUTLET = 485.20
74' LT. OF ℄

.07%

+00
TY. RM D.I. (FUTURE)
W/ 24" RCP
TOP D.I. = 505.00
F.L. D.I. = 500.70
℄ MAINLINE MEDIAN

+00
TY. ST D.I. (FUTURE)
W/ 24" RCP
TOP D.I. = 509.80
F.L. D.I. = 505.40
74' LT. OF ℄
TOP D.I. = 509.10
F.L. D.I. = 500.30
F.L. OUTLET 492.40
80' RT. OF ℄

+00
TY. RM D.I. (FUTURE)
W/ 24" RCP
TOP D.I. = 510.40
F.L. D.I. = 506.10
℄ MAINLINE MEDIAN

+00
TY. ST D.I. (FUTURE) (2)
W/ 24" RCP
TOP D.I. = 515.30
F.L. D.I. = 510.90
72' RT. OF ℄
TOP D.I. = 515.30
F.L. D.I. = 505.80
72' LT. OF ℄

+50
36" (FUTURE RCP)
F.L. INLET= 490.00
F.L. OUTLET= 487.70

4" WATER LINE

21'

FUTURE BRIDGES SEE TABLE

BEGIN BRIDGE SEE TABLE THIS SHEET

EL. 521.47

1830+00 1835+00 1840+00 1845+00 1850+00 1855+00

FUTURE CONSTRUCTION FOR INFORMATION ONLY

STATE OF ARKANSAS
REGISTERED PROFESSIONAL ENGINEER
CHARLES J. KING

SCALE: 1"=100' HORIZ.
1"=10' VERT.

DATE REVISED	DATE FILMED	DATE REVISED	DATE FILMED

FED.RD. DIST.NO.	STATE	FED.AID PROJ.NO.	SHEET NO.	TOTAL SHEETS
6	ARK.		37	229
JOB NO.		040478		

(2) PLAN STA. 1858+00 TO 1886+00

	FUTURE GUARDRAIL (TYPE A)	FUTURE GUARDRAIL TERMINAL (TYPE 2)	FUTURE THRIE BEAM GUARDRAIL TERMINAL
STA. 1860+35.24 TO STA. 1863+53.99 (LT. OF S.B. LANES)	= 250 L.F.	1EACH	1EACH
STA. 1860+75.65 TO STA. 1863+94.40 (RT. OF S.B. LANES)	= 250 L.F.	1EACH	1EACH

FUTURE GUARDRAIL

STA. 1864+50 ℄ U.S. 71 RELOC - CONST.
DBL. 6' X 5' X 409' R.C BOX CULV'T
(0°SKEW)
D.A. = 151.5 ac, Q50 = 337.9 cfs
USE STD. DWG. FOR DBL. 6' X 5' R.C.
BOX CULV'T

STA. 1864+66 ℄ RAMP 5 @ U.S. 71 RELOC - CONST.
10' X 5' X 215' R.C BOX CULV'T
(30° RT. FWD. SKEW)
D.A. = 129.8 ac, Q50 = 286.6 cfs
USE STD. DWG. FOR 10' X 5' R.C.
BOX CULV'T (30° SKEW)

P.O.T. STA. 49+94.16 ℄ EXIST. U.S. 71 =
P.O.T. STA. 1860+08.20 ℄ TEMP. RAMP 5

STA. 1864+40 ℄ RAMP 4 @ EXIST. U.S. 71 - CONST.
DBL 6' X 5' X 209' R.C. BOX CULV'T
(20° LT. FWD. SKEW)
D.A. = 160.5 ac, Q50 = 335.4 cfs
USE STD. DWG. FOR DBL. 6' X 5' R.C.
BOX CULV'T (15° SKEW)

STA. 1875+00 ℄ U.S. 71 RELOC- CONST.
TYPE "RM" DROP INLET IN MEDIAN
4'-0" X 3'-0" X H = 4'-10"
WITH 24" X 96' R.C. PIPE CULV'T LT.
(CLASS III) WITH TYPE 3 BEDDING
WITH TYPE "RM" DROP INLET 99' LT.
4'-0" X 3'-0" X H = 4'-4"
AND 24" X 70' R.C. PIPE CULV'T RT.
(CLASS III) WITH TYPE 3 BEDDING
WITH TYPE "ST" DROP INLET 72.5' RT.
4'-0" X 3'-0" X H = 10'-5"
PLUS 24" X 96' R.C. PIPE CULV'T RT.
(CLASS III) WITH TYPE 3 BEDDING
WITH F.E.S. RT.
CONCRETE DITCH PAVING (TY. B, W=4'-0")
W/ ENERGY DISSIPATORS = 56 SQ. YD.

STA. 1865+00 ℄ U.S. 71 RELOC- CONST.
TYPE "RM" DROP INLET IN MEDIAN
4'-0" X 3'-0" X H = 3'-0"
WITH 24" X 70' R.C. PIPE CULV'T LT.
(CLASS III) WITH TYPE 3 BEDDING
WITH TYPE "ST" DROP INLET 72.5' LT.
4'-0" X 3'-0" X H = 5'-6"
AND 24" X 70' R.C. PIPE CULV'T RT.
(CLASS III) WITH TYPE 3 BEDDING
WITH TYPE "ST" DROP INLET 72.5' RT.
4'-0" X 3'-0" X H = 8'-10"
PLUS 24" X 58' R.C. PIPE CULV'T RT.
(CLASS III) WITH TYPE 3 BEDDING
WITH F.E.S. RT.
CONCRETE DITCH PAVING (TY. B, W=4'-0")
W/ ENERGY DISSIPATORS = 32 SQ. YD.

STA. 1871+25 ℄ U.S. 71 RELOC- CONST.
TYPE "RM" DROP INLET 84' LT.
4'-0" X 3'-0" X H = 6'-0"
WITH 24" X 225' R.C. PIPE CULV'T LT.
(CLASS III) WITH TYPE 3 BEDDING
TIE TO TYPE "ST" DROP INLET
AT STA. 1869+00 72.5' LT.

CONCRETE DITCH PAVING (TYPE B) ℄ RAMP 5

STA.	STA.	SIDE	"W"	SQ. YDS.
1876+32	1876.75	LT	8'	38.22

P.O.T. STA. 1858+46.91 ℄ U.S. 71 RELOCATED =
P.O.T. STA. 38+80.06 ℄ EXIST. U.S. 71
4°65'51.00"

STA. 1859+64.11
BEGIN EARTHWORK

BEGIN GRADING
STA. 1861+48.14
TEMP. RAMP 5

BEGIN CONST.
STA. 1861+50.00
TEMP. RAMP 5

℄ MEDIAN
STA. 1860+08.06
BEGIN JOB 040478

STA. 1860+55 ℄ U.S. 71 RELOC- CONST.
TYPE "RM" DROP INLET IN MEDIAN
4'-0" X 3'-0" X H = 4'-4"
WITH 24" X 80' R.C. PIPE CULV'T LT.
(28° LT. FWD. SKEW)
(CLASS III) WITH TYPE 3 BEDDING
WITH TYPE "ST" DROP INLET 72.5' LT.
4'-0" X 3'-0" X H = 5'-5"
AND 24" X 80' R.C. PIPE CULV'T RT.
(28° LT. FWD SKEW)
(CLASS III) WITH TYPE 3 BEDDING
WITH TYPE "ST" DROP INLET 72.5' RT.
4'-0" X 3'-0" X H = 9'-6"
PLUS 24" X 68' R.C. PIPE CULV'T RT.
(0° SKEW)
(CLASS III) WITH TYPE 3 BEDDING
WITH F.E.S. RT.
CONCRETE DITCH PAVING (TY. B, W=4'-0")
W/ ENERGY DISSIPATORS = 25 SQ. YD.

STA. 1883+50 ℄ U.S. 71 RELOC- CONST.
TYPE "RM" DROP INLET IN MEDIAN
4'-0" X 3'-0" X H = 3'-0"
WITH 24" X 124' R.C. PIPE CULV'T RT.
(CLASS III) WITH TYPE 3 BEDDING
WITH F.E.S. RT.

STA. 1869+00 ℄ U.S. 71 RELOC- CONST.
TYPE "RM" DROP INLET IN MEDIAN
4'-0" X 3'-0" X H = 3'-0"
WITH 24" X 70' R.C. PIPE CULV'T LT.
(CLASS III) WITH TYPE 3 BEDDING
WITH TYPE "ST" DROP INLET 72.5' LT.
4'-0" X 3'-0" X H = 8'-8"
PLUS 24" X 78' R.C. PIPE CULV'T LT.
(CLASS III) WITH TYPE 3 BEDDING
WITH F.E.S. LT.
CONCRETE DITCH PAVING (TY. B, W=4'-0")
W/ ENERGY DISSIPATORS = 36 SQ. YD.
AND 24" X 70' R.C. PIPE CULV'T RT.
(CLASS III) WITH TYPE 3 BEDDING
WITH TYPE "ST" DROP INLET 72.5' RT.
4'-0" X 3'-0" X H = 5'-6"

REMOVAL & DISPOSAL OF FENCE
STA. 1860+08.06 - STA. 1893+62.58 ℄ U.S. 71 RELOC. = 7959.55 L.F.
NOTE: QUANTITY INCLUDES ALL FENCE REMOVAL WITHIN RIGHT-OF-WAY
BOUNDARY FOR ENTIRE PROJECT.

SEE INTERCHANGE
LAYOUT FOR RAMP
& CD ROAD GEOMETRY

5' CHAIN LINK FENCE
STA. 1848+61.30 RT. - STA. 1886+09.29 RT. ℄ U.S. 71 RELOC. = 4582 LF
STA. 1870+69.97 LT. - STA. 1885+69.90 LT. ℄ U.S. 71 RELOC. = 3675 LF W/ 1 - 16' VEHICULAR GATE

STA. 1860+00 ℄ RAMP 4 @ EXIST. U.S. 71 - CONST.
36"X 230' R.C. PIPE CULV'T
(0° SKEW)
(CLASS V) WITH TYPE 3 BEDDING
WITH F.E.S. LT. & RT.
D.A. = 9.2 ac, Q50 = 35.2 cfs

P.O.T. STA. 1885+93.77 ℄ U.S. 71 RELOCATED =
P.O.T. STA. 57+55.45 ℄ COUNTY RD. 8

STATE OF ARKANSAS
REGISTERED PROFESSIONAL ENGINEER
No. 9808
JAMES L. BARR
2/28/12

SCALE: 1"=100' HORIZ.

DATE REVISED	DATE FILMED	DATE REVISED	DATE FILMED	FED.RD. DIST.NO.	STATE	FED.AID PROJ.NO.	SHEET NO.	TOTAL SHEETS
				6	ARK.		38	229
				JOB NO.	040478			

(2) PROFILE STA. 1858+00 TO 1886+00

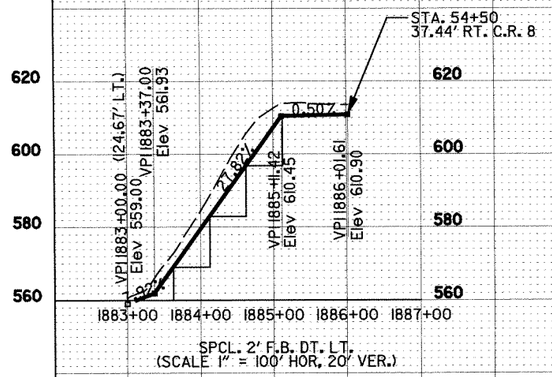

SPCL. 2' F.B. DT. LT.
(SCALE 1" = 100' HOR, 20' VER.)

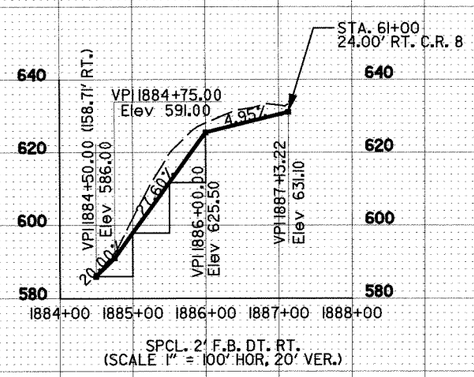

SPCL. 2' F.B. DT. RT.
(SCALE 1" = 100' HOR, 20' VER.)

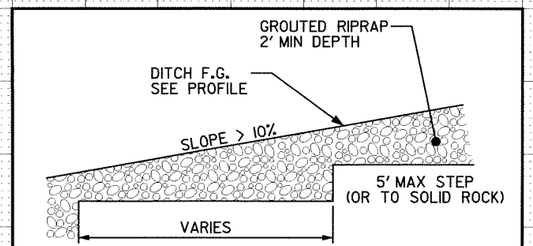

SPCL. DT. STEP DETAIL (N.T.S.)

STA. 1885+93.77 ℄ U.S. 71 RELOC. =
STA 57+55.47 ℄ COUNTY ROAD 8

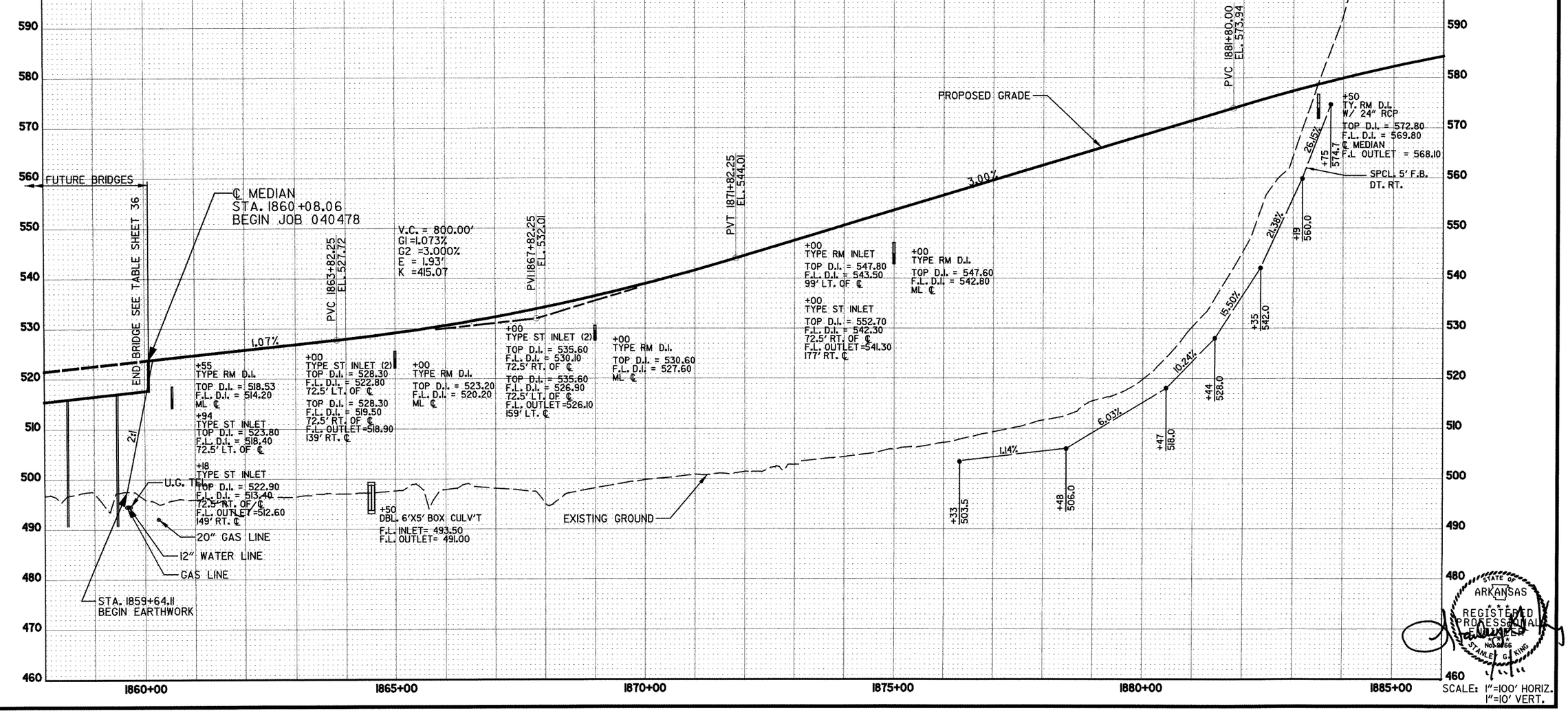

STATE OF ARKANSAS
REGISTERED PROFESSIONAL ENGINEER
No. 9866
STANLEY G. KING

SCALE: 1"=100' HORIZ.
1"=10' VERT.

DATE REVISED	DATE FILMED	DATE REVISED	DATE FILMED

FED. RD. DIST. NO.	STATE	FED. AID PROJ. NO.	SHEET NO.	TOTAL SHEETS
6	ARK.		39	229
JOB NO.		040478		

(2) PLAN & PROFILE STA. 1886+00 TO 1914+00

STA. 1902+00 ℄ U.S. 71 RELOC- IN PLACE
TYPE "RM" DROP INLET IN MEDIAN
4'-0" X 3'-0" X H = 3'-0"
WITH 24" X 98' R.C. PIPE CULV'T
(CLASS III) WITH TYPE 3 BEDDING
WITH F.E.S. LT.

STA. 1908+50 ℄ U.S. 71 RELOC- IN PLACE
TYPE "RM" DROP INLET IN MEDIAN
4'-0" X 5'-0" X H = 5'-0"
WITH 48" X 104' R.C. PIPE CULV'T LT.
(CLASS III) WITH TYPE 3 BEDDING
WITH F.E.S. LT.
AND 48" X 92' R.C. PIPE CULV'T RT.
(CLASS III) WITH TYPE 3 BEDDING
WITH F.E.S. RT.

STA. 1913+50 ℄ U.S. 71 RELOC- IN PLACE
TYPE "RM" DROP INLET IN MEDIAN
4'-0" X 3'-0" X H = 3'-0"
WITH 24" X 98' R.C. PIPE CULV'T
(CLASS III) WITH TYPE 3 BEDDING
WITH F.E.S. LT.

PROP. R.O.W., C.A. & FENCE
CONST. LIMITS
℄ CONST.
℄ COUNTY RD. 8
PC 1888+09.12
PI 1889+04.94
PT 1890+00.00
PC 1894+38.02
PT 1886+46.19
PC 1885+69.79
PI 59+30.89
300' TAPER
700' ACCEL LANE
50' EASEMENT
16'-0" GATE
PROP. R.O.W.
PI 1886+07.99
55+00
SPCL. "V" DT.
SPCL. 5' F.B. DT.
SPCL. 4' F.B. DT.
24" RCP
48" RCP
POND
WELL HOUSE
SHED
BARN
MOBILE HOME
CHICKEN BARN
CONC. PADS
GRAVEL
BARB WIRE
CHAIN LINK
PASTURE/CATTLE
LAWN
GARDEN
CONC.
STONE
GAR.
ELEC. OVERHEAD
IRR.
10' SHLD.
6' SHLD.
2@12' LANES

STA. 1893+62.58
END JOB 040478=
BEGIN JOB 040458

U.S. 71 RELOCATED
P.I. 1915+59.41
N = 349705.1271
E = 610653.2784
Δ = 24°22'30" Rt.
D = 0°35'00"
T = 2121.38'
L = 4178.59'
E = 226.48'
℄ = N.C.

5' CHAIN LINK FENCE
STA. 1886+02.89 LT. - 1894+38.02 LT. ℄ U.S. 71 RELOC. = 900 LF
STA. 1886+41.16 RT. - 1894+38.02 RT. ℄ U.S. 71 RELOC. = 851 LF W/ 1 - 16' VEHICULAR GATE

SCALE: 1"=100' HORIZ
1"=10' VERT.

PVI 1891+80.00
EL. 603.94
3.00%
3:1
STA. 1893+62.58
END JOB 040478=
BEGIN JOB 040458
V.C. = 2000.00'
G1 = 3.000%
G2 = -2.074%
E = -12.68'
K = 394.19
EXISTING GROUND
PROPOSED GRADE
PVT 1901+80.00
EL. 583.21
-3.40%
-5.00%
-3.00%
-2.07%
-0.51%
-2.63%
-3.95%
-1.28%
-5.28%
+00 583.8
SPCL. "V" DT. LT.
+00 582.3
SPCL. "V" DT. RT.
+50 574.8
+00 573.6
+00 570.3
+00 TY. RM D.I. W/ 24" RCP
TOP D.I. = 577.13
F.L. D.I. = 574.13
F.L. OUTLET = 573.64
℄ MEDIAN
+50 568.5
+50 TY. RM D.I. W/ 48" RCP
TOP D.I. = 563.70
F.L. D.I. = 558.70
F.L. INLET = 560.60
F.L. OUTLET = 556.60
℄ MEDIAN
+50 560.6 RT.
+50 556.5 LT.
SPCL. 5' F.B. DT. LT.
+01 553.3
SPCL. 4' F.B. DT. RT.
+50 556.8
+50 TY. RM D.I. W/ 24" RCP
TOP D.I. = 553.30
F.L. D.I. = 550.30
F.L. OUTLET = 549.80
℄ MEDIAN

EARTHWORK
STA. 1859+64.11 TO STA. 1893+62.58
LOCATION: U.S. 71 RELOCATED
UNCLASSIFIED EXCAVATION: 307861 CU. YD.
COMPACTED EMBANKMENT: 682741 CU. YD.
STABILIZING LAYER: 133121 CU. YD.

600 590 580 570 560 550 540 530 520
1886+00 1890+00 1895+00 1900+00 1905+00 1910+00

STATE OF ARKANSAS
REGISTERED PROFESSIONAL ENGINEER
No. 9166
JAMES G. KING

DATE REVISED	DATE FILMED	DATE REVISED	DATE FILMED	FED.RD. DIST.NO.	STATE	FED.AID PROJ.NO.	SHEET NO.	TOTAL SHEETS
				6	ARK.		40	229
				JOB NO.		040478		

(2) U.S. 71 INTERCHANGE LAYOUT

FUTURE S.B. COLLECT./DIST.
P.I. 1832+34.37
N = 341588.4590
E = 608799.8790
Δ = 2°04'09" Lt.
D = 3°00'00"
T = 34.49'
L = 68.97'
E = 0.3'
MATCH MAINLINE

FUTURE S.B. COLLECT./DIST.
P.I. 1837+07.32
N = 342054.0930
E = 608882.8140
Δ = 2°17'29" Rt.
D = 3°00'00"
T = 38.20'
L = 76.38'
E = 0.38'
NO SUPER

FUTURE RAMP 7
C. C.
N = 344025.3247
E = 608999.5104
Δ = 295°47'42" Rt.
D = 19°05'55"
L = 1548.78'
e = 9.50%
Ls = 210'

FUTURE RAMP 8
P.I. 1844+73.22
N = 342804.6990
E = 609038.5020
Δ = 32°06'09" Lt.
D = 3°45'00"
T = 439.60'
L = 856.07'
E = 61.98'
e = 6.90%
Ls = 215'

FUTURE RAMP 8
P.I. 1866+27.05
N = 344854.0850
E = 608304.2330
Δ = 28°02'21" Lt.
D = 4°45'00"
T = 301.19'
L = 590.30'
E = 37.03'
e = 8.00%
Ls = 250'

FUTURE RAMP 8
P.I. 1871+28.24
N = 345199.1790
E = 607924.2980
Δ = 5°42'29" Lt.
D = 3°00'00"
T = 95.21'
L = 190.27'
E = 2.37'
NO SUPER

FUTURE RAMP 1
P.I. 1856+16.11
N = 343819.8180
E = 609713.1140
Δ = 112°12'30" Rt.
D = 6°15'00"
T = 1364.45'
L = 1795.33'
E = 727.08'
e = 9.30%
Ls = 275'

FUTURE N.B. COLLECT./DIST.
P.I. 1828+24.01
N = 341164.5990
E = 608845.3060
Δ = 11°38'05" Rt.
D = 3°00'00"
T = 194.58'
L = 387.82'
E = 9.89'
MATCH MAINLINE

FUTURE N.B. COLLECT./DIST.
P.I. 1838+35.17
N = 342127.0020
E = 609159.8490
Δ = 9°46'55" Lt.
D = 1°00'00"
T = 490.28'
L = 978.18'
E = 20.94'
e = 2.10%
Ls = 300'

FUTURE RAMP 2
C. C.
N = 343450.2070
E = 609685.0730
Δ = 242°11'28" Rt.
D = 19°05'55"
L = 1268.11'
e = 9.50%
Ls = 210'

FUTURE N.B. COLLECT./DIST.
P.I. 1849+58.11
N = 343240.4840
E = 609322.6290
Δ = 4°04'25" Rt.
D = 1°30'00"
T = 135.84'
L = 271.57'
E = 2.41'
e = 3.10%
Ls = 200'

RAMP 5
P.I. 1869+35.39
N = 344416.4700
E = 609143.4270
Δ = 108°26'30" Lt.
D = 5°45'00"
T = 1382.67'
L = 1885.94'
E = 707.86'
e = 6.80%
Ls = 200'

TEMP. RAMP 5
P.I. 1861+71.72
N = 344933.0210
E = 608639.5610
Δ = 26°53'14" Rt.
D = 11°27'33"
T = 119.52'
L = 234.64'
E = 14.09'
e = 4.50%
Ls = 150'

FUTURE RAMP 6
C. C.
N = 344774.5410
E = 609164.1080
Δ = 245°51'01" Rt.
D = 19°05'55"
L = 1287.27'
e = 9.50%
Ls = 210'

STATE OF ARKANSAS
REGISTERED PROFESSIONAL ENGINEER
STATE ENG. NO. 9026
ENGINEER

S.B. COLLECT./DIST.
P.I. 1866+63.58
N = 344947.7070
E = 609518.5210
Δ = 4°04'25" Lt.
D = 1°30'00"
T = 135.84'
L = 271.57'
E = 2.41'
e = 3.10%
Ls = 200'

S.B. COLLECT./DIST.
P.I. 1877+90.64
N = 346063.0300
E = 609681.5700
Δ = 9°46'54" Rt.
D = 1°00'00"
T = 490.28'
L = 978.18'
E = 20.94'
e = 2.10%
Ls = 200'

S.B. COLLECT./DIST.
P.I. 1889+04.94
N = 347124.4640
E = 610028.4780
Δ = 5°42'30" Lt.
D = 3°00'00"
T = 95.22'
L = 190.28'
E = 2.37'
NO SUPER

STA. 1860+08.06
BEGIN JOB 040478

STA. 1859+64.11
BEGIN EARTHWORK

STA. 1893+62.58
END JOB 040478=
BEGIN JOB 040458

NOTE: SEE NEXT PAGE FOR ADDITIONAL INFORMATION.

TEMP. RAMP 4
P.I. 1858+48.64
N = 344072.7860
E = 610300.0970
Δ = 58°58'28" Lt.
D = 11°27'33"
T = 282.74'
L = 514.65'
E = 74.41'
e = 4.50%
Ls = 150'

RAMP 4
P.I. 1842+39.91
N = 342770.7460
E = 611090.4230
Δ = 5°42'29" Rt.
D = 3°00'00"
T = 95.21'
L = 190.27'
E = 2.37'
NO SUPER

RAMP 4
P.I. 1849+36.66
N = 343244.9810
E = 610579.7630
Δ = 28°27'03" Rt.
D = 4°45'00"
T = 305.79'
L = 598.97'
E = 38.16'
e = 8.00%
Ls = 250'

RAMP 4
P.I. 1872+84.74
N = 345481.4930
E = 609824.1770
Δ = 31°03'28" Rt.
D = 2°45'00"
T = 578.93'
L = 1129.37'
E = 78.94'
e = 5.30%
Ls = 200'

FUTURE RAMP 3
C. C.
N = 344220.6250
E = 609854.3280
Δ = 297°53'04" Rt.
D = 19°05'55"
L = 1559.72'
e = 9.50%
Ls = 210'

N.B. COLLECT./DIST.
P.I. 1881+32.82
N = 346339.5810
E = 610003.4800
Δ = 2°17'31" Lt.
D = 3°00'00"
T = 38.21'
L = 76.40'
E = 0.38'
NO SUPER

N.B. COLLECT./DIST.
P.I. 1886+07.99
N = 346807.3990
E = 610086.8010
Δ = 2°17'30" Rt.
D = 3°00'00"
T = 38.20'
L = 76.40'
E = 0.38'
NO SUPER

U.S. 71 INTERCHANGE LAYOUT - SHEET 1 OF 2

DATE REVISED	DATE FILMED	DATE REVISED	DATE FILMED	FED.RD. DIST.NO.	STATE	FED.AID PROJ.NO.	SHEET NO.	TOTAL SHEETS
				6	ARK.		41	229
				JOB NO.		040478		

(2) U.S. 71 INTERCHANGE LAYOUT

FUTURE RAMP 1

- (A) P.C. 1834+44.89 ℄ FUTURE RAMP 1= 118.67' RT. ℄ FUTURE U.S. 71 RELOC. STA. 1833+49.49
- (B) P.C. 1833+44.89 ℄ FUTURE RAMP 1= STA. 1833+44.89 ℄ FUTURE N.B. C.D.
- (C) P.T. 1860+46.98 ℄ FUTURE RAMP 1= 48.50' LT. ℄ EXIST. U.S. 71 STA. 20+99.95

FUTURE RAMP 2

- (D) P.C. 1839+74.32 ℄ FUTURE RAMP 2= 48.50' LT. ℄ EXIST. U.S. 71 STA. 32+47.25
- (E) P.T. 1852+42.43 ℄ FUTURE RAMP 2= 9.00' RT. ℄ FUTURE N.B.C.D. STA. 1852+40.60
- (F) P.T. 1852+42.43 ℄ FUTURE RAMP 2= 96.50' RT. ℄ FUTURE U.S. 71 RELOC. STA. 1852+42.43

FUTURE RAMP 3

- (G) P.C. 1860+31.22 ℄ FUTURE RAMP 3= 96.50' RT. ℄ U.S. 71 RELOC. STA. 1860+31.22
- (H) P.T. 1875+90.94 ℄ FUTURE RAMP 3= 48.50' RT. ℄ EXIST. U.S. 71 STA. 36+15.82

RAMP 4

- (I) P.C. 1841+44.70 ℄ RAMP 4= 36.50' RT ℄ EXIST. U.S. 71 STA. 16+38.18
- (J) STA. 1860+80.55 ℄ RAMP 4= P.T. 1860+80.55 ℄ TEMP. RAMP 4
- (K) P.T. 1878+35.18 ℄ RAMP 4= 96.50' RT. ℄ U.S. 71 RELOC. STA. 1878+35.18
- (L) P.T. 1878+35.18 ℄ RAMP 4= 9.00' RT. ℄ N.B.C.D. STA. 1878+35.18

TEMP. RAMP 4

- (M) P.C. 1853+24.52 ℄ TEMP. RAMP 4= P.T. 31+80.42 ℄ EXIST. U.S. 71
- (N) P.T. 1860+80.55 ℄ TEMP. RAMP 4= STA. 1860+80.55 ℄ RAMP 4

RAMP 5

- (O) P.C. 1855+52.72 ℄ RAMP 5= 48.50' RT. ℄ EXIST. U.S. 71 STA. 56+64.45
- (P) STA. 1866+50.33 ℄ RAMP 5= STA. 1866+50.33 ℄ TEMP. RAMP 5
- (Q) STA. 1882+78.54 ℄ RAMP 5= STA. 1882+78.54 ℄ S.B.C.D.
- (R) P.T. 1882+78.54 ℄ RAMP 5= 118.80' LT. ℄ U.S. 71 RELOC. STA. 1882+81.49

TEMP. RAMP 5

- (S) STA. 1860+08.20 ℄ TEMP. RAMP 5= STA. 49+94.16 ℄ EXIST. U.S. 71
- (T) STA. 1866+50.33 ℄ TEMP. RAMP 5= STA. 1866+50.33 ℄ RAMP 5

FUTURE RAMP 6

- (U) P.C. 1851+36.86 ℄ FUTURE RAMP 6= 48.50' RT. ℄ EXIST. U.S. 71 STA. 44+78.36
- (V) P.C. 1864+24.13 ℄ FUTURE RAMP 6= 9.00' LT. ℄ S.B.C.D. STA. 1864+18.40
- (W) P.T. 1864+24.13 ℄ FUTURE RAMP 6= 96.50' LT. ℄ U.S.71 RELOC. STA.1864+24.13

FUTURE RAMP 7

- (X) P.C. 1872+05.83 ℄ FUTURE RAMP 7= 96.50' LT. ℄ FUTURE U.S. 71 RELOC. STA. 1856+57.05
- (Y) P.T. 1872+05.83 ℄ FUTURE RAMP 7= 48.50' LT. ℄ EXIST. U.S. 71 STA. 41+54.49

FUTURE RAMP 8

- (Z) P.C. 1840+33.62 ℄ FUTURE RAMP 8= 9.00' LT. ℄ FUTURE S.B.C.D. STA. 1840+34.25
- (AA) P.C. 1840+33.62 ℄ FUTURE RAMP 8= 96.50' LT. ℄ FUTURE U.S. 71 RELOC. STA. 1840+33.62
- (AB) P.T. 1872+23.30 ℄ FUTURE RAMP 8= 48.50' LT. ℄ EXIST. U.S. 71 STA. 58+22.51

N.B. C.D.

- (AC) STA. 1826+29.43 ℄ FUTURE N.B.C.D.= 56.50' RT. ℄ FUTURE U.S. 71 RELOC. STA. 1826+29.43
- (AD) STA. 1833+44.89 ℄ FUTURE N.B.C.D.= P.C. 1833+44.89 ℄ FUTURE RAMP 1
- (AE) P.T. 1853+74.33 ℄ FUTURE N.B.C.D.= 87.50' RT. ℄ FUTURE U.S. 71 RELOC. STA. 1853+76.16
- (AF) STA. 1878+35.18 ℄ N.B.C.D.= 87.50' RT. ℄ U.S. 71 RELOC. STA. 1878+35.18
- (AG) STA. 1878+35.18 ℄ N.B.C.D.= 9.00' LT. ℄ RAMP 4 STA. 1878+35.18
- (AH) P.T. 1886+46.19 ℄ N.B.C.D.= 68.50' RT. ℄ U.S. 71 RELOC. STA. 1886+45.83

S.B. C.D.

- (AI) STA. 1831+99.88 ℄ FUTURE S.B.C.D.= 68.50' LT. ℄ FUTURE U.S. 71 RELOC. STA. 1831+99.88
- (AJ) P.T. 1840+34.25 ℄ FUTURE S.B.C.D.= 9.00' RT. ℄ FUTURE RAMP 8 STA. 1840+33.62
- (AK) P.T. 1840+34.25 ℄ FUTURE S.B.C.D.= 87.50' LT. ℄ FUTURE U.S. 71 RELOC. STA. 1840+33.62
- (AL) P.T. 1862+47.23 ℄ S.B.C.D.= 87.50' LT. ℄ U.S. 71 RELOC. STA. 1862+52.96
- (AM) P.O.T. 1864+18.40 ℄ S.B.C.D.= 9.00' LT. ℄ FUTURE RAMP 6 STA. 1864+24.13
- (AN) STA. 1882+78.54 ℄ S.B.C.D.= STA. 1882+78.54 ℄ RAMP 5
- (AO) P.T. 1890+00.01 ℄ S.B.C.D.= 56.50' LT. ℄ U.S. 71 RELOC. STA. 1890+04.18

STATE OF ARKANSAS
REGISTERED PROFESSIONAL ENGINEER
STANLEY G. KING

U.S. 71 INTERCHANGE LAYOUT - SHEET 2 OF 2

DATE REVISED	DATE FILMED	DATE REVISED	DATE FILMED	FED.RD. DIST.NO.	STATE	FED.AID PROJ.NO.	SHEET NO.	TOTAL SHEETS
				6	ARK.		42	229
				JOB NO.		040478		

(2) PROFILE N.B.C.D. & FUTURE N.B.C.D.

STA. 1886+04.83 ℄ NBCD =
STA. 58+25.25 ℄ COUNTY RD. 8

+85 200' TRANS. FROM -5.3% TO -2.0% OUTSIDE LANE ONLY (SEE RAMP 4) +85

7.5' LT. STA. 1878+35.18 ℄ NBCD RD. = 80.00' RT. STA. 1878+35.18 ℄ U.S. 71 RELOC. ELEV. 562.92

PVI 1878+35.18 EL = 562.92

PVC 1882+30.63 EL = 574.78

PVI 1883+30.63 EL = 577.78

PVI 1887+35.11 EL = 580.20

PVT 1884+30.63 EL = 580.00

3.00%

2.31% MAIN LANES

7.5' LT. STA. 1884+35.11 ℄ NBCD RD. = 67.92' RT. STA. 1884+34.58 ℄ U.S. 71 RELOC. ELEV. 580.20

V.C. = 200.00'
G1 = 3.000%
G2 = 2.313%
E = 0.17'
K = 291.08

PROPOSED GRADE

EXISTING GROUND

EARTHWORK QUANTITIES INCLUDED IN MAINLINE

1875+00 1880+00 1885+00 1890+00

640 630 620 610 600 590 580 570 560 550

NORTHBOUND COLLECTOR/DISTRIBUTOR

PVI 1830+92.14 EL. 490.85

0.7% MAIN LANES

1.11%

7.5' LT. STA. 1830+92.14 ℄ FUTURE NBCD RD. = 84.72' RT. STA. 1830+96.88 ℄ FUTURE U.S. 71 RELOC. ELEV. 490.85

PROPOSED FUTURE GRADE

EXISTING GROUND

PVI 1852+75.87 EL. 515.19

7.5' LT. STA. 1852+75.87 ℄ FUTURE NBCD RD. = 80.00' RT. STA. 1852+77.70 ℄ FUTURE U.S. 71 RELOC. ELEV. 515.19

FUTURE CONSTRUCTION FOR INFORMATION ONLY

FUTURE NORTHBOUND COLLECTOR/DISTRIBUTOR

+20 300' TRANSITION FROM -3.7% TO +2.1% +20 MAXIMUM SUPERELEVATION +2.1% +73 200' TRANSITION FROM +2.1% TO -2.0% +73 +72 200' TRANSITION FROM -2.0% TO -3.1% +72 MAX. SUPER. -3.1% +44 200' TRANSITION FROM -3.1% TO -2.0% +44

1825+00 1830+00 1835+00 1840+00 1845+00 1850+00 1855+00

530 520 510 500 490 480 470 460 450

SCALE: 1"=100' HORIZ.
1"=10' VERT.

STATE OF ARKANSAS REGISTERED PROFESSIONAL ENGINEER No. 9866 JAMES M. KING

DATE REVISED	DATE FILMED	DATE REVISED	DATE FILMED	FED.RD. DIST.NO.	STATE	FED.AID PROJ.NO.	SHEET NO.	TOTAL SHEETS
				6	ARK.		43	229
				JOB NO.	040478			

(2) PROFILE S.B.C.D. & FUTURE S.B.C.D.

350' TRANSITION FROM +3.7% TO -2.0% (MATCH MAIN LANES)

+85

PVI 1834+05.01 EL. 495.59

PROPOSED FUTURE GRADE

PVI 1840+34.25 EL. 501.85

7.5' RT. STA. 1840+34.25 FUTURE SBCD RD. = 80.00' LT. STA. 1840+33.62 ℄ FUTURE U.S. 71 RELOC. ELEV. 501.85

MAIN LANES 1.07% 0.99%

7.5' RT. STA. 1834+05.01 ℄ FUTURE SBCD RD. = 67.92' LT. STA. 1834+04.91 ℄ FUTURE U.S. 71 RELOC. ELEV. 495.59

EXISTING GROUND

FUTURE CONSTRUCTION FOR INFORMATION ONLY

1835+00 1840+00 1845+00

FUTURE SOUTHBOUND COLLECTOR/DISTRIBUTOR

NOTE: SEE SPCL. DT. LT. DETAIL AND PROFILE SHEET 38

STA. 1885+73.55 ℄ U.S. 71 RELOC. = STA. 56+66.37 ℄ COUNTY RD. 8

7.5' RT. STA. 1885+46.02 SBCD RD. = 84.74' LT. STA. 1885+46.90 ℄ U.S. 71 RELOC. ELEV. 582.33

+78 200' TRAN. FROM -2.0% TO -3.1% +78

MAX. SUPER e=-3.1%

+49 200' TRAN. FROM -3.1% TO -2.0% +49

+50 200' TRAN. FROM -2.0% TO +2.1% +50

MAX. SUPER e=+2.1%

+29 200' TRAN. FROM +2.1% TO -2.0% +29

MAIN LANES 2.10%

PVI 1883+96.02 EL =579.17

PVT 1885+46.02 EL =582.33

PVC 1882+46.02 EL =575.10

+50 572.3

29.74%

2.72%

V.C. = 300.00' G1=2.720% G2 =2.101% E = -0.23' K =485.28

+12 561.0

SPCL. 5' F.B. DT. LT.

17.28%

PROPOSED GRADE

V.C. = 400.00' G1=1.070% G2 =3.230% E = 1.08' K =185.24

PVI 1863+45.68 EL =526.71

PVC 1865+00.00 EL =528.36

PVI 1867+00.00 EL =530.50

PVT 1869+00.00 EL =536.96

3.23%

PVC 1870+50.00 EL =541.80

PVI 1872+00.00 EL =546.65

PVT 1873+50.00 EL =550.73

1.07%

7.5' RT. STA. 1863+45.68 SBCD RD. = 80.00' LT. STA. 1863+51.41 ℄ U.S. 71 RELOC. ELEV. 526.71

V.C. = 300.00' G1=3.230% G2 =2.720% E = -0.19' K =588.23

8.45%

3.07%

+32 530.0

EXISTING GROUND

+90 516.0

+76 508.4

EARTHWORK
STA. 1863+45.68 TO STA. 1885+46.02
LOCATION: SOUTHBOUND COLLECTOR/DISTRIBUTOR
UNCLASSIFIED EXCAVATION: 14436 CU. YD.
COMPACTED EMBANKMENT: 249034 CU. YD.
STABILIZING LAYER: 52827 CU. YD.

SOUTHBOUND COLLECTOR/DISTRIBUTOR

SCALE: 1"=100' HORIZ. 1"=10' VERT.

STATE OF ARKANSAS REGISTERED PROFESSIONAL ENGINEER JAMES E. KING NO. 9668

1860+00 1865+00 1870+00 1875+00 1880+00 1885+00 1888+00

510 500 490 480 470 460 590 580 570 560 550 540 530 520 510 500 490 630 620 610 600 590 580 570 560 550 540 530 520 510 500 490

DATE REVISED	DATE FILMED	DATE REVISED	DATE FILMED	FED.RD. DIST.NO.	STATE	FED.AID PROJ.NO.	SHEET NO.	TOTAL SHEETS
				6	ARK.		44	229
				JOB NO.		040478		

(2) PROFILE FUTURE RAMPS 1 & 8

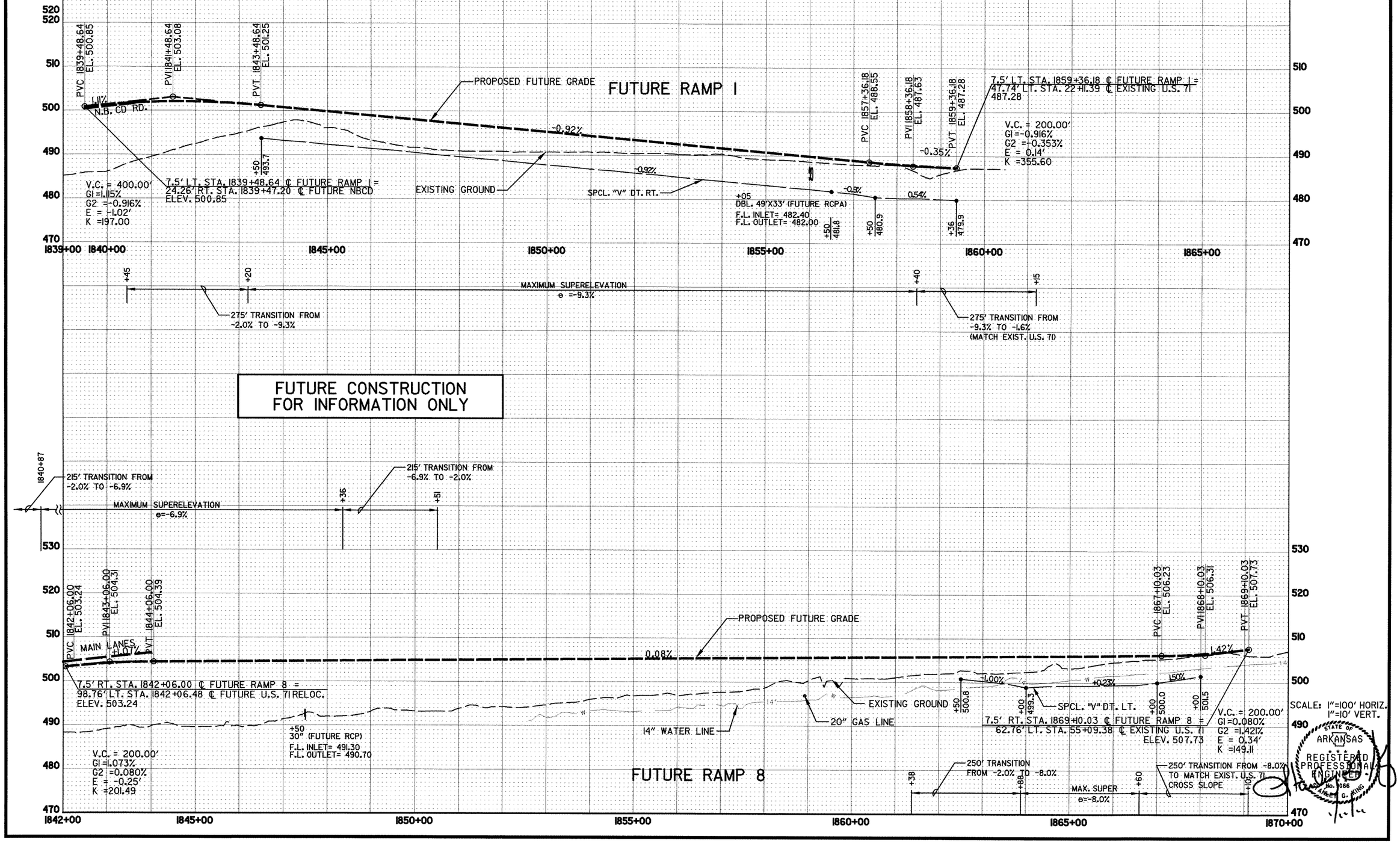

DATE REVISED	DATE FILMED	DATE REVISED	DATE FILMED	FED.RD. DIST.NO.	STATE	FED.AID PROJ.NO.	SHEET NO.	TOTAL SHEETS
				6	ARK.		45	229
				JOB NO.		040478		

(2) PROFILE FUTURE RAMPS 2 & 3

EARTHWORK
STA. 1861+45.14 TO STA. 1862+87.97
LOCATION: FUTURE RAMP 3
UNCLASSIFIED EXCAVATION: 0 CU. YD.
COMPACTED EMBANKMENT: 8459 CU. YD.
STABILIZING LAYER: 2117 CU. YD.

FUTURE RAMP 3

7.5' LT. STA. 1861+45.14 ℄ FUTURE RAMP 3
= 110.90 RT. STA. 1861+45.20 ℄ U.S. 71 RELOC.
ELEV. 523.76

V.C. = 350.00'
G1 =1.073%
G2 =-3.010%
E = -1.79'
K =85.72

MAIN LANE
+1.07%
PVC 1861+45.14 EL. 523.76
PVI 1863+20.14 EL. 525.63
PVT 1864+95.14 EL. 520.36
PROPOSED FUTURE GRADE
-3.01%
END GRADING STA. 1862+87.97 RAMP 3
EXISTING GROUND
20" GAS LINE
U.G. TEL.
12" WATER LINE
PVC 1872+29.11 EL. 498.27
PVI 1873+79.75 EL. 493.75
PVT 1875+29.11 EL. 494.50
V.C. = 300.00'
G1 =-3.010%
G2 =0.505%
E = 1.32'
K =85.35
+65%
-2.72%
-1.04%
-1.80%
7.5' LT. STA. 1875+29.11 ℄ FUTURE RAMP 3
= 47.54' RT. STA. 35+52.89 ℄ EXISTING U.S. 71
ELEV. 494.50
+00 491.5
+25 488.1
+50 486.8
+00 487.7

210' TRANS. FROM -2.0% TO -9.5%
MAX. SUPER e=-9.5%
210' TRANS. FROM -9.5% TO -2.0%

FUTURE RAMP 2

7.5' LT. STA. 1840+86.21 ℄ FUTURE RAMP 2
= 61.94' LT. STA. 31+35.17 ℄ EXISTING U.S. 71
ELEV. 491.61

PVC 1840+86.21 EL. =491.61
V.C. = 600.00'
G1 =0.712%
G2 =2.736%
E = 1.52'
K =296.46
PVI 1843+86.21 EL. =493.74
PVT 1846+86.21 EL. =501.95
PROPOSED FUTURE GRADE
PVC 1849+67.89 EL. =509.66
PVI 1850+67.89 EL. =512.39
PVT 1851+67.89 EL. =513.47
+1.07%
2.74%
V.C. = 200.00'
G1 =2.736%
G2 =1.073%
E = +0.42'
K =120.28
7.5' LT. STA. 1851+67.89 ℄ FUTURE RAMP 2
= 10.94' RT. STA. 1851+64.99 ℄ FUTURE NBCD
ELEV. 513.47
EXISTING GROUND
+0.71%
-0.30%
3.25%
+00 485.3
+00 484.4
+00 490.9
SPCL. 4' F.B. DT. RT.
+00 48" (FUTURE RCP)
F.L. INLET= 484.40
F.L. OUTLET= 484.10
+00 24" (FUTURE RCP)
F.L. INLET= 490.50
F.L. OUTLET= 490.00
4" WATER LINE

210' TRANS. FROM -2.0% TO -9.5%
MAX. SUPER e=-9.5%
210' TRANS. FROM -9.5% TO -2.0%

FUTURE CONSTRUCTION
FOR INFORMATION ONLY

STATE OF ARKANSAS
REGISTERED PROFESSIONAL ENGINEER
JAMES G. KING
No. 9865

SCALE: 1"=100' HORIZ.
1"=10' VERT.

DATE REVISED	DATE FILMED	DATE REVISED	DATE FILMED	FED.RD. DIST.NO.	STATE	FED.AID PROJ.NO.	SHEET NO.	TOTAL SHEETS
				6	ARK.		46	229
				JOB NO.	040478			

(2) PROFILE FUTURE RAMPS 6 & 7

FUTURE CONSTRUCTION FOR INFORMATION ONLY

7.5' LT. STA. 1857+70.98 ℄ FUTURE RAMP 7 =
110.91' LT. STA. 1855+43.05 ℄ FUTURE U.S. 71 RELOC.
ELEV. 517.31

M.L. 1.07%

PROPOSED FUTURE GRADE

-1.47%

EXISTING GROUND

V.C. = 200.00'
G1 =-1.468%
G2 =-0.377%
E = 0.27'
K =183.32

PVC 1869+42.47 EL. 500.51
PVI 1870+42.47 EL. 499.04
PVT 1871+42.47 EL. 498.67

-0.37%

PVC 1857+70.98 EL. 517.31
PVI 1858+70.98 EL. 516.24
PVT 1859+70.98 EL. 514.77

V.C. = 200.00'
G1 =-1.073%
G2 =-1.468%
E = -0.10'
K =506.33

20" GAS LINE

+00 499.3

SPCL. "V" DT. RT.

1.44%

+50
30" (FUTURE RCP)
F.L. INLET= 493.70
F.L. OUTLET= 492.80

-0.40%

4" WATER LINE

+00 492.1

+00 491.7

7.5' LT. STA. 1871+42.47 ℄ FUTURE RAMP 7 =
47.55' LT. STA. 42+19.36 ℄ EXISTING U.S. 71
ELEV. 498.67

FUTURE RAMP 7

+31 +41 +72 +82
210' TRANS. FROM -2.0% TO -9.5%
MAXIMUM SUPERELEVATION -9.5%
210' TRANS. FROM -9.5% TO -2.0%

7.5' LT. STA. 1852+48.18 ℄ FUTURE RAMP 6 =
61.93' RT. STA. 45+89.86 EXISTING U.S. 71
ELEV. 500.72

PVC 1852+48.18 EL. =500.72
PVI 1853+98.18 EL. =501.47
PVT 1855+48.18 EL. =506.03

V.C. = 300.00'
G1 =0.499%
G2 =3.041%
E = 0.95'
K =118.00

BEGIN GRADING STA. 1862+11.35 RAMP 6

PVI 1861+99.59 EL. =525.84

PROPOSED FUTURE GRADE

3.04%

+1.61%

7.5' LT. STA. 1863+49.59 ℄ FUTURE RAMP 6 =
10.94' LT. STA. 1864+94.00 ℄ SBCD
ELEV. 528.26

PVC 1860+49.59 EL. =521.26

V.C. = 300.00'
G1 =3.041%
G2 =1.613%
E = -0.54'
K =210.08

3:1

PVT 1863+49.59 EL. =528.26

+0.50%

GAS LINE

+50
24" (FUTURE RCP)
F.L. INLET= 495.60
F.L. OUTLET= 495.20

+50
30" (FUTURE RCP)
F.L. INLET= 499.00
F.L. OUTLET= 498.00

EXISTING GROUND

12" WATER LINE

U.G. TEL.

FUTURE RAMP 6

+08 +18 +96 +06
210' TRANS. FROM -2.0% TO -9.5%
MAX. SUPER e=-9.5%
210' TRANS. FROM -9.5% TO -2.0%

EARTHWORK
STA. 1862+11.35 TO STA. 1863+49.59
LOCATION: FUTURE RAMP 6
UNCLASSIFIED EXCAVATION: 0 CU. YD.
COMPACTED EMBANKMENT: 3760 CU. YD.
STABILIZING LAYER: 1126 CU. YD.

STATE OF ARKANSAS
REGISTERED PROFESSIONAL ENGINEER
TIMOTHY D. KING

SCALE: 1"=100' HORIZ.
1"=10' VERT.

DATE REVISED	DATE FILMED	DATE REVISED	DATE FILMED	FED.RD. DIST.NO.	STATE	FED.AID PROJ.NO.	SHEET NO.	TOTAL SHEETS
				6	ARK.		47	229
				JOB NO.		040478		

(2) PROFILE RAMP 4 & TEMP. RAMP 4

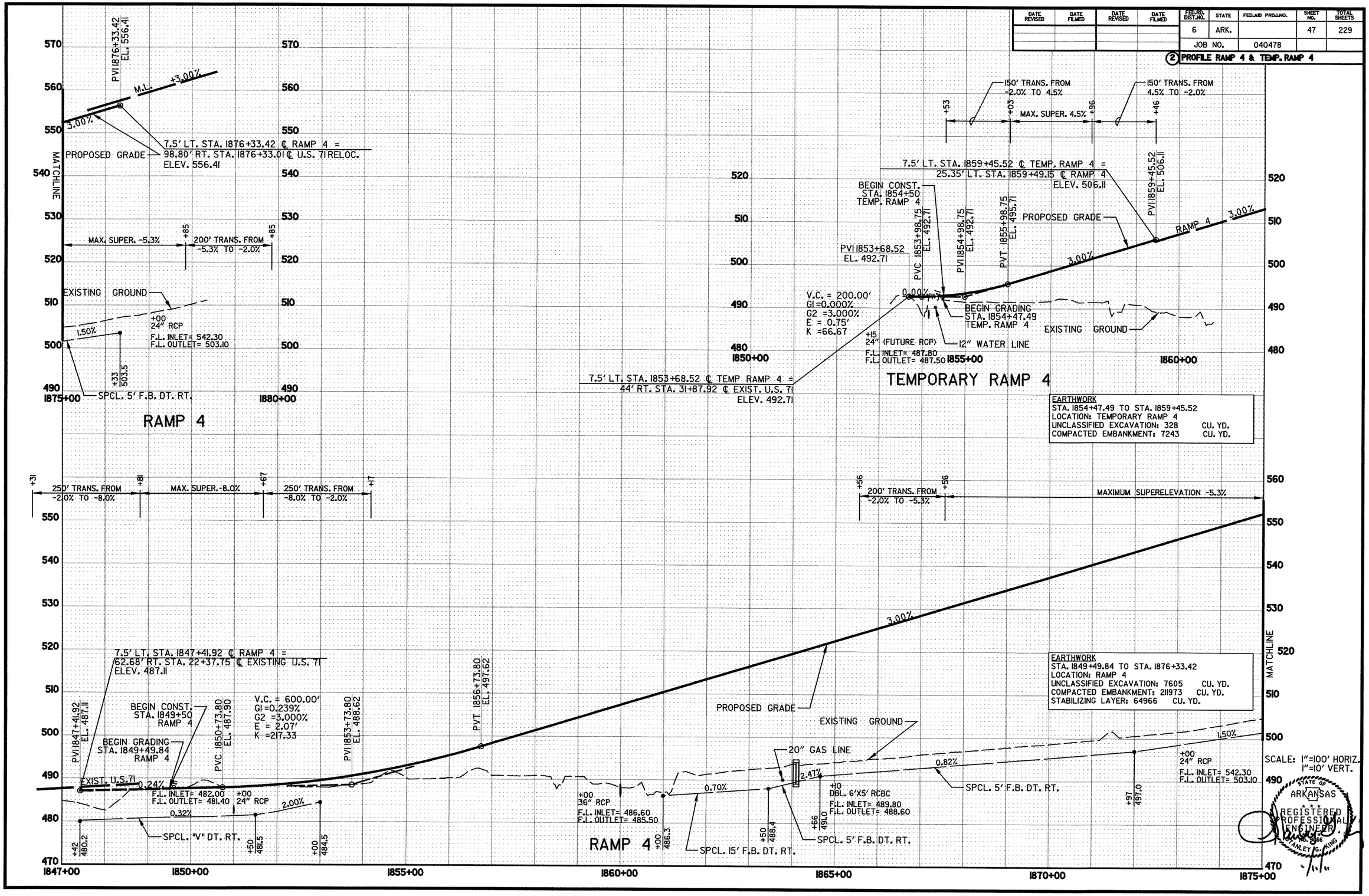

DATE REVISED	DATE FILMED	DATE REVISED	DATE FILMED

FED.RD. DIST.NO.	STATE	FED.AID PROJ.NO.	SHEET NO.	TOTAL SHEETS
6	ARK.		48	229
JOB NO.	040478			

(2) PROFILE RAMP 5 & TEMP. RAMP 5

7.5' RT. STA. 1860+52.20 ℄ TEMP. RAMP 5 =
44' RT. STA. 49+86.66 EXISTING U.S. 71
ELEV. 503.88

EARTHWORK
STA. 1861+48.14 TO STA. 1863+99.33
LOCATION: TEMPORARY RAMP 5
UNCLASSIFIED EXCAVATION: 195 CU. YD.
COMPACTED EMBANKMENT: 2212 CU. YD.

BEGIN GRADING
STA. 1861+48.14
TEMP. RAMP 5

BEGIN CONST.
STA. 1861+50
TEMP. RAMP 5

PROPOSED GRADE

V.C. = 150.00'
G1 =0.000%
G2 =4.351%
E = 0.82'
K =34.47

7.5' RT. STA. 1863+99.33 ℄ TEMP. RAMP 5 =
38.40' LT. STA. 1864+06.21 ℄ RAMP 5
ELEV. 514.51

RAMP 5
V.C. = 150.00'
G1 =4.351%
G2 =2.735%
E = -0.30'
K =92.84

PVC 1860+52.20 EL. 503.88
PVI 1861+27.20 EL. 503.88
PVT 1862+02.20 EL. 507.14
PVC 1862+49.33 EL. 509.19
PVI 1863+24.33 EL. 512.46
PVT 1863+99.33 EL. 514.51

2.74%
4.35%
0.00%

U.G. TEL.
GAS LINE
12" WATER LINE
+95
24" (FUTURE RCP)
F.L. INLET= 499.00
F.L. OUTLET= 498.30

EXISTING GROUND

530 / 520 / 510 / 500 / 490
1860+00 / 1865+00 / 1870+00

TEMPORARY RAMP 5

150' TRANS. FROM -2.0% TO +4.5%
150' TRANS. FROM +4.5% TO -1.8%
+52 +02 +49 +99 119' +18
MAX. SUPER. e = +4.5%
119' TRANS. FROM -1.8% TO -6.8%

V.C. = 200.00'
G1 =3.855%
G2 =2.720%
E = -0.28'
K =176.12

2.72%
SBCD RD

PVC 1874+74.78 EL. 553.49
PVI 1875+74.78 EL. 557.34
PVT 1876+74.78 EL. 560.06

7.5' RT. STA. 1876+74.78 ℄ RAMP 5 =
24.26' LT. 1876+76.21 ℄ SBCD RD.
ELEV. 560.06

3.86%
PVT 1866+18.36 EL. 520.47
PROPOSED GRADE

7.5' RT. STA. 1856+68.36 ℄ RAMP 5 =
47.75' RT. STA. 55+48.20 ℄ EXIST. U.S. 71
ELEV. 508.20

V.C. = 950.00'
G1 =-1.272%
G2 =3.855%
E = 6.09'
K =185.29

PVC 1856+68.36 EL. 508.20
BEGIN GRADING
STA. 1859+49.30
RAMP 5
BEGIN CONST.
STA. 1859+50
RAMP 5
PVI 1861+43.36 EL. 502.16

12" WATER LINE
EXIST. U.S. 71
-1.27%
-2.20%
-0.40%
U.G. TEL.
GAS LINE
-0.60%
0.43%
1.06%
3.02%

+00 502.4
+50 501.3
+00 500.7
SPCL. "V" DT. LT.
SPCL. 3' F.B. DT. LT.
+66
10'X5' RCBC
F.L. INLET= 497.60
F.L. OUTLET= 496.00
+17 497.6
SPCL. 5' F.B. DT. LT.
+71 500.0
EXISTING GROUND
+32 507.0
+75 508.3

EARTHWORK
STA. 1859+49.30 TO STA. 1876+74.78
LOCATION: RAMP 5
UNCLASSIFIED EXCAVATION: 6499 CU. YD.
COMPACTED EMBANKMENT: 144016 CU. YD.
STABILIZING LAYER: 37716 CU. YD.

200' TRANS. FROM -2.1% TO -6.8%
+03 +03
200' TRANS. FROM -6.8% TO -2.0%
171' TRANS. FROM -2.0% TO +2.1%
+89 200' +89 171' +60
MAX. SUPERELEVATION e = -6.8%

560 / 550 / 540 / 530 / 520 / 510 / 500 / 490 / 480 / 470 / 460
1855+00 / 1860+00 / 1865+00 / 1870+00 / 1875+00 / 1880+00

RAMP 5

SCALE: 1"=100' HORIZ.
1"=10' VERT.

STATE OF ARKANSAS
REGISTERED PROFESSIONAL ENGINEER
No. 9066
ANGELA G. KING

DATE REVISED	DATE FILMED	DATE REVISED	DATE FILMED

FED.RD. DIST.NO.	STATE	FED.AID PROJ.NO.	SHEET NO.	TOTAL SHEETS
6	ARK.		49	229
JOB NO.		040478		

(2) PLAN EXIST. U.S. 71 STA. 3+00 TO 17+00

STA. 2+47 IN PLACE
30" X 32' C.M. PIPE
CULV'T ON LT.
RETAIN

STA. 4+03 IN PLACE
24" X 32' C.M. PIPE
CULV'T ON LT.
RETAIN

STA. 5+44 IN PLACE
24" X 36' C.M. PIPE
CULV'T ON LT.
RETAIN

WOODS/SCRUB BRUSH

FUTURE CONSTRUCTION
FOR INFORMATION ONLY

PASTURE

BRUSH

5+00

10+00

15+00

19+11.61

19+11.61

300' FUTURE TAPER

700' FUTURE ACCEL LANE

FUTURE SPCL. "V" DT.

EXIST. R.O.W.

BARB WIRE

STA. 12+11.61
BEGIN FUTURE
ACCEL LANE

PC 19+38.18

30" CMP

24" CMP

24" CMP

ASPH.

ASPH.

ASPH.

10' SHLD.

2@12' LANES

6' SHLD.

6' SHLD.

2@12' LANES

10' SHLD.

EXIST. U.S. 71

N52°49'35"W

24" RCP

24" RCP

24" RCP

+38.18
36.50'

RAMP 4
N52°49'34"

PC 18+41+44.10

24" CMP

SPCL. "V" DT.

GRAVEL

BARB WIRE

EXIST. R.O.W.

GATE

16' GATE

PROP. R.O.W.

+00.00
2653.83'

+20.05
2428.41'

SOUTHWESTERN BELL
UG FIBER OPTIC SIGN

+50.00
2184.42'

PROP. R.O.W.,
C.A. & FENCE
SOUTHWESTERN BELL
UG FIBER OPTIC SIGN

SAGE BRUSH

GAS MARKERS

STA. 12+00.00
BEGIN FUTURE CONST.

LIVESTOCK

+70.00
2416.00'

T.C.E.

+55.00
2257.50'

FR. BARN
METAL ROOF
RUIN'S

STA. 1846+00.00 2653.83' RT.
BEGIN PROP. R.O.W.

WOODS

WOODS

STA. 1848+61.30 2163.20' RT.
BEGIN PROP. R.O.W., C.A.
& FENCE

POND

STA. 8+71 IN PLACE
DROP INLET WITH
24" X 72' R.C. PIPE
OUTLET WITH F.E.S.
RETAIN

WIRE FENCE (TYPE D-1)
STA. 1846+00.00 RT. - STA. 1848+61.30 RT. U.S. 71 RELOC. = 556 L.F. W/ 1 - 16' VEHICULAR GATE

STA. 14+69 IN PLACE
24" X 30' C.M. PIPE
CULV'T ON RT.
RETAIN

STA. 2+49 IN PLACE
DBL. 48" X 46' C.M. PIPE
CULV'T ON RT.
RETAIN

STA. 2+75 IN PLACE
DROP INLET WITH
24" X 78' R.C. PIPE
OUTLET WITH F.E.S.
RETAIN

STA. 15+10 IN PLACE
DROP INLET WITH
24" X 70' R.C. PIPE
OUTLET WITH F.E.S.
RETAIN

SEE INTERCHANGE
LAYOUT FOR RAMP
GEOMETRY

STATE OF ARKANSAS
REGISTERED
PROFESSIONAL
ENGINEER
No. 9808
JAMES L. BARR
2/28/12

SCALE: 1"=50' HORIZ.

DATE REVISED	DATE FILMED	DATE REVISED	DATE FILMED	FED.RD. DIST.NO.	STATE	FED.AID PROJ.NO.	SHEET NO.	TOTAL SHEETS
				6	ARK.		50	229
				JOB NO.	040478			

(2) PROFILE EXIST. U.S. 71 STA. 3+00 TO 17+00

520
510
500
490
480
470
460
450
440
430

EXIST. GRADE RT. LANE
EXIST. GRADE LT. LANE
STA. 12+00.00
BEGIN FUTURE CONST.
SURFACE US 71 CENTERLINE
FUTURE SPCL. "V" DT. LT.
SPCL. "V" DT. RT.
0.40%
0.40%
0.40%
+00 LT. 474.3
+00 RT. 476.0
+71
EXIST. D.I.
W/ 24" RCP
TOP DI=477.40
F.L. DI= 474.60
F.L. OUTLET = 474.20
+10
EXIST. D.I.
W/ 24" RCP
TOP DI= 484.30
F.L. DI= 481.60
F.L. OUTLET = 478.70

5+00
10+00
15+00
17+00

FUTURE CONSTRUCTION
FOR INFORMATION ONLY

SCALE: 1"=50' HORIZ.
1"=5' VERT.

STATE OF ARKANSAS
REGISTERED PROFESSIONAL ENGINEER
1066
JAMES G. KING

DATE REVISED	DATE FILMED	DATE REVISED	DATE FILMED	FED.RD. DIST.NO.	STATE	FED.AID PROJ.NO.	SHEET NO.	TOTAL SHEETS
				6	ARK.		51	229
				JOB NO.		040478		

(2) PLAN EXIST. U.S. 71 STA. 17+00 TO 31+00

STA. 19+72 ℄ EXIST. U.S. 71 - IN PLACE
DROP INLET 24" X 72' R.C. PIPE OUTLET
WITH F.E.S.
RETAIN

STA. 31+15 IN PLACE
18" X 36' C.M. PIPE
CULV'T ON LT.
RETAIN

FUTURE CONSTRUCTION
FOR INFORMATION ONLY

700' FUTURE ACCEL LANE

20+00

1860+00

1855+00

1845+00

25+00

30+00

FUTURE SPCL. "V" DT.

EXIST. R.O.W.

PT 1860+79.98

PI 18+43.33

PT 20+48.38

+99.95
48.50'

+11.61
45.88'

BARB WIRE

FUTURE RAMP 1

15' LANE

6' SHLD.

4' SHLD.

FUTURE DBL. W.B.A. 49"X33"

FUTURE SPCL. 4' F.B. DT.

WOODS

FUTURE 18" RCP

FUTURE SPCL. 3' F.B. DT.

6' SHLD.

FUTURE SPCL. 4' F.B. DT.

15' LANE

FUTURE RAMP 2

EXIST. R.O.W.

BARB WIRE

10' SHLD.

2@12' LANES

6' SHLD.

S49°41'34"E

18" CMP

+33.46
57.55'

EXIST. U.S. 71

N52°49'35"W

N49°41'34"W

24" RCP

+38.41
57.86'

6' SHLD.

2@12' LANES

10' SHLD.

N49°41'34"W

POB 1853+24.52

N52°49'34"W

PI 1842+39.41

N42°07'05"W

PT 1843+34.91

N47°07'05"W

N47°07'05"W

#1003

#1004

#1005

#1006

#115641

EXIST. R.O.W.

BEGIN GRADING
STA. 1854+47.49
TEMP. RAMP 4

FUT. 24" RCP

FUTURE EXT.

BARB WIRE & WOOD

SOUTHWESTERN BELL
UG FIBER OPTIC SIGN

+00.00
1715.00'

PI 1849+36.66

N18°40'02"W

SPCL. "V" DT.

CONST. LIMITS

24" RCP

BEGIN CONST.
STA. 1854+50
TEMP. RAMP 4

1855+00

STA. 29+70 IN PLACE
DROP INLET WITH
24" X 70' R.C. PIPE
OUTLET WITH F.E.S.
RETAIN

16' SHLD.

4' SHLD.

15' LANE

CONST. LIMITS

TEMP. RAMP 4

PC 1855+65.90

EXIST. U.S. HWY. 71
P.I. 18+43.33
N = 342808.0860
E = 610980.7740
Δ = 3°08'01" Rt.
D = 0°45'50"
T = 205.15'
L = 410.20'
R = 7500.00'
E = 2.81'
RADIUS POINT
N = 348660.1918
E = 615675.9784

1845+00

PC 1846+30.87

POND

+65.00
1465.00'

PROP. R.O.W., C.A. & FENCE

BEGIN GRADING
STA. 1849+49.84
RAMP 4

BEGIN CONST.
STA. 1849+50
RAMP 4

1850+00

+85.00
1260.00'

PT 1852+29.83

4' SHLD.

15' LANE

6' SHLD.

CONST. LIMITS

RAMP 4

CONST. LIMITS

TREES & BRUSH

TREES

STA. 24+70 IN PLACE
DROP INLET WITH
24" X 72' R.C. PIPE
OUTLET WITH F.E.S.
RETAIN

STA. 1851+00 ℄ RAMP 4 @ EXIST. U.S. 71 - CONST.
24" X 60' R.C. PIPE CULV'T
(0° SKEW)
(CLASS III) WITH TYPE 3 BEDDING
WITH S.E.S. LT. & RT.
D.A. = 7.1 ac, Q50 = 21.3 cfs

1855+00

+35.00
1090.00'

N40°18'22"E

SEE INTERCHANGE
LAYOUT FOR RAMP
GEOMETRY

STATE OF ARKANSAS
REGISTERED PROFESSIONAL ENGINEER
No. 9808
JAMES L. BARR
2/28/12

SCALE: 1"=50' HORIZ.

DATE REVISED	DATE FILMED	DATE REVISED	DATE FILMED	FED.RD. DIST.NO.	STATE	FED.AID PROJ.NO.	SHEET NO.	TOTAL SHEETS
				6	ARK.		52	229
				JOB NO.	040478			

(2) PROFILE EXIST. U.S. 71 STA. 17+00 TO 31+00

EXIST. GRADE LT. LANE

SURFACE US 71 CENTERLINE

EXIST. GRADE RT. LANE

FUTURE SPCL."V" DT. LT.

0.40%

0.40%

SPCL. "V" DT. RT.

+72
EXIST. D.I.
W/ 24" RCP
TOP DI= 484.30
F.L. DI= 481.60
F.L. OUTLET= 480.30

+12 LT.
480.0

+38 RT.
480.1

+70
EXIST. D.I.
W/ 24" RCP
TOP DI= 486.60
F.L. DI= 483.70
F.L. OUTLET= 482.70

4" WATER LINE

U.G. CABLE

+70
EXIST. D.I.
W/ 24" RCP
TOP DI= 489.50
F.L. DI= 486.70
F.L. OUTLET= 486.00

12" WATER LINE

520 510 500 490 480 470 460 450 440 430

17+00 20+00 25+00 30+00 31+00

FUTURE CONSTRUCTION
FOR INFORMATION ONLY

SCALE: 1"=50' HORIZ.
1"=5' VERT.

STATE OF ARKANSAS
REGISTERED PROFESSIONAL ENGINEER
No. 5066
STANLEY G. KING

FUTURE CONSTRUCTION
FOR INFORMATION ONLY

DATE REVISED	DATE FILMED	DATE REVISED	DATE FILMED	FED.RD. DIST.NO.	STATE	FED.AID PROJ.NO.	SHEET NO.	TOTAL SHEETS
				6	ARK.		53	229
				JOB NO.		040478		

(2) PLAN EXIST. U.S. 71 STA. 31+00 TO 45+00

PT 1852+42.43
N72°37'57"E
FUTURE 36" RCP
POE 1853+74.33
STA. 36+06 IN PLACE
18" X 38' C.M. PIPE CULV'T ON LT.
RETAIN
STA. 40+48 IN PLACE
24" X 132' R.C. PIPE CULV'T
WITH F.E.S. LT. & RT.
RETAIN
1855+00
STA. 41+14 IN PLACE
30" X 60' C.M. PIPE CULV'T ON LT.
RETAIN
FUTURE RAMP 7
P.O.T. STA. 1858+46.91 ℄ U.S. 71 RELOCATED =
P.O.C. STA. 38+80.06 ℄ EXIST. U.S. 71
∢=65°51'00"
TREECE RD. TO BE
REMOVED UNDER
FUTURE JOB.
PASTURE
BARB WIRE
1840+00
FUTURE SPCL. 3' F.B. DT.
P.O.T. STA. 31+80.42 ℄ EXIST. U.S. 71 =
P.O.T. STA. 1853+24.52 ℄ TEMP. RAMP 4
∢=90°00'00"
35+00
℄ CONST.
FUTURE 36" RCP
PC 1856+57.05
1870+00
45+00
FUTURE DITCH
TRAIL
FUTURE SPCL.
4' F.B. DT.
PC 1839+74.32
PI 1856+16.41
EXIST. R.O.W.
18" CMP
GPS L298
PT 1872+05.83
30" CMP
FUTURE AUX. LANE
PT 43+69.83
FUTURE RAMP 2
+33.48
57.55
+52.92
20' R
+47.25
48.50
350' LEFT TURN LANE
EXIST. D.I.
200' TAPER
EXIST. U.S. 71
POB 1853+24.52
+62.92
14' R
24" RCP
FUT. 24" RCP
+52.53
46.19
+151.82
48.50
FUT. 24" RCP
N49°41'34"W
+54.49
48.50
+19.73
45.79
N53°27'34"W
24" RCP
+76.58
48.50
+91.59
57.34
FUTURE AUX. LANE
FUTURE RAMP 6
PI 1869+35.39
PI 41+23.38
BARB WIRE
SPCL. "V" DT.
EXIST. R.O.W.
FUTURE EXT.
PC 1851+36.86
END GRADING
STA. 1854+47.49
TEMP. RAMP 4
END CONST.
STA. 1854+50
TEMP. RAMP 4
PT 1875+90.94
STA. 1859+64.11
BEGIN EARTHWORK
1875+00
STA. 1860+08.06
BEGIN JOB 040478
FUTURE SPCL. 3' F.B. DT.
PC 1855+65.90
FUTURE RAMP 3
TREES
24" RCP
PC 1860+31.22
CONST. LIMITS
BRUSH/TREES
EXIST. TURN LANE & MED. CROSSING TO BE REMOVED
BY CUTTING A NEAT EDGE LINE AT THE OUTSIDE EDGE
OF THE SHOULDERS UNDER FUTURE JOB.
EXIST. U.S. HWY. 71
P.I. 41+23.38
N = 344283.0850
E = 609241.9620
Δ = 3°46'01" Lt.
D = 0°45'50"
T = 246.63'
L = 493.08'
R = 7500.00'
E = 4.05'
RADIUS POINT
N = 338404.1485
E = 604578.3871
POB 1862+47.27
N12°32'26"E
SEE INTERCHANGE
LAYOUT FOR RAMP
GEOMETRY
STA. 41+69 IN PLACE
DROP INLET WITH
24" X 70' R.C. PIPE OUTLET WITH F.E.S. RT.
RETAIN
SPCL. 10' F.B. DT.
PT 1864+24.13
DBL. 6' X 5' RCBC
STA. 44+70 IN PLACE
DROP INLET WITH
24" X 68' R.C. PIPE OUTLET WITH F.E.S. RT.
RETAIN
STA. 34+71 IN PLACE
DROP INLET WITH
24" X 70' R.C. PIPE OUTLET WITH F.E.S.
RETAIN
1870+00
SPCL. 3' F.B. DT.
N40°18'26"E
TEMP. RAMP 4
RAMP 4
SCALE: 1"=50' HORIZ.

STATE OF ARKANSAS
REGISTERED PROFESSIONAL ENGINEER
No. 9066
STANLEY G. KING

DATE REVISED	DATE FILMED	DATE REVISED	DATE FILMED	FED.RD. DIST.NO.	STATE	FED.AID PROJ.NO.	SHEET NO.	TOTAL SHEETS
				6	ARK.		54	229
				JOB NO.	040478			

(2) PROFILE EXIST. U.S. 71 STA. 31+00 TO 45+00

520 510 500 490 480 470 460 450 440 430

31+00 35+00 40+00 45+00

SURFACE US 71 CENTERLINE

EXIST. GRADE RT. LANE

EXIST. GRADE LT. LANE

4" WATER LINE

0.40%

+50
490.2

+00
FUT. TY. "RM" D.I.
W/ 24" RCP
TOP DI= 491.50
F.L. DI= 488.50
F.L. OUTLET= 488.20

+71
EXIST. D.I.
W/ 24" RCP
TOP DI= 492.20
F.L. DI= 489.50
F.L. OUTLET= 488.20

SPCL. "V" DT. RT.

+00
490.8

+00
FUT. TY. "RM" D.I.
W/ 24" RCP
TOP DI= 494.10
F.L. DI= 491.10
F.L. OUTLET= 490.80

U.G.F.O. CABLE

12" WATER LINE

20" GAS MAIN

+48
EXIST. 24" RCP
F.L. INLET= 496.30
F.L. OUTLET= 493.00

+14
EXIST. D.I.
W/ 24" RCP
TOP DI= 497.60
F.L. DI= 494.90
F.L. OUTLET= 494.00

+70
EXIST. D.I.
W/ 24" RCP
TOP DI= 498.30
F.L. DI= 495.70
F.L. OUTLET= 495.10

FUTURE CONSTRUCTION
FOR INFORMATION ONLY

SCALE: 1"=50' HORIZ.
1"=5' VERT.

STATE OF ARKANSAS
REGISTERED PROFESSIONAL ENGINEER
No. 3066
STANLEY G. KING

DATE REVISED	DATE FILMED	DATE REVISED	DATE FILMED	FED.RD. DIST.NO.	STATE	FED.AID PROJ.NO.	SHEET NO.	TOTAL SHEETS
				6	ARK.		55	229
				JOB NO.		040478		

(2) PLAN EXIST. U.S. 71 STA. 45+00 TO 59+00

STA. 59+72 ℄ EXIST. U.S. 71 - IN PLACE
DROP INLET WITH 24" X 72' R.C. PIPE
OUTLET WITH F.E.S.
RETAIN

STA. 54+70 ℄ EXIST. U.S. 71 - IN PLACE
D.I. WITH 24" X 72' R.C. PIPE OUTLET
RETAIN

STA. 49+70 ℄ EXIST. U.S. 71 - IN PLACE
D. I. WITH 24" X 72' R.C. PIPE OUTLET
WITH F.E.S.
RETAIN

FUTURE CONSTRUCTION
FOR INFORMATION ONLY

1865+00 1870+00 60+00 50+00 55+00 1860+00 1855+00 1865+00

6' SHLD. 4' SHLD. 15' LANE

PC 1863+25.86 FUTURE RAMP 8 N15°42'43"W PI 1866+27.05 N47°45'04"W

TRAIL FUTURE DITCH TRAIL

P.O.T. STA. 49+94.16 ℄ EXIST. U.S. 71=
P.O.T. STA. 1860.08.20 ℄ TEMP. RAMP 5
∠=90°00'00"

EXIST. R.O.W. 4" W

PT 1869+16.16 N47°45'04"W PC 1870+33.03 N47°45'04"W PI 1871+28.24 N53°27'33"W PT 1872+23.30 PC 59+22.51 FSGIS 178 EXIST. R.O.W.

FUTURE AUX. LANE +91.66 20' R R 75 +57.52 48.50' 24" RCP +91.99 57.54

+21.66 20' R FUT. 24" RCP N53°27'34"W EXIST. U.S. 71 PC 1860+52.20 S53°27'34"E

10' SHLD. 6' SHLD. 2@12' LANES 6' SHLD. 2@12' LANES 10' SHLD.

108.87 58.00 24" RCP +47.98 45.88 +64.45 48.50' +22.51 48.50' TYPE RM DI. 24" RCP

FUT. 24" RCP 1@12' LANES TWIN 24" CMP 6' SHLD. EXIST. R.O.W. FUTURE EXT.

B FUT. 24" RCP BARB WIRE EXIST. R.O.W. SPCL. "V" DT. PC 1855+53.72 TRAIL PROP. R.O.W., C.A. & FENCE +25.00 1610.72'

FUTURE 24" RCP FUTURE SPCL. 3' F.B. DT. BEGIN GRADING STA. 1861+48.14 TEMP. RAMP 5 CONST. LIMITS N63°25'40"E 4' SHLD. 15' LANE 6' SHLD. PI 1861+71.72 RAMP 5 4' SHLD. 6' SHLD. 15' LANE SPCL. 3' F.B. DT. +55.00 1395.00' BEGIN GRADING STA. 1859+49.30 RAMP 5 700' ACCEL LANE

BEGIN CONST. STA. 1861+50 TEMP. RAMP 5 CONST. LIMITS 4' SHLD. 4' SHLD. 15' LANE 6' SHLD. +35.00 1204.69' BEGIN CONST. STA. 1859+50 RAMP 5 IST. BK. RES. IST. BK. RES. CHAIN LINK GAR. CHAIN LINK SHED

FUTURE SPCL. 3' F.B. DT. 4' SHLD. 15' LANE 6' SHLD. FUTURE RAMP 6 TEMP. RAMP 5 N63°25'40"E PASTURE PT 1862+86.84 PROP. R.O.W., C.A. & FENCE TRAIL TRAIL

BM 921 12" CHERRY +17.11 960.36' +00.00 950.00'

SPCL. 10' F.B. DT. 10'X5' RCBC N63°25'40"E CONST. LIMITS SPCL. 5' F.B. DT. T.C.E.

STA. 58+56 IN PLACE
DBL. 24" X 36' C.M. PIPE
CULV'T ON RT.
RETAIN

EXIST. U.S. HWY. 71
P.I. 68+71.42
N = 345919.3490
E = 607033.9400
Δ = 20°44'54" Rt.
D = 1°00'00"
T = 1048.91'
L = 2074.85'
R = 5729.58'
E = 95.22'
RADIUS POINT
N = 349898.1914
E = 611288.0074

SEE INTERCHANGE
LAYOUT FOR RAMP
& CD ROAD GEOMETRY

STATE OF ARKANSAS
REGISTERED PROFESSIONAL ENGINEER
No. 9808
JAMES L. BARR
2/28/12

SCALE: 1"=50' HORIZ.

DATE REVISED	DATE FILMED	DATE REVISED	DATE FILMED

FED.RD. DIST.NO.	STATE	FED.AID PROJ.NO.	SHEET NO.	TOTAL SHEETS
6	ARK.		56	229
JOB NO.		040478		

(2) PROFILE EXIST. U.S. 71 STA. 45+00 TO 59+00

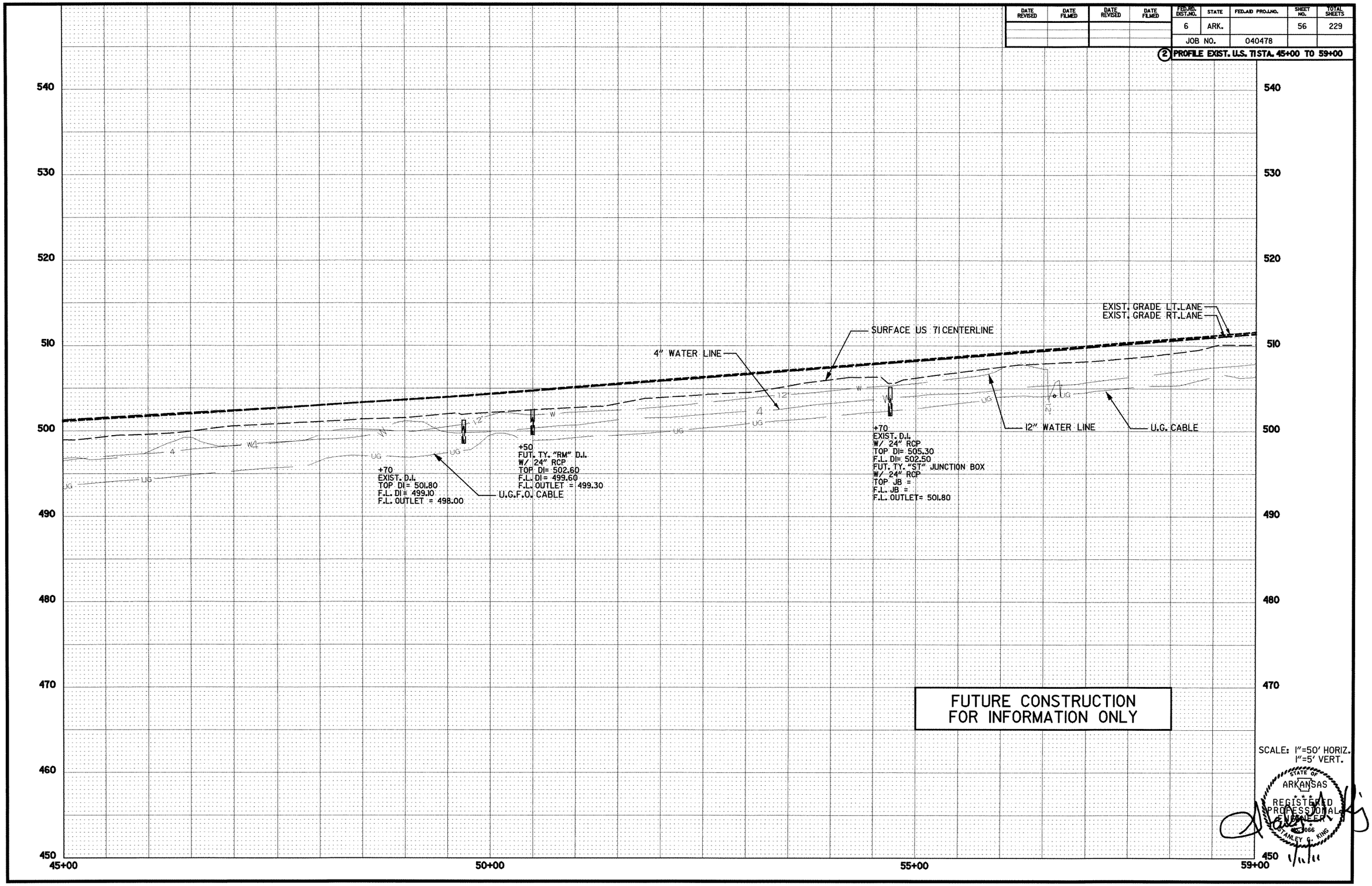

SCALE: 1"=50' HORIZ.
1"=5' VERT.

STATE OF ARKANSAS
REGISTERED PROFESSIONAL ENGINEER
No. 3066
STANLEY G. KING

1/11/11

DATE REVISED	DATE FILMED	DATE REVISED	DATE FILMED	FED.RD. DIST.NO.	STATE	FED.AID PRO.JNO.	SHEET NO.	TOTAL SHEETS
				6	ARK.		57	229
				JOB NO.		040478		

(2) PLAN EXIST. U.S. 71 STA. 59+00 TO 73+00

STA. 63+71℄ EXIST. U.S. 71 - IN PLACE
DROP INLET WITH 24" X 72'
R.C. PIPE OUTLET WITH F.E.S.
RETAIN

STA. 66+75 IN PLACE
DROP INLET WITH 24" X 64' R.C.
PIPE OUTLET WITH F.E.S.
RETAIN

STA. 72+72 IN PLACE
DROP INLET WITH 24" X 72' R.C.
PIPE OUTLET WITH F.E.S.
RETAIN

FUTURE CONSTRUCTION
FOR INFORMATION ONLY

N

TRAIL

65+00

P.I 68+71.42

EXIST. R.O.W.

GLENDALE TERRACE

12" RCP

48" RCP

70+00

N53°27'34"W

N32°42'40"W

6' SHLD.

3@12' LANES

6' SHLD.

24" RCP

FUTURE EXT.

PROP. R.O.W., C.A. & FENCE

BARB WIRE

+69.97
2360.63'

STA. 1870+69.97 2360.63' LT.
END PROP. R.O.W., C.A.
& FENCE

700' ACCEL LANE

300' TAPER

STA. 65+48.00
END FUTURE CONST.

24" RCP

PAVED DRAIN

48" RCP

36" CMP

24" RCP

EXIST. R.O.W.

EXIST. U.S. 71

10' SHLD.

2@12' LANES

6' SHLD.

6' SHLD.

2@12' LANES

10' SHLD.

PAVED DRAIN

EXIST. R.O.W.

EXIST. R.O.W.

75+00

BARB WIRE

POND

LEVEE

STA. 68+65 IN PLACE
36" X 36' C.M. PIPE
CULV'T ON RT.
RETAIN

STA. 69+74 IN PLACE
48" X 182' R.C. PIPE
CULV'T WITH F.E.S. LT. & RT.
RETAIN

SEE INTERCHANGE
LAYOUT FOR RAMP
GEOMETRY

EXIST. U.S. HWY. 71
P.I. 68+71.42
N = 345919.3490
E = 607033.9400
Δ = 20°44'54" Rt.
D = 1°00'00"
T = 1048.91'
L = 2074.85'
R = 5729.58'
E = 95.22'
RADIUS POINT
N = 349898.1914
E = 611288.0074

STATE OF ARKANSAS
REGISTERED PROFESSIONAL ENGINEER
No. 9808
JAMES L. BARR
2/29/12

SCALE: 1"=50' HORIZ.

DATE REVISED	DATE FILMED	DATE REVISED	DATE FILMED	FED.RD. DIST.NO.	STATE	FED.AID PROJ.NO.	SHEET NO.	TOTAL SHEETS
				6	ARK.		58	229
				JOB NO.		040478		

(2) PROFILE EXIST. U.S. 71 STA. 59+00 TO 73+00

570
560
550
540
530
520
510
500
490
480

59+00 60+00 65+00 70+00 73+00

EXIST. GRADE LT. LANE

EXIST. GRADE RT. LANE

STA. 65+48.00
END FUTURE CONST.

SURFACE US 71 CENTERLINE

4" WATER LINE

4" UG W

UG

+72
EXIST. D.I.
W/ 24" RCP
TOP DI= 505.30
F.L. DI= 502.50
F.L. OUTLET = 505.70

U.G. CABLE

+71
EXIST. D.I.
W/ 24" RCP
TOP DI= 513.70
F.L. DI= 510.90
F.L. OUTLET= 509.40

+75
EXIST. D.I.
TOP DI= 522.20
F.L. DI= 519.20
F.L. OUTLET= 516.80

FUTURE CONSTRUCTION
FOR INFORMATION ONLY

SCALE: 1"=50' HORIZ.
1"=5' VERT.

STATE OF ARKANSAS
REGISTERED PROFESSIONAL ENGINEER
No. 8066
STANLEY G. KING

DATE REVISED	DATE FILMED	DATE REVISED	DATE FILMED	FED.RD. DIST.NO.	STATE	FED.AID PROJ.NO.	SHEET NO.	TOTAL SHEETS
				6	ARK.		59	229
				JOB NO.		040478		

(2) PLAN C.R. 8

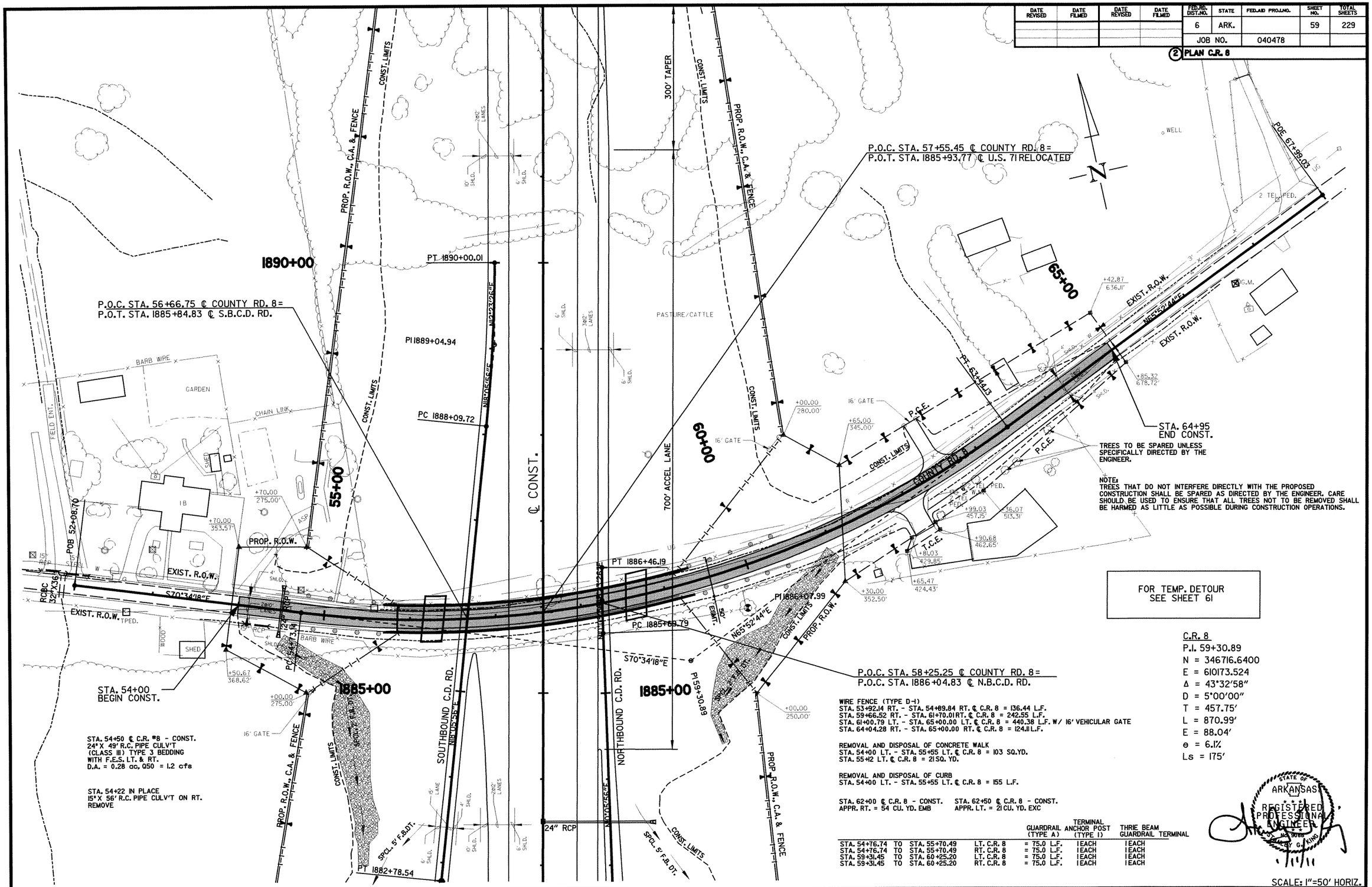

C.R. 8
P.I. 59+30.89
N = 346716.6400
E = 610173.524
Δ = 43°32'58"
D = 5°00'00"
T = 457.75'
L = 870.99'
E = 88.04'
e = 6.1%
Ls = 175'

WIRE FENCE (TYPE D-1)
STA. 53+92.14 RT. - STA. 54+89.84 RT. ℄ C.R. 8 = 136.44 L.F.
STA. 59+66.52 RT. - STA. 61+70.01 RT. ℄ C.R. 8 = 242.55 L.F.
STA. 61+00.79 LT. - STA. 65+00.00 LT. ℄ C.R. 8 = 440.38 L.F. W/ 16' VEHICULAR GATE
STA. 64+04.28 RT. - STA. 65+00.00 RT. ℄ C.R. 8 = 124.11 L.F.

REMOVAL AND DISPOSAL OF CONCRETE WALK
STA. 54+00 LT. - STA. 55+55 LT. ℄ C.R. 8 = 103 SQ.YD.
STA. 55+12 LT. ℄ C.R. 8 = 21 SQ. YD.

REMOVAL AND DISPOSAL OF CURB
STA. 54+00 LT. - STA. 55+55 LT. ℄ C.R. 8 = 155 L.F.

STA. 62+00 ℄ C.R. 8 - CONST.
APPR. RT. = 54 CU. YD. EMB

STA. 62+50 ℄ C.R. 8 - CONST.
APPR. LT. = 21 CU. YD. EXC

				GUARDRAIL (TYPE A)	TERMINAL ANCHOR POST (TYPE I)	THRIE BEAM GUARDRAIL TERMINAL
STA. 54+76.74	TO	STA. 55+70.49	LT. C.R. 8	= 75.0 L.F.	1 EACH	1 EACH
STA. 54+76.74	TO	STA. 55+70.49	RT. C.R. 8	= 75.0 L.F.	1 EACH	1 EACH
STA. 59+31.45	TO	STA. 60+25.20	LT. C.R. 8	= 75.0 L.F.	1 EACH	1 EACH
STA. 59+31.45	TO	STA. 60+25.20	RT. C.R. 8	= 75.0 L.F.	1 EACH	1 EACH

STATE OF ARKANSAS
REGISTERED PROFESSIONAL ENGINEER
No. 9088
STANLEY G. KING

SCALE: 1"=50' HORIZ.

DATE REVISED	DATE FILMED	DATE REVISED	DATE FILMED	FED.RD. DIST.NO.	STATE	FED.AID PROJ.NO.	SHEET NO.	TOTAL SHEETS
				6	ARK.		60	229
				JOB NO.	040478			

(2) PROFILE C.R. 8

EARTHWORK
STA. 54+00 TO STA. 56+24.48
LOCATION: COUNTY ROAD # 8
UNCLASSIFIED EXCAVATION: 825 CU. YD.
COMPACTED EMBANKMENT: 27 CU. YD.

TOTAL LENGTH OF BRIDGE = 329'-2"
327'-0" CONTINUOUS COMPOSITE PLATE GIRDER UNIT(169'-158')

BEGIN BRIDGE - STA. 55+85.39
ELEV. 621.02

END BRIDGE - STA. 59+14.55
ELEV. 629.37

STA. 57+55.47
EL. =625.43

VPC 61+00.00
EL. 633.54

PROPOSED GRADE

VPC 54+50.00
EL. 615.55

4" GAS LINE

U.G. TEL.

4.95% SPCL. 2' F.B. DT. RT. TO MAIN LANES

2.47%

VPI 64+50
EL. 630.78
NO V.C.

VPI 64+95.13
EL. 629.33

-3.24%

-3.21%

STA. 64+95
END CONST.

EXISTING GROUND

VPT 64+00.00
EL. 632.39

VPI 62+50.00
EL. 637.25

2" WATER LINE

+00
632.3

V.C. = 300'
G1 = 2.47%
G2 = -3.24%
E = 2.14'
K = 52.54

STA. 54+00
BEGIN CONST.

4.39%

VPI 56+50.00
EL. 622.41

VPT 56+50.00
EL. 622.41

VPI 55+50.00
EL. 619.94

VPI 54+00.03
EL. 613.36

+50
24" RCP
F.L. INLET= 611.30
F.L. OUTLET= 610.90

-0.5% SPCL. 2' F.B. DT. RT. TO MAIN LANES

V.C. = 200'
G1 = 4.39%
G2 = 2.47%
E = -0.48'
K = 104.17

FOR SPCL. 2' F.B. DT. PROFILES & DETAILS, SEE SHEET 38

EARTHWORK
STA. 58+72.52 TO STA. 64+95
LOCATION: COUNTY ROAD # 8
UNCLASSIFIED EXCAVATION: 1679 CU. YD.
COMPACTED EMBANKMENT: 86 CU. YD.

BM #923 SPIKE IN 12" OAK
50' RT STA. 59+81℄ COUNTY RD #8
ELEV. 630.3452

STA. 57+55.45 CO. RD. 8

STA. 1885+93.77 U.S. 71 RELOC.

COUNTY ROAD #8

MATCH EXIST. +00

175' TRANS. FROM EXIS TO 6.1%

+75

MAX. SUPERELEVATION e = 6.1%

+25

175' TRANS. FROM 6.1% TO EXIST.

MATCH EXIST. +00

SCALE: 1"=50' HORIZ.
1"=5' VERT.

STATE OF ARKANSAS
REGISTERED PROFESSIONAL ENGINEER
No. 9068
JACK G. KING

665 660 655 650 645 640 635 630 625 620 615 610 605 600 595 590 585 580 575 570

53+00 54+00 55+00 56+00 57+00 58+00 59+00 60+00 61+00 62+00 63+00 64+00 65+00 66+00 67+00

DATE REVISED	DATE FILMED	DATE REVISED	DATE FILMED	FED. RD. DIST. NO.	STATE	FED. AID PROJ. NO.	SHEET NO.	TOTAL SHEETS
				6	ARK.		61	229
				JOB NO.		040478		

② PLAN & PROFILE C.R. 8 TEMP. DETOUR

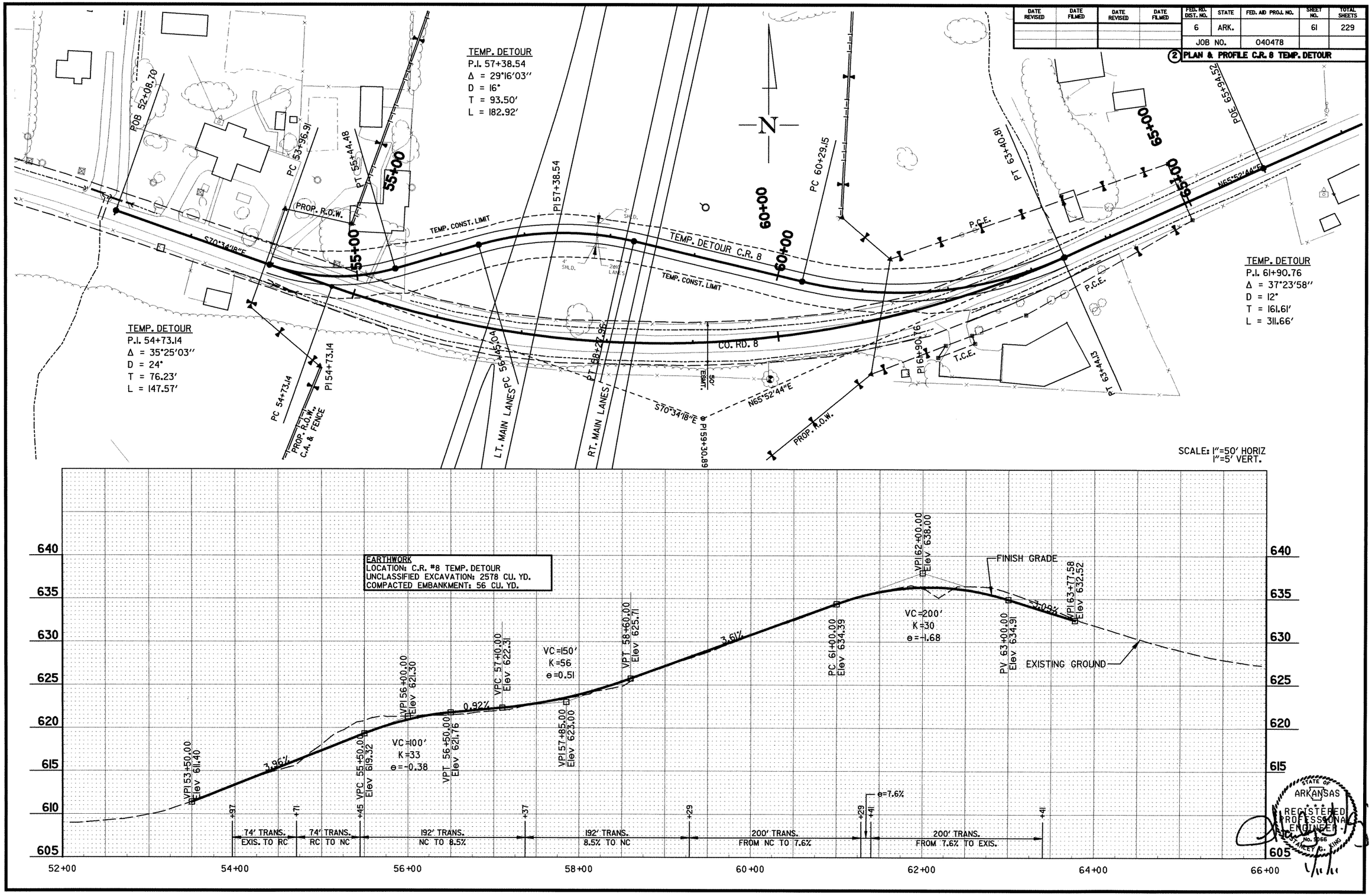

STATE OF ARKANSAS
REGISTERED PROFESSIONAL ENGINEER
No. 9066
STANLEY G. KING

DATE REVISED	DATE FILMED	FED. ROAD DIST. No.	STATE	FED. AID PROJ. NO.	SHEET No.	TOTAL SHEETS
		6	ARK.		62	229
		JOB NO.		040478		

(2) DRIVEWAY PROFILES

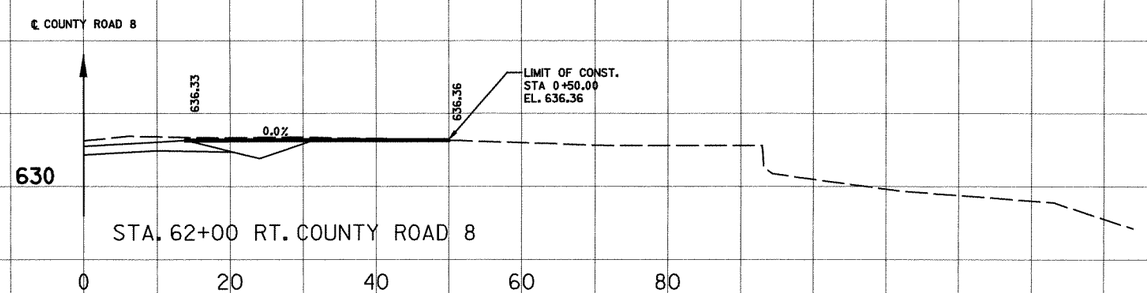

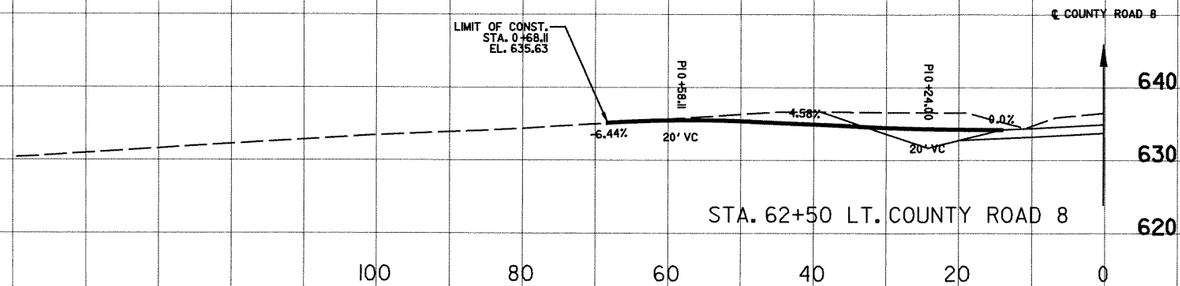

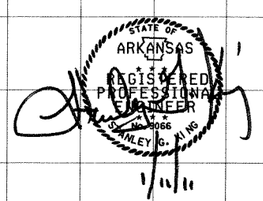

DATE REVISED	DATE FILMED	DATE REVISED	DATE FILMED	FED.RD. DIST.NO.	STATE	FED.AID PROJ.NO.	SHEET NO.	TOTAL SHEETS
				6	ARK.		63	229
				JOB NO.	040478			

(2) CULVERT DIAGRAM - 1864+10

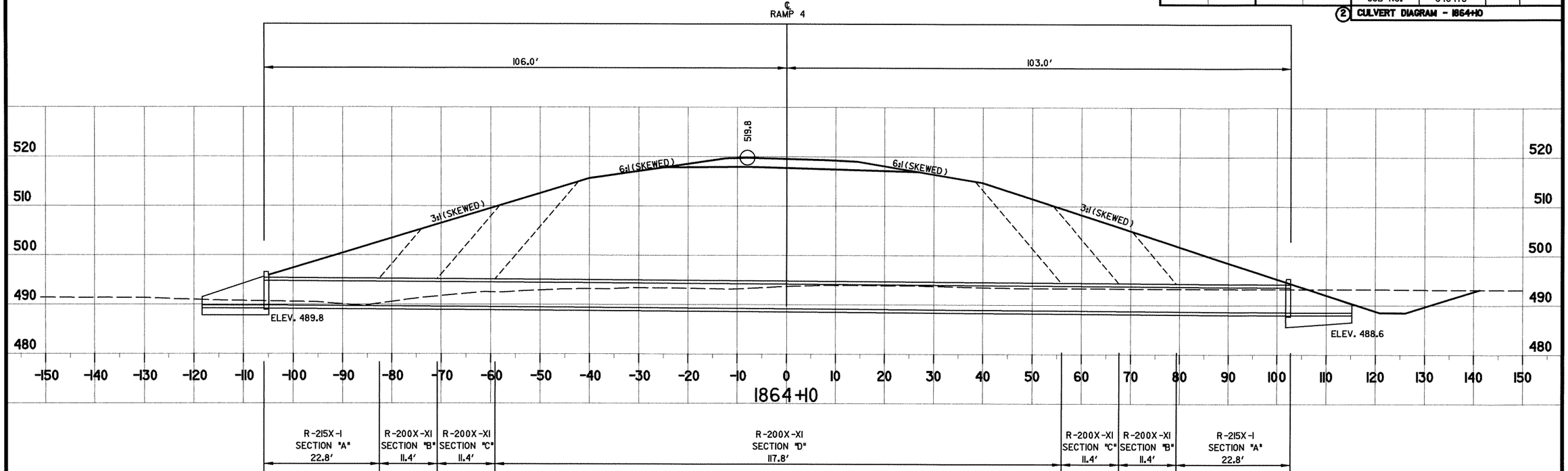

STA. 1864+10 ℄ RAMP 4 @ EXIST. U.S. 71 - CONST.
DBL 6' X 5' X 209' R.C. BOX CULV'T
(20° LT. FWD. SKEW)
D.A. = 160.5 ac, Q50 = 335.4 cfs
USE STD. DWG. FOR DBL. 6' X 5' R.C.
BOX CULV'T (15° SKEW)

QUANTITIES - STA. 1864+10

SECTION AND LENGTH	CLASS "S" CONCRETE-ROADWAY		REINFORCING STEEL - ROADWAY (GRADE 60)		UNCLASSIFIED EXCAVATION FOR STRUCTURES - ROADWAY	STANDARD DRAWING NO.
	PER LINEAR FOOT-BARREL	TOTAL	PER LINEAR FOOT-BARREL	TOTAL		
	CU. YD.		POUNDS		CU. YD.	
SECTION "A" 2 @ 22.8'		42.86		5972	18.16	R-215X-I
SECTION "B" 2 @ 11.4'	1.005	22.91	128.35	2926	9.97	R-200X-XI
SECTION "C" 2 @ 11.4'	1.068	24.35	149.57	3410	10.84	R-200X-XI
SECTION "D" 1 @ 117.8'	1.152	135.71	158.19	18635	60.94	R-200X-XI
FOUR WINGS		13.26		379	13.03	W-XI53-I, RCB-I, RCB-2, W-XI5
6 LAPS @ 46.76 #				281		R-200X-XI
TOTAL		239.09		31603	112.93	

USE 21.39 S.Y. SOLID SODDING AND 0.27 M. GALLONS WATER

STATE OF ARKANSAS
REGISTERED PROFESSIONAL ENGINEER
No. 9066
STANLEY G. KING
1/11/11

DATE REVISED	DATE FILMED	DATE REVISED	DATE FILMED	FED.RD. DIST.NO.	STATE	FED.AID PROJ.NO.	SHEET NO.	TOTAL SHEETS
				6	ARK.		64	229
				JOB NO.	040478			

(2) CULVERT DIAGRAM - 1864+50

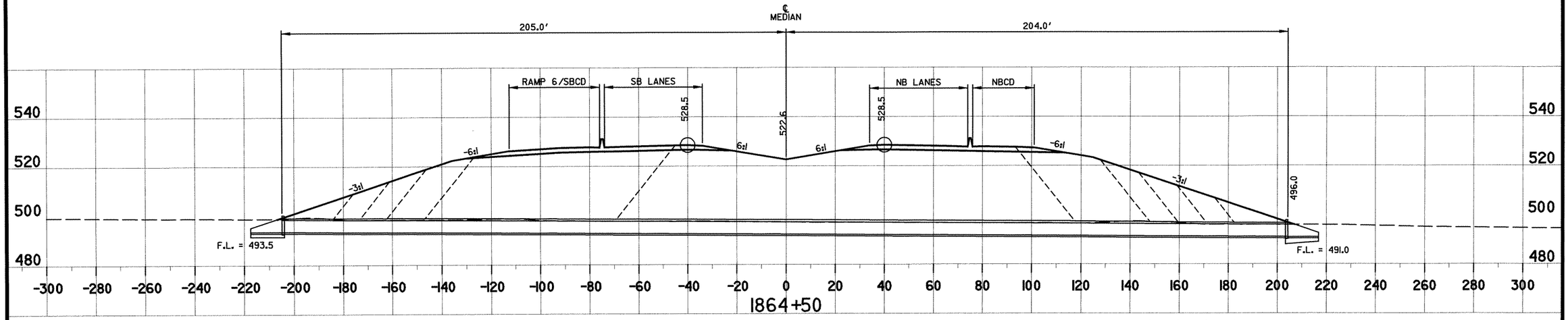

R-200X-XI

20.9' SECT. "A"	10.9' SECT. "B"	10.9' SECT. "C"	15.4' SECT. "D"	77.8' SECT. "E"	186.3' SECT. "F"	30.5' SECT. "E"	11.4' SECT. "D"	11.5' SECT. "C"	11.5' SECT. "B"	21.9' SECT. "A"

STA. 1864+50 ℄ U.S. 71 RELOC - CONST.
DBL. 6' X 5' X 409' R.C BOX CULV'T
(0°SKEW)
D.A. = 151.5 ac. Q50 = 337.9 cfs
USE STD. DWG. FOR DBL. 6' X 5' R.C.
BOX CULV'T

QUANTITIES - STA. 1864+50

SECTION AND LENGTH	CLASS "S" CONCRETE-ROADWAY		REINFORCING STEEL - ROADWAY (GRADE 60)		UNCLASSIFIED EXCAVATION FOR STRUCTURES - ROADWAY	STANDARD DRAWING NO.
	PER LINEAR FOOT-BARREL	TOTAL	PER LINEAR FOOT-BARREL	TOTAL		
	CU. YD.		POUNDS		CU. YD.	
SECTION "A" (20.9'+21.9'= 42.8')	0.941	40.27	121.81	5213	17.06	R-200X-XI
SECTION "B" (10.9'+11.5'=22.4')	1.005	22.51	128.35	2875	9.79	R-200X-XI
SECTION "C" (10.9'+11.5'=22.4')	1.068	23.92	149.57	3350	10.66	R-200X-XI
SECTION "D" (15.4'+11.4'=26.8')	1.152	30.87	158.19	4239	13.85	R-200X-XI
SECTON "E" (77.8'+30.5'=108.3')	1.236	133.86	168.46	18244	60.49	R-200X-XI
SECTION "F" (186.3')	1.321	246.10	180.4	33609	111.86	R-200X-XI
FOUR WINGS		12.53		358	13.81	W-X003-1, RCB-1, & RCB-2
LAPS (12 @ 46.76#)				561		R-200X-XI
TWO HW. & APRONS				143		R-200X-XI
TOTAL		510.06		68592	237.53	

USE 18.91 S.Y. SOLID SODDING AND 0.24 M. GALLONS WATER

STATE OF ARKANSAS
REGISTERED PROFESSIONAL ENGINEER
NO. 9066
JANEY G. KING

DATE REVISED	DATE FILMED	DATE REVISED	DATE FILMED

FED.RD. DIST.NO.	STATE	FED.AID PROJ.NO.	SHEET NO.	TOTAL SHEETS
6	ARK.		65	229
JOB NO.		040478		

(2) **CULVERT DIAGRAM - 1864+66**

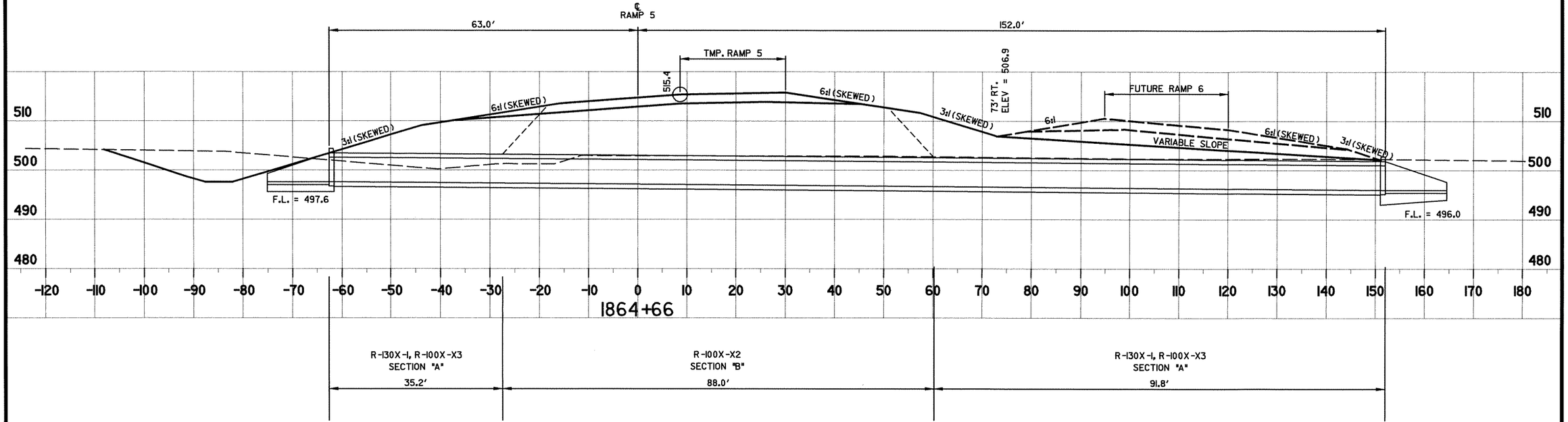

STA. 1864+66 ℄ RAMP 5 @ U.S. 71 RELOC - CONST.
10' X 5' X 215' R.C BOX CULV'T
(30° RT. FWD. SKEW)
D.A. = 129.8 ac, Q50 = 286.6 cfs
USE STD. DWG. FOR 10' X 5' R.C.
BOX CULV'T (30° SKEW)

QUANTITIES - STA. 1864+66

SECTION AND LENGTH	CLASS "S" CONCRETE-ROADWAY		REINFORCING STEEL-ROADWAY (GRADE 60)		UNCLASSIFIED EXCAVATION FOR STRUCTURES - ROADWAY	STANDARD DRAWING NO.
	PER LINEAR FOOT-BARREL	TOTAL	PER LINEAR FOOT-BARREL	TOTAL		
	CU. YD.		POUNDS		CU. YD.	
SECTION "A" (2 @ 25.396')		49.48		6834	25.54	R-130X-1
SECTION "A" (127.0'-50.79'=76.21')	0.974	74.23	124.54	9491	38.32	R-100X-X3
SECTION "B" (88.0')	1.06	93.28	139.76	12299	49.06	R-100X-X3
FOUR WINGS		15.98		460	15.02	W-X303-1, RCB-1, RCB-2, W-X30
LAPS (4 @ 28.39*)				114		R-100X-X3
TOTAL		232.97		29198	127.93	

USE 23.88 S.Y. SOLID SODDING AND 0.30 M. GALLONS WATER



DATE REVISED	DATE FILMED	DATE REVISED	DATE FILMED	FED. ROAD DIST. NO.	STATE	FED. AID PROJ. NO.	SHEET NO.	TOTAL SHEETS
				6	ARK.			
				JOB NO.		040478	66	229
				① 07079		LAYOUT		48629

For R/W Data See Roadway Plans

Note: Use Type "C" Approach Gutters ("W" = 6'-0") at edges of Roadway and Type "Special" Approach Gutters at Barrier with Approach Slabs. Typical at each End of Bridge.

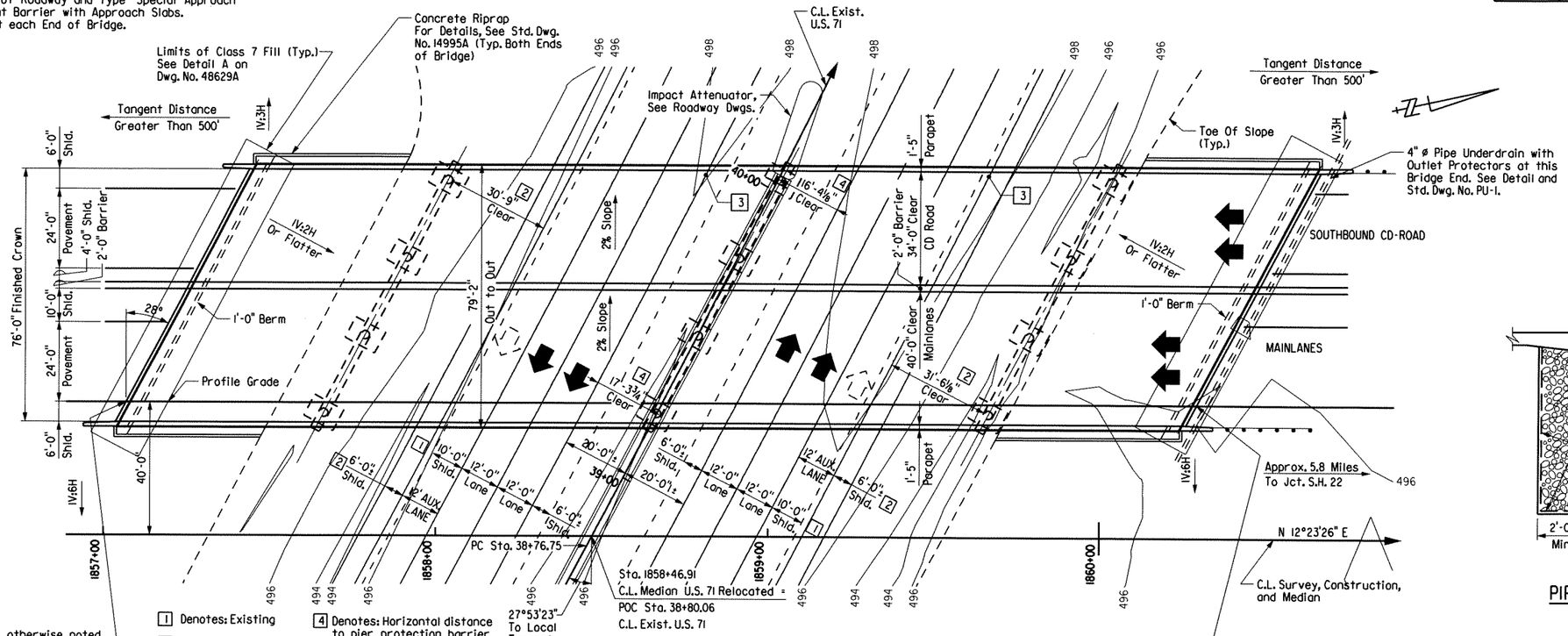

PLAN

Note: Unless otherwise noted, stations and elevations shown are along profile grade.

1 Denotes: Existing

2 Denotes: Future

3 Location of Minimum Vertical Clearance

4 Denotes: Horizontal distance to pier protection barrier

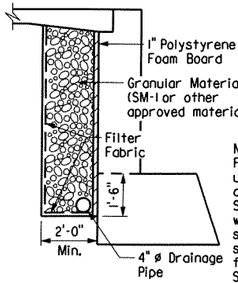

PIPE UNDERDRAIN DETAIL

No Scale

Notes:
For additional details of pipe underdrain see Std. Dwg. No. PU-1 and Section 611 of the Standard Specifications. Pipe underdrains will not be measured or paid for separately, but will be considered subsidiary to the unit price bid for "Unclassified Excavation for Structures-Bridge".

1" Polystyrene Foam Board, Filter Fabric and Granular Material shall not be paid for directly, but shall be considered subsidiary to the various bid items.

HORIZONTAL CURVE DATA
U.S. 71 EXISTING
C.L. MEDIAN

P.I. 41+23.38
D = 0°45'50"
△ = 3°46'01" Lt.
T = 246.63'
R = 7500.00'
L = 493.08'
E = 4.05'
e = Match Existing

Total Length of Bridge = 322'-6"

320'-0" Continuous Composite Plate Girder Unit (60'- 100'- 100'- 60')

1'-3" | 1'-3"

C.L. 3" Strip Seal Joint (5" Movement Rating)

C.L. 3" Strip Seal Joint (5" Movement Rating)

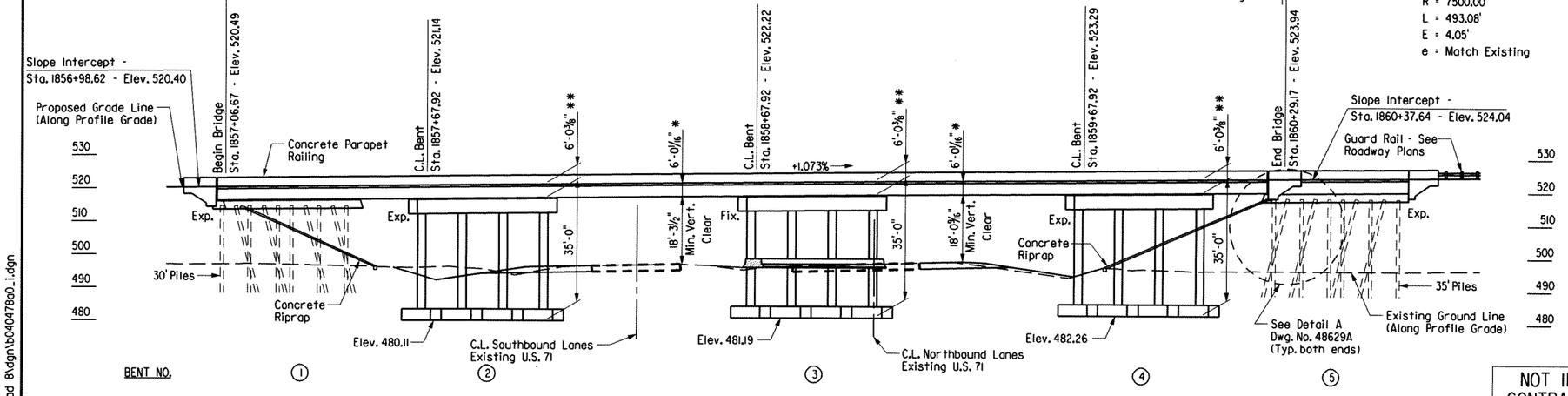

ELEVATION

** Top of Deck @ C.L. Bent @ Profile Grade to low side Top of Cap

* Top of Deck @ Profile Grade to low steel

Note: Minimum Vertical Clearance is to existing roadway surface.

NOTE: FUTURE BRIDGES FOR U.S. 71 RELOCATED OVER EXISTING U.S. 71 TO BE CONSTRUCTED UNDER SEPARATE PROJECT. BRIDGE PRELIMINARY LAYOUTS PROVIDED IN THIS PROJECT (JOB 040478) FOR INFORMATION ONLY. SEE ROADWAY PLANS FOR PROJECT TERMINI.

NOT IN CONTRACT

FOR INFORMATION ONLY

BRIDGE ENGINEER

BRIDGE A
LAYOUT OF U.S. ROUTE 71 RELOCATED FUTURE BRIDGE OVER U.S. ROUTE 71 EXISTING HWY. 71 INTERCHANGE (GR. & STRS.) (F)
SEBASTIAN COUNTY
(NOT IN THIS PROJECT)

ROUTE 71 SEC.

ARKANSAS STATE HIGHWAY COMMISSION

LITTLE ROCK, ARK.

DRAWN BY: JE DATE: 9/04 FILENAME: b040478a0_i.dgn

CHECKED BY: PJS DATE: 05-08 SCALE: 1" = 20'

DESIGNED BY: DM DATE: 9/04

BRIDGE NO. 07079 DRAWING NO. 48629

Florence & Hutcheson, Inc. CONSULTING ENGINEERS

7/14/2010

I:\01075\county road 8\dgn\b040478a0_i.dgn

DATE REVISED	DATE FILMED	DATE REVISED	DATE FILMED	FED. ROAD DIST. NO.	STATE	FED. AID PROJ. NO.	SHEET NO.	TOTAL SHEETS
				6	ARK.			
				JOB NO.		040478	67	229
				(1) 07079		LAYOUT		48629A

For R/W Data See Roadway Plans

Note: Use Type "C" Approach Gutters ("W" = 6'-0") at edges of Roadway and Type "Special" Approach Gutters at Barrier with Approach Slabs. Typical at each End of Bridge.

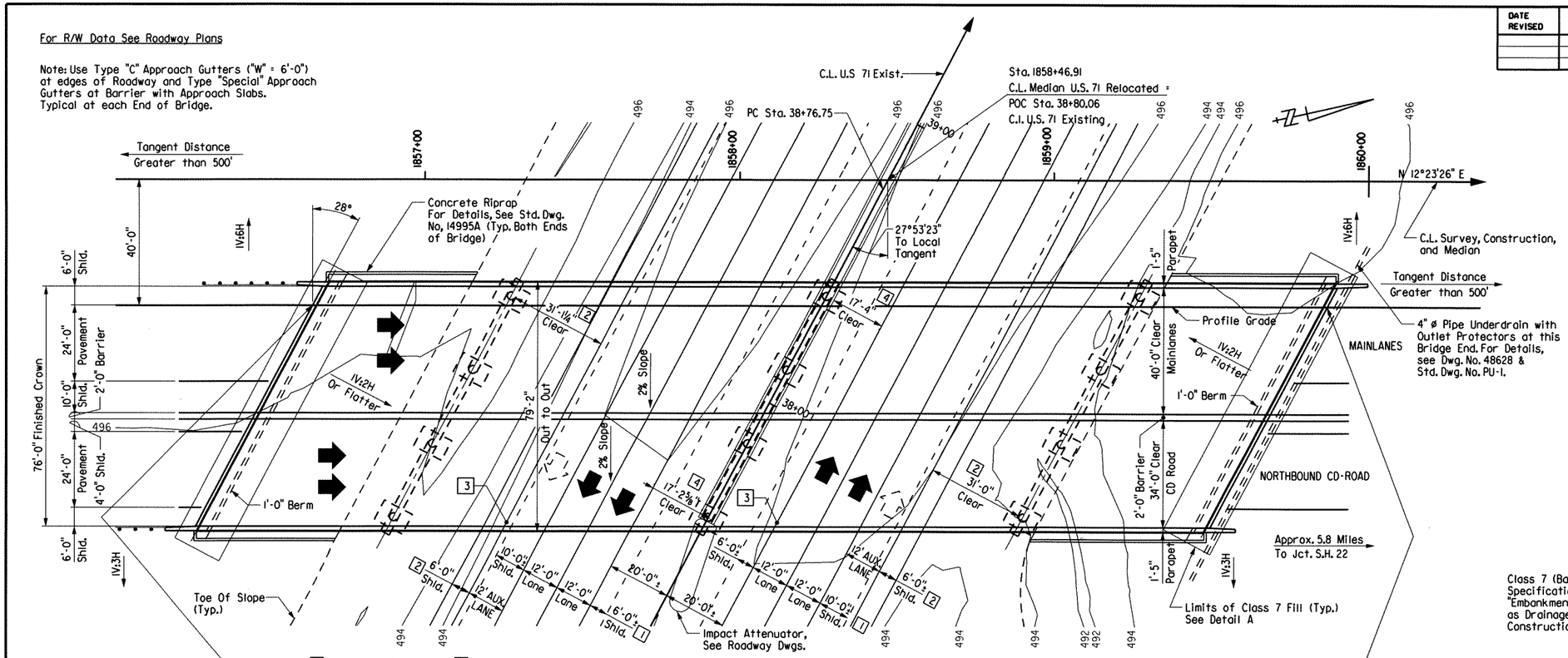

PLAN

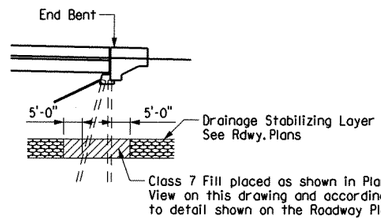

Class 7 (Base Course), in accordance with Section 303.02 of the Standard Specifications, will replace the Drainage Stabilizing Layer (See SP Job 040458 "Embankment Construction"). Class 7, as shown in this Detail, will be paid for as Drainage Stabilizing Layer in accordance with SP Job 040458 "Embankment Construction".

DETAIL A

No Scale

HORIZONTAL CURVE DATA
U.S. 71 EXISTING
C.L. MEDIAN

P.I. 41+23.38
D = 0°45'50"
△ = 3°46'01" Lt.
T = 246.63'
R = 7500.00'
L = 493.08'
E = 4.05'
e = Match Existing

Note: Unless otherwise noted, stations and elevations shown are along profile grade.

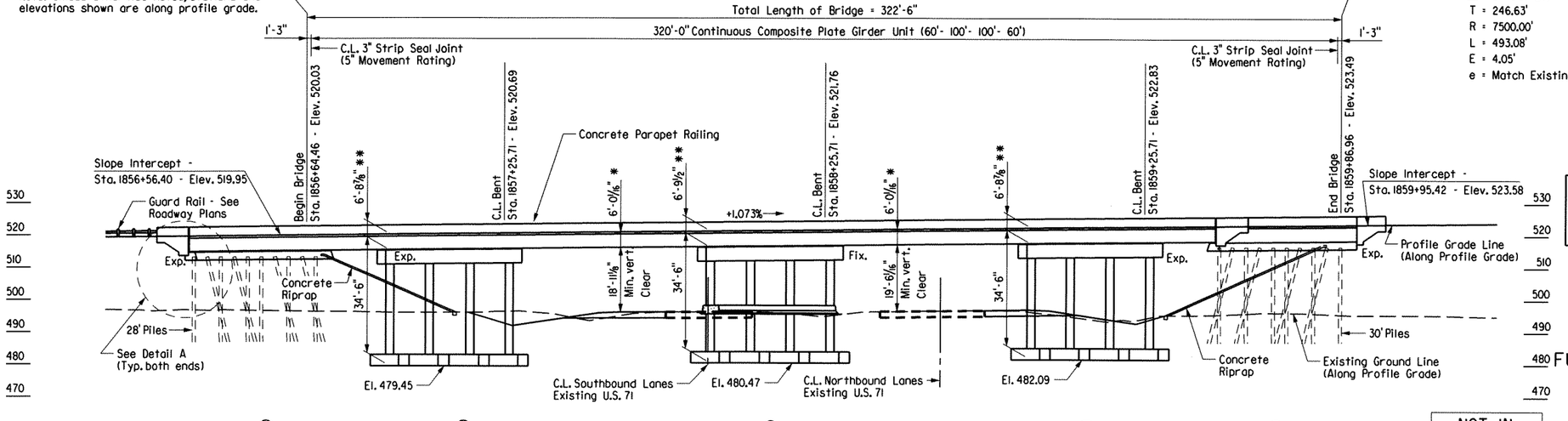

BENT NO. ① ② ③ ④ ⑤

** Top of Deck @ C.L. Bent @ Profile Grade to low side Top of Cap

* Top of Deck @ Profile Grade to low steel

Note: Minimum Vertical Clearance is to existing roadway surface.

1857+00 1858+00 1859+00 1860+00

ELEVATION

NOTE: FUTURE BRIDGES FOR U.S. 71 RELOCATED OVER EXISTING U.S. 71 TO BE CONSTRUCTED UNDER SEPARATE PROJECT. BRIDGE PRELIMINARY LAYOUTS PROVIDED IN THIS PROJECT (JOB 040458) FOR INFORMATION ONLY. SEE ROADWAY PLANS FOR PROJECT TERMINI.

NOT IN CONTRACT FOR INFORMATION ONLY
BRIDGE ENGINEER

BRIDGE B
LAYOUT OF U.S. ROUTE 71 RELOCATED FUTURE BRIDGE OVER U.S. ROUTE 71 EXISTING HWY. 71 INTERCHANGE (GR. & STRS.) (F)
SEBASTIAN COUNTY
(NOT IN THIS PROJECT)

ROUTE 71 SEC.

ARKANSAS STATE HIGHWAY COMMISSION
LITTLE ROCK, ARK.

DRAWN BY: JE DATE: 9/04 FILENAME: b040478b0_i.dgn
CHECKED BY: PJS DATE: 05-08 SCALE: 1" = 20'
DESIGNED BY: DM DATE: 9/04

BRIDGE NO. 07079 DRAWING NO. 48629A

Florence & Hutcheson, Inc.
Consulting Engineers

7/14/2010

i:\01075\county road 8\dgn\b040478b0_i.dgn

DATE REVISED	DATE FILMED	DATE REVISED	DATE FILMED	FED. ROAD DIST. NO.	STATE	FED. AID PROJ. NO.	SHEET NO.	TOTAL SHEETS
				6	ARK.			
				JOB NO.		040478	68	229
				(1) 07079		LAYOUT		48630

For R/W Data, See Roadway Plans

Note: Use Type Special Approach Gutters ("W" = 4'-0" & "W" = 6'-0") Typical Each End of Bridge.

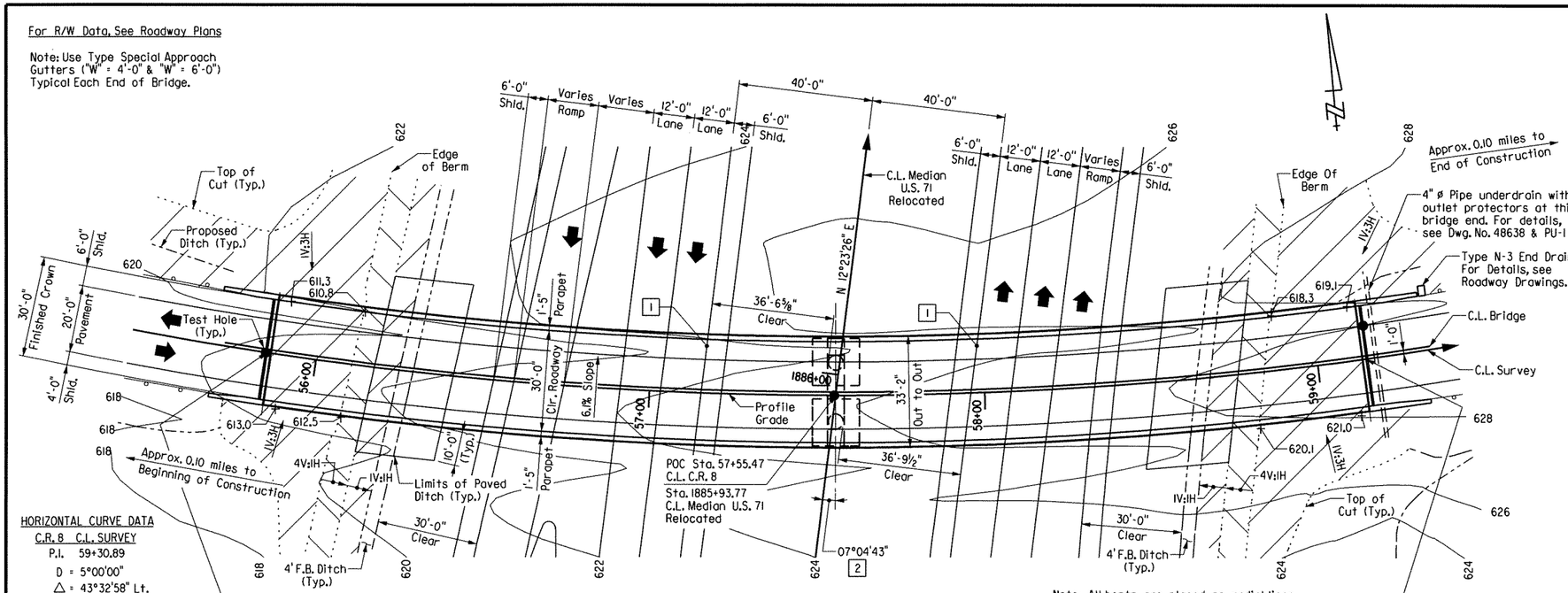

PLAN

[1] Location of Minimum Vertical Clearance

[2] Skew angle is measured from a line radial to C.L. Bridge

Note: Unless otherwise noted, stations and elevations shown are top of deck along C.L. Bridge.

Note: All bents are placed on radial lines from C.L. Bridge unless otherwise noted.

+ Denotes spot elevation in rock cut.

Hatching denotes limits of excavation.

See Roadway plans for details of cut sections.

HORIZONTAL CURVE DATA
C.R. 8 C.L. SURVEY
P.I. 59+30.89
D = 5°00'00"
△ = 43°32'58" Lt.
T = 457.75'
R = 1145.92'
L = 870.99'
E = 88.04'
e = 6.1%

P.V.I. Sta. 55+50.00
Elev. 619.94
+4.390% +2.473%
V.C. = 200.00'

VERTICAL CURVE DATA
(Along Profile Grade)
See "SUPERELEVATION TRANSITION SKETCH"

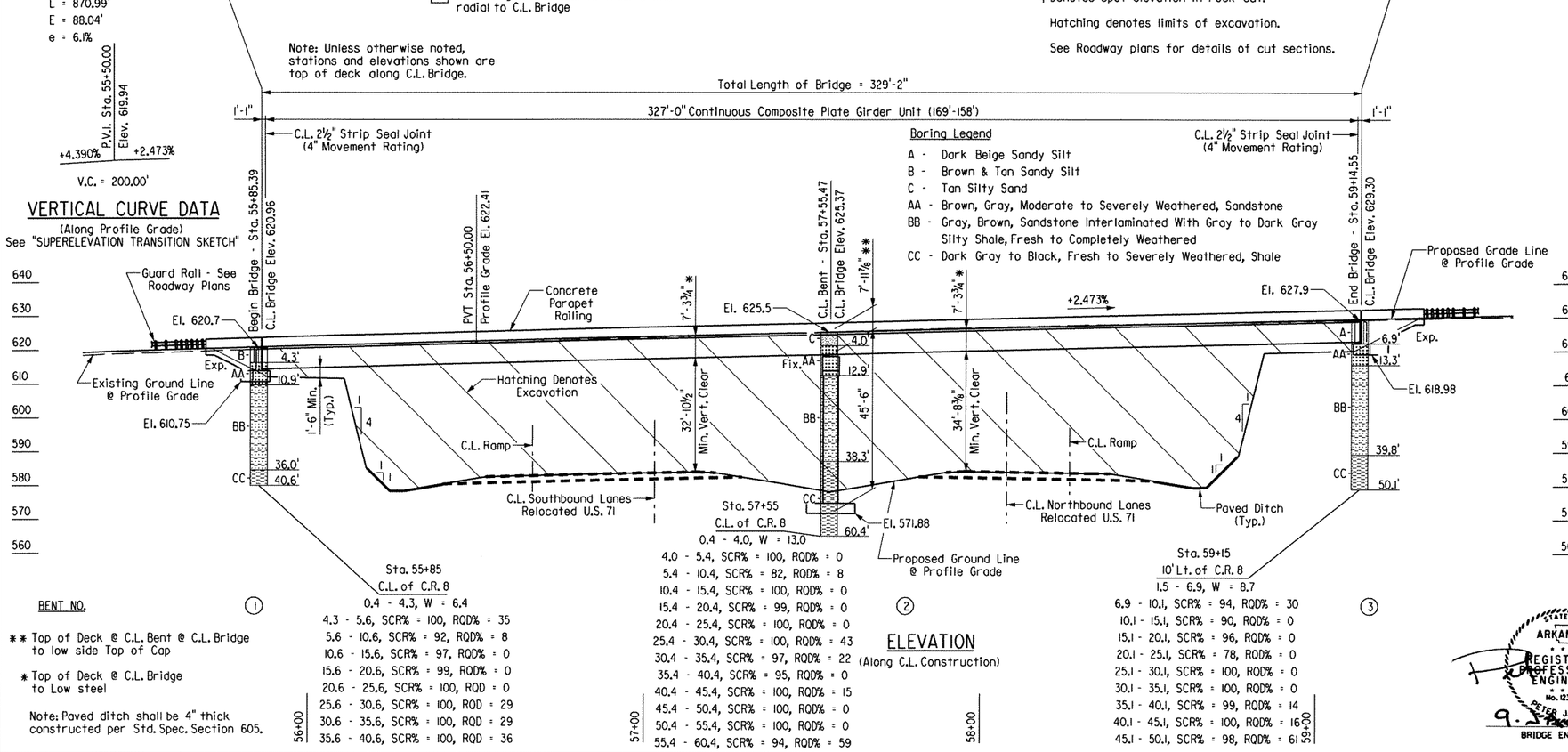

ELEVATION
(Along C.L. Construction)

Boring Legend
A - Dark Beige Sandy Silt
B - Brown & Tan Sandy Silt
C - Tan Silty Sand
AA - Brown, Gray, Moderate to Severely Weathered, Sandstone
BB - Gray, Brown, Sandstone Interlaminated With Gray to Dark Gray Silty Shale, Fresh to Completely Weathered
CC - Dark Gray to Black, Fresh to Severely Weathered, Shale

BENT NO. (1)
Sta. 55+85
C.L. of C.R. 8
0.4 - 4.3, W = 6.4
4.3 - 5.6, SCR% = 100, RQD% = 35
5.6 - 10.6, SCR% = 92, RQD% = 8
10.6 - 15.6, SCR% = 97, RQD% = 0
15.6 - 20.6, SCR% = 99, RQD% = 0
20.6 - 25.6, SCR% = 100, RQD = 0
25.6 - 30.6, SCR% = 100, RQD = 29
30.6 - 35.6, SCR% = 100, RQD = 29
35.6 - 40.6, SCR% = 100, RQD = 36

BENT NO. (2)
Sta. 57+55
C.L. of C.R. 8
0.4 - 4.0, W = 13.0
4.0 - 5.4, SCR% = 100, RQD% = 0
5.4 - 10.4, SCR% = 82, RQD% = 8
10.4 - 15.4, SCR% = 100, RQD% = 0
15.4 - 20.4, SCR% = 99, RQD% = 0
20.4 - 25.4, SCR% = 100, RQD% = 0
25.4 - 30.4, SCR% = 100, RQD% = 43
30.4 - 35.4, SCR% = 97, RQD% = 22
35.4 - 40.4, SCR% = 95, RQD% = 0
40.4 - 45.4, SCR% = 100, RQD% = 15
45.4 - 50.4, SCR% = 100, RQD% = 0
50.4 - 55.4, SCR% = 100, RQD% = 0
55.4 - 60.4, SCR% = 94, RQD% = 59

BENT NO. (3)
Sta. 59+15
10' Lt. of C.R. 8
1.5 - 6.9, W = 8.7
6.9 - 10.1, SCR% = 94, RQD% = 30
10.1 - 15.1, SCR% = 90, RQD% = 0
15.1 - 20.1, SCR% = 96, RQD% = 0
20.1 - 25.1, SCR% = 78, RQD% = 0
25.1 - 30.1, SCR% = 100, RQD% = 0
30.1 - 35.1, SCR% = 100, RQD% = 0
35.1 - 40.1, SCR% = 99, RQD% = 14
40.1 - 45.1, SCR% = 100, RQD% = 16
45.1 - 50.1, SCR% = 98, RQD% = 61

** Top of Deck @ C.L. Bent @ C.L. Bridge to low side Top of Cap

* Top of Deck @ C.L. Bridge to Low steel

Note: Paved ditch shall be 4" thick constructed per Std. Spec. Section 605.

GENERAL NOTES

BENCH MARK: Railroad Spike in 12" Oak, 239.00' Rt. of C.L. Construction U.S. 71 Relocated Sta. 1885+98.90, Elevation 630.35

CONSTRUCTION SPECIFICATIONS: Arkansas State Highway and Transportation Department Standard Specifications for Highway Construction (2003 edition), with applicable supplemental specifications and special provisions. Unless otherwise noted on the plans, section and subsection refer to the Standard Construction Specifications.

DESIGN SPECIFICATIONS: AASHTO Standard Specifications for Highway Bridges (2002 edition), with current interim specifications.

LIVE LOAD: HS20 METHOD OF DESIGN: Load Factor
SEISMIC PERFORMANCE CATEGORY: A

MATERIALS AND STRENGTHS:

Class S(AE) Concrete (Superstructure)	f'c = 4,000 psi
Class S Concrete (Substructure)	f'c = 3,500 psi
Reinforcing Steel (AASHTO M 31 or M 53, Gr, 60)	fy = 60,000 psi
Structural Steel (AASHTO M 270, Gr. 50)	Fy = 50,000 psi
Structural Steel (AASHTO M 270, Gr. 36)	Fy = 36,000 psi

BORING LOGS: Boring Logs may be obtained from the Programs and Contracts Division.

FOOTINGS: Footings for Bent No. 2 shall be set a minimum of 1'-6" into competent sandstone or shale and shall have a minimum cover above top of footings of 2'-0". Footings for Bent Nos. 1 and 3 shall be set a minimum of 1'-6" into competent sandstone. Foundations for footings shall be prepared in accordance with Section 801.04 of the Standard Specifications. Rock excavations shall be made to neat lines of the concrete footings. Care shall be exercised to avoid shattering of rock faces by excessive blasting. Concrete in footings shall be poured directly against excavated surfaces of rock.

BRIDGE DECK: The concrete bridge deck shall be given a tine finish as specified for final finishing in Subsection 802.19 for Class 5 Tined Bridge Roadway Surface Finish.

CLASS I PROTECTIVE SURFACE TREATMENT: Class I Protective Surface Treatment shall be applied to the roadway surface and to the face and top of the concrete parapet rail.

TEXTURED COATING FINISH: Class 3 Textured Coating Finish shall be applied to bridge surfaces as specified in SP Job 040478 "TEXTURED COATING FINISH" in accordance with Section 802.19. Textured Coating Finish shall not be applied on surfaces where Class I Protective Surface Treatment is applied.

PAINTING: All structural steel except galvanized members and some surfaces in contact with concrete shall be painted as specified in subsection 807.75. The color shall be Gray and match Fed. Std. 595B, Color Chip No. 26176.

FORM INSERT: State of Arkansas form inserts shall be used at end bent wingwalls (4 locations). See Dwg. No. 48639 for details.

DETAIL DRAWINGS:	DRAWING NO.
End Bents	48631-48633, 48636-48638
Intermediate Bent	48634-48635
State of Arkansas Form Insert	48639
327'-0" Cont. Comp. Plate Girder Unit	48640-48647
Elastomeric Bearings	48648
Type Special Approach Gutter	48648A

MAINTENANCE OF TRAFFIC: See roadway plans

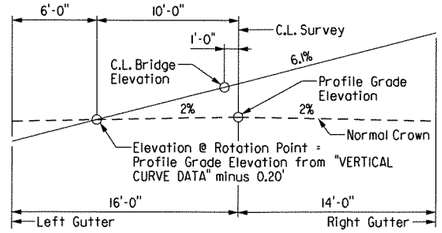

SUPERELEVATION TRANSITION SKETCH
(Looking Forward)
No Scale

Note: Superelevation is 6.1% from Sta. 55+75.00 to Sta. 62+75.00.

For Profile Grade Elevation, see "VERTICAL CURVE DATA".

STATE OF ARKANSAS REGISTERED PROFESSIONAL ENGINEER No. 12307 PETER J. STAK
9. Stak 2012
BRIDGE ENGINEER

LAYOUT OF COUNTY ROAD 8 BRIDGE OVER U.S. ROUTE 71 RELOCATED HWY. 71 INTERCHANGE (GR. & STRS.) (F) SEBASTIAN COUNTY

ROUTE 71 SEC.

ARKANSAS STATE HIGHWAY COMMISSION
LITTLE ROCK, ARK.

DRAWN BY: JAP DATE: 03-06 FILENAME: b040478mi_111.dgn
CHECKED BY: PJS DATE: 05-08 SCALE: 1" = 20'
DESIGNED BY: PJS DATE: 03-06

BRIDGE NO. 07079 DRAWING NO. 48630

Florence & Hutcheson, Inc.
Consulting Engineers

$$$$dgnspec$$$$$. $$$$date$$$$

Note: Class I Protective Surface Treatment shall be applied to the face and top of the transition rail and the top of the backwall.

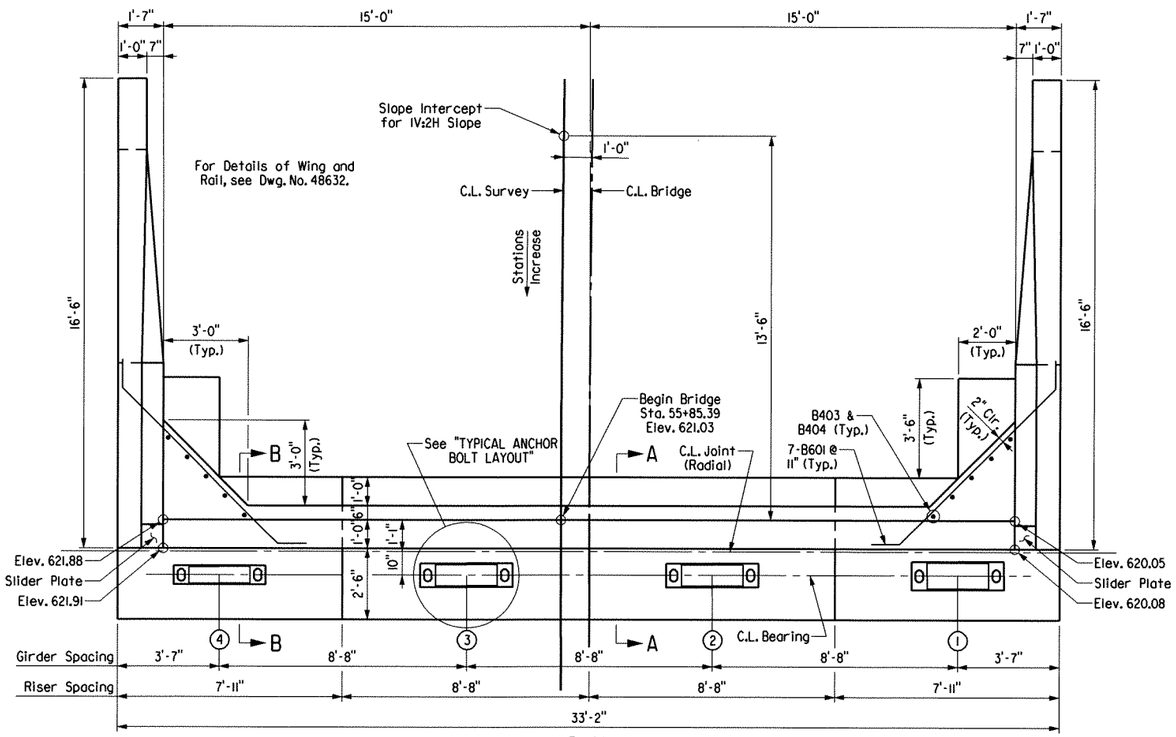

PLAN

Scale: 3/8" = 1'-0"

(A) B604 & B606 - 3 Sp. @ 10" = 2'-6" (Front Face)
B605 & B607 - 3 Sp. @ 10" = 2'-6" (Back Face)

(B) B510 & B515 - 3 Sp. @ 10" = 2'-6" (Front Face)
B514 & B516 - 3 Sp. @ 10" = 2'-6" (Back Face)

(C) B507 & B515 - 3 Sp. @ 10" = 2'-6" (Front Face)
B511 & B516 - 3 Sp. @ 10" = 2'-6" (Back Face)

(D) B602 & B606 - 3 Sp. @ 10" = 2'-6" (Front Face)
B603 & B607 - 3 Sp. @ 10" = 2'-6" (Back Face)

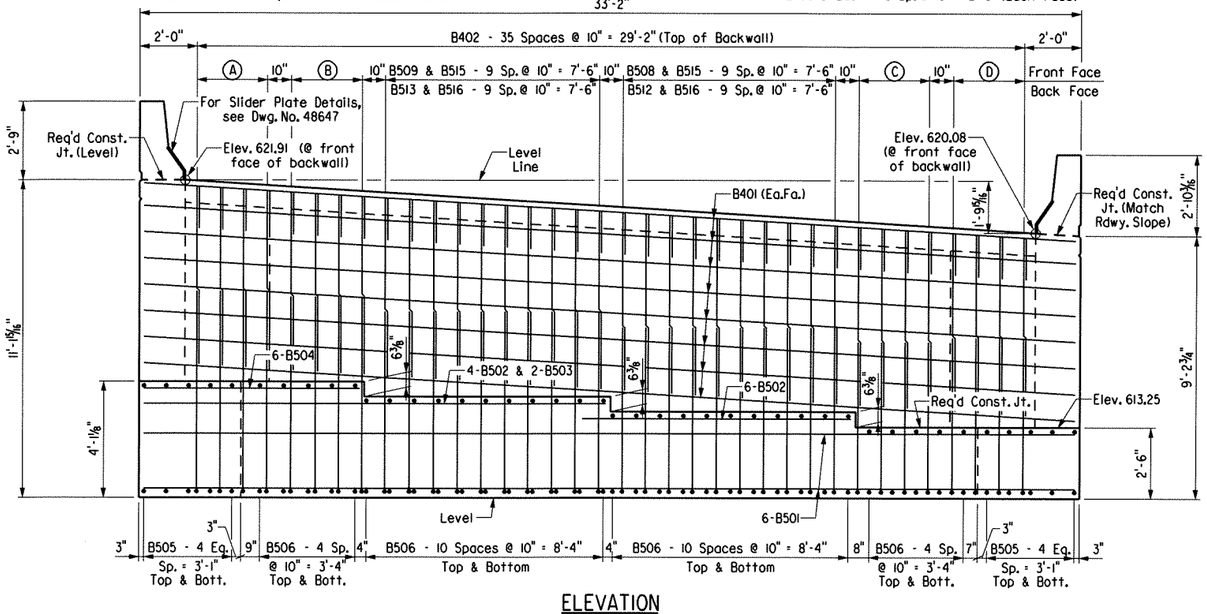

ELEVATION

(Looking Back Station)
Scale: 3/8" = 1'-0"

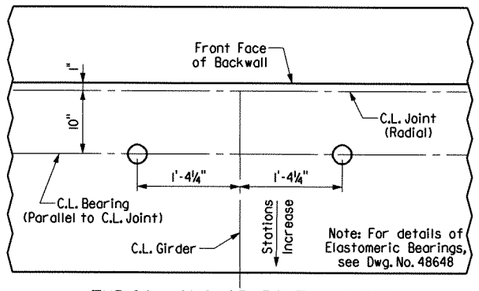

TYPICAL ANCHOR BOLT LAYOUT

Scale: 1" = 1'-0"

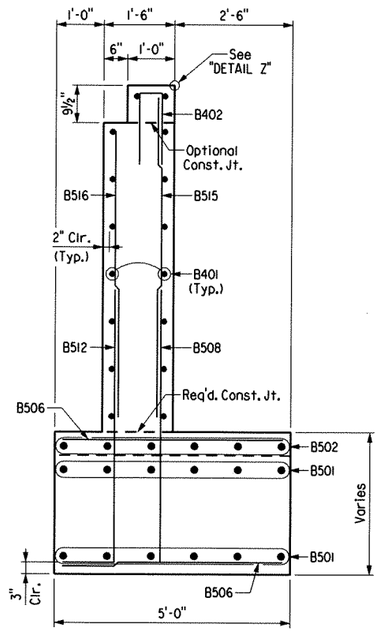

SECTION A-A

Not to Scale

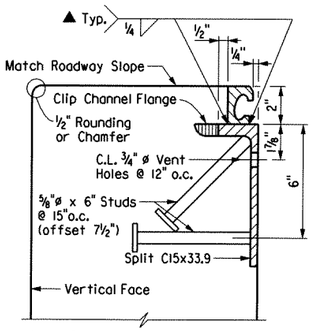

Note: Concrete shall be hand packed under the joint armor in the backwall.

For additional details, See Dwg. No. 48647.

DETAIL Z

3" = 1'-0"

▲ Shop Weld - See SP Job 040478 "ARMORED JOINT WITH NEOPRENE STRIP SEAL"

SECTION B-B

Not to Scale

DATE REVISED	DATE FILMED	DATE REVISED	DATE FILMED	FED. ROAD DIST. NO.	STATE	FED. AID PROJ. NO.	SHEET NO.	TOTAL SHEETS
				6	ARK.			
				JOB NO.		040478	69	229
				(1) 07079		BENT DETAILS		48631

GENERAL NOTES

All concrete shall be Class "S" with a minimum 28 day compressive strength f'c = 3,500 psi and shall be poured in the dry. All exposed corners to be chamfered ¾" unless otherwise noted.

All reinforcing steel shall conform to AASHTO M31 or M53, Grade 60 (yield strength = 60,000 psi).

Backwall shall not be poured before beams are erected. See Dwg. No. 48647 for expansion device installation at end bents.

All structural steel shall be AASHTO M270, Grade 50 unless otherwise noted. All exposed surfaces shall be cleaned and painted Gray in accordance with Section 807. Cleaning and painting will be paid for under the pay item "PAINTING STRUCTURAL STEEL".

Top reinforcing bars in cap shall be properly placed to avoid interference with anchor bolts or sheet metal sleeves.

For additional information, see LAYOUT on Dwg. No. 48630.

STATE OF ARKANSAS
REGISTERED PROFESSIONAL ENGINEER
No. 12307
PETER J. STAK
BRIDGE ENGINEER
14 JUN 2010

SHEET 1 OF 3
DETAILS OF BENT 1
COUNTY ROAD 8 BRIDGE

ROUTE 71 SEC.

ARKANSAS STATE HIGHWAY COMMISSION

LITTLE ROCK, ARK.

DRAWN BY: JAP DATE: 03-06
CHECKED BY: PJS DATE: 05-08
DESIGNED BY: PJS DATE: 03-06
FILENAME: b040478ml_bll.dgn
SCALE: AS SHOWN

BRIDGE NO. 07079 DRAWING NO. 48631

Florence & Hutcheson, Inc.
Consulting Engineers

7/14/2010

I:\07075\county road 8\dgn\b040478ml_bll.dgn

DATE REVISED	DATE FILMED	DATE REVISED	DATE FILMED	FED. ROAD DIST. NO.	STATE	FED. AID PROJ. NO.	SHEET NO.	TOTAL SHEETS
				6	ARK.			
				JOB NO.		040478	70	229
				①	07079	BENT DETAILS		48632

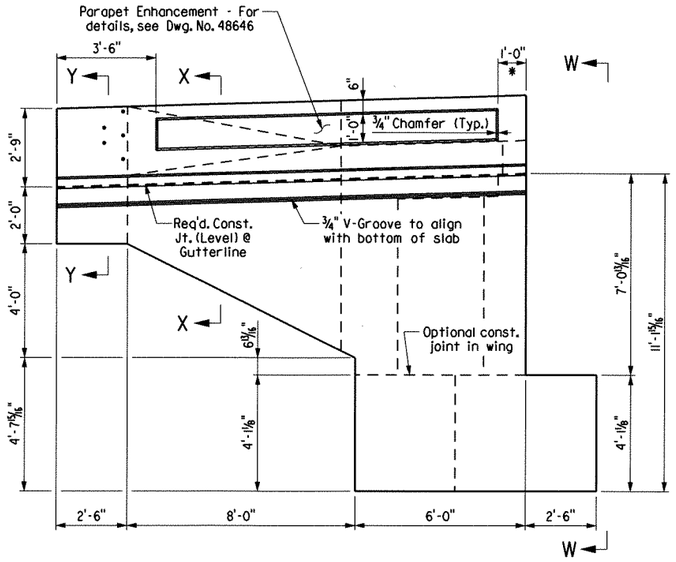

VIEW A-A
Scale: ⅜" = 1'-0"

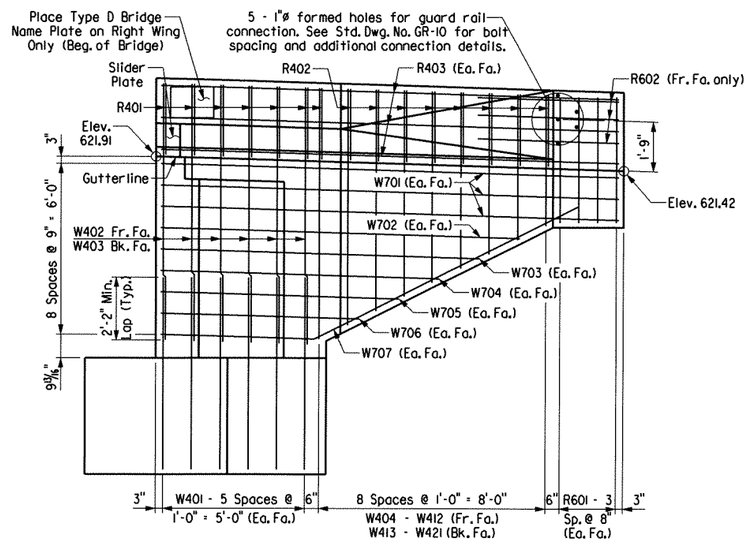

VIEW B-B
Scale: ⅜" = 1'-0"

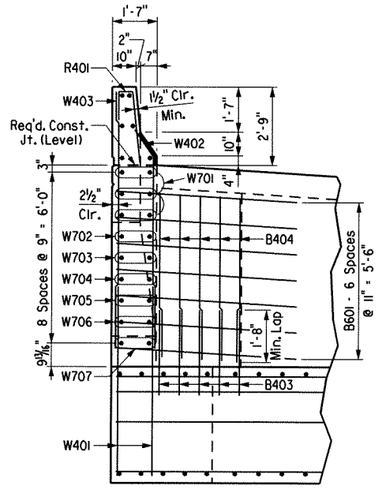

VIEW W-W
Scale: ⅜" = 1'-0"

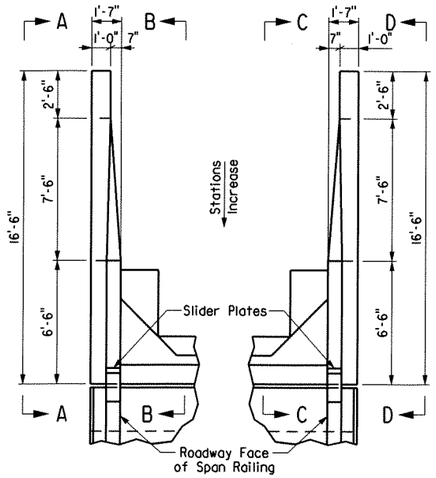

PLAN OF RAIL
Scale: ¼" = 1'-0"

* Parapet enhancement shall be made continuous if slip forms are used on bridge parapet rail.

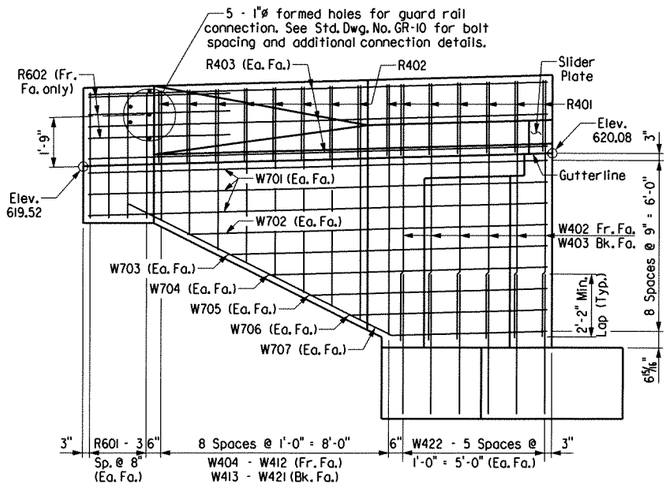

VIEW C-C
Scale: ⅜" = 1'-0"

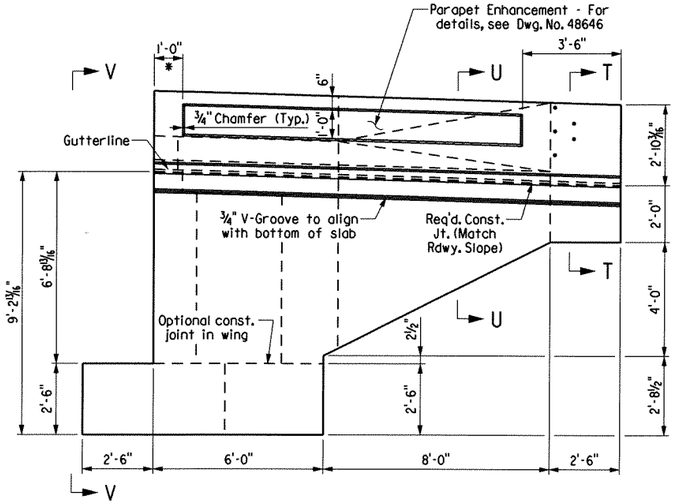

VIEW D-D
Scale: ⅜" = 1'-0"

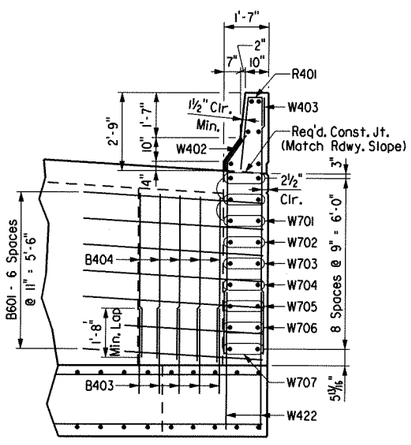

VIEW V-V
Scale: ⅜" = 1'-0"

Place Type D Bridge Name Plate on right transition rail at beginning of bridge approx. 6" from joint. See Std. Dwg. No. 2387.

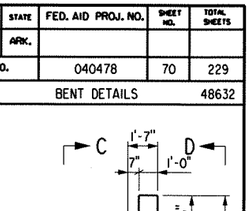

NAME PLATE DETAIL
No Scale

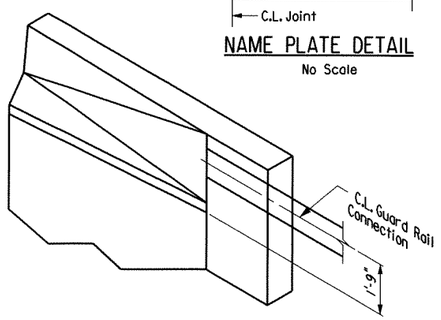

THREE DIMENSIONAL VIEW OF RAIL
No Scale

SHEET 2 OF 3
DETAILS OF BENT 1
COUNTY ROAD 8 BRIDGE

ROUTE 71 SEC.

ARKANSAS STATE HIGHWAY COMMISSION
LITTLE ROCK, ARK.

DRAWN BY: JAP DATE: 03-06 FILENAME: b040478ml_bl2.dgn
CHECKED BY: PJS DATE: 05-08 SCALE: AS SHOWN
DESIGNED BY: PJS DATE: 03-06
BRIDGE NO. 07079 DRAWING NO. 48632

STATE OF ARKANSAS REGISTERED PROFESSIONAL ENGINEER No. 12307 PETER J. SZAK BRIDGE ENGINEER
14 JULY 2010

Florence & Hutcheson, Inc.
CONSULTING ENGINEERS

7/14/2010
I:\01075\county road 8\dgn\b040478ml_bl2.dgn

DATE REVISED	DATE FILMED	DATE REVISED	DATE FILMED	FED. ROAD DIST. NO.	STATE	FED. AID PROJ. NO.	SHEET NO.	TOTAL SHEETS
				6	ARK.			
				JOB NO.		040478	71	229
				①	07079	BENT DETAILS		48633

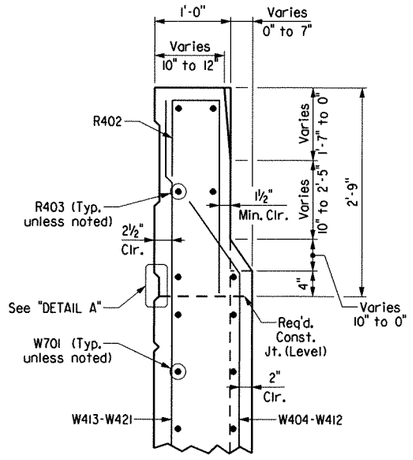

SECTION X-X
Scale: 1" = 1'-0"

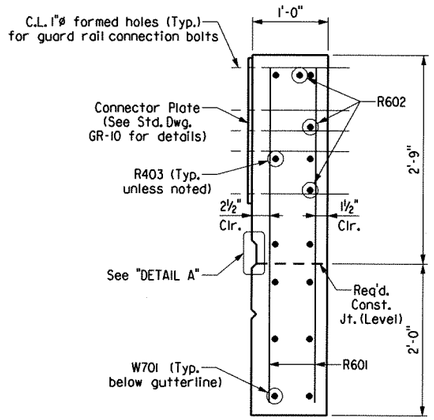

SECTION Y-Y
Scale: 1" = 1'-0"

BAR LIST - BENT 1

Mark	Number Required	Length	Pin Dia.	Mark	Number Required	Length	Pin Dia.	Mark	Number Required	Length	Pin Dia.
B401	16	32'-10"	Str.	B604	4	7'-1"	Str.	W414	2	8'-3"	Str.
B402	36	3'-5"	2"	B605	4	8'-1"	4½"	W415	2	7'-9"	Str.
B403	10	3'-0"	Str.	B606	8	6'-4"	Str.	W416	2	7'-3"	Str.
B404	10	5'-11"	Str.	B607	8	5'-7"	Str.	W417	2	6'-8"	Str.
								W418	2	6'-2"	Str.
B501	12	32'-10"	Str.	R401	14	3'-11"	2"	W419	2	5'-8"	Str.
B502	10	9'-6"	Str.	R402	16	3'-11"	2"	W420	2	5'-1"	Str.
B503	2	16'-3"	Str.	R403	12	16'-2"	Str.	W421	2	4'-7"	Str.
B504	6	7'-7"	Str.					W422	12	4'-11"	Str.
B505	20	8'-2"	Str.	R601	16	4'-5"	Str.				
B506	64	4'-8"	Str.	R602	6	5'-0"	Str.	W701	12	16'-2"	Str.
B507	4	5'-4"	Str.					W702	4	12'-8"	Str.
B508	10	5'-10"	Str.	W401	12	6'-9"	Str.	W703	4	11'-3"	Str.
B509	10	6'-5"	Str.	W402	12	8'-0"	3"	W704	4	9'-10"	Str.
B510	4	6'-11"	Str.	W403	12	9'-1"	Str.	W705	4	8'-5"	Str.
B511	4	6'-3"	3¾"	W404	2	7'-9"	3"	W706	4	7'-0"	Str.
B512	10	6'-9"	3¾"	W405	2	7'-2"	3"	W707	4	15'-10"	5¼"
B513	10	7'-4"	3¾"	W406	2	6'-8"	3"				
B514	4	7'-10"	3¾"	W407	2	6'-2"	3"				
B515	28	6'-4"	Str.	W408	2	5'-7"	3"				
B516	28	5'-7"	Str.	W409	2	5'-1"	3"				
				W410	2	4'-7"	3"				
B601	14	9'-9"	4½"	W411	2	4'-1"	3"				
B602	4	5'-5"	Str.	W412	2	3'-6"	3"				
B603	4	6'-8"	4½"	W413	2	8'-10"	Str.				

Bending Diagrams
(Dimensions are out to out of bars.)

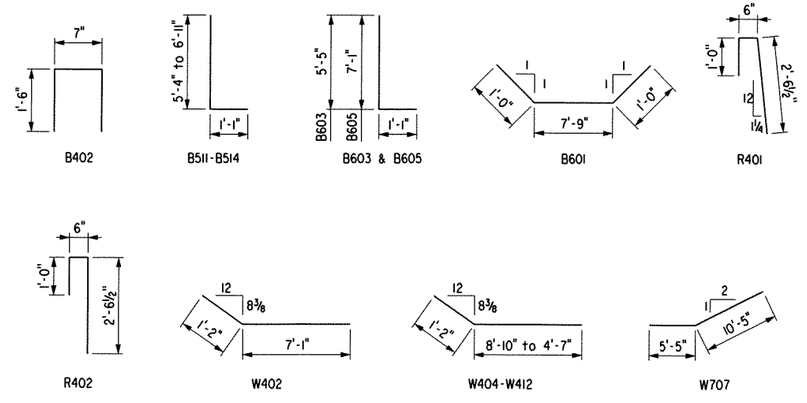

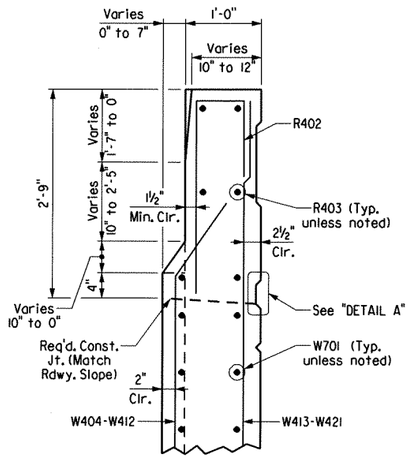

SECTION U-U
Scale: 1" = 1'-0"

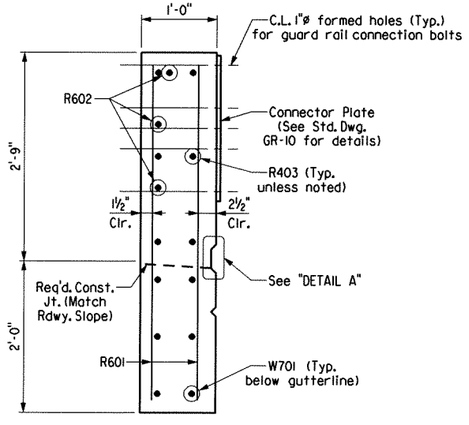

SECTION T-T
Scale: 1" = 1'-0"

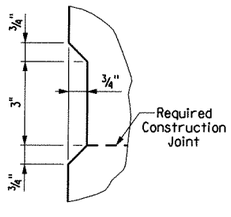

DETAIL A
Scale: 4" = 1'-0"

STATE OF ARKANSAS
REGISTERED PROFESSIONAL ENGINEER
No. 12307
PETER J. SZAK
BRIDGE ENGINEER
14 DEC 2010

SHEET 3 OF 3
DETAILS OF BENT 1
COUNTY ROAD 8 BRIDGE
ROUTE 71 SEC.
ARKANSAS STATE HIGHWAY COMMISSION
LITTLE ROCK, ARK.

DRAWN BY: JAP DATE: 03-06 FILENAME: b040478ml_bl3.dgn
CHECKED BY: PJS DATE: 05-08 SCALE: AS SHOWN
DESIGNED BY: PJS DATE: 03-06
BRIDGE NO. 07079 DRAWING NO. 48633

Florence & Hutcheson, Inc.
Consulting Engineers

7/14/2010

I:\07075\county road 8\dgn\b040478ml_bl3.dgn

DATE REVISED	DATE FILMED	DATE REVISED	DATE FILMED	FED. ROAD DIST. NO.	STATE	FED. AID PROJ. NO.	SHEET NO.	TOTAL SHEETS
				6	ARK.			
				JOB NO.		040478	72	229
				①	07079	BENT DETAILS		48634

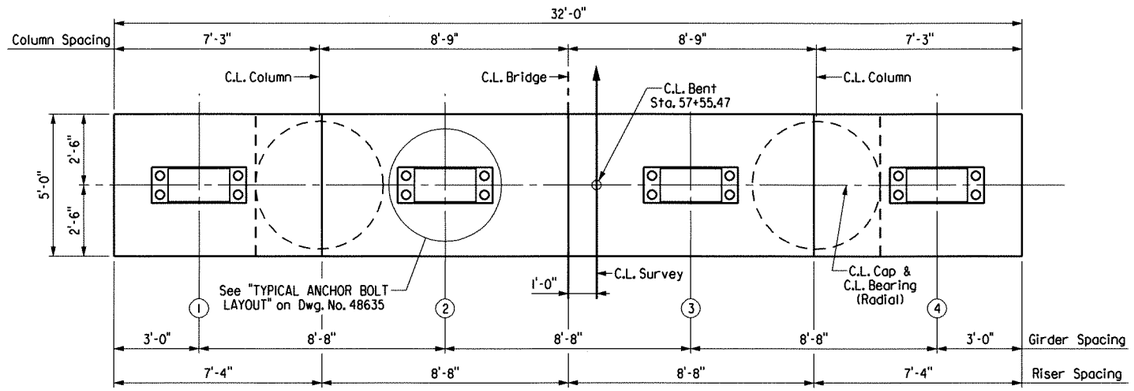

PLAN
Scale: ⅜" = 1'-0"

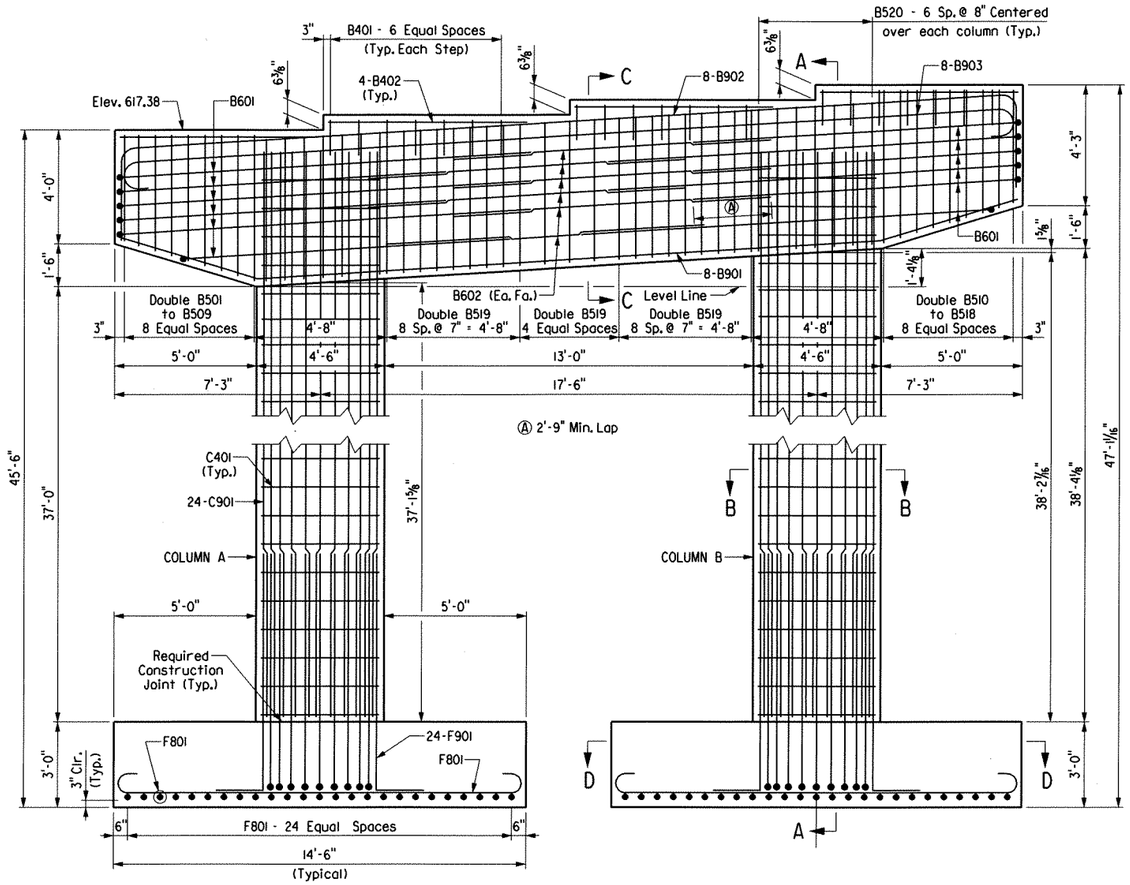

ELEVATION
(Looking Ahead)
Scale: ⅜" = 1'-0"

GENERAL NOTES

All concrete shall be Class "S" with a minimum 28-day compressive strength f'c = 3500 psi. Concrete shall be poured in the dry and all exposed corners to be chamfered ¾" unless otherwise noted.

All reinforcing shall conform to AASHTO M31 or M53, Grade 60 (yield strength = 60,000 psi).

Reinforcing bars in top of cap shall be properly placed to avoid interference with anchor bolts or sheet metal sleeves.

For additional information, see LAYOUT on Dwg. No. 48630.

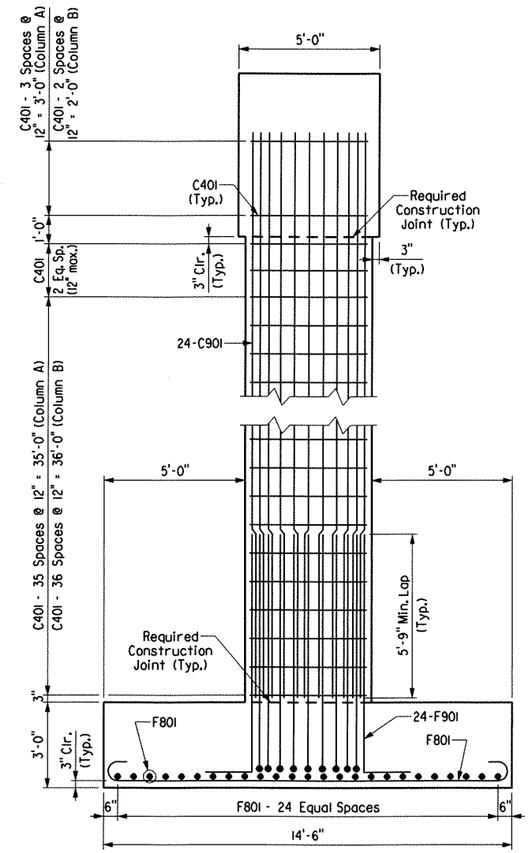

SECTION A-A
Scale: ⅜" = 1'-0"

SHEET 1 OF 2
DETAILS OF BENT 2
COUNTY ROAD 8 BRIDGE
ROUTE 71 SEC.
ARKANSAS STATE HIGHWAY COMMISSION
LITTLE ROCK, ARK.

STATE OF ARKANSAS — REGISTERED PROFESSIONAL ENGINEER — No. 12307 — PETER J. STAN — BRIDGE ENGINEER
14 Jul 2010

DRAWN BY: JAP DATE: 03-06
CHECKED BY: PJS DATE: 05-08
DESIGNED BY: PJS DATE: 03-06
FILENAME: b040478ml_b21.dgn
SCALE: AS SHOWN
BRIDGE NO. 07079
DRAWING NO. 48634

Florence & Hutcheson, Inc.
CONSULTING ENGINEERS

h:\07075\county road 8\dgn\b040478ml_b21.dgn 7/14/2010

DATE REVISED	DATE FILMED	DATE REVISED	DATE FILMED	FED. ROAD DIST. NO.	STATE	FED. AID PROJ. NO.	SHEET NO.	TOTAL SHEETS
				6	ARK.			
				JOB NO.		040478	73	229
				1	07079	BENT DETAILS		48635

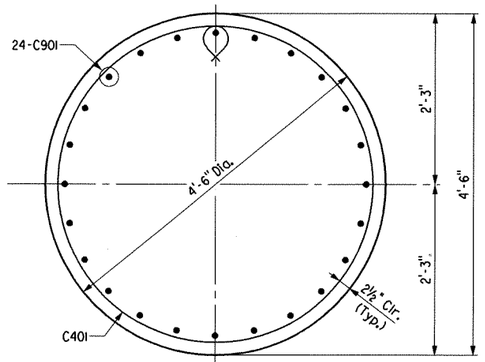

SECTION B-B
Scale: 1" = 1'-0"

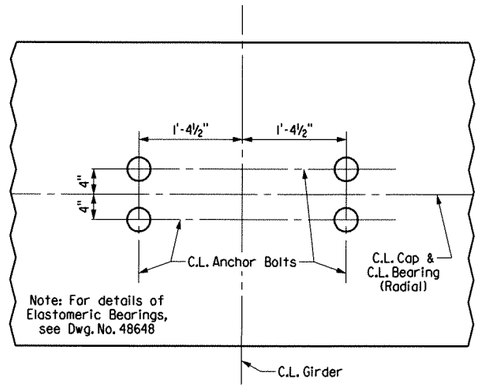

TYPICAL ANCHOR BOLT LAYOUT
Scale: 1" = 1'-0"

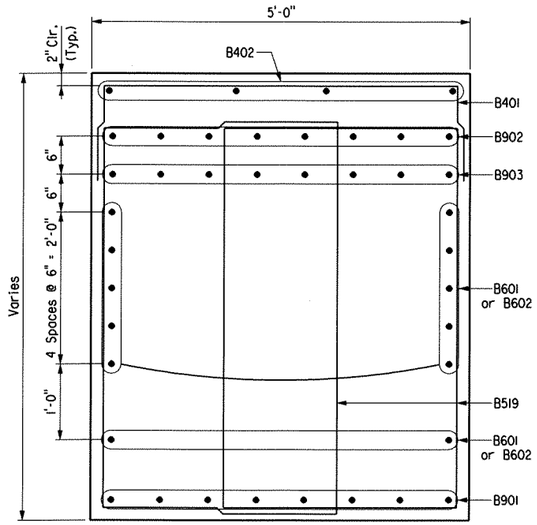

SECTION C-C
Scale: 1" = 1'-0"

BAR LIST - BENT 2

Mark	Number Required	Length	Pin Dia.
B401	21	6'-0"	2"
B402	16	7'-0"	Str.
B501	2	14'-2"	2½"
B502	2	14'-6"	2½"
B503	2	14'-10"	2½"
B504	2	15'-2"	2½"
B505	2	15'-6"	2½"
B506	2	15'-10"	2½"
B507	2	16'-2"	2½"
B508	2	16'-6"	2½"
B509	2	16'-10"	2½"
B510	2	17'-4"	2½"
B511	2	17'-0"	2½"
B512	2	16'-8"	2½"
B513	2	16'-4"	2½"
B514	2	16'-0"	2½"
B515	2	15'-8"	2½"
B516	2	15'-4"	2½"
B517	2	15'-0"	2½"
B518	2	14'-8"	2½"
B519	42	16'-8"	2½"
B520	14	14'-6"	2½"
B601	12	30'-2"	4½"
B602	12	11'-3"	Str.
B901	8	31'-1"	9"
B902	8	37'-6"	9"
B903	8	33'-10"	9"
C401	84	14'-2"	3"
C901	48	41'-7"	Str.
F801	100	15'-10"	6"
F901	48	11'-11"	9"

Bending Diagrams
(Dimensions are out to out of bars.)

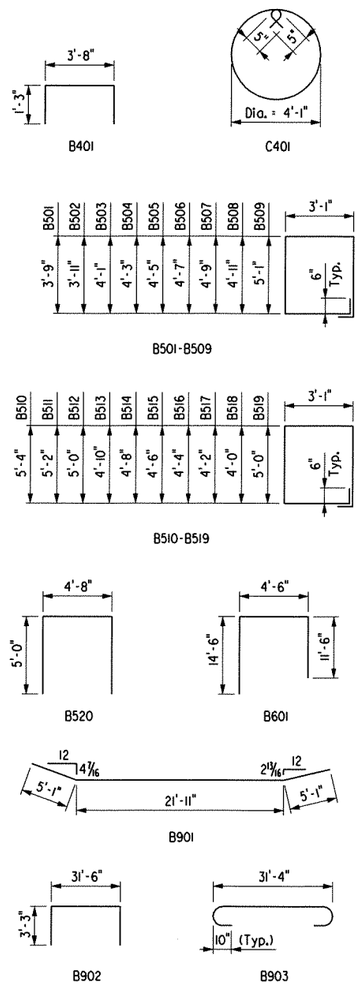

SHEET 2 OF 2
DETAILS OF BENT 2
COUNTY ROAD 8 BRIDGE

ROUTE 71 SEC.
ARKANSAS STATE HIGHWAY COMMISSION
LITTLE ROCK, ARK.

STATE OF ARKANSAS
REGISTERED PROFESSIONAL ENGINEER
No. 12307
PETER J. SZAK
BRIDGE ENGINEER
14-July-2010

DRAWN BY: JAP DATE: 03-06 FILENAME: b040478ml_b22.dgn
CHECKED BY: PJS DATE: 05-08 SCALE: AS SHOWN
DESIGNED BY: PJS DATE: 03-06
BRIDGE NO. 07079 DRAWING NO. 48635

Florence & Hutcheson, Inc.
CONSULTING ENGINEERS
I:\01075\county road 8\dgn\b040478ml_b22.dgn
7/14/2010

Note: Class I Protective Surface Treatment shall be applied to the face and top of the transition rail and the top of the backwall.

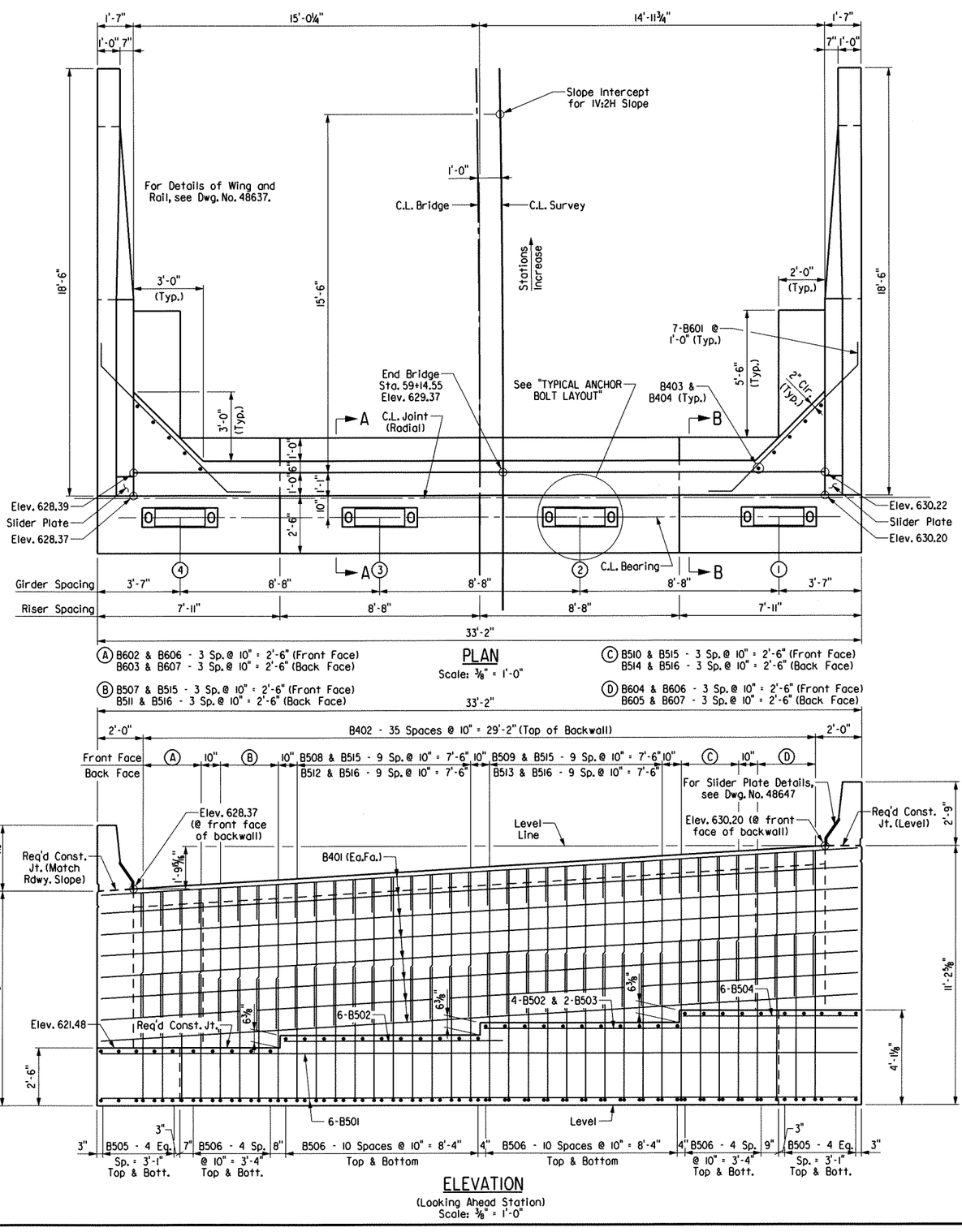

PLAN
Scale: ⅜" = 1'-0"

Ⓐ B602 & B606 - 3 Sp. @ 10" = 2'-6" (Front Face)
B603 & B607 - 3 Sp. @ 10" = 2'-6" (Back Face)

Ⓑ B507 & B515 - 3 Sp. @ 10" = 2'-6" (Front Face)
B511 & B516 - 3 Sp. @ 10" = 2'-6" (Back Face)

Ⓒ B510 & B515 - 3 Sp. @ 10" = 2'-6" (Front Face)
B514 & B516 - 3 Sp. @ 10" = 2'-6" (Back Face)

Ⓓ B604 & B606 - 3 Sp. @ 10" = 2'-6" (Front Face)
B605 & B607 - 3 Sp. @ 10" = 2'-6" (Back Face)

ELEVATION
(Looking Ahead Station)
Scale: ⅜" = 1'-0"

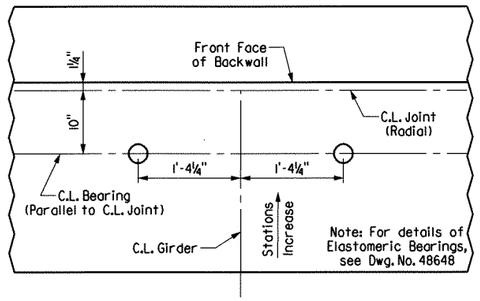

TYPICAL ANCHOR BOLT LAYOUT
Scale: 1" = 1'-0"

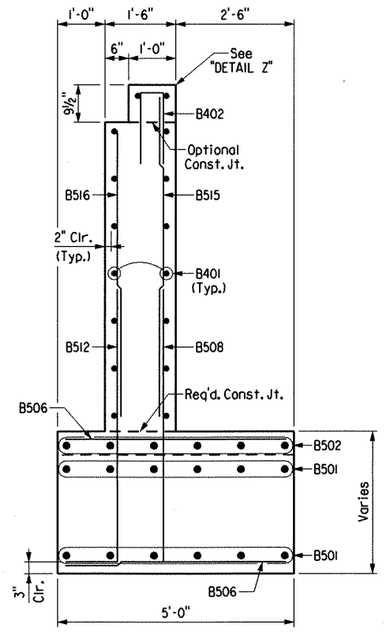

SECTION A-A
Not to Scale

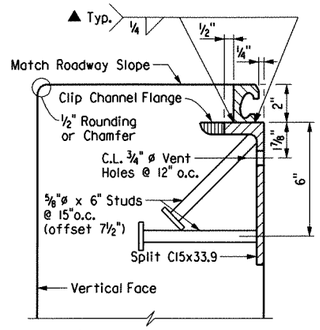

Note: Concrete shall be hand packed under the joint armor in the backwall.

For additional details, See Dwg. No. 48647.

DETAIL Z
3"= 1'-0"

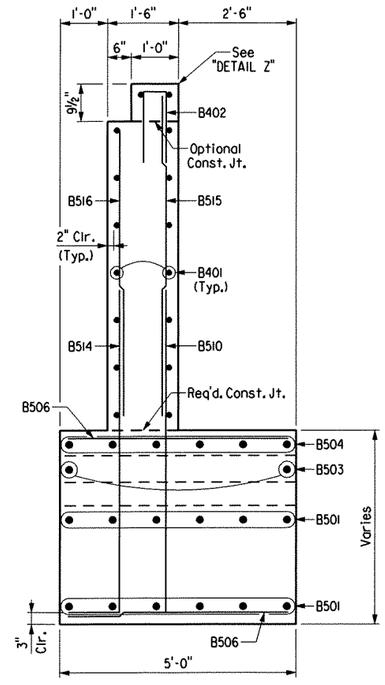

SECTION B-B
Not to Scale

▲ Shop Weld - See SP Job 040478 "ARMORED JOINT WITH NEOPRENE STRIP SEAL"

DATE REVISED	DATE FILMED	DATE REVISED	DATE FILMED	FED. ROAD DIST. NO.	STATE	FED. AID PROJ. NO.	SHEET NO.	TOTAL SHEETS
				6	ARK.			
				JOB NO.		040478	74	229
				①	07079	BENT DETAILS		48636

GENERAL NOTES

All concrete shall be Class "S" with a minimum 28 day compressive strength f'c = 3,500 psi and shall be poured in the dry. All exposed corners to be chamfered ¾" unless otherwise noted.

All reinforcing steel shall conform to AASHTO M31 or M53, Grade 60 (yield strength = 60,000 psi).

Backwall shall not be poured before beams are erected. See Dwg. No. 48647 for expansion device installation at end bents.

All structural steel shall be AASHTO M270, Grade 50 unless otherwise noted. All exposed surfaces shall be cleaned and painted Gray in accordance with Section 807. Cleaning and painting will be paid for under the pay item "PAINTING STRUCTURAL STEEL".

Top reinforcing bars in cap shall be properly placed to avoid interference with anchor bolts or sheet metal sleeves.

For additional information, see LAYOUT on Dwg. No. 48630.

ARKANSAS REGISTERED PROFESSIONAL ENGINEER No. 12307 PETER J. SILK
14 JULY 2010
BRIDGE ENGINEER

SHEET 1 OF 3
DETAILS OF BENT 3
COUNTY ROAD 8 BRIDGE

ROUTE 71 SEC.

ARKANSAS STATE HIGHWAY COMMISSION
LITTLE ROCK, ARK.

DRAWN BY: JAP DATE: 03-06
CHECKED BY: PJS DATE: 05-08
DESIGNED BY: PJS DATE: 03-06
FILENAME: b040478ml_b31.dgn
SCALE: AS SHOWN

BRIDGE NO. 07079 DRAWING NO. 48636

Florence & Hutcheson, Inc.
CONSULTING ENGINEERS

7/14/2010

I:\01075\county road 8\dgn\b040478ml_b31.dgn

DATE REVISED	DATE FILMED	DATE REVISED	DATE FILMED	FED. ROAD DIST. NO.	STATE	FED. AID PROJ. NO.	SHEET NO.	TOTAL SHEETS
				6	ARK.			
				JOB NO.		040478	75	229
				1 07079		BENT DETAILS		48637

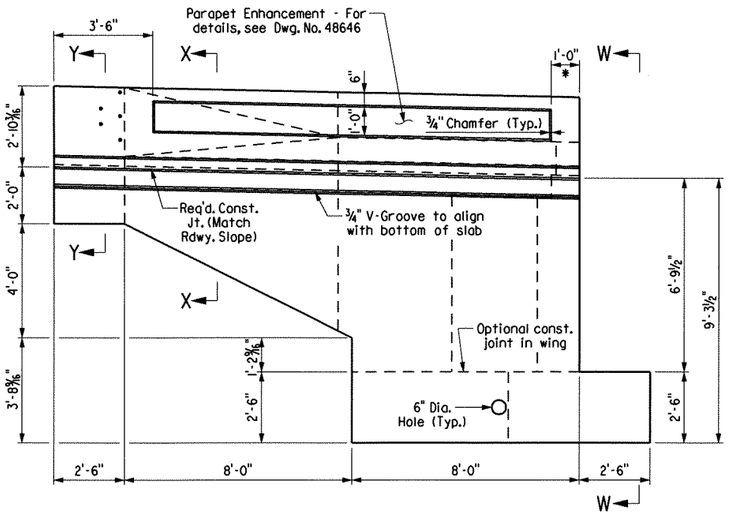

VIEW A-A
Scale: ⅜" = 1'-0"

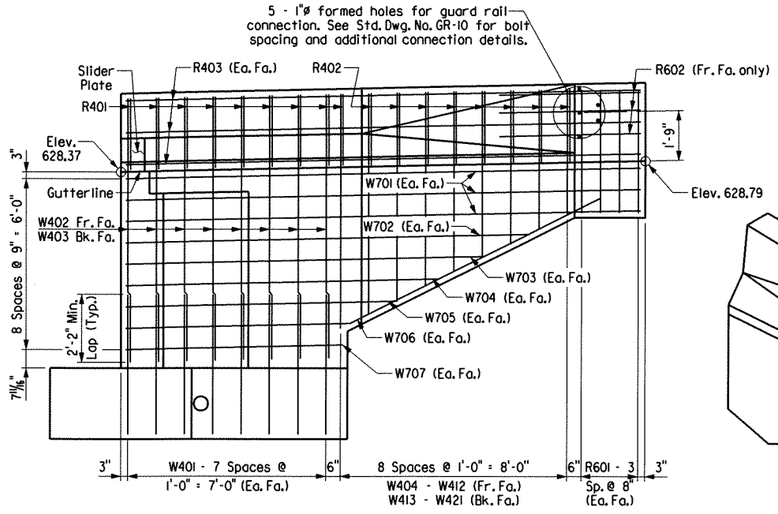

VIEW B-B
Scale: ⅜" = 1'-0"

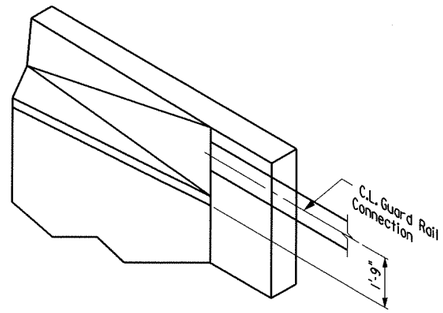

THREE DIMENSIONAL VIEW OF RAIL
No Scale

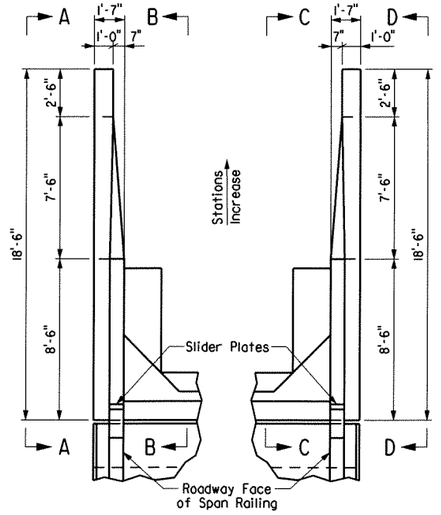

PLAN OF RAIL
Scale: ¼" = 1'-0"

* Parapet enhancement shall be made continuous if slip forms are used on bridge parapet rail.

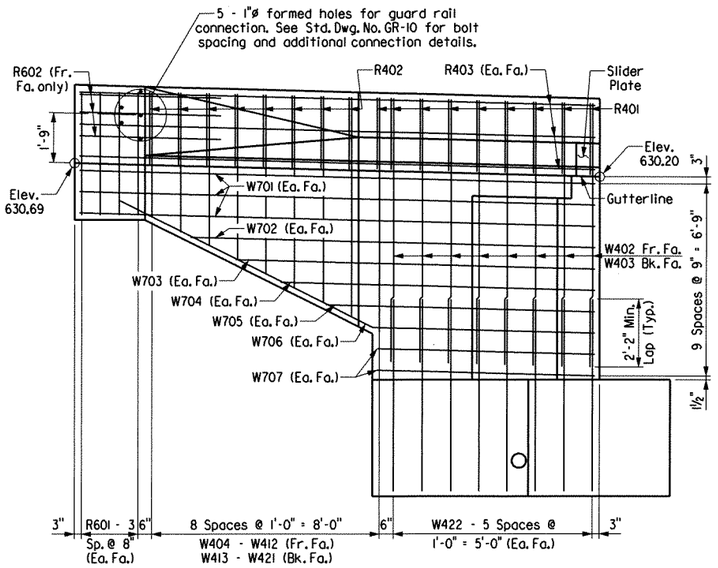

VIEW C-C
Scale: ⅜" = 1'-0"

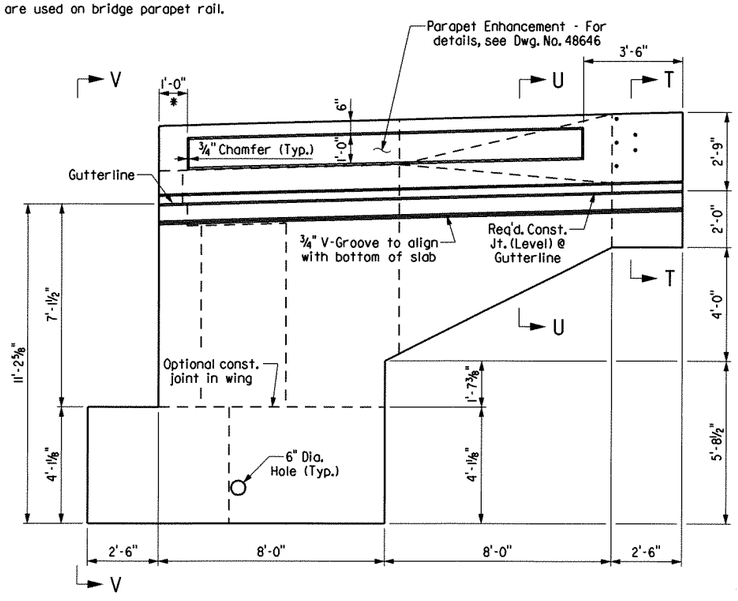

VIEW D-D
Scale: ⅜" = 1'-0"

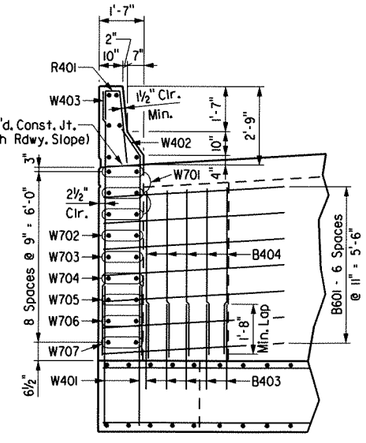

VIEW W-W
Scale: ⅜" = 1'-0"

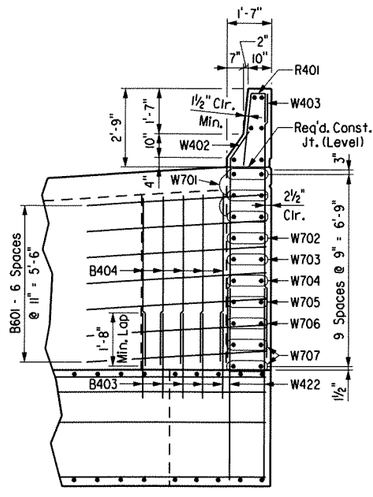

VIEW V-V
Scale: ⅜" = 1'-0"

SHEET 2 OF 3
DETAILS OF BENT 3
COUNTY ROAD 8 BRIDGE

ROUTE 71 SEC.

ARKANSAS STATE HIGHWAY COMMISSION
LITTLE ROCK, ARK.

STATE OF ARKANSAS REGISTERED PROFESSIONAL ENGINEER No. 12307 PETER J. SZIK
14 Dec 2010
BRIDGE ENGINEER

DRAWN BY: JAP DATE: 03-06
CHECKED BY: PJS DATE: 05-08
DESIGNED BY: PJS DATE: 03-06
FILENAME: b040478ml_b32.dgn
SCALE: AS SHOWN

BRIDGE NO. 07079 DRAWING NO. 48637

7/14/2010

Florence & Hutcheson, Inc.
CONSULTING ENGINEERS

I:\01075\county road 8\dgn\b040478ml_b32.dgn

DATE REVISED	DATE FILMED	DATE REVISED	DATE FILMED	FED. ROAD DIST. NO.	STATE	FED. AID PROJ. NO.	SHEET NO.	TOTAL SHEETS
				6	ARK.			
				JOB NO.		040478	76	229
				(1) 07079		BENT DETAILS		48638

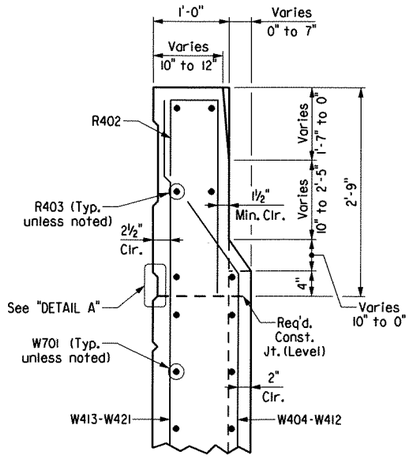

SECTION X-X
Scale: 1" = 1'-0"

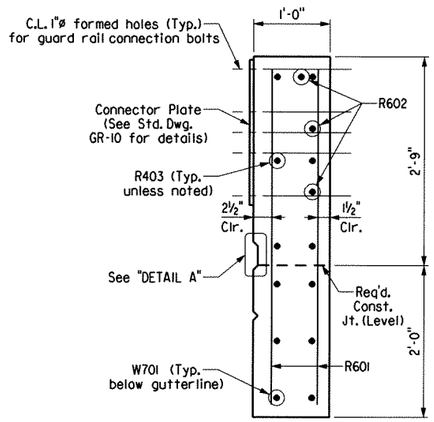

SECTION Y-Y
Scale: 1" = 1'-0"

[1] Filter fabric shall meet the requirements specified in Section 625.02, Type 2.

Notes:
For additional details of pipe underdrain see Std. Dwg. No. PU-1 and Section 611 of the Standard Specifications. Pipe underdrains will not be measured or paid for separately, but will be considered subsidiary to the unit price bid for "Unclassified Excavation for Structures-Bridge".

Filter Fabric and Granular Material shall not be paid for directly, but shall be considered subsidiary to the various bid items.

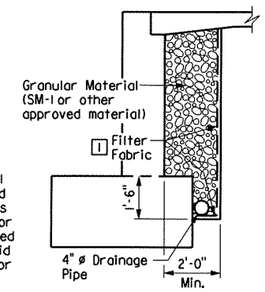

PIPE UNDERDRAIN DETAIL
No Scale

BAR LIST - BENT 3

Mark	Number Required	Length	Pin Dia.	Mark	Number Required	Length	Pin Dia.	Mark	Number Required	Length	Pin Dia.
B401	16	32'-10"	Str.	B604	4	7'-1"	Str.	W414	2	7'-9"	Str.
B402	36	3'-5"	2"	B605	4	8'-1"	4½"	W415	2	7'-4"	Str.
B403	10	3'-0"	Str.	B606	8	6'-4"	Str.	W416	2	6'-10"	Str.
B404	10	6'-4"	Str.	B607	8	5'-7"	Str.	W417	2	4'-4"	Str.
								W418	2	5'-10"	Str.
B501	12	32'-10"	Str.	R401	18	3'-11"	2"	W419	2	5'-5"	Str.
B502	10	9'-6"	Str.	R402	16	3'-11"	2"	W420	2	4'-11"	Str.
B503	2	16'-3"	Str.	R403	12	18'-2"	Str.	W421	2	4'-5"	Str.
B504	6	7'-7"	Str.					W422	16	4'-11"	Str.
B505	20	10'-2"	Str.	R601	16	4'-5"	Str.				
B506	64	4'-8"	Str.	R602	6	5'-0"	Str.	W701	12	18'-2"	Str.
B507	4	5'-4"	Str.					W702	4	14'-3"	Str.
B508	10	5'-10"	Str.	W401	16	4'-11"	Str.	W703	4	12'-8"	Str.
B509	10	6'-5"	Str.	W402	16	8'-3"	3"	W704	4	11'-1"	Str.
B510	4	6'-11"	Str.	W403	16	9'-4"	Str.	W705	4	9'-7"	Str.
B511	4	6'-3"	3¾"	W404	2	7'-2"	3"	W706	4	17'-9"	5¼"
B512	10	6'-9"	3¾"	W405	2	6'-8"	3"	W707	6	7'-8"	Str.
B513	10	7'-4"	3¾"	W406	2	6'-3"	3"				
B514	4	7'-10"	3¾"	W407	2	5'-9"	3"				
B515	28	6'-4"	Str.	W408	2	3'-3"	3"				
B516	28	5'-7"	Str.	W409	2	4'-9"	3"				
				W410	2	4'-4"	3"				
B601	14	9'-9"	4½"	W411	2	3'-10"	3"				
B602	4	5'-5"	Str.	W412	2	3'-4"	3"				
B603	4	6'-8"	4½"	W413	2	8'-3"	Str.				

Bending Diagrams
(Dimensions are out to out of bars.)

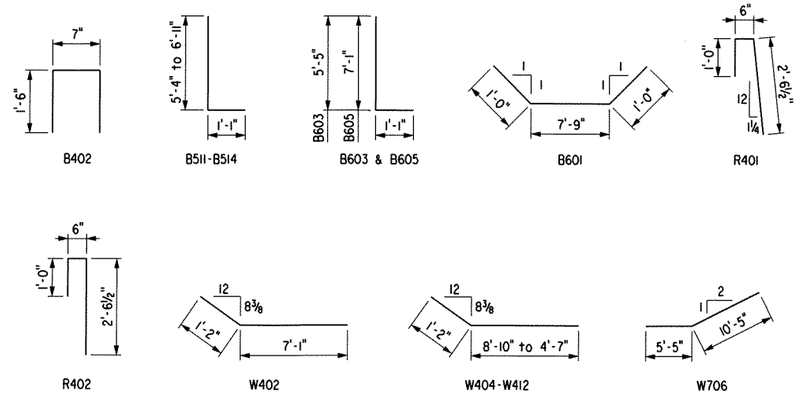

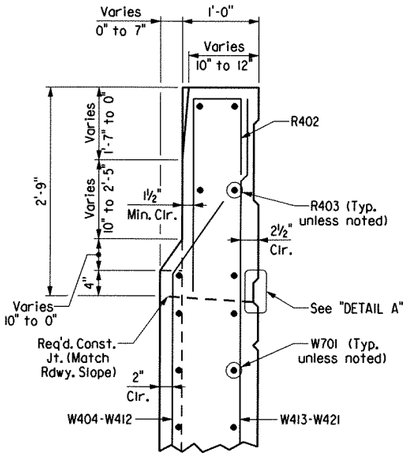

SECTION U-U
Scale: 1" = 1'-0"

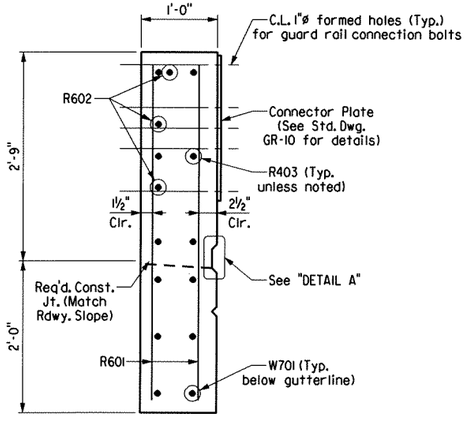

SECTION T-T
Scale: 1" = 1'-0"

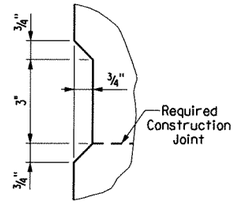

DETAIL A
Scale: 4" = 1'-0"

STATE OF ARKANSAS
REGISTERED PROFESSIONAL ENGINEER
No. 12307
CHRISTOPHER I. STAN
BRIDGE ENGINEER
14 Sept. 2010

SHEET 3 OF 3
DETAILS OF BENT 3
COUNTY ROAD 8 BRIDGE

ROUTE 71 SEC.
ARKANSAS STATE HIGHWAY COMMISSION
LITTLE ROCK, ARK.

DRAWN BY: JAP DATE: 03-06
CHECKED BY: PJS DATE: 05-08
DESIGNED BY: PJS DATE: 03-06
FILENAME: b040478ml_b33.dgn
SCALE: AS SHOWN

BRIDGE NO. 07079 DRAWING NO. 48638

Florence & Hutcheson, Inc.
CONSULTING ENGINEERS

7/14/2010
I:\07075\county road 8\dgn\b040478ml_b33.dgn

DATE REVISED	DATE FILMED	DATE REVISED	DATE FILMED	FED. ROAD DIST. NO.	STATE	FED. AID PROJ. NO.	SHEET NO.	TOTAL SHEETS
				6	ARK.			
				JOB NO.		040478	77	229
				① 07079		ARK. FORM INSERT		48639

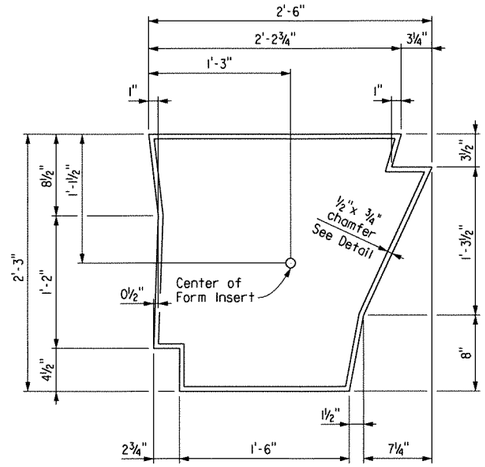

Note: Use form insert on designated bents as noted on layout or as shown on detail drawings.

FORM INSERT DETAILS

Scale: 1½" = 1'-0"

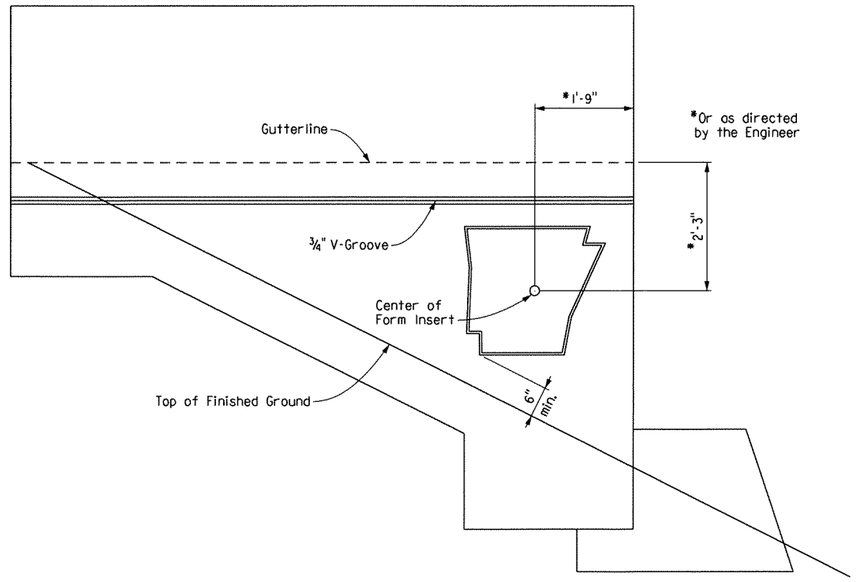

PLACEMENT AT WINGS
END BENT

Scale: ¾" = 1'-0"

GENERAL NOTES

See SP JOB NO. 040478 "TEXTURED COATING FINISH" for finishing requirements of recessed State of Arkansas form insert.

Fabricate form insert as a one piece unit, without the use of splices, joints or glue.

Wash and clean multi-use form inserts before each use.

All work and materials for form inserts shall be included in the unit price bid for "CLASS S CONCRETE-BRIDGE".

Damaged or worn form inserts shall be replaced at the contractor's expense.

The form inserts shall be approved by the Engineer before its use.

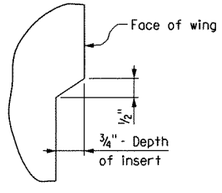

CHAMFER DETAILS

Scale: 6" = 1'-0"

STATE OF ARKANSAS REGISTERED PROFESSIONAL ENGINEER No. 12307 PETER J. STAK
9-30-2012
BRIDGE ENGINEER

DETAILS OF STANDARD STATE OF ARKANSAS FORM INSERT COUNTY ROAD 8 BRIDGE

ROUTE 71 SEC.

ARKANSAS STATE HIGHWAY COMMISSION

LITTLE ROCK, ARK.

DRAWN BY: JAP DATE: 03-06
CHECKED BY: PJS DATE: 05-08
DESIGNED BY: PJS DATE: 03-06
FILENAME: b040478ml_b41.dgn
SCALE: AS SHOWN

BRIDGE NO. 07079 DRAWING NO. 48639

Florence & Hutcheson, Inc. CONSULTING ENGINEERS

$$$$date$$$$

$$$$dgnspec$$$$$

DATE REVISED	DATE FILMED	DATE REVISED	DATE FILMED	FED. ROAD DIST. NO.	STATE	FED. AID PROJ. NO.	SHEET NO.	TOTAL SHEETS
				6	ARK.			
				JOB NO.		040478	78	229
				(1) 07079		SPAN DETAILS		48640

(1) TOLERANCE:
Minus = ¼"
Plus = Equal to amount of slab thickening used to meet slab thickness tolerance - see "ADJUSTMENT FOR SLAB THICKNESS TOLERANCE WHEN REMOVABLE DECK FORMING IS USED".

(2) See "ADJUSTMENT FOR SLAB THICKNESS TOLERANCE WHEN REMOVABLE DECK FORMING IS USED".

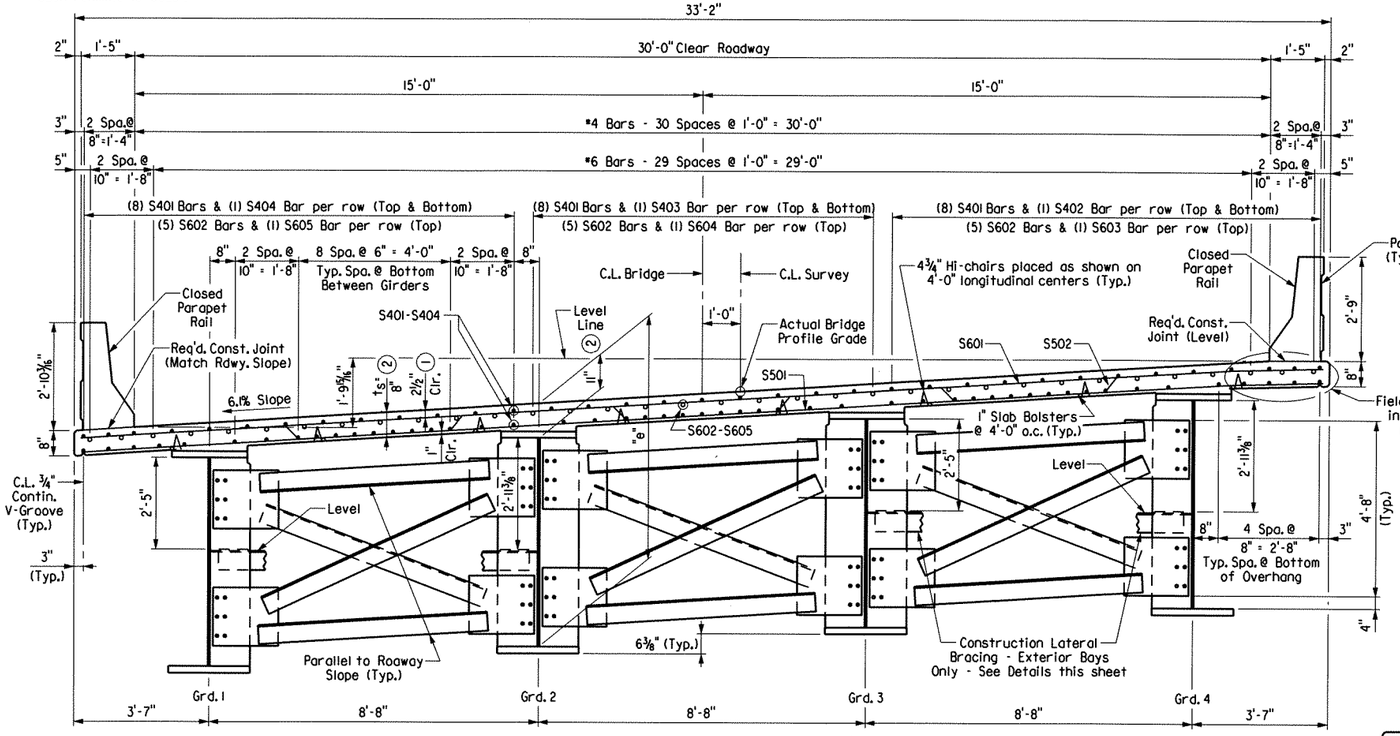

"e" = 6'-5" + Bottom Flange Thickness

TYPICAL ROADWAY SECTION

(Looking Ahead)
Scale: ½" = 1'-0"

Note: Crossframe shown is typical only at intermediate bent.

SLAB REINFORCING

Transverse: S502 @ 12" o.c. (Bent up over girders)
S601 @ 12" o.c. (Top)
S501 @ 12" o.c. (Bottom)
Longitudinal: S401 - S404 @ 12" o.c. (Top)
S401 - S404 Place as shown (Bottom)
S602 - S605 (Top)

Note: For additional reinforcing details, see Dwg. No. 48645.

Note: Class 1 Protective Surface Treatment shall be applied to the Roadway Surface and the Face and Top of Concrete Parapet Rail.

Note: One #5 bar in the top and one #5 bar in the bottom may be substituted for each bar S502. Payment will be based on the weight of bars S502.

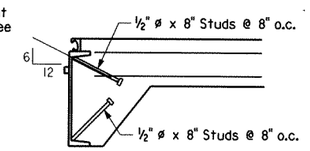

Note: As an alternate to ⅝" ø studs, ½" ø x 8" studs spaced as shown may be used. Use weight of ⅝" ø stud as basis of measurement of structural steel in anchors.

DETAIL OF ALTERNATE ANCHORS

No Scale

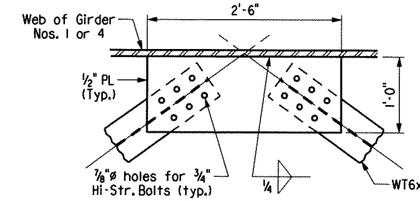

TYPICAL LATERAL BRACE CONNECTION @ GIRDER NOS. 1 & 4

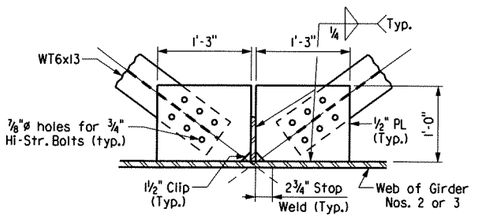

TYPICAL LATERAL BRACE CONNECTION @ GIRDER NOS. 2 & 3

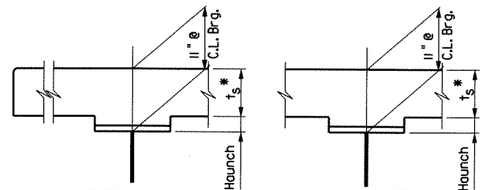

Note: ts = slab thickness as shown on "TYPICAL SECTION".
*Tolerance when removable deck forming is used is +½", -¼".
Haunch forming is required and shall be adjusted to maintain slab thickness tolerance.

ADJUSTMENT FOR SLAB THICKNESS TOLERANCE WHEN REMOVABLE DECK FORMING IS USED

No Scale

Haunch dimension may vary within the following limits to maintain the grade and slab thickness tolerance; Minimum - top flange thickness plus 3/16"; Maximum - top flange thickness plus 2½". No increase in concrete and structural steel quantities will be made to maintain tolerances.

Tolerances shown are applicable only when removable deck forming is used. See Std. Dwg. No. 14991 for tolerances when permanent steel deck forms are used. Payment for concrete shall be based on removable deck forming.

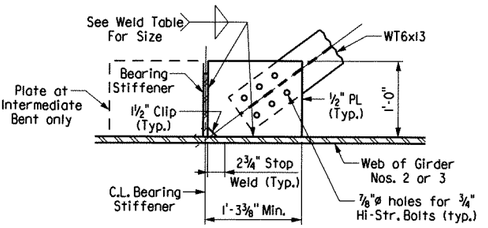

TYPICAL LATERAL BRACE CONNECTION @ BEARING

Expansion Devices:
Roadway Channel C15x33.9
Neoprene Strip Seal Steel Joint Extrusion
Connection ∠'s 7"x4"x½"
Detail Device ⅛" high & provide ¼" shims using 1 - ⅛" PL & 2 - 1/16" PLs

Note: For additional details of expansion device, see Dwg. No. 48647.

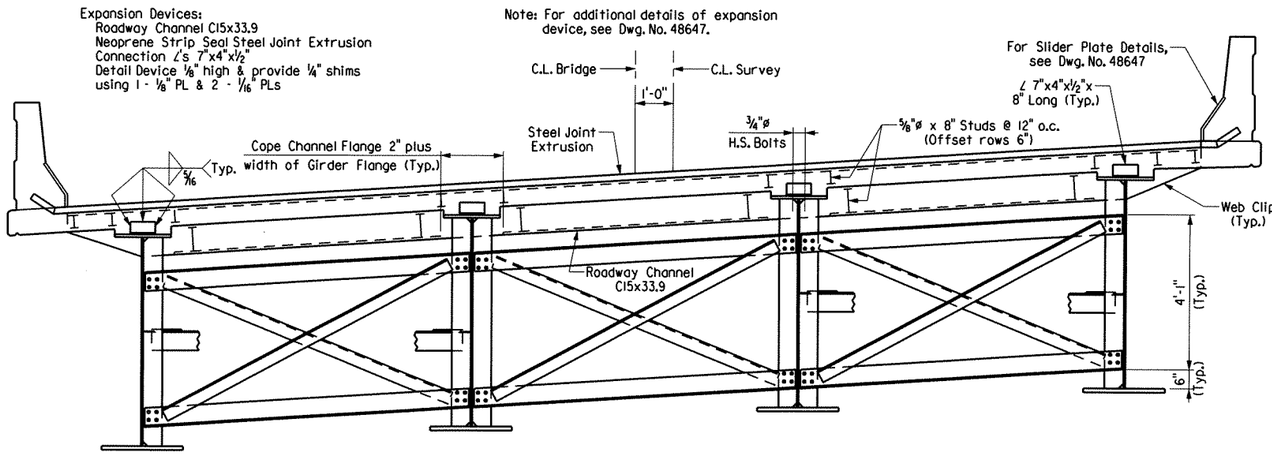

VIEW @ C.L. JOINT

(Looking Ahead)
Scale: ½" = 1'-0"

STATE OF ARKANSAS
REGISTERED PROFESSIONAL ENGINEER
No. 12307
PETER J. SZAK
14-May-2010
BRIDGE ENGINEER

SHEET 1 OF 7
DETAILS OF 327'-0" CONTINUOUS COMPOSITE PLATE GIRDER UNIT COUNTY ROAD 8 BRIDGE

ROUTE 71 SEC.

ARKANSAS STATE HIGHWAY COMMISSION
LITTLE ROCK, ARK.

DRAWN BY: JAP DATE: 03-06
CHECKED BY: PJS DATE: 05-08
DESIGNED BY: PJS DATE: 03-06
FILENAME: b040478ml_sll.dgn
SCALE: AS SHOWN

BRIDGE NO. 07079 DRAWING NO. 48640

Florence & Hutcheson, Inc.
Consulting Engineers

7/14/2010

I:\01075\county road 8\dgn\b040478ml_sll.dgn

DATE REVISED	DATE FILMED	DATE REVISED	DATE FILMED	FED. ROAD DIST. NO.	STATE	FED. AID PROJ. NO.	SHEET NO.	TOTAL SHEETS
				6	ARK.			
				JOB NO.		040478	79	229
				(1) 07079		SPAN DETAILS		48641

(1) PL 1⅛" x 12⅝" Bearing Stiffeners (Typ. @ Bt. 1, 2, & 3)

Note: All stiffeners shall be AASHTO M270, Grade 50 steel.

Note: Girders are curved and concentric to C.L. Bridge. All cross frames are on radial lines, U.N.O.

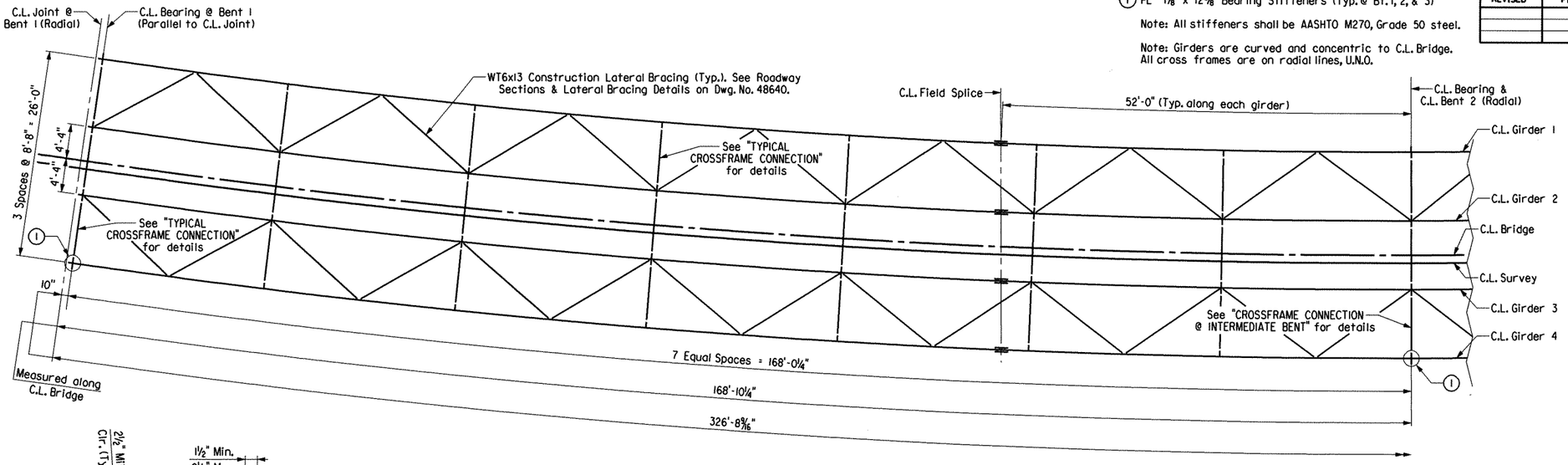

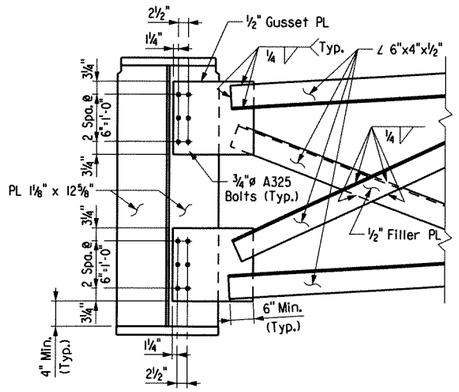

CROSSFRAME CONNECTION @ INTERMEDIATE BENT

Scale: Not to Scale

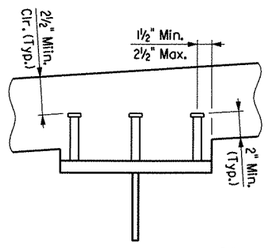

Stud Shear Connectors shown shall be ⅞"ø x 5" long, granular flux filled, solid fluxed or equal, and automatically end welded to the girder flange in accordance with the recommendations of the Manufacturer. ¾"ø studs may be used in place of the ⅞"ø studs shown, at the ratio of 1.361 - ¾"ø studs in place of one ⅞"ø stud. ⅞"ø studs will be used as basis for measurment of structural steel in shear connectors. Maximum stud spacing = 24".

SHEAR CONNECTOR DETAIL

Scale: 1½" = 1'-0"

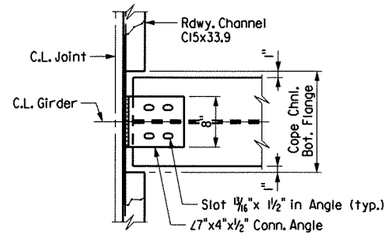

ROADWAY CHANNEL CONNECTION DETAIL

Structural steel shall be fabricated and completely fitted together in the shop in the "no-load" condition.

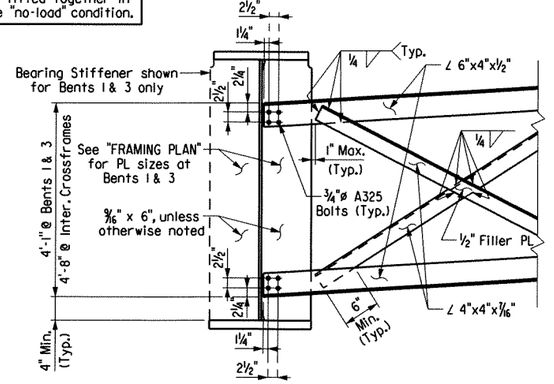

TYPICAL INTERMEDIATE CROSSFRAME CONNECTION & CROSSFRAME CONNECTION @ BENTS 1 & 3

Scale: Not to Scale

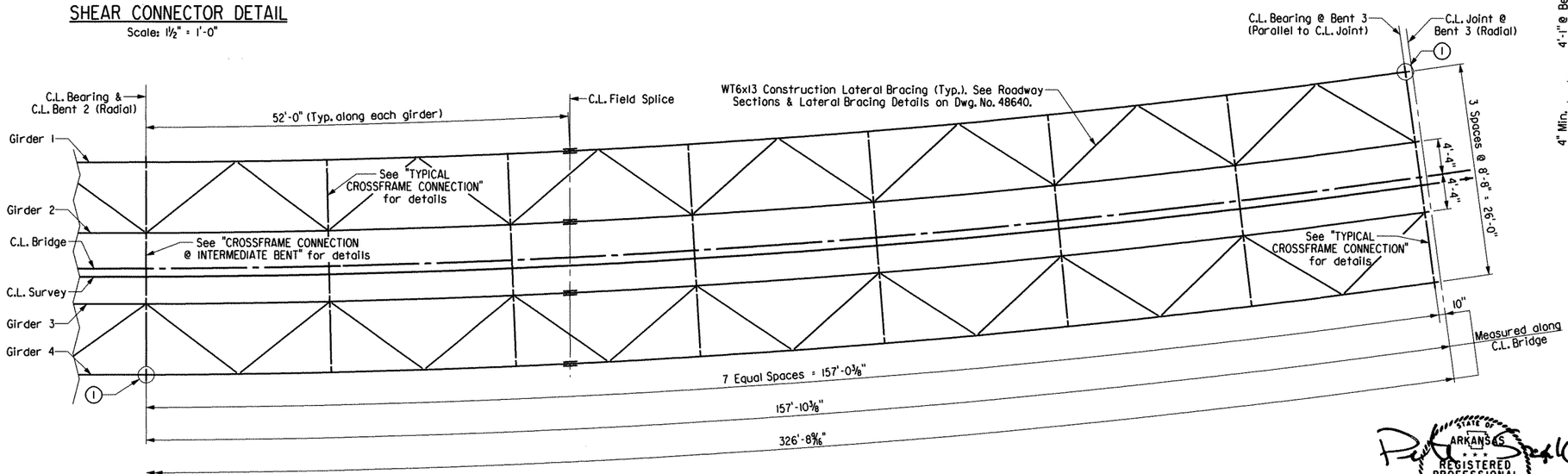

FRAMING PLAN

Scale: ⅛" = 1'-0"

STATE OF ARKANSAS
REGISTERED PROFESSIONAL ENGINEER
NO. 12307
PETER J. SZAK
14-Jul-2010
BRIDGE ENGINEER

SHEET 2 OF 7
DETAILS OF 327'-0" CONTINUOUS COMPOSITE PLATE GIRDER UNIT COUNTY ROAD 8 BRIDGE

ROUTE 71 SEC.

ARKANSAS STATE HIGHWAY COMMISSION

LITTLE ROCK, ARK.

DRAWN BY: JAP DATE: 03-06 FILENAME: b040478ml_sl2.dgn
CHECKED BY: PJS DATE: 05-08 SCALE: AS SHOWN
DESIGNED BY: PJS DATE: 03-06

BRIDGE NO. 07079 DRAWING NO. 48641

Florence & Hutcheson, Inc.
CONSULTING ENGINEERS

7/14/2010

I:\01075\county road 8\dgn\b040478ml_sl2.dgn

DATE REVISED	DATE FILMED	DATE REVISED	DATE FILMED	FED. ROAD DIST. NO.	STATE	FED. AID PROJ. NO.	SHEET NO.	TOTAL SHEETS
				6	ARK.			
				JOB NO.		040478	80	229
				(I) 07079		SPAN DETAILS		48642

Ⓐ 3 Spaces @ 14"
Ⓑ 7 Spaces @ 12"

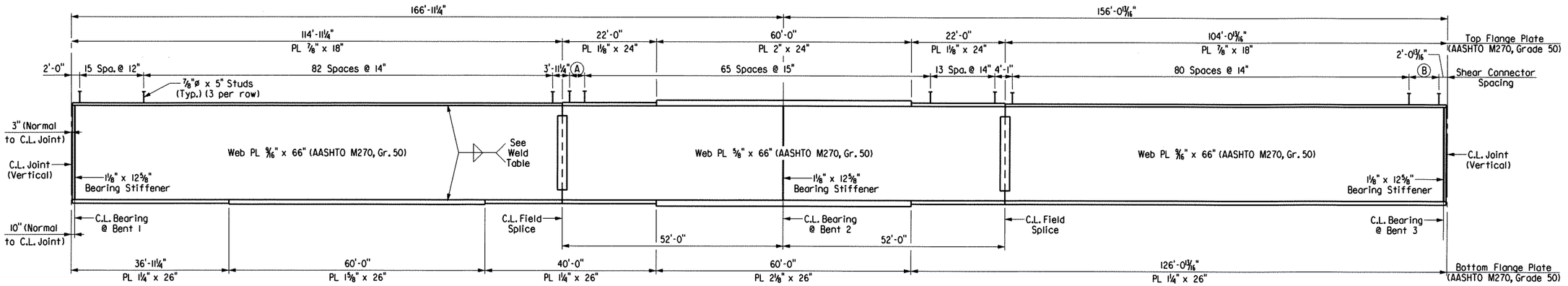

GIRDER 1 ELEVATION
Not To Scale

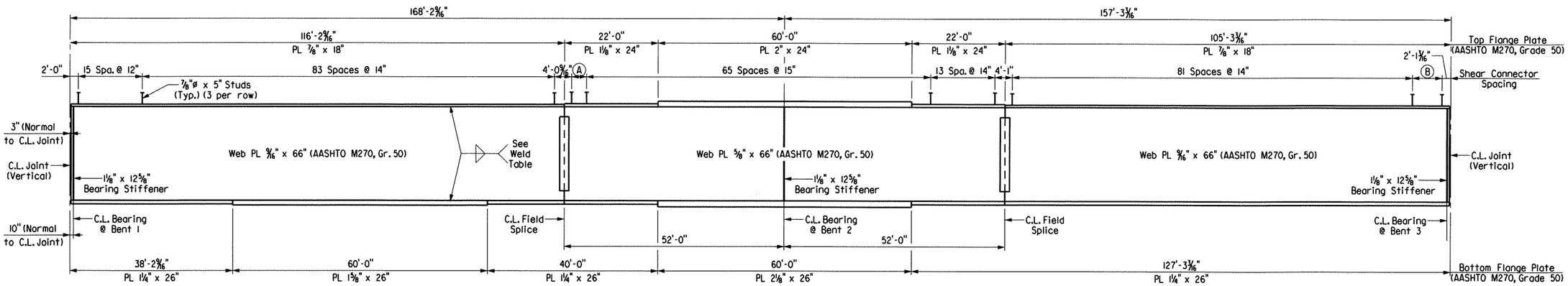

GIRDER 2 ELEVATION
Not To Scale

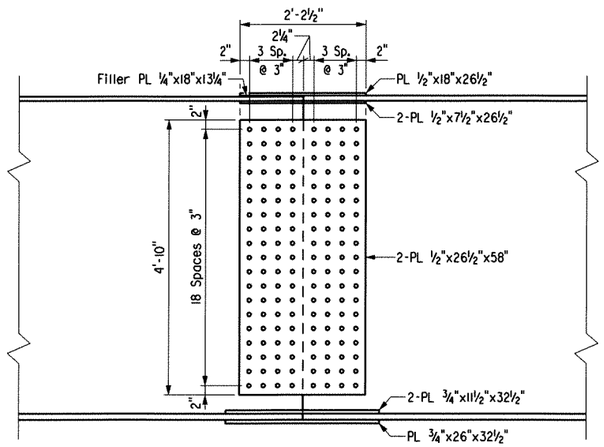

WEB SPLICE PLATES

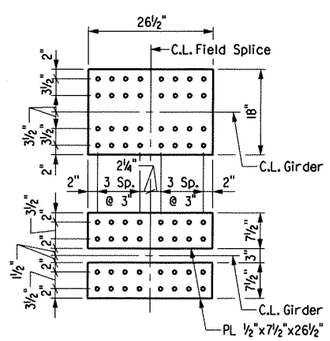

TOP FLANGE SPLICE PLATES

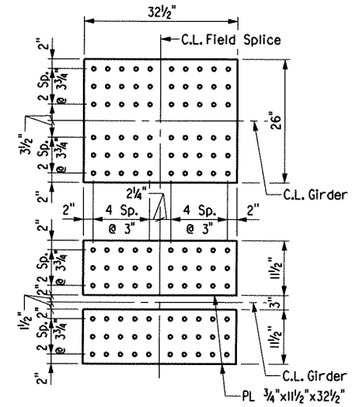

BOTTOM FLANGE SPLICE PLATES

TYPICAL FIELD SPLICE DETAILS
Scale: ¾" = 1'-0"

Note: All field splice bolts shall be ⅞"ø H.S. bolts. All field splice plates shall be AASHTO M270, Gr. 50 steel.

Note: Bolted field splices shown may be eliminated or shop welded splices may be substituted with approval of the Engineer. Payment will be made on the basis of Plan Quantities.

SHEET 3 OF 7
DETAILS OF 327'-0" CONTINUOUS COMPOSITE PLATE GIRDER UNIT
COUNTY ROAD 8 BRIDGE

ROUTE 71 SEC.

ARKANSAS STATE HIGHWAY COMMISSION
LITTLE ROCK, ARK.

STATE OF ARKANSAS — REGISTERED PROFESSIONAL ENGINEER — No. 9307 — PETER J. SZAK
14-January-2010
BRIDGE ENGINEER

DRAWN BY: JAP DATE: 03-06
CHECKED BY: PJS DATE: 05-08
DESIGNED BY: PJS DATE: 03-06
FILENAME: b040478ml_sl3.dgn
SCALE: AS SHOWN
BRIDGE NO. 07079 DRAWING NO. 48642

Florence & Hutcheson, Inc. CONSULTING ENGINEERS

7/14/2010

I:\07075\county road 8\dgn\b040478ml_sl3.dgn

DATE REVISED	DATE FILMED	DATE REVISED	DATE FILMED	FED. ROAD DIST. NO.	STATE	FED. AID PROJ. NO.	SHEET NO.	TOTAL SHEETS
				6	ARK.			
				JOB NO.		040478	81	229
				(1) 07079		SPAN DETAILS		48643

(A) 3 Spaces @ 14"
(B) 7 Spaces @ 12"

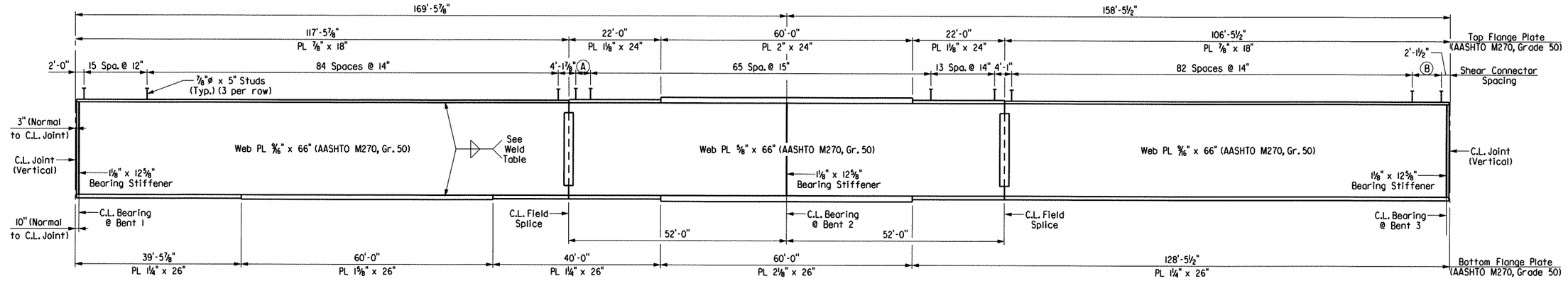

GIRDER 3 ELEVATION
Not To Scale

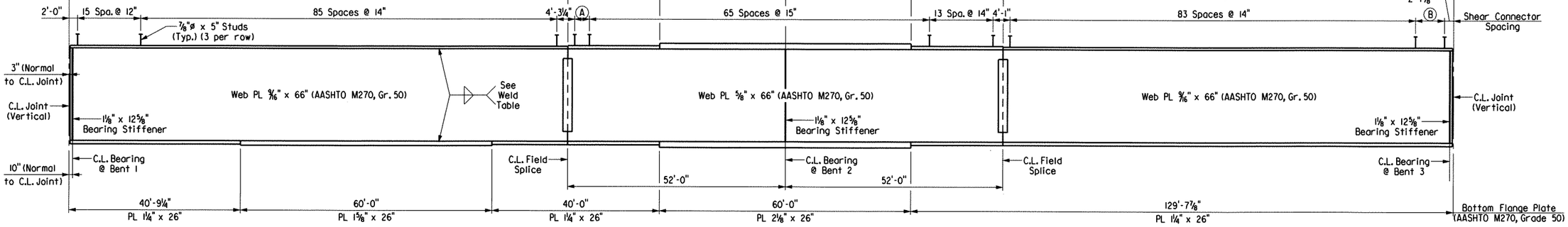

GIRDER 4 ELEVATION
Not To Scale

7/14/2010

I:\01075\county road 8\dgn\b040478mi_sl4.dgn

Florence & Hutcheson, Inc.
CONSULTING ENGINEERS

STATE OF ARKANSAS
REGISTERED PROFESSIONAL ENGINEER
NO. 12307
PETER J. SEAL
14-Sept-2010
BRIDGE ENGINEER

SHEET 4 OF 7
DETAILS OF 327'-0" CONTINUOUS COMPOSITE PLATE GIRDER UNIT COUNTY ROAD 8 BRIDGE

ROUTE 71 SEC.
ARKANSAS STATE HIGHWAY COMMISSION
LITTLE ROCK, ARK.

DRAWN BY: JAP DATE: 03-06
CHECKED BY: PJS DATE: 05-08
DESIGNED BY: PJS DATE: 03-06
FILENAME: b040478mi_sl4.dgn
SCALE: AS SHOWN

BRIDGE NO. 07079 DRAWING NO. 48643

DATE REVISED	DATE FILMED	DATE REVISED	DATE FILMED	FED. ROAD DIST. NO.	STATE	FED. AID PROJ. NO.	SHEET NO.	TOTAL SHEETS
				6	ARK.			
				JOB NO.		040478	82	229
				(1) 07079		SPAN DETAILS		48644

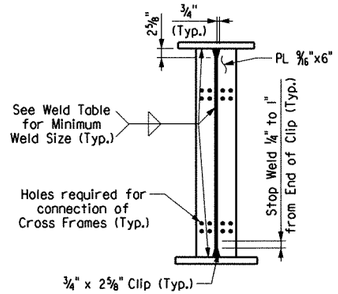

CROSS FRAME CONNECTION DETAIL

Scale: ½" = 1'-0"

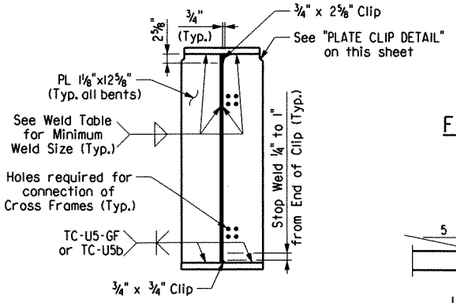

BEARING STIFFENER DETAIL

Scale: ½" = 1'-0"

Note: Bearing stiffeners shall be fabricated to be plumb in its final position.

TABLE FOR WELD

Material Thickness of Thicker Part Joined (Inches)	Minimum Size of Fillet Weld (Inches)	Single Pass Weld Must Be Used
To ¾" Inclusive	¼"	
Over ¾"	5/16"	

NOTE: When a fillet weld size, as shown on the plans, is larger than the minimum, the first pass shall be that specified for minimum size of fillet weld.

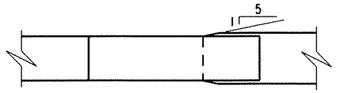

FIELD SPLICE AT UNEQUAL FLANGE WIDTHS

No Scale

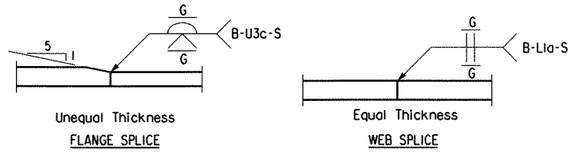

DETAILS OF WELDED SPLICES

Not to Scale

TABLE OF DEAD LOAD DEFLECTIONS (INCHES)

Camber for Dead Load Deflection plus vertical curve +/- ¼" tolerance. Vertical curve corrections not included. Negative sign (-) indicates upward deflection. Deflections shown are along the centerline of girder from the plane perpendicular to the web extending from centerline bearing to centerline bearing.

	POINT OF DEFLECTION	Structural Steel				Structural Steel (+) Slab				Structural Steel (+) Slab (+) Para. Rail			
		Girder 1	Girder 2	Girder 3	Girder 4	Girder 1	Girder 2	Girder 3	Girder 4	Girder 1	Girder 2	Girder 3	Girder 4
SPAN NO. 1	1.00	0.000	0.000	0.000	0.000	0.000	0.000	0.000	0.000	0.000	0.000	0.000	0.000
	1.10	0.349	0.422	0.494	0.574	1.345	1.616	1.874	2.152	1.467	1.738	1.996	2.274
	1.20	0.621	0.752	0.882	1.024	2.387	2.872	3.335	3.831	2.609	3.094	3.557	4.053
	1.30	0.810	0.984	1.156	1.345	3.110	3.747	4.358	5.013	3.398	4.035	4.646	5.301
	1.40	0.878	1.069	1.260	1.467	3.363	4.058	4.730	5.444	3.679	4.374	5.046	5.760
	1.50	0.834	1.021	1.207	1.408	3.188	3.861	4.511	5.195	3.493	4.166	4.816	5.500
	1.60	0.689	0.850	1.012	1.183	2.628	3.200	3.757	4.329	2.887	3.459	4.016	4.588
	1.70	0.479	0.600	0.723	0.851	1.823	2.242	2.659	3.074	2.010	2.429	2.846	3.261
	1.80	0.265	0.341	0.421	0.501	1.005	1.262	1.526	1.778	1.110	1.367	1.631	1.883
	1.90	0.086	0.118	0.155	0.190	0.324	0.429	0.546	0.651	0.360	0.465	0.582	0.687
SPAN NO. 2	2.00	0.000	0.000	0.000	0.000	0.000	0.000	0.000	0.000	0.000	0.000	0.000	0.000
	2.10	0.041	0.021	-0.003	-0.027	0.148	0.096	0.027	-0.042	0.159	0.107	0.038	-0.031
	2.20	0.161	0.134	0.098	0.062	0.597	0.542	0.455	0.362	0.649	0.594	0.507	0.414
	2.30	0.322	0.300	0.273	0.242	1.213	1.201	1.168	1.111	1.322	1.310	1.277	1.220
	2.40	0.472	0.464	0.453	0.440	1.799	1.858	1.898	1.920	1.965	2.024	2.064	2.086
	2.50	0.584	0.593	0.600	0.608	2.246	2.379	2.490	2.595	2.452	2.585	2.696	2.801
	2.60	0.629	0.653	0.673	0.699	2.438	2.626	2.782	2.950	2.659	2.847	3.003	3.171
	2.70	0.584	0.614	0.640	0.673	2.274	2.471	2.638	2.822	2.479	2.676	2.843	3.027
	2.80	0.454	0.482	0.505	0.536	1.775	1.941	2.081	2.238	1.934	2.100	2.240	2.397
	2.90	0.252	0.268	0.283	0.301	0.986	1.082	1.164	1.254	1.073	1.169	1.251	1.341
	3.00	0.000	0.000	0.000	0.000	0.000	0.000	0.000	0.000	0.000	0.000	0.000	0.000

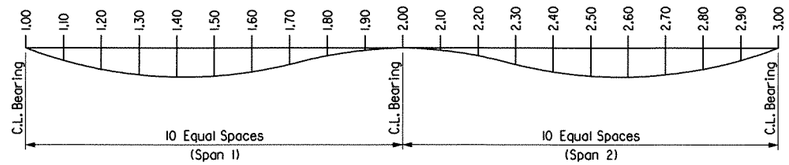

DEAD LOAD DEFLECTION DIAGRAM

Not to Scale

SUPERSTRUCTURE GENERAL NOTES

CONSTRUCTION SPECIFICATIONS: Arkansas State Highway and Transportation Department Standard Specifications for Highway Construction (2003 edition) with applicable supplemental specifications and special provisions.

DESIGN SPECIFICATIONS: AASHTO Standard Specifications for Highway Bridges (2002 edition), with current interim specifications, and AASHTO Guide Specifications for Horizontally Curved Steel Girder Highway Bridges (2003 edition).

MATERIALS AND STRENGTHS:

Class S(AE) Concrete	fc =	4,000 psi
Reinforcing Steel (AASHTO M31 or M53, Gr. 60)	Fy =	60,000 psi
Structural Steel (AASHTO M270, Gr. 50)	Fy =	50,000 psi
Structural Steel (AASHTO M270, Gr. 36)	Fy =	36,000 psi

CONCRETE: Concrete shall be poured in the dry and all exposed corners to be chamfered ¾" unless otherwise noted. All concrete shall be Class S(AE) with a minimum 28 day compressive strength f'c = 4,000 psi.

The superstructure details shown are for use when removable deck forming is used and are the basis for measurement of Class S(AE) Concrete. See Standard Drawing No. 14991 for allowable modifications and for tolerances when Permanent Steel Bridge Deck Forms are used.

Concrete in bridge superstructure shall be placed, consolidated and screeded off for the entire pour before any concrete has taken its initial set. This may require the use of a retarding agent.

The concrete deck shall be given a tine finish in accordance with subsection 802.19 for Class 5 Tined Bridge Roadway Surface Finish. Movement of the finishing machine across new concrete shall be on planks placed on the surface and shall be prohibited for 72 hours after finishing the pour. Sufficient concrete must be placed ahead of the strike-off to fully load the girder. A longitudinal screed is prohibited.

A minimum of 72 hours shall elapse between completion of the deck and the pouring of the parapet railing. Any railing pours made before the entire deck has been placed and cured must be approved by the Engineer.

REINFORCING STEEL: All reinforcing steel shall conform to AASHTO M31 or M53, Grade 60. The reinforcing steel is to be accurately located in the forms and firmly held in place by steel wire supports, sufficient in number and size to prevent displacement during the course of construction. The wire supports will not be paid for directly, but will be considered subsidiary to the item "REINFORCING STEEL - BRIDGE (GRADE 60)".

STRUCTURAL STEEL: All structural steel shall be AASHTO M270, Gr. 50 unless otherwise noted and shall be paid for as "STRUCTURAL STEEL IN PLATE GIRDER SPANS (M270, GR. 50)". All structural steel except galvanized steel and steel which is completely encased in concrete shall be painted in accordance with subsection 807.75. The color of paint shall be Gray and shall conform to Federal Standard 595B, Color Chip No. 26176. All exposed surfaces shall be cleaned in accordance with subsection 807.84(b). Structural steel completely embedded in concrete may be AASHTO M270, Grade 36. See Dwg. No. 48648 for cleaning requirements of external load plates of elastomeric bearings.

Drawings show general features of design only. Shop drawings shall be made in accordance with the specifications, submitted and approval secured before fabrication is begun.

Requests for substitution of structural steel shapes shown with shapes of greater size must be submitted by the Contractor to the Engineer for approval. Steels of equal or greater strengths will be accepted only when shown on the approved shop drawings. Shapes and materials shown in the plans will be the basis of payment and no additional compensation will be made for any adjustments due to substitutions.

Girder web, flange, splice plates, cross frames, and cross frame connection plates are considered main load carrying members and shall meet the Longitudinal Charpy V-notch Test specified in subsection 807.05. This work and material will not be paid for directly but are considered subsidiary to item "STRUCTURAL STEEL IN PLATE GIRDER SPANS (M270, GR. 50)".

All Girders shall be blocked in their true position in the shop, in groups of a minimum of three (3) sections as specified in subsection 807.54(b)(2). Girders shall be blocked with webs horizontal. The camber, length of sections, distance between bearings and openings of joints shall be measured with the girders in their true position and this information shall become part of the permanent records for this job. The component parts shall be match marked in this assembly and these marks shall be shown on the erection diagram. All girder dimensions are based on a temperature of 60 degrees F. A tolerance of ¼" +/- is allowed for camber.

Web and flange plates for main members and flange splice plates for main members shall be cut and fabricated so that the primary direction of rolling is parallel to the direction of the main tensile and/or compressive stresses.

All welding that is to be done during fabrication of structural steel, including temporary welds, shall be detailed on the shop drawings and submitted for approval. If additional welds are required, whether temporary or permanent, a formal request with detailed drawings shall be submitted to the Engineer for approval; however, additional welds used for attaching falsework support devices or screed rail supports to the structural steel that do not exceed the limitations of subsection 802.13 will not require approval prior to construction. All welding shall conform to subsection 807.26.

Anchor bolts shall be galvanized according to section 807.07.

Girder webs may be made by shop splicing with minimum lengths of 25 feet for sections. Flange plates longer than 50 feet may be made by shop splicing with minimum lengths of 25 feet for sections. Material specifications and location of shop-welded splices, if any, shall be shown on the shop drawings. No additional payment for welds for these splices will be made.

Groove welds in web and flange plates shall be Quality Control (Q.C.) tested by nondestructive testing, as required by the governing specifications in subsection 807.23(b). Fillet welds at flange to web plate connections shall be Q.C. tested by the magnetic particle method. All Quality Control (Q.C.) testing is at the Contractor's expense.

Field connection shall be bolted with high-strength bolts and shall be ¾"ø bolts unless otherwise noted. Bolts shall be placed with heads on the outside face of the exterior girder webs and on the bottom of the girder flanges. Hole for ¾"ø high-strength bolts may be 15/16"ø if a washer is supplied for use under both the nut and head of the bolt.

Cross-frames and lateral bracing shall be installed as girders are erected. All bolts in cross-frames, field splices, and lateral bracing shall be installed and tightened in accordance with subsection 807.71 prior to pouring the concrete deck.

Bearings shall be seated in accordance with subsection 808.08. This work and materials are to be considered as subsidiary to the item "Elastomeric Bearings" and will not be paid for directly.

ERECTION OF STRUCTURAL STEEL: The erection of the structural steel shall be performed according to a plan permitting the steel to be erected plumb with bolts tightened while the steel is as close as possible to the no-load condition, so that the bolt holes can be aligned. This requirement may necessitate the use of large capacity cranes, temporary shoring or jacking frames.

The Contractor shall submit to the Engineer for informational and record purposes, details of falsework construction in accordance with Section 807.64.

The Contractor shall ensure that girders are stable throughout the erection process. The Contractor will be responsible for providing temporary bracing or stiffening devices to accommodate handling stresses in individual members or segments of the structure during erection.

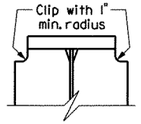

Note: If permanent steel bridge deck forms are used, the fabricator shall clip the plate as necessary to accomodate the deck form support.

PLATE CLIP DETAIL

Not to Scale

DESIGN INFORMATION

Live Loading: HS20 Method of Design: Load Factor

	Interior Girder	Exterior Girder
Dead Load: a) To Girder	1029 plf + 1.3(Wt./ft. of girder)	943 plf + 1.3(Wt./ft. of girder)
b) To Composite Girder	381 plf *	381 plf *
Live Load: To Each Composite Girder	1.58 wheels + impact	1.41 wheels + impact

* - Includes 188 plf of future wearing surface

STATE OF ARKANSAS REGISTERED PROFESSIONAL ENGINEER No. 12307 — 14 July 2010 — BRIDGE ENGINEER

SHEET 5 OF 7
DETAILS OF 327'-0" CONTINUOUS COMPOSITE PLATE GIRDER UNIT COUNTY ROAD 8 BRIDGE

ROUTE 71 SEC.

ARKANSAS STATE HIGHWAY COMMISSION

LITTLE ROCK, ARK.

DRAWN BY: JAP DATE: 03-06 FILENAME: b040478ml_sl5.dgn

CHECKED BY: PJS DATE: 05-08 SCALE: AS SHOWN

DESIGNED BY: PJS DATE: 03-06

BRIDGE NO. 07079 DRAWING NO. 48644

7/14/2010

i:\01075\county road 8\dgn\b040478ml_sl5.dgn

Florence & Hutcheson, Inc. CONSULTING ENGINEERS

DATE REVISED	DATE FILMED	DATE REVISED	DATE FILMED	FED. ROAD DIST. NO.	STATE	FED. AID PROJ. NO.	SHEET NO.	TOTAL SHEETS
				6	ARK.			
				JOB NO.		040478	83	229
				1	07079	SPAN DETAILS		48645

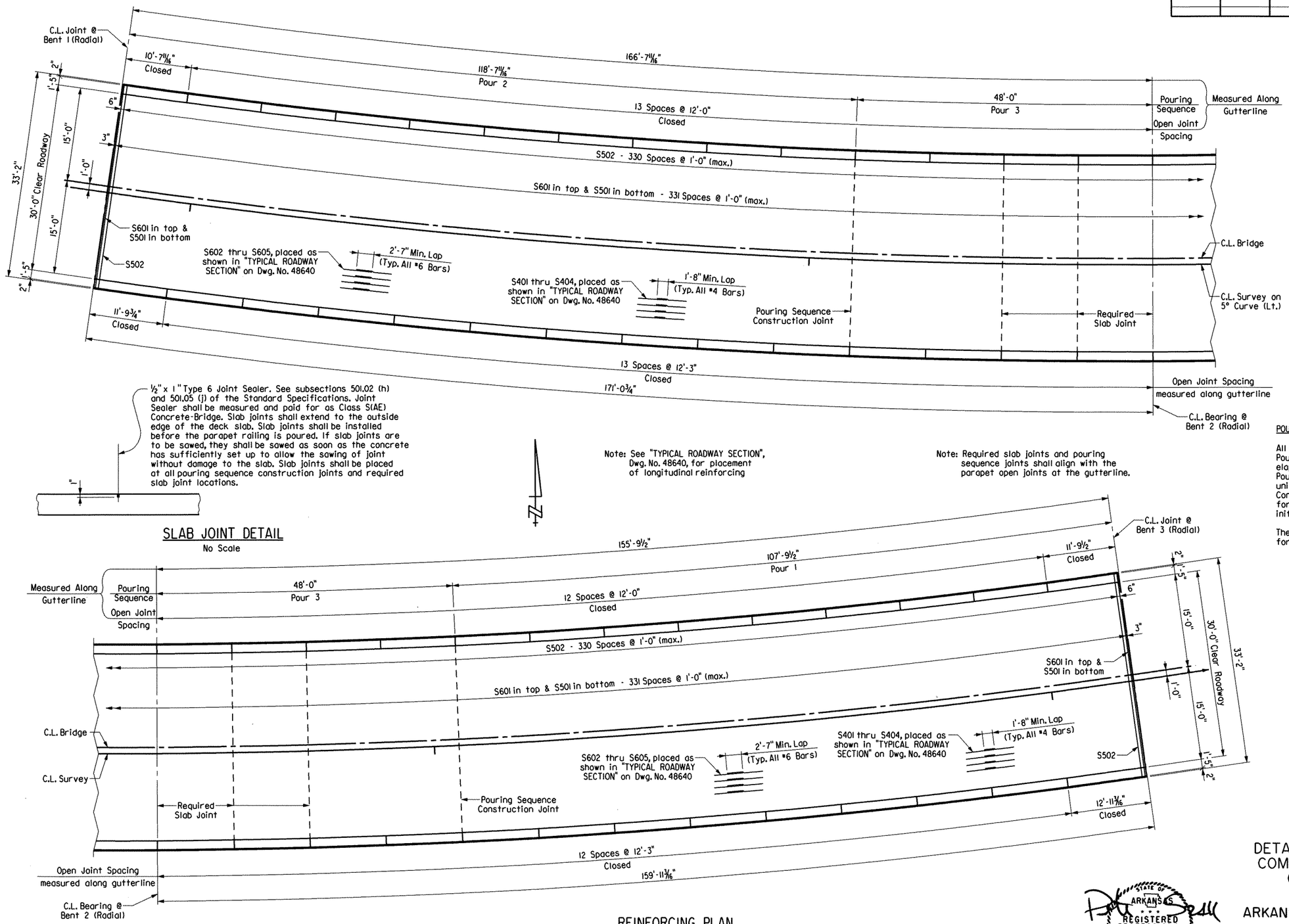

Note: See "TYPICAL ROADWAY SECTION", Dwg. No. 48640, for placement of longitudinal reinforcing.

Note: For Bar List, see Dwg. No. 48646.

Note: All transverse reinforcing steel shall be placed on radial lines. Spacing is measured along C.L. Ramp.

All longitudinal lines and longitudinal reinforcing steel shall be placed on curves concentric with C.L. Ramp.

SLAB JOINT DETAIL

No Scale

Note: See "TYPICAL ROADWAY SECTION", Dwg. No. 48640, for placement of longitudinal reinforcing

Note: Required slab joints and pouring sequence joints shall align with the parapet open joints at the gutterline.

REINFORCING PLAN

Scale: 1" = 10'-0"

POURING SEQUENCE

All pours shall be placed in the order shown, although Pour (2) may immediately follow Pour (1). 72 hours shall elapse before the end of Pour (2) and the start of Pour (3). Any railing pours made before the entire slab unit has been placed must be approved by the Engineer. Concrete in bridge superstructure shall be consolidated for the entire pour before any concrete has taken its initial set. This may require the use of a retarding agent.

The Contractor must obtain approval from the Engineer for any deviations from the pouring sequence shown.

STATE OF ARKANSAS REGISTERED PROFESSIONAL ENGINEER No. 12307 PETER J. SZAK BRIDGE ENGINEER

14 July 2010

SHEET 6 OF 7
DETAILS OF 327'-0" CONTINUOUS COMPOSITE PLATE GIRDER UNIT
COUNTY ROAD 8 BRIDGE

ROUTE 71 SEC.

ARKANSAS STATE HIGHWAY COMMISSION

LITTLE ROCK, ARK.

DRAWN BY: JAP	DATE: 03-06	FILENAME: b040478ml_sl6.dgn
CHECKED BY: PJS	DATE: 05-08	SCALE: AS SHOWN
DESIGNED BY: PJS	DATE: 03-06	

BRIDGE NO. 07079 DRAWING NO. 48645

Florence & Hutcheson, Inc.
CONSULTING ENGINEERS

7/14/2010

I:\01075\county road 8\dgn\b040478ml_sl6.dgn

DATE REVISED	DATE FILMED	DATE REVISED	DATE FILMED	FED. ROAD DIST. NO.	STATE	FED. AID PROJ. NO.	SHEET NO.	TOTAL SHEETS
				6	ARK.			
				JOB NO.		040478	84	229
				(1) 07079		SPAN DETAILS		48646

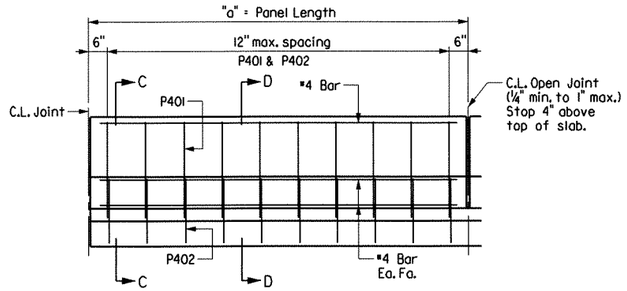

DETAILS OF CLOSED PARAPET RAIL

Scale: ½" = 1'-0"

** Panel Inset may be made continuous if slip forms are used.

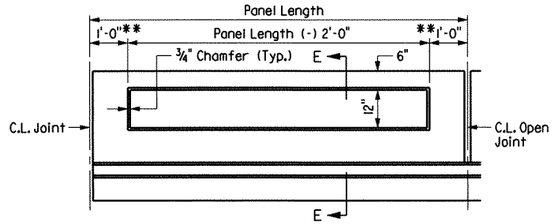

PARAPET ENHANCEMENT DETAILS

Scale: ½" = 1'-0"

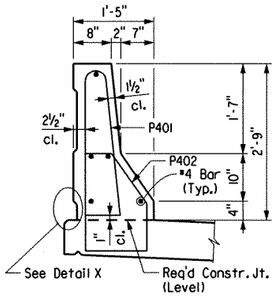

SECTION C-C

Scale: ¾" = 1'-0"

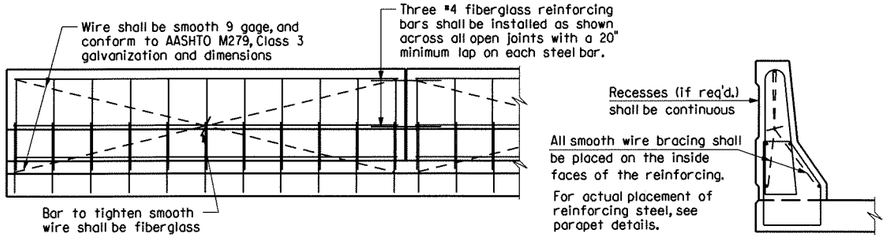

All panels shall be braced as shown to prevent racking. All open joints shall be sawed as soon as practical to a minimum width of ¼". To control cracking before sawing all joints must be grooved before the concrete is set. Sawing of the joints must be controlled so it will follow the grooved joint.

The extruded parapet shall conform to the horizontal and vertical lines shown on the plans or as directed by the Engineer and shall present a smooth, uniform appearance and texture. Exposed surfaces may be given a light brush finish or a Class 3, Textured Coating Finish, in place of Class 2, Rubbed Finish.

DETAILS OF OPTIONAL SLIPFORMING OF CONCRETE PARAPET RAIL

No Scale

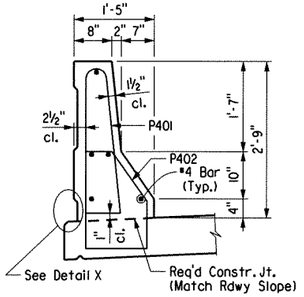

SECTION D-D

Scale: ¾" = 1'-0"

PARAPET RAIL VARIABLES

Parapet Type	"a"	Longitudinal Reinforcing
Closed	10'-7 11/16"	P404
Closed	12'-0"	P403
Closed	11'-9½"	P405
Closed	11'-9¾"	P405
Closed	12'-3"	P406
Closed	12'-11 3/16"	P407

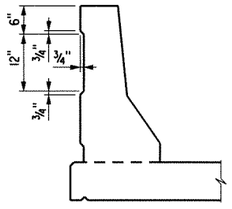

SECTION E-E

Scale: ¾" = 1'-0"

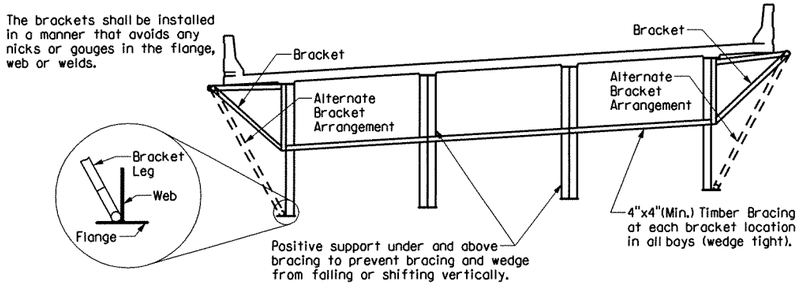

Note: If a transverse finishing machine is used, the rail shall be supported directly over the exterior girders, or as an alternate, the rail may be supported by the overhang brackets if the above strutting system is used. The strutting system may be omitted if 5/16" x6" web stiffeners are welded to the insides of the exterior girders at the location of each bracket or if the alternate bracket arrangement shown above is used. The Alternate Bracket arrangement shall extend down to the junction of the web and bottom flange. The stiffener shall conform to the cross frame connection detail shown on drawing No. 48640, 48641, or 48644. No direct payment will be made for brackets, timber bracing, supports, or welded stiffeners. Payment shall be subsidiary to "Structural Steel In Plate Girder Spans (M270. Gr. 50)."

SCREED RAIL SUPPORT

No Scale

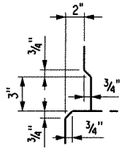

DETAIL X

No Scale

Mark	Number Required	Length	Pin Dia.
S401	672	40'-0"	Str.
S402	31	24'-3"	Str.
S403	22	20'-9"	Str.
S404	31	18'-2"	Str.
S501	332	32'-10"	Str.
S502	331	33'-6"	3"
S601	332	32'-10"	Str.
S602	170	60'-0"	Str.
S603	12	43'-9"	Str.
S604	10	40'-5"	Str.
S605	12	37'-7"	Str.
P401	673	6'-4"	2"
P402	673	6'-10"	2"
P403	125	11'-8"	Str.
P404	5	10'-3"	Str.
P405	10	11'-5"	Str.
P406	125	11'-11"	Str.
P407	5	12'-7"	Str.

Bending Diagrams (Dimensions are out to out of bars.)

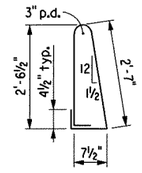

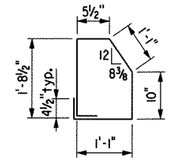

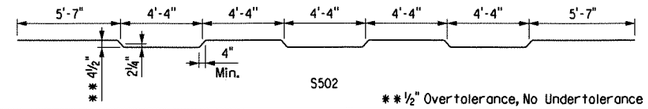

** ½" Overtolerance, No Undertolerance

SHEET 7 OF 7
DETAILS OF 327'-0" CONTINUOUS COMPOSITE PLATE GIRDER UNIT COUNTY ROAD 8 BRIDGE

ROUTE 71 SEC.

ARKANSAS STATE HIGHWAY COMMISSION

LITTLE ROCK, ARK.

STATE OF ARKANSAS REGISTERED PROFESSIONAL ENGINEER No. 9207 PETER J. STAL
14-July-2010
BRIDGE ENGINEER

DRAWN BY: JAP DATE: 03-06
CHECKED BY: PJS DATE: 05-08
DESIGNED BY: PJS DATE: 03-06
FILENAME: b040478ml_sl7.dgn
SCALE: AS SHOWN

BRIDGE NO. 07079 DRAWING NO. 48646

Florence & Hutcheson, Inc. CONSULTING ENGINEERS

7/14/2010

I:\07075\county road 8\dgn\b040478ml_sl7.dgn

DATE REVISED	DATE FILMED	DATE REVISED	DATE FILMED	FED. ROAD DIST. NO.	STATE	FED. AID PROJ. NO.	SHEET NO.	TOTAL SHEETS
				6	ARK.			
				JOB NO.		040478	85	229
				GENERAL NOTES ①		07079 JOINT DETAILS		48647

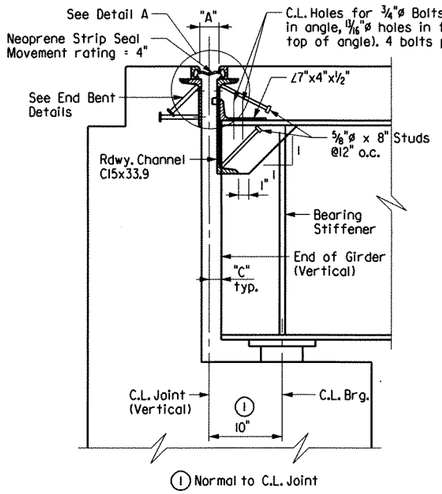

SECTION THRU JOINT AT END BENTS

1" = 1'-0"

Note: Sections thru Joints are taken normal to C.L. Joints

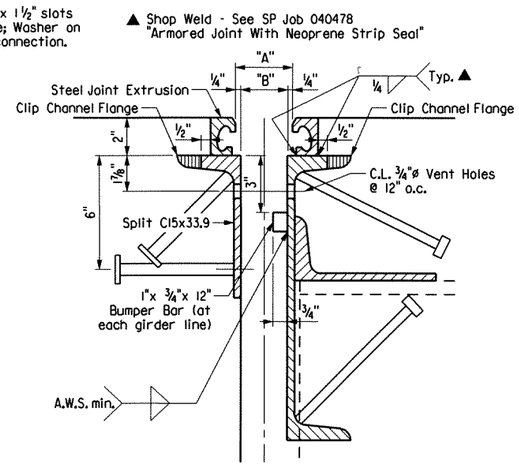

DETAIL A

3" = 1'-0"

Note: Concrete shall be hand packed under the joint armor in the backwall and in the span.

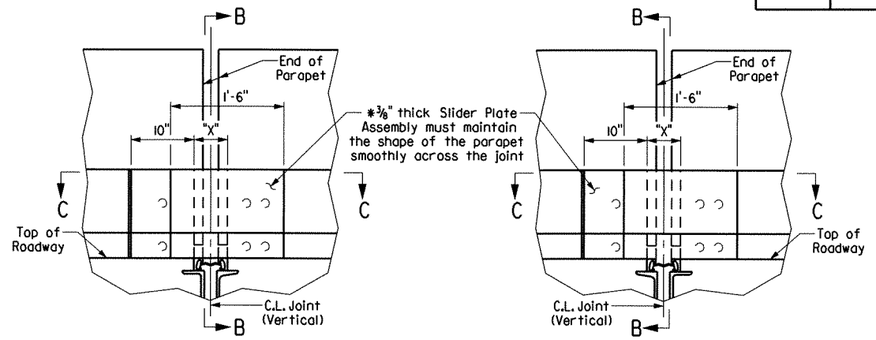

LOW SIDE OF BRIDGE

HIGH SIDE OF BRIDGE

DETAILS OF NEOPRENE SEAL AT GUTTERLINE

Scale: 1" = 1'-0"

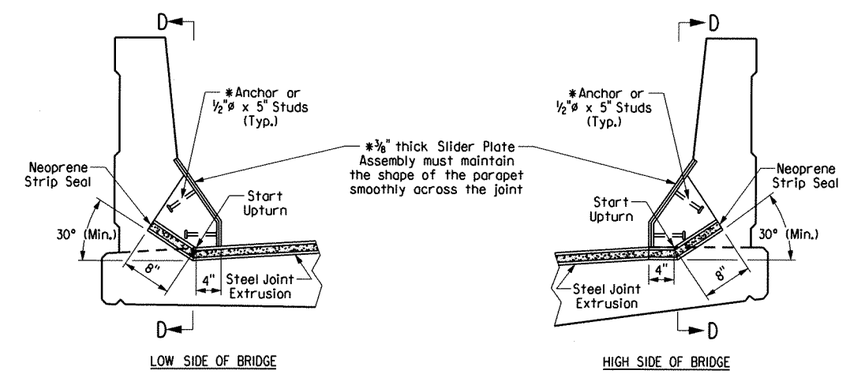

LOW SIDE OF BRIDGE

HIGH SIDE OF BRIDGE

SECTION B-B

Scale: 1" = 1'-0"

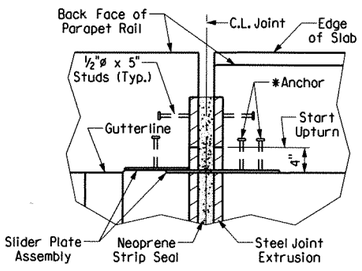

LOW SIDE OF BRIDGE

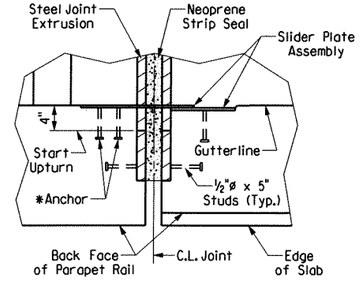

HIGH SIDE OF BRIDGE

SECTION C-C

Scale: 1" = 1'-0"

*The method of attachment of the cover slider plate assembly or similar device must be such that it may be removed in order to provide for future replacement of the neoprene seal. Method of installation and fabrication shall be determined by the manufacturer.

GENERAL NOTES

EXPANSION NEOPRENE STRIP SEAL: The expansion device shall provide a movement of 4" as shown in the "STRIP SEAL JOINT DATA" table. The expansion joint shall be capable of sealing the deck surface and parapet area to prevent moisture and other contaminants from descending through the joint.

Details of proposed slider plate assembly shall be submitted to and approved by the Bridge Engineer prior to the fabrication of any structural steel at the expansion device.

All structural steel shall be AASHTO M270, Grade 50 unless otherwise noted. All exposed surfaces shall be cleaned and painted Gray in accordance with section 807 and will be paid for under the pay item "PAINTING STRUCTURAL STEEL".

All structural steel, except for the steel extrusion and slider plate anchor system, shall be paid for as "STRUCTURAL STEEL IN PLATE GIRDER SPANS (M270, Grade 50)". The steel extrusion, neoprene strip seal, and slider plate anchor system shall be paid for in accordance with SP Job No. 040478 "ARMORED JOINT WITH NEOPRENE STRIP SEAL".

Note: Details of joint turn-up in parapet are general and show basic design controls only. See SP Job No. 040478 "ARMORED JOINT WITH NEOPRENE STRIP SEAL". Method of installation and fabrication shall be determined by the manufacturer.

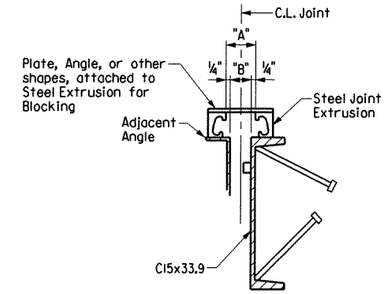

DETAILS FOR BLOCKING EXPANSION JOINT DEVICE

Note:
Each Expansion Joint device shall be blocked in the shop by the Fabricator to the dimension shown for 60° F and the blocking details shall be shown on the Shop Drawings. Blocking shall be placed within 2 feet of each end of the device and with a maximum spacing of 8 feet.

One of two different blocing systems may be used.

1) Plate, Angle, or other shapes, attached to Channels (or Angles) for Blocking.

2) Bolt & spacer attached to Channel & Angles for Blocking.

EXPANSION DEVICE INSTALLATION AT END BENTS:

1) The concrete span pour adjacent to joint shall be placed before the end bent backwall is placed. After the end bent backwall forms are in place and the girders erected, the blocked expansion device shall be installed and adjusted for grade. All connection bolts shall be fully tightened prior to placing the deck concrete adjacent to the bent. Immediately prior to pouring the backwall concrete, the blocking shall be removed, the opening adjusted for temperature, and the backwall constructed.

2) The backwall shall be poured to the optional construction joint after girders are erected. The blocked expansion device shall be installed and adjusted for grade. All connection bolts shall be fully tightened prior to placing the deck concrete adjacent to the bent. Immediately prior to pouring the remainder of the backwall concrete, the blocking shall be removed and the opening adjusted for temperature.

Dimension "X" equals the width of the opening in the parapet at the curb to allow for removal or repair of joint.

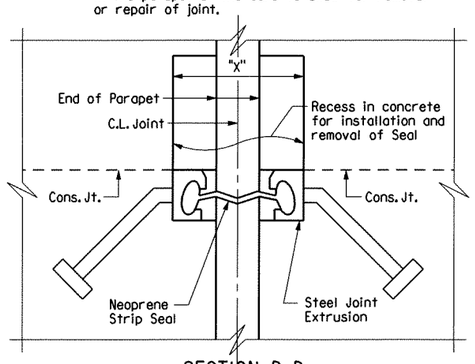

SECTION D-D

STRIP SEAL JOINT DATA

Bent No.(s)	Movement Rating (inch)	"A" Width Perpendicular to Joint at 24 Hour Average Temperature ** of:			"B" Width Perpendicular to Joint at 24 Hour Average Temperature ** of:			"C" Perpendicular to Joint at 24 Hour Average Temperature of 60° F
		40° F	60° F	80° F	40° F	60° F	80° F	
1	4"	2¾"	2½"	2¼"	2¼"	2"	1¾"	± 3"
3	4"	2¾"	2½"	2¼"	2¼"	2"	1¾"	± 3"

**The temperature used to set the joint opening shall be the approximate average air temperature during the 24 hour period immediately before the bolts are tightened. The Engineer shall establish the temperature.

Installation is limited to 40°F, min. and 80°F, max. Interpolation of the table may be necessary. The temperature Limitations by the lubricant-adhesive manufacturer shall be observed.

STATE OF ARKANSAS REGISTERED PROFESSIONAL ENGINEER No. 12307 PAUL J. STAR BRIDGE ENGINEER

14 - Jan - 2010

DETAILS OF ARMORED JOINT WITH NEOPRENE STRIP SEAL COUNTY ROAD 8 BRIDGE

ROUTE 71 SEC.

ARKANSAS STATE HIGHWAY COMMISSION

LITTLE ROCK, ARK.

DRAWN BY: JAP DATE: 03-06 FILENAME: b040478ml_jil.dgn

CHECKED BY: PJS DATE: 05-08 SCALE: AS SHOWN

DESIGNED BY: PJS DATE: 03-06

BRIDGE NO. 07079 DRAWING NO. 48647

Florence & Hutcheson, Inc. CONSULTING ENGINEERS

7/14/2010

I:\01075\county road 8\dgn\b040478ml_jil.dgn

DATE REVISED	DATE FILMED	DATE REVISED	DATE FILMED	FED. ROAD DIST. NO.	STATE	FED. AID PROJ. NO.	SHEET NO.	TOTAL SHEETS
				6	ARK.			
				JOB NO.		040478	86	229
				① 07079		ELASTO. BRGS.		48648

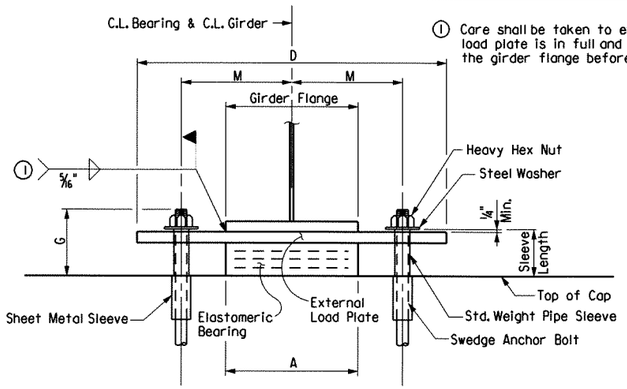

① Care shall be taken to ensure that the external load plate is in full and complete contact with the girder flange before welding begins.

FRONT VIEW @ BENT NOS. 1 & 3

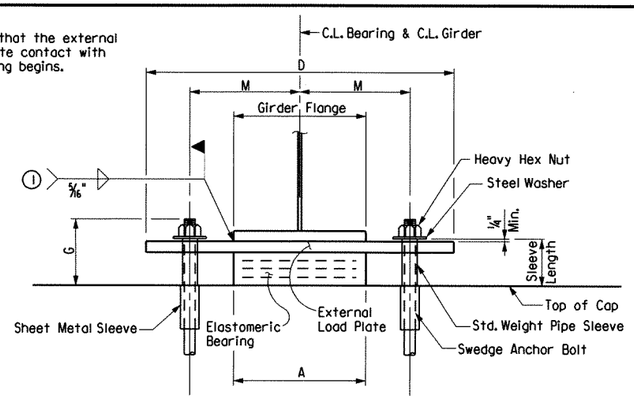

FRONT VIEW @ BENT NO. 2

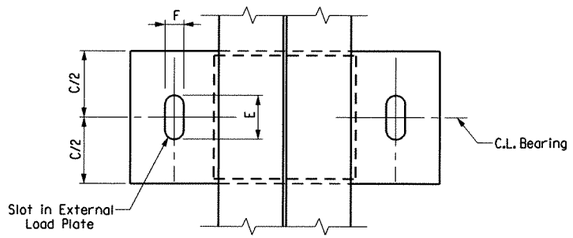

PLAN VIEW @ BENT NOS. 1 & 3

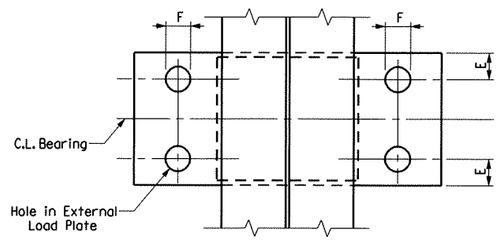

PLAN VIEW @ BENT NO. 2

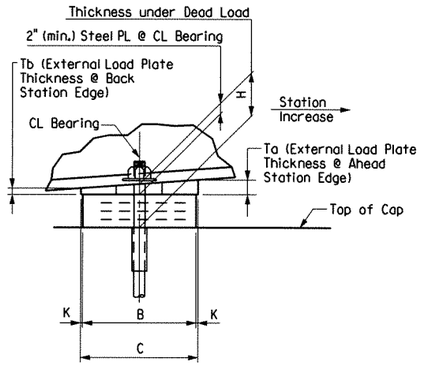

SIDE VIEW @ BENT NOS. 1 & 3

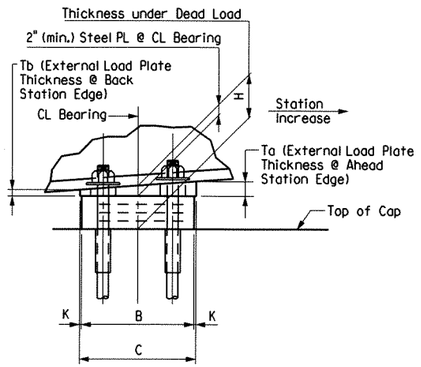

SIDE VIEW @ BENT NO. 2

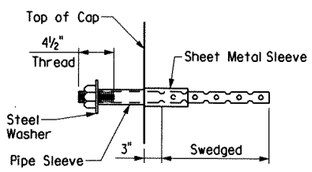

ANCHOR BOLT DETAIL

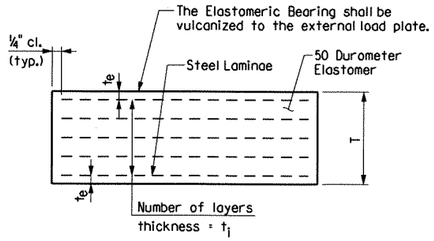

t_e = thickness of elastomer cover on top and bottom of pad

t_i = thickness of elastomer between steel laminae

N = number of elastomer layers of thickness t_i

ELASTOMERIC BEARING

NOTE:
Anchor Bolts may be cast in place or drilled and grouted into place. If Anchor Bolts are to be cast in place, the Galvanized Sheet Metal Sleeves will not be required. If Anchor Bolts are to be drilled and grouted in place, the Galvanized Sheet Metal Sleeves shall be cast in place as shown. Sleeves shall be dry packed with styrofoam, urethane foam or approved equal prior to pouring of concrete. After pouring of the cap and prior to erection of Structural Steel, the dry pack shall be removed and holes for the anchor bolts shall be accurately drilled into the masonry. Bolts placed in drilled holes shall be accurately set and fixed using a OPL approved epoxy or non-shrink grout that completely fills the holes. Galvanized Sheet Metal Sleeves will not be paid for directly, but will be considered subsidiary to the item "STRUCTURAL STEEL IN PLATE GIRDER SPANS (M270, GR. 50)"

GENERAL NOTES

Elastomeric Bearings shall conform to Section 808 of the Standard Specifications and shall be paid for at the unit price bid for "ELASTOMERIC BEARINGS".

External load plates shall conform to AASHTO M270, Grade 50. Pipe sleeves shall be ASTM A53, Grade B, and shall be galvanized to conform to AASHTO M232, Class C or AASHTO M298, Class 50.

External load plates shall be completely fabricated (including bevel and bolt holes) and shall be cleaned before vulcanizing to the elastomeric bearing. The surface in contact with the elastomeric bearing shall be cleaned in accordance with subsection 808.03. Other surfaces shall be blast cleaned in accordance with subsection 807.84(b) for painted steel and 807.84(e) for unpainted Grade 50 steel.

Anchor Bolts, Washers and Nuts shall conform to subsection 807.07 of the Standard Specifications. The anchor bolt grade of steel shall be as specified in the "Table of Fabricator Variables". Indentations shall be circular with rounded bottoms and staggered as shown in the details.

Pipe Sleeves, Anchor Bolts, Washers and Nuts shall be paid for at the unit price bid for "STRUCTURAL STEEL IN PLATE GIRDER SPANS (M270, GR. 50)".

Bearings shall be seated in accordance with subsection 808.08. This work and materials are considered subsidiary to the item "ELASTOMERIC BEARINGS" and will not be paid for directly.

Unless otherwise approved by the Engineer, welding of the external load plate at expansion bearings to the girder will be allowed only when 1) the approximate average air temperature during the 24 hour period immediately preceding welding is between 40°F and 80°F; and 2) the slots in the external load plate are positioned to center on the anchor bolts; and 3) no horizontal deformation of the elastomeric pad is evident. If welding at other temperatures is required, the Engineer will provide adjustment data.

Mask areas of field welding. Galvanized steel shall not be painted. The color of the paint shall be Gray and shall match Fed. Std. 595B, Color Chip No. 26176. Painting will not be paid for directly but will be considered subsidiary to "Elastomeric Bearings".

TABLE OF FABRICATOR VARIABLES

BRIDGE NO.	LOCATION			BEARING TYPE	NO. of BEARINGS EACH BENT	* MAXIMUM DESIGN LOAD (KIPS)	ELASTOMERIC PAD						EXTERNAL LOAD PLATE								ANCHOR BOLT			
	BENT NO(S).	SPAN NO.	BEAM OR GIRDER NO.				G	H	A	B	N	t_i	t_e	NO. & THICKNESS OF STEEL LAMINAE	T	C	D	E	F	K	M	T_a	T_b	ANCHOR BOLT (ø x L)	GRADE	PIPE SLEEVE SIZE (ø x L)	SHEET METAL SLEEVE SIZE (ø x L)	STEEL WASHER SIZE (O.D.)
	1	1	1 - 4	Exp.	4	181	9¼"	5⅝"	26"	9"	5	½"	¼"	6 @ 12 Ga.	3⅜"	10"	39"	5½"	3⅛"	½"	16¼"	2.15"	1.85"	2¼" x 35"	55	2½" x 5⅞"	4" x 6"	4"
	2	1 & 2	1 - 4	Fix.	4	552	11¼"	7¼"	26"	14"	8	½"	¼"	9 @ 12 Ga.	5⅞"	15"	40"	3½"	3¾"	½"	16½"	2.18"	1.82"	2½" x 39"	55	3" x 7¾"	4" x 12½"	4½"
	3	2	1 - 4	Exp.	4	158	9¼"	5⅝"	26"	9"	5	½"	¼"	6 @ 12 Ga.	3⅜"	10"	39"	5½"	3⅛"	½"	16¼"	2.12"	1.88"	2¼" x 35"	55	2½" x 5⅞"	4" x 6"	4"

* Maximum Design Load = Service Load

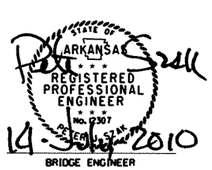

DETAILS OF ELASTOMERIC BEARINGS
COUNTY ROAD 8 BRIDGE

ROUTE 71 SEC.

ARKANSAS STATE HIGHWAY COMMISSION

LITTLE ROCK, ARK.

DRAWN BY: JAP DATE: 03-06
CHECKED BY: PJS DATE: 05-08
DESIGNED BY: PJS DATE: 03-06

FILENAME: b040478ml_ell.dgn
SCALE: AS SHOWN

BRIDGE NO. 07079 DRAWING NO. 48648

Florence & Hutcheson, Inc.
CONSULTING ENGINEERS

7/14/2010

I:\07075\county road 8\dgn\b040478ml_ell.dgn

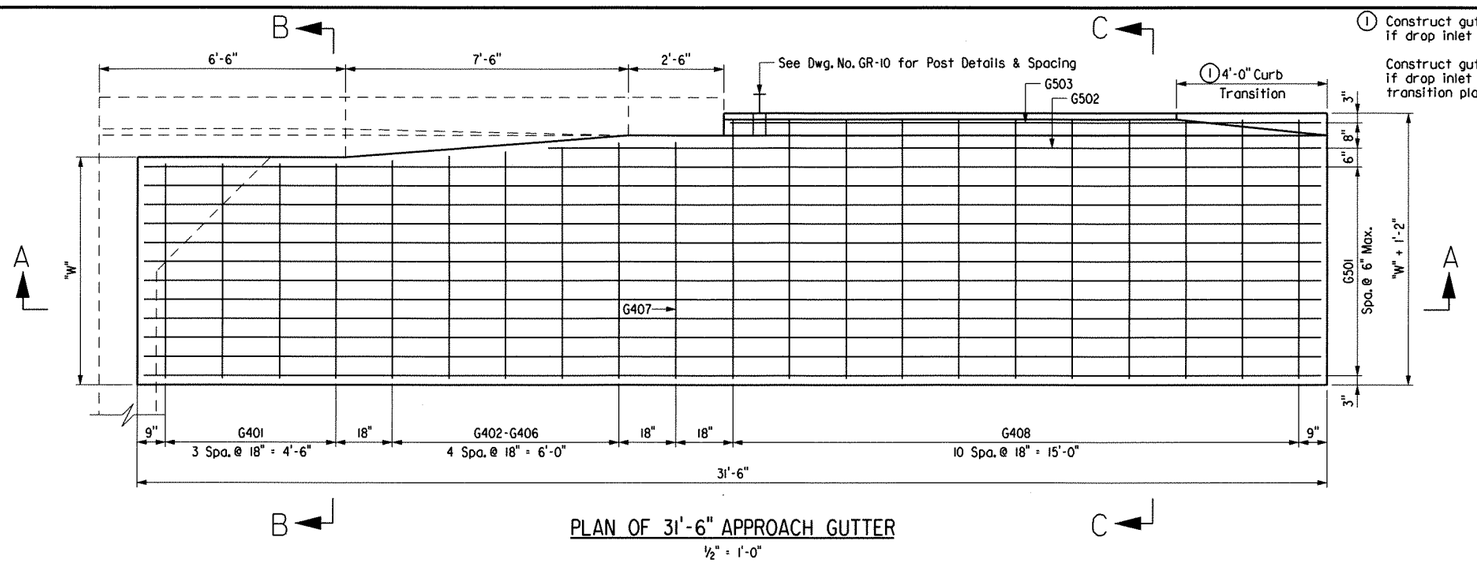

PLAN OF 31'-6" APPROACH GUTTER

½" = 1'-0"

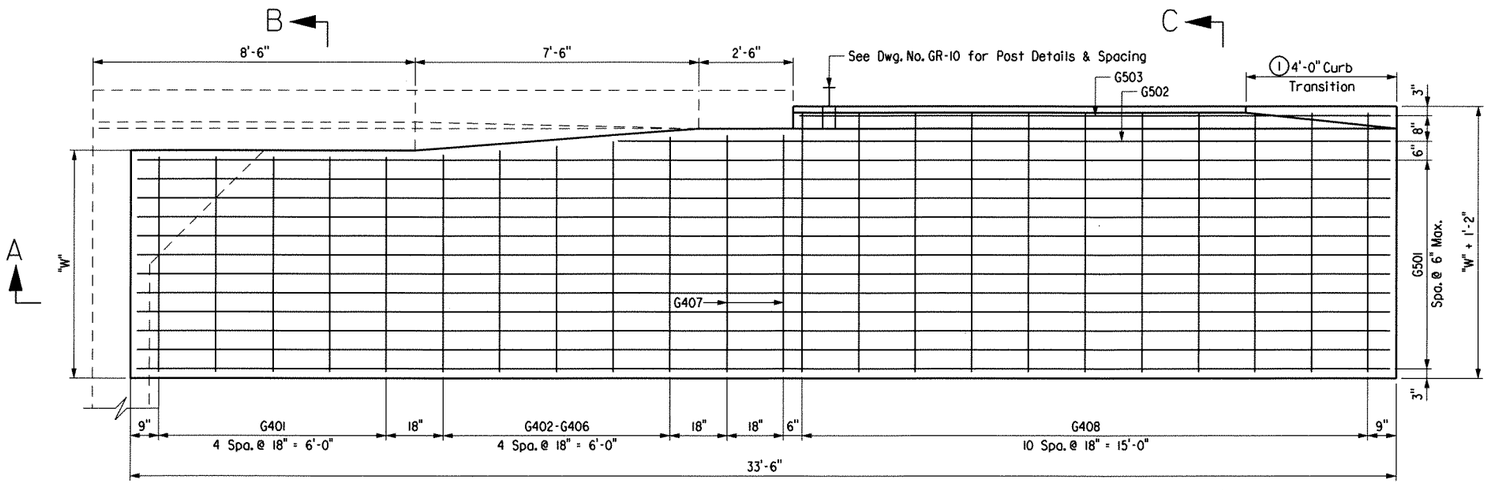

PLAN OF 33'-6" APPROACH GUTTER

½" = 1'-0"

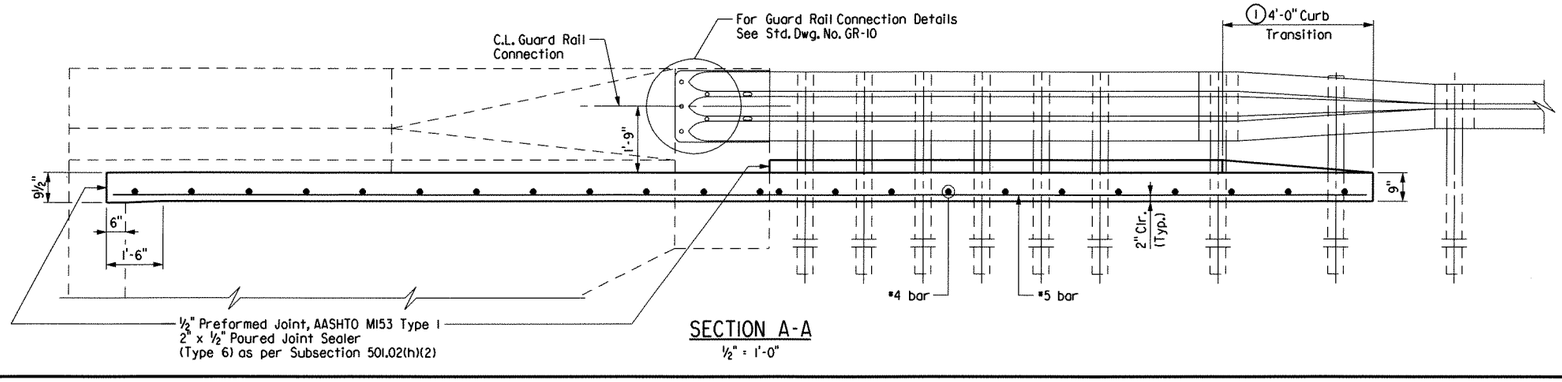

SECTION A-A

½" = 1'-0"

1 Construct gutter curb with height-transition as shown if drop inlet is not placed at end of gutter.

Construct gutter curb full height (no height-transition) if drop inlet is placed at end of gutter. Curb height transition placed on drop inlet. See drop inlet details.

DATE REVISED	DATE FILMED	DATE REVISED	DATE FILMED	FED. ROAD DIST. NO.	STATE	FED. AID PROJ. NO.	SHEET NO.	TOTAL SHEETS
				6	ARK.			
				JOB NO.		040478	87	229
				1 07079		APPROACH GUTTERS		48648A

GENERAL NOTES:

Concrete shall be Class S or Class S(AE) or mixture used for Portland Cement Concrete Pavement.

Reinforcement Steel shall conform to AASHTO M31 or M53, Grade 60 (fy = 60,000 psi).

Approach Gutters will be measured and paid for in accordance with Section 504 of the Standard Specifications.

QUANTITIES
ONE APPROACH GUTTER

Approach Gutter Length	Reinforcing Steel (lbs.)		Concrete (cubic yard)	
	"W"=4'-0"	"W"=6'-0"	"W"=4'-0"	"W"=6'-0"
31'-6"	359	517	4.16	5.91
33'-6"	381	550	4.38	6.24

BAR LIST - ONE
31'-6" APPROACH GUTTER

Mark	No. Req'd for "W" 4'-0"	No. Req'd for "W" 6'-0"	Length	Pin Dia.
G401	4	4	"W" - 4"	Str.
G402 to G406	1 ea.	1 ea.	"W" - 3" to "W" + 3"	Str.
G407	1	1	"W" + 3"	Str.
G408	11	11	"W" + 10"	Str.
G501	8	12	31'-2"	Str.
G502	1	1	20'-5"	Str.
G503	1	1	15'-8"	Str.

BAR LIST - ONE
33'-6" APPROACH GUTTER

Mark	No. Req'd for "W" 4'-0"	No. Req'd for "W" 6'-0"	Length	Pin Dia.
G401	5	5	"W" - 4"	Str.
G402 to G406	1 ea.	1 ea.	"W" - 3" to "W" + 3"	Str.
G407	2	2	"W" + 3"	Str.
G408	11	11	"W" + 10"	Str.
G501	8	12	33'-2"	Str.
G502	1	1	20'-5"	Str.
G503	1	1	15'-8"	Str.

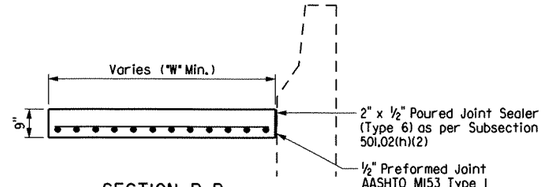

SECTION B-B

½" = 1'-0"

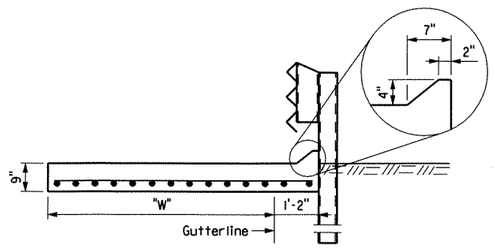

SECTION C-C

½" = 1'-0"

STATE OF ARKANSAS REGISTERED PROFESSIONAL ENGINEER No. 12307 BRIDGE ENGINEER

14 JAN 2010

DETAILS OF TYPE SPECIAL APPROACH GUTTER COUNTY ROAD 8 BRIDGE

ROUTE 71 SEC.

ARKANSAS STATE HIGHWAY COMMISSION

LITTLE ROCK, ARK.

DRAWN BY: JAP DATE: 05-06

CHECKED BY: PJS DATE: 05-08

DESIGNED BY: PJS DATE: 05-06

FILENAME: b040478ml_gll.dgn

SCALE: AS SHOWN

BRIDGE NO. 07079 DRAWING NO. 48648A

Florence & Hutcheson, Inc. CONSULTING ENGINEERS

7/14/2010

I:\0107S\county road 8\dgn\b040478ml_gll.dgn

DATE REVISED	DATE FILMED	DATE REVISED	DATE FILMED	FED. ROAD DIST. NO.	STATE	FED. AID PROJ. NO.	SHEET NO.	TOTAL SHEETS
04-10-2003				6	ARK.		67	
				JOB NO.				
				①	EMBANKMENT & BACKFILL		1888A	

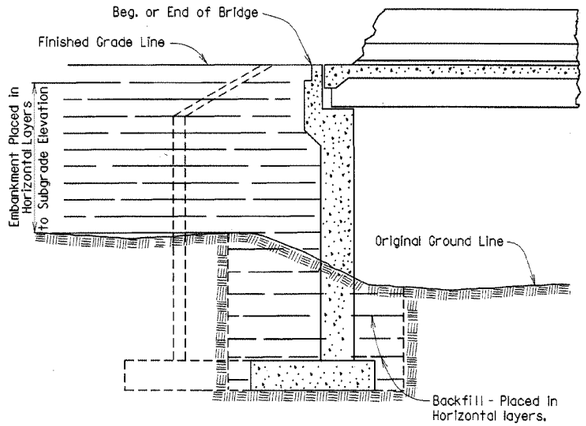

EMBANKMENT CONSTRUCTION AND FOOTING BACKFILL AT VERTICAL WALL ABUTMENTS

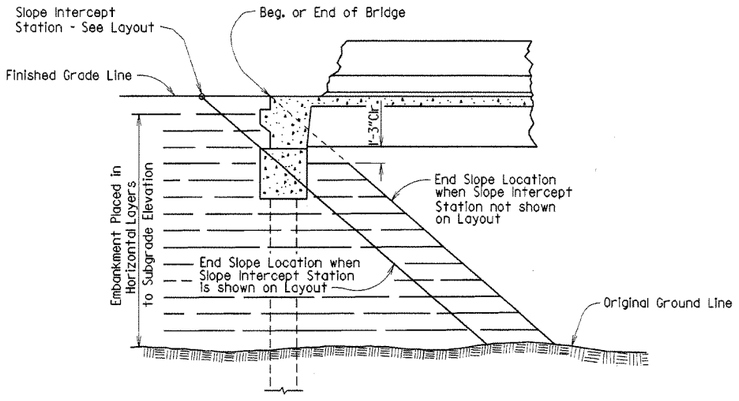

EMBANKMENT CONSTRUCTION AT SPILL-THROUGH PILE END BENTS

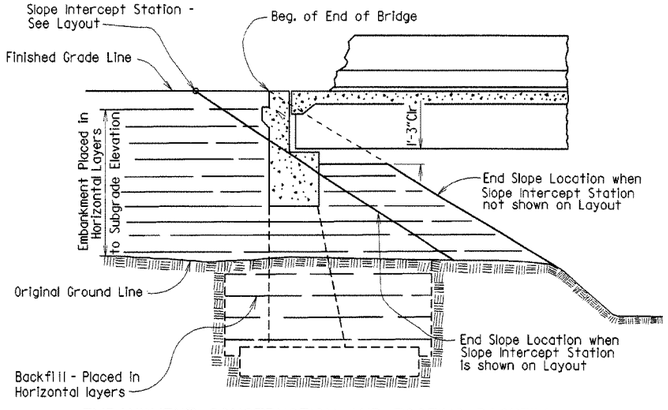

EMBANKMENT CONSTRUCTION AND FOOTING BACKFILL AT SPILL-THROUGH END BENTS

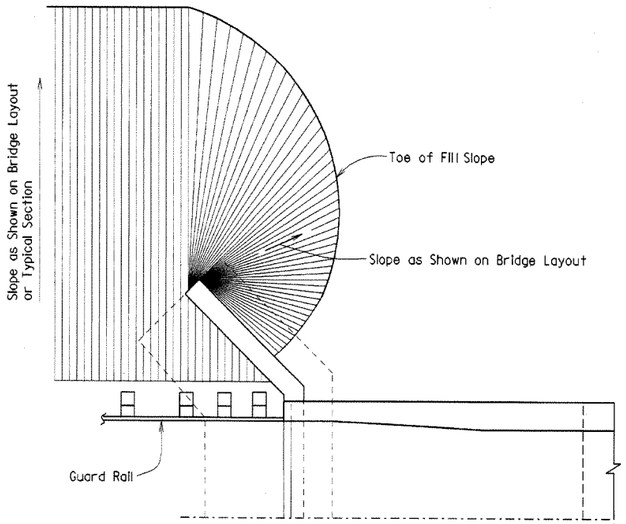

VERTICAL WALL ABUTMENTS

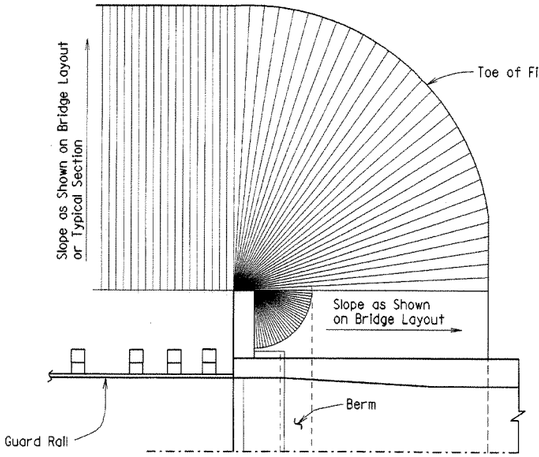

SPILL-THROUGH END BENTS WITH STUB WING

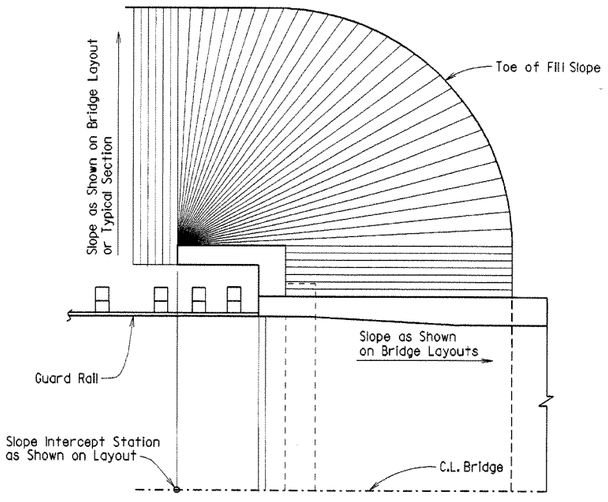

SPILL-THROUGH END BENTS WITH TURNBACK WING

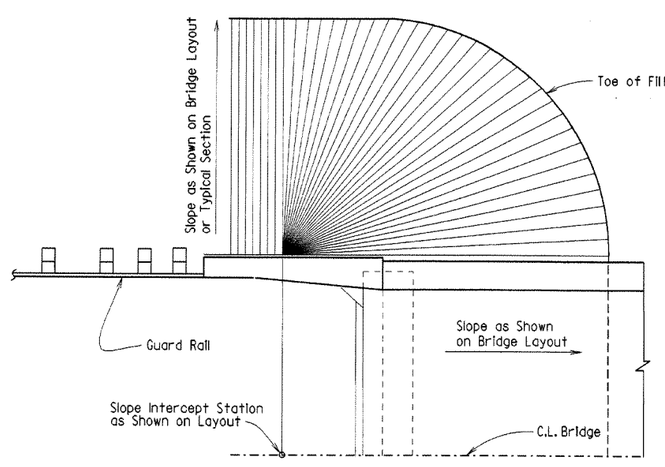

SPILL-THROUGH END BENTS WITH TRANSITION WING

METHOD OF DETERMINING FILL SLOPE LOCATION AT BRIDGE ENDS

GENERAL NOTES

The Bridge End Embankment shall be defined as a section of embankment, not less than 20 feet long adjacent to the bridge end, together with the side slopes and slopes under the bridge end including around the end of wingwalls. Embankment adjacent to structures shall be constructed in 4 inch horizontal layers (loose measure) and compacted by the use of mechanical equipment to the satisfaction of the Engineer. Refer to subsections 210.09, 210.10 and 801.08 of the Specifications for construction requirements.

⚠ Revised and redrawn MJT 04-10-2003
Chk'd. By: CJF 04-10-2003

STATE OF ARKANSAS
REGISTERED PROFESSIONAL ENGINEER
No. 4337
CHARLES P. BRAND

BRIDGE ENGINEER

EMBANKMENT CONSTRUCTION AND BACKFILL AT BRIDGE ENDS

ROUTE SEC.

ARKANSAS STATE HIGHWAY COMMISSION

LITTLE ROCK, ARK.

DRAWN BY: MJT DATE: 04-10-2003 FILENAME: BI888A.STD
CHECKED BY: CJF DATE: 04-10-2003 SCALE: NO SCALE
DESIGNED BY: STD. DATE: —

BRIDGE NO. DRAWING NO. 1888A

BI888A.STD

DATE REVISED	DATE FILMED	DATE REVISED	DATE FILMED	FED. ROAD DIST. NO.	STATE	FED. AID PROJ. NO.	SHEET NO.	TOTAL SHEETS
04-10-2003				6	ARK.		89	
				JOB NO.				
						RIP. & EXCAV.		1891F

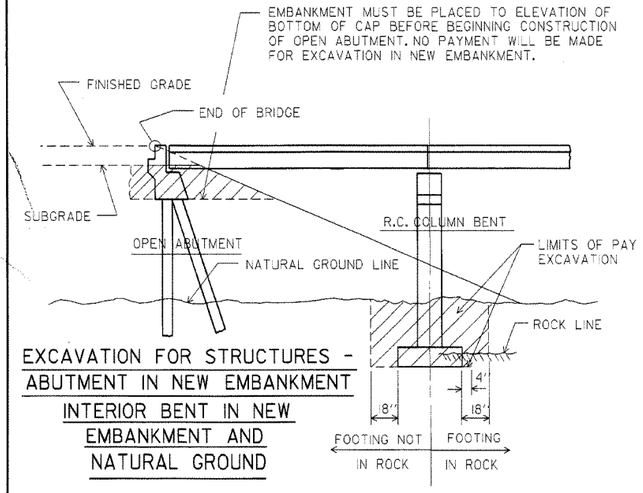

EXCAVATION FOR STRUCTURES - ABUTMENT IN NEW EMBANKMENT INTERIOR BENT IN NEW EMBANKMENT AND NATURAL GROUND

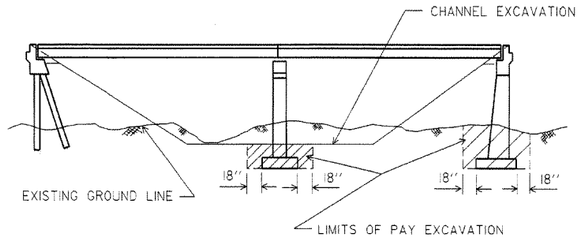

EXCAVATION FOR STRUCTURES - BRIDGE LOCATION WITH DESIGNATED CHANNEL CHANGE

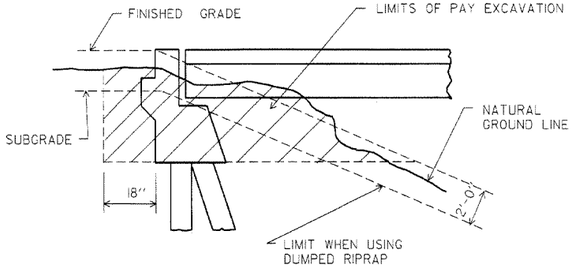

EXCAVATION FOR STRUCTURES - ABUTMENT IN NATURAL GROUND

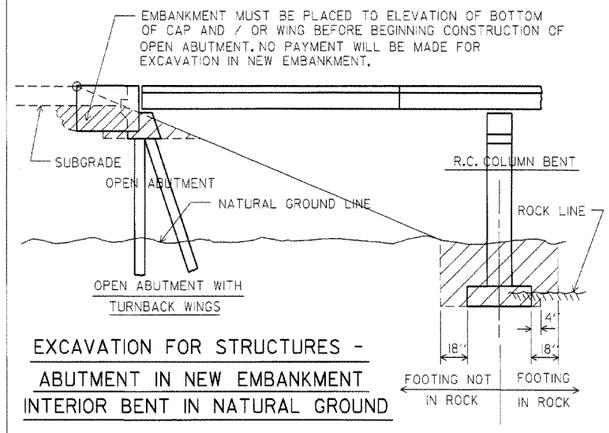

EXCAVATION FOR STRUCTURES - ABUTMENT IN NEW EMBANKMENT INTERIOR BENT IN NATURAL GROUND

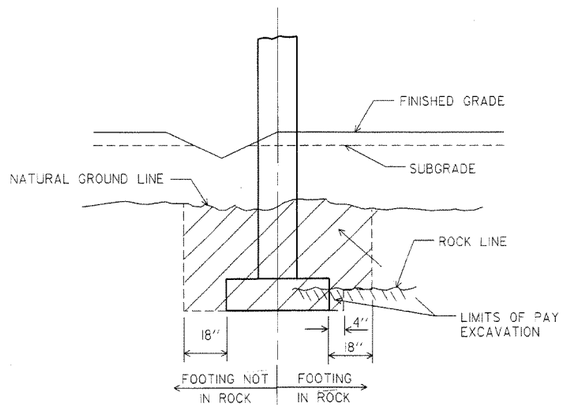

EXCAVATION FOR STRUCTURES - BENT IN ROADWAY FILL SECTION AND NATURAL GROUND

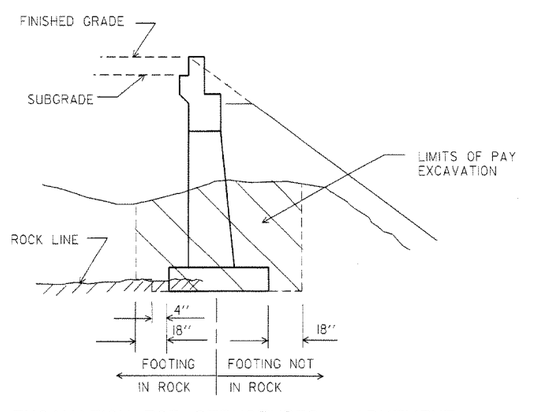

EXCAVATION FOR STRUCTURES - ABUTMENT IN NATURAL GROUND AND NEW EMBANKMENT

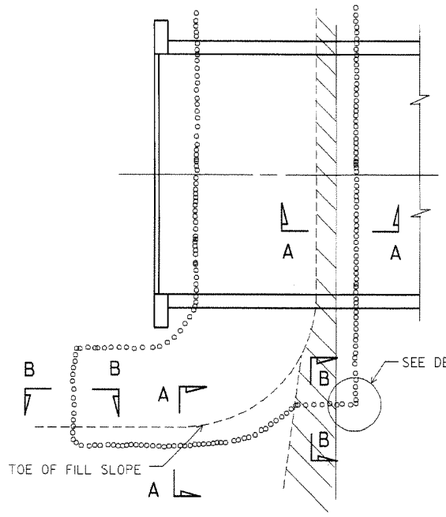

PLAN OF DUMPED RIPRAP

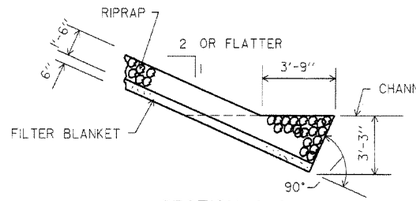

SECTION A-A

(TOE EXCAVATION IN SOIL)

EXCAVATION FOR TOES IS NOT A PAY ITEM

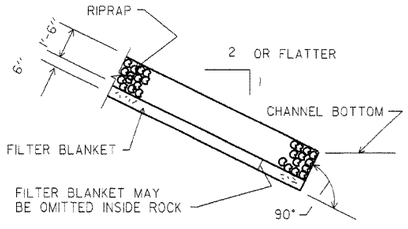

SECTION A-A

(TOE EXCAVATION IN ROCK)

NOTE : USE THIS TYPE OF TOE WHEN ROCK IS ENCOUNTERED WHICH IS IN A STABLE CONDITION.

NOTE : IN LIEU OF AN AGGREGATE FILTER BLANKET, A SYNTHETIC FIBER GEOTEXTILE FABRIC COMPLYING WITH THE REQUIREMENTS OF SUBSECTION 816.02(e) MAY BE USED.

NOTE : DETAILS FOR COMPUTING EXCAVATION FOR STRUCTURES ARE INCLUDED FOR INFORMATION AS TO HOW PLAN QUANTITIES WERE CALCULATED AND FOR USE WHEN ADJUSTING QUANTITIES WHEN CHANGING FOOTING ELEVATION.

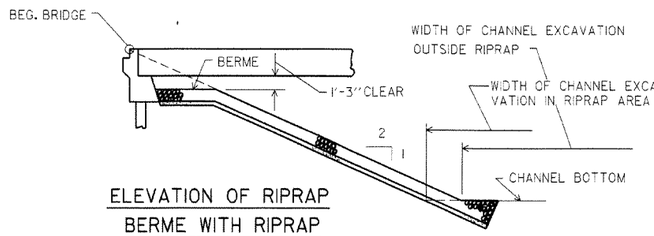

ELEVATION OF RIPRAP BERME WITH RIPRAP

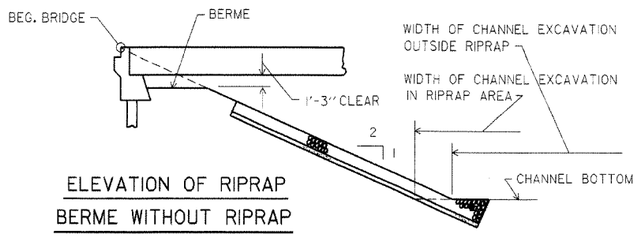

ELEVATION OF RIPRAP BERME WITHOUT RIPRAP

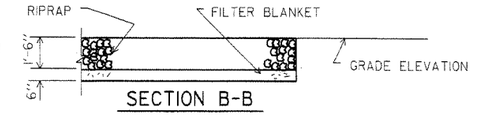

SECTION B-B

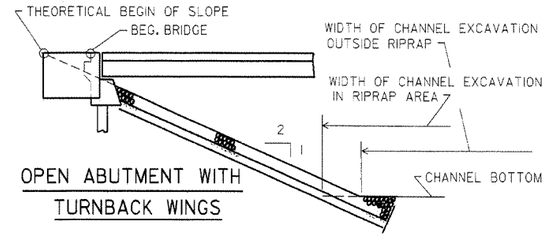

OPEN ABUTMENT WITH TURNBACK WINGS

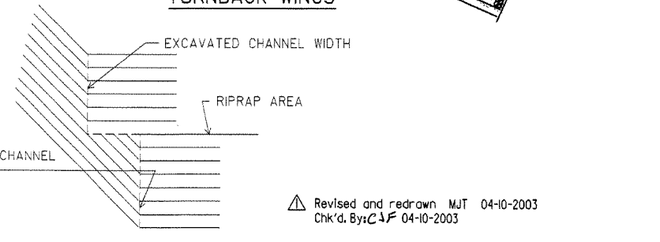

DETAIL C

⚠ Revised and redrawn MJT 04-10-2003
Chk'd. By: CJF 04-10-2003

STATE OF ARKANSAS
REGISTERED PROFESSIONAL ENGINEER
No. 4337
CHARLES P. BRAND
BRIDGE ENGINEER

DETAILS FOR DUMPED RIPRAP AND FILTER BLANKET AND DETAILS FOR COMPUTING EXCAVATION FOR STRUCTURES

ROUTE SEC.

ARKANSAS STATE HIGHWAY COMMISSION

LITTLE ROCK, ARK.

DRAWN BY: MJT DATE: 04-10-2003 FILENAME: B1891F.STD
CHECKED BY: CJF DATE: 04-10-2003 SCALE: NO SCALE
DESIGNED BY: STD. DATE: ——

BRIDGE NO. DRAWING NO. 1891F

DATE REVISED	DATE FILMED	DATE REVISED	DATE FILMED
9-8-11			

FED. ROAD DIST. NO.	STATE	FED. AID PROJ. NO.	SHEET NO.	TOTAL SHEETS
6	ARK.		90	
JOB NO.				

① NAME PLATE 2387

The name of the bridge as shown on the plans shall be placed on Lines 1 - 3 using 1/8" raised letters and numerals 3/8" high.

	Example 1	Example 2	Example 3	Example 4
Line 1	Red River	Southern	Saline	
Line 2	Relief	Railroad	River	Highway 5
Line 3		Overpass	Relief	

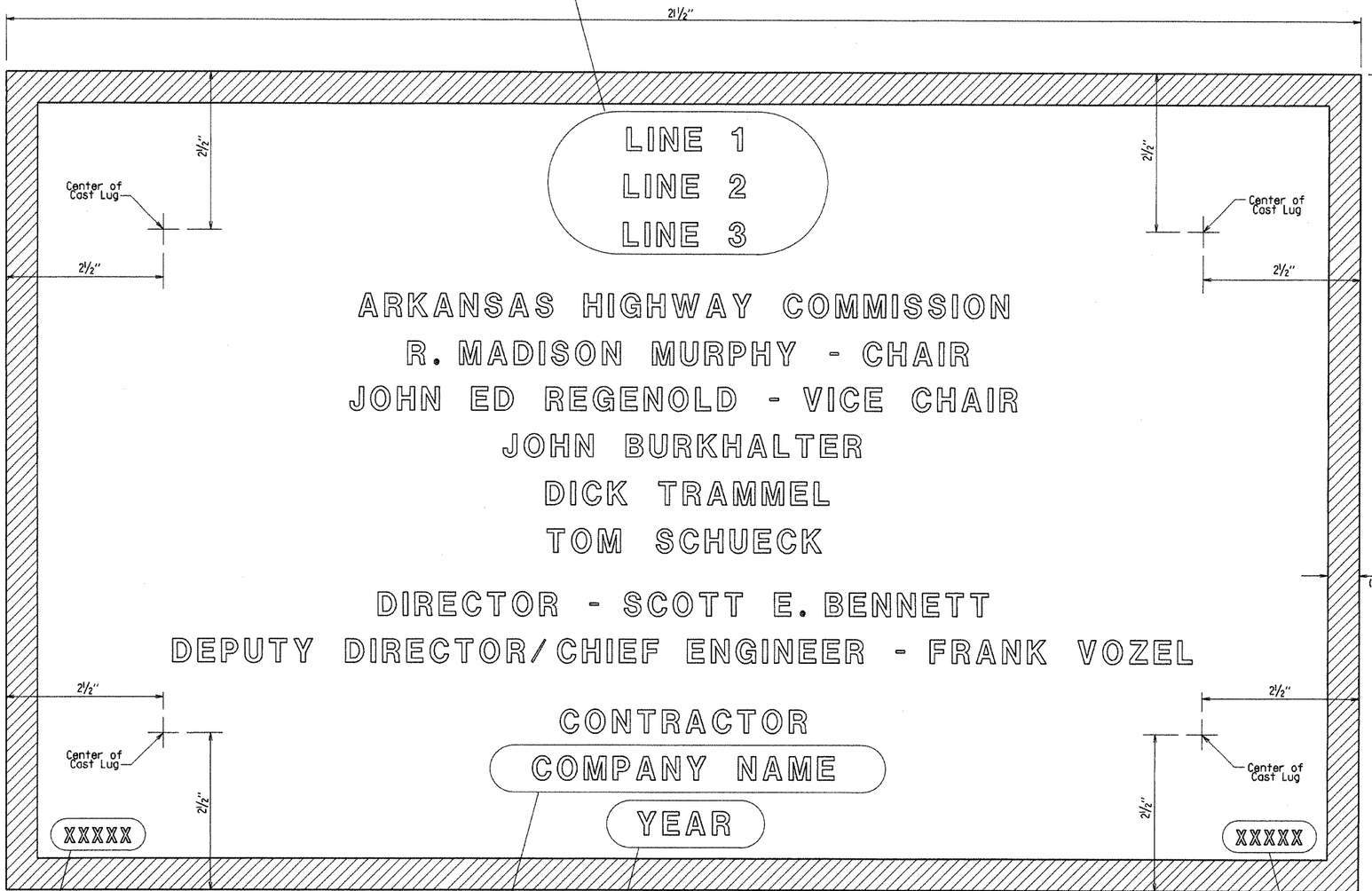

Place the design live loading here using 1/8" raised letters and numerals 1/4" high. Examples : HS 20
HL-93

Place the Year in which Contract was awarded here using 1/8" raised numerals 3/8" high. Example : 2001

Place the name of the company awarded the construction contract here using 1/8" raised letters and numerals 3/8" high. Example : ABCD CONSTRUCTION, INC.

Place the Bridge number here using 1/8" raised letters and numerals 1/4" high. Examples : A1234
05432

TYPICAL BRIDGE NAME PLATE

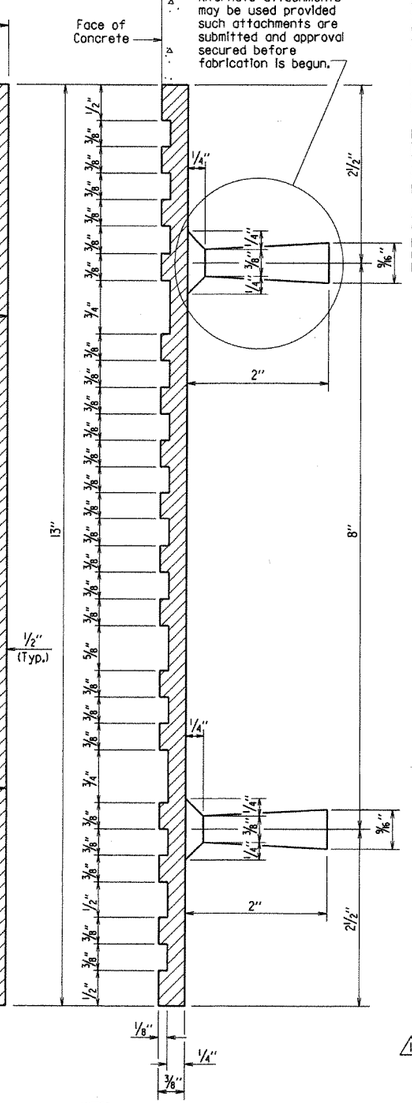

GENERAL NOTES

Specifications: Arkansas State Highway and Transportation Department Standard Specifications for Highway Construction, (2003 Edition) with applicable Supplemental Specifications and Special Provisions.

Name plates shall be cast bronze and shall meet the material requirements as specified in Section 812 of the Standard Specifications.

Body of plate shall be 1/4" thick and shall include four tapering cone lugs 3/8" to 5/8"x 2" long. The border and all lettering shall be raised 1/8" above the face of plate and shall be polished.

All lettering shall be plain gothic, square cut and not tapered. The number of plates required and the location and name on the plate for each bridge shall be as designated on the plans.

⚠1 Revised and Redrawn 9-8-11 KDH Checked By: CRE

STATE OF ARKANSAS
REGISTERED PROFESSIONAL ENGINEER
No. 7510
CARL J. PUGELIER
BRIDGE ENGINEER

DETAILS OF STANDARD TYPE D BRIDGE NAME PLATE
ROUTE SEC.
ARKANSAS STATE HIGHWAY COMMISSION
LITTLE ROCK, ARK.

DRAWN BY: KDH DATE: 9-8-11 FILENAME: B2387.STD
CHECKED BY: CRE DATE: 9-8-11 SCALE: 1'-0" = 1'-0" OR AS NOTED
DESIGNED BY: STD. DATE: —
BRIDGE NO. DRAWING NO. 2387

DATE REVISED	DATE FILMED	DATE REVISED	DATE FILMED	DATE REVISED	DATE FILMED	FED. ROAD DIST. NO.	STATE	FED. AID PROJ. NO.	SHEET NO.	TOTAL SHEETS
11-27-96						6	ARK.		91	
04-10-2003						JOB NO.				

① BR. DECK FORMS 14991

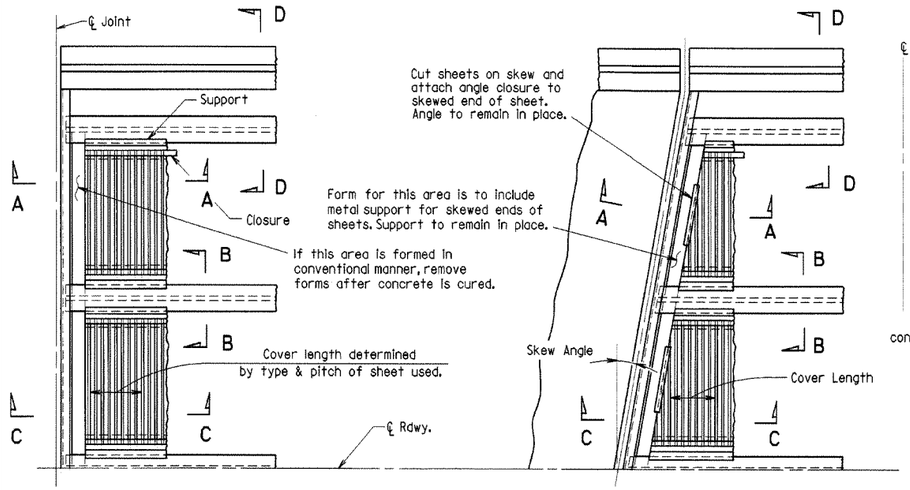

PART PLAN - SQUARE SPAN
3/8" = 1'-0"

PART PLAN - SKEWED SPAN
3/8" = 1'-0"

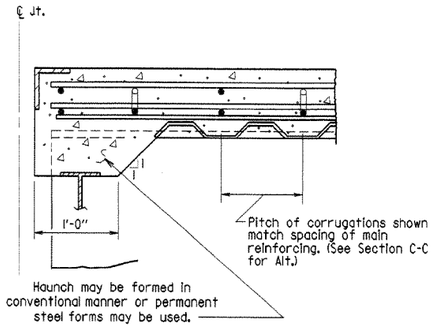

SECTION A-A
N.T.S.
(Angle at end of span)

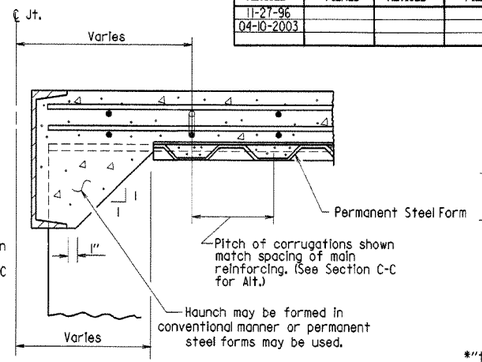

SECTION A-A
N.T.S.
(Channel at end of span)

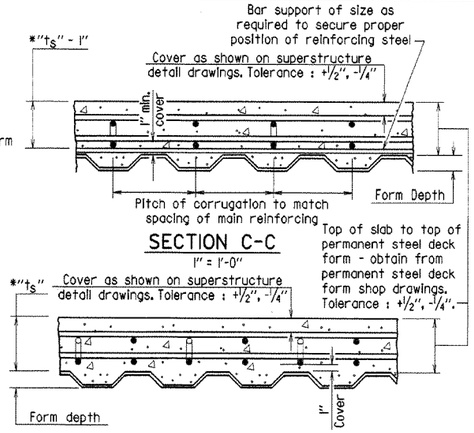

SECTION C-C
1" = 1'-0"

SECTION C-C - ALTERNATE
1" = 1'-0"
(Applicable when corrugations do not match spacing of main reinforcement)

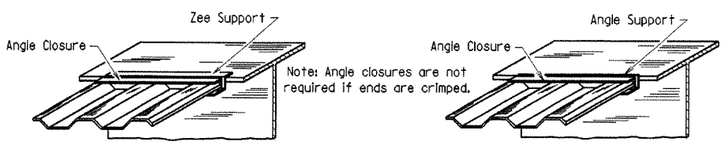

SKETCH OF PERMISSIBLE SUPPORTS
N.T.S.

*t_s = slab thickness as shown on superstructure detail drawings.

GENERAL NOTES

Permanent steel deck forms may be used at the Contractor's option and shall be at no additional cost to the Department. Such use may result in changes to the dead load deflection of the girder. Any cost for adjustments due to a change in the dead load deflection will be borne by the Contractor. Payment for deck concrete and structural steel will not be increased due to use of permanent steel deck forms.

Permanent steel deck forms shall conform to subsection 802.14(b) of the Standard Specifications. Detailed plans, including detailed calculations and manufacturer's technical brochure, shall be submitted to and approved by the Bridge Engineer before work of forming the bridge deck is started.

Welding of form supports to the tension flange of steel girders will be permitted only in areas where shear connectors are used. When welding is not allowed, the method of fastening Z or ∠ supports to the flange must be approved by the Bridge Engineer.

Form sheets shall be fastened to supporting members and to each other with galvanized metal screws sufficient in size and number to provide a secure attachment. Alternate methods of attachment must be approved by the Bridge Engineer.

When the pitch of form corrugations match the reinforcing spacing, transversely align form sheets across the bridge to maintain the correct orientation of continuous reinforcing bars in the corrugations.

Bar support rods, when used, shall be sized and spaced to adequately support the bottom reinforcing mat at the required position.

High chairs shall be sized to support the top mat of reinforcing at the proper position. High chairs shall be placed at locations shown on the detail drawings.

⚠2 Specifications: Arkansas State Highway and Transportation Department Standard Specifications for Highway Construction (2003 Edition), with applicable supplemental specifications and special provisions.

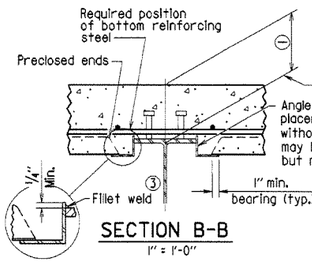

SECTION B-B
1" = 1'-0"
(Showing permissible support for tension flange where shear connectors are used, and for all compression flanges)

③ Minimum weld: 1/8" x 1" ℄ 18". More weld may be required; maximum length per weld = 1 1/2" (typ.)

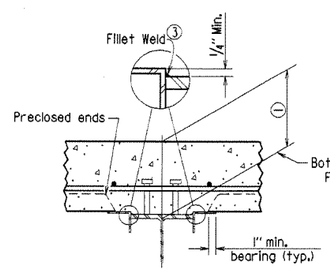

SECTION B-B
1" = 1'-0"
(Showing permissible support for tension flange where shear connectors are used and for all compression flanges)

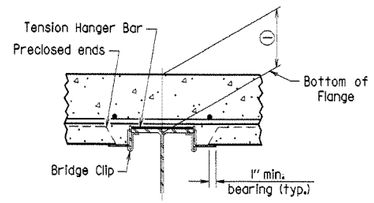

SECTION B-B
1" = 1'-0"
(Showing permissible support for tension flange where shear connectors are not used)

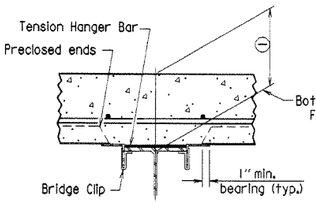

SECTION B-B
1" = 1'-0"
(Showing permissible support for tension flange where shear connectors are not used)

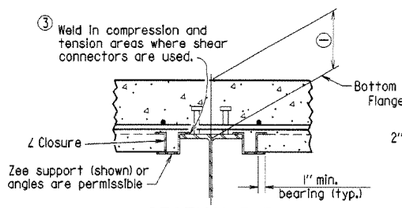

SECTION B-B
1" = 1'-0"
(Showing ∠ Closure)

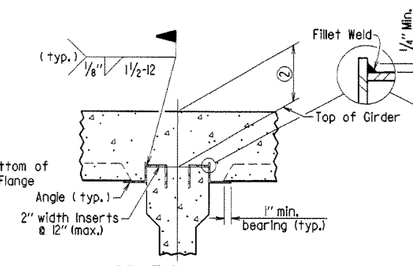

SECTION B-B
(FOR CONCRETE GIRDERS)
1" = 1'-0"
(Showing support by insert cast in girder)

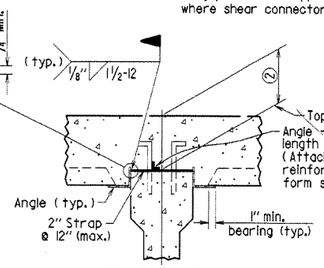

SECTION B-B
(FOR CONCRETE GIRDERS)
1" = 1'-0"
(Showing support by Strap)

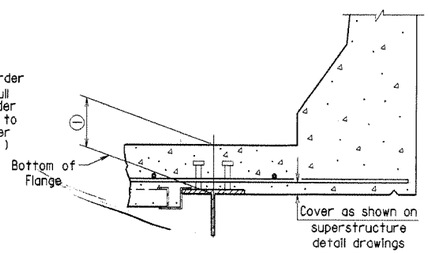

SECTION D-D
1" = 1'-0"
Note: Only Bottom Reinforcing is shown.

① Distance from top of slab to bottom of top flange as measured at centerline girder and as shown on superstructure detail drawings. This dimension may vary within the following limits to maintain the grade and slab thickness tolerances : Minimum - occurs when either the top flange or the support angle leg contacts the bottom reinforcing steel; Maximum = t_s + 1 3/4" + flange thickness. See Section C-C for slab thickness tolerance between adjacent girder flanges.

② Distance from top of slab to top of girder as measured at centerline girder and as shown on superstructure detail drawings. This dimension may vary within the following limits to maintain the grade and slab thickness tolerances : Minimum - occurs when either the top of girder or the support angle leg contacts the bottom reinforcing steel; Maximum - value shown on the superstructure detail drawings when removable forms are used. See Section C-C for slab thickness tolerance between adjacent girder flanges.

⚠ Redrawn and revised 11/27/96; MJT

⚠2 Revised for 2003 AHTD Construction Specifications and CPB Seal. MJT 04-10-2003
Chk'd. By: CJF 04-10-2003

STATE OF ARKANSAS
REGISTERED PROFESSIONAL ENGINEER
No. 4537
CHARLES P. BRAND
BRIDGE ENGINEER

DETAILS OF PERMISSIBLE TYPE PERMANENT STEEL BRIDGE DECK FORMS FOR STEEL & CONCRETE GIRDER SPANS

ROUTE SEC.

ARKANSAS STATE HIGHWAY COMMISSION

LITTLE ROCK, ARK.

DRAWN BY: MJT DATE: 10-17-96
CHECKED BY: CPB DATE: 10-17-96
DESIGNED BY: STD. DATE: —
SCALE: as noted

BRIDGE NO. DRAWING NO. 14991

BI4991.STD

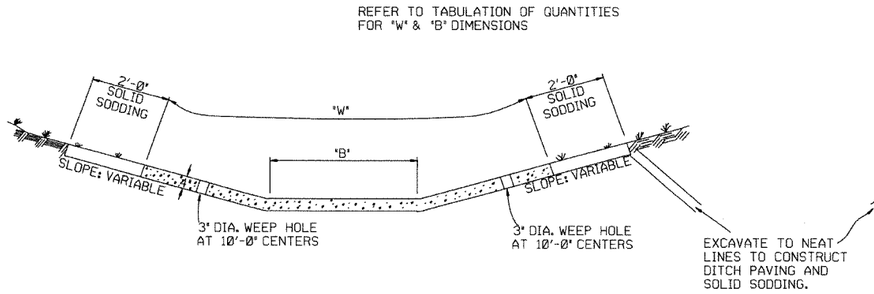

TYPE A

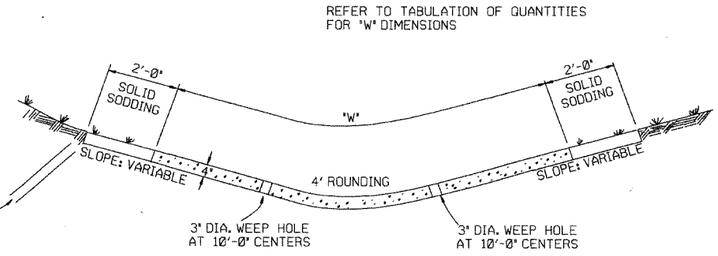

TYPE B

THE STEEL AND ADDITIONAL CONCRETE FOR THE WALLS SHALL NOT BE PAID FOR DIRECTLY, BUT SHALL BE CONSIDERED TO BE INCLUDED IN THE PRICE BID FOR 'CONCRETE DITCH PAVING.'

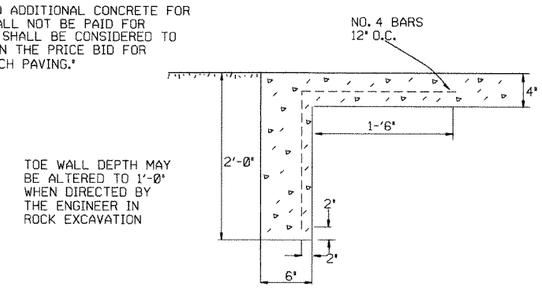

TOE WALL DEPTH MAY BE ALTERED TO 1'-0" WHEN DIRECTED BY THE ENGINEER IN ROCK EXCAVATION

TOE WALL DETAIL FOR CONCRETE DITCH PAVING

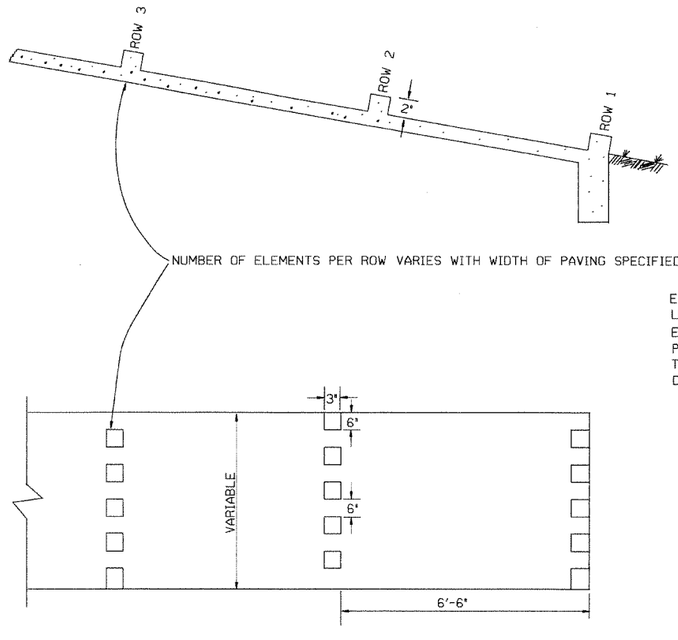

ENERGY DISSIPATORS
(NO SCALE)

ENERGY DISSIPATORS TO BE USED FOR THE ENTIRE LENGTH OF DITCH WHEN SLOPE OF DITCH PAVING EXCEEDS 7%. THE DISSIPATORS WILL NOT BE PAID FOR DIRECTLY, BUT SHALL BE CONSIDERED TO BE UNCLUDED IN THE PRICE BID FOR CONCRETE DITCH PAVING.

GENERAL NOTES:

THE FULL WIDTH OF EACH SECTION SHALL BE POURED MONOLITHICALLY.

TOE WALLS TO BE CONSTRUCTED FULL WIDTH AT EACH END OF DITCH PAVING, AND POURED MONOLITHICALLY.

SOLID SOD ALONG DITCH PAVING TO BE PLACED WITHIN 14 DAYS OF DITCH PAVING CONSTRUCTION.

1" WIDE TRANSVERSE EXPANSION JOINTS SHALL BE PLACED IN CONCRETE DITCH PAVING AT 45' INTERVALS. THE SPACE SHALL BE FILLED WITH APPROVED JOINT FILLER COMPLYING WITH AASHTO M213.

DATE	REVISION	DATE FILM'D
11-17-10	ADDED GENERAL NOTE	
6-2-94	ADDED GENERAL NOTE ABOUT SOLID SODDING	
11-30-8	ELIMINATED MIN. ROWS OF ELEMENTS	111-30-89
7-15-88	REVISED DISSIPATOR NOTE	653-7-15-88
4-3-87	REVISED ENERGY DISSIPATOR	671-4-3-87
1-9-87	MODIFIED NOTE ON ENERGY DISS.	532-1-9-87
11-3-86	ADDED NOTE TO ENERGY DISS.	599-12-1-86
11-1-84	ENERGY DISSIPATOR DETAILS ADDED	508-11-1-84
11-1-84	EXCAVATION DETAILS ADDED TYPED A & B	
10-2-72	REVISED AND REDRAWN	508-10-2-72

ARKANSAS STATE HIGHWAY COMMISSION

CONCRETE DITCH PAVING

STANDARD DRAWING CDP-1

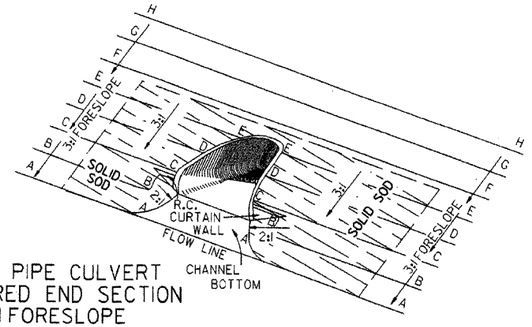

TYPICAL PIPE CULVERT
WITH FLARED END SECTION
& 3:1 FORESLOPE

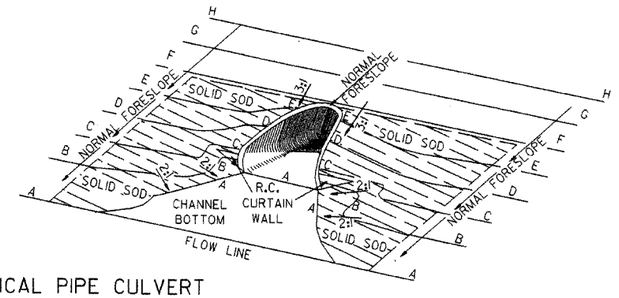

TYPICAL PIPE CULVERT
WITH FLARED END SECTION
& FLATTENED ADJACENT SLOPES

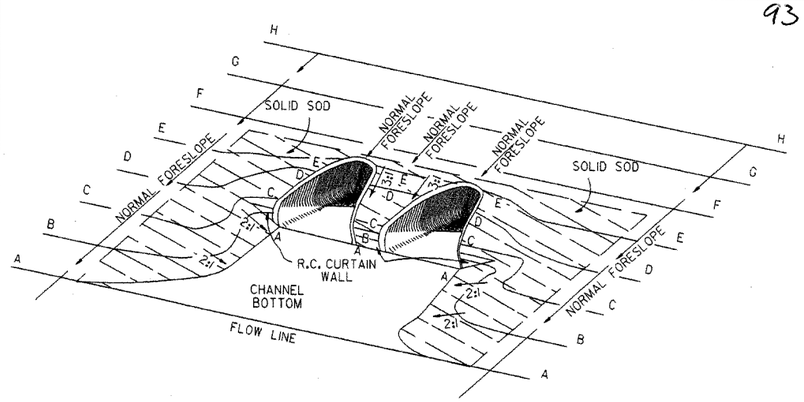

TYPICAL MULTIPLE PIPE CULVERT
WITH FLARED END SECTIONS
& FLATTENED ADJACENT SLOPES

R.C. CURTAIN WALL
DIMENSIONS & QUANTITIES

PIPE DIA.	H_1	L_1	L	L (DBL.)/2	SINGLE R.C.P.C. CONC.	SINGLE R.C.P.C. REINF. STEEL	DOUBLE R.C.P.C. CONC.	DOUBLE R.C.P.C. REINF. STEEL
					CU. YDS.	LBS.	CU. YDS.	LBS.
18"	1'-11/2"	3'-5"	8'-0"	6'-3"	0.31	27.7	0.45	39.5
24"	1'-01/2"	4'-6"	9'-6"	7'-6"	0.37	33.4	0.53	48.0
30"	1'-31/2"	5'-7"	11'-0"	9'-0"	0.45	39.0	0.67	59.0
36"	1'-7"	6'-8"	13'-0"	10'-6"	0.58	52.6	0.83	73.9
42"	2'-11/2"	7'-3"	15'-6"	12'-0"	0.82	77.1	1.10	100.7
48"	2'-5"	7'-10"	17'-0"	13'-0"	0.98	94.9	1.27	120.4
54"	2'-91/2"	8'-5"	18'-6"	14'-0"	1.16	115.8	1.47	143.7
60"	3'-4"	9'-0"	20'-6"	15'-6"	1.47	149.7	1.84	180.3
72"	4'-5"	10'-2"	25'-6"	18'-6"	2.31	232.6	2.73	271.0

NOTE: QUANTITIES SHOWN ARE FOR ONE (1) CURTAIN WALL.

REINFORCING STEEL SCHEDULE

PIPE DIA.	SINGLE R.C. PIPE CULVERT H401 L	H401 NO.	H402 L	H402 NO.	V401 L	V401 NO.	V402 L	V402 NO.	DOUBLE R.C. PIPE CULVERT H401 L	H401 NO.	H402 L	H402 NO.	H403 L	H403 NO.	V401 L	V401 NO.	V402 L	V402 NO.
18"	7'-8"	2	1'-11½"	4	1'-7½"	8	8"	8	12'-2"	2	1'-11½"	4	8"	2	1'-7½"	10	8"	14
24"	9'-2"	2	2'-2"	4	1'-8½"	10	8"	9	14'-8"	2	2'-2"	4	8"	2	1'-8½"	12	8"	18
30"	10'-8"	2	2'-4½"	4	1'-11½"	10	8"	12	17'-8"	2	2'-4½"	4	8"	2	1'-11½"	14	8"	22
36"	12'-8"	2	2'-10"	6	2'-3"	12	8"	14	20'-8"	2	2'-10"	6	8"	3	2'-3"	14	8"	28
42"	15'-2"	2	3'-9½"	8	2'-9½"	16	8"	15	23'-8"	2	3'-9½"	8	8"	4	2'-9½"	18	8"	30
48"	16'-8"	2	4'-3"	10	3'-1"	18	8"	16	25'-8"	2	4'-3"	10	8"	5	3'-1"	20	8"	32
54"	18'-2"	2	4'-8½"	12	3'-5½"	20	8"	17	27'-8"	2	4'-9"	12	8"	6	3'-5½"	22	8"	34
60"	20'-2"	2	5'-5"	14	4'-0"	24	8"	18	30'-8"	2	5'-5"	14	8"	7	4'-0"	26	8"	36
72"	25'-2"	2	7'-4"	18	5'-1"	30	8"	20	36'-8"	2	7'-4"	18	8"	9	5'-1"	33	8"	40

ALL REINFORCING STEEL #4 BARS @ 6" O.C.

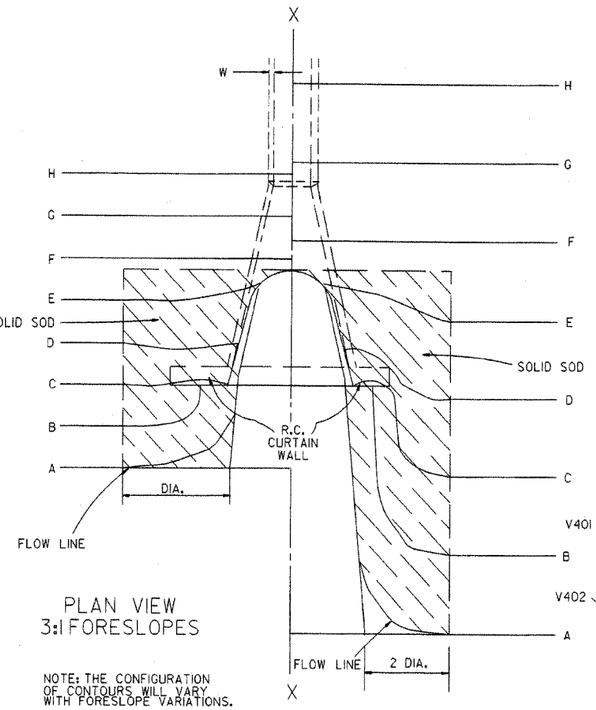

PLAN VIEW
3:1 FORESLOPES

NOTE: THE CONFIGURATION OF CONTOURS WILL VARY WITH FORESLOPE VARIATIONS.

PLAN VIEW
FLATTENED FORESLOPES

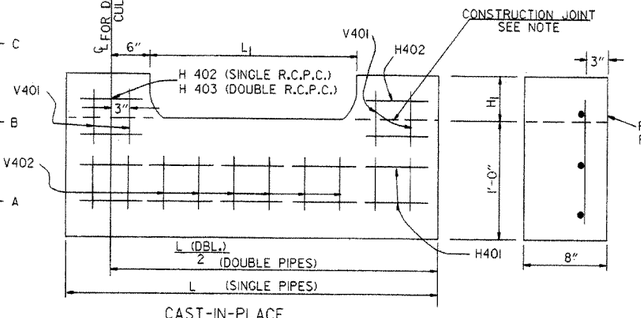

CAST-IN-PLACE

NOTE: THE PORTION OF THE R.C. CURTAIN WALL BENEATH THE FLARED END SECTION (LOWER 1'-0") SHALL BE PLACED MONOLITHICALLY. THE FLARED END SECTION SHALL THEN BE SET IN PLACE & THE REMAINING PORTIONS OF THE R.C. CURTAIN WALL PLACED.

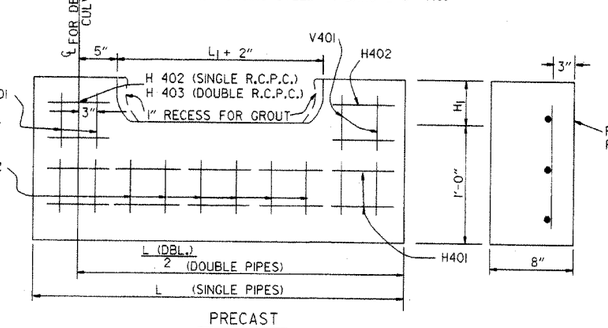

PRECAST

NOTE: THE PRECAST CURTAIN WALL WILL BE SET AND BACKFILLED WITH COMPACTED MATERIAL. THE FLARED END SECTION SHALL THEN BE SET IN PLACE AND THE 1" RECESS FILLED WITH GROUT. WHERE "L" EXCEEDS 11' THE CURTAIN WALL MAY BE CAST IN TWO (2) OR MORE SECTIONS. THE METHOD OF JOINING THE SECTIONS FOR INSTALLATION SHALL BE APPROVED BY THE ENGINEER.

SOLID SODDING

PIPE DIA.	SINGLE R.C.P.C. 3:1	SINGLE R.C.P.C. 4:1	SINGLE R.C.P.C. 6:1	DOUBLE R.C.P.C. 3:1	DOUBLE R.C.P.C. 4:1	DOUBLE R.C.P.C. 6:1
	SQ. YDS.			SQ. YDS.		
18"	5	7	12	6	8	13
24"	8	12	19	9	13	20
30"	13	18	29	14	19	30
36"	17	26	41	18	28	43
42"	23	35	55	25	37	57
48"	29	46	68	31	48	70
54"	35	57	85	37	59	87
60"	45	66	104	48	65	107
72"	64	92	156	67	95	159

NOTE: QUANTITIES SHOWN ABOVE ARE FOR ONE (1) END OF F.E.S.

GENERAL NOTES

1. A CAST-IN-PLACE OR PRECAST CURTAIN WALL MAY BE USED. PAYMENT FOR THE CURTAIN WALL SHALL BE CONSIDERED TO BE INCLUDED IN THE UNIT PRICE BID EACH FOR FLARED END SECTIONS OF THE SEVERAL SIZES, WHICH PRICE SHALL BE FULL COMPENSATION FOR FURNISHING ALL MATERIALS INCLUDING REINFORCING STEEL AND CONCRETE: FOR FORMS, MIXING AND PLACING; FOR EXCAVATION AND BACKFILL, AND FOR ALL LABOR, TOOLS, EQUIPMENT AND INCIDENTALS NECESSARY TO COMPLETE THE WORK.
2. ALL EXPOSED EDGES SHALL BE CHAMFERED ¾".
3. CONCRETE FOR CURTAIN WALL SHALL MEET THE REQUIREMENTS FOR CLASS A OR S CONCRETE AS PROVIDED IN SECTION 802 OF THE STANDARD SPECIFICATIONS OR FOR PAVING CONCRETE AS PROVIDED IN SECTION 501 OF THE STANDARD SPECIFICATIONS.
4. WELDED WIRE MESH 3 x 3 W10 x W10 MAY BE USED IN LIEU OF REINFORCING BARS.

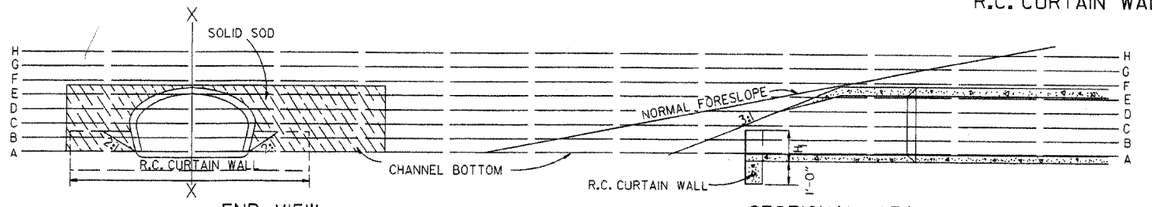

END VIEW

SECTIONAL VIEW "X-X"

R.C. CURTAIN WALL DETAILS

DATE	REVISION	FILMED
10-18-96	ADDED NOTE TO SOLID SODDING	10-18-96
10-12-95	CORRECTED SPELLING	
11- 3-94	ADDED GENERAL NOTE NO. 4	
8-15-91	REV. CURTAIN WALL QUANT. STEEL SCH. & SOLID SOD QUANT.	
3-2-81	ALLOW PRECAST IN 2 OR MORE PIECES CHAMFER EDGES	
5-15-80	ADDED PRECAST WALL & GENERAL NOTES	
10-2-72	REVISED AND REDRAWN	

ARKANSAS STATE HIGHWAY COMMISSION

FLARED END SECTION

STANDARD DRAWING FES-1

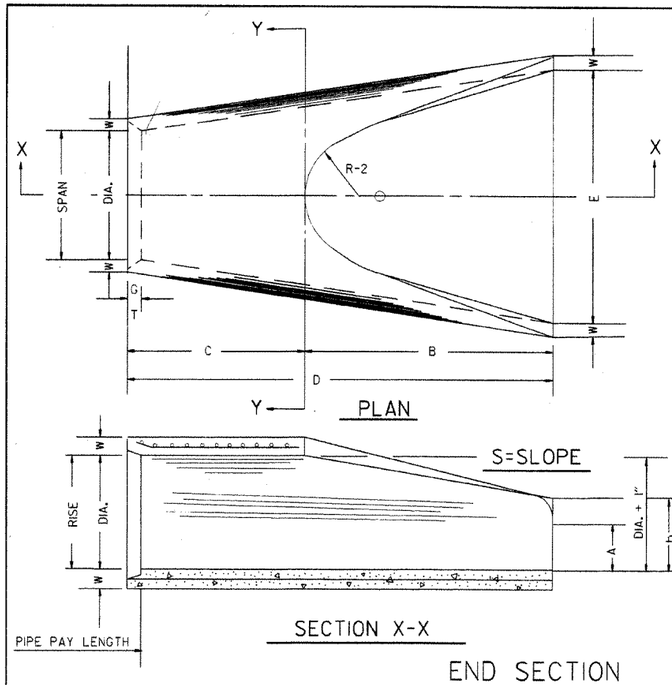

TABLE OF DIMENSIONS

DIA.	WALL	A	B	C	D	E	S	DIA. ± 1"	P	R-1	R-2	G-T	WT.	h
18"	2½"	9"	2'-3"	3'-10"	6'-1"	3'-0"	3:1	19"	29"	15½"	12"	2"	1000	1'-0½"
24"	3"	9½"	3'-7½"	2'-6"	6'-1½"	4'-0"	3:1	25"	33 3/16"	16 13/16"	14"	2½"	1600	1'-1½"
30"	3½"	1'-0"	4'-6"	1'-7¾"	6'-1¾"	5'-0"	3:1	31"	37"	18½"	15"	3¼"	1940	1'-4⅝"
36"	4"	1'-3"	5'-3"	2'-10¾"	8'-1¾"	6'-0"	3:1	37"	47 13/16"	24 5/16"	20"	3½"	4100	1'-8"
42"	4½"	1'-9"	5'-3"	2'-11"	8'-2"	6'-6"	3:1	43"	53 7/16"	27½"	22"	3½"	5380	2'-2½"
48"	5"	2'-0"	6'-0"	2'-2"	8'-2"	7'-0"	3:1	49"	56½"	28½"	22"	3½"	6550	2'-6"
54"	5½"	2'-4"	6'-6"	1'-10"	8'-4"	7'-6"	3:1	55"	65½"	33⅛"	24"	4"	8750	2'-10½"
60"	6"	2'-10"	6'-6"	1'-10"	8'-4"	8'-0"	3:1	61"	72½"	36 1/16"	24"	4"	9270	3'-5"
72"	7"	3'-10"	6'-6"	1'-10"	8'-4"	9'-0"	3:1	73"	77 13/16"	38 13/16"	24"	5"	13250	4'-6"

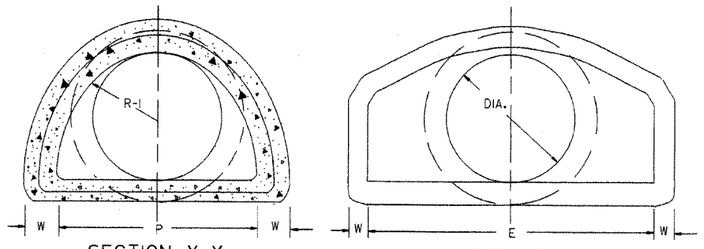

NOTE: TONGUE END ON UPSTREAM SECTION
GROOVE END ON DOWNSTREAM SECTION

END SECTION FOR REINFORCED CONCRETE PIPE CULVERTS

ARCH PIPE

EQUIV. DIA.	• SPAN AASHTO M 206	• SPAN AHD NOMINAL	• RISE AASHTO M 206	• RISE AHD NOMINAL	W	A	B	C	D	E	P	R2	G-T	S
	INCHES													
15	18	18	11	11	2"	4"	2'-0"	4'-0"	6'-0"	3'-0"	29"	12"	1½"	2½:1
18	22	22	13½	14	2½"	5"	2'-0"	4'-1"	6'-1"	3'-6"	32⅛"	13"	2½"	2½:1
21	26	26	15½	16	2¾"	7"	2'-3"	3'-10"	6'-1"	4'-0"	34⅛"	14"	2½"	2½:1
24	28½	29	18	18	3"	9"	2'-3"	3'-10"	6'-1"	5'-0"	36 13/16"	15"	2½"	2½:1
30	36¼	36	22½	23	3½"	10"	3'-1"	3'-0½"	6'-1½"	6'-0"	47 13/16"	20"	3"	2½:1
36	43¾	44	26⅝	27	4"	10½"	4'-0"	2'-1½"	6'-1½"	6'-6"	54⅝"	22"	3½"	2½:1
42	51⅛	51	31 5/16	31	4½"	11½"	4'-7"	1-10¼"	6'-5¼"	7'-2"	59½"	23"	3¾"	2½:1
48	58½	59	36	36	5"	1'-3"	5'-3"	2'-10¾"	8'-1¾"	7'-10"	70 5/16"	24"	4¼"	2½:1
54	65	65	40	40	5½"	1'-7"	5'-3"	2'-11"	8'-2"	8'-6"	72 1/16"	24"	4¾"	2½:1
60	73	73	45	45	6"	1'-10"	5'-6"	2'-8"	8'-2"	9'-0"	77 3/16"	24"	5"	2½:1

• THE MEASURED SPAN AND RISE SHALL NOT VARY MORE THAN ± 2 PER CENT FROM THE VALUES SPECIFIED BY AASHTO M 206.

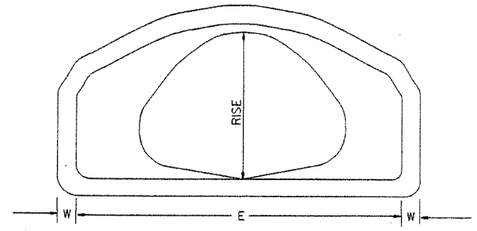

END VIEW
CONCRETE ARCH PIPE

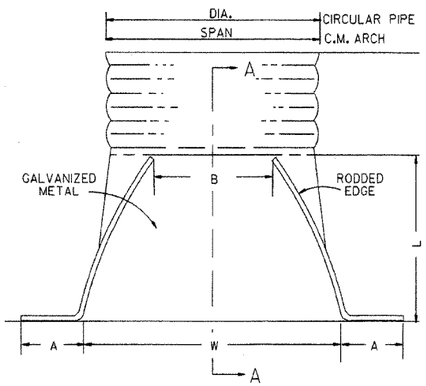

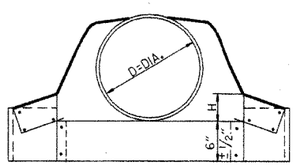

CIRCULAR PIPE

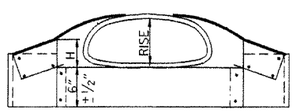

C.M. ARCH PIPE

CIRCULAR PIPE

D. DIA.	GAUGE	A 1" ±	B. MAX.	H 1" ±	L 1½" ±	W 2" ±	S
		INCHES					
12	16	6	6	6	21	24	2½:1
15	16	7	8	6	26	30	2½:1
18	16	8	10	6	31	36	2½:1
21	16	9	12	6	36	42	2½:1
24	16	10	13	6	41	48	2½:1
30	14	12	16	8	51	60	2½:1
36	14	14	19	9	60	72	2½:1
42	12	16	22	11	69	84	2½:1
48	12	18	27	12	78	90	2½:1
54	12	18	30	12	84	102	2:1
60	12	18	33	12	87	114	1¾:1
66	12	18	36	12	87	120	1½:1
72	12	18	39	12	87	126	1 1/3:1

C.M. ARCH PIPE

EQUIV. DIA.	SPAN	RISE	A 1" ±	B MAX.	H 1" ±	L 1½" ±	W 2" ±	S	GAUGE
	INCHES								
15"	17	13	7	9	6	19	30	2½:1	16
18"	21	15	7	10	6	23	36	2½:1	16
21"	24	18	8	12	6	28	42	2½:1	16
24"	28	20	9	14	6	32	48	2½:1	16
30"	35	24	10	16	6	39	60	2½:1	14
36"	42	29	12	18	8	46	75	2½:1	14
42"	49	33	13	21	9	53	85	2½:1	12
48"	57	38	18	26	12	63	90	2½:1	12
54"	64	43	18	30	12	70	102	2¼:1	12
60"	71	47	18	33	12	77	114	2¼:1	12

NOTE: ALTERNATE CONNECTIONS TO THE PIPE CULVERTS, IN ACCORDANCE WITH MANUFACTURER'S STANDARD PRACTICES, MAY BE MADE SUBJECT TO THE APPROVAL OF THE ENGINEER.

END SECTIONS FOR CORRUGATED METAL PIPE CULVERTS

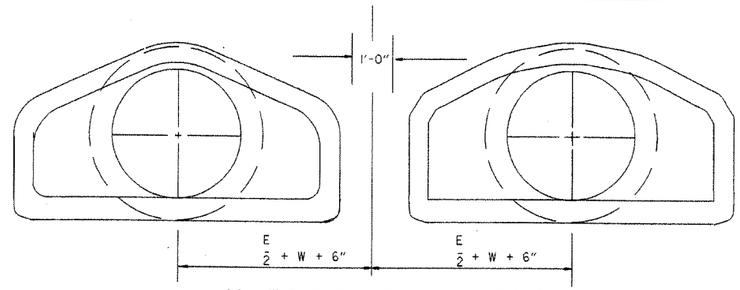

MULTIPLE R.C. PIPE CULVERTS

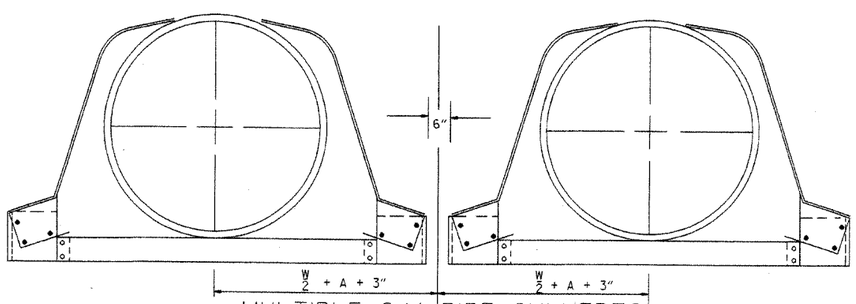

MULTIPLE C.M. PIPE CULVERTS

DATE	REVISION
10-18-96	REVISED ASTM REF. TO AASHTO
5-15-80	REVISED DISTANCE BETWEEN MULTIPLE R.C.P. F.E.S.
7-14-78	C.M. ARCH SIZES TO CONFORM WITH AASHTO SIZES
8-22-75	ADDED MULTIPLE PIPE CULVERTS
12-5-74	REMOVED NOTE RE REINF. FOR R.C. F.E.S.
5-24-73	CMP END SECTION, SHOW PIPE PAY LENGTH
10-2-72	REVISED AND REDRAWN

FILMED: 10-18-96 | 664-5-15-80 | 752-7-14-78 | 517-8-22-75 | 500-12-5-74 | 627-5-24-73 | 760-10-2-72

ARKANSAS STATE HIGHWAY COMMISION

FLARED END SECTION

STANDARD DRAWING FES-2

stdfes2.dgn

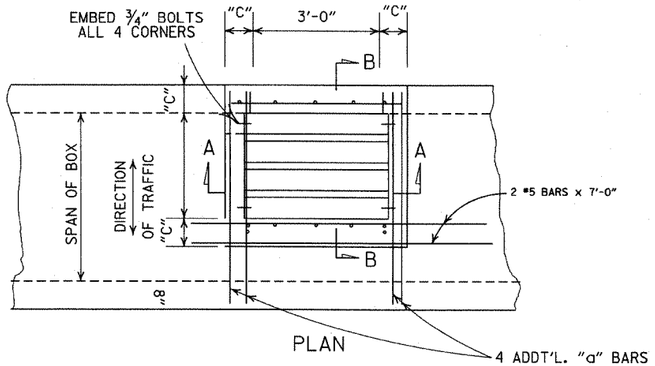

PLAN

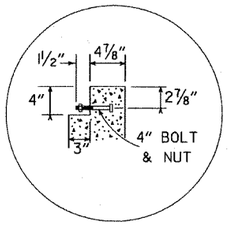

DETAIL A

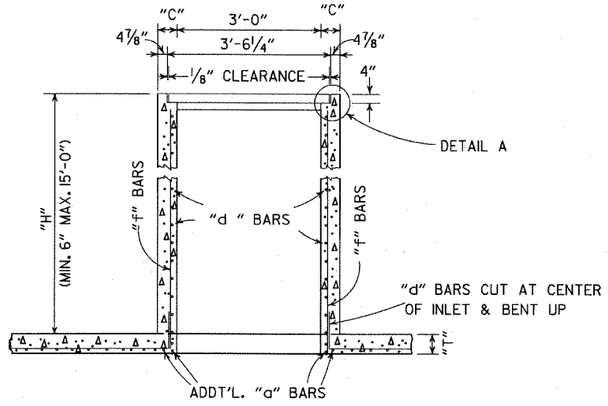

SECTION A-A

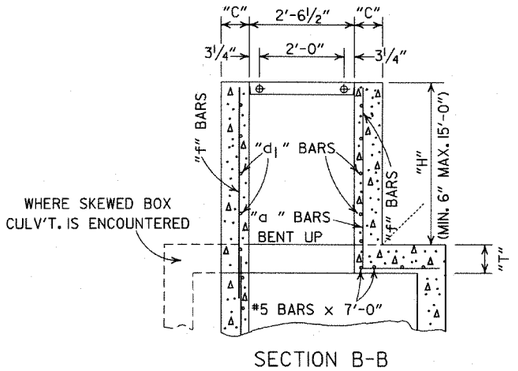

SECTION B-B

NOTE: ADDT'L.REINF. STEEL TO BE INCLUDED IN UNIT PRICE BID PER TYPE "TM" D.I.

DIMENSIONS & REINF. BARS FOR D.I. TO BE THE SAME AS THOSE SHOWN ON APPLICABLE STD. BARREL DRAWING FOR R.C. BOX CULVERTS.

DROP INLET TYPE "TM" FOR REINFORCED CONC. BOX CULVERTS

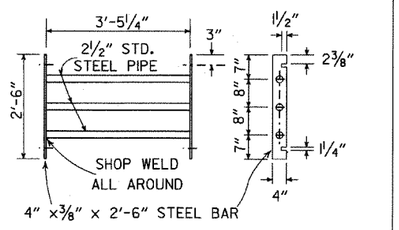

GRATE DETAIL

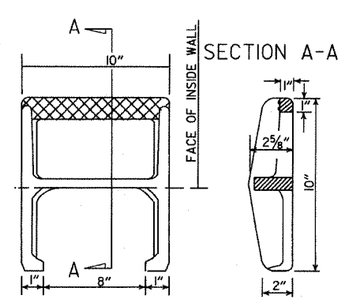

APPROX. WEIGHT = 11 LBS. (CAST IRON)

PLAN

NOTE: THIS DETAIL IS TYPICAL. OTHERS MAY BE USED WITH PRIOR APPROVAL OF THE ENGINEER.

DETAIL OF STEP FOR DROP INLET

GENERAL NOTES:

1. STEEL PIPE FOR GRATES AND BOLTS SHALL CONFORM TO THE REQUIREMENTS OF SECTION 807. BOLTS SHALL CONFORM TO ONE OF THE FOLLOWING: ASTM A193, GRADE B8 CLASS 1 OR 2, ASTM A307 OR AASHTO M 164.
2. STEEL PIPE FOR GRATES SHALL BE "STANDARD WEIGHT" PIPE CONFORMING TO ASTM A53 NATIONAL STANDARD PIPE.
3. BOLTS, NUTS, WASHERS SHALL BE GALVANIZED IN ACCORDANCE WITH AASHTO M 232 OR AASHTO M 298, CLASS 40 OR 50.
4. ALL EXPOSED CORNERS TO HAVE ¾" CHAMFER.
5. ALL #4 AND #5 REINFORCING BARS TO HAVE 1½" COVER. LARGER SIZES TO HAVE 2" COVER.
6. THE COMPLETE PIPE GRATE SHALL BE PAINTED IN ACCORDANCE WITH THE STANDARD SPECIFICATIONS.

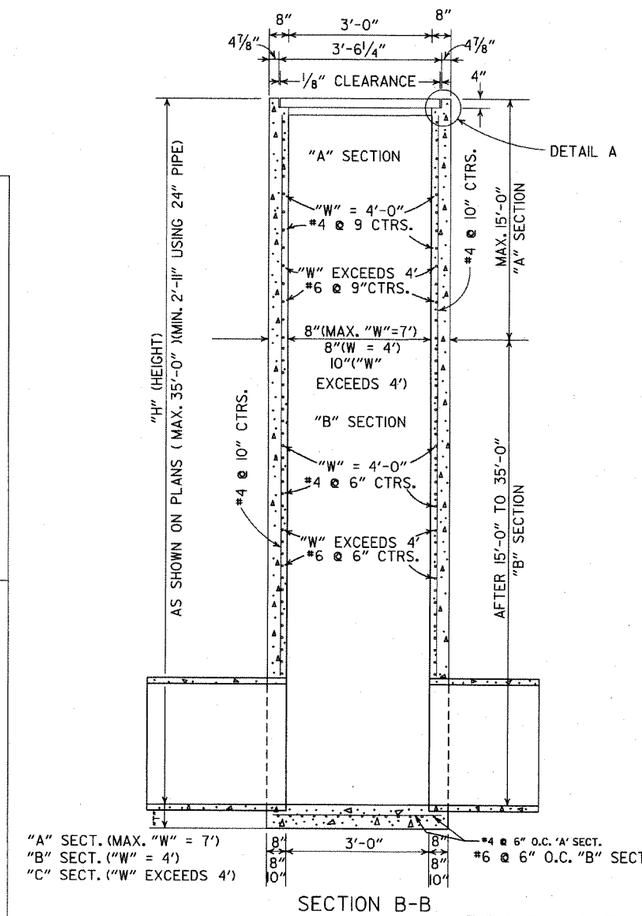

SECTION B-B

TABLE OF "W" DIMENSIONS

95

I.D. PIPE	SKEW OF CROSS DRAIN		
	STRAIGHT	30°	45°
	"W"	"W"	"W"
24"	4'-0"	4'-0"	4'-0"
30"	4'-0"	4'-0"	4'-5"
36"	4'-0"	4'-3"	5'-3"
42"	4'-3"	4'-11"	6'-1"
48"	4'-10"	5'-7"	6'-11"

NOTE: DIMENSIONS SHOWN ABOVE ARE FOR PIPES INTERSECTING DROP INLET ON ONE SIDE ONLY. FOR SKEWED PIPES INTERSECTING BOTH SIDES OF DROP INLET, "W" WILL NEED TO BE INCREASED OR AXIS OF INTERSECTING PIPES WILL NEED TO BE SHIFTED.

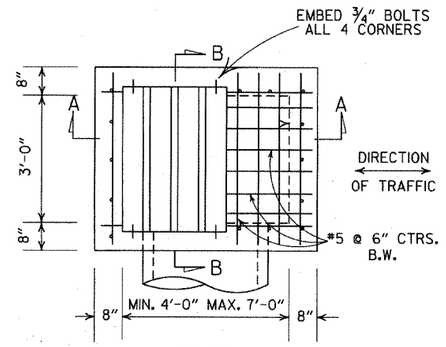

PLAN

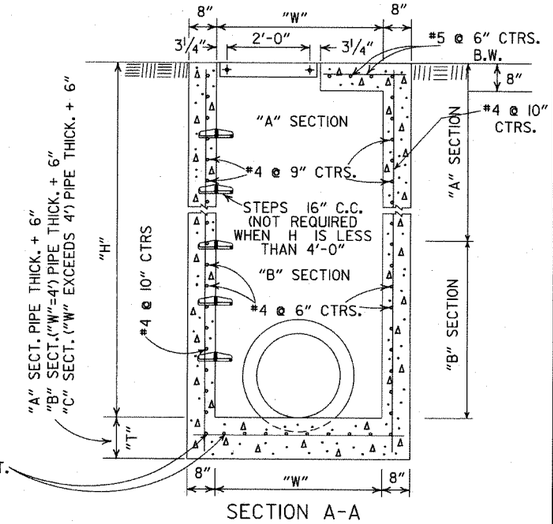

SECTION A-A

DROP INLET(TYPE RM)

8-22-02	ADDED & REVISED DIMENSION TO SECTION A-A	
1-12-00	CORRECTED DIMENSION ON SECTION B-B	
11-06-97	ADDED DIMENSION TO SECTION A-A	
10-18-96	REVISED ASTM REF. TO AASHTO AND ADDED NOTE TO TABLE OF "W" DIMENSIONS	
10-1-92	ADDED DIRECTION OF TRAFFIC	10-1-92
8-15-91	ADDED NOTE ABOUT PAINTING OF GRATE	8-15-91
11-30-89	ALTERED DETAIL A	11-30-89
7-15-88	REVISED STEP DETAIL,TM & RM D.I. & GRATE DETAIL	719-7-15-88
10-2-72	REVISED AND REDRAWN	542-10-2-72
REVISED		DATE FILMED

ARKANSAS STATE HIGHWAY COMMISSION

DETAILS OF DROP INLETS

STANDARD DRAWING FPC-9D

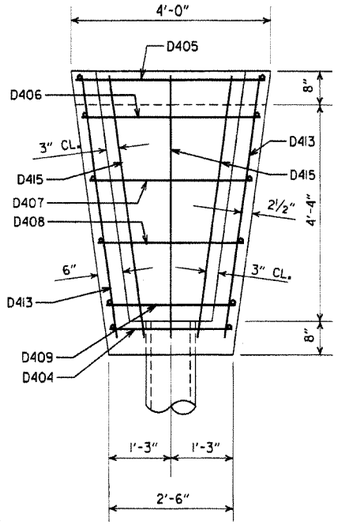

PLAN

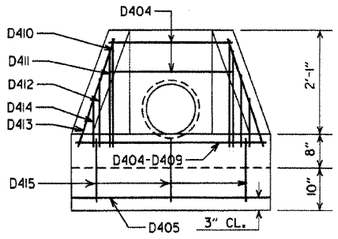

FRONT ELEVATION

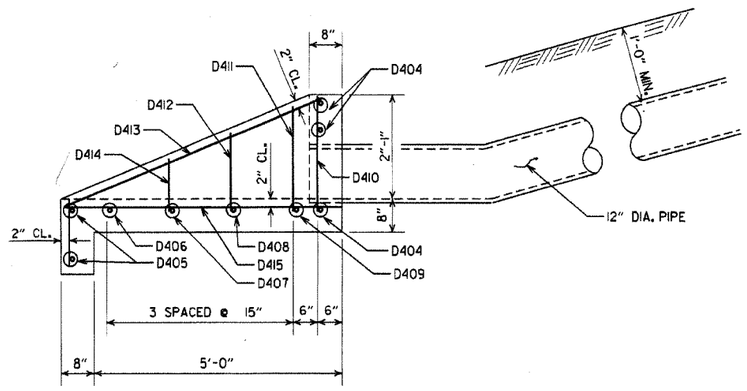

SIDE ELEVATION
CONCRETE SPILLWAY

DETAILS OF CONCRETE SPILLWAY (TYPE A)

BAR LIST (CONCRETE SPILLWAY)

MARK	NO. REQ'D.	LENGTH	BENDING DIAGRAM
D404	3	2'-2"	5'-4", 1'-2", 2" P.D., D415
D405	2	3'-8"	
D406	1	3'-5"	
D407	1	3'-1"	
D408	1	2'-9"	
D409	1	2'-5"	
D410	2	2'-5"	
D411	2	2'-2"	
D412	2	1'-9"	
D413	2	5'-6"	
D414	2	1'-2"	
D415	3	6'-5"	

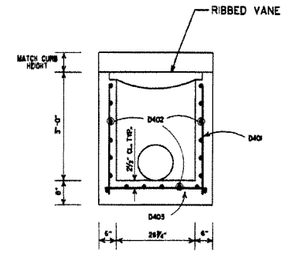

SECTION A-A

BAR LIST (DROP INLET)

MARK	TYPE N-1		TYPE N-2		TYPE N-3	
	NO. REQ'D.	LENGTH	NO. REQ'D.	LENGTH	NO. REQ'D.	LENGTH
D401	20	3'-0"	26	3'-0"	32	3'-0"
D402	19	2'-2"	19	3'-8"	19	5'-2"
D403	17	2'-11"	20	2'-11"	23	2'-11"

ALL BARS #4 @ 6" SPACING

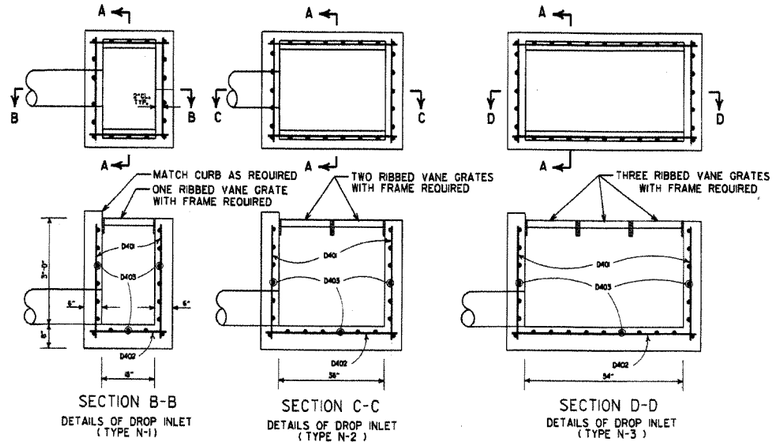

SECTION B-B
DETAILS OF DROP INLET
(TYPE N-1)

SECTION C-C
DETAILS OF DROP INLET
(TYPE N-2)

SECTION D-D
DETAILS OF DROP INLET
(TYPE N-3)

DETAILS OF DROP INLET

GENERAL NOTES (GRATE & FRAME)

1. RIBBED VANE GRATE AND FRAME SHALL BE CONSTRUCTED OF CAST IRON AND SHALL CONFORM TO THE REQUIREMENTS OF THE STANDARD SPECIFICATIONS FOR GRAY IRON CASTINGS AASHTO M 105 CLASS 35B & AASHTO M 306.
2. GRATE AND FRAME SHALL NOT BE PAINTED.
3. GRATE AND FRAME SHALL BE INSTALLED IN DROP INLET IN ASSEMBLED POSITION.
4. APPROXIMATE WEIGHT OF GRATE SHALL BE 170 LBS.

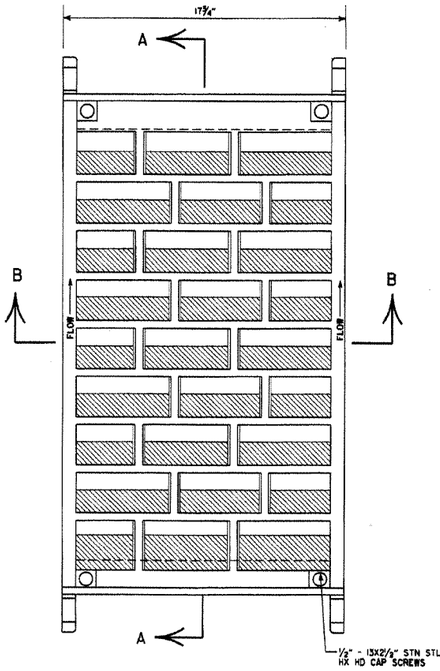

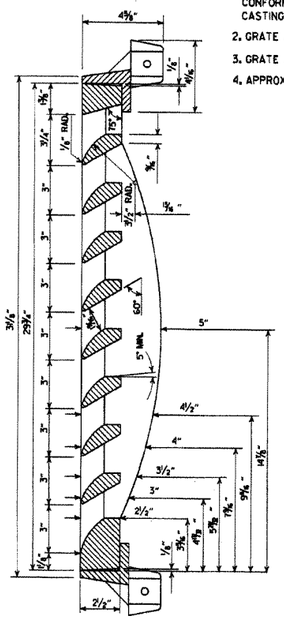

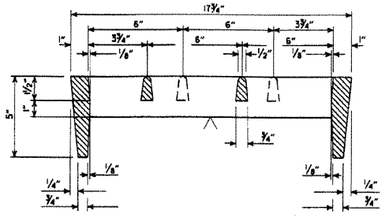

SECTION B-B

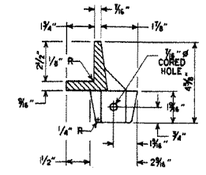

SECTION THRU FRAME

SECTION A-A

DETAILS OF RIBBED VANE GRATE AND FRAME

DATE REVISED	DATE FILMED	DESCRIPTION
7-02-98	7-2-98	REVISED SECT. A-A DETAIL OF DROP INLET & ADDED AASHTO REF. TO NOTE 1, REVISED GRATE
10-18-96		REVISED ASTM REF. TO AASHTO
8-15-91		ISSUED

ARKANSAS STATE HIGHWAY COMMISSION

DETAILS OF DROP INLETS AND SPILLWAY OUTLET

STANDARD DRAWING FPC-9N

STDfpc9N.DGN

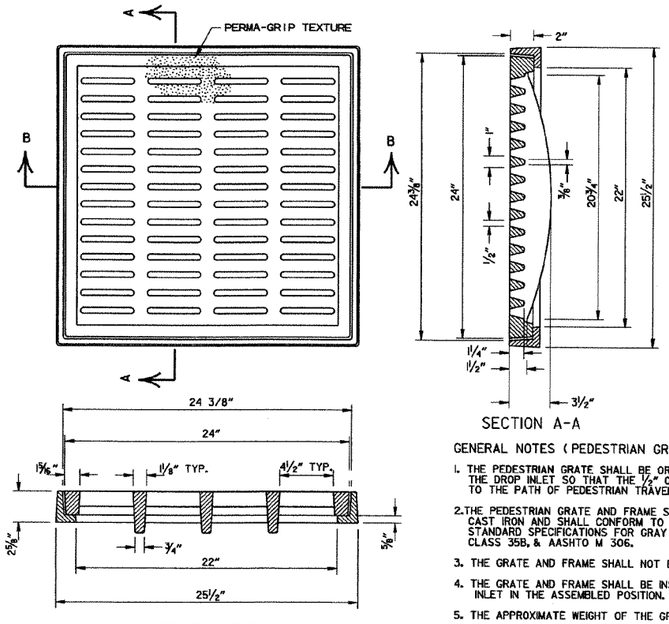

SECTION B-B

SECTION A-A

DETAILS OF PEDESTRIAN GRATE AND FRAME

GENERAL NOTES (PEDESTRIAN GRATE & FRAME)

1. THE PEDESTRIAN GRATE SHALL BE ORIENTED IN THE TOP OF THE DROP INLET SO THAT THE ½" OPENINGS ARE PERPENDICULAR TO THE PATH OF PEDESTRIAN TRAVEL.
2. THE PEDESTRIAN GRATE AND FRAME SHALL BE CONSTRUCTED OF CAST IRON AND SHALL CONFORM TO THE REQUIREMENTS OF THE STANDARD SPECIFICATIONS FOR GRAY IRON CASTINGS AASHTO M 105, CLASS 35B, & AASHTO M 306.
3. THE GRATE AND FRAME SHALL NOT BE PAINTED.
4. THE GRATE AND FRAME SHALL BE INSTALLED IN THE DROP INLET IN THE ASSEMBLED POSITION.
5. THE APPROXIMATE WEIGHT OF THE GRATE AND FRAME SHALL BE 211LBS.
6. THE MINIMUM WATERWAY OPENING SHALL BE 122 SQ. IN.

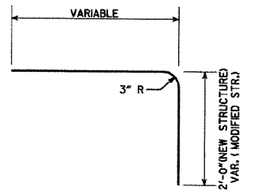

DETAIL OF BENT "b" BAR

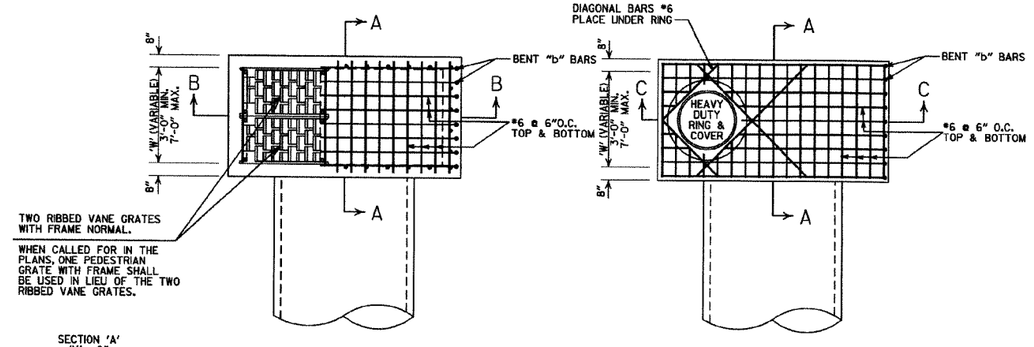

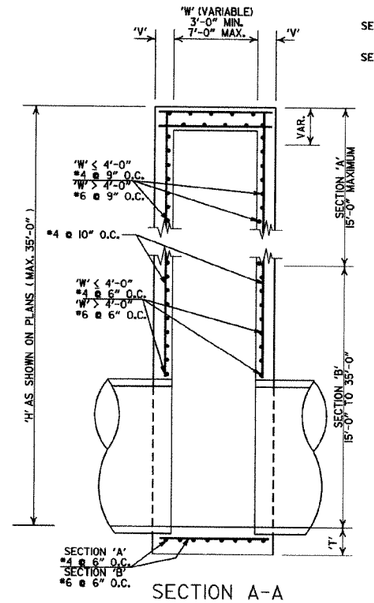

SECTION A-A

DETAILS OF DROP INLET (TYPE ST)

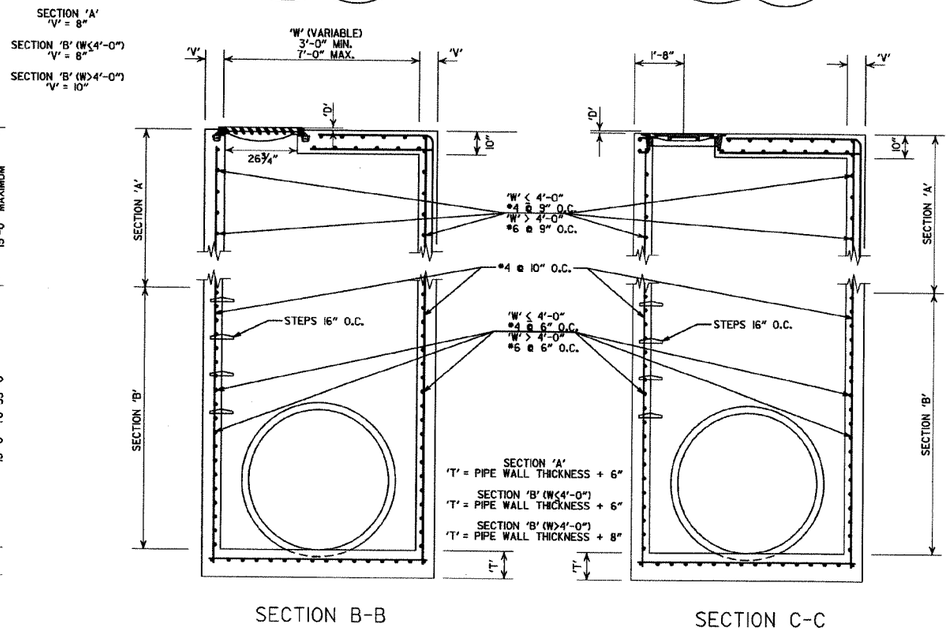

SECTION B-B

SECTION C-C

DETAILS OF JUNCTION BOX (TYPE ST)

GENERAL NOTES (TYPE ST DROP INLET & JUNCTION BOX)

1. THE 'D' DIMENSION SHALL MATCH THE FINAL LIFT OF ACHM SURFACE COURSE SHOWN IN THE PLANS WHEN ASPHALT PAVING SURROUNDS THE GRATE OR RING COVER, AND SHALL BE 0" AT OTHER INSTALLATIONS.
2. THE STEPS SHALL BE OMITTED WHERE 'H' IS LESS THAN 4'-0".
3. ALL EXPOSED CORNERS ARE TO HAVE A ¾" CHAMFER.
4. ALL #4 & #5 REINFORCING BARS ARE TO HAVE A MIN. 1½" COVER. ALL LARGER SIZE BARS ARE TO HAVE A 2" MIN. COVER.

GENERAL NOTES (HEAVY DUTY RING & COVER):

1. HEAVY DUTY RING AND COVER SHALL BE CONSTRUCTED OF CAST IRON AND SHALL CONFORM TO THE REQUIREMENTS OF THE STANDARD SPECIFICATIONS FOR GRAY IRON CASTINGS AASHTO M 105, CLASS 35B, & AASHTO M 306.
2. HEAVY DUTY RING AND COVER SHALL NOT BE PAINTED.
3. HEAVY DUTY RING SHALL ALWAYS BE INSTALLED WITH FLANGE ON TOP.
4. DIMENSIONS SHOWN FOR RING AND COVER ARE TYPICAL. THE CONTRACTOR MAY SUBSTITUTE SIMILAR CASTINGS WITH THE APPROVAL OF THE ENGINEER. REQUESTING APPROVAL FOR CASTING DESIGNS MAY BE MADE BY REFERRING TO PREVIOUSLY APPROVED DRAWINGS.

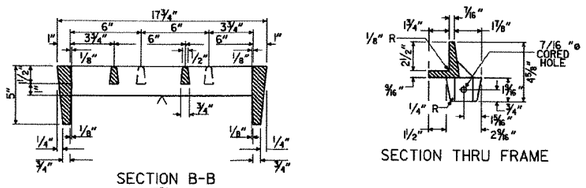

SECTION B-B

SECTION THRU FRAME

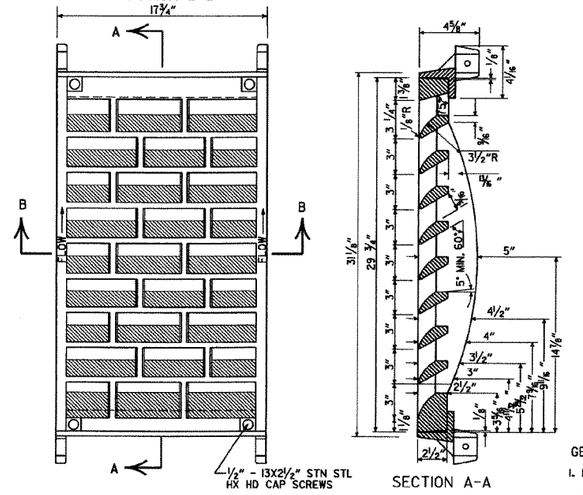

SECTION A-A

DETAILS OF RIBBED VANE GRATE AND FRAME

GENERAL NOTES (RIBBED VANE GRATE & FRAME)

1. RIBBED VANE GRATE AND FRAME SHALL BE CONSTRUCTED OF CAST IRON AND SHALL CONFORM TO THE REQUIREMENTS OF THE STANDARD SPECIFICATIONS FOR GRAY IRON CASTINGS AASHTO M 105, CLASS 35B, & AASHTO M 306.
2. GRATE AND FRAME SHALL NOT BE PAINTED.
3. GRATE AND FRAME SHALL BE INSTALLED IN DROP INLET IN ASSEMBLED POSITION.
4. APPROXIMATE WEIGHT OF GRATE SHALL BE 170 LBS.

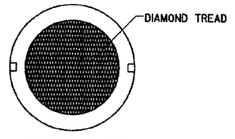

COVER FACE

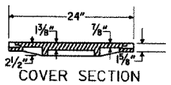

COVER SECTION

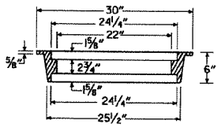

RING SECTION

HEAVY DUTY RING & COVER

APPROXIMATE TOTAL WEIGHT = 333 LBS.

DATE REVISED	DATE FILMED	DESCRIPTION
11-16-01		ADDED NOTE 4
1-12-00		REVISED HEAVY DUTY RING & COVER
5-13-99		ADDED PEDESTRIAN FRAME & GRATE
7-02-98		REMOVED NOTE 5, REV. DIMENSIONS, ADDED HEAVY DUTY RING & COVER ADDED AASHTO REF. REVISED GRATE
10-18-96		REVISED ASTM REF. TO AASHTO
10-1-92		REVISED & REISSUED
8-15-91	8-15-91	REVISED & REISSUED

ARKANSAS STATE HIGHWAY COMMISSION

DETAILS OF DROP INLET & JUNCTION BOX (TYPE ST)

STANDARD DRAWING FPC-9S

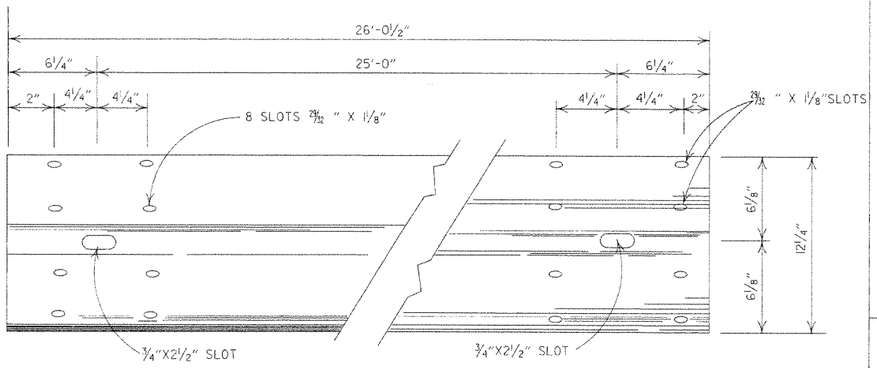

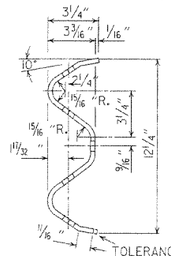

DETAILS OF W-BEAM GUARD RAIL

RAIL SECTION OF CLOSELY SIMILAR DIMENSIONS AND COMPARABLE STRENGTH MAY BE SUBSTITUTED IF APPROVED BY THE ENGINEER.

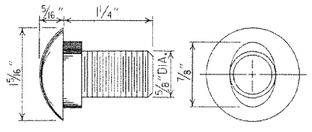

SPLICE BOLT
POST BOLT - SAME EXCEPT LENGTH

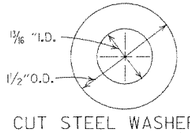

CUT STEEL WASHER

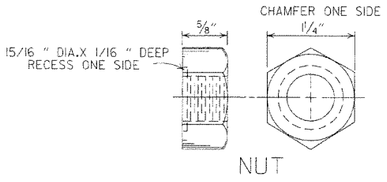

NUT

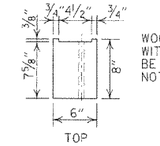

TOP

WOOD BLOCKOUT USED WITH WOOD POSTS SHALL BE 6"x8"x1'-2" WITH NO NOTCH REQUIRED.

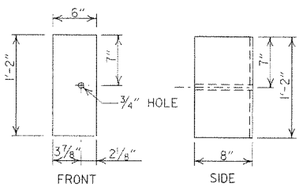

WOOD BLOCKOUT (W-BEAM)

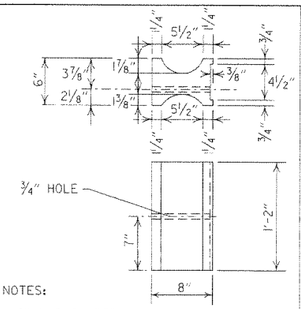

NOTES:
1. SIMILAR SHAPED PLASTIC BLOCKOUTS MAY BE USED AS LONG AS THEY MEET NCHRP-350 TEST LEVEL 3 SPECIFICATIONS OR REQUIREMENTS FOR MANUAL FOR ASSESSING SAFETY HARDWARE (MASH).
2. DIMENSIONS ARE SUBJECT TO MANUFACTURERS TOLERANCES.

PLASTIC BLOCKOUT (W-BEAM)

HOLES IN POSTS AND BLOCKS TO BE ¾" DIA.

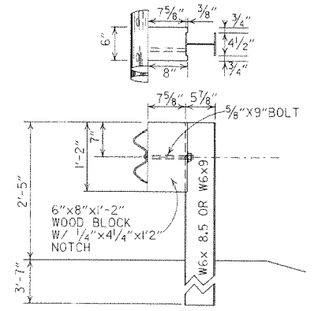

WOOD BLOCKOUT CONNECTIONS

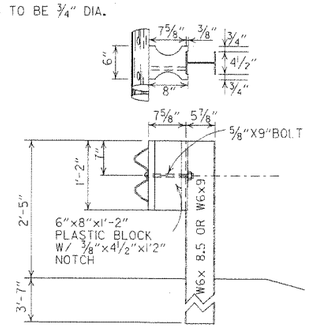

PLASTIC BLOCKOUT CONNECTIONS

DETAILS OF STEEL LINE POST CONNECTIONS (W-BEAM)

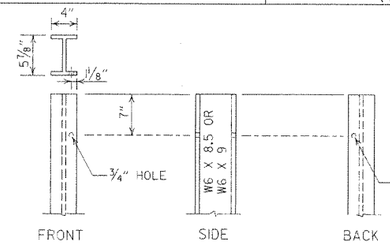

STEEL POST

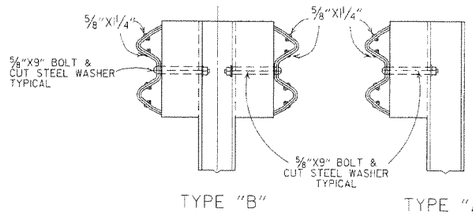

TYPE "B" TYPE "A"

DETAILS OF STEEL LINE POST CONNECTIONS (W-BEAM)

-GENERAL NOTES-

ALL BOLTS SHALL BE SUFFICIENT LENGTH TO EXTEND THROUGH THE FULL THICKNESS OF THE NUT AND NO MORE THAN ¾" BEYOND IT.

WHERE W-BEAM GUARD RAIL CONTINUES, THE INTERMEDIATE SECTIONS SHALL HAVE A POST SPACING OF 6'-3" UNLESS OTHERWISE NOTED.

W-BEAM GUARD RAIL REPRESENTING INTERMEDIATE SECTIONS WILL BE MEASURED ALONG THE ROADWAY FACE FROM CENTERLINE OF POST TO CENTERLINE OF POST.

USE W-BEAM GUARD RAIL COMPONENTS OF SAME MATERIAL FOR ENTIRE JOB. FOR EXTENSIONS OR MODIFICATION OF EXISTING GUARD RAIL, W-BEAM GUARD RAIL COMPONENTS OF THE SAME TYPE AS THOSE EXISTING SHALL BE USED.

ANY BACKFILLING UNDER OR AROUND POST SHALL BE DAMP SAND THOROUGHLY TAMPED IN PLACE.

WOOD POSTS & WOOD BLOCKS SHALL BE EITHER DENSE NO.1 STRUCTURAL OR BETTER 9.7# (1400 f) OR NO.1 1350 f SOUTHERN PINE.

CONTRACTOR SHALL HAVE THE OPTION OF USING WOOD BLOCKOUTS FOR W-BEAM GUARD RAIL OR PLASTIC BLOCKOUTS, AS LONG AS BLOCKOUT USED MEETS NCHRP-350 TEST LEVEL 3 SPECIFICATIONS OR REQUIREMENTS FOR MANUAL FOR ASSESSING SAFETY HARDWARE (MASH) FOR W-BEAM GUARD RAIL.

HOLES IN POSTS AND BLOCKS TO BE ¾" DIA.

POSTS AND BLOCKS TO BE ROUGH SAWN 6"X8" WITH A TOLERANCE OF + OR - ¼".

WOOD BLOCKOUT CONNECTIONS

PLASTIC BLOCKOUT CONNECTIONS

DETAILS OF WOOD LINE POST CONNECTIONS (W-BEAM)

DATE	REVISION	DATE FILM
7-14-10	RAISED HEIGHT OF GUARD RAIL 1"	
10-15-09	ADDED REFERENCE TO MASH	
4-10-03	REVISED GENERAL NOTES	
8-22-02	REVISED DIMENSION ON WOOD & PLASTIC BLOCKOUT CONNECTIONS & ON STEEL POST	
11-16-01	REVISED WOOD BLOCKOUT & DETAILS OF WOOD LINE POST CONNECTIONS	
3-30-00	REMOVED GUARD RAIL AT BRIDGE ENDS	
1-12-00	ADDED PLASTIC BLOCKOUT	
8-12-98	REV. BLOCKOUTS TO WOOD, DELETED CONC. POST & REV. GENERAL NOTE, DELETED DET. OF GUARD RAIL REPLACE. BEHIND CURB & DET. OF POST PLACE. IN SOLID ROCK, & ADDED DETAILS OF STEEL LINE POST CONN. REMOVED BACK-UP PLATE, REVISED HOLES IN STEEL POLES	
4-3-97	REMOVED "LAP IN DIRECTION OF TRAFFIC" NOTE & PLACED ARROWS ON WASHERS	
10-18-96	REVISED WOOD POST NOTE	
6-2-94	ADDED A.I.T. STEEL POST SIZE	
8-5-93	REVISED STEEL POST SIZE	8-5-93
10-1-92	REDRAWN & REVISED	10-1-92
8-15-91	REVISED WASHER NOTE	8-15-91
8-2-90	REV. GEN. NOTE & DEPHT OF ANC. POST IN ROCK	8-2-90
7-15-88	REVISED SECTION 3 & GENERAL NOTES	
3-4-88	REV. ANCHOR POST, ELEV. NOTES & POST IN ROCK	780-3-4-88
10-30-87	REVISED WOOD LINE POST DETAIL	546-10-30-87
10-9-87	REDRAWN & REVISED	802-10-9-87

ARKANSAS STATE HIGHWAY COMMISSION

GUARD RAIL DETAILS

STANDARD DRAWING GR-8

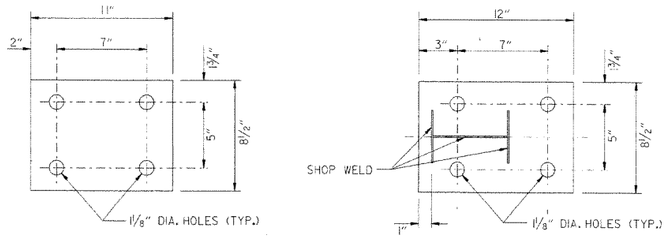

WASHER PLATE

BASE PLATE

Note: Bolts, nuts, washers and plates shall be galvanized in accordance with Section 807 of the Standard Specifications.

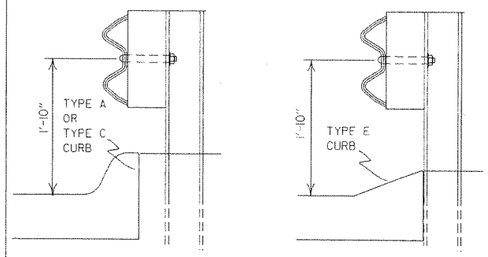

DETAIL OF GUARD RAIL PLACEMENT BEHIND CURB (W-BEAM)

FOR DESIGN SPEEDS OF 50 MPH OR LESS ALL CURB FACES, AS SHOWN ON STD. DRWG. CG-1, MAY BE USED. FOR DESIGN SPEEDS OF 55 MPH OR MORE TYPE "E" CURB FACE SHALL BE USED.

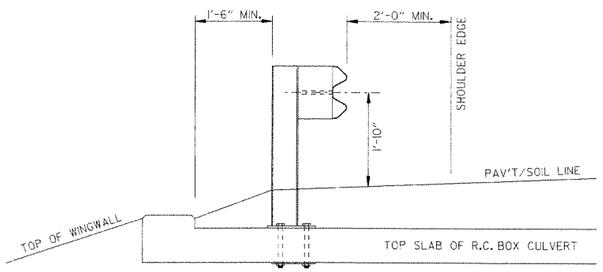

SECTION A-A

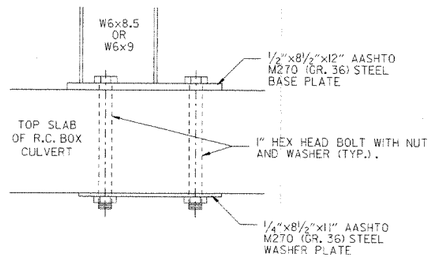

DETAIL OF CONNECTION

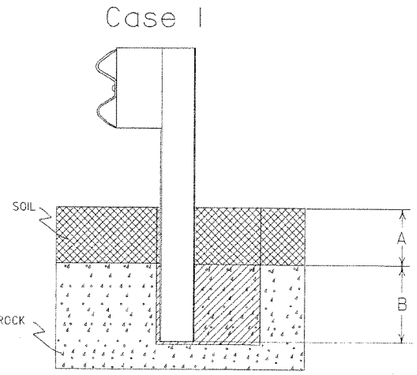

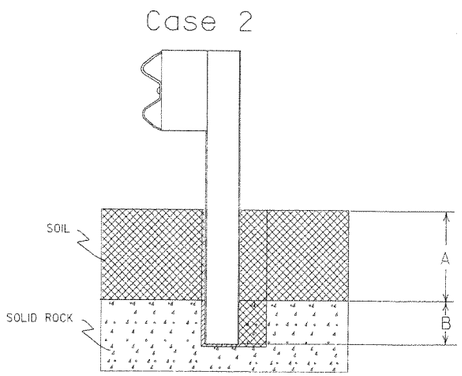

Plan View Steel Posts

Either hole configuration acceptable

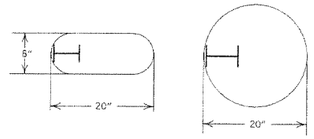

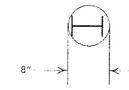

Plan View Wood Posts

Either hole configuration acceptable

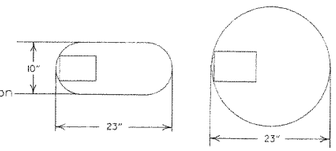

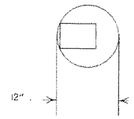

Notes: For overlying soil depths (A) ranging from 0 to 18", the depth of required drilling (B) is equal to 24".

Zone A:
Backfill according to Section 617.03(a).

Zone B:
Backfill hole in 6" lifts with material meeting the requirements of Section 802.02(c) - Alternate gradation. Compact to 95% maximum dry density per ASTM D-698.

Notes: For overlying soil depths (A) ranging from 18" to 44", the depth of required drilling (B) is equal to either 12" or 44" minus the depth of soil whichever is less.

Zone A & B:
Backfill according to Section 617.03(a).

DETAIL OF POST PLACEMENT IN SOLID ROCK (W-BEAM)

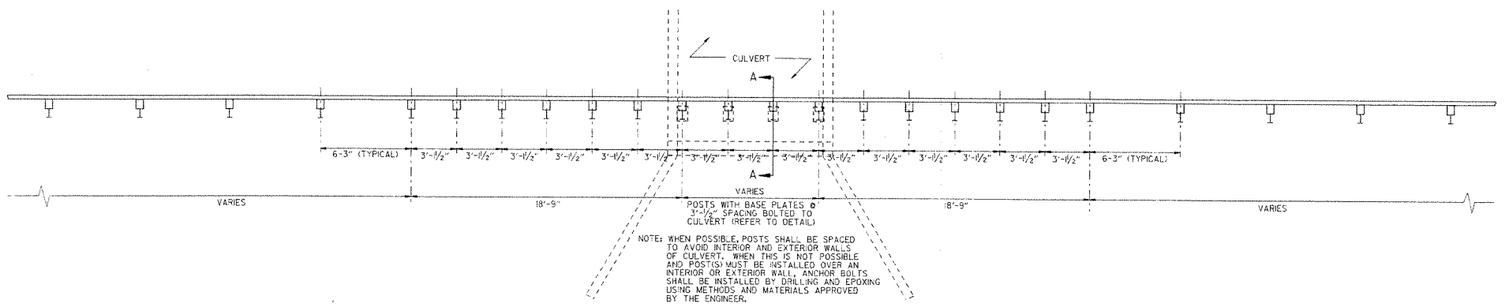

NOTE: WHEN POSSIBLE, POSTS SHALL BE SPACED TO AVOID INTERIOR AND EXTERIOR WALLS OF CULVERT. WHEN THIS IS NOT POSSIBLE AND POST(S) MUST BE INSTALLED OVER AN INTERIOR OR EXTERIOR WALL, ANCHOR BOLTS SHALL BE INSTALLED BY DRILLING AND EPOXING USING METHODS AND MATERIALS APPROVED BY THE ENGINEER.

PLAN LAYOUT OF TYPE A GUARD RAIL AT LOW-FILL CULVERTS

NOTE: THIS DETAIL IS TO BE USED ONLY WHEN THE COVER OVER THE CULVERT DOES NOT PERMIT FULL EMBEDMENT OF GUARD RAIL POSTS AS SHOWN ON STD. DWG. GR-8.

DATE	REVISION	DATE FILM
7-14-10	RAISED HEIGHT OF GUARD RAIL 1"	
4-12-07	REVISED DETAIL OF GUARD RAIL PLACEMENT BEHIND CURB	
11-10-05	ADDED GUARD RAIL PLACEMENT BEHIND CURB; REVISED DETAIL OF CONNECTION	
11-18-04	REVISED POST PLACEMENT IN ROCK & CULVERT CONNECTION DETAILS, ADDED DETAIL FOR GUARD RAIL PLACEMENT AT LOW-FILL CULVERTS	
3-30-00	REMOVED CONCRETE INSERT ANCHOR	
8-12-98	CHANGED STEEL SPACER BLOCK TO WOOD BLOCKOUT, ADD. DET. OF GUARD RAIL CONNECTION TO R.C. BOX CULV'T. DELETED DET. OF STEEL LINE POST CONN.& ADDED DET. OF GUARD RAIL PLACE. BEHIND CURB & DET. OF POST PLACE. IN SOLID ROCK	
4-3-96	PLACED ARROWS AT CUT STEEL WASHERS	4-3-96
10-18-96	REV. ASTM REF. TO AASHTO	
11-22-95	ADDED OPTIONAL HOLES	
6-2-94	REVISED ALTERNATE POST SIZE	
8-5-93	REVISED STEEL POST SIZE	
10-1-92	REDRAWN & REVISED	10-1-92
8-2-90	DEL. WASHER ON ANCHOR ASSEMBLY	8-2-90
7-15-88	CONFORMED TO 1988 SPECS	
3-4-88	REVISED ANCHOR NOTE	
10-30-87	REVISED ANCHOR ASSEMBLY	712-10-30-87
10-30-87	REVISED PLACEMENT BEHIND CURB	547-10-30-87
10-9-87	REDRAWN & REVISED	803-10-9-87

ARKANSAS STATE HIGHWAY COMMISSION

GUARD RAIL DETAILS

STANDARD DRAWING GR-8A

NOTE: GUARD RAIL WITH GUARD RAIL TERMINAL (TYPE I) TO BE INSTALLED ONLY AT LOCATIONS SHOWN ON PLANS.

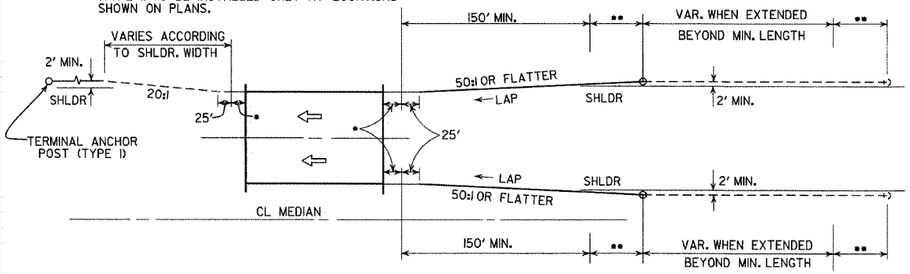

ONE-WAY TRAFFIC

••• LAP OF GUARD RAIL SHALL BE AS SHOWN FOR A DISTANCE OF UP TO 200', CHANGE TO LAP IN DIRECTION OF TRAVEL.

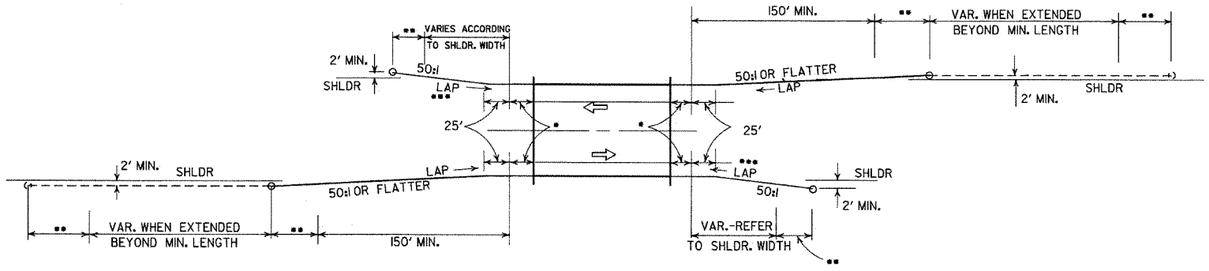

TWO-WAY TRAFFIC

METHODS OF INSTALLATION OF GUARD RAIL AT LESS THAN FULL SHOULDER WIDTH BRIDGES USING GUARD RAIL TERMINAL (TYPE 2)

••• LAP OF GUARD RAIL SHALL BE AS SHOWN FOR A DISTANCE OF UP TO 200', CHANGE TO LAP IN DIRECTION OF TRAVEL.

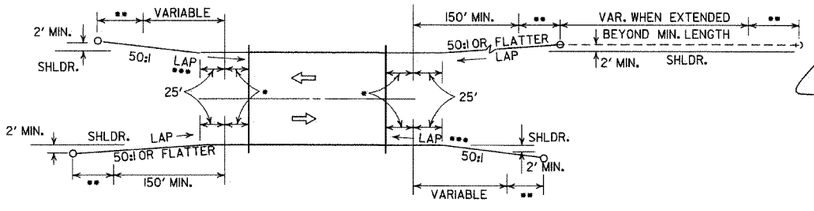

TWO-WAY TRAFFIC

NOTE: GUARD RAIL WITH GUARD RAIL TERMINAL (TYPE I) TO BE INSTALLED ONLY AT LOCATIONS SHOWN ON PLANS.

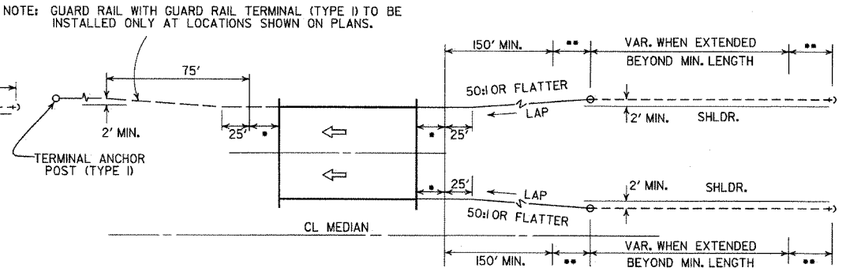

ONE-WAY TRAFFIC

METHOD OF INSTALLATION OF GUARD RAIL AT FULL SHOULDER WIDTH BRIDGES USING GUARD RAIL TERMINAL (TYPE 2)

••• LAP OF GUARD RAIL SHALL BE AS SHOWN FOR A DISTANCE OF UP TO 200', CHANGE TO LAP IN DIRECTION OF TRAVEL.

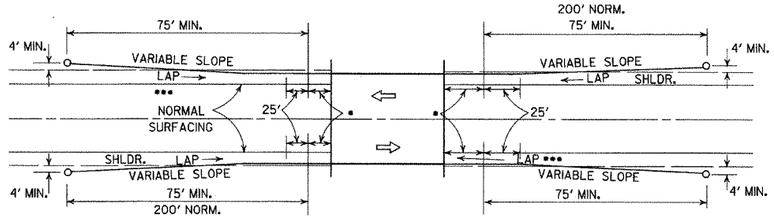

LEGEND

- ▪ THRIE BEAM GUARD RAIL TERMINAL
- ▪▪ GUARD RAIL TERMINAL (TYPE 2)

METHOD OF INSTALLATION OF GUARD RAIL USING GUARD RAIL TERMINAL (TYPE I) (FULL SHOULDER WIDTH OR LESS BRIDGES)

DATE	REVISION	DATE FILM
4-17-08	REVISED LAYOUTS	
11-10-05	REMOVED GUARD RAIL NOTES AND DETAILS	
11-16-01	DELETED NOTE-METHOD OF INSTALLATION OF GUARD RAIL USING GUARD RAIL TERM. (TY. I)	
1-12-00	ADDED CONSTRUCTION NOTE	1-12-00
6-26-97	REVISED LAYOUT	
10-1-92	REDRAWN & REVISED	10-1-92
	ADDED NOTE	
10-9-87	REDRAWN & REVISED	

ARKANSAS STATE HIGHWAY COMMISSION

GUARD RAIL DETAILS

STANDARD DRAWING GR-9

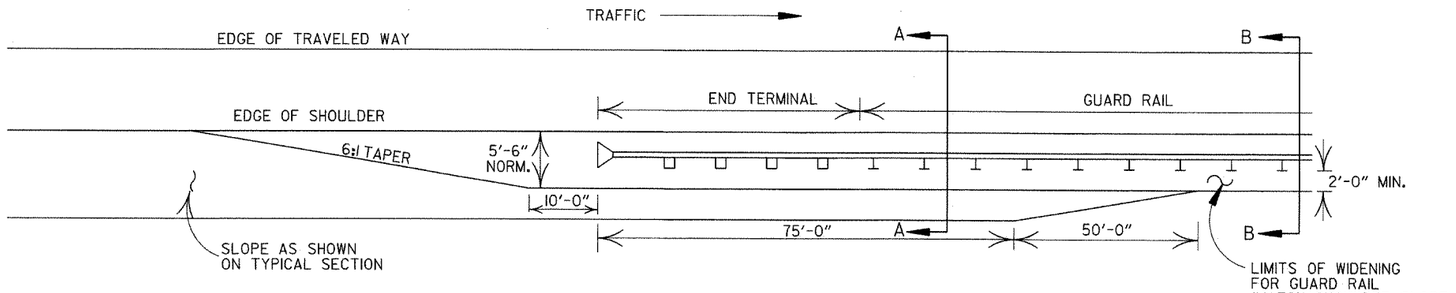

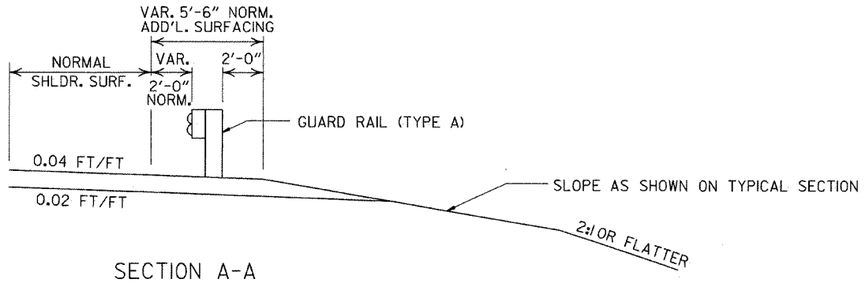

SECTION A-A

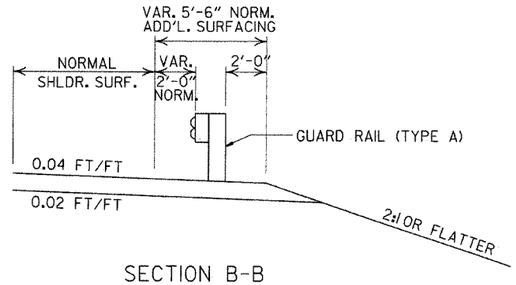

SECTION B-B

DETAILS OF WIDENING FOR GUARD RAIL

NOTE: NORMAL SECTION TO BE WIDENED APPROX. 5'-6" EACH SIDE TO SUPPORT GUARD RAIL.

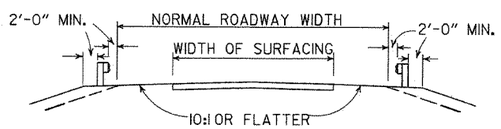

SECTION ON TANGENT

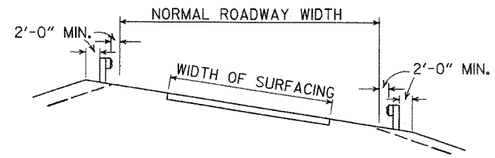

SECTION ON CURVE

DETAILS SHOWING POSITION OF GUARD RAIL ON HIGHWAY

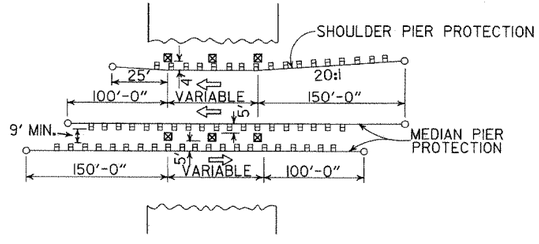

METHOD OF INSTALLATION OF GUARD RAIL AT FIXED OBSTACLE

DATE	REVISION	DATE FILM
4-17-08	MINOR REVISION	
11-10-05	DRAWN	

ARKANSAS STATE HIGHWAY COMMISSION

GUARD RAIL DETAILS

STANDARD DRAWING GR-9A

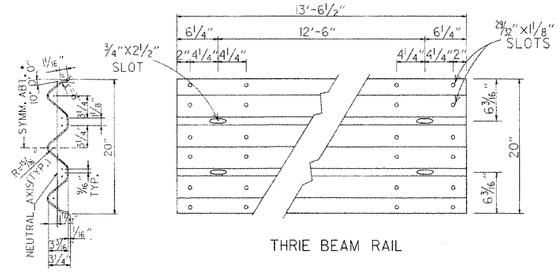

THRIE BEAM RAIL

SECTION THRU THRIE BEAM RAIL

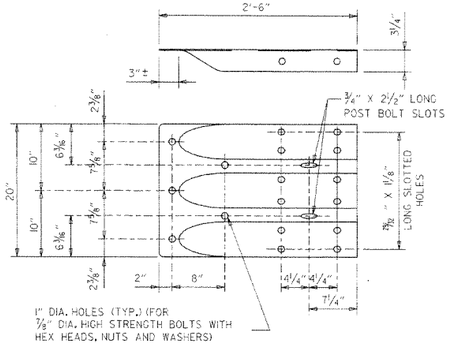

1" DIA. HOLES (TYP.) (FOR ⅞" DIA. HIGH STRENGTH BOLTS WITH HEX HEADS, NUTS AND WASHERS)

SPECIAL END SHOE

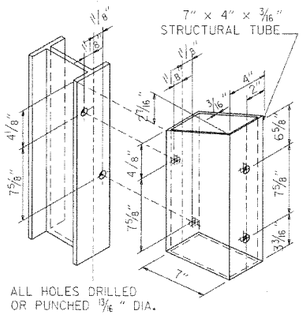

ATTACH BLOCKOUT TO POST USING ⅝" DIA. HEX HEAD BOLTS WITH 1½" O.D. CUT STEEL WASHERS AND NUT.

ALL HOLES DRILLED OR PUNCHED ⅜" DIA.

STRUCTURAL STEEL TUBING BLOCKOUT DETAIL

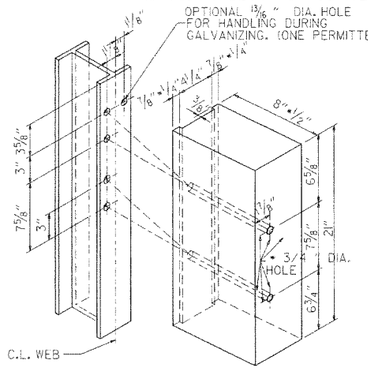

ALL HOLES 13/16" DIAMETER EXCEPT AS NOTED

HOLE PUNCHING DETAIL FOR STEEL POST & WOOD OR PLASTIC BLOCKOUTS

NOTE: BLOCKS SHALL BE THE SAME TYPE THROUGHOUT THE PROJECT LIMITS.

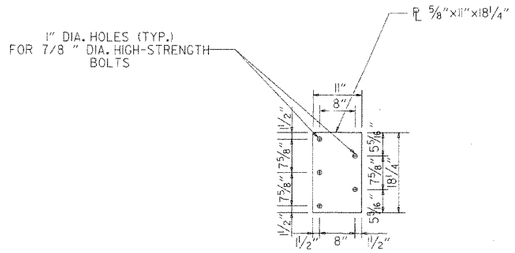

CONNECTOR PLATE

CONNECTOR PLATE SHALL BE AASHTO M270, GR. 36 AND SHALL BE GALVANIZED AFTER FABRICATION. GALVANIZING SHALL CONFORM TO SUBSECTION 807.19 OF THE STANDARD SPECIFICATIONS. CONNECTOR PLATE TO BE BOLTED TO SPECIAL END SHOE USING ⅞" DIA. HIGH STRENGTH BOLTS, WITH THE HEADS PLACED ON THE TRAFFIC FACE. WASHERS SHALL BE USED UNDER THE HEAD AND NUT. BOLTS, NUTS AND WASHERS SHALL BE GALVANIZED AND SHALL CONFORM TO SUBSECTION 807.06.

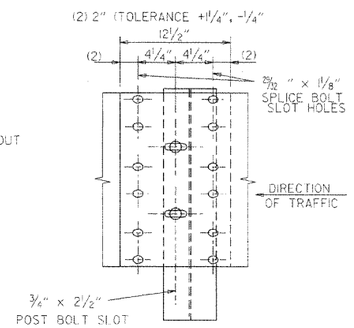

THRIE BEAM RAIL SPLICE AT POST

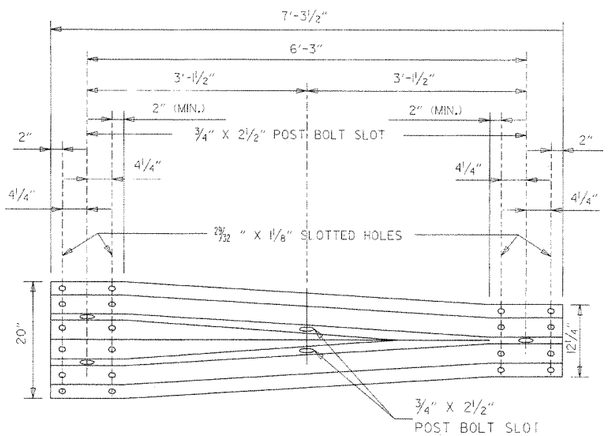

TRANSITION SECTION

NOTE: SEE STANDARD DRAWING GR-10A FOR GUARD RAIL POST EMBEDMENT DEPTHS.

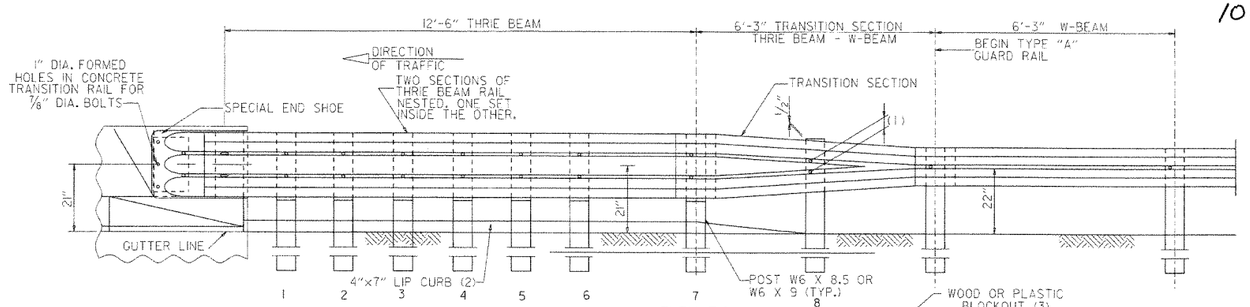

ELEVATION

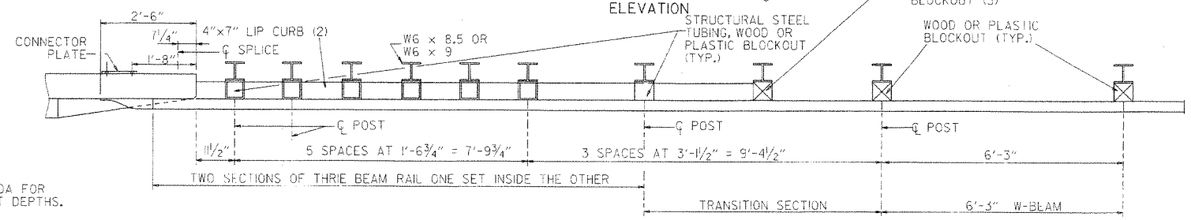

PLAN

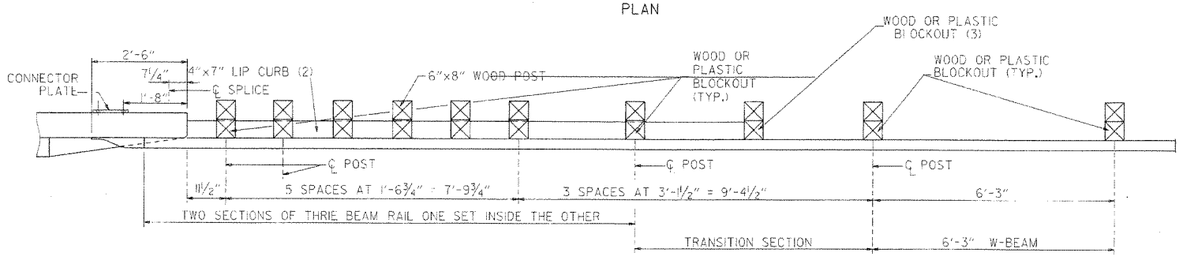

PLAN

(1) VERIFY BOLT SPACING FROM RAIL TRANSITION PRODUCER.
(2) REFER TO APPROACH GUTTER DETAILS.
(3) LENGTH OF BLOCKOUT ON POST 8 TO BE MODIFIED TO FIT RAIL WIDTH.

THRIE BEAM GUARD RAIL CONNECTION AT BRIDGE ENDS

GENERAL NOTES:

THE THRIE BEAM RAIL, SPECIAL END SHOE, AND THE TRANSITION SECTION SHALL BE MADE OF STEEL AND SHALL BE 12 GAGE. ZINC COATING SHALL BE TYPE I.

RAIL POSTS SHALL BE SET PERPENDICULAR TO THE ROADWAY PROFILE GRADE AND VERTICALLY IN CROSS SECTION.

ALL BOLTS SHALL BE SUFFICIENT LENGTH TO EXTEND THROUGH THE FULL THICKNESS OF THE NUT AND NO MORE THAN ¾" BEYOND IT.

ALL LAP SPLICES, INCLUDING SPECIAL END SHOES, SHALL BE MADE IN THE DIRECTION SHOWN ON STANDARD DRAWINGS GR-9 & GR-11.

WOOD POSTS & WOOD BLOCKS SHALL BE EITHER DENSE NO. 1 STRUCTURAL OR BETTER 9.7# (1400 f) OR NO. 1 1350 f SOUTHERN PINE.

REFER TO STD. DRWG. GR-10A FOR POST DETAILS.

USE THRIE BEAM GUARD RAIL COMPONENTS OF SAME MATERIAL FOR ENTIRE JOB.

THRIE BEAM POSTS SHALL BE SAME MATERIAL AS W-BEAM POSTS FOR ENTIRE JOB.

DATE	REVISION	DATE FILM
7-14-10	RAISED HEIGHT OF W-BEAM 1"	
11-29-07	ADDED PLASTIC BLOCKOUTS	
11-10-05	ADDED NOTE FOR ATTACHING STEEL BLOCKOUT	
11-18-04	REVISED GENERAL NOTES	
10-9-03	REVISED GENERAL NOTES	
4-10-03	REVISED GENERAL NOTES	
8-22-02	REVISED NOTE (2)	
6-29-00	MOVED DIMENSION LINES	
5-18-00	ADDED NOTE	
3-30-00	DRAWN & ISSUED	

ARKANSAS STATE HIGHWAY COMMISSION

GUARD RAIL DETAILS

STANDARD DRAWING GR-10

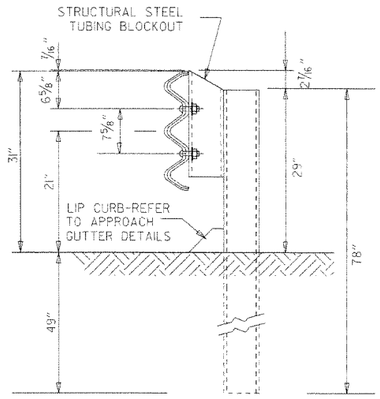

THRIE BEAM RAIL WITH STEEL TUBING BLOCKOUT
AND STEEL POST
POSTS 1-7

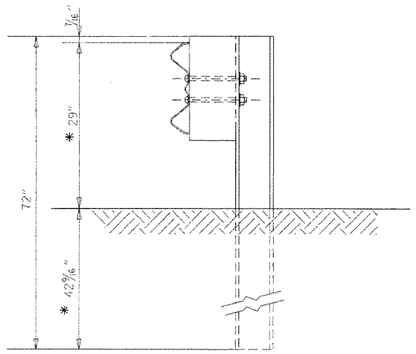

W-BEAM TO THRIE BEAM TRANSITION RAIL
WITH WOOD OR PLASTIC BLOCKOUT AND STEEL POST
POST 8

* NOTE:
THESE DIMENSIONS WILL NEED TO BE ADJUSTED IN THE FIELD TO MAKE THE TRANSITION FROM 21" MID POINT OF THRIE BEAM TO 22" MID POINT OF W-BEAM.

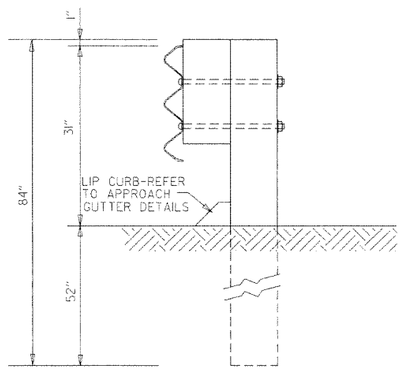

THRIE BEAM RAIL
WITH WOOD OR PLASTIC
BLOCKOUTS & WOOD POSTS
POSTS 1-6

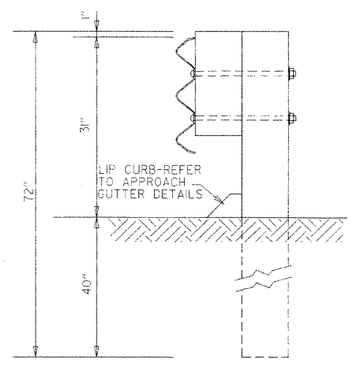

THRIE BEAM RAIL
WITH WOOD OR PLASTIC
BLOCKOUT & WOOD POST
POST 7

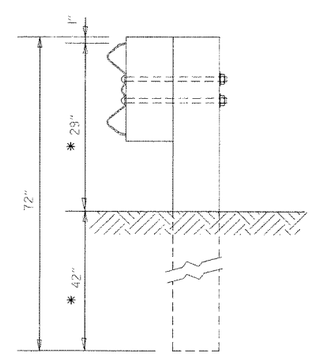

W-BEAM TO THRIE BEAM
TRANSITION RAIL WITH WOOD OR
PLASTIC BLOCKOUT & WOOD POST
POST 8

GENERAL NOTES:

RAIL POSTS SHALL BE SET PERPENDICULAR TO THE ROADWAY PROFILE GRADE AND VERTICALLY IN CROSS SECTION.

WOOD POSTS & WOOD BLOCKS SHALL BE EITHER DENSE NO. 1 STRUCTURAL OR BETTER 9.7f (1400 f) OR NO. 1 1350 f SOUTHERN PINE.

DATE	REVISION	DATE FILM
7-14-10	REVISED POST 8 DIMENSIONS	
11-29-07	ADDED PLASTIC BLOCKOUTS	
8-22-02	REVISED LIP CURB NOTE	
3-30-00	DRAWN & ISSUED	

ARKANSAS STATE HIGHWAY COMMISSION

GUARD RAIL DETAILS

STANDARD DRAWING GR-10A

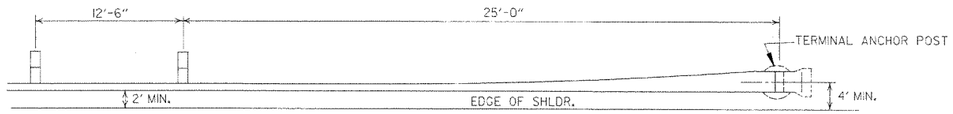

PLAN - GUARD RAIL TERMINAL (TYPE I)

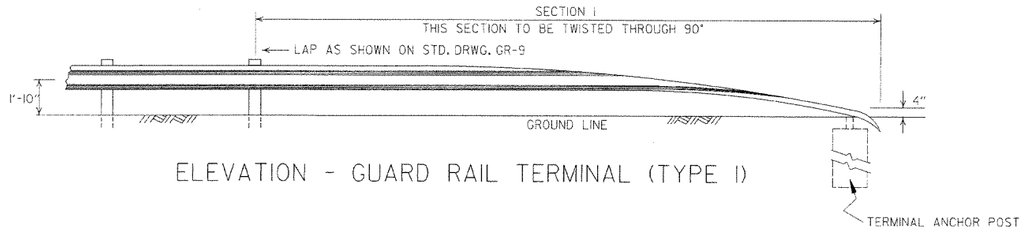

ELEVATION - GUARD RAIL TERMINAL (TYPE I)

NOTE:
SECTIONS 1 AND 2 OF GUARD RAIL TERMINAL SHALL BE PAID FOR AT THE PRICE BID PER LINEAR FOOT OF THE TYPE OF GUARD RAIL SPECIFIED.

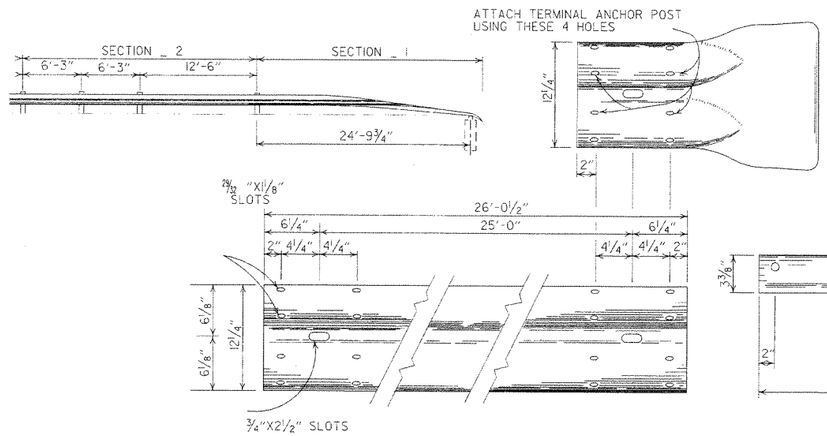

SECTION 1

TERMINAL SECTION

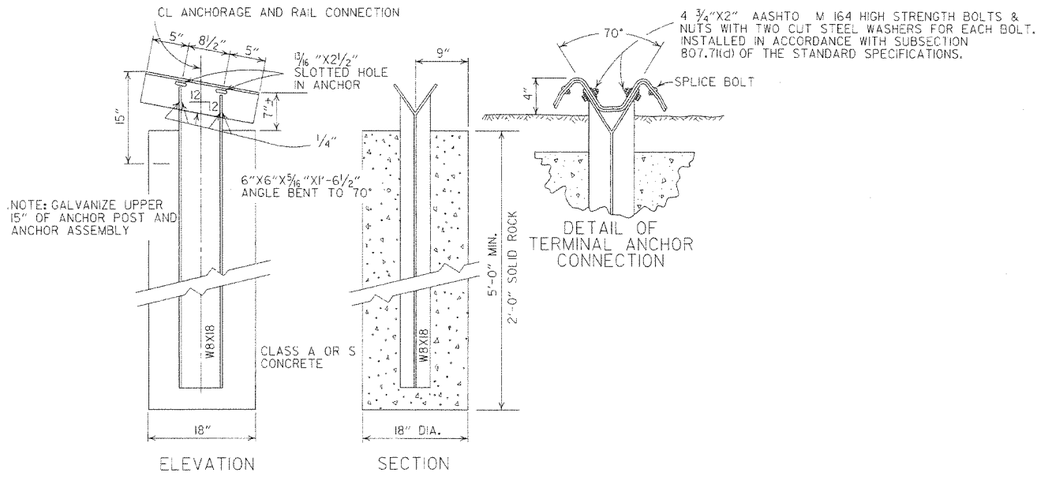

NOTE: RAIL MEMBERS MAY BE BOLTED TO ANGLE AT TERMINAL ANCHOR AND THE TWO ASSEMBLIES POSITIONED TO PROPER ALIGNMENT PRIOR TO PLACING CONCRETE AROUND 8 WF 17 POST IF CONTRACTOR SO DESIRES.

DETAIL OF TERMINAL ANCHOR POST (TYPE I)

DATE	REVISION	DATE FILM
7-14-10	RAISED HEIGHT OF GUARD RAIL 1"	
6-26-97	REVISED LAP NOTE	
10-18-96	REVISED ASTM REF. TO AASHTO	
11-3-94	DIMENSION TERMINAL DETAIL	
11-11-92	ADDED NOTE FOR PAYMENT	11-11-92
10-1-92	DRAWN & ISSUED	10-1-92

ARKANSAS STATE HIGHWAY COMMISSION

GUARD RAIL DETAILS

STANDARD DRAWING GRT-1

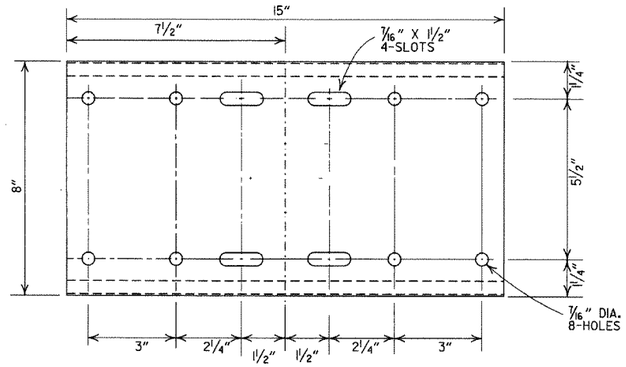

SHELF

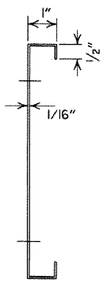

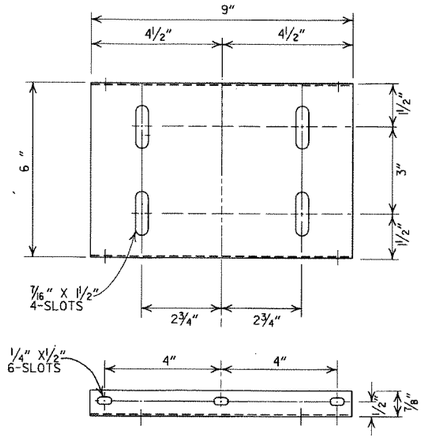

PLATFORM

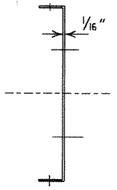

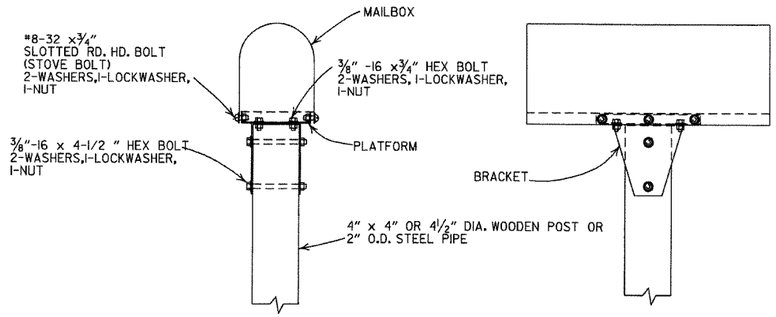

SINGLE INSTALLATION

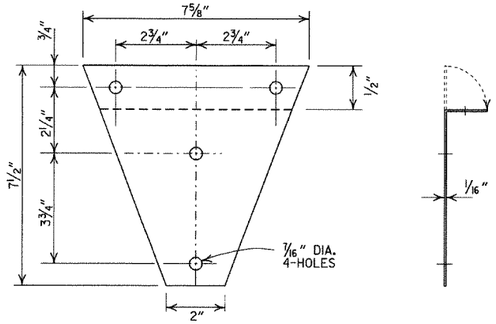

BRACKET

GENERAL NOTES

1. MAILBOX POSTS MAY BE WOOD OR METAL. WOOD POSTS SHALL BE PRESSURE TREATED FOR GROUND CONTACT IN ACCORDANCE WITH SECTION 637.02 OF THE STANDARD SPECIFICATIONS.
2. ANTI-TWIST PLATES SHALL BE USED ONLY ON METAL POSTS.
3. MAILBOX SHELF, BRACKET & PLATFORM SHALL BE GALVANIZED OR PAINTED STEEL, HOWEVER TREATED WOOD MAY BE USED WITH WOODEN POSTS. THE WOODEN SHELF, BRACKET & PLATFORM SHALL BE A MINIMUM OF ¾" THICK AND SHALL BE ASSEMBLED WITH BOLTS OF THE APPROPRIATE LENGTH WITH SIX 8 X¾" FLATHEAD WOOD SCREWS USED TO ATTACH THE MAILBOX TO THE PLATFORM.
4. THE MAILBOX SHELF AND PLATFORM THAT IS SHOWN IS FOR STANDARD SIZE MAILBOXES. THE SHELF AND PLATFORM SIZE SHALL BE MODIFIED TO FIT MAILBOXES OF A DIFFERENT SIZE.
5. METAL PIPE FOR MAILBOX SUPPORT SHALL BE 2" OUTSIDE DIAMETER STEEL WITH A WALL THICKNESS OF 0.145" AND A WEIGHT OF 2.72 LBS PER FT. OUTSIDE DIAMETER AND WEIGHT SHALL HAVE A TOLERANCE OF +/- 5% ACCORDING TO AASHTO M 181.
6. MAILBOX SUPPORT SYSTEM DIFFERING FROM THOSE SHOWN MAY BE USED, PROVIDED THEY ARE ON THE AHTD QUALIFIED PRODUCTS LIST FOR MAILBOX SUPPORTS.

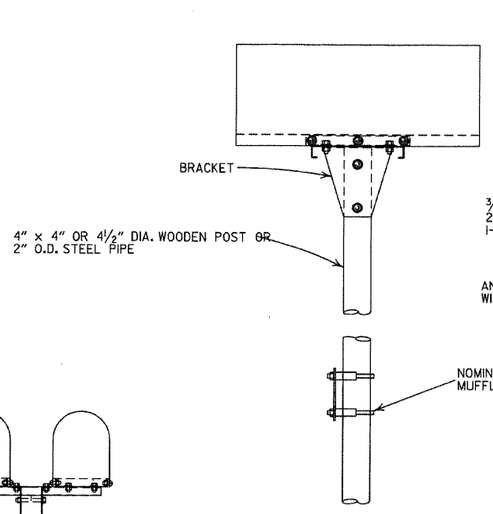

DOUBLE INSTALLATION

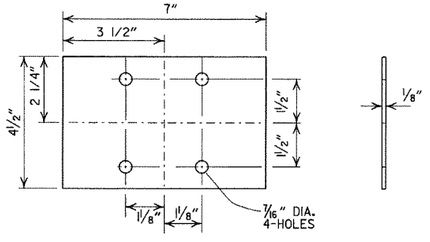

ANTI-TWIST PLATE

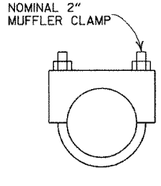

CLAMP

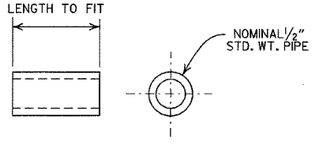

SPACER

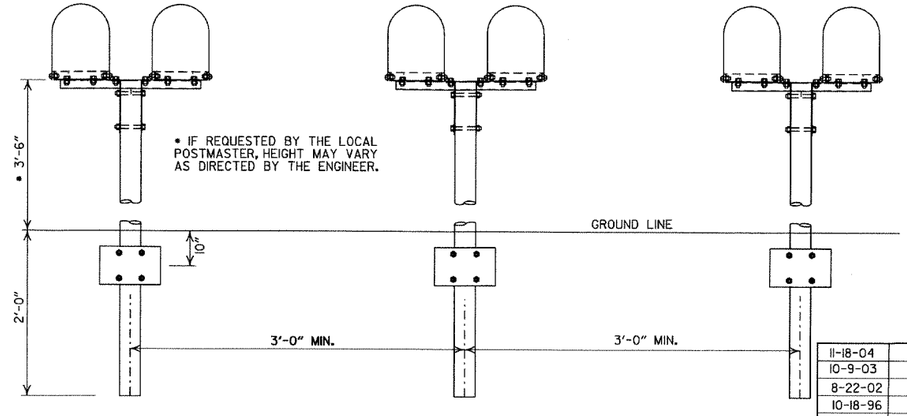

SPACING FOR MULTIPLE POST INSTALLATION

DATE	FILMED	REVISION
11-18-04		REVISED NOTES
10-9-03		REVISED NOTE 6
8-22-02		REVISED NOTE 6
10-18-96		CORRECTED AASHTO
10-1-92		CORRECTED SPELLING
9-26-91		NEW PHONE NUMBER
8-15-91		ADDED NOTE
11-30-89		ADJUSTED HEIGHT & ADDED NOTE
2-16-89		DELETED SLOTS FROM SHELF & PLTF
11-17-88	10-1-92	ADJUSTED DIMENSIONS OF STEEL POSTS
7-15-88	20-7-15-88	ISSUED

ARKANSAS STATE HIGHWAY COMMISSION

MAILBOX DETAILS

STANDARD DRAWING MB-1

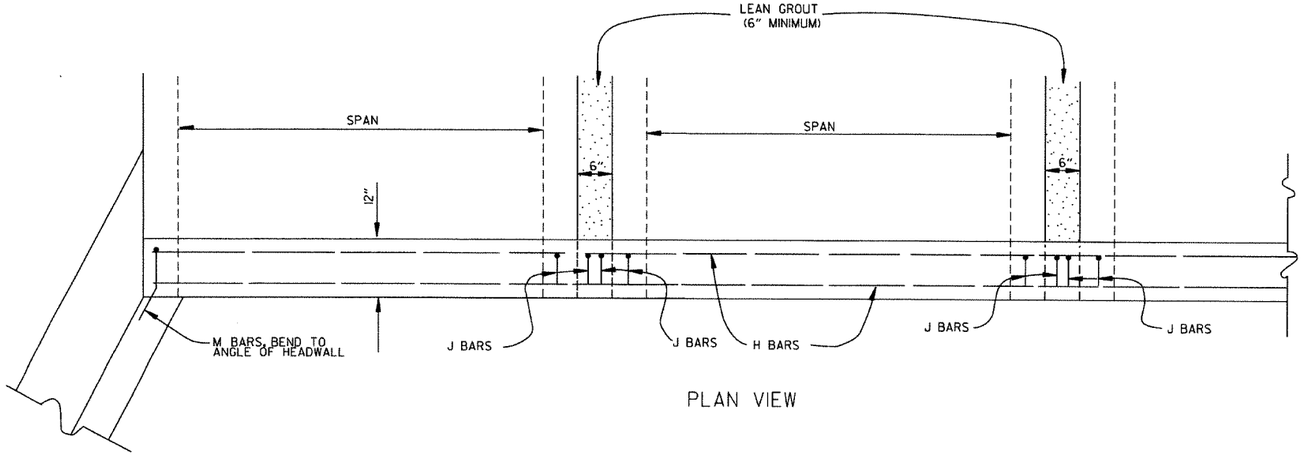

PLAN VIEW

BAR LIST

BAR	NO.	SIZE	LENGTH	BAR BENDING DIAGRAM
H	2	#4	•	
I	•	#4	•	
J	•	#4	1'-5"	
L	•	#4	3'-2"	
M	•	#4	1'-8"	

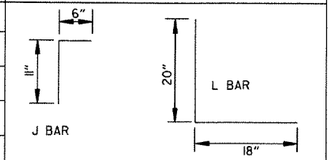

• NOTE: LENGTH AND NUMBER OF BARS VARIES WITH SIZE OF CULVERT

GENERAL NOTES

WINGS, CURTAIN WALLS AND APRONS SHALL BE TIED TO THE PRECAST CULVERT SECTION BY CASTING BARS IN CULVERT END SECTIONS AS SHOWN OR BY DOWELING AND GROUTING. J BARS AND M BARS SHALL BE EMBEDDED A MINIMUM OF 10" IN PRECAST BOX.

WINGS, FOOTINGS, APRONS AND CURTAIN WALLS SHALL BE CONSTRUCTED IN ACCORDANCE WITH THE APPLICABLE WING DRAWING. STEEL AND CONCRETE QUANTITIES WILL BE ADJUSTED TO FIT THE IN-PLACE WIDTH & HEIGHT OF THE PRECAST CONCRETE BOX CULVERTS.

ALL EXPOSED CORNERS TO HAVE ¾" CHAMFERS.

WINGWALLS AND FOOTINGS MAY BE ADJUSTED IN THE FIELD AS DIRECTED BY THE ENGINEER.

ALL CONCRETE, REINFORCING STEEL, LEAN GROUT, MEMBRANE WATERPROOFING, DRAINAGE FILL MATERIAL, GEOTEXTILE FILTER FABRIC, LABOR, MATERIALS AND EQUIPMENT REQUIRED FOR INSTALLING PRECAST BOX CULVERTS WILL NOT BE PAID FOR DIRECTLY BUT WILL BE CONSIDERED TO BE INCLUDED IN THE PRICE BID FOR THE ITEMS AS SPECIFIED IN SECTION 607 OF THE STANDARD SPECIFICATIONS.

LEAN GROUT SHALL CONSIST OF A SAND CEMENT MIXTURE MEETING THE FOLLOWING REQUIREMENTS:
PORTLAND CEMENT SHALL BE TYPE I AND SHALL MEET THE REQUIREMENTS OF AASHTO M 85.
SAND SHALL MEET THE REQUIREMENTS OF FINE AGGREGATE AS SPECIFIED IN SECTION 802.02 OF THE STANDARD SPECIFICATIONS.
THE SAND CEMENT MIXTURE SHALL CONSIST OF NOT LESS THAN 1.5 SACKS OF PORTLAND CEMENT PER TON OF MATERIAL MIXTURE.
THE MIXTURE SHALL CONTAIN SUFFICIENT WATER TO HYDRATE THE CEMENTS. THE SAND CEMENT MIXTURE SHALL BE PLACED IN MAXIMUM 8 INCH THICK LIFTS, LOOSE MEASURE, AND THOROUGHLY RODDED AND TAMPED AROUND BOX TO THOROUGHLY FILL ALL VOIDS.

MEMBRANE WATERPROOFING CONFORMING TO THE REQUIREMENTS OF SECTION 815 OF THE STANDARD SPECIFICATIONS SHALL BE APPLIED TO ALL BOX CULVERT JOINTS.

THE MEMBRANE WATERPROOFING WILL BE REQUIRED ON THE TOP EXTERNAL JOINT AND SHALL EXTEND 1 FOOT DOWN THE SIDES OF THE CULVERT.

IN OUTER BARRELS, ONE WEEP HOLE IS REQUIRED IN EXTERIOR WALLS OF EACH PRECAST CULVERT SECTION. WEEP HOLES SHALL HAVE A MAXIMUM HORIZONTAL SPACING OF 10'-0" IN THE ASSEMBLED CULVERT AND SHALL BE SPACED TO CLEAR ALL REINFORCING STEEL. THE DRAIN OPENING SHALL BE 4" DIAMETER AND SHALL BE PLACED 12" ABOVE THE TOP OF THE BOTTOM SLAB.

DRAINAGE FILL MATERIAL WITH GEOTEXTILE FABRIC IS REQUIRED AT THE EXTERIOR WALLS OF THE ASSEMBLED CULVERT, SEE DETAILS ON THIS DRAWING.

MINIMUM WIDTH SHALL BE 12" (6" ON EACH SIDE OF JOINT). ON MULTIPLE BARREL CULVERTS, MEMBRANE WATERPROOFING SHALL BE APPLIED TO EACH BARREL AS DESCRIBED ABOVE.

WITH THE APPROVAL OF THE ENGINEER, THE CONTRACTOR WILL BE ALLOWED TO SUBSTITUTE, AT NO ADDITIONAL COST TO THE DEPARTMENT, FLOWABLE SELECT MATERIAL CONFORMING TO SECTION 206 OF THE STANDARD SPECIFICATIONS IN LIEU OF LEAN GROUT.

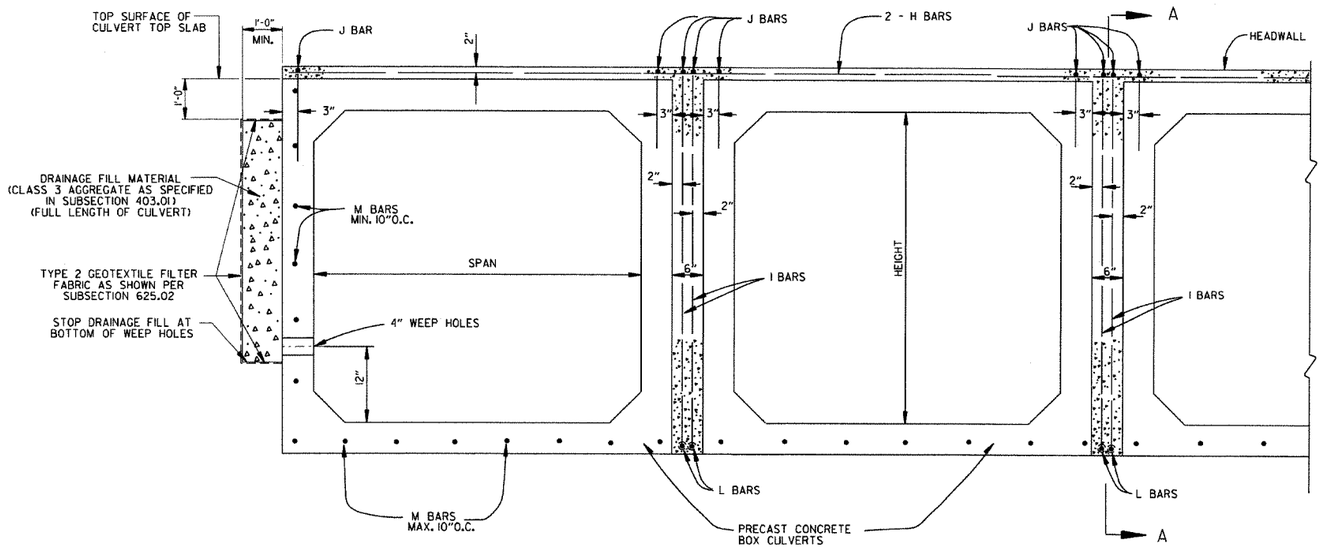

END VIEW

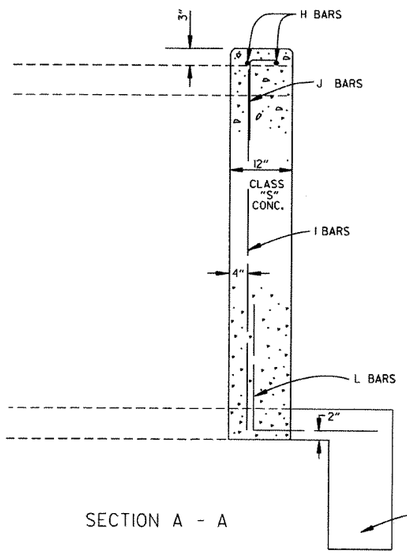

SECTION A - A

DATE	REVISION	DATE FILMED
12-15-11	ADDED NOTE & DTLS FOR WEEP HOLE AND DRAINAGE FILL	
10-15-09	ADDED GENERAL NOTE	
11-10-05	REVISED SPACING OF "M" BARS	
4-10-03	REVISED GENERAL NOTES	
10-18-96	CORRECTED AASHTO REF.	
10-1-92	ADDED NOTE FOR MEMBRANE WATERPROOFING	
8-15-91	ADDED NOTE FOR LEAN GROUT	
11- 8-90	REVISED FOR 1991 SPECS	
11-30-89	ISSUED; JABE	

ARKANSAS STATE HIGHWAY COMMISSION

PRECAST CONCRETE BOX CULVERTS

STANDARD DRAWING PBC-1

REINFORCED CONCRETE ARCH PIPE DIMENSIONS

EQUIV. DIA.	SPAN		RISE	
	AASHTO M 206	AHTD NOMINAL	AASHTO M 206	AHTD NOMINAL
INCHES	INCHES			
15	18	18	11	11
18	22	22	13½	14
21	26	26	15½	16
24	28½	29	18	18
30	36¼	36	22½	23
36	43⅜	44	26⅝	27
42	51⅛	51	31⅛	31
48	58½	59	36	36
54	65	65	40	40
60	73	73	45	45
72	88	88	54	54
84	102	102	62	62
90	115	115	72	72
96	122	122	77½	77
108	138	138	87⅛	87
120	154	154	96⅞	97
132	168¾	169	106½	107

THE MEASURED SPAN AND RISE SHALL NOT VARY MORE THAN ± 2 PERCENT FROM THE VALUES SPECIFIED BY AASHTO M206.

REINFORCED CONCRETE HORIZONTAL ELLIPTICAL PIPE DIMENSIONS

EQUIV. DIA.	AASHTO M 207	
	SPAN	RISE
INCHES	INCHES	
18	23	14
24	30	19
27	34	22
30	38	24
33	42	27
36	45	29
39	49	32
42	53	34
48	60	38
54	68	43
60	76	48
66	83	53
72	91	58
78	98	63
84	106	68

THE MEASURED SPAN AND RISE SHALL NOT VARY MORE THAN ± 2 PERCENT FROM THE VALUES SPECIFIED BY AASHTO M207.

CONSTRUCTION SEQUENCE

1. PLACE STRUCTURAL BEDDING MATERIAL TO GRADE. DO NOT COMPACT.
2. INSTALL PIPE TO GRADE.
3. COMPACT STRUCTURAL BEDDING OUTSIDE THE MIDDLE THIRD OF THE PIPE.
4. PLACE AND COMPACT THE HAUNCH AREA UP TO THE MIDDLE OF THE PIPE.
5. COMPLETE BACKFILL ACCORDING TO SUBSECTION 606.03.(f)(1).

NOTE: HAUNCH AND STRUCTURAL BEDDING MATERIAL WILL NOT BE PAID FOR SEPARATELY, BUT COMPENSATION WILL BE CONSIDERED TO BE INCLUDED IN THE PRICE BID PER LINEAR FOOT OF CONCRETE PIPE.

- LEGEND -

D_1 = NORMAL INSIDE DIAMETER OF PIPE
D_o = OUTSIDE DIAMETER OF PIPE
H = FILL COVER HEIGHT OVER PIPE (FEET)
MIN. = MINIMUM
▨ = UNDISTURBED SOIL

INSTALLATION TYPE	MATERIAL REQUIREMENTS FOR HAUNCH AND STRUCTURAL BEDDING
TYPE 1	AGGREGATE BASE COURSE (CLASS 5 OR CLASS 7)
TYPE 2	SELECTED MATERIALS (CLASS SM-1, SM-2, OR SM-4) OR TYPE 1 INSTALLATION MATERIAL*
TYPE 3**	AASHTO CLASSIFICATION A-1 THRU A-6 SOIL OR TYPE 1 OR 2 INSTALLATION MATERIAL

* SM-3 WILL NOT BE ALLOWED.

** MATERIALS SHALL NOT INCLUDE ORGANIC MATERIALS OR STONES LARGER THAN 3 INCHES.

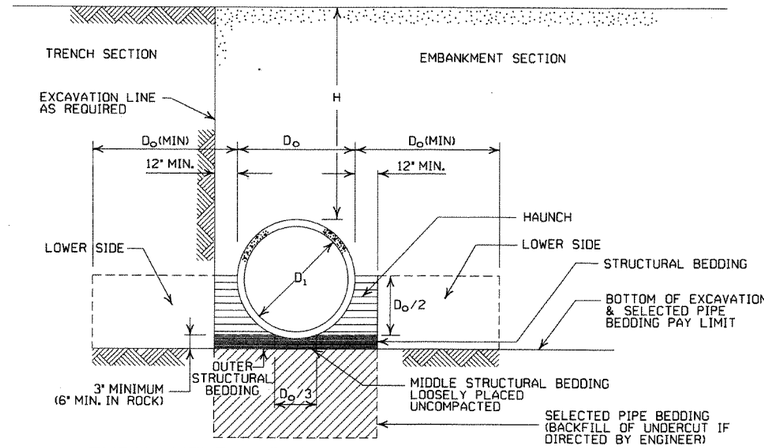

EMBANKMENT AND TRENCH INSTALLATIONS

1. MATERIAL IN THE HAUNCH AND OUTER STRUCTURAL BEDDING SHALL BE COMPACTED TO 95% OF THE MAXIMUM DENSITY ACCORDING TO THE TYPE OR CLASS OF MATERIAL USED.
2. FOR TRENCHES WITH WALLS OF NATURAL SOIL, THE DENSITY OF THE SOIL IN THE LOWER SIDE ZONE SHALL BE AS FIRM AS THE 95% DENSITY REQUIRED FOR THE HAUNCH. IF THE EXISTING SOIL DOES NOT MEET THIS CRITERIA, IT SHALL BE REMOVED AND RECOMPACTED TO 95% OF THE MAXIMUM DENSITY ACCORDING TO THE TYPE OF MATERIAL USED.
3. FOR EMBANKMENTS, THE MATERIAL IN THE LOWER SIDE ZONE SHALL BE COMPACTED TO 95% OF THE MAXIMUM DENSITY ACCORDING TO THE TYPE OR CLASS OF MATERIAL USED.

GENERAL NOTES

1. CONCRETE PIPE CULVERT CONSTRUCTION SHALL CONFORM TO ARKANSAS STATE HIGHWAY AND TRANSPORTATION DEPARTMENT STANDARD SPECIFICATIONS FOR HIGHWAY CONSTRUCTION (2003 EDITION), WITH APPLICABLE SUPPLEMENTAL SPECIFICATIONS AND SPECIAL PROVISIONS. UNLESS OTHERWISE NOTED IN THE PLANS, SECTION AND SUBSECTION REFER TO THE STANDARD CONSTRUCTION SPECIFICATIONS.
2. CONCRETE PIPE CULVERT DESIGN SHALL CONFORM TO AASHTO LRFD BRIDGE DESIGN SPECIFICATIONS, FIFTH EDITION (2010) WITH 2010 INTERIMS.
3. ALL PIPE SHALL CONFORM TO SECTION 606. CIRCULAR R.C. PIPE CULVERTS SHALL CONFORM TO AASHTO M170, R.C. ARCH PIPE CULVERTS SHALL CONFORM TO AASHTO M206 AND HORIZONTAL ELLIPTICAL PIPE CULVERTS SHALL CONFORM TO AASHTO M207.
4. ALL PIPE SHALL BE PROTECTED DURING CONSTRUCTION BY A COVER SUFFICIENT TO PREVENT DAMAGE FROM PASSAGE OF EQUIPMENT.
5. THE MINIMUM TRENCH WIDTH SHALL BE THE OUTSIDE DIAMETER OF THE PIPE PLUS 24 INCHES. THE MAXIMUM ALLOWABLE TRENCH WIDTH SHALL BE THE MINIMUM WIDTH PRACTICABLE FOR WORKING CONDITIONS.
6. MULTIPLE PIPE CULVERTS SHALL BE INSTALLED WITH A MINIMUM CLEARANCE OF 24 INCHES BETWEEN STRINGS OF PIPE. REFER TO STD. DWG. FES-2 FOR MINIMUM CLEARANCE WHERE FLARED END SECTIONS ARE USED.
7. IMPERVIOUS MATERIAL SHOULD BE PLACED AS DIRECTED BY THE ENGINEER AT THE ENDS OF THE CULVERT TO PREVENT LOSS OF STRUCTURAL BEDDING WHEN PERVIOUS MATERIAL IS USED FOR STRUCTURAL BEDDING AND/OR BACKFILL.
8. NOT MORE THAN ONE LIFTING HOLE MAY BE PROVIDED IN CONCRETE PIPE TO FACILITATE HANDLING. HOLE MAY BE CAST IN PLACE, CUT INTO THE FRESH CONCRETE AFTER FORMS ARE REMOVED, OR DRILLED. THE HOLE SHALL NOT BE MORE THAN TWO INCHES IN DIAMETER OR TWO INCHES SQUARE. CUTTING OR DISPLACEMENT OF REINFORCEMENT WILL NOT BE PERMITTED. SPALLED AREAS AROUND THE HOLE SHALL BE REPAIRED IN A WORKMANLIKE MANNER. LIFTING HOLE SHALL BE FILLED WITH MORTAR, CONCRETE, OR OTHER METHOD AS APPROVED BY THE ENGINEER.
9. WHEN DIRECTED BY THE ENGINEER, UNSUITABLE MATERIAL THAT IS ENCOUNTERED AT THE BOTTOM OF THE EXCAVATED TRENCH (BELOW THE AREA IDENTIFIED AS "STRUCTURAL BEDDING" ABOVE) WILL BE EXCAVATED AND REPLACED WITH SELECTED PIPE BEDDING. THE QUANTITY OF MATERIAL REQUIRED TO BACKFILL THE UNDERCUT AREA UP TO THE SELECTED PIPE BEDDING PAY LIMIT DESIGNATED ABOVE WILL BE MEASURED AND PAID FOR AS "SELECTED PIPE BEDDING."
10. WHEN THE EXISTING MATERIAL EXCAVATED FOR THE PIPE TRENCH IS DETERMINED BY THE ENGINEER TO BE UNSUITABLE FOR BACKFILLING THE PIPE (ABOVE THE AREA IDENTIFIED ABOVE AS THE HAUNCH), BORROW MATERIAL OR MATERIAL FROM THE ROADWAY EXCAVATION WILL BE USED TO BACKFILL THE PIPE. IF SUITABLE MATERIAL IS NOT AVAILABLE, THE ENGINEER MAY AUTHORIZE THE USE OF "SELECTED PIPE BACKFILL."

MINIMUM HEIGHT OF FILL "H" OVER CIRCULAR R.C. PIPE CULVERTS

	CLASS OF PIPE			
	CLASS III		CLASS IV	CLASS V
INSTALLATION TYPE	TYPE 1 OR 2	TYPE 3	ALL	ALL
PIPE ID (IN.)	FEET			
12-15	2	2.5	2	1
18-24	2.5	3	2	1
27-33	3	4	2	1
36-42	3.5	5	2	1
48	4.5	5.5	2	1
54-60	5	7	2	1
66-78	6	8	2	1
84-108	7.5	8	2	1

NOTE: FOR MINIMUM COVER VALUES, "H" SHALL INCLUDE A MINIMUM OF 12" OF PAVEMENT AND/OR BASE.

MAXIMUM HEIGHT OF FILL "H" OVER CIRCULAR R.C. PIPE CULVERTS

INSTALLATION TYPE	CLASS OF PIPE		
	CLASS III	CLASS IV	CLASS V
	FEET		
TYPE 1	21	32	50
TYPE 2	16	25	39
TYPE 3	12	20	30

NOTE: IF FILL HEIGHT EXCEEDS 50 FEET, A SPECIAL DESIGN CONCRETE PIPE WILL BE REQUIRED USING TYPE 1 INSTALLATION.

MINIMUM HEIGHT OF FILL "H" OVER R.C. ARCH & HORIZONTAL ELLIPTICAL PIPE CULVERTS

INSTALLATION TYPE	CLASS OF PIPE	
	CLASS III	CLASS IV
	FEET	
TYPE 2 OR TYPE 3	2.5	1.5

NOTE: TYPE 1 INSTALLATION WILL NOT BE ALLOWED FOR ARCH & HORIZONTAL ELLIPTICAL PIPE CULVERTS.

NOTE: FOR MINIMUM COVER VALUES, "H" SHALL INCLUDE A MINIMUM OF 12" OF PAVEMENT AND/OR BASE.

MAXIMUM HEIGHT OF FILL "H" OVER R.C. ARCH & HORIZONTAL ELLIPTICAL PIPE CULVERTS

INSTALLATION TYPE	CLASS OF PIPE	
	CLASS III	CLASS IV
	FEET	
TYPE 2	13	21
TYPE 3	10	16

NOTE: TYPE 1 INSTALLATION WILL NOT BE ALLOWED FOR ARCH & HORIZONTAL ELLIPTICAL PIPE CULVERTS.

DATE	REVISION	DATE FILMED
12-15-11	REVISED FOR LRFD DESIGN SPECIFICATIONS	
5-18-00	REVISED TYPE 3 BEDDING & ADDED NOTE	
3-30-00	REVISED INSTALLATIONS	
11-06-97	ISSUED	

ARKANSAS STATE HIGHWAY COMMISSION

CONCRETE PIPE CULVERT FILL HEIGHTS & BEDDING

STANDARD DRAWING PCC-1

CORRUGATED STEEL PIPE (ROUND)

PIPE DIAMETER (INCHES)	① MINUMUM COVER TOP OF PIPE TO TOP OF GROUND "H" (FEET)	MAX. FILL HEIGHT "H" ABOVE TOP OF PIPE (FEET)				
		METAL THICKNESS (INCHES)				
		0.064	0.079	0.109	0.138	0.168
2⅔ INCH BY ½ INCH CORRUGATION RIVETED, WELDED, OR HELICAL LOCK-SEAM						
12	1	84	91			
15	1	67	73			
18	1	56	61			
24	1	42	46	59		
30	2	34	36	47		
36	2		30	39	41	
42	2		43	67	70	73
48	2		37	58	61	64
② 3 INCH BY 1 INCH OR 5 INCH BY 1 INCH CORRUGATION RIVETED, WELDED, BOLTED, OR HELICAL LOCK-SEAM						
36	1	48	60	88	111	118
42	1	41	51	72	90	102
48	1	36	45	64	77	85
54	2	32	40	59	71	79
60	2	29	36	53	64	71
66	2	26	33	47	58	64
72	2	24	30	44	53	59
78	2		28	41	49	54
84	2		26	38	45	51
90	2		24	35	43	45
96	2		22	33	40	44
102	2			31	38	42
108	2			30	35	39
114	2			28	34	37
120	2			27	32	35

CORRUGATED ALUMINUM PIPE (ROUND)

PIPE DIAMETER (INCHES)	① MINUMUM COVER TOP OF PIPE TO TOP OF GROUND "H" (FEET)	MAX. FILL HEIGHT "H" ABOVE TOP OF PIPE (FEET)				
		METAL THICKNESS IN INCHES				
		0.060	0.075	0.105	0.135	0.164
		2 ⅔ INCH BY ½ INCH CORRUGATION RIVETED OR HELICAL LOCK-SEAM				
12	1	45	45			
18	2	30	30	52		
24	2	22	22	39	41	
30	2		18	31	32	34
36	2.5		15	26	27	28
42	2			43	43	44
48	2			40	41	43
54	2			35	37	38
60	2				33	34
66	2					31
72	2					29

CONSTRUCTION SEQUENCE

1. PLACE STRUCTURAL BEDDING MATERIAL TO GRADE. DO NOT COMPACT.
2. INSTALL PIPE TO GRADE.
3. COMPACT STRUCTURAL BEDDING OUTSIDE THE MIDDLE THIRD OF THE PIPE.
4. COMPLETE STRUCTURAL BACKFILL OPERATION BY WORKING FROM SIDE TO SIDE OF THE PIPE. THE SIDE TO SIDE STRUCTURAL BACKFILL DIFFERENTIAL SHALL NOT EXCEED 24 INCHES OR 1/3 THE SIZE OF THE PIPE, WHICHEVER IS LESS.

NOTE: STRUCTURAL BACKFILL AND STRUCTURAL BEDDING MATERIAL WILL NOT BE PAID FOR SEPARATELY, BUT COMPENSATION WILL BE CONSIDERED TO BE INCLUDED IN THE PRICE BID PER LINEAR FOOT OF METAL PIPE.

INSTALLATION TYPE	MATERIAL REQUIREMENTS FOR STRUCTURAL BACKFILL AND STRUCTURAL BEDDING
TYPE 1	AGGREGATE BASE COURSE (CLASS 4, 5, 6, OR 7)
TYPE 2	SELECTED MATERIALS (CLASS SM-1, SM-2, OR SM-4) OR TYPE 1 INSTALLATION MATERIAL ③

③ SM-3 WILL NOT BE ALLOWED.

EQUIVALENT METAL THICKNESSES AND GAUGES

METAL THICKNESS IN INCHES			GAUGE NUMBER
STEEL			
ZINC COATED	UNCOATED	ALUMINUM	
0.064	0.0598	0.060	16
0.079	0.0747	0.075	14
0.109	0.1046	0.105	12
0.138	0.1345	0.135	10
0.168	0.1644	0.164	8

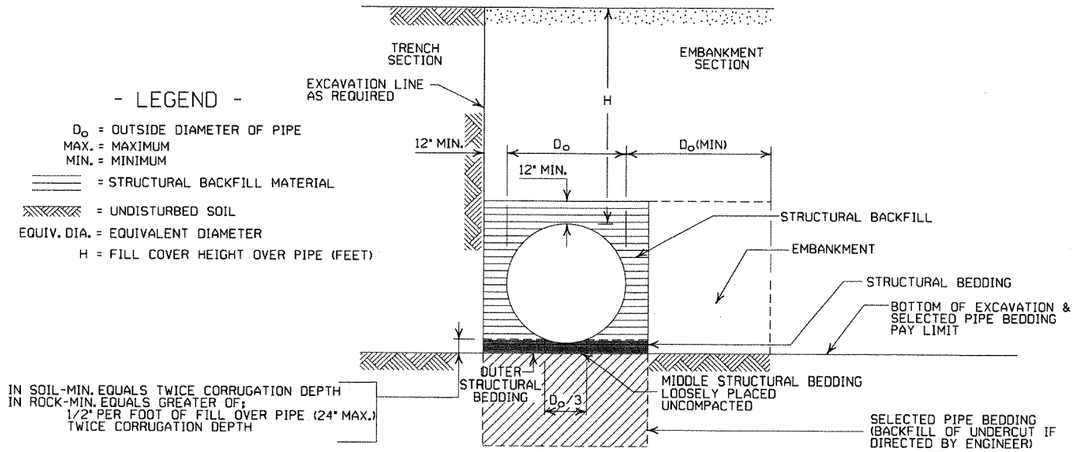

EMBANKMENT AND TRENCH INSTALLATIONS

1. STRUCTURAL BACKFILL, EMBANKMENT, AND OUTER STRUCTURAL BEDDING MATERIAL SHALL BE COMPACTED TO 95% OF THE MAXIMUM DENSITY ACCORDING TO THE TYPE OR CLASS OF MATERIAL USED.
2. INSTALLATION TYPE 1 OR 2 MAY BE USED FOR CORRUGATED STEEL OR ALUMINUM PIPE (ROUND).
3. INSTALALTION TYPE 1 SHALL BE USED FOR CORRUGATED STEEL OR ALUMINUM PIPE ARCHES WITH 2⅔" X ½" CORRUGATION.
4. INSTALLATION TYPE 1 OR 2 MAY BE USED FOR CORRUGATED STEEL OR ALUMINUM PIPE ARCHES WITH 3" X 1" OR 5" X 1" CORRUGATION.

GENERAL NOTES

1. METAL PIPE CULVERT CONSTRUCTION SHALL CONFORM TO ARKANSAS STATE HIGHWAY AND TRANSPORTATION DEPARTMENT STANDARD SPECIFICATIONS FOR HIGHWAY CONSTRUCTION (2003 EDITION), WITH APPLICABLE SUPPLEMENTAL SPECIFICATIONS AND SPECIAL PROVISIONS. UNLESS OTHERWISE NOTED IN THE PLANS, SECTION AND SUBSECTION REFER TO THE STANDARD CONSTRUCTION SPECIFICATIONS.
2. METAL PIPE CULVERT DESIGN SHALL CONFORM TO AASHTO LRFD BRIDGE DESIGN SPECIFICATIONS, FIFTH EDITION (2010) WITH 2010 INTERIMS.
3. METAL PIPE CULVERT MATERIALS AND INSTALLATIONS SHALL CONFORM TO SECTION 606 AND JOB SPECIAL PROVISION "METAL PIPE".
4. ALL PIPE SHALL BE PROTECTED DURING CONSTRUCTION BY A COVER SUFFICIENT TO PREVENT DAMAGE FROM PASSAGE OF EQUIPMENT.
5. THE MINIMUM TRENCH WIDTH SHALL BE THE OUTSIDE DIAMETER OF THE PIPE PLUS 24 INCHES. THE MAXIMUM ALLOWABLE TRENCH WIDTH SHALL BE THE MINIMUM WIDTH PRACTICABLE FOR WORKING CONDITIONS.
6. MULTIPLE PIPE CULVERTS SHALL BE INSTALLED WITH A MINIMUM CLEARANCE OF 24 INCHES BETWEEN STRINGS OF PIPE. REFER TO STD. DWG. FES-2 FOR MINIMUM CLEARANCE WHERE FLARED END SECTIONS ARE USED.
7. IMPERVIOUS MATERIAL SHOULD BE PLACED AS DIRECTED BY THE ENGINEER AT THE ENDS OF THE CULVERT TO PREVENT LOSS OF STRUCTURAL BEDDING WHEN PERVIOUS MATERIAL IS USED FOR STRUCTURAL BEDDING AND/OR BACKFILL.
8. WHEN DIRECTED BY THE ENGINEER, UNSUITABLE MATERIAL THAT IS ENCOUNTERED AT THE BOTTOM OF THE EXCAVATED TRENCH (BELOW THE AREA IDENTIFIED AS "STRUCTURAL BEDDING" ABOVE) WILL BE EXCAVATED AND REPLACED WITH SELECTED PIPE BEDDING. THE QUANTITY OF MATERIAL REQUIRED TO BACKFILL THE UNDERCUT AREA UP TO THE SELECTED PIPE BEDDING PAY LIMIT DESIGNATED ABOVE WILL BE MEASURED AND PAID FOR AS "SELECTED PIPE BEDDING."
9. WHEN THE EXISTING MATERIAL EXCAVATED FOR THE PIPE TRENCH IS DETERMINED BY THE ENGINEER TO BE UNSUITABLE FOR BACKFILLING THE PIPE (ABOVE THE AREA IDENTIFIED AS STRUCTURAL BACKFILL), BORROW MATERIAL OR MATERIAL FROM THE ROADWAY EXCAVATION WILL BE USED TO BACKFILL THE PIPE. IF SUITABLE MATERIAL IS NOT AVAILABLE, THE ENGINEER MAY AUTHORIZE THE USE OF "SELECTED PIPE BACKFILL."

CORRUGATED METAL PIPE ARCHES

EQUIV. DIA. (INCHES)	PIPE DIMENSION SPAN X RISE (INCHES)	MINUMUM CORNER RADIUS (INCHES)	STEEL			ALUMINUM		
			MIN. THICKNESS REQUIRED INCHES	① MIN. HEIGHT OF FILL, "H" (FT.) INSTALLATION TYPE 1	MAX. HEIGHT OF FILL, "H" (FT.) INSTALLATION TYPE 1	MIN. THICKNESS REQUIRED INCHES	① MIN. HEIGHT OF FILL, "H" (FT.) INSTALLATION TYPE 1	MAX. HEIGHT OF FILL, "H" (FT.) INSTALLATION TYPE 1
			2 ⅔ INCH BY ½ INCH CORRUGATION RIVETED, WELDED, OR HELICAL LOCK-SEAM			2 ⅔ INCH BY ½ INCH CORRUGATION RIVETED OR HELICAL LOCK-SEAM		
15	17x13	3	0.064	2	15	0.060	2	15
18	21x15	3	0.064	2	15	0.060	2	15
21	24x18	3	0.064	2.25	15	0.060	2.25	15
24	28x20	3	0.064	2.5	15	0.075	2.5	15
30	35x24	3	0.079	3	12	0.075	3	12
36	42x29	3½	0.079	3	12	0.105	3	12
42	49x33	4	0.079	3	12	0.105	3	12
48	57x38	5	0.109	3	13	0.135	3	13
54	64x43	6	0.109	3	14	0.135	3	14
60	71x47	7	0.138	3	15	0.164	3	15
66	77x52	8	0.168	3	15			
72	83x57	9	0.168	3	15			
			② 3 INCH BY 1 INCH OR 5 INCH BY 1 INCH CORRUGATION RIVETED, WELDED, OR HELICAL LOCK-SEAM					
				INSTALLATION TYPE 2	INSTALLATION TYPE 1		INSTALLATION TYPE 2	INSTALLATION TYPE 1
36	40x31	5	0.079	3	2		12	15
42	46x36	6	0.079	3	2		13	15
48	53x41	7	0.079	3	2		13	15
54	60x46	8	0.079	3	2		13	15
60	66x51	9	0.079	3	2		13	15
66	73x55	12	0.079	3	2		15	15
72	81x59	14	0.079	3	2		15	15
78	87x63	14	0.079	3	2		15	15
84	95x67	16	0.109	3	2		15	15
90	103x71	16	0.109	3	2		15	15
96	112x75	18	0.109	3	2		15	15
102	117x79	18	0.109	3	2		15	15
108	128x83	18	0.138	3	2		15	15

① FOR MINIMUM COVER VALUES, "H" SHALL INCLUDE A MINIMUM 12" OF PAVEMENT AND/OR BASE.

② WHERE THE STANDARD 2 2/3"x ½" CORRUGATION AND GAUGE IS SPECIFIED FOR A GIVEN DIAMETER, A PIPE OF THE SAME DIAMETER WITH A 3" x 1" OR 5" x 1" CORRUGATION MAY BE SUBSTITUTED, PROVIDING IT IS GAUGED FOR A FILL HEIGHT CONDITION EQUAL TO OR GREATER THAN THE MAXIMUM FILL HEIGHT CONDITION FOR THE SPECIFIED GAUGE AND CORRUGATION.

DATE	REVISION	DATE FILMED
12-15-11	REVISED FOR LRFD DESIGN SPECS	
3-30-00	REVISED INSTALLATIONS	
11-06-97	ISSUED	

ARKANSAS STATE HIGHWAY COMMISSION

METAL PIPE CULVERT FILL HEIGHTS & BEDDING

STANDARD DRAWING PCM-1

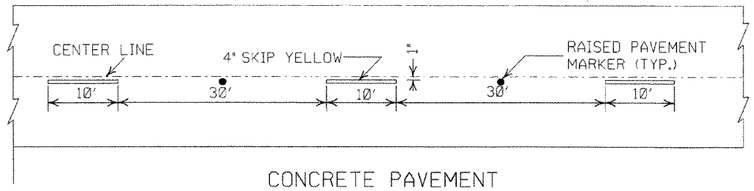

CONCRETE PAVEMENT

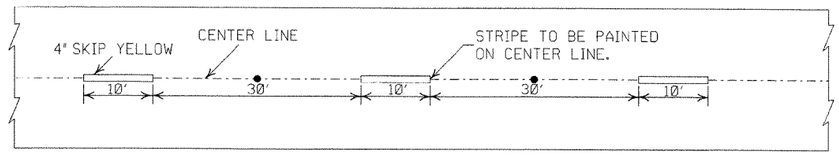

ASPHALT PAVEMENT

BROKEN LINE STRIPING

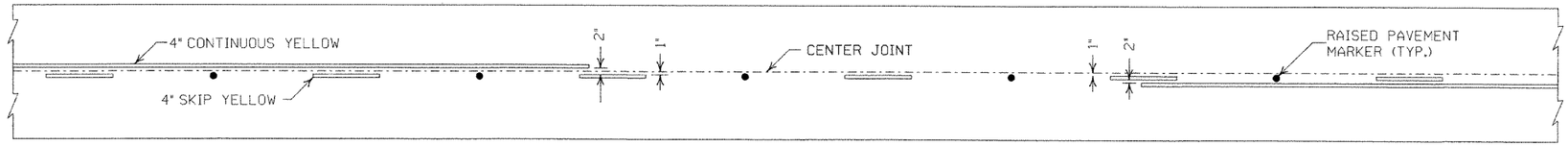

SOLID LINE STRIPING ON CONCRETE PAVEMENT

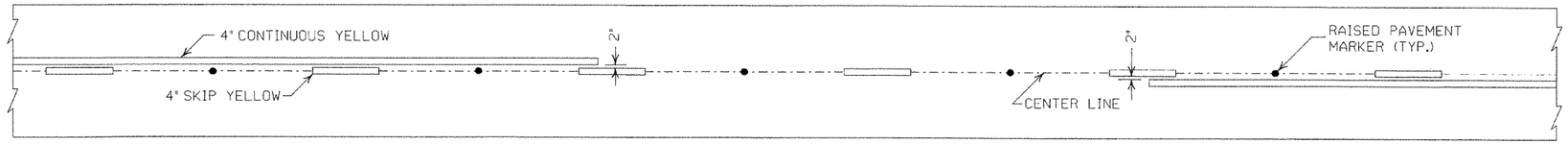

SOLID LINE STRIPING ON ASPHALT PAVEMENT

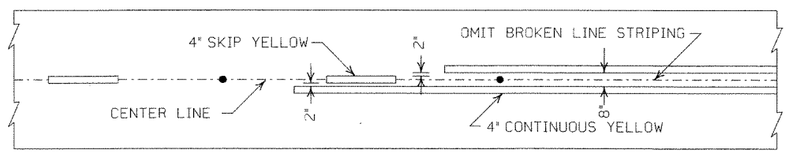

ASPHALT PAVEMENT

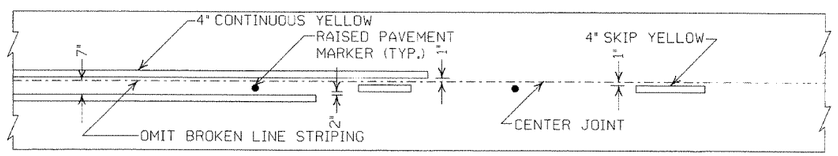

CONCRETE PAVEMENT

STRIPING AT ADJACENT NO PASSING LANES

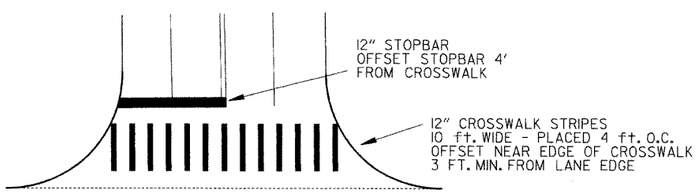

CROSSWALK AND STOPBAR DETAILS

NOTES:

1. ALL LINES SHALL HAVE A WIDTH OF 4 INCHES.
2. THE THICKNESS AND RATE OF PAINT APPLICATION SHALL BE AS SPECIFIED IN SECTION 718 OF THE STANDARD SPECIFICATIONS.
3. THIS DRAWING SHALL BE USED IN CONJUNCTION WITH THE LATEST REVISED ADDITION OF THE "MANUAL ON UNIFORM TRAFFIC CONTROL DEVICES."
4. RAISED PAVEMENT MARKERS SHALL BE CENTERED BETWEEN SKIP LINES ON 40 FEET SPACING UNLESS OTHERWISE SHOWN ON THE PLANS.

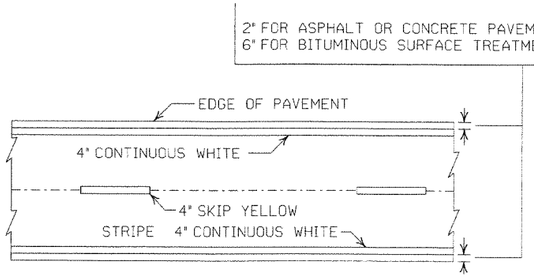

PAVEMENT EDGE LINE MARKING

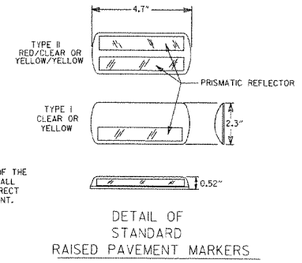

NOTE:
THE RED LENS OF THE TYPE II R.P.M. SHALL FACE THE INCORRECT TRAFFIC MOVEMENT.

DETAIL OF STANDARD RAISED PAVEMENT MARKERS

GENERAL NOTES:

THIS DRAWING SHOULD BE CONSIDERED AS TYPICAL ONLY AND THE FINAL LOCATION OF THE STRIPING AND RAISED PAVEMENT MARKERS SHALL BE DETERMINED BY THE ENGINEER.

THIS DRAWING SHOULD BE USED IN CONJUNCTION WITH THE "MANUAL ON UNIFORM TRAFFIC CONTROL DEVICES", LATEST REVISION.

NOTE:

DIMENSIONS SHOWN FOR RAISED PAVEMENT MARKERS ARE TYPICAL. THE CONTRACTOR MAY SUBSTITUTE SIMILAR MARKERS WITH THE APPROVAL OF THE ENGINEER. REQUESTING APPROVAL FOR SIMILAR MARKERS MAY BE MADE BY REFERRING TO THE AHTD QUALIFIED PRODUCTS LIST.

DATE	REVISION	FILMED
11-17-10	REVISED GENERAL NOTES & REMOVED PLOWABLE PVMT MRKRS	
11-18-04	REVISED NOTE 2 & GENERAL NOTES	
8-22-02	ADDED CROSSWALK & STOPBAR DTLS.	
7-02-98	ADDED DETAILS OF STD. RAISED PAV'T. MARKERS	
4-26-96	REV. NOTES 3&4; ADDED R.P.M.	
9-30-80	DRAWN	1-9-30-80

ARKANSAS STATE HIGHWAY COMMISSION

PAVEMENT MARKING DETAILS

STANDARD DRAWING PM-1

NOTE:
1. GRANULAR BACKFILL TO BE SUBSIDIARY TO PIPE UNDERDRAIN.

2. UNLESS OTHERWISE SPECIFIED ON THE PLANS, THE UNDERDRAIN COVER SHALL BE THOROUGHLY COMPACTED EARTH AND SHALL BE SUBSIDIARY TO PIPE UNDERDRAIN.

3. GRANULAR MATERIAL SHALL BE WRAPPED WITH GEOTEXTILE FABRIC. LAP FABRIC 12" OR THE WIDTH OF THE TRENCH AT THE TOP.

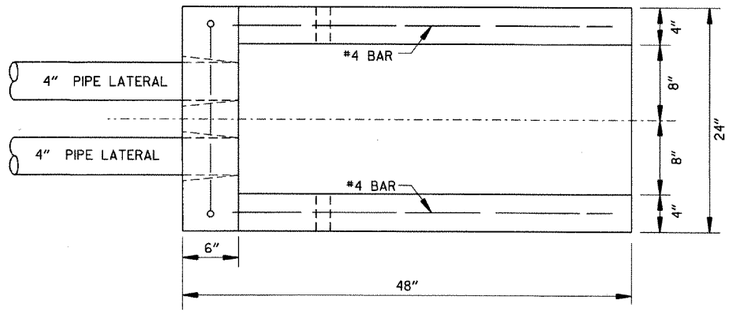

PLAN VIEW

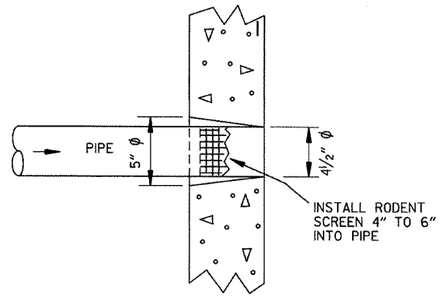

DETAIL OF HOLE FOR 4" PIPE

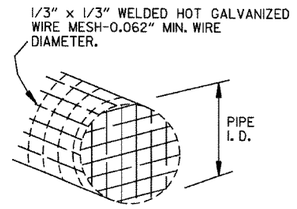

DETAIL OF RODENT SCREEN

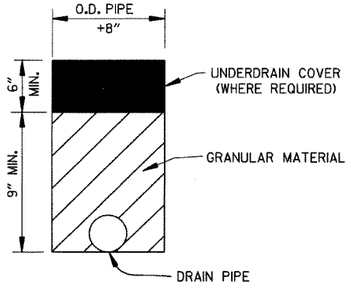

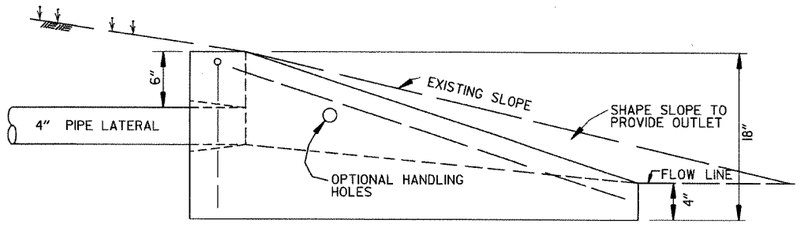

SIDE VIEW

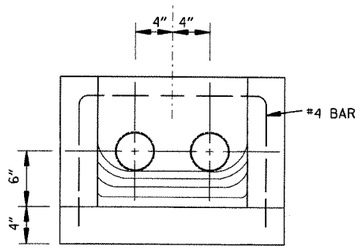

FRONT VIEW

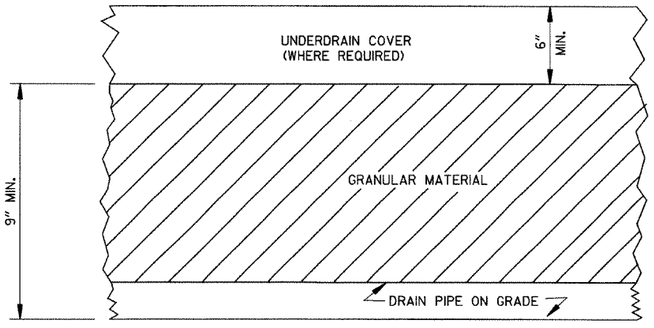

DETAILS OF PIPE UNDERDRAIN

UNDERDRAIN OUTLET PROTECTORS

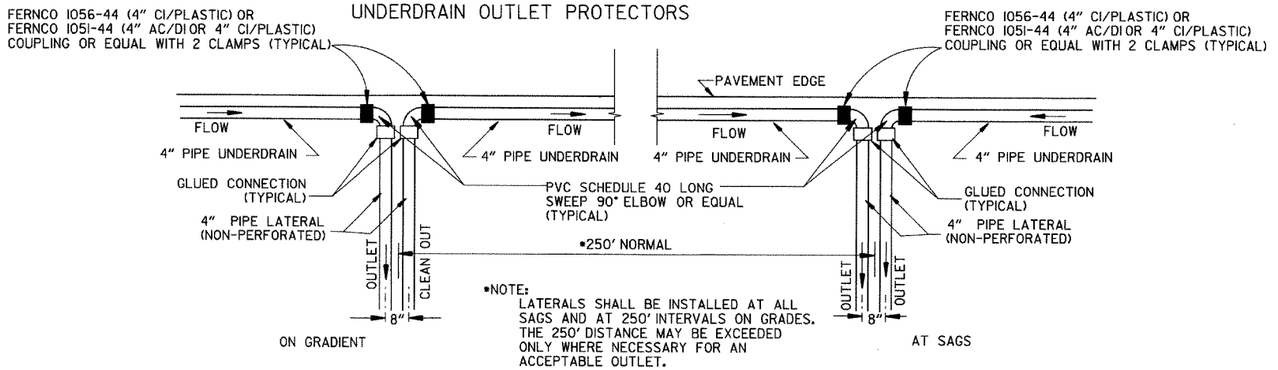

DETAIL OF PIPE UNDERDRAIN LATERALS WHEN PLACED ALONG PAVEMENT EDGE

NOTE: PVC PIPE FOR LATERALS SHALL MEET THE REQUIREMENTS OF ASTM D 1785 (LATEST REVISION) FOR SCHEDULE 40 PIPE.

DATE	REVISION	DATE FILMED
4-10-03	REVISED NOTE 3	
1-12-00	REVISED DETAIL OF UNDERDRAIN LATERALS	
11-18-98	REVISED NOTE	
10-18-96	REVISED MIN. DEPTH & GEOTEXTILE FABRIC	
4-26-96	ADDED LATERAL NOTE; 5½" TO 5"	
11-22-95	REVISED LATERALS	
7-20-95	REVISED LATERALS & ADDED NOTE	
11- 3-94	REVISED FOR DUAL LATERALS	11- 3-94
10- 1-92	SUBSTITUTED GEOTEXTILE	10- 1-92
8-15-91	ADDED POLYEDTHYLENE PIPE	8-15-91
11- 8-90	DELETED ALTERNATE NOTE	11- 8-90
1-25-90	ADDED 4" SNAP ADAPTER	1-25-90
11-30-89	DEL. (SUBGRADE); ADDED (WHERE REQUIRED)	11-30-89
7-15-88	ISSUED P.L.M.	647-7-15-88

ARKANSAS STATE HIGHWAY COMMISSION

DETAILS OF PIPE UNDERDRAIN

STANDARD DRAWING PU-1

7-20-95 INSTD.PUI

STEEL FABRICATION: REINFORCING STEEL FABRICATION SHALL CONFORM TO THE DIMENSIONS LISTED IN THE TABLE BELOW:

BAR SIZE	PIN DIAMETER	HOOK EXTENSION "K"
3	2¼"	4"
4	3 "	4½"
5	3¾"	5"
6	4½"	6"
7	5¼"	7"
8	6"	8"

IF THE OVERALL HEIGHT OF THE HOOK (SEE DIAGRAM BELOW) FOR A "b", "b1", "b2" or "b3" BENT BAR IS GREATER THAN THE CORRESPONDING TOP OR BOTTOM SLAB THICKNESS, LESS 2¾ INCHES, EACH BENT BAR SHALL BE REPLACED WITH ONE HOOKED BAR AND ONE STRAIGHT BAR, USING LENGTHS AS SHOWN IN THE TABLE BELOW. THE TWO BARS SHALL BE THE SAME DIAMETER AS, AND PLACED AT THE SAME SPACING AS, THE "b", "b1", "b2" OR "b3" BENT BARS THEY REPLACE.

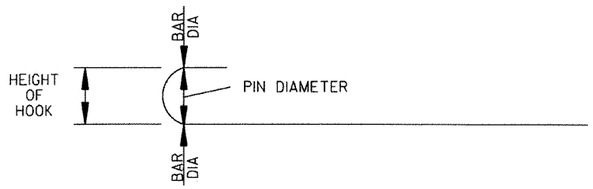

NOTE: DIMENSIONS OF BARS ARE MEASURED OUT TO OUT OF BARS.

OVERALL HEIGHT OF HOOKED BAR DIAGRAM

THE HOOKED BARS SHALL BE PLACED IN THE BOTTOM OF THE TOP SLAB AND THE TOP OF THE BOTTOM SLAB. THE STRAIGHT BARS SHALL BE PLACED IN THE TOP OF THE TOP SLAB AND THE BOTTOM OF THE BOTTOM SLAB. SEE TABLE BELOW FOR LENGTHS OF REPLACEMENT HOOKED AND STRAIGHT BARS.

FOR SKEWED CULVERTS, THE REPLACEMENT STRAIGHT BAR MAY HAVE TO BE CUT IN FIELD TO FIT.

REPLACEMENT BAR LENGTHS TABLE

BAR SIZE: "b", "b1", "b2" OR "b3"	LENGTH OF HOOKED BAR	LENGTH OF STRAIGHT BAR
#4	L + 1' - 0"	SEE "c" BAR LENGTH
#5	L + 1' - 2"	SEE "c" BAR LENGTH
#6	L + 1' - 4"	SEE "c" BAR LENGTH
#7	L + 1' - 8"	SEE "c" BAR LENGTH
#8	L + 1' - 10"	SEE "c" BAR LENGTH
#9	L + 2' - 6"	SEE "c" BAR LENGTH

L = "OW" - 3 INCHES

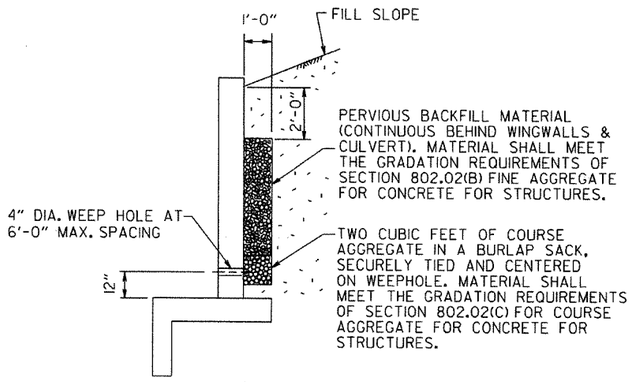

WINGWALL & CULVERT DRAINAGE DETAIL

REINFORCED CONCRETE BOX CULVERT GENERAL NOTES

CONCRETE SHALL BE CLASS S WITH A MINIMUM 28 DAY COMPRESSIVE STRENGTH OF 3500 PSI.

REINFORCING STEEL SHALL BE AASHTO M 31 OR M 53, GRADE 60.

CONSTRUCTION AND MATERIALS FOR WINGWALL & CULVERT DRAINAGE, INCLUDING WEEP HOLES AND GRANULAR MATERIAL, SHALL BE SUBSIDIARY TO THE BID ITEM, "CLASS S CONCRETE".

MEMBRANE WATERPROOFING SHALL CONFORM TO THE REQUIREMENTS OF SECTION 815 OF THE STANDARD SPECIFICATIONS.

MEMBRANE WATERPROOFING SHALL BE APPLIED TO ALL CONSTRUCTION JOINTS IN THE TOP SLAB AND THE SIDEWALLS OF R.C. BOX CULVERTS AS DIRECTED BY THE ENGINEER. NO PAYMENT SHALL BE MADE FOR THIS ITEM, BUT PAYMENT WILL BE CONSIDERED TO BE INCLUDED IN THE VARIOUS ITEMS BID FOR THE R.C. BOX CULVERT.

REINFORCING STEEL TOLERANCES: THE TOLERANCES FOR REINFORCING STEEL SHALL MEET THOSE LISTED IN "MANUAL OF STANDARD PRACTICE" PUBLISHED BY CONCRETE REINFORCING STEEL INSTITUTE (CRSI) EXCEPT THAT THE TOLERANCE FOR TRUSS BARS SUCH AS FIGURE 3 ON PAGE 7-4 OF THE CRSI MANUAL SHALL BE MINUS ZERO TO PLUS ½ INCH.

WEEP HOLES IN BOX CULVERT WALLS SHALL HAVE A MAXIMUM HORIZONTAL SPACING OF 10'-0" AND SHALL BE SPACED TO CLEAR ALL REINFORCING STEEL. THE DRAIN OPENING SHALL BE 4" DIAMETER AND SHALL BE PLACED 12" ABOVE THE TOP OF THE BOTTOM SLAB.

WEEP HOLES IN WINGWALLS SHALL HAVE A MAXIMUM HORIZONTAL SPACING OF 10'-0" AND SHALL BE SPACED TO CLEAR ALL REINFORCING STEEL. THERE SHALL BE A MINIMUM OF TWO (2) WEEP HOLES IN EACH WINGWALL. THE DRAIN OPENING SHALL BE 4" DIAMETER AND SHALL BE PLACED 12" ABOVE THE TOP OF THE WINGWALL FOOTING.

THE REQUIREMENTS SHOWN ON THIS DRAWING SHALL SUPERCEDE THE CORRESPONDING REQUIREMENTS ON ALL REINFORCED CONCRETE BOX CULVERT STANDARD DRAWINGS.

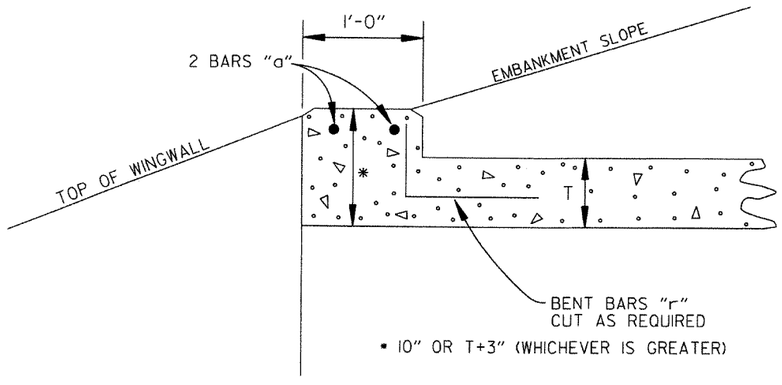

NOTE: FOR ALL SKEWED R.C. BOX CULVERTS THE LENGTH "K" OF THE MODIFIED HEADWALL SHALL BE EQUAL TO THE ROADWAY LENGTH "RL". THE ENDS OF THE HEADWALL SHALL BE CONSTRUCTED PARALLEL TO THE SKEW ANGLE OF THE BOX CULVERT.

R.C. BOX CULVERT HEADWALL MODIFICATIONS

DATE	REVISION	DATE FILMED
12-15-11	REQUIRE WEEP HOLES IN BOX CULVERT WALLS	
5-25-06	REV. GEN. NOTES AND DETAILS FOR WEEP HOLES; BAR DIAGRAM	
11-16-01	ADDED WINGWALL DRAINAGE DETAIL/EDITED GEN. NOTES	
10-18-96	REV. ASTM REF. TO AASHTO & ADDED BAR DIAGRAM	
10-12-95	MOVED SOLID SODDING DETAIL TO RCB-2	
6-2-94	ADDED SOLID SODDING PLAN DETAIL	
8-5-93	REVISED PIN DIAMETER TO SPECS.	
8-15-91	DRAWN AND ISSUED	

ARKANSAS STATE HIGHWAY COMMISSION

REINFORCED CONCRETE BOX CULVERT DETAILS

STANDARD DRAWING RCB-1

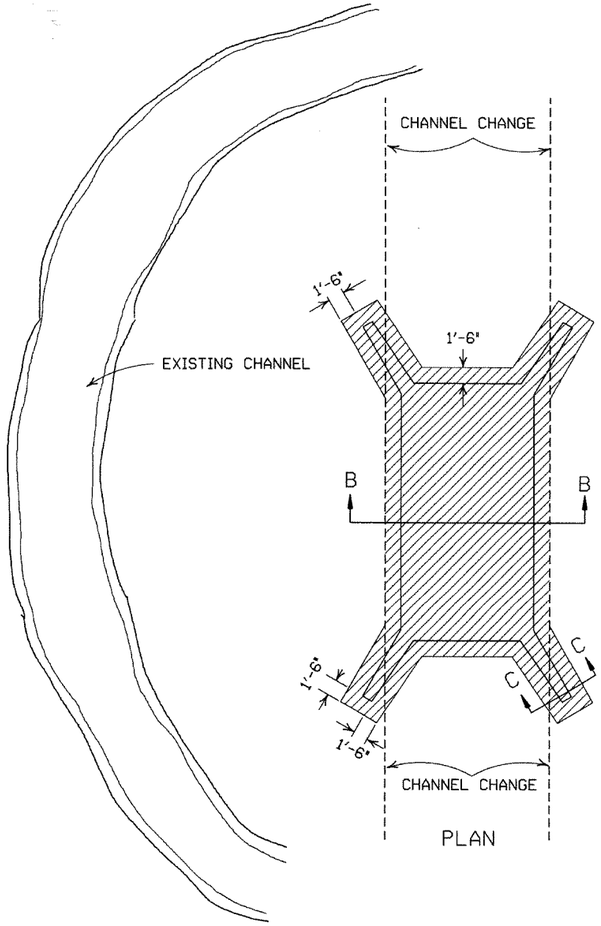

PLAN

SOLID SODDING

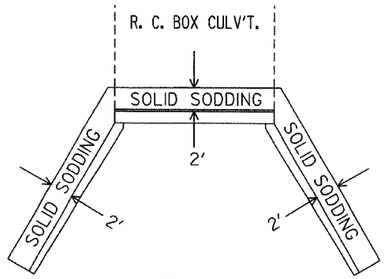

PLAN

PARTIAL SECTION SHOWING SOLID SODDING AT HEADWALLS AND WING WALLS

NOTE: LENGTH MEASURED ALONG THE CENTER OF 2' STRIP OF SOLID SODDING.

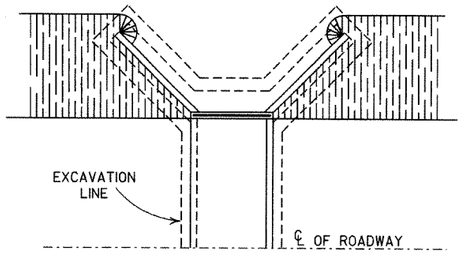

PLAN

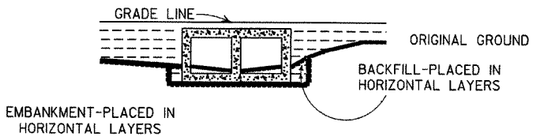

LONGITUDINAL SECTION

BACKFILL DETAILS FOR BOX CULVERT

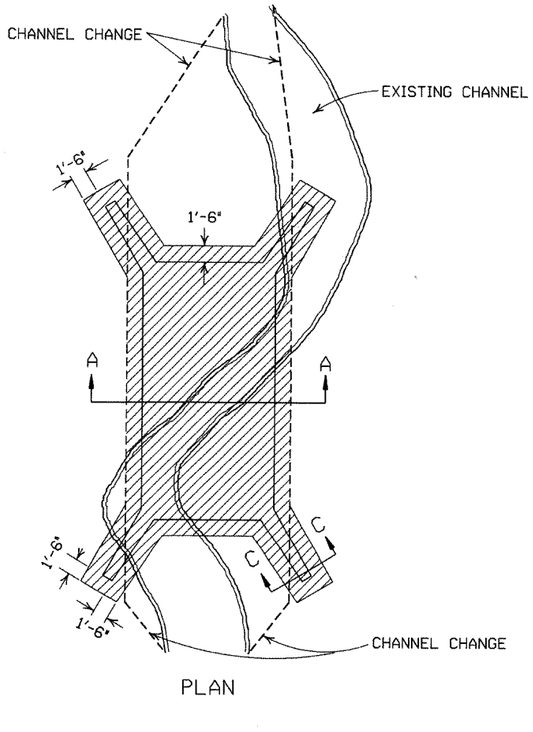

PLAN

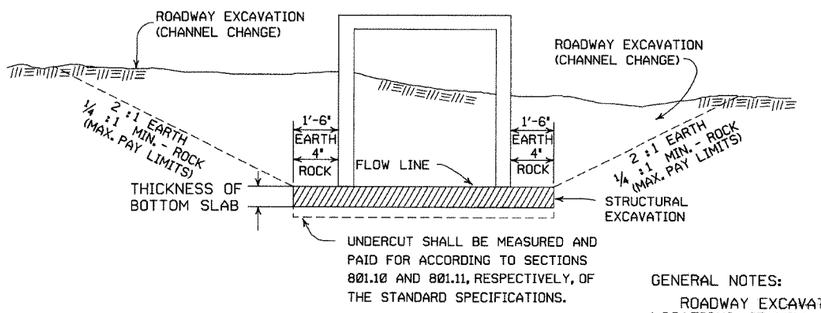

SECTION B-B

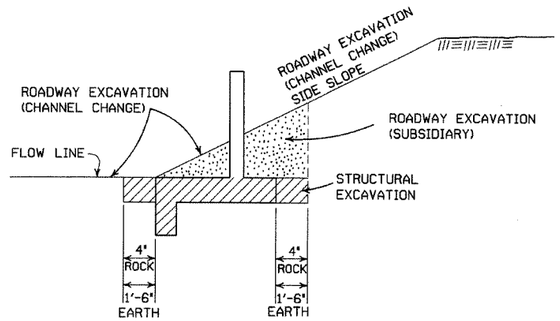

SECTION C-C

DETAILS FOR NEW CHANNELS

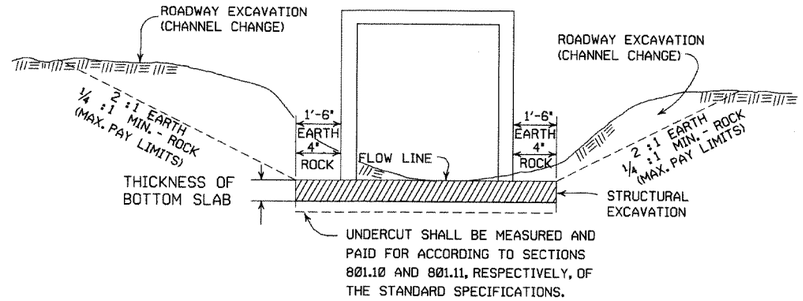

SECTION A-A

DETAILS THROUGH EXISTING CHANNELS

GENERAL NOTES:

ROADWAY EXCAVATION (CHANNEL CHANGE) WILL BE PAID FOR AT R.C. BOX CULVERT LOCATIONS. IT WILL BE PAID TO THE LIMITS ACTUALLY CUT AND WILL BE CONFINED TO THAT PORTION OF THE INDICATED AREA THAT IS ABOVE THE FLOW LINE. ROADWAY EXCAVATION (CHANNEL CHANGE) SHALL BE MEASURED BY CROSS SECTIONS AND VOLUMES COMPUTED BY AVERAGE END AREA METHOD. ALL CHANNEL CHANGES SHALL BE BROUGHT TO GRADE PRIOR TO MAKING ANY EXCAVATION FOR STRUCTURES.

EXCAVATION FOR STRUCTURES WILL BE PAID FOR AT ALL R.C. BOX CULVERT LOCATIONS. IT WILL BE PAID TO THE LIMITS SHOWN AND SHALL BE CONFINED TO THAT PORTION OF THE INDICATED AREA THAT IS BELOW THE CHANNEL FLOW LINE.

ROADWAY EXCAVATION SHOWN IN SECTION C-C ABOVE AS SUBSIDIARY WILL NOT BE MEASURED OR PAID FOR DIRECTLY, BUT PAYMENT WILL BE CONSIDERED TO BE INCLUDED IN THE VARIOUS ITEMS OF EXCAVATION.

DATE	REVISION	FILMED
11-20-03	REVISED SECTION A-A NOTE	
8-22-02	REVISED SECTION B-B NOTE	
10-12-95	COMBINED 1891B AND 1888A	
1-4-83	REVISED GENERAL NOTES	674-1-4-83
	AND ADDED MAXIMUM PAY	
	LIMIT NOTES.	
2-2-76	EXCAV. PAY LIMITS	917-2-2-76
10-2-72	REVISED AND REDRAWN	564-10-16-72

ARKANSAS STATE HIGHWAY COMMISSION

EXCAVATION PAY LIMITS, BACKFILL, & SOLID SODDING FOR BOX CULVERTS

STANDARD DRAWING RCB-2

SUPERELEVATION TABLE FOR ONE - WAY TRAFFIC

DEGREE OF CURVE	30 MPH e	30 MPH Ls (FT) MINIMUM	30 MPH Ls (FT) DESIRABLE	40 MPH e	40 MPH Ls (FT) MINIMUM	40 MPH Ls (FT) DESIRABLE	50 MPH e	50 MPH Ls (FT) MINIMUM	50 MPH Ls (FT) DESIRABLE	55 MPH e	55 MPH Ls (FT) MINIMUM	55 MPH Ls (FT) DESIRABLE	60 MPH e	60 MPH Ls (FT) MINIMUM	60 MPH Ls (FT) DESIRABLE	65 MPH e	65 MPH Ls (FT) MINIMUM	65 MPH Ls (FT) DESIRABLE	70 MPH e	70 MPH Ls (FT) MINIMUM	70 MPH Ls (FT) DESIRABLE
0° 15′	N. C.			N. C.			N. C.			N. C.			N. C.			N. C.			N. C.		
0° 30′	N. C.			N. C.			N. C.			N. C.			N. C.			N. C.			N. C.		
0° 45′	N. C.			N. C.			R. C.			R. C.			R. C.			R. C.			R. C.		
1° 00′	N. C.			N. C.			0.021			0.022			0.023			0.025			0.028		
1° 15′	N. C.			R. C.			0.026			0.026			0.030			0.033			0.037		
1° 30′	N. C.			0.021			0.031	200		0.032			0.037			0.041	250		0.046	275	
1° 45′	N. C.			0.025	175		0.036			0.037	225		0.043	250		0.048			0.054		
2° 00′	R. C.			0.028			0.040			0.043			0.049			0.055			0.062		
2° 15′	R. C.			0.031			0.045			0.048			0.055			0.062			0.070		
2° 30′	0.021			0.034			0.049			0.053			0.061			0.069	265		0.078	300	
2° 45′	0.023			0.037			0.053		300	0.058			0.067			0.075	280		0.085	315	400
3° 00′	0.025	150		0.040		250	0.057			0.063			0.072			0.081	300		0.091	335	
3° 15′	0.027			0.043			0.061			0.067	230		0.077	260		0.087	315		0.096	350	
3° 30′	0.029			0.046			0.065	205		0.072	245		0.082	275		0.090	325	400	0.098	360	450
3° 45′	0.031		250	0.049			0.069	215		0.076	255		0.086	285		0.095	340		0.100	380	
4° 00′	0.033			0.051			0.072	225		0.080	265		0.090	295	400	0.097	345				
4° 30′	0.037			0.056			0.078	240		0.083	270		0.093	305		0.099	350				
5° 00′	0.040			0.061			0.083	250		0.087	280		0.096	315							
5° 30′	0.043			0.066	185		0.088	260		0.091	295		0.098	320							
6° 00′	0.046			0.070	190		0.092	270		0.094	300	400									
6° 30′	0.050			0.074	200		0.096	280	350	0.096	305										
7° 00′	0.053			0.078	210		0.098	285		0.100	315										
7° 30′	0.056			0.081	215		0.099	290													
8° 00′	0.058			0.084	220	300	0.100	290													
8° 30′	0.061			0.087	225																
9° 00′	0.063			0.089	230																
10° 00′	0.068	160		0.094	235																
11° 00′	0.072	170		0.097	250																
12° 00′	0.076	175		0.099	255																
13° 00′	0.080	180		0.100	250																
14° 00′	0.083	190																			
15° 00′	0.086	195																			
16° 00′	0.089	200																			
17° 00′	0.091	200																			
18° 00′	0.093	205																			
19° 00′	0.095	210																			
20° 00′	0.097	215	300																		
21° 00′	0.098	215																			
22° 00′	0.099	215																			
23° 00′	0.099	215																			
24° 00′	0.100	220																			

D MAX = 24° 45′ | D MAX = 13° 15′ | D MAX = 8° 15′ | D MAX = 6° 30′ | D MAX = 5° 15′ | D MAX = 4° 15′ | D MAX = 3° 30′

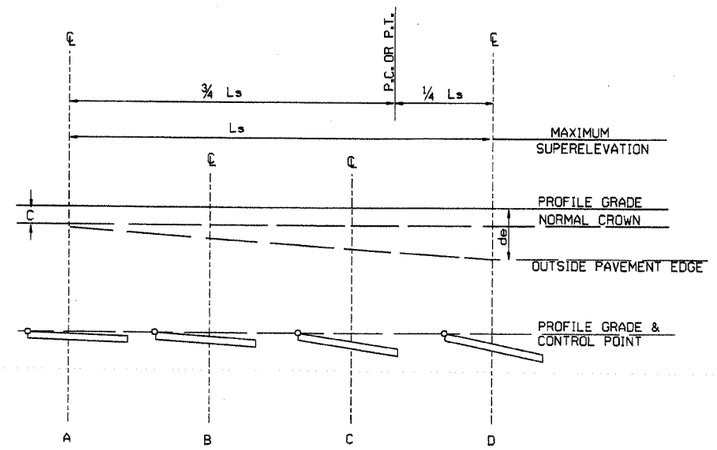

ONE-WAY TRAFFIC
INSIDE LANE

SUPERELEVATION FORMULA = $S = -\frac{L(de-C)}{Ls} - C$

ABBREVIATIONS

NC - NORMAL CROWN
RC - REVERSE CROWN, SUPERELEVATION AT NORMAL CROWN SLOPE
S - SUPERELEVATION
L - DISTANCE FROM BEGINNING OF SUPERELEVATION TRANSITION TO ANY POINT (FT.)
d - WIDTH OF PAVEMENT
e - MAXIMUM RATE OF SUPERELEVATION (FT. PER FT.)
Ls - LENGTH OF SUPERELEVATION TRANSITION (FT.)
C - NORMAL CROWN (FT.)

GENERAL NOTES

1. ON PAVEMENT WITH ONE-WAY TRAFFIC, THE SUPERELEVATION SHALL BE REVOLVED ON THE PROFILE GRADE POINT.
2. SUPERELEVATION VALUES SHOWN ON THE CROSS SECTIONS ARE VALUES (+) OR (-) TO BE ADDED OR SUBTRACTED FROM THE POINT OF CONTROL.
3. LENGTHS FOR Ls MAY BE ROUNDED IN MULTIPLES OF 25 FT. OR 50 FT. TO PERMIT SIMPLER CALCULATIONS.
4. MINIMUM Ls VALUES MAY BE USED FOR RAMPS; DESIRABLE VALUES SHALL APPLY TO MAIN LANES.
5. DIVIDED PAVEMENTS WIDER THAN 4 LANES SHALL HAVE ADDITIONAL TRANSITION LENGTHS AS FOLOWS:

6 LANE DIVIDED---------+20%
8 LANE DIVIDED---------+50%

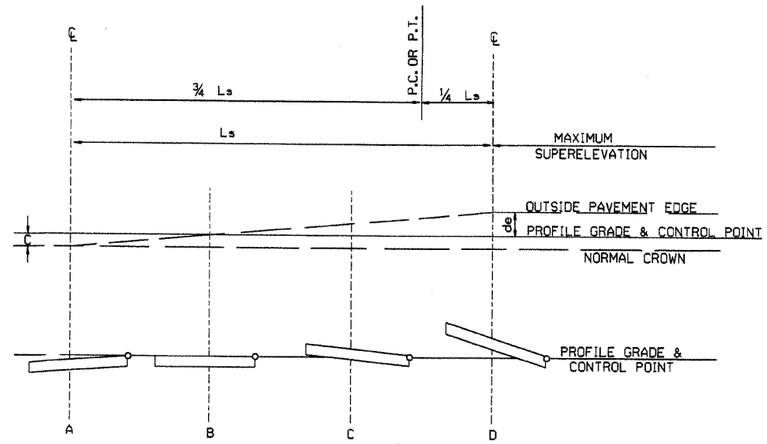

ONE-WAY TRAFFIC
OUTSIDE LANE

SUPERELEVATION FORMULA = $S = +\frac{L(de+C)}{Ls} - C$

DATE	REVISION	DATE FILMED
01-09-87	ISSUED	578-1-15-87

ARKANSAS STATE HIGHWAY COMMISSION

TABLES AND METHOD OF SUPERELEVATION FOR ONE-WAY TRAFFIC

STANDARD DRAWING SE-1

SUPERELEVATION TABLE FOR TWO - WAY TRAFFIC

DEGREE OF CURVE	30 MPH e	30 MPH Ls (FT) MINIMUM	30 MPH Ls (FT) DESIRABLE	40 MPH e	40 MPH Ls (FT) MINIMUM	40 MPH Ls (FT) DESIRABLE	50 MPH e	50 MPH Ls (FT) MINIMUM	50 MPH Ls (FT) DESIRABLE	55 MPH e	55 MPH Ls (FT) MINIMUM	55 MPH Ls (FT) DESIRABLE	60 MPH e	60 MPH Ls (FT) MINIMUM	60 MPH Ls (FT) DESIRABLE	70 MPH e	70 MPH Ls (FT) MINIMUM	70 MPH Ls (FT) DESIRABLE
0° 15′	N.C.			N.C.			N.C.			N.C.			N.C.			N.C.		
0° 30′	N.C.			N.C.			N.C.			N.C.			N.C.			N.C.		
0° 45′	N.C.			N.C.			R.C.			0.022			0.023			0.028		
1° 00′	N.C.			N.C.			0.021			0.026			0.030			0.037	275	300
1° 15′	N.C.			R.C.			0.026			0.032			0.037			0.046		
1° 30′	N.C.			0.021			0.031	200		0.037	225		0.043	250		0.054		
1° 45′	N.C.			0.025	175		0.036			0.043		300	0.049		300	0.062		
2° 00′	R.C.			0.028			0.040			0.048			0.055			0.070		
2° 15′	R.C.			0.031			0.045		250	0.053			0.061			0.078	300	350
2° 30′	0.021			0.034			0.049			0.058			0.067			0.085	315	
2° 45′	0.023			0.037		200	0.053			0.063			0.072			0.091	335	
3° 00′	0.025	150		0.040			0.057			0.067	230		0.077	260		0.096	350	400
3° 15′	0.027			0.043			0.061			0.072	245		0.082	275		0.098	360	
3° 30′	0.029			0.046			0.065	205		0.076	255		0.086	285		0.100	360	
3° 45′	0.031			0.049			0.069	215		0.080	265		0.090	295	350			
4° 00′	0.033			0.051			0.072	225		0.083	270		0.093	305				
4° 30′	0.037			0.056			0.078	240		0.087	280		0.096	315				
5° 00′	0.040			0.061			0.083	250		0.091	295	350	0.098	320				
5° 30′	0.043			0.066	185		0.088	260		0.094	300							
6° 00′	0.046			0.070	190		0.092	270		0.096	305							
6° 30′	0.050			0.074	200		0.095	280	300	0.100	315							
7° 00′	0.053			0.078	210		0.098	285										
7° 30′	0.056			0.081	215		0.099	290										
8° 00′	0.058			0.084	220		0.100	290										
8° 30′	0.061			0.087	225	250												
9° 00′	0.063			0.089	230													
10° 00′	0.068	160		0.094	235													
11° 00′	0.072	170		0.097	250													
12° 00′	0.076	175		0.099	250													
13° 00′	0.080	180		0.100	250													
14° 00′	0.083	190																
15° 00′	0.086	195																
16° 00′	0.089	200																
17° 00′	0.091	200																
18° 00′	0.093	205																
19° 00′	0.095	210																
20° 00′	0.097	215	250															
21° 00′	0.098	215																
22° 00′	0.099	215																
23° 00′	0.099	215																
24° 00′	0.100	220																

D MAX = 24° 45′ | D MAX = 13° 15′ | D MAX = 8° 15′ | D MAX = 6° 30′ | D MAX = 5° 15′ | D MAX = 3° 30′

ABBREVIATIONS

NC - NORMAL CROWN
RC - REVERSE CROWN, SUPERELEVATION AT NORMAL CROWN SLOPE
e - RATE OF SUPERELEVATION (FT. PER FT.)
Ls - LENGTH OF SUPERELEVATION TRANSITION (FT.)
L - DISTANCE FROM BEGINNING OF SUPERELEVATION TRANSITION TO ANY POINT (FT.)
d - WIDTH OF PAVEMENT (FT.) OR WIDTH OF SUBGRADE (FT.)
C - NORMAL CROWN (FT.)

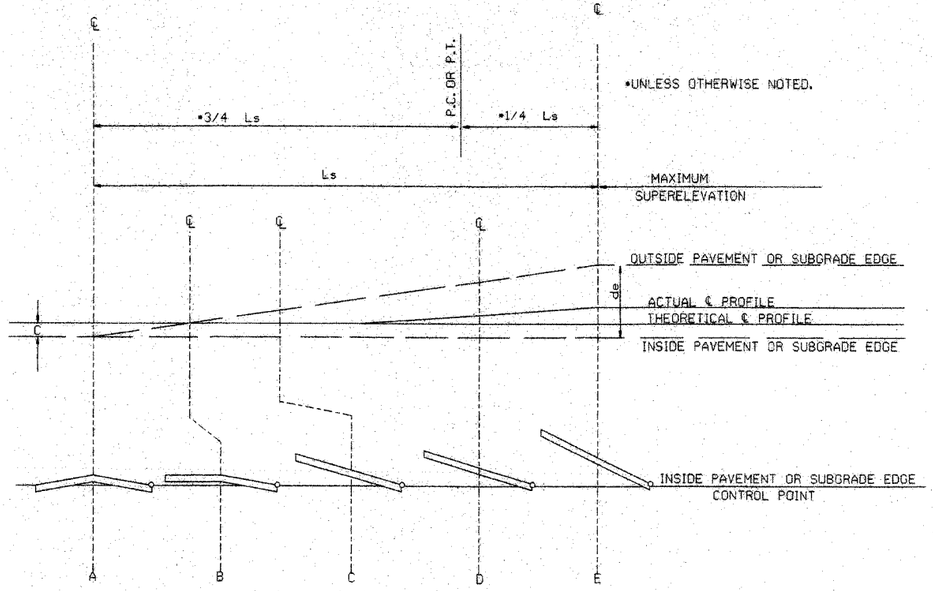

STANDARD METHOD WHEN SUPERELEVATION REVOLVES AROUND INNER SUBGRADE POINT OR INNER PAVEMENT EDGE

NOTE: MAINTAIN NORMAL CROWN ON INSIDE UNTIL SUPERELEVATION EXCEEDS 2C.

GENERAL NOTES

1. ON PAVEMENT WITH TWO-WAY TRAFFIC, THE SUPERELEVATION SHALL BE REVOLVED ON THE INSIDE PAVEMENT EDGE UNLESS OTHERWISE NOTED ON THE PLANS
2. SUPERELEVATION VALUES SHOWN ON THE CROSS SECTIONS ARE VALUES (+) OR (-) TO BE ADDED TO OR SUBTRACTED FROM THE POINT OF CONTROL.
3. LENGTHS FOR L MAY BE ROUNDED IN MULTIPLES OF 25 FT. OR 50 FT. TO PERMIT SIMPLER CALCULATIONS.
4. PAVEMENTS WIDER THAN 2 LANES SHALL HAVE ADDITIONAL TRANSITION LENGTHS AS FOLLOWS:

3 LANE UNDIVIDED - - - - - +20%
4 LANE UNDIVIDED - - - - - +50%
5 LANE UNDIVIDED - - - - - +80%
6 LANE UNDIVIDED - - - - - +100%

NOTE: MAINTAIN NORMAL CROWN ON INSIDE UNTIL SUPERELEVATION EXCEEDS 2C.

RATE OF SUPERELEVATION SHALL BE COMPUTED ON STRAIGHT LINE METHOD USING APPLICABLE Ls.

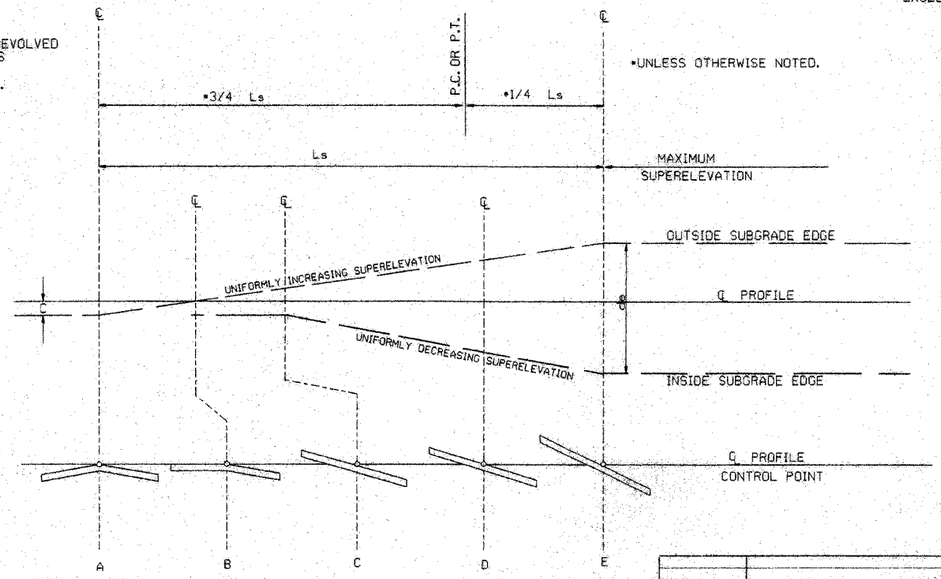

STANDARD METHOD WHEN SUPERELEVATION REVOLVES AROUND CENTER LINE

SUPERELEVATION FORMULA = $\frac{Lde}{Ls}$

DATE	REVISION	DATE FILMED
10-18-96	ADDED FORMULA	10-18-96
01-09-87	ISSUED	534-1-9-87

ARKANSAS STATE HIGHWAY COMMISSION

TABLES AND METHOD OF SUPERELEVATION FOR TWO-WAY TRAFFIC

STANDARD DRAWING SE-2

FILE STDSE2.DGN

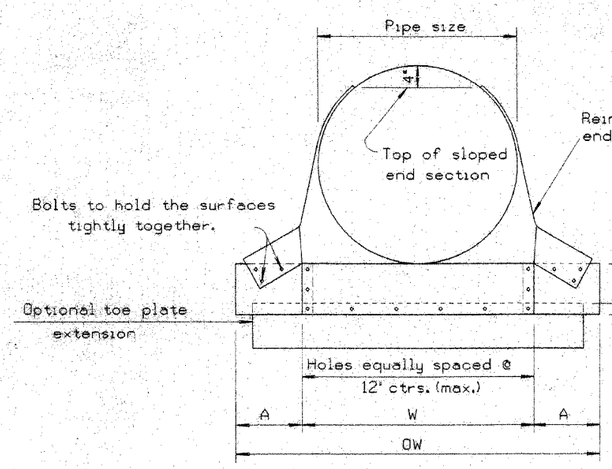

FRONT VIEW CIRCULAR PIPE

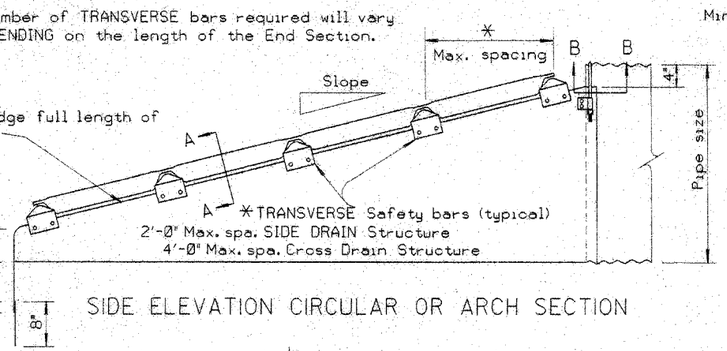

SIDE ELEVATION CIRCULAR OR ARCH SECTION

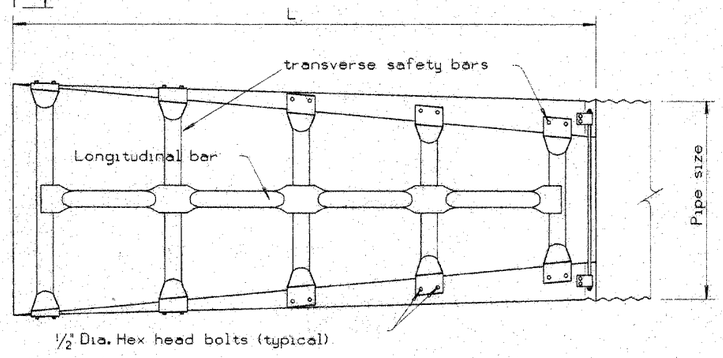

TOP VIEW CIRCULAR OR ARCH SECTION

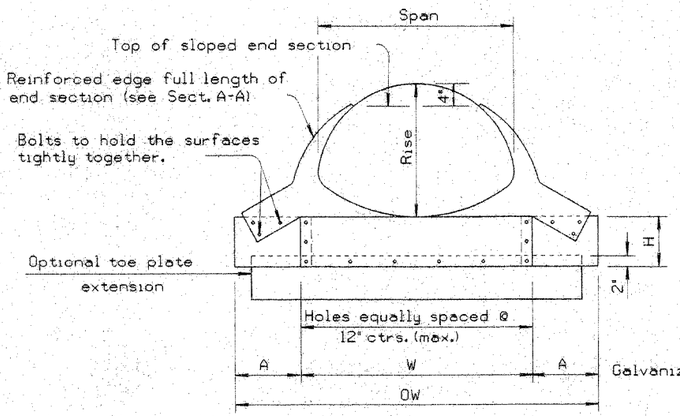

FRONT VIEW ARCH PIPE

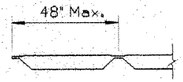

LONGITUDINAL BAR DETAIL

Note: Bars shown are for Cross Drain Structures.

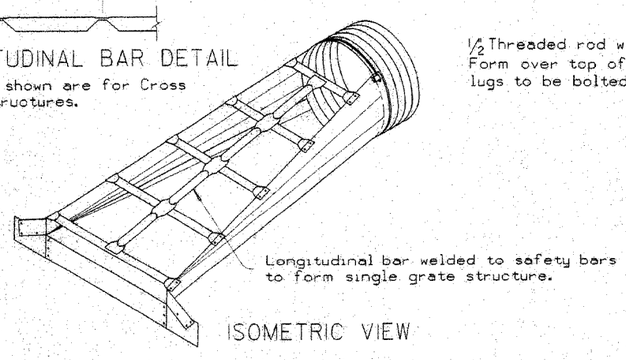

ISOMETRIC VIEW

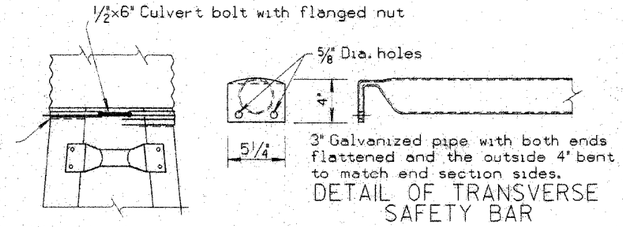

DETAIL OF TRANSVERSE SAFETY BAR

TYPE #1 CONNECTOR DETAIL

For 15" thru 24" pipe

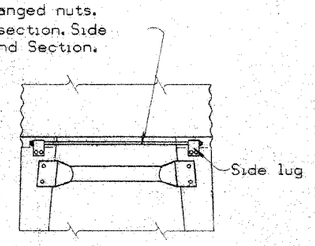

TYPE #2 CONNECTOR DETAIL

For 30" and larger round pipes & 21"x15" thru 64"x43" arch pipes

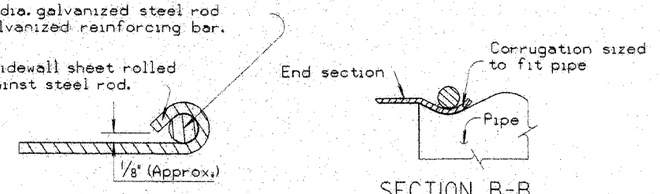

SECTION A-A

SECTION B-B

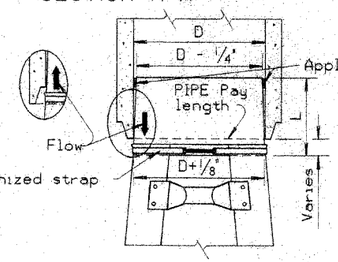

D - 12" to 24" L = 12"
D - 30" & Larger L = 16"

Note: Metal end section to be firmly wedged INTO PIPE END BEFORE BACKFILLING PIPE.

(Tapered sleeve to be 12 Ga. smooth galvanized steel in accordance with AASHTO M 218.)

STEEL END SECTION FOR CONCRETE PIPE
(Alternate for Concrete End Section)

GENERAL NOTES

End sections shall be fabricated from galvanzied steel meeting the requirements of SUBSECTION 606.02(c)(1) OF THE STANDARD SPECIFICATIONS.
When specified optional toe plate extension shall be punched and bolted to end section apron lip with ⅜" diameter galvanized bolts.
Steel for toe plate extension shall be same gauge as end section.
Dimensions shall be overall width less 6" by 8" high.
Attachment to circular pipes 15" through 24" diameter shall be made with Type #1 straps. All other sizes shall be attached with Type #2 rods and lugs.
Safety bars shall be fabricated from steel pipe meeting the requirements of ASTM A-53 Schedule 40 Specifications. Safety bars shall be hot dipped galvanized after fabrication.

All work and materials required for construction and installation of safety end section shall be included in the PRICE BID EACH FOR SAFETY END SECTIONS FOR PIPE CULVERTS.
Longitudinal and transverse bars will be required for cross drain structures when span is greater than 30". no safety bars will be REQUIRED FOR 30" SPAN OR LESS WHEN USED ON CROSS DRAIN STRUCTURES.
Transverse bars will be required for all sizes of side drain structures.
Class 1 safety end sections shall be end sections with a 4:1 slope.
Class 2 safety end sections shall be end sections with a 6:1 slope.

SAFETY END SECTIONS FOR ARCH PIPES													
Equv. Dia.	Nom. W.W. Area Sq Ft	Pipe Arch Span (In.)	Pipe Arch Rise (In.)	Min. Gauge End Sect.	Dimensions in Inches A	H	W	OW	Slope	L (In)	Slope	L (In)
18"	1.6	21	15	16	8	6	27	43	4:1	20	6:1	30
21"	2.2	24	18	16	8	6	30	46	4:1	32	6:1	48
24"	2.9	28	20	16	8	6	34	50	4:1	40	6:1	60
30"	4.5	35	24	14	12	9	41	65	4:1	56	6:1	84
36"	5.5	42	29	12	12	9	48	72	4:1	76	6:1	114
42"	8.9	49	33	12	16	12	55	87	4:1	92	6:1	138
48"	11.6	57	38	12	16	12	63	95	4:1	112	6:1	168
54"	14.7	64	43	12	16	12	70	102	4:1	132	6:1	198
60"	18.1	71	47	12	16	12	77	109	4:1	148	6:1	222
72"	26.0	83	57	12	16	12	89	121	4:1	188	6:1	282

SAFETY END SECTIONS FOR CIRCULAR PIPES								
Pipe Dia.	Min. Gauge Ends	Dimensions in Inches A 1"Tol	H 1"Tol	W 2"Tol	OW	L Dimensions in Inches Slope	L	Slope	L
15"	16	8	6	21	37	4:1	20	6:1	30
18"	16	8	6	24	40	4:1	32	6:1	48
21"	16	8	6	27	43	4:1	44	6:1	66
24"	16	8	6	30	46	4:1	56	6:1	84
30"	12	12	9	36	60	4:1	80	6:1	120
36"	12	12	9	42	66	4:1	104	6:1	156
42"	12	16	12	48	80	4:1	128	6:1	192
48"	12	16	12	54	86	4:1	152	6:1	228
60"	12	16	12	60	92	4:1	176	6:1	264
72"	12	16	12	66	98	4:1	200	6:1	300

DATE	REVISION	DATE FILMED
10-18-96	REVISED ASTM REF. TO AASHTO	10-18-96
8-15-91	DRAWN & ISSUED	

ARKANSAS STATE HIGHWAY COMMISSION

SAFETY END SECTION FOR CIRCULAR AND ARCH PIPES

STANDARD DRAWING SES-1

FILE stdsesi.dgn

R1-1



STANDARD 30"X30"
EXPRESSWAY 36"X36"
SPECIAL 48"X48"

R1-2

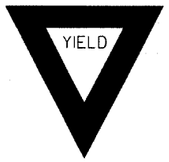

STD. 36"X36"X36"
EXPWY. 48"X48"X48"
FWY. 60"X60"X60"

R2-1

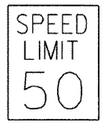

STD. 24"X30"
EXPWY. 36"X48"
FWY. 48"X60"

R2-5A

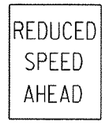

STD. 24"X30"
EXPWY. 36"X48"
FWY. 48"X60"

R2-5C



STD. 24"X30"
EXPWY. 36"X48"
FWY. 48"X60"

R4-1



STD. 24"X30"
EXPWY. 36"X48"
FWY. 48"X60"

R4-2



STD. 24"X30"
EXPWY. 36"X48"
FWY. 48"X60"

R5-1



STD. 30"X30"
EXPWY. 36"X36"
SPECIAL 48"X48"

R11-2



48"X30"

R11-3A

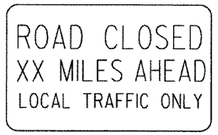

60"X30"

R11-4

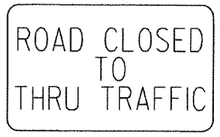

60"X30"

RSP-1



48"X30"

W1-1

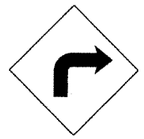

STD. 36"X36"
FWY. 48"X48"

W1-2



STD. 36"X36"
FWY. 48"X48"

W1-3



STD. 48"X48"

W1-4



STD. 48"X48"

W1-6

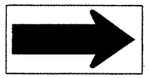

STD. 48"X24"
SPECIAL 60"X30"

W1-8



STD. 18"X24"
SPECIAL 24"X30"
EXPWY. 30"X36"
FWY. 36"X48"

W3-1

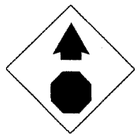

STD. 36"X36"
SPECIAL 48"X48"

W3-2



STD. 36"X36"
SPECIAL 48"X48"

W4-2

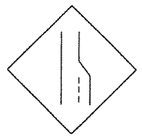

STD. 36"X36"
FWY. 48"X48"

W5-1



STD. 36"X36"
SPECIAL 48"X48"

W6-3



EXPWY. 36"X36"
SPECIAL 48"X48"

W8-7



EXPWY. 36"X36"
FWY. 48"X48"

W9-2



STD. 36"X36"
FWY. 48"X48"

W13-1



STD. 24"X24"

W20-1



STD. 48"X48"

W20-2

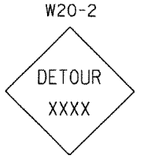

STD. 48"X48"

W20-3



STD. 48"X48"

W20-4



STD. 48"X48"

W20-5



STD. 48"X48"

W20-7a



STD. 36"X36"
FWY. 48"X48"

W21-2



STD. 30"X30"
SPECIAL 36"X36"

W21-5

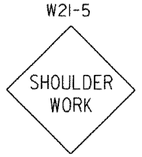

STD. 30"X30"
SPECIAL 36"X36"

W24-1

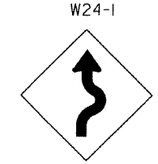

STD. 36"X36"

W1-4b



STD. 48"X48"

R56-1



STD. 18"X18"

W8-11



STD. 36"X36"
FWY. 48"X48"

W8-9



STD. 36"X36"
FWY. 48"X48"

G20-1



60"X24"

G20-2

48"X24"

OM-3L OM-3R

12"X36"

M4-9

STD. 30"X24"
SPECIAL 48"X36"
SPECIAL 60"X48"

M4-10

48"X18"

R55-1

FINES DOUBLE
IN WORK ZONES *

WHEN WORKERS
ARE PRESENT **

36"X60"

* USE 6" C LETTERS
** USE 4" D LETTERS

ADVANCE DISTANCES
(XXXX)

500 FT	½ MILE
1000 FT	¾ MILE
1500 FT	1 MILE
	AHEAD

GENERAL NOTES:

1. ALL TRAFFIC CONTROL DEVICES USED ON ROAD CONSTRUCTION SHALL CONFORM TO THE MANUAL ON UNIFORM TRAFFIC CONTROL DEVICES, LATEST EDITION, AND TO THE STANDARD HIGHWAY SIGNS, LATEST EDITION, OR AS APPROVED BY THE FEDERAL HIGHWAY ADMINISTRATION.
2. TRAFFIC CONTROL DEVICES SHALL BE SET UP JUST BEFORE THE START OF CONSTRUCTION OPERATIONS AND SHALL BE PROPERLY MAINTAINED DURING THE TIME SUCH CONDITIONS EXIST. THEY SHALL REMAIN IN PLACE ONLY AS LONG AS NEEDED AND REMOVED THEREAFTER.
3. EXISTING SIGNS AND CONSTRUCTION SIGNS SHALL BE KEPT IN PROPER POSITION, AND BE CLEAN AND LEGIBLE AT ALL TIMES. SIGNS THAT DO NOT APPLY TO EXISTING CONDITIONS SHALL BE REMOVED. SIGNS THAT ARE DAMAGED, DEFACED, OR THAT ACCUMULATE DIRT DURING CONSTRUCTION SHALL BE CLEANED, REPAIRED, OR REPLACED.
- 4. SIGNS ARE USUALLY MOUNTED ON A SINGLE POST, ALTHOUGH THOSE WIDER THAN 36" OR LARGER THAN 10 SQ. FT. SHALL BE MOUNTED ON TWO POSTS OR ABOVE A TYPE III BARRICADE.
- 5. SIGN POSTS DIRECT BURIED IN SOIL SHALL BE 2 LB. MINIMUM CHANNEL POST OR 4"x4" WOOD POSTS. CHANNEL POSTS SHALL BE PAINTED GREEN. WOOD POSTS SHALL BE PAINTED WHITE. ALL POSTS SHALL BE NEATLY CONSTRUCTED, AND SHALL BE REPLUMBED, CLEANED, OR REPAIRED AS NEEDED FOR THE DURATION OF THE JOB. THERE SHALL NOT BE MORE THAN 2 POSTS IN A 7' PATH FOR WOOD OR CHANNEL POSTS. ANY CHANNEL POST SPLICE SHALL BE IN ACCORDANCE WITH STANDARD DRAWING TC-3.
6. POST MOUNTED SIGNS IN RURAL AREAS SHALL BE CONSTRUCTED WITH THE NEAR EDGE OF THE SIGN FROM 6 TO 12 FEET FROM THE PAVEMENT EDGE. SIGNS IN URBAN AREAS AND BARRICADE MOUNTED SIGNS SHALL BE MOUNTED A MINIMUM OF 2 FEET FROM THE PAVEMENT EDGE.
7. ALL POST AND BARRICADE MOUNTED SIGNS MOUNTED IN URBAN AREAS SHALL BE MOUNTED A MINIMUM DISTANCE OF 7' FROM THE BOTTOM OF THE SIGN TO THE ROADWAY SURFACE. ALL POST AND BARRICADE MOUNTED SIGNS MOUNTED IN RURAL AREAS SHALL BE MOUNTED A MINIMUM DISTANCE OF 7' FROM THE BOTTOM OF THE SIGN TO THE ROADWAY SURFACE, EXCEPT A MINIMUM OF 6' SHALL BE USED WHEN MOUNTING AN ADVISORY SIGN BELOW A WARNING SIGN. TEMPORARY SIGNS MAY BE MOUNTED ON PORTABLE SUPPORTS FOR INTERMEDIATE TERM STATIONARY WORK CONDITIONS. THE SIGNS MINIMUM MOUNTING HEIGHT SHALL BE 5'. RETROREFLECTIVE DEVICES SHALL BE USED. TEMPORARY SIGNS MAY BE MOUNTED ON PORTABLE SUPPORTS FOR SHORT-TERM, SHORT DURATION, AND MOBILE CONDITIONS. THEY SHALL BE NO LESS THAN ONE (1) FOOT ABOVE THE TRAVELED WAY. LONG-TERM STATIONARY SIGNS SHALL BE DIRECT BURIED IN SOIL, UNLESS CONDITIONS NECESSITATE THE USE OF PORTABLE SIGNS, OR AS APPROVED BY THE ENGINEER. CONCRETE PADS, CONCRETE OR ROCK BALLAST, OR OTHER SOLID MATERIALS SHALL NOT BE UTILIZED WITH PORTABLE SIGN SUPPORTS.
8. FLAGGERS SHALL USE REFLECTORIZED STOP-SLOW PADDLES. FLAGS MAY BE USED ONLY FOR EMERGENCY SITUATIONS.
9. MOST OF THE SIGNS SHOWN ARE ORIENTED TO THE RIGHT. HOWEVER, THIS DOES NOT PRECLUDE THE USE OF MIRROR IMAGES OF THESE SIGNS WHERE THE REVERSE ORIENTATION MIGHT BETTER CONVEY TO MOTORISTS THE PROPER DIRECTION OF MOVEMENT.
10. R55-1 SIGNS SHALL BE PLACED AT LEAST 1500' BUT NOT MORE THAN 1 MILE IN ADVANCE OF THE WORK ZONE. IF A SPEED LIMIT REDUCTION IS IN EFFECT, THE SIGN SHALL BE PLACED A MINIMUM OF 500' IN ADVANCE OF THE "REDUCED SPEED AHEAD" SIGN.

- NOTE: SUPPORTS FOR SIGNS, BARRICADES, AND VERTICAL PANELS THAT ARE DIFFERENT FROM THE REQUIREMENTS SHOWN IN NOTES 4 & 5, BUT MEET THE REQUIREMENTS OF NCHRP-350 OR MANUAL FOR ASSESSING SAFETY HARDWARE (MASH), WILL BE ACCEPTED. COMPLIANCE WITH THE REQUIREMENTS OF NCHRP-350 OR MANUAL FOR ASSESSING SAFETY HARDWARE (MASH) IS REQUIRED FOR ALL PROJECTS.

DATE	REVISION	FILMED
12-15-11	REVISED W24-1	
11-17-10	DELETED W8-9a & ADDED W8-9	
10-15-09	ADDED REFERENCE TO MASH & ADDED SIGN W24-1	
4-17-08	REVISED SIGN DESIGNATIONS	
11-18-04	REVISED NOTES	
10-9-03	REVISED NOTE 1	
11-16-01	REVISED NOTE 7	
9-28-00	REVISED NOTE	
11-18-98	ADDED NOTE	
6-26-97	REVISED NOTE 5	
4-03-97	REVISED NOTE 5	
10-18-96	ADDED CONTROLLED ACCESS HWY. SIGN & TO NOTE 7	
10-12-95	ADDED R55-1	
6-8-95	REVISED TO CORRECT SIGN ILLUSTRATIONS	6-8-95
2-2-95	REVISED PER PART VI, MUTCD SEPT. 3, 1993	
8-15-91	DRAWN AND PLACED IN USE	

ARKANSAS STATE HIGHWAY COMMISSION

STANDARD TRAFFIC CONTROLS FOR HIGHWAY CONSTRUCTION

STANDARD DRAWING TC-1

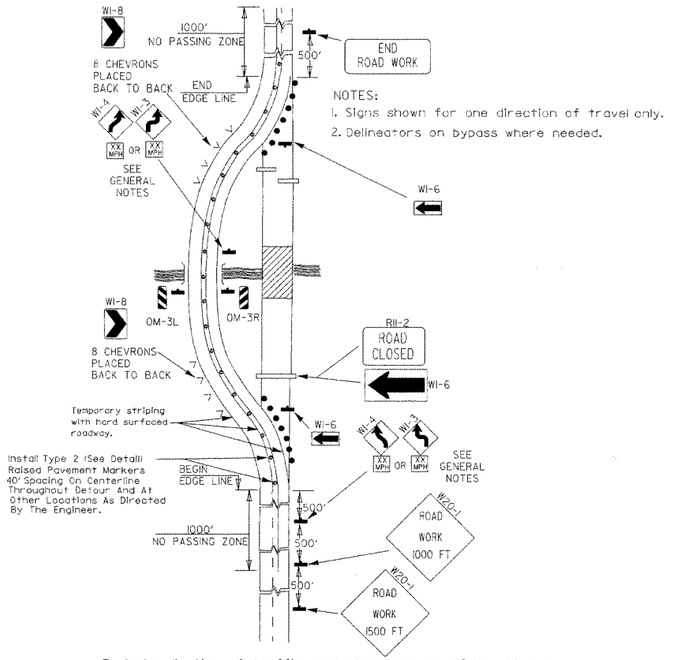

NOTES:
1. Signs shown for one direction of travel only.
2. Delineators on bypass where needed.

(A) Typical application of traffic control devices on a 2-lane highway where the entire roadway is closed and a bypass detour is provided.

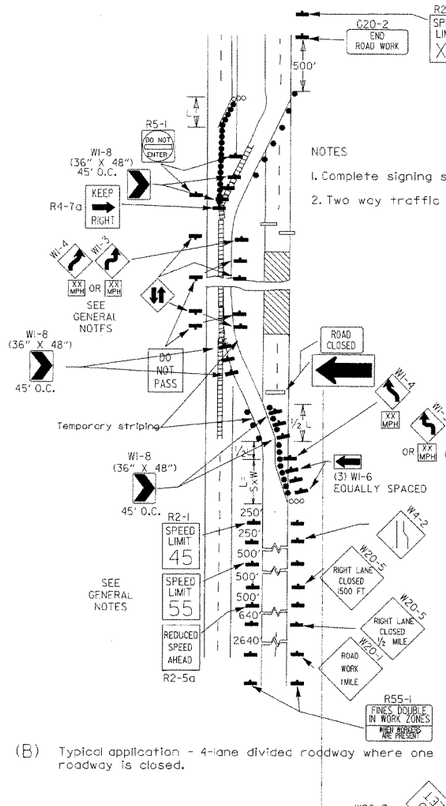

NOTES
1. Complete signing shown only in crossover direction.
2. Two way traffic separated with positive barrier.

(B) Typical application - 4-lane divided roadway where one roadway is closed.

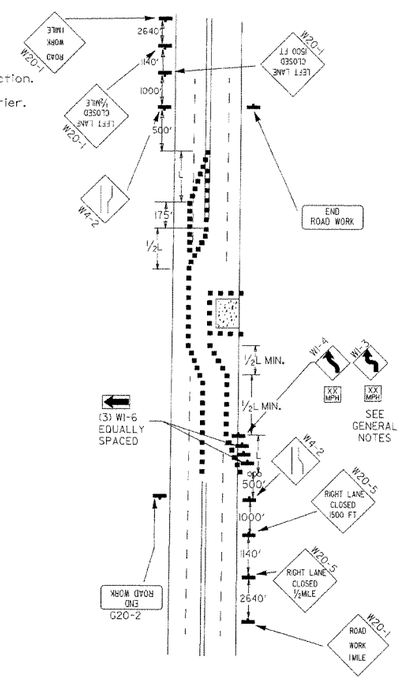

(C) Typical application - 4-lane undivided roadway where half of the roadway is closed.

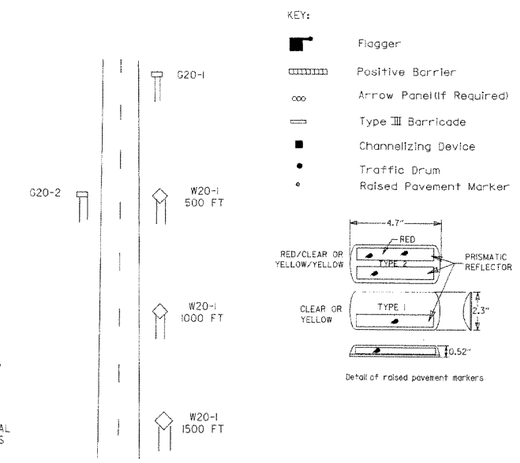

Typical advance warning sign placement

Taper formulae:

L=SxW for speeds of 45mph or more.

$L = \frac{WS^2}{60}$ for speeds of 40mph or less.

Where:
L= Minimum length of taper.
S= Numerical value of posted speed limit prior to work or 85th percentile speed.
W= Width of offset.

GENERAL NOTES:

1. Advisory speed posted on W1-3 or W1-4 curve warning signs to be determined at site. Use W1-4 when speed is greater than 30mph and W1-3 when 30mph or less.
2. When the existing speed limit is 55mph and the plans require a speed limit of 45mph, the R2-1(55) shall be omitted and the R2-5A shall be installed at that location. Additional R2-1 45mph speed limit signs shall be installed at a maximum of 1mile intervals. At the end of the work area a R2-1(xx) shall be installed to match original speed limit.
3. When the existing speed limit is 65mph and the plans require a speed limit of 55mph, the R2-1(45) shall be omitted. Additional R2-1 55mph speed limit signs shall be installed at a maximum of 1mile intervals. At the end of the work area a R2-1(xx) shall be installed to match original speed limit.
4. The maximum spacing between channelizing devices in a taper should be approximately equal in feet to the speed limit. Beyond the taper, maximum spacing shall be two times the speed limit, or as directed by the Engineer.
5. Warning lights and/or flags may be mounted to signs or channelizing devices at night as needed.
6. Pavement markings no longer applicable which might create confusion in the minds of vehicle operators shall be removed or obliterated as soon as practicable.
7. Trailer mounted devices such as arrow panels and portable changeable message signs shall be delineated by affixing conspicuity material in a continuous line on the face of the trailer. When placed on or adjacent to the shoulder and not behind a positive barrier, these devices shall be delineated by placing five (5) traffic drums, equally spaced along the traffic side of the device.

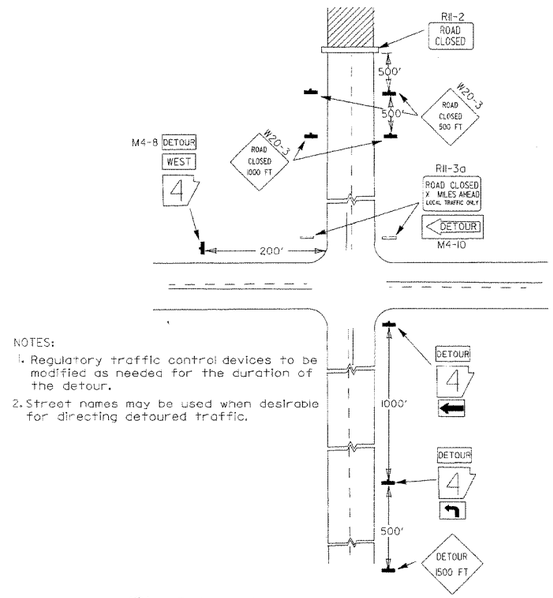

NOTES:
1. Regulatory traffic control devices to be modified as needed for the duration of the detour.
2. Street names may be used when desirable for directing detoured traffic.

(D) Typical application - roadway closed beyond detour point.

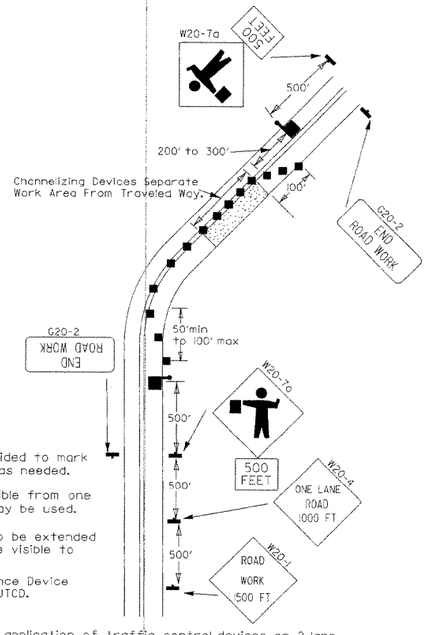

NOTES:
1. Flood lights should be provided to mark flagger stations at night as needed.
2. If entire work area is visible from one station, a single flagger may be used.
3. Channelizing devices are to be extended to a point where they are visible to approaching traffic.
4. Automated Flagger Assistance Device (AFAD) optional. Refer to MUTCD.

(E) Typical application of traffic control devices on 2-lane highway where one lane is closed and flagging is provided.

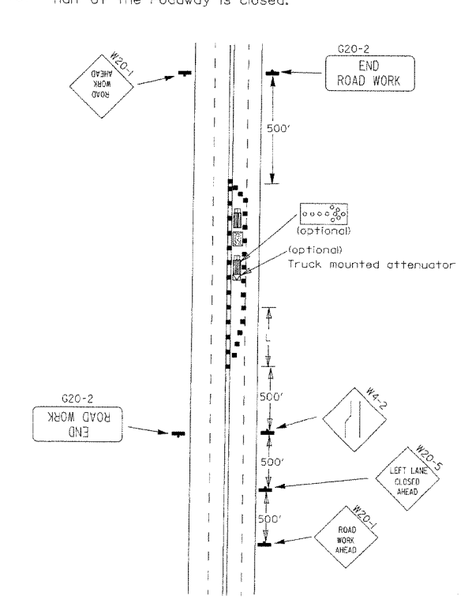

(F) Typical application - 4-lane undivided roadway with inside lane closed.

3-11-10	ADDED (AFAD)	
11-20-08	REVISED SIGN DESIGNATIONS	
11-18-04	ADDED GENERAL NOTE	
10-18-96	ADDED R55-1	
4-26-96	CORRECTED (a) BEHIND G20-2	
6-8-95	CORRECTED SIGN IDENT. ON W1-4A	6-8-95
2-2-95	REVISED PER PART VI, MUTCD, SEPT. 3, 1993	
8-15-91	DRAWN AND PLACED IN USE	
DATE	REVISION	FILMED

ARKANSAS STATE HIGHWAY COMMISSION

STANDARD TRAFFIC CONTROLS FOR HIGHWAY CONSTRUCTION

STANDARD DRAWING TC 2

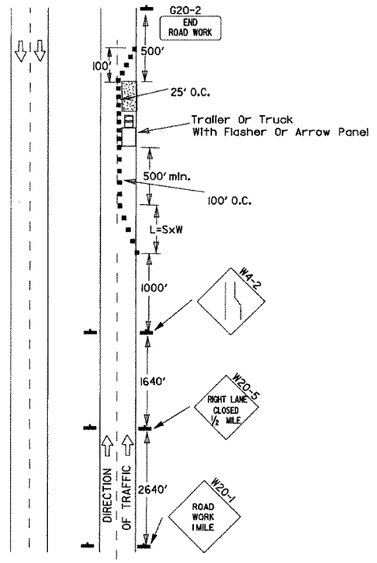

(A) Typical application - daytime maintenance operations of short duration on a 4-lane divided roadway where half of the roadway is closed.

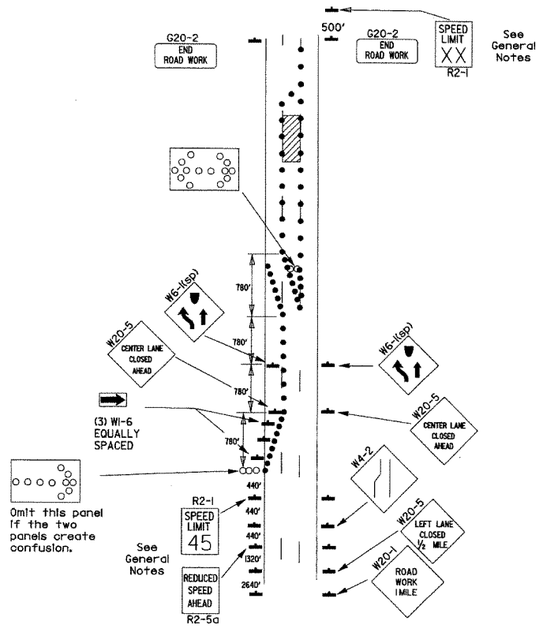

(B) Typical application - 3-lane oneway roadway where center lane is closed.

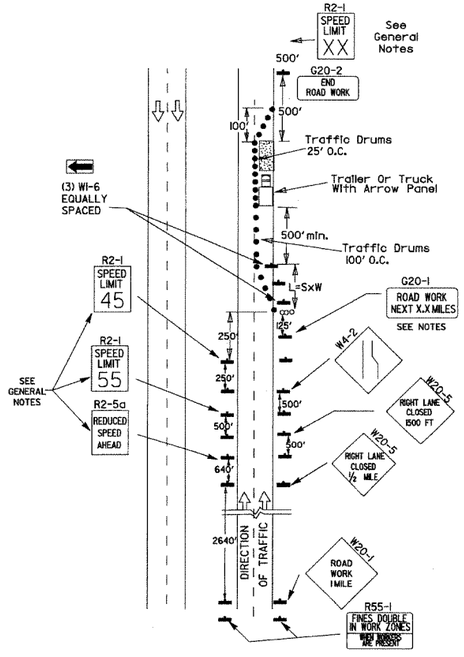

(C) Typical application - construction operations of intermediate to long term duration on a 4-lane divided roadway where half of the roadway is closed.

KEY:

ooo Arrow Panel (If Required)

■ Channelizing Device

● Traffic drum

GENERAL NOTES:

1. A speed limit reduction may be implemented ONLY when designated in the plan or when recommended by the Roadway Design Division.
2. When the existing speed limit is 55mph and the plans require a speed limit of 45mph, the R2-1(55) shall be omitted and the R2-5A shall be installed at that location. Additional R2-1 45mph speed limit signs shall be installed at a maximum of 1 mile intervals. At the end of the work area a R2-1(XX) shall be installed to match original speed limit.
3. When the existing speed limit is 65mph and the plans require a speed limit of 55mph, the R2-1(45) shall be omitted. Additional R2-1 55mph speed limit signs shall be installed at a maximum of 1 mile intervals. At the end of the work area a R2-1(XX) shall be installed to match original speed limit.
4. The maximum spacing between channelizing devices in a taper should be approximately equal in feet to the speed limit. Beyond the taper, maximum spacing shall be two times the speed limit or as directed by the Engineer.
5. Warning lights and/or flags may be mounted to signs or channelizing devices at night as needed.
6. Pavement markings no longer applicable which might create confusion in the minds of vehicle operators shall be removed or obliterated as soon as practicable.
7. The G20-1 sign will be required on jobs of over two miles in length. When the lane closure is not at the beginning of the project, the G20-1 sign shall be erected 125' in advance of the job limit. Additional W20-1 (1 MILE) signs are not required in advance of lane closures that begin inside the project limits.
8. Flaggers shall use STOP/SLOW paddles for controlling traffic through work zones. Flags may be used only for emergency situations.
9. All plastic drums and cones shall meet the requirements of NCHRP-350 or Manual For Assessing Safety Hardware (MASH).
10. Trailer mounted devices such as arrow panels and portable changeable message signs shall be delineated by affixing conspicuity material in a continuous line on the face of the trailer. When placed on or adjacent to the shoulder and not behind a positive barrier, these devices shall be delineated by placing five (5) traffic drums, equally spaced along the traffic side of the device.

Channelizing devices

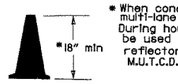

* When cones are used on freeways and multi-lane highways, they shall be 28" min. During hours of darkness, 28" cones shall be used on all roadways, and shall be reflectorized in accordance with the M.U.T.C.D.

CONES

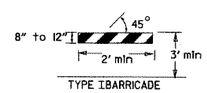

TYPE I BARRICADE

PLASTIC DRUM

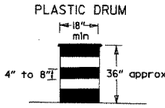

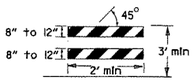

TYPE II BARRICADE

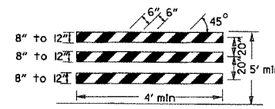

TYPE III BARRICADE

NOTE:
For all road closures, the Type III barricades shall be of sufficient length to extend across entire roadway.

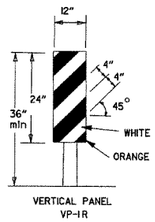

VERTICAL PANEL
VP-1R

VERTICAL PANEL PLACEMENT

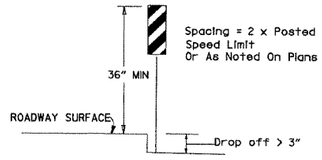

TRAFFIC CONTROL DEVICES
FOR
VERTICAL PAVEMENT DIFFERENTIALS

VERTICAL DIFFERENTIAL	LOCATIONS	TRAFFIC CONTROL
1" to 3"	Centerline, lane lines	W8-11
1" to 3"	Edge of shoulder	W8-9
Greater than 3"	Lane lines	Standard lane closure required
Greater than 3"	Edge of traveled lane	*RSP-1 and vertical panels, drums or concrete barrier
Greater than 3"	Edge of shoulder	*Vertical panels, drums or concrete barrier

* When shown on the plans concrete barrier will be used.

When the shoulder area is used as part of the traveled lane and there is insufficient width to place drums on the remaining shoulder width, then vertical panels shall be used.

FLAG

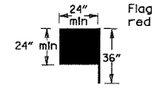

Flag shall be of good grade red material

STOP SLOW PADDLE

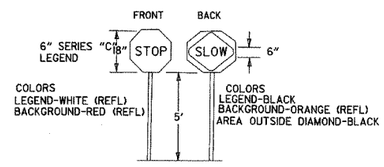

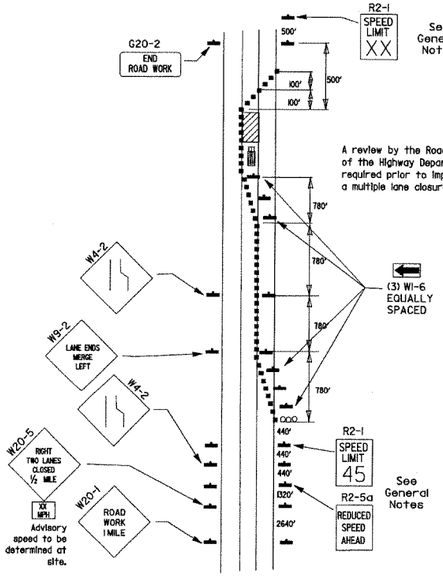

(D) Typical application - closing multiple lanes of a multilane highway.

NOTES: USE SPLICES ONLY WHEN NECESSARY FOR INSTALLATION. TYPICAL INSTALLATION SHOULD HAVE NO SPLICES (SEE STD. DRAWING NO. SHS-2)

NORMAL INSTALLATIONS WILL REQUIRE 1/4" DIA. BOLTS TO MOUNT SIGNS TO POST AND 5/16" DIA. BOLTS TO ASSEMBLE THE VARIOUS POST SUPPORTS. EACH OF THESE BOLTS SHALL BE CARRIAGE BOLTS.

SIGN POSTS SHALL BE PAINTED GREEN; SIGNS SHALL NOT BE PAINTED, AND ALL SIGN POSTS SHALL BE PLUMB.

DETAIL OF SPLICES

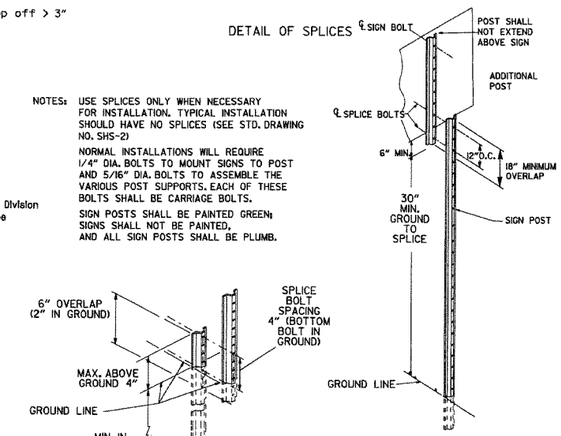

DATE	REVISION	FILMED
10-15-09	ADDED REFERENCE TO MASH	
11-20-08	REVISED SIGN DESIGNATIONS	
11-18-04	ADDED NOTE	
10-1-98	ADDED NOTE	
4-03-97	ADDED (SP) TO W6-1 & REVISED TRAFFIC CONTROL DEVICES NOTE	
10-18-96	ADDED R55-1	
10-12-95	MOVED UPPER SPLICE	
6-8-95	REVISED SPLICE DETAIL, TEXT	6-8-95
2-2-95	REVISED PER PART VI, MUTCD, SEPT. 3, 1993	
8-15-91	DRAWN AND PLACED IN USE	

ARKANSAS STATE HIGHWAY COMMISSION

STANDARD TRAFFIC CONTROLS FOR HIGHWAY CONSTRUCTION

STANDARD DRAWING TC-3

REINFORCING BAR TABLE PER BARRIER UNIT

MARK	LOCATION	BAR SIZE	(NO. BARS)	SKETCH
H-1	HORIZONTAL IN BARRIER TIED INSIDE V-1 BARS	#5	(6)	19'-3"
H-2	CENTERED ABOVE DRAIN SLOTS LONG. & TRANSVERSELY	#5	(6)	6'-6"
H-3	TIED ABOVE H-1 BARS TO SUPPORT H-2, TIED TO V-1	#4	(2)	1'-6"
S-1	OVER LIFT HOLES	#4	(2)	2'-5", LIFTING HOLE, 90°, 3 3/8" R
S-2	HORIZ. AROUND SLOTS BETWEEN V-1'S @ DRAIN SLOTS	#4	(2)	1 1/2" R, SLOTS, 7", 1'-6", 1" MIN. CLEAR TO BAR; 5'-1" BAR W/(4) 1 1/2" R BENDS & MIN. 1'-0" OVERLAP
V-1	VERTICAL IN BARRIER(3) EACH END & (2) AT EACH DRAIN SLOTS	#5	(16)	TOTAL LENGTH 4'-9", 2 3/16" R, 12°, ±9 1/2", 2'-1 3/8", 4 3/8"

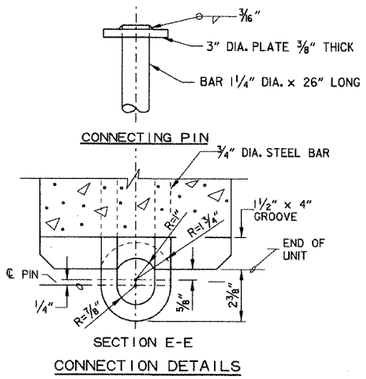

CONNECTION DETAILS

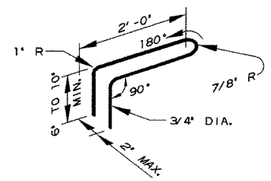

CONNECTION LOOP

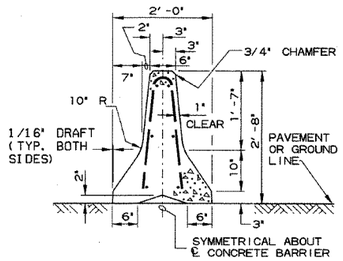

SECTION A-A

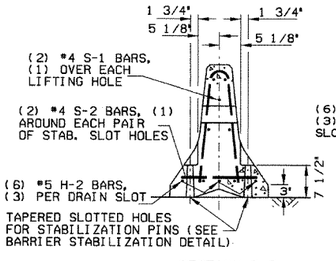

SECTION B-B

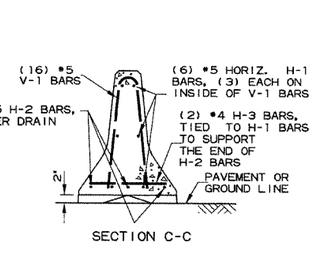

SECTION C-C

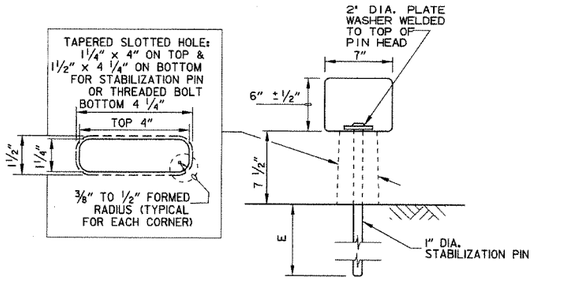

BARRIER STABILIZATION DETAIL

ROADWAY SECTION

(E) 4" - Concrete Pavement
8" - Asphalt Pavement
12" - Shoulder Areas

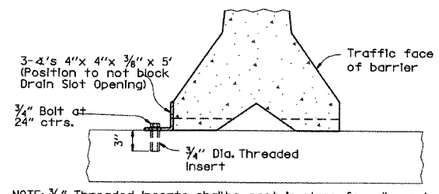

NOTE: 3/4" Threaded Inserts shall be cast in place for all new bridge decks and drilled and grouted for existing bridge decks to be retained. Inserts shall have a minimum ultimate load capacity of 8000 lbs. in tension. After removal of barrier, bolts, and angles, the inserts shall be filled with approved non-shrink epoxy.

BARRIER STABILIZATION DETAIL

BRIDGE DECKS

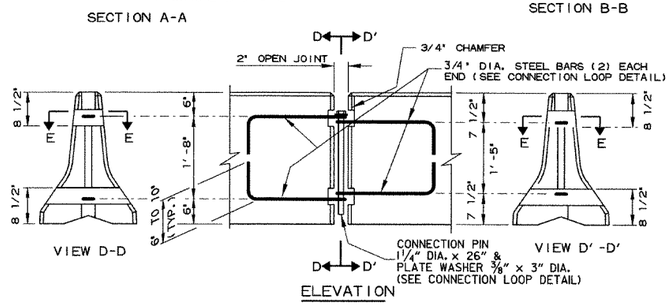

VIEW D-D

VIEW D'-D'

ELEVATION

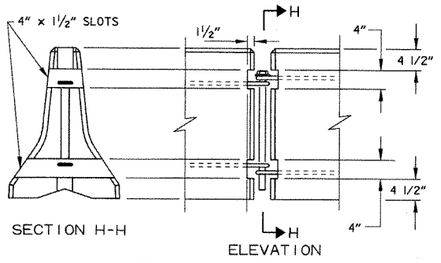

SECTION H-H

ELEVATION

BARRIER REMOVAL SLOT DETAILS

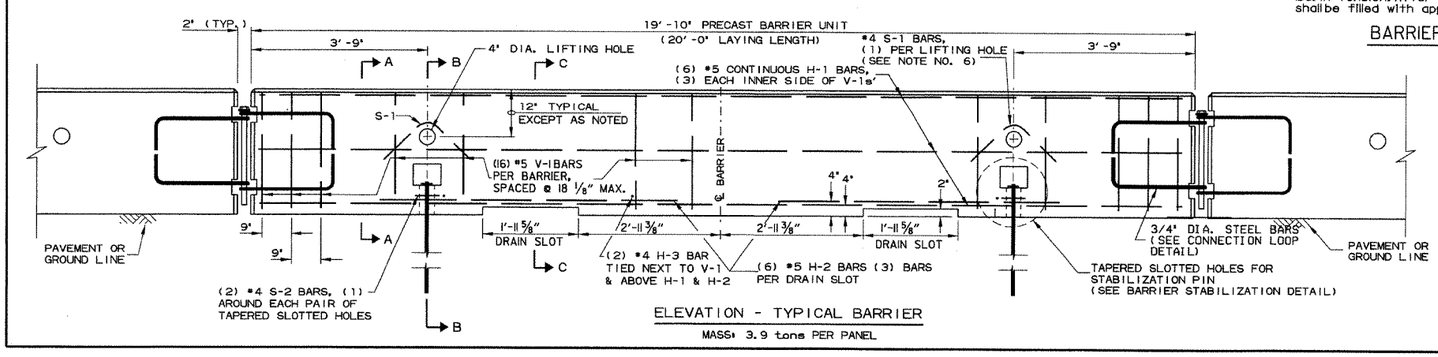

ELEVATION - TYPICAL BARRIER

MASS: 3.9 tons PER PANEL

General Notes

1. The contractor shall furnish the Precast Concrete Barrier Units and shall be responsible for the manufacture, shipment, storage, placement and removal. At the completion of the project, the precast units will remain the property of the contractor.

2. Materials shall meet the following minimum requirements;
   Concrete: 2500 psi compressive strength at 28 days.
   Reinforcing Steel: AASHTO M 31 or M 53, Grade 60
   Structural Steel: AASHTO-M270 Grade 36 shall be used for the Connection Pin, Connection Loops, and Stabilization Pins. A One Piece Pin with a 3" rounded top may be used in place of the detailed Connection Pin.
   Delineators: Delineators shall be mounted at 10' spacing on top of precast barrier.

   In applications where barrier wall is within 6 feet of a traffic lane, additional delineators shall be placed on the barrier at 10' spacing approximately one (1) foot from the top of the barrier. Delineators shall be on the AHTD Qualified Products List for Construction Concrete Barrier Markers.
   Delineator color shall be in accordance with the Manual on Uniform Traffic Control Devices.
   Payment for delineators shall be considered included in the price bid per Lin. Ft. for "Furnishing and Installing Precast Concrete Barrier". The contractor shall certify to the Engineer that the material and the design used in the precast barrier units meets the requirements as shown on this standard drawing.

3. Other Precast Concrete Barriers that have been crash tested and approved by the Federal Highway Administration to meet the requirements of NCHRP-350 test level 3 or Manual For Assessing Safety Hardware (MASH) will be accepted in lieu of the barrier shown. Drain slots shall be provided as needed or as directed by the Engineer. The Contractor shall furnish a certification of NCHRP Report 350 or Manual For Assessing Safety Hardware (MASH) compliance for any other types of precast barrier to be used. The certification shall state that the precast concrete barrier meets the requirements of NCHRP Report 350 or Manual For Assessing Safety Hardware (MASH) and include a copy of the Federal Highway Administration's (FHWA) approval letter with all attachments. Precast concrete barrier units shall be fabricated and installed in accordance with crash testing and documentation provided in the FHWA approval letter. Mixing of shapes will not be allowed in a continuous line of units.

4. Dowel holes in pavement or bridge slabs that are to remain in place shall be filled. Holes in concrete pavement and bridge slabs shall be filled with an approved non-shrink epoxy grout. Holes in asphalt pavement shall be filled with an approved asphalt joint filler. Payment for drilling and filling holes to be to be included in the price for various barrier items.

5. Attach Units To Roadway Surface with Stabilization Pins and to Deck Slabs using bolts when required.

6. A 4" White PVC Sleeve may be used to form the Lifting Hole and if used the Sleeve is to be left in place.

DATE	REVISION	FILMED
10-15-09	ADDED REFERENCE TO MASH	
8-5-09	REV. NOTE 3 CONCERNING DRAIN SLOTS	
11-29-07	REVISED NOTE 3	
5-25-06	DELETED GENERAL NOTE 7	
11-18-04	REVISED BARRIER STABILIZATION DETAIL BRIDGE DECKS	
4-10-03	REVISED GENERAL NOTE 2	
8-22-02	ISSUED NEW DRAWING	

ARKANSAS STATE HIGHWAY COMMISSION

STANDARD TRAFFIC CONTROLS FOR HIGHWAY CONSTRUCTION - TEMPORARY PRECAST BARRIER

STANDARD DRAWING TC-4

Ⓐ 4 feet or greater preferred. If less than 4 feet, Precast Units shall be connected to slab (SEE BARRIER STABILIZATION DETAIL-BRIDGE DECKS STD. DRWG. TC-4)

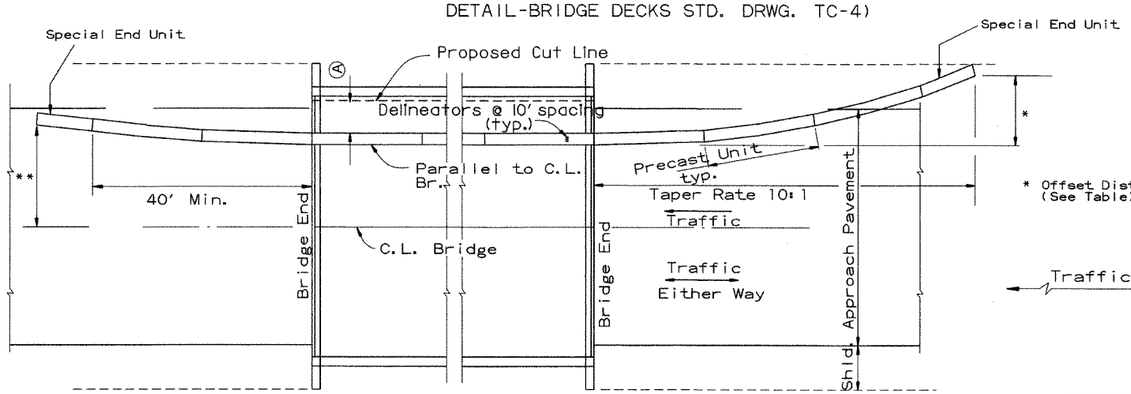

BARRIER PLACEMENT ALONG BRIDGE WITH OFFSET

No Scale

* Offset Distance (See Table)

** Offset Distance for Two Way Traffic Only

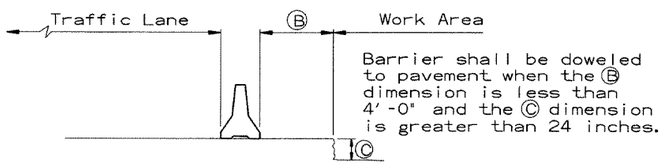

Barrier shall be doweled to pavement when the Ⓑ dimension is less than 4'-0" and the Ⓒ dimension is greater than 24 inches.

SECTION J-J

No Scale

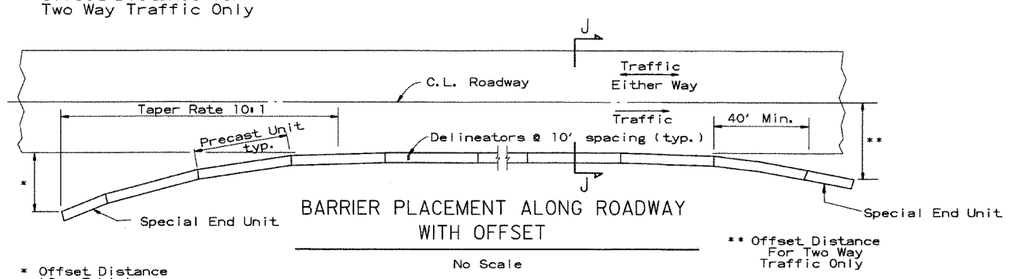

BARRIER PLACEMENT ALONG ROADWAY WITH OFFSET

No Scale

* Offset Distance (See Table)

** Offset Distance For Two Way Traffic Only

Offset Distance Table

Speed (MPH)	Offset Distance (FT.)
≤ 45	12
> 45	18

If offset distance is not attainable, then see 'Barrier Placement With Attenuator' Detail shown below.

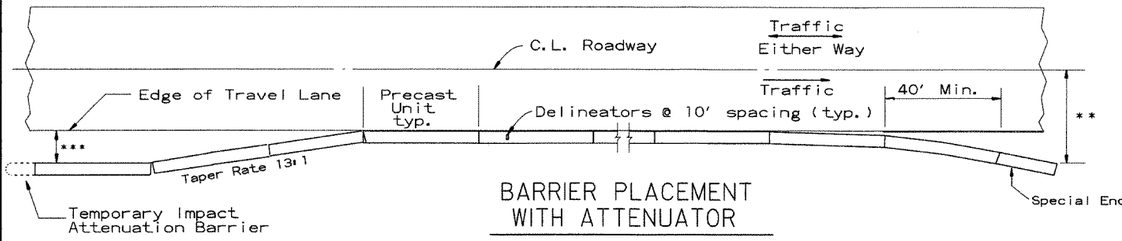

BARRIER PLACEMENT WITH ATTENUATOR

No Scale

*** Min. 3'-0" From Edge of Travel Lane to Nearest Edge of Attenuator

** Offset Distance For Two Way Traffic Only

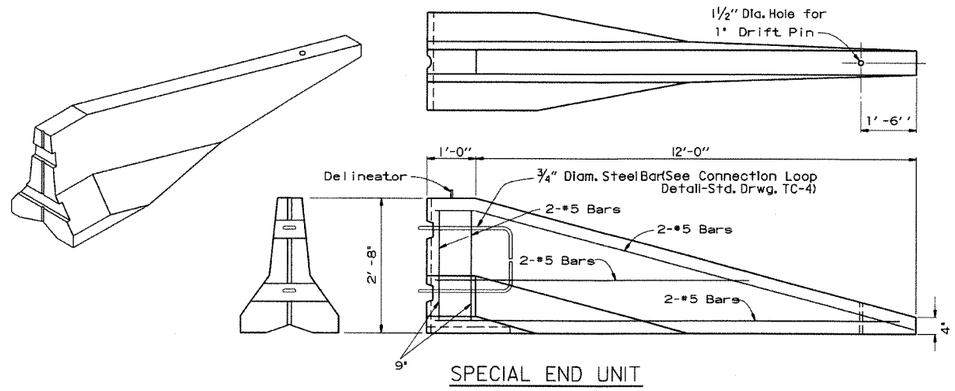

SPECIAL END UNIT

No Scale

General Notes

When shown on the Plans, the ends of the Temporary Precast Concrete Barrier shall be protected with an NCHRP-350 or Manual For Assessing Safety Hardware (MASH) approved Crash Cushion. Payment for Crash Cushions shall be made under the item of "Temporary Impact Attenuation Barrier."

DATE	REVISION	FILMED
10-15-09	ADDED REFERENCE TO MASH	
5-25-06	REVISED BARRIER PLACEMENT	
8-22-02	ISSUED NEW DRAWING	

ARKANSAS STATE HIGHWAY COMMISSION

STANDARD TRAFFIC CONTROLS FOR HIGHWAY CONSTRUCTION - TEMPORARY PRECAST BARRIER

STANDARD DRAWING TC-5

GENERAL NOTES

INSTALL A MINIMUM OF 2 UPSLOPE STAKES AND 4 DOWNSLOPE STAKES AT AN ANGLE TO WEDGE WATTLE TO BOTTOM OF DITCH.

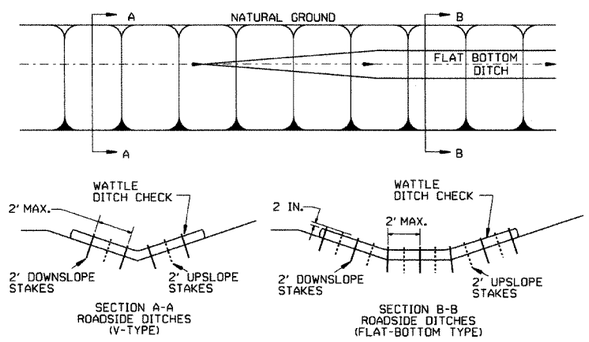

WATTLE DITCH CHECK (E-1)

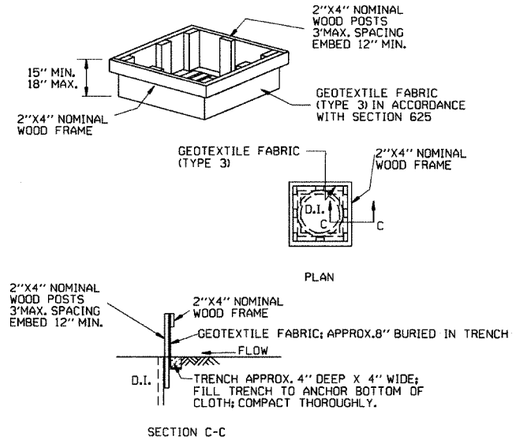

DROP INLET SILT FENCE (E-7)

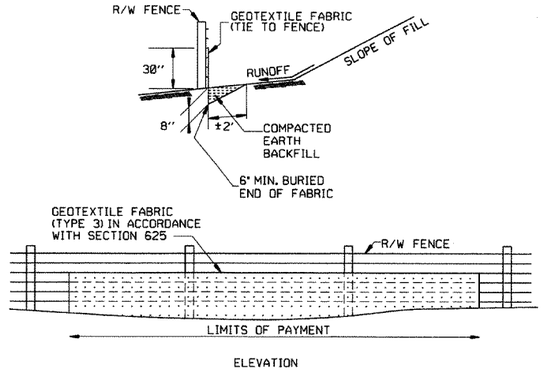

SILT FENCE ON R/W FENCE (E-4)

GENERAL NOTES

GEOTEXTILE FABRIC SHALL BE SPLICED TOGETHER WITH A SEWN SEAM ONLY AT A SUPPORT POST, OR TWO SECTIONS OF FENCE MAY BE OVERLAPPED INSTEAD. PAYMENT OF ADDITIONAL MATERIAL FOR OVERLAP WILL NOT BE MADE.

GENERAL NOTES

1. STRAW BALES SHALL BE INSTALLED SO THAT THE BINDINGS ARE ORIENTED AROUND THE SIDES RATHER THAN ALONG THE TOPS AND BOTTOMS OF THE BALES. THE BALES SHALL BE A MINIMUM OF 30 INCHES IN LENGTH.
2. NO GAPS SHALL BE LEFT BETWEEN BALES.
3. BALED STRAW FILTER BARRIERS COMPLETED AND ACCEPTED WILL BE MEASURED BY THE BALE IN PLACE AS AUTHORIZED BY THE ENGINEER AND WILL BE PAID FOR AT THE CONTRACT UNIT PRICE BID PER BALE FOR BALED STRAW DITCH CHECKS.

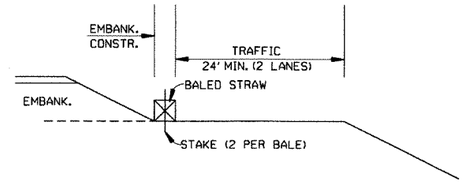

BALED STRAW FILTER BARRIER (E-2)

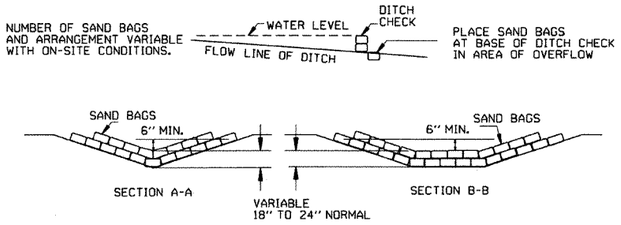

SAND BAG DITCH CHECK (E-5)

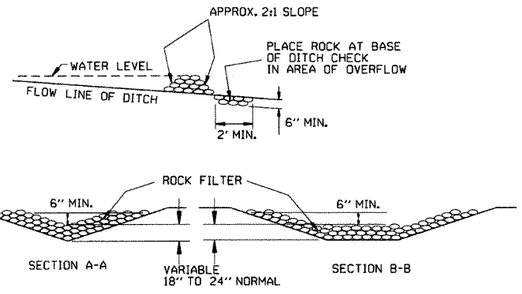

ROCK DITCH CHECK (E-6)

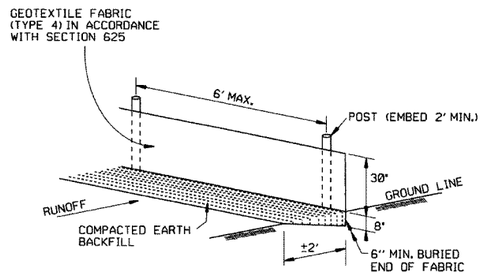

SILT FENCE (E-11)

GENERAL NOTES

GEOTEXTILE FABRIC SHALL BE SPLICED TOGETHER WITH A SEWN SEAM ONLY AT A SUPPORT POST OR TWO SECTIONS OF FENCE MAY BE OVERLAPPED INSTEAD. PAYMENT OF ADDITIONAL MATERIAL FOR OVERLAP WILL NOT BE MADE.

DATE	REVISION	FILMED
12-15-11	DELETED BALED STRAW DITCH CHECK & ADDED WATTLE DITCH CHECK	
11-18-98	ADDED NOTES	
7-02-98	ADDED BALED STRAW FILTER BARRIER (E-2)	
7-20-95	REVISED SILT FENCE E-4 AND E-11	7-20-95
7-15-94	REV. E-4 & E-11 MIN. 13" BURIED END OF FABRIC	
6-2-94	REVISED E-1,4.7 & 11; DELETED E-2 & 3	6-2-94
4-1-93	REDRAWN	
10-1-92	REDRAWN	
8-2-76	ISSUED R.D.M.	298-7-28-76

ARKANSAS STATE HIGHWAY COMMISSION

TEMPORARY EROSION CONTROL DEVICES

STANDARD DRAWING TEC-1

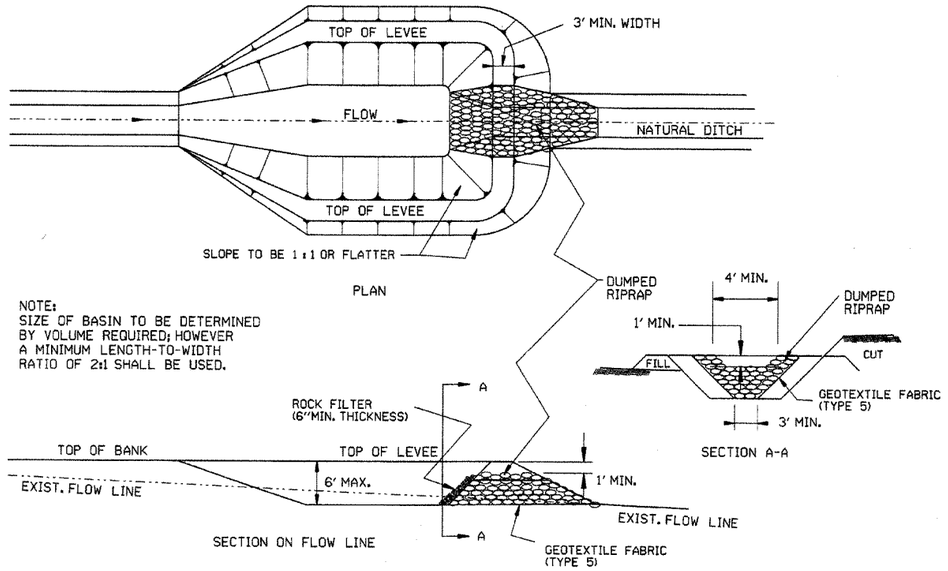

SEDIMENT BASIN WITH RIPRAP OUTLET (E-9)

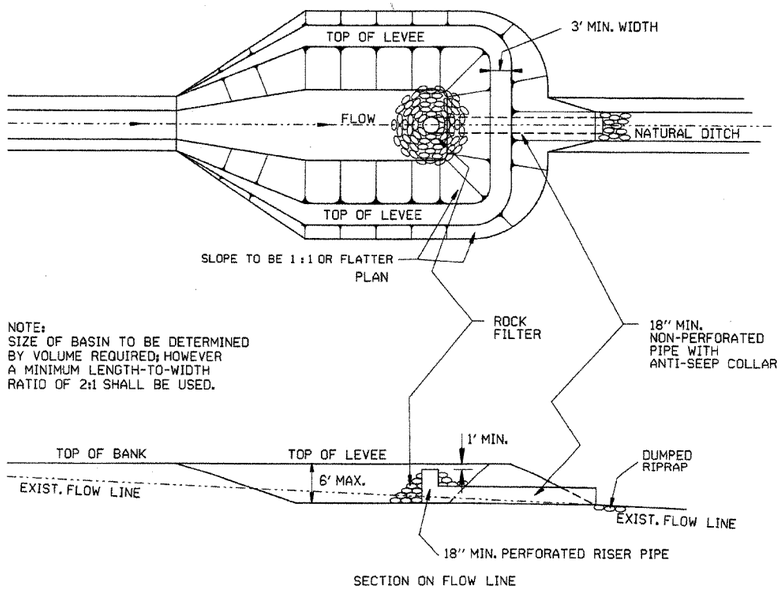

SEDIMENT BASIN WITH PIPE OUTLET (E-10)

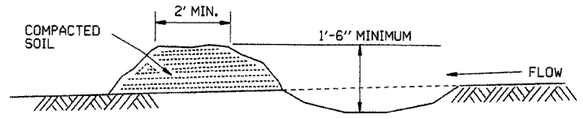

DIVERSION DITCH (E-8)

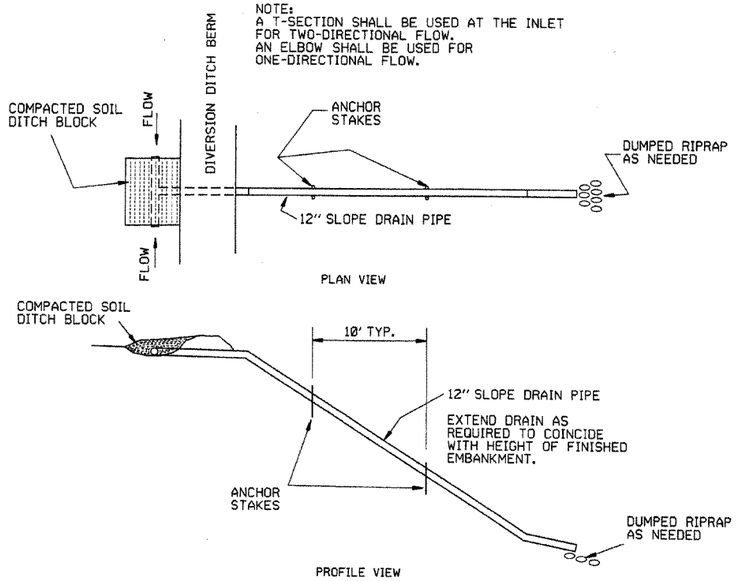

SLOPE DRAIN (E-12)

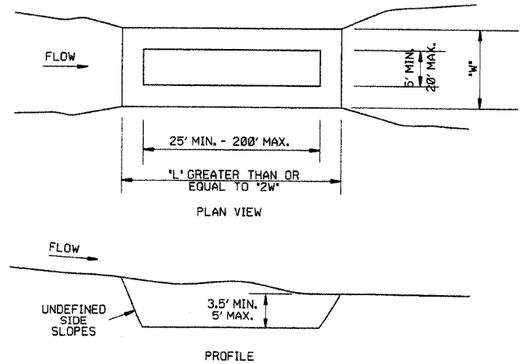

SEDIMENT BASIN (E-14)

DATE	REVISION	FILMED
6-2-94	Revised E-8 & E-12; Added E-14 & Deleted E-13	
4-1-93	ISSUED	

ARKANSAS STATE HIGHWAY COMMISSION

TEMPORARY EROSION CONTROL DEVICES

STANDARD DRAWING TEC-2

CLEARING AND GRUBBING

CONSTRUCTION SEQUENCE

1. PLACE PERIMETER CONTROLS (I.E. SILT FENCES , DIVERSION DITCHES, SEDIMENT BASINS, ETC.)
2. PERFORM CLEARING AND GRUBBING OPERATION.

EXCAVATION

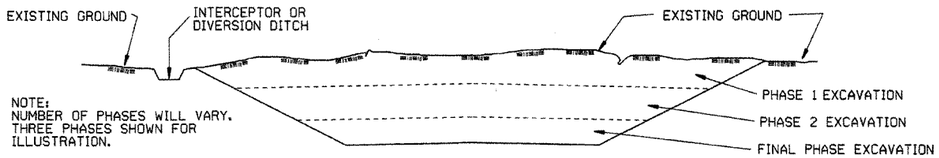

GENERAL NOTE

ALL CUT SLOPES SHALL BE DRESSED, PREPARED, SEEDED, AND MULCHED AS THE WORK PROGRESSES. SLOPES SHALL BE EXCAVATED AND STABILIZED IN EQUAL INCREMENTS NOT TO EXCEED 25 FEET, MEASURED VERTICALLY.

CONSTRUCTION SEQUENCE

1. EXCAVATE AND STABILIZE INTERCEPTOR AND/OR DIVERSION DITCHES.
2. PERFORM PHASE 1 EXCAVATION. PLACE PERMANENT OR TEMPORARY SEEDING.
3. PERFORM PHASE 2 EXCAVATION. PLACE PERMANENT OR TEMPORARY SEEDING.
4. PERFORM FINAL PHASE OF EXCAVATION. PLACE PERMANENT OR TEMPORARY SEEDING. STABILIZE DITCHES. CONSTRUCT DITCH CHECKS, DIVERSION DITCHES, SEDIMENT BASINS, OR OTHER EROSION CONTROL DEVICES AS REQUIRED.

EMBANKMENT

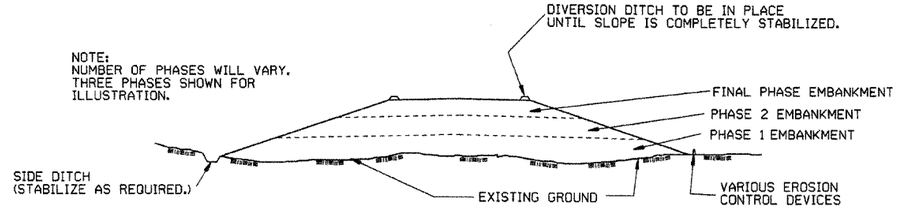

GENERAL NOTE

ALL EMBANKMENT SLOPES SHALL BE DRESSED, PREPARED, SEEDED, AND MULCHED AS THE WORK PROGRESSES. SLOPES SHALL BE CONSTRUCTED AND STABILIZED IN EQUAL INCREMENTS NOT TO EXCEED 25 FEET, MEASURED VERTICALLY.

CONSTRUCTION SEQUENCE

1. CONSTRUCT DIVERSION DITCHES, DITCH CHECKS, SEDIMENT BASINS, SILT FENCES, OR OTHER EROSION CONTROL DEVICES AS SPECIFIED.
2. PLACE PHASE 1 EMBANKMENT WITH PERMANENT OR TEMPORARY SEEDING. PROVIDE DIVERSION DITCHES AND SLOPE DRAINS IF EMBANKMENT CONSTRUCTION IS TO BE TEMPORARILY ABANDONED FOR A PERIOD OF GREATER THAN 21 DAYS.
3. PLACE PHASE 2 EMBANKMENT WITH PERMANENT OR TEMPORARY SEEDING. PROVIDE DIVERSION DITCHES AND SLOPE DRAINS IF EMBANKMENT CONSTRUCTION IS TO BE TEMPORARILY ABANDONED FOR A PERIOD OF GREATER THAN 21 DAYS.
4. PLACE FINAL PHASE OF EMBANKMENT WITH PERMANENT OR TEMPORARY SEEDING. PLACE DIVERSION DITCHES AND SLOPE DRAINS AND MAINTAIN UNTIL ENTIRE SLOPE IS STABILIZED.

DATE	REVISION	FILMED
11-03-94	CORRECTED SPELLING	
6-2-94	Drawn & Issued	6-2-94

ARKANSAS STATE HIGHWAY COMMISSION

TEMPORARY EROSION CONTROL DEVICES

STANDARD DRAWING TEC-3

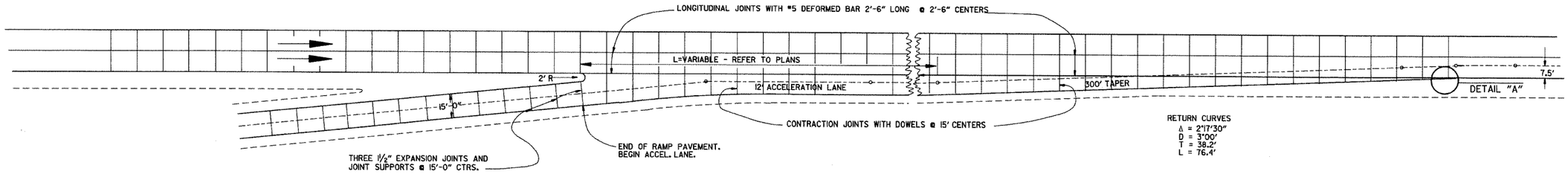

ENTRANCE RAMP

NOTE: JOINT SPACING ON THE MAIN LANES SHALL BE ADJUSTED AS NECESSARY TO CONFORM TO THESE JOINT LAYOUTS. THE MAIN LANE JOINT SPACING MAY BE REDUCED TO A 12' MINIMUM.

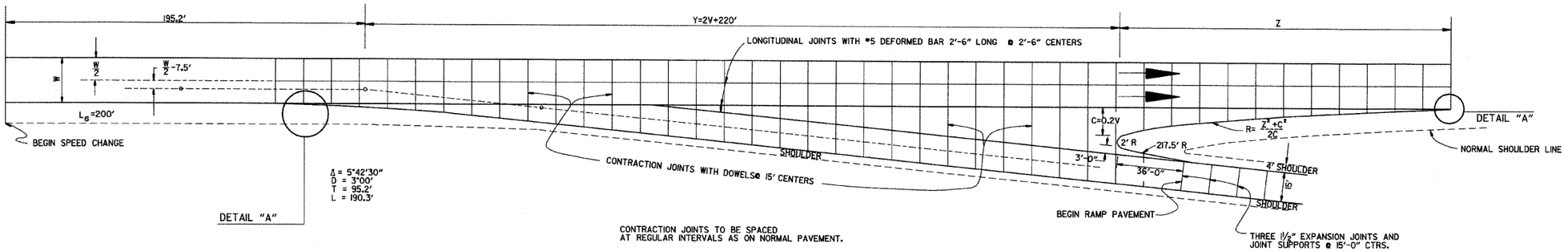

EXIT RAMP

EXIT RAMP

DESIGN SPEED V	Y	NOSE OFFSET C	LENGTH NOSE TAPER Z	RETURN RADIUS R	ADDITIONAL SURFACING SQ. YDS.
40	300.0	8.0	96.0	580.0	602.43
50	320.0	10.0	120.0	725.0	687.29
60	340.0	12.0	168.0	1182.0	790.55
70	360.0	14.0	210.0	1582.0	902.27

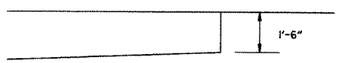

DETAIL "A"

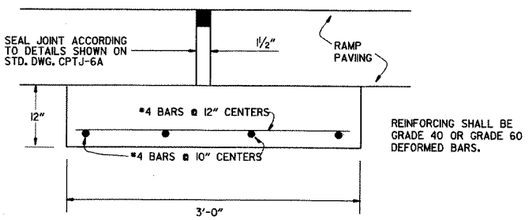

DETAIL OF EXPANSION JOINT & JOINT SUPPORT

NOTE: THE EXPANSION JOINTS SHALL BE MEASURED AND PAID FOR AS P.C.C. PAVEMENT (RAMP THICKNESS). WHEN RAMP PAVING IS ASPHALT, EXPANSION JOINT IS NOT REQUIRED.
THE JOINT SUPPORT MAY BE CONSTRUCTED WITH CLASS "A", "S", OR PAVING CONCRETE. PAYMENT FOR THE JOINT SUPPORT SHALL BE FOR THE CONTRACT UNIT PRICE BID FOR THE CLASS OF CONCRETE USED. ALL OTHER WORK AND MATERIALS REQUIRED FOR THE CONSTRUCTION OF THE JOINT SUPPORT SHALL BE INCLUDED IN THE PRICE BID FOR THE ABOVE ITEMS.

DATE	REVISION	DATE FILM'D
8-22-02	DELETED NOTE	
11-16-01	CORRECTED SPELLING ON ENTRANCE RAMP NOTE	
5-13-99	ADDED, EDITED AND DELETED NOTES	
11-03-94	ADDED NOTE RE: REINF. BARS	
10-1-92	ADDED DETAIL A & OTHER MINOR CHANGES	10-1-92
1-25-90	REVISED EXPANSION JOINT	1-25-90
7-15-88	CONFORM'D TO 1988 SPECIFICATIONS	65C-7-15-88
3-2-81	ISSUED	511-10-2-72

ARKANSAS STATE HIGHWAY COMMISSION

DETAILS OF STANDARD TURNOUT FOR ENTRANCE & EXIT RAMPS (NON-REINFORCED)

STANDARD DRAWING TR-1A

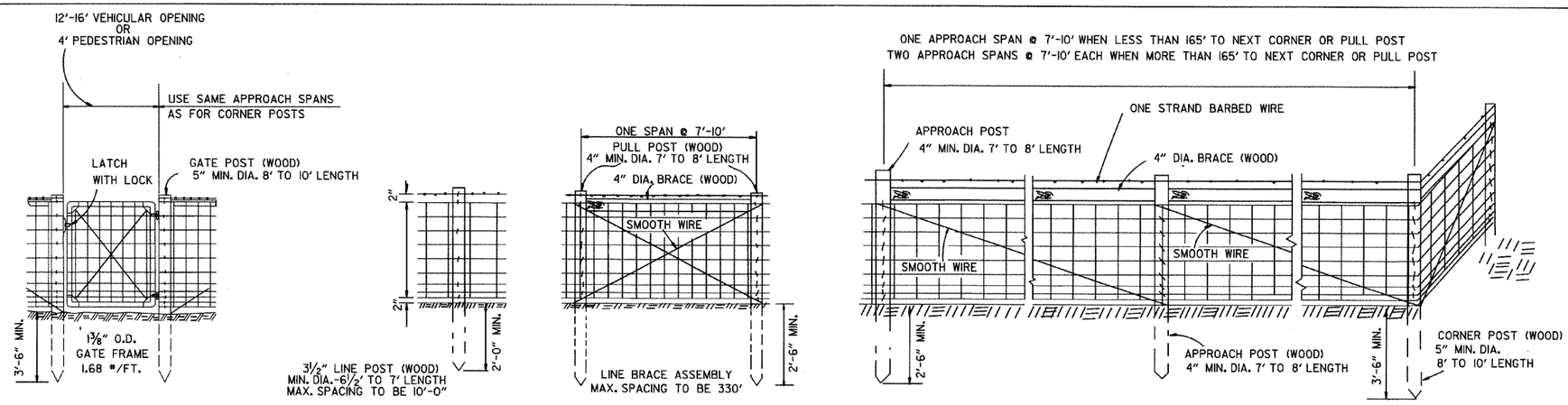

NOTE: STAPLE AT LEAST TOP, BOTTOM AND ALTERNATE WIRES OF WOVEN FABRIC FOR WOOD LINE POSTS.

TYPE A FENCE (WOOD POSTS)

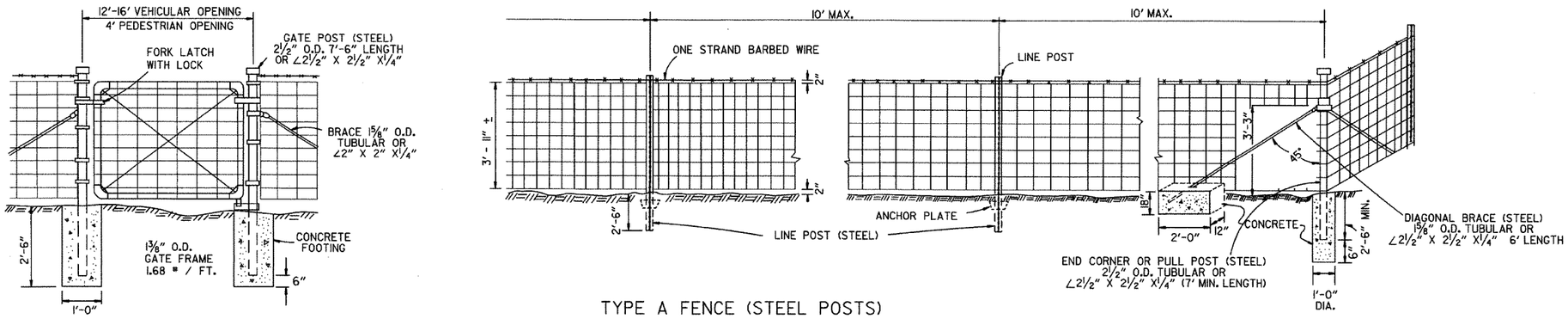

TYPE A FENCE (STEEL POSTS)

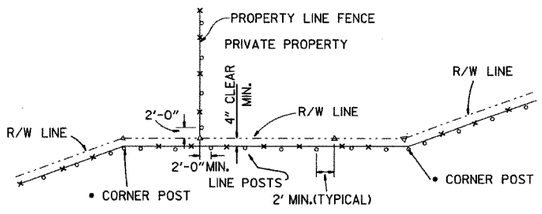

*NOTE: RIGHT-OF-WAY MONUMENTS SHALL NOT BE DISTURBED BY FENCE CONSTRUCTION. CORNER POSTS SHALL BE CONSTRUCTED 2' FROM THE RIGHT-OF-WAY MONUMENT OR AS DIRECTED BY THE ENGINEER.

△ - R/W MONUMENTS
○ - FENCE POSTS

RIGHT-OF-WAY FENCE LOCATION

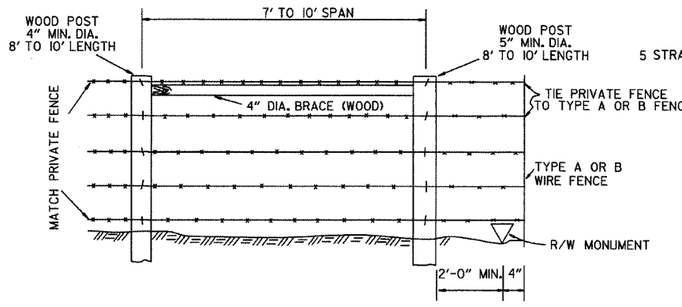

WHERE EXISTING PRIVATE FENCE CONSISTS OF STEEL POSTS, USE END POST ASSEMBLY AS SHOWN WITH TYPE A FENCE OR OTHER END POST ASSEMBLY AS APPROVED BY THE ENGINEER.

PRIVATE FENCE TERMINAL INSTALLATION

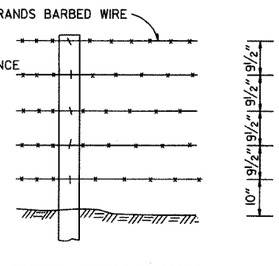

SPACING AND SIZE OF POSTS FOR TYPE B FENCE SHALL BE THE SAME AS TYPE A FENCE.

TYPE B FENCE

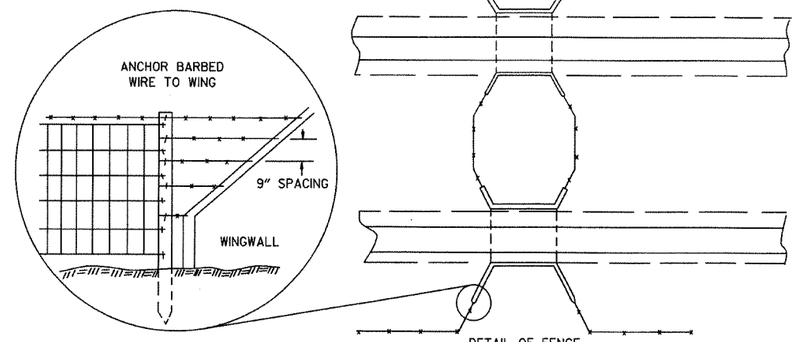

DETAIL OF FENCE CONSTRUCTION AT LARGE CULVERTS (5' IN HEIGHT AND OVER)

GENERAL NOTES:

STEEL LINE POSTS SHALL BE GALVANIZED, 7 FT. IN LENGTH.

TUBULAR END, CORNER, PULL, OR DIAGONAL BRACES MUST CONFORM TO THE DIMENSIONS AND WEIGHTS SPECIFIED ON STANDARD DRAWING WF-3 (CHAIN LINK).

THE CONTRACTOR SHALL FURNISH AT LEAST 25% OF WOOD LINE POSTS OF 7' LENGTHS IN ORDER TO PROVIDE SUFFICIENT SET IN SOFT GROUND OR SMALL DEPRESSIONS.

GATE HINGES AND LATCHES WITH LOCKS TO BE OF A TYPE APPROVED BY THE ENGINEER. DRIVEWAY GATES, EITHER SINGLE 12' OR 16' OR DOUBLE 6' TO 8' OPENINGS OF THE SAME TYPE AS THE PEDESTRIAN GATE, SHALL BE INSTALLED ON THE RIGHT SIDE OF EACH THROUGH LANE ROAD AT LARGE CULVERTS OR BRIDGE CROSS FENCE FOR USE BY MAINTENANCE EQUIPMENT. LOCATION OF GATES TO BE SHOWN ON THE PLANS OR AS DESIGNATED BY THE ENGINEER.

AT STREAM CROSSINGS THE FENCE SHALL NOT BE CONSTRUCTED ACROSS LARGE STREAMS. WHERE CLEARANCE IS SUFFICIENT FROM THE TOP OF BANK TO THE BRIDGE STRUCTURE, A CROSS CONNECTION SHALL BE CONSTRUCTED BETWEEN THE FENCE ON EACH SIDE OF THE ROAD. WHERE THE CLEARANCE IS NOT SUFFIEICNT, THE FENCE SHALL BE TERMINATED WITH CROSS CONNECTIONS AND END POSTS ADJACENT TO THE BRIDGE ABUTMENTS OR CULVERT WINGWALLS.

SPLICE FOR WOVEN WIRE BETWEEN PULL POST SHALL BE BY THE "WESTERN UNION METHOD" AS DESCRIBED AS FOLLOWS: THE VERTICAL WIRES FOR EACH END OF THE FENCE FABRIC SHALL BE PLACED SIDE BY SIDE AND THE PROJECTING HORIZONTAL WIRES SHALL BE WRAPPED A MINIMUM OF 4 TIMES AROUND THE HORIZONTAL WIRES OF THE FIRST WEB.

SPLICE FOR BARBED WIRE BETWEEN PULL POST ASSEMBLY SHALL BE BY THE "EYE METHOD": AS DESCRIBED AS FOLLOWS: THE ENDS OF THE BARBED WIRE SHALL BE BENT TO FORM A LOOP. THE LOOPS SHALL BE CONNECTED. AFTER THE LOOPS ARE CONNECTED THE ENDS OF THE WIRE SHALL BE WRAPPED AROUND THE PROJECTING WIRE A MINIMUM OF 4 TIMES FOR EACH WIRE LOOP.

DATE	REVISION	DATE FILMED
8-22-02	REVISED GENERAL NOTES	
10-18-96	REVISED ASTM REF. TO AASHTO	
11-22-95	REVISED R-O-W LOCATION DETAIL	
6-2-94	ADDED CORNER POST NOTE	6-2-94
8-5-93	REVISED R-O-W LOCATION DETAIL	8-5-93
10-1-92	ADDED STAPLE NOTE	
8-2-90	REV'D PULL POST LENGTH	
11-30-89	DELETED CLASS CONC.	
7-15-88	ADDED SPLICE NOTES	
7-15-88	ADDED HEIGHT DIMENSION	
4-3-87	REVISED VARIOUS NOTES	
	AND GENERAL NOTES	
11-1-84	MAX. POST SPACING	
1-4-83	MIN. DIA. LINE POST	
10-2-72	REVISED & REDRAWN	

ARKANSAS STATE HIGHWAY COMMISSION

WIRE FENCE
TYPE A AND B

STANDARD DRAWING WF-1

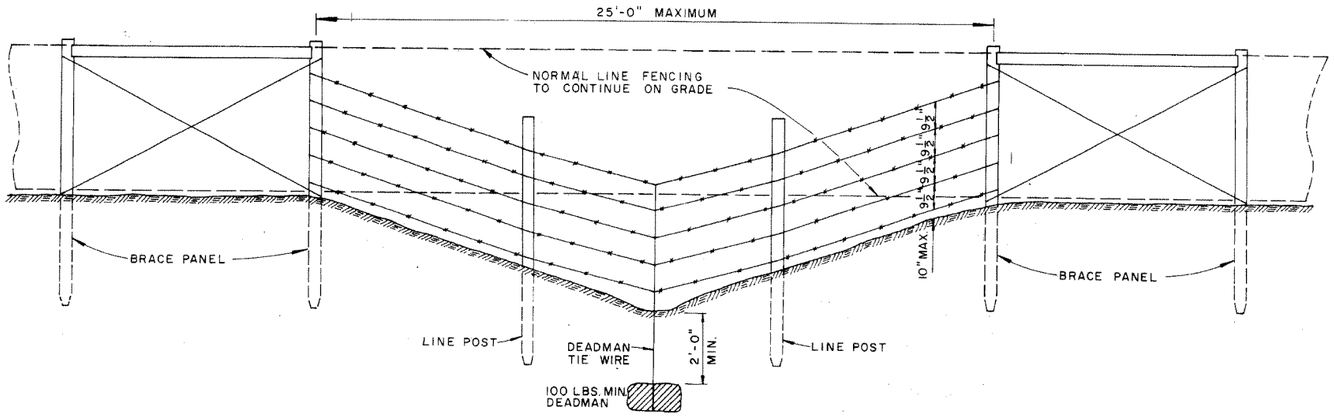

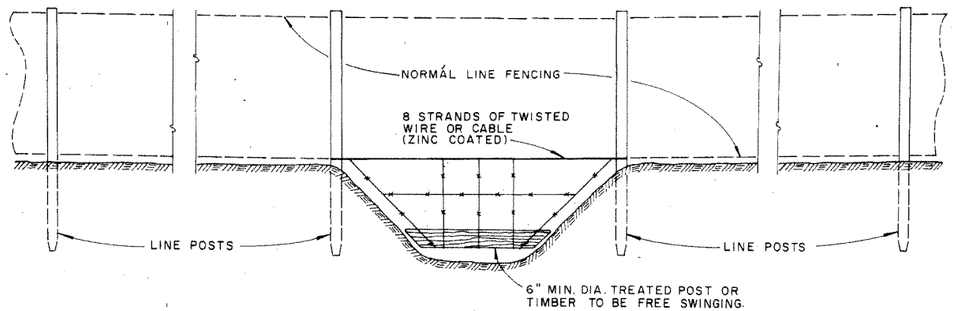

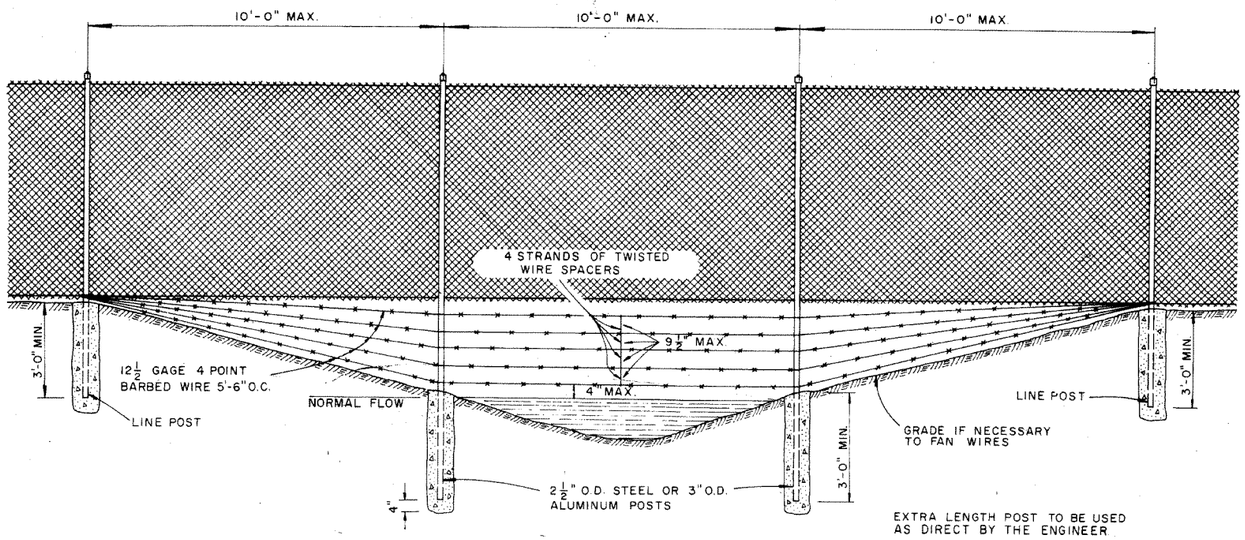

GENERAL NOTES:

THESE INSTALLATIONS TO BE USED WHERE NORMAL FENCING INSTALLATION WOULD CAUSE THE COLLECTING OF DRIFT IN THE CHANNEL OR THE DEPRESSION WILL NOT PERMIT NORMAL INSTALLATION. INSTALLATIONS WILL BE MADE ONLY WHERE DIRECTED BY THE ENGINEER.

WHEN A FENCE LINE APPROACHES A DITCH, GULLY OR DEPRESSION, THE LAST POST ON LEVEL GROUND SHALL BE PLACED CLOSE ENOUGH TO THE EDGE OF THE DROP OFF THAT THE FENCE MAY BE STRUNG TO THE POST IN THE DEPRESSION WITHOUT TOUCHING THE GROUND.

IN TERRAIN OF SUCH EXTREME IRREGULARITY THAT MINOR GRADING WILL NOT BE FEASIBLE, THE NORMAL FENCE SHALL CONTINUE ON GRADE AND THE GULLIES OR DEPRESSIONS TREATED BY AUXILIARY FENCES AS SHOWN.

PAYMENT FOR THE TYPE INSTALLATION USED WILL NOT BE MADE DIRECTLY BUT WILL BE INCLUDED IN THE CONTRACT UNIT PRICE BID FOR WIRE FENCE OR CHAIN LINK FENCE.

4-20-79	REVISED TOP RAIL & TENSION WIRE	696 4-20-79
10-2-72	REVISED & REDRAWN	529 10-2-72
DATE	REVISION	DATE FILM'D.

ARKANSAS STATE HIGHWAY COMMISSION

WIRE FENCE WATER GAPS

STANDARD DRAWING

WF-2

73

1M—11-71—67001—PPASCo

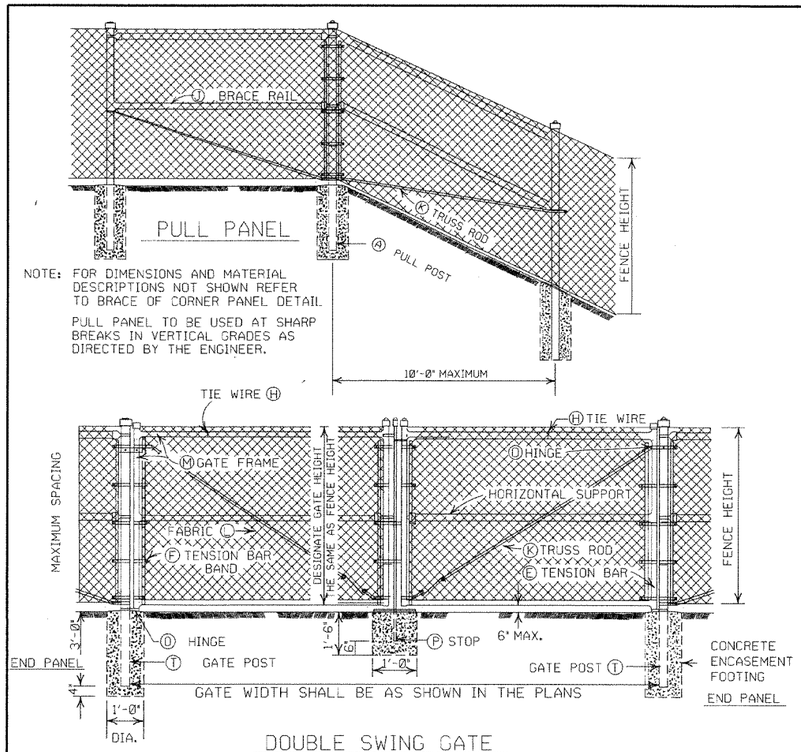

NOTE: FOR DIMENSIONS AND MATERIAL DESCRIPTIONS NOT SHOWN REFER TO BRACE OF CORNER PANEL DETAIL.

PULL PANEL TO BE USED AT SHARP BREAKS IN VERTICAL GRADES AS DIRECTED BY THE ENGINEER.

DOUBLE SWING GATE

POST SPACING DETAIL

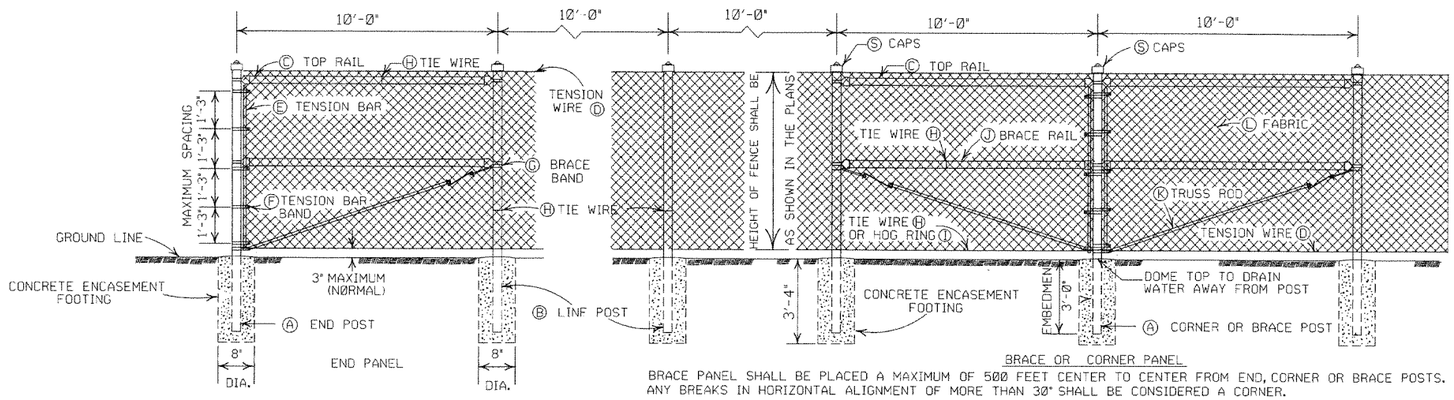

BRACE OR CORNER PANEL

BRACE PANEL SHALL BE PLACED A MAXIMUM OF 500 FEET CENTER TO CENTER FROM END, CORNER OR BRACE POSTS. ANY BREAKS IN HORIZONTAL ALIGNMENT OF MORE THAN 30° SHALL BE CONSIDERED A CORNER.

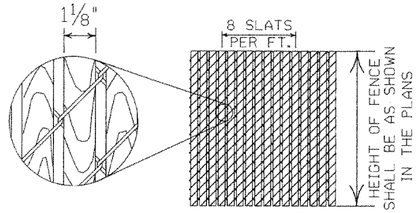

1⅛" X ¼" REDWOOD SLATS(LENGTH TO MATCH HEIGHT OF FENCE)

DETAIL OF REDWOOD SLAT INSTALLATION

(WHERE APPLICABLE)

GENERAL NOTES:

(C) CHAIN LINK FENCE BEING PLACED ON PRIVATE PROPERTY SHALL INCLUDE A TOP RAIL. ALL LABOR, MATERIALS, EQUIPMENT, TOOLS, AND INCIDENTALS NECESSARY TO COMPLETE THE WORK WILL BE PAID FOR AT THE CONTRACT UNIT PRICE BID PER LIN. FT. OF CHAIN LINK FENCE.

(D) TENSION WIRE: SHALL BE SECURED TO ALL TERMINAL, PULL, BRACE OR CORNER POSTS WITH TENSION BAR BANDS.

(J) BRACE RAIL: BRACE RAILS SHALL BE PROVIDED AT ALL TERMINAL, PULL, BRACE OR CORNER POSTS HALFWAY BETWEEN THE TOP RAIL AND GROUND LEVEL WHEN TOPRAIL IS SPECIFIED AND TWELVE INCHES (12") DOWN FROM TOP OF FABRIC WHEN TOP TENSION WIRE IS SPECIFIED. BRACE RAIL SHALL EXTEND FROM SUCH POST TO THE FIRST ADJACENT LINE POST.

(L) FABRIC: SHALL CONFORM TO THE SPECIFICATIONS.

(M) GATE FRAMES: SHALL BE CONSTRUCTED OF TUBULAR MEMBERS ASSEMBLED BY USE OF HEAVY PRESSED STEEL, MALLEABLE FITTINGS OR BY WELDING. ALL GATES SHALL HAVE ONE HORIZONTAL SUPPORT EXTENDING THE WIDTH OF THE GATE AT THE MIDPOINTS OF VERTICAL FRAME MEMBERS. THE COMPLETE FRAME SHALL BE RIGID AND HAVE AMPLE STRENGTH TO BE FREE FROM SAG AND TWIST.

(O) HINGES: SHALL BE OF HEAVY PATTERN, OF ADEQUATE STRENGTH FOR GATE, AND WITH LARGE BEARING SURFACES FOR CLAMPING IN POSITION. THE HINGE SHALL BE OF THE PROPER TYPE TO ALLOW FOR THE DESIGNATED DEGREE OF SWING. THE HINGE SHALL NOT TWIST OR TURN UNDER THE ACTION OF THE GATE. THE GATES SHALL BE CAPABLE OF BEING OPENED AND CLOSED EASILY BY ONE PERSON.

(P) LATCHES AND STOPS: SHALL BE PROVIDED FOR ALL GATES. GATES SHALL HAVE A DROP BAR LATCH. LATCHES SHALL BE ARRANGED FOR LOCKING. THE STOP FOR DROP BAR LATCHES SHALL BE SET IN CONCRETE AND ENGAGE THE PLUNGER OF THE BAR LATCH.

(S) CAPS: ALL POSTS, EXCEPT ROLL FORMED POSTS AND "T" POSTS SHALL BE CAPPED OVER THE EXTERIOR OF THE POST, AND SHALL CONFORM TO ASTM F626.

CONCRETE REQUIRED FOR THE EMBEDMENT OF ALL POSTS SHALL NOT BE PAID FOR DIRECTLY BUT SHALL BE INCLUDED IN THE CONTRACT UNIT PRICE BID FOR CHAIN LINK FENCE.

POSTS SHALL BE SPACED EQUIDISTANT ON A MAXIMUM OF 10' CENTERS.

EXCAVATION FOR POSTS: IN OTHER THAN ROCK SHALL BE OF THE DIMENSIONS INDICATED. IF ROCK IS ENCOUNTERED BEFORE REACHING THE REQUIRED DEPTH, THE EXCAVATION SHALL BE CONTINUED TO THE DEPTH INDICATED OR 1'-6" INTO THE ROCK, WHICHEVER IS LESS, AND SHALL BE A MINIMUM OF 8 INCHES IN DIAMETER.

HEIGHT OF FENCE FABRIC	(A) END, PULL CORNER OR BRACE POST	(B) LINE POSTS SIZE	(B) LINE POSTS TIE SPACING	(C) TOP RAIL SIZE	(C) TOP RAIL TIE SPACING	(C) TOP RAIL MIN. LENGTH	(D) TENSION WIRE SIZE	(D) TENSION WIRE TIE SPACING	(E) TENSION BAR SIZE	(E) TENSION BAR LENGTH	(F) TENSION BAR BAND SIZE	(F) TENSION BAR BAND BOLT SIZE	(F) TENSION BAR BAND SPACING	(G) BRACE BAND SIZE	(G) BRACE BAND BOLT SIZE
6' AND LESS	2½" O.D.	2" O.D.	1 TIE EVERY 1'-2" OF FABRIC HEIGHT	1⅝" O.D.	1 TIE EVERY 2'-0"	10'-0"	7 GAUGE COIL SPRING WIRE	1 TIE EVERY 1'-0"	MIN. OF ⅜" X ¾"	MIN. OF 2" LESS THAN FABRIC HEIGHT	MIN. OF ¾" X 0.074	⅝" X 1¼"	1 BAND AT TOP AND BOTTOM 15" MAX. INTERVAL BETWEEN BANDS	MIN. OF ¾" X 0.105	⅝" X 1¼"
OVER 6' TO 12' INCL.	3 " O.D.	2½" O.D.													

HEIGHT OF FENCE FABRIC	(H) TIE WIRE	(I) HOG RING	(J) BRACE RAIL SIZE	(J) BRACE RAIL TIE SPACING	(K) TRUSS ROD	(L) FABRIC SIZE	(L) FABRIC MESH	(L) FABRIC SELVAGE	(M) GATE FRAME SIZE	(M) GATE FRAME TIE SPACING	(N) HORIZONTAL SUPPORT SIZE	(N) HORIZONTAL SUPPORT TIE SPACING	(O) HINGE TYPE 180° SWING	(T) GATE POST GATE WIDTH 12' AND LESS	(T) GATE POST GATE WIDTH OVER 12' TO 24' INCL.
6' AND LESS	MIN. OF 12 GA. STEEL OR 9 GA. ALUM.	SAME GAUGE AS FABRIC	1⅝" O.D.	1 TIE EVERY 2'-0"	MIN. OF ⅜" ROUND WITH TIGHTNERS AND FITTINGS	9 GA.	2"	KNUCK -ING AND/OR TWIST -ING	2" O.D.	1 TIE EVERY 1'-0"	2" O.D.	1 TIE EVERY 1'-0"	OFFSET	3" O.D.	4" O.D.
OVER 6' TO 12' INCL.														4" O.D.	

NOTE: POST SIZES SHOWN ARE FOR STEEL. WHERE ALUMINUM IS PROVIDED, LINE POSTS SHALL HAVE AN OUT SIDE DIAMETER OF 2½" FOR FENCE HEIGHT OF 6' AND LESS, AN OUTSIDE DIAMETER OF 3" FOR FENCE HEIGHT OF 6' TO 12'. END, PULL, CORNER OR BRACE POSTS SHALL HAVE AN OUTSIDE DIAMETER OF 3" FOR FENCE HEIGHT OF 6' AND LESS; AN OUTSIDE DIAMETER OF 3½" FOR FENCE HEIGHTS OF 6' TO 12'. GATE POSTS WHERE GATE WIDTH IS 12' AND LESS SHALL HAVE AN OUTSIDE DIAMETER OF 3½" FOR FENCE HEIGHT OF 6' AND LESS. ALUMINUM TENSION WIRE SHALL BE Ø.192" IN DIAMETER. MINIMUM THICKNESS OF MATERIAL FROM WHICH EXPANSION SLEEVES SHALL BE MADE WILL BE Ø.078". POSTS AND RAILS MAY HAVE ANY CROSS-SECTIONAL SHAPE THAT WILL MEET THE SPECIFICATIONS.

OTHER DETAILS APPLY TO BOTH STEEL AND ALUMINUM FENCE.

ALL MISCELLANEOUS FITTINGS AND HARDWARE SHALL MEET THE REQUIREMENTS AND PRODUCTION TOLERANCES AS SET FORTH IN THE SPECIFICATIONS.
9 GAUGE ALUMINUM WIRE SHALL BE ACCEPTABLE FOR TIEING FABRIC TO TUBULAR AND ROLL FORMED MEMBERS OF STEEL FENCE.

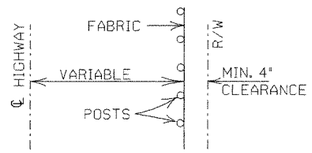

INSTALLATION MAY BE MODIFIED AS SHOWN IN THE PLANS

TYPICAL INSTALLATION DIAGRAM

POSTS AND RAILS

SIZE O.D.	GRADE 1 AND ALUMINUM ALLOY O.D. INCHES	WALL THICKNESS	LBS. PER LINEAR FT. STEEL	LBS. PER LINEAR FT. ALUMINUM	GRADE 2 O.D. INCHES	WALL THICKNESS	LBS. PER LINEAR FT.
1⅝	1.660	0.140	2.27	0.786	1.660	0.111	1.84
2	1.900	0.145	2.72	0.940	1.900	0.120	2.28
2½	2.375	0.154	3.65	1.264	2.375	0.130	3.11
3	2.875	0.203	5.79	2.004	2.875	0.160	4.64
3½	3.500	0.216	7.58	2.621	3.500	0.160	5.71
4	4.000	0.226	9.11	3.151	4.000	0.160	6.56

TOLERANCES ON DIMENSIONS AND WEIGHTS ACCORDING TO AASHTO M 181

DATE	REVISION	FILMED
11-17-10	REVISED TRUSS ROD	
12-10-09	REVISED POSTS & RAILS TABLE	
5-21-09	ADDED TABLE & GEN. NOTE (C)	
8-22-02	REVISED NOTES, REMOVED TABLE, & REMOVED FENCE ALTERNATE	
4-3-97	REVISED BRACE RAIL NOTE	
10-18-96	REVISED AASHTO & ASTM REF.	
11-3-94	REVISED NOTE (L)	
10-1-92	DELETED ALTERNATE POST	10-1-92
8-15-91	DELETED ROLL FORMED POST DETAIL & ADDED NOTE	8-15-91 8-15-91
11-30-89	DELETED CLASS CONCRETE	11-30-89
11-17-88	REVISED O.D. SIZES	668-11-17-88
10-30-87	GENERAL REVISIONS	548-10-30-87
4-20-79	REVISED TOP RAIL & TENSION WIRE	695-4-20-79
10-2-72	REVISED AND REDRAWN	530-10-2-72

ARKANSAS STATE HIGHWAY COMMISSION

CHAIN LINK FENCE

STANDARD DRAWING WF-3

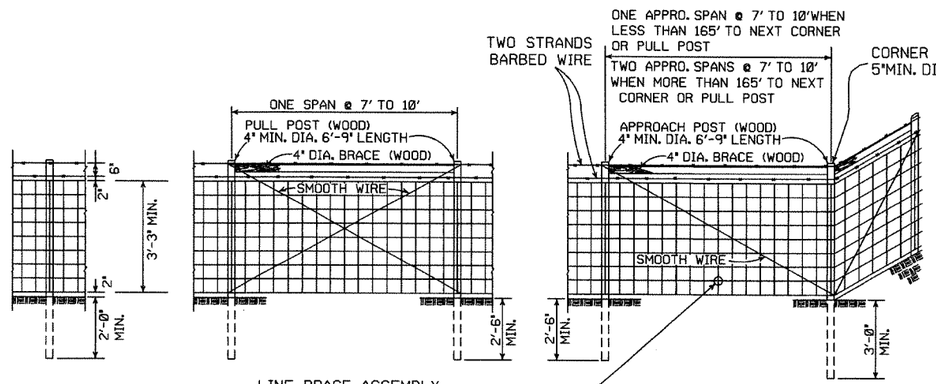

LINE POST
3" MIN. DIA. 6'-3" LENGTH
MAX. SPACING TO BE 10'-0"

LINE BRACE ASSEMBLY
MAX. SPACING TO BE 330'

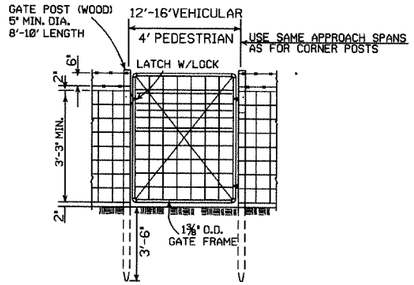

TYPE C FENCE (WOOD POSTS)

OTHER APPROVED TIES WILL BE PERMITTED

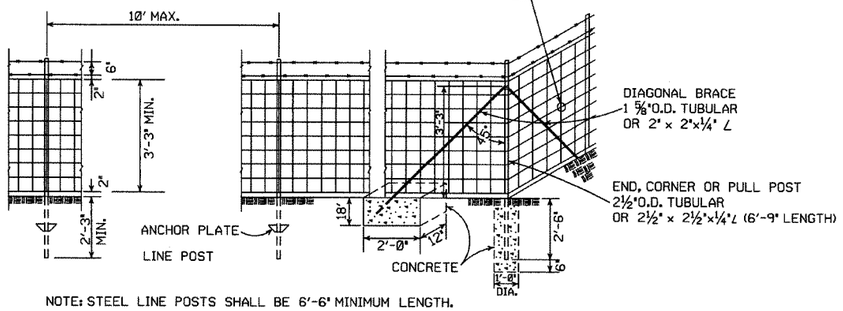

NOTE: STEEL LINE POSTS SHALL BE 6'-6" MINIMUM LENGTH.

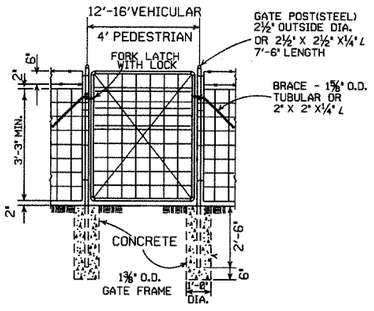

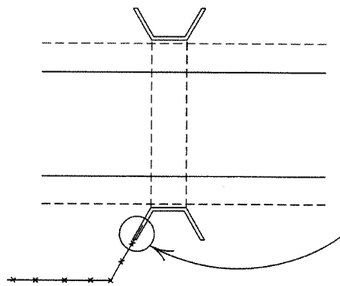

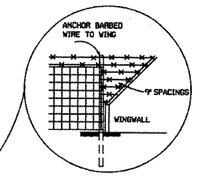

DETAIL OF FENCE CONSTRUCTION AT LARGE CULVERTS (5' IN HEIGHT AND OVER)

GENERAL NOTES:

STEEL LINE POSTS SHALL BE PAINTED OR GALVANIZED. TUBULAR END, CORNER, PULL, OR DIAGONAL BRACES MUST CONFORM TO THE DIMENSIONS AND WEIGHTS SPECIFIED ON STANDARD DRAWING WF-3 (CHAIN LINK). APPROVED ALTERNATES ARE ACCEPTABLE.
AN ACCEPTABLE TOLERANCE IN LENGTH OF TUBULAR OR WOODEN POSTS SHALL BE - 1" TO +2".
TUBULAR POSTS MUST BE PAINTED OR GALVANIZED.

THE CONTRACTOR SHALL FURNISH AT LEAST 25% OF TIMBER LINE POSTS OF 7 FOOT LENGTHS IN ORDER TO PROVIDE SUFFICIENT SET IN SOFT GROUND OR SMALL DEPRESSIONS.

DRIVEWAY GATES, EITHER SINGLE 12' TO 16' OR DOUBLE 6' TO 8' OPENING OF THE SAME TYPE AS THE PEDESTRIAN GATE, SHALL BE INSTALLED ON THE RIGHT SIDE OF EACH THROUGH LANE ROAD AT LARGE CULVERTS OR BRIDGE CROSS FENCE, FOR USE OF MAINTENANCE EQUIPMENT. LOCATION OF GATES TO BE SHOWN ON PLANS OR AS DESIGNATED BY THE ENGINEER.

AT STREAM CROSSINGS, THE FENCE SHALL NOT BE CONSTRUCTED ACROSS LARGE STREAMS. WHERE CLEARANCE IS SUFFICIENT FROM THE TOP OF THE BANK TO THE BRIDGE STRUCTURE A CROSS CONNECTION SHALL BE CONSTRUCTED BETWEEN THE FENCE ON EACH SIDE OF THE ROAD. WHERE THE CLEARANCE IS NOT SUFFICIENT, THE FENCE SHALL BE TERMINATED WITH CROSS CONNECTIONS AND END POSTS ADJACENT TO BRIDGE ABUTMENTS OR CULVERT WINGWALLS.

SPLICE FOR BARBED WIRE BETWEEN PULL POST ASSEMBLY SHALL BE BY THE "EYE METHOD" AS DESCRIBED AS FOLLOWS: THE ENDS OF THE BARBED WIRE SHALL BE BENT TO FORM A LOOP. THE LOOPS SHALL BE CONNECTED. AFTER THE LOOPS ARE CONNECTED THE ENDS OF THE WIRE SHALL BE WRAPPED AROUND THE PROJECTING WIRES A MINIMUM OF 4 TIMES FOR EACH WIRE LOOP.

SPLICE FOR WOVEN WIRE BETWEEN PULL POST SHALL BE BY THE "WESTERN UNION METHOD" AS DESCRIBED AS FOLLOWS: THE VERTICAL WIRES FOR EACH END OF THE FENCE FABRIC SHALL BE PLACED SIDE BY SIDE AND THE PROJECTING HORIZONTAL WIRES SHALL BE WRAPPED A MINIMUM OF 4 TIMES AROUND THE HORIZONTAL WIRES OF THE FIRST WEB.

STAPLE AT LEAST TOP, BOTTOM AND ALTERNATE WIRES OF WOVEN FABRIC FOR WOOD LINE POSTS.

TYPE C FENCE (STEEL POSTS)

4 STRANDS BARBED WIRE (D)
5 STRANDS BARBED WIRE (D-1)
6 STRANDS BARBED WIRE (D-2)

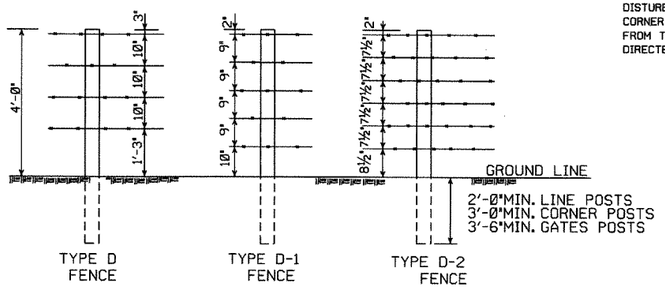

NOTE: SPACING AND SIZE (EXCEPT LENGTH) OF POSTS, APPROACH SPANS, PULL POST ASSEMBLIES, AND CORNER BRACING FOR TYPE D FENCE SHALL CONFORM TO TYPE C FENCE. USE GALVANIZED STAPLES ON WOOD POSTS AND APPROVED FASTENERS ON STEEL POSTS.

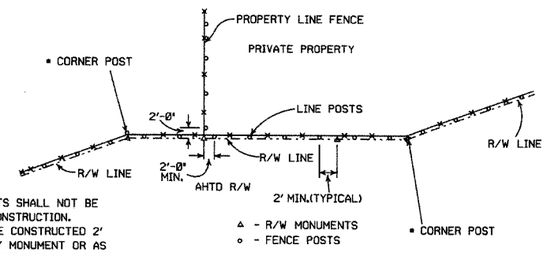

• NOTE: RIGHT-OF-WAY MONUMENTS SHALL NOT BE DISTURBED BY FENCE CONSTRUCTION. CORNER POSTS SHALL BE CONSTRUCTED 2' FROM THE RIGHT-OF-WAY MONUMENT OR AS DIRECTED BY THE ENGINEER.

RIGHT-OF-WAY FENCE LOCATION

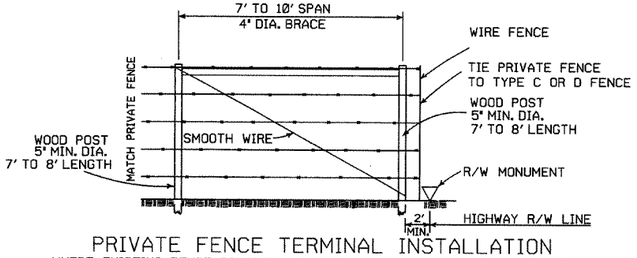

PRIVATE FENCE TERMINAL INSTALLATION
WHERE EXISTING FENCE CONSISTS OF STEEL POSTS, USE END POST ASSEMBLY AS SHOWN IN TYPE C FENCE OR OTHER END POST ASSEMBLY AS APPROVED BY THE ENGINEER.

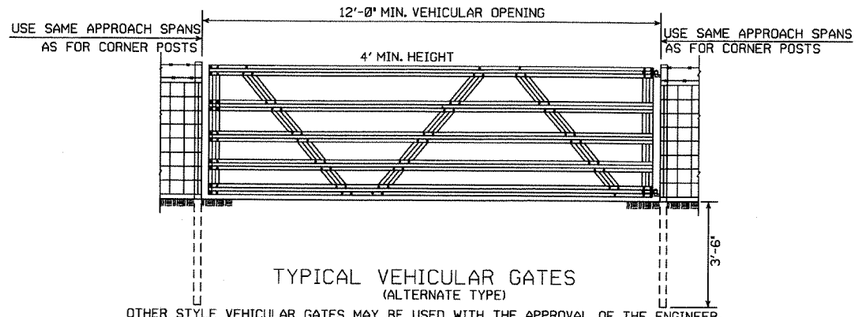

TYPICAL VEHICULAR GATES
(ALTERNATE TYPE)

OTHER STYLE VEHICULAR GATES MAY BE USED WITH THE APPROVAL OF THE ENGINEER.
THE METHOD OF SECURING GATE (LATCH AND/OR LOCK) SHALL MEET THE APPROVAL OF THE ENGINEER.

DATE	REVISION	FILMED
8-22-02	REVISED GENERAL NOTES	
10-18-96	REVISED AASHTO	
11-22-95	REVISED R-O-W LOCATION DETAIL	
6-2-94	REVISED BARB WIRE AND ADDED CORNER POST NOTES	6-2-94
8-5-93	REVISED R/W INSTALLATION FENCE	8-5-93
10-1-92	ADDED STAPLE NOTE	10-1-92
8-15-91	ADDED TYPE D-2 FENCE	8-15-91
11-30-89	DELETED CLASS CONCRETE	11-30-89
7-15-88	ADDED SPLICE NOTE	700-7-15-88
10-30-87	GENERAL REVISIONS	549-10-30-87
11-1-84	MAX. POST SPACING MIN. WIRE GAUGE	507-11-1-84
1-4-83	MIN. DIA. LINE POST	648-1-4-83
3-2-81	TOLERANCE FOR POST LENGTH	722-3-2-81
12-1-72	ADDED D-1 & FENCE INSTALLATION	564-12-1-72
10-2-72	REVISED AND REDRAWN	540-10-2-72

ARKANSAS STATE HIGHWAY COMMISSION

WIRE FENCE TYPE C AND D

STANDARD DRAWING WF-4

BAR LIST FOR VARIOUS SECTIONS OF BARREL

SECTION & BAR GROUP	LENGTH OF SECTION	DEPTH OF COVER	CLEAR SPAN	CLEAR HEIGHT	"a" bars STRAIGHT In Top and Bottom Slabs of Barrel. 2 Add'l in Apron and Headwall - Each.					"b" bars BENT - See Diagram at Right In top and Bottom Slabs of Barrel - Hooked. Alternate with "a" bars.					"j" bars STRAIGHT Longitudinal in Top Slab of Barrel				"d" bars STRAIGHT Longitudinal in Sidewalls.				"e" bars STRAIGHT Longitudinal in Bottom Slab of Barrel.				"f" bars STRAIGHT Verticals in Sidewalls			
		D	S	H	SIZE	SPACING	NUMBER REQ'D 2:1	3:1	4:1	LENGTH	SIZE	SPACING	NUMBER REQ'D 2:1	3:1	4:1	LENGTH	X	SIZE	SPACING	NUMBER REQ'D	LENGTH	SIZE	SPACING	NUMBER REQ'D	LENGTH	SIZE	SPACING	NUMBER REQ'D	LENGTH	SIZE	SPACING	NUMBER REQ'D 2:1	3:1	4:1	LENGTH
"A"	2½"x85", 3½"x65", 4½"x45"	0' TO 10'-0"	10'-0"	1 @ 4'	#4	12"	28	48	68	4'-9"	#4	12"	26	44	64	5'-7"	4'-8⅝"	#4	12"	5	#4	12"	4	#4	12"	5	#4	12"	5	#4	12"	24	44	64	2'-10"
				6'	#5	12"	28	48	68	6'-9"	#6	18"	26	44	64	7'-10"	6'-8"	#4	12"	7	#4	12"	6	#4	12"	7	#4	12"	7	#4	12"	24	44	64	4'-0"
				7'	#5	12"	28	48	68	7'-9"	#6	18"	26	44	64	8'-10"	7'-8"	#4	12"	8	#4	12"	8	#4	12"	8	#4	12"	8	#4	12"	24	44	64	5'-1"
				8'	#6	12"	28	48	68	8'-9"	#6	18"	26	44	64	9'-10"	8'-8"	#4	12"	9	#4	12"	9	#4	12"	9	#4	12"	9	#4	12"	24	44	64	5'-8"
				9'	#6	11"	28	48	68	8'-11"	#6	18"	26	44	64	10'-10"	9'-8"	#4	12"	10	#4	12"	10	#4	12"	10	#4	12"	10	#4	12"	24	44	64	6'-5"
				10'	#7	12"	30	52	74	9'-11"	#7	11"	26	48	70	11'-2"	9'-10"	#4	12"	11	#4	12"	11	#4	12"	11	#4	12"	11	#4	12"	24	44	64	7'-1"
				11'	#7	12"	30	52	74	10'-0"	#7	11"	26	48	70	11'-3"	11'-0"	#4	12"	12	#4	12"	12	#4	12"	12	#4	12"	12	#4	12"	24	44	64	7'-5"
				12'	#7	12"	30	52	74	10'-1"	#7	11"	26	48	70	11'-4"	11'-11"	#4	12"	13	#4	12"	13	#4	12"	13	#4	12"	13	#4	12"	24	44	64	7'-9"
				13'	#7	12"	30	52	74	10'-2"	#7	11"	26	48	70	11'-5"	12'-11"	#4	12"	14	#4	12"	14	#4	12"	14	#4	12"	14	#4	12"	24	44	64	8'-1"
				14'	#7	12"	30	52	74	10'-3"	#7	11"	26	48	70	11'-6"	13'-11"	#4	12"	15	#4	12"	15	#4	12"	15	#4	12"	15	#4	12"	24	44	64	8'-5"
				15'	#7	12"	30	52	74	10'-4"	#7	11"	26	48	70	11'-7"	14'-11"	#4	12"	16	#4	12"	16	#4	12"	16	#4	12"	16	#4	12"	24	44	64	8'-9"
				16'	#7	12"	30	52	74	10'-5"	#7	11"	26	48	70	11'-8"	15'-11"	#4	12"	17	#4	12"	17	#4	12"	17	#4	12"	17	#4	12"	24	44	64	9'-1"
				17'	#7	12"	30	52	74	10'-6"	#7	11"	26	48	70	11'-9"	16'-11"	#4	12"	18	#4	12"	18	#4	12"	18	#4	12"	18	#4	12"	24	44	64	9'-5"
				18'	#7	12"	30	52	74	10'-7"	#7	11"	26	48	70	11'-10"	17'-11"	#4	12"	19	#4	12"	19	#4	12"	19	#4	12"	19	#4	12"	24	44	64	9'-9"
				19'	#7	12"	30	52	74	10'-8"	#7	11"	26	48	70	11'-11"	18'-11"	#4	12"	20	#4	12"	20	#4	12"	20	#4	12"	20	#4	12"	24	44	64	10'-1"
				20'	#7	12"	30	52	74	10'-9"	#7	11"	26	48	70	12'-0"	19'-11"	#4	12"	21	#4	12"	21	#4	12"	21	#4	12"	21	#4	12"	24	44	64	10'-5"
				21'	#7	12"	30	52	74	10'-10"	#7	11"	26	48	70	12'-1"	20'-11"	#4	12"	22	#4	12"	22	#4	12"	22	#4	12"	22	#4	12"	24	44	64	10'-9"
				22'	#7	12"	30	52	74	10'-11"	#7	11"	26	48	70	12'-2"	21'-11"	#4	12"	23	#4	12"	23	#4	12"	23	#4	12"	23	#4	12"	24	44	64	11'-1"
				23'	#7	12"	30	52	74	11'-0"	#7	11"	26	48	70	12'-3"	22'-11"	#4	12"	24	#4	12"	24	#4	12"	24	#4	12"	24	#4	12"	24	44	64	11'-5"
				24'	#7	12"	30	52	74	11'-1"	#7	11"	26	48	70	12'-4"	23'-11"	#4	12"	25	#4	12"	25	#4	12"	25	#4	12"	25	#4	12"	24	44	64	11'-9"
				25'	#7	12"	30	52	74	11'-2"	#7	11"	26	48	70	12'-5"	24'-11"	#4	12"	26	#4	12"	26	#4	12"	26	#4	12"	26	#4	12"	24	44	64	12'-1"
				26'	#7	12"	30	52	74	11'-3"	#7	11"	26	48	70	12'-6"	25'-11"	#4	12"	27	#4	12"	27	#4	12"	27	#4	12"	27	#4	12"	24	44	64	12'-5"
				27'	#7	12"	30	52	74	11'-4"	#7	11"	26	48	70	12'-7"	26'-11"	#4	12"	28	#4	12"	28	#4	12"	28	#4	12"	28	#4	12"	24	44	64	12'-9"
				28'	#7	12"	30	52	74	11'-5"	#7	11"	26	48	70	12'-8"	27'-11"	#4	12"	29	#4	12"	29	#4	12"	29	#4	12"	29	#4	12"	24	44	64	13'-1"
				29'	#7	12"	30	52	74	11'-6"	#7	11"	26	48	70	12'-9"	28'-11"	#4	12"	30	#4	12"	30	#4	12"	30	#4	12"	30	#4	12"	24	44	64	13'-5"
				30'	#7	12"	30	52	74	11'-7"	#7	11"	26	48	70	12'-10"	29'-11"	#4	12"	31	#4	12"	31	#4	12"	31	#4	12"	31	#4	12"	24	44	64	13'-9"
				31'	#7	12"	30	52	74	11'-8"	#7	11"	26	48	70	12'-11"	30'-11"	#4	12"	32	#4	12"	32	#4	12"	32	#4	12"	32	#4	12"	24	44	64	14'-1"
				32'	#7	12"	30	52	74	11'-9"	#7	11"	26	48	70	13'-0"	31'-11"	#4	12"	33	#4	12"	33	#4	12"	33	#4	12"	33	#4	12"	24	44	64	14'-5"
				33'	#7	12"	30	52	74	11'-10"	#7	11"	26	48	70	13'-1"	32'-11"	#4	12"	34	#4	12"	34	#4	12"	34	#4	12"	34	#4	12"	24	44	64	14'-9"
				34'	#7	12"	30	52	74	11'-11"	#7	11"	26	48	70	13'-2"	33'-11"	#4	12"	35	#4	12"	35	#4	12"	35	#4	12"	35	#4	12"	24	44	64	15'-1"
				35'	#7	12"	30	52	74	12'-0"	#7	11"	26	48	70	13'-3"	34'-11"	#4	12"	36	#4	12"	36	#4	12"	36	#4	12"	36	#4	12"	24	44	64	15'-5"
				36'	#7	12"	30	52	74	12'-1"	#7	11"	26	48	70	13'-4"	35'-11"	#4	12"	37	#4	12"	37	#4	12"	37	#4	12"	37	#4	12"	24	44	64	15'-9"
				37'	#7	12"	30	52	74	12'-2"	#7	11"	26	48	70	13'-5"	36'-11"	#4	12"	38	#4	12"	38	#4	12"	38	#4	12"	38	#4	12"	24	44	64	16'-1"
				38'	#7	12"	30	52	74	12'-3"	#7	11"	26	48	70	13'-6"	37'-11"	#4	12"	39	#4	12"	39	#4	12"	39	#4	12"	39	#4	12"	24	44	64	16'-5"
				39'	#7	12"	30	52	74	12'-4"	#7	11"	26	48	70	13'-7"	38'-11"	#4	12"	40	#4	12"	40	#4	12"	40	#4	12"	40	#4	12"	24	44	64	16'-9"
				40'	#7	12"	30	52	74	12'-5"	#7	11"	26	48	70	13'-8"	39'-11"	#4	12"	41	#4	12"	41	#4	12"	41	#4	12"	41	#4	12"	24	44	64	17'-1"
"B"	2½"x60", 3½"x45", 4½"x30"	10'-0" TO 15'-0"	15'-0"	1 @ 4'	#4	12"	12	22	32	4'-9"	#5	12"	12	22	32	5'-8"	4'-8⅝"	#4	12"	5	#4	12"	4	#4	12"	5	#4	12"	5	#4	12"	12	22	32	2'-10"
				6'	#6	11"	12	22	32	6'-9"	#6	18"	12	22	32	7'-10"	6'-8"	#4	12"	7	#4	12"	6	#4	12"	7	#4	12"	7	#4	12"	12	22	32	4'-1"
				7'	#6	11"	12	22	32	7'-9"	#6	18"	12	24	36	8'-10"	7'-8"	#4	12"	8	#4	12"	8	#4	12"	8	#4	12"	8	#4	12"	12	22	32	5'-5"
				8'	#7	12"	12	22	32	8'-9"	#6	18"	12	24	36	9'-10"	8'-8"	#4	12"	9	#4	12"	9	#4	12"	9	#4	12"	9	#4	12"	12	22	32	5'-9"
				9'	#7	12"	12	22	32	8'-11"	#7	18"	12	24	36	10'-10"	9'-8"	#4	12"	10	#4	12"	10	#4	12"	10	#4	12"	10	#4	12"	12	22	32	6'-2"
				10'	#8	12"	12	22	32	9'-0"	#7	18"	12	24	36	11'-10"	10'-8"	#4	12"	11	#4	12"	11	#4	12"	11	#4	12"	11	#4	12"	12	22	32	6'-6"
				11'	#8	12"	12	22	32	9'-1"	#8	18"	12	24	36	12'-10"	11'-8"	#4	12"	12	#4	12"	12	#4	12"	12	#4	12"	12	#4	12"	12	22	32	6'-10"
				12'	#8	12"	12	22	32	9'-2"	#8	18"	12	24	36	13'-10"	12'-8"	#4	12"	13	#4	12"	13	#4	12"	13	#4	12"	13	#4	12"	12	22	32	7'-2"
				13'	#8	12"	12	22	32	9'-3"	#8	18"	12	24	36	14'-10"	13'-8"	#4	12"	14	#4	12"	14	#4	12"	14	#4	12"	14	#4	12"	12	22	32	7'-6"
				14'	#8	12"	12	22	32	9'-4"	#8	18"	12	24	36	15'-10"	14'-8"	#4	12"	15	#4	12"	15	#4	12"	15	#4	12"	15	#4	12"	12	22	32	7'-10"
				15'	#8	12"	12	22	32	9'-5"	#8	18"	12	24	36	16'-10"	15'-8"	#4	12"	16	#4	12"	16	#4	12"	16	#4	12"	16	#4	12"	12	22	32	8'-2"
				16'	#8	12"	12	22	32	9'-6"	#8	18"	12	24	36	17'-10"	16'-8"	#4	12"	17	#4	12"	17	#4	12"	17	#4	12"	17	#4	12"	12	22	32	8'-6"
				17'	#8	12"	12	22	32	9'-7"	#8	18"	12	24	36	18'-10"	17'-8"	#4	12"	18	#4	12"	18	#4	12"	18	#4	12"	18	#4	12"	12	22	32	8'-10"
				18'	#8	12"	12	22	32	9'-8"	#8	18"	12	24	36	19'-10"	18'-8"	#4	12"	19	#4	12"	19	#4	12"	19	#4	12"	19	#4	12"	12	22	32	9'-2"
				19'	#8	12"	12	22	32	9'-9"	#8	18"	12	24	36	20'-10"	19'-8"	#4	12"	20	#4	12"	20	#4	12"	20	#4	12"	20	#4	12"	12	22	32	9'-6"
				20'	#8	12"	12	22	32	9'-10"	#8	18"	12	24	36	21'-10"	20'-8"	#4	12"	21	#4	12"	21	#4	12"	21	#4	12"	21	#4	12"	12	22	32	9'-10"
				21'	#8	12"	12	22	32	9'-11"	#8	18"	12	24	36	22'-10"	21'-8"	#4	12"	22	#4	12"	22	#4	12"	22	#4	12"	22	#4	12"	12	22	32	10'-2"
				22'	#8	12"	12	22	32	10'-0"	#8	18"	12	24	36	23'-10"	22'-8"	#4	12"	23	#4	12"	23	#4	12"	23	#4	12"	23	#4	12"	12	22	32	10'-6"
				23'	#8	12"	12	22	32	10'-1"	#8	18"	12	24	36	24'-10"	23'-8"	#4	12"	24	#4	12"	24	#4	12"	24	#4	12"	24	#4	12"	12	22	32	10'-10"
				24'	#8	12"	12	22	32	10'-2"	#8	18"	12	24	36	25'-10"	24'-8"	#4	12"	25	#4	12"	25	#4	12"	25	#4	12"	25	#4	12"	12	22	32	11'-2"
				25'	#8	12"	12	22	32	10'-3"	#8	18"	12	24	36	26'-10"	25'-8"	#4	12"	26	#4	12"	26	#4	12"	26	#4	12"	26	#4	12"	12	22	32	11'-6"
				26'	#8	12"	12	22	32	10'-4"	#8	18"	12	24	36	27'-10"	26'-8"	#4	12"	27	#4	12"	27	#4	12"	27	#4	12"	27	#4	12"	12	22	32	11'-10"
				27'	#8	12"	12	22	32	10'-5"	#8	18"	12	24	36	28'-10"	27'-8"	#4	12"	28	#4	12"	28	#4	12"	28	#4	12"	28	#4	12"	12	22	32	12'-2"
				28'	#8	12"	12	22	32	10'-6"	#8	18"	12	24	36	29'-10"	28'-8"	#4	12"	29	#4	12"	29	#4	12"	29	#4	12"	29	#4	12"	12	22	32	12'-6"
				29'	#8	12"	12	22	32	10'-7"	#8	18"	12	24	36	30'-10"	29'-8"	#4	12"	30	#4	12"	30	#4	12"	30	#4	12"	30	#4	12"	12	22	32	12'-10"
				30'	#8	12"	12	22	32	10'-8"	#8	18"	12	24	36	31'-10"	30'-8"	#4	12"	31	#4	12"	31	#4	12"	31	#4	12"	31	#4	12"	12	22	32	13'-2"
				31'	#8	12"	12	22	32	10'-9"	#8	18"	12	24	36	32'-10"	31'-8"	#4	12"	32	#4	12"	32	#4	12"	32	#4	12"	32	#4	12"	12	22	32	13'-6"
				32'	#8	12"	12	22	32	10'-10"	#8	18"	12	24	36	33'-10"	32'-8"	#4	12"	33	#4	12"	33	#4	12"	33	#4	12"	33	#4	12"	12	22	32	13'-10"
				33'	#8	12"	12	22	32	10'-11"	#8	18"	12	24	36	34'-10"	33'-8"	#4	12"	34	#4	12"	34	#4	12"	34	#4	12"	34	#4	12"	12	22	32	14'-2"
				34'	#8	12"	12	22	32	11'-0"	#8	18"	12	24	36	35'-10"	34'-8"	#4	12"	35	#4	12"	35	#4	12"	35	#4	12"	35	#4	12"	12	22	32	14'-6"
				35'	#8	12"	12	22	32	11'-1"	#8	18"	12	24	36	36'-10"	35'-8"	#4	12"	36	#4	12"	36	#4	12"	36	#4	12"	36	#4	12"	12	22	32	14'-10"
				36'	#8	12"	12	22	32	11'-2"	#8	18"	12	24	36	37'-10"	36'-8"	#4	12"	37	#4	12"	37	#4	12"	37	#4	12"	37	#4	12"	12	22	32	15'-2"
				37'	#8	12"	12	22	32	11'-3"	#8	18"	12	24	36	38'-10"	37'-8"	#4	12"	38	#4	12"	38	#4	12"	38	#4	12"	38	#4	12"	12	22	32	15'-6"
				38'	#8	12"	12	22	32	11'-4"	#8	18"	12	24	36	39'-10"	38'-8"	#4	12"	39	#4	12"	39	#4	12"	39	#4	12"	39	#4	12"	12	22	32	15'-10"
				39'	#8	12"	12	22	32	11'-5"	#8	18"	12	24	36	40'-10"	39'-8"	#4	12"	40	#4	12"	40	#4	12"	40	#4	12"	40	#4	12"	12	22	32	16'-2"
				40'	#8	12"	12	22	32	11'-6"	#8	18"	12	24	36	41'-10"	40'-8"	#4	12"	41	#4	12"	41	#4	12"	41	#4	12"	41	#4	12"	12	22	32	16'-6"
"C"	2½"x60", 3½"x45", 4½"x30"	15'-0" TO 22'-0"	22'-0"	1 @ 4'	#5	11"	14	24	36	4'-9"	#5	11"	12	24	36	5'-8"	4'-8⅝"	#4	12"	5	#4	12"	4	#4	12"	5	#4	12"	5	#4	12"	12	22	32	2'-11"
				6'	#7	12"	12	22	32	6'-9"	#6	18"	12	22	32	7'-10"	6'-8"	#4	12"	7	#4	12"	6	#4	12"	7	#4	12"	7	#4	12"	12	22	32	4'-2"
				7'	#7	12"	12	22	32	7'-9"	#7	18"	12	22	32	9'-0"	7'-8"	#4	12"	8	#4	12"	8	#4	12"	8	#4	12"	8	#4	12"	12	22	32	5'-2"
				8'	#8	12"	12	22	32	8'-9"	#7	18"	12	22	32	10'-0"	8'-8"	#4	12"	9	#4	12"	9	#4	12"	9	#4	12"	9	#4	12"	12	22	32	5'-9"
				9'	#8	12"	12	22	32	8'-11"	#7	18"	12	22	32	11'-0"	9'-8"	#4	12"	10	#4	12"	10	#4	12"	10	#4	12"	10	#4	12"	12	22	32	6'-3"
				10'	#8	12"	12	22	32	9'-0"	#8	18"	12	22	32	12'-0"	10'-8"	#4	12"	11	#4	12"	11	#4	12"	11	#4	12"	11	#4	12"	12	22	32	6'-9"
				11'	#8	12"	12	22	32	9'-1"	#8	18"	12	22	32	13'-0"	11'-8"	#4	12"	12	#4	12"	12	#4	12"	12	#4	12"	12	#4	12"	12	22	32	7'-3"
				12'	#8	12"	12	22	32	9'-2"	#8	18"	12	22	32	14'-0"	12'-8"	#4	12"	13	#4	12"	13	#4	12"	13	#4	12"	13	#4	12"	12	22	32	7'-9"
				13'	#8	12"	12	22	32	9'-3"	#8	18"	12	22	32	15'-0"	13'-8"	#4	12"	14	#4	12"	14	#4	12"	14	#4	12"	14	#4	12"	12	22	32	8'-3"
				14'	#8	12"	12	22	32	9'-4"	#8	18"	12	22	32	16'-0"	14'-8"	#4	12"	15	#4	12"	15	#4	12"	15	#4	12"	15	#4	12"	12	22	32	8'-9"
				15'	#8	12"	12	22	32	9'-5"	#8	18"	12	22	32	17'-0"	15'-8"	#4	12"	16	#4	12"	16	#4	12"	16	#4	12"	16	#4	12"	12	22	32	9'-3"
				16'	#8	12"	12	22	32	9'-6"	#8	18"	12	22	32	18'-0"	16'-8"	#4	12"	17	#4	12"	17	#4	12"	17	#4	12"	17	#4	12"	12	22	32	9'-9"
				17'	#8	12"	12	22	32	9'-7"	#8	18"	12	22	32	19'-0"	17'-8"	#4	12"	18	#4	12"	18	#4	12"	18	#4	12"	18	#4	12"	12	22	32	10'-3"
				18'	#8	12"	12	22	32	9'-8"	#8	18"	12	22	32	20'-0"	18'-8"	#4	12"	19	#4	12"	19	#4	12"	19	#4	12"	19	#4	12"	12	22	32	10'-9"
				19'	#8	12"	12	22	32	9'-9"	#8	18"	12	22	32	21'-0"	19'-8"	#4	12"	20	#4	12"	20	#4	12"	20	#4	12"	20	#4	12"	12	22	32	11'-3"
				20'	#8	12"	12	22	32	9'-10"	#8	18"	12	22	32	22'-0"	20'-8"	#4	12"	21	#4	12"	21	#4	12"	21	#4	12"	21	#4	12"	12	22	32	11'-9"
				21'	#8	12"	12	22	32	9'-11"	#8	18"	12	22	32	23'-0"	21'-8"	#4	12"	22	#4	12"	22	#4	12"	22	#4	12"	22	#4	12"	12	22	32	12'-3"
				22'	#8	12"	12	22	32	10'-0"	#8	18"	12	22	32	24'-0"	22'-8"	#4	12"	23	#4	12"	23	#4	12"	23	#4	12"	23	#4	12"	12	22	32	12'-9"
				23'	#8	12"	12	22	32	10'-1"	#8	18"	12	22	32	25'-0"	23'-8"	#4	12"	24	#4	12"	24	#4	12"	24	#4	12"	24	#4	12"	12	22	32	13'-3"
				24'	#8	12"	12	22	32	10'-2"	#8	18"	12	22	32	26'-0"	24'-8"	#4	12"	25	#4	12"	25	#4	12"	25	#4	12"	25	#4	12"	12	22	32	13'-9"
				25'	#8	12"	12	22	32	10'-3"	#8	18"	12	22	32	27'-0"	25'-8"	#4	12"	26	#4	12"	26	#4	12"	26	#4	12"	26	#4	12"	12	22	32	14'-3"
				26'	#8	12"	12	22	32	10'-4"	#8	18"	12	22	32	28'-0"	26'-8"	#4	12"	27	#4	12"	27	#4	12"	27	#4	12"	27	#4	12"	12	22	32	14'-9"
				27'	#8	12"	12	22	32	10'-5"	#8	18"	12	22	32	29'-0"	27'-8"	#4	12"	28	#4	12"	28	#4	12"	28	#4	12"	28	#4	12"	12	22	32	15'-3"
				28'	#8	12"	12	22	32	10'-6"	#8	18"	12	22	32	30'-0"	28'-8"	#4	12"	29	#4	12"	29	#4	12"	29	#4	12"	29	#4	12"	12	22	32	15'-9"
				29'	#8	12"	12	22	32	10'-7"	#8	18"	12	22	32	31'-0"	29'-8"	#4	12"	30	#4	12"	30	#4	12"	30	#4	12"	30	#4	12"	12	22	32	16'-3"
				30'	#8	12"	12	22	32	10'-8"	#8	18"	12	22	32	32'-0"	30'-8"	#4	12"	31	#4	12"	31	#4	12"	31	#4	12"	31	#4	12"	12	22	32	16'-9"
				31'	#8	12"	12	22	32	10'-9"	#8	18"	12	22	32	33'-0"	31'-8"	#4	12"	32	#4	12"	32	#4	12"	32	#4	12"	32	#4	12"	12	22	32	17'-3"
				32'	#8	12"	12	22	32	10'-10"	#8	18"	12	22	32	34'-0"	32'-8"	#4	12"	33	#4	12"	33	#4	12"	33	#4	12"	33	#4	12"	12	22	32	17'-9"
				33'	#8	12"	12	22	32	10'-11"	#8	18"	12	22	32	35'-0"	33'-8"	#4	12"	34	#4	12"	34	#4	12"	34	#4	12"	34	#4	12"	12	22	32	18'-3"
				34'	#8	12"	12	22	32	11'-0"	#8	18"	12	22	32	36'-0"	34'-8"	#4	12"	35	#4	12"	35	#4	12"	35	#4	12"	35	#4	12"	12	22	32	18'-9"
				35'	#8	12"	12	22	32	11'-1"	#8	18"	12	22	32	37'-0"	35'-8"	#4	12"	36	#4	12"	36	#4	12"	36	#4	12"	36	#4	12"	12	22	32	19'-3"
				36'	#8	12"	12	22	32	11'-2"	#8	18"	12	22	32	38'-0"	36'-8"	#4	12"	37	#4	12"	37	#4	12"	37	#4	12"	37	#4	12"	12	22	32	19'-9"
				37

FED. ROAD No.	STATE	FED. AID PROJECT	FISCAL YEAR	SHEET No.	TOTAL SHEETS
6	ARK.			130	
JOB No.					

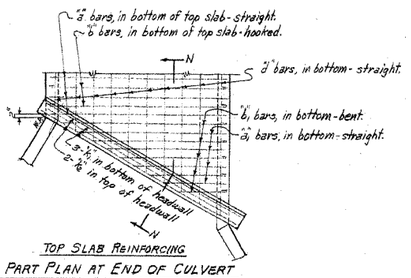

TOP SLAB REINFORCING

PART PLAN AT END OF CULVERT

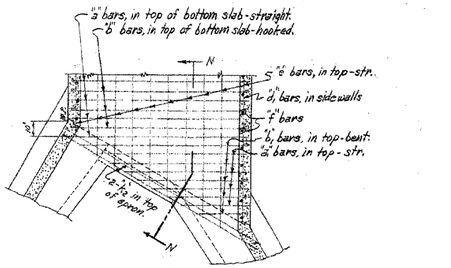

BOTTOM SLAB REINFORCING

PART PLAN AT END OF CULVERT

NOTE:- The "d", "d1" and "e" bars vary in length. They should extend 1'-9" min. into Section "B".

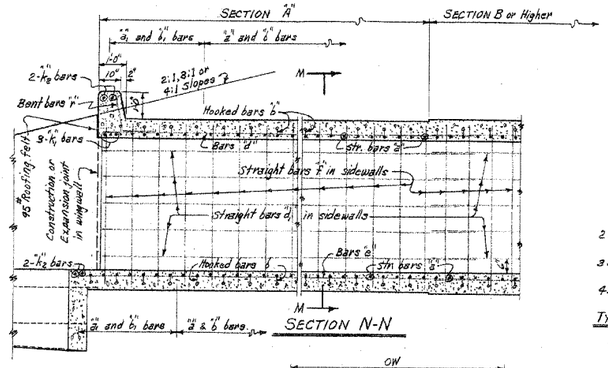

SECTION N-N

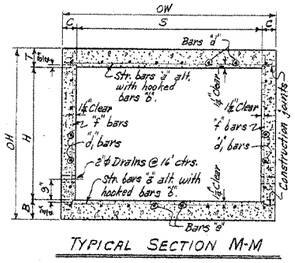

TYPICAL SECTION M-M

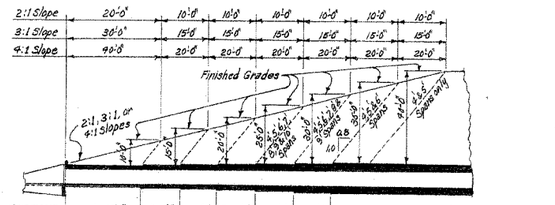
2:1 Slope 20'-0" 10'-0" 10'-0" 10'-0" 10'-0" 10'-0" 10'-0"
3:1 Slope 30'-0" 15'-0" 15'-0" 15'-0" 15'-0" 15'-0" 15'-0"
4:1 Slope 40'-0" 20'-0" 20'-0" 20'-0" 20'-0" 20'-0" 20'-0"
Finished Grades
2:1, 3:1, or 4:1 Slopes
10'-0"
2'-0"
4'-0"
4'-6"
4'-0"
4'-6"
4'-0"
4'-6

RESHOT 3-5-93 425 ~~458~~

BAR LIST FOR VARIOUS SECTIONS OF BARREL

SECTION & BAR GROUP	LENGTHS OF SECTION	DEPTH OF COVER	CLEAR SPAN	CLEAR HEIGHT	"a" bars STRAIGHT In Top and Bottom Slab of Barrel. 2. Add'l in Apron and Headwall - Each.				"b" bars BENT - see Diagram at Right. In Bottom of Top Slab bent up over Division Wall - hooked. Alternate with "a" and "c" bars.							"b" bars BENT - See Diagram at Right. In Top of Bottom Slab bent down under Division Wall - hooked. Alternate with "a" and "c" bars.							"c" bars STRAIGHT In Top and Bottom Slab of Barrel. Alternate with "a" and "b" bars.				"d" bars Longitudinal in Top Slab of Barrel			"d1" bars STRAIGHT Longitudinal in Sidewalls and Division Walls			"e" bars Longitudinal in Bottom Slab of Barrel			"f" bars STRAIGHT Vertical in Sidewalls and Division Walls		
		D	S	H	SIZE	SPACING	NUMBER REQ'D 3:1	NUMBER REQ'D 4:1	LENGTH	SIZE	SPACING	NUMBER REQ'D 3:1	NUMBER REQ'D 4:1	LENGTH	X	Y	Z	SIZE	SPACING	NUMBER REQ'D 3:1	NUMBER REQ'D 4:1	LENGTH	X	Y	Z	SIZE	SPACING	NUMBER REQ'D 3:1	NUMBER REQ'D 4:1	LENGTH	SIZE	SPACING	NUMBER REQ'D	LENGTH	SIZE	SPACING	NUMBER REQ'D	LENGTH	SIZE	SPACING	NUMBER REQ'D 3:1	NUMBER REQ'D 4:1	LENGTH
SECTION "A" & BAR GROUP "A"	3:1 = 22'-0" 4:1 = 22'-0"	0' TO 10'-0"	@ 2 @ 4'-0" @ 5'-0" @ 6'-0"	3' 4' 5' 6'	#4	13"	46 46 46 46	64 64 64 64	9'-5" 9'-5" 9'-5" 9'-8"	#4	13"	20 20 20 20	29 29 29 29	10'-5" 10'-5" 10'-5" 10'-8"	0'-2⅝" 0'-2⅝" 0'-2⅝" 0'-2⅝"	2'-1" 2'-1" 2'-1" 2'-2"	3'-5" 3'-5" 3'-5" 3'-6"	#4	18"	20 20 20 20	29 29 29 29	10'-5" 10'-5" 10'-5" 10'-8"	0'-2⅝" 0'-2⅝" 0'-2⅝" 0'-2⅝"	2'-1" 2'-1" 2'-1" 2'-2"	3'-5" 3'-5" 3'-5" 3'-6"	#5	13"	42 42 42 42	60 60 60 60	4'-6" 4'-9" 4'-9" 4'-9"	#4	12"	14 14 14 14	12"	#4	12"	12 16 20 24	16 16 16 16	#4	12"	88 88 88 88	128 128 128 128	3'-9" 4'-5" 5'-0" 6'-8"
			@ 2 @ 4'-0" @ 5'-0" @ 6'-0"	3' 4' 5' 6' 7'	#5	11"	52 52 52 52 52	74 74 74 74 74	11'-5" 11'-5" 11'-8" 11'-10"	#5	11"	24 24 24 24 24	35 35 35 35 35	12'-6" 12'-6" 12'-9" 12'-11"	0'-3" 0'-3" 0'-3" 0'-3" 0'-3"	2'-6½" 2'-6½" 2'-7½" 2'-8½" 2'-9½"	4'-2" 4'-2" 4'-3" 4'-3" 4'-3"	#5	11"	24 24 24 24 24	35 35 35 35 35	12'-6" 12'-6" 12'-9" 12'-11" 13'-2"	0'-3" 0'-3" 0'-3" 0'-3" 0'-3"	2'-6½" 2'-6½" 2'-7½" 2'-8½" 2'-9½"	4'-2" 4'-2" 4'-3" 4'-3" 4'-3"	#6	12"	49 49 49 49 49	70 70 70 70 70	5'-8" 5'-8" 5'-9" 5'-9" 5'-10"	#5	12"	14 14 14 14 14	11"	#5	11"	16 20 24 28 32	16 16 16 16 16	#4	12"	88 88 88 88 88	128 128 128 128 128	3'-10" 4'-5" 5'-0" 6'-3" 7'-6"
SECTION "B" & BAR GROUP "B"	3:1 = 22'-0" 4:1 = 16'-0"	0' TO 15'-0"	@ 2 @ 4'-0" @ 5'-0" @ 6'-0"	3' 4' 5' 6' 7' 8'	#4	11"	24 24 24 24 24 24	34 34 34 34 34 34	9'-5" 9'-5" 9'-5" 9'-8"	#4	11"	12 12 12 12 12 12	18 18 18 18 18 18	10'-1" 10'-1" 10'-1" 10'-3"	0'-2⅝" 0'-2⅝" 0'-2⅝" 0'-2⅝"	2'-1" 2'-1" 2'-1" 2'-2"	3'-5" 3'-5" 3'-5" 3'-6"	#4	11"	12 12 12 12 12 12	18 18 18 18 18 18	10'-1" 10'-1" 10'-1" 10'-3"	0'-2⅝" 0'-2⅝" 0'-2⅝" 0'-2⅝"	2'-1" 2'-1" 2'-1" 2'-2"	3'-5" 3'-5" 3'-5" 3'-6"	#5	11"	12 12 12 12 12 12	18 18 18 18 18 18	10'-5" 10'-5" 10'-5" 10'-8"	#4	12"	14 14 14 14 14	12"	#4	12"	12 16 20 24 28	16 16 16 16 16	#4	12"	24 24 24 24 24	36 36 36 36 36	5'-8" 5'-8" 5'-9" 5'-9" 5'-10"
			@ 2 @ 4'-0" @ 5'-0" @ 6'-0"	3' 4' 5' 6' 7' 8'	#5	11"	24 24 24 24 24 24	36 36 36 36 36 36	11'-5" 11'-5" 11'-8" 11'-10"	#5	11"	12 12 12 12 12 12	17 17 17 17 17 17	12'-7" 12'-7" 12'-9" 12'-11"	0'-3" 0'-3" 0'-3" 0'-3"	2'-5½" 2'-6½" 2'-7½" 2'-8½"	4'-2" 4'-2" 4'-3" 4'-3"	#5	11"	12 12 12 12 12 12	17 17 17 17 17 17	12'-7" 12'-7" 12'-9" 12'-11"	0'-3" 0'-3" 0'-3" 0'-3"	2'-5½" 2'-6½" 2'-7½" 2'-8½"	4'-2" 4'-2" 4'-3" 4'-3"	#6	11"	24 24 24 24 24 24	36 36 36 36 36 36	5'-8" 5'-8" 5'-9" 5'-9" 5'-10"	#5	12"	16 16 16 16 16	11"	#5	11"	16 20 24 28 32	16 16 16 16 16	#4	12"	24 24 24 24 24	36 36 36 36 36	5'-8" 5'-8" 5'-9" 5'-9" 5'-10"
SECTION "C" & BAR GROUP "C"	3:1 = 11'-0" 4:1 = 16'-0"	15'-0" TO 20'-0"	@ 2 @ 4'-0" @ 5'-0" @ 6'-0"	3' 4' 5' 6' 7' 8'	#4	10"	26 26 26 26 26 26	40 40 40 40 40 40	9'-5" 9'-5" 9'-5" 9'-8"	#4	10"	14 14 14 14 14 14	19 19 19 19 19 19	10'-6" 10'-6" 10'-6" 10'-8"	0'-3⅜" 0'-3⅜" 0'-3⅜" 0'-3⅜"	2'-0" 2'-0" 2'-0" 2'-1"	3'-5" 3'-5" 3'-5" 3'-6"	#4	10"	14 14 14 14 14 14	19 19 19 19 19 19	10'-6" 10'-6" 10'-6" 10'-8"	0'-3⅜" 0'-3⅜" 0'-3⅜" 0'-3⅜"	2'-0" 2'-0" 2'-0" 2'-1"	3'-5" 3'-5" 3'-5" 3'-6"	#5	10"	14 14 14 14 14 14	19 19 19 19 19 19	10'-9" 10'-9" 10'-9" 10'-11"	#4	12"	16 16 16 16 16	12"	#4	12"	12 16 20 24 28	16 16 16 16 16	#4	12"	26 26 26 26 26 26	40 40 40 40 40 40	6'-8" 6'-8" 6'-8" 6'-8"
			@ 2 @ 4'-0" @ 5'-0" @ 6'-0"	3' 4' 5' 6' 7' 8'	#5	10"	24 24 24 24 24 24	36 36 36 36 36 36	11'-5" 11'-5" 11'-8" 11'-10"	#5	10"	12 12 12 12 12 12	18 18 18 18 18 18	12'-7" 12'-7" 12'-9" 12'-11"	0'-3" 0'-3" 0'-3" 0'-3"	2'-4½" 2'-5½" 2'-6½" 2'-7½"	4'-2" 4'-2" 4'-3" 4'-3"	#5	10"	12 12 12 12 12 12	18 18 18 18 18 18	12'-7" 12'-7" 12'-9" 12'-11"	0'-3" 0'-3" 0'-3" 0'-3"	2'-4½" 2'-5½" 2'-6½" 2'-7½"	4'-2" 4'-2" 4'-3" 4'-3"	#6	10"	24 24 24 24 24 24	36 36 36 36 36 36	5'-8" 5'-8" 5'-9" 5'-9" 5'-10"	#5	12"	16 16 16 16 16	11"	#5	11"	16 20 24 28 32	16 16 16 16 16	#4	12"	24 24 24 24 24	36 36 36 36 36	5'-8" 5'-8" 5'-9" 5'-9" 5'-10"
SECTION "D" & BAR GROUP "D"	3:1 = 11'-0" 4:1 = 16'-0"	20'-0" TO 25'-0"	@ 2 @ 4'-0" @ 5'-0" @ 6'-0"	3' 4' 5' 6' 7' 8'	#4	13"	20 20 20 20 20 20	30 30 30 30 30 30	13'-5" 13'-5" 13'-8" 13'-11"	#4	13"	10 10 10 10 10 10	15 15 15 15 15 15	14'-11" 15'-0" 15'-2" 15'-5"	0'-3⅜" 0'-3⅜" 0'-3⅜" 0'-3⅜"	2'-7½" 2'-8½" 2'-9½" 2'-10½"	4'-11½" 4'-11½" 5'-0" 5'-0"	#4	13"	10 10 10 10 10 10	15 15 15 15 15 15	14'-11" 15'-0" 15'-2" 15'-5"	0'-3⅜" 0'-3⅜" 0'-3⅜" 0'-3⅜"	2'-7½" 2'-8½" 2'-9½" 2'-10½"	4'-11½" 4'-11½" 5'-0" 5'-0"	#5	13"	10 10 10 10 10 10	15 15 15 15 15 15	15'-2" 15'-2" 15'-5" 15'-7"	#4	12"	16 16 16 16 16	12"	#4	12"	12 16 20 24 28	16 16 16 16 16	#4	12"	20 20 20 20 20 20	30 30 30 30 30 30	6'-8" 6'-8" 6'-8" 6'-10"
			@ 2 @ 4'-0" @ 5'-0" @ 6'-0"	3' 4' 5' 6' 7' 8'	#5	13"	20 20 20 20 20 20	28 28 28 28 28 28	9'-5" 9'-5" 9'-8" 9'-8"	#5	13"	10 10 10 10 10 10	15 15 15 15 15 15	10'-7" 10'-9" 10'-11" 11'-2"	0'-3" 0'-3" 0'-3" 0'-3"	2'-1½" 2'-2½" 2'-3½" 2'-4½"	3'-5" 3'-5" 3'-6" 3'-6"	#5	13"	10 10 10 10 10 10	15 15 15 15 15 15	10'-7" 10'-9" 10'-11" 11'-2"	0'-3" 0'-3" 0'-3" 0'-3"	2'-1½" 2'-2½" 2'-3½" 2'-4½"	3'-5" 3'-5" 3'-6" 3'-6"	#6	13"	10 10 10 10 10 10	15 15 15 15 15 15	11'-5" 11'-5" 11'-8" 11'-10"	#5	12"	16 16 16 16 16	11"	#5	11"	16 20 24 28 32	16 16 16 16 16	#4	12"	20 20 20 20 20 20	30 30 30 30 30 30	6'-8" 6'-8" 6'-8" 6'-10"
SECTION "E" & BAR GROUP "E"	3:1 = 11'-0" 4:1 = 16'-0"	25'-0" TO 30'-0"	@ 2 @ 4'-0" @ 5'-0" @ 6'-0"	3' 4' 5' 6' 7' 8'	#5	12"	22 22 22 22 22 22	32 32 32 32 32 32	9'-5" 9'-5" 9'-6" 9'-9"	#5	12"	11 11 11 11 11 11	16 16 16 16 16 16	10'-7" 10'-9" 10'-8" 10'-11"	0'-4" 0'-4" 0'-4" 0'-4"	1'-10½" 1'-11½" 1'-11½" 1'-11½"	3'-5" 3'-5" 3'-5" 3'-6"	#5	12"	11 11 11 11 11 11	16 16 16 16 16 16	10'-7" 10'-9" 10'-8" 10'-11"	0'-4" 0'-4" 0'-4" 0'-4"	1'-10½" 1'-11½" 1'-11½" 1'-11½"	3'-5" 3'-5" 3'-5" 3'-6"	#6	12"	11 11 11 11 11 11	16 16 16 16 16 16	11'-0" 11'-0" 11'-3" 11'-5"	#5	12"	16 16 16 16 16	11"	#5	11"	16 20 24 28 32	16 16 16 16 16	#4	12"	22 22 22 22 22 22	32 32 32 32 32 32	6'-8" 6'-8" 6'-8" 6'-10"
			@ 2 @ 4'-0" @ 5'-0" @ 6'-0"	3' 4' 5' 6' 7' 8'	#6	12"	22 22 22 22 22 22	32 32 32 32 32 32	9'-5" 9'-5" 9'-6" 9'-9"	#6	12"	11 11 11 11 11 11	16 16 16 16 16 16	10'-7" 10'-9" 10'-8" 10'-11"	0'-4" 0'-4" 0'-4" 0'-4"	1'-10½" 1'-11½" 1'-11½" 1'-11½"	3'-5" 3'-5" 3'-5" 3'-6"	#6	12"	11 11 11 11 11 11	16 16 16 16 16 16	10'-7" 10'-9" 10'-8" 10'-11"	0'-4" 0'-4" 0'-4" 0'-4"	1'-10½" 1'-11½" 1'-11½" 1'-11½"	3'-5" 3'-5" 3'-5" 3'-6"	#7	12"	11 11 11 11 11 11	16 16 16 16 16 16	11'-0" 11'-0" 11'-3" 11'-5"	#6	12"	16 16 16 16 16	11"	#6	11"	16 20 24 28 32	16 16 16 16 16	#4	12"	22 22 22 22 22 22	32 32 32 32 32 32	6'-8" 6'-8" 6'-8" 6'-10"
SECTION "F" & BAR GROUP "F"	3:1 = 11'-0" 4:1 = 16'-0"	30'-0" TO 35'-0"	@ 2 @ 4'-0" @ 5'-0" @ 6'-0"	3' 4' 5' 6' 7' 8'	#5	11"	24 24 24 24 24 24	36 36 36 36 36 36	9'-5" 9'-5" 9'-7" 9'-10"	#5	11"	12 12 12 12 12 12	17 17 17 17 17 17	10'-5" 10'-7" 10'-9" 10'-11"	0'-4½" 0'-4½" 0'-4½" 0'-4½"	1'-9½" 1'-10½" 1'-10½" 1'-10½"	3'-5" 3'-5" 3'-6" 3'-6"	#5	11"	12 12 12 12 12 12	17 17 17 17 17 17	10'-5" 10'-7" 10'-9" 10'-11"	0'-4½" 0'-4½" 0'-4½" 0'-4½"	1'-9½" 1'-10½" 1'-10½" 1'-10½"	3'-5" 3'-5" 3'-6" 3'-6"	#6	11"	12 12 12 12 12 12	17 17 17 17 17 17	11'-2" 11'-2" 11'-5" 11'-7"	#5	11"	16 16 16 16 16	11"	#5	11"	16 20 24 28 32	16 16 16 16 16	#4	12"	24 24 24 24 24 24	36 36 36 36 36 36	6'-8" 6'-8" 6'-8" 6'-10"
			@ 2 @ 4'-0" @ 5'-0" @ 6'-0"	3' 4' 5' 6' 7' 8'	#6	11"	24 24 24 24 24 24	36 36 36 36 36 36	9'-5" 9'-5" 9'-7" 9'-10"	#6	11"	12 12 12 12 12 12	17 17 17 17 17 17	10'-5" 10'-7" 10'-9" 10'-11"	0'-4½" 0'-4½" 0'-4½" 0'-4½"	1'-9½" 1'-10½" 1'-10½" 1'-10½"	3'-5" 3'-5" 3'-6" 3'-6"	#6	11"	12 12 12 12 12 12	17 17 17 17 17 17	10'-5" 10'-7" 10'-9" 10'-11"	0'-4½" 0'-4½" 0'-4½" 0'-4½"	1'-9½" 1'-10½" 1'-10½" 1'-10½"	3'-5" 3'-5" 3'-6" 3'-6"	#7	11"	12 12 12 12 12 12	17 17 17 17 17 17	11'-2" 11'-2" 11'-5" 11'-7"	#6	11"	16 16 16 16 16	11"	#6	11"	16 20 24 28 32	16 16 16 16 16	#4	12"	24 24 24 24 24 24	36 36 36 36 36 36	6'-8" 6'-8" 6'-8" 6'-10"
SECTION "G" & BAR GROUP "G"	3:1 = 11'-0" 4:1 = 16'-0"	35'-0" TO 90'-0"	@ 2 @ 4'-0" @ 5'-0" @ 6'-0"	3' 4' 5' 6' 7' 8'	#5	10"	18'-6" 13'-8" 18'-11" 14'-3"		Varies with Length of Barrel.	#6	12"	12'-11" 13'-8" 13'-11" 14'-3"		Varies with Length of Barrel.	1'-5" 1'-7" 1'-10" 2'-1"	2'-0" 2'-2" 2'-4" 2'-5"	4'-2" 4'-3" 4'-3" 4'-3"	#6	12"	12'-11" 13'-8" 13'-11" 14'-3"		Varies with Length of Barrel.	1'-5" 1'-7" 1'-10" 2'-1"	2'-0" 2'-2" 2'-4" 2'-5"	4'-2" 4'-3" 4'-3" 4'-3"	#7	10"	18'-6" 13'-8" 18'-11" 14'-3"		Varies with Length of Barrel.	#5	10"	12'-11" 13'-8" 13'-11" 14'-3"		Varies with Length of Barrel.	#6	12"	12'-11" 13'-8" 13'-11" 14'-3"		Varies with Length of Barrel.	#7	11"	18'-6" 13'-8" 18'-11" 14'-3"		Varies with Length of Barrel.	#6	11"	12'-11" 13'-8" 13'-11" 14'-3"		Varies with Length of Barrel.
			@ 2 @ 4'-0" @ 5'-0" @ 6'-0"	3' 4' 5' 6' 7' 8'	#6	11"	18'-6" 13'-8" 18'-11" 14'-3"		Varies with Length of Barrel.	#7	12"	12'-11" 13'-8" 13'-11" 14'-3"		Varies with Length of Barrel.	1'-5" 1'-7" 1'-10" 2'-1"	2'-0" 2'-2" 2'-4" 2'-5"	4'-2" 4'-3" 4'-3" 4'-3"	#7	12"	12'-11" 13'-8" 13'-11" 14'-3"		Varies with Length of Barrel.	1'-5" 1'-7" 1'-10" 2'-1"	2'-0" 2'-2" 2'-4" 2'-5"	4'-2" 4'-3" 4'-3" 4'-3"	#8	10"	18'-6" 13'-8" 18'-11" 14'-3"		Varies with Length of Barrel.	#6	10"	12'-11" 13'-8" 13'-11" 14'-3"		Varies with Length of Barrel.	#7	12"	12'-11" 13'-8" 13'-11" 14'-3"		Varies with Length of Barrel.	#8	11"	18'-6" 13'-8" 18'-11" 14'-3"		Varies with Length of Barrel.	#7	11"	12'-11" 13'-8" 13'-11" 14'-3"		Varies with Length of Barrel.
			@ 2 @ 4'-0" @ 5'-0" @ 6'-0"	3' 4' 5' 6' 7' 8'	#7	11"	18'-6" 13'-8" 18'-11" 14'-3"		Varies with Length of Barrel.	#8	12"	12'-11" 13'-8" 13'-11" 14'-3"		Varies with Length of Barrel.	1'-5" 1'-7" 1'-10" 2'-1"	2'-0" 2'-2" 2'-4" 2'-5"	4'-2" 4'-3" 4'-3" 4'-3"	#8	12"	12'-11" 13'-8" 13'-11" 14'-3"		Varies with Length of Barrel.	1'-5" 1'-7" 1'-10" 2'-1"	2'-0" 2'-2" 2'-4" 2'-5"	4'-2" 4'-3" 4'-3" 4'-3"	#9	10"	18'-6" 13'-8" 18'-11" 14'-3"		Varies with Length of Barrel.	#7	10"	12'-11" 13'-8" 13'-11" 14'-3"		Varies with Length of Barrel.	#8	12"	12'-11" 13'-8" 13'-11" 14'-3"		Varies with Length of Barrel.	#9	11"	18'-6" 13'-8" 18'-11" 14'-3"		Varies with Length of Barrel.	#8	11"	12'-11" 13'-8" 13'-11" 14'-3"		Varies with Length of Barrel.
			@ 2 @ 4'-0" @ 5'-0" @ 6'-0"	3' 4' 5' 6' 7' 8'	#8	11"	18'-6" 13'-8" 18'-11" 14'-3"		Varies with Length of Barrel.	#9	12"	12'-11" 13'-8" 13'-11" 14'-3"		Varies with Length of Barrel.	1'-5" 1'-7" 1'-10" 2'-1"	2'-0" 2'-2" 2'-4" 2'-5"	4'-2" 4'-3" 4'-3" 4'-3"	#9	12"	12'-11" 13'-8" 13'-11" 14'-3"		Varies with Length of Barrel.	1'-5" 1'-7" 1'-10" 2'-1"	2'-0" 2'-2" 2'-4" 2'-5"	4'-2" 4'-3" 4'-3" 4'-3"	#10	10"	18'-6" 13'-8" 18'-11" 14'-3"		Varies with Length of Barrel.	#8	10"	12'-11" 13'-8" 13'-11" 14'-3"		Varies with Length of Barrel.	#9	12"	12'-11" 13'-8" 13'-11" 14'-3"		Varies with Length of Barrel.	#10	11"	18'-6" 13'-8" 18'-11" 14'-3"		Varies with Length of Barrel.	#9	11"	12'-11" 13'-8" 13'-11" 14'-3"		Varies with Length of Barrel.
			@ 2 @ 4'-0" @ 5'-0" @ 6'-0"	3' 4' 5' 6' 7' 8'	#9	11"	18'-6" 13'-8" 18'-11" 14'-3"		Varies with Length of Barrel.	#10	12"	12'-11" 13'-8" 13'-11" 14'-3"		Varies with Length of Barrel.	1'-5" 1'-7" 1'-10" 2'-1"	2'-0" 2'-2" 2'-4" 2'-5"	4'-2" 4'-3" 4'-3" 4'-3"	#10	12"	12'-11" 13'-8" 13'-11" 14'-3"		Varies with Length of Barrel.	1'-5" 1'-7" 1'-10" 2'-1"	2'-0" 2'-2" 2'-4" 2'-5"	4'-2" 4'-3" 4'-3" 4'-3"	#11	10"	18'-6" 13'-8" 18'-11" 14'-3"		Varies with Length of Barrel.	#9	10"	12'-11" 13'-8" 13'-11" 14'-3"		Varies with Length of Barrel.	#10	12"	12'-11" 13'-8" 13'-11" 14'-3"		Varies with Length of Barrel.	#11	11"	18'-6" 13'-8" 18'-11" 14'-3"		Varies with Length of Barrel.	#10	11"	12'-11" 13'-8" 13'-11" 14'-3"		Varies with Length of Barrel.
			@ 2 @ 4'-0" @ 5'-0" @ 6'-0"	3' 4' 5' 6' 7' 8'	#10	11"	18'-6" 13'-8" 18'-11" 14'-3"		Varies with Length of Barrel.	#11	12"	12'-11" 13'-8" 13'-11" 14'-3"		Varies with Length of Barrel.	1'-5" 1'-7" 1'-10" 2'-1"	2'-0" 2'-2" 2'-4" 2'-5"	4'-2" 4'-3" 4'-3" 4'-3"	#11	12"	12'-11" 13'-8" 13'-11" 14'-3"		Varies with Length of Barrel.	1'-5" 1'-7" 1'-10" 2'-1"	2'-0" 2'-2" 2'-4" 2'-5"	4'-2" 4'-3" 4'-3" 4'-3"	#14	10"	18'-6" 13'-8" 18'-11" 14'-3"		Varies with Length of Barrel.	#10	10"	12'-11" 13'-8" 13'-11" 14'-3"		Varies with Length of Barrel.	#11	12"	12'-11" 13'-8" 13'-11" 14'-3"		Varies with Length of Barrel.	#14	11"	18'-6" 13'-8" 18'-11" 14'-3"		Varies with Length of Barrel.	#11	11"	12'-11" 13'-8" 13'-11" 14'-3"		Varies with Length of Barrel.
			@ 2 @ 4'-0" @ 5'-0" @ 6'-0"	3' 4' 5' 6' 7' 8'	#11	11"	18'-6" 13'-8" 18'-11" 14'-3"		Varies with Length of Barrel.	#14	12"	12'-11" 13'-8" 13'-11" 14'-3"		Varies with Length of Barrel.	1'-5" 1'-7" 1'-10" 2'-1"	2'-0" 2'-2" 2'-4" 2'-5"	4'-2" 4'-3" 4'-3" 4'-3"	#14	12"	12'-11" 13'-8" 13'-11" 14'-3"		Varies with Length of Barrel.	1'-5" 1'-7" 1'-10" 2'-1"	2'-0" 2'-2" 2'-4" 2'-5"	4'-2" 4'-3" 4'-3" 4'-3"																										

NOTE: Bars for each Section to be marked with the Section Letter. Use for Section B, the bars should be marked Ba, Bb, Bc, Bd, Be and Bf.

Designed by:- W.C.H. 9-17-62 Checked by:- RMS 11-13-62
Drawn by:- W.C.H. 10-15-62 Checked by:- RMS 11-19-62
Quantities by:- W.C.H. 11-9-62 Checked by:- RMS 11-20-62

DIMENSIONS

BARREL DIMENSIONS

MAX. DESIGN DEPTH OF COVER	CLEAR SPANS	CLEAR HEIGHT	CROSS SECTIONAL AREA PER LIN. FT. OF BARREL	OVERALL WIDTH	THICKNESS OF TOP SLAB	THICKNESS OF SIDE WALLS	THICKNESS OF DIVISION WALL	THICKNESS OF BOTTOM SLAB	OVERALL HEIGHT
D	S	H	A	OW	T	C	M	B	OH
SECTION "A" = 10'-0"	@ 2 @ 4'-0" @ 5'-0" @ 6'-0"	3' 4' 5' 6'	3' 24 9'-8" 4' 32 9'-8" 5' 40 9'-8" 6' 48 9'-11"	6'-0"	6" 6" 6" 7"	8" 8" 8" 9"	6"	6" 6" 6" 7"	4'-0" 5'-0" 6'-0" 7'-0"
SECTION "B" = 15'-0"	@ 2 @ 4'-0" @ 5'-0" @ 6'-0"	3' 4' 5' 6'	3' 30 11'-8" 4' 40 11'-8" 5' 50 11'-8" 6' 60 11'-11"	6½'-0"	6" 6" 6" 7"	8" 8" 8" 9"	6½"	6" 6" 6" 7"	4'-6" 5'-6" 6'-6" 7'-6"
SECTION "C" = 20'-0"	@ 2 @ 4'-0" @ 5'-0" @ 6'-0"	3' 4' 5' 6'	3' 40 11'-8" 4' 50 11'-8" 5' 60 11'-8" 6' 72 11'-11"	7'-0"	6" 6" 6" 7"	8" 8" 8" 9"	7"	6" 6" 6" 7"	5'-0" 6'-0" 7'-0" 8'-0"
SECTION "D" = 25'-0"	@ 2 @ 4'-0" @ 5'-0" @ 6'-0"	3' 4' 5' 6'	3' 48 13'-8" 4' 60 13'-8" 5' 72 13'-11" 6' 84 14'-1"	8½'-0"	6" 6" 6" 7"	8" 8" 8" 9"	8½"	6" 6" 6" 7"	5'-6" 6'-6" 7'-6" 8'-6"
SECTION "E" = 30'-0"	@ 2 @ 4'-0" @ 5'-0" @ 6'-0"	3' 4' 5' 6'	3' 56 15'-8" 4' 70 15'-8" 5' 84 15'-11" 6' 96 16'-2"	9½'-0"	6" 6" 6" 7"	8" 8" 8" 9"	9½"	6" 6" 6" 7"	6'-6" 7'-6" 8'-6" 9'-6"
SECTION "F" = 35'-0"	@ 2 @ 4'-0" @ 5'-0" @ 6'-0"	3' 4' 5' 6'	3' 64 17'-8" 4' 80 17'-8" 5' 96 17'-11" 6' 108 18'-2"	10½'-0"	6" 6" 6" 7"	8" 8" 8" 9"	10½"	6" 6" 6" 7"	7'-6" 8'-6" 9'-6" 10'-6"
SECTION "G" = 40'-0"	@ 2 @ 4'-0" @ 5'-0" @ 6'-0"	3' 4' 5' 6'	3' 72 19'-8" 4' 90 19'-8" 5' 108 19'-11" 6' 120 20'-2"	11½'-0"	6" 6" 6" 7"	8" 8" 8" 9"	11½"	6" 6" 6" 7"	8'-6" 9'-6" 10'-6" 11'-6"

QUANTITIES

UNIT QUANTITIES			
REINFORCING STEEL			
CLASS S CONC. PER LIN. FT. OF BARREL	PER LIN. FT. OF BARREL	ADDITIONAL PER LAP	ADDITIONAL TWO HEADWALLS & APRONS
CU.YD.	LB.	LB.	LB.
0.593	70.19	33.90	100.20
0.606	75.53	36.74	100.20
0.667	80.87	40.08	100.20
0.793	86.99	43.42	101.54
0.659	97.61	36.74	121.13
0.715	102.96	40.08	121.13
0.777	108.30	43.42	121.13
0.904	119.77	46.76	122.97
1.025	132.68	50.10	123.36
0.880	116.47	43.42	192.51
0.941	121.81	46.76	192.51
1.070	128.26	50.10	193.84
1.192	146.93	58.44	194.73
1.298	156.97	56.78	195.18
0.558	76.27	33.90	
0.620	81.61	36.74	
0.682	86.95	40.08	
0.809	103.32	43.42	
0.707	98.03	36.74	
0.769	103.37	40.08	
0.831	108.71	43.42	
0.959	118.88	46.76	
1.081	134.23	50.10	
0.943	123.00	43.42	
1.005	129.35	46.76	
1.135	138.68	50.10	
1.257	156.32	58.44	
1.363	172.09	56.78	
0.588	80.51	33.90	
0.650	85.85	36.74	
0.711	99.95	40.08	
0.839	110.39	43.42	
0.761	108.26	36.74	
0.823	109.59	40.08	
0.885	118.18	43.42	
1.014	132.11	46.76	
1.137	154.69	50.10	
1.006	140.89	43.42	
1.068	149.57	46.76	
1.199	163.94	50.10	
1.323	187.03	53.44	
1.929	207.21	56.78	
0.618	82.12	33.90	
0.680	87.46	36.74	
0.741	103.92	40.08	
0.870	122.24	43.42	
0.797	110.94	36.74	
0.859	116.31	40.08	
0.931	130.90	43.42	
1.051	152.23	46.76	
1.200	166.70	50.10	
1.069	149.09	43.42	
1.152	158.19	46.76	
1.275	175.12	50.10	
1.418	196.10	53.44	
1.539	223.89	56.78	
0.648	96.09	33.90	
0.709	91.93	36.74	
0.791	108.33	40.08	
0.923	126.86	43.42	
0.851	119.82	36.74	
0.913	125.16	40.08	
1.005	140.27	43.42	
1.130	161.92	46.76	
1.283	182.00	50.10	
1.133	158.71	43.42	
1.236	168.96	46.76	
1.376	186.18	50.10	
1.520	207.22	53.44	
1.650	235.78	56.78	
0.943	123.00	43.42	
1.005	129.35	46.76	
1.135	138.68	50.10	
1.257	156.32	58.44	
1.363	172.09	56.78	
0.887	126.75	36.74	
0.966	132.62	40.08	
1.052	147.79	43.42	
1.190	169.71	46.76	
1.397	190.02	50.10	
1.214	170.52	43.42	
1.321	180.90	46.76	
1.445	198.42	50.10	
1.628	220.08	53.44	
1.763	248.66	56.78	
0.707	96.97	33.90	
0.786	102.16	36.74	
0.891	119.78	40.08	
1.031	138.77	43.42	
0.923	139.77	36.74	
1.003	141.90	40.08	
1.109	156.97	43.42	
1.251	176.70	46.76	
1.412	199.25	50.10	

DOWEL BARS FOR TWO HEADWALLS

Span	Size	Spacing	Number	Length	X

FED. ROAD No.	STATE	FED. AID PROJECT	FISCAL YEAR	SHEET No.	TOTAL SHEETS
G	ARK.			132	
JOB No.					

NOTE:- For Details of Standard Wings and bar lists, see Drawing No. W-X.152-1 or W-X.152-2; W-X.153-1 or W-X.153-2, and W-X.154-1 or W-X.154-2. Also W-X.15.

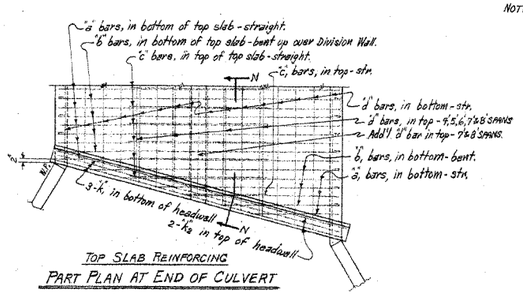

TOP SLAB REINFORCING
PART PLAN AT END OF CULVERT

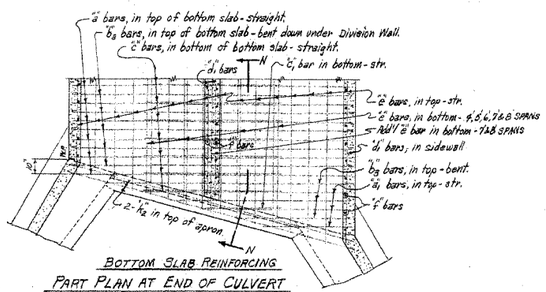

BOTTOM SLAB REINFORCING
PART PLAN AT END OF CULVERT

NOTE:- The "d", "d1" and "e" bars vary in length. They should extend 1'-8" into SECTION B.

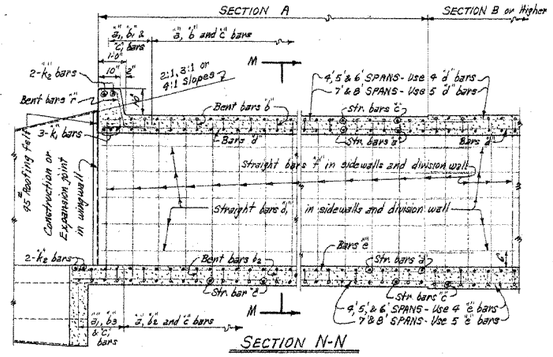

SECTION N-N

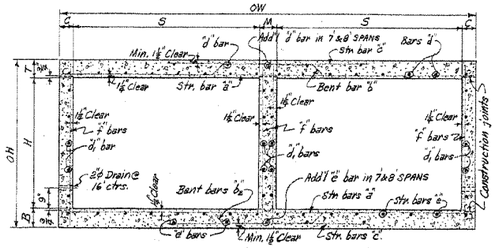

TYPICAL SECTION M-M

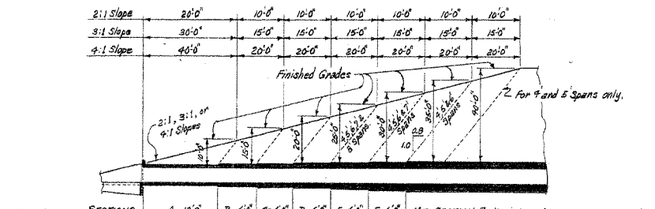

2:1 Slope =	Sections	A=12'-0"	B=6'-0"	C=6'-0"	D=6'-0"	E=6'-0"	F=6'-0"	Mid-Section G - Varies	These lengths are perpendicular to ℄ of roadway. See Table of Skew Lengths below.
	Bar Group	A	B	C	D	E	F	G	
3:1 Slope =	Sections	A=22'-6"	B=11'-0"	C=11'-0"	D=11'-0"	E=11'-0"	F=11'-0"	Mid-Section G - Varies	
	Bar Group	A	B	C	D	E	F	G	
4:1 Slope =	Sections	A=32'-0"	B=16'-0"	C=16'-0"	D=16'-0"	E=16'-0"	F=16'-0"	Mid-Section G - Varies	
	Bar Group	A	B	C	D	E	F	G	

TYPICAL LONGITUDINAL SECTION - SHOWING SECTIONS AND BAR GROUPS FOR VARIOUS DEPTHS OF COVER

NOTE- Lengths of Sections and Bar Groups are to be shown on Cross Section Sheets or on Special Culvert Layout Sheet.

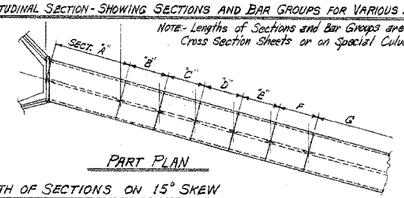

PART PLAN

LENGTH OF SECTIONS ON 15° SKEW

SLOPE	2:1		3:1		4:1	
SECTIONS	A	B, C, D, E & F	A	B, C, D, E & F	A	B, C, D, E & F
LENGTHS	12'-5"	6'-2½"	22'-9½"	11'-4⅝"	33'-1½"	16'-6⅞"

NOTE:- For Details and Bar Lists for SECTIONS B thru G, see Barrel Drawing Nos. R-200X-X1, R-200X-X2, or R-200X-X3.

SECTIONS AND BAR GROUPS TO BE USED FOR VARIOUS DEPTHS OF COVER

DEPTHS OF COVER	SECTIONS & BAR GROUPS FOR END SECTIONS						MID-SECTION AND BAR GROUP
	A	B	C	D	E	F	
5.0' to 9.5'	A						A
10.0' to 14.5'	A						B
15.0' to 19.5'	A	B					C
20.0' to 24.5'	A	B	C				D
25.0' to 29.5'	A	B	C	D			E
30.0' to 39.5'	A	B	C	D	E		F
35.0' to 40.0'	A	B	C	D	E	F	G

OR ALT.

DEPTHS OF COVER	SECTIONS & BAR GROUPS FOR END SECTIONS						MID-SECTION AND BAR GROUP
	A	B	C	D	E	F	
5.0' to 9.5'	A						A
10.0' to 14.5'	A						B
15.0' to 19.5'	A	B					C
20.0' to 24.5'	A	B	2@C				D
25.0' to 29.5'	A	B	2@D				E
30.0' to 34.5'	A	2@C		2@E			F
35.0' to 40.0'	A	B	2@D		2@F		G

MAX. DESIGN DEPTH OF COVER	CLEAR SPANS	BARREL DIMENSIONS										QUANTITIES - ONE SECTION "A"					
		CLEAR HEIGHT	SQ. FT. OPENING	OVERALL WIDTH	THICKNESS OF TOP SLAB	THICKNESS OF SIDEWALLS	THICKNESS OF DIVISION WALL	THICKNESS OF BOTTOM SLAB	OVERALL HEIGHT	ROADWAY LENGTH	LENGTH OF HEADWALL	CLASS S CONCRETE BARREL ONLY			REINFORCING STEEL BARREL, APRON AND HEADWALL		
												2:1	3:1	4:1	2:1	3:1	4:1
D	S	H	A	OW	T	C	M	B	OH	RL	K	CU.YD.	CU.YD.	CU.YD.	LB.	LB.	LB.
SECTION "A" = 10'-0"	4 @ 2	2'	16	9'-8"	6"	8"	6"	6"	3'-0"	10'-0"	10'-6⅜"	5.97	10.95	15.93	967	1629	2303
		3'	24	9'-8"		8"			4'-0"	"	"	6.74	12.36	17.99	1039	1756	2485
		4'	32	9'-8"		8"			5'-0"	"	"	7.51	13.78	20.04	1112	1882	2669
		5'	40	9'-8"		8"			6'-0"	"	"	8.28	15.19	22.09	1184	2003	2850
		6'	48	9'-11"		9"			7'-0"	10'-3⅜"	10'-9⅝"	9.05	16.61	24.17	1270	2157	3062
	2 @ 4 @ 5	3'	30	11'-8"	6½"	8"	8"	6½"	4'-1"	12'-1⅜"	12'-7⅛"	8.11	14.87	21.63	1396	2386	3409
		4'	40	11'-8"		8"			5'-1"	"	"	8.86	16.28	23.68	1468	2513	3592
		5'	50	11'-8"		8"			6'-1"	"	"	9.65	17.69	25.74	1541	2640	3775
		6'	60	11'-11"		9"			7'-1"	12'-4"	12'-10½"	11.22	20.58	29.94	1630	2795	3997
		7'	70	12'-1"		10"			8'-1"	12'-6⅜"	13'-0⅝"	12.73	23.34	33.95	1868	3213	4602
	2 @ 6 @ 7	3'	36	13'-8"	7½"	8"	7½"	7½"	4'-8"	14'-1⅜"	14'-8⅝"	10.16	18.63	27.10	1580	2732	3898
		4'	48	13'-8"		8"			5'-8"	"	"	10.93	20.04	29.15	1658	2859	4080
		5'	60	13'-8"		8"			6'-8"	"	"	11.68	21.43	31.17	1726	2986	4263
		6'	72	13'-11"		9"			7'-8"	14'-1⅛"	14'-7⅝"	13.29	24.36	35.44	1815	3142	4496
		7'	84	14'-1"		10"			8'-8"	14'-7"	15'-1⅛"	14.80	27.14	39.48	2056	3565	5100
		8'	96	14'-2"		10"			9'-8"	14'-8"	15'-2⅝"	16.12	29.56	98.00	2190	3772	5391
	2 @ 6 @ 7	4'	56	15'-8"	8½"	8"	8½"	8½"	5'-5"	16'-2⅝"	16'-9"	13.27	24.34	35.41	2136	3667	5154
		5'	70	15'-8"		8"			6'-5"	"	"	14.04	25.75	37.46	2209	3794	5337
		6'	84	15'-11"		9"			7'-5"	16'-3⅝"	17'-0⅛"	15.66	28.71	41.77	2302	3956	5568
		7'	98	16'-1"		10"			8'-5"	16'-4"	17'-2⅝"	17.18	31.51	45.84	2549	4380	6196
		8'	112	16'-2"		10"			9'-5"	16'-5⅛"	17'-3⅝"	18.50	33.93	49.36	2686	4638	6558
		9'	126	16'-5"		11"			10'-5"	17'-0"	17'-6⅝"	20.70	37.96	55.22	2646	4950	7000
	2 @ 6 @ 7	4'	64	17'-8"	9½"	8"	9½"	9½"	5'-7"	18'-3⅝"	18'-10"	15.93	29.21	42.50	2384	4168	5973
		5'	80	17'-11"		9"			6'-7"	18'-4⅝"	19'-1"	17.96	32.82	46.57	2640	4493	6369
		6'	96	17'-11"		9"			7'-7"	"	"	19.84	33.63	49.83	2712	4620	6552
		7'	112	18'-1"		10"			8'-7"	18'-5⅝"	19'-3"	19.88	36.64	53.03	2847	4875	6919
		8'	128	18'-2"		10"			9'-7"	18'-6⅝"	19'-4⅝"	21.20	38.87	56.54	3064	5235	7441
		9'	144	18'-5"		11"			10'-7"	19'-0⅜"	19'-7⅝"	23.42	42.95	62.47	3224	5528	7866
		10'	160	18'-8"		12"			11'-7"	19'-3⅝"	19'-10⅝"	25.65	47.01	68.37	3568	6116	8714

* For remainder of quantities see Std. Wing and Barrel Drawings listed below.

BAR LIST FOR SECTION "A" ON 15° SKEW - ONE END ONLY.

SECTION & BAR GROUP	DEPTH OF SECTION	CLEAR SPAN	CLEAR HEIGHT	"a" bars STRAIGHT In Top and Bottom Slab of Barrel. SIZE	SPACING	NUMBER REQ'D 2:1	3:1	4:1	LENGTH	"a1" bars STRAIGHT In Top and Bottom Slab of Barrel - (Two of each Length.) SIZE	SPACING	NO. REQ'D	LENGTH
SECTION "A" & BAR GROUP "A"	4:1 = 33'-1½"	2:1 = 12'-5"	2'	#4	18"	28	91	61	9'-5"	#4	18"	2	5'-5"
			3'			28	91	61	"			2	"
			4'			28	91	61	"			2	"
			5'			23	91	61	"			2	"
			6'			23	91	61	9'-8"			2	5'-8"
	3:1 = 22-9½"	0'-0" TO 10'-0" MAXIMUM.	3'	#4	11"	26	90	71	11'-5"	#4	11"	4	8'-0"
			4'			25	90	71	"			4	"
			5'			25	91	71	11'-8"			4	8'-3"
			6'			25	91	71	11'-11"			4	8'-5"
			7'			25	91	71	11'-11"			4	8'-5"
			3'	#4	12"	28	93	65	13'-5"	#4	12"	6	9'-8"
			4'			28	93	65	"			6	"
			5'			28	93	65	"			6	"
			6'			28	93	65	13'-8"			6	9'-11"
			7'			23	93	65	13'-11"			6	10'-1"
			8'			23	93	65	13'-11"			6	10'-2"
			4'	#4	12"	23	93	65	13'-5"	#4	12"	6	11'-8"
			5'			28	93	65	"			6	"
			6'			28	93	65	13'-8"			6	11'-11"
			7'			23	93	65	13'-11"			6	12'-1"
			8'			23	93	65	14'-2"			6	12'-2"
			4'	#4	12"	21	89	63	13'-5"	#5	12"	6	11'-8"
			5'			21	89	63	"			6	"
			6'			21	89	63	13'-8"			6	11'-11"
			7'			21	89	63	13'-11"			6	12'-1"
			8'			21	89	63	14'-2"			6	12'-2"
			9'			21	89	63	14'-5"			6	12'-4

FED. ROAD NO.	STATE	FED. AID PROJECT	FISCAL YEAR	SHEET NO.	TOTAL SHEETS
6	ARK.			133	
JOB NO.					

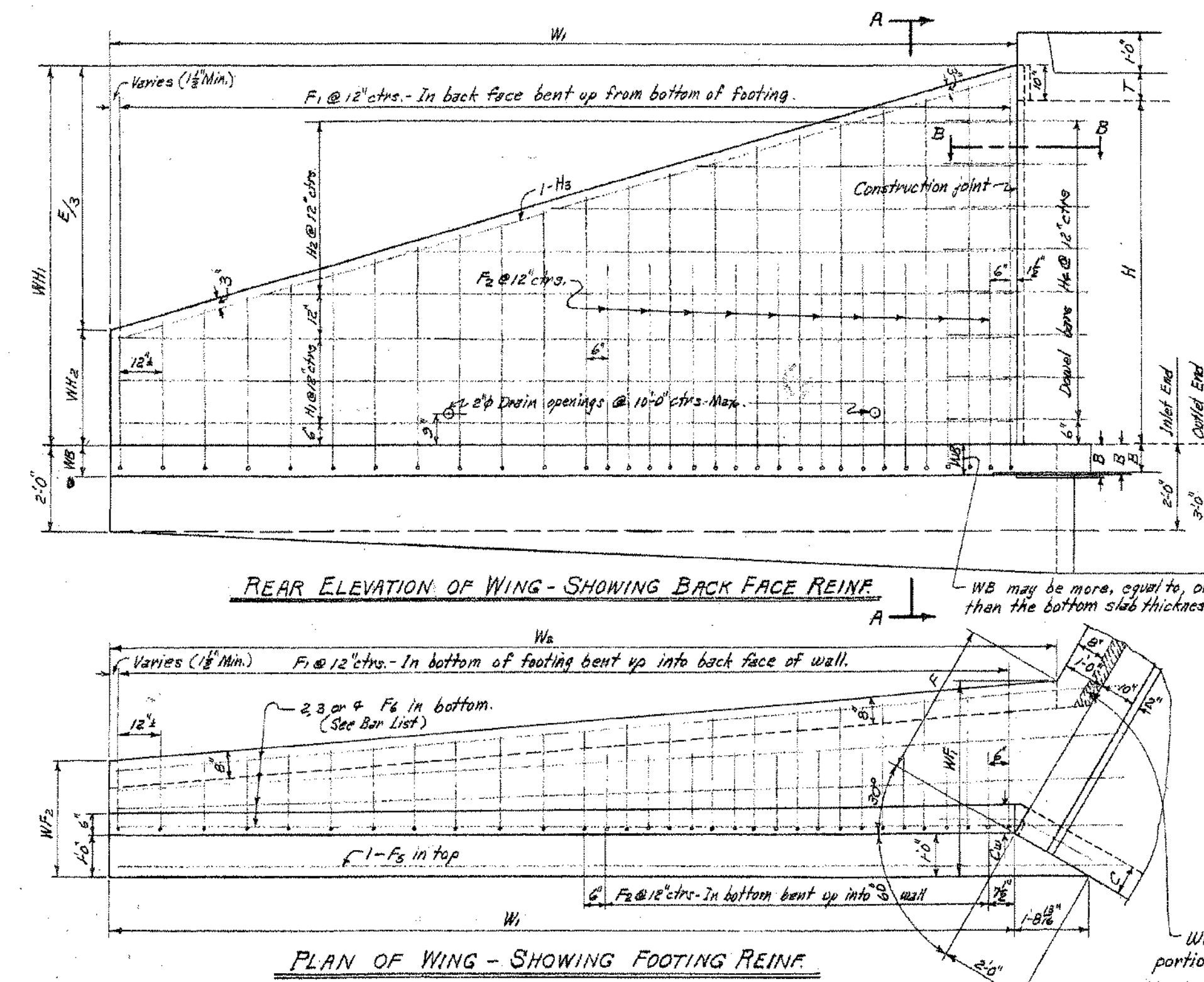

REAR ELEVATION OF WING - SHOWING BACK FACE REINF.

PLAN OF WING - SHOWING FOOTING REINF.

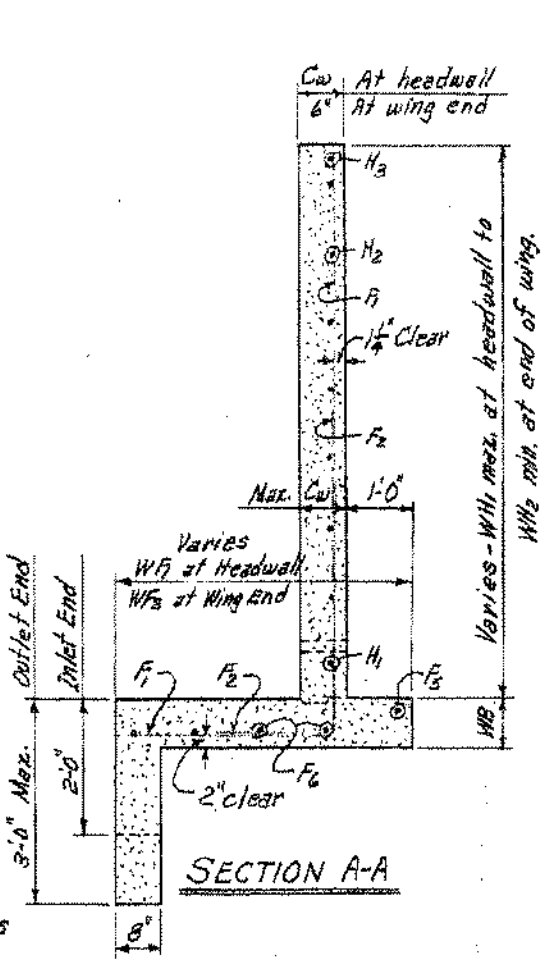

SECTION A-A

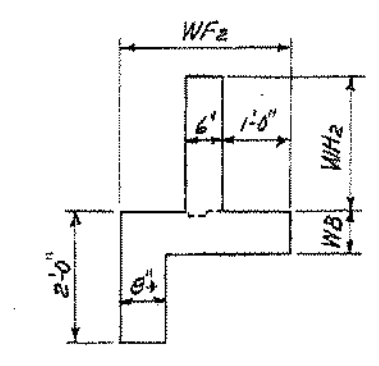

END VIEW OF WING

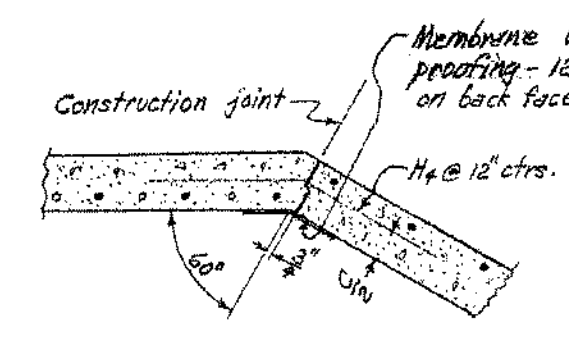

SECTION B-B THRU CONSTRUCTION JOINT

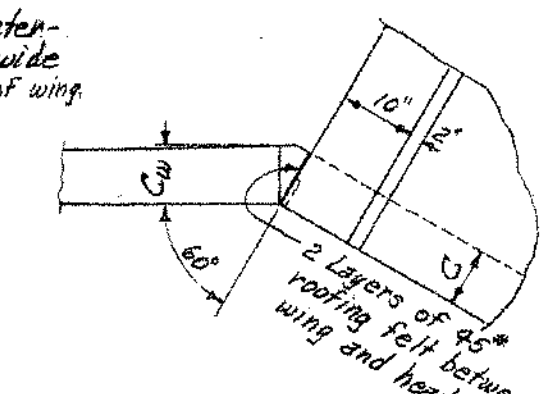

DETAIL AT TOP OF WING

NOTE:- Payment for membrane waterproofing and roofing felt to be included in the price bid for Class S Concrete.

WING DIMENSIONS

CLEAR HEIGHT OF BOX	THICKNESS OF WING FOOTING	THICKNESS OF WING AT HEADWALL = C	WINGWALL HEIGHTS: AT HEADWALL	WINGWALL HEIGHTS: AT END OF WING	WIDTHS OF WING FOOTINGS: AT HEADWALL	WIDTHS OF WING FOOTINGS: AT END OF WING	PERPENDICULAR FOOTING DIMENSION	PERPENDICULAR DIST. FROM HDWL TO END OF WING	LENGTH OF WINGWALLS	INSIDE FOOTING DIMENSION	* QUANTITY PER WING CLASS S CONCRETE: INLET END	OUTLET END
H	WB	Cw	WH1	WH2	WF1	WF2	F	E	W1	W2	CU.YD.	CU.YD.
2'	7"	6"	2'-10"	0'-8"	2'-4"	2'-0"	0'-11 3/4"	6'-6"	7'-6"	7'-1 1/2"	0.889	0.986
3'	7"	6"	3'-10"	1'-0"	2'-8"	2'-1 1/2"	1'-4 3/8"	8'-6"	9'-9 3/4"	9'-7 1/2"	1.338	1.466
4'	7"	6"	4'-10"	1'-4"	3'-0"	2'-3"	1'-9"	10'-6"	12'-1 1/2"	12'-1 1/2"	1.868	2.027
5'	7"	6"	5'-10"	1'-8"	3'-4"	2'-4 1/2"	2'-1 5/8"	12'-6"	14'-5 1/4"	14'-7 1/2"	2.478	2.668
		7"	5'-10"	1'-8"	3'-4"	2'-4 1/2"	2'-1 5/8"	12'-6"	14'-5 1/4"	14'-7 1/2"	2.582	2.772
6'	8"	7"	6'-10"	2'-0"	3'-8"	2'-6"	2'-6 1/4"	14'-6"	16'-9"	17'-1 1/2"	3.440	3.661
		7 1/2"	6'-10"	2'-0"	3'-8"	2'-6"	2'-6 1/4"	14'-6"	16'-9"	17'-1 1/2"	3.511	3.732
		8"	6'-10"	2'-0"	3'-8"	2'-6"	2'-6 1/4"	14'-6"	16'-9"	17'-1 1/2"	3.582	3.803
7'	8 1/2"	7 1/2"	7'-10"	2'-4"	4'-2"	2'-7 1/2"	3'-1 1/4"	16'-6"	19'-0 5/8"	19'-8 3/4"	4.505	4.758
		8"	7'-10"	2'-4"	4'-2"	2'-7 1/2"	3'-1 1/4"	16'-6"	19'-0 5/8"	19'-8 3/4"	4.597	4.851
8'	9"	8"	8'-10"	2'-8"	4'-8"	2'-9"	3'-8"	18'-6"	21'-4 1/4"	22'-4"	5.761	6.047

* Quantity per wing does not include headwall or that portion of apron or toewall for the length W3.

APRON DIMENSION W3

W3 = (OW - 2F)

CLEAR SPAN	CLEAR HEIGHT	2 × FOOTING DIMENSION	SINGLE BARREL CULVERT: OW	W3	DOUBLE BARREL CULVERT: OW	W3	TRIPLE BARREL CULVERT: OW	W3	QUADRUPLE BARREL CULVERT: OW	W3	QUINTUPLE BARREL CULVERT: OW	W3
S	H	2F	OW	W3	OW	W3	OW	W3	OW	W3	OW	W3
4'	2'	1'-11 1/2"	5'-0"	3'-0 1/2"	9'-8"	7'-8 1/2"	14'-4"	12'-4 1/2"	19'-0"	17'-0 1/2"	23'-8"	21'-8 1/2"
	3'	2'-8 3/4"	5'-0"	2'-3 1/4"	9'-8"	6'-11 1/4"	14'-4"	11'-7 1/4"	19'-0"	16'-3 1/4"	23'-8"	20'-11 1/4"
	4'	3'-6"	5'-0"	1'-6"	9'-8"	6'-2"	14'-4"	10'-10"	19'-0"	15'-6"	23'-8"	20'-2"
	5'	4'-3 1/4"	5'-0"	0'-8 3/4"	9'-8"	5'-4 3/4"	14'-4"	10'-0 3/4"	19'-0"	14'-8 3/4"	23'-8"	19'-4 3/4"
	6'	5'-0 1/2"	5'-2"	0'-1 1/2"	9'-11"	4'-10 1/2"	14'-8"	9'-7 1/2"	19'-5"	14'-4 1/2"	24'-2"	19'-1 1/2"
5'	3'	2'-8 3/4"	6'-0"	3'-3 1/4"	11'-8"	8'-11 1/4"	17'-4"	14'-7 1/4"	23'-0"	20'-3 1/4"	28'-8"	25'-11 1/4"
	4'	3'-6"	6'-0"	2'-6"	11'-8"	8'-2"	17'-4"	13'-10"	23'-0"	19'-6"	28'-8"	25'-2"
	5'	4'-3 1/4"	6'-0"	1'-8 3/4"	11'-8"	7'-4 3/4"	17'-4"	13'-0 3/4"	23'-0"	18'-8 3/4"	28'-8"	24'-4 3/4"
	6'	5'-0 1/2"	6'-2"	1'-1 1/2"	11'-11"	6'-10 1/2"	17'-8"	12'-7 1/2"	23'-5"	18'-4 1/2"	29'-2"	24'-1 1/2"
	7'	6'-2 1/2"	6'-3"	0'-0 1/2"	12'-1"	5'-10 1/2"	17'-11"	11'-8 1/2"	23'-9"	17'-6 1/2"	29'-7"	23'-4 1/2"
6'	3'	2'-8 3/4"	7'-0"	4'-3 1/4"	13'-8"	10'-11 1/4"	20'-4"	17'-7 1/4"	27'-0"	24'-3 1/4"	33'-8"	30'-11 1/4"
	4'	3'-6"	7'-0"	3'-6"	13'-8"	10'-2"	20'-4"	16'-10"	27'-0"	23'-6"	33'-8"	30'-2"
	5'	4'-3 1/4"	7'-0"	2'-8 3/4"	13'-8"	9'-4 3/4"	20'-4"	16'-0 3/4"	27'-0"	22'-8 3/4"	33'-8"	29'-4 3/4"
	6'	5'-0 1/2"	7'-2"	2'-1 1/2"	13'-11"	8'-10 1/2"	20'-8"	15'-7 1/2"	27'-5"	22'-4 1/2"	34'-2"	29'-1 1/2"
	7'	6'-2 1/2"	7'-3"	1'-0 1/2"	14'-1"	7'-10 1/2"	20'-11"	14'-8 1/2"	27'-9"	21'-6 1/2"	34'-7"	28'-4 1/2"
	8'	7'-4"	7'-4"	0'-0"	14'-2"	6'-10"	21'-0"	13'-8"	27'-10"	20'-6"	34'-8"	27'-4"
7'	4'	3'-6"	8'-0"	4'-6"	15'-8"	12'-2"	23'-4"	19'-10"	31'-0"	27'-6"	38'-8"	35'-2"
	5'	4'-3 1/4"	8'-0"	3'-8 3/4"	15'-8"	11'-4 3/4"	23'-4"	19'-0 3/4"	31'-0"	26'-8 3/4"	38'-8"	34'-4 3/4"
	6'	5'-0 1/2"	8'-2"	3'-1 1/2"	15'-11"	10'-10 1/2"	23'-8"	18'-7 1/2"	31'-5"	26'-4 1/2"	39'-2"	34'-1 1/2"
	7'	6'-2 1/2"	8'-3"	2'-0 1/2"	16'-1"	9'-10 1/2"	23'-11"	17'-8 1/2"	31'-9"	25'-6 1/2"	39'-7"	33'-4 1/2"
	8'	7'-4"	8'-4"	1'-0"	16'-2"	8'-10"	24'-0"	16'-8"	31'-10"	24'-6"	39'-8"	32'-4"
8'	4'	3'-6"	9'-0"	5'-6"	17'-8"	14'-2"	26'-4"	22'-10"	35'-0"	31'-6"	43'-8"	40'-2"
	5'	4'-3 1/4"	9'-2"	4'-10 3/4"	17'-11"	13'-7 3/4"	26'-8"	22'-4 3/4"	35'-5"	31'-1 3/4"	44'-2"	39'-10 3/4"
	6'	5'-0 1/2"	9'-2"	4'-1 1/2"	17'-11"	12'-10 1/2"	26'-8"	21'-7 1/2"	35'-5"	30'-4 1/2"	44'-2"	39'-1 1/2"
	7'	6'-2 1/2"	9'-3"	3'-0 1/2"	18'-1"	11'-10 1/2"	26'-11"	20'-8 1/2"	35'-9"	29'-6 1/2"	44'-7"	38'-4 1/2"
	8'	7'-4"	9'-4"	2'-0"	18'-2"	10'-10"	27'-0"	19'-8"	35'-10"	28'-6"	44'-8"	37'-4"
9'	5'	4'-3 1/4"	10'-2"	5'-10 3/4"	19'-11"	15'-7 3/4"	29'-8"	25'-4 3/4"	39'-5"	35'-1 3/4"	49'-2"	44'-10 3/4"
	6'	5'-0 1/2"	10'-3"	5'-2 1/2"	20'-1"	15'-0 1/2"	29'-11"	24'-10 1/2"	39'-9"	34'-8 1/2"	49'-7"	44'-6 1/2"
	7'	6'-2 1/2"	10'-3"	4'-0 1/2"	20'-1"	13'-10 1/2"	29'-11"	23'-8 1/2"	39'-9"	33'-6 1/2"	49'-7"	43'-4 1/2"
	8'	7'-4"	10'-4"	3'-0"	20'-2"	12'-10"	30'-0"	22'-8"	39'-10"	32'-6"	49'-8"	42'-4"
10'	5'	4'-3 1/4"	11'-2"	6'-10 3/4"	21'-11"	17'-7 3/4"	32'-8"	28'-4 3/4"	43'-5"	39'-1 3/4"	54'-2"	49'-10 3/4"
	6'	5'-0 1/2"	11'-3"	6'-2 1/2"	22'-1"	17'-0 1/2"	32'-11"	27'-10 1/2"	43'-9"	38'-8 1/2"	54'-7"	49'-6 1/2"
	7'	6'-2 1/2"	11'-3"	5'-0 1/2"	22'-1"	15'-10 1/2"	32'-11"	26'-8 1/2"	43'-9"	37'-6 1/2"	54'-7"	48'-4 1/2"
	8'	7'-4"	11'-4"	4'-0"	22'-2"	14'-10"	33'-0"	25'-8"	43'-10"	36'-6"	54'-8"	47'-4"
11'	6'	5'-0 1/2"	12'-4"	7'-3 1/2"	24'-2"	19'-1 1/2"	36'-0"	30'-11 1/2"	47'-10"	42'-9 1/2"		
	7'	6'-2 1/2"	12'-4"	6'-1 1/2"	24'-2"	17'-11 1/2"	36'-0"	29'-9 1/2"	47'-10"	41'-7 1/2"		
	8'	7'-4"	12'-4"	5'-0"	24'-2"	16'-10"	36'-0"	28'-8"	47'-10"	40'-6"		
12'	6'	5'-0 1/2"	13'-4"	8'-3 1/2"	26'-2"	21'-1 1/2"	39'-0"	33'-11 1/2"	51'-10"	46'-9 1/2"		
	7'	6'-2 1/2"	13'-4"	7'-1 1/2"	26'-2"	19'-11 1/2"	39'-0"	32'-9 1/2"	51'-10"	45'-7 1/2"		
	8'	7'-4"	13'-4"	6'-0"	26'-2"	18'-10"	39'-0"	31'-8"	51'-10"	44'-6"		

QUANTITIES

CLEAR SPAN	CLEAR HEIGHT	THICKNESS OF WING AT HEADWALL	THICKNESS OF WING FOOTING	⊗ REINFORCING STEEL - FOR 4 WINGS	CLASS S CONCRETE - 4 WINGS (HEADWALLS, WINGWALLS, FOOTINGS, TOEWALLS AND APRONS): SINGLE BARREL CULVERT	DOUBLE BARREL CULVERT	TRIPLE BARREL CULVERT	QUADRUPLE BARREL CULVERT	QUINTUPLE BARREL CULVERT
S	H	Cw	WB	LB.	CU.YD.	CU.YD.	CU.YD.	CU.YD.	CU.YD.
4'	2'	6"	7"	108.0	4.50	5.46	6.42	7.38	8.34
	3'	6"	7"	164.4	6.26	7.21	8.17	9.13	10.09
	4'	6"	7"	254.6	8.33	9.28	10.24	11.20	12.16
	5'	6"	7"	357.8	10.72	11.68	12.64	13.60	14.56
	6'	7"	8"	583.1	14.55	15.53	16.52	17.51	18.49
5'	3'	6"	7"	164.4	6.47	7.63	8.79	9.96	11.12
	4'	6"	7"	254.6	8.54	9.70	10.87	10.03	13.20
	5'	6"	7"	357.8	10.94	12.10	13.26	14.43	15.59
	6'	7"	8"	583.1	14.77	15.96	17.15	18.34	19.54
	7'	7 1/2"	8 1/2"	1134.6	18.94	20.15	21.37	22.59	23.80
6'	3'	6"	7"	164.4	6.68	8.06	9.42	10.80	12.18
	4'	6"	7"	254.6	8.75	10.14	11.49	12.87	14.25
	5'	6"	7"	357.8	11.15	12.53	13.89	15.27	16.65
	6'	7"	8"	583.1	14.98	16.39	17.78	19.18	20.59
	7'	7 1/2"	8 1/2"	1134.6	19.15	20.58	22.00	23.43	24.86
	8'	8"	9"	1425.6	24.09	25.53	26.96	28.39	29.83
7'	4'	6"	7"	254.6	8.97	10.58	12.15	13.76	15.35
	5'	6"	7"	357.8	11.36	12.97	14.54	16.15	17.75
	6'	7"	8"	583.1	15.20	16.82	18.42	20.04	21.66
	7'	7 1/2"	8 1/2"	1134.6	19.38	21.02	22.64	24.28	25.92
	8'	8"	9"	1425.6	24.32	25.97	27.60	29.25	30.89
8'	4'	6"	7"	254.6	9.19	11.03	12.82	14.65	16.45
	5'	7"	7"	357.8	12.03	13.89	15.70	17.55	19.36
	6'	7"	8"	583.1	15.42	17.27	19.09	20.93	22.75
	7'	7 1/2"	8 1/2"	1134.6	19.59	21.46	23.30	25.16	26.99
	8'	8"	9"	1425.6	24.54	26.41	28.24	30.11	31.96
9'	5'	7"	7"	357.8	12.26	14.34	16.87	18.45	20.47
	6'	7 1/2"	8"	583.1	15.94	18.04	20.09	22.19	24.23
	7'	7 1/2"	8 1/2"	1134.6	19.81	21.91	23.96	26.06	28.10
	8'	8"	9"	1425.6	24.76	26.86	28.91	31.00	33.05
10'	5'	7"	7"	357.8	12.49	14.80	17.05	19.26	21.52
	6'	7 1/2"	8"	583.1	16.17	18.50	20.77	22.99	25.28
	7'	7 1/2"	8 1/2"	1134.6	20.04	22.37	24.64	26.87	29.15
	8'	8"	9"	1425.6	24.98	27.31	29.58	31.81	34.10
11'	6'	8"	8"	583.1	16.69	19.27	21.76	24.23	
	7'	8"	8 1/2"	1134.6	20.64	23.22	25.71	28.18	
	8'	8"	9"	1425.6	25.19	27.77	30.27	32.74	
12'	6'	8"	8"	583.1	16.92	19.75	22.45	25.18	
	7'	8"	8 1/2"	1134.6	20.87	23.69	26.40	29.13	
	8'	8"	9"	1425.6	25.42	28.25	30.96	33.69	

⊗ For reinforcing steel in Headwalls and Aprons, See Details of Standard Barrel Sections for R.C. Box Culverts for the desired Span and Height.

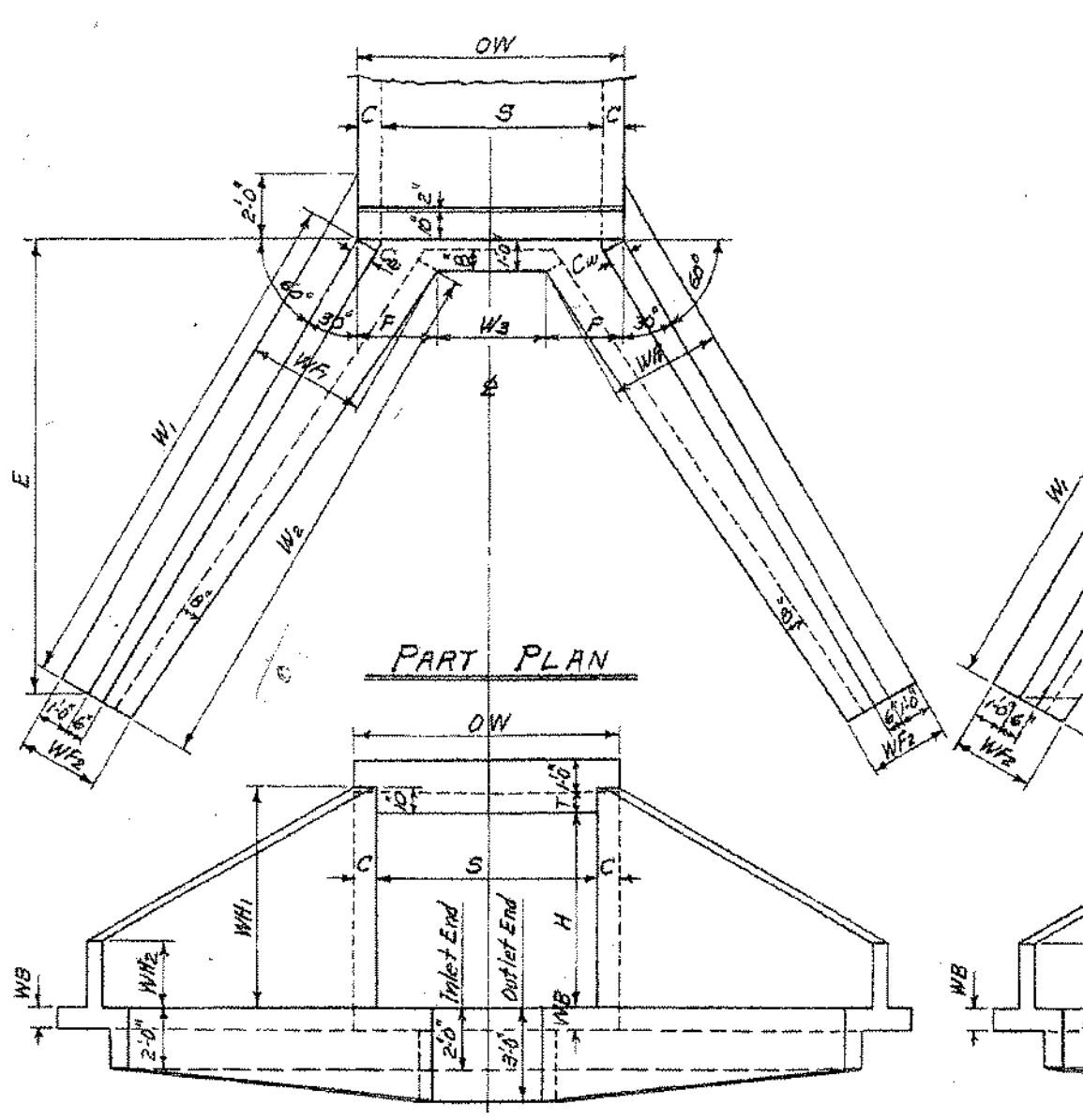

PART PLAN

END ELEVATION

SINGLE BARREL CULVERT

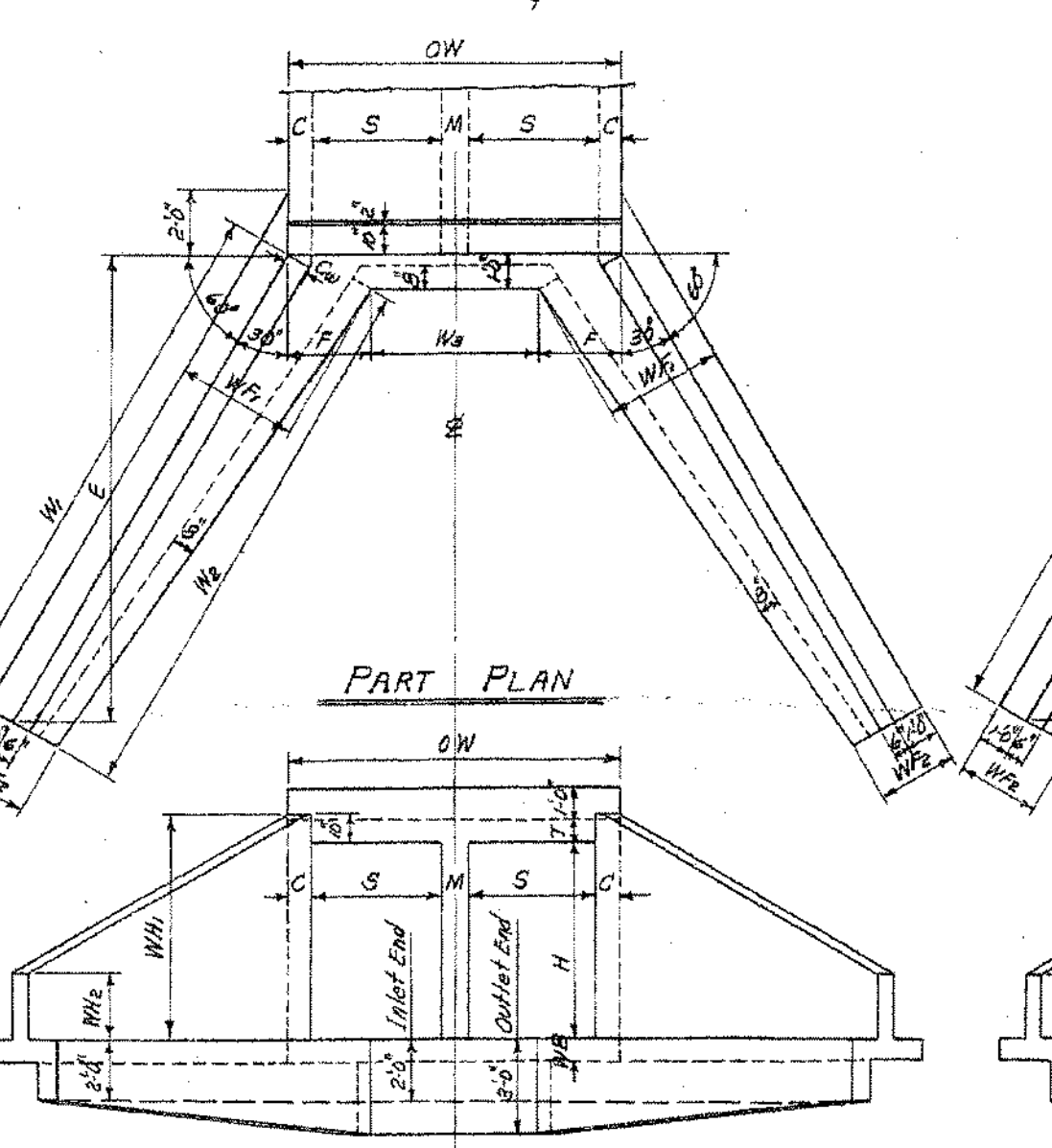

PART PLAN

END ELEVATION

DOUBLE BARREL CULVERT

NOTE:- Plans and Elevations are not to scale.

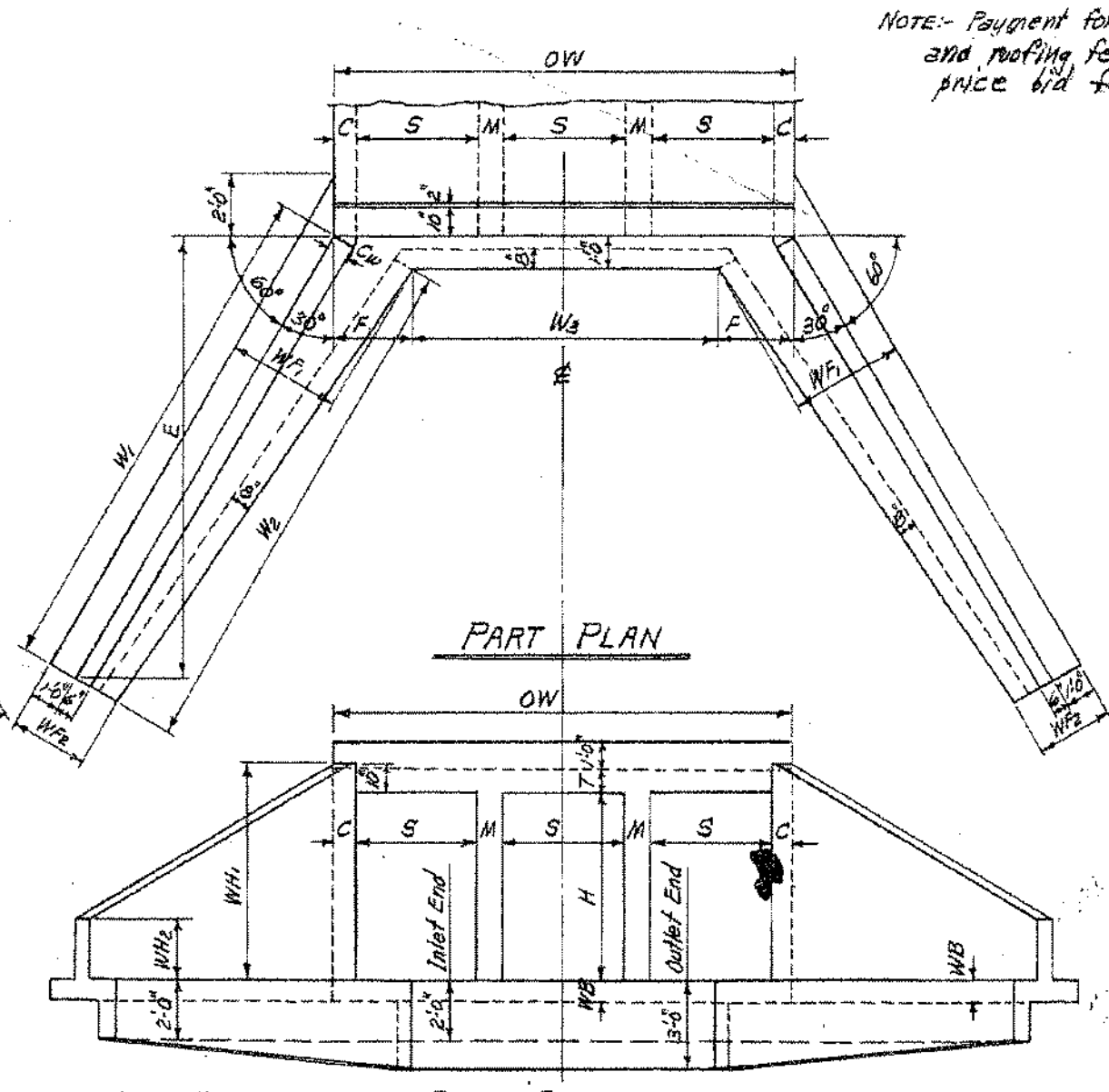

PART PLAN

END ELEVATION

TRIPLE BARREL CULVERT

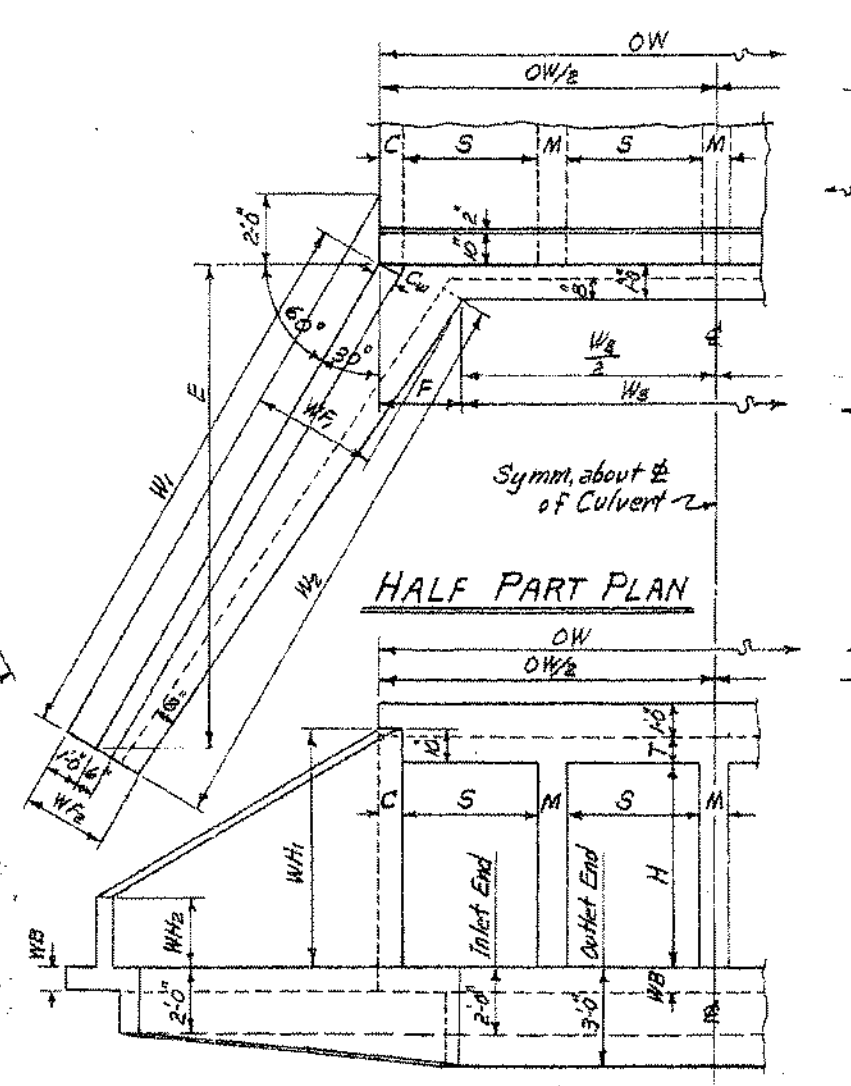

HALF PART PLAN

HALF END ELEVATION

QUADRUPLE BARREL CULVERT

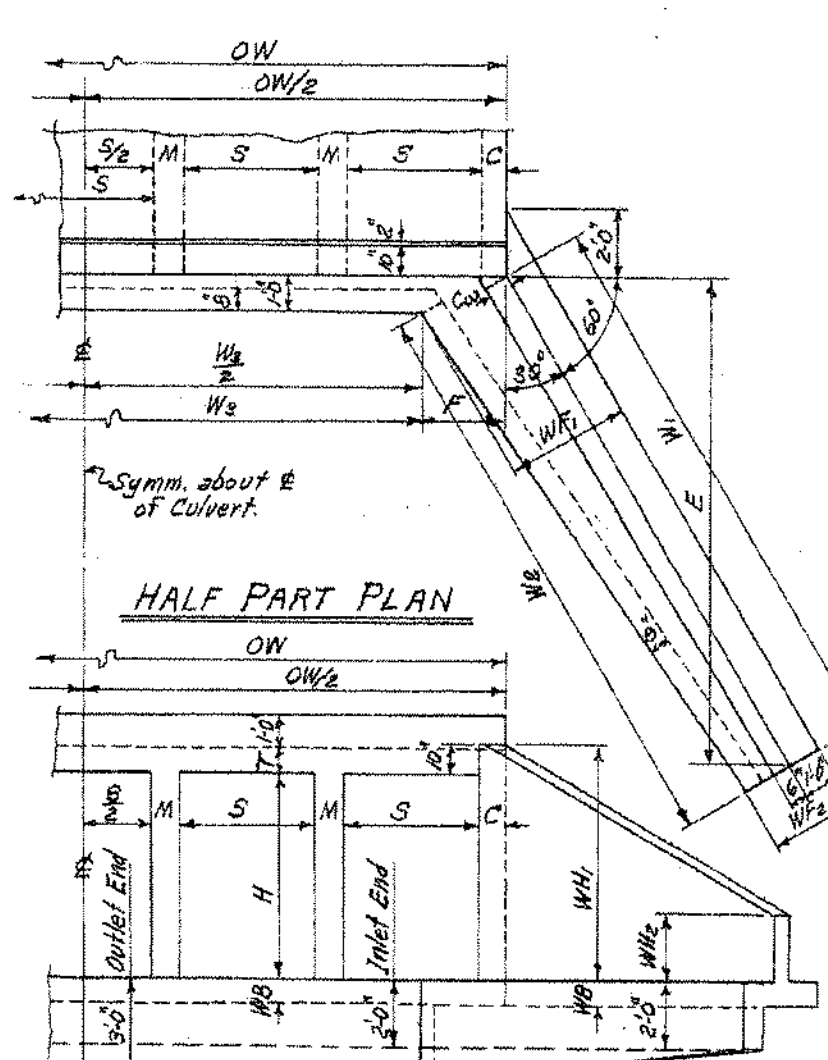

HALF PART PLAN

HALF END ELEVATION

QUINTUPLE BARREL CULVERT

BAR LIST FOR ONE WING - 4 REQUIRED

CLEAR HEIGHT	F1 BENT - In bottom of footing, bent up into back face of wing. One bar of each length.: SIZE	SPACING	NO. REQ'D	LENGTHS VARY: MIN.	MAX.	X: MIN.	MAX.	Y: MIN.	MAX.	F2 BENT - In bottom of footing, bent up into back face of wing. Alt. with F1 bars.: SIZE	SPACING	NO. REQ'D	LENGTH	X	Y
H															
2'	#3	12"	8	1'-6"	3'-10"	0'-8"	1'-0"	0'-11"	2'-11"	—	—	—	—	—	—
3'	#3	12"	10	2'-2"	5'-2"	0'-10"	1'-3"	1'-5"	4'-0"	—	—	—	—	—	—
4'	#3	12"	13	2'-4"	6'-6"	0'-11"	1'-7"	1'-6"	5'-0"	—	—	—	—	—	—
5'	#3	12"	15	2'-11"	7'-10"	1'-1"	1'-11"	1'-11"	6'-0"	#3	12"	4	3'-6"	1'-1"	2'-6"
6'	#4	12"	17	3'-6"	9'-3"	1'-2"	2'-3"	2'-5"	7'-1"	#3	12"	4	4'-6"	1'-4"	3'-3"
7'	#4	12"	20	3'-9"	10'-3"	1'-3"	2'-9"	2'-7"	8'-1"	#4	12"	7	5'-6"	1'-7"	4'-0"
8'	#4	12"	22	4'-4"	12'-3"	1'-5"	3'-2"	3'-0"	9'-2"	#4	12"	10	6'-6"	1'-10"	4'-9"

CLEAR HEIGHT	F5 STRAIGHT - Longitudinal in top of wing footing heel.: SIZE	NO. REQ'D	LENGTH	F6 STRAIGHT - Longitudinal in bottom of wing footing toe.: SIZE	NO. REQ'D	LENGTH	H1 STRAIGHT - Horizontal in back face of wing.: SIZE	SPACING	NO. REQ'D	LENGTH	H2 STRAIGHT - Horizontal in back face of wing. One bar of each length.: SIZE	SPACING	NO. REQ'D	LENGTHS VARY: MAX.	MIN.	H3 - In back face of wing at top-on slope.: SIZE	NO. REQ'D	LENGTH	H4 BENT - Dowels thru construction joint at headwall.: SIZE	SPACING	NO. REQ'D	LENGTH	X	QUANTITY REINFORCING STEEL PER WING: LB.
H																									
2'	#3	1	9'-8"	#3	2	8'-6"	#3	12"	1	7'-2"	#3	12"	1	—	4'-0"	#3	1	7'-4"	#3	12"	2	2'-8"	1'-4"	27.0
3'	#3	1	12'-0"	#3	2	11'-0"	#3	12"	1	9'-6"	#3	12"	2	7'-6"	4'-0"	#3	1	9'-9"	#3	12"	3	2'-8"	1'-4"	41.1
4'	#3	1	14'-4"	#3	3	13'-6"	#3	12"	1	11'-10"	#3	12"	3	10'-11"	4'-0"	#3	1	12'-2"	#3	12"	4	2'-8"	1'-4"	63.7
5'	#3	1	16'-8"	#3	3	16'-0"	#3	12"	2	14'-2"	#3	12"	3	10'-11"	4'-0"	#3	1	14'-7"	#3	12"	5	2'-8"	1'-4"	89.5
6'	#3	1	19'-0"	#3	3	18'-6"	#3	12"	2	16'-6"	#3	12"	4	14'-4"	4'-0"	#3	1	17'-0"	#3	12"	6	2'-8"	1'-4"	145.8
7'	#4	1	21'-4"	#4	4	21'-0"	#4	12"	2	18'-9"	#4	12"	5	17'-9"	4'-0"	#4	1	19'-5"	#4	12"	7	3'-6"	1'-9"	283.7
8'	#4	1	23'-8"	#4	4	23'-9"	#4	12"	3	21'-1"	#4	12"	5	17'-9"	4'-0"	#4	1	21'-10"	#4	12"	8	3'-6"	1'-9"	356.4

BAR BENDING DIAGRAMS: F1 & F2 (Y, X, 3" Pin); H4 (X, X, 7/12)

NOTE:- Dimensions are to bar centers.

Designed By:- W.C.H. 8-20-62. Checked By:- RHS 1-9-63
Drawn By:- W.C.H. 12-4-62. Checked By:- RHS 1-31-63
Quantities By:- W.C.H. 12-14-62. Checked By:- RHS 3-29-63
Rechecked By:- RHS

MEMBRANE:- A membrane waterproofing 12" wide, consisting of three moppings of waterproofing asphalt and two alternate layers of treated cotton fabric shall be applied to the back face of wing to cover the construction joints in wings.

REVISIONS:- Membrane added. 5-10-66 W.C.H.

GENERAL NOTES:-

CONCRETE:- All concrete to be Class S, and shall be poured in the dry. All exposed corners to have 3/4" chamfers.

REINFORCING STEEL:- Reinforcing steel to be deformed bars of intermediate or hard grade.

CONSTRUCTION JOINTS:- Construction joints between wingwall, footings and sidewalls shall be only where shown on plans.

SPECIFICATIONS:- Arkansas State Highway Commission Standard Specifications for Highway Construction and applicable Special Provisions.

UNIT STRESSES:-

Class S Concrete (n=10) 1200#/□"
Reinforcing Steel 20,000#/□"

NOTE:- This drawing to be used in conjunction with Standard Barrel Sections, Drawing Nos. as listed below.

SINGLES	DOUBLES	TRIPLES	QUADRUPLES	QUINTUPLES
R-100X-0	R-200X-0	R-300X-0	R-400X-0	R-500X-0
R-100X-X1	R-200X-X1	R-300X-X1	R-400X-X1	R-500X-X1
R-100X-X2	R-200X-X2	R-300X-X2	R-400X-X2	
	R-200X-X3	R-300X-X3		

CLASS S CONCRETE

ARKANSAS STATE HIGHWAY COMMISSION

DETAILS OF STANDARD WINGS FOR REINFORCED CONCRETE BOX CULVERTS

4', 5', 6', 7', 8', 9', 10', 11' & 12' SPANS — 3:1 SLOPES
SINGLES, DOUBLES, TRIPLES, QUADRUPLES & QUINTUPLES. — ALL DEPTHS OF COVER FOR H = 8'-0" OR LESS

STANDARD DRAWING NO. W-X003-1

FED. ROAD No.	STATE	FED. AID PROJECT	FISCAL YEAR	SHEET No.	TOTAL SHEETS
6	ARK.			134	
JOB No.					

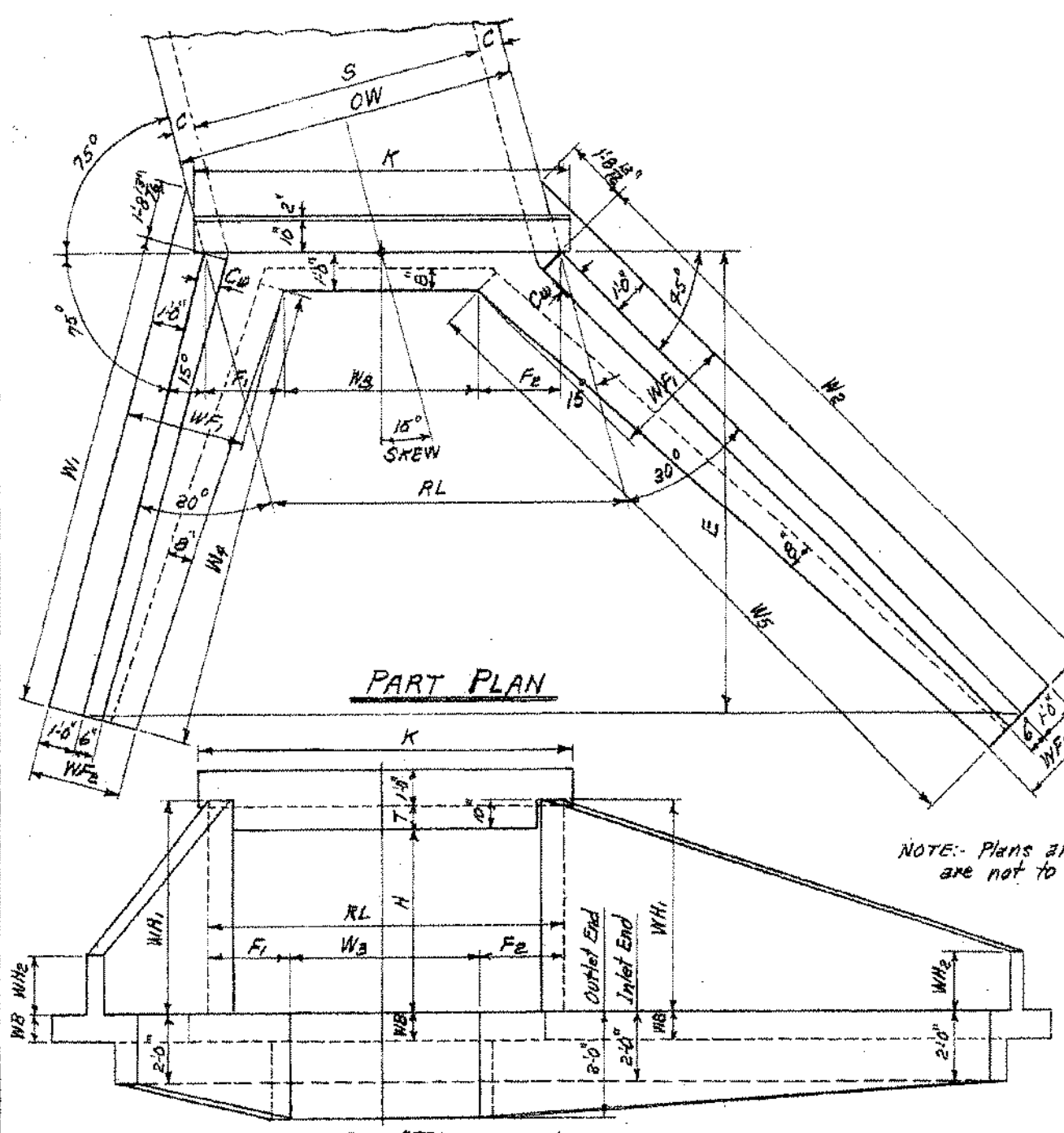

END ELEVATION

SINGLE BARREL CULVERT - 15° SKEW RIGHT FORWARD

Details of Culvert with 15° Skew Left Forward is reversed, see Layout below.

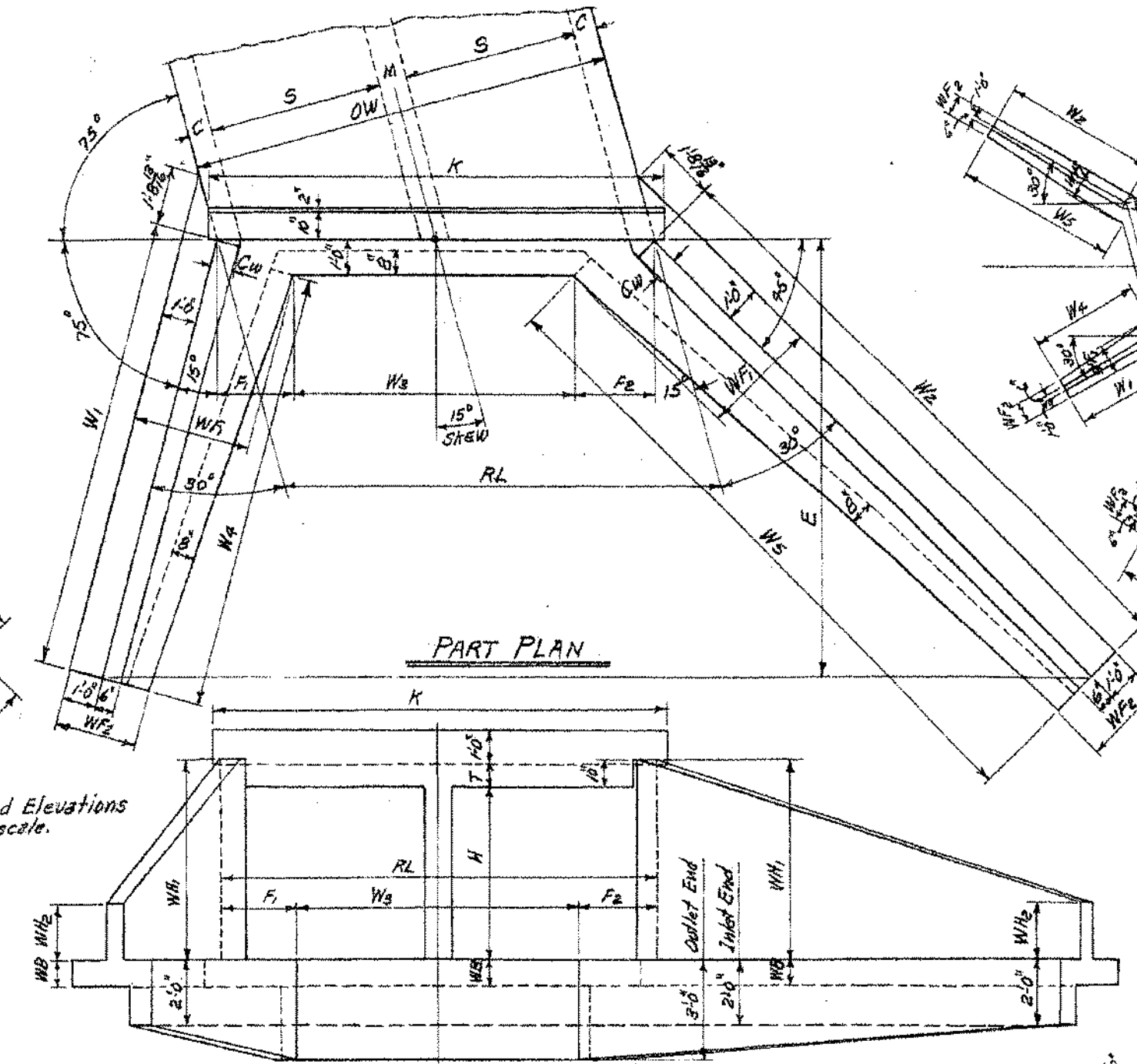

END ELEVATION

DOUBLE BARREL CULVERT - 15° SKEW RIGHT FORWARD

Details of Culvert with 15° Skew Left Forward is reversed, see Layout below.

NOTE:- Plans and Elevations are not to scale.

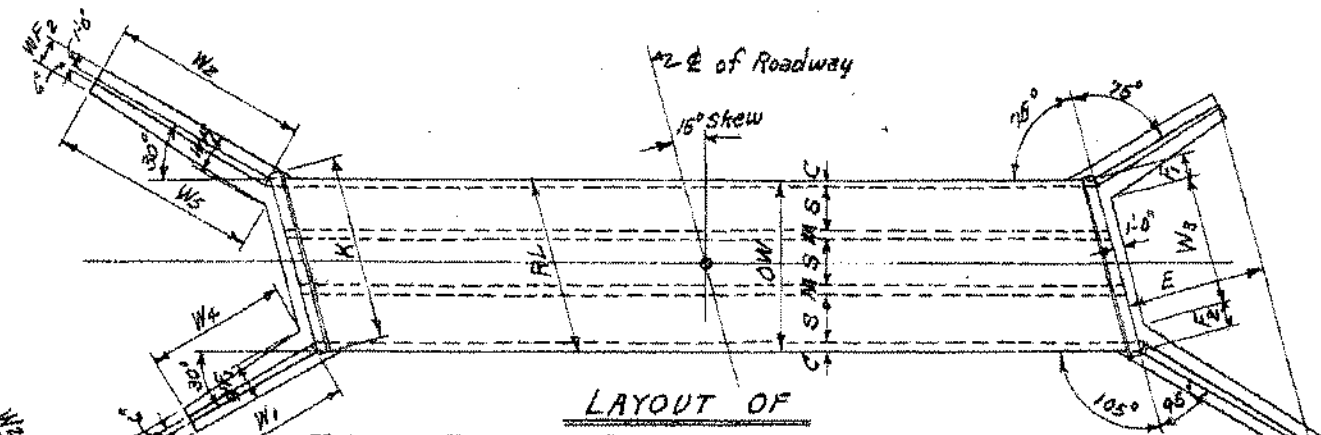

LAYOUT OF

TRIPLE BARREL CULVERT - 15° SKEW LEFT FORWARD

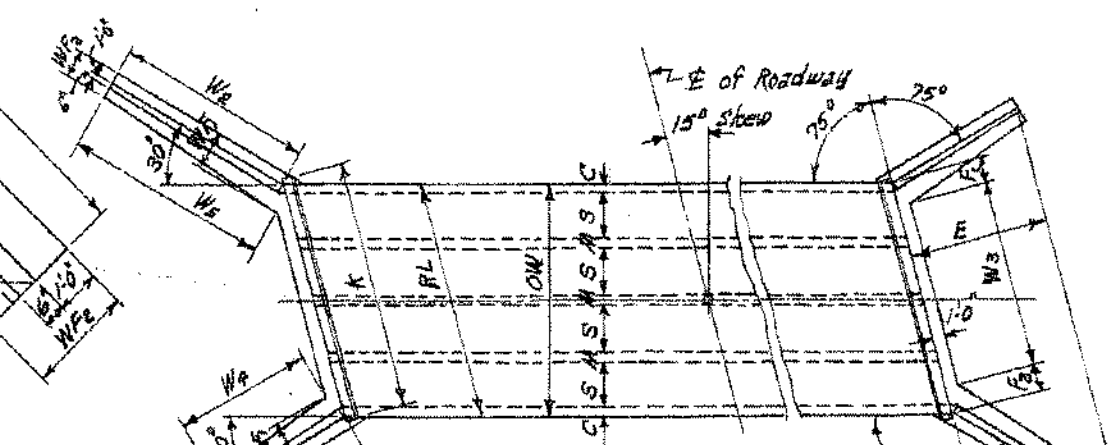

PART LAYOUT OF

QUADRUPLE BARREL CULVERT - 15° SKEW LEFT FORWARD

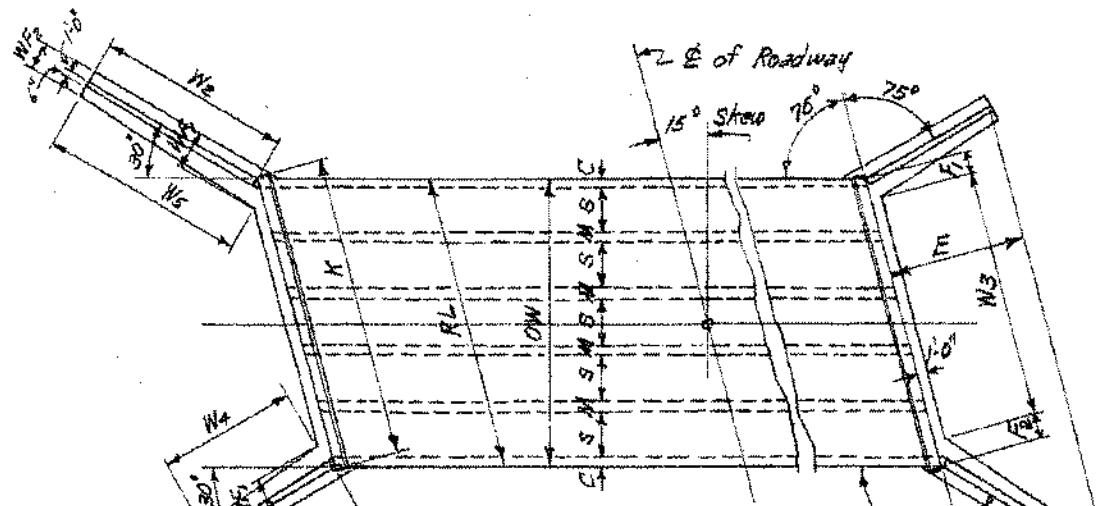

PART LAYOUT OF

QUINTUPLE BARREL CULVERT - 15° SKEW LEFT FORWARD

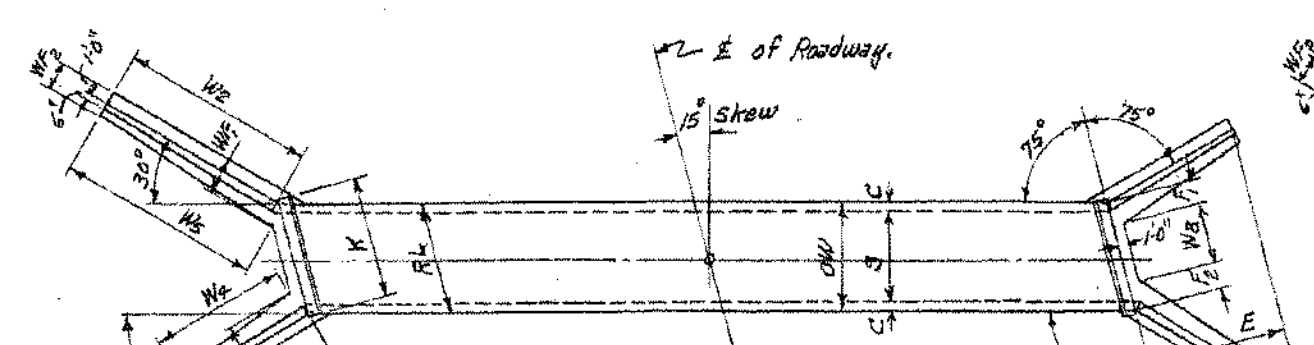

LAYOUT OF

SINGLE BARREL CULVERT - 15° SKEW LEFT FORWARD

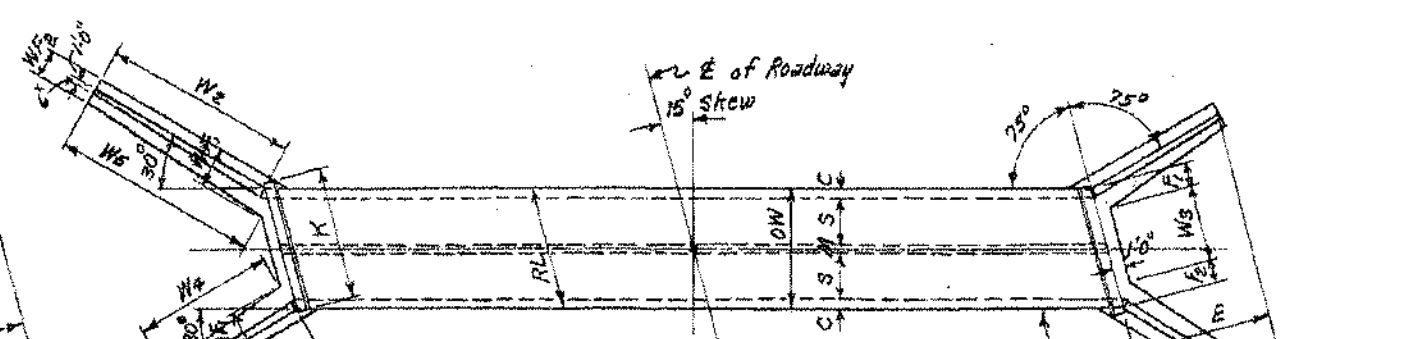

LAYOUT OF

DOUBLE BARREL CULVERT - 15° SKEW LEFT FORWARD

NOTE:- The length of the wings for the Plans, Elevations, and Layouts, as drawn, are proportioned for 3:1 slopes. For 2:1 slopes the wings are proportionally shorter, while for 4:1 slopes they are longer.

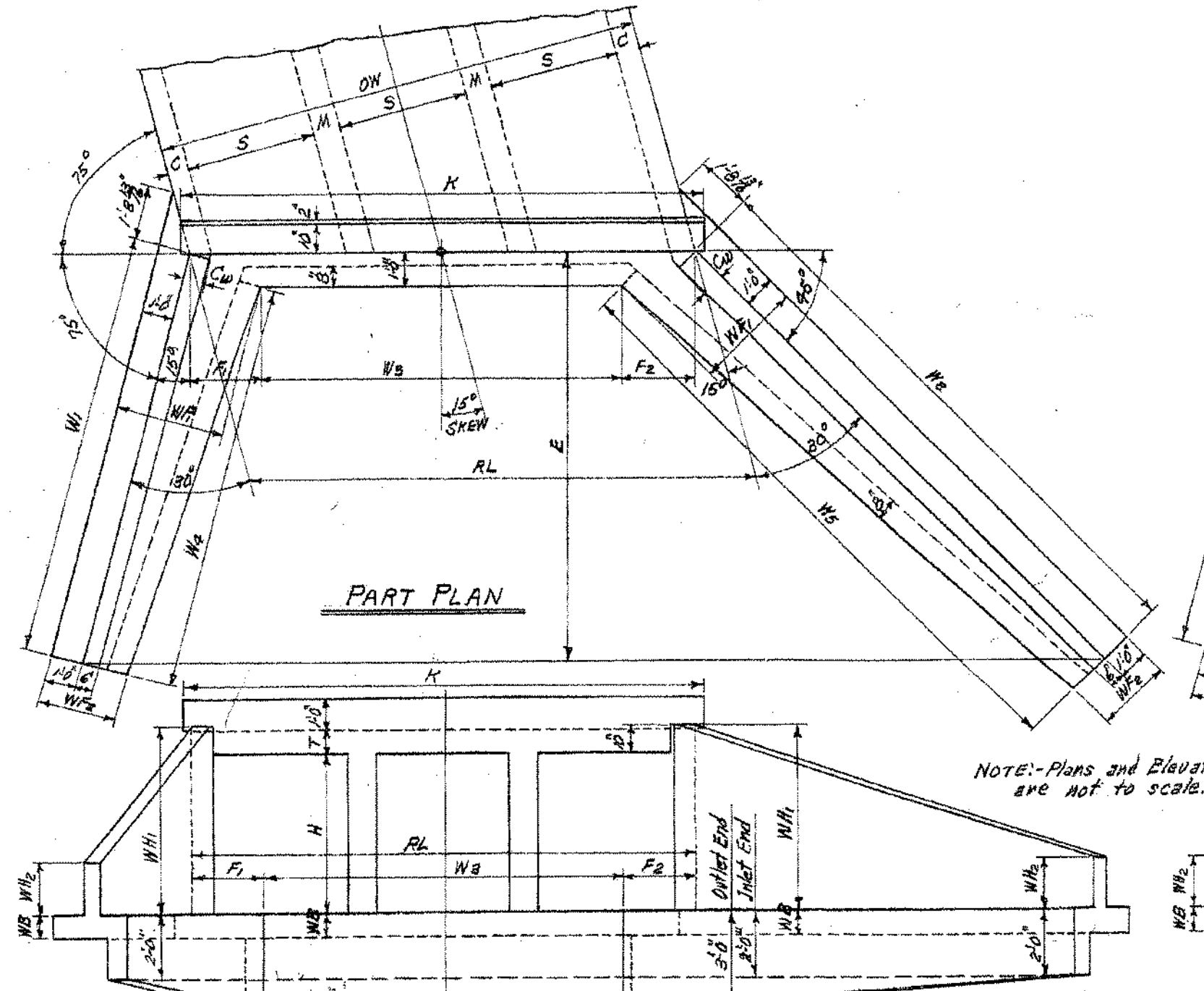

END ELEVATION

TRIPLE BARREL CULVERT - 15° SKEW RIGHT FORWARD

Details of Culvert with 15° Skew Left Forward is reversed, see Layout at top center of sheet.

NOTE:- Plans and Elevations are not to scale.

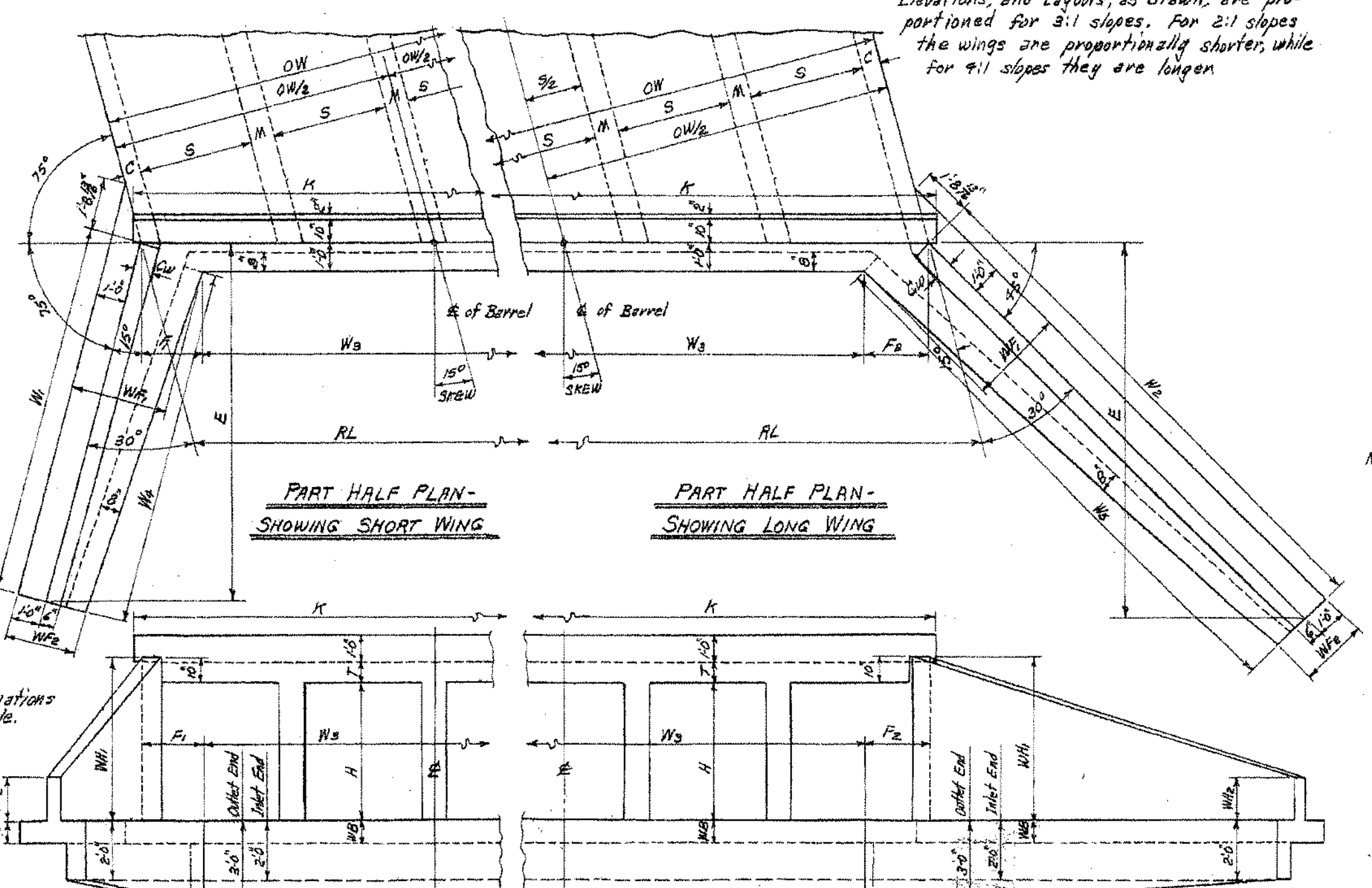

PART END ELEVATION

QUADRUPLE BARREL CULVERT - 15° SKEW RT. FWD.

Details of Culvert with 15° Skew Left Forward is reversed, see Layout at above center.

PART END ELEVATION

QUINTUPLE BARREL CULVERT - 15° SKEW RT. FWD.

Details of Culvert with 15° Skew Left Forward is reversed, see Layout above.

ROADWAY LENGTH RL — HEADWALL LENGTH K — APRON DIMENSION W_3

$RL = OW \times 1.035276$ — $K = RL + (6\frac{1}{2}")$ — $W_3 = RL - (F_1 + F_2)$

Use with Drawing No.	Clear Span S	Clear Height H	Sum of Footing Dimensions F_1&F_2	Single Barrel Culvert OW	RL	K	W_3	Double Barrel Culvert OW	RL	K	W_3	Triple Barrel Culvert OW	RL	K	W_3	Quadruple Barrel Culvert OW	RL	K	W_3	Quintuple Barrel Culvert OW	RL	K	W_3
W-X152-1, W-X153-1 or W-X154-1. (For H=8'-0" or less)	4'	2'	2'-0"	5'-0"	5'-2 1/8"	5'-8 5/8"	3'-2 1/8"	9'-8"	10'-0"	10'-6 1/2"	8'-0"	14'-4"	14'-10"	15'-4 1/2"	12'-10"	19'-0"	19'-8"	20'-2 1/2"	17'-8"	23'-8"	24'-6"	25'-0 1/2"	22'-6"
		3'	2'-9 3/4"	5'-0"	"	"	2'-4 3/8"	9'-8"	"	"	7'-2 1/4"	14'-4"	"	"	12'-0 1/4"	19'-0"	"	"	16'-10 1/8"	23'-8"	"	"	21'-8 1/4"
		4'	3'-7 5/8"	5'-0"	"	"	1'-6 1/2"	9'-8"	"	"	6'-4 1/2"	14'-4"	"	"	11'-2 1/2"	19'-0"	"	"	16'-0 1/2"	23'-8"	"	"	20'-10 1/2"
		5'	4'-5 3/8"	5'-0"	"	"	0'-8 3/8"	9'-8"	"	"	5'-6 3/8"	14'-4"	"	"	10'-4 3/8"	19'-0"	"	"	15'-2 3/4"	23'-8"	"	"	20'-0 3/4"
		6'	5'-3 1/8"	5'-2"	5'-4 1/8"	5'-10 5/8"	0'-1"	9'-11"	10'-3 1/8"	10'-9 5/8"	5'-0"	14'-8"	15'-2 1/4"	15'-8 3/4"	9'-11"	19'-5"	20'-1/4"	20'-7 3/4"	14'-10"	24'-2"	25'-0 1/8"	25'-6 3/8"	19'-9"
	5'	3'	2'-9 3/4"	6'-0"	6'-2 1/2"	6'-9"	3'-4 3/4"	11'-8"	12'-1"	12'-7 1/2"	9'-3 1/4"	17'-4"	17'-11 3/4"	18'-5 3/4"	15'-1 1/2"	23'-0"	23'-9 3/4"	24'-4 1/4"	21'-0"	28'-8"	29'-8 1/8"	30'-2 1/2"	26'-10 1/4"
		4'	3'-7 5/8"	6'-0"	"	"	2'-7"	11'-8"	"	"	8'-5 3/8"	17'-4"	"	"	14'-3 3/4"	23'-0"	"	"	20'-2 1/4"	28'-8"	"	"	26'-0 1/4"
		5'	4'-5 3/8"	6'-0"	"	"	1'-9 1/8"	11'-8"	"	"	7'-7 5/8"	17'-4"	"	"	13'-6"	23'-0"	"	"	19'-4 1/4"	28'-8"	"	"	25'-2 3/4"
		6'	5'-3 1/8"	6'-2"	6'-4 5/8"	6'-11 1/8"	1'-1 1/8"	11'-11"	12'-4"	12'-10 1/2"	7'-0 7/8"	17'-8"	18'-3 1/2"	18'-10"	13'-0 1/4"	23'-5"	24'-2 3/8"	24'-9 1/4"	18'-11 3/4"	29'-2"	30'-2 3/8"	30'-8 3/4"	24'-11 1/4"
		7'	6'-5 7/8"	6'-3"	6'-5 5/8"	7'-0 1/8"	Ⓐ 0"	12'-1"	12'-6 1/8"	13'-0 1/8"	6'-0 1/4"	17'-11"	18'-6 3/8"	19'-1"	12'-0 3/4"	23'-9"	24'-7"	25'-1 1/2"	18'-1 1/4"	29'-7"	30'-7 1/4"	31'-2"	24'-1 3/4"
	6'	3'	2'-9 3/4"	7'-0"	7'-3"	7'-9 1/2"	4'-3 1/4"	13'-8"	14'-1 3/4"	14'-8 1/4"	11'-4"	20'-4"	21'-0 5/8"	21'-7"	18'-2 3/4"	27'-0"	27'-11 3/8"	28'-5 3/4"	25'-1 3/4"	33'-8"	34'-10 1/4"	35'-4 3/4"	32'-0 1/4"
		4'	3'-7 5/8"	7'-0"	"	"	3'-7 3/8"	13'-8"	"	"	10'-6 1/4"	20'-4"	"	"	17'-5"	27'-0"	"	"	24'-3 3/4"	33'-8"	"	"	31'-2 3/4"
		5'	4'-5 3/8"	7'-0"	"	"	2'-9 5/8"	13'-8"	"	"	9'-8 3/8"	20'-4"	"	"	16'-7 1/2"	27'-0"	"	"	23'-6"	33'-8"	"	"	30'-4 3/4"
		6'	5'-3 1/8"	7'-2"	7'-5"	7'-11 1/2"	2'-1 7/8"	13'-11"	14'-5"	14'-11 1/2"	9'-1 1/8"	20'-8"	21'-4 3/4"	21'-11 1/4"	16'-1 1/4"	27'-5"	28'-4 5/8"	28'-11"	23'-1 1/2"	34'-2"	35'-4 1/8"	35'-11"	30'-1 1/4"
		7'	6'-5 7/8"	7'-3"	7'-6"	8'-0 1/2"	1'-0 1/4"	14'-1"	14'-7"	15'-1 1/2"	8'-1 1/8"	20'-11"	21'-7 3/4"	22'-2 1/4"	15'-2"	27'-9"	28'-8 3/4"	29'-3 1/4"	22'-3"	34'-7"	35'-9 5/8"	36'-4"	29'-3 3/4"
		8'	7'-8 5/8"	7'-4"	7'-7 1/8"	8'-1 5/8"	Ⓐ 0"	14'-2"	14'-8"	15'-2 1/2"	6'-11 3/8"	21'-0"	21'-8 3/4"	22'-3 1/4"	14'-0 1/4"	27'-10"	28'-9 3/4"	29'-4 1/4"	21'-1 1/4"	34'-8"	35'-10 5/8"	36'-5"	28'-2"
	7'	4'	3'-7 5/8"	8'-0"	8'-3 3/8"	8'-9 7/8"	4'-7 3/8"	15'-8"	16'-2 5/8"	16'-9"	12'-7"	23'-4"	24'-1 1/8"	24'-8 1/4"	20'-6 1/4"	31'-0"	32'-1 1/8"	32'-7 5/8"	28'-5 1/8"	38'-8"	40'-0 3/8"	40'-6 3/8"	36'-4 3/8"
		5'	4'-5 3/8"	8'-0"	"	"	3'-10"	15'-8"	"	"	11'-9 3/8"	23'-4"	"	"	19'-8 1/2"	31'-0"	"	"	27'-7 3/8"	38'-8"	"	"	35'-7"
		6'	5'-3 1/8"	8'-2"	8'-5 1/2"	9'-0"	3'-2 1/4"	15'-11"	16'-5 3/8"	17'-0 1/4"	11'-2 1/4"	23'-8"	24'-6"	25'-0 1/8"	19'-2 3/4"	31'-5"	32'-6 3/8"	33'-0 3/8"	27'-3"	39'-2"	40'-6 3/8"	41'-1"	35'-3 1/2"
		7'	6'-5 7/8"	8'-3"	8'-6 1/2"	9'-1"	2'-0 3/8"	16'-1"	16'-7 3/4"	17'-2 1/4"	10'-2"	23'-11"	24'-9 1/8"	25'-3 1/2"	18'-3 3/4"	31'-9"	32'-10 1/2"	33'-5"	26'-4 3/4"	39'-7"	40'-11 3/4"	41'-6 1/4"	34'-6"
		8'	7'-8 5/8"	8'-4"	8'-7 1/2"	9'-2"	0'-11"	16'-2"	16'-8 7/8"	17'-3 3/8"	9'-0 3/8"	24'-0"	24'-10 5/8"	25'-4 1/2"	17'-1 1/2"	31'-10"	32'-11 1/2"	33'-6"	25'-3"	39'-8"	41'-0 3/4"	41'-7 1/2"	33'-4 1/2"
	8'	4'	3'-7 5/8"	9'-0"	9'-3 3/4"	9'-10 3/8"	5'-8 3/8"	17'-8"	18'-3 1/2"	18'-10"	14'-8"	26'-4"	27'-3 1/8"	27'-9 1/2"	23'-7 1/2"	35'-0"	36'-2 7/8"	36'-9 1/4"	32'-7 1/2"	43'-8"	45'-2 1/2"	45'-9"	41'-7"
		5'	4'-5 3/8"	9'-2"	9'-5 7/8"	10'-0 1/2"	5'-0 1/2"	17'-11"	18'-6 5/8"	19'-1"	14'-1 1/2"	26'-8"	27'-7 1/2"	28'-1 3/4"	23'-2"	35'-5"	36'-8"	37'-2 3/8"	32'-2 3/4"	44'-2"	45'-8 3/4"	46'-3 1/4"	41'-3 1/2"
		6'	5'-3 1/8"	9'-2"	"	"	4'-2 3/4"	17'-11"	"	"	13'-3 3/4"	26'-8"	"	"	22'-4"	36'-5"	"	"	31'-4 3/4"	44'-2"	"	"	40'-5 1/2"
		7'	6'-5 7/8"	9'-3"	9'-6 7/8"	10'-1 1/4"	3'-1"	18'-1"	18'-8 5/8"	19'-3"	12'-2 3/4"	26'-11"	27'-10 3/8"	28'-4 3/8"	21'-4 1/2"	35'-9"	37'-0 1/2"	37'-6 3/4"	30'-6 1/2"	44'-7"	46'-1 7/8"	46'-8 1/2"	39'-8"
		8'	7'-8 5/8"	9'-4"	9'-8"	10'-2 1/2"	1'-11 1/2"	18'-2"	18'-9 3/4"	19'-4 1/4"	11'-1 1/4"	27'-0"	27'-11 3/8"	28'-5 3/4"	20'-2 3/4"	35'-10"	37'-1 1/8"	37'-7 1/2"	29'-4 1/2"	44'-8"	46'-2 3/8"	46'-9 1/2"	38'-6 1/2"
	9'	5'	4'-5 3/4"	10'-2"	10'-6 1/2"	11'-0 3/4"	6'-1"	19'-11"	20'-7 1/2"	21'-2"	16'-2"	29'-8"	30'-8 1/2"	31'-3"	26'-3 1/4"	39'-5"	40'-9 3/4"	41'-4 1/4"	36'-4 1/4"	49'-2"	50'-10 3/4"	51'-5 1/4"	46'-5 1/2"
		6'	5'-3 1/8"	10'-3"	10'-7 3/8"	11'-1 3/4"	5'-4 1/2"	20'-1"	20'-9 1/2"	21'-4"	15'-6 1/2"	29'-11"	30'-11 5/8"	31'-6"	25'-8 1/2"	39'-9"	41'-1 3/8"	41'-8 7/8"	35'-10 3/4"	49'-7"	51'-4"	51'-10 1/4"	46'-0 3/4"
		7'	6'-5 7/8"	10'-3"	"	"	4'-1 1/2"	20'-1"	"	"	14'-3 3/8"	29'-11"	"	"	24'-5 3/4"	39'-9"	"	"	34'-8"	49'-7"	"	"	44'-10"
		8'	7'-8 5/8"	10'-4"	10'-8 3/8"	11'-2 3/4"	2'-11 3/8"	20'-2"	20'-10 3/4"	21'-5"	13'-2"	30'-0"	31'-0 3/4"	31'-7 1/4"	23'-4 1/4"	39'-10"	41'-2 3/4"	41'-9 1/4"	33'-6 1/4"	49'-8"	51'-5"	51'-11 1/2"	43'-8 1/2"
	10'	5'	4'-5 3/8"	11'-2"	11'-6 3/8"	12'-1 1/8"	7'-1 3/8"	21'-11"	22'-8 1/4"	23'-2 3/8"	18'-3"	32'-8"	33'-9 3/4"	34'-4 1/4"	29'-4 1/2"	43'-5"	44'-11 1/8"	45'-6"	40'-6"	54'-2"	56'-1"	56'-7 1/2"	51'-7 1/2"
		6'	5'-3 1/8"	11'-3"	11'-7 1/8"	12'-2 1/2"	6'-4 3/8"	22'-1"	22'-10 3/4"	23'-4 3/8"	17'-7 1/4"	32'-11"	34'-1"	34'-7 1/2"	28'-9 3/8"	43'-9"	45'-3 1/2"	45'-10"	40'-0 1/4"	54'-7"	56'-6"	57'-0 1/2"	51'-3"
		7'	6'-5 7/8"	11'-3"	"	"	5'-1 7/8"	22'-1"	"	"	16'-4 1/4"	32'-11"	"	"	27'-7"	43'-9"	"	"	38'-9 3/8"	54'-7"	"	"	50'-0 1/4"
		8'	7'-8 5/8"	11'-4"	11'-8 5/8"	12'-3 1/8"	4'-0 1/4"	22'-2"	22'-11 3/4"	23'-5 3/4"	15'-2 3/4"	33'-0"	34'-2"	34'-8 1/2"	26'-5 1/2"	43'-10"	45'-4 1/2"	45'-11"	37'-8"	54'-8"	56'-7 1/2"	57'-1 1/2"	48'-10 1/2"
	11'	6'	5'-3 1/8"	12'-4"	12'-9 1/2"	13'-3 3/4"	7'-6"	24'-2"	25'-0 1/8"	25'-6 3/8"	19'-9"	36'-0"	37'-3 1/4"	37'-9 3/4"	32'-0"	47'-10"	49'-6 1/8"	50'-0 3/4"	44'-3"	—	—	—	—
		7'	6'-5 7/8"	12'-4"	"	"	6'-3 3/4"	24'-2"	"	"	18'-6 3/4"	36'-0"	"	"	30'-9 1/4"	47'-10"	"	"	43'-0 1/2"	—	—	—	—
		8'	7'-8 5/8"	12'-4"	"	"	5'-0 5/8"	24'-2"	"	"	17'-3 3/8"	36'-0"	"	"	29'-6 3/4"	47'-10"	"	"	41'-9 3/4"	—	—	—	—
	12'	6'	5'-3 1/8"	13'-4"	13'-9 5/8"	14'-4"	8'-6 1/2"	26'-2"	27'-1"	27'-7 1/2"	21'-10"	39'-0"	40'-4 5/8"	40'-11"	35'-1 1/4"	51'-10"	53'-8"	54'-2 1/2"	48'-4 3/4"	—	—	—	—
		7'	6'-5 7/8"	13'-4"	"	"	7'-3 3/8"	26'-2"	"	"	20'-7 1/4"	39'-0"	"	"	33'-10 3/4"	51'-10"	"	"	47'-2"	—	—	—	—
		8'	7'-8 5/8"	13'-4"	"	"	6'-1"	26'-2"	"	"	19'-4 3/4"	39'-0"	"	"	32'-8"	51'-10"	"	"	45'-11 1/2"	—	—	—	—
W-X152-2, W-X153-2 or W-X154-2. (For H=9'-0" & over)	7'	9'	8'-11 1/4"	8'-6"	8'-9 3/8"	9'-4"	Ⓐ 0"	16'-5"	17'-0"	17'-6 1/2"	8'-0 3/8"	24'-4"	25'-2 1/2"	25'-8 3/4"	16'-3"	32'-3"	33'-4 3/8"	33'-11"	24'-5 1/4"	40'-2"	41'-7"	42'-1 1/2"	32'-7 3/4"
	8'	9'	8'-11 1/2"	9'-6"	9'-10"	10'-4 1/2"	0'-10 3/4"	18'-5"	19'-0 3/4"	19'-7 1/4"	10'-1 1/2"	27'-4"	28'-3 1/8"	28'-10"	19'-4 1/2"	36'-3"	37'-6 3/8"	38'-0 3/4"	28'-7"	45'-2"	46'-9 1/8"	47'-3 1/2"	37'-9 3/4"
		10'	10'-2"	9'-8"	10'-0 1/8"	10'-6 1/2"	Ⓐ 0"	18'-8"	19'-3 3/4"	19'-10 1/4"	9'-2"	27'-8"	28'-7 3/4"	29'-2 1/4"	18'-5 3/4"	36'-8"	37'-11 3/8"	38'-6"	27'-9 1/2"	45'-8"	47'-3 3/4"	47'-9 3/4"	37'-1/2"
	9'	9'	8'-11 1/2"	10'-6"	10'-10 1/2"	11'-5"	1'-11 1/2"	20'-5"	21'-1 5/8"	21'-8 1/2"	12'-2 1/2"	30'-4"	31'-4 3/8"	31'-11 1/2"	22'-5 1/2"	40'-3"	41'-8"	42'-2 1/2"	32'-8 3/8"	50'-2"	51'-11 1/8"	52'-5 3/4"	43'-0"
		10'	10'-2"	10'-8"	11'-0 1/2"	11'-7"	0'-10 1/2"	20'-8"	21'-4 3/4"	21'-11 1/4"	11'-2 3/4"	30'-8"	31'-9"	32'-3 1/2"	21'-7"	40'-8"	42'-1 1/2"	42'-7 3/4"	31'-11 1/4"	50'-8"	52'-5 1/2"	53'-0"	42'-3 1/2"
		11'	11'-4 5/8"	10'-10"	11'-2 5/8"	11'-9"	Ⓐ 0"	20'-10"	21'-6 3/8"	22'-1 1/2"	10'-2 1/4"	30'-10"	31'-11"	32'-5 1/2"	20'-6 1/4"	40'-10"	42'-3 1/4"	42'-9 3/4"	30'-10 3/4"	50'-10"	52'-7 1/4"	53'-2"	41'-2 3/4"
	10'	9'	8'-11 1/2"	11'-6"	11'-10 7/8"	12'-5 1/4"	2'-11 3/4"	22'-5"	23'-2 1/8"	23'-9"	14'-3 1/2"	33'-4"	34'-6 1/8"	35'-0 1/2"	25'-6 3/4"	44'-3"	45'-9 3/4"	46'-4 1/4"	36'-10 3/4"	55'-2"	57'-1 3/4"	57'-7 3/4"	48'-2"
		10'	10'-2"	11'-8"	12'-1"	12'-7 1/2"	1'-11"	22'-8"	23'-5 1/2"	24'-0"	13'-3 3/4"	33'-8"	34'-10 1/8"	35'-4 3/4"	24'-8 1/2"	44'-8"	46'-2 1/4"	46'-9 1/2"	36'-1"	55'-8"	57'-7 3/4"	58'-2"	47'-5 1/2"
		11'	11'-4 5/8"	11'-10"	12'-3"	12'-9 1/2"	0'-10 3/4"	22'-10"	23'-7 3/4"	24'-2"	12'-3"	33'-10"	35'-0 3/4"	35'-6 3/4"	23'-7 3/4"	44'-10"	46'-5"	46'-11 1/2"	35'-0 1/4"	55'-10"	57'-9 3/4"	58'-4"	46'-5"
		12'	12'-7 3/4"	12'-0"	12'-5 1/2"	12'-11 1/2"	Ⓐ 0"	23'-0"	23'-9 3/4"	24'-4 1/2"	11'-2 1/2"	34'-0"	35'-2 3/4"	35'-8 3/4"	22'-7"	45'-0"	46'-7"	47'-1 1/2"	33'-11 1/2"	56'-0"	57'-11 1/2"	58'-6"	45'-4 1/2"
	11'	9'	8'-11 1/2"	12'-6"	12'-11 1/2"	13'-5 3/4"	4'-0"	24'-5"	25'-3 3/8"	25'-9 3/4"	16'-4"	36'-4"	37'-7 3/4"	38'-1 3/4"	28'-8"	48'-3"	49'-11 3/4"	50'-5 3/4"	41'-0 1/4"	—	—	—	—
		10'	10'-2"	12'-8"	13'-1 3/4"	13'-7 3/4"	2'-11 3/4"	24'-8"	25'-6 1/2"	26'-1"	15'-4 1/2"	36'-8"	37'-11 1/2"	38'-6"	27'-9 1/2"	48'-8"	50'-4 3/4"	50'-11"	40'-2 3/4"	—	—	—	—
		11'	11'-4 5/8"	12'-10"	13'-3 3/8"	13'-10"	1'-10 3/4"	24'-10"	25'-8 1/2"	26'-3"	14'-3 3/4"	36'-10"	38'-1 5/8"	38'-8"	26'-9"	48'-10"	50'-6 5/8"	51'-1"	39'-2"	—	—	—	—
		12'	12'-7 3/4"	13'-0"	13'-5 1/2"	14'-0"	0'-10 3/4"	25'-0"	25'-10 5/8"	26'-5"	13'-3 1/2"	37'-0"	38'-3 3/8"	38'-10"	25'-8 1/4"	49'-0"	50'-8 3/4"	51'-3 3/4"	38'-1 1/2"	—	—	—	—
	12'	9'	8'-11 1/2"	13'-6"	13'-11 3/4"	14'-6 1/2"	5'-0 1/2"	26'-5"	27'-4 1/8"	27'-10 3/4"	18'-5"	39'-4"	40'-8 3/4"	41'-3"	31'-9 1/2"	52'-3"	54'-1 1/8"	54'-7 1/2"	45'-1 3/4"	—	—	—	—
		10'	10'-2"	13'-8"	14'-1 3/4"	14'-8 3/4"	3'-11 3/4"	26'-8"	27'-7 1/4"	28'-1 3/4"	17'-5 1/2"	39'-8"	41'-0 3/4"	41'-7 1/2"	30'-10 3/4"	52'-8"	54'-6 1/2"	55'-0 3/4"	44'-4 1/2"	—	—	—	—
		11'	11'-4 5/8"	13'-10"	14'-3 3/4"	14'-10 1/4"	2'-11 1/4"	26'-10"	27'-9 3/4"	28'-3 3/4"	16'-4 3/4"	39'-10"	41'-2 1/4"	41'-9 1/4"	29'-10 1/4"	52'-10"	54'-8 3/4"	55'-2 3/4"	43'-3 3/4"	—	—	—	—
		12'	12'-7 3/4"	14'-0"	14'-5 1/4"	15'-0 1/2"	1'-10 1/2"	27'-0"	27'-11 3/4"	28'-6"	15'-4"	40'-0"	41'-4 3/4"	41'-11 1/4"	28'-9 1/2"	53'-0"	54'-10 3/4"	55'-4 3/4"	42'-3"	—	—	—	—

Ⓐ Special case for these boxes, See Detail "A" and Table "A" for revised values of F_1, F_2, W_4 and W_5, when apron width is more than 1'-0" and W_3=0". For Detail "A" and Tables "A" for each slope, see Drawing Nos. W-X152-1, W-X152-2, or W-X153-1, W-X153-2, or W-X154-1, W-X154-2.

NOTE:- This drawing to be used in conjunction with Standard Wing Drawings for 15° Skews for each slope as listed below.

2:1 Slopes	3:1 Slopes	4:1 Slopes
W-X152-1 or W-X152-2	W-X153-1 or W-X153-2	W-X154-1 or W-X154-2.

This drawing to be used in conjunction with Std. Barrel Sections, Drawing Nos.

SINGLES	DOUBLES	TRIPLES	QUADRUPLES	QUINTUPLES
R-115X-0	R-215X-0	R-315X-0	R-415X-0	R-515X-0
R-115X-1	R-215X-1	R-315X-1	R-415X-1	R-515X-1
	R-215X-2	R-315X-2		

CLASS S CONCRETE

ARKANSAS STATE HIGHWAY COMMISSION

DETAILS OF STANDARD WINGS FOR REINFORCED CONCRETE BOX CULVERTS 15° SKEW

4', 5', 6', 7', 8', 9', 10', 11' & 12' SPANS — 2:1, 3:1 & 4:1 SLOPES

SINGLES, DOUBLES, TRIPLES, QUADRUPLES & QUINTUPLES. — ALL DEPTHS OF COVER — H=2', 3', 4', 5', 6', 7', 8', 9', 10', 11' & 12'.

STANDARD DRAWING NO. W-X15

Designed by:- W.C.H. 5-22-63 Checked by:-
Traced by:- W.C.H. 6-13-63 Checked by:- J.E.M. 6-20-63
Quantities by:- Checked by:-

FED. ROAD No.	STATE	FED. AID PROJECT	FISCAL YEAR	SHEET No.	TOTAL SHEETS
6	ARK.			135	
JOB No.					

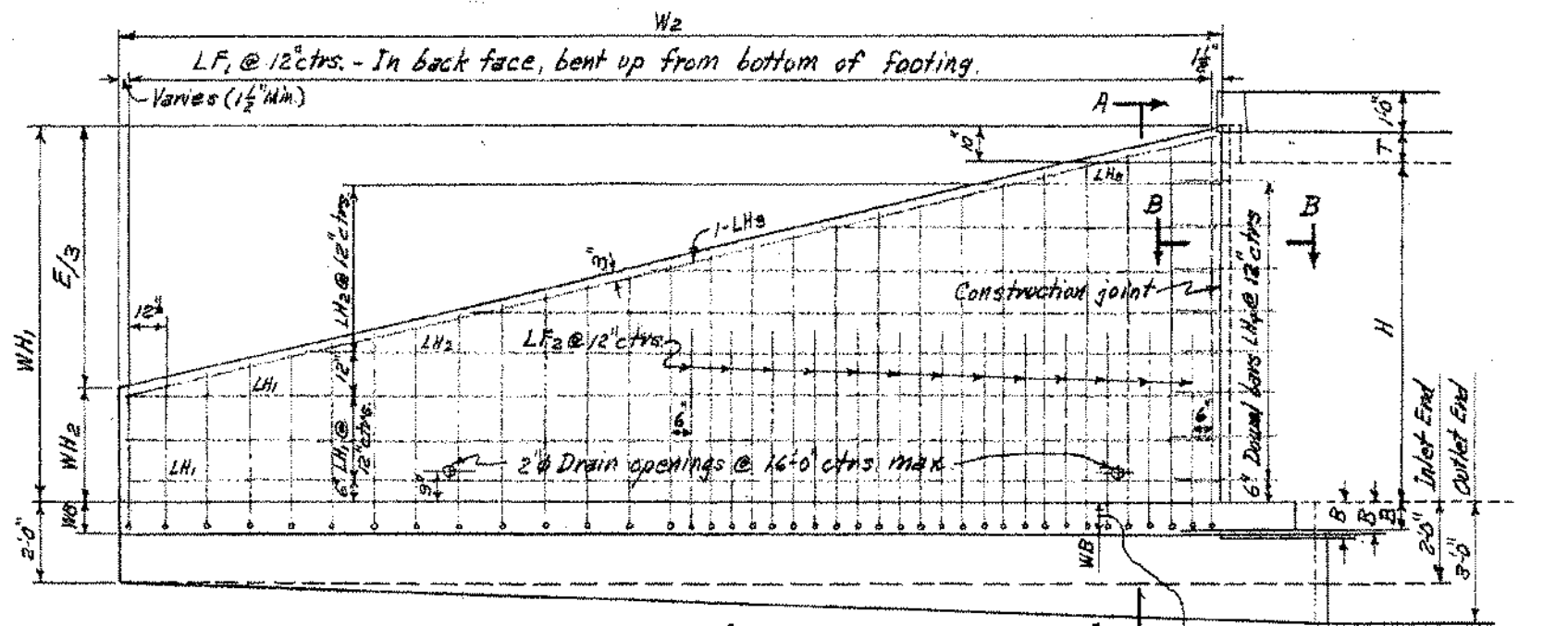

REAR ELEVATION OF LONG WING - 15° SKEW RIGHT FORWARD
SHOWING BACK FACE REINFORCING

WB may be more, equal to, or less than the bottom slab thickness B.

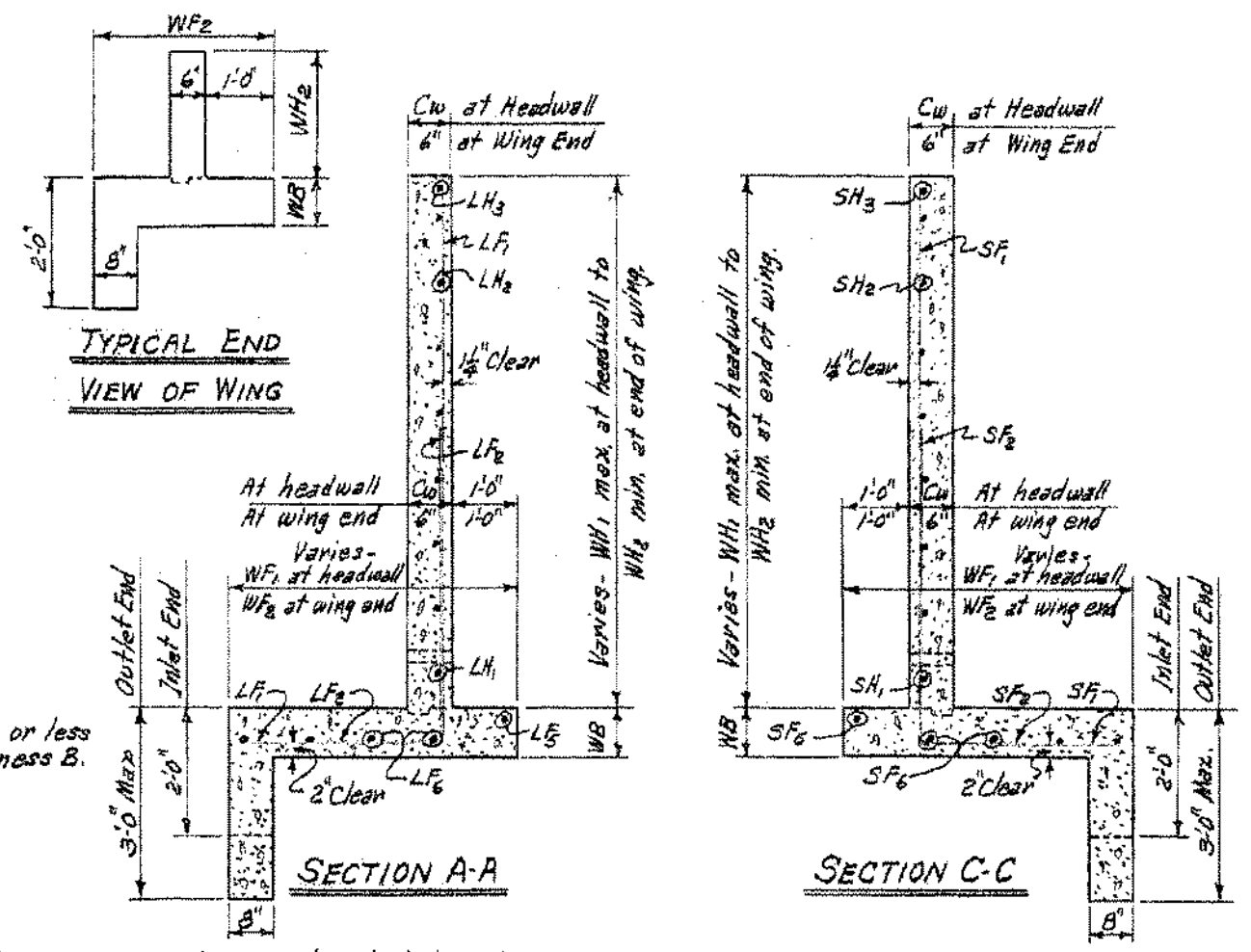

TYPICAL END VIEW OF WING

SECTION A-A

SECTION C-C

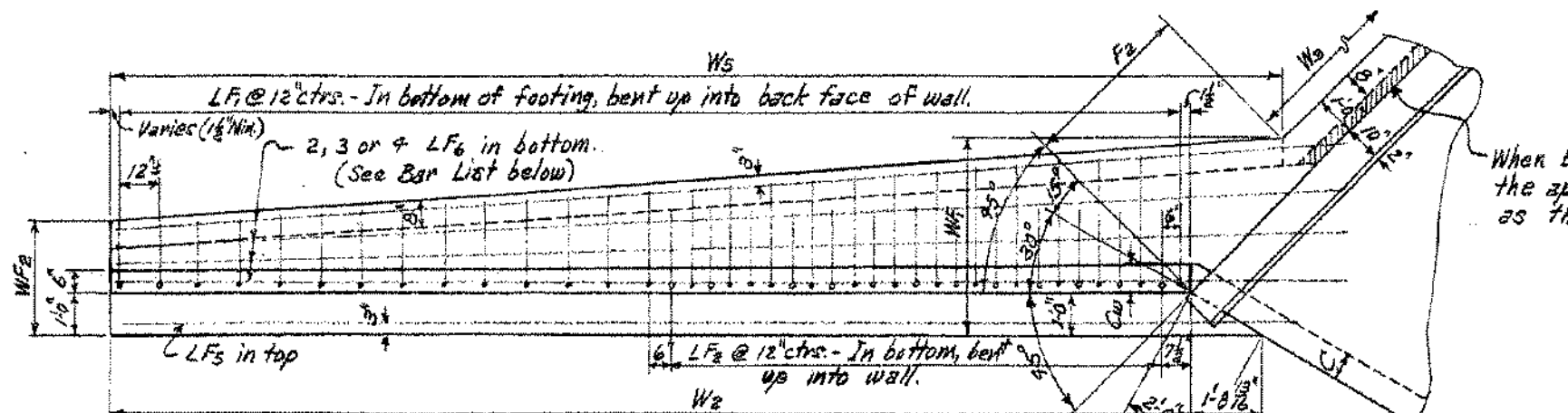

PLAN OF LONG WING - 15° SKEW RIGHT FORWARD
SHOWING FOOTING REINFORCING.

When B is more than WB, the shaded portion of the apron shall be made the same thickness as the bottom slab B.

NOTE:- Payment for membrane waterproofing and roofing felt to be included in the price bid for Class S Concrete.

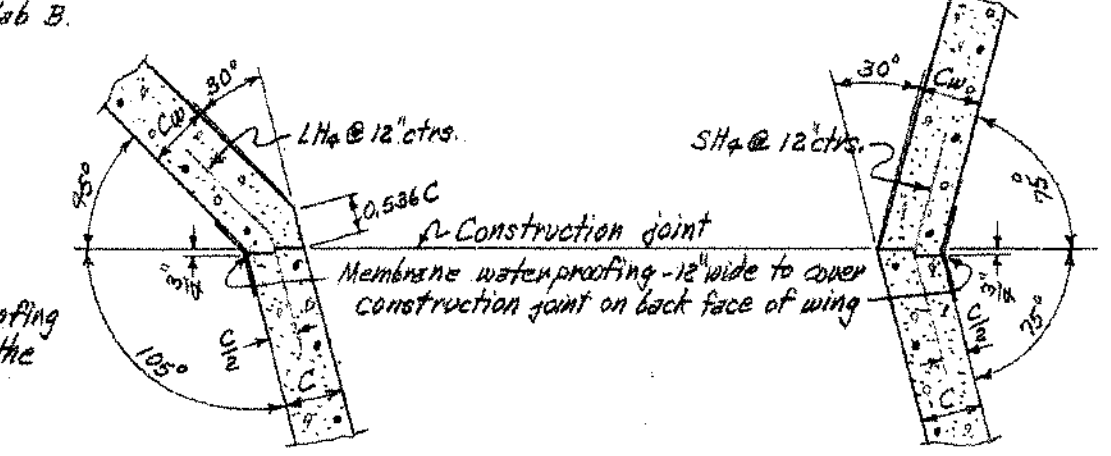

SECTION B-B

SECTION D-D

SECTIONS THRU CONSTRUCTION JOINTS

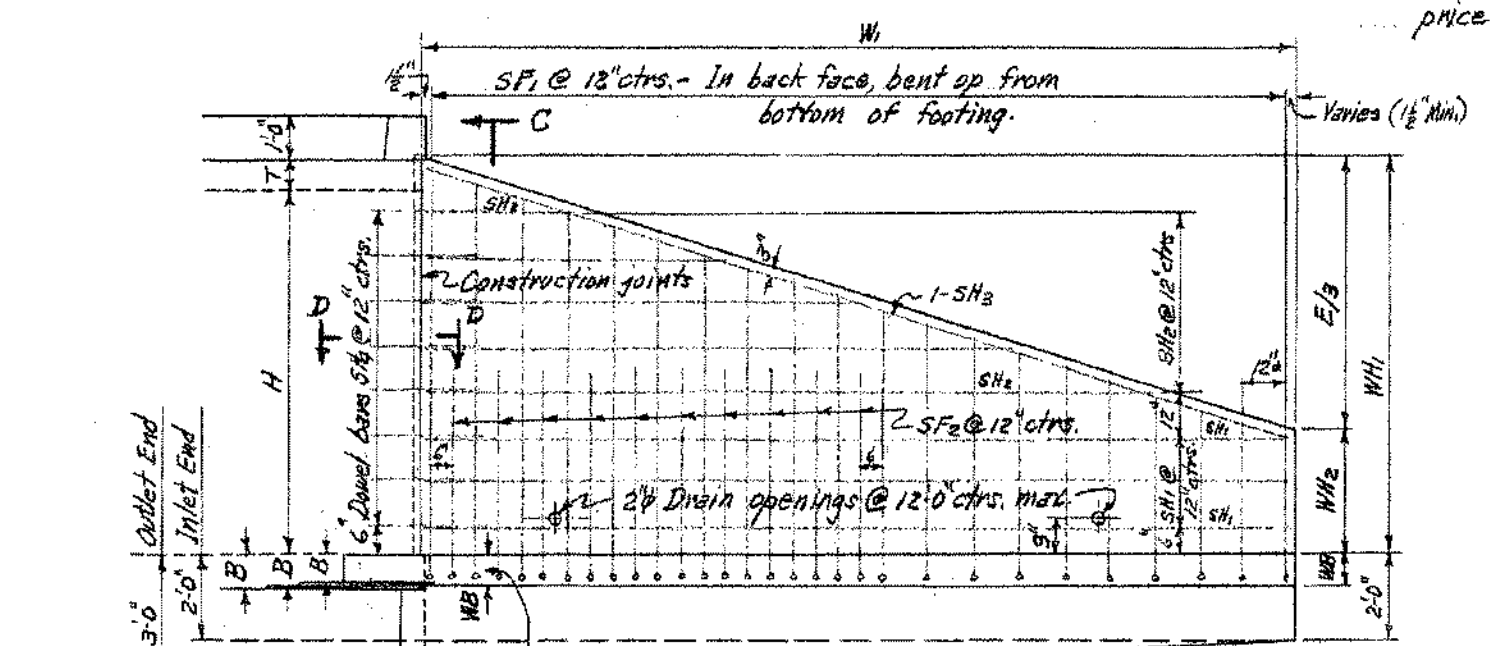

REAR ELEVATION OF SHORT WING - 15° SKEW RIGHT FORWARD
SHOWING BACK FACE REINFORCING

WB may be more, equal to, or less than the bottom slab B.

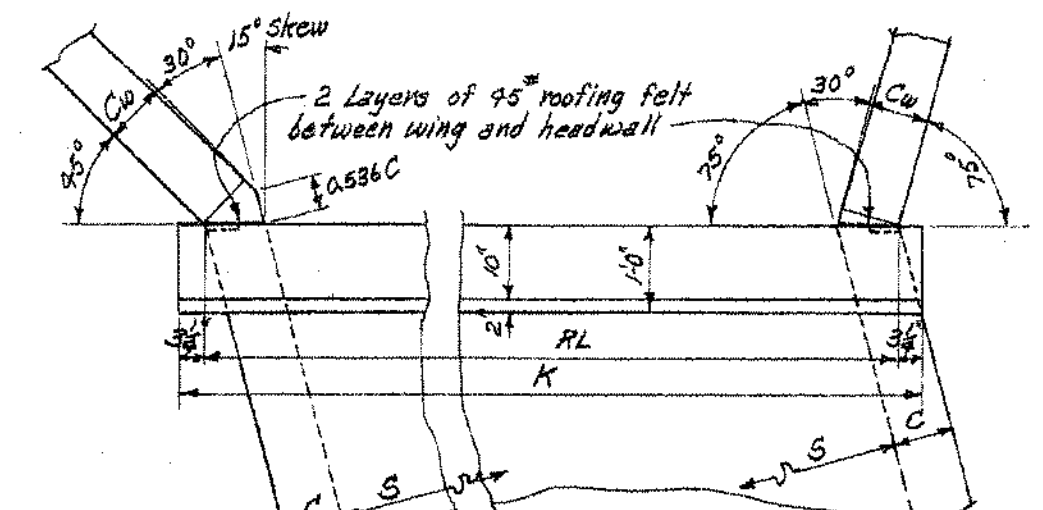

DETAILS AT TOP OF WINGS
15° SKEW RIGHT FORWARD

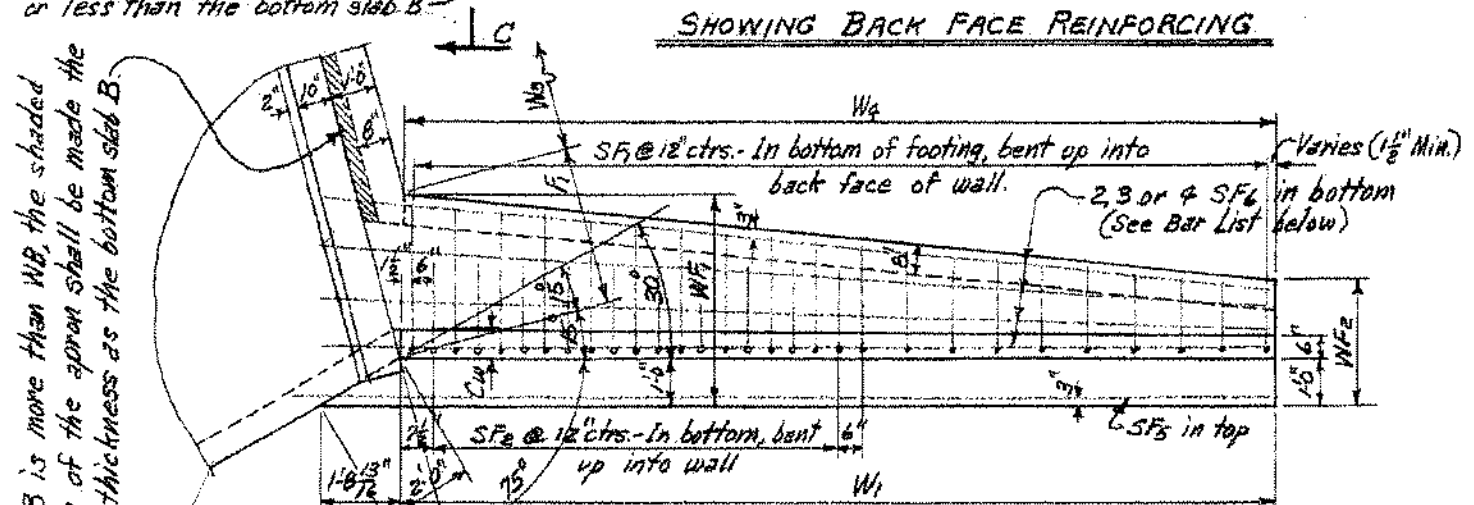

PLAN OF SHORT WING - 15° SKEW RIGHT FORWARD
SHOWING FOOTING REINFORCING

When B is more than WB, the shaded portion of the apron shall be made the same thickness as the bottom slab B.

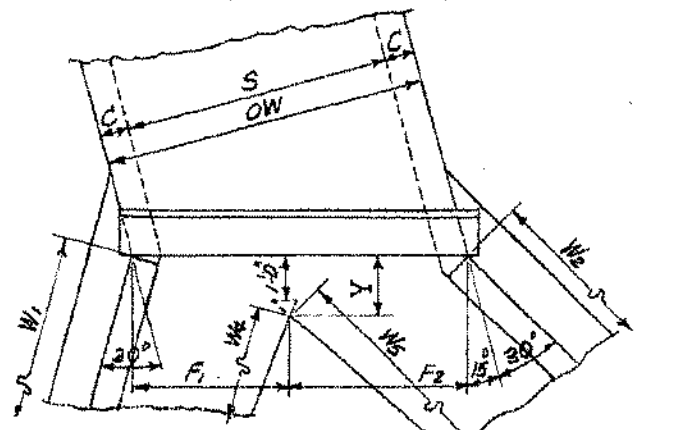

DETAIL "A"

TABLE "A" - DIMENSIONS FOR DETAIL "A"

S	H	F_1	F_2	W_4	W_5	W_3	Y
5'	7'	3'-0"	3'-5 5/8"	16'-10 1/2"	25'-0 3/4"	0"	1'-0 1/4"
6'	8'	3'-6"	4'-1 1/8"	19'-0 1/4"	28'-3 1/2"	0"	1'-1"

REGULAR WING DIMENSIONS - 3:1 SLOPES

CLEAR HEIGHT OF BOX	THICKNESS OF WING FOOTING	THICKNESS OF WING AT HDWL = C	WINGWALL HEIGHTS: AT HEADWALL	WINGWALL HEIGHTS: AT END OF WING	WIDTHS OF WING FOOTINGS: AT HEADWALL	WIDTHS OF WING FOOTINGS: AT END OF WING	FOOTING DIMENSION PARALLEL WITH HEADWALL: SHORT WING	FOOTING DIMENSION PARALLEL WITH HEADWALL: LONG WING	PERPENDICULAR DIST. FROM HDWL TO END OF WING	LENGTHS OF WINGWALLS: SHORT WING	LENGTHS OF WINGWALLS: LONG WING	INSIDE FOOTING DIMENSIONS: SHORT WING	INSIDE FOOTING DIMENSIONS: LONG WING	* QUANTITY PER WING, CLASS S CONCRETE: INLET END SHORT WING	INLET END LONG WING	OUTLET END SHORT WING	OUTLET END LONG WING
H	WB	Cw	WH_1	WH_2	WF_1	WF_2	F_1	F_2	E	W_1	W_2	W_4	W_5	CU.YD.	CU.YD.	CU.YD.	CU.YD.
2'	7"	6"	2'-10"	0'-8"	2'-4"	2'-0"	1'-1 3/8"	0'-10 5/8"	6'-6"	6'-8 3/4"	9'-2 1/4"	6'-0 1/2"	9'-1 1/4"	0.789	1.094	0.876	1.212
3'	7"	6"	3'-10"	1'-0"	2'-8"	2'-1 1/2"	1'-5 1/2"	1'-4 1/2"	8'-6"	8'-9 1/2"	12'-0 1/4"	8'-2 1/2"	12'-3 1/2"	1.186	1.650	1.300	1.808
4'	7"	6"	4'-10"	1'-4"	3'-0"	2'-3"	1'-9 5/8"	1'-10"	10'-6"	10'-10 1/2"	14'-10 1/4"	10'-4 1/2"	15'-5 3/4"	1.656	2.305	1.797	2.502
5'	7"	6"	5'-10"	1'-8"	3'-4"	2'-4 1/2"	2'-1 3/4"	2'-3 5/8"	12'-6"	12'-11 1/4"	17'-8 1/4"	12'-6 1/4"	18'-7 1/4"	2.196	3.059	2.363	3.295
		7"	5'-10"	1'-8"	3'-4"	2'-4 1/2"	2'-1 3/4"	2'-3 5/8"	12'-6"	12'-11 1/4"	17'-8 1/4"	12'-6 1/4"	18'-7 1/4"	2.287	3.188	2.455	3.424
6'	8"	7"	6'-10"	2'-0"	3'-8"	2'-6"	2'-5 7/8"	2'-9 1/4"	14'-6"	15'-0 1/4"	20'-6"	14'-8 1/4"	21'-9"	3.052	4.242	3.246	4.517
		7 1/2"	6'-10"	2'-0"	3'-8"	2'-6"	2'-5 7/8"	2'-9 1/4"	14'-6"	15'-0 1/4"	20'-6"	14'-8 1/4"	21'-9"	3.114	4.329	3.309	4.605
		8"	6'-10"	2'-0"	3'-8"	2'-6"	2'-5 7/8"	2'-9 1/4"	14'-6"	15'-0 1/4"	20'-6"	14'-8 1/4"	21'-9"	3.177	4.417	3.371	4.693
⊕ 7'	8 1/2"	7 1/2"	7'-10"	2'-4"	4'-2"	2'-7 1/2"	3'-0 1/8"	3'-5 3/4"	16'-6"	17'-1"	23'-4"	16'-10 3/4"	25'-1"	3.998	5.560	4.220	5.877
		8"	7'-10"	2'-4"	4'-2"	2'-7 1/2"	3'-0 1/8"	3'-5 3/4"	16'-6"	17'-1"	23'-4"	16'-10 3/4"	25'-1"	4.079	5.675	4.301	5.991
⊕ 8'	9"	8"	8'-10"	2'-8"	4'-8"	2'-9"	3'-6 3/8"	4'-2 1/2"	18'-6"	19'-1 3/4"	26'-2"	19'-1 1/4"	28'-5"	5.111	7.111	5.360	7.470

* Quantity per wing does not include headwall or that portion of apron or toewall for the length W_3.
⊕ See Table "A" for special values of F_1 & F_2 and W_4 & W_5 for Single 5'x7' and 6'x8' Box Culverts.

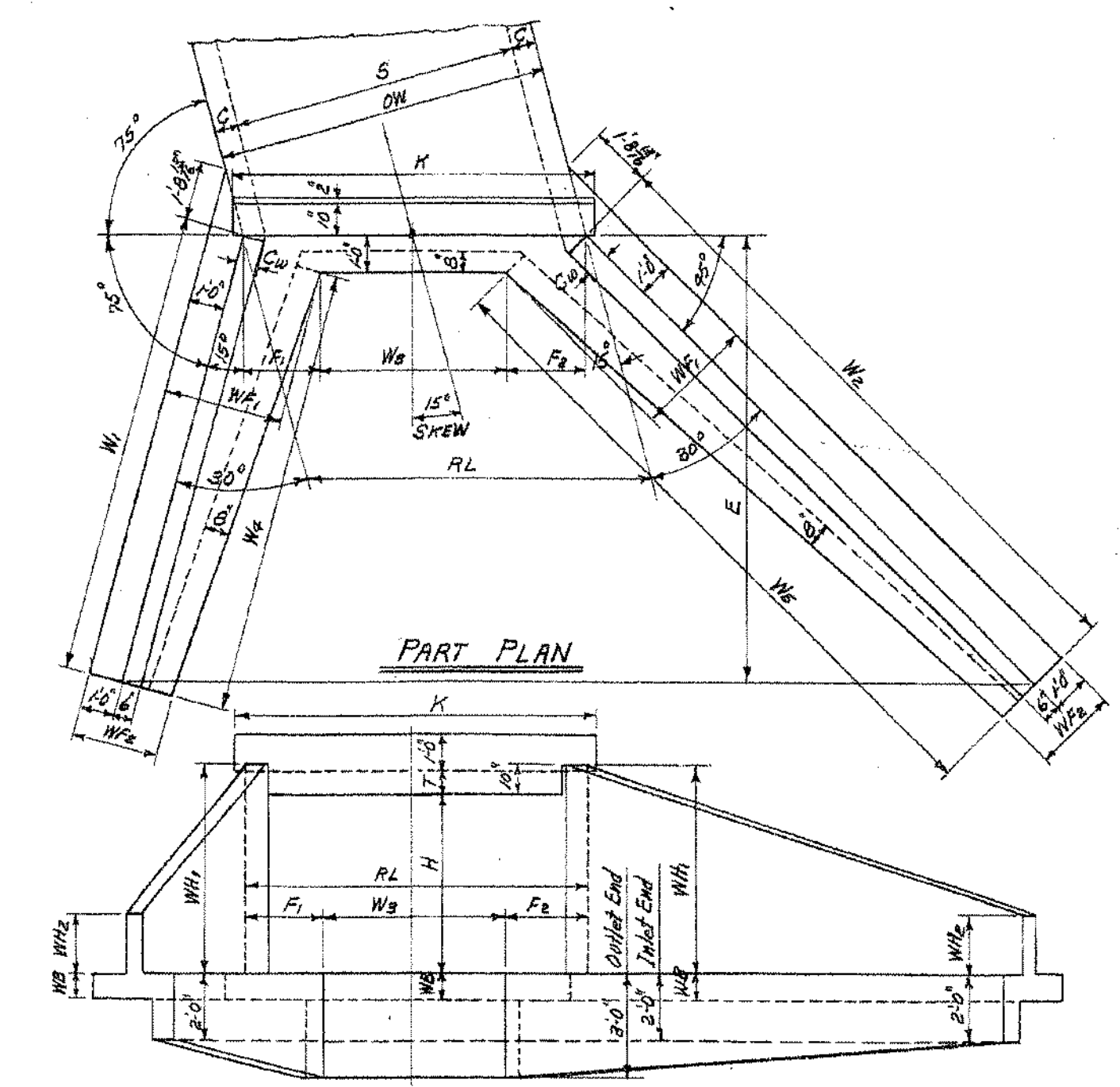

PART PLAN

END ELEVATION

SINGLE BARREL CULVERT - 15° SKEW RIGHT FORWARD
Details of Culvert with 15° Skew Left Forward is reversed, see Drwg. No. W-X15
TYPICAL WING DETAILS

NOTE:- For remainder of General Plans and Elevations of Single, Double, Triple, Quadruple and Quintuple Span Culverts, see Std. Drawing No. W-X15. For values of RL, K, and W_3 for each box, see the above Std. also.

MEMBRANE:- A membrane waterproofing 12" wide, consisting of three moppings of waterproofing asphalt and two alternate layers of treated cotton fabric shall be applied to the back face of wing to cover the construction joints in wings.

QUANTITIES

CLEAR SPAN	CLEAR HEIGHT	THICKNESS OF WING AT HEADWALL	THICKNESS OF WING FOOTING	REINFORCING STEEL ⊛ - FOR 4 WINGS	CLASS S CONCRETE - 4 WINGS (HEADWALLS, WINGWALLS, FOOTINGS, TOEWALLS AND APRONS): SINGLE BARREL CULVERT	DOUBLE BARREL CULVERT	TRIPLE BARREL CULVERT	QUADRUPLE BARREL CULVERT	QUINTUPLE BARREL CULVERT
S	H	Cw	WB	LB.	CU.YD.	CU.YD.	CU.YD.	CU.YD.	CU.YD.
4'	2'	6"	7"	117	4.79	5.78	6.77	7.77	8.76
	3'	6"	7"	176	6.65	7.64	8.63	9.63	10.62
	4'	6"	7"	267	8.85	9.84	10.84	11.83	12.82
	5'	6"	7"	379	11.40	12.38	13.38	14.37	15.36
	6'	7"	8"	626	15.95	16.96	17.98	18.51	19.53
5'	3'	6"	7"	176	6.87	8.07	9.28	10.48	11.69
	4'	6"	7"	267	9.08	10.28	11.48	12.69	13.90
	5'	6"	7"	379	11.61	12.81	14.02	15.23	16.44
	6'	7"	8"	626	15.67	16.90	18.14	19.38	20.61
	7'	7 1/2"	8 1/2"	1210	20.11	21.36	22.62	23.88	25.14
6'	3'	6"	7"	176	7.09	8.52	9.92	11.36	12.78
	4'	6"	7"	267	9.29	10.73	12.13	13.56	14.98
	5'	6"	7"	379	11.83	13.26	14.67	16.10	17.53
	6'	7"	8"	626	15.89	17.35	18.79	20.25	21.70
	7'	7 1/2"	8 1/2"	1210	20.33	21.81	23.28	24.76	26.24
	8'	8"	9"	1533	25.56	27.05	28.53	30.02	31.50
7'	4'	6"	7"	267	9.52	11.18	12.81	14.47	16.09
	5'	6"	7"	379	12.05	13.72	15.35	17.01	18.63
	6'	7"	8"	626	16.12	17.80	19.45	21.13	22.78
	7'	7 1/2"	8 1/2"	1210	20.56	22.26	23.94	25.64	27.33
	8'	8"	9"	1533	25.80	27.50	29.20	30.90	32.60
8'	4'	6"	7"	267	9.75	11.65	13.51	15.41	17.23
	5'	7"	7"	379	12.76	14.68	16.55	18.47	20.31
	6'	7"	8"	626	16.34	18.26	20.14	22.06	23.90
	7'	7 1/2"	8 1/2"	1210	20.78	22.72	24.62	26.55	28.42
	8'	8"	9"	1533	26.03	27.96	29.86	31.80	33.71
9'	5'	7"	7"	379	12.99	15.15	17.25	19.40	21.45
	6'	7 1/2"	8"	626	16.89	19.07	21.19	23.36	25.42
	7'	7 1/2"	8 1/2"	1210	21.01	23.19	25.31	27.48	29.54
	8'	8"	9"	1533	26.25	28.42	30.55	32.72	34.78
10'	5'	7"	7"	379	13.23	15.62	17.95	20.24	22.59
	6'	7 1/2"	8"	626	17.13	19.54	21.89	24.20	26.56
	7'	7 1/2"	8 1/2"	1210	21.44	23.66	26.01	28.32	30.68
	8'	8"	9"	1533	26.48	28.89	31.25	33.56	35.92
11'	6'	8"	8"	626	17.67	20.34	22.92	25.48	—
	7'	8"	8 1/2"	1210	21.88	24.55	27.13	29.69	—
	8'	8"	9"	1533	26.70	29.37	31.96	34.52	—
12'	6'	8"	8"	626	17.91	20.84	23.64	26.46	—
	7'	8"	8 1/2"	1210	22.11	25.04	27.85	30.67	—
	8'	8"	9"	1533	26.93	29.86	32.67	35.49	—

⊛ For reinforcing steel in Headwalls and Aprons, see Drawings listed below.

GENERAL NOTES:-
CONCRETE:- All concrete to be Class S, and shall be poured in the dry. All exposed corners to have 3/4" chamfers.
REINFORCING STEEL:- Reinforcing steel to be deformed bars of intermediate or hard grade.
CONSTRUCTION JOINTS:- Construction joints between wingwall, footings and sidewalls shall be only where shown on plans.
SPECIFICATIONS:- Arkansas State Highway Commission Standard Specifications for Highway Construction and applicable Special Provisions.
UNIT STRESSES:-
Class S Concrete (n=10) 1200#/□"
Reinforcing Steel 20,000#/□"

NOTE:-
This drawing to be used in conjunction with Std. Barrel Sections, Drawing Nos.

SINGLES	DOUBLES	TRIPLES	QUADRUPLES	QUINTUPLES
R-115X-0	R-215X-0	R-315X-0	R-415X-0	R-515X-0
R-115X-1	R-215X-1	R-315X-1	R-415X-1	R-515X-1
	R-215X-2	R-315X-2		

BAR LIST FOR ONE SHORT AND ONE LONG WING - 2 EACH REQUIRED

SF_1 & LF_1 — BENT — In bottom of footing, bent up into back face of wing. One bar of each length.
SF_2 & LF_2 — BENT — In bottom of footing, bent up into back face of wing. Alt. with F_1 bars.

CLEAR HEIGHT H	WING LOCATION (SHORT OR LONG)	SF_1&LF_1 SIZE	SPACING	NO. REQ'D	LENGTHS VARY MIN.	LENGTHS VARY MAX.	X MIN.	X MAX.	Y MIN.	Y MAX.	SF_2&LF_2 SIZE	SPACING	NO. REQ'D	LENGTH	X	Y
2'	Short	#3	12"	7	1'-7"	3'-11"	0'-8"	1'-0"	1'-0"	3'-0"	—	—	—	—	—	—
	Long	#3	12"	10	1'-7"	3'-11"	0'-8"	1'-0"	0'-10"	3'-0"	—	—	—	—	—	—
3'	Short	#3	12"	9	2'-2"	5'-3"	0'-10"	1'-4"	1'-5"	4'-0"	—	—	—	—	—	—
	Long	#3	12"	13	1'-11"	5'-2"	0'-10"	1'-3"	1'-2"	4'-0"	—	—	—	—	—	—
4'	Short	#3	12"	11	2'-7"	6'-7"	0'-11"	1'-8"	1'-9"	5'-0"	—	—	—	—	—	—
	Long	#3	12"	15	2'-6"	6'-6"	0'-11"	1'-7"	1'-8"	5'-0"	—	—	—	—	—	—
5'	Short	#3	12"	13	3'-1"	7'-11"	1'-1"	2'-0"	2'-1"	6'-0"	#3	12"	4	3'-6"	1'-1"	2'-6"
	Long	#3	12"	18	3'-0"	7'-10"	1'-1"	1'-11"	2'-0"	6'-0"	#3	12"	5	3'-6"	1'-1"	2'-6"
6'	Short	#4	12"	16	3'-4"	9'-4"	1'-2"	2'-4"	2'-3"	7'-1"	#3	12"	4	4'-6"	1'-4"	3'-3"
	Long	#4	12"	21	3'-5"	9'-3"	1'-2"	2'-3"	2'-4"	7'-1"	#3	12"	5	4'-6"	1'-4"	3'-3"
7'	Short	#4	12"	18	3'-9"	10'-10"	1'-3"	2'-10"	2'-7"	8'-1"	#4	12"	7	5'-6"	1'-7"	4'-0"
	Long	#4	12"	24	3'-10"	10'-8"	1'-3"	2'-8"	2'-8"	8'-1"	#4	12"	9	5'-6"	1'-7"	4'-0"
8'	Short	#4	12"	20	4'-4"	12'-5"	1'-5"	3'-4"	3'-0"	9'-2"	#4	12"	10	6'-6"	1'-10"	4'-9"
	Long	#4	12"	27	4'-4"	12'-3"	1'-5"	3'-2"	3'-0"	9'-2"	#4	12"	13	6'-6"	1'-10"	4'-9"

STRAIGHT: SF_5 & LF_5 — Longitudinal in top of wing footing heel. SF_6 & LF_6 — Longitudinal in bottom of wing footing toe. SH_1 & LH_1 — Horizontal in back face of wing.

H	WING LOCATION	SF_5&LF_5 SIZE	NO. REQ'D	LENGTH	SF_6&LF_6 SIZE	NO. REQ'D	LENGTH	SH_1&LH_1 SIZE	SPACING	NO. REQ'D	LENGTH
2'	Short	#3	1	9'-2"	#3	2	7'-10"	#3	12"	1	6'-5"
	Long	#3	1	11'-8"	#3	2	10'-10"	#3	12"	1	8'-11"
3'	Short	#3	1	11'-8"	#3	2	10'-0"	#3	12"	1	8'-6"
	Long	#3	1	14'-6"	#3	2	14'-0"	#3	12"	1	11'-9"
4'	Short	#3	1	13'-4"	#3	3	12'-2"	#3	12"	1	10'-7"
	Long	#3	1	17'-4"	#3	3	17'-2"	#3	12"	1	14'-7"
5'	Short	#3	1	15'-5"	#3	3	14'-4"	#3	12"	2	12'-8"
	Long	#3	1	20'-2"	#3	3	20'-4"	#3	12"	2	17'-5"
6'	Short	#3	1	17'-6"	#3	3	16'-6"	#3	12"	2	14'-9"
	Long	#3	1	23'-0"	#3	3	23'-6"	#3	12"	2	20'-3"
7'	Short	#4	1	19'-7"	#4	4	18'-9"	#4	12"	2	16'-10"
	Long	#4	1	25'-10"	#4	4	26'-10"	#4	12"	2	23'-1"
8'	Short	#4	1	21'-8"	#4	4	21'-0"	#4	12"	3	18'-11"
	Long	#4	1	28'-3"	#4	4	30'-3"	#4	12"	3	25'-11"

STRAIGHT: SH_2 & LH_2 — Horizontal in back face of wing. One bar of each length. SH_3 & LH_3 — In back face of wing at top - on slope. BENT: SH_4 & LH_4 — Dowels thru construction joint at headwall.

H	WING LOCATION	SH_2&LH_2 SIZE	SPACING	NO. REQ'D	LENGTHS VARY MAX.	LENGTHS VARY MIN.	SH_3&LH_3 SIZE	NO. REQ'D	LENGTH	SH_4&LH_4 SIZE	SPACING	NO. REQ'D	LENGTH	X	QUANTITY REINFORCING STEEL PER WING - LBS. SHORT WING	LONG WING
2'	Short	#3	12"	1	—	3'-6"	#3	1	6'-10"	#3	12"	2	2'-8"	1'-4"	24.9	33.4
	Long	#3	12"	1	—	4'-8"	#3	1	9'-1"	#3	12"	2	"	"		
3'	Short	#3	12"	2	6'-7"	3'-6"	#3	1	9'-0"	#3	12"	3	"	"	37.7	50.3
	Long	#3	12"	2	8'-11"	4'-8"	#3	1	12'-0"	#3	12"	3	"	"		
4'	Short	#3	12"	3	9'-8"	3'-6"	#3	1	11'-2"	#3	12"	4	"	"	57.3	76.4
	Long	#3	12"	3	12'-2"	4'-8"	#3	1	14'-11"	#3	12"	4	"	"		
5'	Short	#3	12"	3	9'-8"	3'-6"	#3	1	13'-4"	#3	12"	5	"	"	81.1	108.4
	Long	#3	12"	3	13'-2"	4'-8"	#3	1	17'-10"	#3	12"	5	"	"		
6'	Short	#3	12"	4	12'-9"	3'-6"	#3	1	15'-6"	#3	12"	6	"	"	134.8	178.1
	Long	#3	12"	4	17'-5"	4'-8"	#3	1	20'-9"	#3	12"	6	2'-8"	1'-4"		
7'	Short	#4	12"	5	15'-10"	3'-6"	#4	1	17'-8"	#4	12"	7	3'-6"	1'-9"	259.5	345.2
	Long	#4	12"	5	21'-8"	4'-8"	#4	1	23'-8"	#4	12"	7	"	"		
8'	Short	#4	12"	5	15'-10"	3'-6"	#4	1	19'-10"	#4	12"	8	"	"	328.0	438.3
	Long	#4	12"	5	21'-8"	4'-8"	#4	1	26'-7"	#4	12"	8	3'-6"	1'-9"		

BAR BENDING DIAGRAM

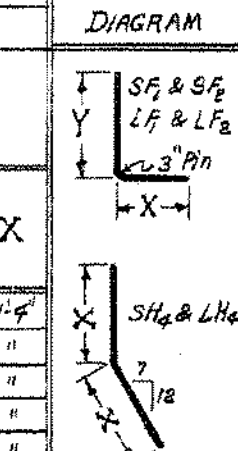

NOTE:- Dimensions are to bar centers.

NOTE:- Bars for short wing shall be marked with prefix letter "S", while those for long wing shall be marked with letter "L".

REVISIONS:- Membrane Added. 5-10-66 W.C.H.

Designed By:- W.C.H. 5-13-63 Checked By:-
Drawn By:- W.C.H. 6-20-63 Checked By:- BHS 8-7-63
Quantities By:- W.C.H. 9-23-63 Checked By:-

CLASS S CONCRETE

ARKANSAS STATE HIGHWAY COMMISSION
DETAILS OF STANDARD WINGS FOR REINFORCED CONCRETE BOX CULVERTS 15° SKEW

4', 5', 6', 7', 8', 9', 10', 11' & 12' SPANS — 3:1 SLOPES
SINGLES, DOUBLES, TRIPLES, QUADRUPLES & QUINTUPLES — ALL DEPTHS OF COVER FOR H = 8'-0" OR LESS

STANDARD DRAWING NO. W-X153-1

Reshot 3-8-93

171

FED. ROAD No.	STATE	FED. AID PROJECT	FISCAL YEAR	SHEET No.	TOTAL SHEETS
6	ARK.			136	
JOB No.					

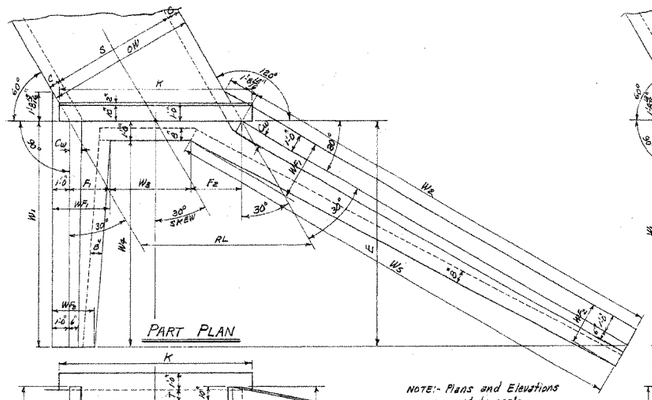

SINGLE BARREL CULVERT-30° SKEW RIGHT FORWARD

Details of Culvert with 30° Skew Left Forward is reversed, see Layout below.

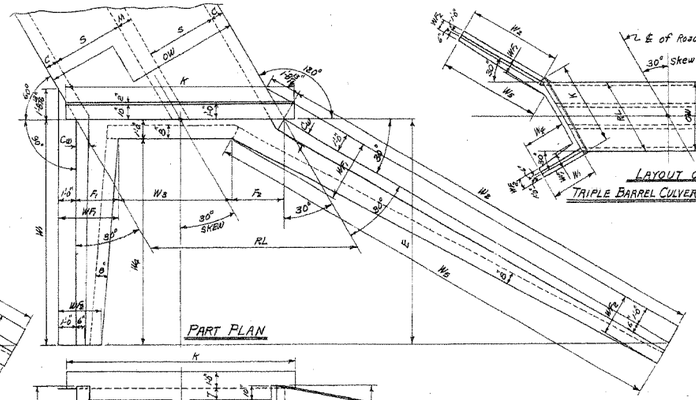

DOUBLE BARREL CULVERT-30° SKEW RIGHT FORWARD

Details of Culvert with 30° Skew Left Forward is reversed, see Layout below.

NOTE:- Plans and Elevations are not to scale.

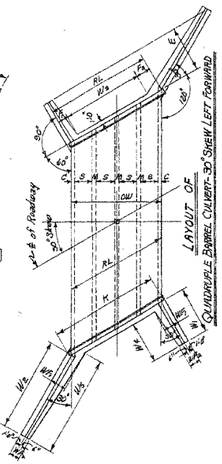

NOTE:- The length of the wings for the Plans, Elevations, and Layouts, as drawn, are proportioned for 3:1 slopes. For 2:1 slopes the wings are proportionally shorter, while for 4:1 slopes they are longer.

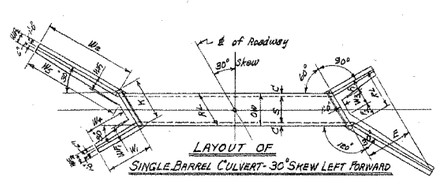

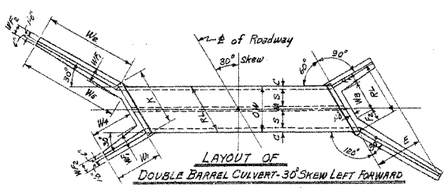



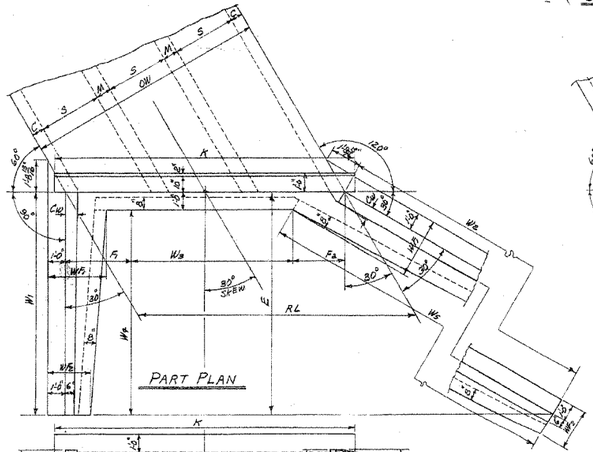

TRIPLE BARREL CULVERT-30° SKEW RIGHT FORWARD

Details of Culvert with 30° Skew Left Forward is reversed, see Layout at top center of sheet.

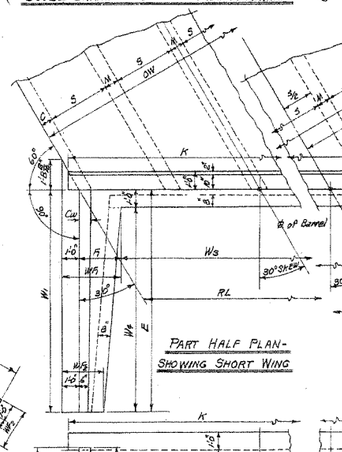

QUADRUPLE BARREL CULVERT-30° SKEW RT. FWD.

Details of Culvert with 30° Skew Left Forward is reversed, see Layout at above center.

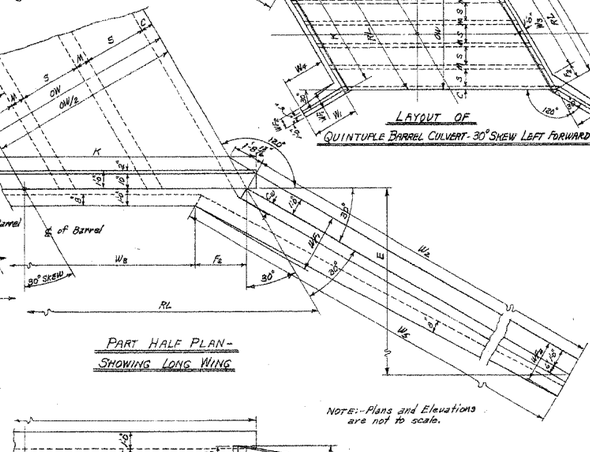

QUINTUPLE BARREL CULVERT-30° SKEW RT. FWD.

Details of Culvert with 30° Skew Left Forward is reversed, see Layout above.

NOTE:--Plans and Elevations are not to scale.

ROADWAY LENGTH RL — HEADWALL LENGTH K — APRON DIMENSION W_3

RL = OW × 1.1547 — K = RL + (1'-1⅝") — W_3 = RL - (F1 + F2)

USE WITH DRAWING NO.	CLEAR SPAN	CLEAR HEIGHT OF OPENING	SLOPE OF HEADWALL	SINGLE BARREL CULVERT OW	RL	K	W3	DOUBLE BARREL CULVERT OW	RL	K	W3	TRIPLE BARREL CULVERT OW	RL	K	W3	QUADRUPLE BARREL CULVERT OW	RL	K	W3	QUINTUPLE BARREL CULVERT OW	RL	K	W3
W-X302-1, W-X303-1 OR W-X304-1. (FOR H=8'0" OR LESS)	S	H	F1 & F2																				
	4'	2'-3⅜		5'-0"	5'-9⅜	6'-11⅝	3'-6"	9'-8"	11'-2"	12'-3⅝"	8'-10⅜"	14'-4"	16'-8⅜"	17'-8½"	14'-3⅜"	19'-0"	21'-11⅝"	23'-1"	19'-8"	23'-8"	27'-4"	28'-5⅜"	25'-0⅜"
		3'	3'-3⅜"	5'-0"	"	"	2'-6"	9'-8"	"	"	7'-10⅜"	14'-9"	"	"	13'-3⅜"	19'-0"	"	"	18'-8"	23'-8"	"	"	29'-0⅜"
		4'	4'-3⅜"	5'-0"	"	"	1'-6"	9'-8"	"	"	6'-10⅜"	14'-9"	"	"	12'-3⅜"	19'-0"	"	"	17'-8"	23'-8"	"	"	23'-0⅜"
		5'	5'-3⅜"	5'-0"	5'-9⅜"	6'-11⅝"	0'-6"	9'-8"	"	"	5'-10⅜"	14'-9"	16'-8⅜"	17'-8½"	11'-3⅜"	19'-0"	21'-11⅝"	23'-1"	16'-8"	23'-8"	27'-4"	28'-5⅜"	22'-0⅜"
		6'	6'-3⅜"	5'-2"	5'-11⅝"	7'-1⅝"	Ⓐ 0"	9'-11"	11'-5⅛"	12'-7⅛"	5'-2⅜"	14'-8"	16'-11⅜"	18'-1"	10'-8"	19'-5"	22'-5"	23'-7"	14'-7⅝"	24'-2"	27'-11⅜"	29'-0⅜"	21'-7⅜"
	5'	3'	3'-3⅜"	6'-0"	6'-11⅝"	8'-1"	3'-7⅜"	11'-8"	13'-5⅜"	14'-7⅛"	10'-2⅜"	17'-4"	20'-0⅛"	21'-2"	16'-9"	23'-0"	26'-6⅜"	27'-8½"	23'-3⅝"	28'-8"	33'-1⅛"	34'-3"	28'-10"
		4'	4'-3⅜"	6'-0"	"	"	2'-7⅜"	11'-8"	"	"	9'-2⅝"	17'-4"	"	"	15'-9"	23'-0"	"	"	22'-3⅝"	28'-8"	"	"	28'-10"
		5'	5'-3⅜"	6'-0"	6'-11⅝"	8'-1⅝"	1'-7⅜"	11'-8"	13'-5⅜"	14'-7⅛"	8'-2⅝"	17'-4"	20'-0⅛"	21'-2"	14'-9"	23'-0"	26'-6⅜"	27'-8½"	21'-3⅝"	28'-8"	33'-1⅛"	34'-3"	27'-10"
		6'	6'-3⅜"	6'-2"	7'-1⅝"	8'-3⅝"	0'-10⅜"	11'-11"	13'-9⅜"	14'-11"	7'-5⅜"	17'-8"	20'-4⅜"	21'-6⅜"	14'-1⅝"	23'-5"	27'-0⅛"	28'-2⅛"	20'-3⅜"	29'-2"	33'-8⅝"	34'-10"	27'-5"
		7'	7'-3⅜"	6'-3"	7'-2⅝"	8'-4⅝"	Ⓐ 0"	12'-1"	13'-11⅛"	15'-1⅛"	6'-2⅛"	17'-11"	20'-8⅜"	21'-10"	12'-11"	23'-9"	27'-5⅝"	28'-7"	19'-0"	29'-7"	34'-2"	35'-3⅜"	26'-9⅜"
	6'	3'	3'-3⅜"	7'-0"	8'-1"	9'-2⅜"	4'-3⅝"	13'-8"	15'-9⅜"	16'-11⅛"	12'-6⅜"	20'-0"	23'-2⅝"	24'-7⅛"	20'-2"	27'-1"	30'-7½"	31'-9⅝"	27'-1"	33'-8"	38'-10⅝"	40'-0⅛"	35'-2⅜"
		4'	4'-3⅜"	7'-0"	"	"	3'-9⅜"	13'-8"	"	"	11'-4⅜"	20'-0"	"	"	19'-2⅜"	27'-1"	"	"	26'-1"	33'-8"	"	"	34'-7⅜"
		5'	5'-3⅜"	7'-0"	8'-1"	9'-2⅜"	2'-9⅜"	13'-8"	15'-9⅜"	16'-11⅛"	10'-6⅜"	20'-0"	23'-2⅝"	24'-7⅛"	18'-2⅜"	27'-1"	30'-7½"	31'-9⅝"	25'-1"	33'-8"	38'-10⅝"	40'-0⅛"	33'-7⅜"
		6'	6'-3⅜"	7'-2"	8'-3⅝"	9'-5⅝"	2'-0"	13'-11"	16'-0⅜"	17'-2⅝"	9'-9⅜"	20'-8"	23'-10⅜"	25'-0⅛"	17'-2⅜"	27'-5"	31'-2⅞"	32'-5"	25'-0⅝"	34'-2"	39'-5⅝"	40'-7⅜"	33'-2⅝"
		7'	7'-3⅜"	7'-3"	8'-4⅝"	9'-6⅝"	0'-7⅝"	14'-1"	16'-3⅜"	17'-5"	8'-6"	20'-11"	24'-1⅛"	25'-3⅜"	16'-4⅜"	27'-9"	31'-6"	32'-9"	24'-0⅜"	34'-7"	39'-11"	41'-1"	32'-2"
		8'	9'-3⅜"	7'-4"	8'-5⅝"	9'-7⅞"	Ⓐ 0"	14'-2"	16'-4⅝"	17'-6⅝"	7'-1"	21'-0"	24'-3"	25'-4⅝"	14'-11⅝"	27'-10"	32'-1⅜"	33'-3⅝"	22'-10⅝"	34'-11"	40'-0⅜"	41'-2⅝"	30'-9⅝"
	7'	4'	4'-3⅜"	8'-0"	9'-2⅝"	10'-5⅜"	4'-11⅝"	15'-8"	18'-1½"	19'-3⅛"	13'-9⅜"	23'-4"	26'-11⅜"	28'-1⅛"	22'-8"	31'-0"	35'-9½"	36'-11⅛"	31'-6"	38'-8"	44'-7⅜"	45'-9⅜"	40'-6½"
		5'	5'-3⅜"	8'-0"	9'-2⅝"	10'-5⅜"	3'-11⅝"	15'-8"	18'-1½"	19'-3"	12'-9⅜"	23'-4"	26'-11⅜"	28'-1⅛"	21'-8"	31'-0"	35'-9½"	36'-11⅛"	30'-6⅝"	38'-8"	44'-7⅜"	45'-9⅜"	39'-4⅝"
		6'	6'-3⅜"	8'-2"	9'-5⅝"	10'-7"	3'-2"	15'-11"	18'-3⅝"	19'-5⅝"	12'-1⅝"	23'-8"	27'-1"	28'-3⅝"	21'-0⅜"	31'-5"	36'-3⅜"	37'-5⅝"	29'-5"	39'-1"	45'-0⅜"	46'-2⅝"	38'-1½"
		7'	7'-3⅜"	8'-3"	9'-6⅝"	10'-8"	1'-3"	16'-1"	18'-5⅝"	19'-8⅛"	10'-3⅜"	23'-11"	27'-3⅜"	28'-5⅝"	19'-1⅛"	31'-9"	36'-8"	37'-10⅜"	28'-1⅝"	39'-7"	45'-5⅜"	46'-8⅛"	37'-1⅛"
		8'	9'-3⅜"	8'-4"	9'-7⅝"	10'-9⅜"	0'-5⅛"	16'-2"	18'-8"	19'-9⅛"	9'-4⅝"	24'-0"	27'-5⅝"	28'-10⅛"	18'-5⅛"	31'-10"	36'-9⅜"	38'-0"	27'-0"	39'-8"	45'-9⅜"	46'-10⅝"	36'-5"
	8'	4'	4'-3⅜"	9'-0"	10'-4⅝"	11'-6⅜"	6'-1⅛"	17'-5"	20'-0⅝"	21'-2⅝"	16'-1⅝"	26'-0"	30'-0⅜"	31'-2⅝"	26'-1⅝"	35'-0"	40'-5"	41'-6⅝"	36'-1⅝"	43'-8"	50'-2⅝"	51'-3"	44'-1⅜"
		5'	5'-3⅜"	9'-2"	10'-7"	11'-8⅝"	5'-3⅜"	17'-11"	20'-1⅜"	21'-3"	15'-5"	26'-8"	30'-3⅜"	31'-4⅝"	25'-6⅜"	35'-5"	40'-10⅝"	42'-0⅛"	35'-7⅜"	44'-2"	51'-0"	52'-1⅜"	45'-0⅜"
		6'	6'-3⅜"	9'-2"	10'-7"	11'-8⅝"	4'-3⅜"	17'-11"	20'-1⅜"	21'-3"	14'-5"	26'-8"	30'-3⅜"	31'-4⅝"	24'-6⅜"	35'-5"	40'-10⅝"	42'-0⅛"	34'-7⅜"	44'-2"	51'-0"	52'-1⅜"	44'-0⅜"
		7'	7'-3⅜"	9'-3"	10'-8⅝"	11'-10"	3'-1"	18'-1"	20'-3⅝"	21'-5⅝"	13'-1⅝"	26'-11"	31'-1"	32'-2⅝"	23'-3⅝"	35'-8"	41'-1⅜"	42'-2⅝"	33'-6⅝"	44'-5"	51'-3⅜"	52'-4⅞"	43'-3⅝"
		8'	9'-3⅜"	9'-4"	10'-9⅝"	11'-11⅛"	1'-6⅛"	18'-2"	20'-5⅛"	21'-7⅛"	11'-8⅜"	27'-0"	31'-2⅜"	32'-3⅝"	22'-1"	35'-10"	41'-4⅜"	42'-5⅝"	32'-1⅛"	44'-8"	51'-5"	52'-7"	42'-3⅛"
	9'	5'	5'-3⅜"	10'-2"	11'-8⅝"	12'-10⅝"	6'-3⅝"	19'-11"	23'-0"	24'-1⅜"	17'-0⅜"	29'-8"	34'-3⅜"	35'-5"	28'-1⅛"	39'-5"	45'-6⅝"	46'-8"	40'-3"	49'-2"	56'-3⅜"	57'-4⅞"	51'-6"
		6'	6'-3⅜"	10'-3"	11'-10"	13'-0"	5'-6⅜"	20'-1"	23'-2⅜"	24'-4⅜"	16'-11"	29'-11"	34'-6⅜"	35'-8⅝"	28'-3⅜"	39'-7"	45'-10⅜"	47'-0⅝"	33'-7⅝"	49'-7"	56'-7⅜"	57'-8⅞"	50'-11⅝"
		7'	7'-3⅜"	10'-3"	11'-10"	13'-0"	4'-0⅜"	20'-1"	23'-2⅜"	24'-4⅜"	15'-5"	29'-11"	34'-6⅜"	35'-8⅝"	24'-3⅜"	39'-7"	45'-10⅜"	47'-0⅝"	38'-1⅝"	49'-7"	57'-1"	58'-2⅝"	49'-3⅝"
		8'	9'-3⅜"	10'-4"	11'-11⅛"	13'-1"	2'-8"	20'-2"	23'-3⅝"	24'-5⅝"	14'-0⅜"	30'-0"	34'-7⅜"	35'-9⅝"	25'-4⅛"	39'-10"	46'-0"	47'-1⅜"	36'-3⅝"	49'-8"	57'-1⅝"	58'-3"	48'-1"
	10'	5'	5'-3⅜"	11'-2"	12'-8⅝"	14'-0⅝"	7'-1⅜"	21'-11"	25'-3⅜"	26'-5⅛"	20'-0⅛"	32'-8"	37'-6⅜"	38'-10⅝"	32'-5⅛"	43'-5"	50'-1⅜"	51'-3⅝"	44'-10⅜"	54'-2"	62'-6⅛"	63'-7⅝"	57'-3⅛"
		6'	6'-3⅜"	11'-3"	12'-11⅜"	14'-1⅝"	6'-6⅝"	22'-1"	25'-6"	26'-7⅜"	19'-2⅜"	32'-11"	38'-0⅛"	39'-2"	31'-9"	43'-9"	50'-6⅛"	51'-8"	44'-3"	54'-7"	63'-0⅛"	64'-2⅜"	57'-8"
		7'	7'-3⅜"	11'-3"	12'-11⅜"	14'-1⅝"	5'-5⅜"	22'-1"	25'-6"	26'-7⅜"	17'-10⅜"	32'-11"	38'-0⅛"	39'-2"	30'-7"	43'-9"	50'-6⅛"	51'-8"	42'-10"	54'-7"	63'-0⅛"	64'-2⅜"	55'-8"
		8'	9'-3⅜"	11'-4"	13'-1"	14'-3"	3'-9⅜"	22'-2"	25'-7⅛"	26'-9"	16'-4"	33'-0"	38'-1⅛"	39'-3"	28'-10"	43'-10"	50'-7⅛"	51'-9⅜"	41'-7⅜"	54'-8"	63'-1⅛"	64'-3⅜"	53'-10⅜"
	11'	6'	6'-3⅜"	12'-4"	14'-2⅜"	15'-6⅜"	7'-11⅝"	24'-2"	27'-10⅜"	29'-0⅜"	21'-7⅜"	36'-0"	41'-6⅜"	42'-8⅝"	35'-3⅜"	47'-10"	55'-2⅜"	56'-4⅝"	48'-11⅝"	—	—	—	—
		7'	7'-3⅜"	12'-5"	"	"	6'-5⅜"	24'-2"	"	"	20'-1⅜"	36'-0"	"	"	32'-5⅜"	47'-10"	"	"	47'-3⅝"	—	—	—	—
		8'	9'-3⅜"	12'-6"	"	"	4'-11⅝"	24'-2"	"	"	18'-7⅜"	36'-0"	"	"	32'-1⅜"	47'-10"	"	"	45'-8⅝"	—	—	—	—
	12'	6'	6'-3⅜"	13'-4"	15'-4⅜"	16'-8⅛"	9'-1⅞"	26'-3"	30'-0⅝"	31'-0⅝"	23'-1⅛"	39'-6"	45'-0⅜"	46'-2⅝"	38'-9⅜"	51'-10"	59'-1⅛"	60'-3"	51'-7⅝"	—	—	—	—
		7'	7'-3⅜"	13'-4"	"	"	7'-7⅜"	26'-3"	"	"	22'-5⅛"	39'-6"	"	"	37'-3⅜"	51'-10"	"	"	52'-1"	—	—	—	—
		8'	9'-3⅜"	13'-4"	"	"	6'-1⅞"	26'-3"	"	"	20'-11⅛"	39'-6"	"	"	35'-7⅜"	51'-10"	"	"	50'-7"	—	—	—	—
W-X302-2, W-X303-2 OR W-X304-2. (FOR H=9'0" & OVER)	7'	9'	10'-9⅜"	8'-6"	9'-8⅝"	10'-11⅛"	Ⓐ 0"	16'-5"	19'-11⅛"	20'-11⅛"	6'-2⅜"	28'-4"	33'-1⅛"	34'-3"	17'-9"	32'-3"	37'-2⅜"	38'-4⅝"	26'-5⅜"	40'-2"	46'-9⅝"	47'-11⅝"	35'-7⅛"
	8'	9	10'-9⅜"	9'-6"	10'-10⅝"	12'-1⅛"	0'-2⅜"	18'-5"	21'-3⅜"	22'-5"	10'-6"	27'-9"	31'-11⅜"	32'-10⅝"	20'-3⅜"	34'-8"	41'-0⅛"	42'-0⅝"	31'-1"	45'-2"	52'-1⅝"	53'-3⅝"	41'-9⅝"
		10'	12'-3⅜"	9'-8"	11'-0"	12'-3⅜"	Ⓐ 0"	18'-8"	21'-6⅛"	22'-8⅛"	9'-3⅜"	27'-5"	31'-11⅜"	33'-1⅛"	19'-0⅜"	34'-6"	41'-4⅛"	42'-4⅝"	30'-0⅜"	45'-5"	52'-4⅝"	53'-6⅜"	40'-5⅝"
	9'	9'	10'-3⅜"	10'-6"	12'-1⅛"	13'-3⅜"	1'-4⅜"	20'-5"	23'-6⅝"	24'-8⅝"	12'-9⅜"	30'-4"	35'-0⅛"	36'-2⅜"	21'-3"	40'-3"	46'-5⅛"	47'-7⅝"	35'-9⅝"	50'-2"	57'-1⅛"	58'-1"	47'-2"
		10'	12'-3⅜"	10'-8"	12'-3⅛"	13'-5⅝"	0'-0⅝"	20'-5"	23'-10⅜"	26'-0⅛"	11'-7⅜"	30'-8"	35'-4⅜"	36'-6⅝"	23'-1⅜"	40'-8"	46'-11⅛"	48'-1⅜"	39'-8⅜"	50'-8"	58'-1⅝"	59'-6"	46'-10⅜"
		11'	13'-3⅜"	10'-10"	12'-6⅜"	13'-8"	Ⓐ 0"	20'-10"	24'-0⅝"	25'-2⅜"	10'-3⅜"	30'-10"	35'-7⅛"	36'-9"	21'-1⅜"	40'-10"	47'-1⅜"	48'-3⅜"	33'-9⅝"	50'-10"	58'-3⅝"	59'-10⅛"	44'-11⅝"
	10'	9'	10'-3⅜"	11'-6"	13'-2⅜"	14'-5⅛"	2'-6⅜"	22'-5"	25'-10⅜"	27'-0⅛"	15'-3⅜"	33'-4"	38'-5⅝"	39'-7⅝"	27'-3⅜"	44'-3"	51'-0⅜"	52'-1⅝"	40'-9"	55'-2"	63'-3⅜"	64'-5⅝"	52'-11⅜"
		10'	12'-3⅜"	11'-8"	13'-5⅜"	14'-7⅝"	1'-2⅜"	22'-5"	26'-1⅛"	27'-2⅝"	13'-10⅜"	33'-10"	39'-0⅛"	40'-2⅜"	24'-7⅜"	44'-8"	51'-7"	52'-8⅝"	39'-3⅜"	55'-8"	64'-3⅜"	65'-5⅝"	53'-0"
		11'	13'-3⅜"	11'-10"	13'-8"	14'-9⅜"	Ⓐ 0"	22'-10"	26'-4⅝"	27'-6"	12'-7⅜"	33'-10"	39'-0⅛"	40'-2⅜"	25'-3⅜"	44'-10"	51'-9⅜"	52'-11"	38'-0"	55'-10"	64'-5⅜"	65'-7⅝"	50'-8⅝"
		12'	15'-3⅜"	12'-0"	13'-10⅛"	15'-0⅛"	Ⓐ 0"	23'-0"	26'-6⅝"	27'-8⅝"	11'-3⅜"	34'-0"	39'-2⅝"	40'-5"	28'-0"	45'-0"	51'-11⅛"	53'-1⅛"	36'-8⅝"	56'-0"	64'-8"	65'-9⅜"	49'-1⅝"
	11'	9'	10'-3⅜"	12'-0"	13'-6⅜"	14'-7⅝"	3'-3"	24'-5"	28'-2⅜"	29'-4⅜"	17'-5"	36'-4"	41'-11⅜"	43'-1⅛"	31'-2⅜"	47'-6"	54'-3⅜"	55'-5⅝"	44'-1⅛"	—	—	—	—
		10'	12'-3⅜"	12'-5"	14'-2⅝"	15'-3⅝"	2'-0⅜"	24'-10"	28'-7⅝"	29'-10"	16'-0⅜"	36'-10"	42'-5⅝"	43'-8⅛"	30'-0⅝"	48'-2"	54'-11⅝"	56'-2"	43'-1⅛"	—	—	—	—
		11'	13'-3⅜"	12'-10"	14'-9⅜"	15'-11⅝"	1'-0⅜"	24'-10"	28'-10⅛"	29'-10"	14'-11"	36'-10"	42'-10⅜"	43'-8⅛"	28'-9⅜"	48'-10"	54'-11⅝"	56'-2"	42'-3⅝"	—	—	—	—
		12'	15'-3⅜"	13'-0"	15'-0⅜"	16'-2"	Ⓐ 0"	25'-0"	28'-10⅜"	30'-0⅛"	13'-7⅜"	37'-0"	42'-8⅝"	43'-10⅝"	27'-5⅜"	49'-0"	54'-7"	57'-0⅜"	41'-3⅝"	—	—	—	—
	12'	9'	10'-3⅜"	13'-6"	15'-2⅞"	16'-4⅜"	4'-3⅜"	26'-5"	30'-2⅝"	31'-4⅝"	19'-8⅜"	39'-4"	45'-5"	46'-7"	34'-7⅜"	52'-3"	60'-0"	61'-2⅝"	49'-6⅜"	—	—	—	—
		10'	12'-3⅜"	13'-8"	15'-5⅜"	16'-6⅝"	3'-6⅜"	26'-8"	30'-3⅝"	31'-6⅛"	18'-1⅝"	39'-8"	45'-9⅜"	46'-11⅝"	33'-6⅜"	52'-8"	60'-5⅜"	61'-7⅞"	48'-6⅜"	—	—	—	—
		11'	13'-3⅜"	13'-10"	15'-11⅝"	17'-1⅛"	2'-2⅜"	26'-10"	30'-11⅜"	32'-1⅜"	17'-2⅜"	39'-10"	46'-0"	47'-1⅝"	32'-2⅜"	52'-10"	61'-0⅜"	62'-2"	47'-2⅜"	—	—	—	—
		12'	15'-3⅜"	14'-0"	16'-2"	17'-3⅜"	0'-10⅜"	27'-0"	31'-2⅜"	32'-4"	15'-11"	40'-0"	46'-2⅛"	47'-3"	30'-11"	53'-0"	61'-2⅝"	62'-4⅜"	45'-11⅝"	—	—	—	—

Ⓐ Special case for these boxes, See Detail 'A' and Table 'A' for revised values of F1, F2, W_4 and W_5, when apron width is more than 1'-0" and W_3=0".
For Details 'A' and Tables 'A' for each slope, see Drawing Nos. W-X302-1, W-X302-2, or W-X303-1, W-X303-2, or W-X304-1, W-X304-2.

NOTE:- This drawing to be used in conjunction with Standard Wing Drawings for 30° Skews for each slope as listed below.

2:1 Slopes	3:1 Slopes	4:1 Slopes
W-X302-1 or W-X302-2	W-X303-1 or W-X303-2	W-X304-1 or W-X304-2.

NOTE:- This drawing to be used in conjunction with Standard Barrel Sections, Drawing Nos.-

SINGLES	DOUBLES	TRIPLES	QUADRUPLES	QUINTUPLES
R-130X-0	R-230X-01	R-330X-01	R-430X-01	R-530X-01
	R-230X-02	R-330X-02	R-430X-02	R-530X-02
R-130X-1	R-230X-1	R-330X-1	R-430X-1	R-530X-1
	R-230X-2	R-330X-2		

CLASS S CONCRETE

ARKANSAS STATE HIGHWAY COMMISSION
DETAILS OF STANDARD WINGS
FOR
REINFORCED CONCRETE BOX CULVERTS
30° SKEW

4', 5', 6', 7', 8', 9', 10', 11' & 12' SPANS — 2:1, 3:1 & 4:1 SLOPES

SINGLES, DOUBLES, TRIPLES, QUADRUPLES & QUINTUPLES. — ALL DEPTHS OF COVER H=2', 3', 4', 5', 6', 7', 8', 9', 10', 11' & 12'.

STANDARD DRAWING NO. W-X30

Designed by:- W.C.H. 5-16-63 Checked by:-
Drawn by:- W.C.H. 7-15-63 Checked by:- RAMS - 8-21-63
Quantities by:- Checked by:-

Reshot 3-8-93

FED. ROAD No.	STATE	FED. AID PROJECT	FISCAL YEAR	SHEET No.	TOTAL SHEETS
6	ARK.			137	
JOB No.					

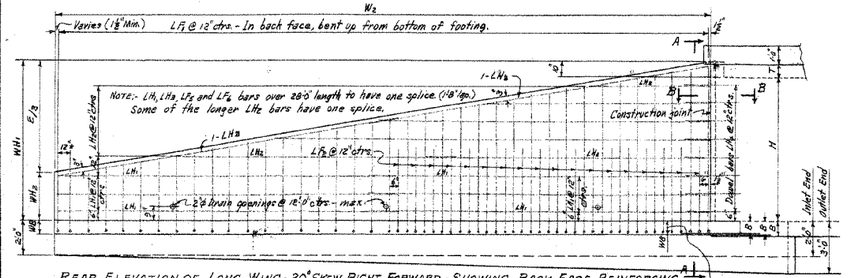

REAR ELEVATION OF LONG WING - 30° SKEW RIGHT FORWARD - SHOWING BACK FACE REINFORCING

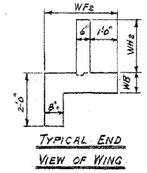

TYPICAL END VIEW OF WING

WB may be more, equal to, or less than the bottom slab thickness B.

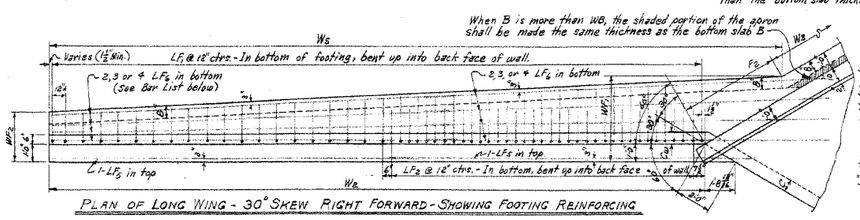

PLAN OF LONG WING - 30° SKEW RIGHT FORWARD - SHOWING FOOTING REINFORCING

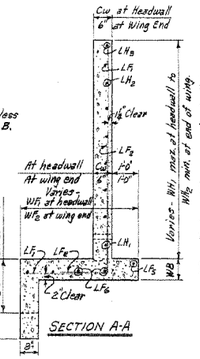

SECTION A-A

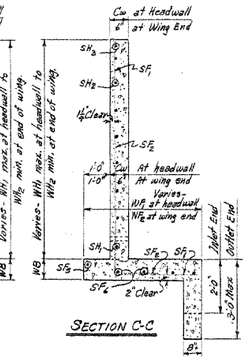

SECTION C-C

REGULAR WING DIMENSIONS - 3:1 SLOPES

CLEAR HEIGHT OF BOX	THICKNESS OF WING FOOTING	THICKNESS OF WING TOP	WINGWALL HEIGHTS		WIDTHS OF WING FOOTINGS		FOOTING DIMENSION PARALLEL WITH HEADWALL		PERPENDICULAR DIST. FROM HDWL TO END OF WING	LENGTHS OF WINGWALLS		INSIDE FOOTING DIMENSION		* QUANTITY PER WING CLASS S CONCRETE			
			AT HEADWALL	AT END OF WING	AT HEADWALL	AT END OF WING	SHORT WING	LONG WING		SHORT WING	LONG WING	SHORT WING	LONG WING	INLET END SHORT WING	INLET END LONG WING	OUTLET END SHORT WING	OUTLET END LONG WING
H	WB	CW	WH1	WH2	WF1	WF2	F1	F2	E	W1	W2	W4	W5	CU.YD.	CU.YD.	CU.YD.	CU.YD.
2'	7"	6"	2'-10"	0'-8"	2'-6"	2'-0"	1'-8"	0'-11½"	6'-6"	6'-6"	13'-0"	5'-6"	13'-3⅜"	0.752	1.599	0.836	1.717
3'	7"	6"	3'-10"	1'-0"	2'-8"	2'-1⅝"	1'-8"	1'-7⅛"	8'-6"	8'-6"	17'-0"	7'-6"	17'-10⅜"	1.130	2.346	1.239	2.565
4'	7"	6"	4'-10"	1'-0"	3'-0"	2'-3"	2'-0"	2'-3⅜"	10'-6"	10'-6"	21'-0"	9'-6"	22'-5¼"	1.577	3.270	1.711	3.552
5'	7"	6"	5'-10"	1'-8"	3'-4"	2'-5½"	2'-4"	2'-11⅛"	12'-6"	12'-6"	25'-0"	11'-6"	27'-0½"	2.098	4.391	2.252	4.680
		7"	5'-10"	1'-8"	3'-4"	2'-5½"	2'-4"	2'-11⅛"	12'-6"	12'-6"	25'-0"	11'-6"	27'-0½"	2.179	4.529	2.337	4.862
◎ 6'	8"	7"	6'-10"	2'-0"	3'-8"	2'-4"	2'-8"	3'-7⅛"	14'-6"	14'-6"	29'-0"	13'-6"	31'-7½"	2.908	6.084	3.092	6.419
		7½"	6'-10"	2'-0"	3'-8"	2'-4"	2'-8"	3'-7⅛"	14'-6"	14'-6"	29'-0"	13'-6"	31'-7½"	2.966	6.147	3.150	6.598
		8"	6'-10"	2'-0"	3'-8"	2'-6"	2'-8"	3'-7⅛"	14'-6"	14'-6"	29'-0"	13'-6"	31'-7½"	3.025	6.212	3.208	6.667
◎ 7'	8½"	7½"	7'-10"	2'-9"	4'-2"	2'-7½"	3'-2"	4'-7⅛"	16'-6"	16'-6"	33'-0"	15'-6"	36'-5⅜"	3.811	7.895	4.019	8.350
		8"	7'-10"	2'-9"	4'-2"	2'-7½"	3'-2"	4'-7⅛"	16'-6"	16'-6"	33'-0"	15'-6"	36'-5⅜"	3.887	8.057	4.095	8.512
◎ 8'	9"	8"	8'-10"	2'-8"	4'-8"	2'-9"	3'-8"	5'-7⅛"	18'-6"	18'-6"	37'-0"	17'-6"	41'-9⅛"	4.874	10.097	5.107	10.612

* Quantity per wing does not include headwall or that portion of apron or toewall for the length W3.
◎ See Table 'A' for special values of F1 & F2 and W4 & W5 for Single 4'x6', 6'x7' and 6'x8' Box Culverts.

TABLE 'A' - DIMENSIONS FOR DETAIL 'A'

S	H	F1	F2	W3	Y	W4	W5
4'	6'	2'-7⅞"	3'-3⅝"	0"	1'-1⅜"	13'-9⅛"	31'-3⅝"
5'	7'	3'-1⅝"	4'-1"	0"	1'-3⅜"	15'-2⅜"	35'-10⅝"
6'	8'	3'-7½"	4'-10⅝"	0"	1'-5⅝"	17'-1⅛"	40'-6"

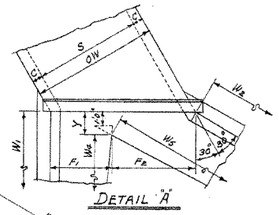

DETAIL 'A'

PART PLAN

NOTE:- Plan and Elevation are not to scale.

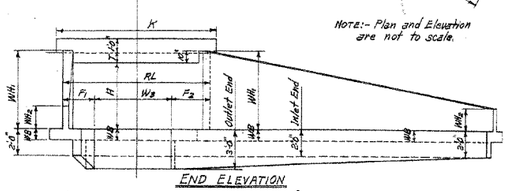

END ELEVATION

SINGLE BARREL CULVERT - 30° SKEW RIGHT FORWARD

Details of Culvert with 30° Skew Left Forward is reversed, see Drawing No. W-X.30.

TYPICAL WING DETAILS

NOTE:- For remainder of General Plans and Elevations of Single, Double, Triple, Quadruple and Quintuple Span Culverts, see Std. Drawing No. W-X.30. For values of RL, K and W3 for each box, see above Std. also.

MEMBRANE:- A membrane waterproofing 12" wide, consisting of three moppings of waterproofing asphalt and two alternate layers of treated cotton fabric shall be applied to the back face of wing to cover the construction joints of wings.

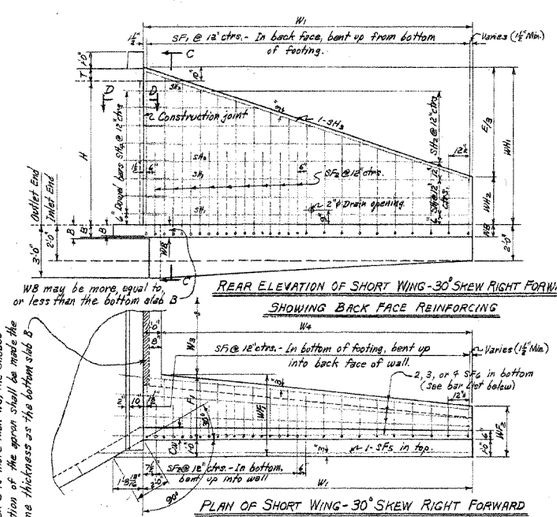

REAR ELEVATION OF SHORT WING - 30° SKEW RIGHT FORWARD SHOWING BACK FACE REINFORCING

PLAN OF SHORT WING - 30° SKEW RIGHT FORWARD SHOWING FOOTING REINFORCING

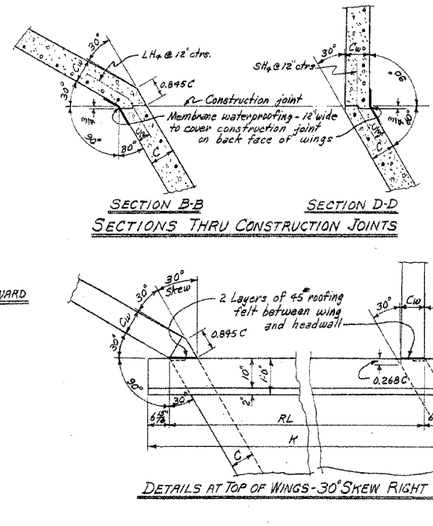

SECTION B-B SECTION D-D

SECTIONS THRU CONSTRUCTION JOINTS

NOTE:- Payment for membrane waterproofing and roofing felt to be included in the price bid for Class S Concrete.

DETAILS AT TOP OF WINGS - 30° SKEW RIGHT FORWARD

BAR LIST FOR ONE SHORT AND ONE LONG WING - 2 EACH REQUIRED

CLEAR HEIGHT	WING LOCATION	SF1 & LF1 BENT: In bottom of footing, bent up into back face of wing. One bar (or two bars) of each length						SF2 & LF2 BENT: In bottom of footing, bent up into back face of wing. Alt. with F1 bars.						SF5 & LF5 STRAIGHT: Longitudinal in top of wing footing heel.			SF6 & LF4 STRAIGHT: Longitudinal in bottom of wing footing toe.			SH1 & LH1 STRAIGHT: Horizontal in back face of wing.			SH2 & LH2 STRAIGHT: Horizontal in back face of wing. One bar of each length. *				SH3 & LH3 BENT: In back face of wing at top- on slope.			SH4 & LH4 BENT: Dowels thru construction joint at headwall.				BAR BENDING DIAGRAM	QUANTITY: REINFORCING STEEL PER WING - LBS.	
		SIZE	SPACING	NO. REQD	LENGTHS VARY MIN.	MAX.	X MIN.	MAX.	Y MIN.	MAX.	SIZE	SPACING	NO. REQD	LENGTH	X	Y	SIZE	NO. REQD	LENGTH	SIZE	NO. REQD	LENGTH	SIZE	SPACING	NO. REQD	LENGTH	SIZE	NO. REQD	LENGTH	SIZE	SPACING	NO. REQD	LENGTHS VARY MAX.	MIN.	SIZE	NO. REQD	LENGTH	SIZE	SPACING	NO. REQD	LENGTH	X		SHORT WING	LONG WING
H	SHORT LONG																																										
2'	Short	#3	12"	7	1'-7"	3'-11"	0'-8"	1'-0"	3'-0"	—	—	—	—	—	—	#3	1	9'-0"	#3	12"	2	2'-8"	#3	12"	1	6'-8"	#3	12"	1	—	3'-3"	#3	1	6'-7"	#3	12"	2	2'-8"	1'-8"				
	Long	#3	12"	14	1'-5"	3'-11"	0'-8"	1'-0"	6'-10"	3'-0"							#3	2	15'-6"	#3	12"	1	12'-8"	#3	12"	1	—	6'-6"	#3	1	12'-11"	#3	12"	2	"	"			24.7	45.6
3'	Short	#5	12"	9	2'-11"	5'-3"	0'-10"	1'-6"	4'-0"	—	—	—	—	—	—	#3	1	11'-0"	#3	12"	2	10'-6"	#3	12"	2	6'-8"	#3	12"	2	6'-8"	9'-8"	#5	1	8'-8"	#3	12"	3	"	"				
	Long	#5	12"	18	1'-11"	5'-3"	0'-10"	1'-6"	8'-0"	—	—	—	—	—	—	#3	2	19'-6"	#3	12"	2	20'-2"	#3	12"	1	16'-8"	#3	12"	2	12'-6"	12'-6"	#3	1	14'-11"	#3	12"	3	"	"			37.0	69.5
4'	Short	#3	12"	11	2'-6"	6'-7"	0'-11"	1'-7"	5'-0"	—	—	—	—	—	—	#3	1	13'-0"	#3	12"	3	15'-0"	#3	12"	3	9'-8"	#3	12"	3	9'-8"	11'-8"	#5	1	10'-5"	#5	12"	4	"	"				
	Long	#3	12"	22	2'-2"	6'-6"	0'-11"	1'-7"	7'-6"	—	—	—	—	—	—	#3	1	23'-6"	#3	12"	3	24'-10"	#3	12"	3	18'-6"	#3	12"	3	18'-6"	21'-6"	#3	1	21'-0"	#3	12"	4	"	"			56.2	107.2
5'	Short	#3	12"	13	2'-11"	7'-11"	1'-0"	2'-0"	6'-0"	#3	12"	3	3'-6"	1'-1"	2'-6"	#3	1	15'-0"	#3	12"	3	16'-0"	#3	12"	2	12'-5"	#3	12"	3	9'-5"	13'-5"	#5	1	12'-1"	#5	12"	5	"	"				
	Long	#3	12"	26	2'-9"	7'-10"	1'-0"	1'-11"	9'-0"	#3	12"	6	3'-6"	1'-1"	2'-6"	#3	1	27'-6"	#3	12"	6	28'-2"	#3	12"	2	24'-9"	#3	12"	3	18'-6"	21'-6"	#3	1	25'-1"	#3	12"	5	"	"			78.0	152.2
6'	Short	#4	12"	15	3'-6"	9'-2"	1'-2"	2'-0"	7'-1"	#3	12"	3	4'-6"	1'-4"	3'-2"	#3	1	17'-0"	#3	12"	3	18'-0"	#3	12"	2	14'-3"	#3	12"	4	12'-3"	15'-3"	#3	1	15'-0"	#3	12"	6	"	"			127.8	253.1
	Long	#4	12"	30	3'-2"	9'-2"	1'-2"	2'-0"	7'-1"	#3	12"	6	4'-6"	1'-4"	3'-2"	#3	2	16'-8"	#3	12"	6	18'-0"	#3	12"	4	15'-2"	#3	12"	4	24'-6"	6'-6"	#3	2	15'-5"	#3	12"	6	2'-8"	1'-8"				
7'	Short	#4	12"	17	3'-11"	10'-10"	1'-3"	2'-0"	8'-1"	#4	12"	6	5'-6"	1'-7"	4'-0"	#4	1	19'-0"	#4	12"	4	18'-0"	#4	12"	5	15'-8"	3'-3"	#4	1	19'-0"	#4	12"	7	17'-1"	#4	12"	7	3'-6"	1'-9"			267.0	989.8
	Long	#4	12"	34	3'-9"	10'-8"	1'-3"	2'-0"	8'-1"	#4	12"	12	5'-6"	1'-7"	4'-0"	#4	2	18'-8"	#4	12"	8	20'-6"	#4	12"	9	17'-2"	#4	12"	5	30'-6"	6'-6"	#4	2	17'-5"	#4	12"	7	"	"				
8'	Short	#4	12"	19	4'-6"	12'-5"	1'-5"	2'-0"	9'-2"	#4	12"	9	6'-6"	1'-10"	4'-9"	#4	1	21'-0"	#4	12"	4	20'-6"	#4	12"	5	16'-3"	3'-3"	#4	1	19'-3"	#4	12"	8	19'-3"	#4	12"	8	"	"			312.9	622.3
	Long	#4	12"	38	4'-2"	12'-3"	1'-5"	2'-0"	9'-2"	#4	12"	18	6'-6"	1'-10"	4'-9"	#4	2	20'-8"	#4	12"	9	22'-9"	#4	12"	6	19'-2"	#4	12"	5	30'-6"	6'-6"	#4	2	19'-6"	#4	12"	8	3'-6"	1'-9"				

NOTE:- Bars for short wing shall be marked with prefix letter 'S', while those for long wing shall be marked with letter 'L'.

* Length without splice. Bars over 28'-0" length may be spliced. (1'-8" lap.)

QUANTITIES

CLEAR SPAN	CLEAR HEIGHT	THICKNESS OF WING AT HEADWALL	THICKNESS OF WING FOOTING	◎ REINFORCING STEEL FOR 4 WINGS	CLASS S CONCRETE - 4 WINGS: HEADWALLS, WINGWALLS, FOOTINGS, TOEWALLS AND APRONS				
					SINGLE BARREL CULVERT	DOUBLE BARREL CULVERT	TRIPLE BARREL CULVERT	QUADRUPLE BARREL CULVERT	QUINTUPLE BARREL CULVERT
S	H	CW	WB	LB	CU.YD.	CU.YD.	CU.YD.	CU.YD.	CU.YD.
4'	2'	6"	7"	141	5.80	6.90	8.01	9.12	10.23
	3'	6"	7"	213	8.08	9.18	10.29	11.40	12.51
	4'	6"	7"	327	10.78	11.88	12.99	14.10	15.21
	5'	6"	7"	460	13.90	15.00	16.11	17.22	18.32
	6'	7"	8"	762	18.85	19.99	21.13	22.27	23.41
5'	3'	6"	7"	213	8.33	9.47	11.01	12.36	13.70
	4'	6"	7"	327	11.03	12.36	13.71	15.06	16.40
	5'	6"	7"	460	14.14	15.98	16.83	18.17	19.52
	6'	7"	8"	762	19.11	20.98	21.86	23.24	24.62
	7'	7½"	8½"	1474	24.51	25.94	27.35	28.75	30.16
6'	3'	6"	7"	213	8.57	10.17	11.73	13.33	14.92
	4'	6"	7"	327	11.27	12.86	14.93	16.03	17.62
	5'	6"	7"	460	14.38	15.98	17.55	19.15	20.73
	6'	7"	8"	762	19.35	20.98	22.59	24.21	25.83
	7'	7½"	8½"	1474	24.79	26.44	28.08	29.73	31.38
	8'	8"	9"	1870	31.15	32.87	34.51	36.17	37.83
7'	4'	6"	7"	327	11.52	13.37	15.19	17.05	18.85
	5'	6"	7"	460	14.63	16.49	18.31	20.16	21.97
	6'	7"	8"	762	19.61	21.58	23.32	25.20	27.04
	7'	7½"	8½"	1474	25.05	26.94	28.82	30.71	32.59
	8'	8"	9"	1870	31.47	33.37	35.25	37.16	39.05
8'	4'	6"	7"	327	11.77	13.89	15.97	18.09	20.12
	5'	7"	7"	460	15.46	17.60	19.70	21.83	23.89
	6'	7"	8"	762	19.86	21.98	24.05	26.17	28.20
	7'	7½"	8½"	1474	25.30	27.46	29.58	31.73	33.81
	8'	8"	9"	1870	31.72	33.88	36.00	38.16	40.27
9'	5'	7"	7"	460	15.72	18.13	20.57	22.87	25.15
	6'	7½"	8"	762	20.50	22.93	25.29	27.71	30.01
	7'	7½"	8½"	1474	25.55	27.98	30.39	32.76	35.07
	8'	8"	9"	1870	31.97	34.39	36.76	39.18	41.49
10'	5'	7"	7"	460	15.98	18.45	21.25	23.80	26.92
	6'	7½"	8"	762	20.74	23.95	26.07	28.64	31.28
	7'	7½"	8½"	1474	25.81	28.50	31.12	33.70	36.84
	8'	8"	9"	1870	32.22	34.91	37.54	40.12	42.76
11'	6'	8"	8"	762	21.39	24.98	27.25	30.11	——
	7'	8"	8½"	1474	26.55	29.53	32.41	35.27	——
	8'	8"	9"	1870	32.97	35.95	38.83	41.19	——
12'	6'	8"	8"	762	21.66	24.93	28.05	31.20	——
	7'	8"	8½"	1474	26.81	30.08	33.21	36.36	——
	8'	8"	9"	1870	32.73	35.99	39.13	42.28	——

◎ For reinforcing steel in Headwalls and Aprons, see Drawing Nos. of Barrel Sections listed below.

GENERAL NOTES:-

CONCRETE:- All concrete to be Class S, and shall be poured in the dry. All exposed corners to have ¾" chamfers.

REINFORCING STEEL:- Reinforcing steel to be deformed bars of intermediate or hard grade.

CONSTRUCTION JOINTS:- Construction joints between wingwall, footings and sidewalls shall be only where shown on plans.

SPECIFICATIONS:- Arkansas State Highway Commission Standard Specifications for Highway Construction and applicable special Provisions.

UNIT STRESSES:-

Class S Concrete (n=10) 1200#/□"
Reinforcing Steel 20,000#/□"

NOTE:- This drawing to be used in conjunction with Standard Barrel Sections, Drawing Nos.:-

SINGLES	DOUBLES	TRIPLES	QUADRUPLES	QUINTUPLES
R-130X-0	R-230X-01	R-330X-01	R-430X-01	R-530X-01
	R-230X-02	R-330X-02	R-430X-02	R-530X-02
R-130X-1	R-230X-1	R-330X-1	R-430X-1	R-530X-1
	R-230X-2	R-330X-2		

CLASS S CONCRETE

ARKANSAS STATE HIGHWAY COMMISSION

DETAILS OF STANDARD WINGS FOR REINFORCED CONCRETE BOX CULVERTS 30° SKEW

4', 5', 6', 7', 8', 9', 10', 11' & 12' SPANS — 3:1 SLOPES

SINGLES, DOUBLES, TRIPLES, QUADRUPLES & QUINTUPLES. — ALL DEPTHS OF COVER FOR H = 8'-0" OR LESS

STANDARD DRAWING NO. W-X30.3-1

REVISIONS:- Membrane added. 5-10-66 W.C.H.

Designed By:- W.C.H. 5-13-63 Checked By:- 2DYS 8-19-63
Drawn By:- W.C.H. 7-26-63 Checked By:- DART 7-15-64
Quantities By:- W.C.H. 1-7-64 Checked By:- 7-15-64

DATE REVISED	DATE FILMED	FED. ROAD DIST. No.	STATE	FED. AID PROJ. NO.	SHEET No.	TOTAL SHEETS
		6	ARK.		138	229
		JOB NO.		040478		

(2) X-SEC. STA. 1859+00 TO STA. 1860+00
U.S. 71 RELOC.

BEGIN JOB 040478 STA. 1860+08.06

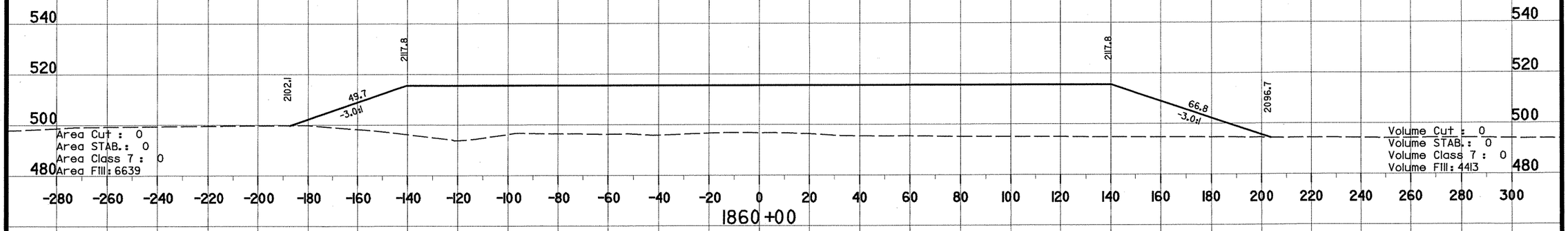

BEGIN GRADING JOB 040478 STA. 1859+64.11

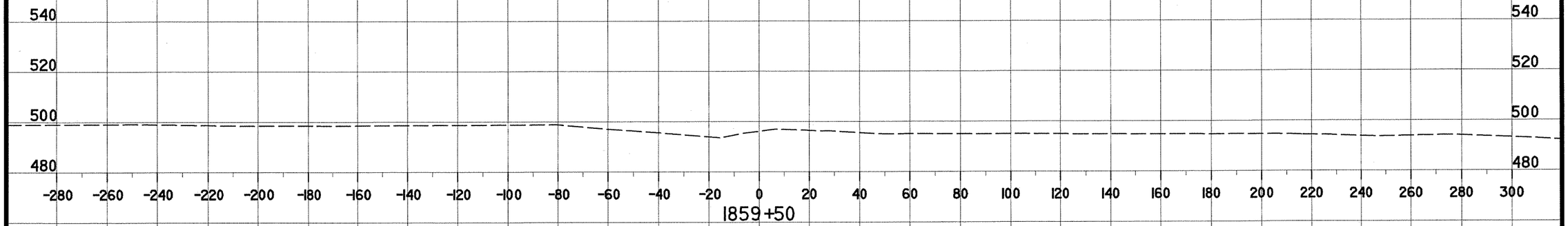

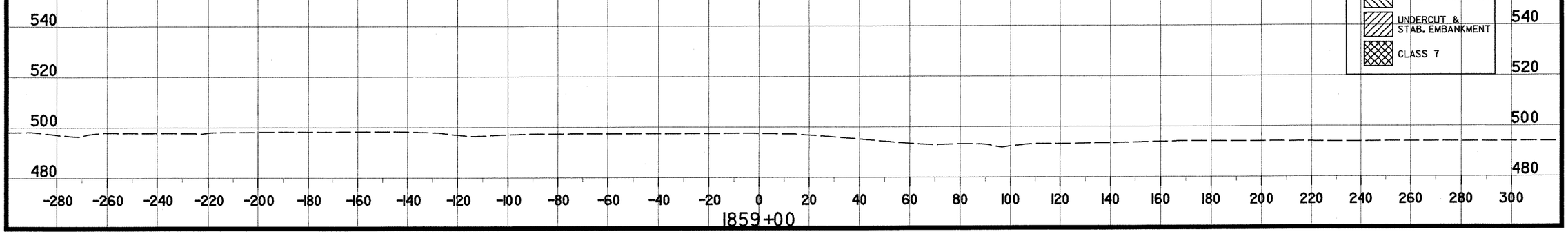

DATE REVISED	DATE FILMED	FED. ROAD DIST. No.	STATE	FED. AID PROJ. NO.	SHEET No.	TOTAL SHEETS
		6	ARK.		139	229
		JOB NO.		040478		

(2) X-SEC. STA. 1860+50 TO STA. 1861+50
U.S. 71 RELOC.

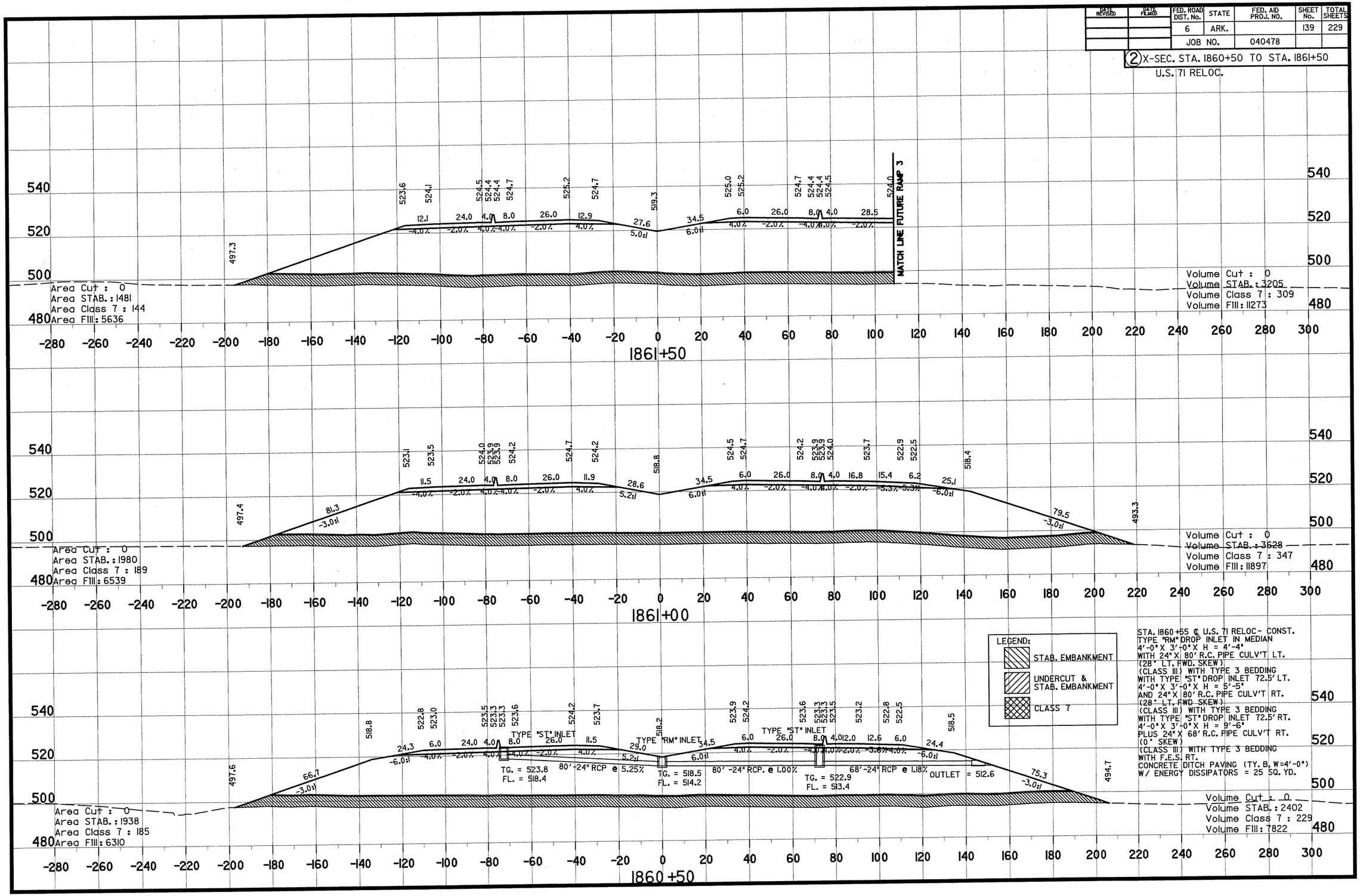

STA. 1860+55 ℄ U.S. 71 RELOC- CONST.
TYPE "RM" DROP INLET IN MEDIAN
4'-0" X 3'-0" X H = 4'-4"
WITH 24" X 80' R.C. PIPE CULV'T LT.
(28° LT. FWD. SKEW)
(CLASS III) WITH TYPE 3 BEDDING
WITH TYPE "ST" DROP INLET 72.5' LT.
4'-0" X 3'-0" X H = 5'-5"
AND 24" X 80' R.C. PIPE CULV'T RT.
(28° LT. FWD. SKEW)
(CLASS III) WITH TYPE 3 BEDDING
WITH TYPE "ST" DROP INLET 72.5' RT.
4'-0" X 3'-0" X H = 9'-6"
PLUS 24" X 68' R.C. PIPE CULV'T RT.
(0° SKEW)
(CLASS III) WITH TYPE 3 BEDDING
WITH F.E.S. RT.
CONCRETE DITCH PAVING (TY. B, W=4'-0")
W/ ENERGY DISSIPATORS = 25 SQ. YD.

DATE REVISED	DATE FILED	FED. ROAD DIST. No.	STATE	FED. AID PROJ. NO.	SHEET No.	TOTAL SHEETS
		6	ARK.		140	229
		JOB NO.		040478		

(2) X-SEC. STA. 1862+00 TO STA. 1863+00
U.S. 71 RELOC.

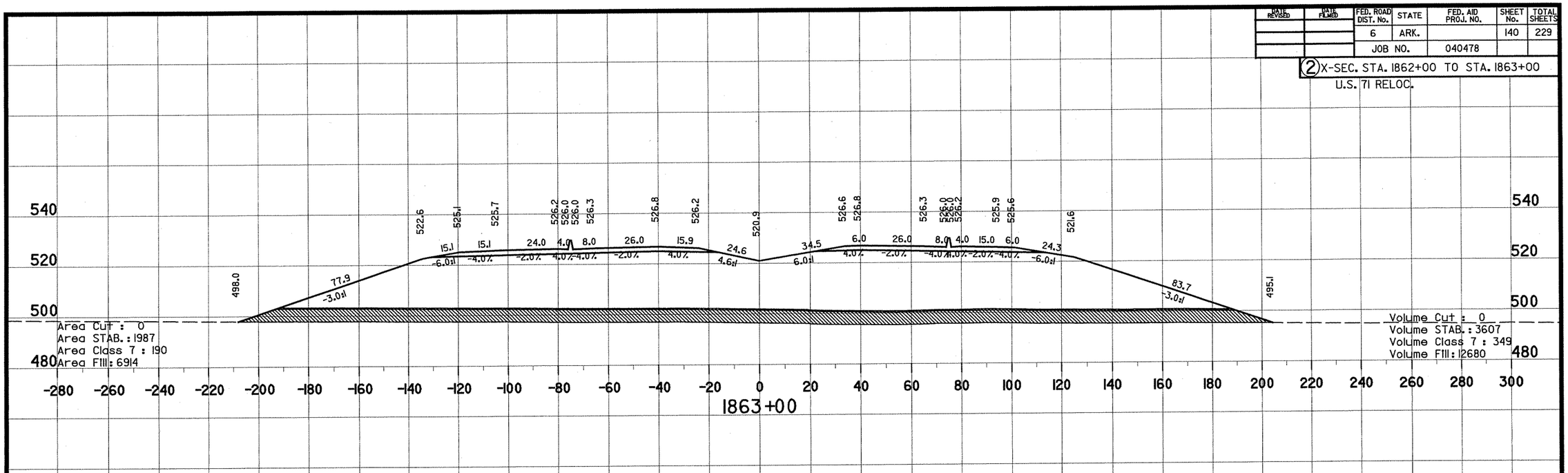

DATE REVISED	DATE FILMED	FED. ROAD DIST. No.	STATE	FED. AID PROJ. NO.	SHEET No.	TOTAL SHEETS
		6	ARK.		141	229
		JOB NO.		040478		

(2) X-SEC. STA. 1863+50 TO STA. 1864+50
U.S. 71 RELOC.

STA. 1864+50 ℄ U.S. 71 RELOC - CONST.
DBL. 6' X 5' X 409' R.C BOX CULV'T
(0°SKEW)
D.A. = 151.5 ac. Q50 = 337.9 cfs
USE STD. DWG. FOR DBL. 6' X 5' R.C.
BOX CULV'T

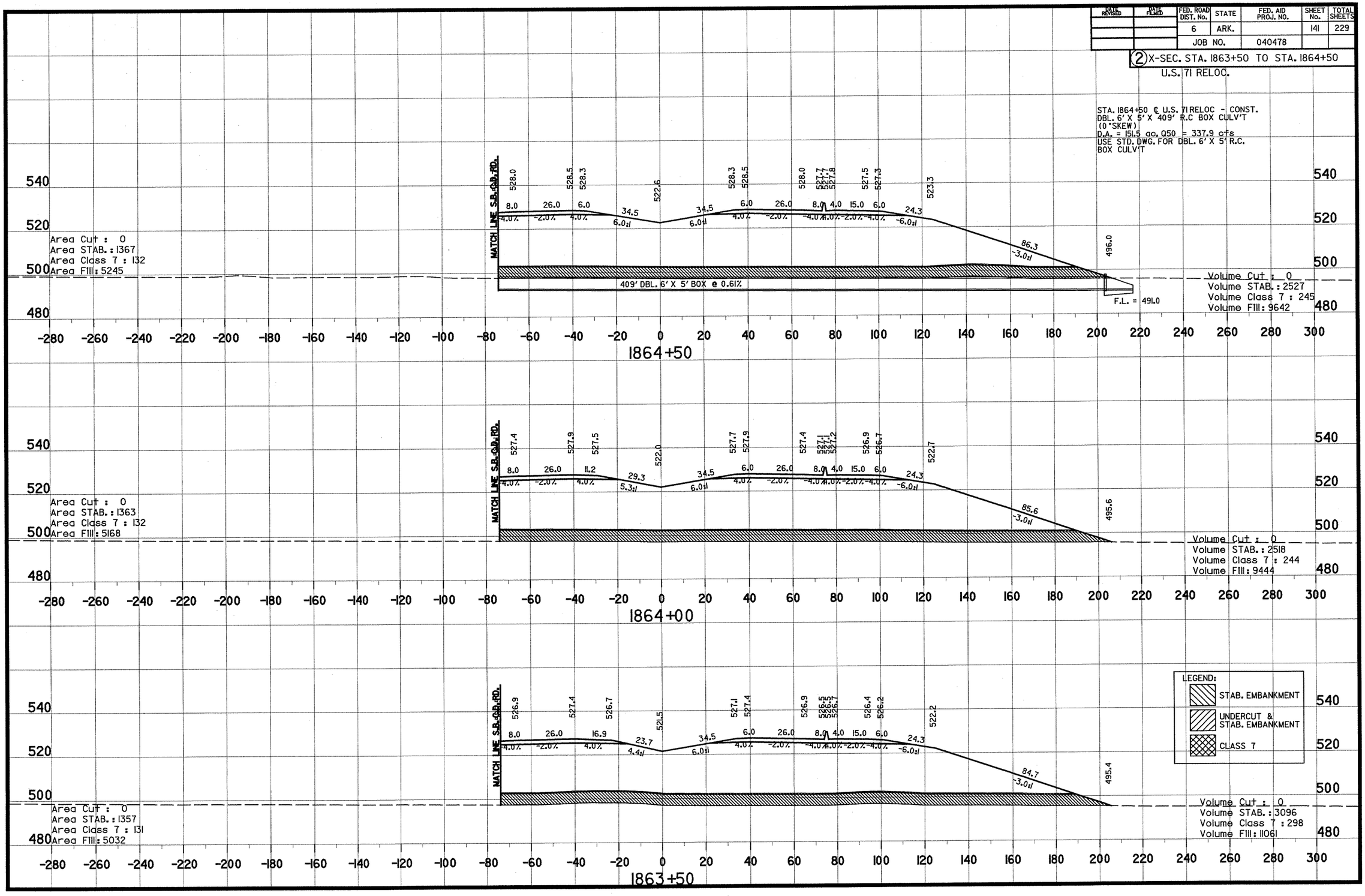

DATE REVISED	DATE FILED	FED. ROAD DIST. No.	STATE	FED. AID PROJ. No.	SHEET No.	TOTAL SHEETS
		6	ARK.		142	229
		JOB NO.		040478		

(2) X-SEC. STA. 1865+00 TO STA. 1866+00
U.S. 71 RELOC.

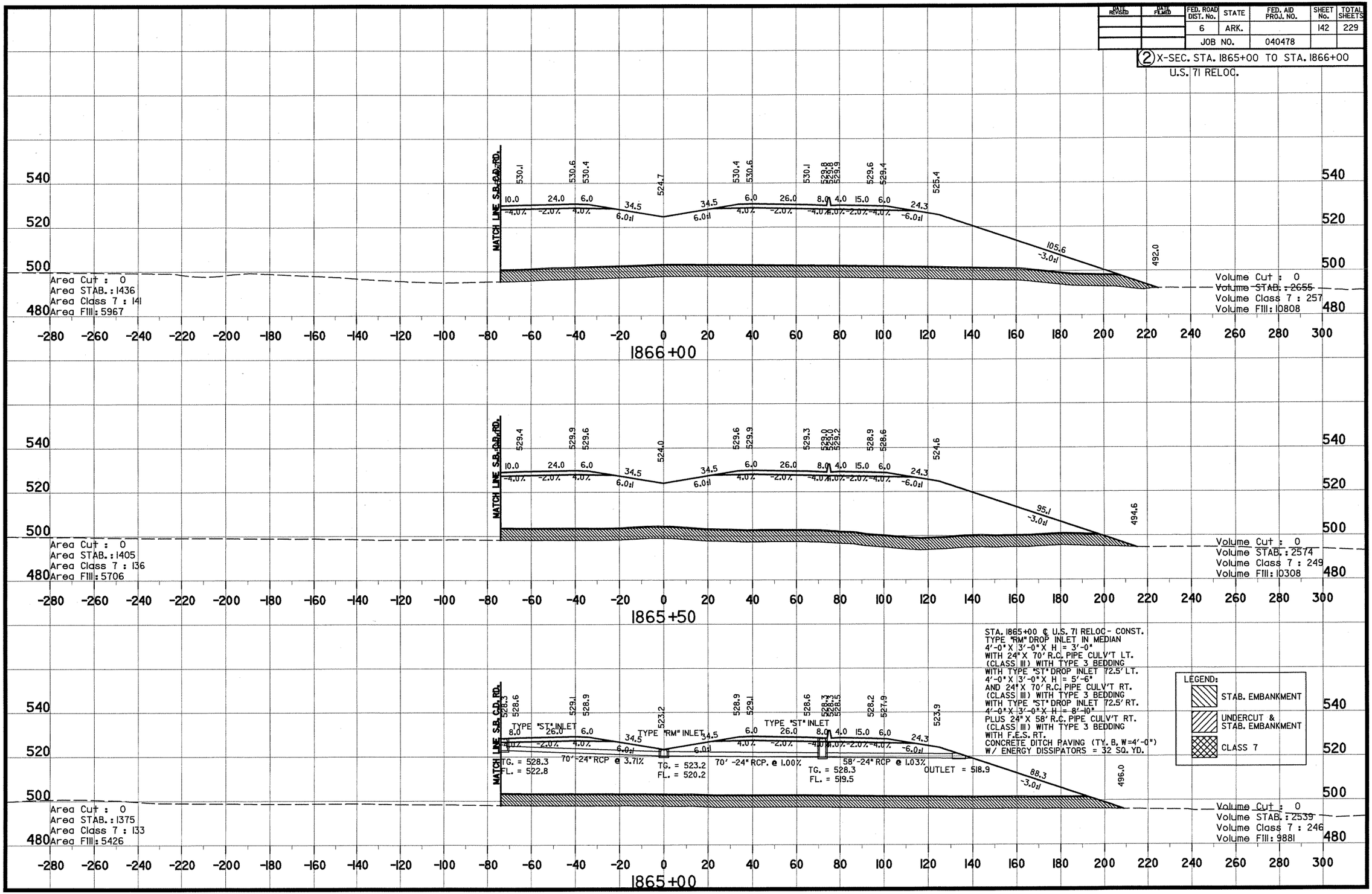

DATE REVISED	DATE FILMED	FED. ROAD DIST. No.	STATE	FED. AID PROJ. No.	SHEET No.	TOTAL SHEETS
		6	ARK.		143	229
		JOB NO.		040478		

(2) X-SEC. STA. 1866+50 TO STA. 1867+50
U.S. 71 RELOC.

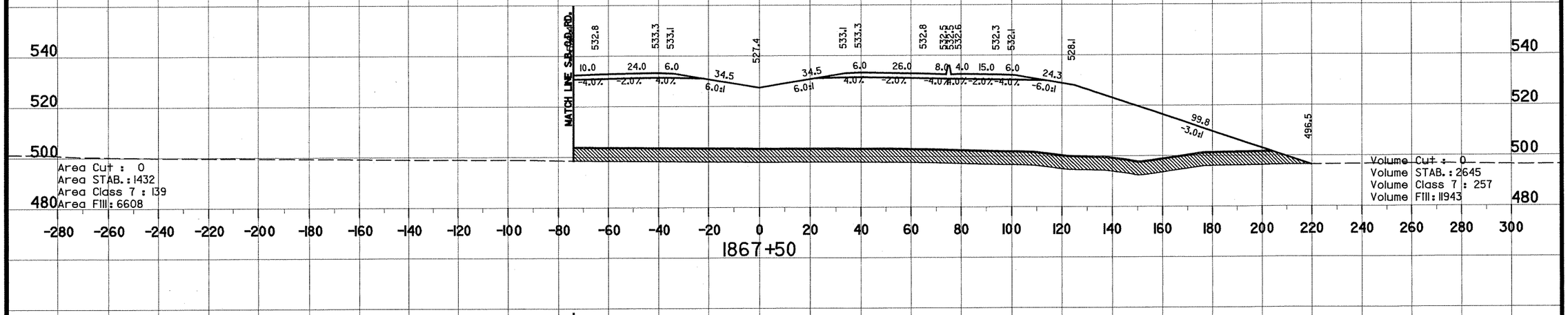

Area Cut : 0
Area STAB. : 1432
Area Class 7 : 139
Area Fill : 6608

Volume Cut : 0
Volume STAB. : 2645
Volume Class 7 : 257
Volume Fill : 11943

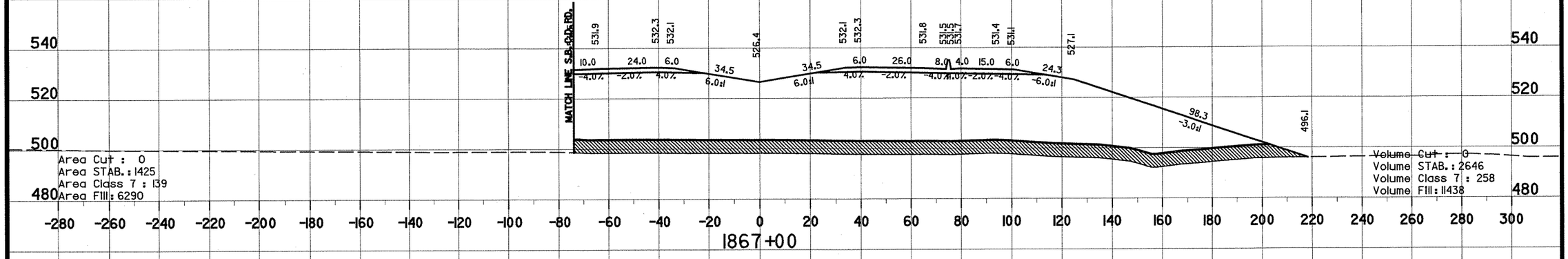

Area Cut : 0
Area STAB. : 1425
Area Class 7 : 139
Area Fill : 6290

Volume Cut : 0
Volume STAB. : 2646
Volume Class 7 : 258
Volume Fill : 11438

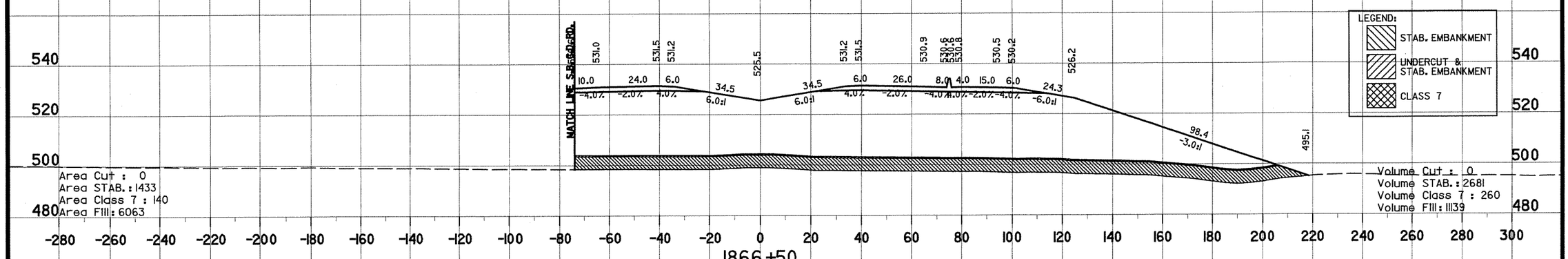

LEGEND:
- STAB. EMBANKMENT
- UNDERCUT & STAB. EMBANKMENT
- CLASS 7

Area Cut : 0
Area STAB. : 1433
Area Class 7 : 140
Area Fill : 6063

Volume Cut : 0
Volume STAB. : 2681
Volume Class 7 : 260
Volume Fill : 11139

DATE REVISED	DATE FILMED	FED. ROAD DIST. No.	STATE	FED. AID PROJ. NO.	SHEET No.	TOTAL SHEETS
		6	ARK.		144	229
		JOB NO.		040478		

(2) X-SEC. STA. 1868+00 TO STA. 1869+00

U.S. 71 RELOC.

STA. 1869+00 ℄ U.S. 71 RELOC- CONST.
TYPE "RM" DROP INLET IN MEDIAN
4'-0" X 3'-0" X H = 3'-0"
WITH 24" X 70' R.C. PIPE CULV'T LT.
(CLASS III) WITH TYPE 3 BEDDING
WITH TYPE "ST" DROP INLET 72.5' LT.
4'-0" X 3'-0" X H = 8'-8"
PLUS 24" X 78' R.C. PIPE CULV'T LT.
(CLASS III) WITH TYPE 3 BEDDING
WITH F.E.S. LT.
CONCRETE DITCH PAVING (TY. B, W=4'-0")
W/ ENERGY DISSIPATORS = 36 SQ. YD.
AND 24" X 70' R.C. PIPE CULV'T RT.
(CLASS III) WITH TYPE 3 BEDDING
WITH TYPE "ST" DROP INLET 72.5' RT.
4'-0" X 3'-0" X H = 5'-6"

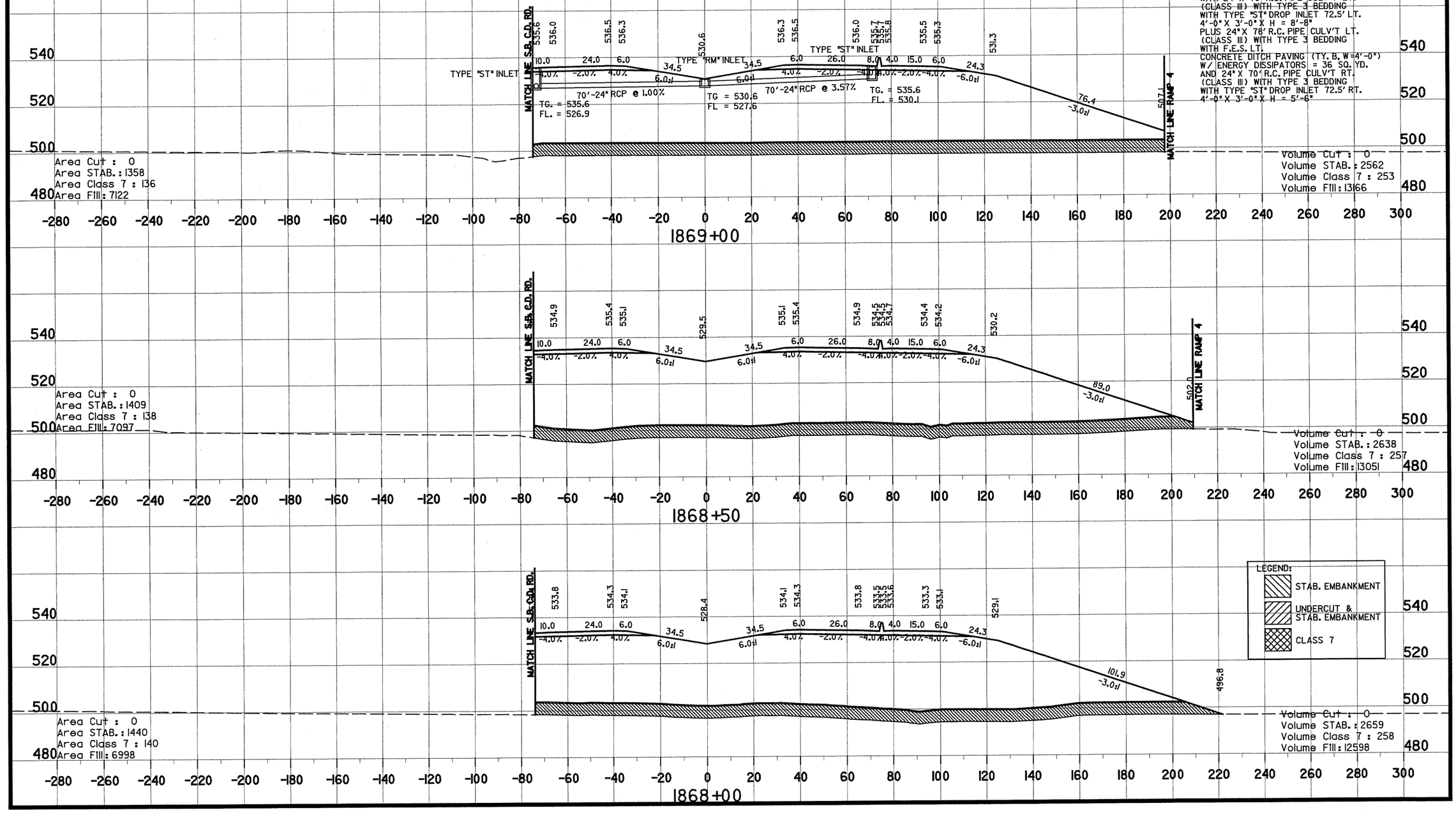

DATE REVISED	DATE FILMED	FED. ROAD DIST. No.	STATE	FED. AID PROJ. NO.	SHEET No.	TOTAL SHEETS
		6	ARK.		145	229
		JOB NO.		040478		

(2) X-SEC. STA. 1869+50 TO STA. 1870+50

U.S. 71 RELOC.

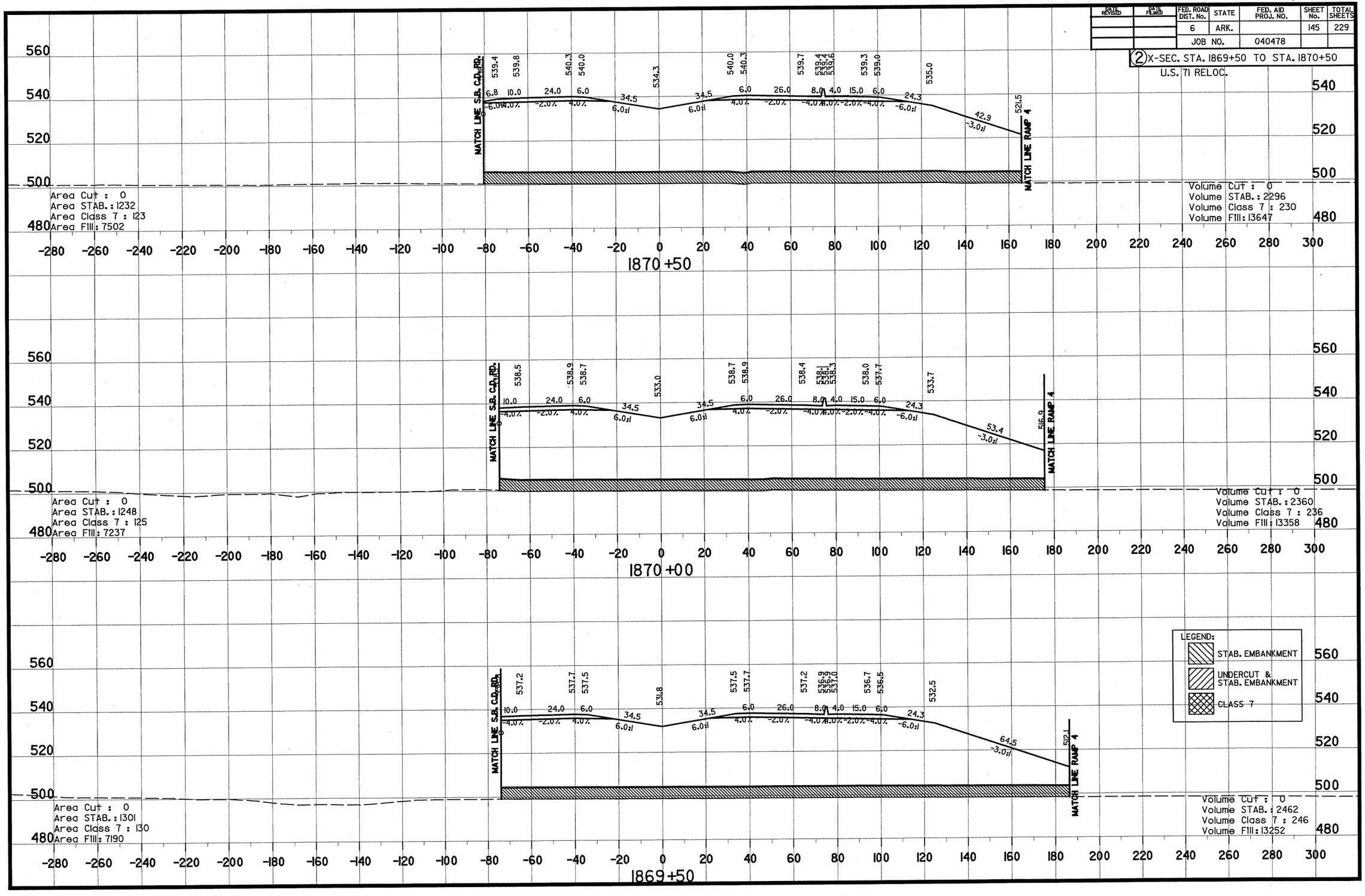

DATE REVISED	DATE FILMED	FED. ROAD DIST. No.	STATE	FED. AID PROJ. NO.	SHEET No.	TOTAL SHEETS
		6	ARK.		146	229
		JOB NO.		040478		

(2) X-SEC. STA. 1871+00 TO STA. 1872+00
U.S. 71 RELOC.

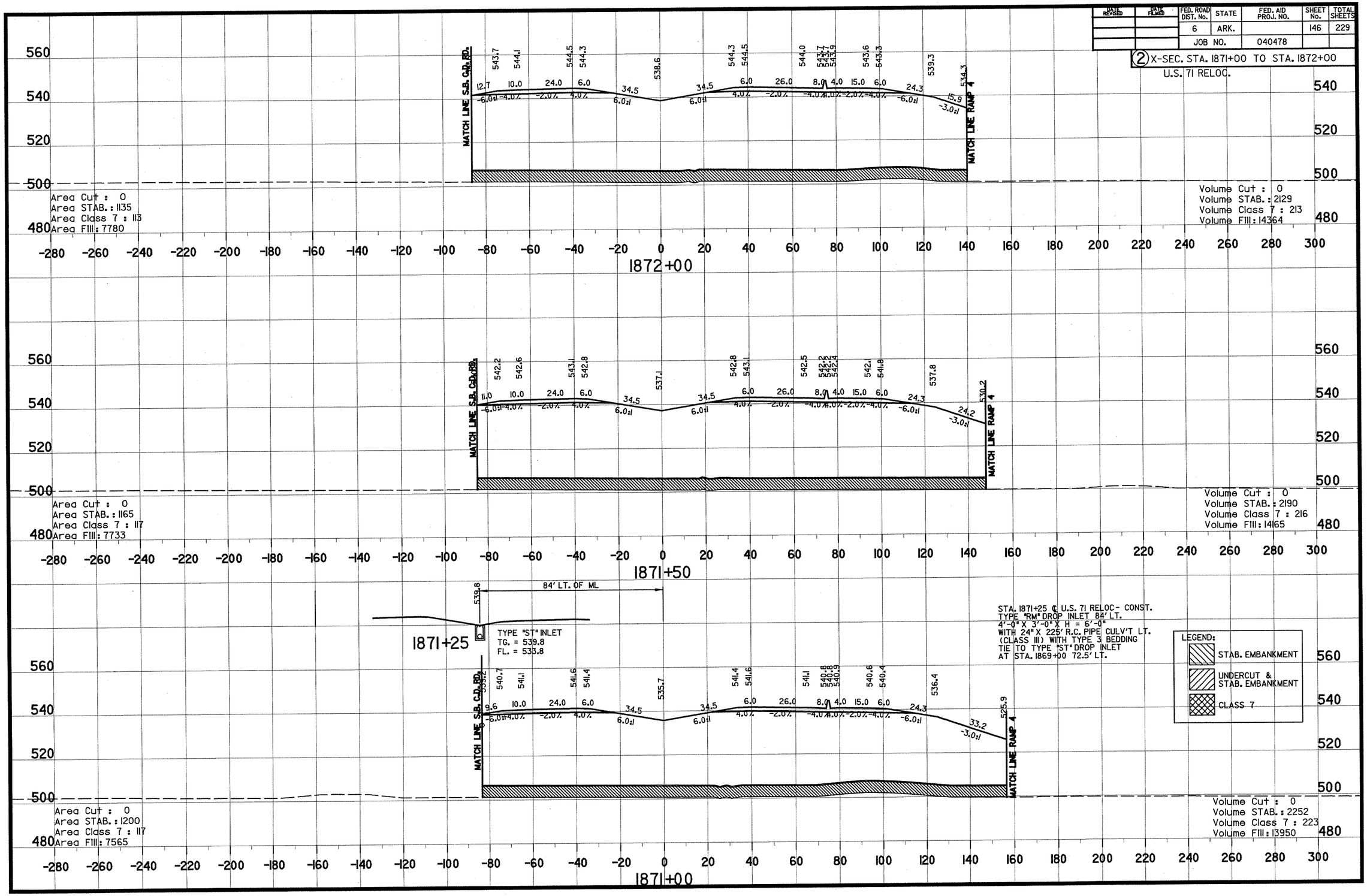

DATE REVISED	DATE FILED	FED. ROAD DIST. No.	STATE	FED. AID PROJ. No.	SHEET No.	TOTAL SHEETS
		6	ARK.		147	229
		JOB NO.		040478		

(2) X-SEC. STA. 1872+50 TO STA. 1873+50
U.S. 71 RELOC.

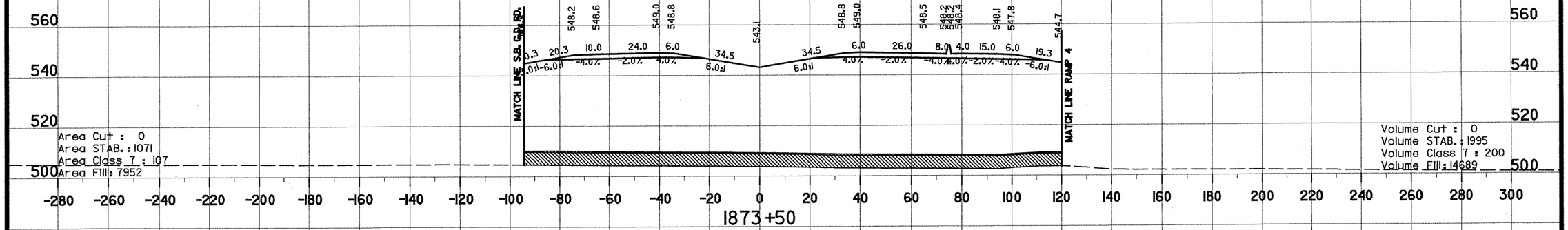

Area Cut : 0
Area STAB. : 1071
Area Class 7 : 107
Area Fill : 7952

Volume Cut : 0
Volume STAB. : 1995
Volume Class 7 : 200
Volume Fill : 14689

1873+50

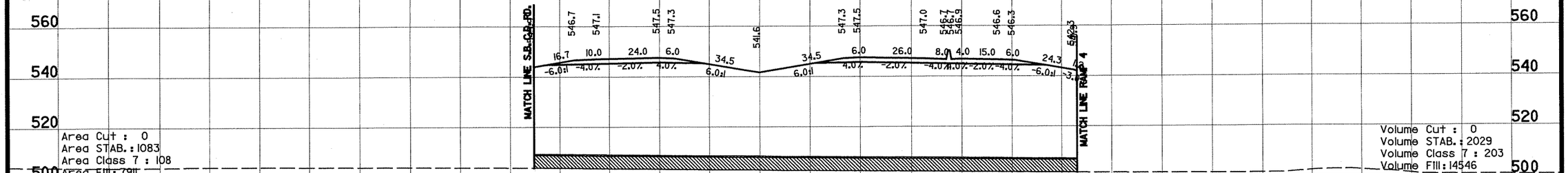

Area Cut : 0
Area STAB. : 1083
Area Class 7 : 108
Area Fill : 7911

Volume Cut : 0
Volume STAB. : 2029
Volume Class 7 : 203
Volume Fill : 14546

1873+00

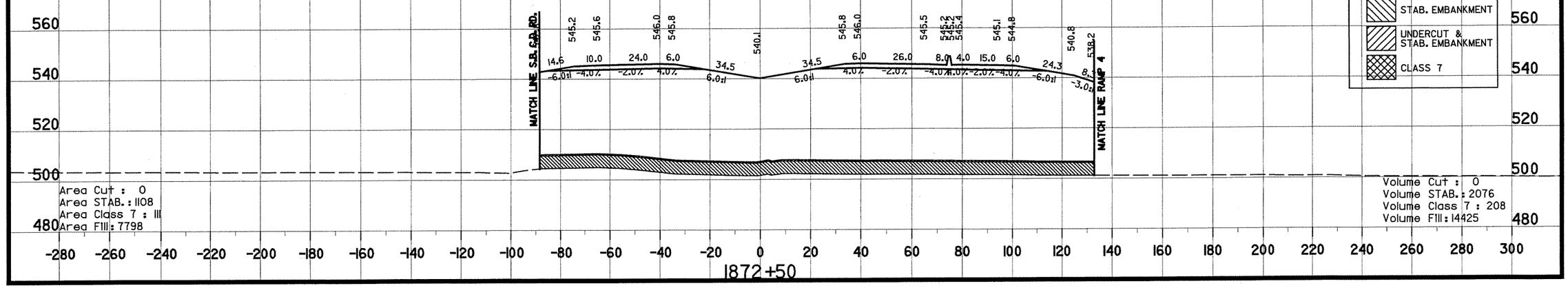

LEGEND:
- STAB. EMBANKMENT
- UNDERCUT & STAB. EMBANKMENT
- CLASS 7

Area Cut : 0
Area STAB. : 1108
Area Class 7 : 111
Area Fill : 7798

Volume Cut : 0
Volume STAB. : 2076
Volume Class 7 : 208
Volume Fill : 14425

1872+50

DATE REVISED	DATE FILMED	FED. ROAD DIST. No.	STATE	FED. AID PROJ. NO.	SHEET No.	TOTAL SHEETS
		6	ARK.		148	229
		JOB NO.		040478		

(2) X-SEC. STA. 1874+00 TO STA. 1875+00

U.S. 71 RELOC.

STA. 1875+00 ℄ U.S. 71 RELOC- CONST.
TYPE "RM" DROP INLET IN MEDIAN
4'-0" X 3'-0" X H = 4'-10"
WITH 24" X 96' R.C. PIPE CULV'T LT.
(CLASS III) WITH TYPE 3 BEDDING
WITH TYPE "RM" DROP INLET 99' LT.
4'-0" X 3'-0" X H = 4'-4"
AND 24" X 70' R.C. PIPE CULV'T RT.
(CLASS III) WITH TYPE 3 BEDDING
WITH TYPE "ST" DROP INLET 72.5' RT.
4'-0" X 3'-0" X H = 10'-5"
PLUS 24" X 96' R.C. PIPE CULV'T RT.
(CLASS III) WITH TYPE 3 BEDDING
WITH F.E.S. RT.
CONCRETE DITCH PAVING (TY. B, W=4'-0")
W/ ENERGY DISSIPATORS = 56 SQ. YD.

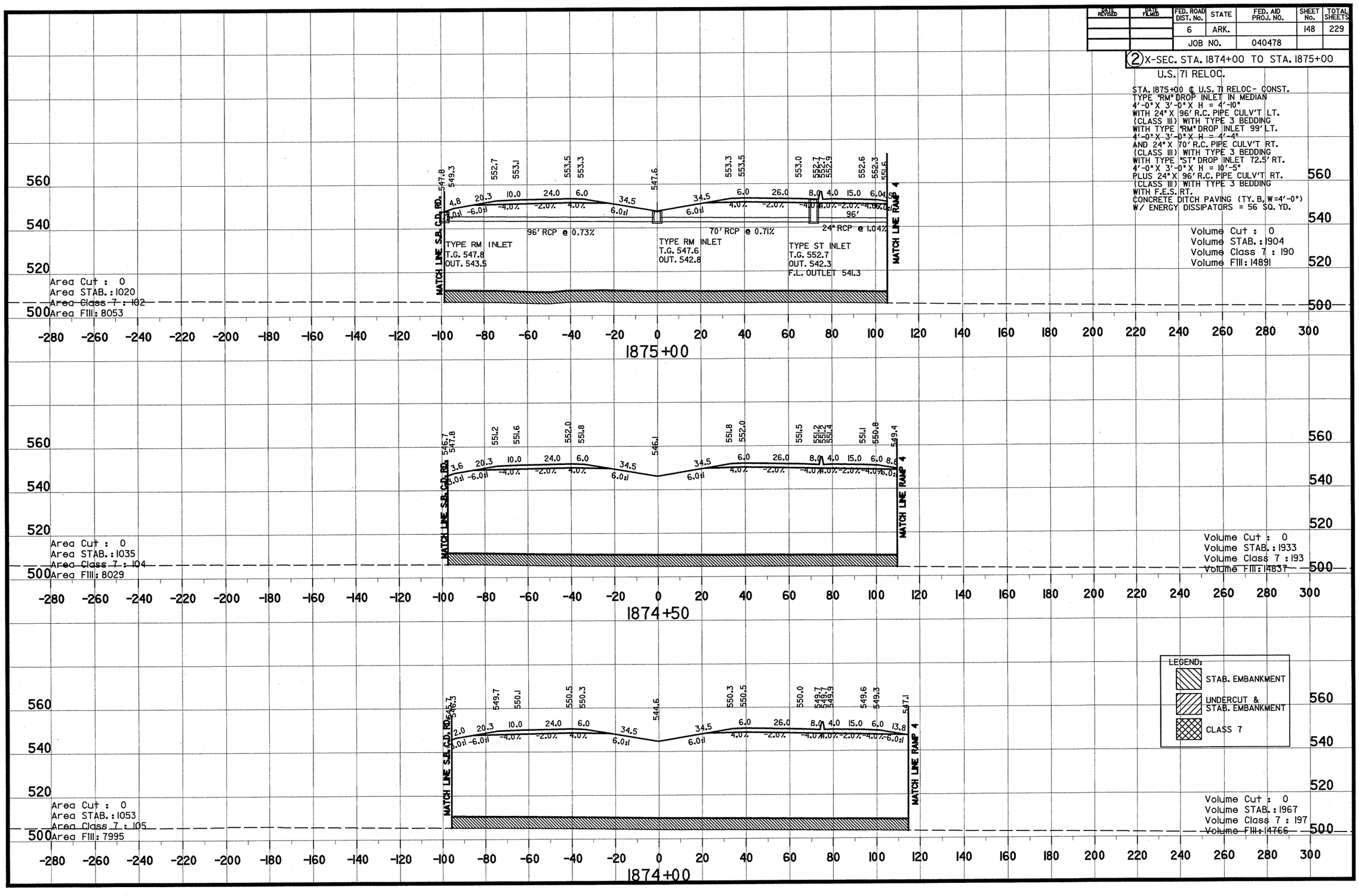

DATE REVISED	DATE FILMED	FED. ROAD DIST. No.	STATE	FED. AID PROJ. NO.	SHEET No.	TOTAL SHEETS
		6	ARK.		149	229
		JOB NO.		040478		

(2) X-SEC. STA. 1875+50 TO STA. 1876+50
U.S. 71 RELOC.

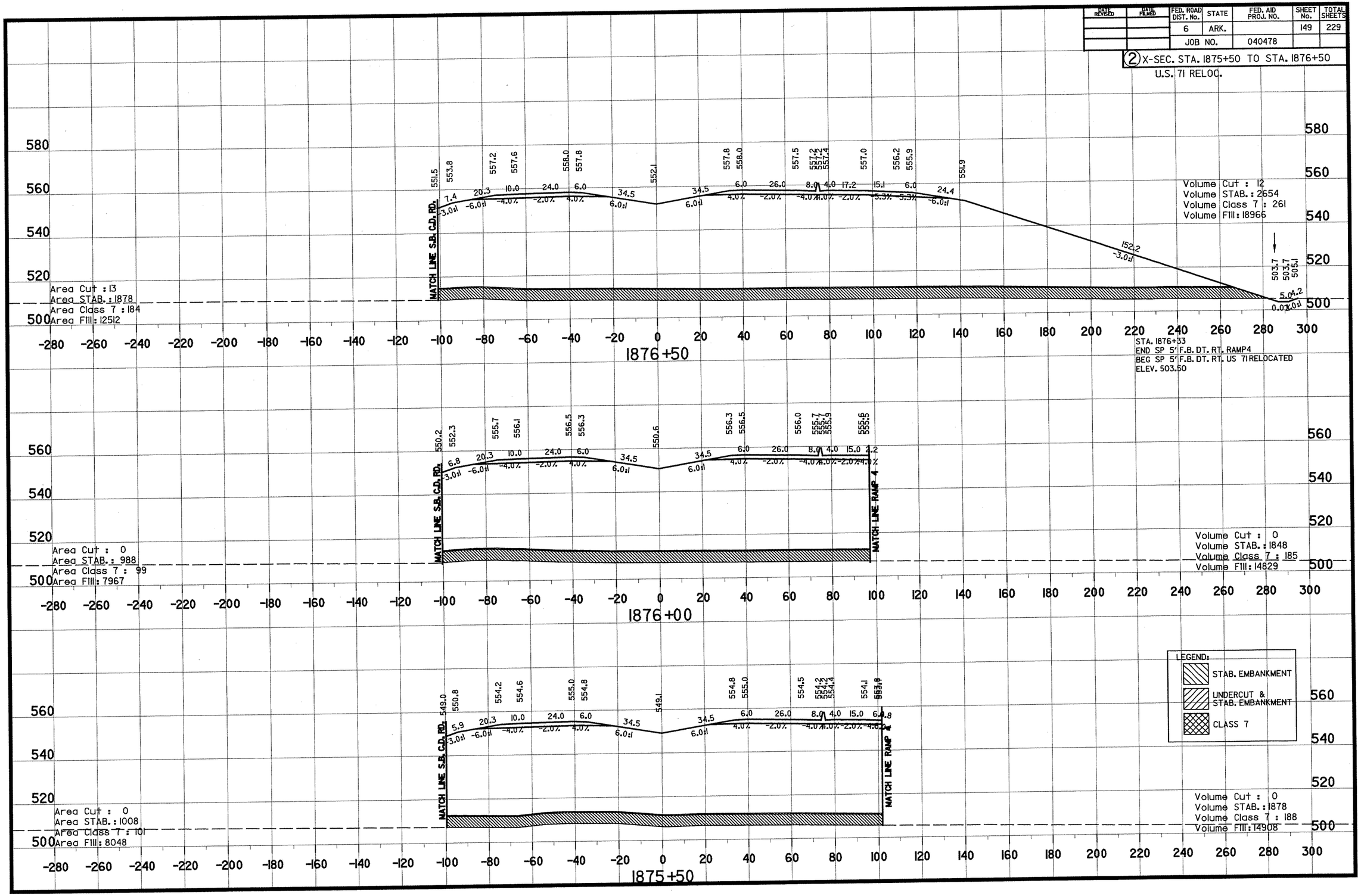

DATE REVISED	DATE FILED	FED. ROAD DIST. No.	STATE	FED. AID PROJ. NO.	SHEET No.	TOTAL SHEETS
		6	ARK.		150	229
		JOB NO.		040478		

(2) X-SEC. STA. 1877+00 TO STA. 1878+00

U.S. 71 RELOC.

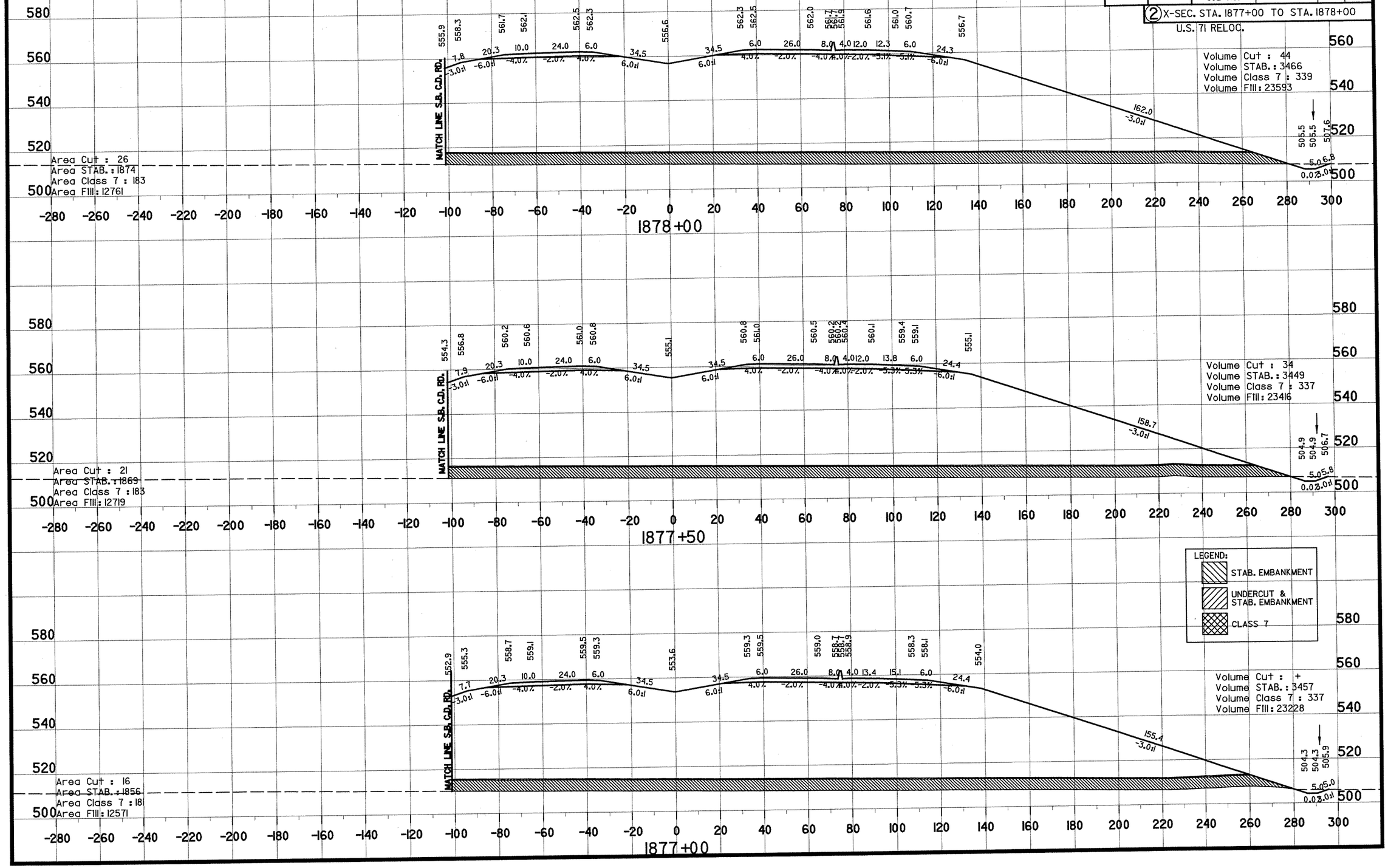

DATE REVISED	DATE FILMED	FED. ROAD DIST. No.	STATE	FED. AID PROJ. NO.	SHEET No.	TOTAL SHEETS
		6	ARK.		151	229
		JOB NO.		040478		

(2) X-SEC. STA. 1878+50 TO STA. 1879+50
U.S. 71 RELOC.

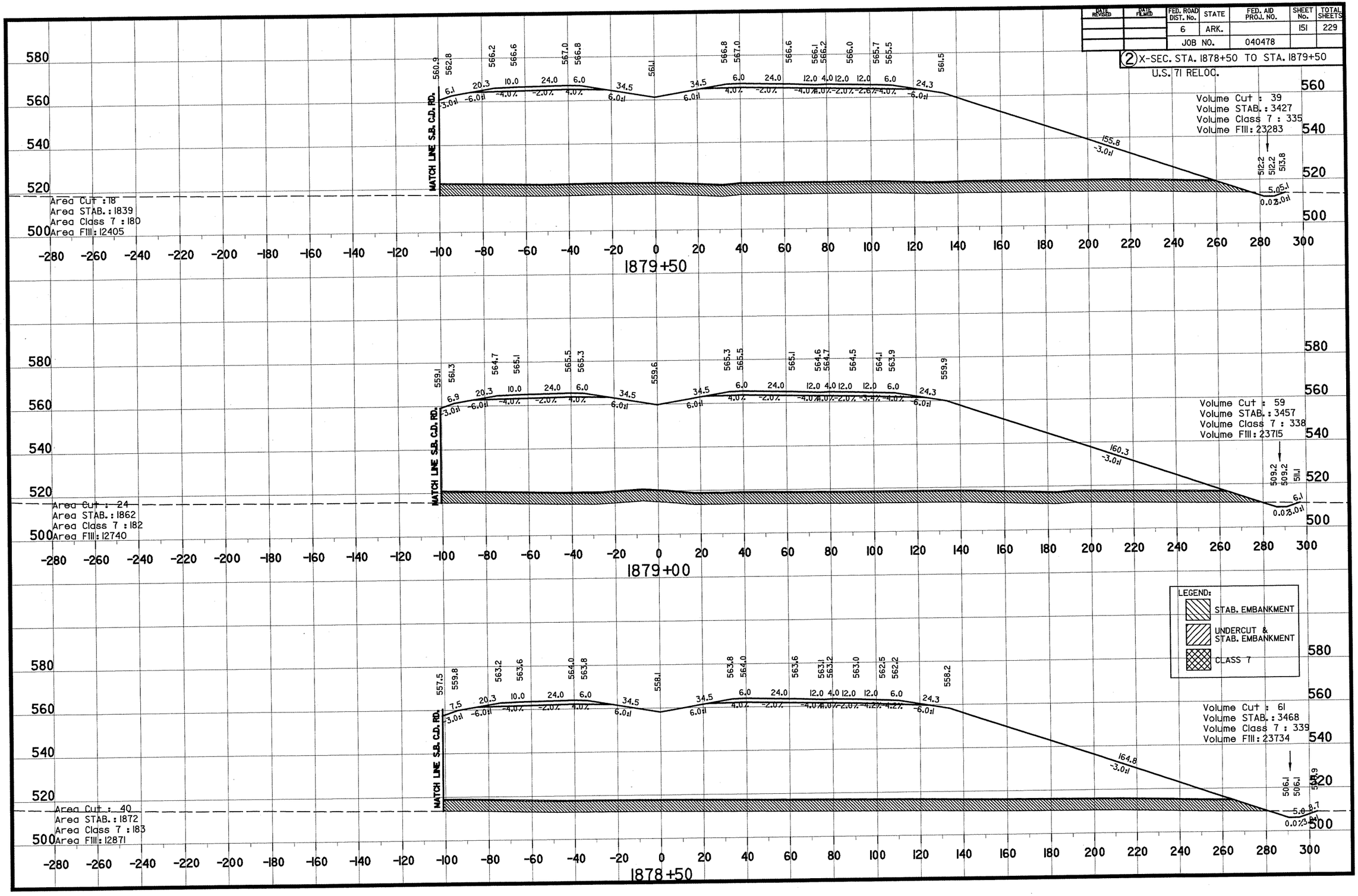

DATE REVISED	DATE FILMED	FED. ROAD DIST. No.	STATE	FED. AID PROJ. No.	SHEET No.	TOTAL SHEETS
		6	ARK.		152	229
		JOB NO.		040478		

(2) X-SEC. STA. 1880+00 TO STA. 1881+00

U.S. 71 RELOC.

Volume Cut : 59
Volume STAB. : 3221
Volume Class 7 : 314
Volume Fill : 18872

Area Cut : 26
Area STAB. : 1714
Area Class 7 : 167
Area Fill : 9585

1881+00

Volume Cut : 53
Volume STAB. : 3309
Volume Class 7 : 322
Volume Fill : 20888

Area Cut : 36
Area STAB. : 1765
Area Class 7 : 172
Area Fill : 10797

1880+50

LEGEND:
- STAB. EMBANKMENT
- UNDERCUT & STAB. EMBANKMENT
- CLASS 7

Volume Cut : 37
Volume STAB. : 3378
Volume Class 7 : 330
Volume Fill : 22377

Area Cut : 22
Area STAB. : 1809
Area Class 7 : 176
Area Fill : 11762

1880+00

DATE REVISED	DATE FILMED	FED. ROAD DIST. No.	STATE	FED. AID PROJ. NO.	SHEET No.	TOTAL SHEETS
		6	ARK.		153	229
		JOB NO.	040478			

(2) X-SEC. STA. 1881+50 TO STA. 1883+00

U.S. 71 RELOC.

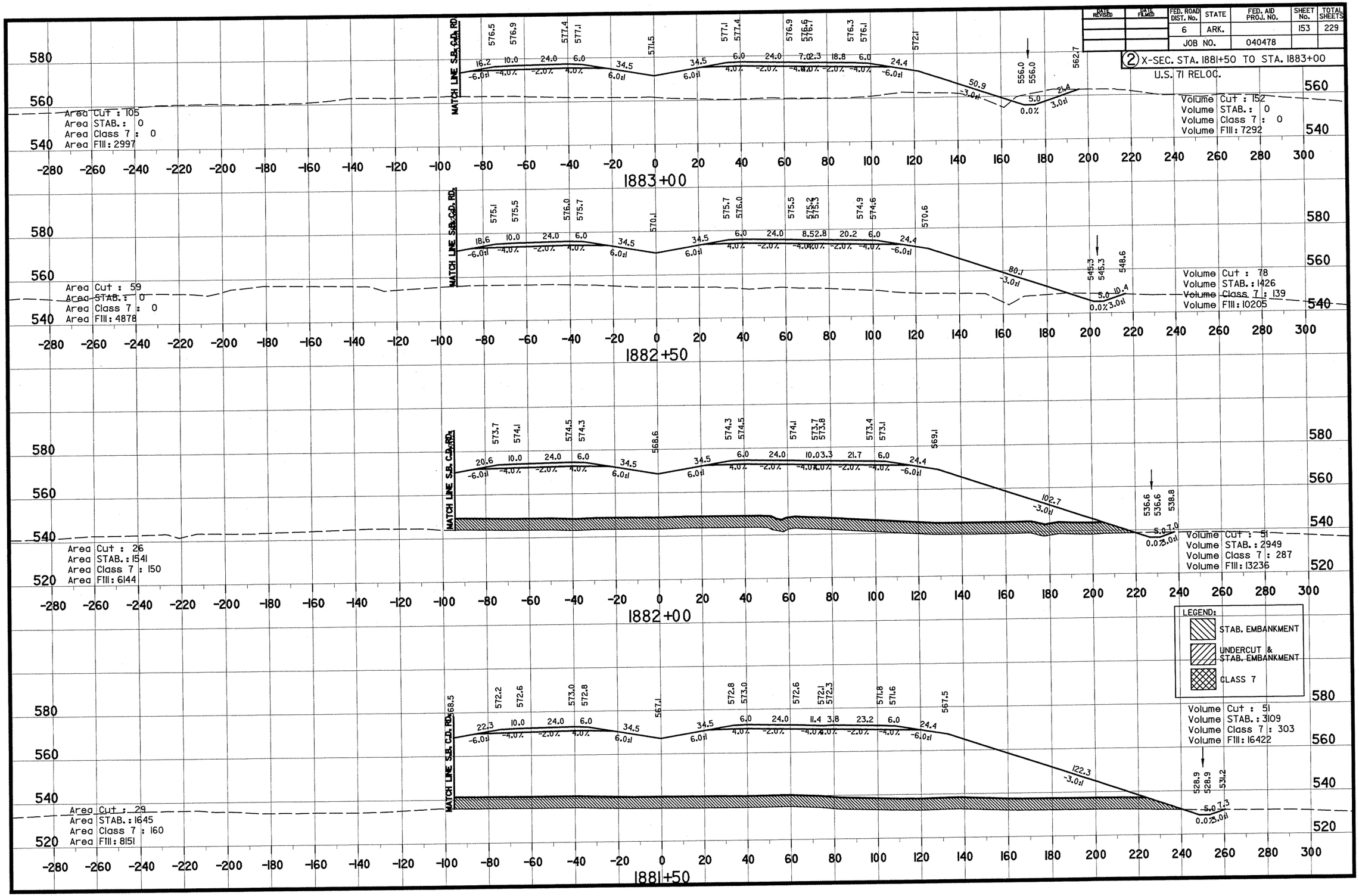

DATE REVISED	DATE FILMED	FED. ROAD DIST. No.	STATE	FED. AID PROJ. NO.	SHEET No.	TOTAL SHEETS
		6	ARK.		154	229
		JOB NO.		040478		

(2) X-SEC. STA. 1883+50 TO STA. 1885+00

U.S. 71 REL OC.

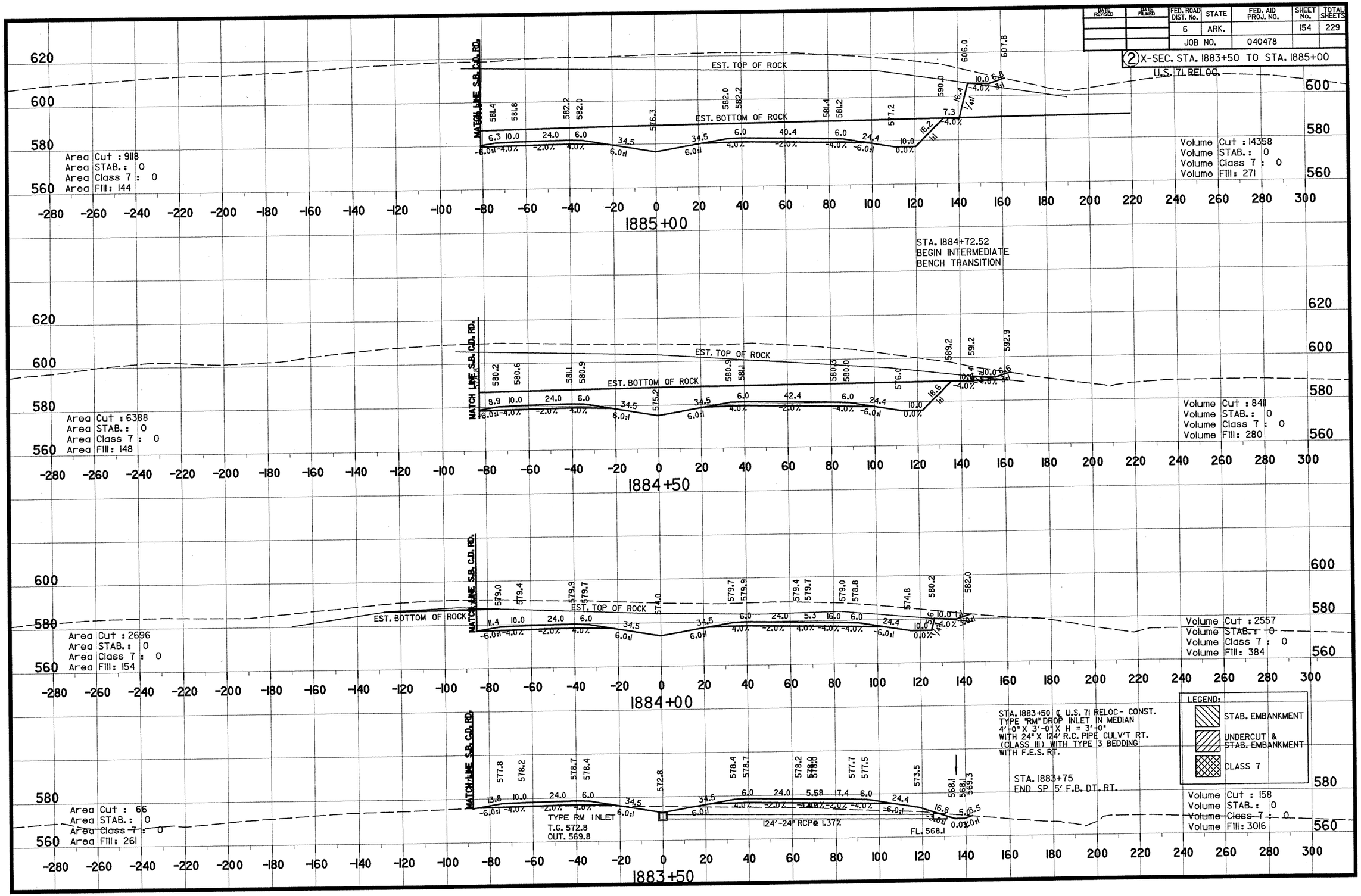

DATE REVISED	DATE FILED	FED. ROAD DIST. No.	STATE	FED. AID PROJ. NO.	SHEET No.	TOTAL SHEETS
		6	ARK.		155	229
		JOB NO.		040478		

(2) X-SEC. STA. 1885+50 TO STA. 1886+50

U.S. 71 RELOC.

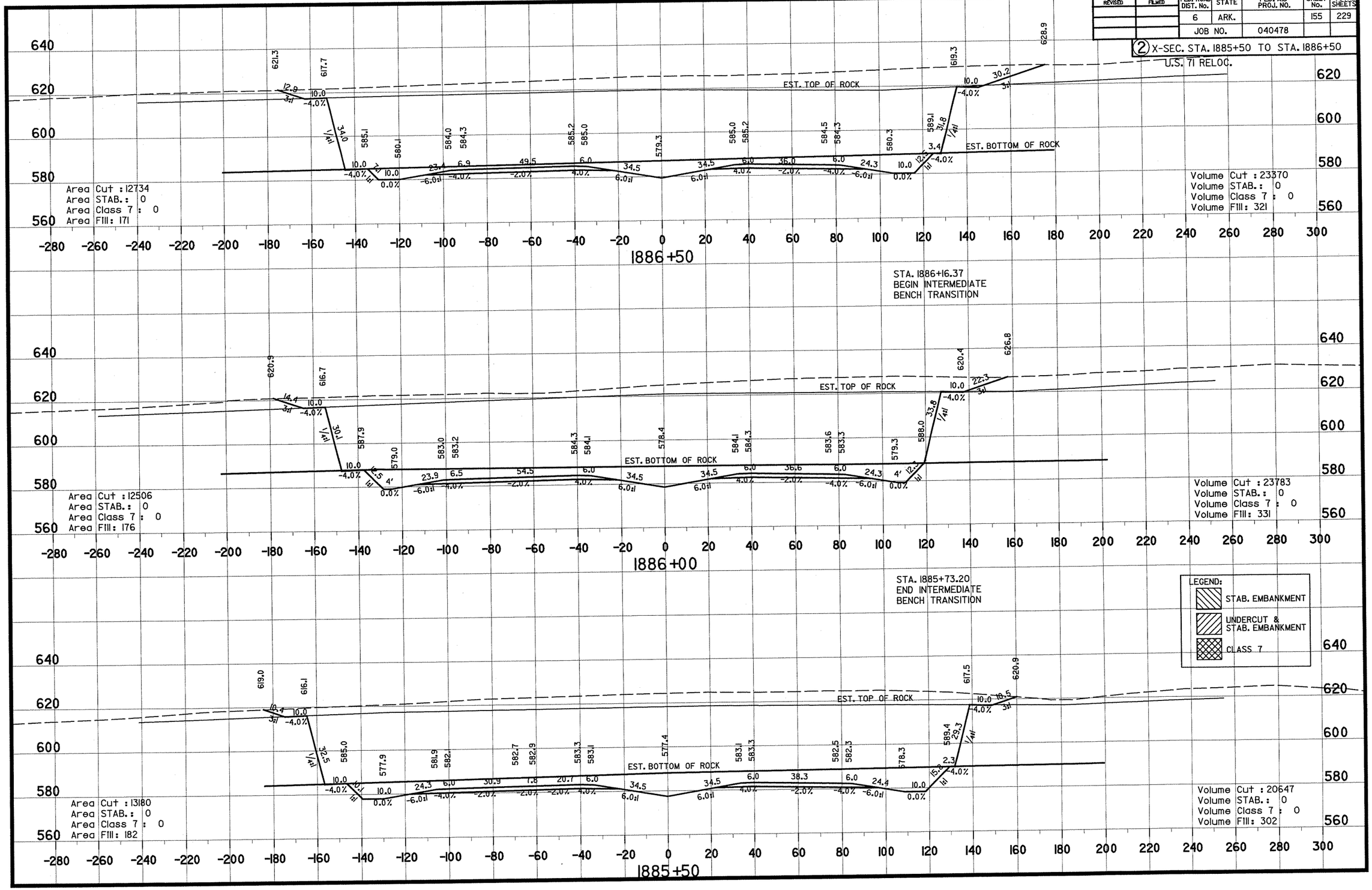

DATE REVISED	DATE FILED	FED. ROAD DIST. No.	STATE	FED. AID PROJ. NO.	SHEET No.	TOTAL SHEETS
		6	ARK.		156	229
		JOB NO.		040478		

(2) X-SEC. STA. 1887+00 TO STA. 1888+00
U.S. 71 RELOC.

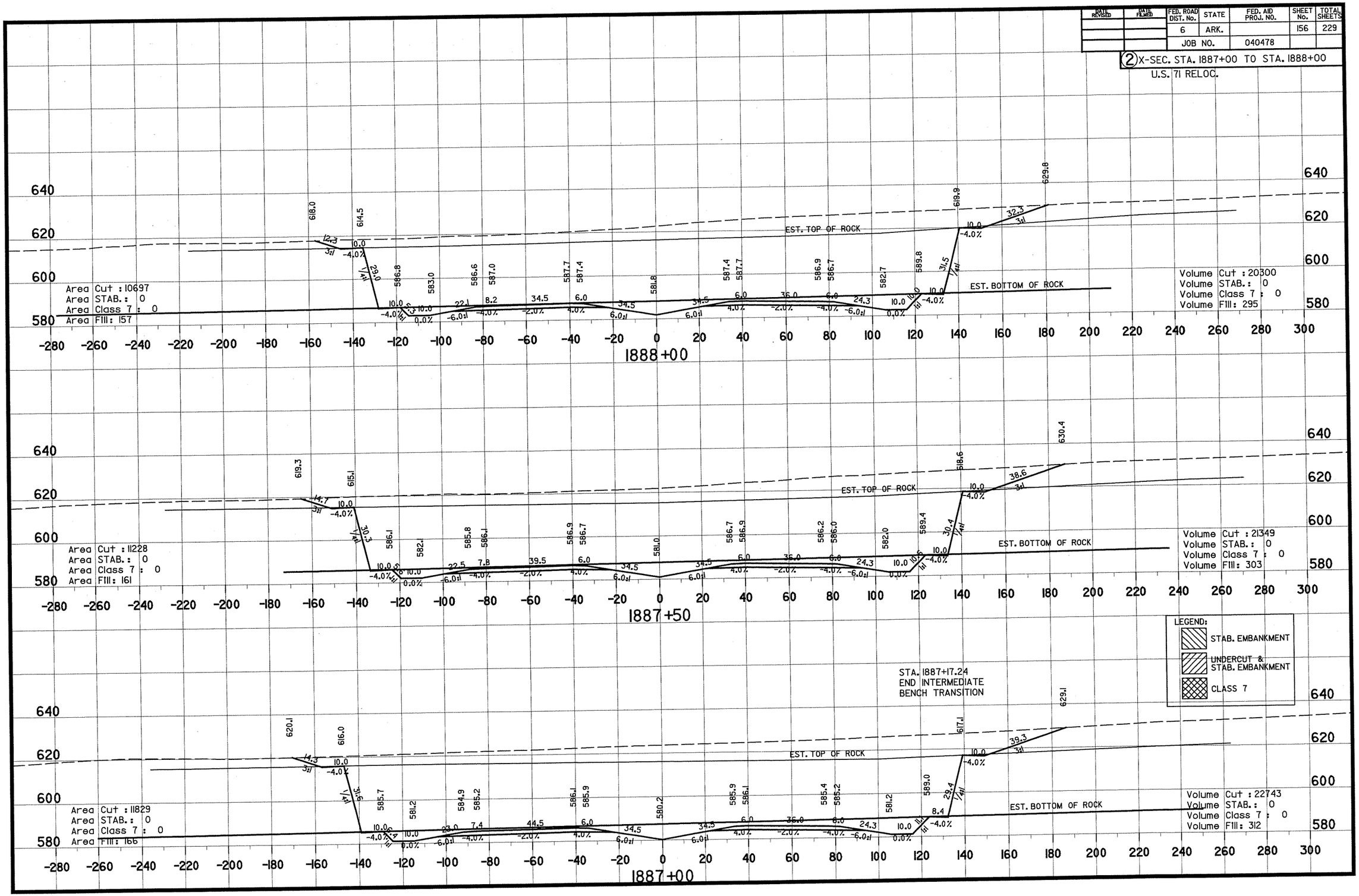

DATE REVISED	DATE FILMED	FED. ROAD DIST. No.	STATE	FED. AID PROJ. NO.	SHEET No.	TOTAL SHEETS
		6	ARK.		157	229
		JOB NO.		040478		

(2) X-SEC. STA. 1888+50 TO STA. 1889+50
U.S. 71 RELOC.

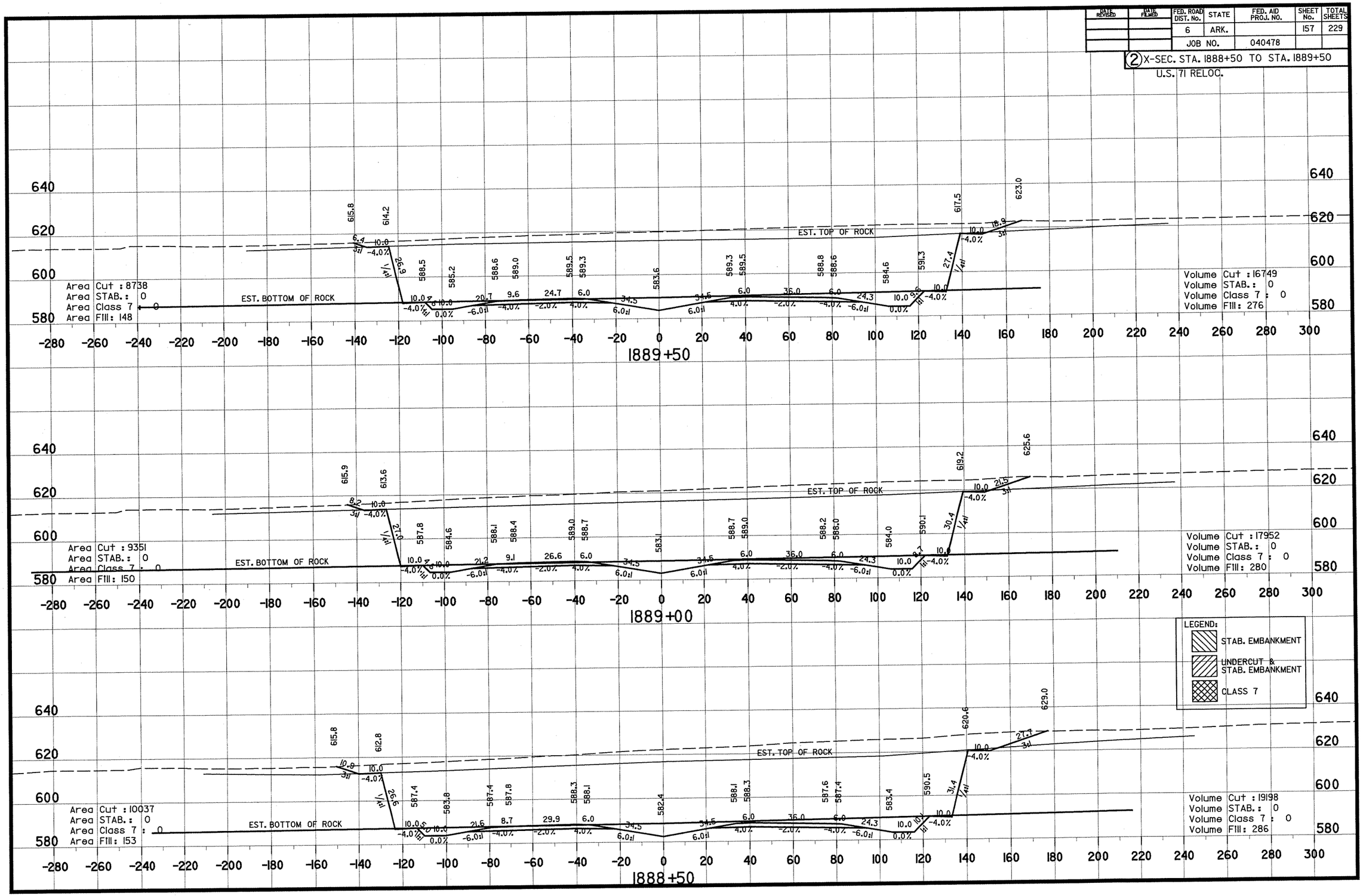

DATE REVISED	DATE FILMED	FED. ROAD DIST. No.	STATE	FED. AID PROJ. NO.	SHEET No.	TOTAL SHEETS
		6	ARK.		158	229
		JOB NO.		040478		

(2) X-SEC. STA. 1890+00 TO STA. 1891+00
U.S. 71 RELOC.

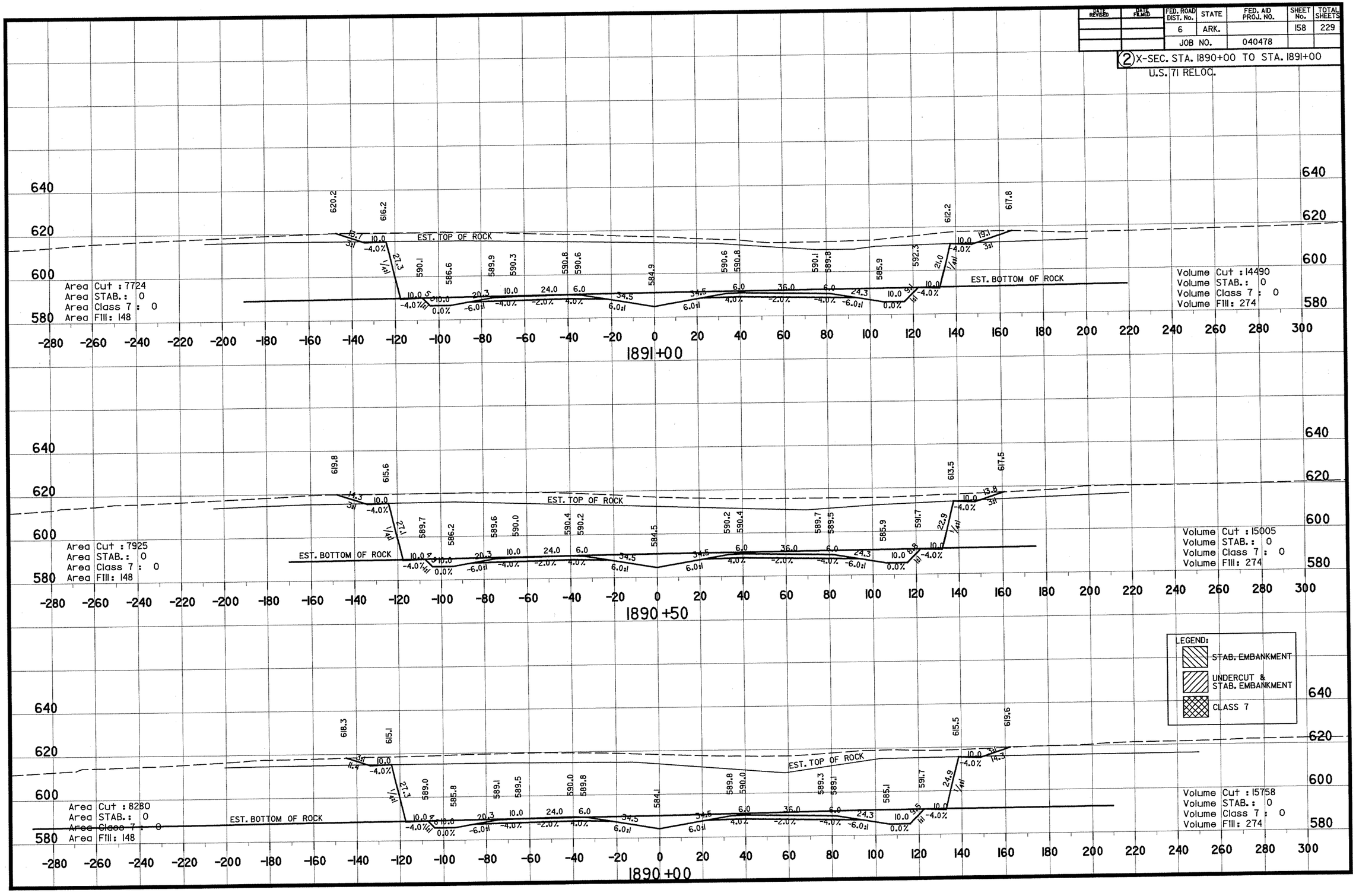

DATE REVISED	DATE FILMED	FED. ROAD DIST. No.	STATE	FED. AID PROJ. NO.	SHEET No.	TOTAL SHEETS
		6	ARK.		159	229
		JOB NO.	040478			

(2) X-SEC. STA. 1891+50 TO STA. 1893+00

U.S. 71 RELOC.

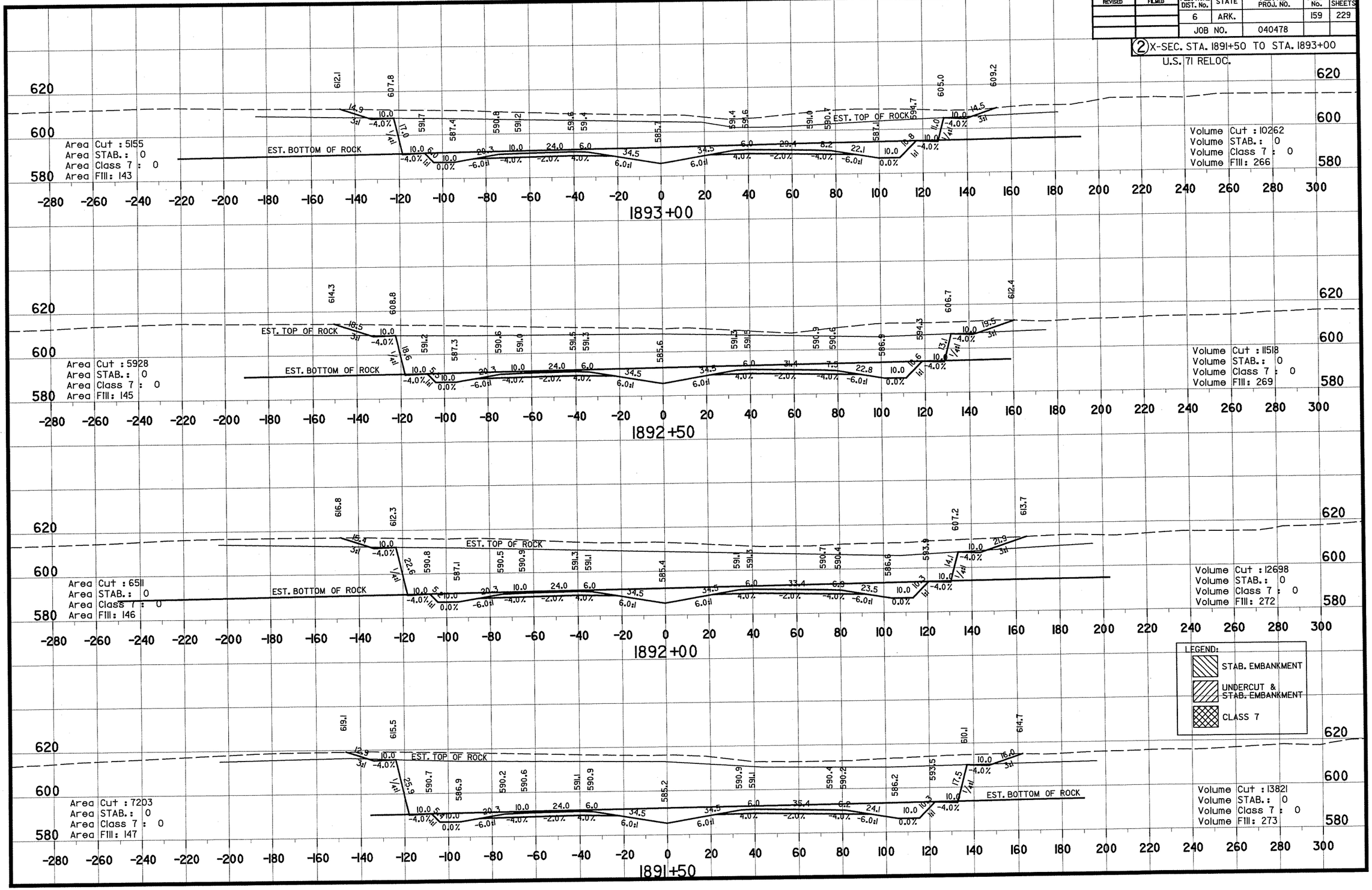

DATE REVISED	DATE FILMED	FED. ROAD DIST. No.	STATE	FED. AID PROJ. NO.	SHEET No.	TOTAL SHEETS
		6	ARK.		160	229
		JOB NO.		040478		

(2) X-SEC. STA. 1893+50 TO STA. 1895+00

U.S. 71 RELOC.

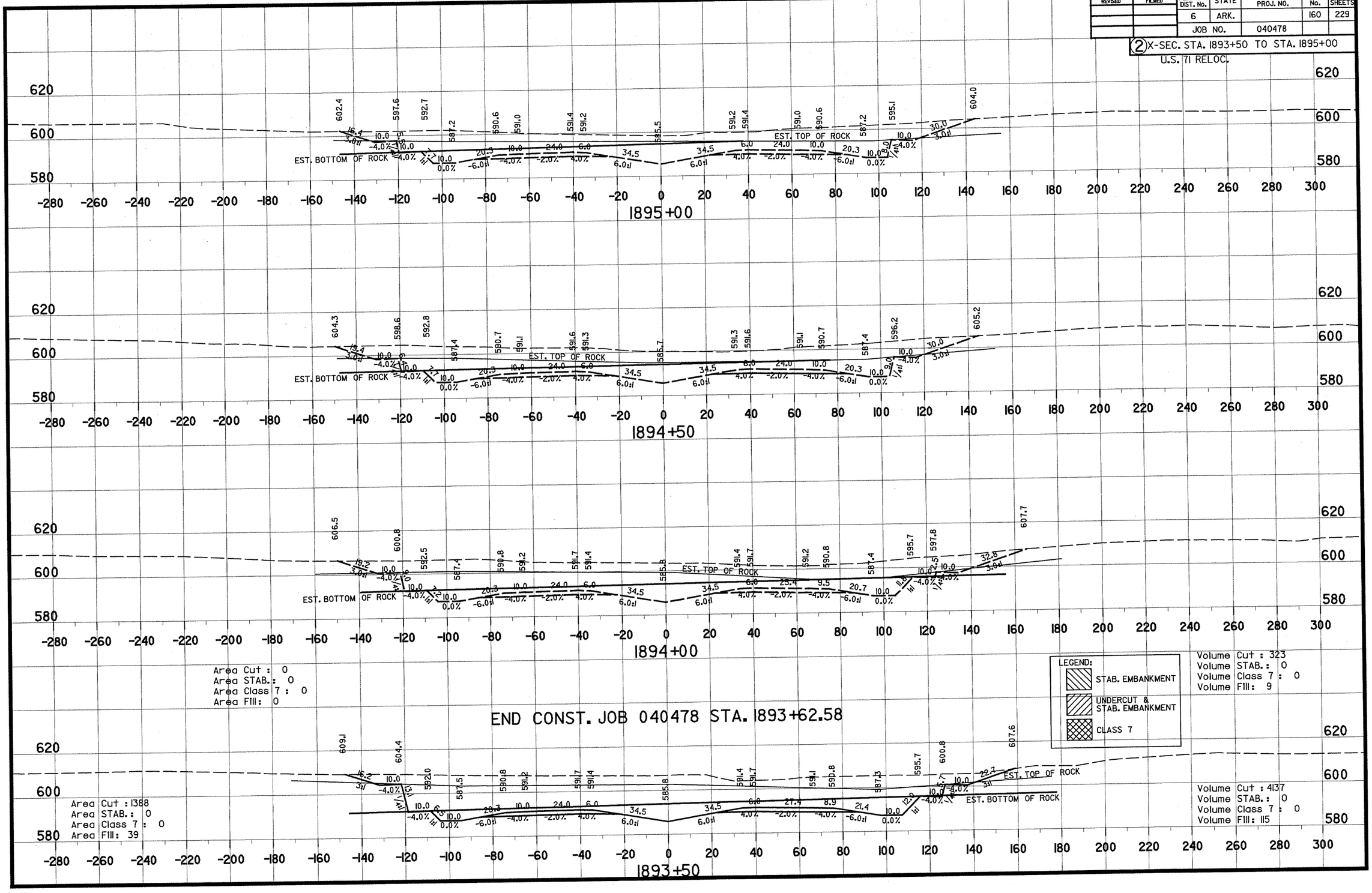

Area Cut : 0
Area STAB.: 0
Area Class 7 : 0
Area Fill: 0

END CONST. JOB 040478 STA. 1893+62.58

Area Cut : 1388
Area STAB.: 0
Area Class 7 : 0
Area Fill: 39

LEGEND:
- STAB. EMBANKMENT
- UNDERCUT & STAB. EMBANKMENT
- CLASS 7

Volume Cut : 323
Volume STAB.: 0
Volume Class 7 : 0
Volume Fill: 9

Volume Cut : 4137
Volume STAB.: 0
Volume Class 7 : 0
Volume Fill: 115

DATE REVISED	DATE FILMED	FED. ROAD DIST. No.	STATE	FED. AID PROJ. NO.	SHEET No.	TOTAL SHEETS
		6	ARK.		161	229
		JOB NO.		040478		

(2) X-SEC. STA. 1863+50 TO STA. 1864+50

S.B. C-D

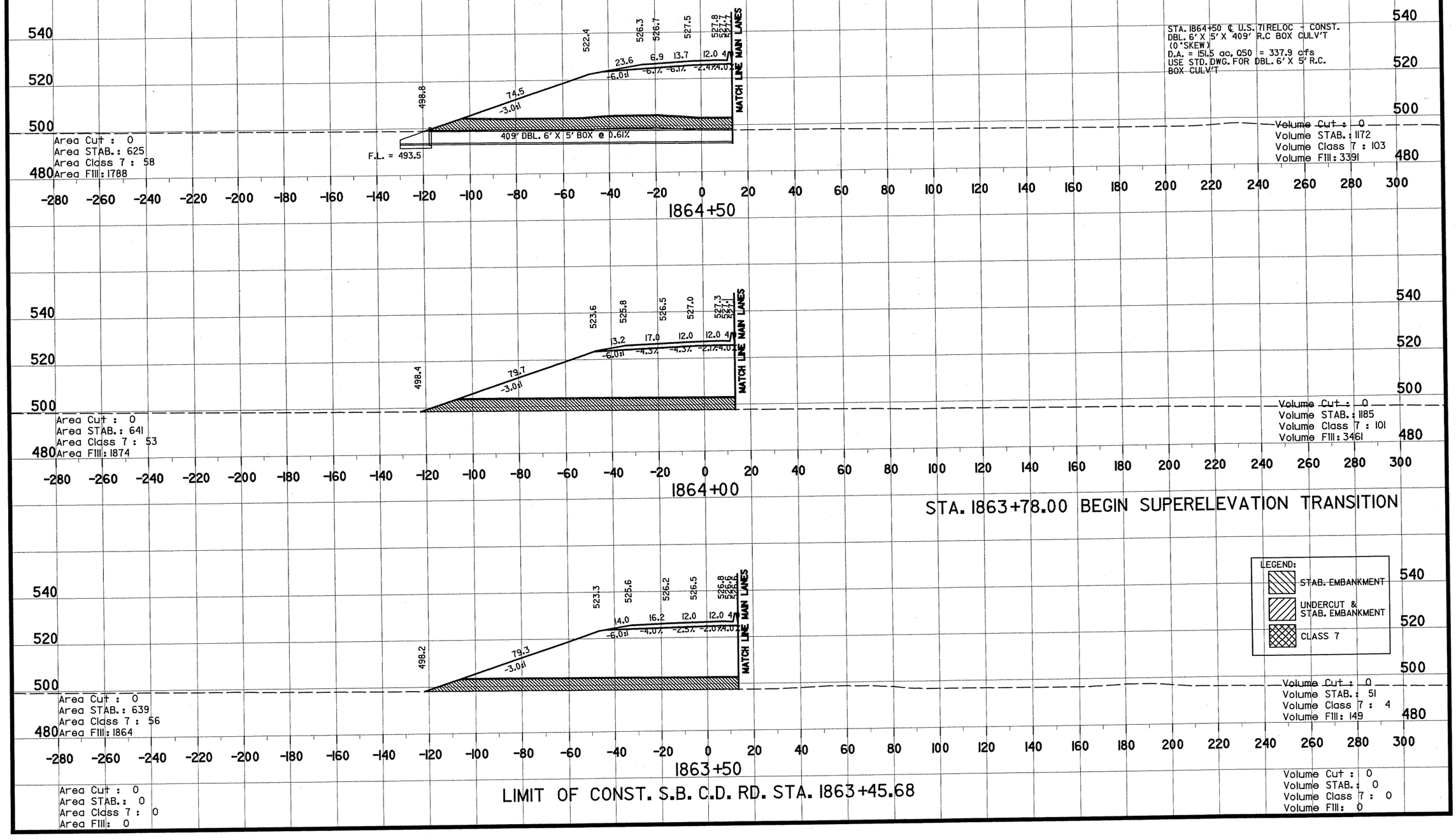

DATE REVISED	DATE FILMED	FED. ROAD DIST. No.	STATE	FED. AID PROJ. NO.	SHEET No.	TOTAL SHEETS
		6	ARK.		162	229
		JOB NO.		040478		

(2) X-SEC. STA. 1865+00 TO STA. 1866+00
S.B. C-D

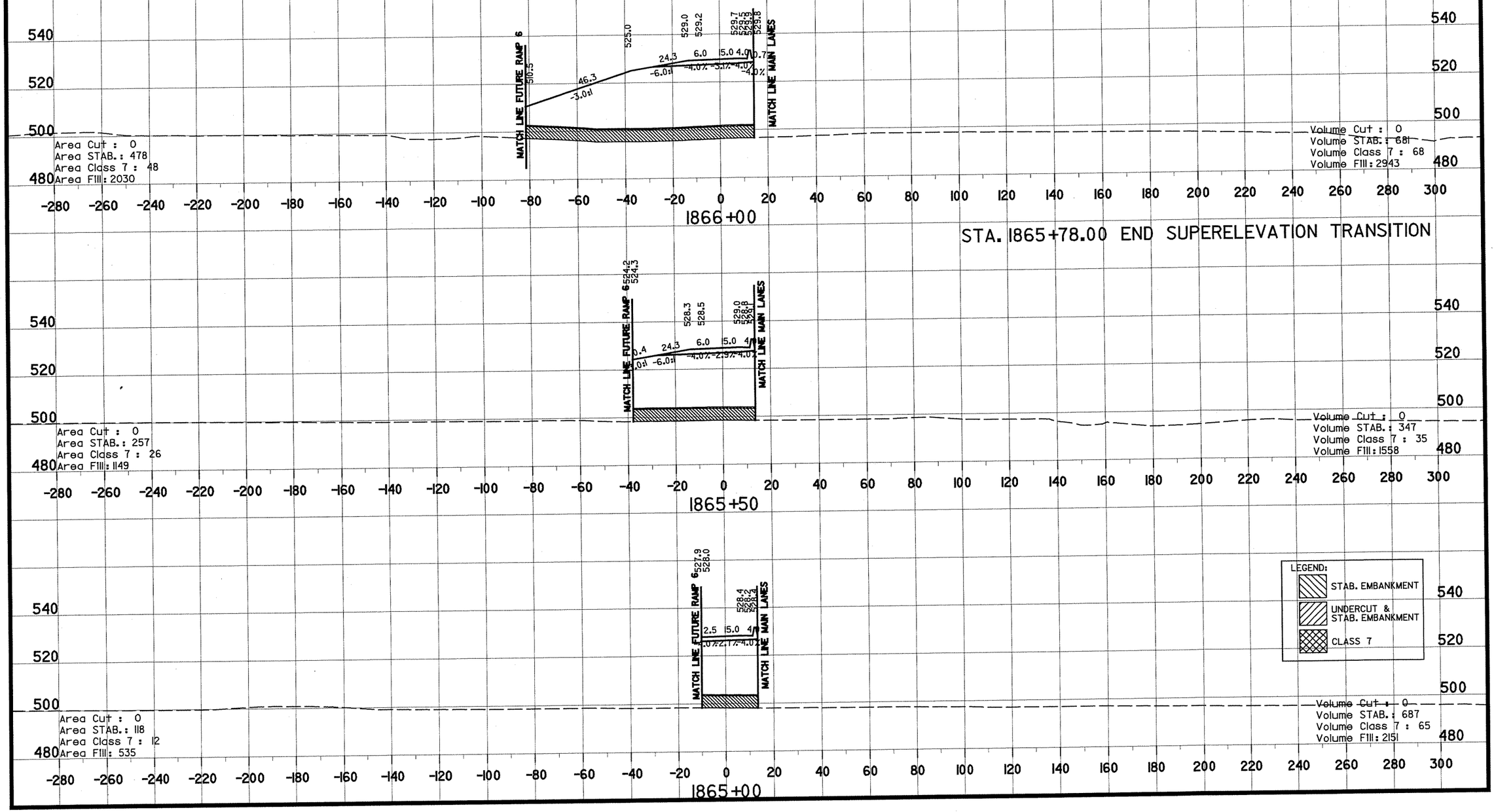

DATE REVISED	DATE FILMED	FED. ROAD DIST. No.	STATE	FED. AID PROJ. NO.	SHEET No.	TOTAL SHEETS
		6	ARK.		163	229
		JOB NO.		040478		

(2) X-SEC. STA. 1866+50 TO STA. 1867+50

S.B. C-D

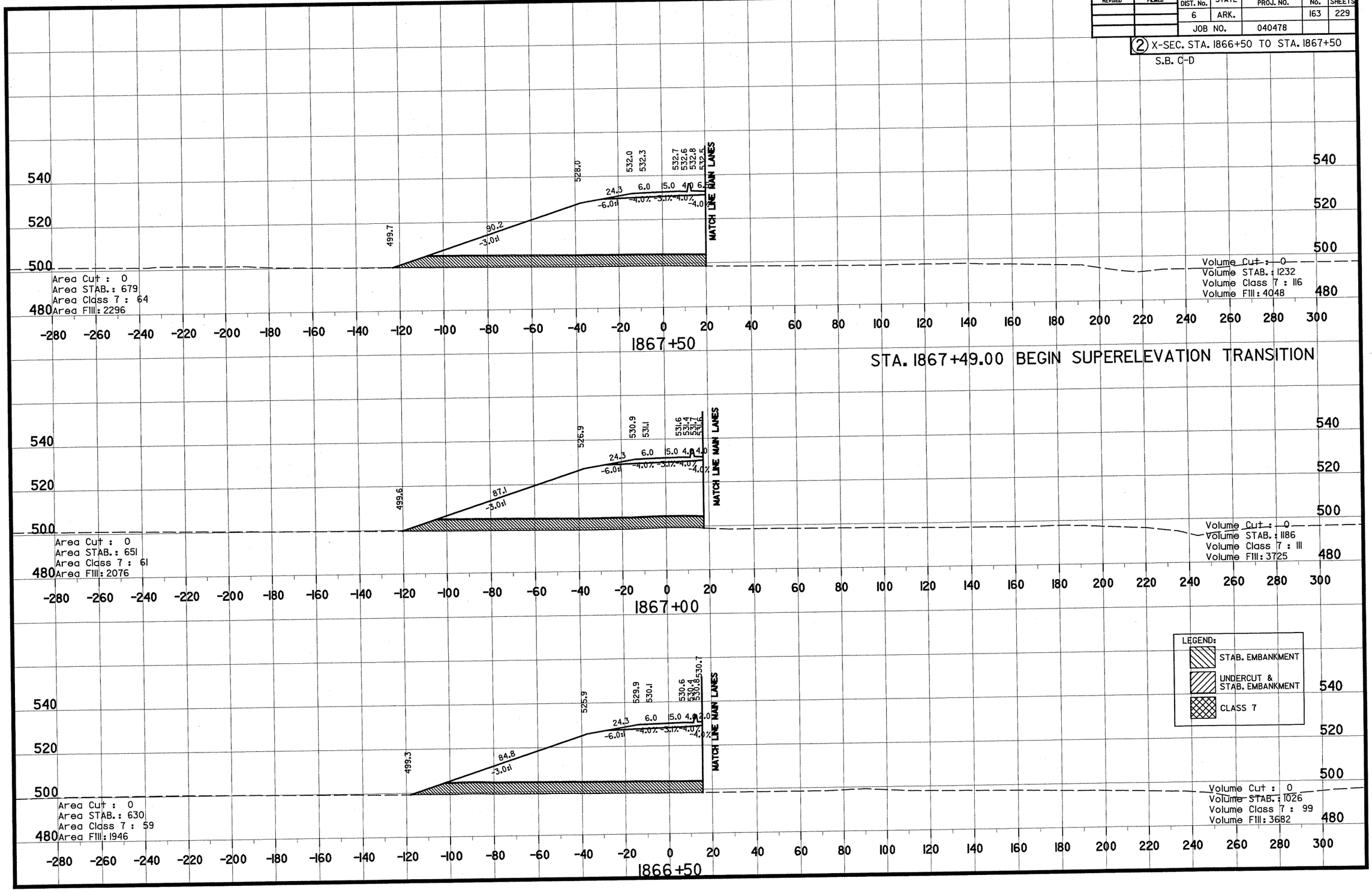

DATE REVISED	DATE FILMED	FED. ROAD DIST. No.	STATE	FED. AID PROJ. NO.	SHEET No.	TOTAL SHEETS
		6	ARK.		164	229
		JOB NO.		040478		

(2) X-SEC. STA. 1868+00 TO STA. 1869+00

S.B. C-D

STA. 1869+49.00 END SUPERELEVATION TRANSITION

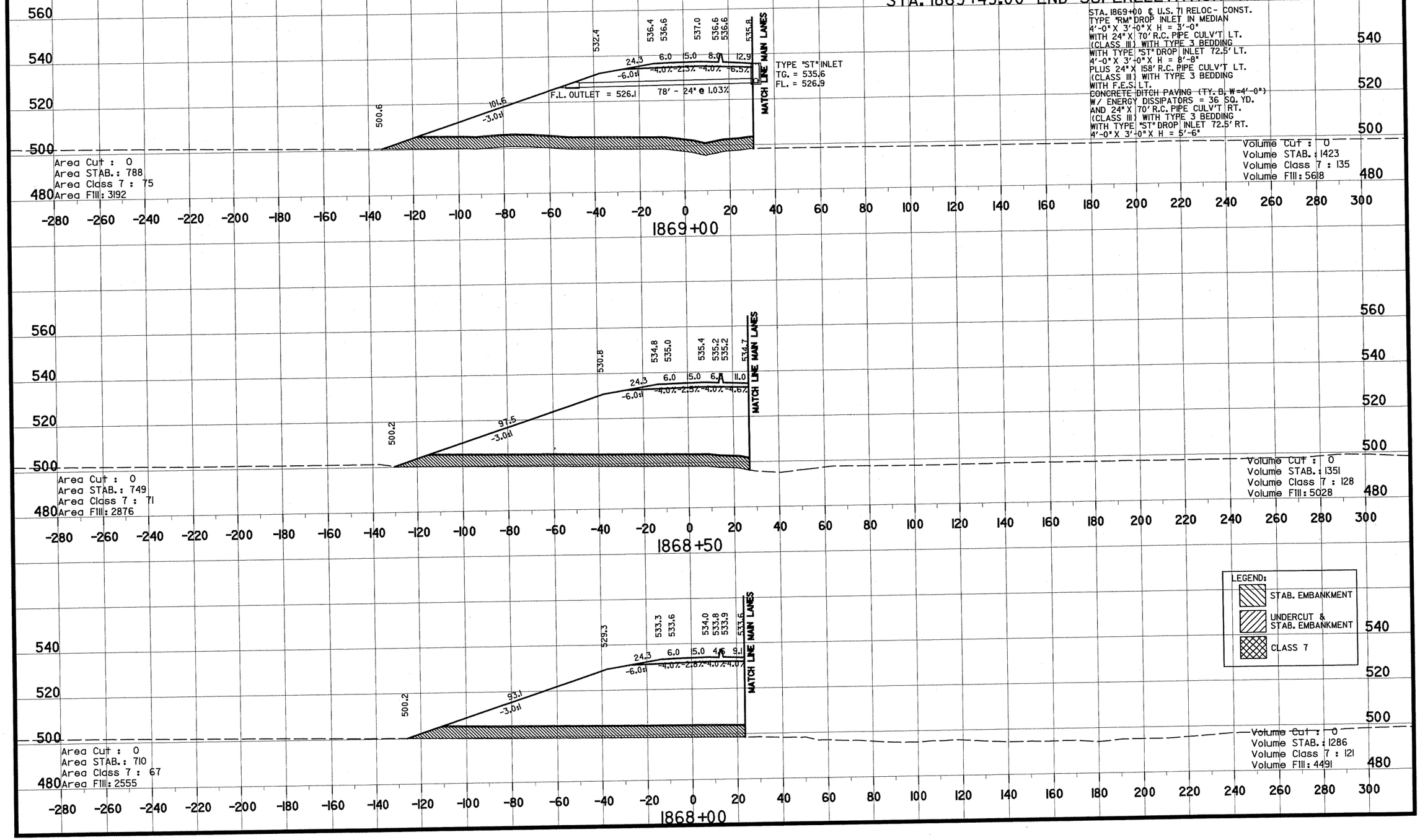

MAJ. REVISED	DATE FILMED	FED. ROAD DIST. No.	STATE	FED. AID PROJ. NO.	SHEET No.	TOTAL SHEETS
		6	ARK.		165	229
		JOB NO.		040478		

(2) X-SEC. STA. 1869+50 TO STA. 1870+50

S.B. C-D

STA. 1871+50.00 BEGIN SUPERELEVATION TRANSITION

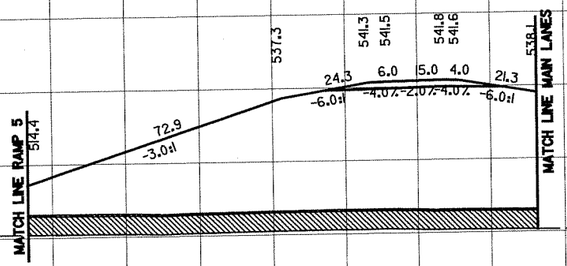

Area Cut : 0
Area STAB.: 696
Area Class 7 : 70
Area Fill: 3659

Volume Cut : 0
Volume STAB.: 1382
Volume Class 7 : 138
Volume Fill: 6941

1870+50

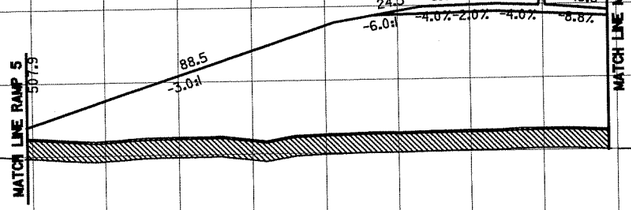

Area Cut : 0
Area STAB.: 797
Area Class 7 : 80
Area Fill: 3838

Volume Cut : 0
Volume STAB.: 1502
Volume Class 7 : 147
Volume Fill: 6905

1870+00

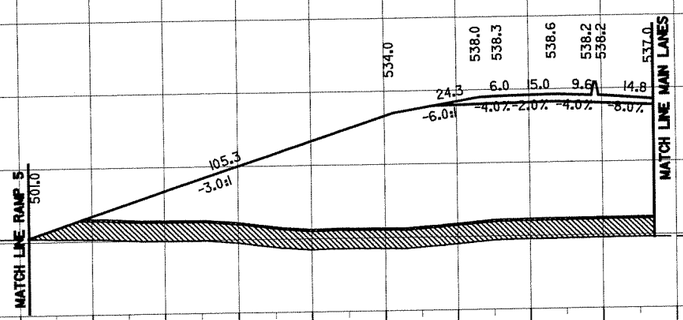

Area Cut : 0
Area STAB.: 826
Area Class 7 : 79
Area Fill: 3619

Volume Cut : 0
Volume STAB.: 1494
Volume Class 7 : 142
Volume Fill: 6306

1869+50

LEGEND:
- STAB. EMBANKMENT
- UNDERCUT & STAB. EMBANKMENT
- CLASS 7

DATE REVISED	DATE FILMED	FED. ROAD DIST. No.	STATE	FED. AID PROJ. NO.	SHEET No.	TOTAL SHEETS
		6	ARK.		166	229
		JOB NO.		040478		

(2) X-SEC. STA. 1871+00 TO STA. 1872+00

S.B. C-D

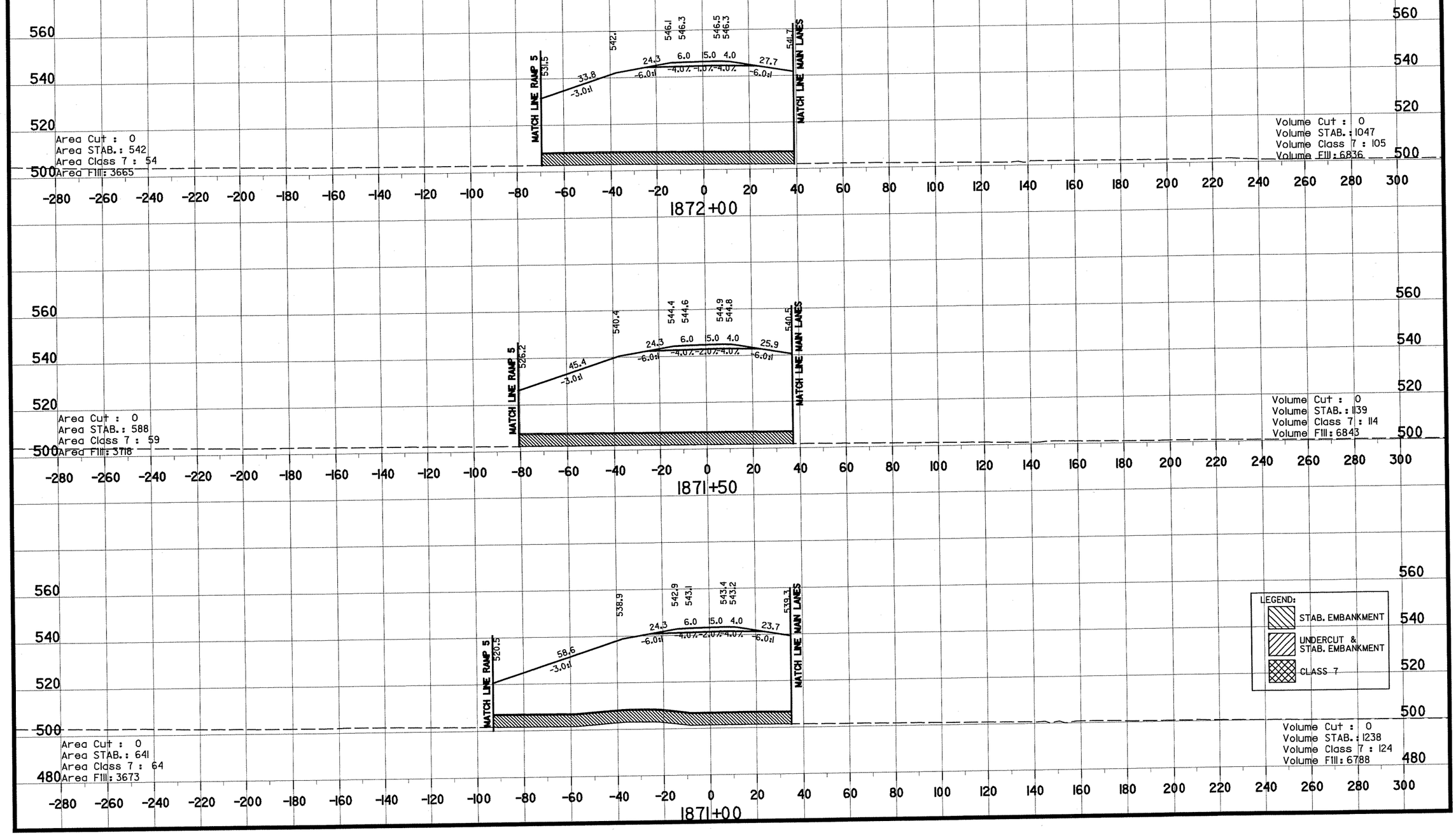

DATE REVISED	DATE FILMED	FED. ROAD DIST. No.	STATE	FED. AID PROJ. No.	SHEET No.	TOTAL SHEETS
		6	ARK.		167	229
		JOB NO.		040478		

(2) X-SEC. STA. 1872+50 TO STA. 1873+50

S.B. C-D

STA. 1873+50.00 END SUPERELEVATION TRANSITION

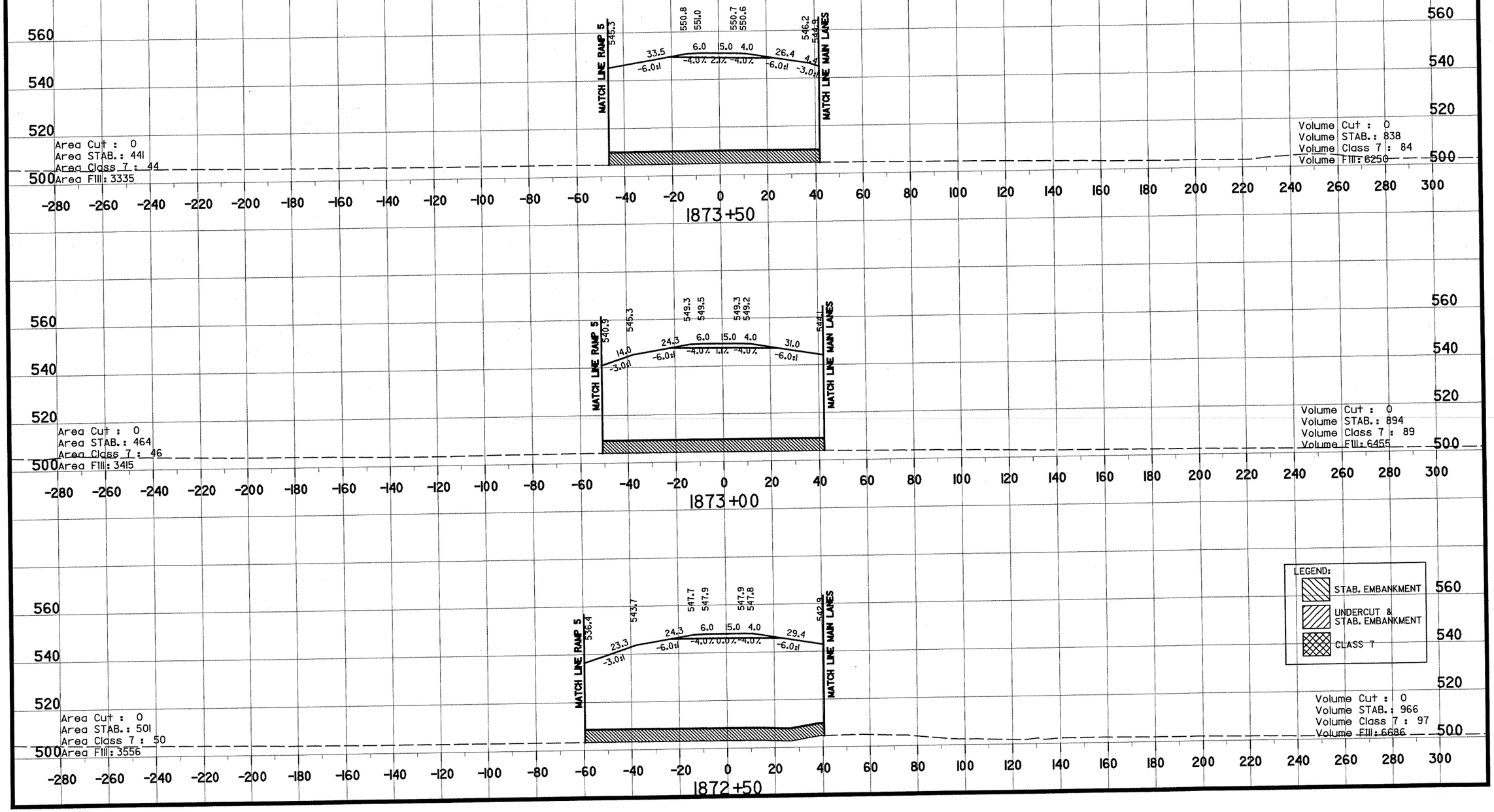

DATE REVISED	DATE FILMED	FED. ROAD DIST. No.	STATE	FED. AID PROJ. NO.	SHEET No.	TOTAL SHEETS
		6	ARK.		168	229
		JOB NO.		040478		

(2) X-SEC. STA. 1874+00 TO STA. 1875+00

S.B. C-D

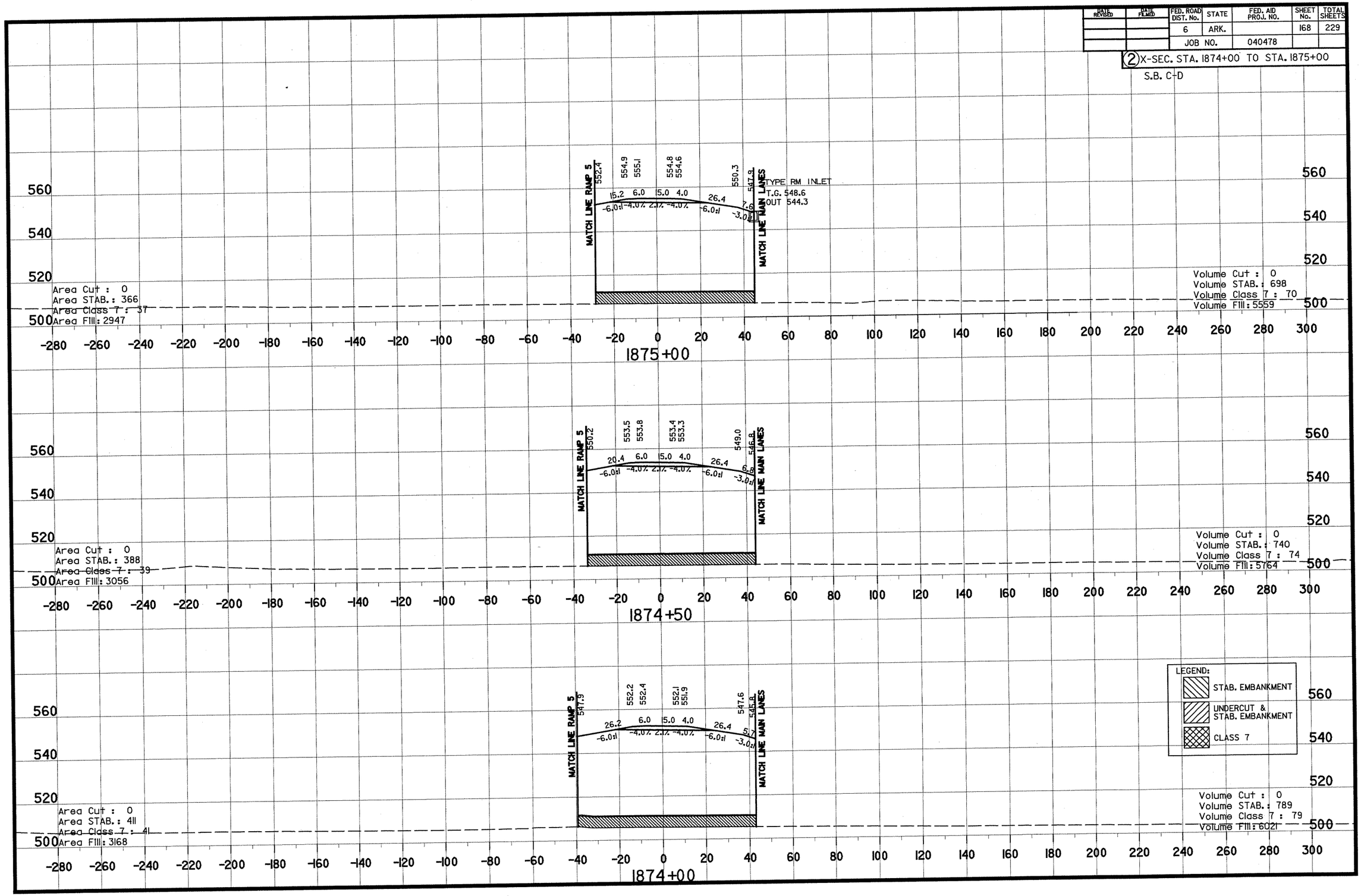

DATE REVISED	DATE FILMED	FED. ROAD DIST. No.	STATE	FED. AID PROJ. NO.	SHEET No.	TOTAL SHEETS
		6	ARK.		169	229
		JOB NO.		040478		

(2) X-SEC. STA. 1875+50 TO STA. 1876+50

S.B. C-D

STA. 1876+76
BEG. SPCL. 5' F.B. DT. LT S.B. C.D.
END SPCL 5' F.B. DT. LT RAMP 5

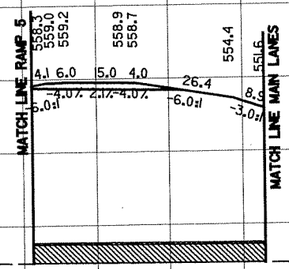

Area Cut : 0
Area STAB.: 317
Area Class 7 : 32
Area Fill: 2611

Volume Cut : 0
Volume STAB.: 603
Volume Class 7 : 60
Volume Fill: 4949

1876+50

STA. 1876+00
BEG. SPCL. 5' F.B. DT. LT S.B. C.D.
END SPCL 5' F.B. DT. LT RAMP 5

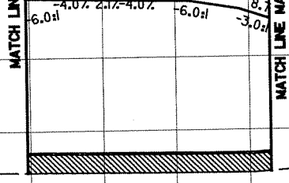

Area Cut : 0
Area STAB.: 333
Area Class 7 : 33
Area Fill: 2735

Volume Cut : 0
Volume STAB.: 634
Volume Class 7 : 63
Volume Fill: 5181

1876+00

STA. 1875+50
BEG. SPCL. 5' F.B. DT. LT S.B. C.D.
END SPCL 5' F.B. DT. LT RAMP 5

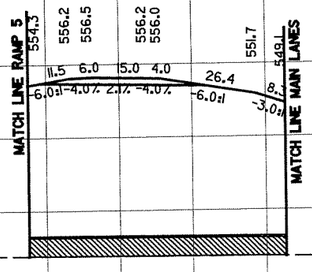

Area Cut : 0
Area STAB.: 351
Area Class 7 : 35
Area Fill: 2860

Volume Cut : 0
Volume STAB.: 664
Volume Class 7 : 66
Volume Fill: 5377

1875+50

LEGEND:
- STAB. EMBANKMENT
- UNDERCUT & STAB. EMBANKMENT
- CLASS 7

DATE REVISED	DATE FILED	FED. ROAD DIST. No.	STATE	FED. AID PROJ. No.	SHEET No.	TOTAL SHEETS
		6	ARK.		170	229
		JOB NO.		040478		

(2) X-SEC. STA. 1877+00 TO STA. 1878+00

S.B. C-D

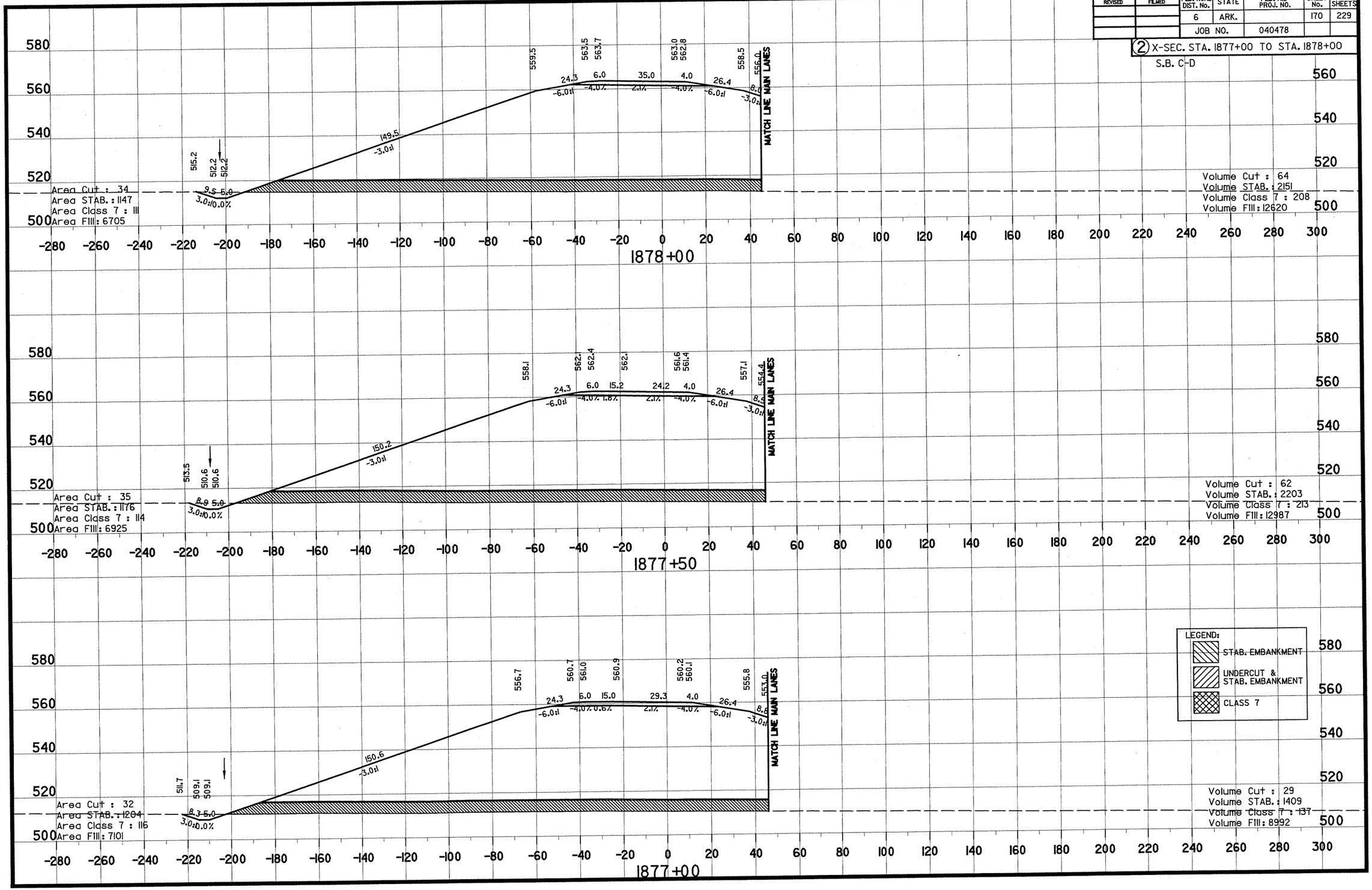

DATE REVISED	DATE FILMED	FED. ROAD DIST. No.	STATE	FED. AID PROJ. NO.	SHEET No.	TOTAL SHEETS
		6	ARK.		171	229
		JOB NO.		040478		

(2) X-SEC. STA. 1878+50 TO STA. 1879+50

S.B. C-D

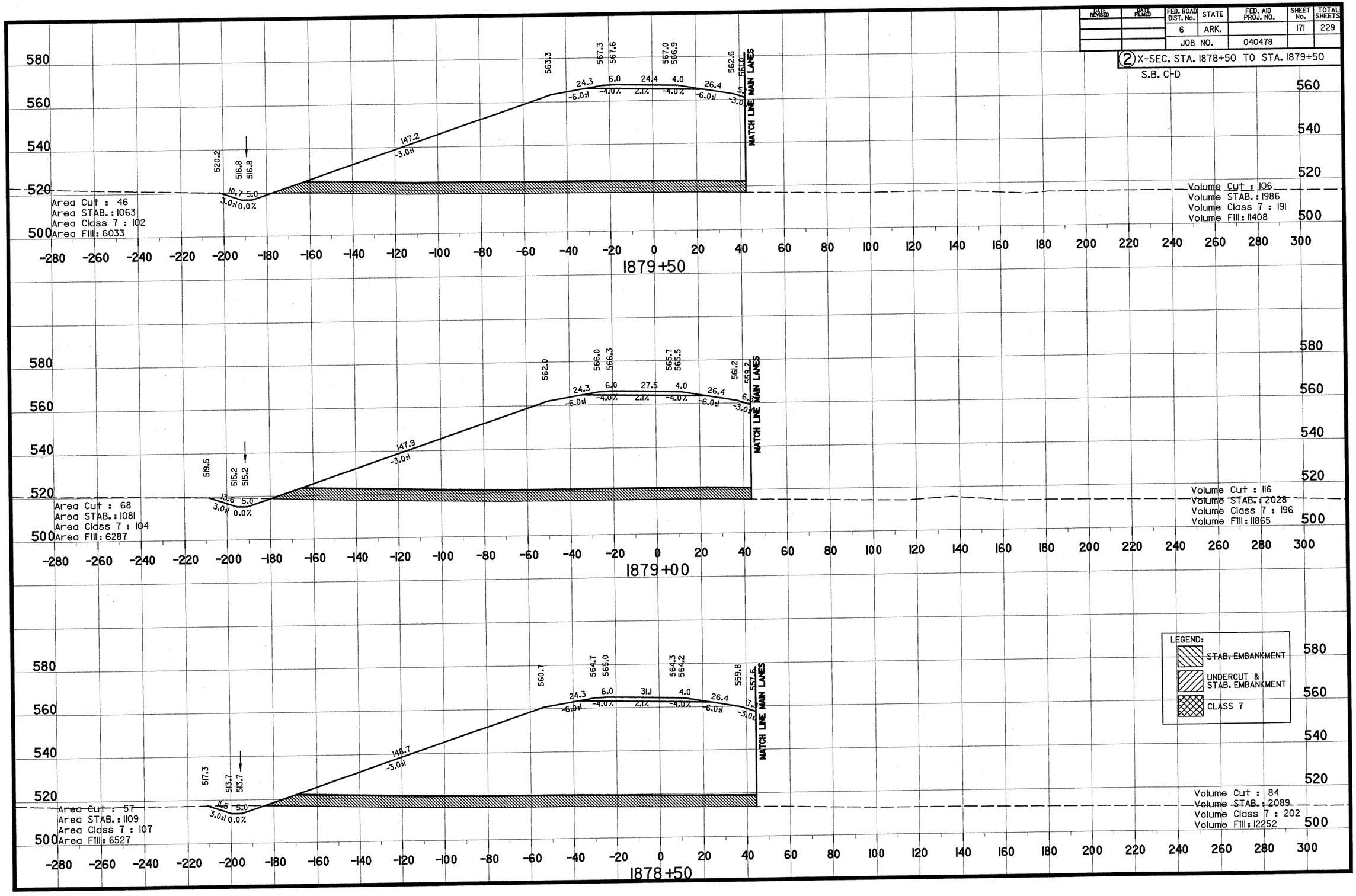

DATE REVISED	DATE FILED	FED. ROAD DIST. No.	STATE	FED. AID PROJ. NO.	SHEET No.	TOTAL SHEETS
		6	ARK.		172	229
		JOB NO.		040478		

(2) X-SEC. STA. 1880+00 TO STA. 1881+00

S.B. C-D

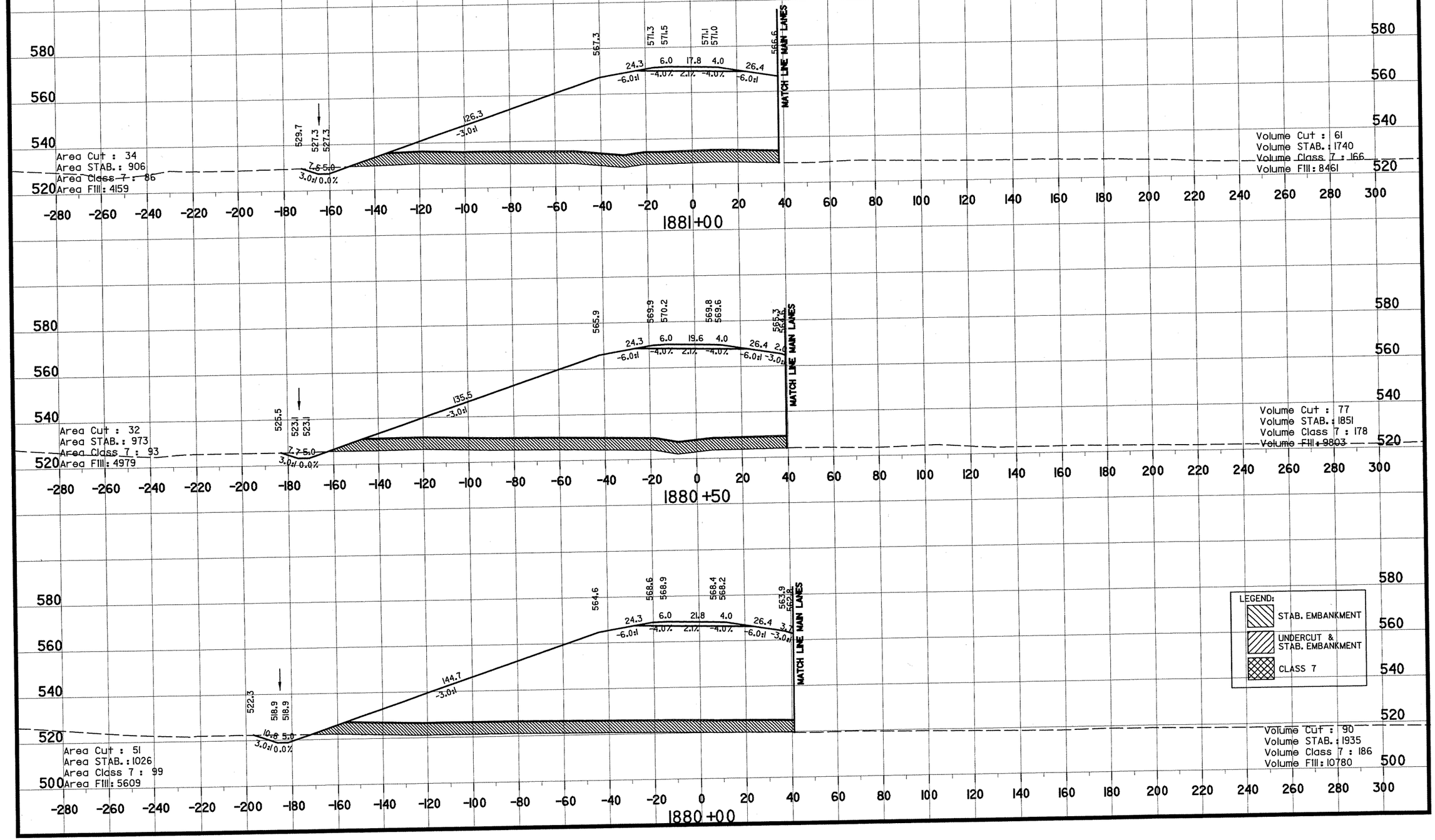

DATE REVISED	DATE FILMED	FED. ROAD DIST. No.	STATE	FED. AID PROJ. NO.	SHEET No.	TOTAL SHEETS
		6	ARK.		173	229
		JOB NO.		040478		

(2) X-SEC. STA. 1881+50 TO STA. 1883+00

S.B. C-D

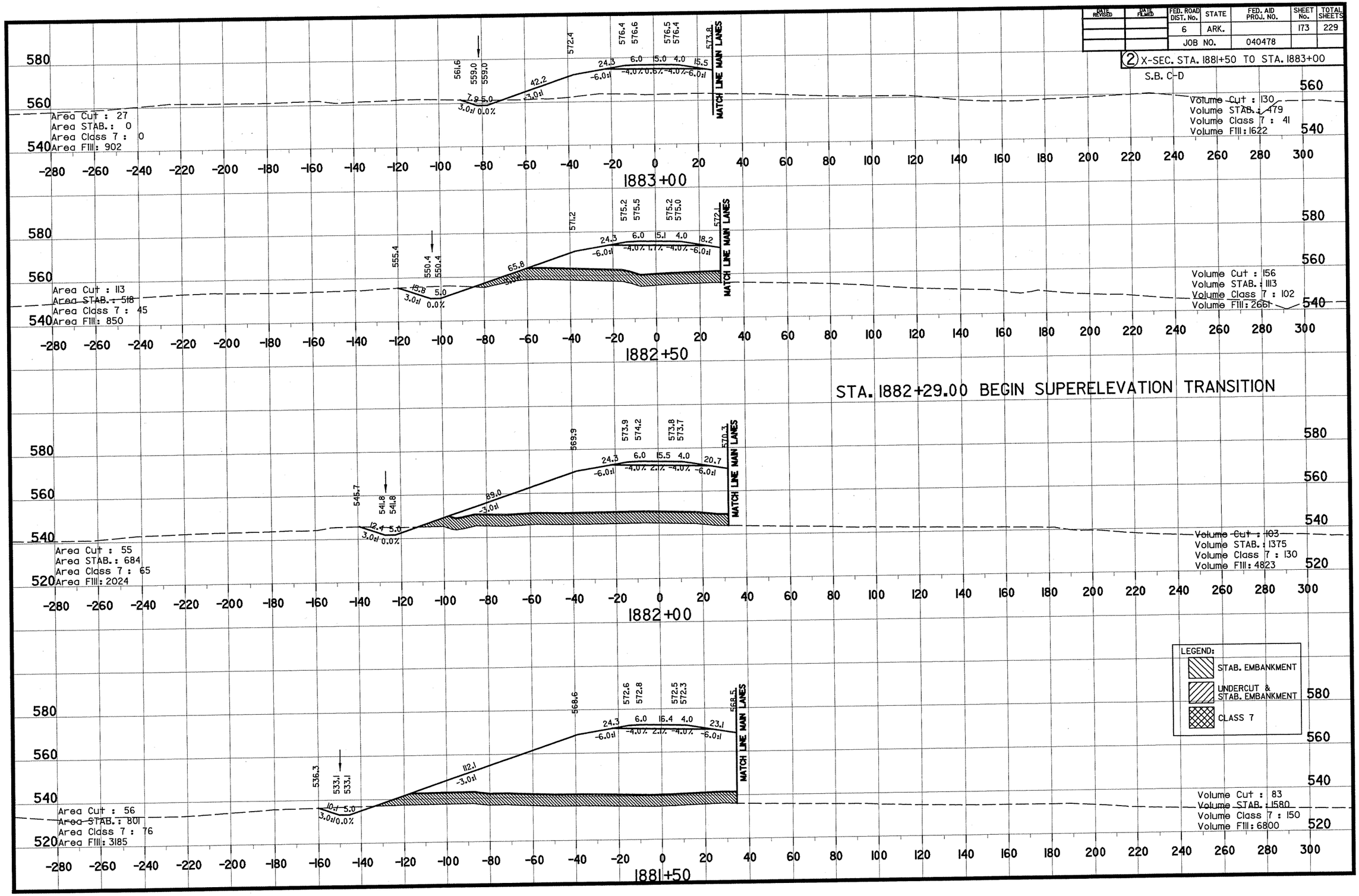

DATE REVISED	DATE FILMED	FED. ROAD DIST. No.	STATE	FED. AID PROJ. NO.	SHEET No.	TOTAL SHEETS
		6	ARK.		174	229
		JOB NO.		040478		

(2) X-SEC. STA. 1883+50 TO STA. 1884+50

S.B. C-D

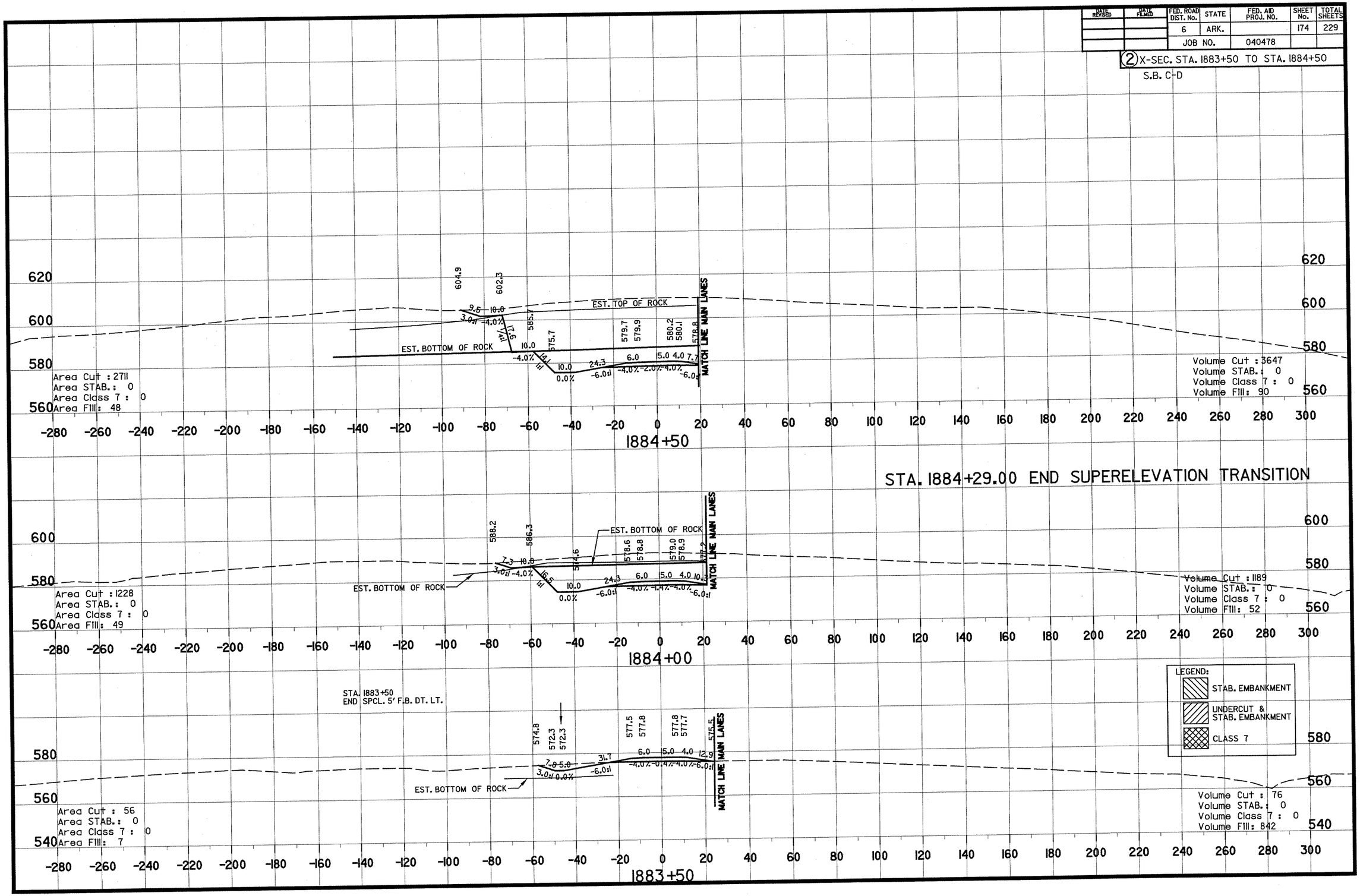

DATE REVISED	DATE FILMED	FED. ROAD DIST. No.	STATE	FED. AID PROJ. NO.	SHEET No.	TOTAL SHEETS
		6	ARK.		175	229
		JOB NO.		040478		

(2) X-SEC. STA. 1885+00 TO STA. 1886+00

S.B. C-D

1886+00

1885+50

LIMIT OF CONST. S.B. C.D. RD. STA. 1885+46.02

1885+00

Area Cut : 0
Area STAB.: 0
Area Class 7 : 0
Area Fill: 0

Area Cut : 3438
Area STAB.: 0
Area Class 7 : 0
Area Fill: 45

Volume Cut : 2930
Volume STAB.: 0
Volume Class 7 : 0
Volume Fill: 39

Volume Cut : 5693
Volume STAB.: 0
Volume Class 7 : 0
Volume Fill: 86

LEGEND:
- STAB. EMBANKMENT
- UNDERCUT & STAB. EMBANKMENT
- CLASS 7

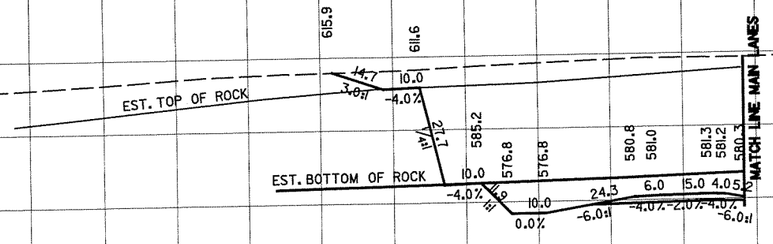

DATE REVISED	DATE FILMED	FED. ROAD DIST. No.	STATE	FED. AID PROJ. No.	SHEET No.	TOTAL SHEETS
		6	ARK.		176	229
		JOB NO.		040478		

(2) X-SEC. STA. 1861+50 TO STA. 1862+50

FUTURE RAMP 3 - U.S. 71 INT.
Volume Cut : 0
Volume STAB. : 0
Volume Class 7 : 0
Volume Fill : 1050

LIMIT OF CONST. FUTURE RAMP 3 STA. 1862+87.97

Area Cut : 0
Area STAB. : 0
Area Class 7 : 0
Area Fill : 0

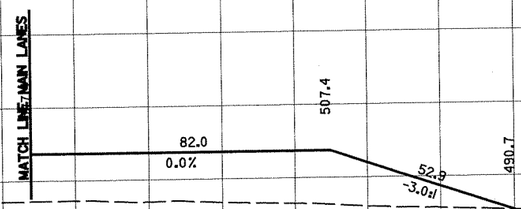

1862+50

Area Cut : 0
Area STAB. : 0
Area Class 7 : 0
Area Fill : 1493

Volume Cut : 0
Volume STAB. : 659
Volume Class 7 : 62
Volume Fill : 3516

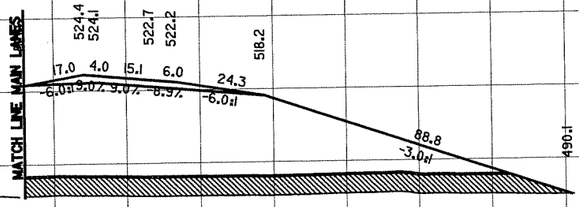

1862+00

Area Cut : 0
Area STAB. : 711
Area Class 7 : 67
Area Fill : 2305

Volume Cut : 0
Volume STAB. : 1222
Volume Class 7 : 114
Volume Fill : 3737

LEGEND:
- STAB. EMBANKMENT
- UNDERCUT & STAB. EMBANKMENT
- CLASS 7

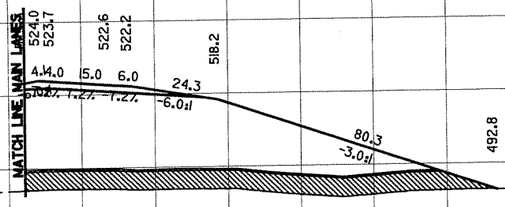

Area Cut : 0
Area STAB. : 609
Area Class 7 : 57
Area Fill : 1731

Volume Cut : 0
Volume STAB. : 55
Volume Class 7 : 5
Volume Fill : 156

1861+50

LIMIT OF CONST. FUTURE RAMP 3 STA. 1861+45.14

DATE REVISED	DATE FILMED	FED. ROAD DIST. No.	STATE	FED. AID PROJ. NO.	SHEET No.	TOTAL SHEETS
		6	ARK.		177	229
		JOB NO.		040478		

(2) X-SEC. STA. 1847+50 TO STA. 1849+50

RAMP 4 - U.S. 71 INT.

Area Cut : 291
Area STAB.: 0
Area Class 7 : 0
Area Fill: 0

Volume Cut : 1
Volume STAB.: 0
Volume Class 7 : 0
Volume Fill: 0

LIMIT OF CONST. RAMP 4 STA. 1849+50.00

LIMIT OF GRADING RAMP 4 STA. 1849+49.84

Area Cut : 0
Area STAB.: 0
Area Class 7 : 0
Area Fill: 0

Volume Cut : 0
Volume STAB.: 0
Volume Class 7 : 0
Volume Fill: 0

1849+00

1848+50

STA. 1848+81.00 END SUPERELEVATION TRANSITION

1848+00

STA. 1847+42
BEG. SP. "V" DT. RT.

1847+50

LEGEND:
- STAB. EMBANKMENT
- UNDERCUT & STAB. EMBANKMENT
- CLASS 7

DATE REVISED	DATE FILMED	FED. ROAD DIST. No.	STATE	FED. AID PROJ. NO.	SHEET No.	TOTAL SHEETS
		6	ARK.		178	229
		JOB NO.		040478		

(2) X-SEC. STA. 1850+00 TO STA. 1852+00

RAMP 4 - U.S. 71 INT.

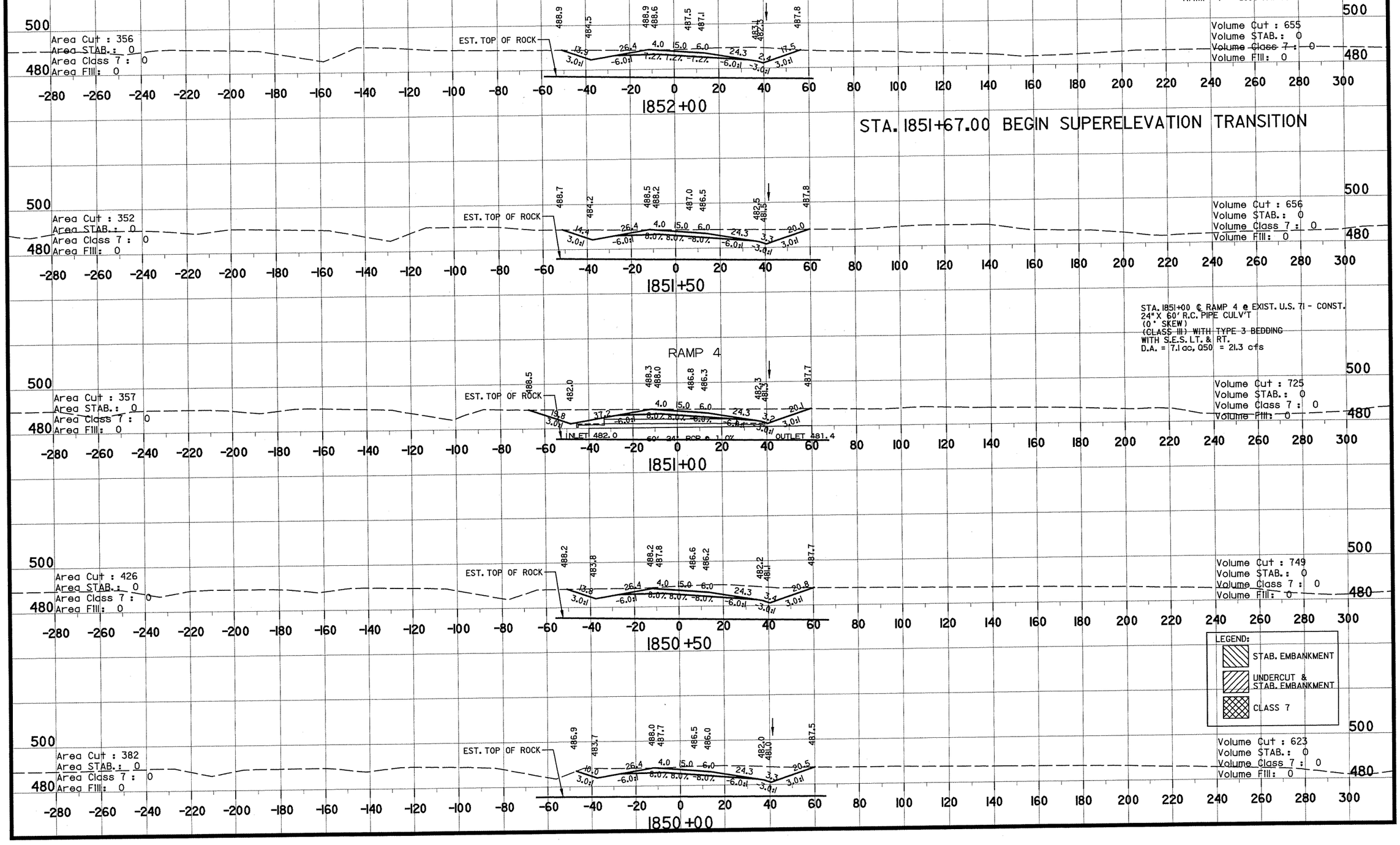

DATE REVISED	DATE FILMED	FED. ROAD DIST. No.	STATE	FED. AID PROJ. NO.	SHEET No.	TOTAL SHEETS
		6	ARK.		179	229
		JOB NO.		040478		

(2) X-SEC. STA. 1852+50 TO STA. 1854+50

RAMP 4 - U.S. 71 INT.

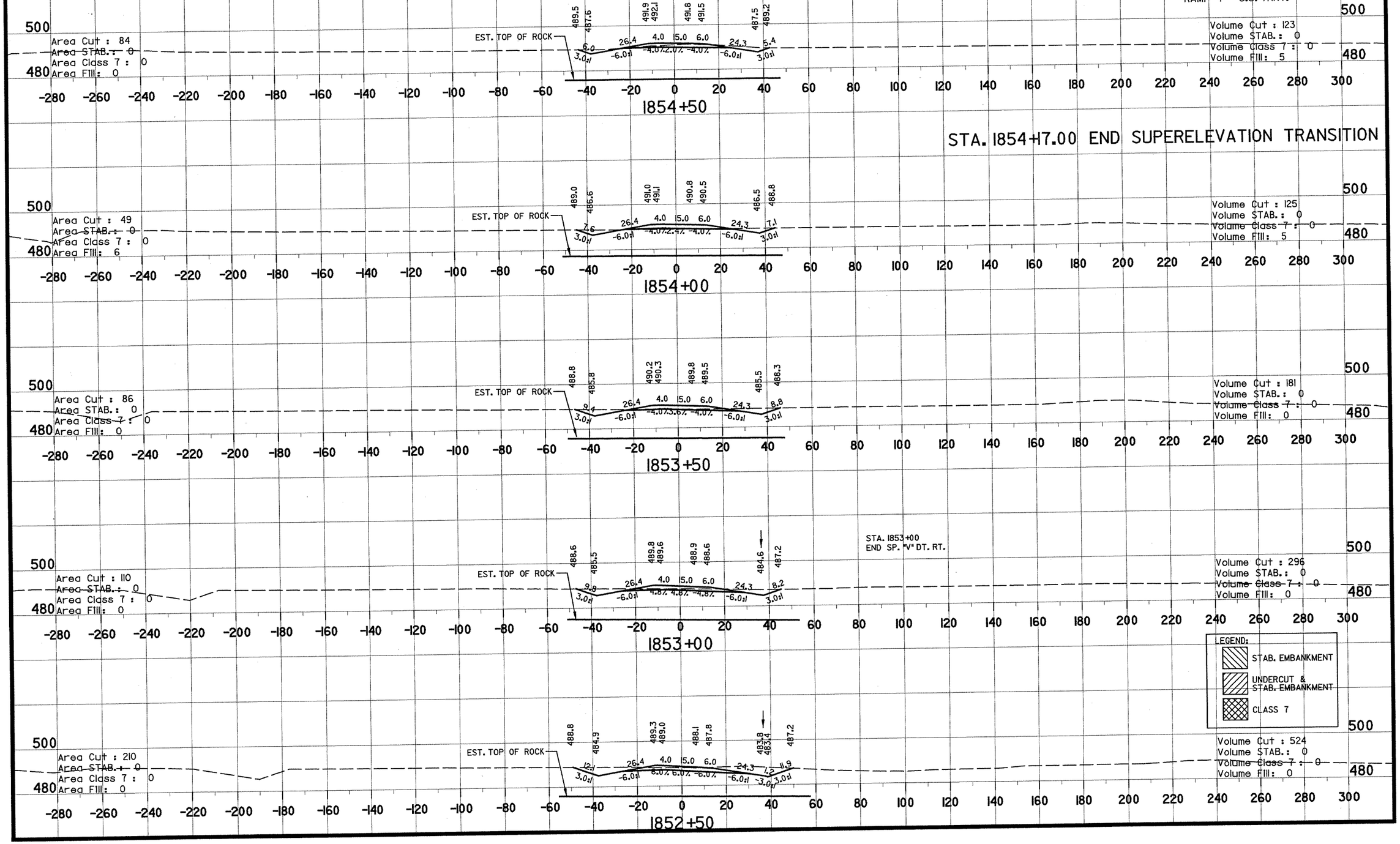

DATE REVISED	DATE FILMED	FED. ROAD DIST. No.	STATE	FED. AID PROJ. NO.	SHEET No.	TOTAL SHEETS
		6	ARK.		180	229
		JOB NO.		040478		

(2) X-SEC. STA. 1855+00 TO STA. 1857+00

RAMP 4 - U.S. 71 INT.

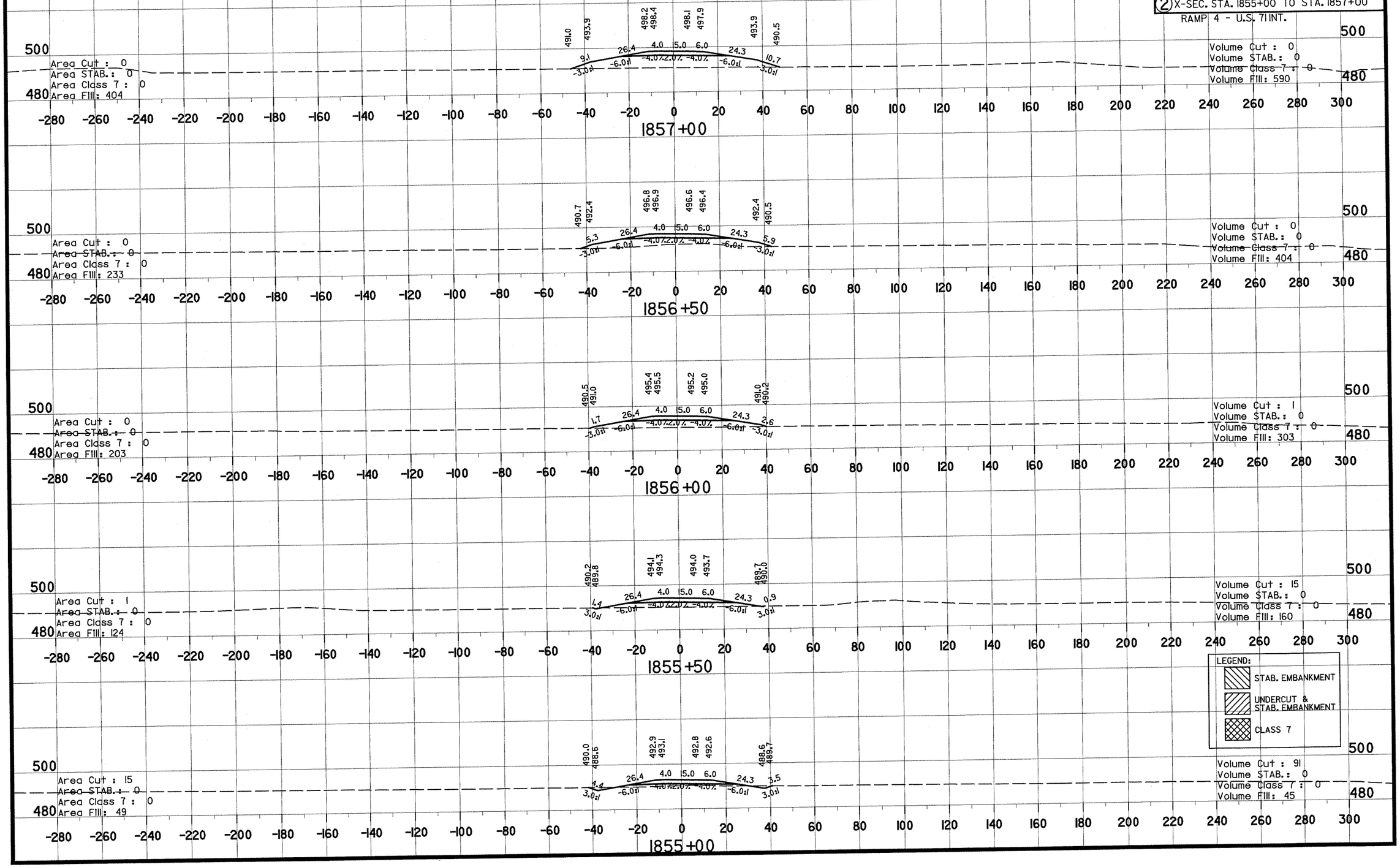

DATE REVISED	DATE FILMED	FED. ROAD DIST. No.	STATE	FED. AID PROJ. No.	SHEET No.	TOTAL SHEETS
		6	ARK.		181	229
		JOB NO.		040478		

(2) X-SEC. STA. 1857+50 TO STA. 1859+00

RAMP 4 - U.S. 71 INT.

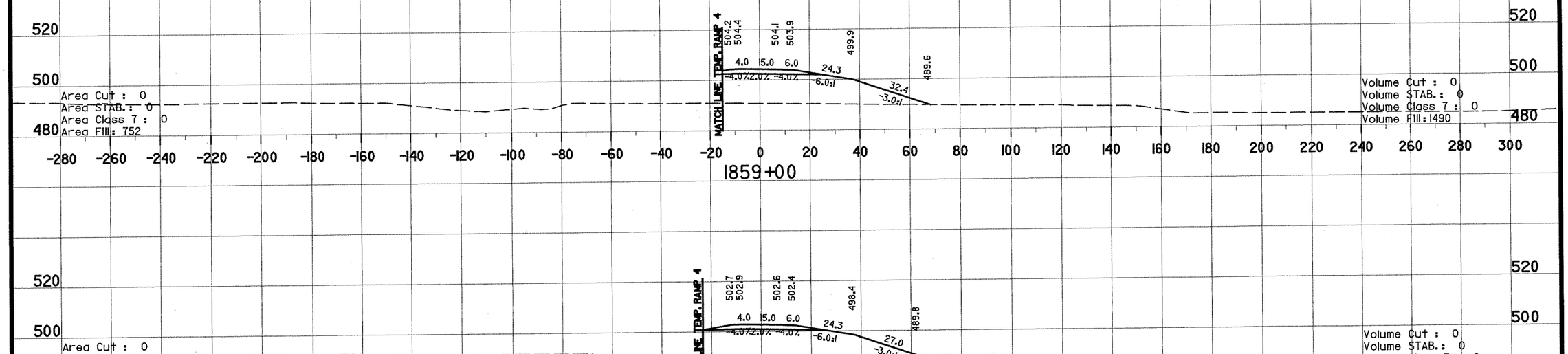

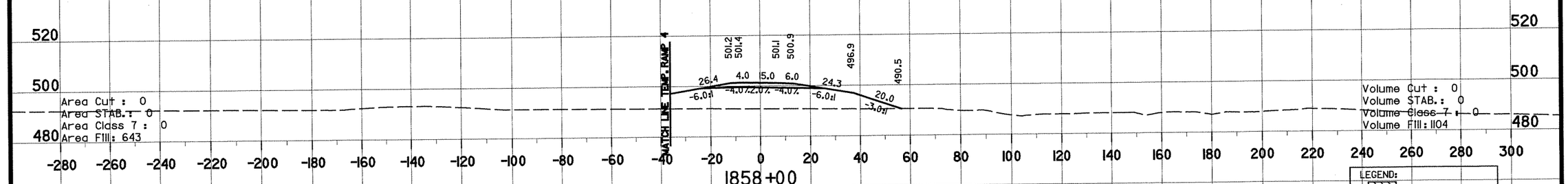

LEGEND:

- STAB. EMBANKMENT
- UNDERCUT & STAB. EMBANKMENT
- CLASS 7

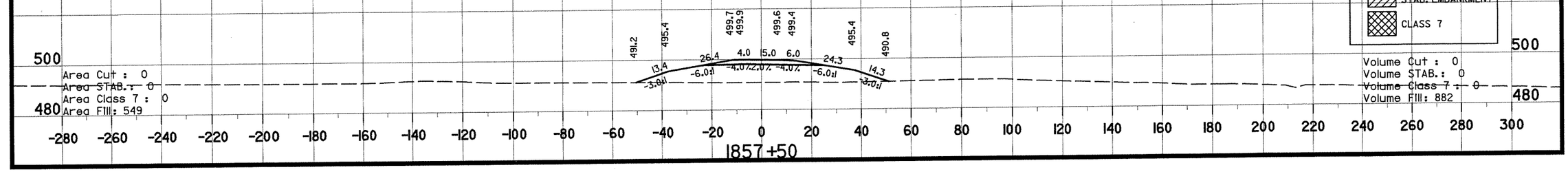

DATE REVISED	DATE FILMED	FED. ROAD DIST. No.	STATE	FED. AID PROJ. No.	SHEET No.	TOTAL SHEETS
		6	ARK.		182	229
		JOB NO.		040478		

(2) X-SEC. STA. 1859+50 TO STA. 1861+00
RAMP 4 - U.S. 71 INT.

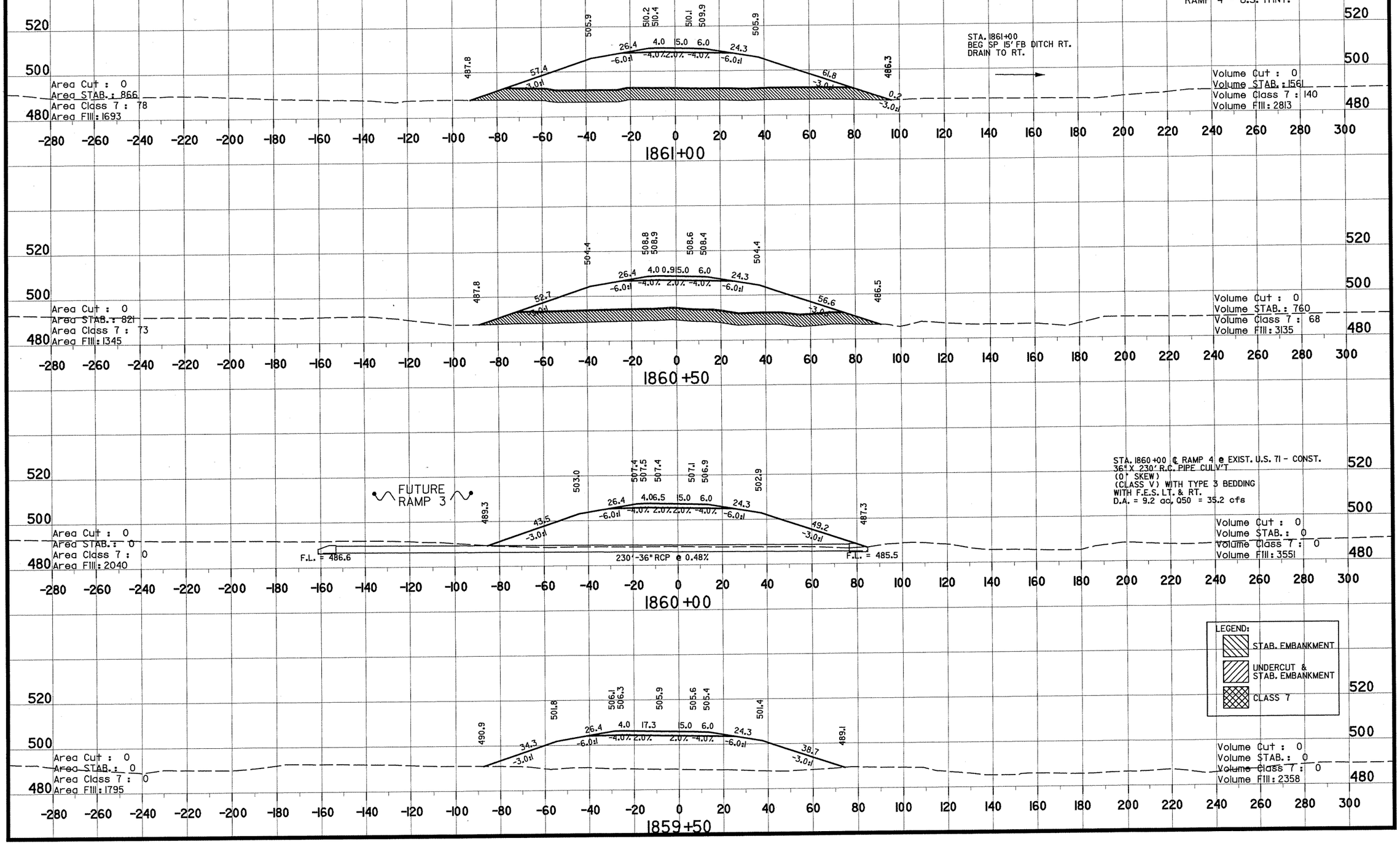

DATE REVISED	DATE FILMED	FED. ROAD DIST. No.	STATE	FED. AID PROJ. NO.	SHEET No.	TOTAL SHEETS
		6	ARK.		183	229
		JOB NO.		040478		

(2) X-SEC. STA. 1861+50 TO STA. 1863+00

RAMP 4 - U.S. 71 INT.

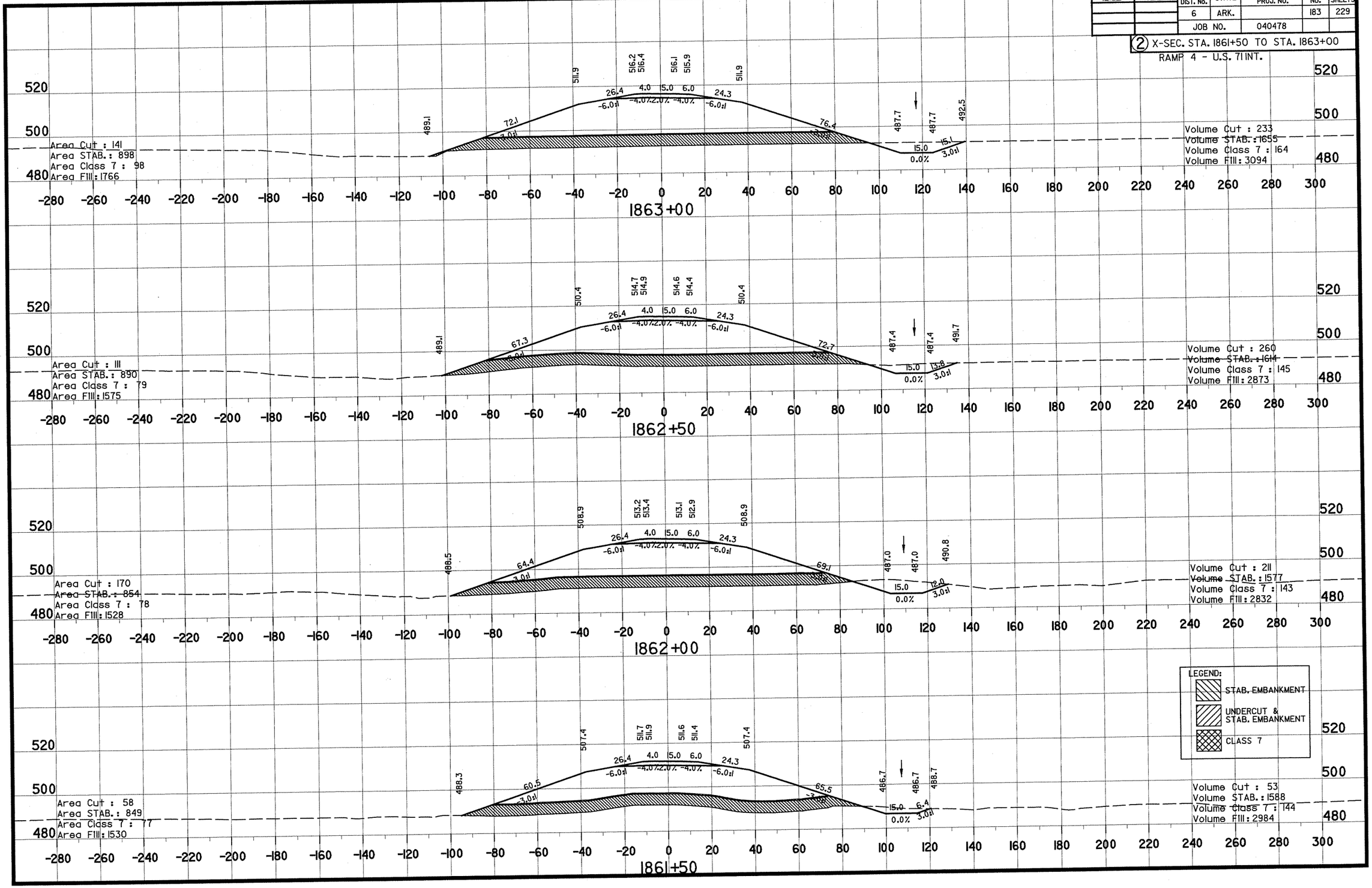

DATE REVISED	DATE FILMED	FED. ROAD DIST. No.	STATE	FED. AID PROJ. NO.	SHEET No.	TOTAL SHEETS
		6	ARK.		184	229
		JOB NO.		040478		

(2) X-SEC. STA. 1863+50 TO STA. 1865+00

RAMP 4 - U.S. 71 INT.

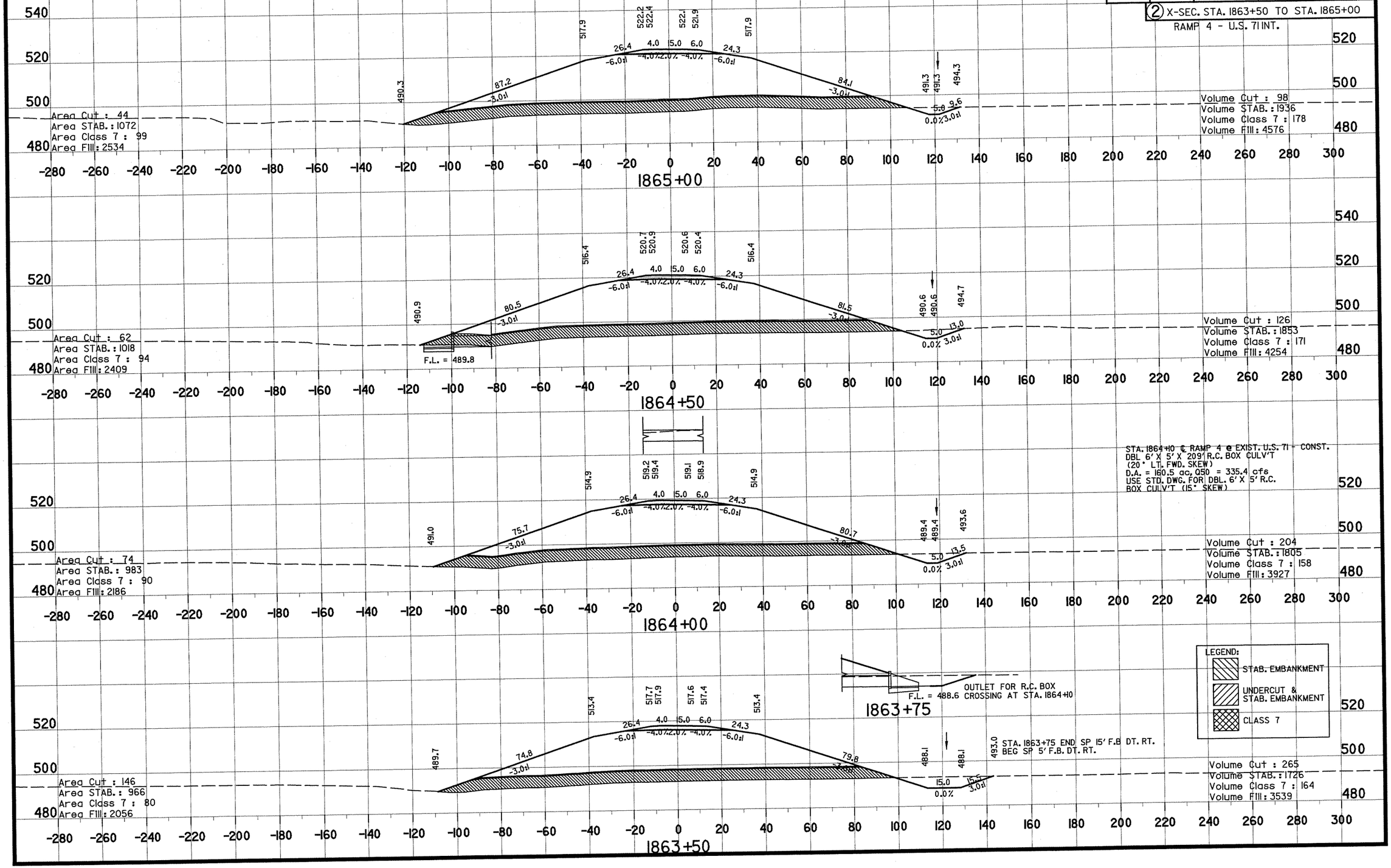

DATE REVISED	DATE FILMED	FED. ROAD DIST. No.	STATE	FED. AID PROJ. NO.	SHEET No.	TOTAL SHEETS
		6	ARK.		185	229
		JOB NO.		040478		

(2) X-SEC. STA. 1865+50 TO STA. 1866+50

RAMP 4 - U.S. 71 INT.

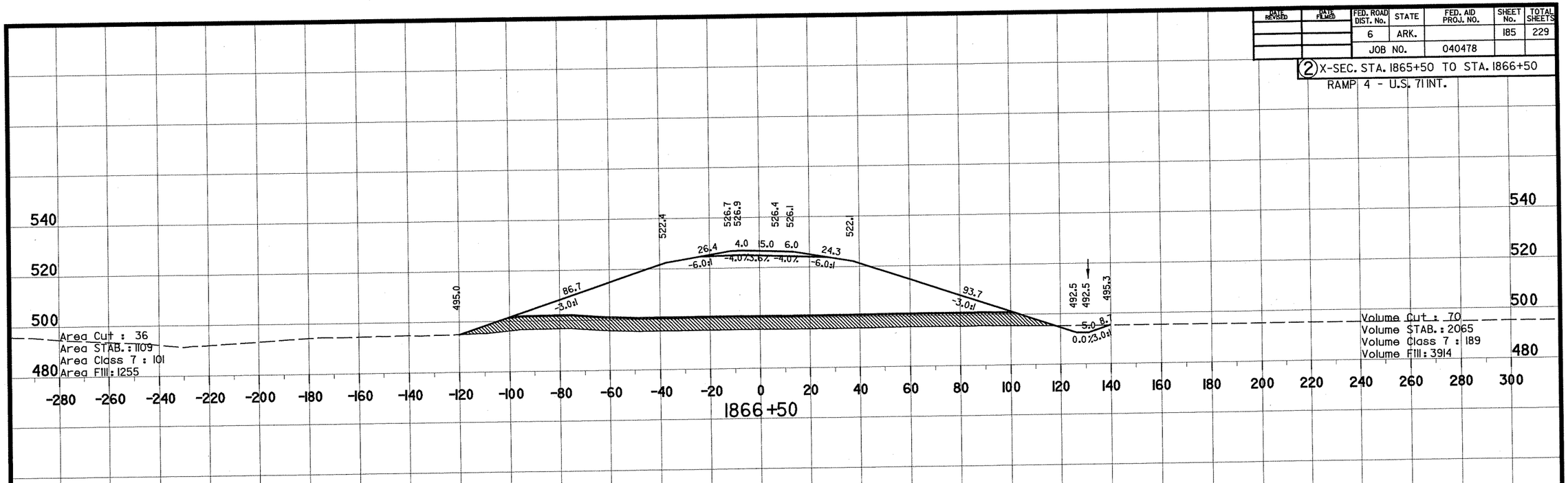

DATE REVISED	DATE FILMED	FED. ROAD DIST. No.	STATE	FED. AID PROJ. NO.	SHEET No.	TOTAL SHEETS
		6	ARK.		186	229
		JOB NO.		040478		

(2) X-SEC. STA. 1867+00 TO STA. 1868+00
RAMP 4 - U.S. 71 INT.

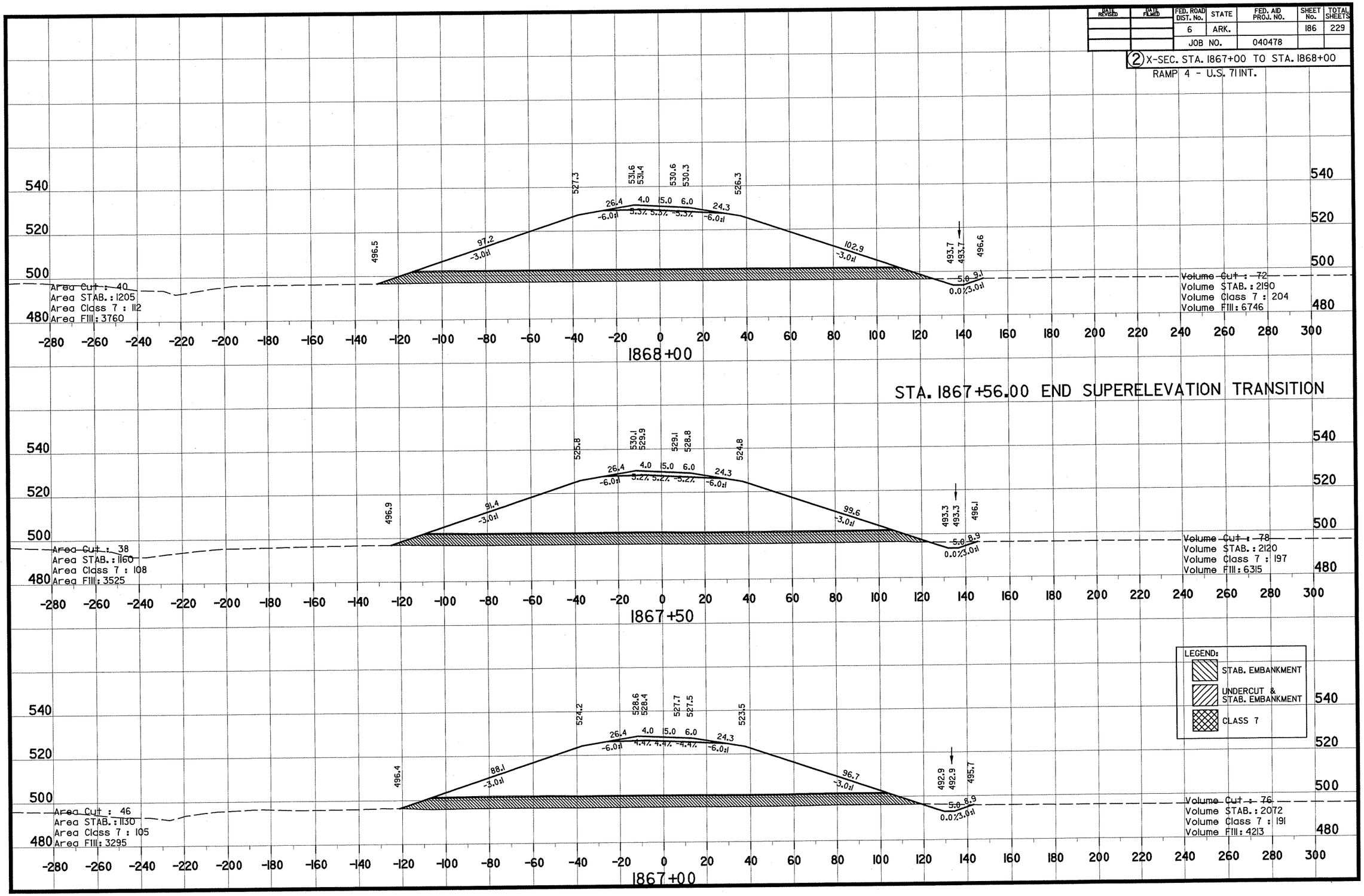

DATE REVISED	DATE FILMED	FED. ROAD DIST. No.	STATE	FED. AID PROJ. NO.	SHEET No.	TOTAL SHEETS
		6	ARK.		187	229
		JOB NO.		040478		

(2) X-SEC. STA. 1868+50 TO STA. 1869+50
RAMP 4 - U.S. 71 INT.

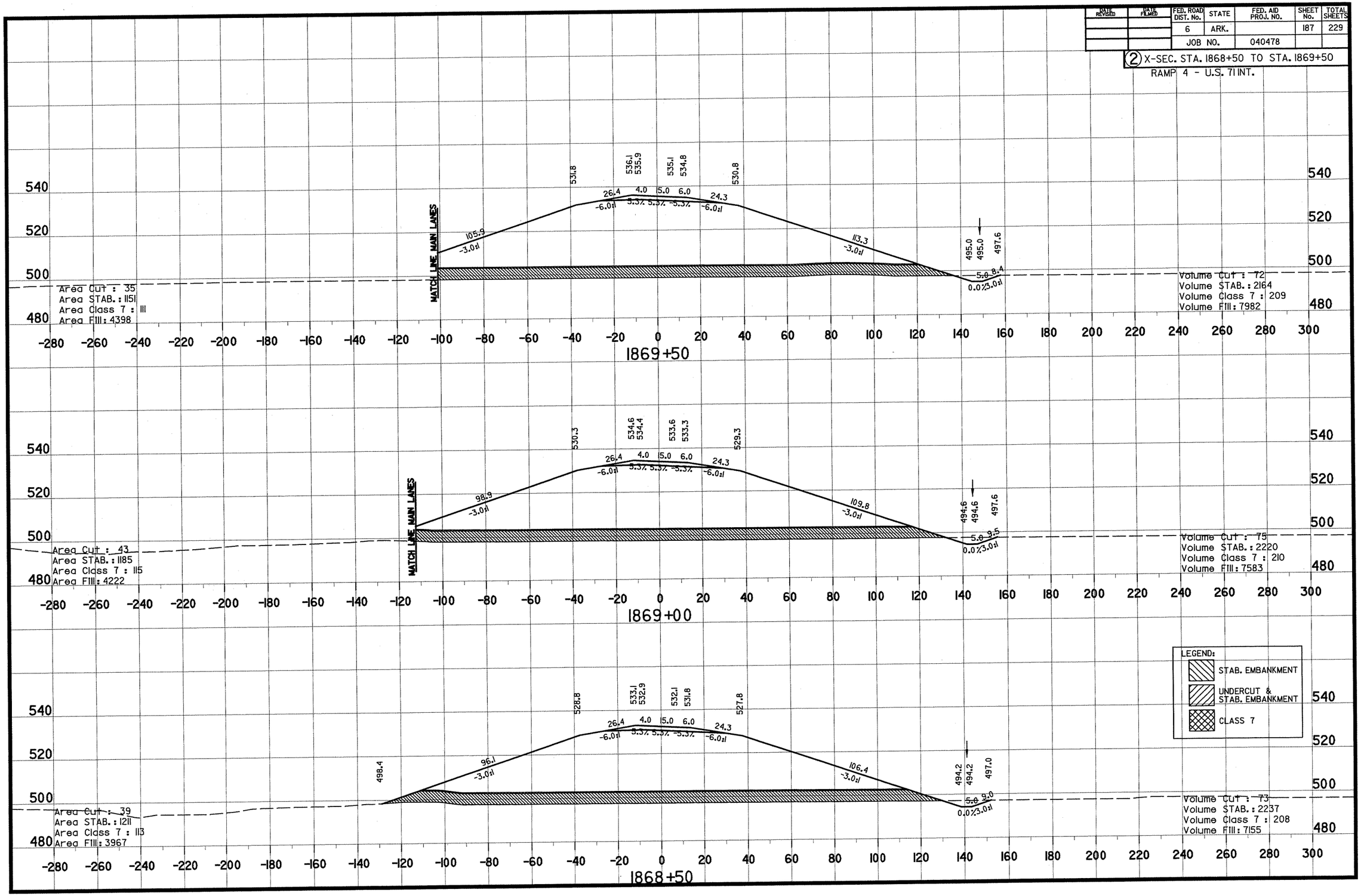

DATE REVISED	DATE FILMED	FED. ROAD DIST. No.	STATE	FED. AID PROJ. NO.	SHEET No.	TOTAL SHEETS
		6	ARK.		188	229
		JOB NO.		040478		

(2) X-SEC. STA. 1870+00 TO STA. 1871+00

RAMP 4 - U.S. 71 INT.

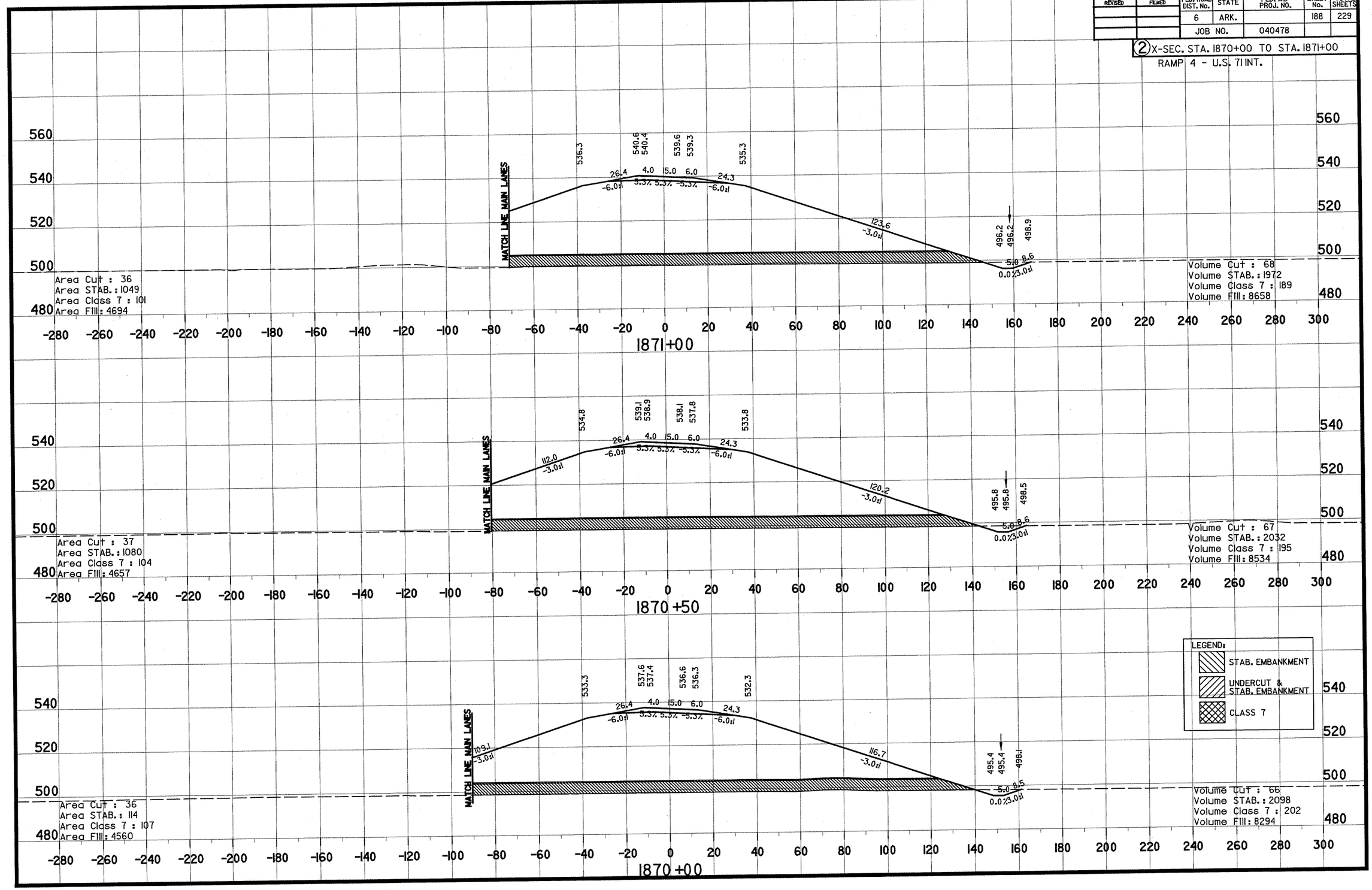

DATE REVISED	DATE FILMED	FED. ROAD DIST. No.	STATE	FED. AID PROJ. No.	SHEET No.	TOTAL SHEETS
		6	ARK.		189	229
		JOB NO.		040478		

(2) X-SEC. STA. 1871+50 TO STA. 1872+50

RAMP 4 - U.S. 71 INT.

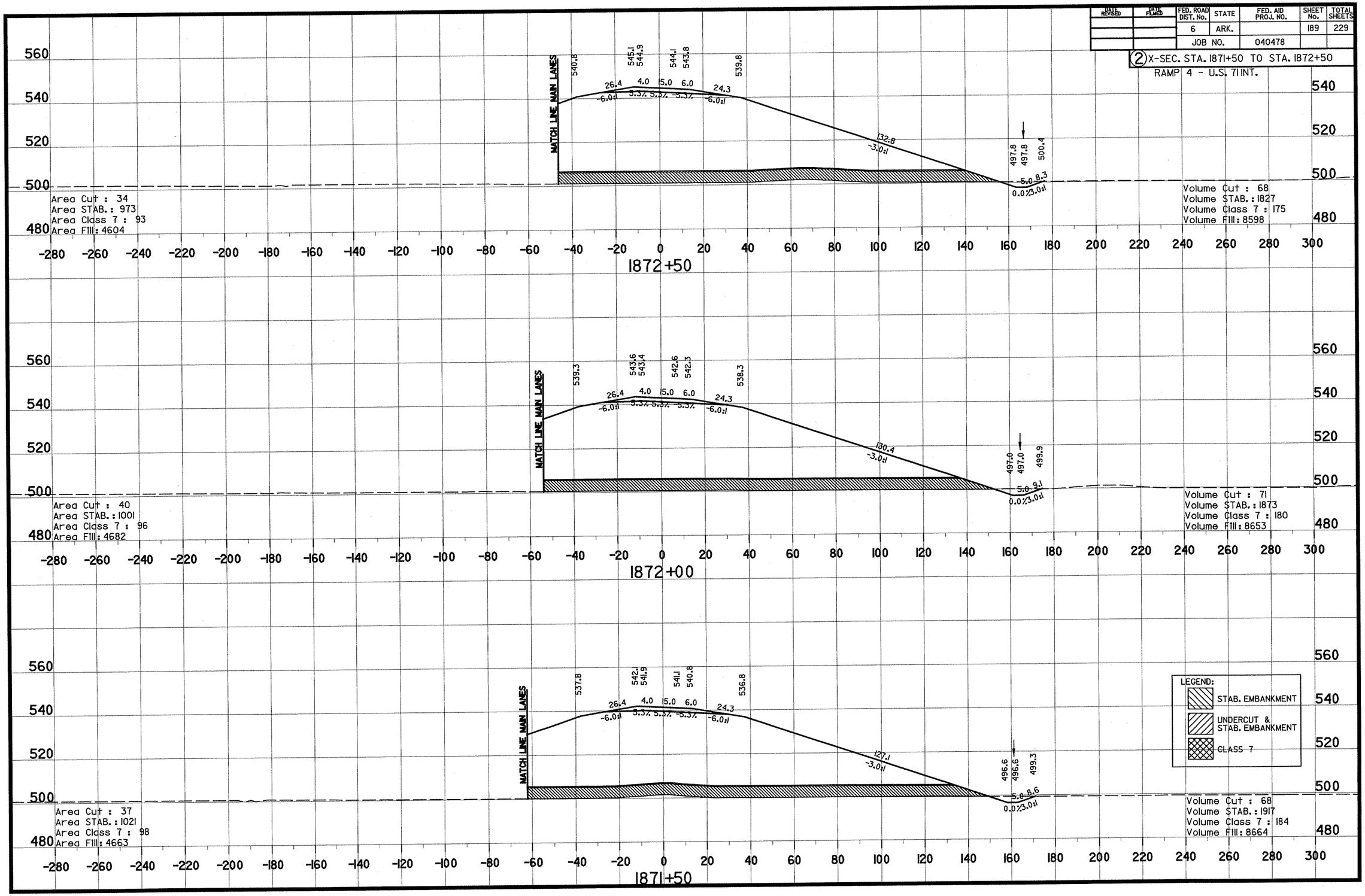

DATE REVISED	DATE FILMED	FED. ROAD DIST. No.	STATE	FED. AID PROJ. NO.	SHEET No.	TOTAL SHEETS
		6	ARK.		190	229
		JOB NO.		040478		

(2) X-SEC. STA. 1873+00 TO STA. 1874+00

RAMP 4 - U.S. 71 INT.

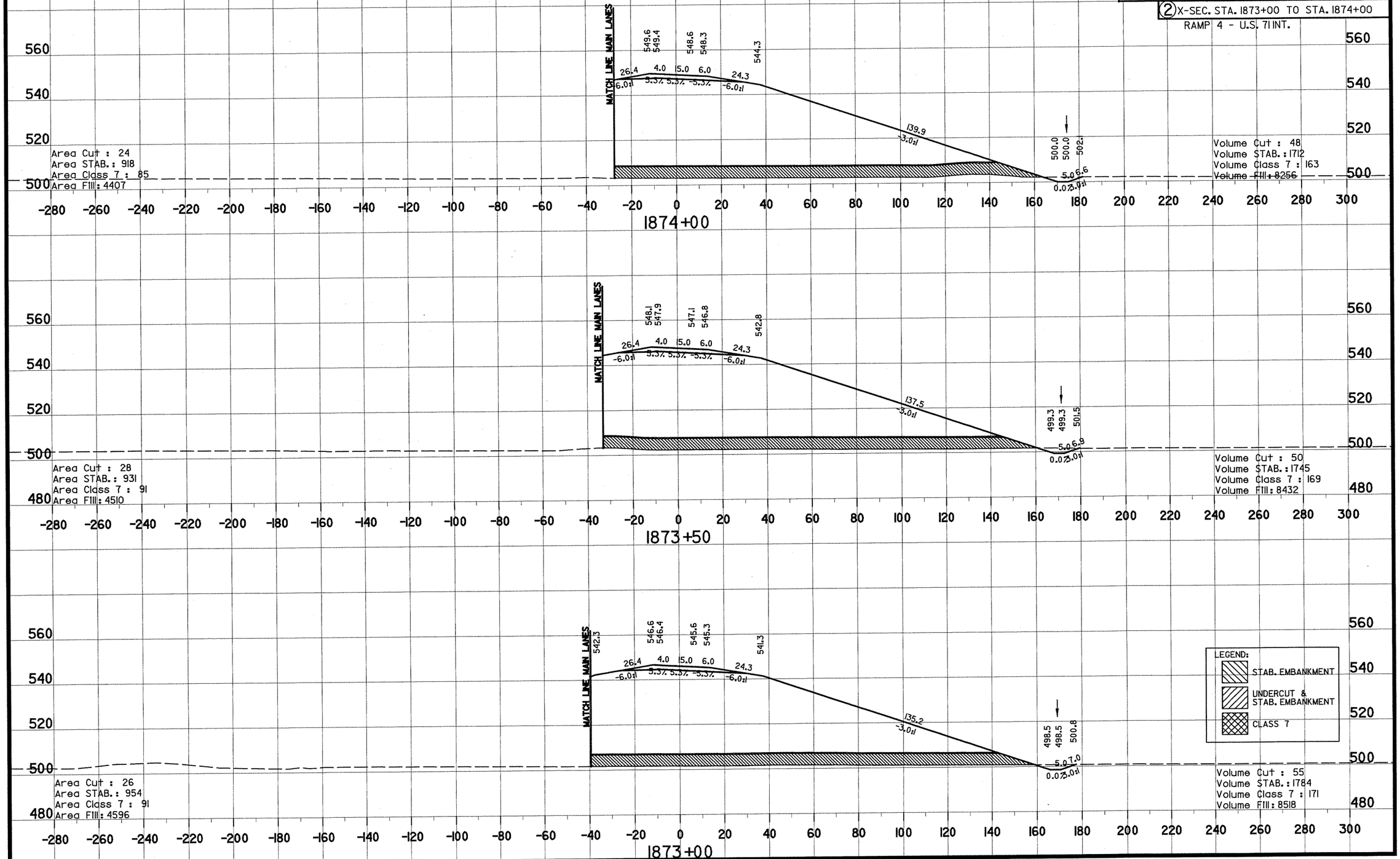

DATE REVISED	DATE FILMED	FED. ROAD DIST. No.	STATE	FED. AID PROJ. No.	SHEET No.	TOTAL SHEETS
		6	ARK.		191	229
		JOB NO.		040478		

(2) X-SEC. STA. 1874+50 TO STA. 1875+50
RAMP 4 - U.S. 71 INT.

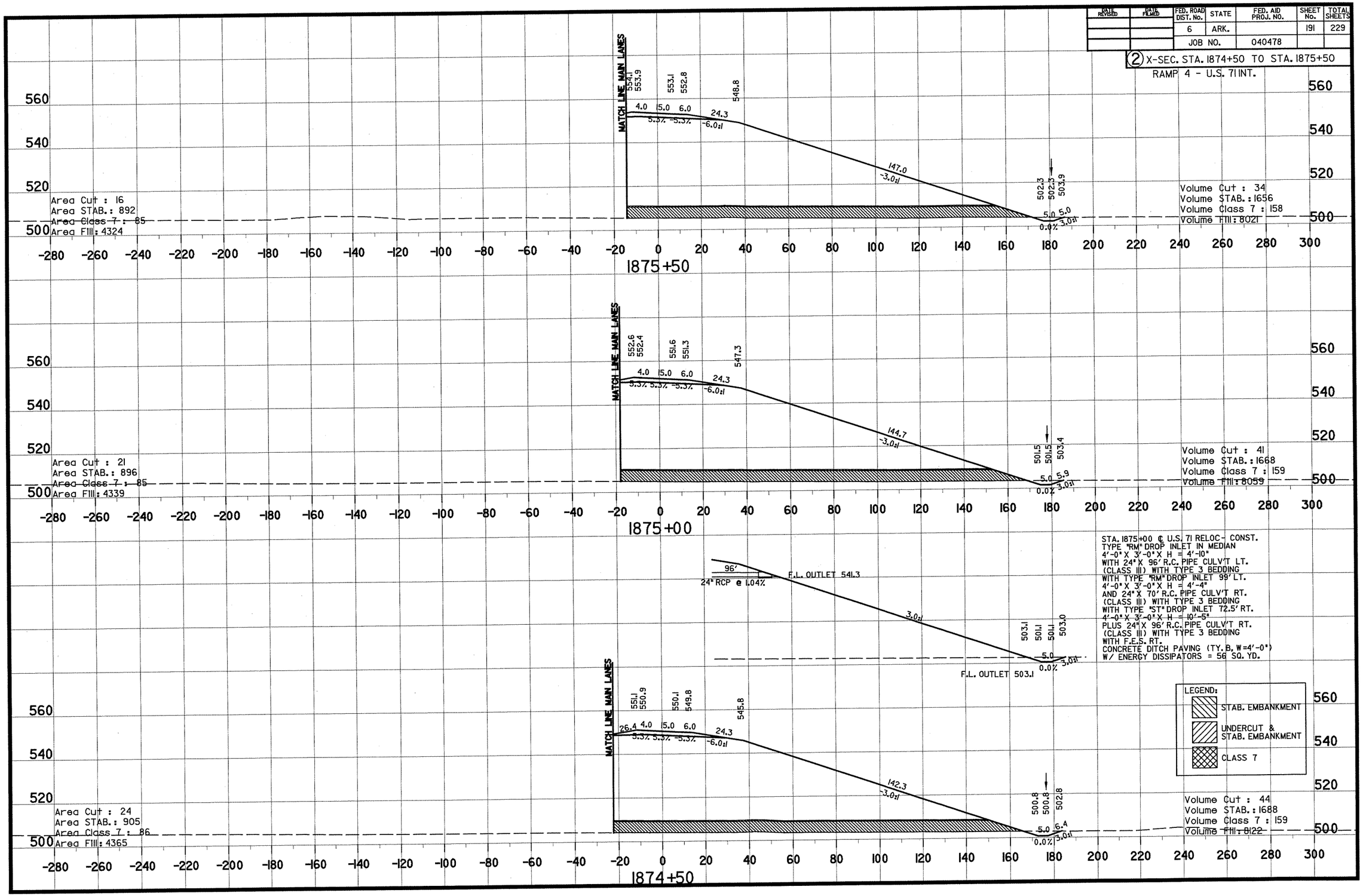

DATE REVISED	DATE FILMED	FED. ROAD DIST. NO.	STATE	FED. AID PROJ. NO.	SHEET NO.	TOTAL SHEETS
		6	ARK.		192	229
		JOB NO.		040478		

(2) X-SEC. STA. 1876+00 TO STA. 1877+50

RAMP 4 - U.S. 71 INT.

STA. 1877+85 BEGIN SUPERELEVATION TRANSITION

520
500
-280 -260 -240 -220 -200 -180 -160 -140 -120 -100 -80 -60 -40 -20 0 20 40 60 80 100 120 140 160 180 200 220 240 260 280 300
1877+50

520
500
-280 -260 -240 -220 -200 -180 -160 -140 -120 -100 -80 -60 -40 -20 0 20 40 60 80 100 120 140 160 180 200 220 240 260 280 300
1877+00

520
500
-280 -260 -240 -220 -200 -180 -160 -140 -120 -100 -80 -60 -40 -20 0 20 40 60 80 100 120 140 160 180 200 220 240 260 280 300
1876+50

Area Cut : 0
Area STAB.: 0
Area Class 7 : 0
Area Fill: 0

LIMIT OF CONST. RAMP 4 STA. 1876+33.42

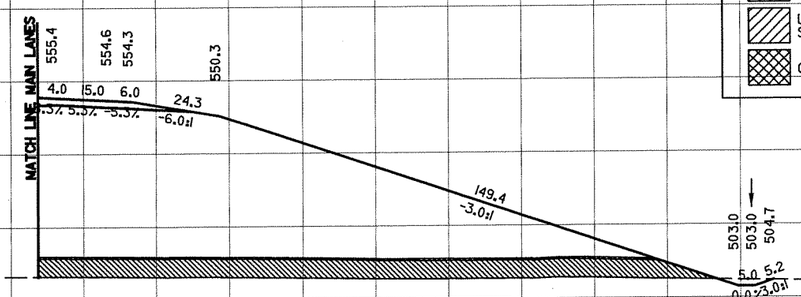

LEGEND:
- STAB. EMBANKMENT
- UNDERCUT & STAB. EMBANKMENT
- CLASS 7

Volume Cut : 11
Volume STAB.: 552
Volume Class 7 : 53
Volume Fill: 2683

STA. 1876+33
END SP. 5' FB DT. RT. RAMP 4
BEG SP 5' FB. DT. RT. MAINLANES

Volume Cut : 32
Volume STAB.: 1652
Volume Class 7 : 157
Volume Fill: 8018

560
540
520
500
-280 -260 -240 -220 -200 -180 -160 -140 -120 -100 -80 -60 -40 -20 0 20 40 60 80 100 120 140 160 180 200 220 240 260 280 300
1876+00

Area Cut : 18
Area STAB.: 892
Area Class 7 : 85
Area Fill: 4336

DATE REVISED	DATE FILMED	FED. ROAD DIST. No.	STATE	FED. AID PROJ. NO.	SHEET No.	TOTAL SHEETS
		6	ARK.		193	229
		JOB NO.		040478		

(2) X-SEC. STA. 1853+25 TO STA. 1854+00

TEMP RAMP 4 - U.S. 71 INT.

Area Cut : 0
Area Fill: 0

Volume Cut : 0
Volume Fill: 0

BEGIN GRADING TEMP. RAMP 4 STA. 1854+47.49

FUTURE
STA. 1854+15 ℄ TEMP RAMP 4 ℮ EXIST. U.S. 71 - CONST.
24" X 58' R.C. PIPE CULV'T
(0° SKEW)
(CLASS III) WITH TYPE 3 BEDDING
WITH S.E.S. LT. & RT.
D.A. = 4.6 ac, Q50 = 13.5 cfs

488.5
488.2
492.6
492.7
492.4
492.2
488.2
4.0
15.0
6.0
26.0
24.0
-4.0%
2.0%
-4.0%
6.0:1
6.0:1
3.0:1
3.0:1
F.L. = 487.8
F.L. = 487.5

58'-24" RCP ℮0.5%
PIPE ℮ STA. 1854+15

1854+00

1853+50

1853+25

DATE REVISED	DATE FILMED	FED. ROAD DIST. No.	STATE	FED. AID PROJ. No.	SHEET No.	TOTAL SHEETS
		6	ARK.		194	229
		JOB NO.		040478		

(2) X-SEC. STA. 1854+50 TO STA. 1855+50

TEMP RAMP 4 - U.S. 71 INT.

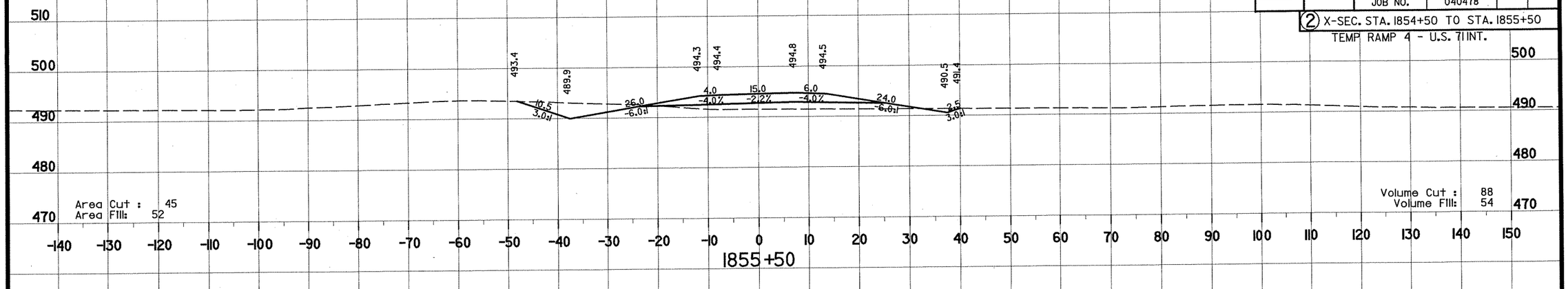

1855+50

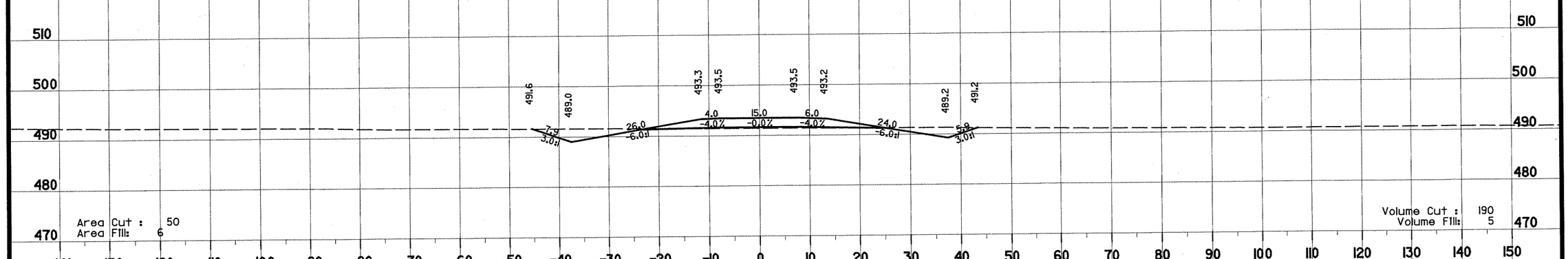

1855+00

STA. 1854+53.00 BEGIN SUPERELEVATION TRANSITION

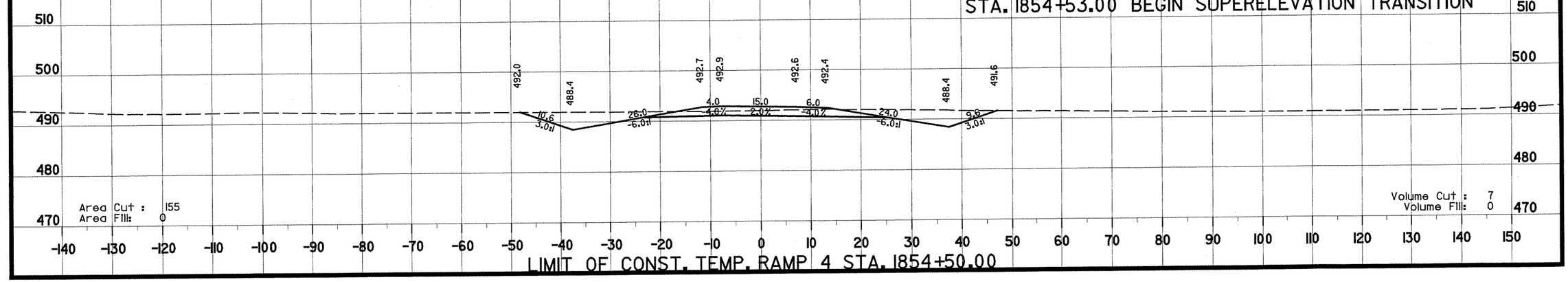

LIMIT OF CONST. TEMP. RAMP 4 STA. 1854+50.00

DATE REVISED	DATE FILMED	FED. ROAD DIST. No.	STATE	FED. AID PROJ. NO.	SHEET No.	TOTAL SHEETS
		6	ARK.		195	229
		JOB NO.		040478		

(2) X-SEC. STA. 1856+00 TO STA. 1857+00
TEMP RAMP 4 - U.S. 71 INT.

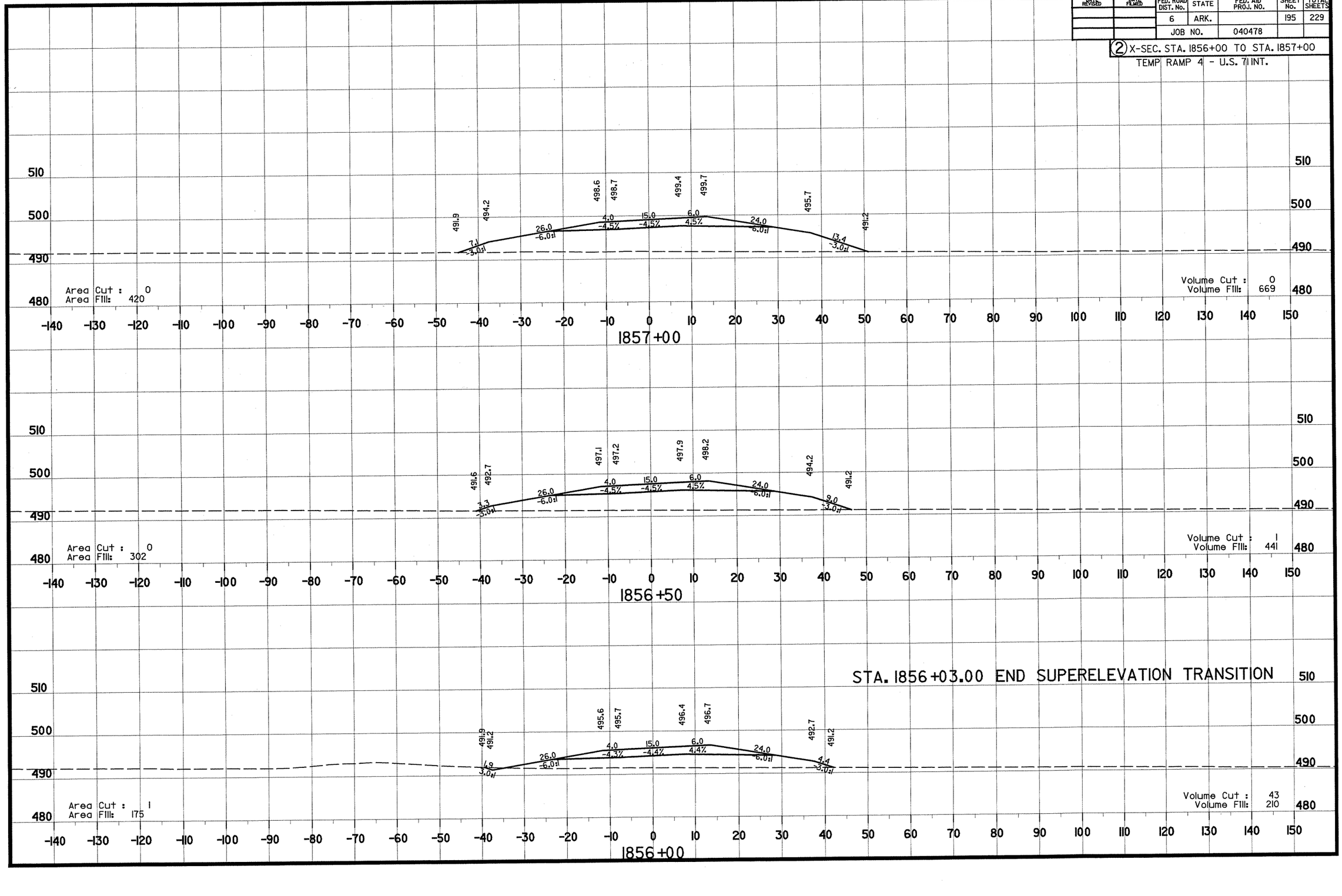

DATE REVISED	DATE FILMED	FED. ROAD DIST. No.	STATE	FED. AID PROJ. NO.	SHEET No.	TOTAL SHEETS
		6	ARK.		196	229
		JOB NO.		040478		

(2) X-SEC. STA. 1857+50 TO STA. 1858+50

TEMP RAMP 4 - U.S. 71 INT.

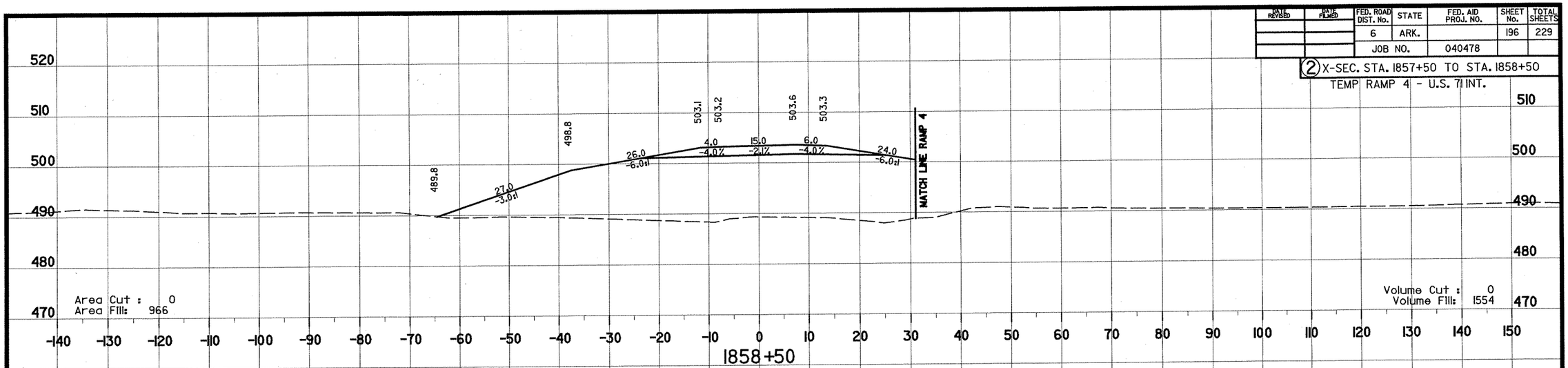

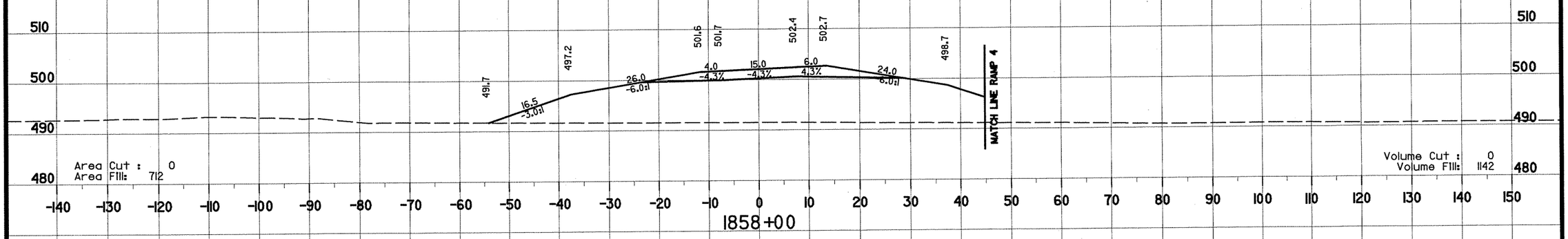

STA. 1857+96.00 BEGIN SUPERELEVATION TRANSITION

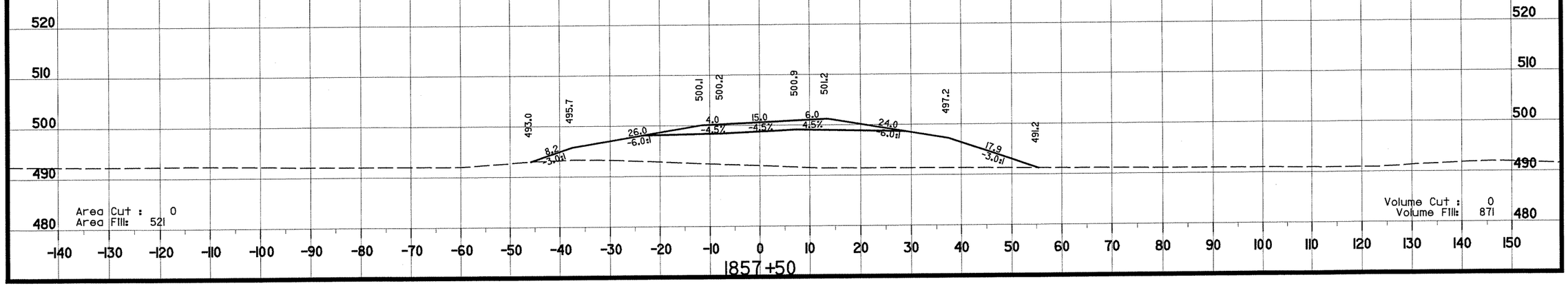

DATE REVISED	DATE FILMED	FED. ROAD DIST. No.	STATE	FED. AID PROJ. NO.	SHEET No.	TOTAL SHEETS
		6	ARK.		197	229
		JOB NO.		040478		

(2) X-SEC. STA. 1859+00 TO STA. 1860+00

TEMP RAMP 4 - U.S. 71 INT.

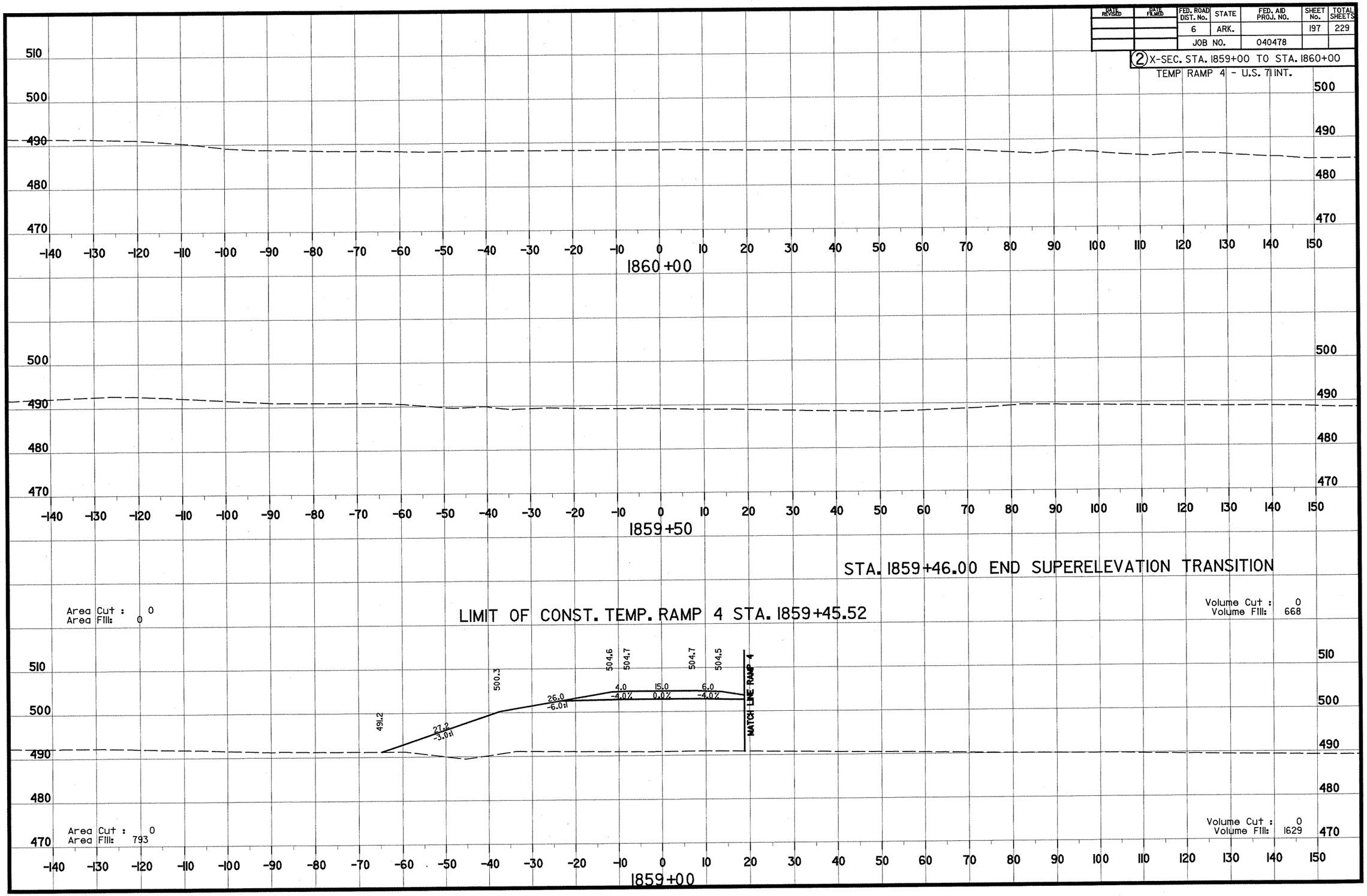

DATE REVISED	DATE FILMED	FED. ROAD DIST. No.	STATE	FED. AID PROJ. NO.	SHEET No.	TOTAL SHEETS
		6	ARK.		198	229
		JOB NO.		040478		

(2) X-SEC. STA. 1855+53 TO STA. 1857+50

RAMP 5 - U.S. 71 INT.

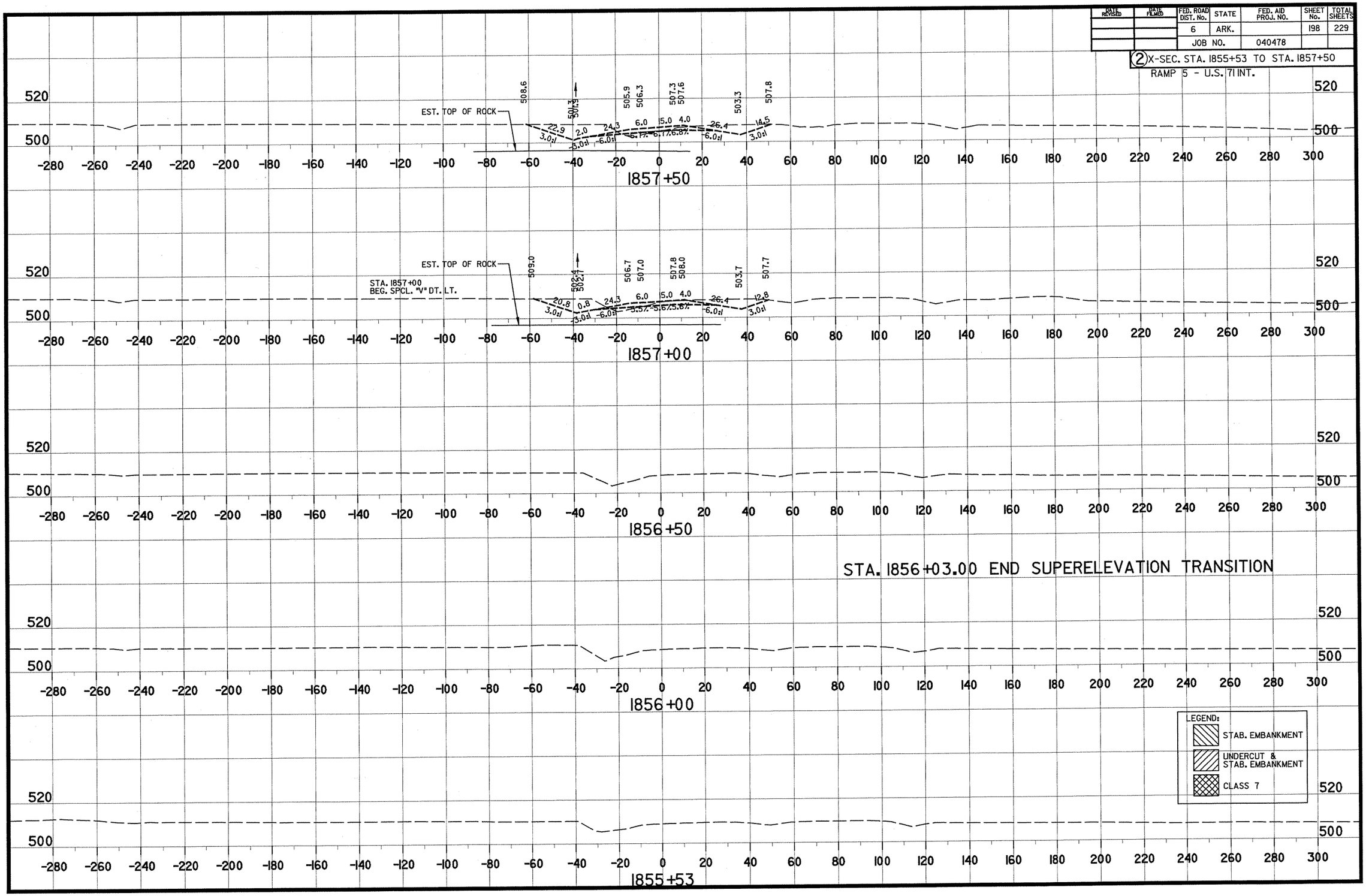

DATE REVISED	DATE FILMED	FED. ROAD DIST. No.	STATE	FED. AID PROJ. No.	SHEET No.	TOTAL SHEETS
		6	ARK.		199	229
		JOB NO.		040478		

(2) X-SEC. STA. 1858+00 TO STA. 1860+00
RAMP 5 - U.S. 71 INT.

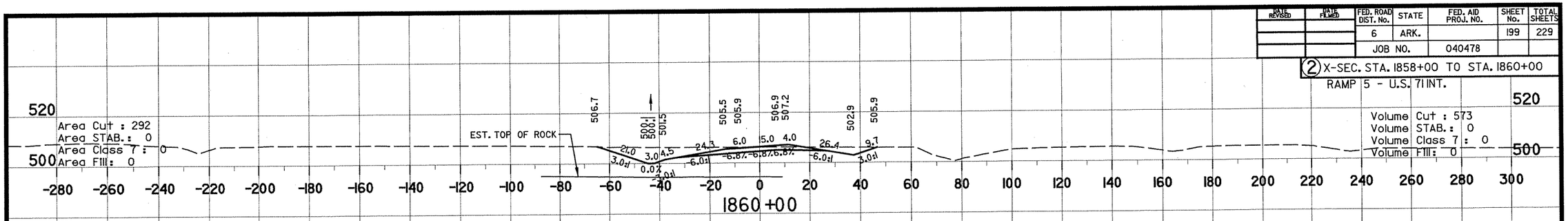

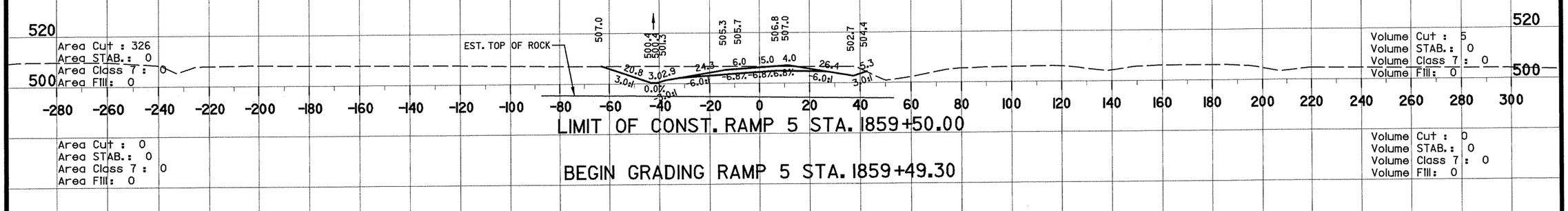

Area Cut : 0
Area STAB.: 0
Area Class 7 : 0
Area Fill: 0

Volume Cut : 0
Volume STAB.: 0
Volume Class 7 : 0
Volume Fill: 0

BEGIN GRADING RAMP 5 STA. 1859+49.30

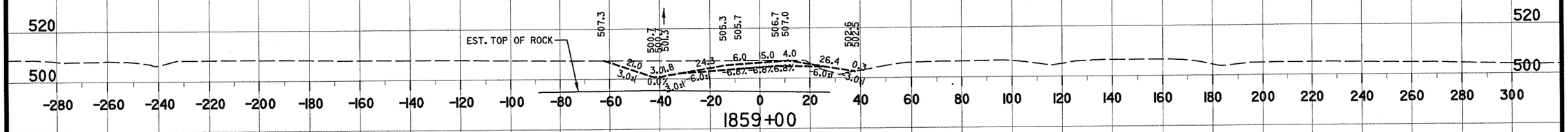

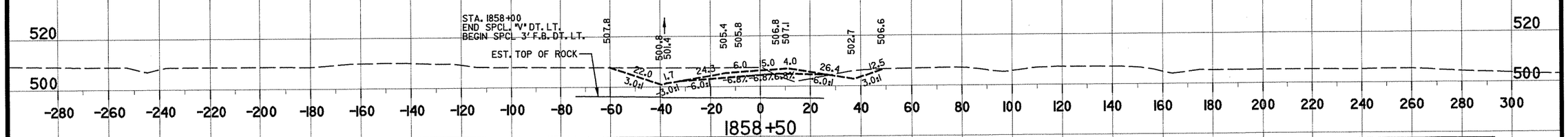

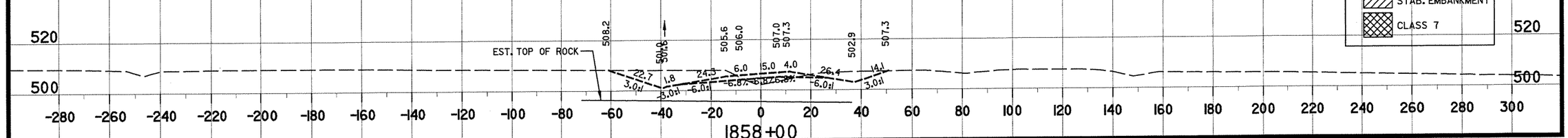

LEGEND:
- STAB. EMBANKMENT
- UNDERCUT & STAB. EMBANKMENT
- CLASS 7

DATE REVISED	DATE FILED	FED. ROAD DIST. No.	STATE	FED. AID PROJ. NO.	SHEET No.	TOTAL SHEETS
		6	ARK.		200	229
		JOB NO.		040478		

(2) X-SEC. STA. 1860+50 TO STA. 1862+00

RAMP 5 - U.S. 71 INT.

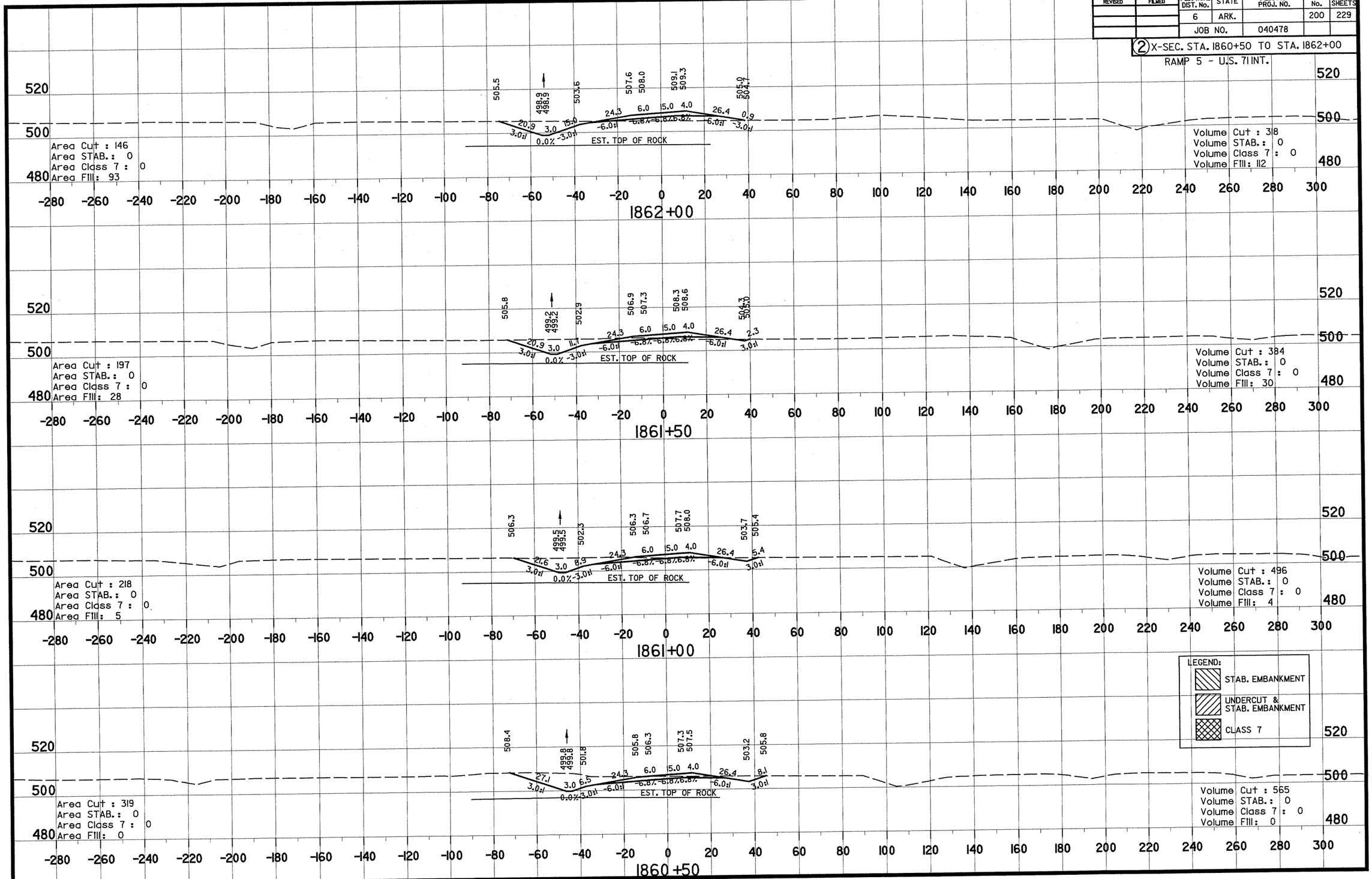

DATE REVISED	DATE FILMED	FED. ROAD DIST. No.	STATE	FED. AID PROJ. No.	SHEET No.	TOTAL SHEETS
		6	ARK.		201	229
		JOB NO.		040478		

(2) X-SEC. STA. 1862+50 TO STA. 1864+35

RAMP 5 - U.S. 71 INT.

INLET FOR R.C. BOX CROSSING AT STA. 1864+66

F.L. = 497.6

STA. 1864+17
END SPCL. 3' F.B. DT. LT.
BEGIN SPCL. 5' F.B. DT. LT.

1864+35

504.1 497.7 497.7 507.9 511.9 512.3 513.3 513.6 509.3 503.5

28.3 3.0 3.0:1 0.0% 32.3 3.0:1 EST. TOP OF ROCK 24.3 6.0 5.0 4.0 26.4 18.4
-6.0:1 -6.8% -6.8% -6.8% -6.0:1 -3.0:1

Area Cut : 85
Area STAB. : 0
Area Class 7 : 0
Area Fill: 563

Volume Cut : 207
Volume STAB. : 0
Volume Class 7 : 0
Volume Fill: 784

1864+00

1863+50

504.0 498.0 498.0 506.6 510.6 511.0 512.1 512.3

19.0 3.0 3.0:1 0.0% 27.3 3.0:1 EST. TOP OF ROCK 24.3 6.0 5.0 4.0
-6.0:1 -6.8% -6.8% -6.8%

MATCH LINE TEMP. RAMP 5

Area Cut : 138
Area STAB. : 0
Area Class 7 : 0
Area Fill: 284

Volume Cut : 262
Volume STAB. : 0
Volume Class 7 : 0
Volume Fill: 480

1863+00

504.8 498.3 498.3 505.5 509.5 509.9 510.9 511.2

20.6 3.0 3.0:1 0.0% 22.8 3.0:1 EST. TOP OF ROCK 24.3 6.0 5.0 4.0
-6.0:1 -6.8% -6.8% -6.8%

MATCH LINE TEMP. RAMP 5

Area Cut : 144
Area STAB. : 0
Area Class 7 : 0
Area Fill: 234

Volume Cut : 268
Volume STAB. : 0
Volume Class 7 : 0
Volume Fill: 384

1862+50

505.2 498.6 498.6 504.5 508.5 508.9 509.9 510.2 505.9 504.2

20.8 3.0 3.0:1 0.0% 18.7 3.0:1 EST. TOP OF ROCK 24.3 6.0 5.0 4.0 26.4 5.3
-6.0:1 -6.8% -6.8% -6.8% -6.0:1 -3.0:1

Area Cut : 145
Area STAB. : 0
Area Class 7 : 0
Area Fill: 180

Volume Cut : 270
Volume STAB. : 0
Volume Class 7 : 0
Volume Fill: 252

LEGEND:
- STAB. EMBANKMENT
- UNDERCUT & STAB. EMBANKMENT
- CLASS 7

DATE REVISED	DATE FILMED	FED. ROAD DIST. NO.	STATE	FED. AID PROJ. NO.	SHEET NO.	TOTAL SHEETS
		6	ARK.		202	229
		JOB NO.		040478		

(2) X-SEC. STA. 1864+50 TO STA. 1866+00
RAMP 5 - U.S. 71 INT.

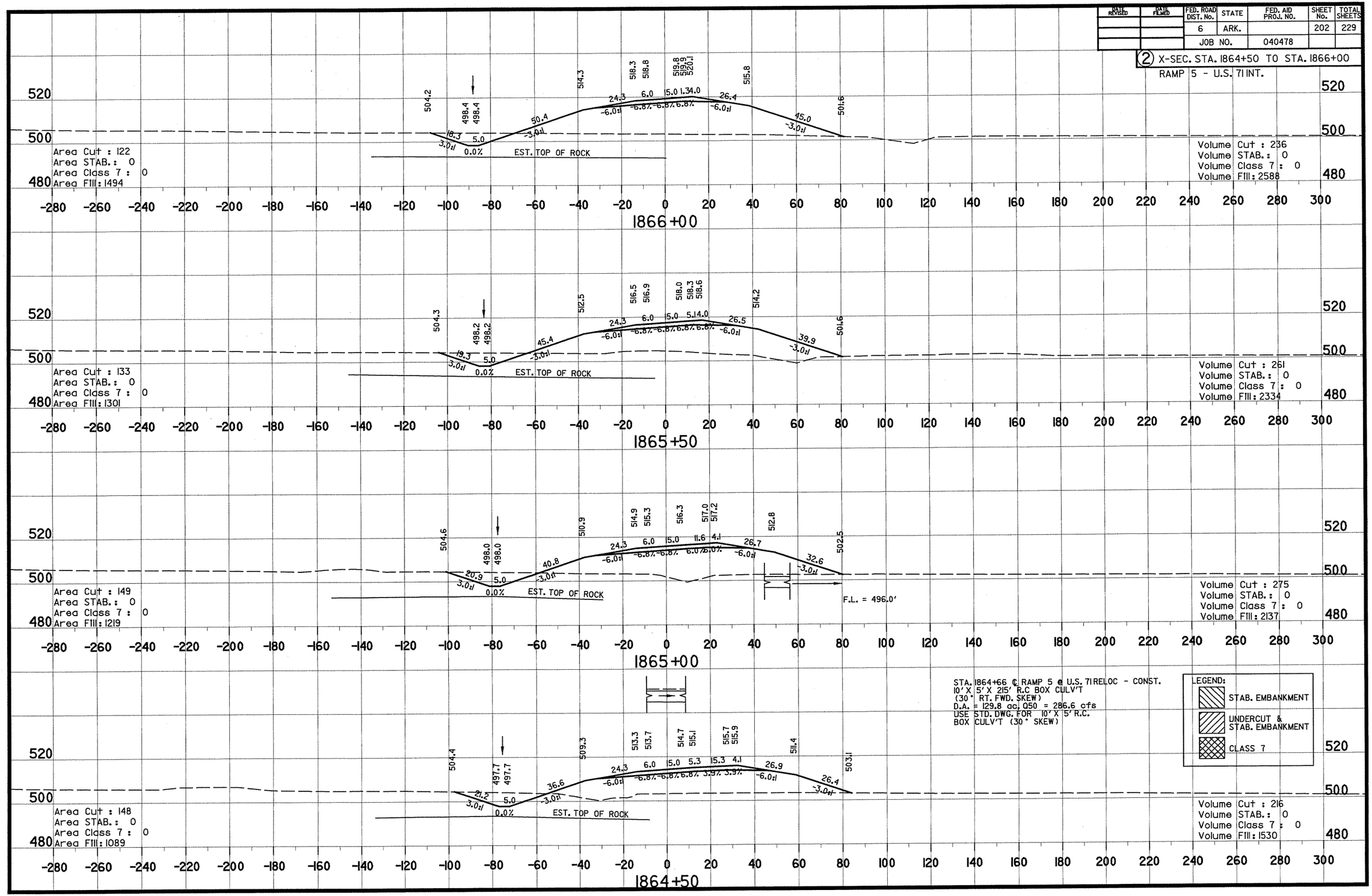

DATE REVISED	DATE FILMED	FED. ROAD DIST. No.	STATE	FED. AID PROJ. NO.	SHEET No.	TOTAL SHEETS
		6	ARK.		203	229
		JOB NO.		040478		

(2) X-SEC. STA. 1866+50 TO STA. 1867+50

RAMP 5 - U.S. 71 INT.

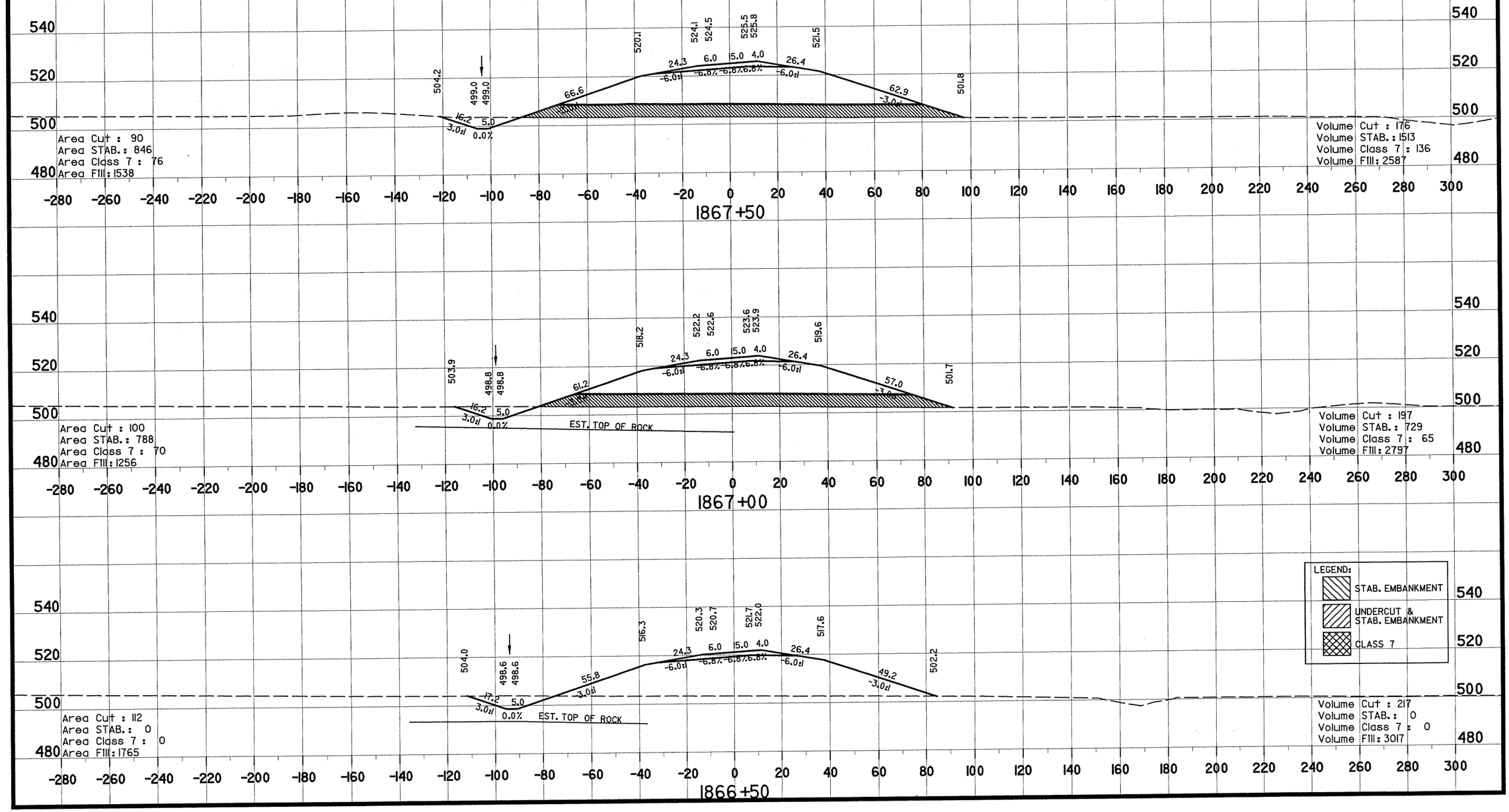

DATE REVISED	DATE FILMED	FED. ROAD DIST. No.	STATE	FED. AID PROJ. No.	SHEET No.	TOTAL SHEETS
		6	ARK.		204	229
		JOB NO.		040478		

(2) X-SEC. STA. 1868+00 TO STA. 1869+00

RAMP 5 - U.S. 71 INT.

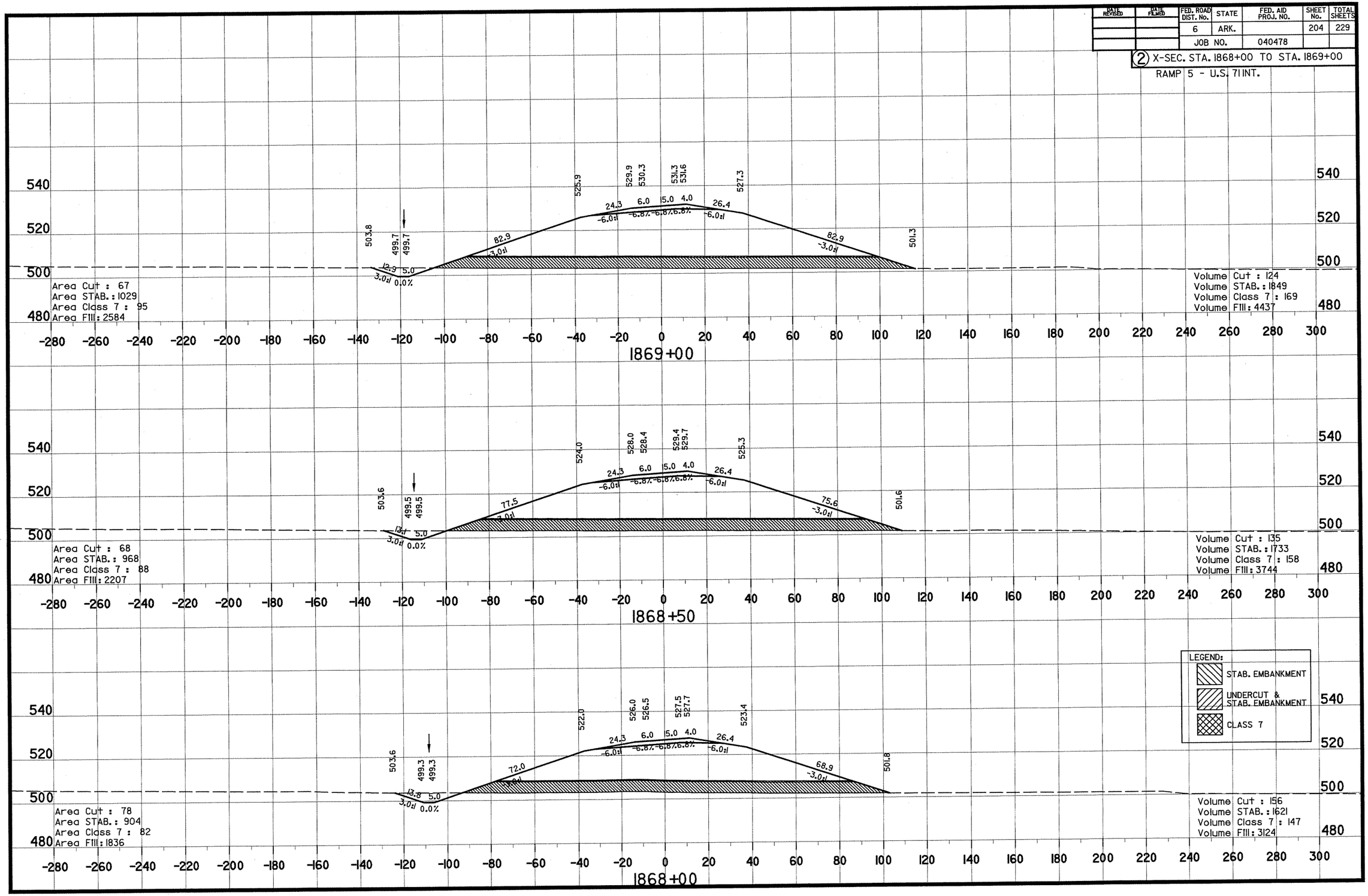

DATE REVISED	DATE FILMED	FED. ROAD DIST. No.	STATE	FED. AID PROJ. NO.	SHEET No.	TOTAL SHEETS
		6	ARK.		205	229
		JOB NO.		040478		

(2) X-SEC. STA. 1869+50 TO STA. 1870+50

RAMP 5 - U.S. 71 INT.

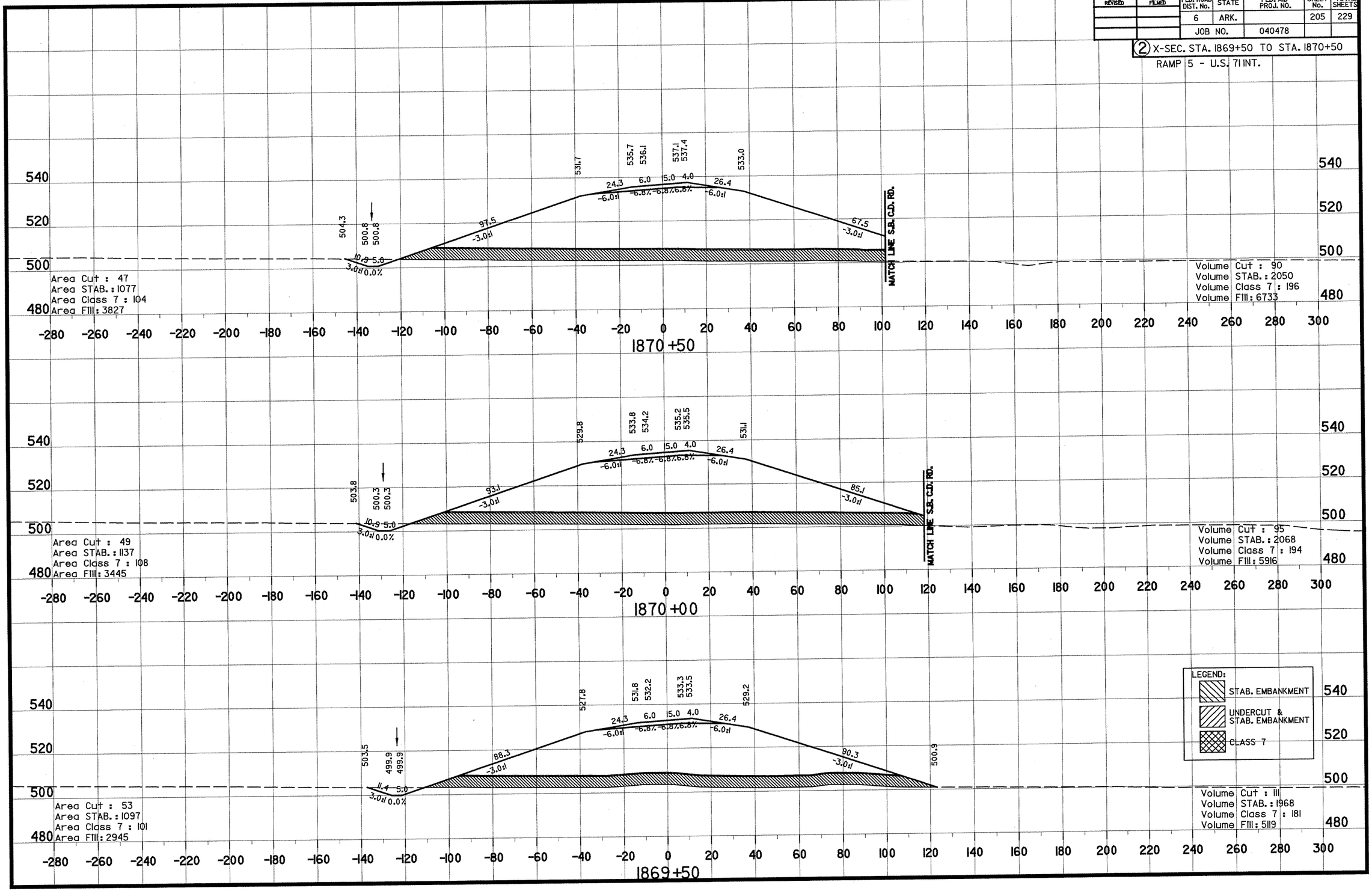

DATE REVISED	DATE FILED	FED. ROAD DIST. No.	STATE	FED. AID PROJ. No.	SHEET No.	TOTAL SHEETS
		6	ARK.		206	229
		JOB NO.		040478		

(2) X-SEC. STA. 1871+00 TO STA. 1872+00

RAMP 5 - U.S. 71 INT.

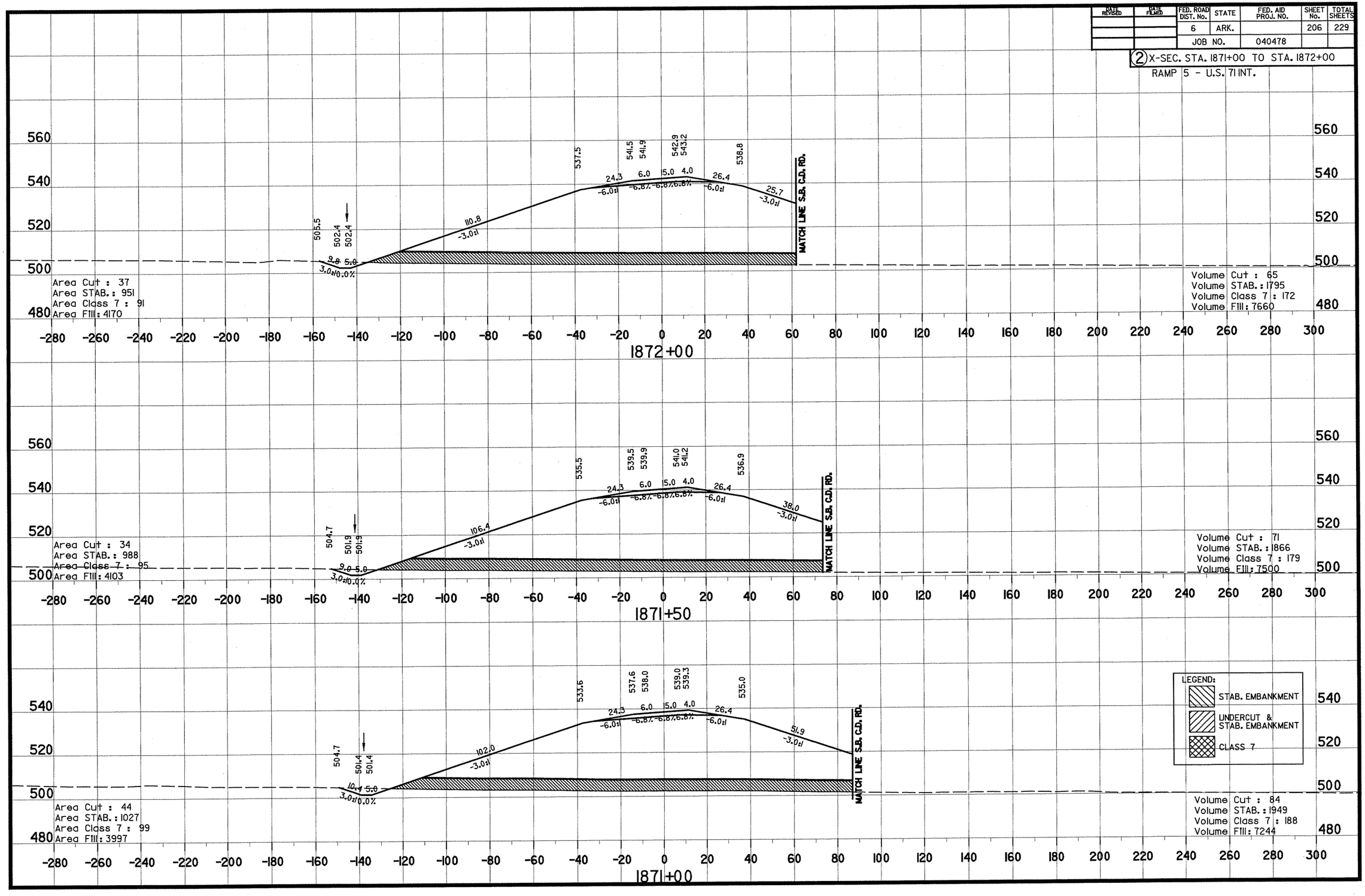

MAJ. REVISED	DATE FILED	FED. ROAD DIST. No.	STATE	FED. AID PROJ. NO.	SHEET No.	TOTAL SHEETS
		6	ARK.		207	229
		JOB NO.		040478		

(2) X-SEC. STA. 1872+50 TO STA. 1873+50

RAMP 5 - U.S. 71 INT.

STA. 1873+79.00 BEGIN SUPERELEVATION TRANSITION

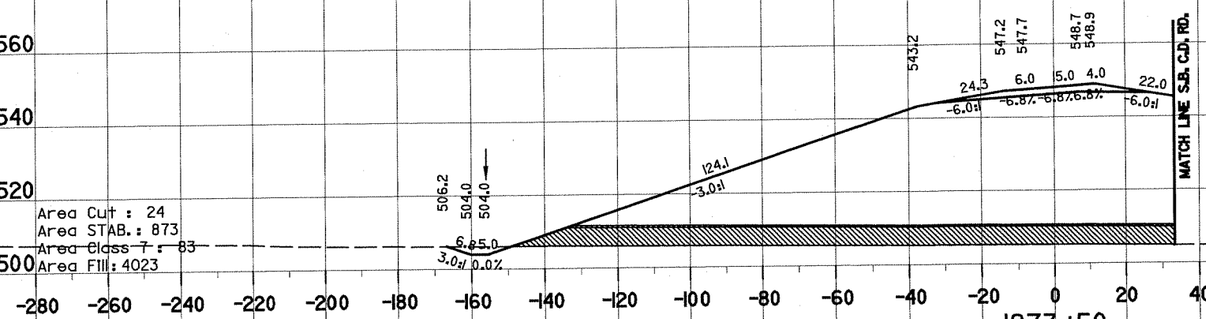

Area Cut : 24
Area STAB. : 873
Area Class 7 : 83
Area Fill : 4023

Volume Cut : 46
Volume STAB. : 1644
Volume Class 7 : 157
Volume Fill : 7576

1873+50

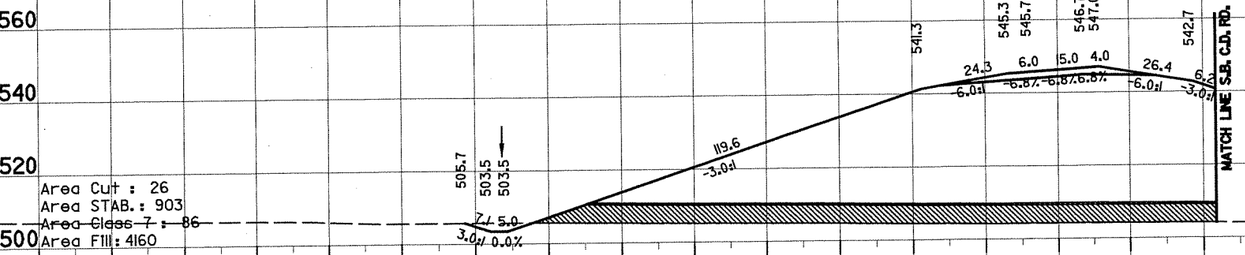

Area Cut : 26
Area STAB. : 903
Area Class 7 : 86
Area Fill : 4160

Volume Cut : 57
Volume STAB. : 1689
Volume Class 7 : 162
Volume Fill : 7724

1873+00

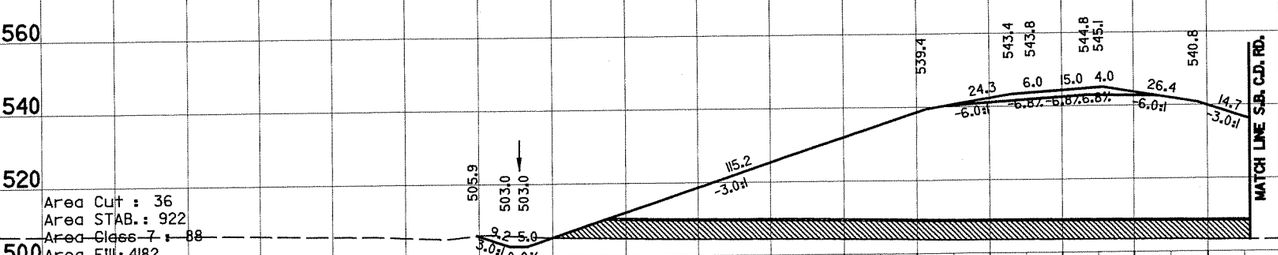

Area Cut : 36
Area STAB. : 922
Area Class 7 : 88
Area Fill : 4182

Volume Cut : 67
Volume STAB. : 1734
Volume Class 7 : 166
Volume Fill : 7733

1872+50

LEGEND:
- STAB. EMBANKMENT
- UNDERCUT & STAB. EMBANKMENT
- CLASS 7

DATE REVISED	DATE FILMED	FED. ROAD DIST. No.	STATE	FED. AID PROJ. No.	SHEET No.	TOTAL SHEETS
		6	ARK.		208	229
		JOB NO.		040478		

(2) X-SEC. STA. 1874+00 TO STA. 1875+00
RAMP 5 - U.S. 71 INT.

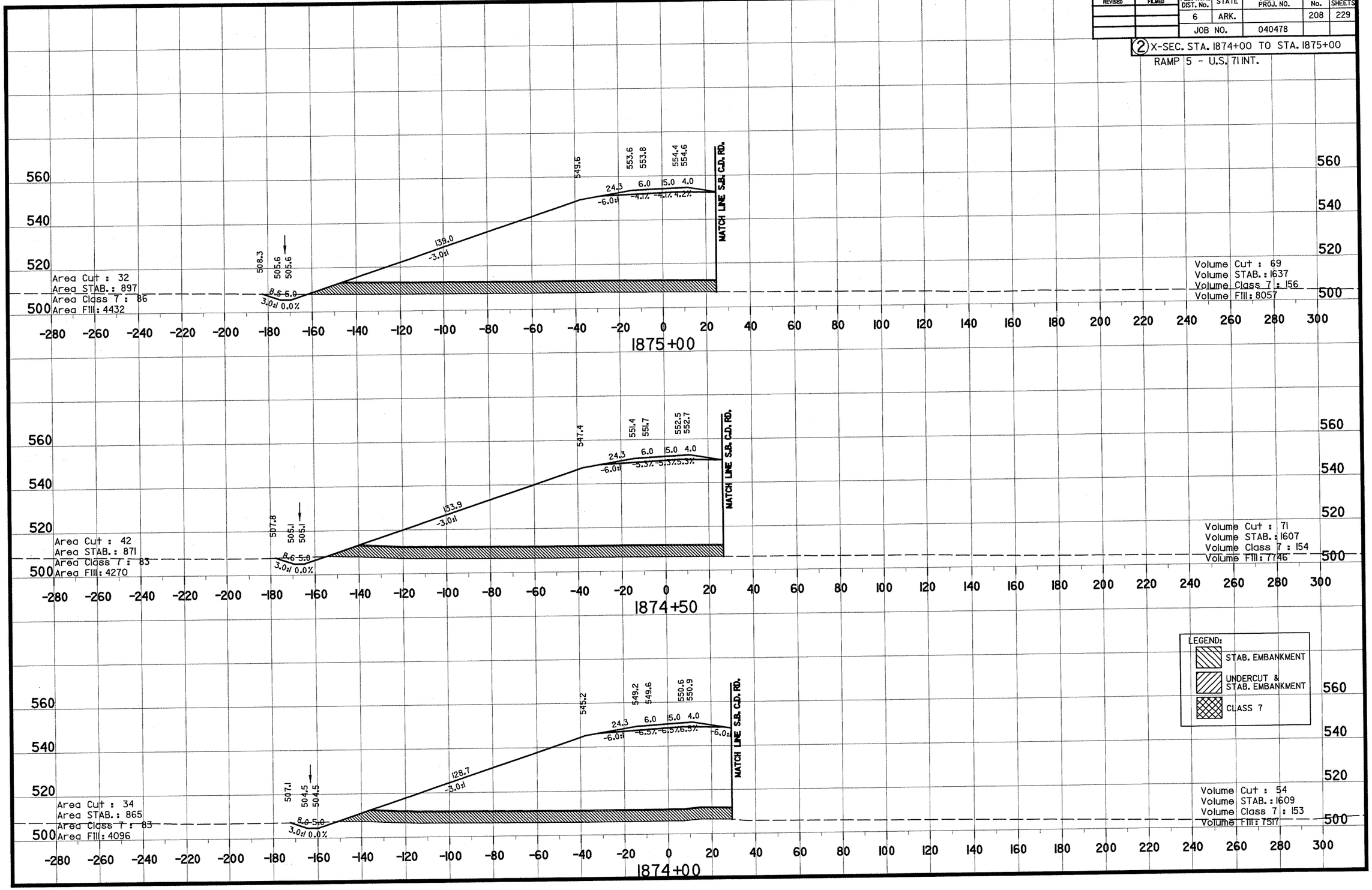

DATE REVISED	DATE FILMED	FED. ROAD DIST. No.	STATE	FED. AID PROJ. NO.	SHEET No.	TOTAL SHEETS
		6	ARK.		209	229
		JOB NO.		040478		

(2) X-SEC. STA. 1875+50 TO STA. 1876+50

RAMP 5 - U.S. 71 INT.

Volume Cut : 24
Volume STAB. : 412
Volume Class 7 : 39
Volume Fill : 2094

LIMIT OF CONST. RAMP 5 STA. 1876+74.78

STA. 1876+75
END SPCL. 5' F.B. DT. LT. RAMP 5
BEGIN SPCL. 5' F.B. DT. LT. S.B. C.D. RD.

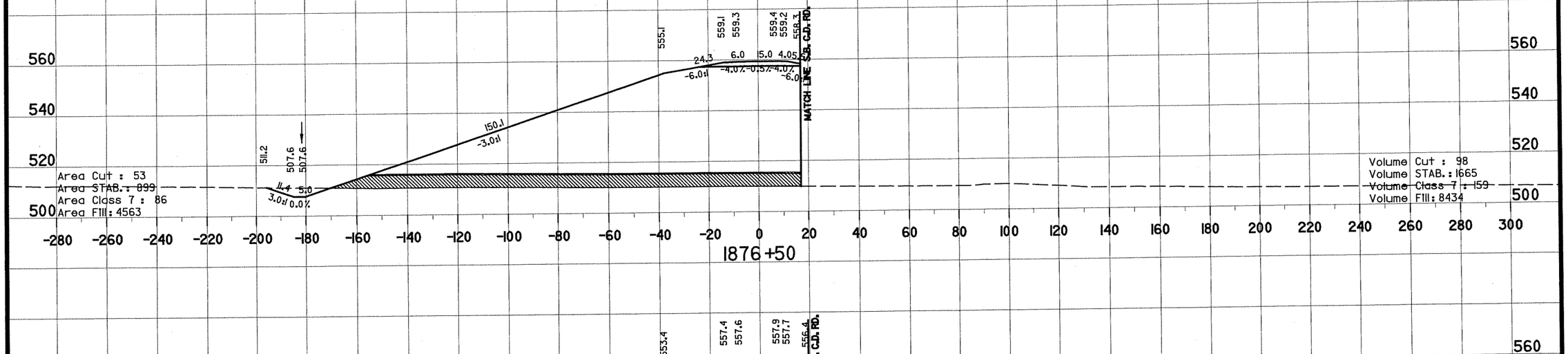

Area Cut : 53
Area STAB. : 899
Area Class 7 : 86
Area Fill : 4563

Volume Cut : 98
Volume STAB. : 1665
Volume Class 7 : 159
Volume Fill : 8434

1876+50

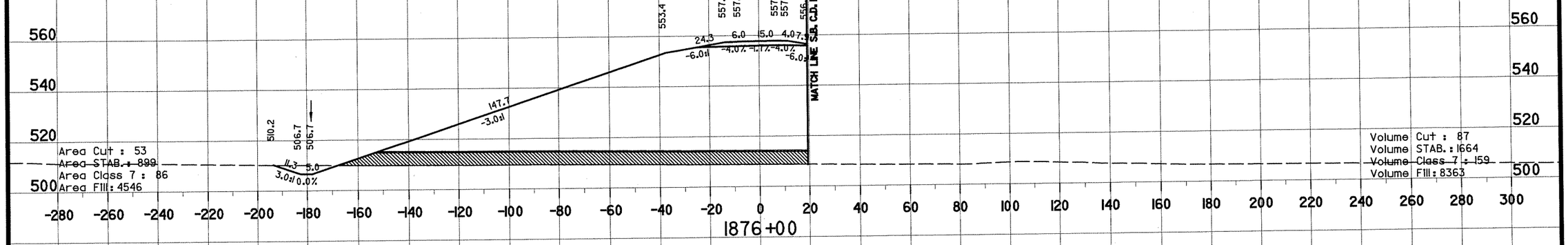

Area Cut : 53
Area STAB. : 899
Area Class 7 : 86
Area Fill : 4546

Volume Cut : 87
Volume STAB. : 1664
Volume Class 7 : 159
Volume Fill : 8363

1876+00

STA. 1875+89.00 END SUPERELEVATION TRANSITION

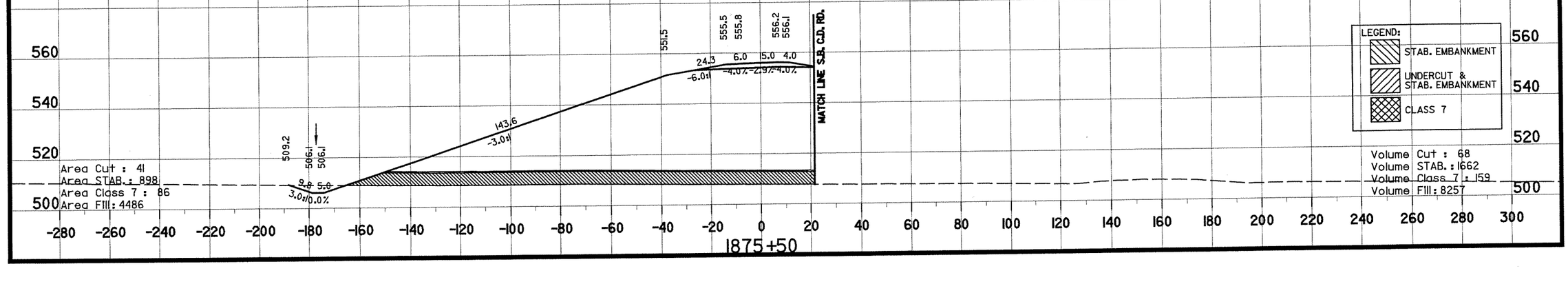

LEGEND:
- STAB. EMBANKMENT
- UNDERCUT & STAB. EMBANKMENT
- CLASS 7

Area Cut : 41
Area STAB. : 898
Area Class 7 : 86
Area Fill : 4486

Volume Cut : 68
Volume STAB. : 1662
Volume Class 7 : 159
Volume Fill : 8257

1875+50

DATE REVISED	DATE FILMED	FED. ROAD DIST. No.	STATE	FED. AID PROJ. NO.	SHEET No.	TOTAL SHEETS
		6	ARK.		210	229
		JOB NO.		040478		

(2) X-SEC. STA. 1860+08 TO STA. 1861+00

TEMP RAMP 5 - U.S. 71 INT.

Area Cut : 0
Area Fill: 0

Volume Cut : 0
Volume Fill: 0

BEGIN GRADING TEMP. RAMP 5 STA. 1861+48.14

FUTURE
STA. 1860+95 ℄ TEMP RAMP 5 ⊕
EXIST. U.S. 71 - CONST.
24" X 66' R.C. PIPE CULV'T
(0° SKEW)
(CLASS III) WITH TYPE 3 BEDDING
WITH S.E.S. LT. & RT.
D.A. = 1.8 ac, Q50 = 7.5 cfs

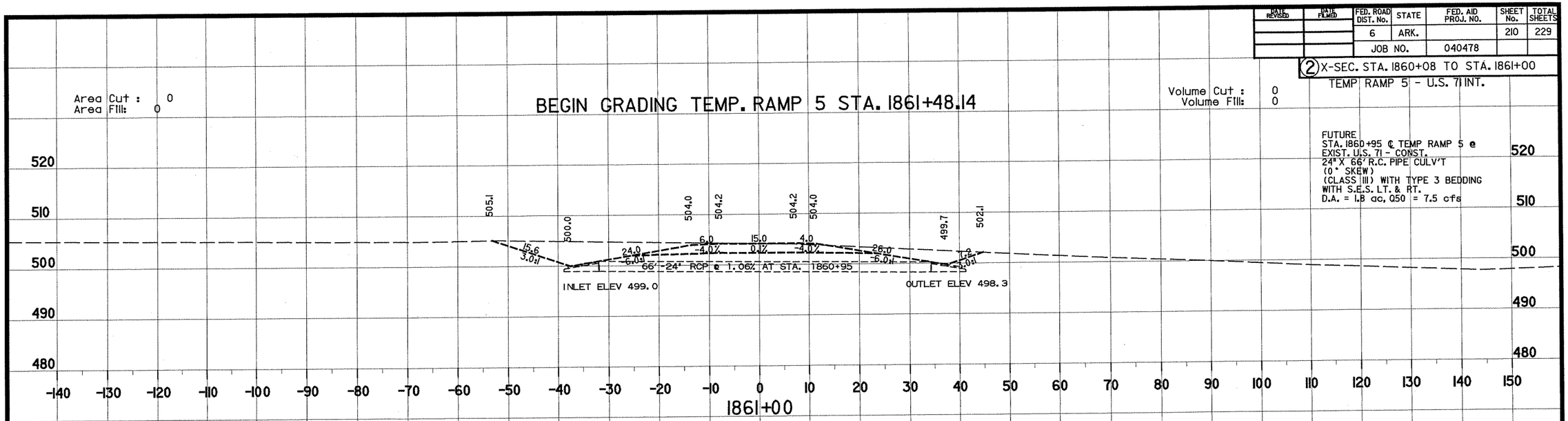

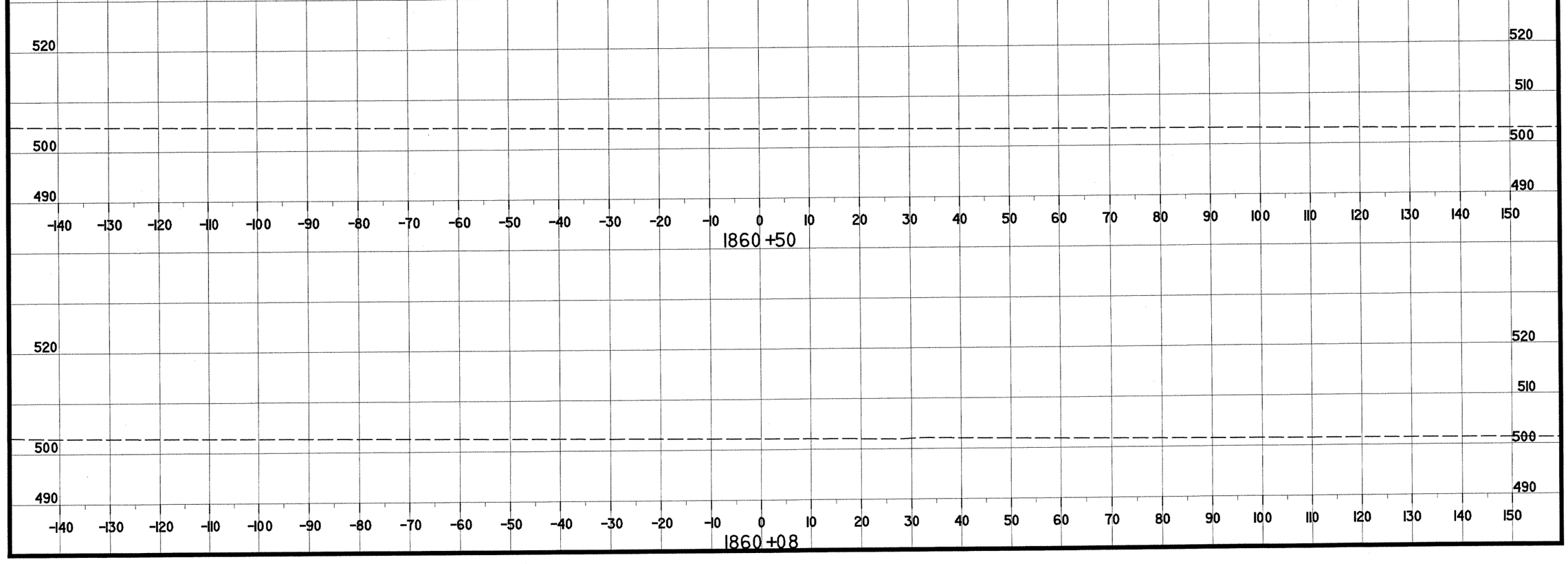

DATE REVISED	DATE FILMED	FED. ROAD DIST. No.	STATE	FED. AID PROJ. NO.	SHEET No.	TOTAL SHEETS
		6	ARK.		211	229
		JOB NO.		040478		

(2) X-SEC. STA. 1861+50 TO STA. 1862+50
TEMP RAMP 5 - U.S. 71 INT.

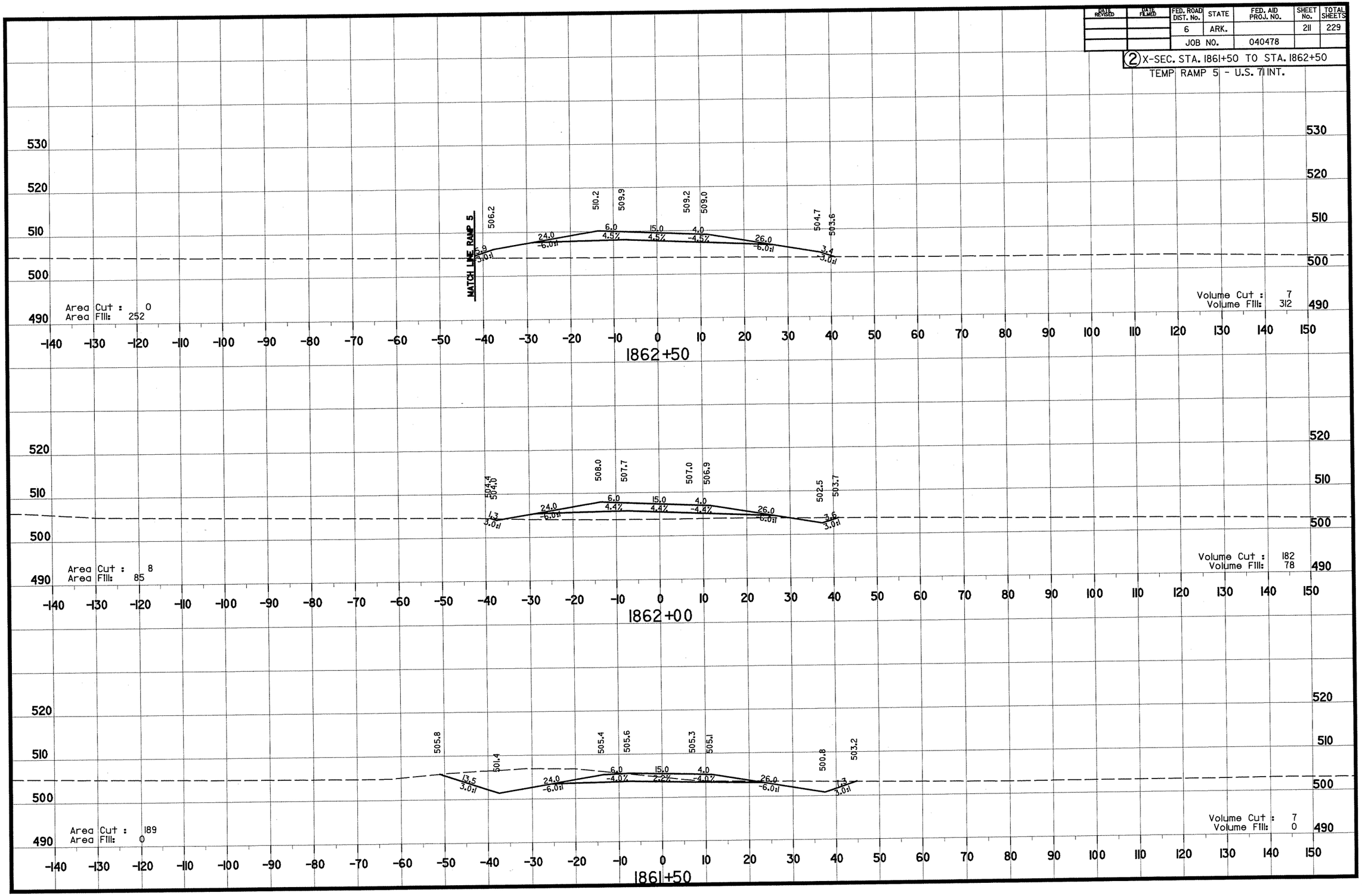

DATE REVISED	DATE FILMED	FED. ROAD DIST. No.	STATE	FED. AID PROJ. NO.	SHEET No.	TOTAL SHEETS
		6	ARK.		212	229
		JOB NO.		040478		

(2) X-SEC. STA. 1863+00 TO STA. 1864+00

TEMP RAMP 5 - U.S. 71 INT.

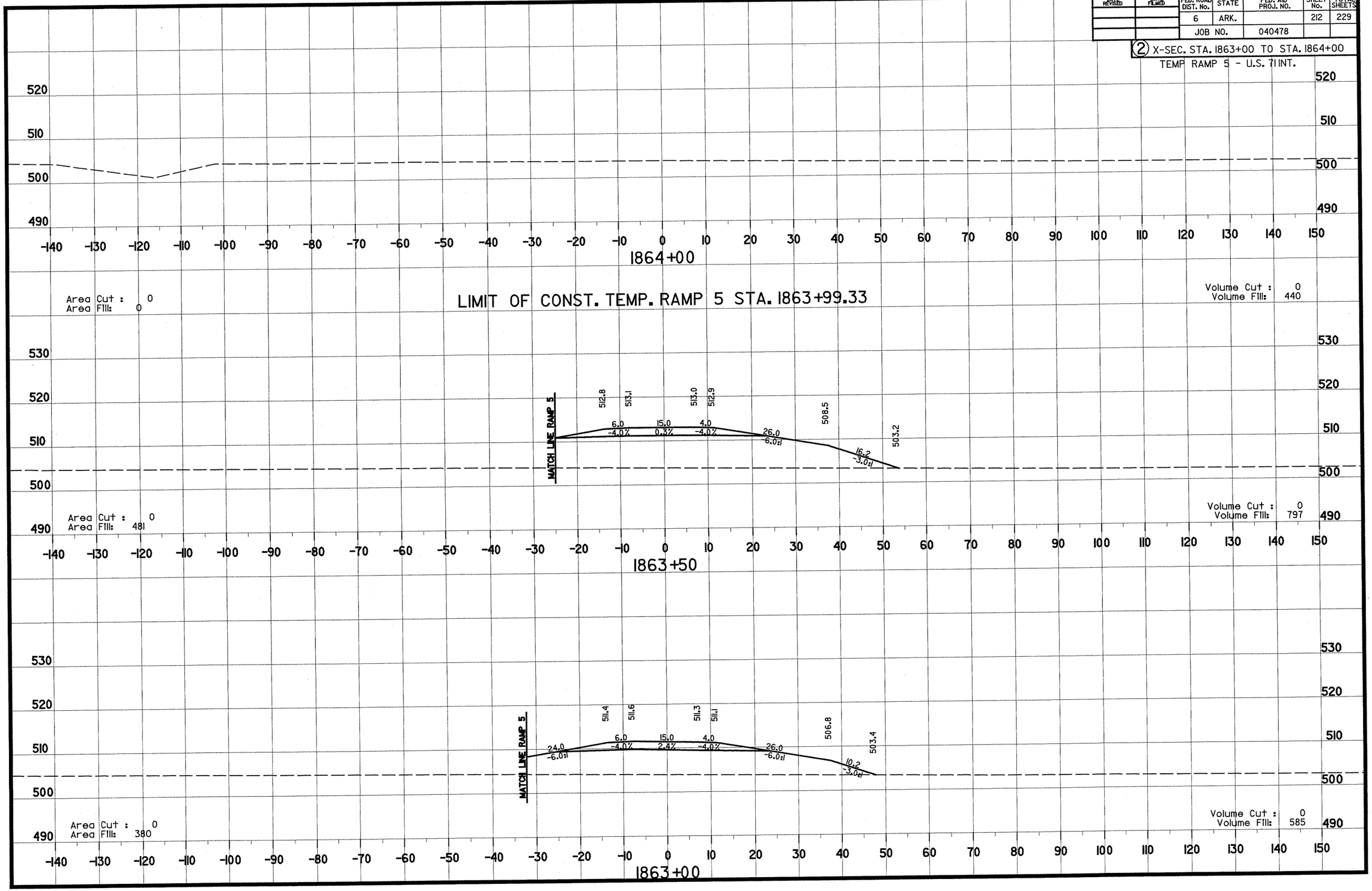

DATE REVISED	DATE FILMED	FED. ROAD DIST. No.	STATE	FED. AID PROJ. NO.	SHEET No.	TOTAL SHEETS
		6	ARK.		213	229
		JOB NO.		040478		

(2) X-SEC. STA. 1862+50 TO STA. 1863+50

FUTURE RAMP 6 - U.S. 71 INT.

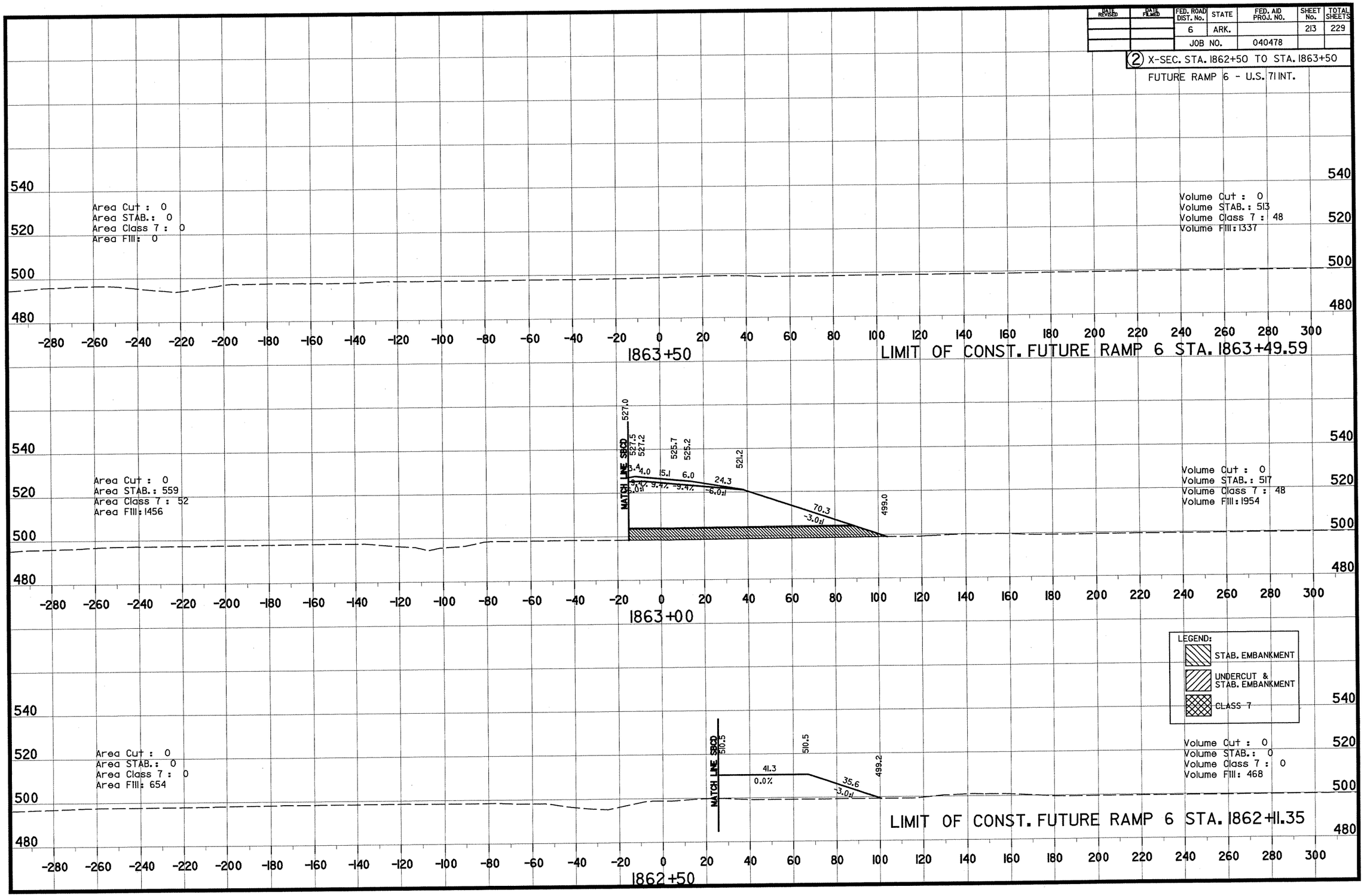

DATE REVISED	DATE FILMED	FED. ROAD DIST. No.	STATE	FED. AID PROJ. No.	SHEET No.	TOTAL SHEETS
		6	ARK.		214	229
		JOB NO.		040478		

(2) X-SEC. STA. 54+00 TO STA. 54+50

CO. RD. 8

STA. 54+50.00 ℄ C.R. #8 - CONST.
24" X 49' R.C. PIPE CULV'T
(CLASS III) TYPE 3 BEDDING
WITH F.E.S. LT. & RT.
D.A. = 0.28 ac. Q50 = 1.2 cfs

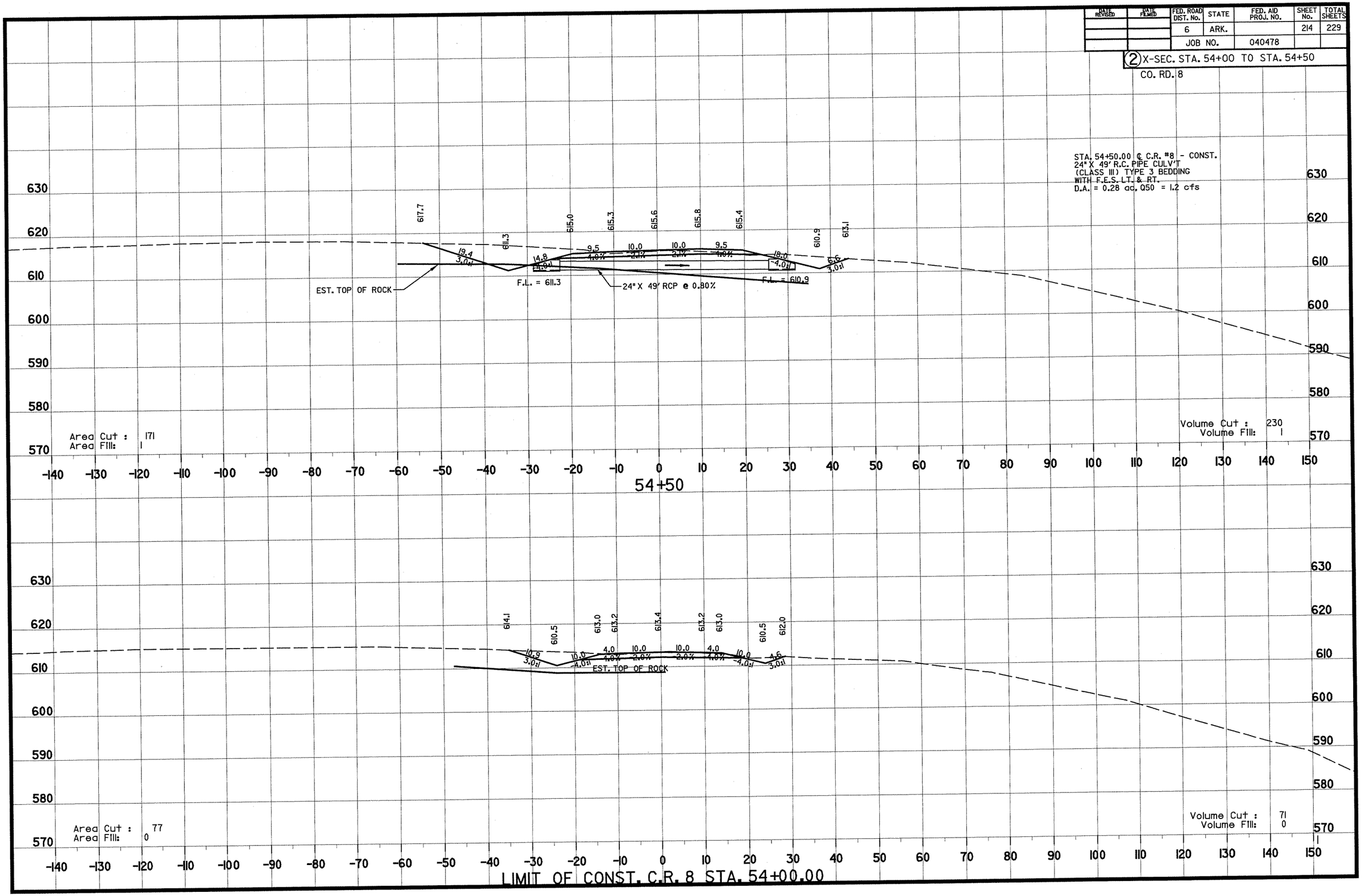

DATE REVISED	DATE FILMED	FED. ROAD DIST. No.	STATE	FED. AID PROJ. No.	SHEET No.	TOTAL SHEETS
		6	ARK.		215	229
		JOB NO.		040478		

(2) X-SEC. STA. 55+00 TO STA. 55+50

CO. RD. 8

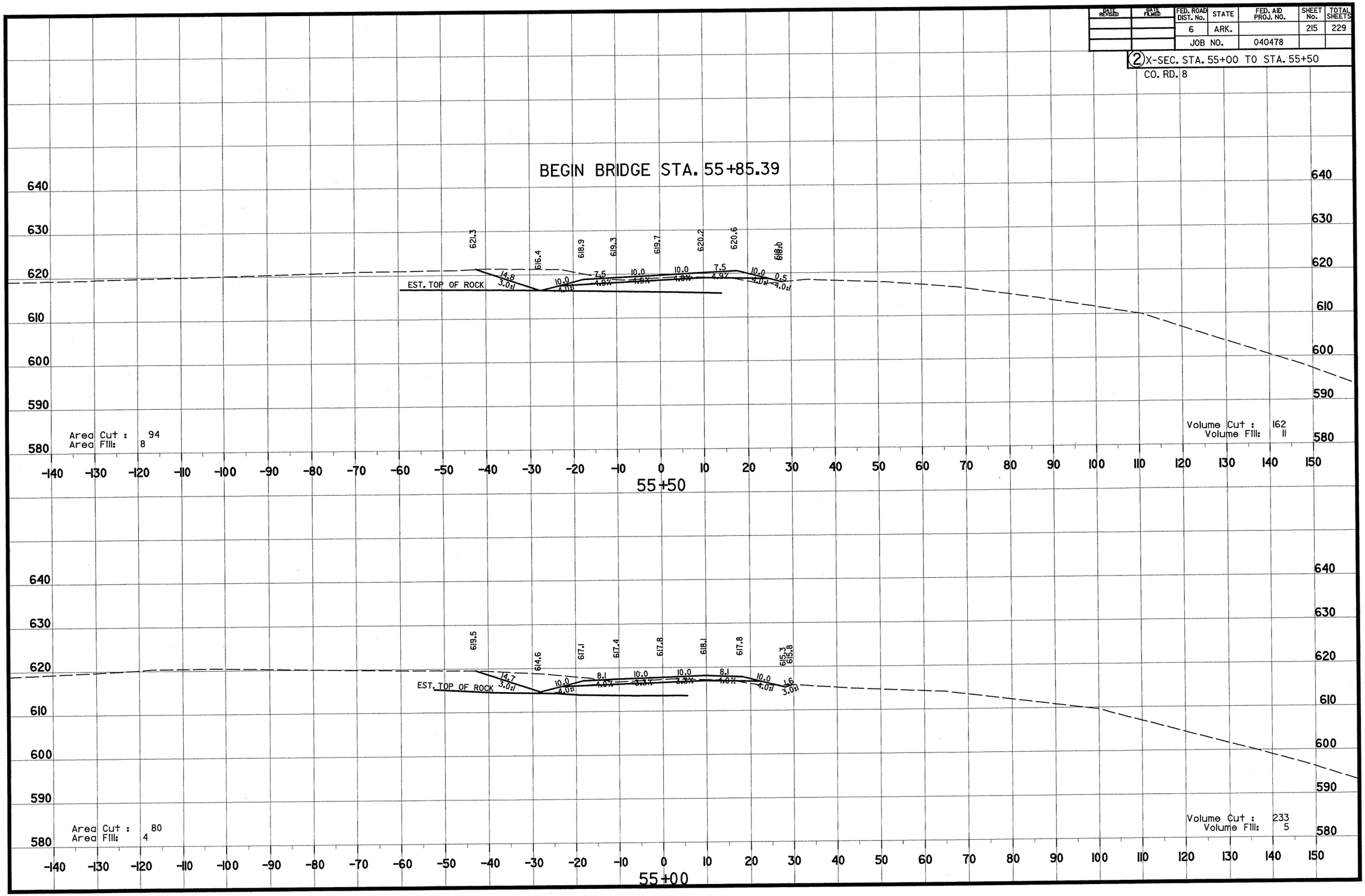

DATE REVISED	DATE FILED	FED. ROAD DIST. No.	STATE	FED. AID PROJ. NO.	SHEET No.	TOTAL SHEETS
		6	ARK.		216	229
		JOB NO.		040478		

(2) X-SEC. STA. 56+00 TO STA. 56+50

CO. RD. 8

640 630 620 610 600 590

620.2 624.7 624.7 621.8 622.2 622.8 623.4 623.7 626.5 626.5 622.0

6.0 10.0 10.0 4.0

-140 -130 -120 -110 -100 -90 -80 -70 -60 -50 -40 -30 -20 -10 0 10 20 30 40 50 60 70 80 90 100 110 120 130 140 150

56+50

Area Cut : 0
Area Fill: 0

0-0 SECTION C.R. 8 STA. 56+24.48

Volume Cut : 130
Volume Fill: 11

630 620 610 600 590 580

618.8 623.3 623.3 620.5 620.9 621.5 622.1 622.3 625.2 625.2 620.7

6.0 10.0 10.0 4.0

MAIN LANE GROUND LINE

-140 -130 -120 -110 -100 -90 -80 -70 -60 -50 -40 -30 -20 -10 0 10 20 30 40 50 60 70 80 90 100 110 120 130 140 150

56+00

DATE REVISED	DATE FILMED	FED. ROAD DIST. No.	STATE	FED. AID PROJ. NO.	SHEET No.	TOTAL SHEETS
		6	ARK.		217	229
		JOB NO.		040478		

(2) X-SEC. STA. 57+00 TO STA. 57+50

CO. RD. 8

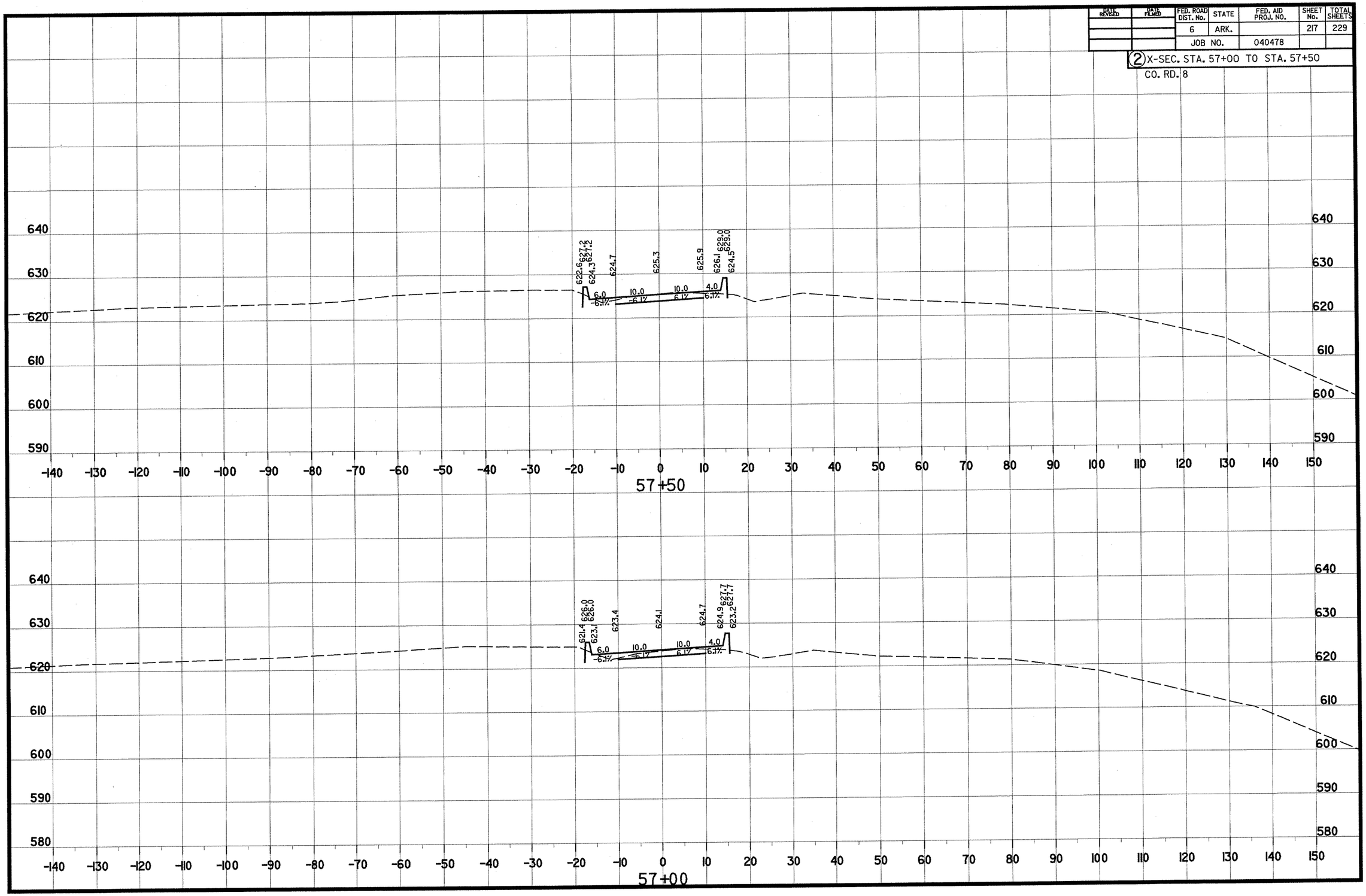

DATE REVISED	DATE FILMED	FED. ROAD DIST. No.	STATE	FED. AID PROJ. NO.	SHEET No.	TOTAL SHEETS
		6	ARK.		218	229
		JOB NO.		040478		

(2) X-SEC. STA. 58+00 TO STA. 58+50

Area Cut : 0
Area Fill: 0

0-0 SECTION C.R. 8 STA. 58+72.52

Volume Cut : 0
Volume Fill: 0

CO. RD. 8

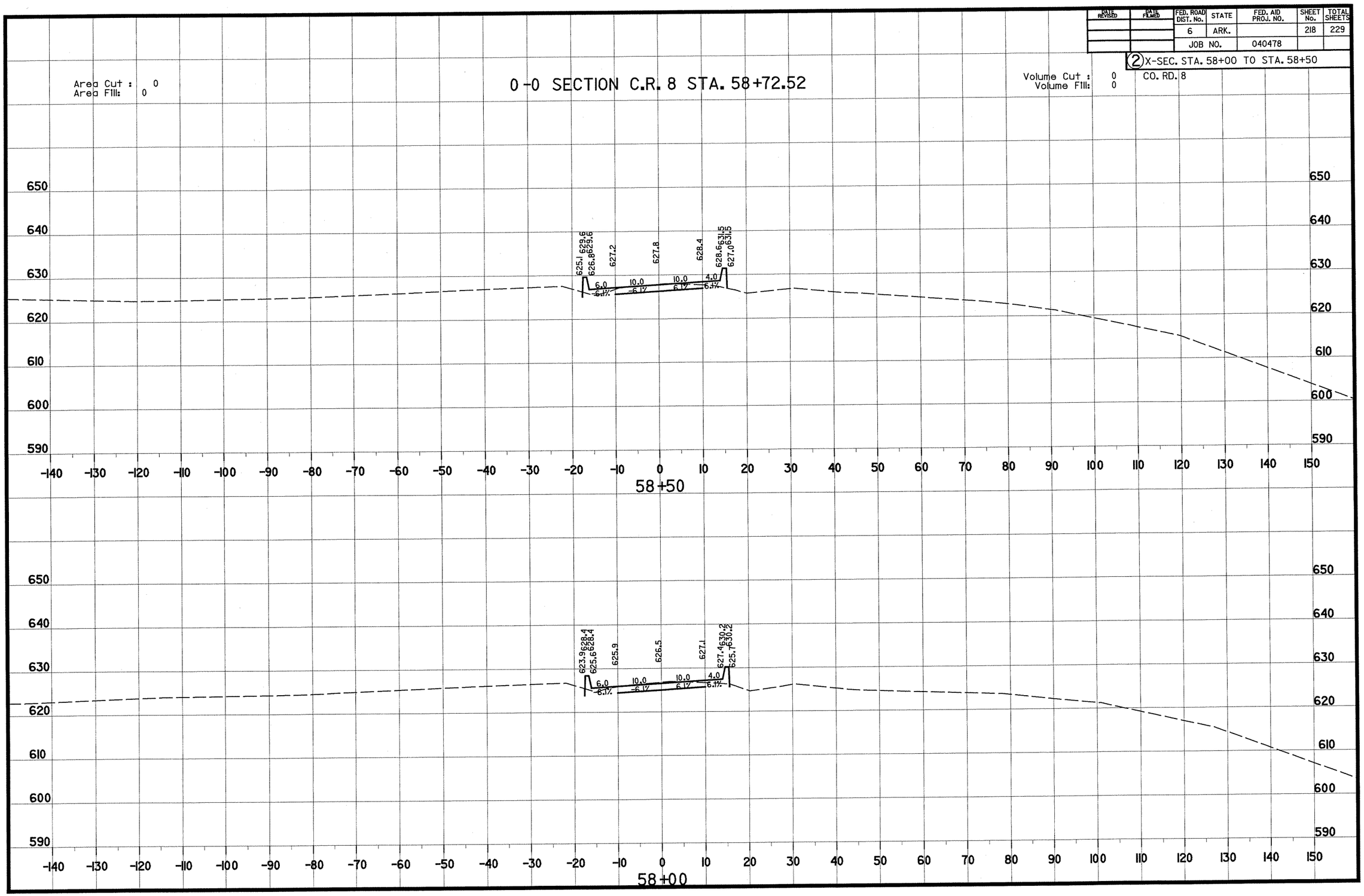

DATE REVISED	DATE FILMED	FED. ROAD DIST. No.	STATE	FED. AID PROJ. No.	SHEET No.	TOTAL SHEETS
		6	ARK.		219	229
		JOB NO.		040478		

(2) X-SEC. STA. 59+00 TO STA. 59+50

CO. RD. 8

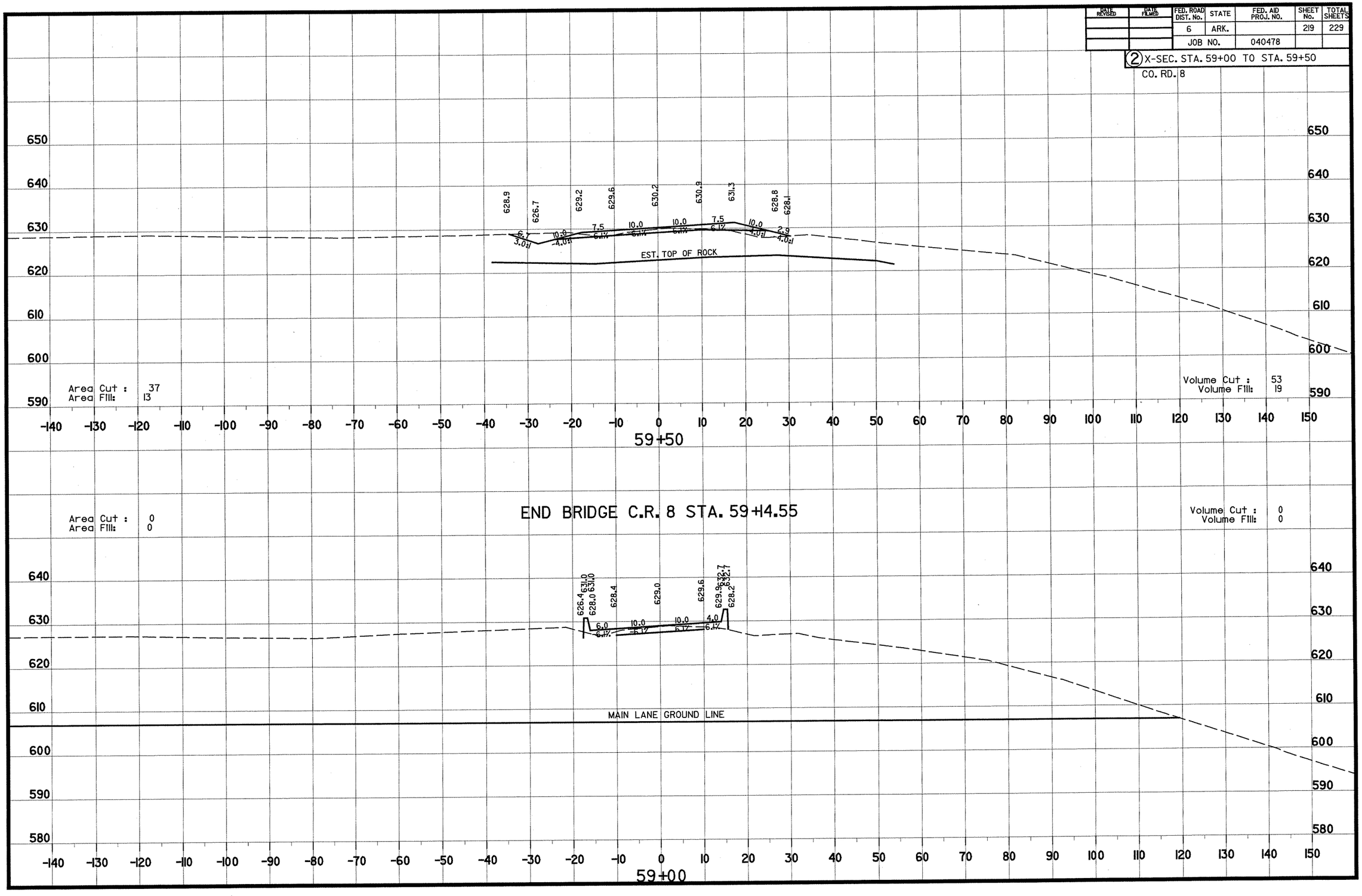

DATE REVISED	DATE FILMED	FED. ROAD DIST. No.	STATE	FED. AID PROJ. NO.	SHEET No.	TOTAL SHEETS
		6	ARK.		220	229
		JOB NO.		040478		

(2) X-SEC. STA. 60+00 TO STA. 60+50

CO. RD. 8

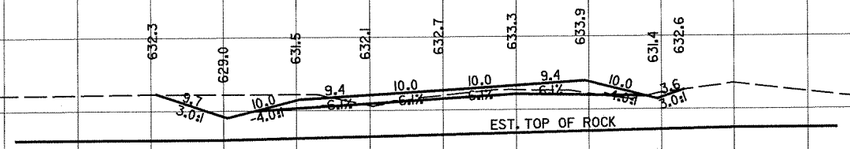

Area Cut : 63
Area Fill: 3

Volume Cut : 103
Volume Fill: 10

60+50

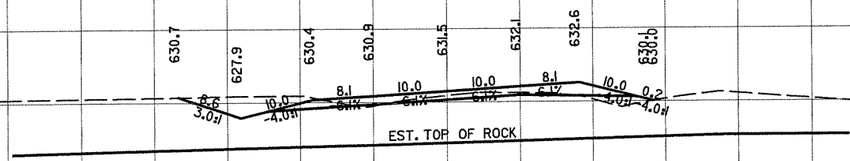

Area Cut : 48
Area Fill: 8

Volume Cut : 79
Volume Fill: 20

60+00

DATE REVISED	DATE FILMED	FED. ROAD DIST. No.	STATE	FED. AID PROJ. NO.	SHEET No.	TOTAL SHEETS
		6	ARK.		221	229
		JOB NO.		040478		

(2) X-SEC. STA. 61+00 TO STA. 61+50

CO. RD. 8

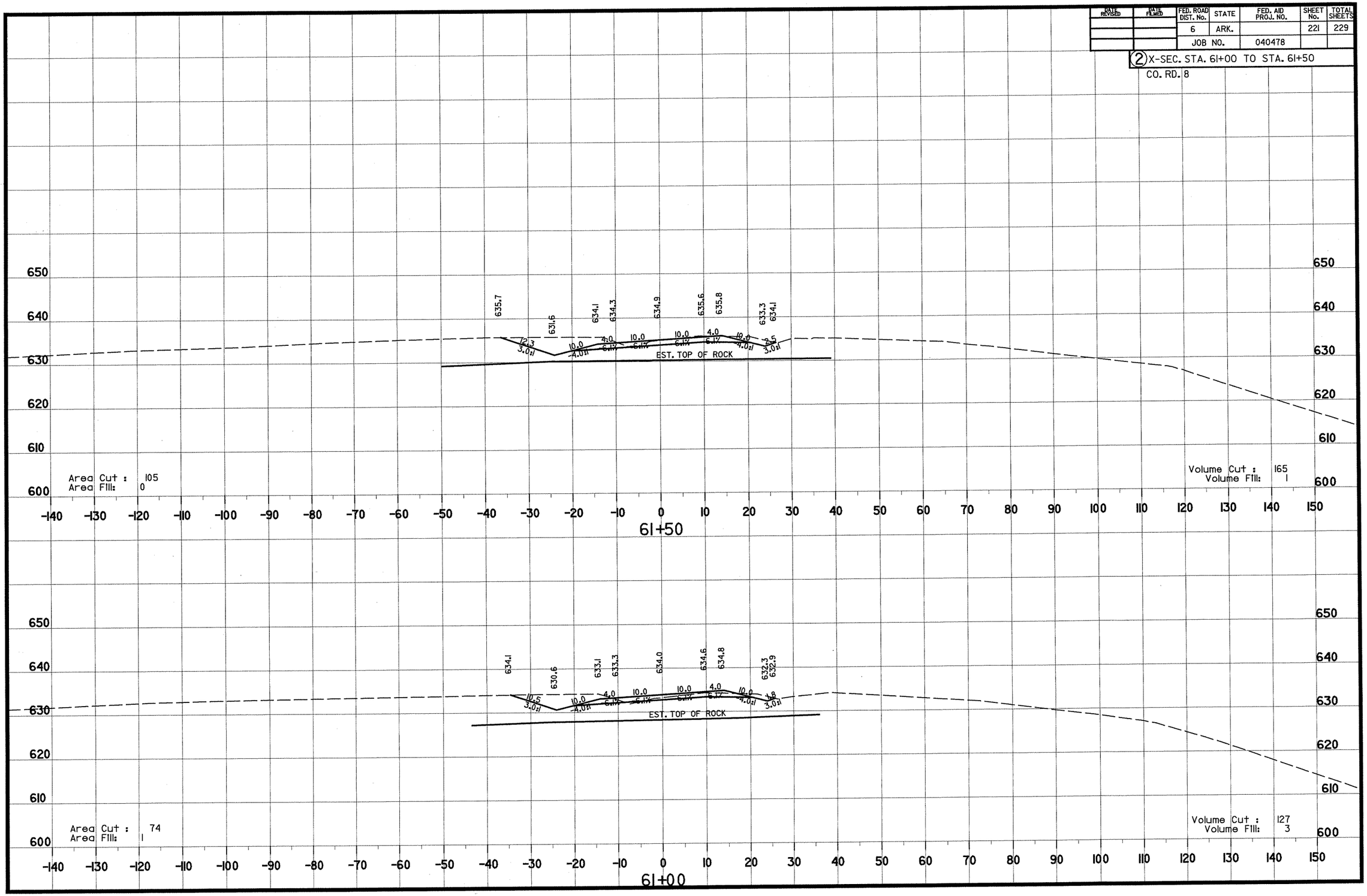

DATE REVISED	DATE FILMED	FED. ROAD DIST. No.	STATE	FED. AID PROJ. NO.	SHEET No.	TOTAL SHEETS
		6	ARK.		222	229
		JOB NO.		040478		

(2) X-SEC. STA. 62+00 TO STA. 62+50

CO. RD. 8

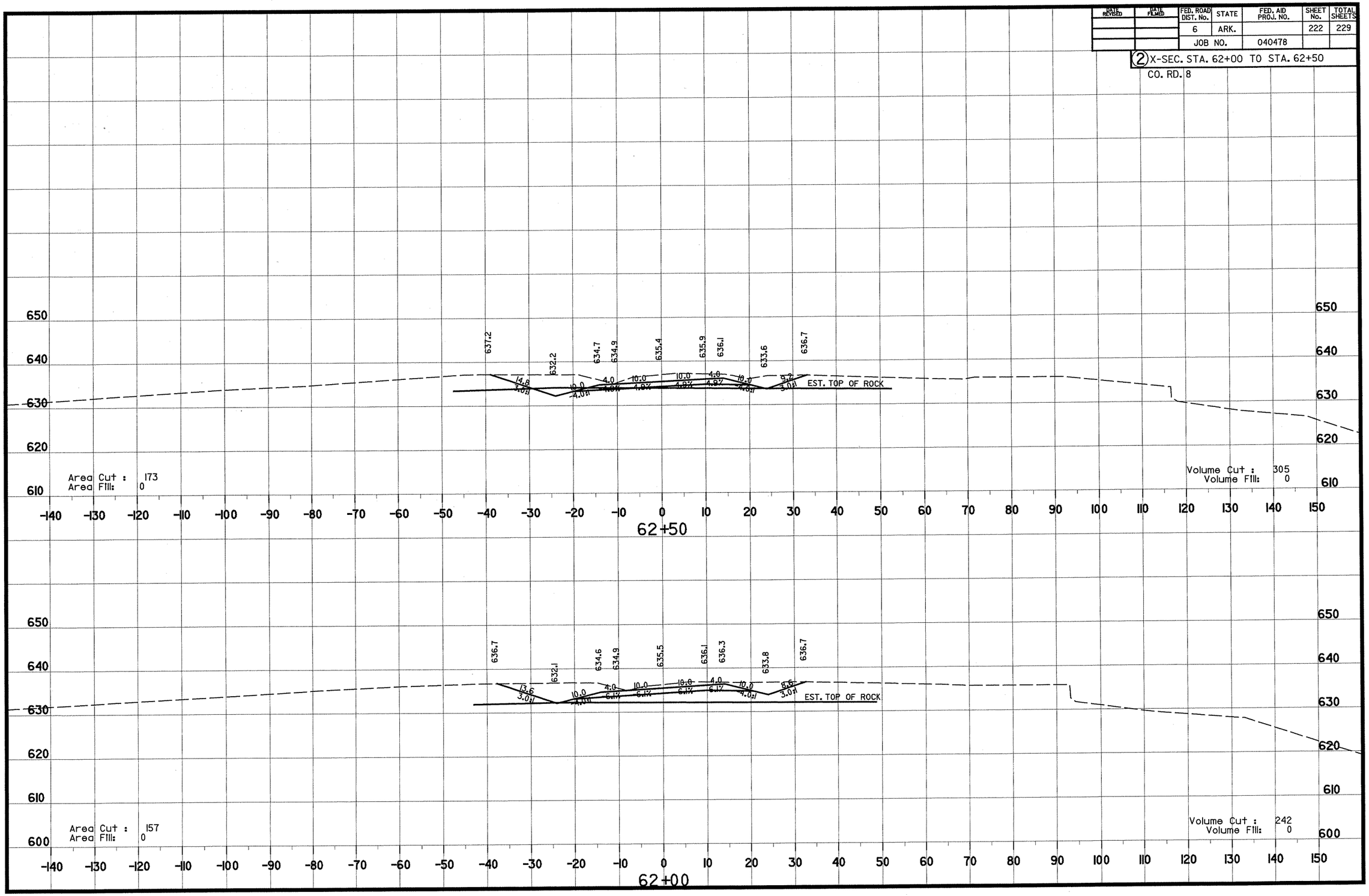

DATE REVISED	DATE FILMED	FED. ROAD DIST. No.	STATE	FED. AID PROJ. NO.	SHEET No.	TOTAL SHEETS
		6	ARK.		223	229
		JOB NO.		040478		

(2) X-SEC. STA. 63+00 TO STA. 63+50

CO. RD. 8

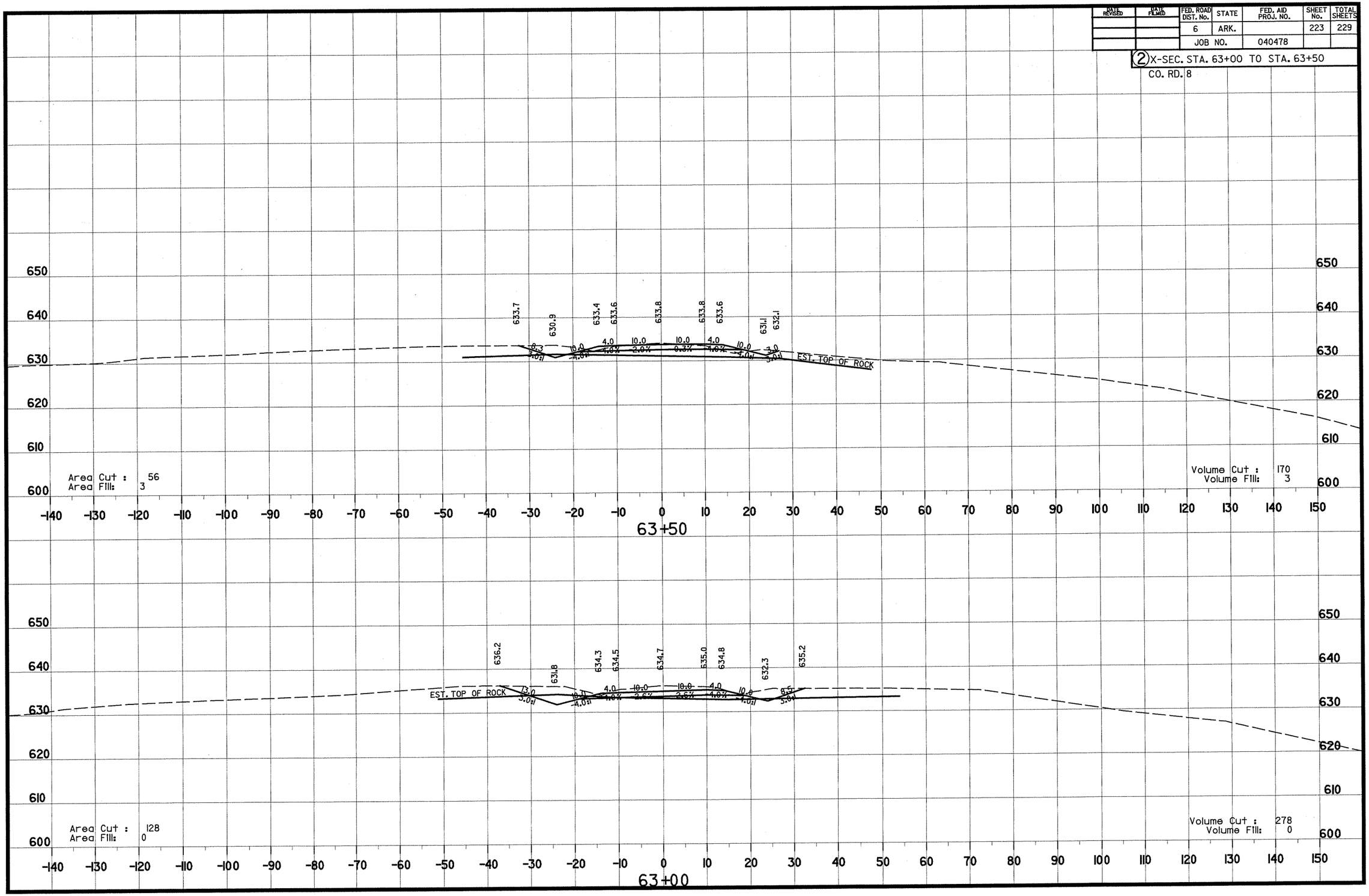

DATE REVISED	DATE FILMED	FED. ROAD DIST. No.	STATE	FED. AID PROJ. No.	SHEET No.	TOTAL SHEETS
		6	ARK.		224	229
		JOB NO.		040478		

(2) X-SEC. STA. 64+00 TO STA. 64+50

CO. RD. 8

Area Cut : 0
Area Fill: 0

Volume Cut : 23
Volume Fill: 6

LIMIT OF CONST. C.R. 8 STA. 64+95.00

629.7 627.9 630.4 630.6 630.8 630.6 630.4 627.8 626.0

10.0 4.0 10.0 10.0 4.0 10.0

3.0:1 4.0:1 4.0% 2.0% 2.0% 4.0% 4.0:1 3.0:1

EST. TOP OF ROCK

650 640 630 620 610 600 590

-140 -130 -120 -110 -100 -90 -80 -70 -60 -50 -40 -30 -20 -10 0 10 20 30 40 50 60 70 80 90 100 110 120 130 140 150

64+50

Area Cut : 27
Area Fill: 7

Volume Cut : 54
Volume Fill: 13

631.9 629.5 632.0 632.2 632.4 632.2 632.0 629.5 630.2

10.0 4.0 10.0 10.0 4.0 10.0

3.0:1 4.0:1 4.0% 2.0% 2.0% 4.0% 4.0:1 3.0:1

EST. TOP OF ROCK

650 640 630 620 610 600 590

-140 -130 -120 -110 -100 -90 -80 -70 -60 -50 -40 -30 -20 -10 0 10 20 30 40 50 60 70 80 90 100 110 120 130 140 150

64+00

Area Cut : 31
Area Fill: 7

Volume Cut : 80
Volume Fill: 10

DATE REVISED	DATE FILMED	FED. ROAD DIST. No.	STATE	FED. AID PROJ. No.	SHEET No.	TOTAL SHEETS
		6	ARK.		225	229
		JOB NO.		040478		

(2) X-SEC. STA. 53+50 TO STA. 54+50

C.R. 8 TEMP. DETOUR

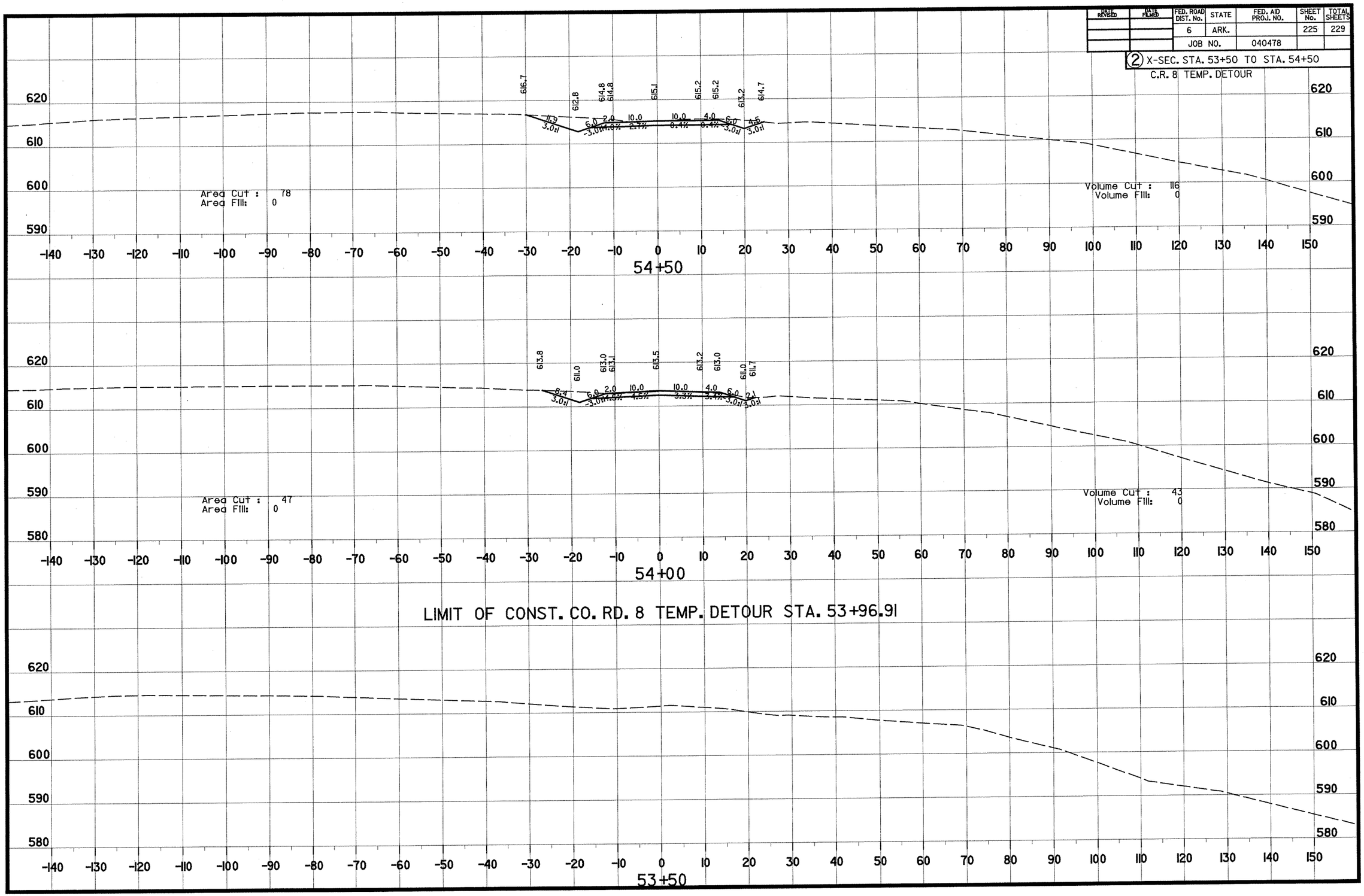

DATE REVISED	DATE FILMED	FED. ROAD DIST. No.	STATE	FED. AID PROJ. No.	SHEET No.	TOTAL SHEETS
		6	ARK.		226	229
		JOB NO.		040478		

(2) X-SEC. STA. 55+00 TO STA. 56+50

C.R. 8 TEMP. DETOUR

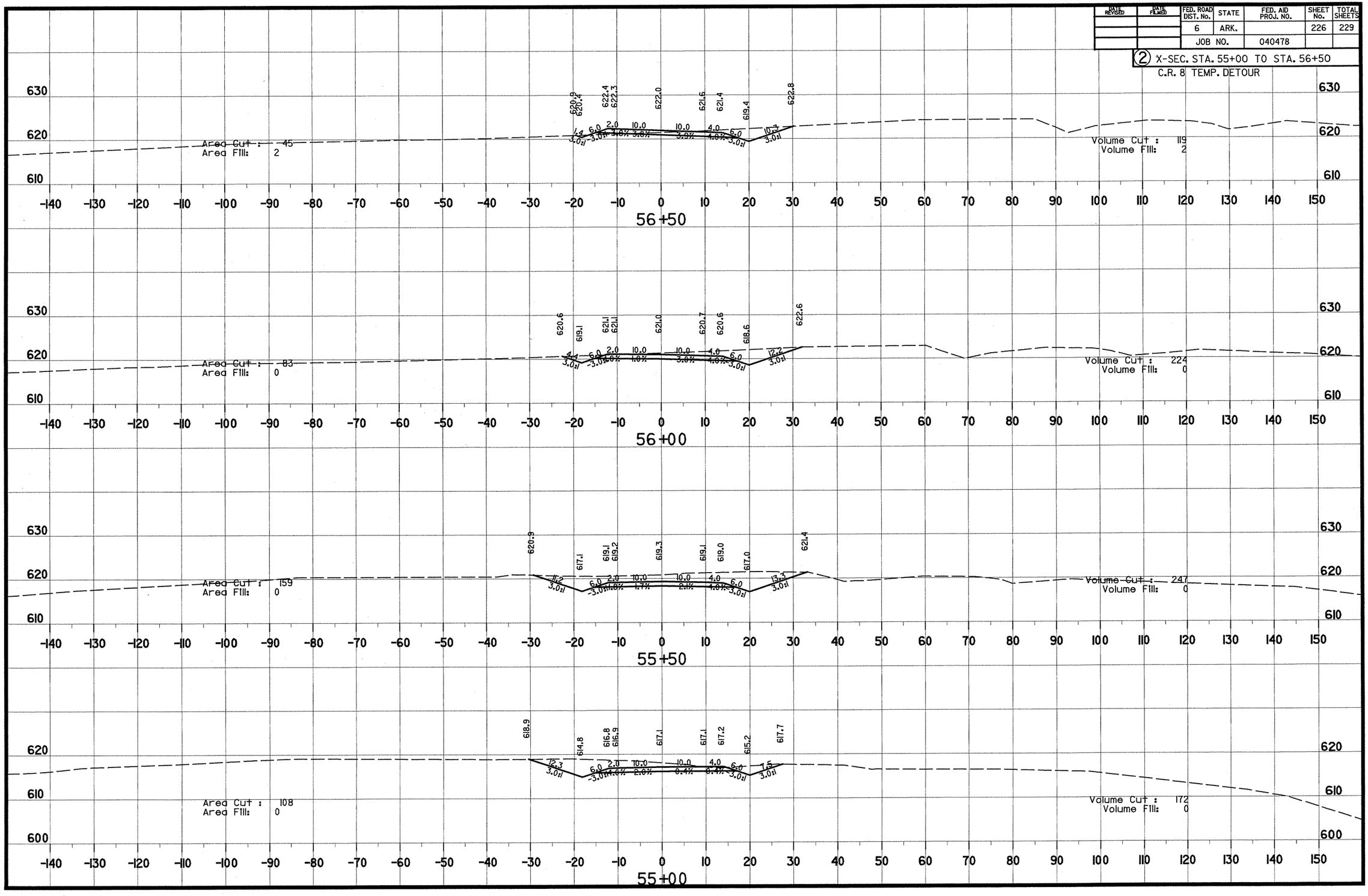

DATE REVISED	DATE FILMED	FED. ROAD DIST. No.	STATE	FED. AID PROJ. NO.	SHEET No.	TOTAL SHEETS
		6	ARK.		227	229
		JOB NO.		040478		

(2) X-SEC. STA. 57+00 TO STA. 59+00

C.R. 8 TEMP. DETOUR

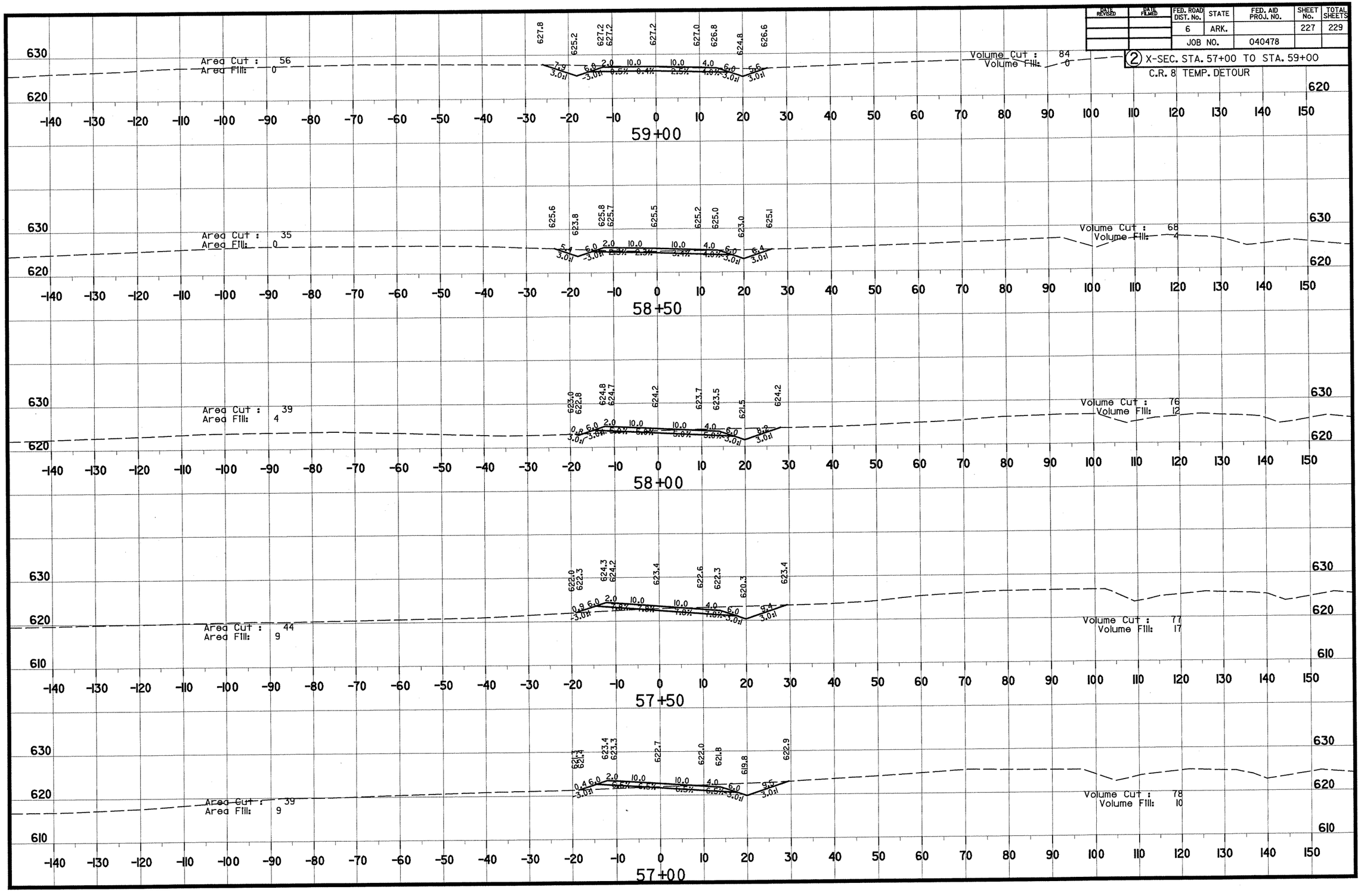

DATE REVISED	DATE FILMED	FED. ROAD DIST. No.	STATE	FED. AID PROJ. NO.	SHEET No.	TOTAL SHEETS
		6	ARK.		228	229
		JOB NO.		040478		

(2) X-SEC. STA. 59+50 TO STA. 61+00

C.R. 8 TEMP. DETOUR

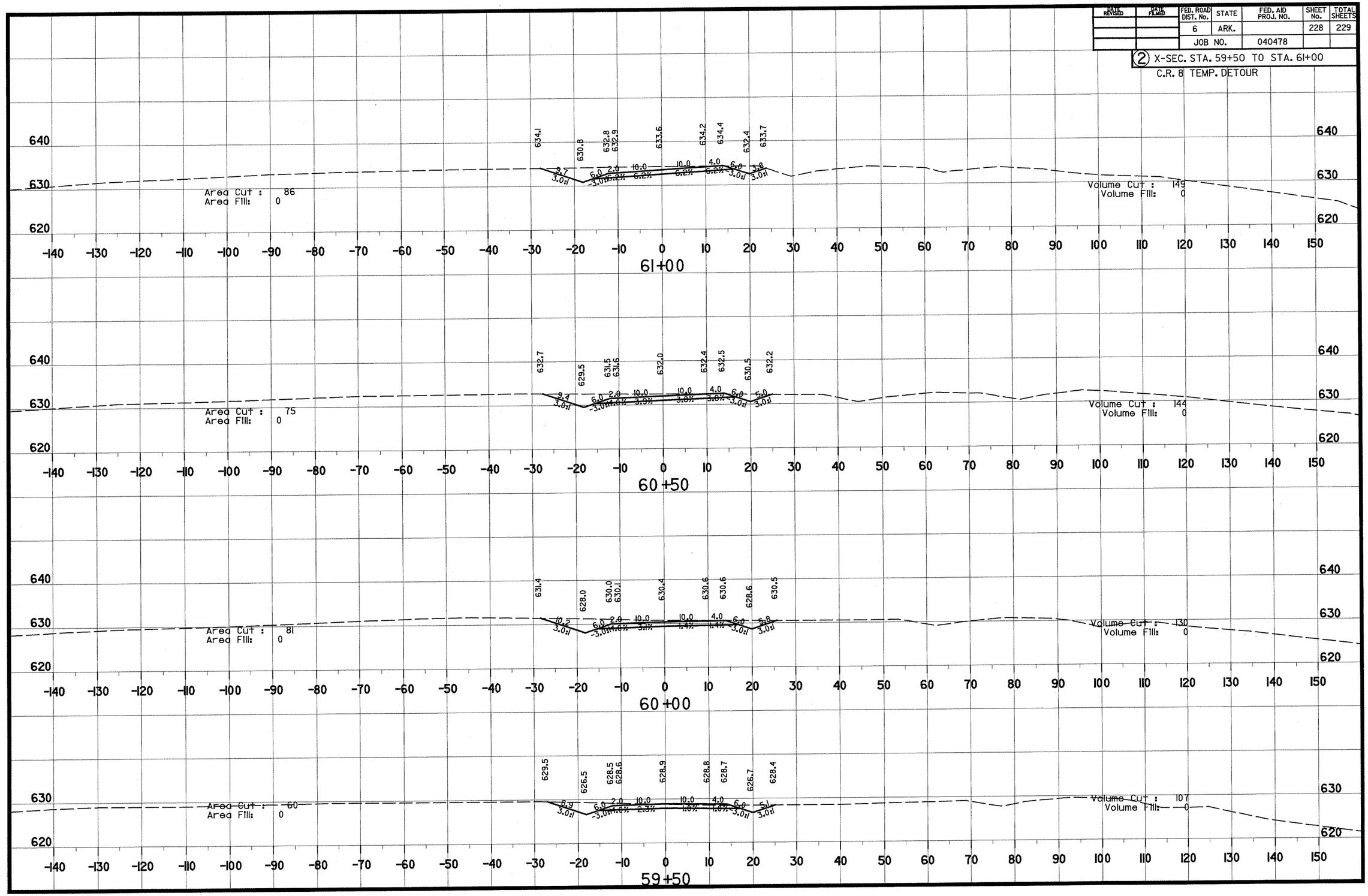

DATE REVISED	DATE FILMED	FED. ROAD DIST. No.	STATE	FED. AID PROJ. No.	SHEET No.	TOTAL SHEETS
		6	ARK.		229	229
		JOB NO.		040478		

(2) X-SEC. STA. 61+50 TO STA. 63+00

C.R. 8 TEMP. DETOUR

LIMIT OF CONST. CO. RD. 8 TEMP. DETOUR 63+44.13

