DATE REVISED	DATE FILMED	DATE REVISED	DATE FILMED	FED.RD. DIST.NO.	STATE	FED.AID PROJ.NO.	SHEET NO.	TOTAL SHEETS
				6	ARK.			
				JOB NO.		100955	1	356
				(2)	HWYS. 77, 140, 158, & 181 STRS. & APPRS. (MISSISSIPPI CO.) (S)			

PROJECT LOCATIONS

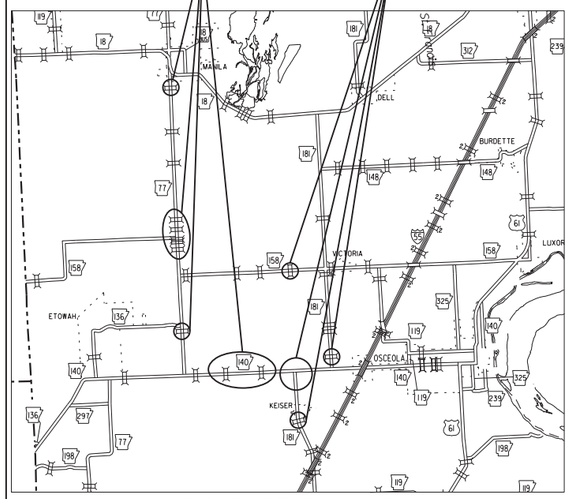

VICINITY MAP

ARKANSAS DEPARTMENT OF TRANSPORTATION
CONSTRUCTION PLANS FOR STATE HIGHWAY

HWYS. 77, 140, 158, & 181
STRS. & APPRS. (MISSISSIPPI CO.) (S)

MISSISSIPPI COUNTY
ROUTE 77 SECTION 2
ROUTE 140 SECTION 2
ROUTE 158 SECTION 1
ROUTE 181 SECTIONS 1 & 2

JOB 100955

FEDERAL AID PROJECT NHPP-CHBP-0047(81)

NOT TO SCALE

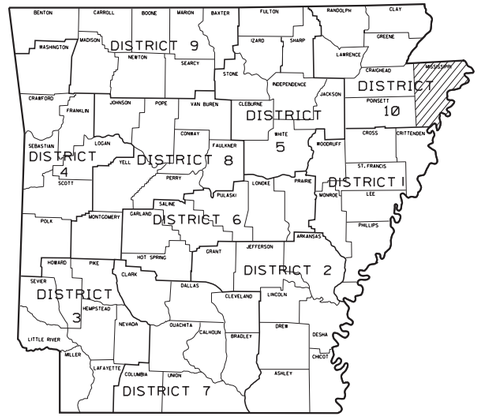

ARKANSAS HIGHWAY DISTRICT 10

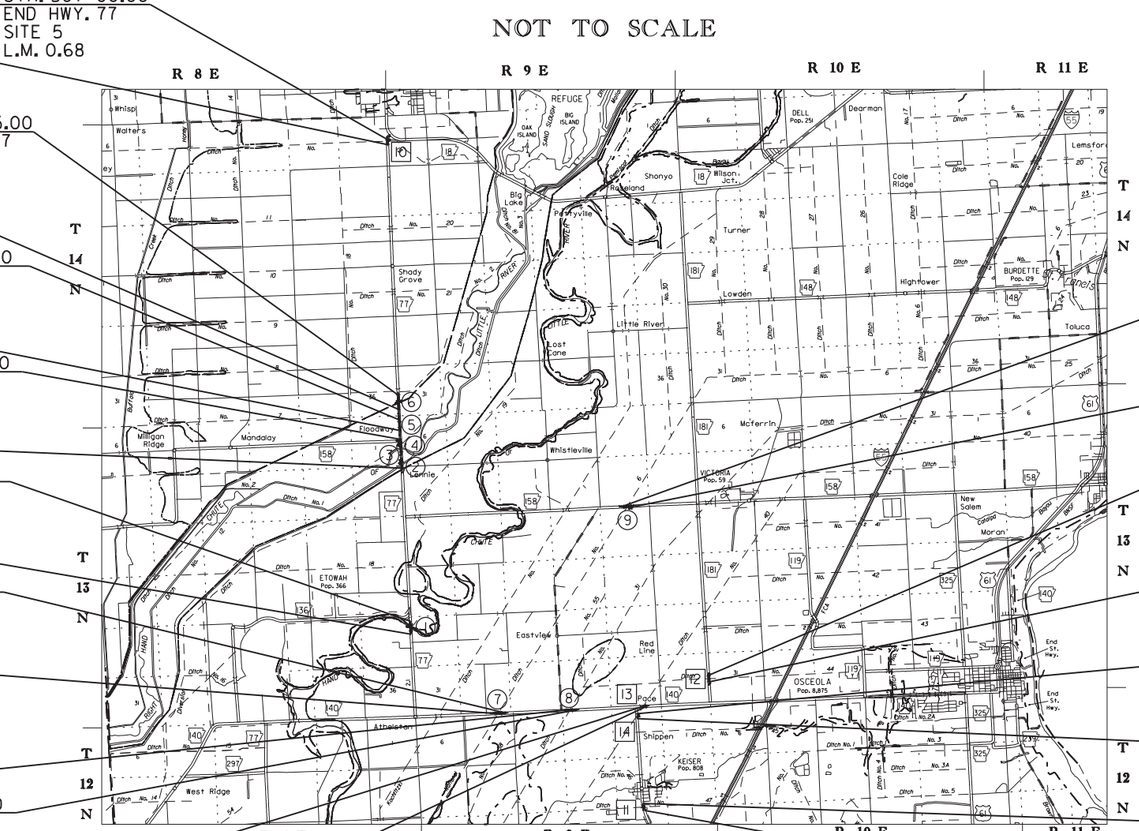

STA. 507+00.00
END HWY. 77
SITE 5
L.M. 0.68

STA. 502+00.00
BEGIN HWY. 77
SITE 5
L.M. 0.70

STA. 281+75.00
END HWY. 77
SITE 4
L.M. 5.80

STA. 267+00.00
BEGIN HWY. 77
SITE 4
L.M. 6.08

STA. 256+00.00
END HWY. 77
SITE 3
L.M. 6.28

STA. 245+00.00
BEGIN HWY. 77
SITE 3
L.M. 6.49

STA. 235+25.00
END HWY. 77
SITE 2
L.M. 6.67

STA. 205+25.00
BEGIN HWY. 77
SITE 2
L.M. 7.24

STA. 113+00.00
END HWY. 77
SITE 1
L.M. 10.33

STA. 102+00.00
BEGIN HWY. 77
SITE 1
L.M. 10.50

STA. 116+50.00
END HWY. 140
SITE 1

STA. 103+00.00
BEGIN HWY. 140
SITE 1
L.M. 8.98

STA. 202+50.00
BEGIN HWY. 140
SITE 2
L.M. 10.42

STA. 215+75.00
END HWY. 140
SITE 2

STA. 303+00.00
BEGIN HWY. 140
SITE 3
L.M. 12.00

STA. 306+00.00
END HWY. 140
SITE 3

STA. 103+25.00
BEGIN HWY. 158
SITE 1
10.47

STA. 114+50.00
END HWY. 158
SITE 1
L.M. 10.26

STA. 311+00.00
END HWY. 181
SITE 3

STA. 302+00.00
BEGIN HWY. 181
SITE 3
L.M. 0.40

STA. 203+50.00
END HWY. 181
SITE 2

STA. 202+00.00
BEGIN HWY. 181
SITE 2
L.M. 5.88

STA. 103+00.00
END HWY. 181
SITE 1

STA. 102+00.00
BEGIN HWY. 181
SITE 1
L.M. 4.17

· DESIGN TRAFFIC DATA HWY. 77 ·

DESIGN YEAR	2041
2021 ADT	1900
2041 ADT	2300
2041 DHV	253
DIRECTIONAL DISTRIBUTION	60%
TRUCKS	06%
DESIGN SPEED	55 MPH

· DESIGN TRAFFIC DATA HWY. 140 ·

DESIGN YEAR	2041
2021 ADT	3300
2041 ADT	4000
2041 DHV	440
DIRECTIONAL DISTRIBUTION	60%
TRUCKS	17%
DESIGN SPEED	60 MPH

· DESIGN TRAFFIC DATA HWY. 158 ·

DESIGN YEAR	2041
2021 ADT	550
2041 ADT	600
2041 DHV	66
DIRECTIONAL DISTRIBUTION	60%
TRUCKS	3%
DESIGN SPEED	60 MPH

· DESIGN TRAFFIC DATA HWY. 181 ·

DESIGN YEAR	2041
2021 ADT	950
2041 ADT	1000
2041 DHV	110
DIRECTIONAL DISTRIBUTION	60%
TRUCKS	7%
DESIGN SPEED	60 MPH

FOR PROJECT COORDINATES SEE SHEET NO. 2.

GROSS LENGTH OF PROJECT	12425.00 FEET OR	2.353 MILES
NET LENGTH OF ROADWAY	9869.03 FEET OR	1.869 MILES
NET LENGTH OF BRIDGES	2555.97 FEET OR	0.484 MILES
NET LENGTH OF PROJECT	12425.00 FEET OR	2.353 MILES

GARVER LLC No. 766 — CERTIFICATE OF AUTHORIZATION — ARKANSAS ENGINEER

STATE OF ARKANSAS — LICENSED PROFESSIONAL ENGINEER — No. 13422 — JOHN F. CANTABERY

DIGITALLY SIGNED 8-31-2021

CGGervasini 8/31/2021 2:02:13 PM
WORKSPACE: AHTD
L:\20\71\70\7642 - ARDOT Job 100955\Drawings\r100955_CO_01.dgn
REVISED DATE:

DATE REVISED	DATE FILMED	DATE REVISED	DATE FILMED	FED.RD. DIST.NO.	STATE	FED.AID PROJ.NO.	SHEET NO.	TOTAL SHEETS
				6	ARK.			
				JOB NO.		100955	2	356

(2) PROJ. COORD. AND STRUCT. OVER 20'-0" SPAN

HWY. 77 - SITE 1 PROJECT COORDINATES
(BRIDGE NO. 07556)

	BEGIN	MID-POINT	END
LATITUDE	N 35°43'23"	N 35°43'29"	N 35°43'34"
LONGITUDE	W 90°10'40"	W 90°10'40"	W 90°10'40"
STATION	102+00.00	107+50.00	113+00.00

HWY. 77 - SITE 2 PROJECT COORDINATES
(BRIDGE NO. 07557, 07558 & 07559)

	BEGIN	MID-POINT	END
LATITUDE	N 35°46'15"	N 35°46'30"	N 35°46'45"
LONGITUDE	W 90°10'41"	W 90°10'41"	W 90°10'41"
STATION	205+25.00	220+25.00	235+25.00

HWY. 77 - SITE 3 PROJECT COORDINATES
(BRIDGE NO. 07560)

	BEGIN	MID-POINT	END
LATITUDE	N 35°46'54"	N 35°47'00"	N 35°47'05"
LONGITUDE	W 90°10'41"	W 90°10'41"	W 90°10'41"
STATION	245+00.00	250+50.00	256+00.00

HWY. 77 - SITE 4 PROJECT COORDINATES
(BRIDGE NO. 07561)

	BEGIN	MID-POINT	END
LATITUDE	N 35°47'16"	N 35°47'23"	N 35°47'31"
LONGITUDE	W 90°10'41"	W 90°10'41"	W 90°10'41"
STATION	267+00.00	274+37.50	281+75.00

HWY. 77 - SITE 5 PROJECT COORDINATES

	BEGIN	MID-POINT	END
LATITUDE	N 35°51'53"	N 35°51'56"	N 35°51'58"
LONGITUDE	W 90°10'39"	W 90°10'39"	W 90°10'39"
STATION	502+00.00	504+50.00	507+00.00

HWY. 140 - SITE 1 PROJECT COORDINATES
(BRIDGE NO. 07562)

	BEGIN	MID-POINT	END
LATITUDE	N 35°41'55"	N 35°41'55"	N 35°41'55"
LONGITUDE	W 90°09'00"	W 90°08'52"	W 90°08'44"
STATION	103+00.00	109+75.00	116+50.00

HWY. 140 - SITE 2 PROJECT COORDINATES
(BRIDGE NO. 07563)

	BEGIN	MID-POINT	END
LATITUDE	N 35°41'55"	N 35°41'55"	N 35°41'55"
LONGITUDE	W 90°07'29"	W 90°07'20"	W 90°07'12"
STATION	202+50.00	209+12.50	215+75.00

HWY. 140 - SITE 3 PROJECT COORDINATES

	BEGIN	MID-POINT	END
LATITUDE	N 35°41'55"	N 35°41'55"	N 35°41'55"
LONGITUDE	W 90°05'48"	W 90°05'46"	W 90°05'44"
STATION	303+00.00	304+50.00	306+00.00

HWY. 181 - SITE 1 PROJECT COORDINATES

	BEGIN	MID-POINT	END
LATITUDE	N 35°40'10"	N 35°40'10"	N 35°40'11"
LONGITUDE	W 90°05'53"	W 90°05'53"	W 90°05'54"
STATION	102+00.00	102+50.00	103+00.00

HWY. 181 - SITE 2 PROJECT COORDINATES

	BEGIN	MID-POINT	END
LATITUDE	N 35°41'45"	N 35°41'45"	N 35°41'46"
LONGITUDE	W 90°05'55"	W 90°05'55"	W 90°05'55"
STATION	202+00.00	202+75.00	203+50.00

HWY. 181 - SITE 3 PROJECT COORDINATES

	BEGIN	MID-POINT	END
LATITUDE	N 35°42'16"	N 35°42'20"	N 35°42'25"
LONGITUDE	W 90°04'22"	W 90°04'22"	W 90°04'22"
STATION	302+00.00	306+50.00	311+00.00

HWY. 158 - SITE 1 PROJECT COORDINATES
(BRIDGE NO. 07564)

	BEGIN	MID-POINT	END
LATITUDE	N 35°43'23"	N 35°45'24"	N 35°45'24"
LONGITUDE	W 90°06'02"	W 90°05'55"	W 90°05'48"
STATION	103+25.00	108+87.50	114+50.00

BRIDGE DATA

(1) STA. 106+68.87 BRIDGE END
BRIDGE NO. 07556 HWY. 77 OVER
LT. HAND CHUTE OF LITTLE RIVER
160'-0" CONT. W-BEAM UNIT (50',60',50')
34'-0" CLEAR ROADWAY
162'-3 1/8" BRIDGE LENGTH
STA. 108+31.13 BRIDGE END

(2) STA. 207+58.75 BRIDGE END
BRIDGE NO. 07557 HWY. 77 OVER
DITCH NO. 1
300'-0" CONT. W-BEAM UNIT (60',60',60',60',60')
34'-0" CLEAR ROADWAY
302'-6" BRIDGE LENGTH
STA. 210+61.25 BRIDGE END

(3) STA. 223+62.90 BRIDGE END
BRIDGE NO. 07558 HWY. 77 OVER
RT. HAND CHUTE OF LITTLE RIVER
360'-0" CONT. W-BEAM UNIT (60',60',60',60',60',60')
34'-0" CLEAR ROADWAY
362'-2 1/2" BRIDGE LENGTH
STA. 227+25.10 BRIDGE END

(4) STA. 228+77.68 BRIDGE END
BRIDGE NO. 07559 HWY. 77 OVER
DITCH NO. 2
220'-0" CONT. W-BEAM UNIT (40',40',60',40',40')
34-0" CLEAR ROADWAY
222'-7 3/4" BRIDGE LENGTH
STA. 231+00.32 BRIDGE END

(5) STA. 249+33.90 BRIDGE END
BRIDGE NO. 07560 HWY. 77 OVER
RELIEF TO RIGHT HAND CHUTE OF LITTLE RIVER
380'-0" CONT. W-BEAM UNIT (40',60',60',60',60',60',40')
34'-0" CLEAR ROADWAY
382'-2 1/2" BRIDGE LENGTH
STA. 253+16.10 BRIDGE END

(6) STA. 271+36.87 BRIDGE END
BRIDGE NO. 07561 HWY. 77 OVER
RELIEF TO RIGHT HAND CHUTE OF
LITTLE RIVER (BORROW DITCH)
150'-0" CONT. W-BEAM UNIT (50',50',50')
34'-0" CLEAR ROADWAY
152'-3 1/8" BRIDGE LENGTH
STA. 272+89.13 BRIDGE END

(7) STA. 108+14.68 BRIDGE END
BRIDGE NO. 07562 HWY. 140 OVER
NATIONAL DITCH NO. 6
270'-0" CONT. W-BEAM UNIT (54',54',54',54',54')
40'-0" CLEAR ROADWAY
272'-7 3/4" BRIDGE LENGTH
STA. 110+87.32 BRIDGE END

(8) STA. 207+70.18 BRIDGE END
BRIDGE NO. 07563 HWY. 140 OVER
DITCH NO. 31
270'-0" CONT. W-BEAM UNIT (54',54',54',54',54')
40'-0" CLEAR ROADWAY
272'-7 3/4" BRIDGE LENGTH
STA. 210+42.82 BRIDGE END

(9) STA. 107+52.68 BRIDGE END
BRIDGE NO. 07564 HWY. 158 OVER
NATIONAL DITCH NO. 6
250'-0" CONT. W-BEAM UNIT (50',50',50',50',50')
30'-0" CLEAR ROADWAY
252'-7 3/4" BRIDGE LENGTH
STA. 110+05.32 BRIDGE END

STRUCTURES OVER 20'-0" SPAN

10 STA. 505+00.00 CONSTRUCT
TRP. 12' X 10' X 84' R.C. BOX CULVERT
WITH 3:1 WINGS LT. & RT.
Q25 = 626 CFS D.A. = 3518 ACRES
SPAN = 38.75'

11 STA. 102+50.00 CONSTRUCT
TRP. 10' X 9' X 86' R.C. BOX CULVERT
10° LT. FWD. SKEW
WITH 3:1 WINGS LT. & RT.
Q25 = 690 CFS D.A. = 2033 ACRES
SPAN = 32.67'

12 STA. 306+75.00 CONSTRUCT
TRP. 9' X 9' X 84' R.C. BOX CULVERT
WITH 3:1 WINGS LT. & RT.
Q25 = 829 CFS D.A. = 2202 ACRES
SPAN = 30.17'

13 STA. 304+23.00 CONSTRUCT
TRP. 11' X 9' X 100' R.C. BOX CULVERT
30° LT. FWD. SKEW
WITH 3:1 WINGS LT. & RT.
Q50 = 1366 CFS D.A. = 125632 ACRES
SPAN = 36.17'

14 STA. 202+91.00 CONSTRUCT
TRP. 11' X 9' X 119' R.C. BOX CULVERT
45° RT. FWD. SKEW
WITH 3:1 WINGS LT. & RT.
Q25 = 1184 CFS D.A. = 125632 ACRES
SPAN = 36.17'

STATE OF ARKANSAS
LICENSED PROFESSIONAL ENGINEER
No. 13436
SHAUN A. ROBERSON
DIGITALLY SIGNED 8-13-2021

PROJECT COORDINATES AND
STRUCTURES OVER 20'-0" SPAN

PJoseph 8/13/2021 5:21:23 PM
WORKSPACE: AHTD
L:\201\T01\7642 - ARDOT Job 100955\Drawings\r100955_CO_02.dgn
REVISED DATE:

INDEX OF SHEETS

SHEET NO.	TITLE	BRIDGE NO.	DRWG.NO.
1	TITLE SHEET		
2	PROJECT COORDINATES AND STRUCTURES OVER 20'-0" SPAN		
3	INDEX OF SHEETS AND STANDARD DRAWINGS		
4	STANDARD DRAWINGS, GOVERNING SPECIFICATIONS, AND GENERAL NOTES		
5 - 12	TYPICAL SECTIONS OF IMPROVEMENT		
13 - 32	SPECIAL DETAILS		
33 - 60	TEMPORARY EROSION CONTROL DETAILS		
61 - 67	MAINTENANCE OF TRAFFIC DETAILS		
68	PERMANENT PAVEMENT MARKING DETAILS		
69	SOIL BORING LOG		
70 - 80	QUANTITIES		
81	SCHEDULE OF BRIDGE QUANTITIES (SHEET 1 OF 2)	07556-07564	64301
82	SCHEDULE OF BRIDGE QUANTITIES (SHEET 2 OF 2)	07556-07564	64302
83	SUMMARY OF QUANTITIES AND REVISIONS		
84 - 100	SURVEY CONTROL DETAILS		
101 - 125	PLAN AND PROFILE SHEETS		
126	PROJECT GENERAL NOTES	07556-07564	64303
127	PRECAST BENT CAP TOLERANCES	07556-07564	64304
128	SUGGESTED SEQUENCE OF CONSTRUCTION	07556-07564	64305
129	LAYOUT OF BRIDGE HIGHWAY 77 OVER LEFT HAND CHUTE OF LITTLE RIVER (SHEET 1 OF 2)	07556	64306
130	LAYOUT OF BRIDGE HIGHWAY 77 OVER LEFT HAND CHUTE OF LITTLE RIVER (SHEET 2 OF 2)	07556	64307
131	DETAILS OF FOUNDATION IMPROVEMENT PLAN HWY. 77 OVER LEFT HAND CHUTE OF LITTLE RIVER	07556	64308
132	DETAILS OF END BENTS HWY. 77 OVER LEFT HAND CHUTE OF LITTLE RIVER (SHEET 1 OF 5)	07556	64309
133	DETAILS OF END BENTS HWY. 77 OVER LEFT HAND CHUTE OF LITTLE RIVER (SHEET 2 OF 5)	07556-07561, 07564	64310
134	DETAILS OF END BENTS HWY. 77 OVER LEFT HAND CHUTE OF LITTLE RIVER (SHEET 3 OF 5)	07556	64311
135	DETAILS OF END BENTS HWY. 77 OVER LEFT HAND CHUTE OF LITTLE RIVER (SHEET 4 OF 5)	07556-07564	64312
136	DETAILS OF END BENTS HWY. 77 OVER LEFT HAND CHUTE OF LITTLE RIVER (SHEET 5 OF 5)	07556	64313
137	DETAILS OF INTERMEDIATE BENTS HWY. 77 OVER LEFT HAND CHUTE OF LITTLE RIVER (SHEET 1 OF 4)	07556	64314
138	DETAILS OF INTERMEDIATE BENTS HWY. 77 OVER LEFT HAND CHUTE OF LITTLE RIVER (SHEET 2 OF 4)	07556, 07562-07564	64315
139	DETAILS OF INTERMEDIATE BENTS HWY. 77 OVER LEFT HAND CHUTE OF LITTLE RIVER (SHEET 3 OF 4)	07556, 07562-07564	64316
140	DETAILS OF INTERMEDIATE BENTS HWY. 77 OVER LEFT HAND CHUTE OF LITTLE RIVER (SHEET 4 OF 4)	07556, 07562-07564	64317
141	COMMON DETAILS OF 34' CLEAR ROADWAY STEEL SUPERSTRUCTURE (SHEET 1 OF 2)	07556-07561	64318
142	COMMON DETAILS OF 34' CLEAR ROADWAY STEEL SUPERSTRUCTURE (SHEET 2 OF 2)	07556-07561	64319
143	DETAILS OF 160'-0" CONTINUOUS W-BEAM UNIT HWY. 77 OVER LEFT HAND CHUTE OF LITTLE RIVER (SHEET 1 OF 3)	07556	64320
144	DETAILS OF 160'-0" CONTINUOUS W-BEAM UNIT HWY. 77 OVER LEFT HAND CHUTE OF LITTLE RIVER (SHEET 2 OF 3)	07556	64321
145	DETAILS OF 160'-0" CONTINUOUS W-BEAM UNIT HWY. 77 OVER LEFT HAND CHUTE OF LITTLE RIVER (SHEET 3 OF 3)	07556	64322
146	LAYOUT OF BRIDGE HIGHWAY 77 OVER DITCH NO. 1 (SHEET 1 OF 2)	07557	64323
147	LAYOUT OF BRIDGE HIGHWAY 77 OVER DITCH NO. 1 (SHEET 2 OF 2)	07557	64324
148	DETAILS OF FOUNDATION IMPROVEMENT PLAN HWY. 77 OVER DITCH NO. 1	07557	64325
149	DETAILS OF END BENTS HWY. 77 OVER DITCH NO. 1 (SHEET 1 OF 4)	07557	64326
150	DETAILS OF END BENTS HWY. 77 OVER DITCH NO. 1 (SHEET 2 OF 4)	07557	64327
151	DETAILS OF END BENTS HWY. 77 OVER DITCH NO. 1 (SHEET 3 OF 4)	07557	64328
152	DETAILS OF END BENTS HWY. 77 OVER DITCH NO. 1 (SHEET 4 OF 4)	07557	64329
153	DETAILS OF INTERMEDIATE BENTS HWY. 77 OVER DITCH NO. 1 (SHEET 1 OF 5)	07557	64330
154	DETAILS OF INTERMEDIATE BENTS HWY. 77 OVER DITCH NO. 1 (SHEET 2 OF 5)	07557	64331
155	DETAILS OF INTERMEDIATE BENTS HWY. 77 OVER DITCH NO. 1 (SHEET 3 OF 5)	07557-07561	64332
156	DETAILS OF INTERMEDIATE BENTS HWY. 77 OVER DITCH NO. 1 (SHEET 4 OF 5)	07557-07561	64333
157	DETAILS OF INTERMEDIATE BENTS HWY. 77 OVER DITCH NO. 1 (SHEET 5 OF 5)	07557-07561	64334
158	DETAILS OF 300'-0" CONTINUOUS W-BEAM UNIT HWY. 77 OVER DITCH NO. 1 (SHEET 1 OF 4)	07557	64335
159	DETAILS OF 300'-0" CONTINUOUS W-BEAM UNIT HWY. 77 OVER DITCH NO. 1 (SHEET 2 OF 4)	07557	64336
160	DETAILS OF 300'-0" CONTINUOUS W-BEAM UNIT HWY. 77 OVER DITCH NO. 1 (SHEET 3 OF 4)	07557	64337
161	DETAILS OF 300'-0" CONTINUOUS W-BEAM UNIT HWY. 77 OVER DITCH NO. 1 (SHEET 4 OF 4)	07557	64338
162	LAYOUT OF BRIDGE HIGHWAY 77 OVER RIGHT HAND CHUTE OF LITTLE RIVER (SHEET 1 OF 2)	07558	64339
163	LAYOUT OF BRIDGE HIGHWAY 77 OVER RIGHT HAND CHUTE OF LITTLE RIVER (SHEET 2 OF 2)	07558	64340
164	DETAILS OF FOUNDATION IMPROVEMENT PLAN HWY. 77 OVER RIGHT HAND CHUTE OF LITTLE RIVER	07558	64341
165	DETAILS OF END BENTS HWY. 77 OVER RIGHT HAND CHUTE OF LITTLE RIVER (SHEET 1 OF 3)	07558	64342
166	DETAILS OF END BENTS HWY. 77 OVER RIGHT HAND CHUTE OF LITTLE RIVER (SHEET 2 OF 3)	07558	64343
167	DETAILS OF END BENTS HWY. 77 OVER RIGHT HAND CHUTE OF LITTLE RIVER (SHEET 3 OF 3)	07558	64344
168	DETAILS OF INTERMEDIATE BENTS HWY. 77 OVER RIGHT HAND CHUTE OF LITTLE RIVER	07558	64345
169	DETAILS OF 360'-0" CONTINUOUS W-BEAM UNIT HWY. 77 OVER RIGHT HAND CHUTE OF LITTLE RIVER (SHEET 1 OF 4)	07558	64346
170	DETAILS OF 360'-0" CONTINUOUS W-BEAM UNIT HWY. 77 OVER RIGHT HAND CHUTE OF LITTLE RIVER (SHEET 2 OF 4)	07558	64347
171	DETAILS OF 360'-0" CONTINUOUS W-BEAM UNIT HWY. 77 OVER RIGHT HAND CHUTE OF LITTLE RIVER (SHEET 3 OF 4)	07558	64348
172	DETAILS OF 360'-0" CONTINUOUS W-BEAM UNIT HWY. 77 OVER RIGHT HAND CHUTE OF LITTLE RIVER (SHEET 4 OF 4)	07558	64349
173	LAYOUT OF BRIDGE HIGHWAY 77 OVER DITCH NO. 2 (SHEET 1 OF 2)	07559	64350
174	LAYOUT OF BRIDGE HIGHWAY 77 OVER DITCH NO. 2 (SHEET 2 OF 2)	07559	64351
175	DETAILS OF FOUNDATION IMPROVEMENT PLAN HWY. 77 OVER DITCH NO. 2	07559	64352
176	DETAILS OF END BENTS HWY. 77 OVER DITCH NO. 2 (SHEET 1 OF 4)	07559	64353
177	DETAILS OF END BENTS HWY. 77 OVER DITCH NO. 2 (SHEET 2 OF 4)	07559	64354
178	DETAILS OF END BENTS HWY. 77 OVER DITCH NO. 2 (SHEET 3 OF 4)	07559	64355
179	DETAILS OF END BENTS HWY. 77 OVER DITCH NO. 2 (SHEET 4 OF 4)	07559	64356
180	DETAILS OF INTERMEDIATE BENTS HWY. 77 OVER DITCH NO. 2 (SHEET 1 OF 2)	07559	64357
181	DETAILS OF INTERMEDIATE BENTS HWY. 77 OVER DITCH NO. 2 (SHEET 2 OF 2)	07559	64358
182	DETAILS OF 220'-0" CONTINUOUS W-BEAM UNIT HWY. 77 OVER DITCH NO. 2 (SHEET 1 OF 4)	07559	64359
183	DETAILS OF 220'-0" CONTINUOUS W-BEAM UNIT HWY. 77 OVER DITCH NO. 2 (SHEET 2 OF 4)	07559	64360
184	DETAILS OF 220'-0" CONTINUOUS W-BEAM UNIT HWY. 77 OVER DITCH NO. 2 (SHEET 3 OF 4)	07559	64361
185	DETAILS OF 220'-0" CONTINUOUS W-BEAM UNIT HWY. 77 OVER DITCH NO. 2 (SHEET 4 OF 4)	07559	64362
186	LAYOUT OF BRIDGE HIGHWAY 77 OVER RELIEF TO RIGHT HAND CHUTE OF LITTLE RIVER (SHEET 1 OF 2)	07560	64363
187	LAYOUT OF BRIDGE HIGHWAY 77 OVER RELIEF TO RIGHT HAND CHUTE OF LITTLE RIVER (SHEET 2 OF 2)	07560	64364
188	DETAILS OF FOUNDATION IMPROVEMENT PLAN HWY. 77 OVER RELIEF TO RIGHT HAND CHUTE OF LITTLE RIVER	07560	64365
189	DETAILS OF END BENTS HWY. 77 OVER RELIEF TO RIGHT HAND CHUTE OF LITTLE RIVER (SHEET 1 OF 3)	07560	64366
190	DETAILS OF END BENTS HWY. 77 OVER RELIEF TO RIGHT HAND CHUTE OF LITTLE RIVER (SHEET 2 OF 3)	07560	64367
191	DETAILS OF END BENTS HWY. 77 OVER RELIEF TO RIGHT HAND CHUTE OF LITTLE RIVER (SHEET 3 OF 3)	07560	64368
192	DETAILS OF INTERMEDIATE BENTS HWY. 77 OVER RELIEF TO RIGHT HAND CHUTE OF LITTLE RIVER	07560	64369
193	DETAILS OF 380'-0" CONTINUOUS W-BEAM UNIT HWY. 77 OVER RELIEF TO RIGHT HAND CHUTE OF LITTLE RIVER (SHEET 1 OF 4)	07560	64370
194	DETAILS OF 380'-0" CONTINUOUS W-BEAM UNIT HWY. 77 OVER RELIEF TO RIGHT HAND CHUTE OF LITTLE RIVER (SHEET 2 OF 4)	07560	64371
195	DETAILS OF 380'-0" CONTINUOUS W-BEAM UNIT HWY. 77 OVER RELIEF TO RIGHT HAND CHUTE OF LITTLE RIVER (SHEET 3 OF 4)	07560	64372
196	DETAILS OF 380'-0" CONTINUOUS W-BEAM UNIT HWY. 77 OVER RELIEF TO RIGHT HAND CHUTE OF LITTLE RIVER (SHEET 4 OF 4)	07560	64373
197	LAYOUT OF BRIDGE HIGHWAY 77 OVER RELIEF TO RIGHT HAND CHUTE OF LITTLE RIVER (BORROW DITCH) (SHEET 1 OF 2)	07561	64374
198	LAYOUT OF BRIDGE HIGHWAY 77 OVER RELIEF TO RIGHT HAND CHUTE OF LITTLE RIVER (BORROW DITCH) (SHEET 2 OF 2)	07561	64375
199	DETAILS OF FOUNDATION IMPROVEMENT PLAN HWY. 77 OVER RELIEF TO RIGHT HAND CHUTE OF LITTLE RIVER (BORROW DITCH)	07561	64376
200	DETAILS OF END BENTS HWY. 77 OVER RELIEF TO RIGHT HAND CHUTE OF LITTLE RIVER (BORROW DITCH) (SHEET 1 OF 4)	07561	64377

STATE OF ARKANSAS
LICENSED PROFESSIONAL ENGINEER
No. 13436
SHAUN A. ROBERSON
DIGITALLY SIGNED 8-13-2021

DATE REVISED	DATE FILMED	DATE REVISED	DATE FILMED	FED.RD. DIST.NO.	STATE	FED.AID PROJ.NO.	SHEET NO.	TOTAL SHEETS
				6	ARK.			
				JOB NO.		100955	3	356

(2) INDEX OF SHEETS AND BRIDGE STANDARD DRAWINGS

INDEX OF SHEETS (CONT.)

SHEET NO.	TITLE	BRIDGE NO.	DRWG.NO.
201	DETAILS OF END BENTS HWY. 77 OVER RELIEF TO RIGHT HAND CHUTE OF LITTLE RIVER (BORROW DITCH) (SHEET 2 OF 4)	07561	64378
202	DETAILS OF END BENTS HWY. 77 OVER RELIEF TO RIGHT HAND CHUTE OF LITTLE RIVER (BORROW DITCH) (SHEET 3 OF 4)	07561	64379
203	DETAILS OF END BENTS HWY. 77 OVER RELIEF TO RIGHT HAND CHUTE OF LITTLE RIVER (BORROW DITCH) (SHEET 4 OF 4)	07561	64380
204	DETAILS OF INTERMEDIATE BENTS HWY. 77 OVER RELIEF TO RIGHT HAND CHUTE OF LITTLE RIVER (BORROW DITCH)	07561	64381
205	DETAILS OF 150'-0" CONTINUOUS W-BEAM UNIT HWY. 77 OVER RELIEF TO RIGHT HAND CHUTE OF LITTLE RIVER (BORROW DITCH) (SHEET 1 OF 3)	07561	64382
206	DETAILS OF 150'-0" CONTINUOUS W-BEAM UNIT HWY. 77 OVER RELIEF TO RIGHT HAND CHUTE OF LITTLE RIVER (BORROW DITCH) (SHEET 2 OF 3)	07561	64383
207	DETAILS OF 150'-0" CONTINUOUS W-BEAM UNIT HWY. 77 OVER RELIEF TO RIGHT HAND CHUTE OF LITTLE RIVER (BORROW DITCH) (SHEET 3 OF 3)	07561	64384
208	LAYOUT OF BRIDGE HIGHWAY 140 OVER NATIONAL DITCH NO. 6 (SHEET 1 OF 2)	07562	64385
209	LAYOUT OF BRIDGE HIGHWAY 140 OVER NATIONAL DITCH NO. 6 (SHEET 2 OF 2)	07562	64386
210	DETAILS OF FOUNDATION IMPROVEMENT PLAN HWY. 140 OVER NATIONAL DITCH NO. 6	07562	64387
211	DETAILS OF END BENTS HWY. 140 OVER NATIONAL DITCH NO. 6 (SHEET 1 OF 5)	07562	64388
212	DETAILS OF END BENTS HWY. 140 OVER NATIONAL DITCH NO. 6 (SHEET 2 OF 5)	07562-07563	64389
213	DETAILS OF END BENTS HWY. 140 OVER NATIONAL DITCH NO. 6 (SHEET 3 OF 5)	07562	64390
214	DETAILS OF END BENTS HWY. 140 OVER NATIONAL DITCH NO. 6 (SHEET 4 OF 5)	07562-07563	64391
215	DETAILS OF END BENTS HWY. 140 OVER NATIONAL DITCH NO. 6 (SHEET 5 OF 5)	07562	64392
216	DETAILS OF INTERMEDIATE BENTS HWY. 140 OVER NATIONAL DITCH NO. 6 (SHEET 1 OF 2)	07562	64393
217	DETAILS OF INTERMEDIATE BENTS HWY. 140 OVER NATIONAL DITCH NO. 6 (SHEET 2 OF 2)	07562	64394
218	DETAILS OF 270'-0" CONTINUOUS W-BEAM UNIT HWY. 140 OVER NATIONAL DITCH NO. 6 HWY. 140 OVER DITCH NO. 31 (SHEET 1 OF 6)	07562-07563	64395
219	DETAILS OF 270'-0" CONTINUOUS W-BEAM UNIT HWY. 140 OVER NATIONAL DITCH NO. 6 HWY. 140 OVER DITCH NO. 31 (SHEET 2 OF 6)	07562-07563	64396
220	DETAILS OF 270'-0" CONTINUOUS W-BEAM UNIT HWY. 140 OVER NATIONAL DITCH NO. 6 HWY. 140 OVER DITCH NO. 31 (SHEET 3 OF 6)	07562-07563	64397
221	DETAILS OF 270'-0" CONTINUOUS W-BEAM UNIT HWY. 140 OVER NATIONAL DITCH NO. 6 HWY. 140 OVER DITCH NO. 31 (SHEET 4 OF 6)	07562-07563	64398
222	DETAILS OF 270'-0" CONTINUOUS W-BEAM UNIT HWY. 140 OVER NATIONAL DITCH NO. 6 HWY. 140 OVER DITCH NO. 31 (SHEET 5 OF 6)	07562-07563	64399
223	DETAILS OF 270'-0" CONTINUOUS W-BEAM UNIT HWY. 140 OVER NATIONAL DITCH NO. 6 HWY. 140 OVER DITCH NO. 31 (SHEET 6 OF 6)	07562-07563	64400
224	LAYOUT OF BRIDGE HIGHWAY 140 OVER DITCH NO. 31 (SHEET 1 OF 2)	07563	64401
225	LAYOUT OF BRIDGE HIGHWAY 140 OVER DITCH NO. 31 (SHEET 2 OF 2)	07563	64402
226	DETAILS OF END BENTS HWY. 140 OVER DITCH NO. 31 (SHEET 1 OF 3)	07563	64403
227	DETAILS OF END BENTS HWY. 140 OVER DITCH NO. 31 (SHEET 2 OF 3)	07563	64404
228	DETAILS OF END BENTS HWY. 140 OVER DITCH NO. 31 (SHEET 3 OF 3)	07563	64405
229	DETAILS OF INTERMEDIATE BENTS HWY. 140 OVER DITCH NO. 31 (SHEET 1 OF 2)	07563	64406
230	DETAILS OF INTERMEDIATE BENTS HWY. 140 OVER DITCH NO. 31 (SHEET 2 OF 2)	07563	64407
231	LAYOUT OF BRIDGE HIGHWAY 158 OVER NATIONAL DITCH NO. 6 (SHEET 1 OF 2)	07564	64408
232	LAYOUT OF BRIDGE HIGHWAY 158 OVER NATIONAL DITCH NO. 6 (SHEET 2 OF 2)	07564	64409
233	DETAILS OF END BENTS HWY. 158 OVER NATIONAL DITCH NO. 6 (SHEET 1 OF 4)	07564	64410
234	DETAILS OF END BENTS HWY. 158 OVER NATIONAL DITCH NO. 6 (SHEET 2 OF 4)	07564	64411
235	DETAILS OF END BENTS HWY. 158 OVER NATIONAL DITCH NO. 6 (SHEET 3 OF 4)	07564	64412
236	DETAILS OF END BENTS HWY. 158 OVER NATIONAL DITCH NO. 6 (SHEET 4 OF 4)	07564	64413
237	DETAILS OF INTERMEDIATE BENTS HWY. 158 OVER NATIONAL DITCH NO. 6	07564	64414
238	DETAILS OF 250'-0" CONTINUOUS W-BEAM UNIT HWY. 158 OVER NATIONAL DITCH NO. 6 (SHEET 1 OF 6)	07564	64415
239	DETAILS OF 250'-0" CONTINUOUS W-BEAM UNIT HWY. 158 OVER NATIONAL DITCH NO. 6 (SHEET 2 OF 6)	07564	64416
240	DETAILS OF 250'-0" CONTINUOUS W-BEAM UNIT HWY. 158 OVER NATIONAL DITCH NO. 6 (SHEET 3 OF 6)	07564	64417
241	DETAILS OF 250'-0" CONTINUOUS W-BEAM UNIT HWY. 158 OVER NATIONAL DITCH NO. 6 (SHEET 4 OF 6)	07564	64418
242	DETAILS OF 250'-0" CONTINUOUS W-BEAM UNIT HWY. 158 OVER NATIONAL DITCH NO. 6 (SHEET 5 OF 6)	07564	64419
243	DETAILS OF 250'-0" CONTINUOUS W-BEAM UNIT HWY. 158 OVER NATIONAL DITCH NO. 6 (SHEET 6 OF 6)	07564	64420
244	COMMON SUPERSTRUCTURE DETAILS (SHEET 1 OF 4)	07556-07564	64421
245	COMMON SUPERSTRUCTURE DETAILS (SHEET 2 OF 4)	07556-07564	64422
246	COMMON SUPERSTRUCTURE DETAILS (SHEET 3 OF 4)	07556-07564	64423
247	COMMON SUPERSTRUCTURE DETAILS (SHEET 4 OF 4)	07556-07564	64424
248	DETAILS OF ELASTOMERIC BEARINGS (SHEET 1 OF 2)	07556-07564	64425
249	DETAILS OF ELASTOMERIC BEARINGS (SHEET 2 OF 2)	07556-07564	64426
250	DETAILS OF TYPE SPECIAL APPROACH GUTTERS (SHEET 1 OF 3)	07556-07564	64427
251	DETAILS OF TYPE SPECIAL APPROACH GUTTERS (SHEET 2 OF 3)	07556-07557, 07559, 07561-07564	64428
252	DETAILS OF TYPE SPECIAL APPROACH GUTTERS (SHEET 3 OF 3)	07556-07564	64429
253	DETAILS OF TYPE SPECIAL APPROACH SLABS	07556-0756', 07564	64430
254 - 356	CROSS SECTIONS		

NOTE: CROSS SECTIONS NOT NORMALLY INCLUDED IN PLANS SOLD TO PROSPECTIVE BIDDERS, BUT MAY BE HAD UPON REQUEST.

PJoseph 8/13/2021 5:21:25 PM
WORKSPACE: AHTD
L:\2017\17017642 - ARDOT Job 100955\Drawings\r100955_IDX_01.dgn
REVISED DATE:

DATE REVISED	DATE FILMED	DATE REVISED	DATE FILMED	FED.RD. DIST.NO.	STATE	FED.AID PROJ.NO.	SHEET NO.	TOTAL SHEETS
11-22-2021				6	ARK.			
				JOB NO.		100955	4	356

(2) ROADWAY STANDARD DRAWINGS, GOVERNING SPECIFICATIONS, AND GENERAL NOTES

BRIDGE STANDARD DRAWINGS

DRWG.NO.	TITLE	DATE
55000	STANDARD DETAILS FOR EMBANKMENT CONSTRUCTION AND BACKFILL AT BRIDGE ENDS	02-27-14
55001	STANDARD DETAILS FOR DUMPED RIPRAP AND FILTER BLANKET AND COMPUTING EXCAVATION FOR STRUCTURES	02-27-14
55005	STANDARD DETAILS FOR PERMANENT STEEL BRIDGE DECK FORMS FOR STEEL & CONCRETE GIRDER SPANS	03-24-16
55006	STANDARD GENERAL NOTES FOR STEEL BRIDGE STRUCTURES	09-02-15
55007	STANDARD DETAILS FOR STEEL BRIDGE STRUCTURES	02-11-16
55008	STANDARD DETAILS FOR POURED SILICONE JOINTS	02-11-16
55010	STANDARD DETAILS FOR TYPE D BRIDGE NAME PLATE	05-11-21
55021	STANDARD DETAILS FOR CONCRETE FILLED STEEL SHELL PILES AND PILE ENCASEMENTS	03-24-16
55040C2	STANDARD DETAILS FOR TYPE C2 APPROACH SLAB	02-27-14
55070	STANDARD DETAILS FOR BRIDGE TRAFFIC RAIL TYPE SSTR36	11-05-20

ROADWAY STANDARD DRAWINGS

DRWG.NO.	TITLE	DATE
CDP-1	CONCRETE DITCH PAVING	12-08-16
FES-1	FLARED END SECTION	10-18-96
FES-2	FLARED END SECTION	10-18-96
GR-6	GUARDRAIL DETAILS	11-07-19
GR-7	GUARDRAIL DETAILS	11-07-19
GR-8	GUARDRAIL DETAILS	11-07-19
GR-9	GUARDRAIL DETAILS	11-07-19
GR-10	GUARDRAIL DETAILS	11-07-19
GR-11	GUARDRAIL DETAILS	11-07-19
GR-12	GUARDRAIL DETAILS	05-14-20
MB-1	MAILBOX DETAILS	11-18-04
PBC-1	PRECAST CONCRETE BOX CULVERTS	01-28-15
PCC-1	CONCRETE PIPE CULVERT FILL HEIGHTS & BEDDING	02-27-14
PCM-1	METAL PIPE CULVERT FILL HEIGHTS & BEDDING	02-27-14
PCP-1	PLASTIC PIPE CULVERT (HIGH DENSITY POLYETHYLENE)	02-27-14
PCP-2	PLASTIC PIPE CULVERT (PVC F949)	02-27-14
PCP-3	PLASTIC PIPE CULVERT (POLYPROPYLENE)	02-27-20
PM-1	PAVEMENT MARKING DETAILS	02-27-20
PU-1	DETAILS OF PIPE UNDERDRAIN	12-08-16
RCB-1	REINFORCED CONCRETE BOX CULVERT DETAILS	07-26-12
RCB-2	EXCAVATION PAY LIMITS, BACKFILL, & SOLID SODDING FOR BOX CULVERTS	11-20-03
SE-2	TABLES AND METHOD OF SUPERELEVATION FOR TWO-WAY TRAFFIC	11-07-19
SI-1	DETAILS OF SPECIAL ITEMS	10-25-18
TC-1	STANDARD TRAFFIC CONTROLS FOR HIGHWAY CONSTRUCTION	11-07-19
TC-2	STANDARD TRAFFIC CONTROLS FOR HIGHWAY CONSTRUCTION	05-20-21
TC-3	STANDARD TRAFFIC CONTROLS FOR HIGHWAY CONSTRUCTION	08-12-21
TEC-1	TEMPORARY EROSION CONTROL DEVICES	11-16-17
TEC-2	TEMPORARY EROSION CONTROL DEVICES	06-02-94
TEC-3	TEMPORARY EROSION CONTROL DEVICES	11-03-94
WF-3	CHAIN LINK FENCE	11-17-10

GENERAL NOTES

1. GRADE LINE DENOTES FINISHED GRADE WHERE SHOWN ON PLANS.
2. ALL PIPE LINES, POWER, TELEPHONE, AND TELEGRAPH LINES TO BE MOVED OR LOWERED BY THE RESPECTIVE OWNERS AS PER AGREEMENT WITH SUCH OWNERS.
3. ANY EQUIPMENT OR APPURTENANCE THAT INTERFERES WITH THE PROPOSED CONSTRUCTION AND WHICH MAY BE THE PROPERTY OF UTILITY SERVICE ORGANIZATIONS SHALL BE MOVED BY THE OWNERS UNLESS OTHERWISE PROVIDED.
4. THE CONTRACTOR SHALL BE RESPONSIBLE FOR MAINTAINING U. S. MAILBOXES WITHIN THE PROJECT LIMITS IN SUCH A MANNER THAT THE PUBLIC MAY RECEIVE CONTINUED MAIL SERVICE. PAYMENT WILL BE CONSIDERED INCLUDED IN THE PRICE BID FOR THE VARIOUS BID ITEMS.
5. ALL LAND MONUMENTS LOCATED WITHIN THE CONSTRUCTION AREA SHALL BE PROTECTED IN ACCORDANCE WITH SECTION 107.12 OF THE STANDARD SPECIFICATIONS.
6. ALL TREES THAT DO NOT DIRECTLY INTERFERE WITH THE PROPOSED CONSTRUCTION SHALL BE SPARED AS DIRECTED BY THE ENGINEER. CARE AND DISCRETION SHALL BE USED TO ENSURE THAT ALL TREES NOT TO BE REMOVED SHALL BE HARMED AS LITTLE AS POSSIBLE DURING THE CONSTRUCTION OPERATIONS.
7. THE CONTRACTOR SHALL BE RESPONSIBLE FOR PROVIDING A FENCE TO CONTROL LIVESTOCK IN AREAS WHERE PASTURES ARE SEVERED. WIRE FENCE MAY BE CONSTRUCTED INITIALLY, OR IN LIEU THEREOF, THE CONTRACTOR AT HIS OWN EXPENSE, MAY ELECT TO PROVIDE TEMPORARY FENCING SUITABLE TO CONTAIN LIVESTOCK.
8. THE SEQUENCE AS SHOWN ON THE MAINTENANCE OF TRAFFIC PLANS IS A GENERAL OUTLINE FOR THE CONSTRUCTION OF THIS PROJECT, AND IN NO WAY IS IT INTENDED TO COVER EVERY ITEM IN THE PROJECT. ITEMS NOT CRITICAL TO THE CONSTRUCTION SEQUENCE MAY BE CONSTRUCTED IN ANY STAGE AS APPROVED BY THE RESIDENT ENGINEER.
9. ALL FLEXIBLE BASE AND ASPHALTIC PAVEMENTS REMOVED SHALL BE PAID FOR UNDER THE ITEM NO. 210 - UNCLASSIFIED EXCAVATION.
10. THE EXISTING ASPHALT PAVEMENT TO BE REMOVED FROM THE REMAINING PAVEMENT SHALL BE SEPARATED BY SAWING ALONG A NEAT LINE. AFTER SAWING, THE PAVEMENT TO BE REMOVED SHALL BE CAREFULLY REMOVED IN A MANNER THAT WILL NOT DAMAGE THE PAVEMENT THAT IS TO REMAIN. ANY DAMAGE OF THE ASPHALT PAVEMENT THAT IS TO REMAIN IN PLACE SHALL BE REPAIRED AT THE CONTRACTOR'S EXPENSE.

GOVERNING SPECIFICATIONS

ARKANSAS STATE HIGHWAY COMMISSION STANDARD SPECIFICATIONS FOR HIGHWAY CONSTRUCTION, EDITION OF 2014, AND THE FOLLOWING SPECIAL PROVISIONS AND SUPPLEMENTAL SPECIFICATIONS:

NUMBER	TITLE
ERRATA	ERRATA FOR THE BOOK OF STANDARD SPECIFICATIONS
FHWA-1273	REQUIRED CONTRACT PROVISIONS FEDERAL-AID CONSTRUCTION CONTRACTS
FHWA-1273	SUPPLEMENT - EQUAL EMPLOYMENT OPPORTUNITY - NOTICE TO CONTRACTORS
FHWA-1273	SUPPLEMENT - SPECIFIC EQUAL EMPLOYMENT OPPORTUNITY RESPONSIBILITIES (23 U.S.C. 140)
FHWA-1273	SUPPLEMENT - EQUAL EMPLOYMENT OPPORTUNITY - GOALS AND TIMETABLES
FHWA-1273	SUPPLEMENT - EQUAL EMPLOYMENT OPPORTUNITY - FEDERAL STANDARDS
FHWA-1273	SUPPLEMENT - TRAINING PROGRAM - JOB 100955
FHWA-1273	SUPPLEMENT - POSTERS AND NOTICES REQUIRED FOR FEDERAL-AID PROJECTS
FHWA-1273	SUPPLEMENT - WAGE RATE DETERMINATION
100-3	CONTRACTOR'S LICENSE
100-4	DEPARTMENT NAME CHANGE
102-2	ISSUANCE OF PROPOSALS
108-1	LIQUIDATED DAMAGES
108-2	WORK ALLOWED PRIOR TO ISSUANCE OF WORK ORDER
110-1	PROTECTION OF WATER QUALITY AND WETLANDS
210-1	UNCLASSIFIED EXCAVATION
303-1	AGGREGATE BASE COURSE
306-1	QUALITY CONTROL AND ACCEPTANCE
400-1	TACK COATS
400-4	DESIGN AND QUALITY CONTROL OF ASPHALT MIXTURES
400-5	PERCENT AIR VOIDS FOR ACHM MIX DESIGNS
400-6	LIQUID ANTI-STRIP ADDITIVE
400-7	TRACKLESS TACK
404-3	DESIGN OF ASPHALT MIXTURES
410-1	CONSTRUCTION REQUIREMENTS AND ACCEPTANCE OF ASPHALT CONCRETE PLANT MIX COURSES
410-2	DEVICES FOR MEASURING DENSITY FOR ROLLING PATTERNS
600-2	INCIDENTAL CONSTRUCTION
603-1	LANE CLOSURE NOTIFICATION
604-1	RETROREFLECTIVE SHEETING FOR TRAFFIC CONTROL DEVICES IN CONSTRUCTION ZONES
604-3	TRAFFIC CONTROL DEVICES IN CONSTRUCTION ZONES (MASH)
605-1	CONCRETE DITCH PAVING
606-1	PIPE CULVERTS FOR SIDE DRAINS
617-1	GUARDRAIL TERMINAL (TYPE 2)
620-1	MULCH COVER
734-1	BRIDGE END TERMINAL
800-1	STRUCTURES
802-3	CONCRETE FOR STRUCTURES
804-2	REINFORCING STEEL FOR STRUCTURES
807-2	STEEL STRUCTURES
808-1	INSTALLATION OF ELASTOMERIC BEARINGS
808-2	ELASTOMERIC BEARINGS
JOB 100955	BIDDING REQUIREMENTS AND CONDITIONS
JOB 100955	BRIDGE DECK GRINDING
JOB 100955	BROADBAND INTERNET SERVICE FOR ASPHALT CONCRETE PLANT
JOB 100955	BROADBAND INTERNET SERVICE FOR FIELD OFFICE
JOB 100955	CARGO PREFERENCE ACT REQUIREMENTS
JOB 100955	CLASS C FLY ASH IN PORTLAND CEMENT CONCRETE PAVEMENT AND CLASS S(AE) CONCRETE
JOB 100955	COLD MILLING - COUNTY PROPERTY
JOB 100955	COMPACTED EMBANKMENT
JOB 100955	CONCRETE BRIDGE DECK CURING AND SURFACE TREATMENT RESTRICTIONS
JOB 100955	CONCRETE FILL FOR LARGE DIA. STEEL SHELL PILES
JOB 100955	CONSTRUCTION IN SPECIAL FLOOD HAZARD AREAS
JOB 100955	CONSTRUCTION PROJECT INFORMATION SIGN
JOB 100955	DELAY IN RIGHT OF WAY OCCUPANCY
JOB 100955	DIRECT TENSION INDICATORS FOR HIGH STRENGTH BOLT ASSEMBLIES
JOB 100955	DISADVANTAGED BUSINESS ENTERPRISE BIDDER'S RESPONSIBILITIES
JOB 100955	ESTABLISHING CONTRACT TIME - CALENDAR DAY CONTRACT
JOB 100955	FLEXIBLE BEGINNING OF WORK - CALENDAR DAY CONTRACT
JOB 100955	GOALS FOR DISADVANTAGED BUSINESS ENTERPRISE PARTICIPATION
JOB 100955	MAINTENANCE OF TRAFFIC
JOB 100955	MANDATORY ELECTRONIC CONTRACT
JOB 100955	MANDATORY ELECTRONIC DOCUMENT SUBMITTAL
JOB 100955	NESTING SITES OF MIGRATORY BIRDS
JOB 100955	PARTNERING REQUIREMENTS
JOB 100955	PILE DRIVING SYSTEM
JOB 100955	PILE DRIVING TOLERANCES
JOB 100955	PLASTIC PIPE
JOB 100955	POLYMER OVERLAY
JOB 100955	PRECAST CONCRETE BENT CAPS
JOB 100955	PREFABRICATED SUPERSTRUCTURE MODULES
JOB 100955	PRICE ADJUSTMENT FOR ASPHALT BINDER
JOB 100955	PROHIBITION OF CERTAIN TELECOMMUNICATIONS AND VIDEO SURVEILLANCE SERVICES OR EQUIPMENT
JOB 100955	PROSECUTION AND PROGRESS WITH BID SCHEDULE
JOB 100955	RUMBLE STRIPS
JOB 100955	SECTION 404 NATIONWIDE 14 PERMIT REQUIREMENTS
JOB 100955	SELF-CONSOLIDATING CONCRETE
JOB 100955	SHORING FOR CULVERTS
JOB 100955	SOIL STABILIZATION
JOB 100955	STORM WATER POLLUTION PREVENTION PLAN
JOB 100955	SUBMISSION OF ASPHALT CONCRETE HOT MIX ACCEPTANCE TEST RESULTS
JOB 100955	TIMBER PILING FOR SOIL DENSIFICATION
JOB 100955	ULTRA HIGH PERFORMANCE CONCRETE
JOB 100955	UTILITY ADJUSTMENTS
JOB 100955	UTILITY REQUIREMENTS
JOB 100955	VALUE ENGINEERING
JOB 100955	VEGETATED BUFFER ZONE
JOB 100955	WARM MIX ASPHALT
JOB 100955	WATER POLLUTION CONTROL
JOB 100955	WELLHEAD PROTECTION

STATE OF ARKANSAS
LICENSED PROFESSIONAL ENGINEER
No.13436
SHAUN A. ROBERSON
DIGITALLY SIGNED 11-22-2021

ROADWAY STANDARD DRAWINGS,
GOVERNING SPECIFICATIONS, AND GENERAL NOTES

PJoseph 12/2/2021 3:40:23 PM
WORKSPACE: AHTD
L:\20ITN1701642 - ARDOT Job 100955\Drawings\r100955_IDX_01.dgn
REVISED DATE:

DATE REVISED	DATE FILMED	DATE REVISED	DATE FILMED	FED.RD. DIST.NO.	STATE	FED.AID PROJ.NO.	SHEET NO.	TOTAL SHEETS
				6	ARK.			
				JOB NO.		100955	5	356
				(2)	TYPICAL SECTIONS OF IMPROVEMENT			

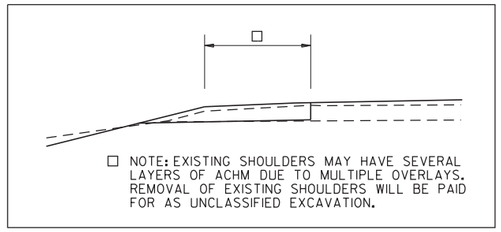

□ NOTE: EXISTING SHOULDERS MAY HAVE SEVERAL LAYERS OF ACHM DUE TO MULTIPLE OVERLAYS. REMOVAL OF EXISTING SHOULDERS WILL BE PAID FOR AS UNCLASSIFIED EXCAVATION.

HWY. 77 TYPICAL 2-LANE NOTCH AND WIDEN SECTION

STA. 102+00.00 TO STA. 103+16.81
STA. 111+89.36 TO STA. 113+00.00
STA. 205+25.00 TO STA. 207+15.90
STA. 211+04.10 TO STA. 215+00.00
STA. 219+25.00 TO STA. 223+26.40
STA. 227+61.60 TO STA. 228+33.48
STA. 231+44.52 TO STA. 235+25.00
STA. 245+00.00 TO STA. 248+97.40
STA. 253+52.60 TO STA. 256+00.00
STA. 267+00.00 TO STA. 270+96.37
STA. 273+29.63 TO STA. 274+61.25
STA. 280+38.69 TO STA. 281+75.00
STA. 502+00.00 TO STA. 504+70.00

☒ TO BE USED IF AND WHERE DIRECTED BY THE ENGINEER

NOTE:
SEE BRIDGE LAYOUTS FOR APPROACH SLABS AND BRIDGE STRUCTURE
FROM STA. 106+28.37 TO STA. 108+71.63
FROM STA. 207+15.90 TO STA. 211+04.10
FROM STA. 223+26.40 TO STA. 227+61.60
FROM STA. 228+33.48 TO STA. 231+44.52
FROM STA. 248+97.40 TO STA. 253+52.60
FROM STA. 270+96.37 TO STA. 273+29.63

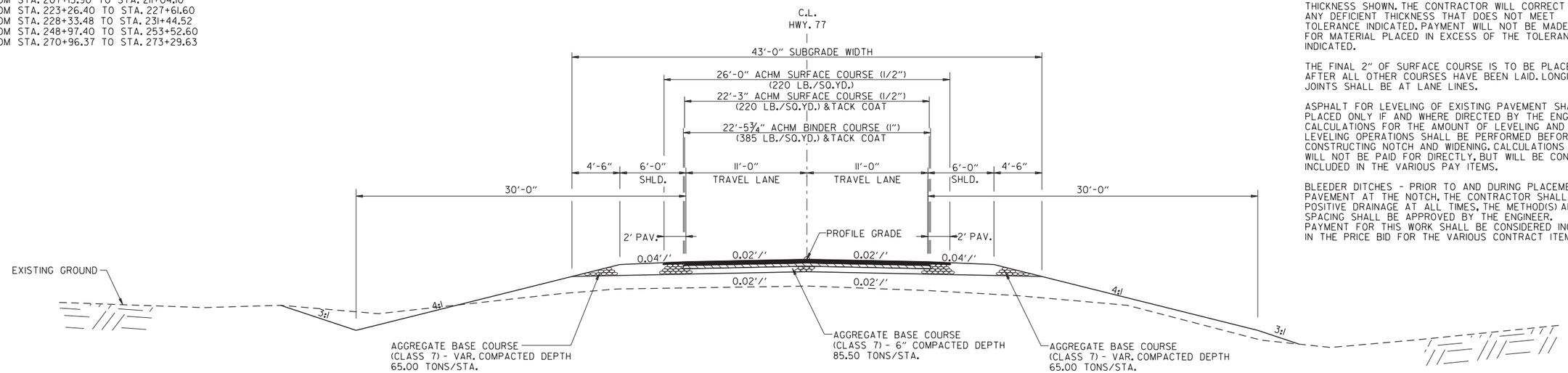

HWY. 77 TYPICAL SECTION

STA. 103+16.81 TO STA. 106+28.37
STA. 108+71.63 TO STA. 111+89.36
STA. 274+61.25 TO STA. 280+38.69
STA. 504+70.00 TO STA. 505+09.52

NOTES:

REFER TO CROSS SECTIONS FOR DEVIATION FROM THE NORMAL SLOPES. NO CHANGES SHALL BE MADE FROM THE PLANNED SLOPES WITHOUT THE APPROVAL OF THE ENGINEER.

THE THICKNESS OF AGGREGATE BASE COURSE SHALL BE WITHIN PLUS OR MINUS ONE INCH OF THE PLAN THICKNESS SHOWN. THE CONTRACTOR WILL CORRECT ANY DEFICIENT THICKNESS THAT DOES NOT MEET TOLERANCE INDICATED. PAYMENT WILL NOT BE MADE FOR MATERIAL PLACED IN EXCESS OF THE TOLERANCE INDICATED.

THE FINAL 2" OF SURFACE COURSE IS TO BE PLACED AFTER ALL OTHER COURSES HAVE BEEN LAID. LONGITUDINAL JOINTS SHALL BE AT LANE LINES.

ASPHALT FOR LEVELING OF EXISTING PAVEMENT SHALL BE PLACED ONLY IF AND WHERE DIRECTED BY THE ENGINEER. CALCULATIONS FOR THE AMOUNT OF LEVELING AND LEVELING OPERATIONS SHALL BE PERFORMED BEFORE CONSTRUCTING NOTCH AND WIDENING. CALCULATIONS WILL NOT BE PAID FOR DIRECTLY, BUT WILL BE CONSIDERED INCLUDED IN THE VARIOUS PAY ITEMS.

BLEEDER DITCHES - PRIOR TO AND DURING PLACEMENT OF PAVEMENT AT THE NOTCH, THE CONTRACTOR SHALL PROVIDE POSITIVE DRAINAGE AT ALL TIMES, THE METHOD(S) AND SPACING SHALL BE APPROVED BY THE ENGINEER. PAYMENT FOR THIS WORK SHALL BE CONSIDERED INCLUDED IN THE PRICE BID FOR THE VARIOUS CONTRACT ITEMS.

STATE OF ARKANSAS
LICENSED PROFESSIONAL ENGINEER
No. 13436
SHAUN A. ROBERSON
DIGITALLY SIGNED 8-13-2021

PJoseph 8/13/2021 5:21:56 PM
WORKSPACE: AHTD
L:\2017\17017642 - ARDOT Job 100955\Drawings\r100955_TYP.dgn
REVISED DATE:

DATE REVISED	DATE FILMED	DATE REVISED	DATE FILMED	FED.RD. DIST.NO.	STATE	FED.AID PROJ.NO.	SHEET NO.	TOTAL SHEETS
				6	ARK.			
				JOB NO.		100955	6	356

(2) TYPICAL SECTIONS OF IMPROVEMENT

STATE OF ARKANSAS
LICENSED PROFESSIONAL ENGINEER
No.13436
SHAUN A. ROBERSON
DIGITALLY SIGNED 8-13-2021

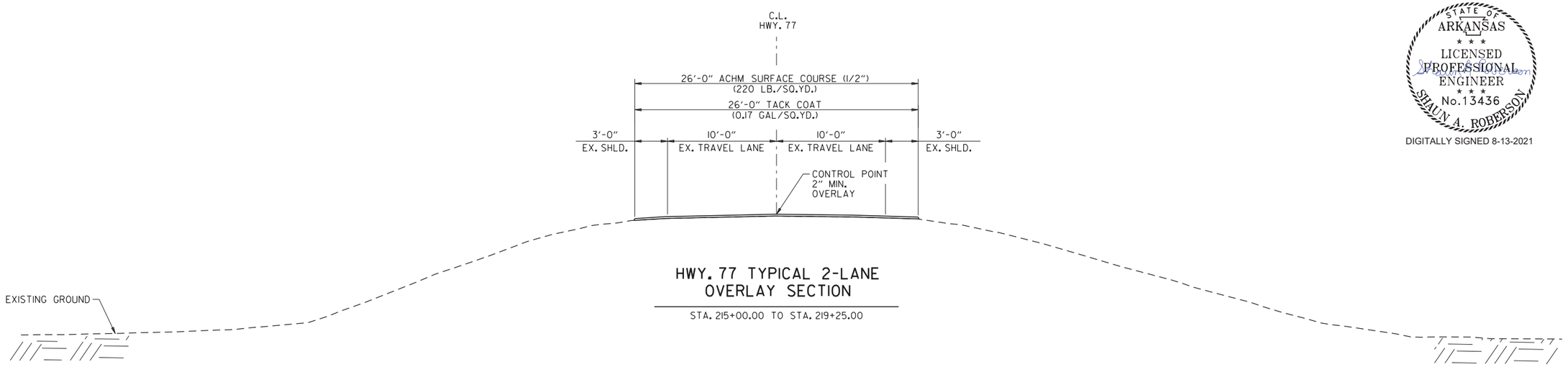

HWY. 77 TYPICAL 2-LANE OVERLAY SECTION

STA. 215+00.00 TO STA. 219+25.00

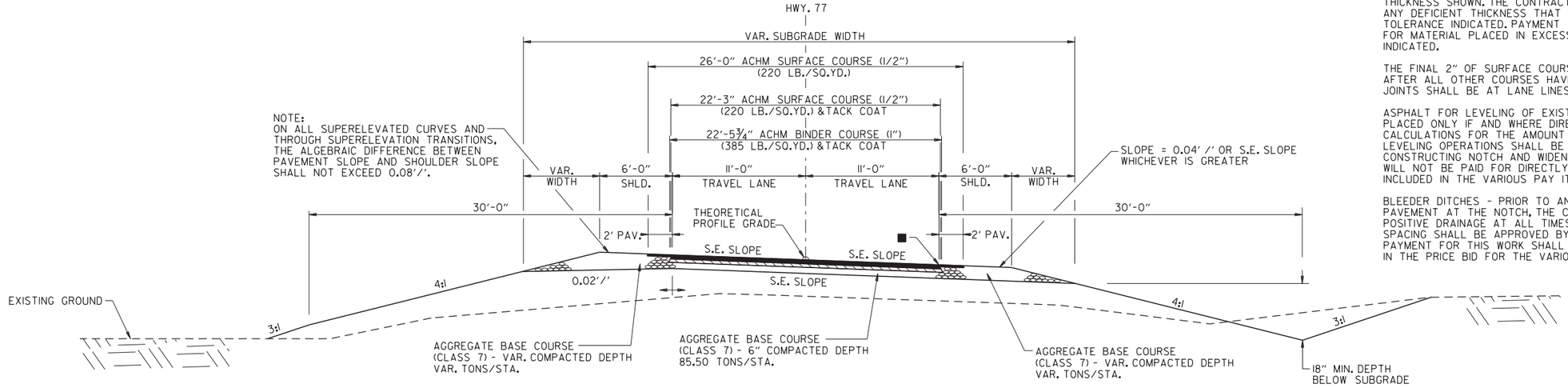

HWY. 77 TYPICAL 2-LANE SUPERELEVATED SECTION

STA. 505+09.52 TO STA. 505+26.20

■ POINT OF SUPERELEVATION ROTATION (0.22' BELOW PROFILE GRADE)

NOTES:

REFER TO CROSS SECTIONS FOR DEVIATION FROM THE NORMAL SLOPES. NO CHANGES SHALL BE MADE FROM THE PLANNED SLOPES WITHOUT THE APPROVAL OF THE ENGINEER.

THE THICKNESS OF AGGREGATE BASE COURSE SHALL BE WITHIN PLUS OR MINUS ONE INCH OF THE PLAN THICKNESS SHOWN. THE CONTRACTOR WILL CORRECT ANY DEFICIENT THICKNESS THAT DOES NOT MEET TOLERANCE INDICATED. PAYMENT WILL NOT BE MADE FOR MATERIAL PLACED IN EXCESS OF THE TOLERANCE INDICATED.

THE FINAL 2" OF SURFACE COURSE IS TO BE PLACED AFTER ALL OTHER COURSES HAVE BEEN LAID. LONGITUDINAL JOINTS SHALL BE AT LANE LINES.

ASPHALT FOR LEVELING OF EXISTING PAVEMENT SHALL BE PLACED ONLY IF AND WHERE DIRECTED BY THE ENGINEER. CALCULATIONS FOR THE AMOUNT OF LEVELING AND LEVELING OPERATIONS SHALL BE PERFORMED BEFORE CONSTRUCTING NOTCH AND WIDENING. CALCULATIONS WILL NOT BE PAID FOR DIRECTLY, BUT WILL BE CONSIDERED INCLUDED IN THE VARIOUS PAY ITEMS.

BLEEDER DITCHES - PRIOR TO AND DURING PLACEMENT OF PAVEMENT AT THE NOTCH, THE CONTRACTOR SHALL PROVIDE POSITIVE DRAINAGE AT ALL TIMES, THE METHOD(S) AND SPACING SHALL BE APPROVED BY THE ENGINEER. PAYMENT FOR THIS WORK SHALL BE CONSIDERED INCLUDED IN THE PRICE BID FOR THE VARIOUS CONTRACT ITEMS.

TYPICAL SECTIONS OF IMPROVEMENT

PJoseph 8/13/2021 5:21:56 PM
WORKSPACE: AHTD
L:\2017\170176\42 - ARDOT Job 100955\Drawings\r100955_TYP.dgn
REVISED DATE:

DATE REVISED	DATE FILMED	DATE REVISED	DATE FILMED	FED.RD. DIST.NO.	STATE	FED.AID PROJ.NO.	SHEET NO.	TOTAL SHEETS
				6	ARK.			
				JOB NO.		100955	7	356
				(2)	TYPICAL SECTIONS OF IMPROVEMENT			

STATE OF ARKANSAS
LICENSED PROFESSIONAL ENGINEER
No.13436
SHAUN A. ROBERSON
DIGITALLY SIGNED 8-13-2021

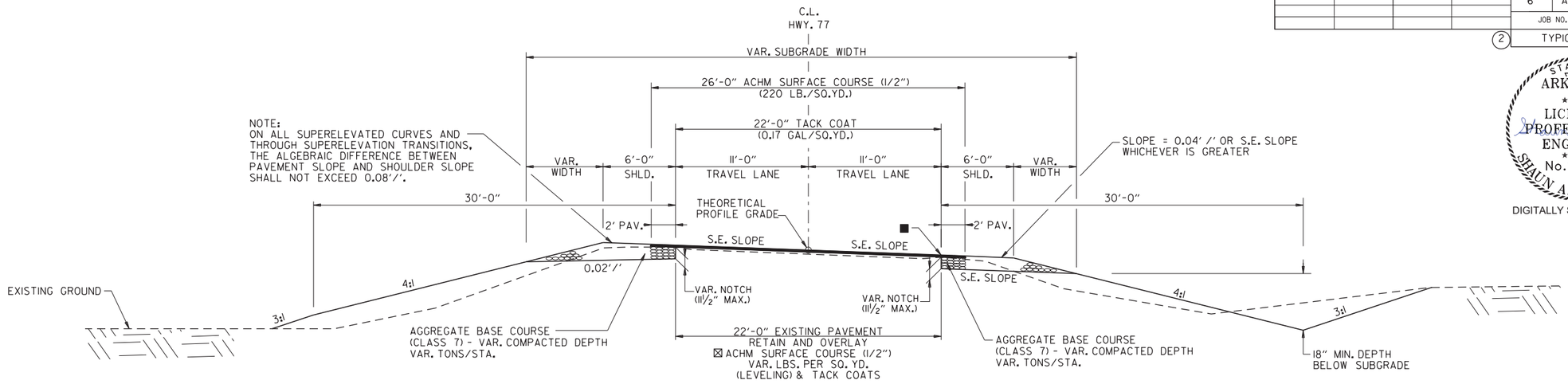

HWY. 77 TYPICAL 2-LANE SUPERELEVATED NOTCH AND WIDEN SECTION

STA. 505+26.20 TO STA. 507+00.00

■ POINT OF SUPERELEVATION ROTATION (0.22' BELOW PROFILE GRADE)

☒ TO BE USED IF AND WHERE DIRECTED BY THE ENGINEER

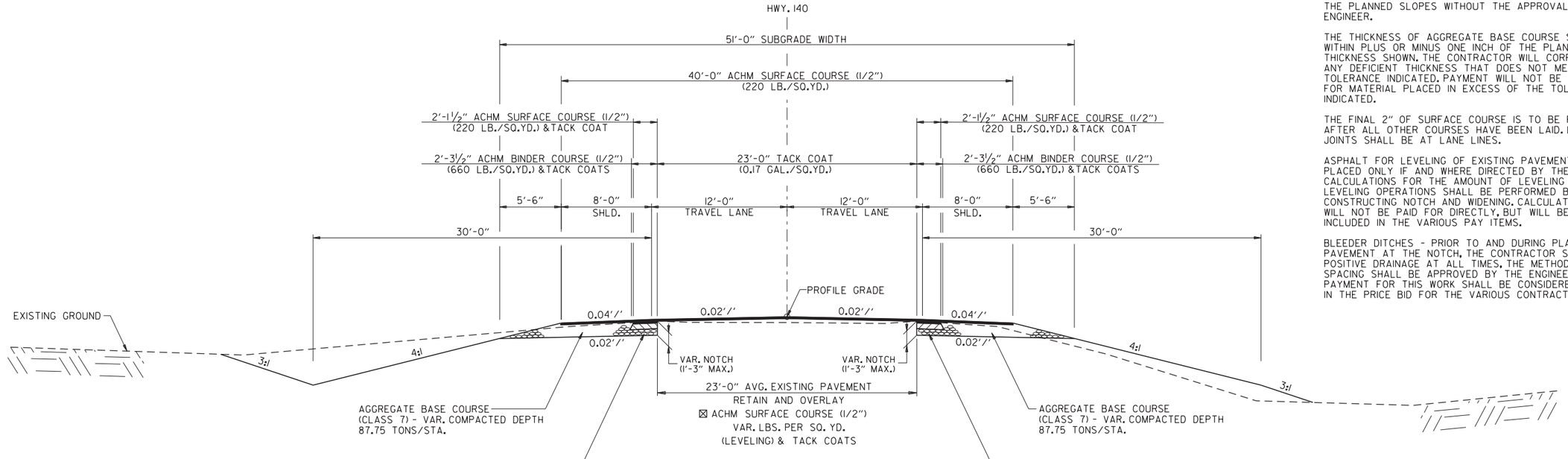

HWY. 140 NOTCH AND WIDENING SECTION

STA. 103+00 TO STA. 104+43.98
STA. 115+23.16 TO STA. 116+50.00

☒ TO BE USED IF AND WHERE DIRECTED BY THE ENGINEER

NOTES:

REFER TO CROSS SECTIONS FOR DEVIATION FROM THE NORMAL SLOPES. NO CHANGES SHALL BE MADE FROM THE PLANNED SLOPES WITHOUT THE APPROVAL OF THE ENGINEER.

THE THICKNESS OF AGGREGATE BASE COURSE SHALL BE WITHIN PLUS OR MINUS ONE INCH OF THE PLAN THICKNESS SHOWN. THE CONTRACTOR WILL CORRECT ANY DEFICIENT THICKNESS THAT DOES NOT MEET TOLERANCE INDICATED. PAYMENT WILL NOT BE MADE FOR MATERIAL PLACED IN EXCESS OF THE TOLERANCE INDICATED.

THE FINAL 2" OF SURFACE COURSE IS TO BE PLACED AFTER ALL OTHER COURSES HAVE BEEN LAID. LONGITUDINAL JOINTS SHALL BE AT LANE LINES.

ASPHALT FOR LEVELING OF EXISTING PAVEMENT SHALL BE PLACED ONLY IF AND WHERE DIRECTED BY THE ENGINEER. CALCULATIONS FOR THE AMOUNT OF LEVELING AND LEVELING OPERATIONS SHALL BE PERFORMED BEFORE CONSTRUCTING NOTCH AND WIDENING. CALCULATIONS WILL NOT BE PAID FOR DIRECTLY, BUT WILL BE CONSIDERED INCLUDED IN THE VARIOUS PAY ITEMS.

BLEEDER DITCHES - PRIOR TO AND DURING PLACEMENT OF PAVEMENT AT THE NOTCH, THE CONTRACTOR SHALL PROVIDE POSITIVE DRAINAGE AT ALL TIMES. THE METHOD(S) AND SPACING SHALL BE APPROVED BY THE ENGINEER. PAYMENT FOR THIS WORK SHALL BE CONSIDERED INCLUDED IN THE PRICE BID FOR THE VARIOUS CONTRACT ITEMS.

P.Joseph 8/13/2021 5:21:56 PM
WORKSPACE: AHTD
L:\2017\17017642 - ARDOT Job 100955\Drawings\r100955_TYP.dgn
REVISED DATE:

TYPICAL SECTIONS OF IMPROVEMENT

DATE REVISED	DATE FILMED	DATE REVISED	DATE FILMED	FED.RD. DIST.NO.	STATE	FED.AID PROJ.NO.	SHEET NO.	TOTAL SHEETS
				6	ARK.			
				JOB NO.		100955	8	356
				(2)	TYPICAL SECTIONS OF IMPROVEMENT			

STATE OF ARKANSAS
LICENSED PROFESSIONAL ENGINEER
No.13436
SHAUN A. ROBERSON
DIGITALLY SIGNED 8-13-2021

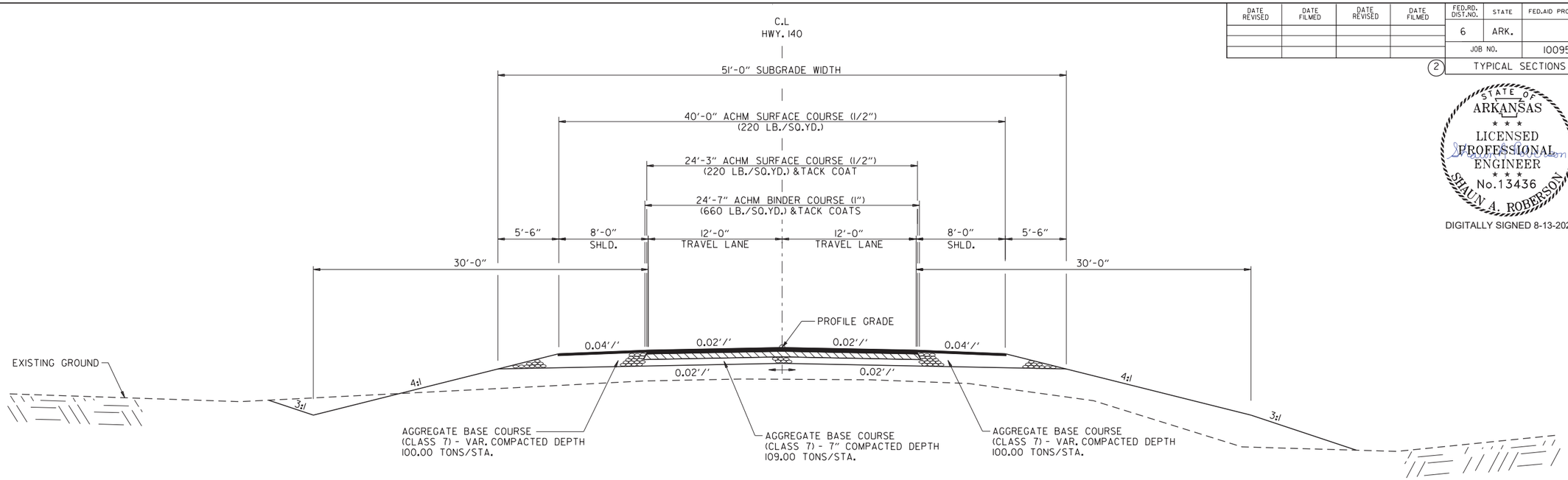

HWY. 140 TYPICAL SECTION

STA. 104+43.98 TO STA. 107+69.78
STA. 111+32.22 TO STA. 115+23.16
STA. 204+07.65 TO STA. 207+25.28
STA. 210+87.72 TO STA. 214+71.02
STA. 303+88.84 TO STA. 304+57.18

NOTE:
SEE BRIDGE LAYOUTS FOR APPROACH SLABS AND BRIDGE STRUCTURE
FROM STA. 107+69.78 TO STA. 111+32.22
FROM STA. 207+25.28 TO STA. 210+87.72

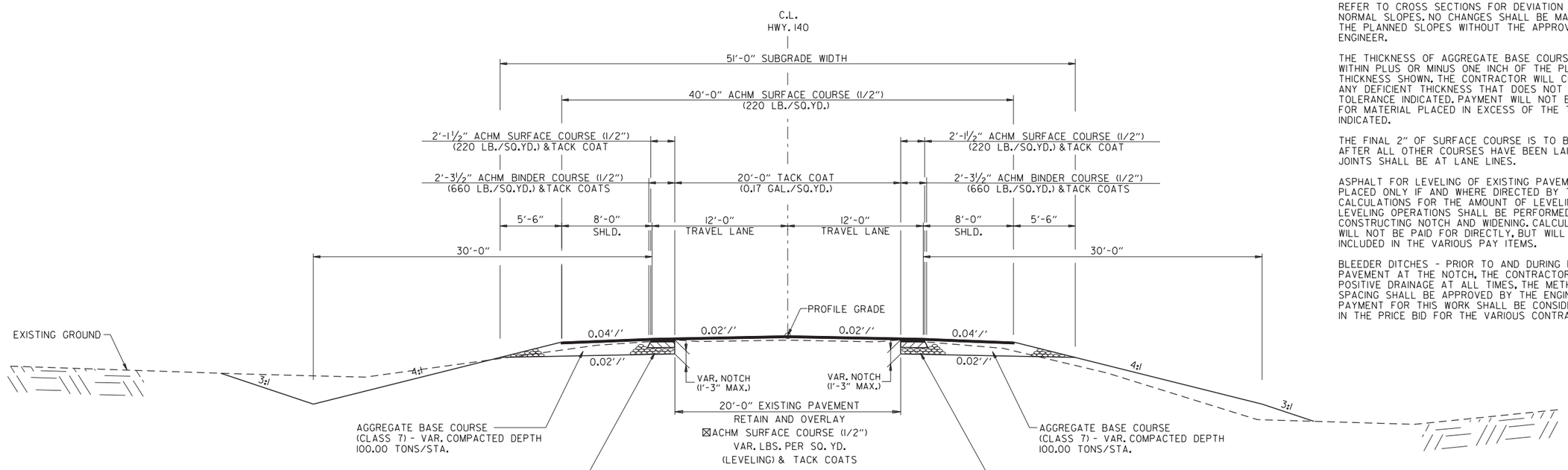

HWY. 140 NOTCH AND WIDENING SECTION

STA. 202+50.00 TO STA. 204+07.65
STA. 214+71.02 TO STA. 215+75.00
STA. 303+00.00 TO STA. 303+88.84
STA. 304+57.18 TO STA. 306+00.00

☒ TO BE USED IF AND WHERE DIRECTED BY THE ENGINEER

NOTES:

REFER TO CROSS SECTIONS FOR DEVIATION FROM THE NORMAL SLOPES. NO CHANGES SHALL BE MADE FROM THE PLANNED SLOPES WITHOUT THE APPROVAL OF THE ENGINEER.

THE THICKNESS OF AGGREGATE BASE COURSE SHALL BE WITHIN PLUS OR MINUS ONE INCH OF THE PLAN THICKNESS SHOWN. THE CONTRACTOR WILL CORRECT ANY DEFICIENT THICKNESS THAT DOES NOT MEET TOLERANCE INDICATED. PAYMENT WILL NOT BE MADE FOR MATERIAL PLACED IN EXCESS OF THE TOLERANCE INDICATED.

THE FINAL 2" OF SURFACE COURSE IS TO BE PLACED AFTER ALL OTHER COURSES HAVE BEEN LAID. LONGITUDINAL JOINTS SHALL BE AT LANE LINES.

ASPHALT FOR LEVELING OF EXISTING PAVEMENT SHALL BE PLACED ONLY IF AND WHERE DIRECTED BY THE ENGINEER. CALCULATIONS FOR THE AMOUNT OF LEVELING AND LEVELING OPERATIONS SHALL BE PERFORMED BEFORE CONSTRUCTING NOTCH AND WIDENING. CALCULATIONS WILL NOT BE PAID FOR DIRECTLY, BUT WILL BE CONSIDERED INCLUDED IN THE VARIOUS PAY ITEMS.

BLEEDER DITCHES - PRIOR TO AND DURING PLACEMENT OF PAVEMENT AT THE NOTCH, THE CONTRACTOR SHALL PROVIDE POSITIVE DRAINAGE AT ALL TIMES. THE METHOD(S) AND SPACING SHALL BE APPROVED BY THE ENGINEER. PAYMENT FOR THIS WORK SHALL BE CONSIDERED INCLUDED IN THE PRICE BID FOR THE VARIOUS CONTRACT ITEMS.

TYPICAL SECTIONS OF IMPROVEMENT

PJoseph 8/13/2021 5:21:57 PM
WORKSPACE: AHTD
L:\2017\170176\42 - ARDOT Job 100955\Drawings\r100955_TYP.dgn
REVISED DATE:

DATE REVISED	DATE FILMED	DATE REVISED	DATE FILMED	FED.RD. DIST.NO.	STATE	FED.AID PROJ.NO.	SHEET NO.	TOTAL SHEETS
				6	ARK.			
				JOB NO.		100955	9	356
				(2)	TYPICAL SECTIONS OF IMPROVEMENT			

STATE OF ARKANSAS
LICENSED PROFESSIONAL ENGINEER
No.13436
SHAUN A. ROBERSON
DIGITALLY SIGNED 8-13-2021

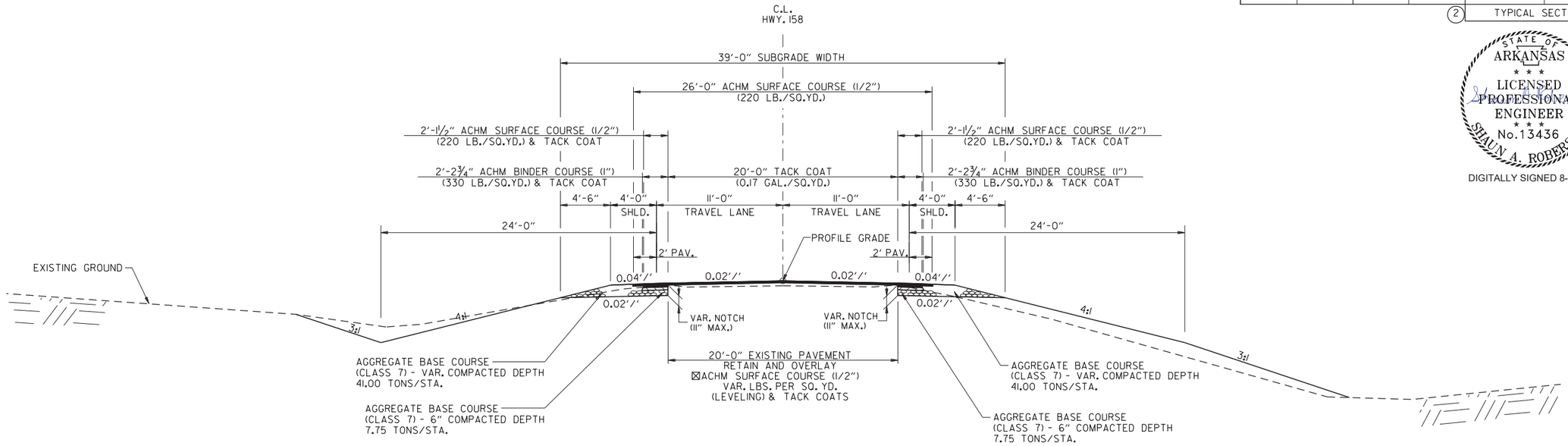

HWY. 158 TYPICAL 2-LANE NOTCH AND WIDEN SECTION

STA. 103+25.00 TO STA. 104+46.40
STA. 113+05.10 TO STA. 114+50.00

☒ TO BE USED IF AND WHERE DIRECTED BY THE ENGINEER

NOTES:

REFER TO CROSS SECTIONS FOR DEVIATION FROM THE NORMAL SLOPES. NO CHANGES SHALL BE MADE FROM THE PLANNED SLOPES WITHOUT THE APPROVAL OF THE ENGINEER.

THE THICKNESS OF AGGREGATE BASE COURSE SHALL BE WITHIN PLUS OR MINUS ONE INCH OF THE PLAN THICKNESS SHOWN. THE CONTRACTOR WILL CORRECT ANY DEFICIENT THICKNESS THAT DOES NOT MEET TOLERANCE INDICATED. PAYMENT WILL NOT BE MADE FOR MATERIAL PLACED IN EXCESS OF THE TOLERANCE INDICATED.

THE FINAL 2" OF SURFACE COURSE IS TO BE PLACED AFTER ALL OTHER COURSES HAVE BEEN LAID. LONGITUDINAL JOINTS SHALL BE AT LANE LINES.

ASPHALT FOR LEVELING OF EXISTING PAVEMENT SHALL BE PLACED ONLY IF AND WHERE DIRECTED BY THE ENGINEER. CALCULATIONS FOR THE AMOUNT OF LEVELING AND LEVELING OPERATIONS SHALL BE PERFORMED BEFORE CONSTRUCTING NOTCH AND WIDENING. CALCULATIONS WILL NOT BE PAID FOR DIRECTLY, BUT WILL BE CONSIDERED INCLUDED IN THE VARIOUS PAY ITEMS.

BLEEDER DITCHES - PRIOR TO AND DURING PLACEMENT OF PAVEMENT AT THE NOTCH, THE CONTRACTOR SHALL PROVIDE POSITIVE DRAINAGE AT ALL TIMES, THE METHOD(S) AND SPACING SHALL BE APPROVED BY THE ENGINEER. PAYMENT FOR THIS WORK SHALL BE CONSIDERED INCLUDED IN THE PRICE BID FOR THE VARIOUS CONTRACT ITEMS.

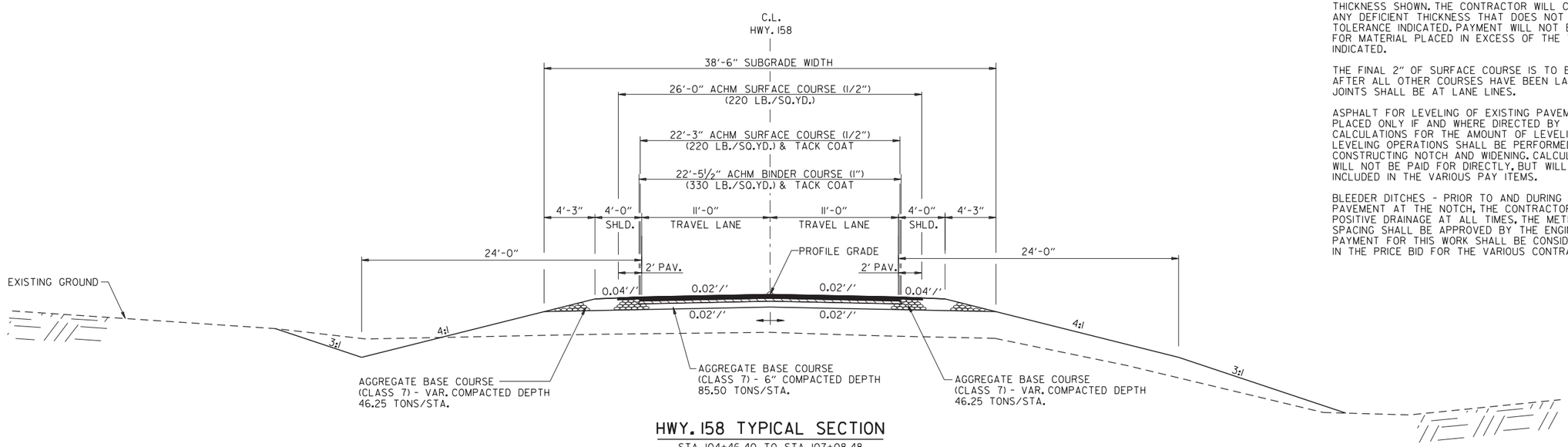

HWY. 158 TYPICAL SECTION

STA. 104+46.40 TO STA. 107+08.48
STA. 110+49.52 TO STA. 113+05.10

NOTE:
SEE BRIDGE LAYOUTS FOR APPROACH SLABS AND BRIDGE STRUCTURE FROM STA. 107+08.48 TO STA. 110+49.52

PJoseph 8/13/2021 5:21:57 PM
WORKSPACE: AHTD
L:\2017\17017642 - ARDOT Job 100955\Drawings\r100955_TYP.dgn
REVISED DATE:

TYPICAL SECTIONS OF IMPROVEMENT

DATE REVISED	DATE FILMED	DATE REVISED	DATE FILMED	FED.RD. DIST.NO.	STATE	FED.AID PROJ.NO.	SHEET NO.	TOTAL SHEETS
				6	ARK.			
				JOB NO.		100955	10	356
				(2)	TYPICAL SECTIONS OF IMPROVEMENT			

STATE OF ARKANSAS
LICENSED PROFESSIONAL ENGINEER
No. 13436
SHAUN A. ROBERSON
DIGITALLY SIGNED 8-13-2021

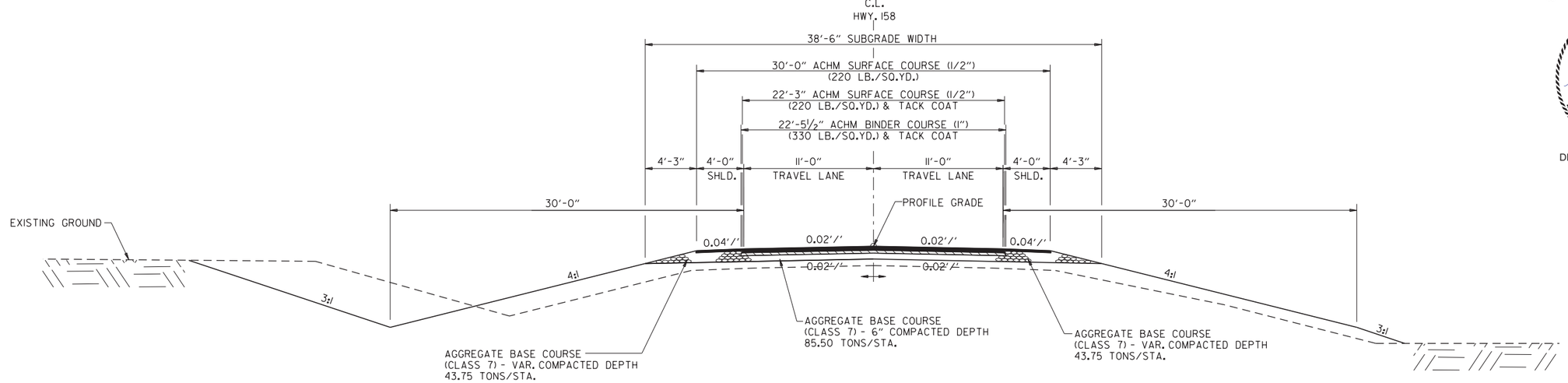

HWY. 181 TYPICAL SECTION

STA. 102+00.00 TO STA. 102+79.00
STA. 202+49.00 TO STA. 203+33.02
STA. 304+15.80 TO STA. 309+47.61

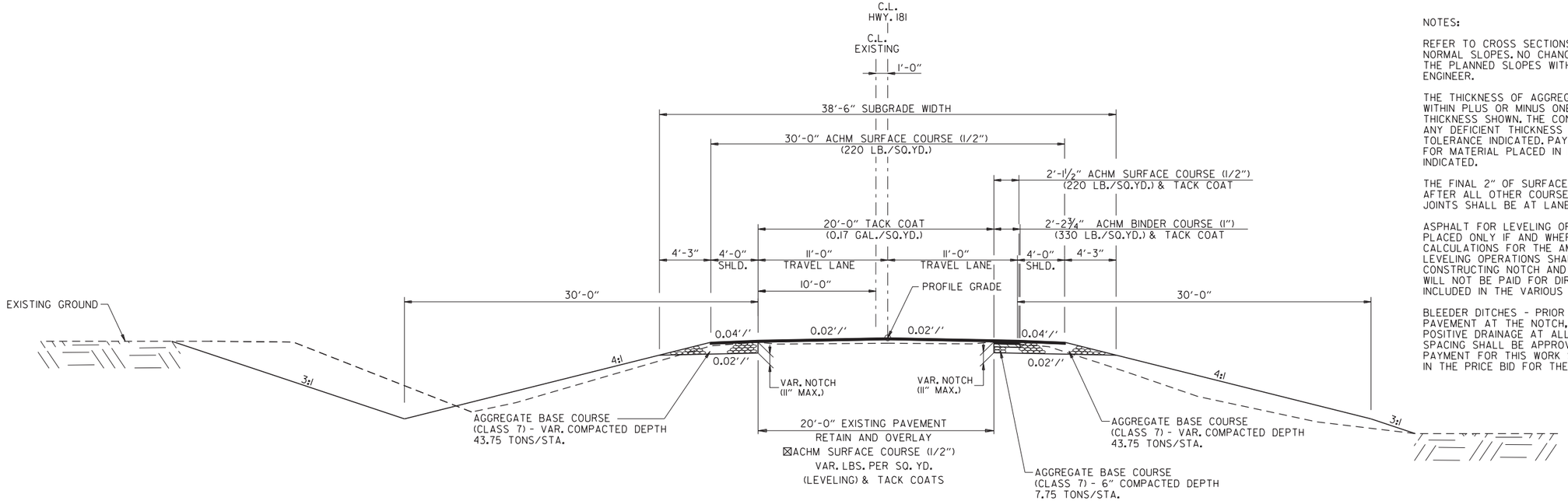

HWY. 181 NOTCH AND WIDENING SECTION

STA. 102+79.00 TO STA. 103+00.00
STA. 202+00.00 TO STA. 202+49.00
STA. 203+33.02 TO STA. 203+50.00

☒ TO BE USED IF AND WHERE DIRECTED BY THE ENGINEER

NOTES:

REFER TO CROSS SECTIONS FOR DEVIATION FROM THE NORMAL SLOPES. NO CHANGES SHALL BE MADE FROM THE PLANNED SLOPES WITHOUT THE APPROVAL OF THE ENGINEER.

THE THICKNESS OF AGGREGATE BASE COURSE SHALL BE WITHIN PLUS OR MINUS ONE INCH OF THE PLAN THICKNESS SHOWN. THE CONTRACTOR WILL CORRECT ANY DEFICIENT THICKNESS THAT DOES NOT MEET TOLERANCE INDICATED. PAYMENT WILL NOT BE MADE FOR MATERIAL PLACED IN EXCESS OF THE TOLERANCE INDICATED.

THE FINAL 2" OF SURFACE COURSE IS TO BE PLACED AFTER ALL OTHER COURSES HAVE BEEN LAID. LONGITUDINAL JOINTS SHALL BE AT LANE LINES.

ASPHALT FOR LEVELING OF EXISTING PAVEMENT SHALL BE PLACED ONLY IF AND WHERE DIRECTED BY THE ENGINEER. CALCULATIONS FOR THE AMOUNT OF LEVELING AND LEVELING OPERATIONS SHALL BE PERFORMED BEFORE CONSTRUCTING NOTCH AND WIDENING. CALCULATIONS WILL NOT BE PAID FOR DIRECTLY, BUT WILL BE CONSIDERED INCLUDED IN THE VARIOUS PAY ITEMS.

BLEEDER DITCHES - PRIOR TO AND DURING PLACEMENT OF PAVEMENT AT THE NOTCH, THE CONTRACTOR SHALL PROVIDE POSITIVE DRAINAGE AT ALL TIMES, THE METHOD(S) AND SPACING SHALL BE APPROVED BY THE ENGINEER. PAYMENT FOR THIS WORK SHALL BE CONSIDERED INCLUDED IN THE PRICE BID FOR THE VARIOUS CONTRACT ITEMS.

PJoseph 8/13/2021 5:21:57 PM
WORKSPACE: AHTD
L:\2017\17017642 - ARDOT Job 100955\Drawings\r100955_TYP.dgn
REVISED DATE:

DATE REVISED	DATE FILMED	DATE REVISED	DATE FILMED	FED.RD. DIST.NO.	STATE	FED.AID PROJ.NO.	SHEET NO.	TOTAL SHEETS
				6	ARK.			
				JOB NO.		100955	11	356
				(2)	TYPICAL SECTIONS OF IMPROVEMENT			

STATE OF ARKANSAS
LICENSED PROFESSIONAL ENGINEER
No.13436
SHAUN A. ROBERSON
DIGITALLY SIGNED 8-13-2021

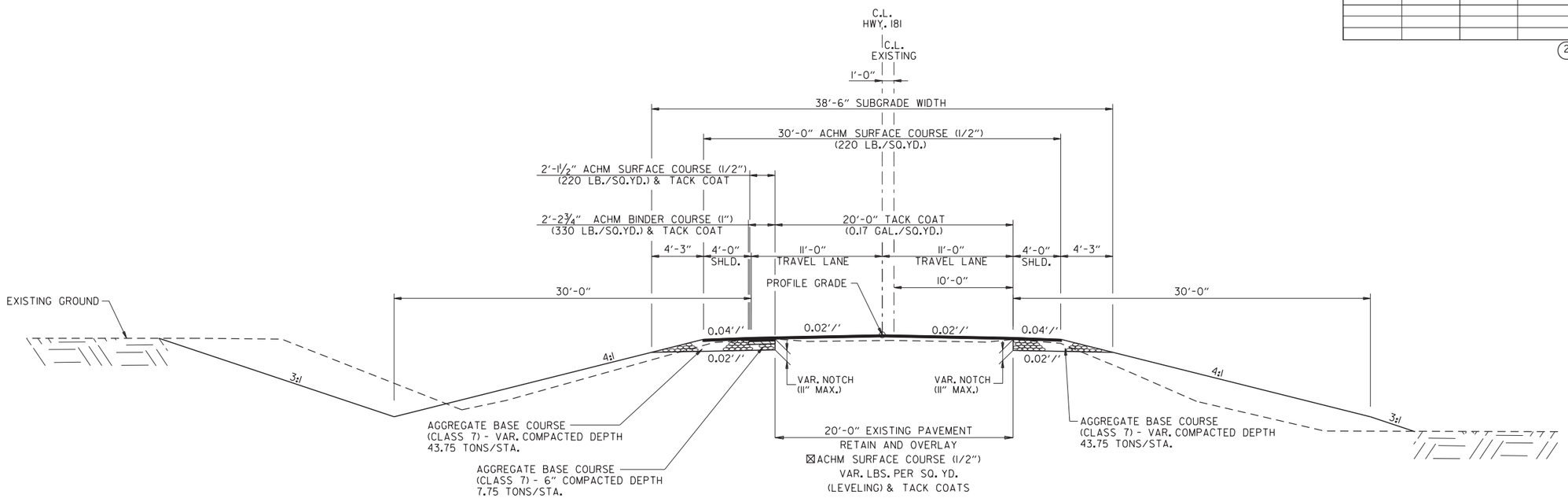

HWY. 181 NOTCH AND WIDENING SECTION

STA. 302+00.00 TO STA. 304+15.80
STA. 309+47.61 TO STA. 311+00.00

☒ TO BE USED IF AND WHERE DIRECTED BY THE ENGINEER

NOTES:

REFER TO CROSS SECTIONS FOR DEVIATION FROM THE NORMAL SLOPES. NO CHANGES SHALL BE MADE FROM THE PLANNED SLOPES WITHOUT THE APPROVAL OF THE ENGINEER.

THE THICKNESS OF AGGREGATE BASE COURSE SHALL BE WITHIN PLUS OR MINUS ONE INCH OF THE PLAN THICKNESS SHOWN. THE CONTRACTOR WILL CORRECT ANY DEFICIENT THICKNESS THAT DOES NOT MEET TOLERANCE INDICATED. PAYMENT WILL NOT BE MADE FOR MATERIAL PLACED IN EXCESS OF THE TOLERANCE INDICATED.

THE FINAL 2" OF SURFACE COURSE IS TO BE PLACED AFTER ALL OTHER COURSES HAVE BEEN LAID. LONGITUDINAL JOINTS SHALL BE AT LANE LINES.

ASPHALT FOR LEVELING OF EXISTING PAVEMENT SHALL BE PLACED ONLY IF AND WHERE DIRECTED BY THE ENGINEER. CALCULATIONS FOR THE AMOUNT OF LEVELING AND LEVELING OPERATIONS SHALL BE PERFORMED BEFORE CONSTRUCTING NOTCH AND WIDENING. CALCULATIONS WILL NOT BE PAID FOR DIRECTLY, BUT WILL BE CONSIDERED INCLUDED IN THE VARIOUS PAY ITEMS.

BLEEDER DITCHES - PRIOR TO AND DURING PLACEMENT OF PAVEMENT AT THE NOTCH, THE CONTRACTOR SHALL PROVIDE POSITIVE DRAINAGE AT ALL TIMES, THE METHOD(S) AND SPACING SHALL BE APPROVED BY THE ENGINEER. PAYMENT FOR THIS WORK SHALL BE CONSIDERED INCLUDED IN THE PRICE BID FOR THE VARIOUS CONTRACT ITEMS.

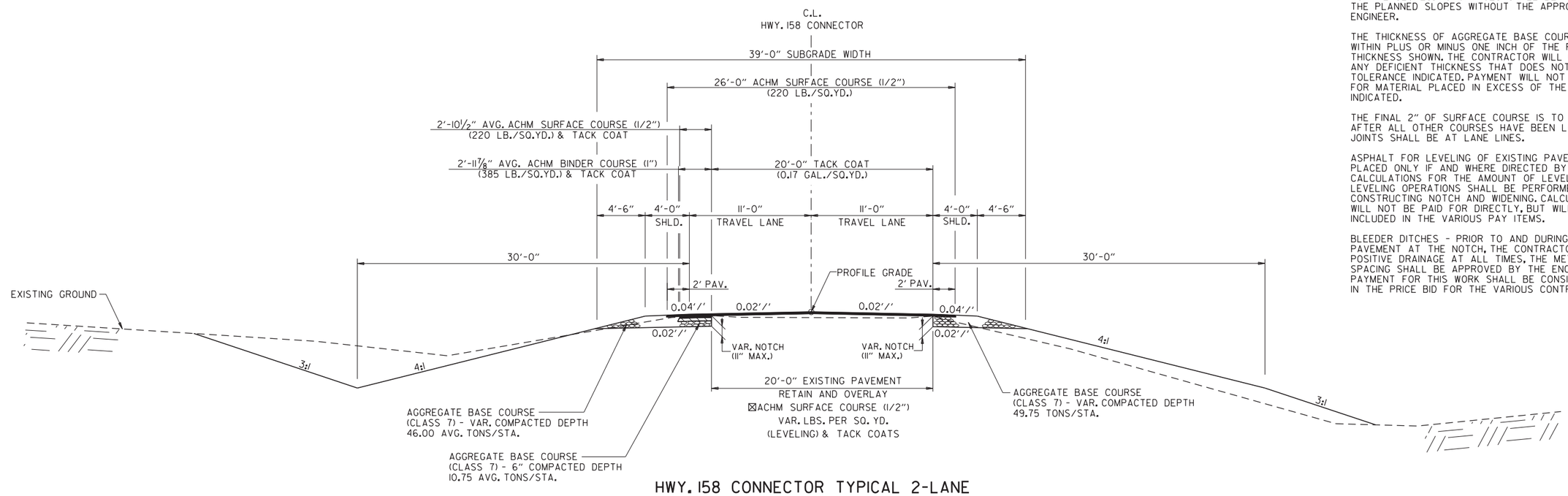

HWY. 158 CONNECTOR TYPICAL 2-LANE NOTCH AND WIDEN SECTION

STA. 11+40.00 TO STA. 12+22.00

☒ TO BE USED IF AND WHERE DIRECTED BY THE ENGINEER

TYPICAL SECTIONS OF IMPROVEMENT

PJoseph 8/13/2021 5:21:57 PM
WORKSPACE: AHTD
L:\2017\170176 42 - ARDOT Job 100955\Drawings\r100955_TYP.dgn
REVISED DATE:

DATE REVISED	DATE FILMED	DATE REVISED	DATE FILMED
01-05-2022			

FED.RD. DIST.NO.	STATE	FED.AID PROJ.NO.	SHEET NO.	TOTAL SHEETS
6	ARK.			
JOB NO.		100955	12	356

(2) TYPICAL SECTIONS OF IMPROVEMENT

STATE OF ARKANSAS
LICENSED PROFESSIONAL ENGINEER
No.13436
SHAUN A. ROBERSON

DIGITALLY SIGNED 1-5-2022

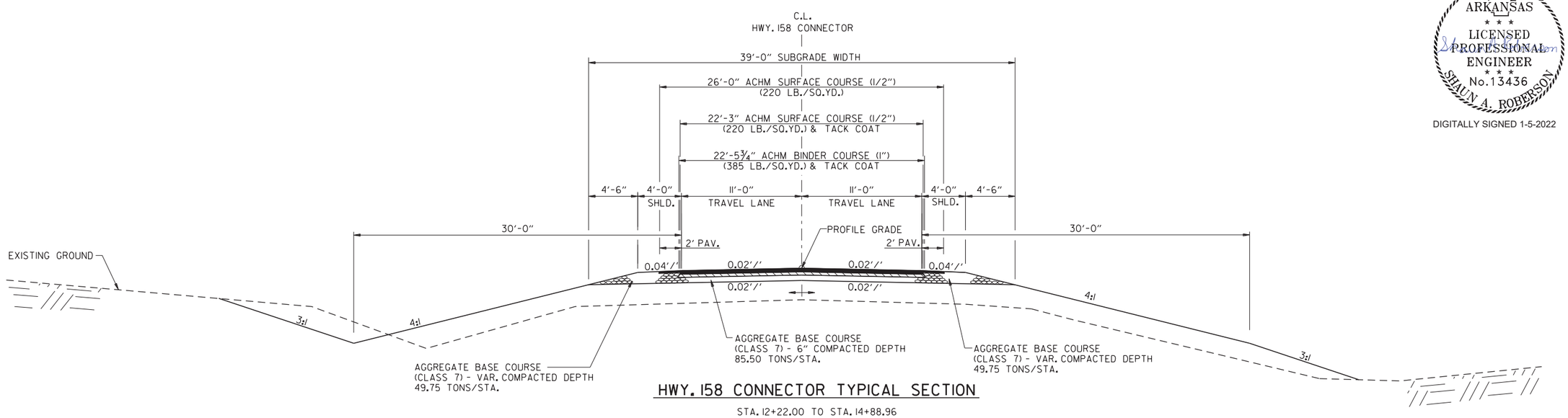

HWY. 158 CONNECTOR TYPICAL SECTION

STA. 12+22.00 TO STA. 14+88.96

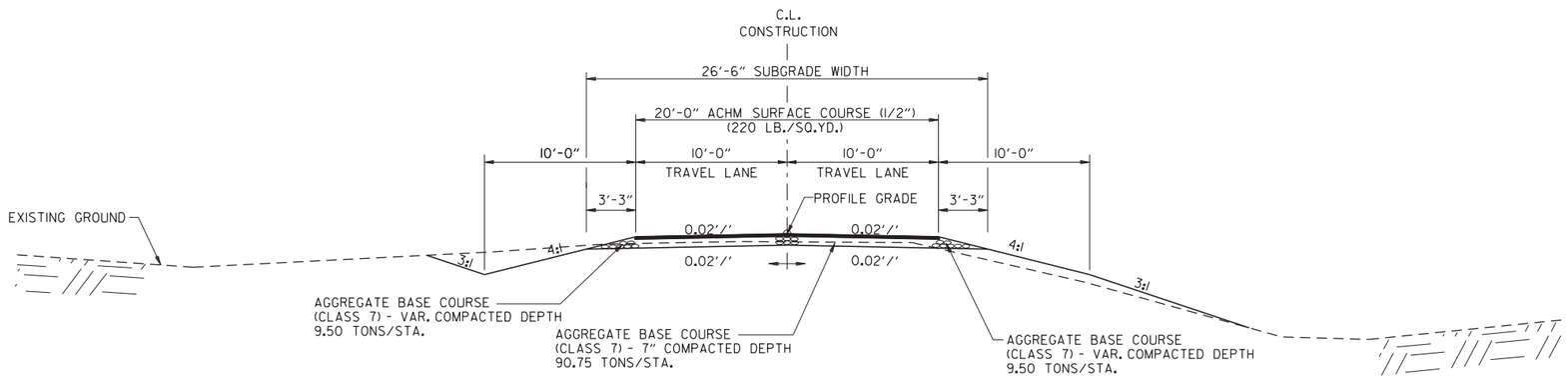

SIDE ROAD TYPICAL SECTION

C.R. 524 STA. 3+95.00 TO STA. 9+89.00
C.R. 538 WEST STA. 15+90.00 TO STA. 19+89.00
C.R. 538 EAST STA. 20+11.00 TO STA. 23+20.00
FARMER LN. STA. 10+11.00 TO STA. 12+25.00

CGGervasini 1/5/2022 11:57:17 PM
WORKSPACE: AHTD
L:\2017\170176\42 - ARDOT Job 100955\Drawings\r100955_TYP.dgn
REVISED DATE:

TYPICAL SECTIONS OF IMPROVEMENT

DATE REVISED	DATE FILMED	DATE REVISED	DATE FILMED	FED.RD. DIST.NO.	STATE	FED.AID PROJ.NO.	SHEET NO.	TOTAL SHEETS
				6	ARK.			
				JOB NO.		100955	13	356
				(2)	SPECIAL DETAILS			

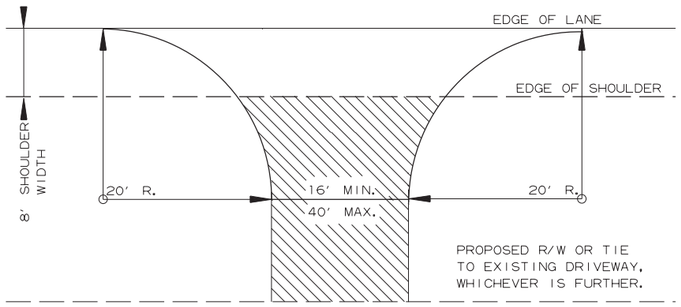

NOTE: TURNOUTS AND PRIVATE DRIVES SHALL BE MODIFIED WHERE NECESSARY TO MEET LOCAL CONDITIONS AS DIRECTED BY THE ENGINEER.

ACHM SURFACE COURSE (1/2") (220 LBS. PER SQ. YD.) AND AGGREGATE BASE COURSE (CLASS 7) 7" COMP. DEPTH IF ASPHALT OR GRAVEL DRIVE EXISTING; OR 6" CONCRETE IF CONCRETE DRIVE EXISTING.

DETAIL FOR DRIVEWAY TURNOUTS (HIGHWAY 140)

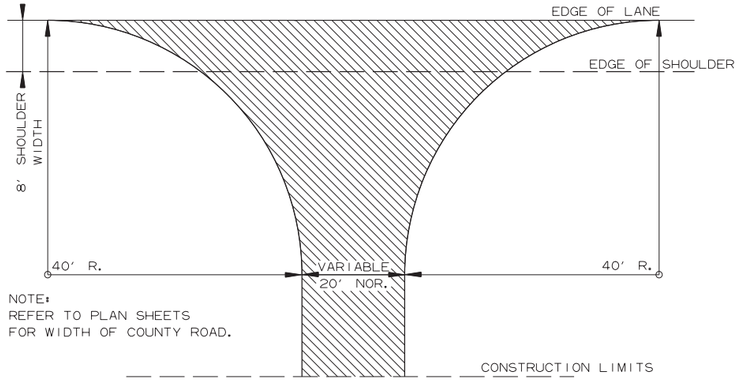

NOTE:
REFER TO PLAN SHEETS FOR WIDTH OF COUNTY ROAD.

NOTE: TURNOUTS SHALL BE MODIFIED WHERE NECESSARY TO MEET LOCAL CONDITIONS AS DIRECTED BY THE ENGINEER.

ACHM SURFACE COURSE (1/2") (220 LBS. PER SQ. YD.) AND AGGREGATE BASE COURSE (CLASS 7) 7" COMP. DEPTH

DETAIL FOR COUNTY ROAD TURNOUTS

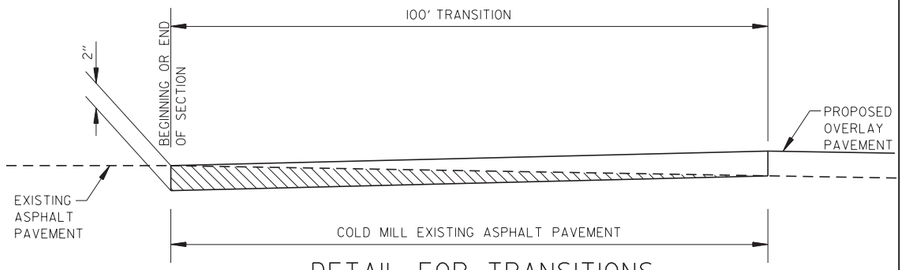

DETAIL FOR TRANSITIONS

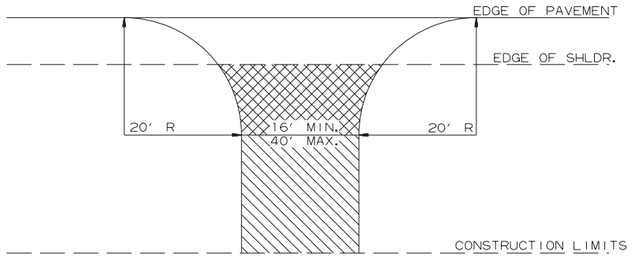

NOTE: TURNOUTS AND PRIVATE DRIVES SHALL BE MODIFIED WHERE NECESSARY TO MEET LOCAL CONDITIONS AS DIRECTED BY THE ENGINEER.

ASPHALT CONCRETE HOT MIX SURFACE COURSE (220 LBS. PER SQ. YD.) AGGREGATE BASE COURSE (CLASS 7) 7" COMP. DEPTH.

AGGREGATE BASE COURSE (CLASS 7) 9" COMP. DEPTH OR CONFORM TO EXISTING DRIVEWAY

DETAIL FOR DRIVEWAY TURNOUTS (COLLECTORS) (HWYS. 77, 158, & 181)

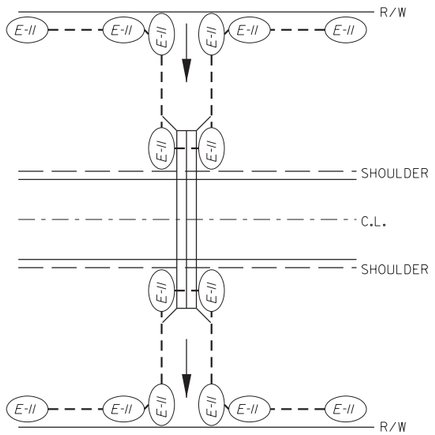

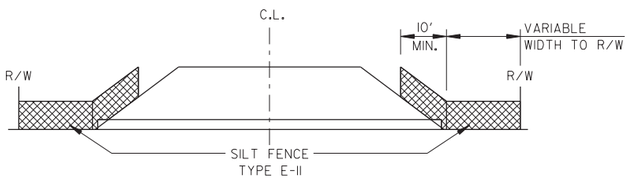

DETAILS OF SILT FENCE AT R.C. BOX

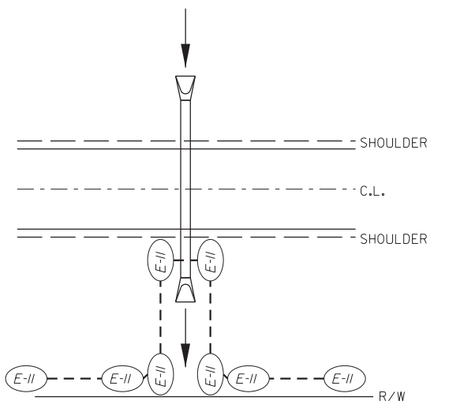

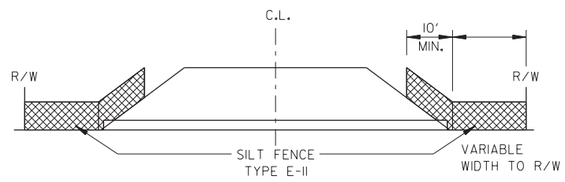

DETAILS OF SILT FENCE AT CROSS DRAINS

SPECIAL DETAILS

P.Joseph 8/13/2021 5:21:58 PM
WORKSPACE: AHTD
L:\2017\17017642 - ARDOT Job 100955\Drawings\r100955_SD_ALL.dgn
REVISED DATE:

DATE REVISED	DATE FILMED	DATE REVISED	DATE FILMED	FED.RD. DIST.NO.	STATE	FED.AID PROJ.NO.	SHEET NO.	TOTAL SHEETS
				6	ARK.			
				JOB NO.		100955	14	356
				(2)	SPECIAL DETAILS			

STATE OF ARKANSAS
LICENSED PROFESSIONAL ENGINEER
No.13436
SHAUN A. ROBERSON

DIGITALLY SIGNED 8-13-2021

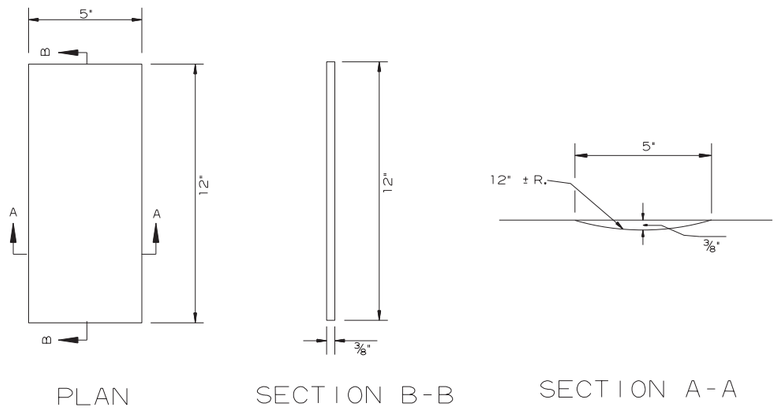

PLAN SECTION B-B SECTION A-A

DETAILS OF RUMBLE STRIPS

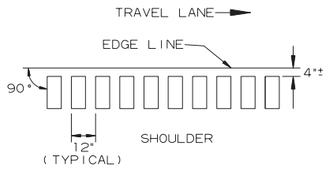

LOCATION PLAN OF RUMBLE STRIPS LEFT OR RIGHT SHOULDER

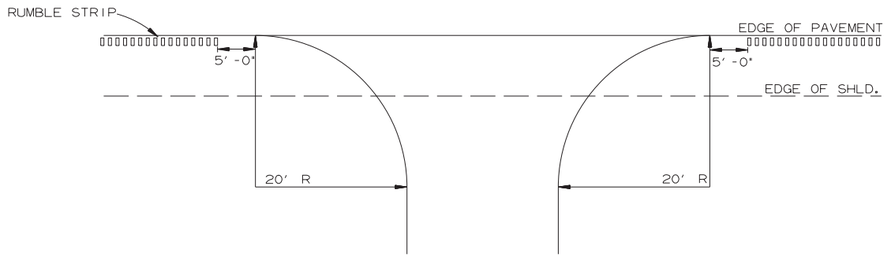

DETAIL FOR RUMBLE STRIP GAP AT DRIVEWAY TURNOUTS

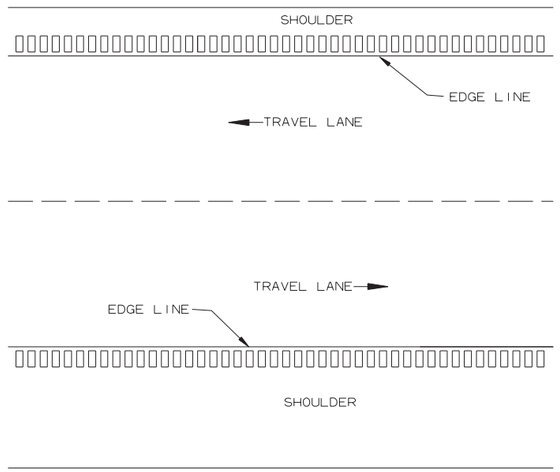

PLAN VIEW

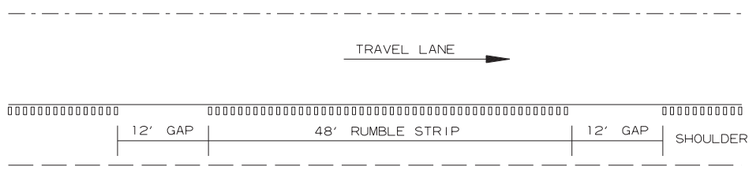

NOTE: GAP PATTERN SHALL BE ADJUSTED BY THE ENGINEER IN THE FIELD ALLOWING FOR DRIVEWAYS TO SERVE AS THE GAP.

DETAIL FOR GAP PATTERN RUMBLE STRIP

GENERAL NOTES

1. RUMBLE STRIPS SHALL NOT BE INSTALLED ON CURB SECTIONS, BRIDGE DECKS, APPROACH SLABS, INTERSECTING STREETS OR ROADWAYS, RESIDENTIAL OR COMMERCIAL DRIVEWAYS OR ACROSS TRANSVERSE JOINTS OF CONCRETE SHOULDERS.
2. RUMBLE STRIPS SHALL NOT BE INSTALLED ON A PAVED SHOULDER THAT IS USED AS A DECELERATION LANE FOR THE LENGTH DEEMED APPROPRIATE BY THE ENGINEER.
3. THE 4" OFFSET FROM THE EDGE LINE MAY BE INCREASED TO AVOID LONGITUDINAL JOINTS. IN ALL CASES, THE LATERAL DEVIATION FROM THE PLANNED OFFSET SHOULD BE KEPT TO A MINIMUM.
4. RUMBLE STRIPS SHALL BE MEASURED BY THE LINEAR FOOT LONGITUDINALLY ALONG THE SHOULDER. PAYMENT SHALL ONLY INCLUDE THAT PORTION OF THE SHOULDER ON WHICH RUMBLE STRIPS HAVE BEEN CONSTRUCTED. NO MEASUREMENT OR PAYMENT WILL BE MADE FOR GAPS, DRIVEWAYS, TURNOUTS, OR OTHER PUBLIC ROAD INTERSECTIONS WHERE RUMBLE STRIPS HAVE NOT BEEN CONSTRUCTED.
5. THE 3/8" DEPTH SHALL GENERALLY APPLY FOR THE ENTIRE 12" LENGTH. SOME VARIATION TO SUIT SHOULDER SLOPE BREAKS MAY BE NECESSARY.

PJoseph 8/13/2021 5:21:59 PM
WORKSPACE: AHTD
L:\2017\17017642 - ARDOT Job 100955\Drawings\r100955_SD_ALL.dgn
REVISED DATE:

DATE REVISED	DATE FILMED	DATE REVISED	DATE FILMED	FED.RD. DIST.NO.	STATE	FED.AID PROJ.NO.	SHEET NO.	TOTAL SHEETS
				6	ARK.			
				JOB NO.		100955	15	356
				(2)		SPECIAL DETAILS		

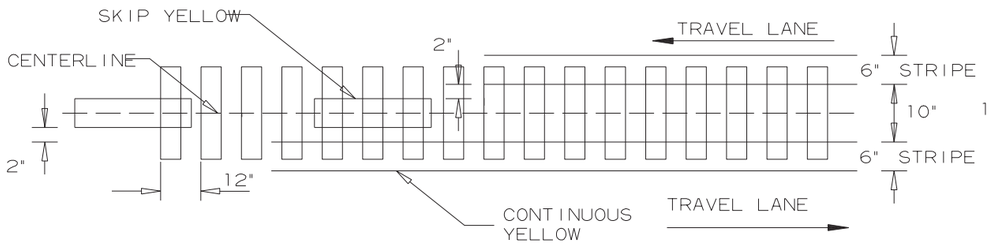

ASPHALT PAVEMENT

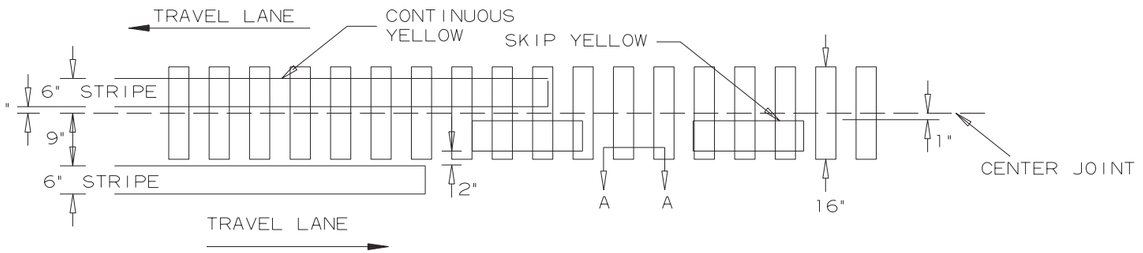

CONCRETE PAVEMENT

STATE OF ARKANSAS
LICENSED PROFESSIONAL ENGINEER
No.13436
SHAUN A. ROBERSON
DIGITALLY SIGNED 8-13-2021

LOCATION PLAN OF CENTERLINE RUMBLE STRIPES

NOTE:
THIS DETAIL ONLY APPLIES TO HWY. 140 SITE 1, HWY. 140 SITE 2, & HWY. 140 SITE 3.

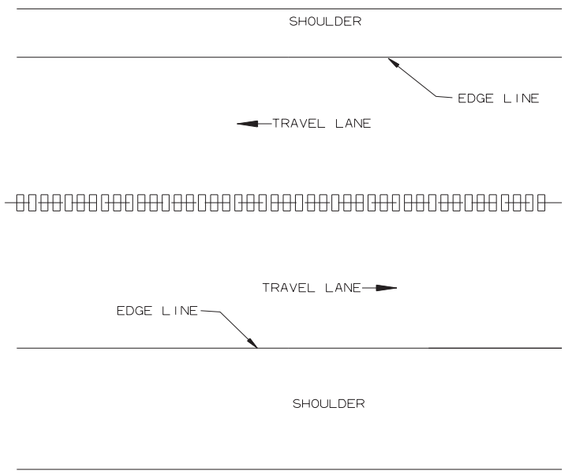

PLAN VIEW

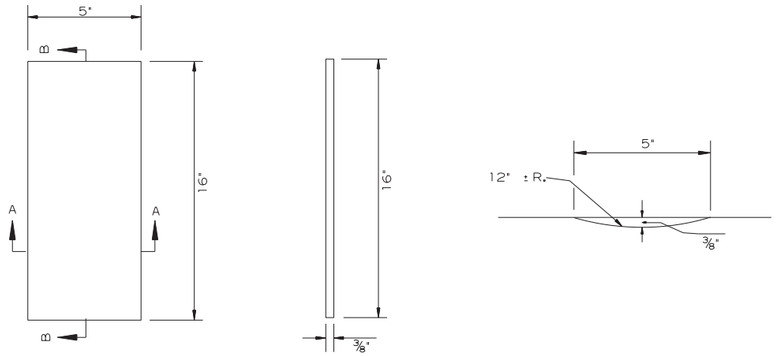

PLAN SECTION B-B SECTION A-A

DETAILS OF CENTERLINE RUMBLE STRIPES

GENERAL NOTES

1. RUMBLE STRIPES SHALL NOT BE INSTALLED ON BRIDGE DECKS, APPROACH SLABS, INTERSECTING STREETS OR ROADWAYS, OR ACROSS TRANSVERSE JOINTS OF CONCRETE SHOULDERS.
2. RUMBLE STRIPES SHALL BE MEASURED BY THE LINEAR FOOT LONGITUDINALLY ALONG THE CENTERLINE.
3. THE 3/8" DEPTH SHALL GENERALLY APPLY FOR THE ENTIRE 16" LENGTH. SOME VARIATION TO SUIT SLOPE BREAKS MAY BE NECESSARY.

PJoseph 8/13/2021 5:21:59 PM
WORKSPACE: AHTD
L:\20\TIO\170\7642 - ARDOT Job 100955\Drawings\r100955_SD_ALL.dgn
REVISED DATE:

DATE REVISED	DATE FILMED	DATE REVISED	DATE FILMED	FED.RD. DIST.NO.	STATE	FED.AID PROJ.NO.	SHEET NO.	TOTAL SHEETS
01-05-2022				6	ARK.			
				JOB NO.		100955	16	356
				(2)	SPECIAL DETAILS			

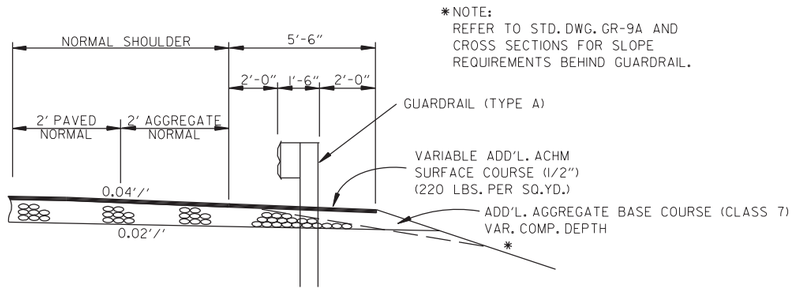

*NOTE:
REFER TO STD. DWG. GR-9A AND CROSS SECTIONS FOR SLOPE REQUIREMENTS BEHIND GUARDRAIL.

WIDENING FOR GUARDRAIL AT PROPOSED SHOULDER EDGE

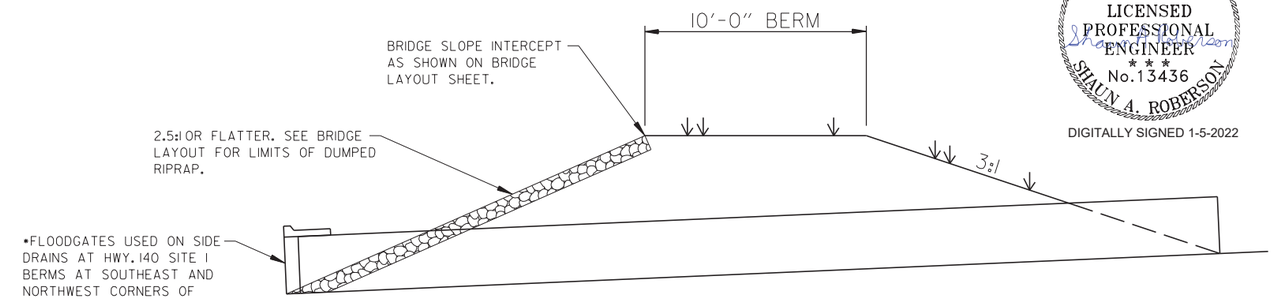

STATE OF ARKANSAS
LICENSED PROFESSIONAL ENGINEER
No. 13436
SHAUN A. ROBERSON
DIGITALLY SIGNED 1-5-2022

LOCATION	HWY. 158-RT.	HWY. 158-LT.	HWY. 140-RT.	HWY. 140-LT.	HWY. 140-RT.	HWY. 140-LT.
BEGIN STATION	107+10.00	110+40.00	107+68.33	107+96.89	110+95.04	111+23.70
END STATION	107+20.00	110+50.00	107+78.33	108+06.89	111+05.04	111+33.70
BEGIN OFFSET	18.49' RT.	18.50' LT.	78.18' RT.	67.91' LT.	94.63' RT.	81.45' LT.
END OFFSET	76.33' RT.	71.66' LT.	23.50' RT.	23.50' LT.	23.50' RT.	23.50' LT.

BERM GRADING LOCATIONS

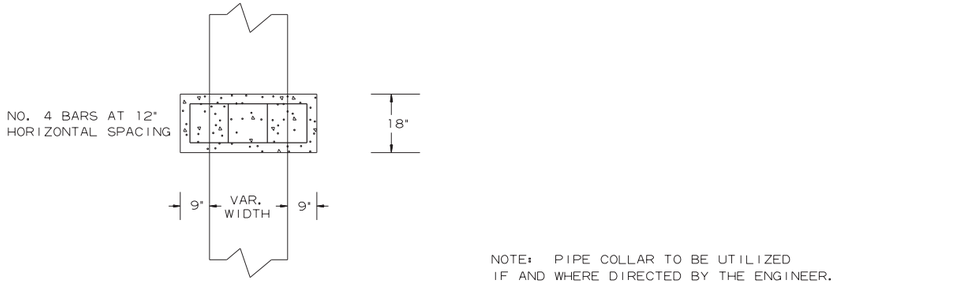

NOTE: PIPE COLLAR TO BE UTILIZED IF AND WHERE DIRECTED BY THE ENGINEER.

TOP VIEW

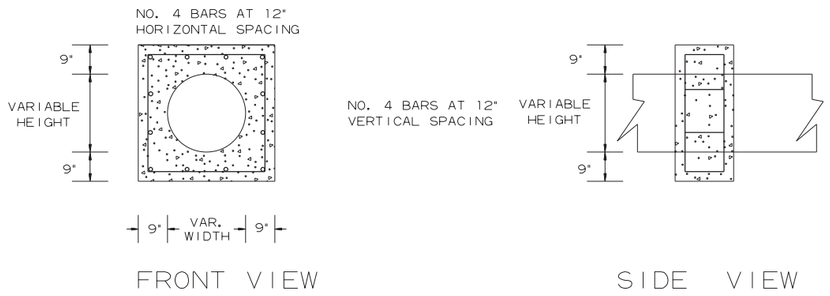

MIN 3" COVER

FRONT VIEW

SIDE VIEW

PIPE EXTENSION REINFORCED CONCRETE COLLAR DETAIL



6.0" Radius, 1.3" Border, Black on Orange;
'Job XXXXXX' C 2K; 'Start Date Mo Year' C 2K;
'Est Completion Mo Year' C 2K; 'IDRIVE ' Arial;
' ARKANSAS.COM ' Arial;

CONSTRUCTION PROJECT INFORMATION SIGN

CGervosini 1/5/2022 1:57:17 PM
WORKSPACE: AHTD
L:\2017\170\7642 - ARDOT Job 100955\Drawings\r100955_SD_ALL.dgn
REVISED DATE:

DATE REVISED	DATE FILMED	DATE REVISED	DATE FILMED	FED.RD. DIST.NO.	STATE	FED.AID PROJ.NO.	SHEET NO.	TOTAL SHEETS
01-05-2022				6	ARK.			
				JOB NO.		100955	17	356
				(2)		SPECIAL DETAILS		

STATE OF ARKANSAS
LICENSED PROFESSIONAL ENGINEER
No.13436
SHAUN A. ROBERSON
DIGITALLY SIGNED 1-5-2022

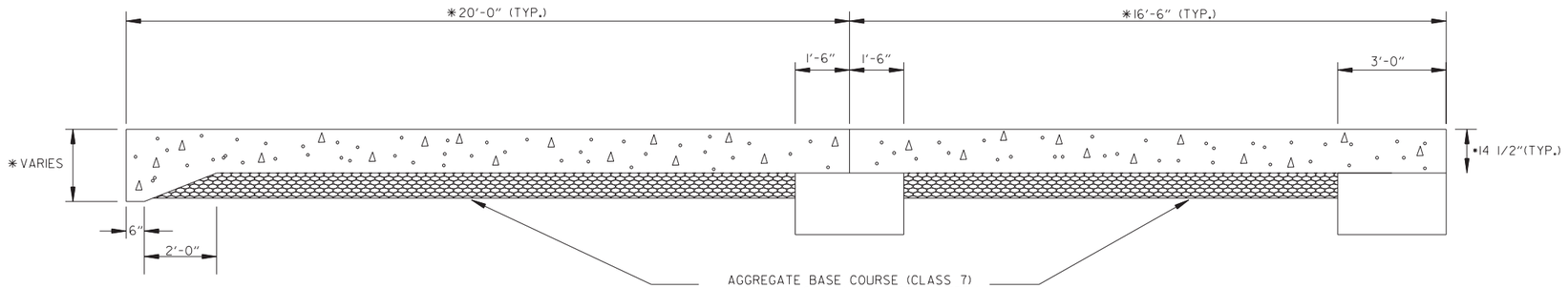

*SEE APPROACH SLAB DETAILS IN BRIDGE DRAWINGS

SECTION OF APPROACH SLAB

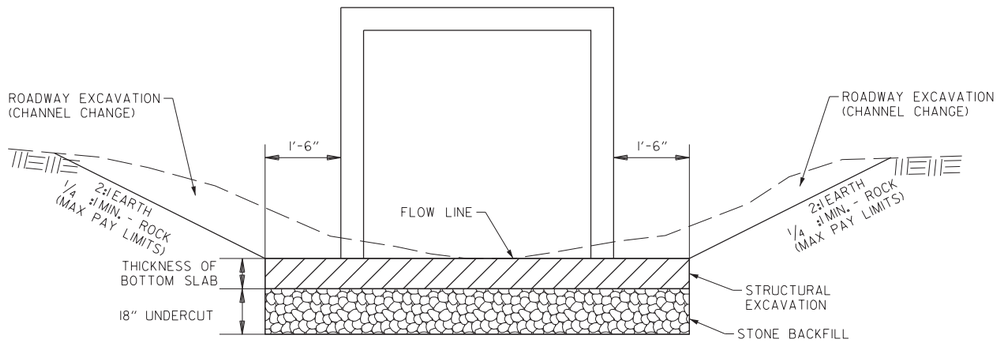

BACKFILL DETAIL FOR BOX CULVERTS

HWY. 77 SITE 5 STA. 505+00
HWY. 140 SITE 3 STA. 304+23
HWY. 181 SITE 1 STA. 102+50
HWY. 181 SITE 2 STA. 202+91
HWY. 181 SITE 3 STA. 306+75

NOTE:
UNDERCUT SHALL BE MEASURED AND PAID FOR ACCORDING TO SECTIONS 801.10 AND 801.11, RESPECTIVELY, OF THE STANDARD SPECIFICATIONS.

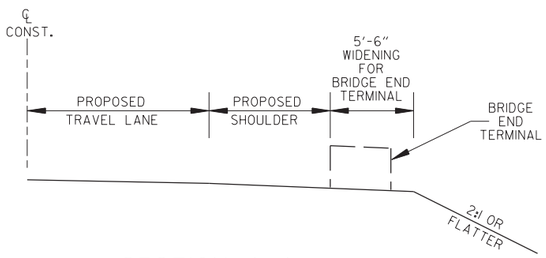

SECTION A-A

NOTE:
ELIMINATE OR MODIFY APPROACH CURB SECTION TO FIT BRIDGE END TERMINAL. NO PAYMENT SHALL BE MADE FOR ELIMINATING OR MODIFYING THIS CURB, BUT SHALL BE CONSIDERED IN PAYMENT MADE FOR APPROACH GUTTERS OF THE TYPE SPECIFIED.

NOTE:
BRIDGE END TERMINAL SHALL CONFORM TO THE FOLLOWING:
-MAXIMUM LENGTH: 20'
-MAXIMUM HEIGHT: 2.75'
-DESIGN SPEED: 60 MPH

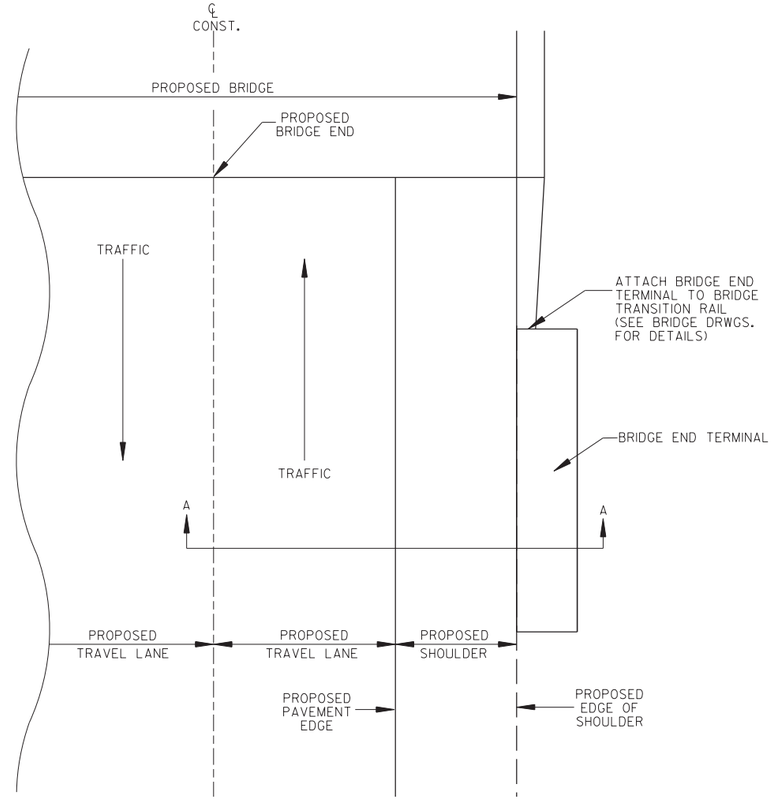

PLAN VIEW

BRIDGE END TERMINAL DETAILS

SPECIAL DETAILS

CGervasini 1/5/2022 11:57:17 PM
WORKSPACE: AHTD
L:\2017\1701642 - ARDOT Job 100955\Drawings\r100955_SD_ALL.dgn
REVISED DATE:

DATE REVISED	DATE FILMED	DATE REVISED	DATE FILMED	FED.RD. DIST.NO.	STATE	FED.AID PROJ.NO.	SHEET NO.	TOTAL SHEETS
				6	ARK.			
				JOB NO.		100955	18	356

(I) SPECIAL DETAILS

STATE OF ARKANSAS
LICENSED PROFESSIONAL ENGINEER
No. 13436
SHAUN A. ROBERSON
DIGITALLY SIGNED 8-13-2021

TABULAR DATA BY: CGG DATE: 08/21/2020
CHECKED BY: AEW DATE: 08/28/2020

INLET WINGWALL TABLE

OVER ALL WIDTH	CLEAR HEIGHT	FOOTING THK.	WING WALL THK.	BOX SKEW (DEG.)	SLOPE	HDWL LENGTH	HEEL	WALL HEIGHT AT HDWL	WALL HEIGHT AT WING END	WINGWALL ANGLE (DEGREE) WING A	WINGWALL ANGLE (DEGREE) WING B	FOOTING WIDTH AT WALL END	WIDTH OF WING FOOTINGS AT HDW. WING A	WIDTH OF WING FOOTINGS AT HDW. WING B	FOOTING DIMENSION PARALLEL WITH HDWL WING A	FOOTING DIMENSION PARALLEL WITH HDWL WING B	LENGTH OF WINGWALLS WING A	LENGTH OF WINGWALLS WING B	LENGTH OF FOOTING HEEL WING A	LENGTH OF FOOTING HEEL WING B
OW	H	WB	CW	SK	SL	K	HL	WH1	WH2	AF1	AF2	WE	WF1	WF2	G1	G2	W1	W2	W3	W4
38'-9"	10'-0"	0'-11"	0'-10"	0	3:1	37'-4"	2'-0"	10'-10"	3'-4"	30	30	3'-4"	5'-4 1/4"	5'-4 1/4"	2'-4"	2'-4"	25'-6"	25'-6"	28'-11 7/8"	28'-11 7/8"

CLASS "S" CONCRETE (Includes apron)	REINFORCING STEEL (Includes apron and laps if required)
INLET	NLET
CU.YD	LBS.
22.35	1868

WING	F1 BAR SIZE	F1 MAX. SPACING	F1 NO. REQ'D	F1 LENGTHS VARY	F1 LENGTHS	F2 BAR SIZE	F2 SPACING	F2 NO. REQ'D	F2 LENGTHS	F3 BAR SIZE	F3 SPACING	F3 NO. REQ'D	F3 LENGTHS	F4 BAR SIZE	F4 SPACING	F4 NO. REQ'D	F4 LENGTHS VARY	F5 BAR SIZE	F5 SPACING	F5 NO. REQ'D	F5 LENGTHS
WING A	4	12	26	L Min	4'-8"	5	12	4	L 7'-6"	4	12	7	L 5'-8"	4	18	10	Min 3'-10"	4	18	4	25'-2"
				L Max	14'-0"												Max 24'-2"				
				X Min	0'-11"				X 2'-8"				X 2'-1"								
				X Max	2'-11"																
				Y Min	3'-10"				Y 4'-11"				Y 3'-8"								
				Y Max	11'-2"																
WING B	4	12	26	L Min	4'-8"	5	12	4	L 7'-6"	4	12	7	L 5'-8"	4	18	10	Min 3'-10"	4	18	4	25'-2"
				L Max	14'-0"												Max 24'-2"				
				X Min	0'-11"				X 2'-8"				X 2'-1"								
				X Max	2'-11"																
				Y Min	3'-10"				Y 4'-11"				Y 3'-8"								
				Y Max	11'-2"																

WING	F6 BAR SIZE	F6 SPACING	F6 NO. REQ'D	F6 LENGTHS VARY	F6 LENGTHS	F7 BAR SIZE	F7 NO. REQ'D	F7 LENGTHS	F8 BAR SIZE	F8 SPACING	F8 NO. REQ'D	F8 LENGTHS VARY	F9 BAR SIZE	F9 SPACING	F9 NO. REQ'D	F9 LENGTHS	F10 BAR SIZE	F10 NO. REQ'D	F10 LENGTHS	F11 BAR SIZE	F11 NO. REQ'D	F11 LENGTHS	F12 BAR SIZE	F12 SPACING	F12 NO. REQ'D	F12 LENGTHS	REINF. STEEL QTY. PER WING (LBS)
WING A	4	18	17	L Min 6'-6"		4	8	29'-10"	6	18	18	Min 2'-10"	4	18	2	Min 21'-1"	4	2	26'-1"	4	2	27'-11"	6	12	10	L 3'-4"	934
				L Max 13'-7"								Max 4'-10"				Max 21'-1"										X 1'-8"	
				X Min 2'-6"																							
				X Max 2'-6"																							
				Y Min 4'-1"																							
				Y Max 11'-2"																							
WING B	4	18	17	L Min 6'-6"		4	8	29'-10"	6	18	18	Min 2'-10"	4	18	2	Min 21'-1"	4	2	26'-1"	4	2	27'-11"	6	12	10	L 3'-4"	934
				L Max 13'-7"								Max 4'-10"				Max 21'-1"										X 1'-8"	
				X Min 2'-6"																							
				X Max 2'-6"																							
				Y Min 4'-1"																							
				Y Max 11'-2"																							

MID-SECTION BAR LAP TABLE

# of Long. Laps Req'd.	SL = Section Length
0	< 40.0 ft
1	>40.0 ft - 78.0 ft
2	>78.0 ft - 116.0 ft
3	>116.0 ft - 154.0 ft
4	>154.0 ft - 192.0 ft
5	>192.0 ft - 230.0 ft
6	>230.0 ft - 268.0 ft
7	>268.0 ft - 306.0 ft
8	>306.0 ft -344.0 ft

Min. Bar Lap Length	
#4	1'-9"
#5	2'-2"
#6	2'-7"
#7	3'-6"
#8	4'-7"

Bar Pin Dia. Table	
#4	3"
#5	3 3/4"
#6	4 1/2"
#7	5 1/4"
#8	6"

This drawing to be used in conjunction with
SHEET 1 OF 4, "GENERAL DETAILS OF R.C. BOX CULVERT", 'GENERAL NOTES & LONGITUDINAL SECTION LENGTH SCHEDULE',
SHEET 3 OF 4, "GENERAL DETAILS OF R.C. BOX CULVERT", 'DETAILS OF MULTI-BARREL R.C. BOX CULVERT',
SHEET 4 OF 4, "GENERAL DETAILS OF R.C. BOX CULVERT", 'DETAILS OF WINGWALLS', and
STANDARD DRAWING RCB-2.

For additional information and outlet sections, see Sheet 2 of 2.

(I) Any Bar Lap Required for the Skewed End Section shall be considered subsidiary to the item "Reinforcing Steel - Roadway (Grade 60)."

INLET SKEWED END SECTION

SKEW (DEGREE)	SLOPE	DESIGN FILL DEPTH (FT.)	CLEAR SPAN (FT.)	CLEAR HEIGHT (FT.)	SECTION LENGTH	TOP SLAB THK.	HDWL DEPTH	BOTTOM SLAB THK.	SIDE WALL THK.	INTERIOR WALL THK.	OVER ALL WIDTH	OVER ALL HEIGHT
SK	SL	D	S	H	LL	T	HD	B	C	W	OW	OH

TOP SLAB REINFORCING STEEL "a" SIZE	"a" SPACING	"a" LENGTHS VARY	"a" NO. REQ'D	"c" SIZE	"c" SPACING	"c" LENGTHS VARY	"c" NO. REQ'D
		Max				Max	
		Min				Min	

BOTTOM SLAB REINFORCING STEEL "d" SIZE	"d" SPACING	"d" LENGTHS VARY	"d" NO. REQ'D	"f" SIZE	"f" SPACING	"f" LENGTHS VARY	"f" NO. REQ'D
		Max				Max	
		Min				Min	

SIDE WALL REINFORCING STEEL "f0" SIZE	"f0" SPACING	"f0" NO. REQ'D	"f0" LENGTH

INTERIOR WALL REINFORCING STEEL "f1" SIZE	"f1" SPACING	"f1" NO. REQ'D	"f1" LENGTH

TOP SLAB DISTRIBUTION REINFORCING STEEL "g" SIZE	"g" SPACING	"g" NO. REQ'D	"g" LENGTHS VARY
			Max
			Min

BOTTOM SLAB DISTRIBUTION REINFORCING STEEL "e" SIZE	"e" SPACING	"e" NO. REQ'D	"e" LENGTHS VARY
			Max
			Min

SIDE WALL DISTRIBUTION REINFORCING STEEL "d1" SIZE	"d1" SPACING	"d1" NO. REQ'D	"d1" LENGTH
			LONG
			SHORT

INTERIOR WALL DISTRIBUTION REINFORCING STEEL "d2" SIZE	"d2" SPACING	"d2" NO. REQ'D	"d2" LENGTH
			LONG
			SHORT

CLASS "S" CONCRETE (Includes HDWL) CU. YDS.	(I) REINFORCING STEEL (GR 60) (Includes HDWL) LBS.

"k1" HDWL BARS SIZE	"k1" HDWL BARS LENGTH	"k1" HDWL BARS NO. REQ'D	"k2" HDWL BARS SIZE	"k2" HDWL BARS LENGTH	"k2" HDWL BARS NO. REQ'D	"h" HDWL BARS SIZE	"h" HDWL BARS LENGTH	"h" HDWL BARS Y	"h" HDWL BARS NO. REQ'D

INLET SLOPE SECTION(S)

R.C. BOX SECTION	DESIGN FILL DEPTH (FT.) D	CLEAR SPAN (FT.) S	CLEAR HEIGHT (FT.) H	TOP SLAB THK. T	BOTTOM SLAB THK. B	SIDE WALL THK. C	INTERIOR WALL THK. W	OVER ALL WIDTH OW	OVER ALL HEIGHT OH	SECTION LENGTH (FT.) SL

LENGTH = OW - 4" + BENDS "a" SIZE	"a" L	Bent "b" SIZE	Bent "b" L	"c" SIZE	"c" L	SPACING	NO. REQ'D

BOTTOM SLAB REINFORCING STEEL LENGTH = OW - 4" + BENDS "d" SIZE	"d" L	Bent "b1" SIZE	Bent "b1" L	"f" SIZE	"f" L	SPACING	NO. REQ'D

SIDE WALL REINFORCING STEEL "f0" LENGTH = OH - 4" SIZE	SPACING	NO. REQ'D	LENGTH

INTERIOR WALL REINFORCING STEEL "f1" LENGTH = OH - 4" SIZE	SPACING	NO. REQ'D	LENGTH

TOP SLAB DISTRIBUTION REINFORCING "g" LENGTH = SL SIZE	SPACING	NO. REQ'D

BOTTOM SLAB DISTRIBUTION REINFORCING "e" LENGTH = SL SIZE	SPACING	NO. REQ'D

SIDE WALL DISTRIBUTION REINFORCING "d1" LENGTH = SL SIZE	SPACING	NO. REQ'D

INTERIOR WALL DISTRIBUTION REINFORCING "d2" LENGTH = SL SIZE	SPACING	NO. REQ'D

CLASS "S" CONCRETE CU. YDS.	REINFORCING STEEL (GR. 60) LBS.
0.36	105
TOTAL	
0.36	105

HDWL DEPTH HD	ADDITIONAL REINF. FOR HDWL LBS.	"h" HDWL BARS SIZE	"h" HDWL BARS Y	"h" HDWL BARS LENGTH	"h" HDWL BARS NO. REQ'D
3"	51	4	1'-0"	2'-0"	40

Design Fill Depth	Range of Actual Fill Depth
2	0.0 ft - 2.0 ft
5	>2.0 ft - 5.0 ft
10	>5.0 ft - 10.0 ft
15	>10.0 ft - 15.0 ft
20	>15.0 ft - 20.0 ft
25	>20.0 ft - 25.0 ft
30	>25.0 ft - 30.0 ft
35	>30.0 ft - 35.0 ft
40	>35.0 ft - 40.0 ft

Data shown for Mid-Section, Slope Section(s), and Skewed End Section is based on the design fill depth shown in the table, see PLAN AND PROFILE SHEETS for actual fill depth.

MID-SECTION

R.C. BOX SECTION	DESIGN FILL DEPTH (FT.) D	CLEAR SPAN (FT.) S	CLEAR HEIGHT (FT.) H	TOP SLAB THK. T	BOTTOM SLAB THK. B	SIDE WALL THK. C	INTERIOR WALL THK. W	OVER ALL WIDTH OW	OVER ALL HEIGHT OH	SECTION LENGTH (FT.) SL
A	2	12	10	13.5	13.5	8.5	8	38'-9"	12'-3"	84

TOP SLAB REINFORCING STEEL LENGTH = OW - 4" + BENDS "a" SIZE	"a" L	Bent "b" SIZE	Bent "b" L	"c" SIZE	"c" L	SPACING	NO. REQ'D
	4 38'-5"	8	39'-3"	8	38'-5"	17	59

BOTTOM SLAB REINFORCING STEEL LENGTH = OW - 4" + BENDS "d" SIZE	"d" L	Bent "b1" SIZE	Bent "b1" L	"f" SIZE	"f" L	SPACING	NO. REQ'D
	4 38'-5"	4	39'-3"	4	38'-5"	14	72

SIDE WALL REINFORCING STEEL "f0" LENGTH = OH - 4" SIZE	SPACING	NO. REQ'D	LENGTH
	5 5	402	11'-11"

INTERIOR WALL REINFORCING STEEL "f1" LENGTH = OH - 4" SIZE	SPACING	NO. REQ'D	LENGTH
	4 12	336	11'-11"

TOP SLAB DISTRIBUTION REINF. STEEL "g" LENGTH = SL SIZE	SPACING	NO. REQ'D
	4 8	113

BOTTOM SLAB DISTRIBUTION REINF. STEEL "e" LENGTH = SL SIZE	SPACING	NO. REQ'D
	4 8	113

SIDE WALL DISTRIBUTION REINF. STEEL "d1" LENGTH = SL SIZE	SPACING	NO. REQ'D
	4 12	20

INTERIOR WALL DISTRIBUTION REINF. STEEL "d2" LENGTH = SL SIZE	SPACING	NO. REQ'D
	4 12	40

CLASS "S" CONCRETE CU. YDS.	REINFORCING STEEL (GR. 60) LBS.
356.81	43803

SHEET 1 OF 2
DETAILS OF R.C. BOX CULVERT
TRIPLE BARREL BOX CULVERT
HWY. 77 Sta. 505+00

SPECIAL DETAILS

LRFD

P.Joseph 8/13/2021 5:22:02 PM
WORKSPACE: AHTD
L:\20ITI\ITI07642 - ARDOT Job 100955\Drawings\r100955_SD_HWY 77-SITE 5 505+00.dgn
REVISED DATE:

DATE REVISED	DATE FILMED	DATE REVISED	DATE FILMED	FED.RD. DIST.NO.	STATE	FED.AID PROJ.NO.	SHEET NO.	TOTAL SHEETS
				6	ARK.			
				JOB NO.		100955	19	356
				(1) SPECIAL DETAILS				

STATE OF ARKANSAS
LICENSED PROFESSIONAL ENGINEER
No.13436
SHAUN A. ROBERTSON
DIGITALLY SIGNED 8-13-2021

TABULAR DATA BY: CGG DATE: 08/21/2020
CHECKED BY: AEW DATE: 08/28/2020

OUTLET WINGWALL TABLE

OVER ALL WIDTH	CLEAR HEIGHT	FOOTING THK.	WING WALL THK.	BOX SKEW (DEG.)	SLOPE	HDWL LENGTH	HEEL	WALL HEIGHT AT HDWL	WALL HEIGHT AT WING END	WINGWALL ANGLE (DEGREE) WING A	WINGWALL ANGLE (DEGREE) WING B	FOOTING WIDTH AT WALL END	WIDTH OF WING FOOTINGS AT HDWL WING A	WIDTH OF WING FOOTINGS AT HDWL WING B	FOOTING DIMENSION PARALLEL WITH HDWL WING A	FOOTING DIMENSION PARALLEL WITH HDWL WING B	LENGTH OF WINGWALLS WING A	LENGTH OF WINGWALLS WING B	LENGTH OF FOOTING HEEL WING A	LENGTH OF FOOTING HEEL WING B
OW	H	WB	CW	SK	SL	K	HL	WH1	WH2	AF1	AF2	WE	WF1	WF2	G1	G2	W1	W2	W3	W4
38'-9"	10'-0"	0'-11"	0'-10"	0	3:1	37'-4"	2'-0"	10'-10"	3'-4"	30	30	3'-4"	5'-4 1/4"	5'-4 1/4"	2'-4"	2'-4"	25'-6"	25'-6"	28'-11 7/8"	28'-11 7/8"

CLASS 'S' CONCRETE (Includes apron)	REINFORCING STEEL (Includes apron and laps if required)
OUTLET	OUTLET
CU.YD	LBS.
23.80	1868

WING	F1 BAR SIZE	F1 MAX. SPACING	F1 NO. REQ'D	F1 LENGTHS VARY			F2 BAR SIZE	F2 SPACING	F2 NO. REQ'D	F2 LENGTHS			F3 BAR SIZE	F3 SPACING	F3 NO. REQ'D	F3 LENGTHS			F4 BAR SIZE	F4 SPACING	F4 NO. REQ'D	F4 LENGTHS VARY
WING A	4	12	26	L	Min	4'-8"	5	12	4	L	7'-6"		4	12	7	L	5'-8"		4	18	10	Min
					Max	14'-0"																3'-10"
				X	Min	0'-11"																
					Max	2'-11"																Max
				Y	Min	3'-10"				X	2'-8"					X	2'-1"				24'-2"
					Max	11'-2"																
										Y	4'-11"					Y	3'-8"				
WING B	4	12	26	L	Min	4'-8"	5	12	4	L	7'-6"		4	12	7	L	5'-8"		4	18	10	Min
					Max	14'-0"																3'-10"
				X	Min	0'-11"																
					Max	2'-11"																Max
				Y	Min	3'-10"				X	2'-8"					X	2'-1"				24'-2"
					Max	11'-2"																
										Y	4'-11"					Y	3'-8"				

WING	F5 BAR SIZE	F5 SPACING	F5 NO. REQ'D	F5 LENGTHS	F6 BAR SIZE	F6 SPACING	F6 NO. REQ'D	F6 LENGTHS VARY			F7 NO. REQ'D	F7 LENGTHS	F8 BAR SIZE	F8 SPACING	F8 NO. REQ'D	F8 LENGTHS VARY		F9 BAR SIZE	F9 SPACING	F9 NO. REQ'D	F9 LENGTHS	F10 BAR SIZE	F10 NO. REQ'D	F10 LENGTHS	F11 BAR SIZE	F11 NO. REQ'D	F11 LENGTHS	F12 BAR SIZE	F12 SPACING	F12 NO. REQ'D	F12 LENGTHS		REINF. STEEL QTY. PER WING (LBS)
WING A	4	18	4	25'-2"	4	18	17	L	Min	6'-6"	4	29'-10"	6	18	18	Min		4	18	2	21'-1"	4	2	26'-1"	4	2	27'-11"	6	12	10	L	3'-4"	934
									Max	13'-7"						2'-10"					Max												
								X	Min	2'-6"						Min					21'-1"										X	1'-8"	
									Max	2'-6"						Max																
								Y	Min	4'-1"						4'-10"																
									Max	11'-2"											21'-1"											
WING B	4	18	4	25'-2"	4	18	17	L	Min	6'-6"	4	29'-10"	6	18	18	Min		4	18	2	21'-1"	4	2	26'-1"	4	2	27'-11"	6	12	10	L	3'-4"	934
									Max	13'-7"						2'-10"					Max												
								X	Min	2'-6"						Min					21'-1"										X	1'-8"	
									Max	2'-6"						Max																
								Y	Min	4'-1"						4'-10"																
									Max	11'-2"											21'-1"											

Min. Bar Lap Length	
#4	1'-9"
#5	2'-2"
#6	2'-7"
#7	3'-6"
#8	4'-7"

Bar Pin Dia. Table	
#4	3"
#5	3 3/4"
#6	4 1/2"
#7	5 1/4"
#8	6"

(1) Any Bar Lap Required for the Skewed End Section shall be considered subsidiary to the item "Reinforcing Steel - Roadway (Grade 60)."

OUTLET SKEWED END SECTION

SKEW (DEGREE)	SLOPE	DESIGN FILL DEPTH (FT.)	CLEAR SPAN (FT.)	CLEAR HEIGHT (FT.)	SECTION LENGTH	TOP SLAB THK.	HDWL DEPTH	BOTTOM SLAB THK.	SIDE WALL THK.	INTERIOR WALL THK.	OVER ALL WIDTH	OVER ALL HEIGHT
SK	SL	D	S	H	LL	T	HD	B	C	W	OW	OH

TOP SLAB REINFORCING STEEL "a" SIZE	"a" SPACING	"a" LENGTHS VARY	"a" NO. REQ'D	"c" SIZE	"c" SPACING	"c" LENGTHS VARY	"c" NO. REQ'D
		Max				Max	
		Min				Min	

BOTTOM SLAB REINFORCING STEEL "d" SIZE	"d" SPACING	"d" LENGTHS VARY	"d" NO. REQ'D	"f" SIZE	"f" SPACING	"f" LENGTHS VARY	"f" NO. REQ'D
		Max				Max	
		Min				Min	

SIDE WALL REINFORCING STEEL "f0" SIZE	"f0" SPACING	"f0" NO. REQ'D	"f0" LENGTH

INTERIOR WALL REINFORCING STEEL "f1" SIZE	"f1" SPACING	"f1" NO. REQ'D	"f1" LENGTH

TOP SLAB DISTRIBUTION REINFORCING STEEL "g" SIZE	"g" SPACING	"g" NO. REQ'D	"g" LENGTHS VARY
			Max
			Min

BOTTOM SLAB DISTRIBUTION REINFORCING STEEL "e" SIZE	"e" SPACING	"e" NO. REQ'D	"e" LENGTHS VARY
			Max
			Min

SIDE WALL DISTRIBUTION REINFORCING STEEL "d1" SIZE	"d1" SPACING	"d1" NO. REQ'D	"d1" LENGTH
			LONG
			SHORT

INTERIOR WALL DISTRIBUTION REINFORCING STEEL "d2" SIZE	"d2" SPACING	"d2" NO. REQ'D	"d2" LENGTH
			LONG
			SHORT

CLASS "S" CONCRETE (Includes HDWL) CU. YDS.	(1) REINFORCING STEEL (GR 60) (Includes HDWL) LBS.

"k1" HDWL BARS SIZE	"k1" HDWL BARS LENGTH	"k1" HDWL BARS NO. REQ'D	"k2" HDWL BARS SIZE	"k2" HDWL BARS LENGTH	"k2" HDWL BARS NO. REQ'D	"h" HDWL BARS SIZE	"h" HDWL BARS LENGTH	"h" HDWL BARS Y	"h" HDWL BARS NO. REQ'D

OUTLET SLOPE SECTION(S)

R.C. BOX SECTION	DESIGN FILL DEPTH (FT.)	CLEAR SPAN (FT.)	CLEAR HEIGHT (FT.)	TOP SLAB THK.	BOTTOM SLAB THK.	SIDE WALL THK.	INTERIOR WALL THK.	OVER ALL WIDTH	OVER ALL HEIGHT	SECTION LENGTH (FT.)
D	S	H	T	B	C	W	OW	OH	SL	

LENGTH = OW - 4" + BENDS "a" SIZE	"a" L	Bent "b" SIZE	Bent "b" L	"c" SIZE	"c" L	SPACING	NO. REQ'D

BOTTOM SLAB REINFORCING STEEL LENGTH = OW - 4" + BENDS "d" SIZE	"d" L	Bent "b1" SIZE	Bent "b1" L	"f" SIZE	"f" L	SPACING	NO. REQ'D

SIDE WALL REINFORCING STEEL "f0" LENGTH = OH - 4" SIZE	SPACING	NO. REQ'D	LENGTH

INTERIOR WALL REINFORCING STEEL "f1" LENGTH = OH - 4" SIZE	SPACING	NO. REQ'D	LENGTH

TOP SLAB DISTRIBUTION REINFORCING STEEL "g" LENGTH = SL SIZE	SPACING	NO. REQ'D

BOTTOM SLAB DISTRIBUTION REINFORCING STEEL "e" LENGTH = SL SIZE	SPACING	NO. REQ'D

SIDE WALL DISTRIBUTION REINFORCING STEEL "d1" LENGTH = SL SIZE	SPACING	NO. REQ'D

INTERIOR WALL DISTRIBUTION REINFORCING STEEL "d2" LENGTH = SL SIZE	SPACING	NO. REQ'D

HDWL DEPTH	ADDITIONAL REINF. FOR HDWL	"h" HDWL BARS			
HD	LBS.	SIZE	Y	LENGTH	NO. REQ'D
3"	51	4	1'-0"	2'-0"	40

CLASS "S" CONCRETE CU. YDS.	REINFORCING STEEL (GR. 60) LBS.
TOTAL	
0.36	105

The required number of bars and lengths shown are for estimating purpose only. The actual number and length required shall be determined in field.

Unless otherwise noted, all dimensions are in inches.

SHEET 2 OF 2
DETAILS OF R.C. BOX CULVERT
TRIPLE BARREL BOX CULVERT
HWY. 77 Sta. 505+00

SPECIAL DETAILS

LRFD

PJoseph 8/13/2021 5:22:08 PM
WORKSPACE: AHTD
L:\201\7\701642 - ARDOT Job 100955\Drawings\r100955_SD_HWY 77-SITE 5 505+00.dgn
REVISED DATE:

DATE REVISED	DATE FILMED	DATE REVISED	DATE FILMED	FED.RD. DIST.NO.	STATE	FED.AID PROJ.NO.	SHEET NO.	TOTAL SHEETS
				6	ARK.			
				JOB NO.		100955	20	356

(I) SPECIAL DETAILS

INLET WINGWALL TABLE

OVER ALL WIDTH	CLEAR HEIGHT	FOOTING THK.	WING WALL THK.	BOX SKEW (DEG.)	SLOPE	HDWL LENGTH	HEEL	WALL HEIGHT AT HDWL	WALL HEIGHT AT WING END	WINGWALL ANGLE (DEGREE) WING A	WINGWALL ANGLE (DEGREE) WING B	FOOTING WIDTH AT WALL END	WIDTH OF WING FOOTINGS AT HDWL WING A	WIDTH OF WING FOOTINGS AT HDWL WING B	FOOTING DIMENSION PARALLEL WITH HDWL WING A	FOOTING DIMENSION PARALLEL WITH HDWL WING B	LENGTH OF WINGWALLS WING A	LENGTH OF WINGWALLS WING B	LENGTH OF FOOTING HEEL WING A	LENGTH OF FOOTING HEEL WING B
OW	H	WB	CW	SK	SL	K	HL	WH1	WH2	AF1	AF2	WE	WF1	WF2	G1	G2	W1	W2	W3	W4
36'-2"	9'-0"	0'-10"	0'-9"	30	3:1	39'-7 3/4"	2'-0"	9'-10"	3'-0"	0	60	3'-3"	4'-4 3/8"	5'-4 1/2"	1'-7 3/8"	3'-6 1/4"	20'-6"	41'-0"	23'-5 1/8"	43'-11 1/8"

CLASS "S" CONCRETE (Includes apron)	REINFORCING STEEL (Includes apron and laps if required)
INLET	INLET
CU.YD	LBS.
22.93	2087

WING	F1 BAR SIZE	F1 MAX. SPACING	F1 NO. REQ'D	F1 LENGTHS VARY	F1	F2 BAR SIZE	F2 SPACING	F2 NO. REQ'D	F2 LENGTHS	F3 BAR SIZE	F3 SPACING	F3 NO. REQ'D	F3 LENGTHS	F4 BAR SIZE	F4 SPACING	F4 NO. REQ'D	F4 LENGTHS VARY	F4	F5 BAR SIZE	F5 SPACING	F5 NO. REQ'D	F5 LENGTHS VARY	F5	F6 BAR SIZE	F6 SPACING	F6 NO. REQ'D	F6 LENGTHS VARY	F6	F7 NO. REQ'D	F7 LENGTHS	F8 BAR SIZE	F8 SPACING	F8 NO. REQ'D	F8 LENGTHS VARY	F9 BAR SIZE	F9 SPACING	F9 NO. REQ'D	F9 LENGTHS	F10 BAR SIZE	F10 NO. REQ'D	F10 LENGTHS	F11 BAR SIZE	F11 NO. REQ'D	F11 LENGTHS	F12 BAR SIZE	F12 SPACING	F12 NO. REQ'D	F12 LENGTHS	REINF. STEEL QTY. PER WING (LBS)
WING A	4	12	21	L	Min 4'-2"	4	12	6	L 5'-2"	-	-	-	L -	4	18	8	Min	Min	4	18	4	20'-2"	L Min 5'-11"	4	18	14	L Min	Min	4	24'-3"	6	18	14	Min	4	18	2	Min	4	2	21'-2"	4	2	21'-4"	6	'2	9	L 3'-4"	704
					Max 12'-0"												4'-10"	2'-9"					Max 12'-5"				Max	28'-2"																				X 1'-8"	
				X	Min 0'-10"				X -				X -				Max	Max					L Min 2'-5"				L Min	Max																				
					Max 2'-0"																		Max 2'-5"				Max																				
				Y	Min 3'-5"				Y -				Y -				18'-4"	3'-10"					X Min 3'-7"				X Min	28'-2"																				
					Max 10'-1"																		Max 10'-1"				Max																				
WING B	4	12	41	L	Min 4'-3"	4	12	18	L 6'-5"	-	-	-	L -	4	18	8	Min	Min	4	18	4	40'-8"	L Min 5'-8"	4	18	28	L Min	Min	4	44'-9"	6	18	30	Min	4	18	2	Min	4	2	41'-1"	4	2	46'-8"	6	'2	9	L 3'-4"	1383
					Max 12'-11"												9'-10"	2'-9"					Max 12'-6"				Max	33'-5"																				
				X	Min 0'-10"				X -				X -				Max	Max					L Min 2'-5"				L Min	Max																				
					Max 2'-10"																		Max 2'-5"				Max																				
				Y	Min 3'-6"				Y -				Y -				36'-10"	4'-11"					X Min 3'-4"				X Min	33'-5"																				
					Max 10'-2"																		Max 10'-2"				Max																				

MID-SECTION

BAR LAP TABLE

# of Long. Laps Req'd.	SL = Section Length
0	< 40.0 ft
1	>40.0 ft - 78.0 ft
2	>78.0 ft - 116.0 ft
3	>116.0 ft - 154.0 ft
4	>154.0 ft - 192.0 ft
5	>192.0 ft - 230.0 ft
6	>230.0 ft - 268.0 ft
7	>268.0 ft - 306.0 ft
8	>306.0 ft -344.0 ft

Min. Bar Lap Length	
#4	1'-9"
#5	2'-2"
#6	2'-7"
#7	3'-6"
#8	4'-7"

Bar Pin Dia. Table	
#4	3"
#5	3 3/4"
#6	4 1/2"
#7	5 1/4"
#8	6"

This drawing to be used in conjunction with
SHEET 1 OF 4, "GENERAL DETAILS OF R.C. BOX CULVERT", 'GENERAL NOTES & LONGITUDINAL SECTION LENGTH SCHEDULE',
SHEET 3 OF 4, "GENERAL DETAILS OF R.C. BOX CULVERT", 'DETAILS OF MULTI-BARREL R.C. BOX CULVERT',
SHEET 4 OF 4, "GENERAL DETAILS OF R.C. BOX CULVERT", 'DETAILS OF WINGWALLS', and
STANDARD DRAWING RCB-2.

For additional information and outlet sections, see Sheet 2 of 2.

STATE OF ARKANSAS
LICENSED PROFESSIONAL ENGINEER
No.13436
SHAUN A. ROBERSON
DIGITALLY SIGNED 8-13-2021

TABULAR DATA BY: CGG DATE: 08/28/2020
CHECKED BY: AEW DATE: 08/28/2020

INLET SKEWED END SECTION

SKEW (DEGREE)	SLOPE	DESIGN FILL DEPTH (FT.)	CLEAR SPAN (FT.)	CLEAR HEIGHT (FT.)	SECTION LENGTH	TOP SLAB THK.	HDWL DEPTH	BOTTOM SLAB THK.	SIDE WALL THK.	INTERIOR WALL THK.	OVER ALL WIDTH	OVER ALL HEIGHT	TOP SLAB REINFORCING STEEL "a" SIZE	"a" SPACING	"a" LENGTHS VARY	"a" NO. REQ'D	TOP SLAB REINFORCING STEEL "c" SIZE	"c" SPACING	"c" LENGTHS VARY	"c" NO. REQ'D	BOTTOM SLAB REINFORCING STEEL "d" SIZE	"d" SPACING	"d" LENGTHS VARY	"d" NO. REQ'D	BOTTOM SLAB REINFORCING STEEL "f" SIZE	"f" SPACING	"f" LENGTHS VARY	"f" NO. REQ'D	SIDE WALL REINFORCING STEEL "f0" SIZE	"f0" SPACING	"f0" NO. REQ'D	"f0" LENGTH	INTERIOR WALL REINFORCING STEEL "f1" SIZE	"f1" SPACING	"f1" NO. REQ'D	"f1" LENGTH	TOP SLAB DISTRIBUTION REINFORCING STEEL "g" SIZE	"g" SPACING	"g" NO. REQ'D	"g" LENGTHS VARY	BOTTOM SLAB DISTRIBUTION REINFORCING STEEL "e" SIZE	"e" SPACING	"e" NO. REQ'D	"e" LENGTHS VARY	SIDE WALL DISTRIBUTION REINFORCING STEEL "d1" SIZE	"d1" SPACING	"d1" NO. REQ'D	"d1" LENGTH	INTERIOR WALL DISTRIBUTION REINFORCING STEEL "d2" SIZE	"d2" SPACING	"d2" NO. REQ'D	"d2" LENGTH
SK	SL	D	S	H	LL	T	HD	B	C	W	OW	OH			Max 35'-10" / Min 3'-5" / 35'-10"				Max 35'-10" / Min 3'-5" / 35'-10"						Max 35'-10" / Min 3'-5" / 35'-10"						Max 35'-10" / Min 3'-5" / 35'-10"						Max 22'-9" / Min 1'-10"				Max 22'-9" / Min 1'-10"											
30	3:1	5	11	9	12'-5"	11	3	11	11	8	36'-2"	10'-10"	6	7		33		6	5.5	41	4	4.5		50	4	5.5		41	5	7	44	10'-6"	4	12	54	10'-6"	4	10	89		4	10	89	4	10	11	LONG 22'-3" / SHORT 2'-3"	4	12	18	LONG 15'-8" / SHORT 8'-11"

"k1" HDWL BARS SIZE	"k1" HDWL BARS LENGTH	"k1" HDWL BARS NO. REQ'D	"k2" HDWL BARS SIZE	"k2" HDWL BARS LENGTH	"k2" HDWL BARS NO. REQ'D	"h" HDWL BARS SIZE	"h" HDWL BARS LENGTH	"h" HDWL BARS Y	"h" HDWL BARS NO. REQ'D
4	41'-5"	6	4	41'-5"	6	4	1'-10"	0'-10"	43

CLASS "S" CONCRETE (Includes HDWL) CU. YDS.	(I) REINFORCING STEEL (GR 60) (Includes HDWL) LBS.
44.52	7304

(I) Any Bar Lap Required for the Skewed End Section shall be considered subsidiary to the item "Reinforcing Steel - Roadway (Grade 60)."

INLET SLOPE SECTION(S)

R.C. BOX SECTION	DESIGN FILL DEPTH (FT.)	CLEAR SPAN (FT.)	CLEAR HEIGHT (FT.)	TOP SLAB THK.	BOTTOM SLAB THK.	SIDE WALL THK.	INTERIOR WALL THK.	OVER ALL WIDTH	OVER ALL HEIGHT	SECTION LENGTH (FT.)	TOP SLAB REINFORCING STEEL LENGTH = OW - 4" + BENDS "a" SIZE	"a" L	Bent "b" SIZE	Bent "b" L	"c" SIZE	"c" L	SPACING	NO. REQ'D	BOTTOM SLAB REINFORCING STEEL LENGTH = OW - 4" + BENDS "d" SIZE	"d" L	Bent "b1" SIZE	Bent "b1" L	"f" SIZE	"f" L	SPACING	NO. REQ'D	SIDE WALL REINFORCING STEEL "f0" LENGTH = OH - 4" SIZE	SPACING	NO. REQ'D	LENGTH	INTERIOR WALL REINFORCING STEEL "f1" LENGTH = OH - 4" SIZE	SPACING	NO. REQ'D	LENGTH	TOP SLAB DISTRIBUTION REINFORCING STEEL "g" LENGTH = SL SIZE	SPACING	NO. REQ'D	BOTTOM SLAB DISTRIBUTION REINFORCING STEEL "e" LENGTH = SL SIZE	SPACING	NO. REQ'D	SIDE WALL DISTRIBUTION REINFORCING STEEL "d1" LENGTH = SL SIZE	SPACING	NO. REQ'D	INTERIOR WALL DISTRIBUTION REINFORCING STEEL "d2" LENGTH = SL SIZE	SPACING	NO. REQ'D
D	S	H	T	B	C	W	OW	OH	SL																																									

HDWL DEPTH HD	ADDITIONAL REINF. FOR HDWL LBS.	"h" HDWL BARS SIZE	"h" HDWL BARS Y	"h" HDWL BARS LENGTH	"h" HDWL BARS NO. REQ'D

CLASS "S" CONCRETE CU. YDS.	REINFORCING STEEL (GR 60) LBS.
TOTAL	

Design Fill Depth	Range of Actual Fill Depth
2	0.0 ft - 2.0 ft
5	>2.0 ft - 5.0 ft
10	>5.0 ft - 10.0 ft
15	>10.0 ft - 15.0 ft
20	>15.0 ft - 20.0 ft
25	>20.0 ft - 25.0 ft
30	>25.0 ft - 30.0 ft
35	>30.0 ft - 35.0 ft
40	>35.0 ft - 40.0 ft

Data shown for Mid-Section, Slope Section(s), and Skewed End Section is based on the design fill depth shown in the table, see PLAN AND PROFILE SHEETS for actual fill depth.

MID-SECTION

R.C. BOX SECTION	DESIGN FILL DEPTH (FT.)	CLEAR SPAN (FT.)	CLEAR HEIGHT (FT.)	TOP SLAB THK.	BOTTOM SLAB THK.	SIDE WALL THK.	INTERIOR WALL THK.	OVER ALL WIDTH	OVER ALL HEIGHT	SECTION LENGTH (FT.)	TOP SLAB REINFORCING STEEL LENGTH = OW - 4" + BENDS "a" SIZE	"a" L	Bent "b" SIZE	Bent "b" L	"c" SIZE	"c" L	SPACING	NO. REQ'D	BOTTOM SLAB REINFORCING STEEL LENGTH = OW - 4" + BENDS "d" SIZE	"d" L	Bent "b1" SIZE	Bent "b1" L	"f" SIZE	"f" L	SPACING	NO. REQ'D	SIDE WALL REINFORCING STEEL "f0" LENGTH = OH - 4" SIZE	SPACING	NO. REQ'D	LENGTH	INTERIOR WALL REINFORCING STEEL "f1" LENGTH = OH - 4" SIZE	SPACING	NO. REQ'D	LENGTH	TOP SLAB DISTRIBUTION REINF. STEEL "g" LENGTH = SL SIZE	SPACING	NO. REQ'D	BOTTOM SLAB DISTRIBUTION REINF. STEEL "e" LENGTH = SL SIZE	SPACING	NO. REQ'D	SIDE WALL DISTRIBUTION REINF. STEEL "d1" LENGTH = SL SIZE	SPACING	NO. REQ'D	INTERIOR WALL DISTRIBUTION REINF. STEEL "d2" LENGTH = SL SIZE	SPACING	NO. REQ'D
D	S	H	T	B	C	W	OW	OH	SL																																									
A	5	11	9	11	11	11	8	36'-2"	10'-10"	75.17	4	35'-10"	8	36'-5"	6	35'-10"	15	60	4	35'-10"	5	36'-4"	4	35'-10"	11	82	5	7	256	10'-6"	4	12	300	10'-6"	4	10	89	4	10	89	4	10	22	4	12	36

CLASS "S" CONCRETE CU. YDS.	REINFORCING STEEL (GR. 60) LBS.
263.95	34614

SHEET 1 OF 2
DETAILS OF R.C. BOX CULVERT
TRIPLE BARREL BOX CULVERT
HWY. 140 Sta. 304+23

SPECIAL DETAILS

P.Joseph 8/13/2021 5:22:13 PM
WORKSPACE: AHTD
L:\201\1701642 - ARDOT Job 100955\Drawings\r100955_SD_HWY 140-SITE 3 304+23.dgn
REVISED DATE:

DATE REVISED	DATE FILMED	DATE REVISED	DATE FILMED	FED.RD. DIST.NO.	STATE	FED.AID PROJ.NO.	SHEET NO.	TOTAL SHEETS
				6	ARK.			
				JOB NO.		100955	21	356
				(1)	SPECIAL DETAILS			

STATE OF ARKANSAS
LICENSED PROFESSIONAL ENGINEER
No. 13436
SHAUN A. ROBERSON
DIGITALLY SIGNED 8-13-2021

TABULAR DATA BY: CGG DATE 08/28/2020
CHECKED BY: AEW DATE 08/28/2020

OUTLET WINGWALL TABLE

OVER ALL WIDTH	CLEAR HEIGHT	FOOTING THK.	WING WALL THK.	BOX SKEW (DEG.)	SLOPE	HDWL LENGTH	HEEL	WALL HEIGHT AT HDWL	WALL HEIGHT AT WING END	WINGWALL ANGLE (DEGREE) WING A	WINGWALL ANGLE (DEGREE) WING B	FOOTING WIDTH AT WALL END	WIDTH OF WING FOOTINGS AT HDWL WING A	WIDTH OF WING FOOTINGS AT HDWL WING B	FOOTING DIMENSION PARALLEL WITH HDWL WING A	FOOTING DIMENSION PARALLEL WITH HDWL WING B	LENGTH OF WINGWALLS WING A	LENGTH OF WINGWALLS WING B	LENGTH OF FOOTING HEEL WING A	LENGTH OF FOOTING HEEL WING B	CLASS "S" CONCRETE (Includes apron)	REINFORCING STEEL (Includes apron and laps if required)
OW	H	WB	CW	SK	SL	K	HL	WH1	WH2	AF1	AF2	WE	WF1	WF2	G1	G2	W1	W2	W3	W4	CU.YD	LBS.
36'-2"	9'-0"	0'-10"	0'-9"	30	3:1	39'-7 3/4"	2'-0"	9'-10"	3'-0"	0	60	3'-3"	4'-4 3/8"	5'-4 1/2"	1'-7 3/8"	3'-6 1/4"	20'-6"	41'-0"	23'-5 1/8"	43'-11 1/8"	24.57	2087

WING	F1 BAR SIZE	F1 MAX. SPACING	F1 NO. REQ'D	F1 LENGTHS VARY	F1 LENGTHS	F2 BAR SIZE	F2 SPACING	F2 NO. REQ'D	F2 LENGTHS	F3 BAR SIZE	F3 SPACING	F3 NO. REQ'D	F3 LENGTHS	F4 BAR SIZE	F4 SPACING	F4 NO. REQ'D	F4 LENGTHS VARY	F4 LENGTHS	F5 BAR SIZE	F5 SPACING	F5 NO. REQ'D	F5 LENGTHS	F6 BAR SIZE	F6 SPACING	F6 NO. REQ'D	F6 LENGTHS VARY	F6 LENGTHS	F7 BAR SIZE	F7 NO. REQ'D	F7 LENGTHS	F8 BAR SIZE	F8 SPACING	F8 NO. REQ'D	F8 LENGTHS VARY	F8 LENGTHS	F9 BAR SIZE	F9 SPACING	F9 NO. REQ'D	F9 LENGTHS	F10 BAR SIZE	F10 NO. REQ'D	F10 LENGTHS	F11 BAR SIZE	F11 NO. REQ'D	F11 LENGTHS	F12 BAR SIZE	F12 SPACING	F12 NO. REQ'D	F12 LENGTHS	REINF. STEEL QTY PER WING (LBS)
WING A	4	12	21	⌐ Min	4'-2"	4	12	6	L 5'-2"	-	-	-	L -	4	18	8	Min	4'-10"	4	18	4	20'-2"	4	18	14	Min	5'-11"	4	8	24'-3"	6	18	14	Min	2'-9"	4	18	2	Min	28'-2"	4	2	21'-2"	4	2	21'-4"	6	12	9	L 3'-4"	704
				⌐ Max	12'-0"												Max									Max	12'-5"							Max					Max	28'-2"									X 1'-8"	
				X Min	0'-10"				X 1'-8"				X -				Min									Min	2'-5"							Min					Min										
				X Max	2'-0"												Max									Max	2'-5"							Max					Max										
				Y Min	3'-5"				Y 3'-7"				Y -				Min									Min	3'-7"							Min					Min										
				Y Max	10'-1"												Max	18'-4"								Max	10'-1"							Max	3'-10"				Max	28'-2"										
WING B	4	12	41	⌐ Min	4'-3"	4	12	18	L 6'-5"	-	-	-	L -	4	18	8	Min	9'-10"	4	18	4	40'-8"	4	18	28	Min	5'-8"	4	8	44'-9"	6	18	30	Min	2'-9"	4	18	2	Min	33'-5"	4	2	41'-1"	4	2	46'-8"	6	12	9	L 3'-4"	1383
				⌐ Max	12'-11"												Max									Max	12'-6"							Max					Max	33'-5"									X 1'-8"	
				X Min	0'-10"				X 1'-11"				X -				Min									Min	2'-5"							Min															
				X Max	2'-10"												Max									Max	2'-5"							Max															
				Y Min	3'-6"				Y 4'-7"				Y -				Min									Min	3'-4"							Min															
				Y Max	10'-2"												Max	36'-10"								Max	10'-2"							Max	4'-11"					33'-5"										

Min. Bar Lap Length	
#4	1'-9"
#5	2'-2"
#6	2'-7"
#7	3'-6"
#8	4'-7"

Bar Pin Dia. Table	
#4	3"
#5	3 3/4"
#6	4 1/2"
#7	5 1/4"
#8	6"

(1) Any Bar Lap Required for the Skewed End Section shall be considered subsidiary to the item "Reinforcing Steel - Roadway (Grade 60)."

OUTLET SKEWED END SECTION

SKEW (DEGREE)	SLOPE	DESIGN FILL DEPTH (FT.)	CLEAR SPAN (FT.)	CLEAR HEIGHT (FT.)	SECTION LENGTH	TOP SLAB THK.	HDWL DEPTH	BOTTOM SLAB THK.	SIDE WALL THK.	INTERIOR WALL THK.	OVER ALL WIDTH	OVER ALL HEIGHT	TOP SLAB REINF. "a" SIZE	"a" SPACING	"a" LENGTHS VARY	"a" NO. REQ'D	TOP SLAB REINF. "c" SIZE	"c" SPACING	"c" LENGTHS VARY	"c" NO. REQ'D	BOTTOM SLAB REINF. "d" SIZE	"d" SPACING	"d" LENGTHS VARY	"d" NO. REQ'D	BOTTOM SLAB REINF. "f" SIZE	"f" SPACING	"f" LENGTHS VARY	"f" NO. REQ'D	SIDE WALL REINF. "f0" SIZE	"f0" SPACING	"f0" NO. REQ'D	"f0" LENGTH	INTERIOR WALL REINF. "f1" SIZE	"f1" SPACING	"f1" NO. REQ'D	"f1" LENGTH	TOP SLAB DIST. "g" SIZE	"g" SPACING	"g" NO. REQ'D	"g" LENGTHS VARY	BOTTOM SLAB DIST. "e" SIZE	"e" SPACING	"e" NO. REQ'D	"e" LENGTHS VARY	SIDE WALL DIST. "d1" SIZE	"d1" SPACING	"d1" NO. REQ'D	"d1" LENGTH	INTERIOR WALL DIST. "d2" SIZE	"d2" SPACING	"d2" NO. REQ'D	"d2" LENGTH	CLASS "S" CONCRETE (Includes HDWL)	(1) REINFORCING STEEL (GR 60) (Includes HDWL)
SK	SL	D	S	H	LL	T	HD	B	C	W	OW	OH	SIZE	SPACING	LENGTHS VARY	NO. REQ'D	SIZE	SPACING	LENGTHS VARY	NO. REQ'D	SIZE	SPACING	LENGTHS VARY	NO. REQ'D	SIZE	SPACING	LENGTHS VARY	NO. REQ'D	SIZE	SPACING	NO. REQ'D	LENGTH	SIZE	SPACING	NO. REQ'D	LENGTH	SIZE	SPACING	NO. REQ'D	LENGTHS VARY	SIZE	SPACING	NO. REQ'D	LENGTHS VARY	SIZE	SPACING	NO. REQ'D	LENGTH	SIZE	SPACING	NO. REQ'D	LENGTH	CU. YDS.	LBS.
30	3:1	5	11	9	12'-5"	11	3	11	11	8	36'-2"	10'-10"	6	7	Max 35'-10" / Min 3'-5"	33	6	5.5	Max 35'-10" / Min 3'-5"	41	4	4.5	Max 35'-10" / Min 3'-5"	50	4	5.5	Max 35'-10" / Min 3'-5"	41	5	7	44	10'-6"	4	12	54	10'-6"	4	10	39	Max 22'-9" / Min 1'-10"	4	10	89	Max 22'-9" / Min 1'-10"	4	10	11	LONG 22'-3" / SHORT 2'-3"	4	12	18	LONG 15'-8" / SHORT 8'-11"	44.52	7304
															35'-10"	4			35'-10"	5			35'-10"	6			35'-10"	5																												

"k1" HDWL BARS			"k2" HDWL BARS			"h" HDWL BARS			
SIZE	LENGTH	NO. REQ'D	SIZE	LENGTH	NO. REQ'D	SIZE	LENGTH	Y	NO. REQ'D
4	41'-5"	6	4	41'-5"	6	4	1'-10"	0'-10"	43

OUTLET SLOPE SECTION(S)

R.C. BOX SECTION	DESIGN FILL DEPTH (FT.)	CLEAR SPAN (FT.)	CLEAR HEIGHT (FT.)	TOP SLAB THK.	BOTTOM SLAB THK.	SIDE WALL THK.	INTERIOR WALL THK.	OVER ALL WIDTH	OVER ALL HEIGHT	SECTION LENGTH (FT.)	LENGTH = OW - 4" + BENDS "a" SIZE	"a" L	Bent "b" SIZE	Bent "b" L	"c" SIZE	"c" L	SPACING	NO. REQ'D	BOTTOM SLAB REINFORCING STEEL LENGTH = OW - 4" + BENDS "d" SIZE	"d" L	Bent "b1" SIZE	Bent "b1" L	"f" SIZE	"f" L	SPACING	NO. REQ'D	SIDE WALL REINF. "f0" LENGTH = OH - 4" SPACING	NO. REQ'D	LENGTH	INTERIOR WALL REINF. "f1" LENGTH = OH - 4" SPACING	NO. REQ'D	LENGTH	TOP SLAB DIST. "g" LENGTH = SL SPACING	NO. REQ'D	BOTTOM SLAB DIST. "e" LENGTH = SL SPACING	NO. REQ'D	SIDE WALL DIST. "d1" LENGTH = SL SPACING	NO. REQ'D	INTERIOR WALL DIST. "d2" LENGTH = SL SPACING	NO. REQ'D	CLASS "S" CONCRETE CU. YDS.	REINFORCING STEEL (GR. 60) LBS.
D	S	H	T	B	C	W	OW	OH	SL																																													

HDWL DEPTH	ADDITIONAL REINF. FOR HDWL	"h" HDWL BARS			
HD	LBS.	SIZE	Y	LENGTH	NO. REQ'D

CLASS "S" CONCRETE	REINFORCING STEEL (GR. 60)
CU. YDS.	LBS.
TOTAL	

The required number of bars and lengths shown are for estimating purpose only. The actual number and length required shall be determined in field.

Unless otherwise noted, all dimensions are in inches.

SHEET 2 OF 2
DETAILS OF R.C. BOX CULVERT
TRIPLE BARREL BOX CULVERT
HWY. 140 Sta. 304+23

SPECIAL DETAILS

PJoseph 8/13/2021 5:22:17 PM
WORKSPACE: AHTD
L:\201\7\01\7642 - ARDOT Job 100955\Drawings\r100955_SD_HWY 140-SITE 3 304+23.dgn
REVISED DATE:

DATE REVISED	DATE FILMED	DATE REVISED	DATE FILMED	FED.RD. DIST.NO.	STATE	FED.AID PROJ.NO.	SHEET NO.	TOTAL SHEETS
				6	ARK.			
				JOB NO.		100955	22	356

(I) SPECIAL DETAILS

STATE OF ARKANSAS
LICENSED PROFESSIONAL ENGINEER
No. 13436
SHAUN A. ROBERSON
DIGITALLY SIGNED 8-13-2021

TABULAR DATA BY: CGG DATE: 08/21/2020
CHECKED BY: AEW DATE: 08/28/2020

INLET WINGWALL TABLE

OVER ALL WIDTH	CLEAR HEIGHT	FOOTING THK.	WING WALL THK.	BOX SKEW (DEG.)	SLOPE	HDWL LENGTH	HEEL	WALL HEIGHT AT HDWL	WALL HEIGHT AT WING END	WINGWALL ANGLE (DEGREE) WING A	WINGWALL ANGLE (DEGREE) WING B	FOOTING WIDTH AT WALL END	WIDTH OF WING FOOTINGS AT HDWL. WING A	WIDTH OF WING FOOTINGS AT HDWL. WING B	FOOTING DIMENSION PARALLEL WITH HDWL WING A	FOOTING DIMENSION PARALLEL WITH HDWL WING B	LENGTH OF WINGWALLS WING A	LENGTH OF WINGWALLS WING B	LENGTH OF FOOTING HEEL WING A	LENGTH OF FOOTING HEEL WING B
OW	H	WB	CW	SK	SL	K	HL	WH1	WH2	AF1	AF2	WE	WF1	WF2	G1	G2	W1	W2	W3	W4
32'-8"	9'-0"	0'-10"	0'-9"	10	3:1	31'-9 7/8"	2'-0"	9'-10"	3'-0"	20	40	3'-3"	4'-9 3/4"	5'-1 5/8"	1'-10"	2'-3 1/4"	21'-6"	26'-6"	24'-11 1/8"	29'-11 1/8"

CLASS "S" CONCRETE (Includes apron)	REINFORCING STEEL (Includes apron and laps if required)
INLET	NLET
CU.YD	LBS.
17.98	1658

WING	F1 BAR SIZE	F1 MAX. SPACING	F1 NO. REQ'D	F1 LENGTHS VARY	F1 LENGTHS	F2 BAR SIZE	F2 SPACING	F2 NO. REQ'D	F2 LENGTHS	F3 BAR SIZE	F3 SPACING	F3 NO. REQ'D	F3 LENGTHS	F4 BAR SIZE	F4 SPACING	F4 NO. REQ'D	F4 LENGTHS VARY	F5 BAR SIZE	F5 SPACING	F5 NO. REQ'D	F5 LENGTHS
WING A	4	12	22	L	Min 4'-2"	4	12	10	L 6'-3"	-	-	-	L -	4	18	8	Min	4	18	4	21'-2"
					Max 12'-5"												5'-1"				
				X	Min 0'-10"			X 1'-9"				X -				Max					
					Max 2'-5"												19'-3"				
				Y	Min 3'-5"			Y 4'-7"				Y -									
					Max 10'-1"																
WING B	4	12	27	L	Min 4'-2"	4	12	12	L 6'-4"	-	-	-	L -	4	18	8	Min	4	18	4	26'-2"
					Max 12'-8"												6'-4"				
				X	Min 0'-10"			X 1'-10"				X -				Max					
					Max 2'-8"												23'-9"				
				Y	Min 3'-5"			Y 4'-7"				Y -									
					Max 10'-1"																

WING	F6 BAR SIZE	F6 SPACING	F6 NO. REQ'D	F6 LENGTHS VARY	F6 LENGTHS	F7 BAR SIZE	F7 NO. REQ'D	F7 LENGTHS	F8 BAR SIZE	F8 SPACING	F8 NO. REQ'D	F8 LENGTHS VARY	F9 BAR SIZE	F9 SPACING	F9 NO. REQ'D	F9 LENGTHS	F10 BAR SIZE	F10 NO. REQ'D	F10 LENGTHS	F11 BAR SIZE	F11 NO. REQ'D	F11 LENGTHS	F12 BAR SIZE	F12 SPACING	F12 NO. REQ'D	F12 LENGTHS	REINF. STEEL QTY. PER WING (LBS)
WING A	4	18	15	L Min 5'-9"		4	8	25'-9"	6	18	15	Min	4	18	2	Min	4	2	22'-1"	4	2	23'-2"	6	12	9	L 3'-4"	751
				Max 12'-5"								2'-9"				22'-3"										X 1'-8"	
				X Min 2'-5"								Max				Max											
				Max 2'-5"								4'-4"				22'-3"											
				Y Min 3'-5"																							
				Max 10'-1"																							
WING B	4	18	18	L Min 5'-10"		4	8	30'-9"	6	18	19	Min	4	18	2	Min	4	2	26'-11"	4	2	29'-6"	6	12	9	L 3'-4"	907
				Max 12'-5"								2'-9"				23'-9"										X 1'-8"	
				X Min 2'-5"								Max				Max											
				Max 2'-5"								4'-8"				23'-9"											
				Y Min 3-6"																							
				Max 10'-1"																							

MID-SLOPE SKEWED END SECTION

SKEW (DEGREE) SK	SLOPE SL	DESIGN FILL DEPTH (FT.) D	CLEAR SPAN (FT.) S	CLEAR HEIGHT (FT.) H	SECTION LENGTH LL	TOP SLAB THK. T	HDWL DEPTH HD	BOTTOM SLAB THK. B	SIDE WALL THK. C	INTERIOR WALL THK. W	OVER ALL WIDTH OW	OVER ALL HEIGHT OH
10	3:1	2	10	9	4'-11"	12	3	12	8	8	32'-8"	11'-0"

TOP SLAB REINFORCING STEEL "a" SIZE	"a" SPACING	"a" LENGTHS VARY	"a" NO. REQ'D	"c" SIZE	"c" SPACING	"c" LENGTHS VARY	"c" NO. REQ'D
6	9	Max 32'-4"	6	7	5	Max 32'-4"	10
		Min 8'-11"				Min 8'-11"	
		32'-4"	3			32'-4"	5

BOTTOM SLAB REINFORCING STEEL "d" SIZE	"d" SPACING	"d" LENGTHS VARY	"d" NO. REQ'D	"f" SIZE	"f" SPACING	"f" LENGTHS VARY	"f" NO. REQ'D
4	9	Max 32'-4"	6	4	8.5	Max 32'-4"	6
		Min 8'-11"				Min 8'-11"	
		32'-4"	3			32'-4"	3

SIDE WALL REINFORCING STEEL "f0" SIZE	"f0" SPACING	"f0" NO. REQ'D	"f0" LENGTH
4	4	30	10'-8"

INTERIOR WALL REINFORCING STEEL "f1" SIZE	"f1" SPACING	"f1" NO. REQ'D	"f1" LENGTH
4	12	22	10'-8"

TOP SLAB DISTRIBUTION REINFORCING STEEL "g" SIZE	"g" SPACING	"g" NO. REQ'D	"g" LENGTHS VARY
4	9	89	Max 7'-7"
			Min 1'-10"

BOTTOM SLAB DISTRIBUTION REINFORCING STEEL "e" SIZE	"e" SPACING	"e" NO. REQ'D	"e" LENGTHS VARY
4	9	89	Max 7'-7"
			Min 1'-10"

SIDE WALL DISTRIBUTION REINFORCING STEEL "d1" SIZE	"d1" SPACING	"d1" NO. REQ'D	"d1" LENGTH
4	12	9	LONG 7'-6"
			SHORT 1'-11"

INTERIOR WALL DISTRIBUTION REINFORCING STEEL "d2" SIZE	"d2" SPACING	"d2" NO. REQ'D	"d2" LENGTH
4	12	18	LONG 5'-8"
			SHORT 3'-9"

CLASS "S" CONCRETE (Includes HDWL) CU. YDS.	(I) REINFORCING STEEL (GR 60) (Includes HDWL) LBS.
16.81	2787

"k1" HDWL BARS SIZE	"k1" HDWL BARS LENGTH	"k1" HDWL BARS NO. REQ'D	"k2" HDWL BARS SIZE	"k2" HDWL BARS LENGTH	"k2" HDWL BARS NO. REQ'D
4	32'-10"	6	4	32'-10"	6

"h" HDWL BARS SIZE	"h" HDWL BARS LENGTH	"h" HDWL BARS Y	"h" HDWL BARS NO. REQ'D
4	1'-11"	0'-11"	35

(I) Any Bar Lap Required for the Skewed End Section shall be considered subsidiary to the item "Reinforcing Steel - Roadway (Grade 60)."

MID-SECTION

R.C. BOX SECTION	DESIGN FILL DEPTH (FT.) D	CLEAR SPAN (FT.) S	CLEAR HEIGHT (FT.) H	TOP SLAB THK. T	BOTTOM SLAB THK. B	SIDE WALL THK. C	INTERIOR WALL THK. W	OVER ALL WIDTH OW	OVER ALL HEIGHT OH	SECTION LENGTH (FT.) SL
A	2	10	9	12	12	8	8	32'-8"	11'-0"	76.17

TOP SLAB REINFORCING STEEL LENGTH = OW - 4" + BENDS "a" SIZE	"a" L	Bent "b" SIZE	Bent "b" L	"c" SIZE	"c" L	SPACING	NO. REQ'D
4	32'-4"	8	33'-0"	8	32'-4"	13	70

BOTTOM SLAB REINFORCING STEEL LENGTH = OW - 4" + BENDS "d" SIZE	"d" L	Bent "b1" SIZE	Bent "b1" L	"f" SIZE	"f" L	SPACING	NO. REQ'D
4	32'-4"	4	32'-0"	4	32'-4"	17	53

SIDE WALL REINFORCING STEEL "f0" LENGTH = OH - 4" SIZE	SPACING	NO. REQ'D	LENGTH
4	4	456	10'-8"

INTERIOR WALL REINFORCING STEEL "f1" LENGTH = OH - 4" SIZE	SPACING	NO. REQ'D	LENGTH
4	12	304	10'-8"

TOP SLAB DISTRIBUTION REINF. STEEL "g" LENGTH = SL SIZE	SPACING	NO. REQ'D
4	9	89

BOTTOM SLAB DISTRIBUTION REINF. STEEL "e" LENGTH = SL SIZE	SPACING	NO. REQ'D
4	9	89

SIDE WALL REINF. STEEL "d1" LENGTH = SL SIZE	SPACING	NO. REQ'D
4	12	18

INTERIOR WALL DISTRIBUTION REINF. STEEL "d2" LENGTH = SL SIZE	SPACING	NO. REQ'D
4	12	36

CLASS "S" CONCRETE CU. YDS.	REINFORCING STEEL (GR. 60) LBS.
252.02	34759

INLET SLOPE SECTION(S)

R.C. BOX SECTION	DESIGN FILL DEPTH (FT.) D	CLEAR SPAN (FT.) S	CLEAR HEIGHT (FT.) H	TOP SLAB THK. T	BOTTOM SLAB THK. B	SIDE WALL THK. C	INTERIOR WALL THK. W	OVER ALL WIDTH OW	OVER ALL HEIGHT OH	SECTION LENGTH (FT.) SL

TOP SLAB REINFORCING STEEL LENGTH = OW - 4" + BENDS "a" SIZE	"a" L	Bent "b" SIZE	Bent "b" L	"c" SIZE	"c" L	SPACING	NO. REQ'D

BOTTOM SLAB REINFORCING STEEL LENGTH = OW - 4" + BENDS "d" SIZE	"d" L	Bent "b1" SIZE	Bent "b1" L	"f" SIZE	"f" L	SPACING	NO. REQ'D

SIDE WALL REINFORCING STEEL "f0" LENGTH = OH - 4" SIZE	SPACING	NO. REQ'D	LENGTH

INTERIOR WALL REINFORCING STEEL "f1" LENGTH = OH - 4" SIZE	SPACING	NO. REQ'D	LENGTH

TOP SLAB DISTRIBUTION REINFORCING STEEL "g" LENGTH = SL SIZE	SPACING	NO. REQ'D

BOTTOM SLAB DISTRIBUTION REINFORCING STEEL "e" LENGTH = SL SIZE	SPACING	NO. REQ'D

SIDE WALL DISTRIBUTION REINFORCING STEEL "d1" LENGTH = SL SIZE	SPACING	NO. REQ'D

INTERIOR WALL DISTRIBUTION REINFORCING STEEL "d2" LENGTH = SL SIZE	SPACING	NO. REQ'D

HDWL DEPTH HD	ADDITIONAL REINF. FOR HDWL LBS.	"h" HDWL BARS SIZE	"h" HDWL BARS Y	"h" HDWL BARS LENGTH	"h" HDWL BARS NO. REQ'D

CLASS "S" CONCRETE CU. YDS.	REINFORCING STEEL (GR. 60) LBS.
TOTAL	

MID-SECTION

Min. Bar Lap Length	
#4	1'-9"
#5	2'-2"
#6	2'-7"
#7	3'-6"
#8	4'-7"

Bar Pin Dia. Table	
#4	3"
#5	3 3/4"
#6	4 1/2"
#7	5 1/4"
#8	6"

MID-SECTION BAR LAP TABLE

# of Long. Laps Req'd.	SL = Section Length
0	< 40.0 ft
1	>40.0 ft - 78.0 ft
2	>78.0 ft - 116.0 ft
3	>116.0 ft - 154.0 ft
4	>154.0 ft - 192.0 ft
5	>192.0 ft - 230.0 ft
6	>230.0 ft - 268.0 ft
7	>268.0 ft - 306.0 ft
8	>306.0 ft -344.0 ft

This drawing to be used in conjunction with
SHEET 1 OF 4, "GENERAL DETAILS OF R.C. BOX CULVERT", 'GENERAL NOTES & LONGITUDINAL SECTION LENGTH SCHEDULE',
SHEET 3 OF 4, "GENERAL DETAILS OF R.C. BOX CULVERT", 'DETAILS OF MULTI-BARREL R.C. BOX CULVERT',
SHEET 4 OF 4, "GENERAL DETAILS OF R.C. BOX CULVERT", 'DETAILS OF WINGWALLS', and
STANDARD DRAWING RCB-2.

For additional information and outlet sections, see Sheet 2 of 2.

Design Fill Depth	Range of Actual Fill Depth
2	0.0 ft - 2.0 ft
5	>2.0 ft - 5.0 ft
10	>5.0 ft - 10.0 ft
15	>10.0 ft - 15.0 ft
20	>15.0 ft - 20.0 ft
25	>20.0 ft - 25.0 ft
30	>25.0 ft - 30.0 ft
35	>30.0 ft - 35.0 ft
40	>35.0 ft - 40.0 ft

Data shown for Mid-Section, Slope Section(s), and Skewed End Section is based on the design fill depth shown in the table, see PLAN AND PROFILE SHEETS for actual fill depth.

SHEET 1 OF 2
DETAILS OF R.C. BOX CULVERT
TRIPLE BARREL BOX CULVERT
HWY. 181 Sta. 102+50
SPECIAL DETAILS

P.Joseph 8/13/2021 5:22:21 PM
WORKSPACE: AHTD
L:\2017\17017642 - ARDOT Job 100955\Drawings\r100955_SD_HWY 181-SITE 1102+50.dgn
REVISED DATE:

DATE REVISED	DATE FILMED	DATE REVISED	DATE FILMED	FED.RD. DIST.NO.	STATE	FED.AID PROJ.NO.	SHEET NO.	TOTAL SHEETS
				6	ARK.			
				JOB NO.		100955	23	356
				(1)	SPECIAL DETAILS			

OUTLET WINGWALL TABLE

OVER ALL WIDTH	CLEAR HEIGHT	FOOTING THK.	WING WALL THK.	BOX SKEW (DEG.)	SLOPE	HDWL LENGTH	HEEL	WALL HEIGHT AT HDWL	WALL HEIGHT AT WING END	WINGWALL ANGLE (DEGREE) WING (2)A	WINGWALL ANGLE (DEGREE) WING B	FOOTING WIDTH AT WALL END	WIDTH OF WING FOOTINGS AT HDWL WING A (2)	WIDTH OF WING FOOTINGS AT HDWL WING B	FOOTING DIMENSION PARALLEL WITH HDWL WING A (2)	FOOTING DIMENSION PARALLEL WITH HDWL WING B	LENGTH OF WINGWALLS WING (2)A	LENGTH OF WINGWALLS WING B	LENGTH OF FOOTING HEEL WING A (2)	LENGTH OF FOOTING HEEL WING B	CLASS "S" CONCRETE (Includes apron)	REINFORCING STEEL (Includes apron and laps if required)
OW	H	WB	CW	SK	SL	K	HL	WH1	WH2	AF1	AF2	WE	WF1	WF2	G1	G2	W1	W2	W3	W4	CU.YD	LBS.
32'-8"	9'-0"	0'-10"	0'-9"	10	3:1	31'-9 7/8"	2'-0"	9'-10"	3'-0"	~~20~~	40	3'-3"	~~4'-9 3/4"~~	5'-1 5/8"	~~1'-10"~~	2'-3 1/4"	~~21'-6"~~	26'-6"	~~24'-11 1/8"~~	29'-11 1/8"	(3) ~~19.26~~ 19.66	(3) ~~658~~ 1656

WING	BAR SIZE	MAX. SPACING	NO. REQ'D	F1 LENGTHS VARY			F2 BAR SIZE	F2 SPACING	F2 NO. REQ'D	F2 LENGTHS	F3 BAR SIZE	F3 SPACING	F3 NO. REQ'D	F3 LENGTHS	F4 BAR SIZE	F4 SPACING	F4 NO. REQ'D	F4 LENGTHS VARY	F5 BAR SIZE	F5 SPACING	F5 NO. REQ'D	F5 LENGTHS	F6 BAR SIZE	F6 SPACING	F6 NO. REQ'D	F6 LENGTHS VARY			F7 NO. REQ'D	F7 LENGTHS	F8 BAR SIZE	F8 SPACING	F8 NO. REQ'D	F8 LENGTHS VARY	F9 BAR SIZE	F9 SPACING	F9 NO. REQ'D	F9 LENGTHS	F10 BAR SIZE	F10 NO. REQ'D	F10 LENGTHS	F11 BAR SIZE	F11 NO. REQ'D	F11 LENGTHS	F12 BAR SIZE	F12 SPACING	F12 NO. REQ'D	F12 LENGTHS		REINF. STEEL QTY PER WING (LBS)
WING A (2)	4	12	22		Min	~~4'-2"~~	4	12	10		-	-	-	-	4	18	8	Min	4	18	4	21'-2"	4	18	15		Min	5'-9"	4	8	25'-9"	6	18	15	Min	4	18	2	Min	4	2	22'-1"	4	2	23'-2"	6	12	9		L	3'-4"	751
					Max	12'-5"												5'-1"								Max	12'-5"							2'-9"				22'-3"										
				X	Min	0'-10"			L	6'-3"			L	-											X	Min	2'-5"							Max				Max								X	1'-8"	
					Max	2'-5"												Max								Max	2'-5"							4'-4"				22'-3"										
				Y	Min	3'-5"			Y	4'-7"			Y	-											Y	Min	3'-5"							Min				Min										
					Max	~~10'-1"~~												19'-3"								Max	10'-1"							4'-4"				22'-3"										
WING B	4	12	27		Min	4'-2"	4	12	12		-	-	-	-	4	18	8	Min	4	18	4	26'-2"	4	18	18		Min	5'-10"	4	8	30'-9"	6	18	19	Min	4	18	2	Min	4	2	26'-11"	4	2	29'-6"	6	12	9		L	3'-4"	907
					Max	12'-8"												6'-4"								Max	12'-5"							2'-9"				23'-9"										
				X	Min	0'-10"			L	6'-4"			L	-											X	Min	2'-5"							Max				Max								X	1'-8"	
					Max	2'-8"												Max								Max	2'-5"							4'-8"				23'-9"										
				Y	Min	3'-5"			Y	4'-7"			Y	-											Y	Min	3'-6"							Min				Min										
					Max	10'-1"												23'-9"								Max	10'-1"																					

(1) Any Bar Lap Required for the Skewed End Section shall be considered subsidiary to the item "Reinforcing Steel - Roadway (Grade 60)."

(2) For Wing A Dimensions and Reinforcement, see Sheet No. 31.

(3) Includes Quantity for Wing A as Shown on Sheet No. 31.

STATE OF ARKANSAS
LICENSED PROFESSIONAL ENGINEER
No. 13436
SHAUN A. ROBERSON
DIGITALLY SIGNED 8-13-2021

TABULAR DATA BY: CGG DATE: 08/21/2020
CHECKED BY: AEW DATE: 08/28/2020

Min. Bar Lap Length	
#4	1'-9"
#5	2'-2"
#6	2'-7"
#7	3'-6"
#8	4'-7"

Bar Pin Dia. Table	
#4	3"
#5	3 3/4"
#6	4 1/2"
#7	5 1/4"
#8	6"

OUTLET SKEWED END SECTION

SKEW (DEGREE)	SLOPE	DESIGN FILL DEPTH (FT.)	CLEAR SPAN (FT.)	CLEAR HEIGHT (FT.)	SECTION LENGTH	TOP SLAB THK.	HDWL DEPTH	BOTTOM SLAB THK.	SIDE WALL THK.	INTERIOR WALL THK.	OVER ALL WIDTH	OVER ALL HEIGHT	TOP SLAB REINFORCING STEEL "a" SIZE	"a" SPACING	"a" LENGTHS VARY	"a" NO. REQ'D	TOP SLAB REINFORCING STEEL "c" SIZE	"c" SPACING	"c" LENGTHS VARY	"c" NO. REQ'D	BOTTOM SLAB REINFORCING STEEL "d" SIZE	"d" SPACING	"d" LENGTHS VARY	"d" NO. REQ'D	BOTTOM SLAB REINFORCING STEEL "f" SIZE	"f" SPACING	"f" LENGTHS VARY	"f" NO. REQ'D	SIDE WALL REINFORCING STEEL "f0" SIZE	"f0" SPACING	"f0" NO. REQ'D	"f0" LENGTH	INTERIOR WALL REINFORCING STEEL "f1" SIZE	"f1" SPACING	"f1" NO. REQ'D	"f1" LENGTH	TOP SLAB DISTRIBUTION REINFORCING STEEL "g" SIZE	"g" SPACING	"g" NO. REQ'D	"g" LENGTHS VARY	BOTTOM SLAB DISTRIBUTION REINFORCING STEEL "e" SIZE	"e" SPACING	"e" NO. REQ'D	"e" LENGTHS VARY	SIDE WALL DISTRIBUTION REINFORCING STEEL "d1" SIZE	"d1" SPACING	"d1" NO. REQ'D	"d1" LENGTH	INTERIOR WALL DISTRIBUTION REINFORCING STEEL "d2" SIZE	"d2" SPACING	"d2" NO. REQ'D	"d2" LENGTH	CLASS "S" CONCRETE (Includes HDWL)	(1) REINFORCING STEEL (GR 60) (Includes HDWL)
SK	SL	D	S	H	LL	T	HD	B	C	W	OW	OH	SIZE	SPACING	LENGTHS VARY	NO. REQ'D	SIZE	SPACING	LENGTHS VARY	NO. REQ'D	SIZE	SPACING	LENGTHS VARY	NO. REQ'D	SIZE	SPACING	LENGTHS VARY	NO. REQ'D	SIZE	SPACING	NO. REQ'D	LENGTH	SIZE	SPACING	NO. REQ'D	LENGTH	SIZE	SPACING	NO. REQ'D	LENGTHS VARY	SIZE	SPACING	NO. REQ'D	LENGTHS VARY	SIZE	SPACING	NO. REQ'D	LENGTHS VARY	SIZE	SPACING	NO. REQ'D	LENGTH	SIZE	SPACING	NO. REQ'D	LENGTH	CU. YDS.	LBS.
10	3:1	2	10	9	4'-11"	12	3	12	8	8	32'-8"	11'-0"	6	9	Max 32'-4" / Min 8'-11"	6	7	5	Max 32'-4" / Min 8'-11"	10	4	9	Max 32'-4" / Min 8'-11"	6	4	8.5	Max 32'-4" / Min 8'-11"	6	4	4	30	10'-8"	4	12	22	10'-8"	4	9	39	Max 7'-7" / Min 1'-10"	4	9	89	Max 7'-7" / Min 1'-10"	4	12	9	LONG 7'-6" / SHORT 1'-11"	4	12	18	LONG 5'-8" / SHORT 3'-9"	16.81	2787
															32'-4"	3			32'-4"	5			32'-4"	3			32'-4"	3																														

"k1" HDWL BARS			"k2" HDWL BARS			"h" HDWL BARS			
SIZE	LENGTH	NO. REQ'D	SIZE	LENGTH	NO. REQ'D	SIZE	LENGTH	Y	NO. REQ'D
4	32'-10"	6	4	32'-10"	6	4	1'-11"	0'-11"	35

OUTLET SLOPE SECTION(S)

R.C. BOX SECTION	DESIGN FILL DEPTH (FT.)	CLEAR SPAN (FT.)	CLEAR HEIGHT (FT.)	TOP SLAB THK.	BOTTOM SLAB THK.	SIDE WALL THK.	INTERIOR WALL THK.	OVER ALL WIDTH	OVER ALL HEIGHT	SECTION LENGTH (FT.)	LENGTH = OW - 4" + BENDS "a" SIZE	"a" L	Bent "b" SIZE	Bent "b" L	"c" SIZE	"c" L	SPACING	NO. REQ'D	BOTTOM SLAB REINFORCING STEEL LENGTH = OW - 4" + BENDS "d" SIZE	"d" L	Bent "b1" SIZE	Bent "b1" L	"f" SIZE	"f" L	SPACING	NO. REQ'D	SIDE WALL REINFORCING STEEL "f0" LENGTH = OH - 4" SIZE	SPACING	NO. REQ'D	LENGTH	INTERIOR WALL REINFORCING STEEL "f1" LENGTH = OH - 4" SIZE	SPACING	NO. REQ'D	LENGTH	TOP SLAB DISTRIBUTION REINFORCING STEEL "g" LENGTH = SL SIZE	SPACING	NO. REQ'D	BOTTOM SLAB DISTRIBUTION REINFORCING STEEL "e" LENGTH = SL SIZE	SPACING	NO. REQ'D	SIDE WALL DISTRIBUTION REINFORCING STEEL "d1" LENGTH = SL SIZE	SPACING	NO. REQ'D	INTERIOR WALL DISTRIBUTION REINFORCING STEEL "d2" LENGTH = SL SIZE	SPACING	NO. REQ'D	CLASS "S" CONCRETE CU. YDS.	REINFORCING STEEL (GR. 60) LBS.
D	S	H	T	B	C	W	OW	OH	SL																																																	
HDWL DEPTH	ADDITIONAL REINF. FOR HDWL						"h" HDWL BARS																																																				
HD	LBS.						SIZE	Y	LENGTH	NO. REQ'D																																																			

CLASS "S" CONCRETE CU. YDS.	REINFORCING STEEL (GR. 60) LBS.
TOTAL	

The required number of bars and lengths shown are for estimating purpose only. The actual number and length required shall be determined in field.

Unless otherwise noted, all dimensions are in inches.

SHEET 2 OF 2
DETAILS OF R.C. BOX CULVERT

TRIPLE BARREL BOX CULVERT
HWY. 181 Sta. 102+50

SPECIAL DETAILS

PJoseph 8/13/2021 5:22:26 PM
WORKSPACE: AHTD
L:\2017\7017642 - ARDOT Job 100955\Drawings\r100955_SD_HWY 181-SITE 1102+50.dgn
REVISED DATE:

INLET WINGWALL TABLE

OVER ALL WIDTH	CLEAR HEIGHT	FOOTING THK.	WING WALL THK.	BOX SKEW (DEG.)	SLOPE	HDWL LENGTH	HEEL	WALL HEIGHT AT HDWL	WALL HEIGHT AT WING END	WINGWALL ANGLE (DEGREE) WING A	WINGWALL ANGLE (DEGREE) WING B	FOOTING WIDTH AT WALL END	WIDTH OF WING FOOTINGS AT HDWL WING A	WIDTH OF WING FOOTINGS AT HDWL WING B	FOOTING DIMENSION PARALLEL WITH HDWL WING A	FOOTING DIMENSION PARALLEL WITH HDWL WING B	LENGTH OF WINGWALLS WING A	LENGTH OF WINGWALLS WING B	LENGTH OF FOOTING HEEL WING A	LENGTH OF FOOTING HEEL WING B
OW	H	WB	CW	SK	SL	K	HL	WH1	WH2	AF1	AF2	WE	WF1	WF2	G1	G2	W1	W2	W3	W4
36'-2"	9'-0"	0'-10"	0'-9"	45	3:1	48'-6 3/4"	2'-0"	9'-10"	3'-0"	0	60	3'-3"	4'-4 3/8"	5'-4 1/2"	1'-7 3/8"	3'-6 1/4"	20'-6"	41'-0"	21'-11 1/2"	47'-8 5/8"

CLASS "S" CONCRETE (Includes apron)	REINFORCING STEEL (Includes apron and laps if required)
INLET	INLET
CU.YD	LBS.
23.53	2113

	F1						F2				F3				F4				F5				F6					F7			F8				F9				F10			F11			F12				REINF. STEEL QTY. PER WING (LBS)
WING	BAR SIZE	MAX. SPACING	NO. REQ'D	LENGTHS VARY			BAR SIZE	SPACING	NO. REQ'D	LENGTHS	BAR SIZE	SPACING	NO. REQ'D	LENGTHS	BAR SIZE	SPACING	NO. REQ'D	LENGTHS VARY	BAR SIZE	SPACING	NO. REQ'D	LENGTHS	BAR SIZE	SPACING	NO. REQ'D	LENGTHS VARY		BAR SIZE	NO. REQ'D	LENGTHS	BAR SIZE	SPACING	NO. REQ'D	LENGTHS VARY		BAR SIZE	SPACING	NO. REQ'D	LENGTHS	BAR SIZE	NO. REQ'D	LENGTHS	BAR SIZE	NO. REQ'D	LENGTHS	BAR SIZE	SPACING	NO. REQ'D	LENGTHS	
WING A	4	12	21	L	Min	4'-2"				L	5'-2"				L	-	4	18	8	Min	4	18	4	20'-2"	4	18	14	L	Min	5'-11"	4	8	22'-10"	6	18	14	Min	4	18	2	Min	4	2	21'-2"	4	2	21'-4"	6	12	9	L	3'-4"	703
					Max	12'-0"														4'-10"									Max	12'-5"								2'-9"			28'-2"								
				X	Min	0'-10"	4	12	6	X	1'-8"	-	-	-	X	-												X	Min	2'-5"																		X	1'-8"	
					Max	2'-0"														Max									Max	2'-5"								Max			28'-2"								
				Y	Min	3'-5"				Y	3'-7"				Y	-				18'-4"								Y	Min	3'-7"								3'-10"												
					Max	10'-1"																							Max	10-1"																				
WING B	4	12	41	L	Min	4'-3"				L	6'-5"				L	-	4	18	8	Min	4	18	4	40'-8"	4	18	28	L	Min	5'-8"	4	8	48'-7"	6	18	30	Min	4	18	2	Min	4	2	41'-1"	4	2	46'-8"	6	12	9	L	3'-4"	1410
					Max	12'-11"														9'-10"									Max	12-6"								2'-9"			33'-5"								
				X	Min	0'-10"	4	12	18	X	1'-11"	-	-	-	X	-												X	Min	2'-5"																		X	1'-8"	
					Max	2'-10"														Max									Max	2'-5"								Max			33'-5"								
				Y	Min	3'-6"				Y	4'-7"				Y	-				36'-10"								Y	Min	3'-4"								4'-11"												
					Max	10'-2"																							Max	10-2"																				

MID-SECTION

BAR LAP TABLE

# of Long. Laps Req'd.	SL = Section Length
0	< 40.0 ft
1	>40.0 ft - 78.0 ft
2	>78.0 ft - 116.0 ft
3	>116.0 ft - 154.0 ft
4	>154.0 ft - 192.0 ft
5	>192.0 ft - 230.0 ft
6	>230.0 ft - 268.0 ft
7	>268.0 ft - 306.0 ft
8	>306.0 ft -344.0 ft

Min. Bar Lap Length	
#4	1'-9"
#5	2'-2"
#6	2'-7"
#7	3'-6"
#8	4'-7"

Bar Pin Dia. Table	
#4	3"
#5	3 3/4"
#6	4 1/2"
#7	5 1/4"
#8	6"

This drawing to be used in conjunction with
SHEET 1 OF 4, "GENERAL DETAILS OF R.C. BOX CULVERT", 'GENERAL NOTES & LONGITUDINAL SECTION LENGTH SCHEDULE',
SHEET 3 OF 4, "GENERAL DETAILS OF R.C. BOX CULVERT", 'DETAILS OF MULTI-BARREL R.C. BOX CULVERT',
SHEET 4 OF 4, "GENERAL DETAILS OF R.C. BOX CULVERT", 'DETAILS OF WINGWALLS', and
STANDARD DRAWING RCB-2.

For additional information and outlet sections, see Sheet 2 of 2.

DATE REVISED	DATE FILMED	DATE REVISED	DATE FILMED	FED.RD. DIST.NO.	STATE	FED.AID PROJ.NO.	SHEET NO.	TOTAL SHEETS
				6	ARK.			
				JOB NO.		100955	24	356

(I) SPECIAL DETAILS

STATE OF ARKANSAS
LICENSED PROFESSIONAL ENGINEER
No.13436
SHAUN A. ROBERTSON
DIGITALLY SIGNED 8-13-2021

TABULAR DATA BY: CGG DATE: 08/21/2020
CHECKED BY: AEW DATE: 08/28/2020

INLET SKEWED END SECTION

SKEW (DEGREE)	SLOPE	DESIGN FILL DEPTH (FT.)	CLEAR SPAN (FT.)	CLEAR HEIGHT (FT.)	SECTION LENGTH	TOP SLAB THK.	HDWL DEPTH	BOTTOM SLAB THK.	SIDE WALL THK.	INTERIOR WALL THK.	OVER ALL WIDTH	OVER ALL HEIGHT	TOP SLAB REINFORCING STEEL "a" SIZE	"a" SPACING	"a" LENGTHS VARY	"a" NO. REQ'D	TOP SLAB REINFORCING STEEL "c" SIZE	"c" SPACING	"c" LENGTHS VARY	"c" NO. REQ'D	BOTTOM SLAB REINFORCING STEEL "d" SIZE	"d" SPACING	"d" LENGTHS VARY	"d" NO. REQ'D	BOTTOM SLAB REINFORCING STEEL "f" SIZE	"f" SPACING	"f" LENGTHS VARY	"f" NO. REQ'D	SIDE WALL REINFORCING STEEL "f0" SIZE	"f0" SPACING	"f0" NO. REQ'D	"f0" LENGTH	INTERIOR WALL REINFORCING STEEL "f1" SIZE	"f1" SPACING	"f1" NO. REQ'D	"f1" LENGTH	TOP SLAB DISTRIBUTION REINFORCING STEEL "g" SIZE	"g" SPACING	"g" NO. REQ'D	"g" LENGTHS VARY	BOTTOM SLAB DISTRIBUTION REINFORCING STEEL "e" SIZE	"e" SPACING	"e" NO. REQ'D	"e" LENGTHS VARY	SIDE WALL DISTRIBUTION REINFORCING STEEL "d1" SIZE	"d1" SPACING	"d1" NO. REQ'D	"d1" LENGTH	INTERIOR WALL DISTRIBUTION REINFORCING STEEL "d2" SIZE	"d2" SPACING	"d2" NO. REQ'D	"d2" LENGTH
SK	SL	D	S	H	LL	T	HD	B	C	W	OW	OH																																							
45	3:1	5	11	9	20'-1"	11	3.5	11	11	8	36'-2"	10'-10"	6	7	Max 35'-10" / Min 2'-6" / 35'-10"	58 / 4	6	5.5	Max 35'-10" / Min 2'-6" / 35'-10"	73 / 5	4	4.5	Max 35'-10" / Min 2'-6" / 35'-10"	89 / 6	4	5.5	Max 35'-10" / Min 2'-6" / 35'-10"	73 / 5	5	7	70	10'-6"	4	12	84	10'-6"	4	10	89	Max 38'-0" / Min 1'-10"	4	10	89	Max 38'-0" / Min 1'-10"	4	10	11	LONG 37'-3" / SHORT 2'-7"	4	12	18	LONG 25'-9" / SHORT 14'-1"

"k1" HDWL BARS			"k2" HDWL BARS			"h" HDWL BARS			
SIZE	LENGTH	NO. REQ'D	SIZE	LENGTH	NO. REQ'D	SIZE	LENGTH	Y	NO. REQ'D
7	50'-10"	6	7	50'-10"	6	4	1'-10"	0'-10"	53

CLASS "S" CONCRETE (Includes HDWL) CU. YDS.	(I) REINFORCING STEEL (GR 60) (Includes HDWL) LBS.
71.72	12400

(I) Any Bar Lap Required for the Skewed End Section shall be considered subsidiary to the item "Reinforcing Steel - Roadway (Grade 60)."

INLET SLOPE SECTION(S)

R.C. BOX SECTION	DESIGN FILL DEPTH (FT.)	CLEAR SPAN (FT.)	CLEAR HEIGHT (FT.)	TOP SLAB THK.	BOTTOM SLAB THK.	SIDE WALL THK.	INTERIOR WALL THK.	OVER ALL WIDTH	OVER ALL HEIGHT	SECTION LENGTH (FT.)	TOP SLAB REINFORCING STEEL LENGTH = OW - 4" + BENDS "a" SIZE	"a" L	Bent "b" SIZE	Bent "b" L	"c" SIZE	"c" L	SPACING	NO. REQ'D	BOTTOM SLAB REINFORCING STEEL LENGTH = OW - 4" + BENDS "d" SIZE	"d" L	Bent "b1" SIZE	Bent "b1" L	"f" SIZE	"f" L	SPACING	NO. REQ'D	SIDE WALL REINFORCING STEEL "f0" LENGTH = OH - 4" SPACING	NO. REQ'D	LENGTH	INTERIOR WALL REINFORCING STEEL "f1" LENGTH = OH - 4" SPACING	NO. REQ'D	LENGTH	TOP SLAB DISTRIBUTION REINFORCING STEEL "g" LENGTH = SL SPACING	NO. REQ'D	BOTTOM SLAB DISTRIBUTION REINFORCING STEEL "e" LENGTH = SL SPACING	NO. REQ'D	SIDE WALL DISTRIBUTION REINFORCING STEEL "d1" LENGTH = SL SPACING	NO. REQ'D	INTERIOR WALL DISTRIBUTION REINFORCING STEEL "d2" LENGTH = SL SPACING	NO. REQ'D	CLASS "S" CONCRETE CU. YDS.	REINFORCING STEEL (GR 60) LBS.
D	S	H	T	B	C	W	OW	OH	SL																																								

HDWL DEPTH	ADDITIONAL REINF. FOR HDWL	"h" HDWL BARS			
HD	LBS.	SIZE	Y	LENGTH	NO. REQ'D

CLASS "S" CONCRETE CU. YDS.	REINFORCING STEEL (GR 60) LBS.
TOTAL	

Design Fill Depth	Range of Actual Fill Depth
2	0.0 ft - 2.0 ft
5	>2.0 ft - 5.0 ft
10	>5.0 ft - 10.0 ft
15	>10.0 ft - 15.0 ft
20	>15.0 ft - 20.0 ft
25	>20.0 ft - 25.0 ft
30	>25.0 ft - 30.0 ft
35	>30.0 ft - 35.0 ft
40	>35.0 ft - 40.0 ft

Data shown for Mid-Section, Slope Section(s), and Skewed End Section is based on the design fill depth shown in the table, see PLAN AND PROFILE SHEETS for actual fill depth.

MID-SECTION

R.C. BOX SECTION	DESIGN FILL DEPTH (FT.)	CLEAR SPAN (FT.)	CLEAR HEIGHT (FT.)	TOP SLAB THK.	BOTTOM SLAB THK.	SIDE WALL THK.	INTERIOR WALL THK.	OVER ALL WIDTH	OVER ALL HEIGHT	SECTION LENGTH (FT.)	TOP SLAB REINFORCING STEEL LENGTH = OW - 4" + BENDS "a" SIZE	"a" L	Bent "b" SIZE	Bent "b" L	"c" SIZE	"c" L	SPACING	NO. REQ'D	BOTTOM SLAB REINFORCING STEEL LENGTH = OW - 4" + BENDS "d" SIZE	"d" L	Bent "b1" SIZE	Bent "b1" L	"f" SIZE	"f" L	SPACING	NO. REQ'D	SIDE WALL REINFORCING STEEL "f0" LENGTH = OH - 4" SPACING	NO. REQ'D	LENGTH	INTERIOR WALL REINFORCING STEEL "f1" LENGTH = OH - 4" SPACING	NO. REQ'D	LENGTH	TOP SLAB DISTRIBUTION REINF. STEEL "g" LENGTH = SL SPACING	NO. REQ'D	BOTTOM SLAB DISTRIBUTION REINF. STEEL "e" LENGTH = SL SPACING	NO. REQ'D	SIDE WALL DISTRIBUTION REINF. STEEL "d1" LENGTH = SL SIZE	SPACING	NO. REQ'D	INTERIOR WALL DISTRIBUTION REINF. STEEL "d2" LENGTH = SL SPACING	NO. REQ'D	CLASS "S" CONCRETE CU. YDS.	REINFORCING STEEL (GR 60) LBS.
D	S	H	T	B	C	W	OW	OH	SL																																								
A	5	11	9	11	11	11	8	36'-2"	10'-10"	78.83	4	35'-10"	8	36'-5"	6	35'-10"	15	63	4	35'-10"	5	36'-4"	4	35'-10"	11	85	5	7	270	10'-6"	4	12	312	10'-6"	4	10	89	4	10	89	4	10	22	4	12	36	276.80	36562

P.Joseph 8/13/2021 5:22:35 PM
WORKSPACE: AHTD
L:\20IT\170I7642 - ARDOT Job 100955\Drawings\r100955_SD_HWY 181-SITE 2 202+91.dgn
REVISED DATE:

SHEET 1 OF 2
DETAILS OF R.C. BOX CULVERT
TRIPLE BARREL BOX CULVERT
HWY. 181 Sta. 202+91

SPECIAL DETAILS

LRFD

DATE REVISED	DATE FILMED	DATE REVISED	DATE FILMED	FED.RD. DIST.NO.	STATE	FED.AID PROJ.NO.	SHEET NO.	TOTAL SHEETS
				6	ARK.			
				JOB NO.		100955	25	356

(1) SPECIAL DETAILS

STATE OF ARKANSAS
LICENSED PROFESSIONAL ENGINEER
No.13436
SHAUN A. ROBERSON
DIGITALLY SIGNED 8-13-2021

TABULAR DATA BY: CGG DATE: 08/21/2020
CHECKED BY: AEW DATE: 08/28/2020

OUTLET WINGWALL TABLE

OVER ALL WIDTH	CLEAR HEIGHT	FOOTING THK.	WING WALL THK.	BOX SKEW (DEG.)	SLOPE	HDWL LENGTH	HEEL	WALL HEIGHT AT HDWL	WALL HEIGHT AT WING END	WINGWALL ANGLE (DEGREE) WING A	WINGWALL ANGLE (DEGREE) WING B	FOOTING WIDTH AT WALL END	WIDTH OF WING FOOTINGS AT HDWL WING A	WIDTH OF WING FOOTINGS AT HDWL WING B	FOOTING DIMENSION PARALLEL WITH HDWL WING A	FOOTING DIMENSION PARALLEL WITH HDWL WING B	LENGTH OF WINGWALLS WING A	LENGTH OF WINGWALLS WING B	LENGTH OF FOOTING HEEL WING A	LENGTH OF FOOTING HEEL WING B	CLASS "S" CONCRETE (Includes apron)	REINFORCING STEEL (Includes apron and laps if required)
OW	H	WB	CW	SK	SL	K	HL	WH1	WH2	AF1	AF2	WE	WF1	WF2	G1	G2	W1	W2	W3	W4	CU.YD	LBS.
36'-2"	9'-0"	0'-10"	0'-9"	45	3:1	48'-6 3/4"	2'-0"	9'-10"	3'-0"	0	60	3'-3"	4'-4 3/8"	5'-4 1/2"	1'-7 3/8"	3'-6 1/4"	20'-6"	41'-0"	21'-11 1/2"	47'-8 5/8"	25.38	2113

WING	F1 BAR SIZE	F1 MAX. SPACING	F1 NO. REQ'D	F1 LENGTHS VARY	F1 LENGTHS	F2 BAR SIZE	F2 SPACING	F2 NO. REQ'D	F2 LENGTHS	F3 BAR SIZE	F3 SPACING	F3 NO. REQ'D	F3 LENGTHS	F4 BAR SIZE	F4 SPACING	F4 NO. REQ'D	F4 LENGTHS VARY	F5 BAR SIZE	F5 SPACING	F5 NO. REQ'D	F5 LENGTHS	F6 BAR SIZE	F6 SPACING	F6 NO. REQ'D	F6 LENGTHS VARY	F6 LENGTHS	F7 BAR SIZE	F7 NO. REQ'D	F7 LENGTHS	F8 BAR SIZE	F8 SPACING	F8 NO. REQ'D	F8 LENGTHS VARY	F8 LENGTHS	F9 BAR SIZE	F9 SPACING	F9 NO. REQ'D	F9 LENGTHS	F10 BAR SIZE	F10 NO. REQ'D	F10 LENGTHS	F11 BAR SIZE	F11 NO. REQ'D	F11 LENGTHS	F12 BAR SIZE	F12 SPACING	F12 NO. REQ'D	F12 LENGTHS	REINF. STEEL QTY PER WING (LBS)
WING A	4	12	21	⌐ Min	4'-2"	4	12	6	L 5'-2"	-	-	-	L -	4	18	8	Min 4'-10"	4	18	4	20'-2"	4	18	14	L Min 5'-11"		4	8	22'-10"	6	18	14	Min 2'-9"		4	18	2	Min 28'-2"	4	2	21'-2"	4	2	21'-4"	6	12	9	L 3'-4"	703
				⌐ Max	12'-0"												Max 18'-4"								L Max 12'-5"								Max 3'-10"				Max 28'-2"									X 1'-8"	
				X Min	0'-10"				X 1'-8"	-	-	-	X -												X Min 2'-5"																						
				X Max	2'-0"																				X Max 2'-5"																						
				Y Min	3'-5"				Y 3'-7"				Y -												Y Min 3'-7"																						
				Y Max	10'-1"																				Y Max 10'-1"																						
WING B	4	12	41	⌐ Min	4'-3"	4	12	18	L 6'-5"	-	-	-	L -	4	18	8	Min 9'-10"	4	18	4	40'-8"	4	18	28	L Min 5'-8"		4	8	48'-7"	6	18	30	Min 2'-9"		4	18	2	Min 33'-5"	4	2	41'-1"	4	2	46'-8"	6	12	9	L 3'-4"	1410
				⌐ Max	12'-11"												Max 36'-10"								L Max 12'-6"								Max 4'-11"				Max 33'-5"									X 1'-8"	
				X Min	0'-10"				X 1'-11"				X -												X Min 2'-5"																						
				X Max	2'-10"																				X Max 2'-5"																						
				Y Min	3'-6"				Y 4'-7"				Y -												Y Min 3'-4"																						
				Y Max	10'-2"																				Y Max 10'-2"																						

Min. Bar Lap Length	
#4	1'-9"
#5	2'-2"
#6	2'-7"
#7	3'-6"
#8	4'-7"

Bar Pin Dia. Table	
#4	3"
#5	3 3/4"
#6	4 1/2"
#7	5 1/4"
#8	6"

(1) Any Bar Lap Required for the Skewed End Section shall be considered subsidiary to the item "Reinforcing Steel - Roadway (Grade 60)."

OUTLET SKEWED END SECTION

SKEW (DEGREE)	SLOPE	DESIGN FILL DEPTH (FT.)	CLEAR SPAN (FT.)	CLEAR HEIGHT (FT.)	SECTION LENGTH	TOP SLAB THK.	HDWL DEPTH	BOTTOM SLAB THK.	SIDE WALL THK.	INTERIOR WALL THK.	OVER ALL WIDTH	OVER ALL HEIGHT
SK	SL	D	S	H	LL	T	HD	B	C	W	OW	OH
45	3:1	5	11	9	20'-1"	11	3.5	11	11	8	36'-2"	10'-10"

TOP SLAB REINFORCING STEEL "a" SIZE	"a" SPACING	"a" LENGTHS VARY	"a" LENGTHS	"a" NO. REQ'D	"c" SIZE	"c" SPACING	"c" LENGTHS VARY	"c" LENGTHS	"c" NO. REQ'D
6	7	Max	35'-10"	58	6	5.5	Max	35'-10"	73
		Min	2'-6"				Min	2'-6"	
			35'-10"	4				35'-10"	5

BOTTOM SLAB REINFORCING STEEL "d" SIZE	"d" SPACING	"d" LENGTHS VARY	"d" LENGTHS	"d" NO. REQ'D	"f" SIZE	"f" SPACING	"f" LENGTHS VARY	"f" LENGTHS	"f" NO. REQ'D
4	4.5	Max	35'-10"	89	4	5.5	Max	35'-10"	73
		Min	2'-6"				Min	2'-6"	
			35'-10"	6				35'-10"	5

SIDE WALL REINFORCING STEEL "f0" SIZE	"f0" SPACING	"f0" NO. REQ'D	"f0" LENGTH
5	7	70	10'-6"

INTERIOR WALL REINFORCING STEEL "f1" SIZE	"f1" SPACING	"f1" NO. REQ'D	"f1" LENGTH
4	12	84	10'-6"

TOP SLAB DISTRIBUTION REINFORCING STEEL "g" SIZE	"g" SPACING	"g" NO. REQ'D	"g" LENGTHS VARY	"g" LENGTHS
4	10	39	Max	38'-0"
			Min	1'-10"

BOTTOM SLAB DISTRIBUTION REINFORCING STEEL "e" SIZE	"e" SPACING	"e" NO. REQ'D	"e" LENGTHS VARY	"e" LENGTHS
4	10	89	Max	38'-0"
			Min	1'-10"

SIDE WALL DISTRIBUTION REINFORCING STEEL "d1" SIZE	"d1" SPACING	"d1" NO. REQ'D	"d1" LENGTH
4	10	11	LONG 37'-3"
			SHORT 2'-7"

INTERIOR WALL DISTRIBUTION REINFORCING STEEL "d2" SIZE	"d2" SPACING	"d2" NO. REQ'D	"d2" LENGTH
4	12	18	LONG 25'-9"
			SHORT 14'-1"

CLASS "S" CONCRETE (Includes HDWL) CU. YDS.	(1) REINFORCING STEEL (GR 60) (Includes HDWL) LBS.
71.72	12400

"k1" HDWL BARS SIZE	"k1" HDWL BARS LENGTH	"k1" HDWL BARS NO. REQ'D
7	50'-10"	6

"k2" HDWL BARS SIZE	"k2" HDWL BARS LENGTH	"k2" HDWL BARS NO. REQ'D
7	50'-10"	6

"h" HDWL BARS SIZE	"h" HDWL BARS LENGTH	"h" HDWL BARS Y	"h" HDWL BARS NO. REQ'D
4	1'-10"	0'-10"	53

OUTLET SLOPE SECTION(S)

R.C. BOX SECTION	DESIGN FILL DEPTH (FT.)	CLEAR SPAN (FT.)	CLEAR HEIGHT (FT.)	TOP SLAB THK.	BOTTOM SLAB THK.	SIDE WALL THK.	INTERIOR WALL THK.	OVER ALL WIDTH	OVER ALL HEIGHT	SECTION LENGTH (FT.)
	D	S	H	T	B	C	W	OW	OH	SL

BOTTOM SLAB REINFORCING STEEL LENGTH = OW - 4" + BENDS "a" SIZE	"a" L	"b" Bent SIZE	"b" Bent L	"c" SIZE	"c" L	SPACING	NO. REQ'D

BOTTOM SLAB REINFORCING STEEL LENGTH = OW - 4" + BENDS "d" SIZE	"d" L	"b1" Bent SIZE	"b1" Bent L	"f" SIZE	"f" L	SPACING	NO. REQ'D

SIDE WALL REINFORCING STEEL "f0" LENGTH = OH - 4" SIZE	SPACING	NO. REQ'D	LENGTH

INTERIOR WALL REINFORCING STEEL "f1" LENGTH = OH - 4" SIZE	SPACING	NO. REQ'D	LENGTH

TOP SLAB DISTRIBUTION REINFORCING STEEL "g" LENGTH = SL SIZE	SPACING	NO. REQ'D

BOTTOM SLAB DISTRIBUTION REINFORCING STEEL "e" LENGTH = SL SIZE	SPACING	NO. REQ'D

SIDE WALL DISTRIBUTION REINFORCING STEEL "d1" LENGTH = SL SIZE	SPACING	NO. REQ'D

INTERIOR WALL DISTRIBUTION REINFORCING STEEL "d2" LENGTH = SL SIZE	SPACING	NO. REQ'D

HDWL DEPTH HD	ADDITIONAL REINF. FOR HDWL LBS.	"h" HDWL BARS SIZE	"h" HDWL BARS Y	"h" HDWL BARS LENGTH	"h" HDWL BARS NO. REQ'D

CLASS "S" CONCRETE CU. YDS.	REINFORCING STEEL (GR. 60) LBS.
TOTAL	

The required number of bars and lengths shown are for estimating purpose only. The actual number and length required shall be determined in field.

Unless otherwise noted, all dimensions are in inches.

SHEET 2 OF 2
DETAILS OF R.C. BOX CULVERT
TRIPLE BARREL BOX CULVERT
HWY. 181 Sta. 202+91

SPECIAL DETAILS

PJoseph 8/13/2021 5:22:39 PM
WORKSPACE: AHTD
L:\20\7\70\7642 - ARDOT Job 100955\Drawings\r100955_SD_HWY 181-SITE 2 202+91.dgn
REVISED DATE:

DATE REVISED	DATE FILMED	DATE REVISED	DATE FILMED	FED.RD. DIST.NO.	STATE	FED.AID PROJ.NO.	SHEET NO.	TOTAL SHEETS
				6	ARK.			
				JOB NO.		100955	26	356

(1) SPECIAL DETAILS

STATE OF ARKANSAS
LICENSED PROFESSIONAL ENGINEER
No. 13436
SHAUN A. ROBERSON
DIGITALLY SIGNED 8-13-2021

TABULAR DATA BY: CGG DATE: 8/28/2020
CHECKED BY: AEW DATE: 8/28/2020

INLET WINGWALL TABLE

OVER ALL WIDTH	CLEAR HEIGHT	FOOTING THK.	WING WALL THK.	BOX SKEW (DEG.)	SLOPE	HDWL LENGTH	HEEL	WALL HEIGHT AT HDWL	WALL HEIGHT AT WING END	WINGWALL ANGLE (DEGREE) WING A	WINGWALL ANGLE (DEGREE) WING B	FOOTING WIDTH AT WALL END	WIDTH OF WING FOOTINGS AT HDWL WING A	WIDTH OF WING FOOTINGS AT HDWL WING B	FOOTING DIMENSION PARALLEL WITH HDWL WING A	FOOTING DIMENSION PARALLEL WITH HDWL WING B	LENGTH OF WINGWALLS WING A	LENGTH OF WINGWALLS WING B	LENGTH OF FOOTING HEEL WING A	LENGTH OF FOOTING HEEL WING B
OW	H	WB	CW	SK	SL	K	HL	WH1	WH2	AF1	AF2	WE	WF1	WF2	G1	G2	W1	W2	W3	W4
30'-2"	9'-0"	0'-10"	0'-9"	0	3:1	29'-0"	2'-0"	9'-10"	3'-0"	30	30	3'-3"	4'-10"	4'-10"	1'-10"	1'-10"	23'-6"	23'-6"	27'-1 1/8"	27'-1 1/8"

CLASS "S" CONCRETE (Includes apron)	REINFORCING STEEL (Includes apron and laps if required)
INLET	INLET
CU.YD	LBS.
17.40	1614

WING	F1 BAR SIZE	F1 MAX. SPACING	F1 NO. REQ'D	F1 LENGTHS VARY			F2 BAR SIZE	F2 SPACING	F2 NO. REQ'D	F2 LENGTHS	F3 BAR SIZE	F3 SPACING	F3 NO. REQ'D	F3 LENGTHS	F4 BAR SIZE	F4 SPACING	F4 NO. REQ'D	F4 LENGTHS VARY			F5 BAR SIZE	F5 SPACING	F5 NO. REQ'D	F5 LENGTHS	F6 BAR SIZE	F6 SPACING	F6 NO. REQ'D	F6 LENGTHS VARY			F7 BAR SIZE	F7 NO. REQ'D	F7 LENGTHS	F8 BAR SIZE	F8 SPACING	F8 NO. REQ'D	F8 LENGTHS VARY			F9 BAR SIZE	F9 SPACING	F9 NO. REQ'D	F9 LENGTHS	F10 BAR SIZE	F10 NO. REQ'D	F10 LENGTHS	F11 BAR SIZE	F11 NO. REQ'D	F11 LENGTHS	F12 BAR SIZE	F12 SPACING	F12 NO. REQ'D	F12 LENGTHS		REINF. STEEL QTY. PER WING (LBS)
WING A	4	12	24	L	Min	4'-2"	4	12	11	L 6'-3"	-	-	-	L -	4	18	8	Min			4	18	4	23'-2"	4	18	16	Min			4	8	27'-11"	6	18	16	Min			4	18	2	Min	4	2	24'-0"	4	2	25'-8"	6	'2	9	L	3'-4"		
					Max	12'-5"												5'-7"										Max										2'-9"														
				X	Min	0'-10"				X -				X -				Max																						Max										X	1'-8"		
					Max	2'-5"												21'-0"										Min										4'-3"													807
				Y	Min	3'-5"				Y 4'-7"				Y -				Min										Max										24'-3"													
					Max	10'-1"																						Min																							
WING B	4	12	24	L	Min	4'-2"	4	12	11	L 6'-3"	-	-	-	L -	4	18	8	Min			4	18	4	23'-2"	4	18	16	Min			4	8	27'-11"	6	18	16	Min			4	18	2	Min	4	2	24'-0"	4	2	25'-8"	6	'2	9	L	3'-4"		
					Max	12'-5"												5'-7"										Max										2'-9"														
				X	Min	0'-10"				X -				X -				Max																						Max										X	1'-8"		
					Max	2'-5"												21'-0"										Min										4'-3"													807
				Y	Min	3'-5"				Y 4'-7"				Y -				Min										Max										24'-3"													
					Max	10'-1"																						Min																							

MID-SECTION

BAR LAP TABLE

# of Long. Laps Req'd.	SL = Section Length
0	< 40.0 ft
1	>40.0 ft - 78.0 ft
2	>78.0 ft - 116.0 ft
3	>116.0 ft - 154.0 ft
4	>154.0 ft - 192.0 ft
5	>192.0 ft - 230.0 ft
6	>230.0 ft - 268.0 ft
7	>268.0 ft - 306.0 ft
8	>306.0 ft -344.0 ft

Min. Bar Lap Length	
#4	1'-9"
#5	2'-2"
#6	2'-7"
#7	3'-6"
#8	4'-7"

Bar Pin Dia. Table	
#4	3"
#5	3 3/4"
#6	4 1/2"
#7	5 1/4"
#8	6"

This drawing to be used in conjunction with
SHEET 1 OF 4, "GENERAL DETAILS OF R.C. BOX CULVERT", 'GENERAL NOTES & LONGITUDINAL SECTION LENGTH SCHEDULE',
SHEET 3 OF 4, "GENERAL DETAILS OF R.C. BOX CULVERT", 'DETAILS OF MULTI-BARREL R.C. BOX CULVERT',
SHEET 4 OF 4, "GENERAL DETAILS OF R.C. BOX CULVERT", 'DETAILS OF WINGWALLS', and
STANDARD DRAWING RCB-2.

For additional information and outlet sections, see Sheet 2 of 2.

(1) Any Bar Lap Required for the Skewed End Section shall be considered subsidiary to the item "Reinforcing Steel - Roadway (Grade 60)."

INLET SKEWED END SECTION

SKEW (DEGREE)	SLOPE	DESIGN FILL DEPTH (FT.)	CLEAR SPAN (FT.)	CLEAR HEIGHT (FT.)	SECTION LENGTH	TOP SLAB THK.	HDWL DEPTH	BOTTOM SLAB THK.	SIDE WALL THK.	INTERIOR WALL THK.	OVER ALL WIDTH	OVER ALL HEIGHT	TOP SLAB REINFORCING STEEL "a" SIZE	"a" SPACING	"a" LENGTHS VARY	"a" NO. REQ'D	TOP SLAB REINFORCING STEEL "c" SIZE	"c" SPACING	"c" LENGTHS VARY	"c" NO. REQ'D	BOTTOM SLAB REINFORCING STEEL "d" SIZE	"d" SPACING	"d" LENGTHS VARY	"d" NO. REQ'D	BOTTOM SLAB REINFORCING STEEL "f" SIZE	"f" SPACING	"f" LENGTHS VARY	"f" NO. REQ'D	SIDE WALL REINFORCING STEEL "f0" SIZE	"f0" SPACING	"f0" NO. REQ'D	"f0" LENGTH	INTERIOR WALL REINFORCING STEEL "f1" SIZE	"f1" SPACING	"f1" NO. REQ'D	"f1" LENGTH	TOP SLAB DISTRIBUTION REINFORCING STEEL "g" SIZE	"g" SPACING	"g" NO. REQ'D	"g" LENGTHS VARY	BOTTOM SLAB DISTRIBUTION REINFORCING STEEL "e" SIZE	"e" SPACING	"e" NO. REQ'D	"e" LENGTHS VARY	SIDE WALL DISTRIBUTION REINFORCING STEEL "d1" SIZE	"d1" SPACING	"d1" NO. REQ'D	"d1" LENGTH	INTERIOR WALL DISTRIBUTION REINFORCING STEEL "d2" SIZE	"d2" SPACING	"d2" NO. REQ'D	"d2" LENGTH	CLASS "S" CONCRETE (Includes HDWL) CU. YDS.	(1) REINFORCING STEEL (GR 60) (Includes HDWL) LBS.
SK	SL	D	S	H	LL	T	HD	B	C	W	OW	OH																																												
															Max				Max				Max				Max																														
															Min				Min				Min				Min																														

"k1" HDWL BARS			"k2" HDWL BARS			"h" HDWL BARS			
SIZE	LENGTH	NO. REQ'D	SIZE	LENGTH	NO. REQ'D	SIZE	LENGTH	Y	NO. REQ'D

INLET SLOPE SECTION(S)

R.C. BOX SECTION	DESIGN FILL DEPTH (FT.)	CLEAR SPAN (FT.)	CLEAR HEIGHT (FT.)	TOP SLAB THK.	BOTTOM SLAB THK.	SIDE WALL THK.	INTERIOR WALL THK.	OVER ALL WIDTH	OVER ALL HEIGHT	SECTION LENGTH (FT.)	LENGTH = OW - 4" + BENDS "a" SIZE	"a" L	Bent "b" SIZE	Bent "b" L	"c" SIZE	"c" L	SPACING	NO. REQ'D	BOTTOM SLAB REINFORCING STEEL LENGTH = OW - 4" + BENDS "d" SIZE	"d" L	Bent "b1" SIZE	Bent "b1" L	"f" SIZE	"f" L	SPACING	NO. REQ'D	SIDE WALL REINFORCING STEEL "f0" LENGTH = OH - 4" SIZE	SPACING	NO. REQ'D	LENGTH	INTERIOR WALL REINFORCING STEEL "f1" LENGTH = OH - 4" SIZE	SPACING	NO. REQ'D	LENGTH	TOP SLAB DISTRIBUTION REINFORCING STEEL "g" LENGTH = SL SIZE	SPACING	NO. REQ'D	BOTTOM SLAB DISTRIBUTION REINFORCING STEEL "e" LENGTH = SL SIZE	SPACING	NO. REQ'D	SIDE WALL DISTRIBUTION REINFORCING STEEL "d1" LENGTH = SL SIZE	SPACING	NO. REQ'D	INTERIOR WALL DISTRIBUTION REINFORCING STEEL "d2" LENGTH = SL SIZE	SPACING	NO. REQ'D	CLASS "S" CONCRETE CU. YDS.	REINFORCING STEEL (GR. 60) LBS.
D	S	H	T	B	C	W	OW	OH	SL																																												

HDWL DEPTH	ADDITIONAL REINF. FOR HDWL	"h" HDWL BARS			
HD	LBS.	SIZE	Y	LENGTH	NO. REQ'D
3"	39	4	0'-7"	1'-7"	31

CLASS "S" CONCRETE CU. YDS.	REINFORCING STEEL (GR. 60) LBS.
0.27	72
TOTAL	
0.27	72

Design Fill Depth	Range of Actual Fill Depth
2	0.0 ft - 2.0 ft
5	>2.0 ft - 5.0 ft
10	>5.0 ft - 10.0 ft
15	>10.0 ft - 15.0 ft
20	>15.0 ft - 20.0 ft
25	>20.0 ft - 25.0 ft
30	>25.0 ft - 30.0 ft
35	>30.0 ft - 35.0 ft
40	>35.0 ft - 40.0 ft

Data shown for Mid-Section, Slope Section(s), and Skewed End Section is based on the design fill depth shown in the table, see PLAN AND PROFILE SHEETS for actual fill depth.

MID-SECTION

R.C. BOX SECTION	DESIGN FILL DEPTH (FT.)	CLEAR SPAN (FT.)	CLEAR HEIGHT (FT.)	TOP SLAB THK.	BOTTOM SLAB THK.	SIDE WALL THK.	INTERIOR WALL THK.	OVER ALL WIDTH	OVER ALL HEIGHT	SECTION LENGTH (FT.)	TOP SLAB REINFORCING STEEL LENGTH = OW - 4" + BENDS "a" SIZE	"a" L	Bent "b" SIZE	Bent "b" L	"c" SIZE	"c" L	SPACING	NO. REQ'D	BOTTOM SLAB REINFORCING STEEL LENGTH = OW - 4" + BENDS "d" SIZE	"d" L	Bent "b1" SIZE	Bent "b1" L	"f" SIZE	"f" L	SPACING	NO. REQ'D	SIDE WALL REINFORCING STEEL "f0" LENGTH = OH - 4" SIZE	SPACING	NO. REQ'D	LENGTH	INTERIOR WALL REINFORCING STEEL "f1" LENGTH = OH - 4" SIZE	SPACING	NO. REQ'D	LENGTH	TOP SLAB DISTRIBUTION REINF. STEEL "g" LENGTH = SL SIZE	SPACING	NO. REQ'D	BOTTOM SLAB DISTRIBUTION REINF. STEEL "e" LENGTH = SL SIZE	SPACING	NO. REQ'D	SIDE WALL DISTRIBUTION REINF. STEEL "d1" LENGTH = SL SIZE	SPACING	NO. REQ'D	INTERIOR WALL DISTRIBUTION REINF. STEEL "d2" LENGTH = SL SIZE	SPACING	NO. REQ'D	CLASS "S" CONCRETE CU. YDS.	REINFORCING STEEL (GR. 60) LBS.
D	S	H	T	B	C	W	OW	OH	SL																																												
A	5	9	9	9.5	9.5	11	8	30'-2"	10'-7"	84	4	29'-10"	8	30'-3"	6	29'-10"	14	72	4	29'-10"	4	30'-3"	4	29'-10"	11	91	5	7	288	10'-3"	4	12	336	10'-3"	4	11	65	4	11	65	4	10	22	4	12	36	237.27	32349

P.Joseph 8/13/2021 5:22:44 PM
WORKSPACE: AHTD
L:\2017\1701642 - ARDOT Job 100955\Drawings\r100955_SD_HWY 181-SITE 3 306+75.dgn
REVISED DATE:

SHEET 1 OF 2
DETAILS OF R.C. BOX CULVERT
TRIPLE BARREL BOX CULVERT
HWY. 181 Sta. 306+75

SPECIAL DETAILS

DATE REVISED	DATE FILMED	DATE REVISED	DATE FILMED	FED.RD. DIST.NO.	STATE	FED.AID PROJ.NO.	SHEET NO.	TOTAL SHEETS
				6	ARK.			
				JOB NO.		100955	27	356

(I) SPECIAL DETAILS

STATE OF ARKANSAS
LICENSED PROFESSIONAL ENGINEER
No. 13436
SHAUN A. ROBERSON
DIGITALLY SIGNED 8-13-2021

TABULAR DATA BY: CGG DATE: 8/28/2020
CHECKED BY: AEW DATE: 8/28/2020

OUTLET WINGWALL TABLE

OVER ALL WIDTH	CLEAR HEIGHT	FOOTING THK.	WING WALL THK.	BOX SKEW (DEG.)	SLOPE	HDWL LENGTH	HEEL	WALL HEIGHT AT HDWL	WALL HEIGHT AT WING END	WINGWALL ANGLE (DEGREE) WING A	WINGWALL ANGLE (DEGREE) WING B	FOOTING WIDTH AT WALL END	WIDTH OF WING FOOTINGS AT HDWL WING A	WIDTH OF WING FOOTINGS AT HDWL WING B	FOOTING DIMENSION PARALLEL WITH HDWL WING A	FOOTING DIMENSION PARALLEL WITH HDWL WING B	LENGTH OF WINGWALLS WING A	LENGTH OF WINGWALLS WING B	LENGTH OF FOOTING HEEL WING A	LENGTH OF FOOTING HEEL WING B	CLASS "S" CONCRETE (Includes apron)	REINFORCING STEEL (Includes apron and laps if required)
OW	H	WB	CW	SK	SL	K	HL	WH1	WH2	AF1	AF2	WE	WF1	WF2	G1	G2	W1	W2	W3	W4	CU.YD	LBS.
30'-2"	9'-0"	0'-10"	0'-9"	0	3:1	29'-0"	2'-0"	9'-10"	3'-0"	30	30	3'-3"	4'-10"	4'-10"	1'-10"	1'-10"	23'-6"	23'-6"	27'-1 1/8"	27'-1 1/8"	18.60	614

WING	F1 BAR SIZE	F1 MAX. SPACING	F1 NO. REQ'D	F1 LENGTHS VARY	F1 LENGTHS	F2 BAR SIZE	F2 SPACING	F2 NO. REQ'D	F2 LENGTHS	F3 BAR SIZE	F3 SPACING	F3 NO. REQ'D	F3 LENGTHS	F4 BAR SIZE	F4 SPACING	F4 NO. REQ'D	F4 LENGTHS VARY	F5 BAR SIZE	F5 SPACING	F5 NO. REQ'D	F5 LENGTHS	F6 BAR SIZE	F6 SPACING	F6 NO. REQ'D	F6 LENGTHS VARY	F6 LENGTHS	F7 BAR SIZE	F7 NO. REQ'D	F7 LENGTHS	F8 BAR SIZE	F8 SPACING	F8 NO. REQ'D	F8 LENGTHS VARY	F8 LENGTHS	F9 BAR SIZE	F9 SPACING	F9 NO. REQ'D	F9 LENGTHS	F10 BAR SIZE	F10 NO. REQ'D	F10 LENGTHS	F11 BAR SIZE	F11 NO. REQ'D	F11 LENGTHS	F12 BAR SIZE	F12 SPACING	F12 NO. REQ'D	F12 LENGTHS	REINF. STEEL QTY PER WING (LBS)
WING A	4	12	24	⌐ Min	4'-2"	4	12	11	L 6'-3"	-	-	-	L -	4	18	8	Min 5'-7"	4	18	4	23'-2"	4	18	16	L Min 5'-11"		4	8	27'-11"	6	18	16	Min 2'-9"		4	18	2	Min 24'-3"	4	2	24'-0"	4	2	25'-8"	6	12	9	L 3'-4"	807
				⌐ Max	12'-5"												Max 21'-0"								L Max 12'-5"								Max 4'-3"				Max 24'-3"									X 1'-8"	
				X Min	0'-10"				X 1'-9"				X -												X Min 2'-5"																						
				X Max	2'-5"																				X Max 2'-5"																						
				Y Min	3'-5"				Y 4'-7"				Y -												Y Min 3'-7"																						
				Y Max	10'-1"																				Y Max 10'-1"																						
WING B	4	12	24	⌐ Min	4'-2"	4	12	11	L 6'-3"	-	-	-	L -	4	18	8	Min 5'-7"	4	18	4	23'-2"	4	18	16	L Min 5'-11"		4	8	27'-11"	6	18	16	Min 2'-9"		4	18	2	Min 24'-3"	4	2	24'-0"	4	2	25'-8"	6	12	9	L 3'-4"	807
				⌐ Max	12'-5"												Max 21'-0"								L Max 12'-5"								Max 4'-3"				Max 24'-3"									X 1'-8"	
				X Min	0'-10"				X 1'-9"				X -												X Min 2'-5"																						
				X Max	2'-5"																				X Max 2'-5"																						
				Y Min	3'-5"				Y 4'-7"				Y -												Y Min 3'-7"																						
				Y Max	10'-1"																				Y Max 10'-1"																						

Min. Bar Lap Length	
#4	1'-9"
#5	2'-2"
#6	2'-7"
#7	3'-6"
#8	4'-7"

Bar Pin Dia. Table	
#4	3"
#5	3 3/4"
#6	4 1/2"
#7	5 1/4"
#8	6"

(I) Any Bar Lap Required for the Skewed End Section shall be considered subsidiary to the item "Reinforcing Steel - Roadway (Grade 60)."

OUTLET SKEWED END SECTION

SKEW (DEGREE)	SLOPE	DESIGN FILL DEPTH (FT.)	CLEAR SPAN (FT.)	CLEAR HEIGHT (FT.)	SECTION LENGTH	TOP SLAB THK.	HDWL DEPTH	BOTTOM SLAB THK.	SIDE WALL THK.	INTERIOR WALL THK.	OVER ALL WIDTH	OVER ALL HEIGHT	TOP SLAB REINFORCING STEEL "a" SIZE	"a" SPACING	"a" LENGTHS VARY	"a" NO. REQ'D	TOP SLAB REINFORCING STEEL "c" SIZE	"c" SPACING	"c" LENGTHS VARY	"c" NO. REQ'D	BOTTOM SLAB REINFORCING STEEL "d" SIZE	"d" SPACING	"d" LENGTHS VARY	"d" NO. REQ'D	BOTTOM SLAB REINFORCING STEEL "f" SIZE	"f" SPACING	"f" LENGTHS VARY	"f" NO. REQ'D	SIDE WALL REINFORCING STEEL "f0" SIZE	"f0" SPACING	"f0" NO. REQ'D	"f0" LENGTH	INTERIOR WALL REINFORCING STEEL "f1" SIZE	"f1" SPACING	"f1" NO. REQ'D	"f1" LENGTH	TOP SLAB DISTRIBUTION REINFORCING STEEL "g" SIZE	"g" SPACING	"g" NO. REQ'D	"g" LENGTHS VARY	BOTTOM SLAB DISTRIBUTION REINFORCING STEEL "e" SIZE	"e" SPACING	"e" NO. REQ'D	"e" LENGTHS VARY	SIDE WALL DISTRIBUTION REINFORCING STEEL "d1" SIZE	"d1" SPACING	"d1" NO. REQ'D	"d1" LENGTH	INTERIOR WALL DISTRIBUTION REINFORCING STEEL "d2" SIZE	"d2" SPACING	"d2" NO. REQ'D	"d2" LENGTH
SK	SL	D	S	H	LL	T	HD	B	C	W	OW	OH																																															
															Max				Max				Max				Max															Max				Max			LONG				LONG
																																																SHORT				SHORT
															Min				Min				Min				Min													Min				Min							

"k1" HDWL BARS			"k2" HDWL BARS			"h" HDWL BARS			
SIZE	LENGTH	NO. REQ'D	SIZE	LENGTH	NO. REQ'D	SIZE	LENGTH	Y	NO. REQ'D

CLASS "S" CONCRETE (Includes HDWL)	(I) REINFORCING STEEL (GR 60) (Includes HDWL)
CU. YDS.	LBS.

OUTLET SLOPE SECTION(S)

R.C. BOX SECTION	DESIGN FILL DEPTH (FT.)	CLEAR SPAN (FT.)	CLEAR HEIGHT (FT.)	TOP SLAB THK.	BOTTOM SLAB THK.	SIDE WALL THK.	INTERIOR WALL THK.	OVER ALL WIDTH	OVER ALL HEIGHT	SECTION LENGTH (FT.)	LENGTH = OW - 4" + BENDS "a" SIZE	"a" L	Bent "b" SIZE	Bent "b" L	"c" SIZE	"c" L	LENGTH = OW - 4" + BENDS SPACING	LENGTH = OW - 4" + BENDS NO. REQ'D	BOTTOM SLAB REINFORCING STEEL LENGTH = OW - 4" + BENDS "d" SIZE	"d" L	Bent "b1" SIZE	Bent "b1" L	"f" SIZE	"f" L	BOTTOM SLAB REINFORCING STEEL SPACING	BOTTOM SLAB REINFORCING STEEL NO. REQ'D	SIDE WALL REINFORCING STEEL "f0" LENGTH = OH - 4" SIZE	SIDE WALL REINFORCING STEEL "f0" SPACING	SIDE WALL REINFORCING STEEL "f0" NO. REQ'D	SIDE WALL REINFORCING STEEL "f0" LENGTH	INTERIOR WALL REINFORCING STEEL "f1" LENGTH = OH - 4" SIZE	INTERIOR WALL REINFORCING STEEL "f1" SPACING	INTERIOR WALL REINFORCING STEEL "f1" NO. REQ'D	INTERIOR WALL REINFORCING STEEL "f1" LENGTH	TOP SLAB DISTRIBUTION REINFORCING STEEL "g" LENGTH = SL SIZE	TOP SLAB DISTRIBUTION REINFORCING STEEL "g" SPACING	TOP SLAB DISTRIBUTION REINFORCING STEEL "g" NO. REQ'D	BOTTOM SLAB DISTRIBUTION REINFORCING STEEL "e" LENGTH = SL SIZE	BOTTOM SLAB DISTRIBUTION REINFORCING STEEL "e" SPACING	BOTTOM SLAB DISTRIBUTION REINFORCING STEEL "e" NO. REQ'D	SIDE WALL DISTRIBUTION REINFORCING STEEL "d1" LENGTH = SL SIZE	SIDE WALL DISTRIBUTION REINFORCING STEEL "d1" SPACING	SIDE WALL DISTRIBUTION REINFORCING STEEL "d1" NO. REQ'D	INTERIOR WALL DISTRIBUTION REINFORCING STEEL "d2" LENGTH = SL SIZE	INTERIOR WALL DISTRIBUTION REINFORCING STEEL "d2" SPACING	INTERIOR WALL DISTRIBUTION REINFORCING STEEL "d2" NO. REQ'D
D	S	H	T	B	C	W	OW	OH	SL																																														

CLASS "S" CONCRETE	REINFORCING STEEL (GR. 60)
CU. YDS.	LBS.
TOTAL	
0.27	72

HDWL DEPTH	ADDITIONAL REINF. FOR HDWL	"h" HDWL BARS			
HD	LBS.	SIZE	Y	LENGTH	NO. REQ'D
3"	39	4	0'-7"	1'-7"	31

The required number of bars and lengths shown are for estimating purpose only. The actual number and length required shall be determined in field.

Unless otherwise noted, all dimensions are in inches.

SHEET 2 OF 2
DETAILS OF R.C. BOX CULVERT
TRIPLE BARREL BOX CULVERT
HWY. 181 Sta. 306+75
SPECIAL DETAILS

LRFD

PJoseph 8/13/2021 5:22:48 PM
WORKSPACE: AHTD
L:\2017\17017642 - ARDOT Job 100955\Drawings\r100955_SD_HWY 181-SITE 3 306+75.dgn
REVISED DATE:

DATE REVISED	DATE FILMED	DATE REVISED	DATE FILMED	FED.RD. DIST.NO.	STATE	FED.AID PROJ.NO.	SHEET NO.	TOTAL SHEETS
				6	ARK.			
				JOB NO.		100955	28	356

(1) SPECIAL DETAILS

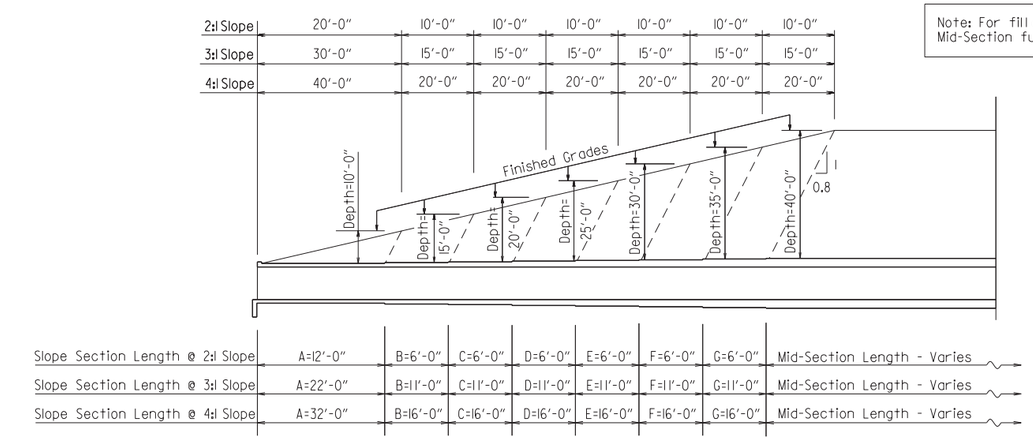

Note: For fill depths 10' and under, use Mid-Section full length of box culvert.

Slope Section Length @	A	B	C	D	E	F	G	Mid-Section Length
2:1 Slope	12'-0"	6'-0"	6'-0"	6'-0"	6'-0"	6'-0"	6'-0"	Varies
3:1 Slope	22'-0"	11'-0"	11'-0"	11'-0"	11'-0"	11'-0"	11'-0"	Varies
4:1 Slope	32'-0"	16'-0"	16'-0"	16'-0"	16'-0"	16'-0"	16'-0"	Varies

LONGITUDINAL SECTION LENGTH SCHEDULE FOR VARYING FILL DEPTHS OVER 10'

Lengths for Non-Skewed Boxes

*LL = Skewed End Section Length - See "Skewed End Section Details" Length LL varies with skew angle, overall box width and fill depth and may eliminate the need for some slope section lengths as shown.

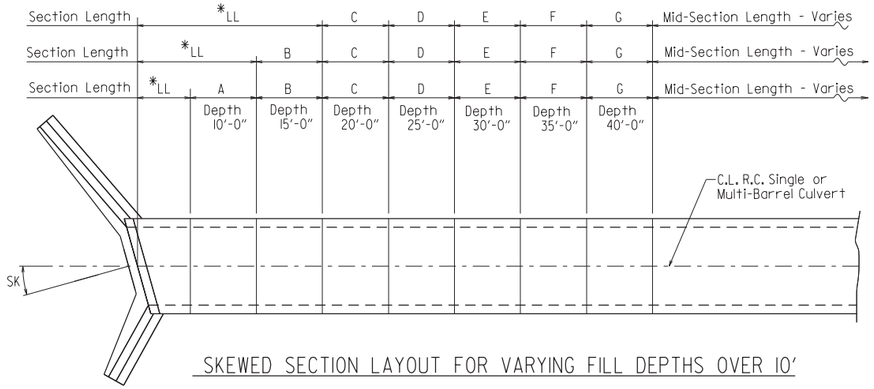

SKEWED SECTION LAYOUT FOR VARYING FILL DEPTHS OVER 10'

STATE OF ARKANSAS
LICENSED PROFESSIONAL ENGINEER
No. 13436
SHAUN A. ROBERSON
DIGITALLY SIGNED 8-13-2021

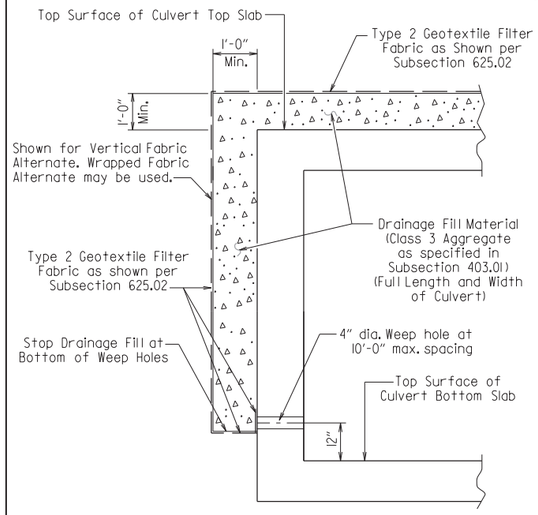

CULVERT DRAINAGE DETAIL FOR ROCK FILL

This detail shall be used when rock fill is specified for embankment construction.

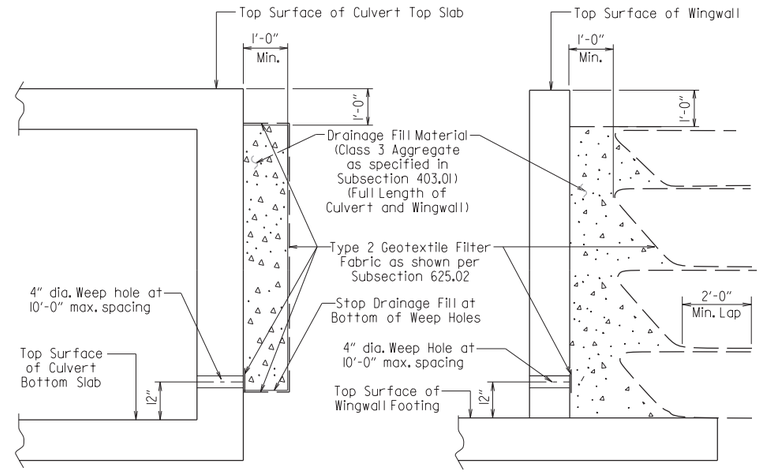

For Details of Excavation and Pay Limits, see Standard Drawing RCB-2.

VERTICAL FABRIC ALTERNATE
(Shown for Culvert, Similar for Wingwall)

WRAPPED FABRIC ALTERNATE
(Shown for Wingwall, Similar for Culvert)

WINGWALL & CULVERT DRAINAGE DETAIL

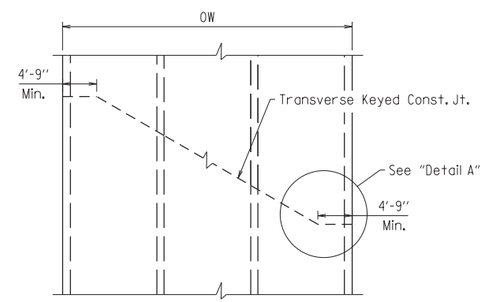

SKEWED TRANSVERSE JOINT DETAIL

This detail shall be used to construct a skewed transverse joint only for Multi-Barrel Culverts and only when required by the Maintenance of Traffic Plans. Otherwise, transverse joints should be made normal to the centerline of the barrel.

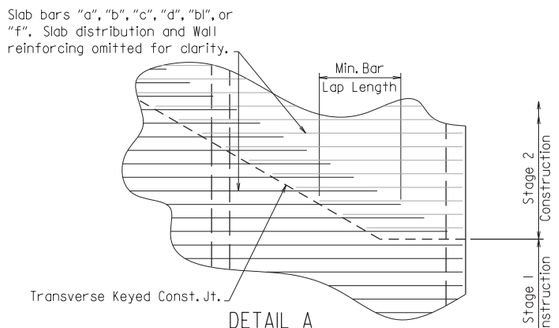

DETAIL A

See Tabular Data Sheets for Minimum Bar Lap Lengths.

Shown for transverse reinforcing, longitudinal reinforcing similar.

GENERAL NOTES:

CONSTRUCTION SPECIFICATIONS: Arkansas State Highway and Transportation Department Standard Specifications for Highway Construction (2014 edition) with applicable Supplemental Specifications and Special Provisions. Section and Subsection refer to the Standard Construction Specifications unless otherwise noted in the Plans.

DESIGN SPECIFICATIONS: AASHTO LRFD Bridge Design Specifications, Fifth Edition (2010) with 2010 interim revisions.

LIVE LOADING: HL-93

All concrete shall be Class S with a minimum 28-day compressive strength of 3,500 psi and shall be poured in the dry. All exposed corners to have ¾" chamfers.

Reinforcing Steel shall be Grade 60 (yield strength = 60,000 psi) conforming to AASHTO M31 or M322, Type A, with mill test reports.

Reinforcing Steel Tolerances: The tolerances for reinforcing steel shall meet those listed in 'Manual of Standard Practice' published by Concrete Reinforcing Steel Institute (CRSI) except that the tolerance for truss bars such as Figure 3 on page 7-4 of the CRSI Manual shall be minus zero to plus 1/2 inch.

Excavation and backfilling shall be in accordance with the requirements of Section 801.

Membrane Waterproofing shall conform to the requirements of Section 815. Membrane Waterproofing shall be Type C and as directed by the Engineer applied to all construction joints in the top slab and the sidewalls of R.C. Box culverts and to the construction joint between wingwalls and R.C. Box culvert walls.

Weep Holes in box culvert walls shall have a maximum horizontal spacing of 10'-0" and shall be spaced to clear all reinforcing steel. The drain opening shall be 4" diameter and shall be placed 12" above the top of the bottom slab.

Weep Holes in wingwalls shall have a maximum horizontal spacing of 10'-0" and shall be spaced to clear all reinforcing steel. There shall be a minimum of two (2) weep holes in each wingwall. The drain opening shall be 4" diameter and shall be placed 12" above the top of the wingwall footing.

The barrel components of the culvert may be constructed using continuous pours. For longer culvert construction, the Contractor may use multiple pours with transverse construction joints spaced a minimum of 50 feet apart unless superseded by stage construction or site constraints as approved by the Engineer. Construction joints between footings and walls shall be made only where shown in the Plans. Joints shall be keyed and shall be normal to the centerline of barrel except as noted. Reinforcing through stage construction joints shall provide the minimum bar lap length shown on the Tabular Data Sheets. All longitudinal construction joints shall be submitted to the Engineer for approval.

Membrane Waterproofing, Weep Holes, Geotextile Filter Fabric, and Drainage Fill Material will not be paid for directly but shall be considered subsidiary to Class S Concrete.

When the top slab of the box culvert serves as finished roadway surface, curing and finishing shall be in accordance with subsections 802.17 and 802.20 for bridge roadway surface and a tine finish shall be applied in accordance with subsection 802.19 for Class 5 Tined Bridge Roadway Surface Finish. Curing and finishing shall not be paid for directly, but shall be considered incidental to the item "Class S Concrete-Roadway". Class 1 Protective Surface Treatment shall be applied to the roadway surface and this work shall be paid for under the unit price bid for "Class 1 Protective Surface Treatment".

When precast reinforced concrete box culverts are substituted for cast in place box culverts, they shall be manufactured according to ASTM C 1577 and meet the requirements of Section 607. When the top slab of the box culvert serves as the finished roadway surface, a precast reinforced concrete box culvert substitution is not allowed.

SHEET 1 OF 4

GENERAL DETAILS OF R.C. BOX CULVERT

GENERAL NOTES &
LONGITUDINAL SECTION LENGTH SCHEDULE

SPECIAL DETAILS

LRFD

PJoseph 8/13/2021 5:22:52 PM
WORKSPACE: AHTD
L:\20\7\1\01\7642 - ARDOT Job 100955\Drawings\r100955_SD_BOX CULVERT GENERAL.dgn
REVISED DATE:

DATE REVISED	DATE FILMED	DATE REVISED	DATE FILMED	FED.RD. DIST.NO.	STATE	FED.AID PROJ.NO.	SHEET NO.	TOTAL SHEETS
				6	ARK.			
				JOB NO.		100955	29	356
				(1)		SPECIAL DETAILS		

Note: When top slab of culvert serves as finished roadway surface, see General Notes on Sheet 1 of 4.

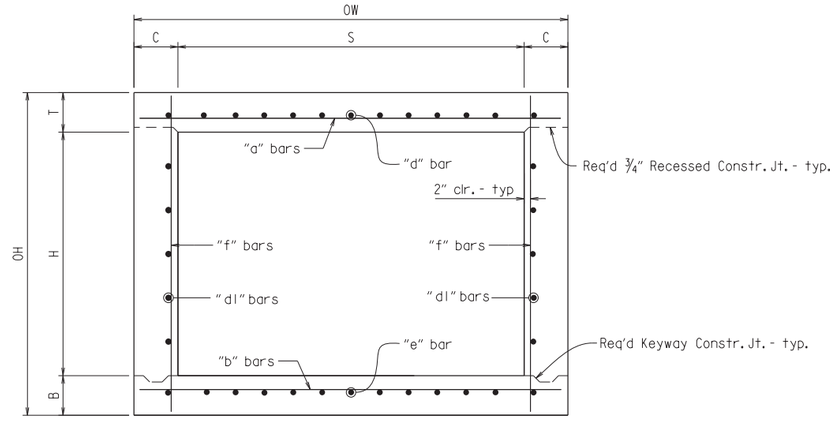

TYPICAL SECTION M-M

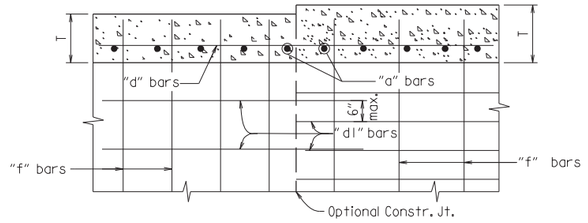

Longitudinal Bar Spacing at individual sections shall be maintained, which may result in noncontact bar laps.

LONGITUDINAL LAP DETAIL AT CHANGE IN SECTIONS

TOP SLAB SHOWN, BOTTOM SLAB SIMILAR

STATE OF ARKANSAS
LICENSED PROFESSIONAL ENGINEER
No. 13436
SHAUN A. ROBERSON
DIGITALLY SIGNED 8-13-2021

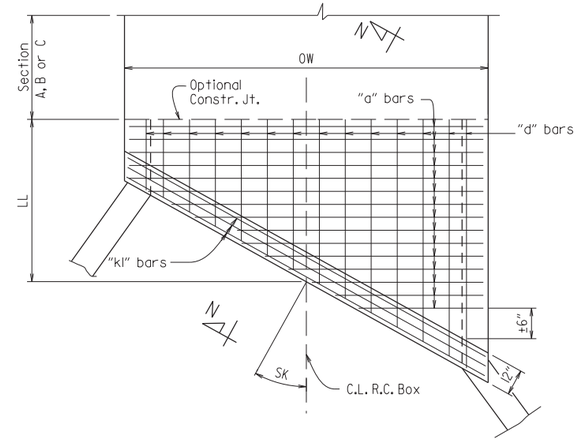

TOP SLAB REINFORCEMENT

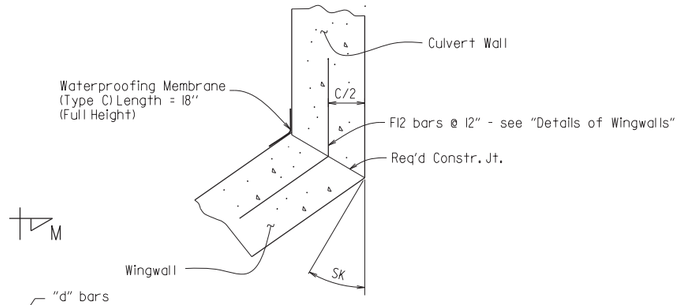

WINGWALL ATTACHMENT

See "Details of Wingwalls" for additional information and wingwall details.

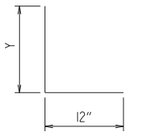

"h" bars sketch

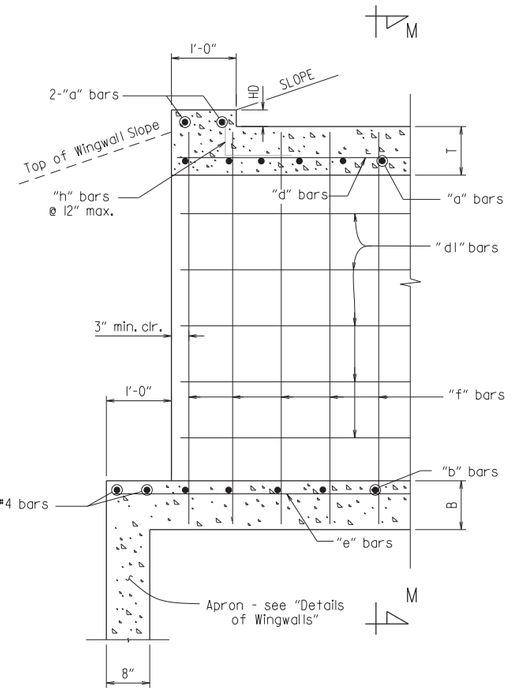

PART LONGITUDINAL SECTION

(Non-Skewed Ends)

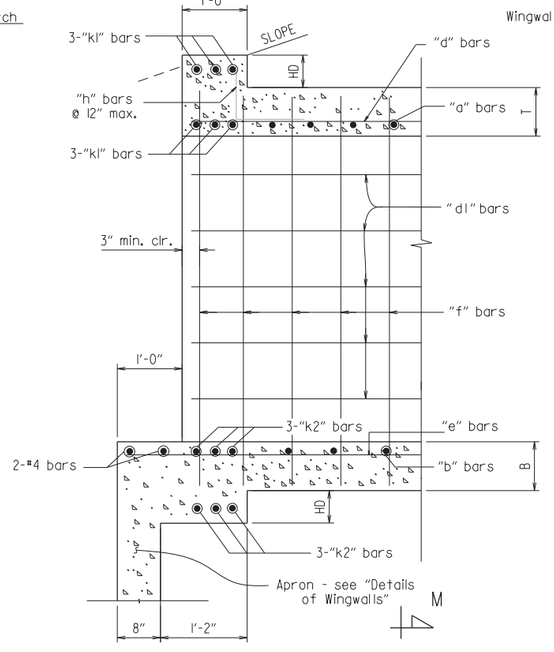

PART LONGITUDINAL SECTION N-N

(Skewed Ends)

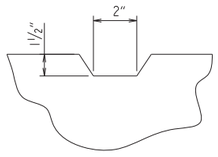

TYPICAL KEYWAY DETAIL

(All Construction Joints)

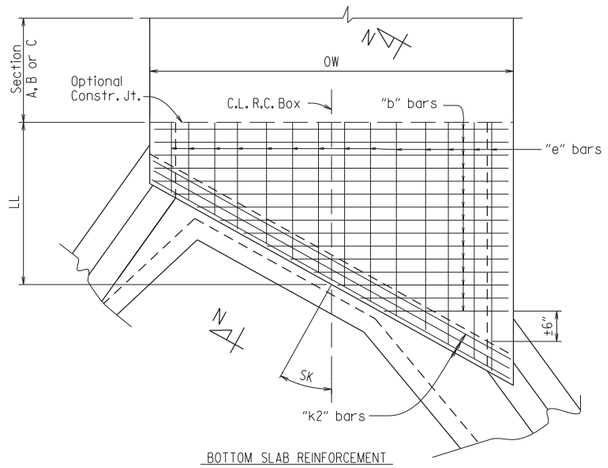

BOTTOM SLAB REINFORCEMENT

SKEWED END SECTION DETAILS

SHEET 2 OF 4
GENERAL DETAILS OF R.C. BOX CULVERT

DETAILS OF SINGLE BARREL R.C. BOX CULVERT

SPECIAL DETAILS

PJoseph 8/13/2021 5:22:54 PM
WORKSPACE: AHTD
L:\20\TN\70\7642 - ARDOT Job 100955\Drawings\r100955_SD_BOX CULVERT GENERAL.dgn
REVISED DATE:

DATE REVISED	DATE FILMED	DATE REVISED	DATE FILMED	FED.RD. DIST.NO.	STATE	FED.AID PROJ.NO.	SHEET NO.	TOTAL SHEETS
				6	ARK.			
				JOB NO.		100955	30	356

(1) SPECIAL DETAILS

(1) 2" clr. for fill depth (D) greater than 2 ft.
2½" clr. for fill depth (D) equal to or less than 2 ft.

Note: When top slab of culvert serves as finished roadway surface, see General Notes on Sheet 1 of 4.

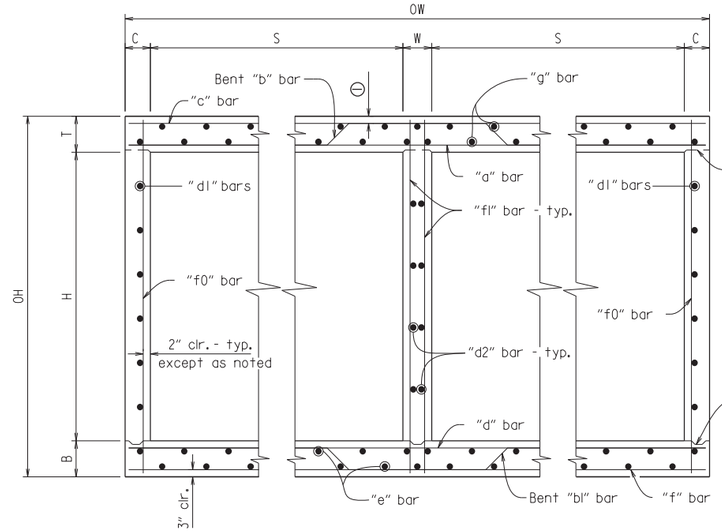

TYPICAL SECTION M-M

Top Slab
Straight "c" bars shall alternate with Bent "b" bars in top.
Straight "a" bars shall alternate with Bent "b" bars in bottom.

Bottom Slab
Straight "d" bars shall alternate with Bent "bl" bars in top.
Straight "f" bars shall alternate with Bent "bl" bars in bottom.

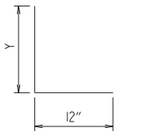

"h" bars sketch

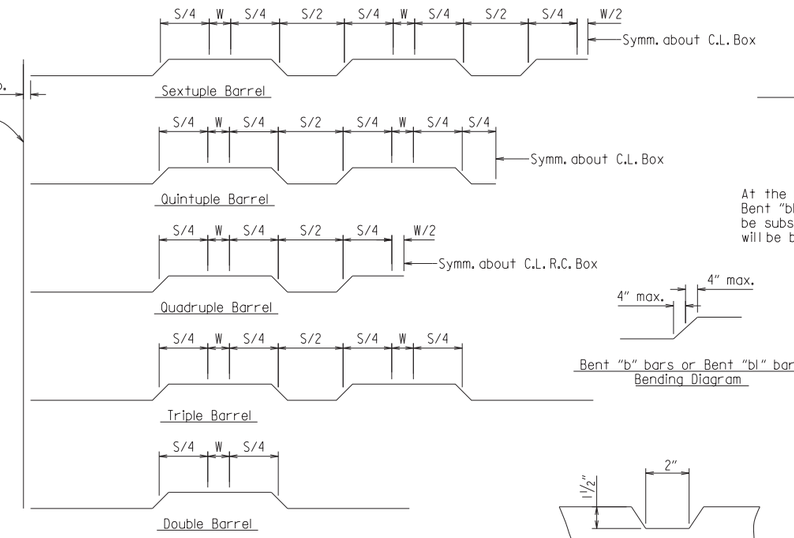

Bent "b" bars or Bent "bl" bars sketch

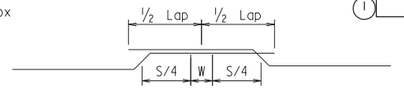

Lap Detail
For Bent "b" bars and Bent "bl" bars

At the Contractor's option in lieu of providing Bent "b" or Bent "bl" bars, one bar top and bottom of equivalent size may be substituted for each bent bar. Payment for the reinforcing will be based on the weight of the "b" or "bl" bar.

Bent "b" bars or Bent "bl" bars Bending Diagram

TYPICAL KEYWAY DETAIL

(All Construction Joints)

STATE OF ARKANSAS
LICENSED PROFESSIONAL ENGINEER
SHAUN A. ROBERSON
No. 13436
DIGITALLY SIGNED 8-13-2021

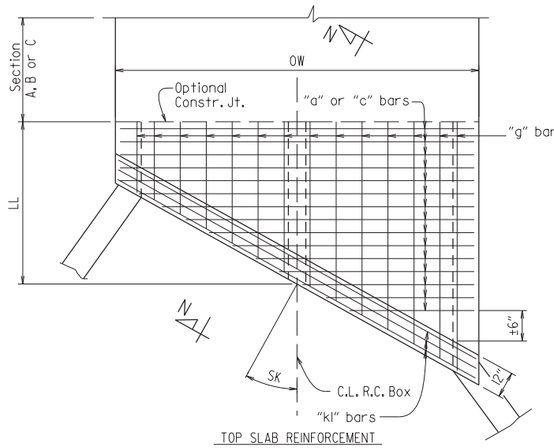

TOP SLAB REINFORCEMENT
Straight "c" bars in top.
Straight "a" bars in bottom.

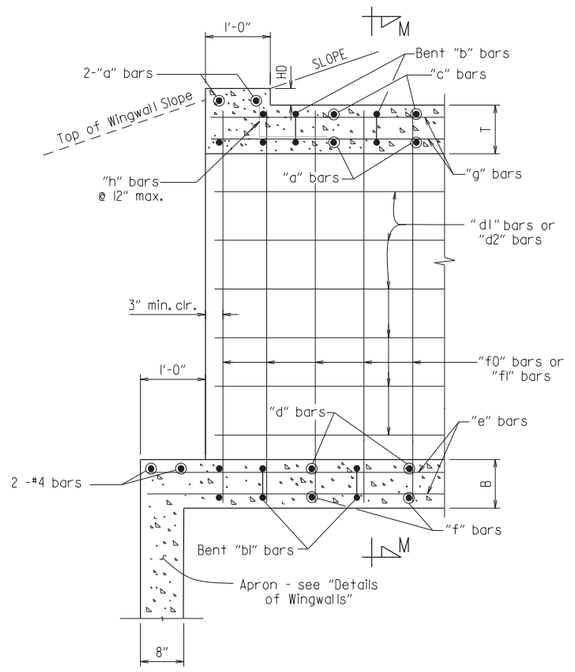

PART LONGITUDINAL SECTION

(Non-Skewed Ends)

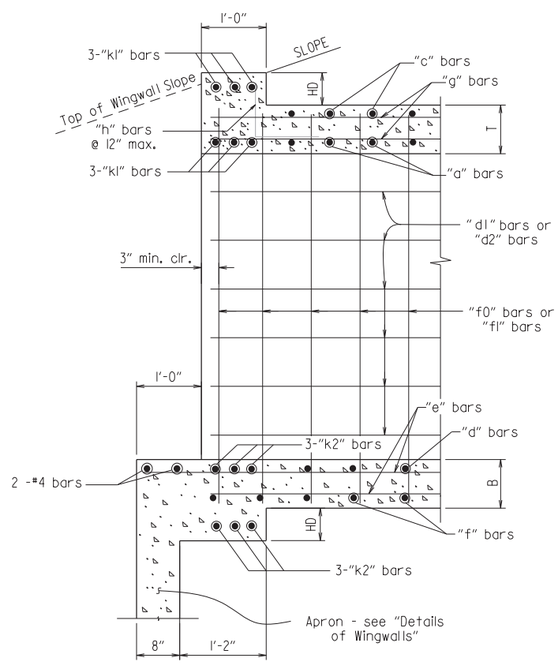

PART LONGITUDINAL SECTION N-N

(Skewed Ends)

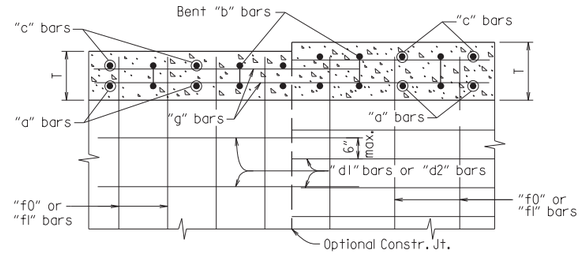

Longitudinal Bar Spacing at individual sections shall be maintained, which may result in noncontact bar laps.

LONGITUDINAL LAP DETAIL AT CHANGE IN SECTIONS

TOP SLAB SHOWN, BOTTOM SLAB SIMILAR

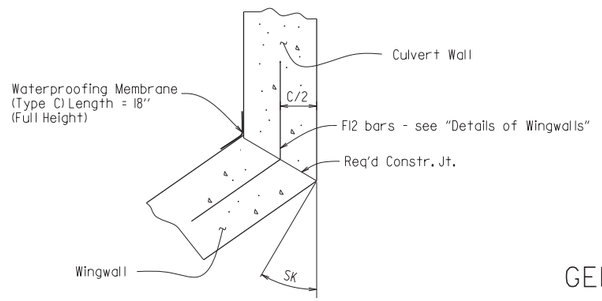

WINGWALL ATTACHMENT

See "Details of Wingwalls" for additional information and wingwall details.

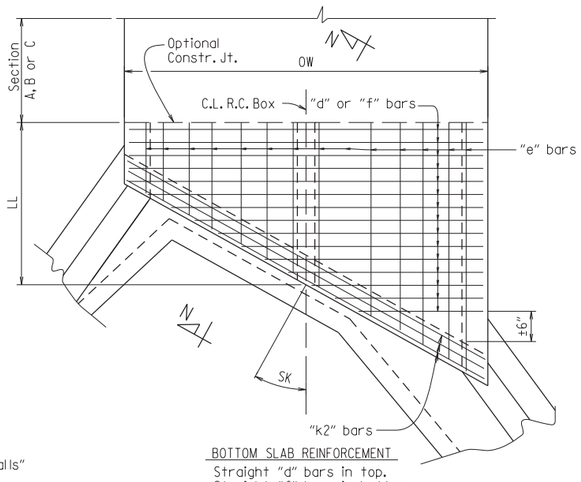

BOTTOM SLAB REINFORCEMENT
Straight "d" bars in top.
Straight "f" bars in bottom.

SKEWED END SECTION DETAILS

SHEET 3 OF 4
GENERAL DETAILS OF R.C. BOX CULVERT

DETAILS OF MULTI-BARREL
R.C. BOX CULVERT

SPECIAL DETAILS

PJoseph 8/13/2021 5:22:54 PM
WORKSPACE: AHTD
L:\2017\17017642 - ARDOT Job 100955\Drawings\r100955_SD_BOX CULVERT GENERAL.dgn
REVISED DATE:

DATE REVISED	DATE FILMED	DATE REVISED	DATE FILMED	FED.RD. DIST.NO.	STATE	FED.AID PROJ.NO.	SHEET NO.	TOTAL SHEETS
				6	ARK.			
				JOB NO.		100955	31	356

(1) SPECIAL DETAILS

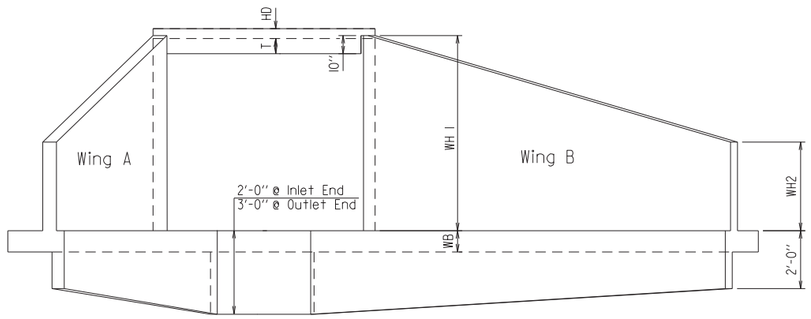

END ELEVATION

Flared Wingwalls Shown

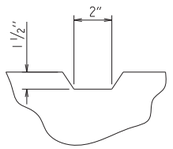

TYPICAL KEYWAY DETAIL

All Construction Joints

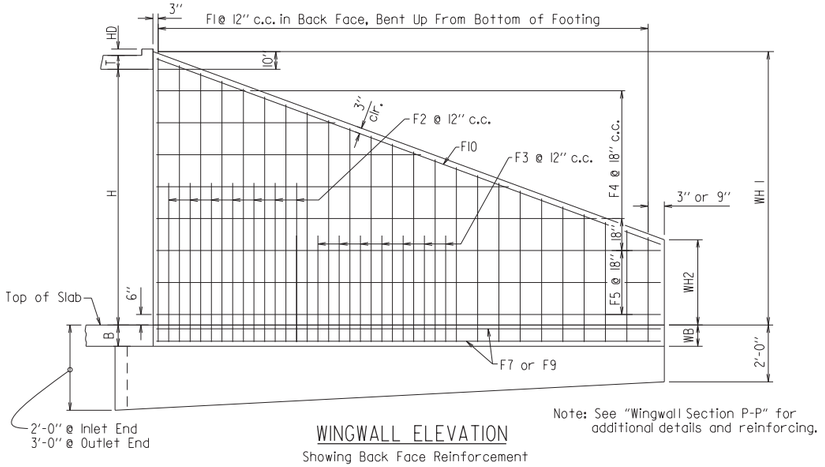

WINGWALL ELEVATION

Showing Back Face Reinforcement

Note: See "Wingwall Section P-P" for additional details and reinforcing.

PART PLAN - FLARED WINGWALLS

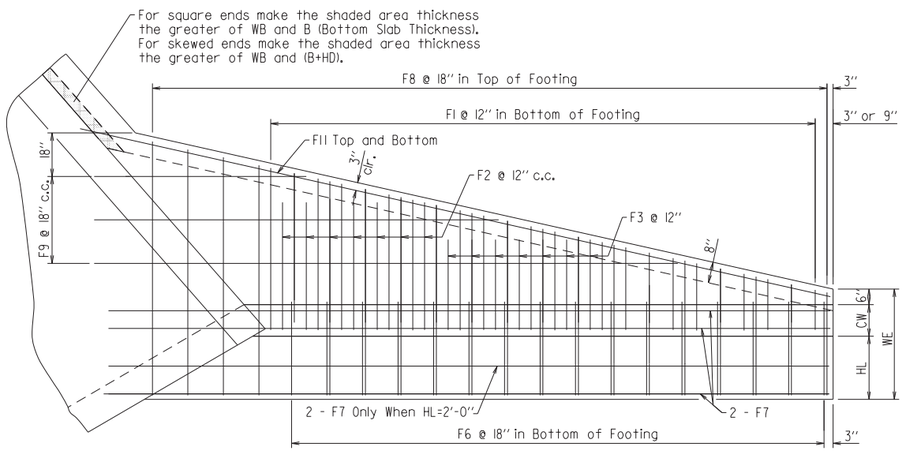

PLAN - FLARED WINGWALLS

Showing Footing Reinforcement

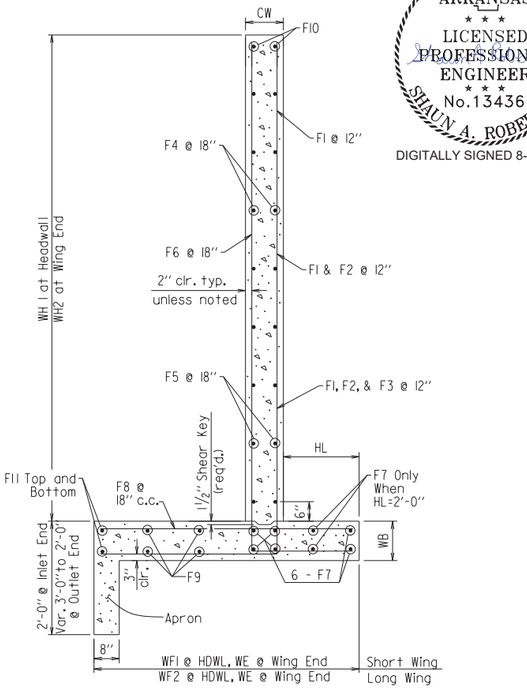

WINGWALL SECTION P-P

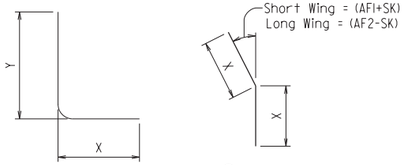

F1, F2, F3, & F6 BARS

(1) F12 BAR

(1) F12 is a straight bar for parallel wingwalls

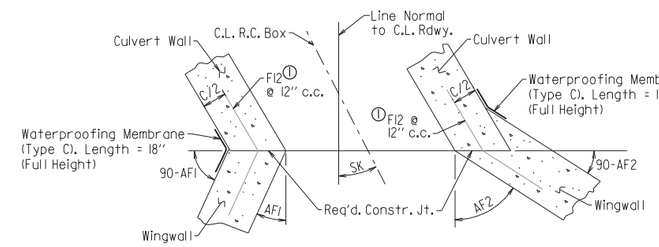

CONSTRUCTION JOINTS

Flared Wingwalls Shown

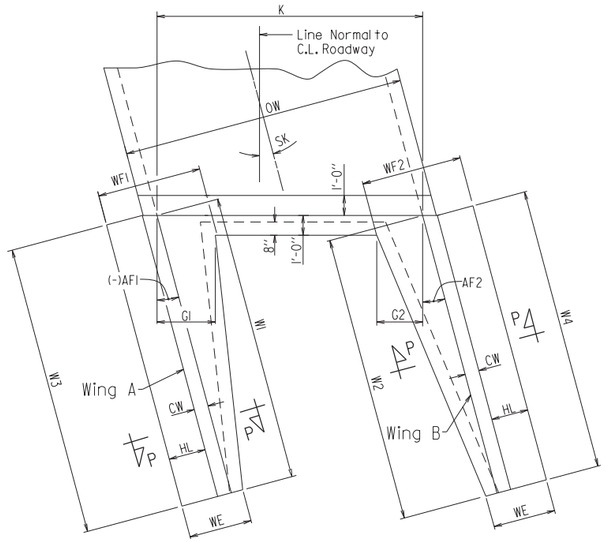

PART PLAN - PARALLEL WINGWALLS

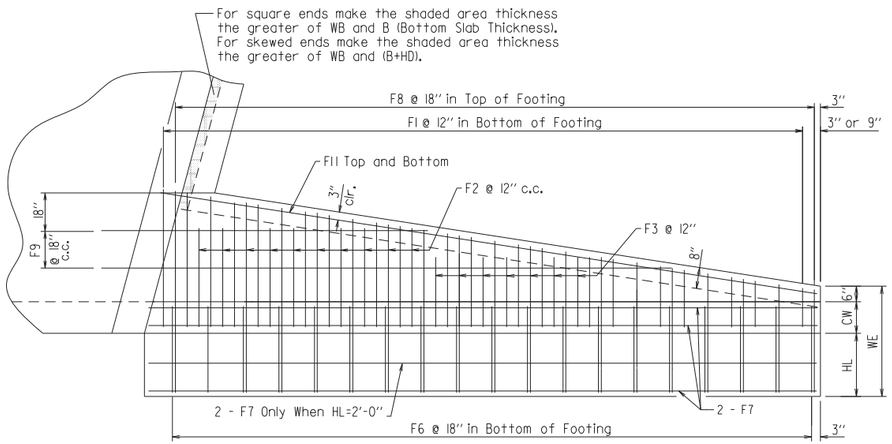

PLAN - PARALLEL WINGWALLS

Showing Footing Reinforcement

SHEET 4 OF 4

GENERAL DETAILS OF R.C. BOX CULVERT

DETAILS OF WINGWALLS

SPECIAL DETAILS

STATE OF ARKANSAS
LICENSED PROFESSIONAL ENGINEER
No.13436
SHAUN A. ROBERSON
DIGITALLY SIGNED 8-13-2021

P.Joseph 8/13/2021 5:22:55 PM
WORKSPACE: AHTD
L:\2017\17017642 - ARDOT Job 100955\Drawings\r100955_SD_BOX CULVERT GENERAL.dgn
REVISED DATE:

DATE REVISED	DATE FILMED	DATE REVISED	DATE FILMED	FED.RD. DIST.NO.	STATE	FED.AID PROJ.NO.	SHEET NO.	TOTAL SHEETS
				6	ARK.			
				JOB NO.		100955	32	356
				(1)	SPECIAL DETAILS			

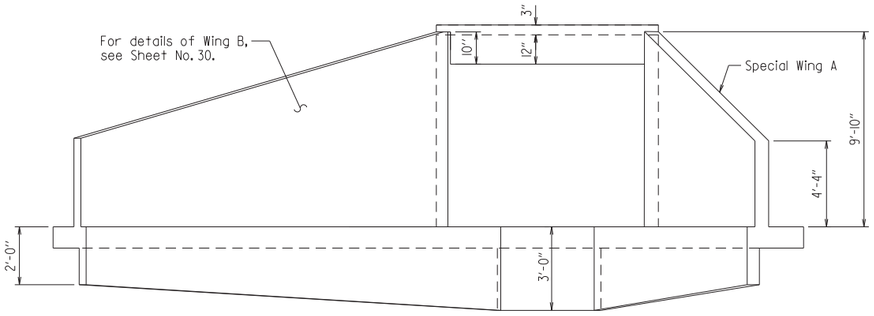

END ELEVATION - LOOKING EAST

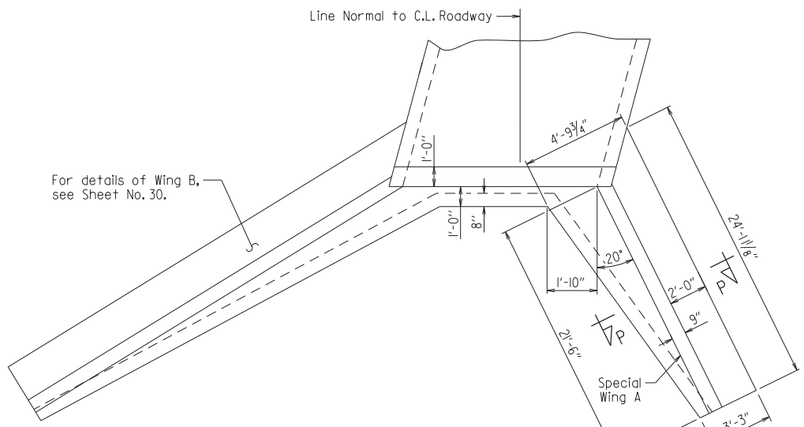

PART PLAN - LOOKING EAST
(Showing Special Wing A)

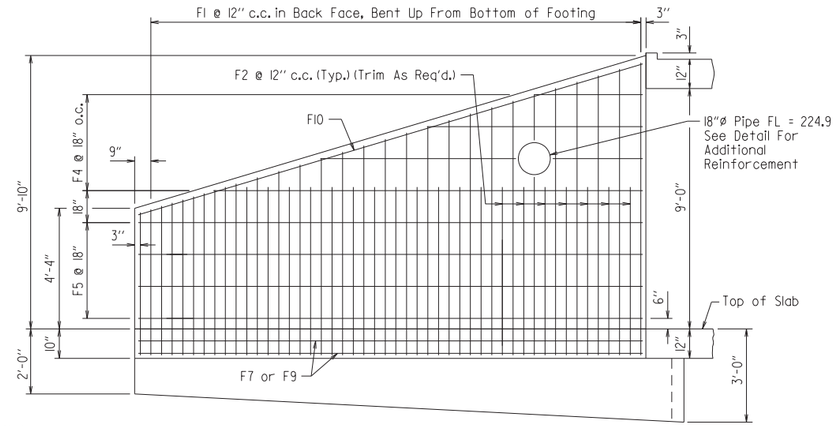

Note:
See "Wingwall Section P-P" for additional details and reinforcing.

ELEVATION - SPECIAL WING A
Showing Back Face Reinforcement

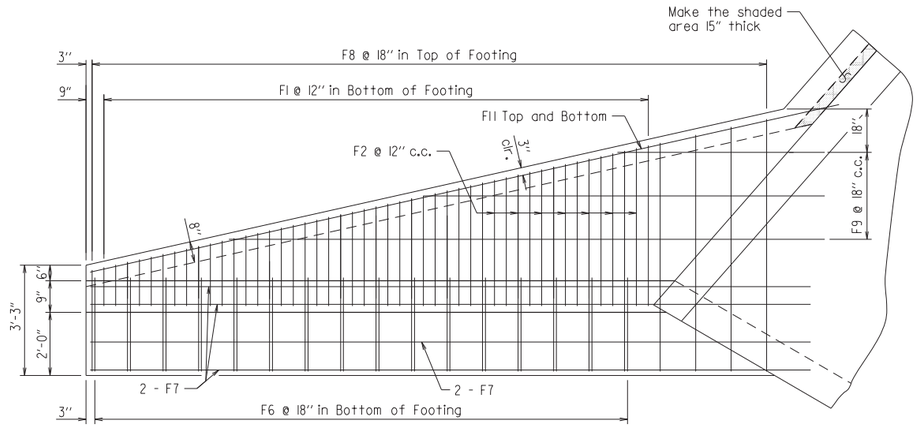

PLAN - SPECIAL WING A
Showing Footing Reinforcement

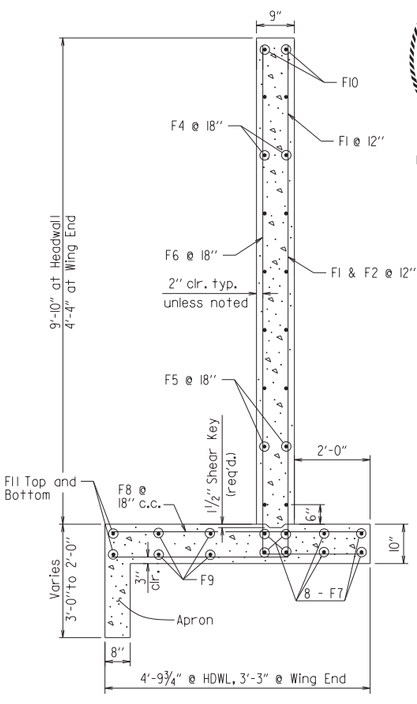

WINGWALL SECTION P-P

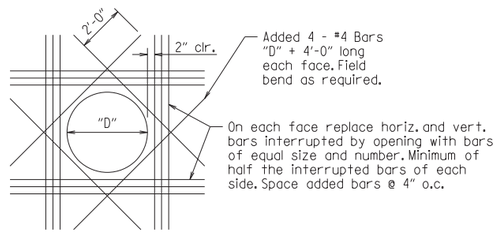

ADDITIONAL REINF. @ PIPE OPENING IN CONCRETE BOX

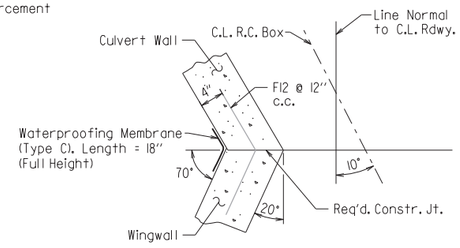

CONSTRUCTION JOINT

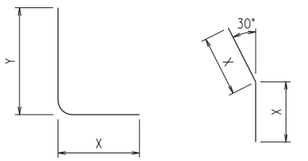

F1, F2 & F6 BARS F12 BAR

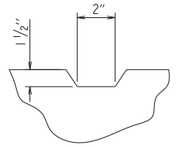

TYPICAL KEYWAY DETAIL
All Construction Joints

WING	F1 BAR SIZE	F1 MAX. SPACING	F1 NO. REQ'D	F1 LENGTHS VARY		F2 BAR SIZE	F2 SPACING	F2 NO. REQ'D	F2 LENGTHS		F4 BAR SIZE	F4 SPACING	F4 NO. REQ'D	F4 LENGTHS	F5 BAR SIZE	F5 SPACING	F5 NO. REQ'D	F5 LENGTHS	F6 BAR SIZE	F6 SPACING	F6 NO. REQ'D	F6 LENGTHS VARY		F7 BAR SIZE	F7 NO. REQ'D	F7 LENGTHS	F8 BAR SIZE	F8 SPACING	F8 NO. REQ'D	F8 LENGTHS VARY	F9 BAR SIZE	F9 SPACING	F9 NO. REQ'D	F9 LENGTHS	F10 BAR SIZE	F10 NO. REQ'D	F10 LENGTHS	F11 BAR SIZE	F11 NO. REQ'D	F11 LENGTHS	F12 BAR SIZE	F12 SPACING	F12 NO. REQ'D	F12 LENGTHS		REINF. STEEL QTY. PER WING (LBS)
WING A	4	12	22	L	Min	5'-5"	4	12	24	L	6'-3"	4	18	8	Min	4	18	6	21'-2"	4	18	15	L	Min	7'-0"	4	8	25'-9"	6	18	15	Min	4	18	2	22'-3"	4	2	21'-10"	4	2	23'-2"	6	12	9	L	3'-4"	749
					Max	12'-5"								1'-2"									X	Min	2'-5"			2'-9"																			
				X	Min	10"				X	1'-9"													Max	2'-5"			Max				Max												X	1'-8"	
					Max	2'-5"																						4'-4"																	
				Y	Min	4'-7"				Y	4'-7"			18'-8"									Y	Min	4'-7"																					
					Max	10'-1"																		Max	10'-1"																					

P.Joseph 8/13/2021 5:22:55 PM
WORKSPACE: AHTD
L:\20\TO\TO17642 - ARDOT Job 100955\Drawings\r100955_SD_BOX CULVERT SPECIAL WINGWALL.dgn
REVISED DATE:

STATE OF ARKANSAS
LICENSED PROFESSIONAL ENGINEER
No. 13436
SHAUN A. ROBERSON
DIGITALLY SIGNED 8-13-2021

SHEET 1 OF 1
SPECIAL DETAILS OF R.C. BOX CULVERT
DETAILS OF SPECIAL WING A HWY. 181 STA. 102+50
SPECIAL DETAILS

DATE REVISED	DATE FILMED	DATE REVISED	DATE FILMED	FED.RD. DIST.NO.	STATE	FED.AID PROJ.NO.	SHEET NO.	TOTAL SHEETS
				6	ARK.			
				JOB NO.		100955	33	356
				(2)	TEMPORARY EROSION CONTROL DETAILS			

HWY. 77

SILT FENCE	(E-11)	LIN. FT.
STA. 104+20 TO 104+30	LT.	30
STA. 104+70 TO 104+80	LT.	35
STA. 106+85 TO 106+95	LT. & RT.	65
STA. 108+05 TO 108+15	LT. & RT.	70
STA. 109+65 TO 109+70	RT.	45
STA. 110+25 TO 110+50	RT.	70
STA. 111+30 TO 111+30	LT.	20
STA. 111+70 TO 111+70	RT.	20

ROCK DITCH CHECK	(E-6)	INSTALLATION
STA. 101+00	LT.	1
STA. 101+00	RT.	1
STA. 105+90	LT.	1
STA. 106+20	LT.	1
STA. 106+50	RT.	1
STA. 107+15	LT.	1
STA. 108+20	LT.	1
STA. 108+95	RT.	1
STA. 109+65	LT.	1
STA. 109+65	RT.	1
STA. 110+25	RT.	1
STA. 114+00	RT.	1
STA. 114+00	LT.	1

N

STATE OF ARKANSAS
LICENSED PROFESSIONAL ENGINEER
No.13436
SHAUN A. ROBERSON

DIGITALLY SIGNED 8-13-2021

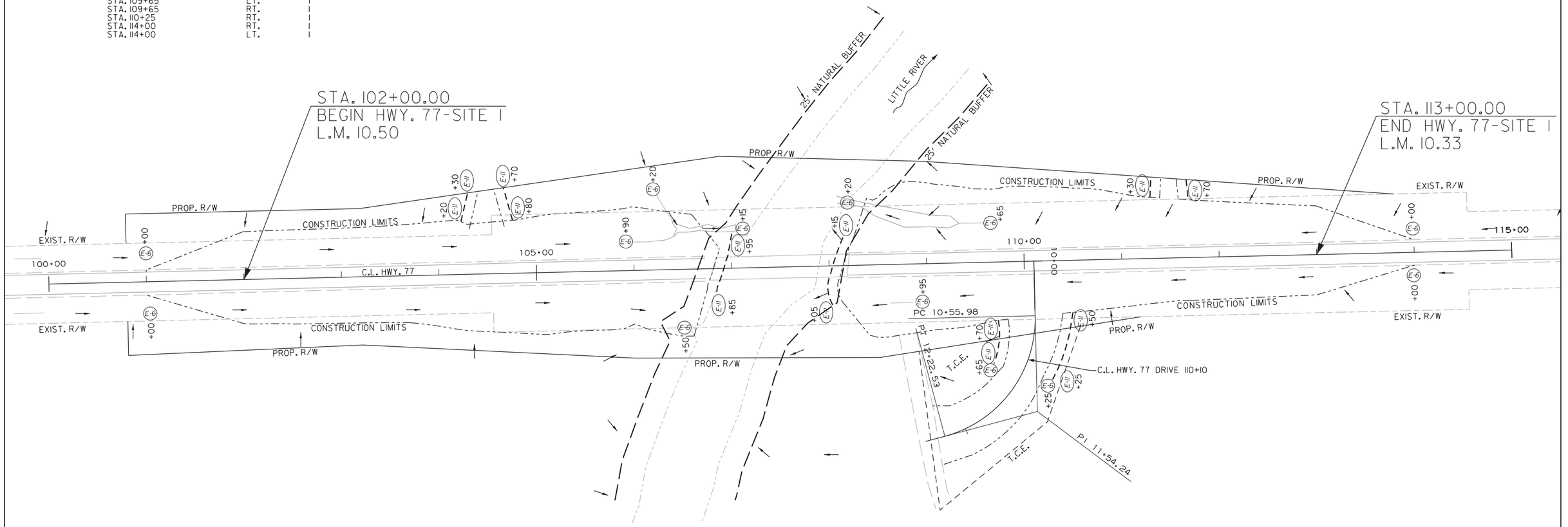

LEGEND

(E-6) = ROCK DITCH CHECKS (E-11) = SILT FENCE

EROSION CONTROL MEASURES TO BE PLACED DURING APPROPRIATE STAGES. THESE DEVICES SHALL BE LEFT IN PLACE AS LONG AS REQUIRED TO CONTROL EROSION.

REVISIONS

DATE	REVISION

HWY. 77 - SITE 1
TEMPORARY EROSION CONTROL DETAILS
CLEARING AND GRUBBING STAGE

PJoseph 8/13/2021 5:22:57 PM
WORKSPACE: AHTD
L:\2017\1701642 - ARDOT Job 100955\Drawings\r100955_EC_CG_Hwy. 77_Site 1.dgn
REVISED DATE:

DATE REVISED	DATE FILMED	DATE REVISED	DATE FILMED

FED.RD. DIST.NO.	STATE	FED.AID PROJ.NO.	SHEET NO.	TOTAL SHEETS
6	ARK.			
JOB NO.		100955	34	356

(2) TEMPORARY EROSION CONTROL DETAILS

HWY. 77

SILT FENCE	(E-11)	LIN. FT.
STA. 204+25 TO 208+00	LT.	455
STA. 204+30 TO 208+00	RT.	545
STA. 209+30 TO 209+85	LT.	125
STA. 209+65 TO 213+00	LT.	360
STA. 210+15 TO 210+80	LT.	230
STA. 210+15 TO 212+75	RT.	385
STA. 210+60 TO 210+95	LT.	405

ROCK DITCH CHECK	(E-6)	INSTALLATION
STA. 204+25	LT.	1
STA. 204+30	RT.	1
STA. 209+30	LT.	1
STA. 209+65	LT.	1

STATE OF ARKANSAS
LICENSED PROFESSIONAL ENGINEER
No. 13436
SHAUN A. ROBERSON
DIGITALLY SIGNED 8-13-2021

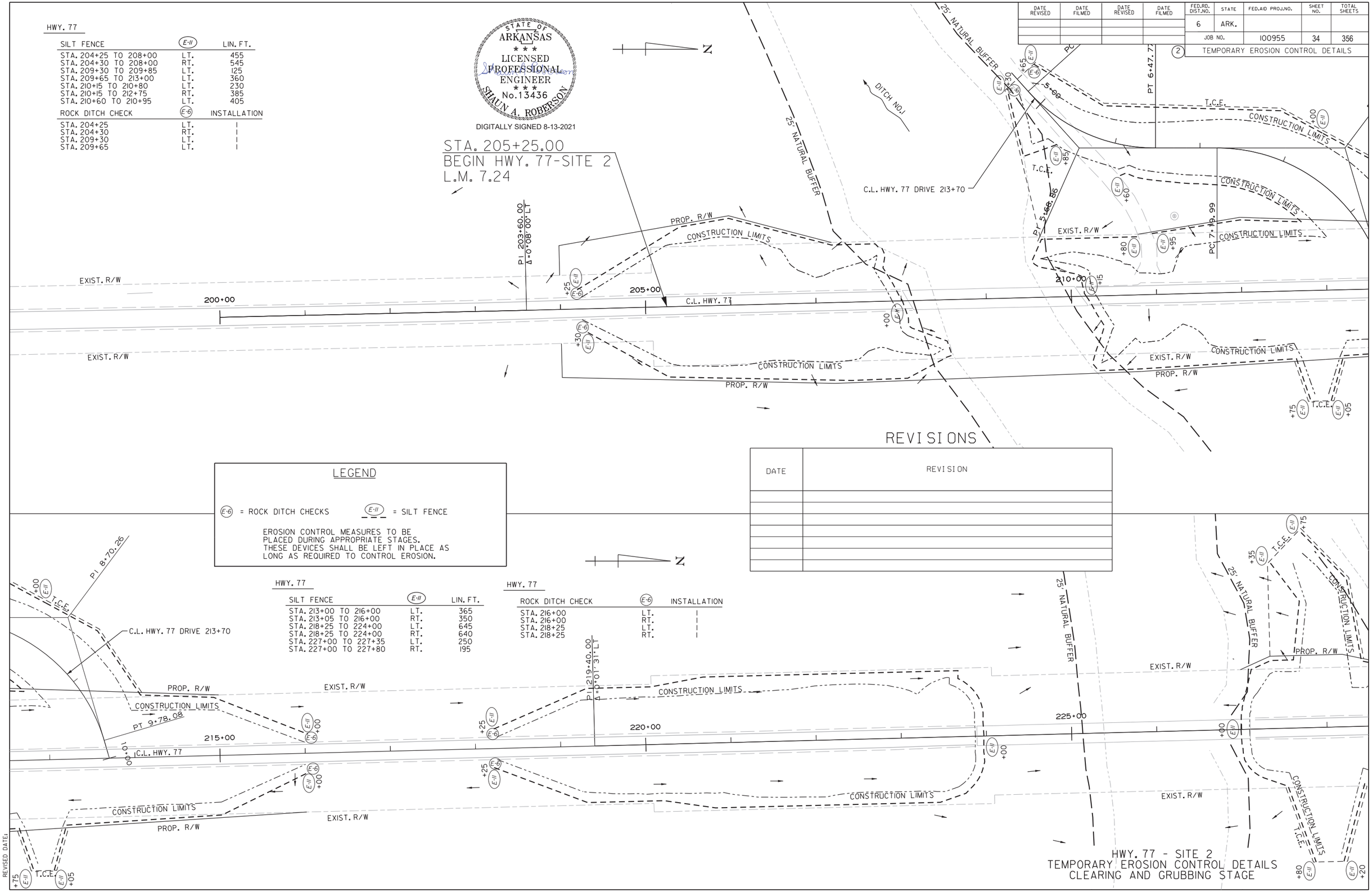

REVISIONS

DATE	REVISION

LEGEND

(E-6) = ROCK DITCH CHECKS (E-11) = SILT FENCE

EROSION CONTROL MEASURES TO BE PLACED DURING APPROPRIATE STAGES. THESE DEVICES SHALL BE LEFT IN PLACE AS LONG AS REQUIRED TO CONTROL EROSION.

HWY. 77

SILT FENCE	(E-11)	LIN. FT.
STA. 213+00 TO 216+00	LT.	365
STA. 213+05 TO 216+00	RT.	350
STA. 218+25 TO 224+00	LT.	645
STA. 218+25 TO 224+00	RT.	640
STA. 227+00 TO 227+35	LT.	250
STA. 227+00 TO 227+80	RT.	195

HWY. 77

ROCK DITCH CHECK	(E-6)	INSTALLATION
STA. 216+00	LT.	1
STA. 216+00	RT.	1
STA. 218+25	LT.	1
STA. 218+25	RT.	1

HWY. 77 - SITE 2
TEMPORARY EROSION CONTROL DETAILS
CLEARING AND GRUBBING STAGE

PJoseph 8/13/2021 5:22:58 PM
WORKSPACE: AHTD
L:\2017\17017642 - ARDOT Job 100955\Drawings\r100955_EC_CG_Hwy. 77_Site 2_01.dgn
REVISED DATE:

DATE REVISED	DATE FILMED	DATE REVISED	DATE FILMED
01-05-2022			

FED.RD. DIST.NO.	STATE	FED.AID PROJ.NO.	SHEET NO.	TOTAL SHEETS
6	ARK.			
JOB NO.		100955	35	356
(2) TEMPORARY EROSION CONTROL DETAILS				

STATE OF ARKANSAS
LICENSED PROFESSIONAL ENGINEER
No.13436
SHAUN A. ROBERSON
DIGITALLY SIGNED 1-5-2022

HWY. 77

SILT FENCE (E-II)		LIN. FT.
STA. 227+75 TO 229+20	LT.	325
STA. 228+20 TO 229+20	RT.	290
STA. 229+10 TO 229+40	LT.	85
STA. 229+40 TO 233+35	LT.	395
STA. 230+40 TO 230+50	LT.	160
STA. 230+50 TO 232+75	RT.	335
STA. 229+65 TO 230+65	LT.	840
STA. 233+05 TO 235+40	RT.	325
STA. 234+70 TO 235+50	LT.	270
STA. 235+70 TO 236+30	RT.	125
STA. 235+80 TO 236+30	LT.	130

ROCK DITCH CHECK (E-6)		INSTALLATION
STA. 228+00	LT.	1
STA. 228+20	LT.	1
STA. 233+90	LT.	1
STA. 234+10	LT.	1
STA. 236+30	LT.	1
STA. 236+30	RT.	1

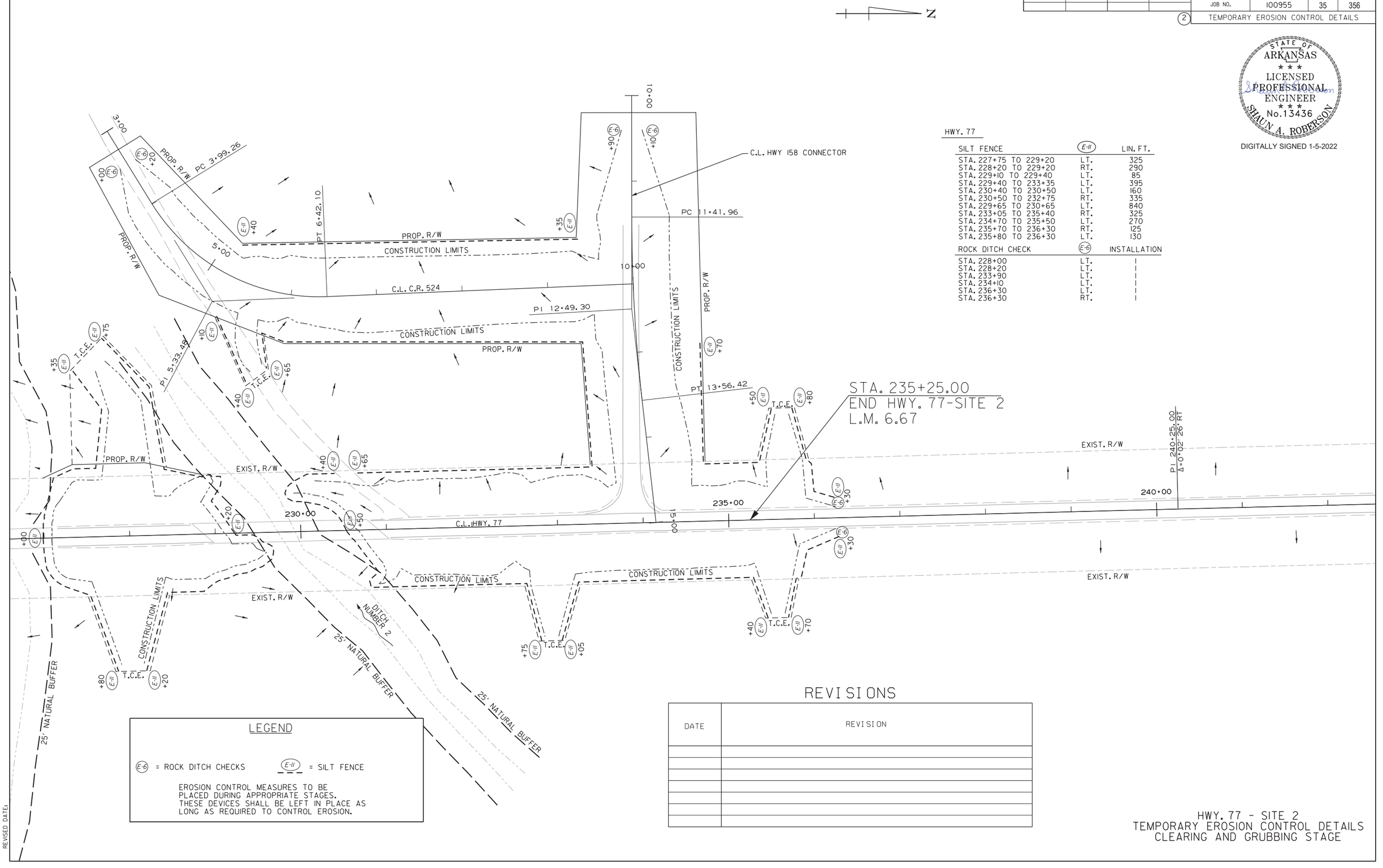

LEGEND

(E-6) = ROCK DITCH CHECKS (E-II) = SILT FENCE

EROSION CONTROL MEASURES TO BE PLACED DURING APPROPRIATE STAGES. THESE DEVICES SHALL BE LEFT IN PLACE AS LONG AS REQUIRED TO CONTROL EROSION.

REVISIONS

DATE	REVISION

HWY. 77 - SITE 2
TEMPORARY EROSION CONTROL DETAILS
CLEARING AND GRUBBING STAGE

CGervosini 1/5/2022 1:57:20 PM
WORKSPACE: AHTD
L:\20\7\701\642 - AROOT Job 100955\Drawings\r100955_EC_CG_Hwy. 77_Site 2_02.dgn
REVISED DATE:

DATE REVISED	DATE FILMED	DATE REVISED	DATE FILMED

FED.RD. DIST.NO.	STATE	FED.AID PROJ.NO.	SHEET NO.	TOTAL SHEETS
6	ARK.			
JOB NO.		100955	36	356
(2) TEMPORARY EROSION CONTROL DETAILS				

STATE OF ARKANSAS
LICENSED PROFESSIONAL ENGINEER
No.13436
SHAUN A. ROBERSON
DIGITALLY SIGNED 8-13-2021

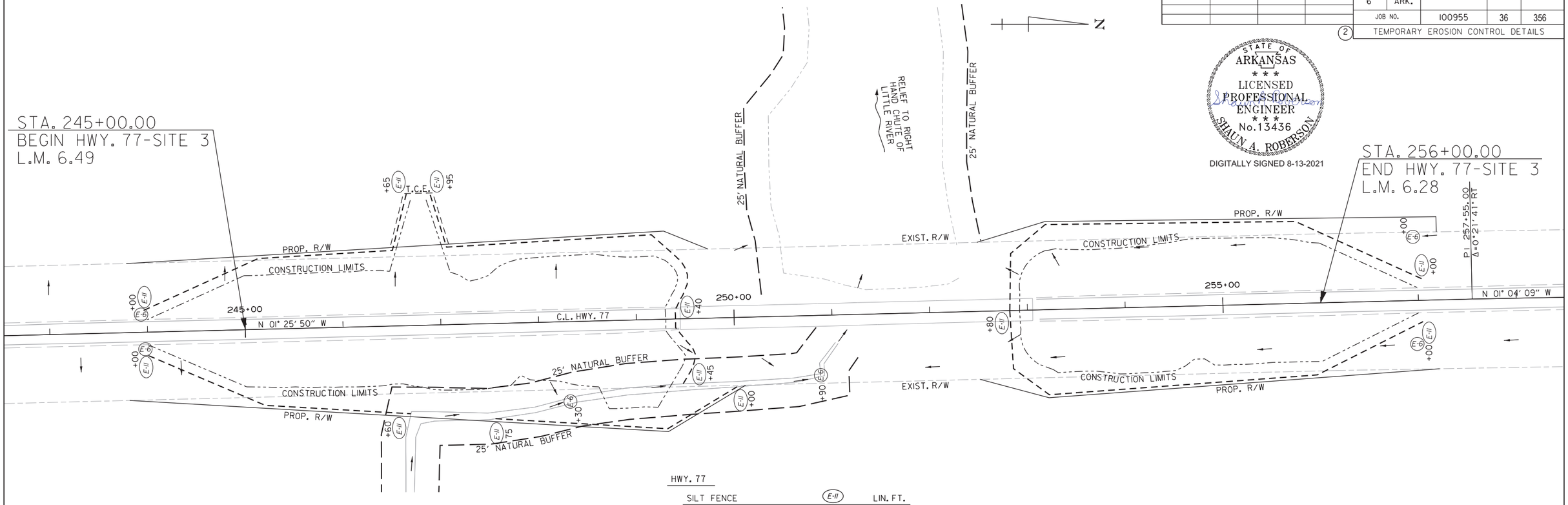

HWY. 77

SILT FENCE (E-II)		LIN. FT.
STA. 244+00 TO 246+65	LT.	325
STA. 244+00 TO 246+60	RT.	280
STA. 246+95 TO 249+40	LT.	370
STA. 247+75 TO 250+00	RT.	260
STA. 249+40 TO 249+45	RT.	75
STA. 252+80 TO 257+00	LT.	500
STA. 252+80 TO 257+00	RT.	500

ROCK DITCH CHECK (E-6)		INSTALLATION
STA. 244+00	LT.	1
STA. 244+00	RT.	1
STA. 248+30	RT.	1
STA. 250+90	RT.	1
STA. 257+00	LT.	1
STA. 257+00	RT.	1

LEGEND

(E-6) = ROCK DITCH CHECKS (E-II) = SILT FENCE

EROSION CONTROL MEASURES TO BE PLACED DURING APPROPRIATE STAGES. THESE DEVICES SHALL BE LEFT IN PLACE AS LONG AS REQUIRED TO CONTROL EROSION.

REVISIONS

DATE	REVISION

HWY. 77 - SITE 3
TEMPORARY EROSION CONTROL DETAILS
CLEARING AND GRUBBING STAGE

PJoseph 8/13/2021 5:22:59 PM
WORKSPACE: AHTD
L:\20171701742 - ARDOT Job 100955\Drawings\r100955_EC_CG_Hwy. 77_Site 3.dgn
REVISED DATE:

DATE REVISED	DATE FILMED	DATE REVISED	DATE FILMED	FED.RD. DIST.NO.	STATE	FED.AID PROJ.NO.	SHEET NO.	TOTAL SHEETS
				6	ARK.			
				JOB NO.		100955	37	356
				(2)	TEMPORARY EROSION CONTROL DETAILS			

HWY. 77

SILT FENCE (E-11)		LIN. FT.
STA. 266+00 TO 271+75	LT.	640
STA. 266+00 TO 271+75	RT.	660

ROCK DITCH CHECK (E-6)		INSTALLATION
STA. 266+00	LT.	1
STA. 266+00	RT.	1

STATE OF ARKANSAS
LICENSED PROFESSIONAL ENGINEER
No. 13436
SHAUN A. ROBERSON

DIGITALLY SIGNED 8-13-2021

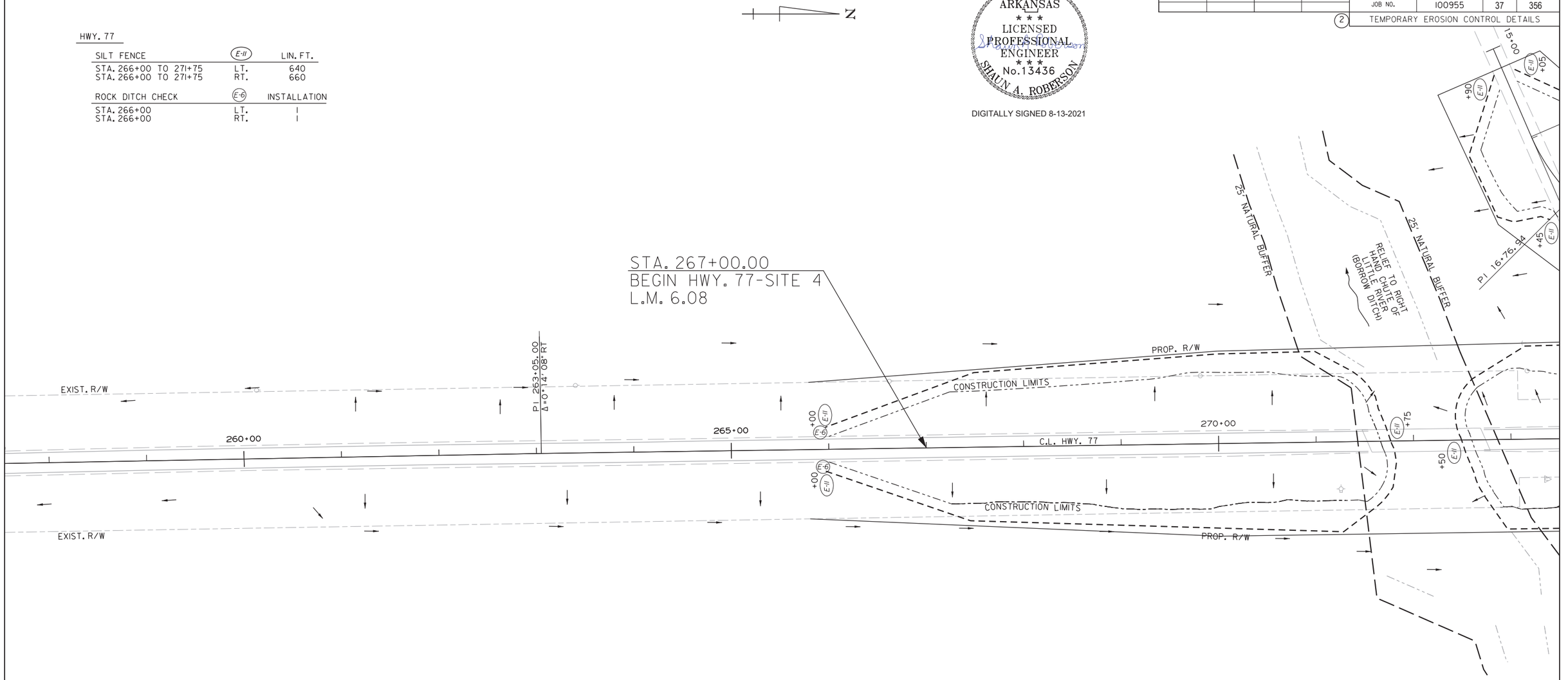

LEGEND

(E-6) = ROCK DITCH CHECKS (E-11) = SILT FENCE

EROSION CONTROL MEASURES TO BE PLACED DURING APPROPRIATE STAGES. THESE DEVICES SHALL BE LEFT IN PLACE AS LONG AS REQUIRED TO CONTROL EROSION.

REVISIONS

DATE	REVISION

HWY. 77 - SITE 4
TEMPORARY EROSION CONTROL DETAILS
CLEARING AND GRUBBING STAGE

P.Joseph 8/13/2021 5:22:59 PM
WORKSPACE: AHTD
L:\20IT\170I7642 - ARDOT Job 100955\Drawings\r100955_EC_CG_Hwy. 77_Site 4_01.dgn
REVISED DATE:

DATE REVISED	DATE FILMED	DATE REVISED	DATE FILMED	FED.RD. DIST.NO.	STATE	FED.AID PROJ.NO.	SHEET NO.	TOTAL SHEETS
				6	ARK.			
				JOB NO.		100955	38	356
				(2)	TEMPORARY EROSION CONTROL DETAILS			

HWY. 77

SILT FENCE (E-11)		LIN. FT.
STA. 272+50 TO 274+00	LT.	220
STA. 272+50 TO 274+75	RT.	285
STA. 272+90 TO 273+45	LT.	210
STA. 273+85 TO 274+25	LT.	160
STA. 273+05 TO 277+70	LT.	630
STA. 274+80 TO 275+15	RT.	110
STA. 274+90 TO 275+85	RT.	285
STA. 275+95 TO 277+35	RT.	460
STA. 277+65 TO 278+10	RT.	95
STA. 278+00 TO 279+10	LT.	140

ROCK DITCH CHECK (E-6)		INSTALLATION
STA. 275+75	LT.	1
STA. 282+75	LT.	1
STA. 282+75	RT.	1

STATE OF ARKANSAS
LICENSED PROFESSIONAL ENGINEER
No. 13436
SHAUN A. ROBERSON

DIGITALLY SIGNED 8-13-2021

STA. 281+75.00
END HWY. 77-SITE 4
L.M. 5.80

15+00
PC 15+98.18
PROP. R/W
PRC 17+48.32
C.L. C.R. 538 WEST
PI 16+76.94
PI 18+77.53
25' NATURAL BUFFER
CONSTRUCTION LIMITS
T.C.E.
EXIST. R/W
PT 19+78.00
275+00
PI 278+45.00
Δ=01° 14' 16" RT
280+00
285+00
C.L. HWY. 77
PROP. R/W
EXIST. R/W
CONSTRUCTION LIMITS
C.L. C.R. 538 EAST
PC 22+06.04
PI 22+58.70
PT 23+10.20
24+00

NOTE:
A 25' NATURAL BUFFER WAS ASSUMED.
WILL MODIFY IF NECESSARY ONCE
SWPPP INFORMATION IS PROVIDED.

LEGEND

(E-6) = ROCK DITCH CHECKS (E-11) = SILT FENCE

EROSION CONTROL MEASURES TO BE PLACED DURING APPROPRIATE STAGES. THESE DEVICES SHALL BE LEFT IN PLACE AS LONG AS REQUIRED TO CONTROL EROSION.

REVISIONS

DATE	REVISION

HWY. 77 - SITE 4
TEMPORARY EROSION CONTROL DETAILS
CLEARING AND GRUBBING STAGE

PJoseph 8/13/2021 5:23:00 PM
WORKSPACE: AHTD
L:\2017\170\642 - ARDOT Job 100955\Drawings\r100955_EC_CG_Hwy. 77_Site 4_02.dgn
REVISED DATE:

DATE REVISED	DATE FILMED	DATE REVISED	DATE FILMED	FED.RD. DIST.NO.	STATE	FED.AID PROJ.NO.	SHEET NO.	TOTAL SHEETS
				6	ARK.			
				JOB NO.		100955	39	356
				(2)	TEMPORARY EROSION CONTROL DETAILS			

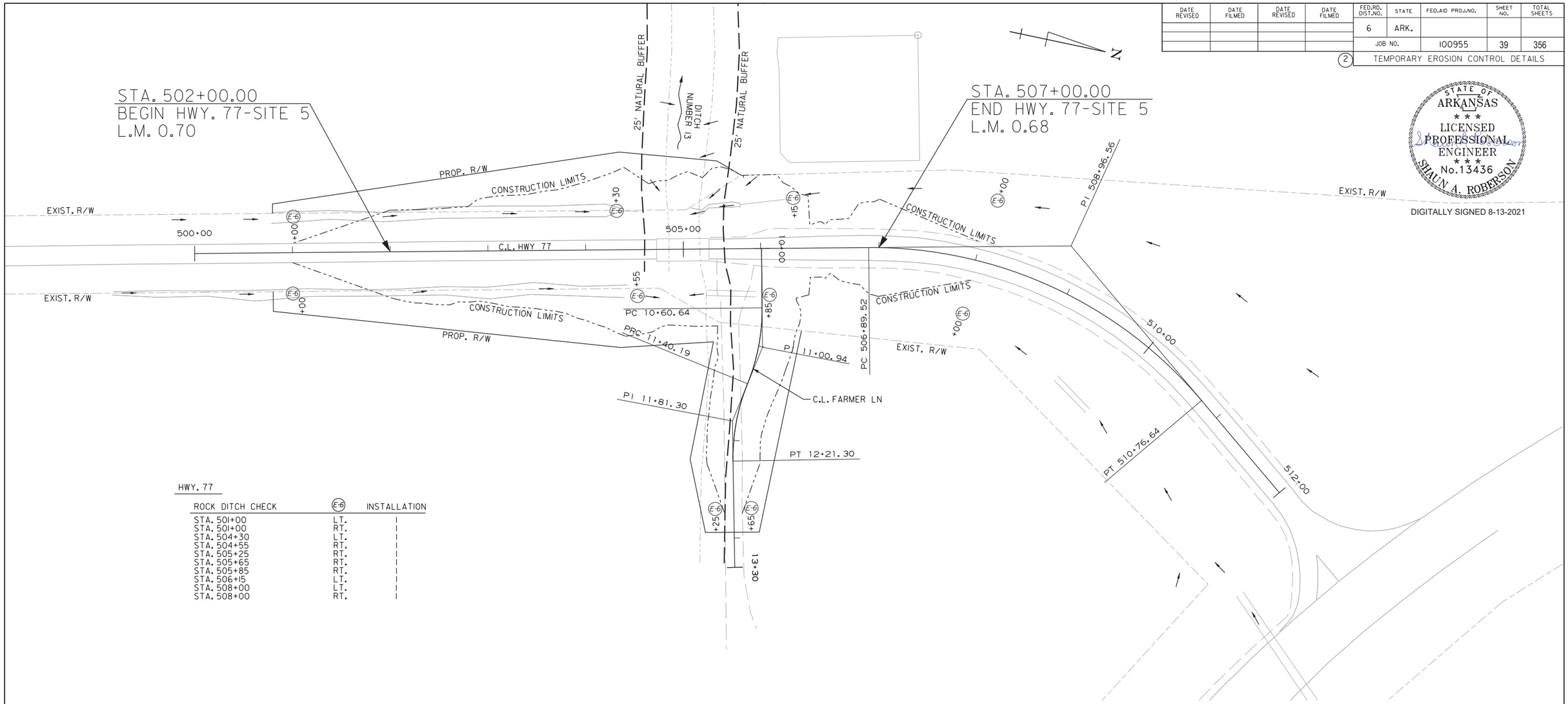

HWY. 77

ROCK DITCH CHECK	(E-6)	INSTALLATION
STA. 501+00	LT.	I
STA. 501+00	RT.	I
STA. 504+30	LT.	I
STA. 504+55	RT.	I
STA. 505+25	RT.	I
STA. 505+65	RT.	I
STA. 505+85	RT.	I
STA. 506+15	LT.	I
STA. 508+00	LT.	I
STA. 508+00	RT.	I

STATE OF ARKANSAS
LICENSED PROFESSIONAL ENGINEER
No.13436
SHAUN A. ROBERSON
DIGITALLY SIGNED 8-13-2021

LEGEND

(E-6) = ROCK DITCH CHECKS (E-11) = SILT FENCE

EROSION CONTROL MEASURES TO BE PLACED DURING APPROPRIATE STAGES. THESE DEVICES SHALL BE LEFT IN PLACE AS LONG AS REQUIRED TO CONTROL EROSION.

REVISIONS

DATE	REVISION

HWY. 77 - SITE 5
TEMPORARY EROSION CONTROL DETAILS
CLEARING AND GRUBBING STAGE

PJoseph 8/13/2021 5:23:00 PM
WORKSPACE: AHTD
L:\2017\1701642 - ARDOT Job 100955\Drawings\r100955_EC_CG_Hwy. 77_Site 5.dgn
REVISED DATE:

DATE REVISED	DATE FILMED	DATE REVISED	DATE FILMED	FED.RD. DIST.NO.	STATE	FED.AID PROJ.NO.	SHEET NO.	TOTAL SHEETS
				6	ARK.			
				JOB NO.		100955	40	356
				(2)	TEMPORARY EROSION CONTROL DETAILS			

STATE OF ARKANSAS
* * *
LICENSED PROFESSIONAL ENGINEER
* * *
No.13436
SHAUN A. ROBERSON

DIGITALLY SIGNED 8-13-2021

HWY. 140

SILT FENCE	(E-11)	LIN. FT.
STA. 104+65 TO 104+70	RT.	30
STA. 105+10 TO 105+15	RT.	30
STA. 105+85 TO 105+90	LT.	20
STA. 106+25 TO 106+30	LT.	25

ROCK DITCH CHECK	(E-6)	INSTALLATION
STA. 102+00	LT.	1
STA. 102+00	RT.	1

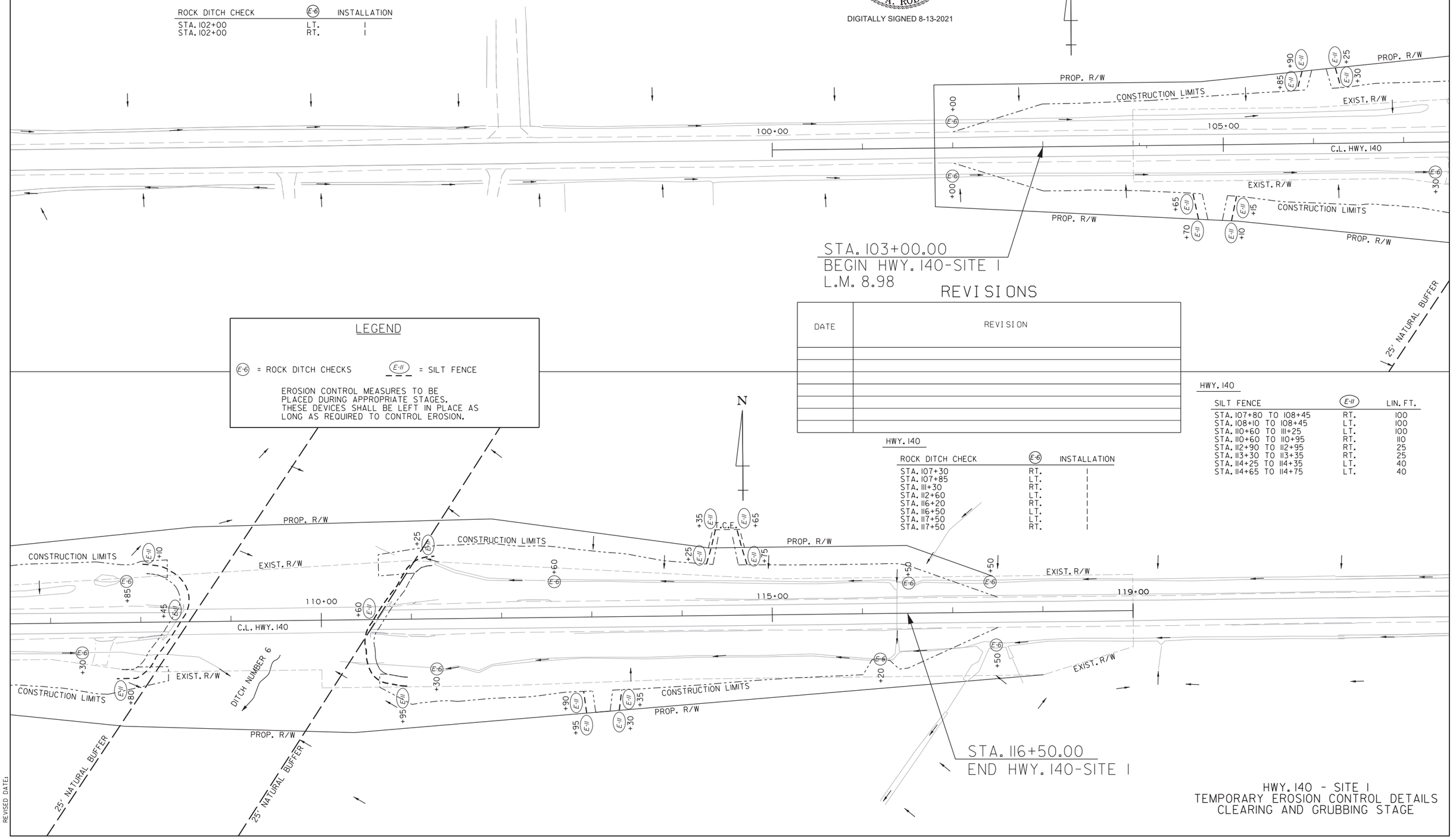

LEGEND

(E-6) = ROCK DITCH CHECKS (E-11) = SILT FENCE

EROSION CONTROL MEASURES TO BE PLACED DURING APPROPRIATE STAGES. THESE DEVICES SHALL BE LEFT IN PLACE AS LONG AS REQUIRED TO CONTROL EROSION.

REVISIONS

DATE	REVISION

HWY. 140

ROCK DITCH CHECK	(E-6)	INSTALLATION
STA. 107+30	RT.	1
STA. 107+85	LT.	1
STA. 111+30	RT.	1
STA. 112+60	LT.	1
STA. 116+20	RT.	1
STA. 116+50	LT.	1
STA. 117+50	LT.	1
STA. 117+50	RT.	1

HWY. 140

SILT FENCE	(E-11)	LIN. FT.
STA. 107+80 TO 108+45	RT.	100
STA. 108+10 TO 108+45	LT.	100
STA. 110+60 TO 111+25	LT.	100
STA. 110+60 TO 110+95	RT.	110
STA. 112+90 TO 112+95	RT.	25
STA. 113+30 TO 113+35	RT.	25
STA. 114+25 TO 114+35	LT.	40
STA. 114+65 TO 114+75	LT.	40

HWY. 140 - SITE 1
TEMPORARY EROSION CONTROL DETAILS
CLEARING AND GRUBBING STAGE

PJoseph 8/13/2021 5:23:01 PM
WORKSPACE: AHTD
L:\2017\17017642 - ARDOT Job 100955\Drawings\r100955-100996.EC.CG.Hwy.140.Site 1.dgn
REVISED DATE:

DATE REVISED	DATE FILMED	DATE REVISED	DATE FILMED	FED.RD. DIST.NO.	STATE	FED.AID PROJ.NO.	SHEET NO.	TOTAL SHEETS
01-05-2022				6	ARK.			
				JOB NO.		100955	41	356
				(2)	TEMPORARY EROSION CONTROL DETAILS			

HWY. 140

SILT FENCE	(E-11)	LIN. FT.
STA. 202+05 TO 202+10	RT.	35
STA. 202+45 TO 202+50	RT.	20
STA. 204+35 TO 204+45	RT.	40
STA. 204+70 TO 204+75	RT.	30

ROCK DITCH CHECK	(E-6)	INSTALLATION
STA. 201+50	LT.	1
STA. 201+50	RT.	1
STA. 202+45	RT.	1
STA. 204+80	RT.	1

STATE OF ARKANSAS
LICENSED PROFESSIONAL ENGINEER
No. 13436
SHAUN A. ROBERSON
DIGITALLY SIGNED 1-5-2022

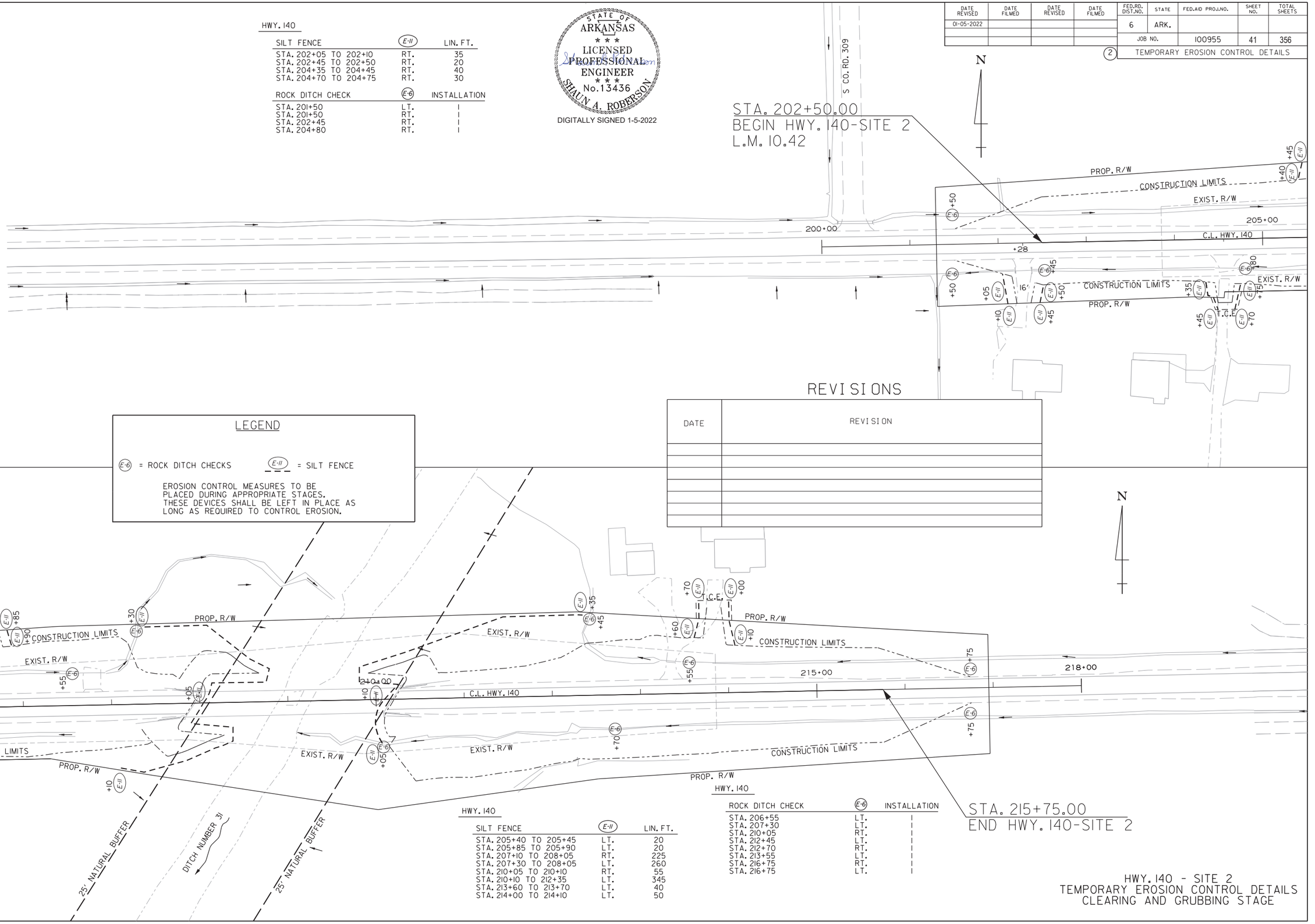

LEGEND

(E-6) = ROCK DITCH CHECKS (E-11) = SILT FENCE

EROSION CONTROL MEASURES TO BE PLACED DURING APPROPRIATE STAGES. THESE DEVICES SHALL BE LEFT IN PLACE AS LONG AS REQUIRED TO CONTROL EROSION.

REVISIONS

DATE	REVISION

HWY. 140

SILT FENCE	(E-11)	LIN. FT.
STA. 205+40 TO 205+45	LT.	20
STA. 205+85 TO 205+90	LT.	20
STA. 207+10 TO 208+05	RT.	225
STA. 207+30 TO 208+05	LT.	260
STA. 210+05 TO 210+10	RT.	55
STA. 210+10 TO 212+35	LT.	345
STA. 213+60 TO 213+70	LT.	40
STA. 214+00 TO 214+10	LT.	50

HWY. 140

ROCK DITCH CHECK	(E-6)	INSTALLATION
STA. 206+55	LT.	1
STA. 207+30	LT.	1
STA. 210+05	RT.	1
STA. 212+45	LT.	1
STA. 212+70	RT.	1
STA. 213+55	LT.	1
STA. 216+75	RT.	1
STA. 216+75	LT.	1

HWY. 140 - SITE 2
TEMPORARY EROSION CONTROL DETAILS
CLEARING AND GRUBBING STAGE

CGervasini 1/5/2022 15:57:21 PM
WORKSPACE: AHTD
L:\20171701642 - ARDOT Job 100955\Drawings\r100955-100996.EC.CG_Hwy.140_Site 2.dgn
REVISED DATE:

STATE OF ARKANSAS
LICENSED PROFESSIONAL ENGINEER
No.13436
SHAUN A. ROBERSON

DIGITALLY SIGNED 8-13-2021

DATE REVISED	DATE FILMED	DATE REVISED	DATE FILMED	FED.RD. DIST.NO.	STATE	FED.AID PROJ.NO.	SHEET NO.	TOTAL SHEETS
				6	ARK.			
				JOB NO.		100955	42	356
				(2)	TEMPORARY EROSION CONTROL DETAILS			

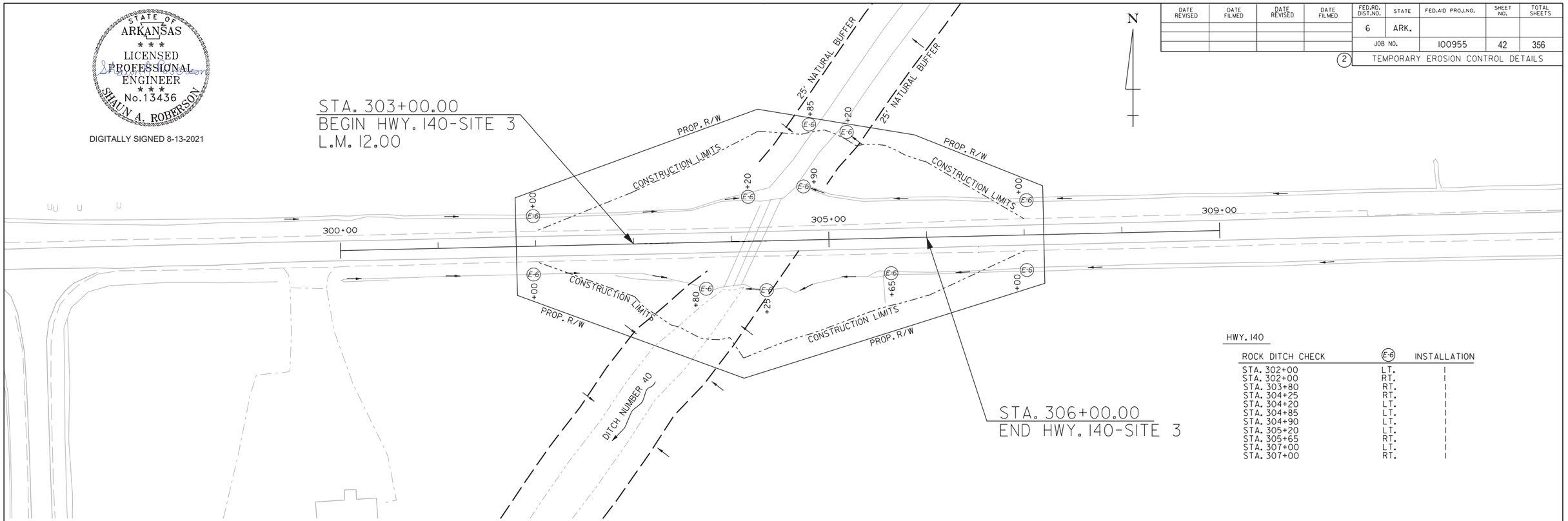

HWY. 140

ROCK DITCH CHECK	(E-6)	INSTALLATION
STA. 302+00	LT.	I
STA. 302+00	RT.	I
STA. 303+80	RT.	I
STA. 304+25	RT.	I
STA. 304+20	LT.	I
STA. 304+85	LT.	I
STA. 304+90	LT.	I
STA. 305+20	LT.	I
STA. 305+65	RT.	I
STA. 307+00	LT.	I
STA. 307+00	RT.	I

LEGEND

(E-6) = ROCK DITCH CHECKS (E-11) = SILT FENCE

EROSION CONTROL MEASURES TO BE PLACED DURING APPROPRIATE STAGES. THESE DEVICES SHALL BE LEFT IN PLACE AS LONG AS REQUIRED TO CONTROL EROSION.

REVISIONS

DATE	REVISION

HWY. 140 - SITE 3
TEMPORARY EROSION CONTROL DETAILS
CLEARING AND GRUBBING STAGE

PJoseph 8/13/2021 5:23:05 PM
WORKSPACE: AHTD
L:\2017\17017642 - ARDOT Job 100955\Drawings\r100955-100996_EC_CG_Hwy. 140_Site 3.dgn
REVISED DATE:

DATE REVISED	DATE FILMED	DATE REVISED	DATE FILMED	FED.RD. DIST.NO.	STATE	FED.AID PROJ.NO.	SHEET NO.	TOTAL SHEETS
01-05-2022				6	ARK.			
				JOB NO.		100955	43	356
				(2)	TEMPORARY EROSION CONTROL DETAILS			

HWY. 158

SILT FENCE	(E-11)	LIN. FT.
STA. 103+90 TO 103+90	RT.	20
STA. 104+30 TO 104+30	RT.	25
STA. 105+00 TO 105+00	LT.	20

ROCK DITCH CHECK	(E-6)	INSTALLATION
STA. 102+25	LT.	1
STA. 102+25	RT.	1

STATE OF ARKANSAS
LICENSED PROFESSIONAL ENGINEER
No. 13436
SHAUN A. ROBERSON
DIGITALLY SIGNED 1-5-2022

N

STA. 103+25.00
BEGIN HWY. 158-SITE 1
L.M. 10.47

LEGEND

(E-6) = ROCK DITCH CHECKS

(E-11) = SILT FENCE

EROSION CONTROL MEASURES TO BE PLACED DURING APPROPRIATE STAGES. THESE DEVICES SHALL BE LEFT IN PLACE AS LONG AS REQUIRED TO CONTROL EROSION.

REVISIONS

DATE	REVISION

HWY. 158

ROCK DITCH CHECK	(E-6)	INSTALLATION
STA. 105+05	RT.	1
STA. 106+10	LT.	1
STA. 106+55	RT.	1
STA. 107+60	LT.	1
STA. 109+60	RT.	1
STA. 109+75	RT.	1
STA. 111+20	LT.	1
STA. 115+50	LT.	1
STA. 115+50	RT.	1

HWY. 158

SILT FENCE	(E-11)	LIN. FT.
STA. 105+40 TO 105+40	LT.	30
STA. 107+20 TO 107+80	RT.	95
STA. 107+60 TO 107+80	LT.	85
STA. 109+70 TO 110+35	LT.	95
STA. 109+70 TO 110+10	RT.	260
STA. 111+35 TO 111+60	RT.	115
STA. 111+90 TO 112+75	RT.	160
STA. 113+05 TO 113+05	LT.	15
STA. 113+45 TO 113+45	LT.	15

STA. 114+50.00
END HWY. 158-SITE 1
L.M. 10.26

HWY. 158
TEMPORARY EROSION CONTROL DETAILS
CLEARING AND GRUBBING STAGE

CGGervasini 1/5/2022 1:57:21 PM
WORKSPACE: AHTD
L:\20171701642 - ARDOT Job 100955\Drawings\r100955-100763.EC.CG.Hwy.158.dgn
REVISED DATE:

DATE REVISED	DATE FILMED	DATE REVISED	DATE FILMED	FED.RD. DIST.NO.	STATE	FED.AID PROJ.NO.	SHEET NO.	TOTAL SHEETS
				6	ARK.			
				JOB NO.		100955	44	356
				(2)	TEMPORARY EROSION CONTROL DETAILS			

STATE OF ARKANSAS
LICENSED PROFESSIONAL ENGINEER
No.13436
SHAUN A. ROBERSON
DIGITALLY SIGNED 8-13-2021

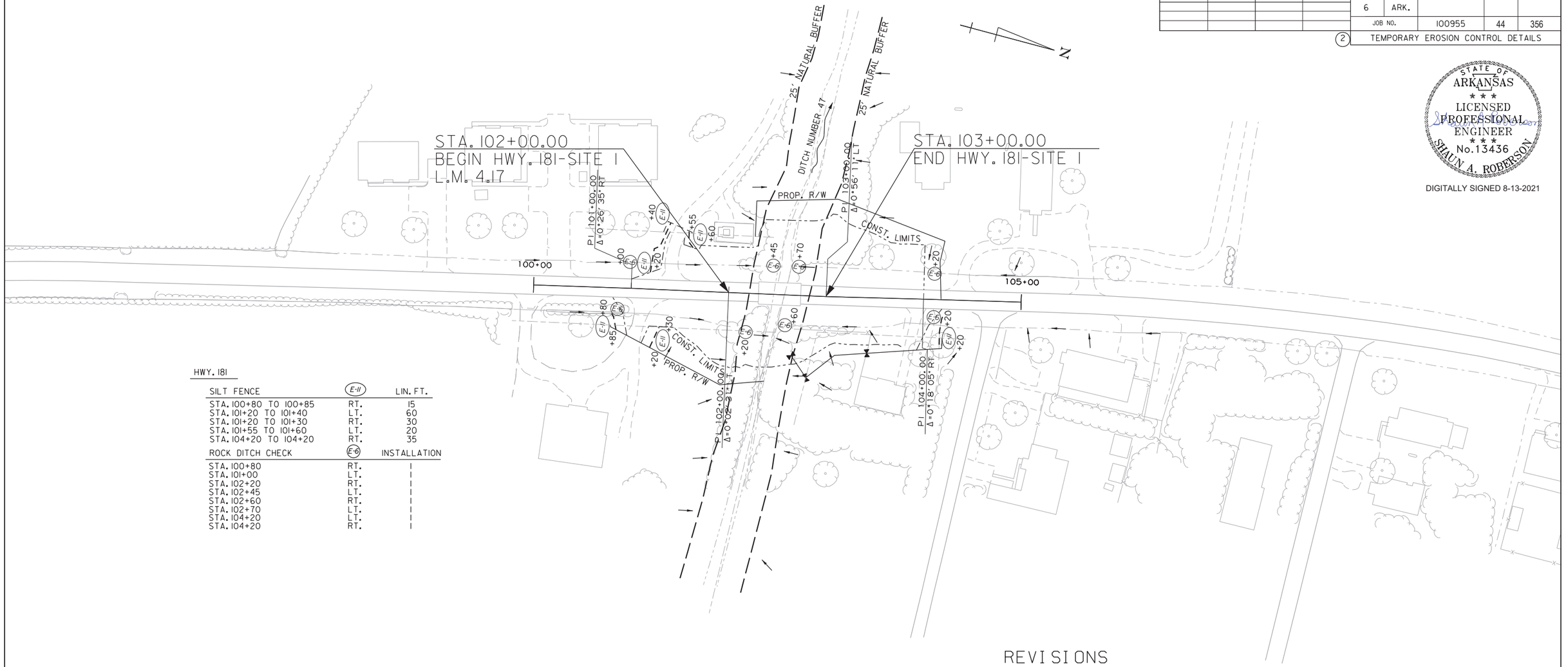

HWY. 181

SILT FENCE	(E-11)	LIN. FT.
STA. 100+80 TO 100+85	RT.	15
STA. 101+20 TO 101+40	LT.	60
STA. 101+20 TO 101+30	RT.	30
STA. 101+55 TO 101+60	LT.	20
STA. 104+20 TO 104+20	RT.	35

ROCK DITCH CHECK	(E-6)	INSTALLATION
STA. 100+80	RT.	1
STA. 101+00	LT.	1
STA. 102+20	RT.	1
STA. 102+45	LT.	1
STA. 102+60	RT.	1
STA. 102+70	LT.	1
STA. 104+20	LT.	1
STA. 104+20	RT.	1

LEGEND

(E-6) = ROCK DITCH CHECKS (E-11) = SILT FENCE

EROSION CONTROL MEASURES TO BE PLACED DURING APPROPRIATE STAGES. THESE DEVICES SHALL BE LEFT IN PLACE AS LONG AS REQUIRED TO CONTROL EROSION.

REVISIONS

DATE	REVISION

HWY. 181 - SITE 1
TEMPORARY EROSION CONTROL DETAILS
CLEARING AND GRUBBING STAGE

PJoseph 8/13/2021 5:23:06 PM
WORKSPACE: AHTD
L:\20IT\170I7642 - ARDOT Job 100955\Drawings\r100955_EC_CG_Hwy.181_Site 1.dgn
REVISED DATE:

DATE REVISED	DATE FILMED	DATE REVISED	DATE FILMED	FED.RD. DIST.NO.	STATE	FED.AID PROJ.NO.	SHEET NO.	TOTAL SHEETS
				6	ARK.			
				JOB NO.		100955	45	356

(2) TEMPORARY EROSION CONTROL DETAILS



DIGITALLY SIGNED 8-13-2021

HWY. 181

SILT FENCE	(E-11)	LIN. FT.
STA. 202+15 TO 202+40	RT.	50
STA. 202+70 TO 203+75	RT.	115

ROCK DITCH CHECK	(E-6)	INSTALLATION
STA. 201+00	LT.	1
STA. 201+00	RT.	1
STA. 202+00	LT.	1
STA. 203+00	LT.	1
STA. 203+85	RT.	1
STA. 204+50	LT.	1
STA. 204+50	RT.	1

LEGEND

(E-6) = ROCK DITCH CHECKS

(E-11) = SILT FENCE

EROSION CONTROL MEASURES TO BE PLACED DURING APPROPRIATE STAGES. THESE DEVICES SHALL BE LEFT IN PLACE AS LONG AS REQUIRED TO CONTROL EROSION.

REVISIONS

DATE	REVISION

HWY. 181 - SITE 2
TEMPORARY EROSION CONTROL DETAILS
CLEARING AND GRUBBING STAGE

PJoseph 8/13/2021 5:23:07 PM
WORKSPACE: AHTD
L:\2017\1701742 - ARDOT Job 100955\Drawings\r100955-100996_EC_CG_Hwy.181_Site 2.dgn
REVISED DATE:

DATE REVISED	DATE FILMED	DATE REVISED	DATE FILMED	FED.RD. DIST.NO.	STATE	FED.AID PROJ.NO.	SHEET NO.	TOTAL SHEETS
				6	ARK.			
				JOB NO.		100955	46	356
				(2)	TEMPORARY EROSION CONTROL DETAILS			

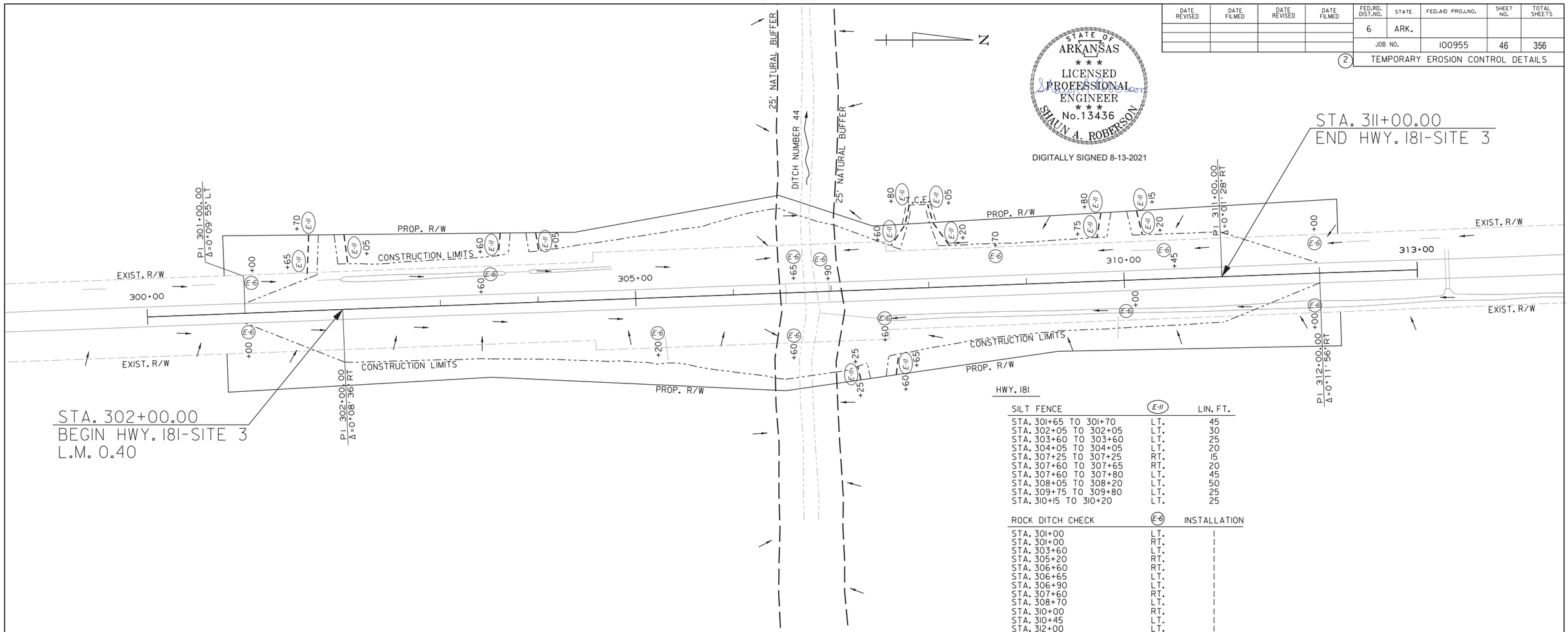

STATE OF ARKANSAS
LICENSED PROFESSIONAL ENGINEER
No.13436
SHAUN A. ROBERSON
DIGITALLY SIGNED 8-13-2021

HWY. 181

SILT FENCE	(E-11)	LIN. FT.
STA. 301+65 TO 301+70	LT.	45
STA. 302+05 TO 302+05	LT.	30
STA. 303+60 TO 303+60	LT.	25
STA. 304+05 TO 304+05	LT.	20
STA. 307+25 TO 307+25	RT.	15
STA. 307+60 TO 307+65	RT.	20
STA. 307+60 TO 307+80	LT.	45
STA. 308+05 TO 308+20	LT.	50
STA. 309+75 TO 309+80	LT.	25
STA. 310+15 TO 310+20	LT.	25

ROCK DITCH CHECK	(E-6)	INSTALLATION
STA. 301+00	LT.	1
STA. 301+00	RT.	1
STA. 303+60	LT.	1
STA. 305+20	RT.	1
STA. 306+60	RT.	1
STA. 306+65	LT.	1
STA. 306+90	LT.	1
STA. 307+60	RT.	1
STA. 308+70	LT.	1
STA. 310+00	RT.	1
STA. 310+45	LT.	1
STA. 312+00	LT.	1
STA. 312+00	RT.	1

LEGEND

(E-6) = ROCK DITCH CHECKS

(E-11) = SILT FENCE

EROSION CONTROL MEASURES TO BE PLACED DURING APPROPRIATE STAGES. THESE DEVICES SHALL BE LEFT IN PLACE AS LONG AS REQUIRED TO CONTROL EROSION.

REVISIONS

DATE	REVISION

HWY. 181 - SITE 3
TEMPORARY EROSION CONTROL DETAILS
CLEARING AND GRUBBING STAGE

PJoseph 8/13/2021 5:23:08 PM
WORKSPACE: AHTD
L:\2017\17017642 - ARDOT Job 100955\Drawings\r100955_EC_CG_Hwy.181_Site 3.dgn
REVISED DATE:

DATE REVISED	DATE FILMED	DATE REVISED	DATE FILMED	FED.RD. DIST.NO.	STATE	FED.AID PROJ.NO.	SHEET NO.	TOTAL SHEETS
				6	ARK.			
				JOB NO.		100955	47	356
				(2)	TEMPORARY EROSION CONTROL DETAILS			

HWY. 77

SILT FENCE	(E-11)	LIN. FT.
STA. 104+20 TO 104+30	LT.	RETAIN
STA. 104+70 TO 104+80	LT.	RETAIN
STA. 106+85 TO 106+95	LT. & RT.	RETAIN
STA. 108+05 TO 108+15	LT. & RT.	RETAIN
STA. 109+65 TO 109+70	RT.	RETAIN
STA. 110+25 TO 110+50	RT.	RETAIN
STA. 111+30 TO 111+30	LT.	RETAIN
STA. 111+70 TO 111+70	RT.	RETAIN

ROCK DITCH CHECK	(E-6)	INSTALLATION
STA. 101+00	LT.	RETAIN
STA. 101+00	RT.	RETAIN
STA. 103+00	LT.	I
STA. 103+35	RT.	I
STA. 104+10	LT.	I
STA. 104+40	RT.	I
STA. 105+60	LT.	I
STA. 106+10	RT.	I
STA. 106+20	LT.	RETAIN
STA. 107+15	LT.	RETAIN
STA. 108+20	LT.	RETAIN
STA. 108+25	RT.	I
STA. 109+65	LT.	I
STA. 109+65	RT.	RETAIN
STA. 110+25	RT.	RETAIN
STA. 110+40	RT.	I
STA. 111+80	LT.	I
STA. 114+00	RT.	RETAIN
STA. 114+00	LT.	RETAIN

STATE OF ARKANSAS
LICENSED PROFESSIONAL ENGINEER
No.13436
SHAUN A. ROBERSON
DIGITALLY SIGNED 8-13-2021

STA. 102+00.00
BEGIN HWY. 77-SITE I
L.M. 10.50

STA. 113+00.00
END HWY. 77-SITE I
L.M. 10.33

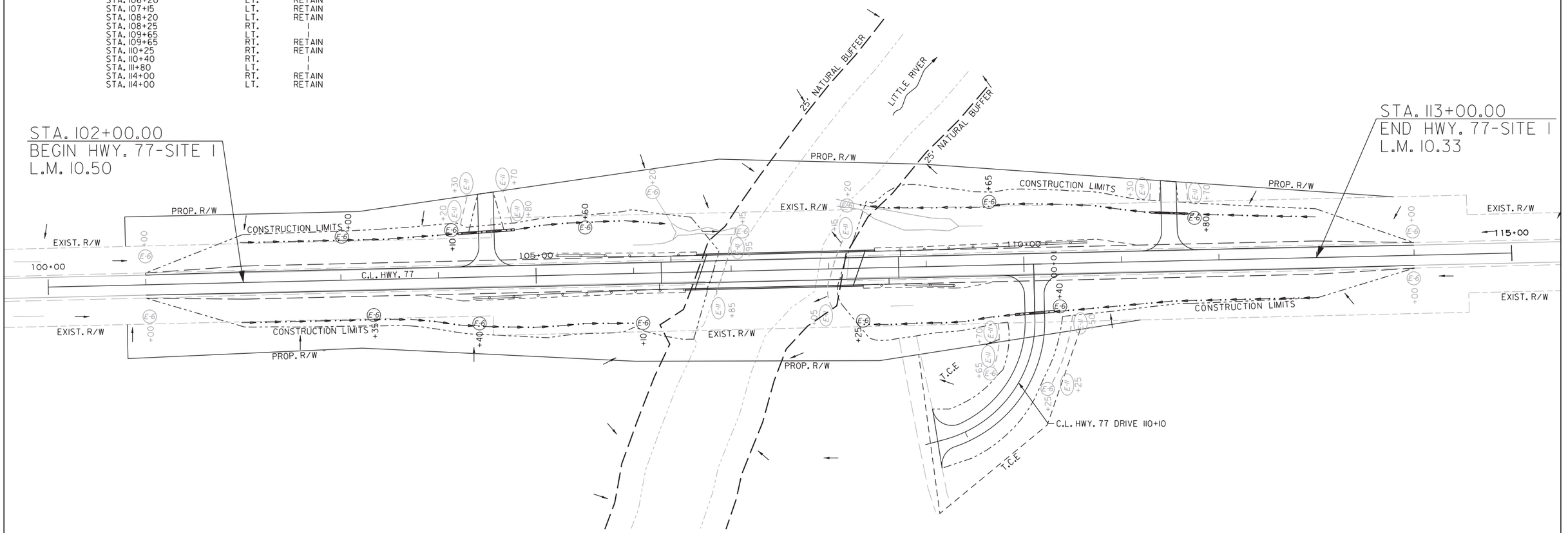

LEGEND

(E-6) = ROCK DITCH CHECKS (E-11) = SILT FENCE

EROSION CONTROL MEASURES TO BE PLACED DURING APPROPRIATE STAGES. THESE DEVICES SHALL BE LEFT IN PLACE AS LONG AS REQUIRED TO CONTROL EROSION.

REVISIONS

DATE	REVISION

HWY. 77 - SITE I
TEMPORARY EROSION CONTROL DETAILS
STAGE I

PJoseph 8/13/2021 5:23:08 PM
WORKSPACE: AHTD
L:\2017\1701642 - ARDOT Job 100955\Drawings\r100955_EC_STG1_Hwy. 77_Site 1.dgn
REVISED DATE:

DATE REVISED	DATE FILMED	DATE REVISED	DATE FILMED	FED.RD. DIST.NO.	STATE	FED.AID PROJ.NO.	SHEET NO.	TOTAL SHEETS
				6	ARK.			
				JOB NO.		100955	48	356

(2) TEMPORARY EROSION CONTROL DETAILS

HWY. 77

SILT FENCE	(E-11)	LIN. FT.
STA. 204+25 TO 208+00	LT.	RETAIN
STA. 204+30 TO 208+00	RT.	RETAIN
STA. 209+30 TO 209+85	LT.	RETAIN
STA. 209+65 TO 213+00	LT.	RETAIN
STA. 210+15 TO 210+80	LT.	RETAIN
STA. 210+15 TO 212+75	RT.	RETAIN
STA. 210+60 TO 210+95	LT.	RETAIN
ROCK DITCH CHECK	**(E-6)**	**INSTALLATION**
STA. 204+25	LT.	RETAIN
STA. 204+30	RT.	RETAIN
STA. 209+65	LT.	RETAIN

STATE OF ARKANSAS
LICENSED PROFESSIONAL ENGINEER
No. 13436
SHAUN A. ROBERSON
DIGITALLY SIGNED 8-13-2021

STA. 205+25.00
BEGIN HWY. 77-SITE 2
L.M. 7.24

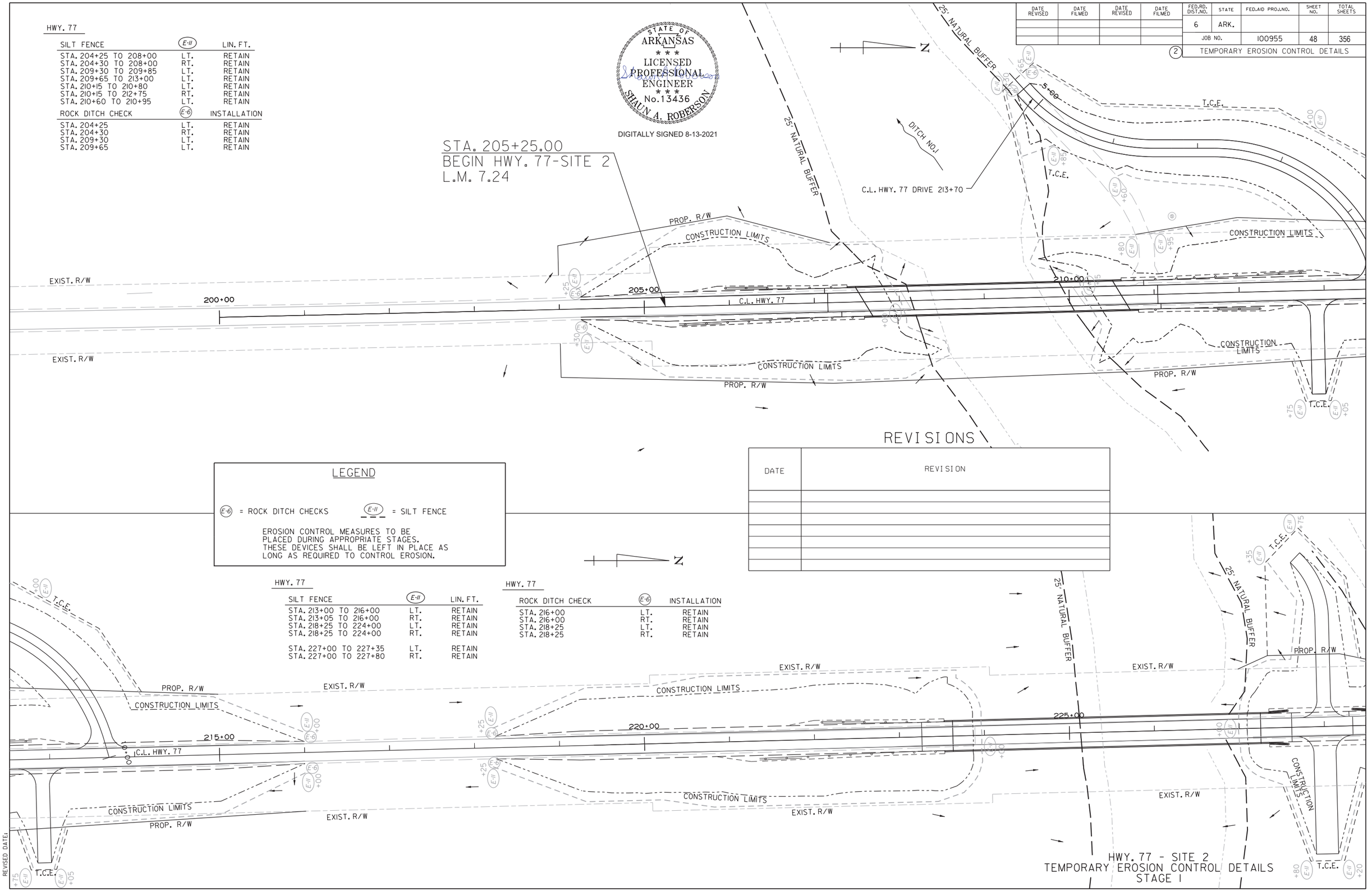

REVISIONS

DATE	REVISION

LEGEND

(E-6) = ROCK DITCH CHECKS (E-11) = SILT FENCE

EROSION CONTROL MEASURES TO BE PLACED DURING APPROPRIATE STAGES. THESE DEVICES SHALL BE LEFT IN PLACE AS LONG AS REQUIRED TO CONTROL EROSION.

HWY. 77

SILT FENCE	(E-11)	LIN. FT.
STA. 213+00 TO 216+00	LT.	RETAIN
STA. 213+05 TO 216+00	RT.	RETAIN
STA. 218+25 TO 224+00	LT.	RETAIN
STA. 218+25 TO 224+00	RT.	RETAIN
STA. 227+00 TO 227+35	LT.	RETAIN
STA. 227+00 TO 227+80	RT.	RETAIN

HWY. 77

ROCK DITCH CHECK	(E-6)	INSTALLATION
STA. 216+00	LT.	RETAIN
STA. 216+00	RT.	RETAIN
STA. 218+25	LT.	RETAIN
STA. 218+25	RT.	RETAIN

HWY. 77 - SITE 2
TEMPORARY EROSION CONTROL DETAILS
STAGE 1

PJoseph 8/13/2021 5:23:09 PM
WORKSPACE: AHTD
L:\2017\17017642 - ARDOT Job 100955\Drawings\r100955_EC_ST01_Hwy. 77_Site 2.01.dgn
REVISED DATE:

DATE REVISED	DATE FILMED	DATE REVISED	DATE FILMED
01-05-2022			

FED.RD. DIST.NO.	STATE	FED.AID PROJ.NO.	SHEET NO.	TOTAL SHEETS
6	ARK.			
JOB NO.		100955	49	356

(2) TEMPORARY EROSION CONTROL DETAILS

STATE OF ARKANSAS
LICENSED PROFESSIONAL ENGINEER
No.13436
SHAUN A. ROBERSON
DIGITALLY SIGNED 1-5-2022

N

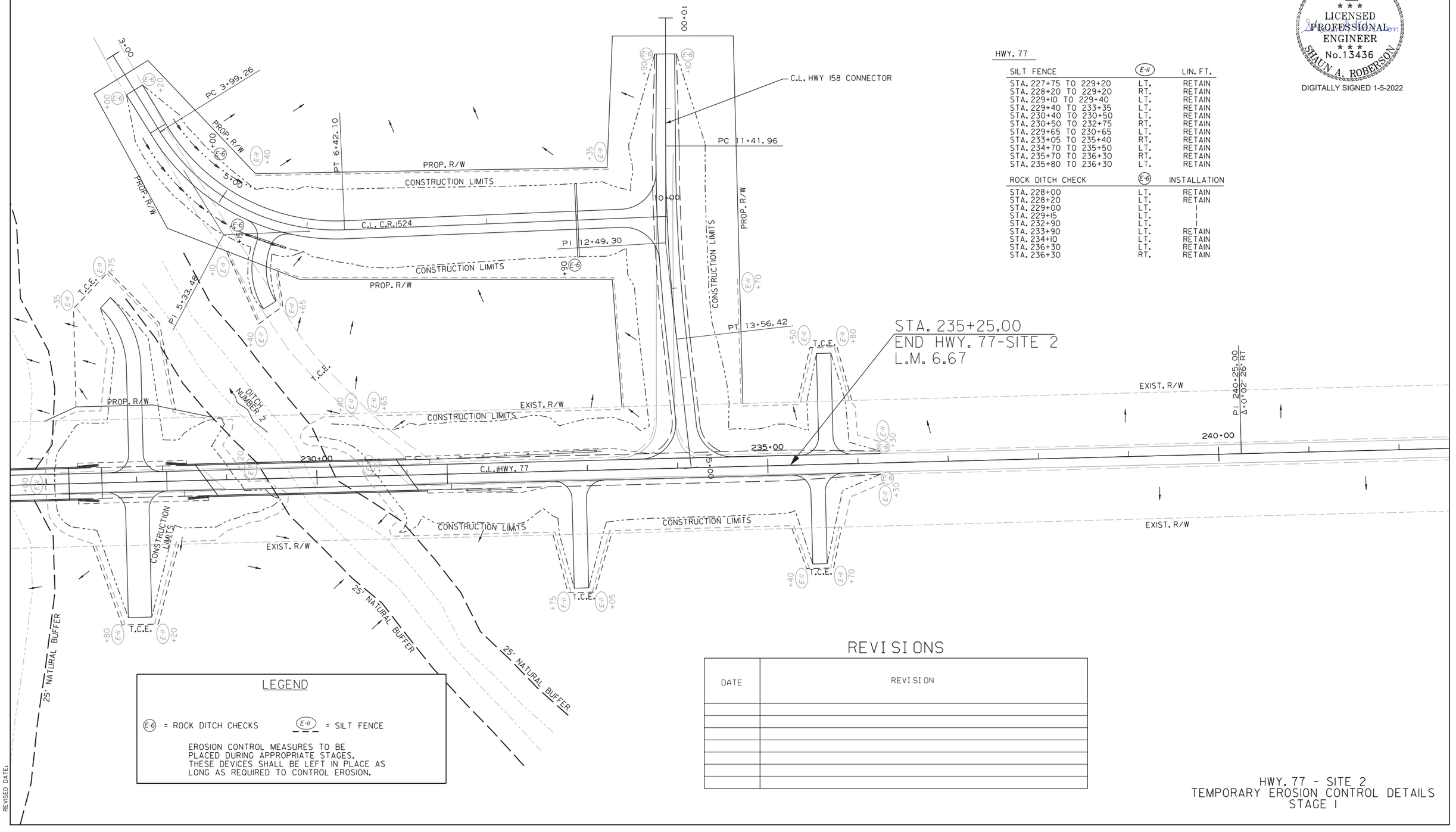

HWY. 77

SILT FENCE (E-11)		LIN. FT.
STA. 227+75 TO 229+20	LT.	RETAIN
STA. 228+20 TO 229+20	RT.	RETAIN
STA. 229+10 TO 229+40	LT.	RETAIN
STA. 229+40 TO 233+35	LT.	RETAIN
STA. 230+40 TO 230+50	LT.	RETAIN
STA. 230+50 TO 232+75	RT.	RETAIN
STA. 229+65 TO 230+65	LT.	RETAIN
STA. 233+05 TO 235+40	RT.	RETAIN
STA. 234+70 TO 235+50	LT.	RETAIN
STA. 235+70 TO 236+30	RT.	RETAIN
STA. 235+80 TO 236+30	LT.	RETAIN

ROCK DITCH CHECK (E-6)		INSTALLATION
STA. 228+00	LT.	RETAIN
STA. 228+20	LT.	RETAIN
STA. 229+00	LT.	I
STA. 229+15	LT.	I
STA. 232+90	LT.	I
STA. 233+90	LT.	RETAIN
STA. 234+10	LT.	RETAIN
STA. 236+30	LT.	RETAIN
STA. 236+30	RT.	RETAIN

LEGEND

(E-6) = ROCK DITCH CHECKS (E-11) = SILT FENCE

EROSION CONTROL MEASURES TO BE PLACED DURING APPROPRIATE STAGES. THESE DEVICES SHALL BE LEFT IN PLACE AS LONG AS REQUIRED TO CONTROL EROSION.

REVISIONS

DATE	REVISION

HWY. 77 - SITE 2
TEMPORARY EROSION CONTROL DETAILS
STAGE I

CGGervasini 1/5/2022 11:57:22 PM
WORKSPACE: AHTD
L:\2017\1701642 - ARDOT Job 100955\Drawings\r100955_EC_STGI_Hwy. 77_Site 2_02.dgn
REVISED DATE:

DATE REVISED	DATE FILMED	DATE REVISED	DATE FILMED

FED.RD. DIST.NO.	STATE	FED.AID PROJ.NO.	SHEET NO.	TOTAL SHEETS
6	ARK.			
JOB NO.		100955	50	356
(2) TEMPORARY EROSION CONTROL DETAILS				

STATE OF ARKANSAS
* * *
LICENSED PROFESSIONAL ENGINEER
* * *
No.13436
SHAUN A. ROBERSON

DIGITALLY SIGNED 8-13-2021

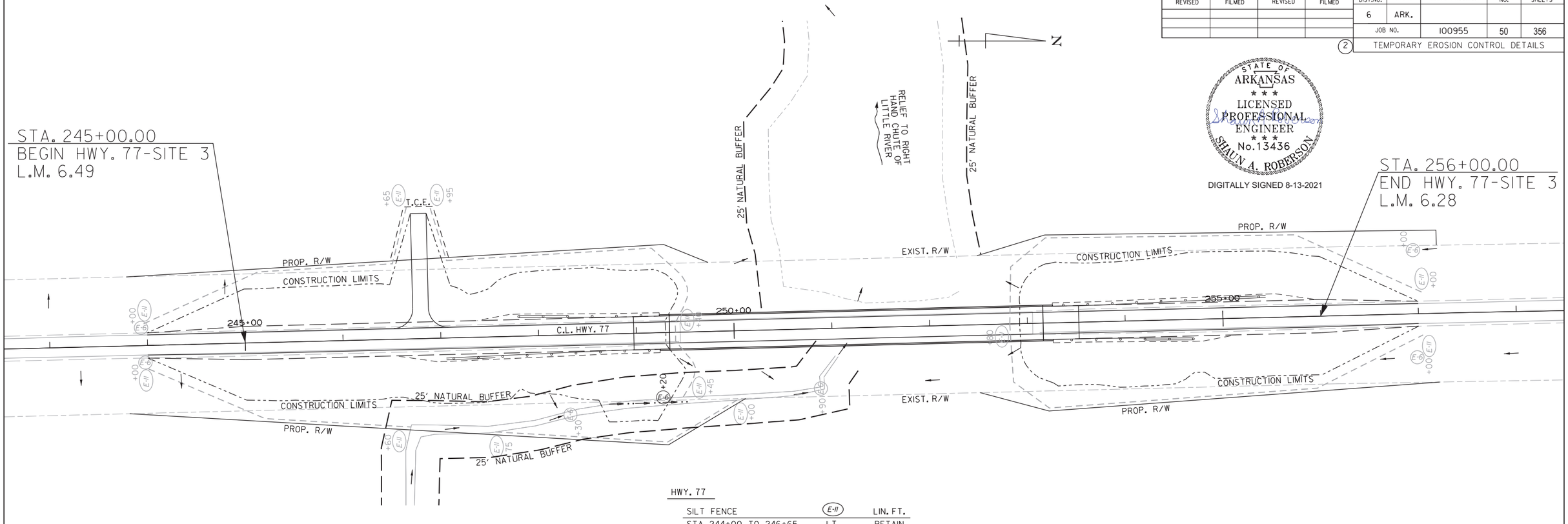

HWY. 77

SILT FENCE	(E-II)	LIN. FT.
STA. 244+00 TO 246+65	LT.	RETAIN
STA. 244+00 TO 246+60	RT.	RETAIN
STA. 246+95 TO 249+40	LT.	RETAIN
STA. 247+75 TO 250+00	RT.	RETAIN
STA. 249+40 TO 249+45	RT.	RETAIN
STA. 252+80 TO 257+00	LT.	RETAIN
STA. 252+80 TO 257+00	RT.	RETAIN

ROCK DITCH CHECK	(E-6)	INSTALLATION
STA. 244+00	LT.	RETAIN
STA. 244+00	RT.	RETAIN
STA. 248+30	RT.	RETAIN
STA. 249+20	RT.	I
STA. 250+90	RT.	RETAIN
STA. 257+00	LT.	RETAIN
STA. 257+00	RT.	RETAIN

LEGEND

(E-6) = ROCK DITCH CHECKS (E-II) = SILT FENCE

EROSION CONTROL MEASURES TO BE PLACED DURING APPROPRIATE STAGES. THESE DEVICES SHALL BE LEFT IN PLACE AS LONG AS REQUIRED TO CONTROL EROSION.

REVISIONS

DATE	REVISION

HWY. 77 - SITE 3
TEMPORARY EROSION CONTROL DETAILS
STAGE I

PJoseph 8/13/2021 5:23:10 PM
WORKSPACE: AHTD
L:\2017\170176\42 - ARDOT Job 100955\Drawings\r100955_EC_ST01_Hwy. 77_Site 3.dgn
REVISED DATE:

DATE REVISED	DATE FILMED	DATE REVISED	DATE FILMED	FED.RD. DIST.NO.	STATE	FED.AID PROJ.NO.	SHEET NO.	TOTAL SHEETS
				6	ARK.			
				JOB NO.		100955	51	356
				(2)	TEMPORARY EROSION CONTROL DETAILS			

HWY. 77

SILT FENCE (E-11)		LIN. FT.
STA. 266+00 TO 271+75	LT.	RETAIN
STA. 266+00 TO 271+75	RT.	RETAIN

ROCK DITCH CHECK (E-6)		INSTALLATION
STA. 266+00	LT.	RETAIN
STA. 266+00	RT.	RETAIN

STATE OF ARKANSAS
LICENSED PROFESSIONAL ENGINEER
No.13436
SHAUN A. ROBERSON
DIGITALLY SIGNED 8-13-2021

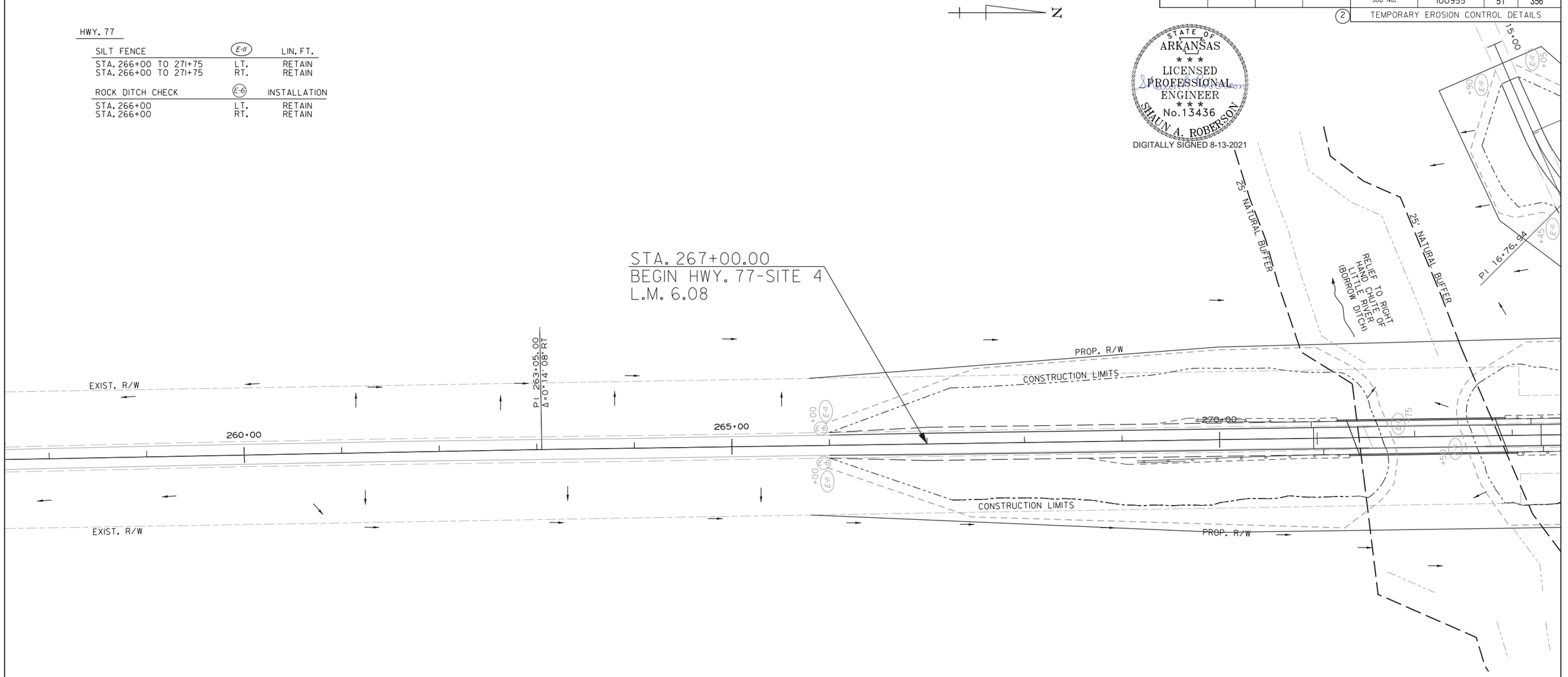

LEGEND

(E-6) = ROCK DITCH CHECKS

(E-11) = SILT FENCE

EROSION CONTROL MEASURES TO BE PLACED DURING APPROPRIATE STAGES. THESE DEVICES SHALL BE LEFT IN PLACE AS LONG AS REQUIRED TO CONTROL EROSION.

REVISIONS

DATE	REVISION

HWY. 77 - SITE 4
TEMPORARY EROSION CONTROL DETAILS
STAGE I

PJoseph 8/13/2021 5:23:11 PM
WORKSPACE: AHTD
L:\2017\17017642 - ARDOT Job 100955\Drawings\r100955_EC_STG1_Hwy. 77_Site 4.01.dgn
REVISED DATE:

DATE REVISED	DATE FILMED	DATE REVISED	DATE FILMED	FED.RD. DIST.NO.	STATE	FED.AID PROJ.NO.	SHEET NO.	TOTAL SHEETS
				6	ARK.			
				JOB NO.		100955	52	356
				(2)	TEMPORARY EROSION CONTROL DETAILS			

HWY. 77

SILT FENCE (E-11)		LIN. FT.
STA. 272+50 TO 274+00	LT.	RETAIN
STA. 272+50 TO 274+75	RT.	RETAIN
STA. 272+90 TO 273+45	LT.	RETAIN
STA. 273+85 TO 274+25	LT.	RETAIN
STA. 273+05 TO 277+70	LT.	RETAIN
STA. 274+80 TO 275+15	RT.	RETAIN
STA. 274+90 TO 275+85	RT.	RETAIN
STA. 275+95 TO 277+35	RT.	RETAIN
STA. 277+65 TO 278+10	RT.	RETAIN
STA. 278+00 TO 279+10	LT.	RETAIN

ROCK DITCH CHECK (E-6)		INSTALLATION
STA. 279+55	RT.	I
STA. 280+00	LT.	I
STA. 282+75	LT.	RETAIN
STA. 282+75	RT.	RETAIN

STATE OF ARKANSAS
LICENSED PROFESSIONAL ENGINEER
No. 13436
SHAUN A. ROBERSON
DIGITALLY SIGNED 8-13-2021

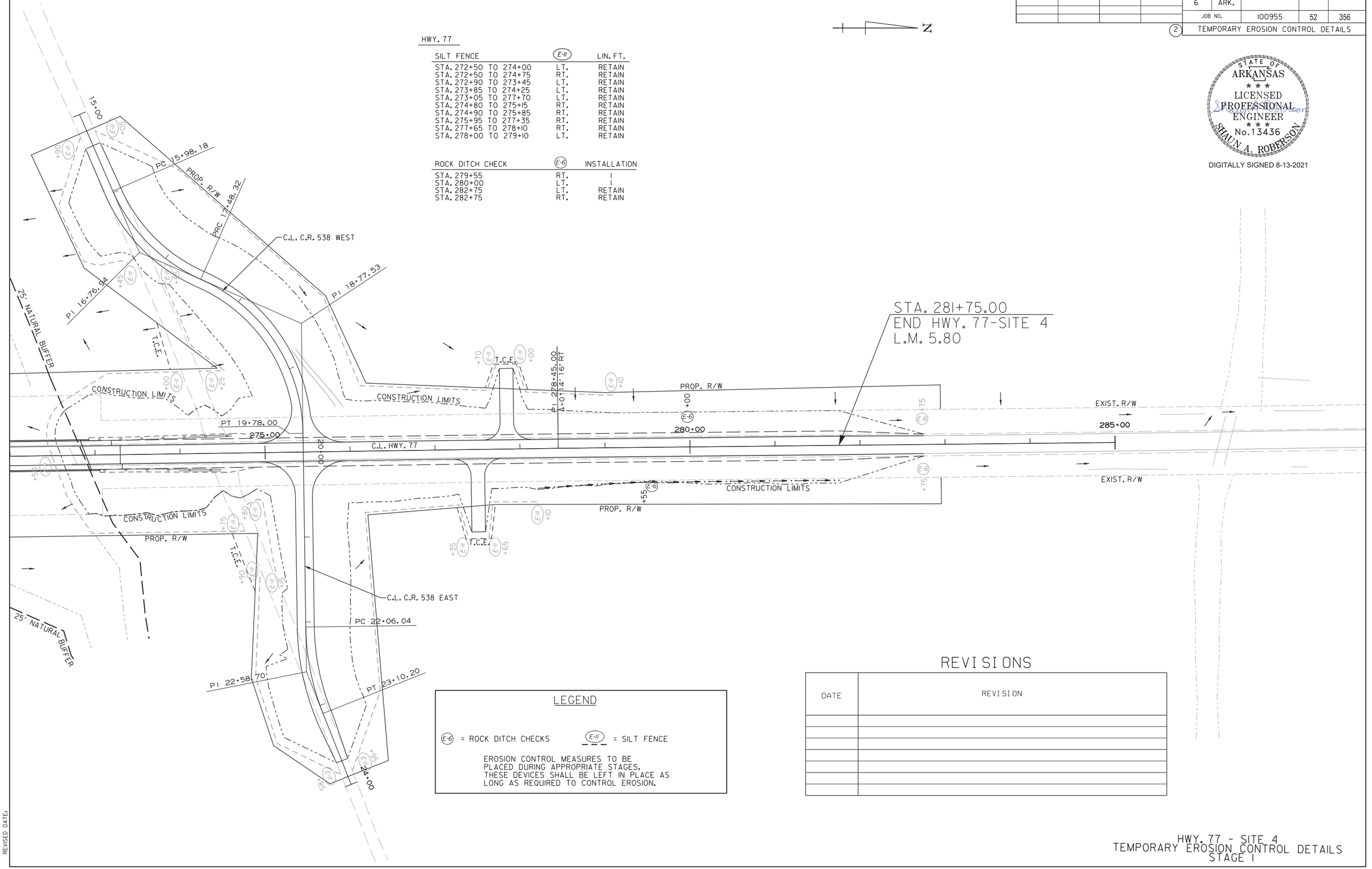

LEGEND

(E-6) = ROCK DITCH CHECKS E-11 = SILT FENCE

EROSION CONTROL MEASURES TO BE PLACED DURING APPROPRIATE STAGES. THESE DEVICES SHALL BE LEFT IN PLACE AS LONG AS REQUIRED TO CONTROL EROSION.

REVISIONS

DATE	REVISION

HWY. 77 - SITE 4
TEMPORARY EROSION CONTROL DETAILS
STAGE I

PJoseph 8/13/2021 5:23:11 PM
WORKSPACE: AHTD
L:\2017\1701642 - ARDOT Job 100955\Drawings\r100955_EC_STG1_Hwy. 77_Site 4_02.dgn
REVISED DATE:

DATE REVISED	DATE FILMED	DATE REVISED	DATE FILMED	FED.RD. DIST.NO.	STATE	FED.AID PROJ.NO.	SHEET NO.	TOTAL SHEETS
				6	ARK.			
				JOB NO.		100955	53	356
				(2)	TEMPORARY EROSION CONTROL DETAILS			

STATE OF ARKANSAS
LICENSED PROFESSIONAL ENGINEER
No.13436
SHAUN A. ROBERSON

DIGITALLY SIGNED 8-13-2021

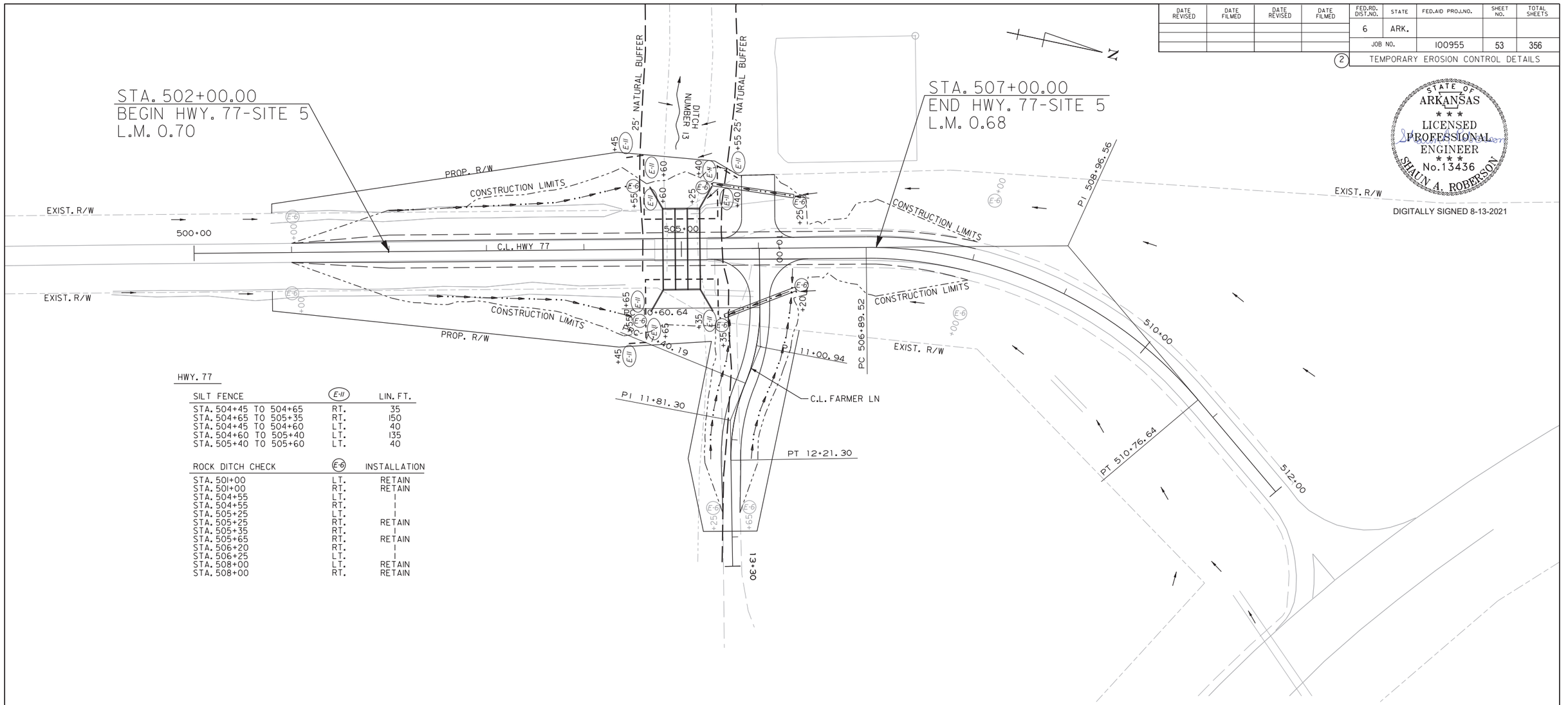

HWY. 77

SILT FENCE (E-II)		LIN. FT.
STA. 504+45 TO 504+65	RT.	35
STA. 504+65 TO 505+35	RT.	150
STA. 504+45 TO 504+60	LT.	40
STA. 504+60 TO 505+40	LT.	135
STA. 505+40 TO 505+60	LT.	40

ROCK DITCH CHECK (E-6)		INSTALLATION
STA. 501+00	LT.	RETAIN
STA. 501+00	RT.	RETAIN
STA. 504+55	LT.	I
STA. 504+55	RT.	I
STA. 505+25	LT.	I
STA. 505+25	RT.	RETAIN
STA. 505+35	RT.	I
STA. 505+65	RT.	RETAIN
STA. 506+20	RT.	I
STA. 506+25	LT.	I
STA. 508+00	LT.	RETAIN
STA. 508+00	RT.	RETAIN

LEGEND

(E-6) = ROCK DITCH CHECKS

(E-II) = SILT FENCE

EROSION CONTROL MEASURES TO BE PLACED DURING APPROPRIATE STAGES. THESE DEVICES SHALL BE LEFT IN PLACE AS LONG AS REQUIRED TO CONTROL EROSION.

REVISIONS

DATE	REVISION

HWY. 77 - SITE 5
TEMPORARY EROSION CONTROL DETAILS
STAGE I

PJoseph 8/13/2021 5:23:12 PM
WORKSPACE: AHTD
L:\20\TO\170\7642 - ARDOT Job 100955\Drawings\r100955_EC_STGI_Hwy. 77_Site 5.dgn
REVISED DATE:

DATE REVISED	DATE FILMED	DATE REVISED	DATE FILMED	FED.RD. DIST.NO.	STATE	FED.AID PROJ.NO.	SHEET NO.	TOTAL SHEETS
				6	ARK.			
				JOB NO.		100955	54	356

(2) TEMPORARY EROSION CONTROL DETAILS

STATE OF ARKANSAS
LICENSED PROFESSIONAL ENGINEER
No.13436
SHAUN A. ROBERSON
DIGITALLY SIGNED 8-13-2021

HWY. 140

SILT FENCE	(E-11)	LIN. FT.
STA. 104+65 TO 104+70	RT.	RETAIN
STA. 105+10 TO 105+15	RT.	RETAIN
STA. 105+85 TO 105+90	LT.	RETAIN
STA. 106+25 TO 106+30	LT.	RETAIN

ROCK DITCH CHECK	(E-6)	INSTALLATION
STA. 102+00	LT.	RETAIN
STA. 102+00	RT.	RETAIN
STA. 104+55	RT.	I
STA. 105+70	LT.	I
STA. 105+95	RT.	I
STA. 107+00	LT.	I

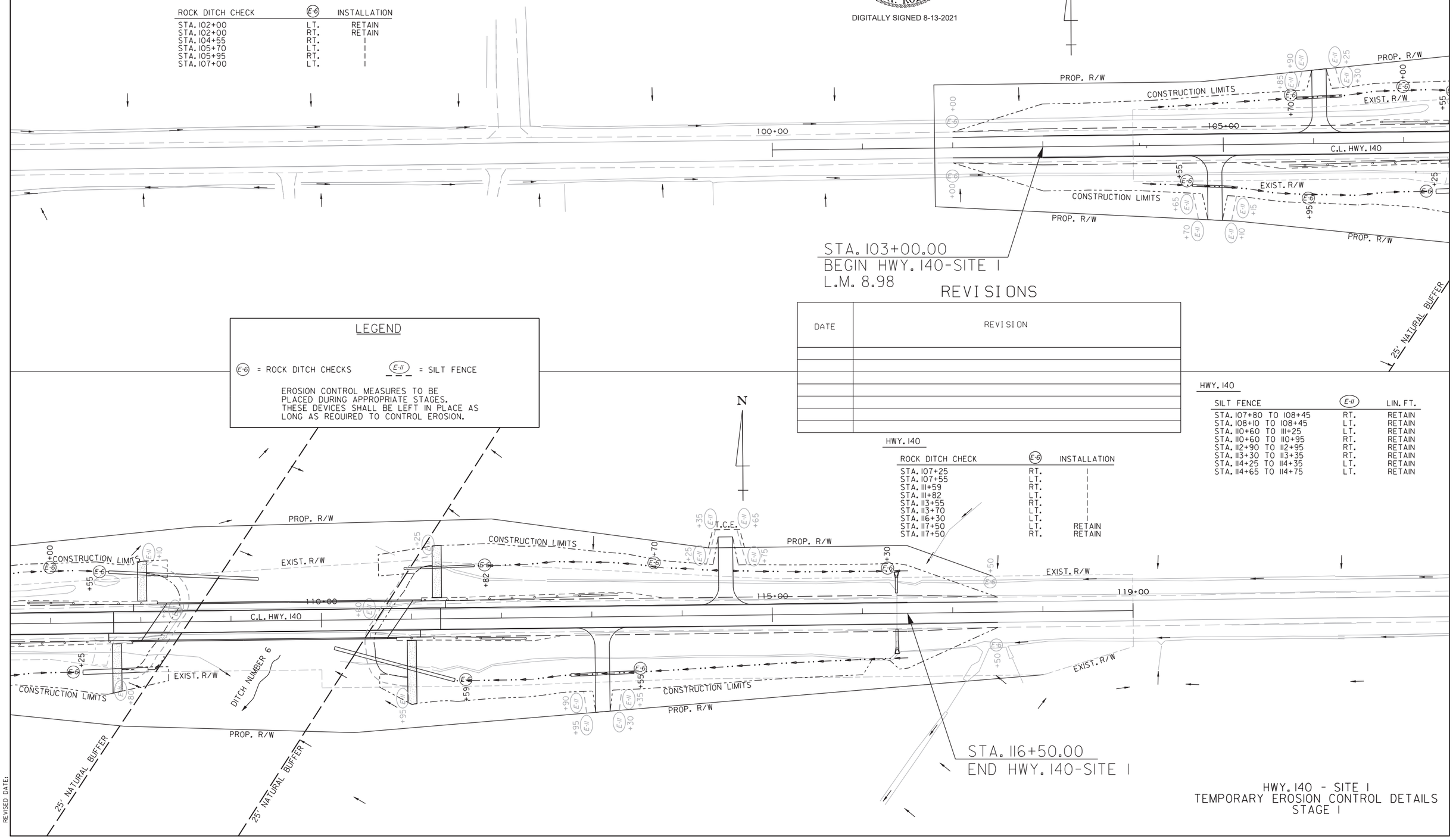

STA. 103+00.00
BEGIN HWY. 140-SITE 1
L.M. 8.98

STA. 116+50.00
END HWY. 140-SITE 1

REVISIONS

DATE	REVISION

HWY. 140

ROCK DITCH CHECK	(E-6)	INSTALLATION
STA. 107+25	RT.	I
STA. 107+55	LT.	I
STA. 111+59	RT.	I
STA. 111+82	LT.	I
STA. 113+55	RT.	I
STA. 113+70	LT.	I
STA. 116+30	LT.	I
STA. 117+50	LT.	RETAIN
STA. 117+50	RT.	RETAIN

HWY. 140

SILT FENCE	(E-11)	LIN. FT.
STA. 107+80 TO 108+45	RT.	RETAIN
STA. 108+10 TO 108+45	LT.	RETAIN
STA. 110+60 TO 111+25	LT.	RETAIN
STA. 110+60 TO 110+95	RT.	RETAIN
STA. 112+90 TO 112+95	RT.	RETAIN
STA. 113+30 TO 113+35	RT.	RETAIN
STA. 114+25 TO 114+35	LT.	RETAIN
STA. 114+65 TO 114+75	LT.	RETAIN

LEGEND

(E-6) = ROCK DITCH CHECKS
(E-11) = SILT FENCE

EROSION CONTROL MEASURES TO BE PLACED DURING APPROPRIATE STAGES. THESE DEVICES SHALL BE LEFT IN PLACE AS LONG AS REQUIRED TO CONTROL EROSION.

HWY. 140 - SITE 1
TEMPORARY EROSION CONTROL DETAILS
STAGE 1

PJoseph 8/13/2021 5:23:13 PM
WORKSPACE: AHTD
L:\2017\17017642 - ARDOT Job 100955\Drawings\r100955-100996_EC_STGI_Hwy_140_Site 1.dgn
REVISED DATE:

DATE REVISED	DATE FILMED	DATE REVISED	DATE FILMED	FED.RD. DIST.NO.	STATE	FED.AID PROJ.NO.	SHEET NO.	TOTAL SHEETS
01-05-2022				6	ARK.			
				JOB NO.		100955	55	356
				(2)	TEMPORARY EROSION CONTROL DETAILS			

HWY. 140

SILT FENCE	(E-11)	LIN. FT.
STA. 202+05 TO 202+10	RT.	RETAIN
STA. 202+45 TO 202+50	RT.	RETAIN
STA. 204+35 TO 204+45	RT.	RETAIN
STA. 204+70 TO 204+75	RT.	RETAIN

ROCK DITCH CHECK	(E-6)	INSTALLATION
STA. 201+50	LT.	RETAIN
STA. 201+50	RT.	RETAIN
STA. 202+65	RT.	I
STA. 204+85	RT.	I

STATE OF ARKANSAS
* * *
LICENSED PROFESSIONAL ENGINEER
* * *
No. 13436
SHAUN A. ROBERSON
DIGITALLY SIGNED 1-5-2022

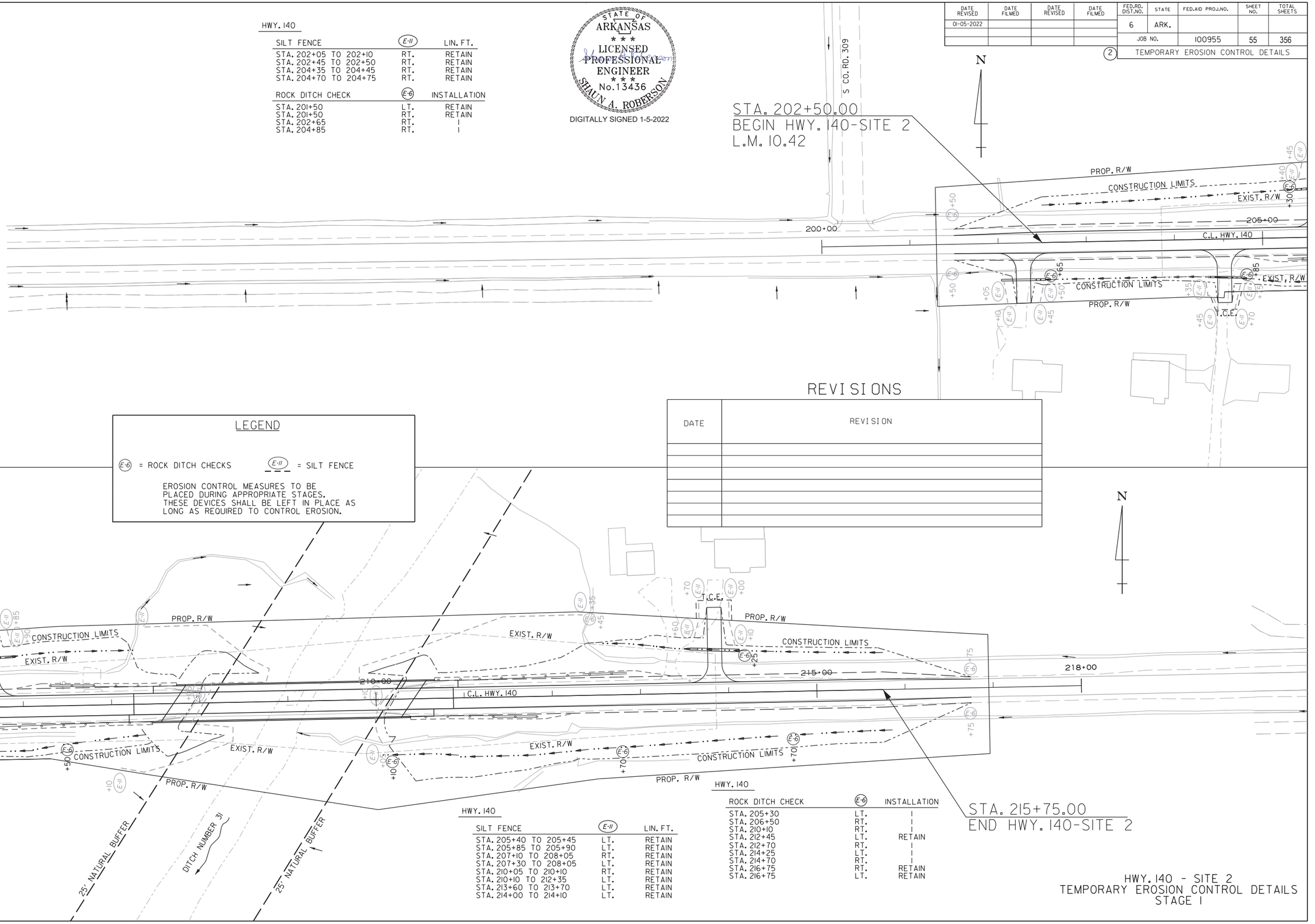

REVISIONS

DATE	REVISION

HWY. 140

SILT FENCE	(E-11)	LIN. FT.
STA. 205+40 TO 205+45	LT.	RETAIN
STA. 205+85 TO 205+90	LT.	RETAIN
STA. 207+10 TO 208+05	RT.	RETAIN
STA. 207+30 TO 208+05	LT.	RETAIN
STA. 210+05 TO 210+10	RT.	RETAIN
STA. 210+10 TO 212+35	LT.	RETAIN
STA. 213+60 TO 213+70	LT.	RETAIN
STA. 214+00 TO 214+10	LT.	RETAIN

HWY. 140

ROCK DITCH CHECK	(E-6)	INSTALLATION
STA. 205+30	LT.	I
STA. 206+50	RT.	I
STA. 210+10	RT.	I
STA. 212+45	LT.	RETAIN
STA. 212+70	RT.	I
STA. 214+25	LT.	I
STA. 214+70	RT.	I
STA. 216+75	RT.	RETAIN
STA. 216+75	LT.	RETAIN

HWY. 140 - SITE 2
TEMPORARY EROSION CONTROL DETAILS
STAGE 1

CGervasini 1/5/2022 1:57:23 PM
WORKSPACE: AHTD
L:\2017\1701642 - ARDOT Job 100955\Drawings\r100955-100996.EC.STGI.Hwy.140.Site 2.dgn
REVISED DATE:

DATE REVISED	DATE FILMED	DATE REVISED	DATE FILMED	FED.RD. DIST.NO.	STATE	FED.AID PROJ.NO.	SHEET NO.	TOTAL SHEETS
				6	ARK.			
				JOB NO.		100955	56	356
				(2)	TEMPORARY EROSION CONTROL DETAILS			

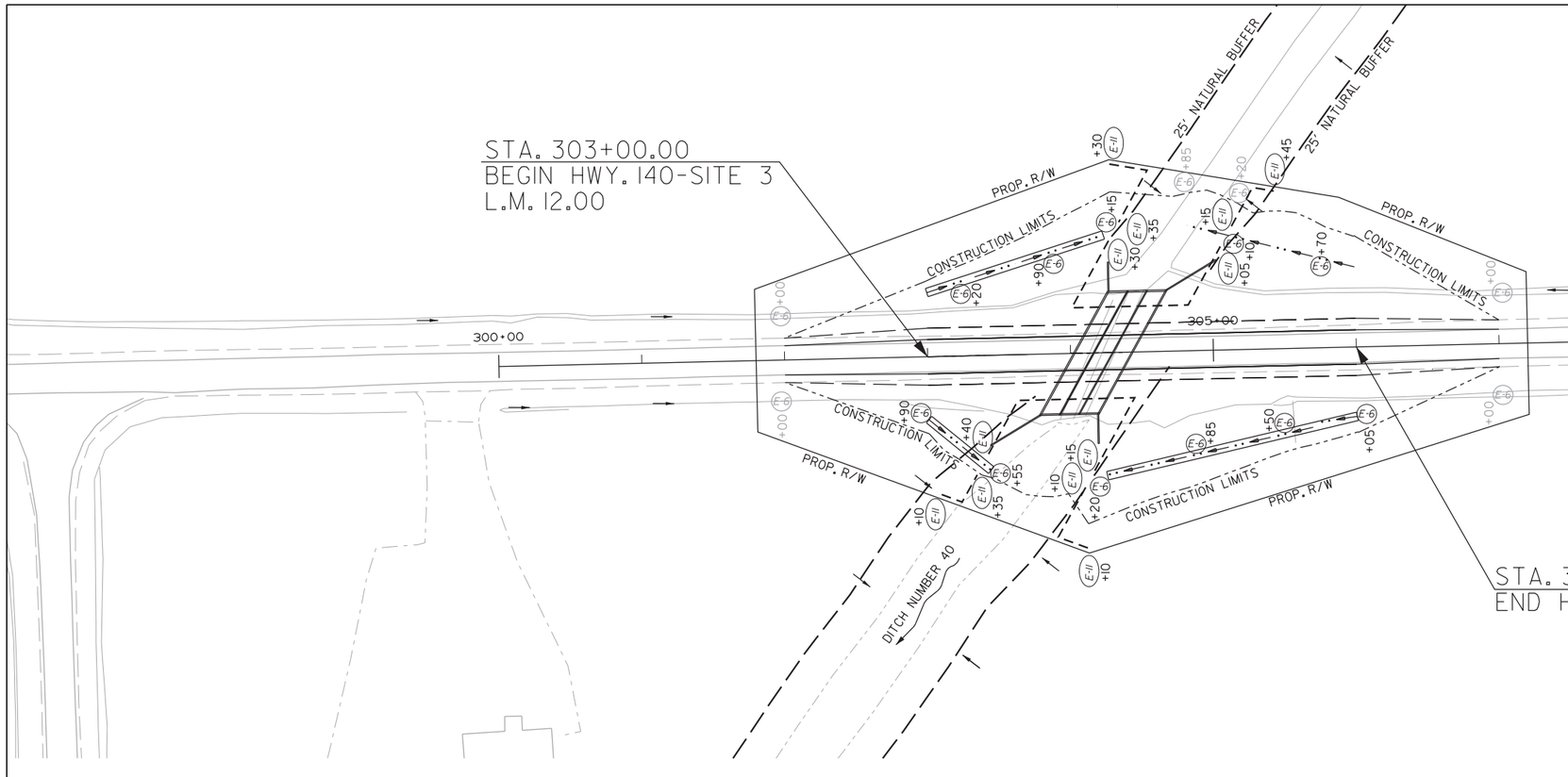

STATE OF ARKANSAS
LICENSED PROFESSIONAL ENGINEER
No. 13436
SHAUN A. ROBERSON
DIGITALLY SIGNED 8-13-2021

HWY. 140

SILT FENCE	(E-11)	LIN. FT.
STA. 303+10 TO 303+35	RT.	35
STA. 303+40 TO 304+15	RT.	185
STA. 304+10 TO 304+10	RT.	65
STA. 304+30 TO 304+35	LT.	70
STA. 304+30 TO 305+05	LT.	180
STA. 305+10 TO 305+45	LT.	45

ROCK DITCH CHECK	(E-6)	INSTALLATION
STA. 302+00	LT.	RETAIN
STA. 302+00	RT.	RETAIN
STA. 302+90	RT.	I
STA. 303+55	RT.	I
STA. 303+20	LT.	I
STA. 303+90	LT.	I
STA. 304+15	LT.	I
STA. 304+20	RT.	I
STA. 304+85	LT.	RETAIN
STA. 304+85	RT.	I
STA. 305+10	LT.	I
STA. 305+20	LT.	RETAIN
STA. 305+50	RT.	I
STA. 305+70	LT.	I
STA. 306+00	LT.	RETAIN
STA. 306+00	RT.	RETAIN
STA. 306+05	RT.	I

LEGEND

(E-6) = ROCK DITCH CHECKS (E-11) = SILT FENCE

EROSION CONTROL MEASURES TO BE PLACED DURING APPROPRIATE STAGES. THESE DEVICES SHALL BE LEFT IN PLACE AS LONG AS REQUIRED TO CONTROL EROSION.

REVISIONS

DATE	REVISION

HWY. 140 - SITE 3
TEMPORARY EROSION CONTROL DETAILS
STAGE I

PJoseph 8/13/2021 5:23:14 PM
WORKSPACE: AHTD
L:\20\TO\T01642 - ARDOT Job 100955\Drawings\r100955-100996_EC_STGI_Hwy.140_Site 3.dgn
REVISED DATE:

DATE REVISED	DATE FILMED	DATE REVISED	DATE FILMED	FED.RD. DIST.NO.	STATE	FED.AID PROJ.NO.	SHEET NO.	TOTAL SHEETS
01-05-2022				6	ARK.			
				JOB NO.		100955	57	356
				(2)	TEMPORARY EROSION CONTROL DETAILS			

HWY. 158

SILT FENCE	(E-11)	LIN. FT.
STA. 103+90 TO 103+90	RT.	RETAIN
STA. 104+30 TO 104+30	RT.	RETAIN
STA. 105+00 TO 105+00	LT.	RETAIN

ROCK DITCH CHECK	(E-6)	INSTALLATION
STA. 102+25	LT.	RETAIN
STA. 102+25	RT.	RETAIN
STA. 103+70	RT.	I
STA. 104+80	LT.	I

STATE OF ARKANSAS
LICENSED PROFESSIONAL ENGINEER
No. 13436
SHAUN A. ROBERSON
DIGITALLY SIGNED 1-5-2022

N

STA. 103+25.00
BEGIN HWY. 158-SITE 1
L.M. 10.47

POB 100+00.00
PC 102+01.31
100+00
PROP. R/W
CONSTRUCTION LIMITS
C.L. HWY. 158
105+00
PROP. R/W
PI 104+69.12
CONSTRUCTION LIMITS

LEGEND

(E-6) = ROCK DITCH CHECKS
(E-11) = SILT FENCE

EROSION CONTROL MEASURES TO BE PLACED DURING APPROPRIATE STAGES. THESE DEVICES SHALL BE LEFT IN PLACE AS LONG AS REQUIRED TO CONTROL EROSION.

REVISIONS

DATE	REVISION

HWY. 158

ROCK DITCH CHECK	(E-6)	INSTALLATION
STA. 105+05	RT.	RETAIN
STA. 106+10	LT.	RETAIN
STA. 106+55	RT.	RETAIN
STA. 106+67	RT.	I
STA. 107+30	LT.	I
STA. 107+60	LT.	RETAIN
STA. 109+60	RT.	RETAIN
STA. 109+75	RT.	RETAIN
STA. 110+30	RT.	I
STA. 110+95	LT.	I
STA. 111+90	RT.	I
STA. 113+70	LT.	I
STA. 114+50	RT.	I
STA. 115+50	LT.	RETAIN
STA. 115+50	RT.	RETAIN

HWY. 158

SILT FENCE	(E-11)	LIN. FT.
STA. 105+40 TO 105+40	LT.	RETAIN
STA. 107+20 TO 107+80	RT.	RETAIN
STA. 107+60 TO 107+80	LT.	RETAIN
STA. 109+70 TO 110+35	LT.	RETAIN
STA. 109+70 TO 110+10	RT.	RETAIN
STA. 111+35 TO 111+60	RT.	RETAIN
STA. 111+90 TO 112+75	RT.	RETAIN
STA. 113+05 TO 113+05	LT.	RETAIN
STA. 113+45 TO 113+45	LT.	RETAIN

25' NATURAL BUFFER
PROP. R/W
CONSTRUCTION LIMITS
PT 107+36.91
PC 112+59.46
PT 115+32.24
110+00
115+00
118+00
105+00
PC 104+62.01
PI 113+33.98
PI 113+95.86
PI 104+69.12
T.C.E.
DITCH NUMBER 6
C.L. HWY. 158 DRIVE 112+35

STA. 114+50.00
END HWY. 158-SITE 1
L.M. 10.26

HWY. 158
TEMPORARY EROSION CONTROL DETAILS
STAGE 1

CGervasini 1/5/2022 1:57:23 PM
WORKSPACE: AHTD
L:\2017\17017642 - ARDOT Job 100955\Drawings\r100955-100763_EC_STG1_Hwy_158.dgn
REVISED DATE:

DATE REVISED	DATE FILMED	DATE REVISED	DATE FILMED	FED.RD. DIST.NO.	STATE	FED.AID PROJ.NO.	SHEET NO.	TOTAL SHEETS
				6	ARK.			
				JOB NO.		100955	58	356
				(2)	TEMPORARY EROSION CONTROL DETAILS			

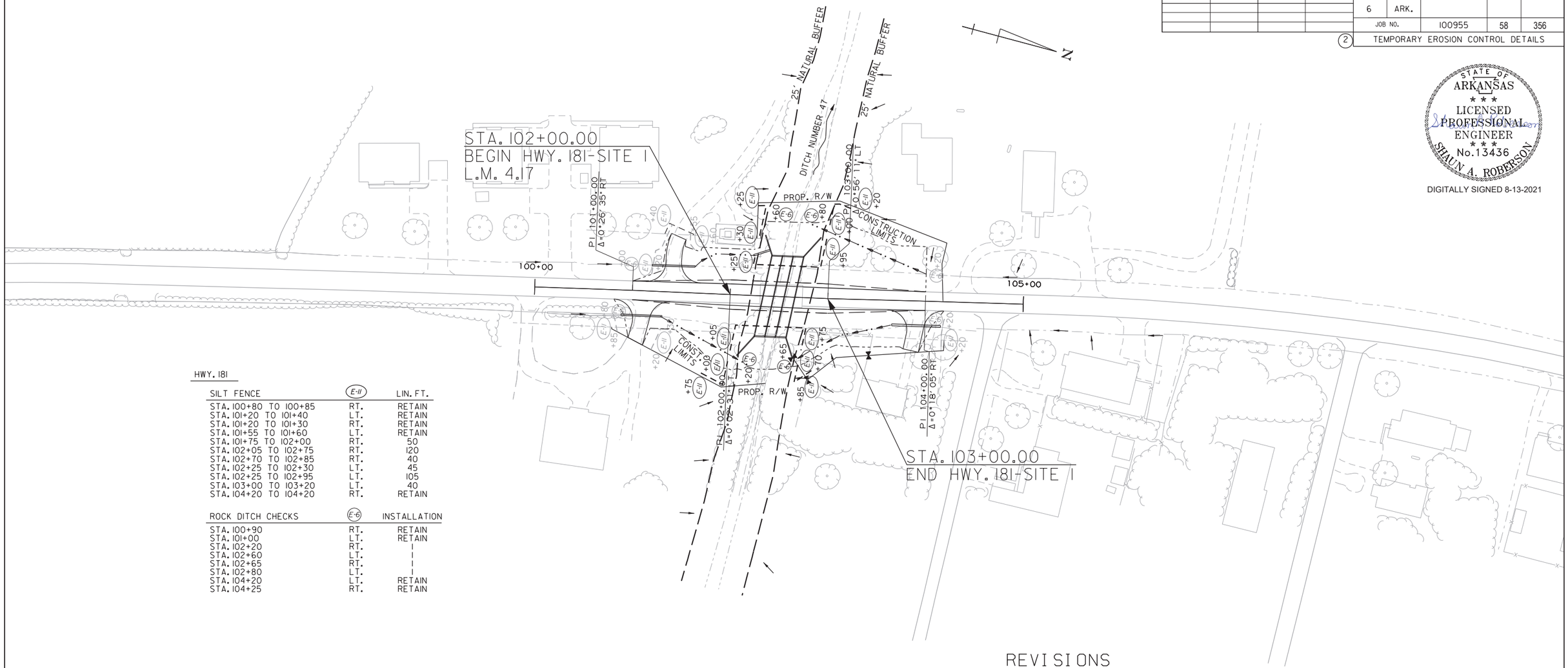

HWY. 181

SILT FENCE	(E-11)	LIN. FT.
STA. 100+80 TO 100+85	RT.	RETAIN
STA. 101+20 TO 101+40	LT.	RETAIN
STA. 101+20 TO 101+30	RT.	RETAIN
STA. 101+55 TO 101+60	LT.	RETAIN
STA. 101+75 TO 102+00	RT.	50
STA. 102+05 TO 102+75	RT.	120
STA. 102+70 TO 102+85	RT.	40
STA. 102+25 TO 102+30	LT.	45
STA. 102+25 TO 102+95	LT.	105
STA. 103+00 TO 103+20	LT.	40
STA. 104+20 TO 104+20	RT.	RETAIN

ROCK DITCH CHECKS	(E-6)	INSTALLATION
STA. 100+90	RT.	RETAIN
STA. 101+00	LT.	RETAIN
STA. 102+20	RT.	1
STA. 102+60	LT.	1
STA. 102+65	RT.	1
STA. 102+80	LT.	1
STA. 104+20	LT.	RETAIN
STA. 104+25	RT.	RETAIN

LEGEND

(E-6) = ROCK DITCH CHECKS

(E-11) = SILT FENCE

EROSION CONTROL MEASURES TO BE PLACED DURING APPROPRIATE STAGES. THESE DEVICES SHALL BE LEFT IN PLACE AS LONG AS REQUIRED TO CONTROL EROSION.

STATE OF ARKANSAS
LICENSED PROFESSIONAL ENGINEER
No.13436
SHAUN A. ROBERSON
DIGITALLY SIGNED 8-13-2021

REVISIONS

DATE	REVISION

HWY. 181 - SITE 1
TEMPORARY EROSION CONTROL DETAILS
STAGE 1

PJoseph 8/13/2021 5:23:15 PM
WORKSPACE: AHTD
L:\2017\17017642 - ARDOT Job 100955\Drawings\r100955_EC_STG1_Hwy_181_Site 1.dgn
REVISED DATE:

DATE REVISED	DATE FILMED	DATE REVISED	DATE FILMED	FED.RD. DIST.NO.	STATE	FED.AID PROJ.NO.	SHEET NO.	TOTAL SHEETS
				6	ARK.			
				JOB NO.		100955	59	356

(2) TEMPORARY EROSION CONTROL DETAILS



DIGITALLY SIGNED 8-13-2021

HWY. 181

SILT FENCE	(E-11)	LIN. FT.
STA. 201+45 TO 202+55	LT.	255
STA. 202+15 TO 202+40	RT.	RETAIN
STA. 202+40 TO 202+40	LT.	50
STA. 202+70 TO 203+75	RT.	RETAIN
STA. 203+20 TO 203+45	RT.	35
STA. 203+05 TO 204+30	RT.	225

ROCK DITCH CHECK	(E-6)	INSTALLATION
STA. 201+00	LT.	RETAIN
STA. 201+00	RT.	RETAIN
STA. 202+30	LT.	I
STA. 203+25	RT.	I
STA. 203+50	LT.	I
STA. 204+50	LT.	RETAIN
STA. 204+50	RT.	RETAIN

LEGEND

(E-6) = ROCK DITCH CHECKS (E-11) = SILT FENCE

EROSION CONTROL MEASURES TO BE PLACED DURING APPROPRIATE STAGES. THESE DEVICES SHALL BE LEFT IN PLACE AS LONG AS REQUIRED TO CONTROL EROSION.

REVISIONS

DATE	REVISION

HWY. 181 - SITE 2
TEMPORARY EROSION CONTROL DETAILS
STAGE 1

PJoseph 8/13/2021 5:23:16 PM
WORKSPACE: AHTD
L:\20\7\7017642 - ARDOT Job 100955\Drawings\r100955-100996_EC_STG1_Hwy.181_Site 2.dgn
REVISED DATE:

DATE REVISED	DATE FILMED	DATE REVISED	DATE FILMED

FED.RD. DIST.NO.	STATE	FED.AID PROJ.NO.	SHEET NO.	TOTAL SHEETS
6	ARK.			
JOB NO.		100955	60	356

(2) TEMPORARY EROSION CONTROL DETAILS

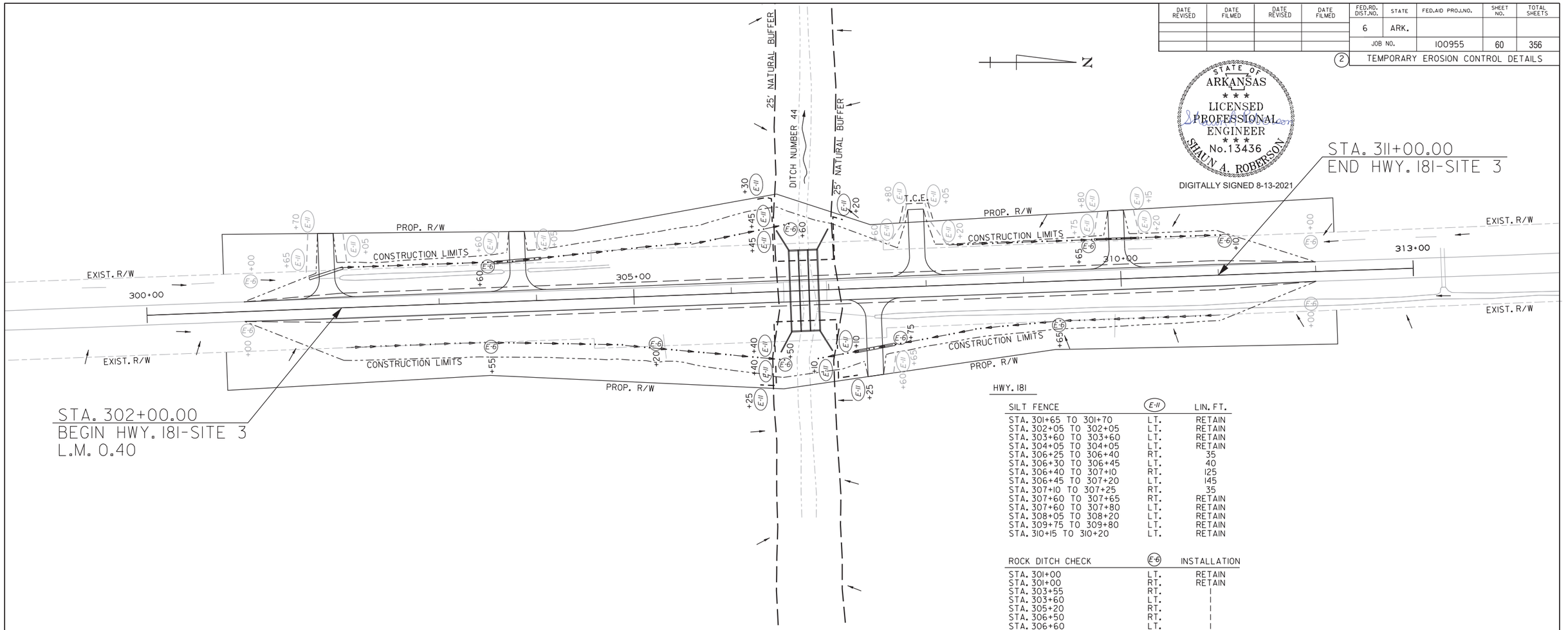

STATE OF ARKANSAS
LICENSED PROFESSIONAL ENGINEER
No.13436
SHAUN A. ROBERSON
DIGITALLY SIGNED 8-13-2021

HWY. 181

SILT FENCE	(E-11)	LIN. FT.
STA. 301+65 TO 301+70	LT.	RETAIN
STA. 302+05 TO 302+05	LT.	RETAIN
STA. 303+60 TO 303+60	LT.	RETAIN
STA. 304+05 TO 304+05	LT.	RETAIN
STA. 306+25 TO 306+40	RT.	35
STA. 306+30 TO 306+45	LT.	40
STA. 306+40 TO 307+10	RT.	125
STA. 306+45 TO 307+20	LT.	145
STA. 307+10 TO 307+25	RT.	35
STA. 307+60 TO 307+65	RT.	RETAIN
STA. 307+60 TO 307+80	LT.	RETAIN
STA. 308+05 TO 308+20	LT.	RETAIN
STA. 309+75 TO 309+80	LT.	RETAIN
STA. 310+15 TO 310+20	LT.	RETAIN

ROCK DITCH CHECK	(E-6)	INSTALLATION
STA. 301+00	LT.	RETAIN
STA. 301+00	RT.	RETAIN
STA. 303+55	RT.	I
STA. 303+60	LT.	I
STA. 305+20	RT.	I
STA. 306+50	RT.	I
STA. 306+60	LT.	I
STA. 306+75	RT.	I
STA. 309+65	RT.	I
STA. 309+65	LT.	I
STA. 311+10	LT.	I
STA. 312+00	LT.	RETAIN
STA. 312+00	RT.	RETAIN

LEGEND

(E-6) = ROCK DITCH CHECKS (E-11) = SILT FENCE

EROSION CONTROL MEASURES TO BE PLACED DURING APPROPRIATE STAGES. THESE DEVICES SHALL BE LEFT IN PLACE AS LONG AS REQUIRED TO CONTROL EROSION.

REVISIONS

DATE	REVISION

HWY. 181 - SITE 3
TEMPORARY EROSION CONTROL DETAILS
STAGE I

PJoseph 8/13/2021 5:23:17 PM
WORKSPACE: AHTD
L:\2017\170176\42 - ARDOT Job 100955\Drawings\r100955_EC_ST01_Hwy.181_Site 3.dgn
REVISED DATE:

DATE REVISED	DATE FILMED	DATE REVISED	DATE FILMED	FED.RD. DIST.NO.	STATE	FED.AID PROJ.NO.	SHEET NO.	TOTAL SHEETS
				6	ARK.			
				JOB NO.		100955	61	356

(2) MAINTENANCE OF TRAFFIC DETAILS

1	ROAD CLOSED	(1) R11-2 (48" X 30") 8' BARR. TYP. III LT. 8' BARR. TYP. III RT.
2	ROAD CLOSED 500 FT	(1) W20-3 (48" X 48")
3	ROAD CLOSED 1000 FT	(1) W20-3 (48" X 48")
4	ROAD CLOSED 1500 FT	(1) W20-3 (48" X 48")
5	END ROAD WORK	(1) G20-2 (48" X 24")
6	ROAD CLOSED 4.4 MILES AHEAD LOCAL TRAFFIC ONLY	(1) R11-3A (60" X 30")
7	ROAD CLOSED 1.0 MILE AHEAD LOCAL TRAFFIC ONLY	(1) R11-3A (60" X 30")
8	ROAD CLOSED 1.4 MILES AHEAD LOCAL TRAFFIC ONLY	(1) R11-3A (60" X 30")
9	ROAD CLOSED HWY. 181 SOUTH LOCAL TRAFFIC ONLY	(1) R11-3A (60" X 30")
10	ROAD CLOSED 1.3 MILES AHEAD LOCAL TRAFFIC ONLY	(1) R11-3A (60" X 30")
11	ROAD CLOSED 3.7 MILES AHEAD LOCAL TRAFFIC ONLY	(1) R11-3A (60" X 30")
12	DETOUR 158	(1) M4-10R (48" X 18") (1) M1-5 (MODIFIED) (24" X 24")
13	DETOUR 158	(1) M4-10L (48" X 18") (1) M1-5 (MODIFIED) (24" X 24")
14	DETOUR 181	(1) M4-10R (48" X 18") (1) M1-5 (MODIFIED) (24" X 24")
15	DETOUR 181	(1) M4-10L (48" X 18") (1) M1-5 (MODIFIED) (24" X 24")
16	HWY. 181 DETOUR USE EXIT 44	(1) SPECIAL (48" X 36")
17	HWY. 181 DETOUR USE EXIT 48	(1) SPECIAL (48" X 36")

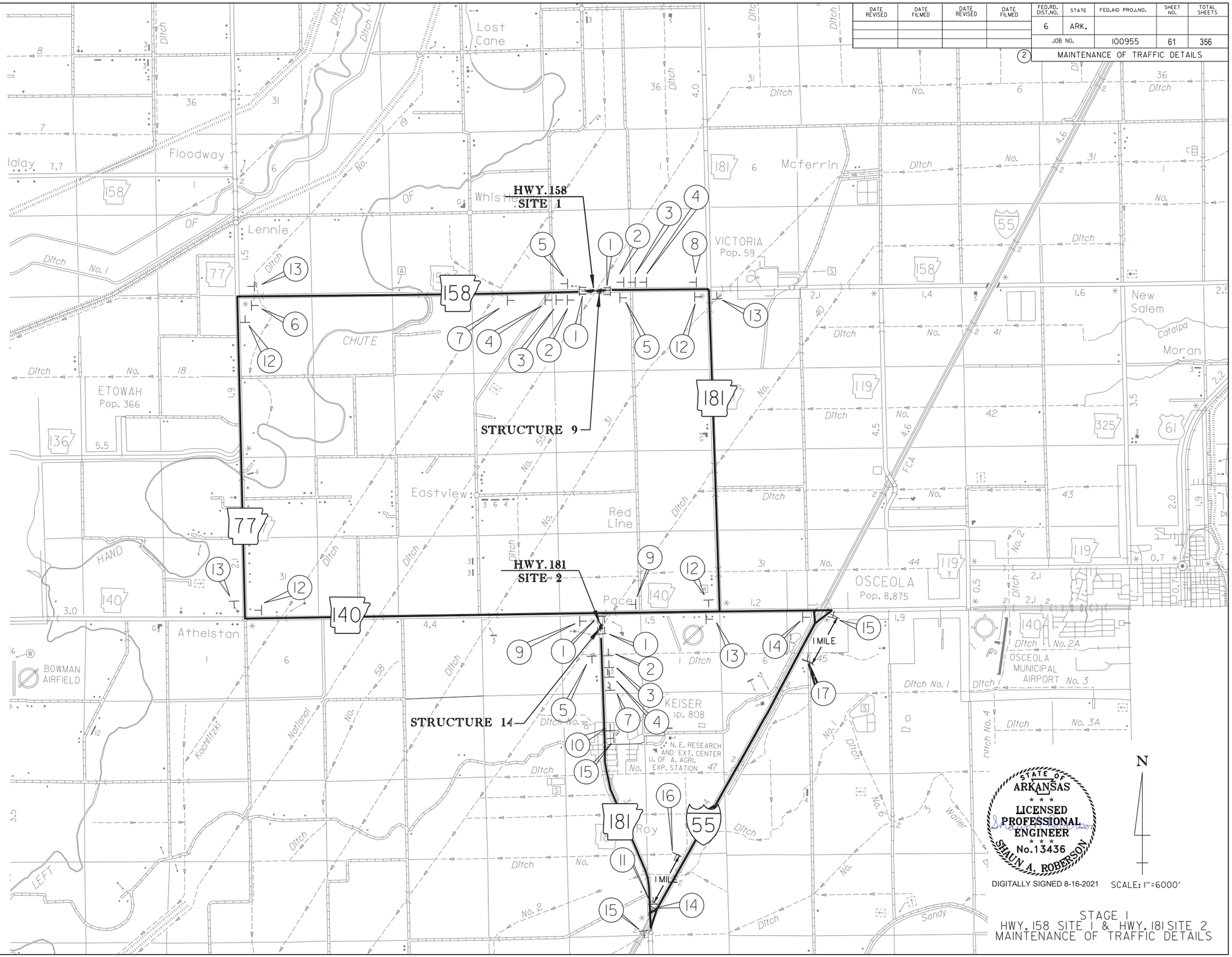

STATE OF ARKANSAS
LICENSED PROFESSIONAL ENGINEER
No. 13436
SHAUN A. ROBERSON

DIGITALLY SIGNED 8-16-2021

SCALE: 1"=6000'

STAGE 1
HWY. 158 SITE 1 & HWY. 181 SITE 2
MAINTENANCE OF TRAFFIC DETAILS

PJoseph 8/16/2021 4:16:32 PM
WORKSPACE: AHTD
L:\2017\17017642 - ARDOT Job 100955\Drawings\r100955_MOT_DET_HWY. 158 SITE 1 & HWY. 181 SITE 2.dgn
REVISED DATE:

DATE REVISED	DATE FILMED	DATE REVISED	DATE FILMED	FED.RD. DIST.NO.	STATE	FED.AID PROJ.NO.	SHEET NO.	TOTAL SHEETS
				6	ARK.			
				JOB NO.		100955	62	356

2 MAINTENANCE OF TRAFFIC DETAILS

1	ROAD CLOSED	(1) RII-2 (48" X 30") 8' BARR. TYP. III LT. 8' BARR. TYP. III RT.
2	ROAD CLOSED 500 FT	(1) W20-3 (48" X 48")
3	ROAD CLOSED 1000 FT	(1) W20-3 (48" X 48")
4	ROAD CLOSED 1500 FT	(1) W20-3 (48" X 48")
5	END ROAD WORK	(1) G20-2 (48" X 24")
6	ROAD CLOSED 6.4 MILES AHEAD LOCAL TRAFFIC ONLY	(1) RII-3A (60" X 30")
7	ROAD CLOSED 1.0 MILE AHEAD LOCAL TRAFFIC ONLY	(1) RII-3A (60" X 30")
8	ROAD CLOSED 1.3 MILES AHEAD LOCAL TRAFFIC ONLY	(1) RII-3A (60" X 30")
9	ROAD CLOSED 1.7 MILES AHEAD LOCAL TRAFFIC ONLY	(1) RII-3A (60" X 30")
10	ROAD CLOSED 2.1 MILES AHEAD LOCAL TRAFFIC ONLY	(1) RII-3A (60" X 30")
11	ROAD CLOSED HWY. 77 SOUTH LOCAL TRAFFIC ONLY	(1) RII-3A (60" X 30")
12	ROAD CLOSED HWY. 77 NORTH LOCAL TRAFFIC ONLY	(1) RII-3A (60" X 30")
13	DETOUR NORTH 77	(1) M4-10R (48" X 18") (1) M3-1 (24"X12") (1) MI-5 (MODIFIED) (24" X 24")
14	DETOUR NORTH 77	(1) M4-10L (48" X 18") (1) M3-1 (24"X12") (1) MI-5 (MODIFIED) (24" X 24")
15	DETOUR SOUTH 77	(1) M4-10R (48" X 18") (1) M3-3 (24"X12") (1) MI-5 (MODIFIED) (24" X 24")
16	DETOUR SOUTH 77	(1) M4-10L (48" X 18") (1) M3-3 (24"X12") (1) MI-5 (MODIFIED) (24" X 24")
17	DETOUR 77	(1) M4-10R (48" X 18") (1) MI-5 (MODIFIED) (24" X 24")
18	DETOUR 77	(1) M4-10L (48" X 18") (1) MI-5 (MODIFIED) (24" X 24")
19	DETOUR 77	(1) M4-8 (24" X 12") (1) M6-3 (21" X 15") (1) MI-5 (MODIFIED) (24" X 24")

STRUCTURE 2

HWY. 77 SITE 2

HWY. 77 SITE 1

STRUCTURE 1

STATE OF ARKANSAS
LICENSED PROFESSIONAL ENGINEER
No. 13436
SHAUN A. ROBERSON
DIGITALLY SIGNED 8-16-2021

N

SCALE: 1"=7000'

STAGE 2
HWY. 77 SITE 1 & HWY. 77 SITE 2
MAINTENANCE OF TRAFFIC DETAILS

PJoseph 8/16/2021 4:16:33 PM
WORKSPACE: AHTD
L:\20T\170T642 - ARDOT Job 100955\Drawings\r100955_MOT_DET_HWY. 77 SITE 1 & HWY. 77 SITE 2.dgn
REVISED DATE:

DATE REVISED	DATE FILMED	DATE REVISED	DATE FILMED	FED.RD. DIST.NO.	STATE	FED.AID PROJ.NO.	SHEET NO.	TOTAL SHEETS
				6	ARK.			
				JOB NO.		100955	63	356

2 MAINTENANCE OF TRAFFIC DETAILS

1 ROAD CLOSED — (1) RII-2 (48" X 30") 8' BARR. TYP. III LT. 8' BARR. TYP. III RT.

2 ROAD CLOSED 500 FT — (1) W20-3 (48" X 48")

3 ROAD CLOSED 1000 FT — (1) W20-3 (48" X 48")

4 ROAD CLOSED 1500 FT — (1) W20-3 (48" X 48")

5 END ROAD WORK — (1) G20-2 (48" X 24")

6 ROAD CLOSED 6.2 MILES AHEAD LOCAL TRAFFIC ONLY — (1) RII-3A (60" X 30")

7 ROAD CLOSED 1.0 MILE AHEAD LOCAL TRAFFIC ONLY — (1) RII-3A (60" X 30")

8 ROAD CLOSED 1.3 MILES AHEAD LOCAL TRAFFIC ONLY — (1) RII-3A (60" X 30")

9 ROAD CLOSED 5.3 MILES AHEAD LOCAL TRAFFIC ONLY — (1) RII-3A (60" X 30")

10 ROAD CLOSED 3.0 MILE AHEAD LOCAL TRAFFIC ONLY — (1) RII-3A (60" X 30")

11 ROAD CLOSED 1.7 MILES AHEAD LOCAL TRAFFIC ONLY — (1) RII-3A (60" X 30")

12 ROAD CLOSED 2.8 MILES AHEAD LOCAL TRAFFIC ONLY — (1) RII-3A (60" X 30")

13 ROAD CLOSED HWY. 77 SOUTH LOCAL TRAFFIC ONLY — (1) RII-3A (60" X 30")

14 DETOUR — (1) M4-10R (48" X 18"); 77 — (1) MI-5 (MODIFIED) (24" X 24")

15 DETOUR — (1) M4-10L (48" X 18"); 77 — (1) MI-5 (MODIFIED) (24" X 24")

16 DETOUR — (1) M4-10R (48" X 18"); 140 — (1) MI-5 (MODIFIED) (24" X 24")

17 DETOUR — (1) M4-10L (48" X 18"); 140 — (1) MI-5 (MODIFIED) (24" X 24")

18 DETOUR — (1) M4-8 (24" X 12"); (1) M6-3 (21" X 15"); 77 — (1) MI-5 (MODIFIED) (24" X 24")

STRUCTURE 3
HWY. 77
SITE 2

STRUCTURE 8
HWY. 140
SITE 2

STATE OF ARKANSAS
LICENSED PROFESSIONAL ENGINEER
No. 13436
SHAUN A. ROBERSON
DIGITALLY SIGNED 8-16-2021

N

SCALE: 1"=7000'

STAGE 3
HWY. 77 SITE 2 & HWY. 140 SITE 2
MAINTENANCE OF TRAFFIC DETAILS

PJoseph 8/16/2021 4:16:34 PM
WORKSPACE: AHTD
L:\201\T01\7642 - ARDOT Job 100955\Drawings\r100955_MOT_DET_HWY. 77 SITE 2 & HWY. 140 SITE 2.dgn
REVISED DATE:

DATE REVISED	DATE FILMED	DATE REVISED	DATE FILMED	FED.RD. DIST.NO.	STATE	FED.AID PROJ.NO.	SHEET NO.	TOTAL SHEETS
				6	ARK.			
				JOB NO.		100955	64	356

(2) MAINTENANCE OF TRAFFIC DETAILS

NOTE: C.R. 524 AND HWY. 158 CONNECTOR NEEDS TO BE CONSTRUCTED PRIOR TO THE BRIDGE WORK AT STA. 230+00 IN ORDER TO FACILITATE THE ROAD CLOSURE ON THE NORTH END OF THE BRIDGE.

(1) RII-2 (48" X 30")
8' BARR. TYP. III LT.
8' BARR. TYP. III RT.

(2) ROAD CLOSED 500 FT — (1) W20-3 (48" X 48")

(3) ROAD CLOSED 1000 FT — (1) W20-3 (48" X 48")

(4) ROAD CLOSED 1500 FT — (1) W20-3 (48" X 48")

(5) END ROAD WORK — (1) G20-2 (48" X 24")

(6) ROAD CLOSED 6.2 MILES AHEAD LOCAL TRAFFIC ONLY — (1) RII-3A (60" X 30")

(7) ROAD CLOSED 1.0 MILE AHEAD LOCAL TRAFFIC ONLY — (1) RII-3A (60" X 30")

(8) ROAD CLOSED 1.3 MILES AHEAD LOCAL TRAFFIC ONLY — (1) RII-3A (60" X 30")

(9) ROAD CLOSED 5.3 MILES AHEAD LOCAL TRAFFIC ONLY — (1) RII-3A (60" X 30")

(10) ROAD CLOSED 1.6 MILE AHEAD LOCAL TRAFFIC ONLY — (1) RII-3A (60" X 30")

(11) ROAD CLOSED 2.7 MILES AHEAD LOCAL TRAFFIC ONLY — (1) RII-3A (60" X 30")

(12) ROAD CLOSED 4.2 MILES AHEAD LOCAL TRAFFIC ONLY — (1) RII-3A (60" X 30")

(13) ROAD CLOSED HWY. 77 SOUTH LOCAL TRAFFIC ONLY — (1) RII-3A (60" X 30")

(14) DETOUR — (1) M4-10R (48" X 18"); 77 — (1) MI-5 (MODIFIED) (24" X 24")

(15) DETOUR — (1) M4-10L (48" X 18"); 77 — (1) MI-5 (MODIFIED) (24" X 24")

(16) DETOUR — (1) M4-10R (48" X 18"); 140 — (1) MI-5 (MODIFIED) (24" X 24")

(17) DETOUR — (1) M4-10L (48" X 18"); 140 — (1) MI-5 (MODIFIED) (24" X 24")

(18) DETOUR — (1) M4-8 (24" X 12"); (1) M6-3 (21" X 15"); 77 — (1) MI-5 (MODIFIED) (24" X 24")

STRUCTURE 4

HWY. 77 SITE 2

STRUCTURE 7

HWY. 140 SITE 1



DIGITALLY SIGNED 8-16-2021

N

SCALE: 1"=7000'

STAGE 4
HWY. 77 SITE 2 & HWY. 140 SITE 1
MAINTENANCE OF TRAFFIC DETAILS

PJoseph 8/16/2021 4:16:35 PM
WORKSPACE: AHTD
L:\2017\1701642 - ARDOT Job 100955\Drawings\r100955_MOT_DET_HWY. 77 SITE 2 & HWY. 140 SITE 1.dgn
REVISED DATE:

DATE REVISED	DATE FILMED	DATE REVISED	DATE FILMED	FED.RD. DIST.NO.	STATE	FED.AID PROJ.NO.	SHEET NO.	TOTAL SHEETS
				6	ARK.			
				JOB NO.		100955	65	356

MAINTENANCE OF TRAFFIC DETAILS

1 — ROAD CLOSED — (1) R11-2 (48" X 30") 8' BARR. TYP. III LT. 8' BARR. TYP. III RT.

2 — ROAD CLOSED 500 FT — (1) W20-3 (48" X 48")

3 — ROAD CLOSED 1000 FT — (1) W20-3 (48" X 48")

4 — ROAD CLOSED 1500 FT — (1) W20-3 (48" X 48")

5 — END ROAD WORK — (1) G20-2 (48" X 24")

6 — ROAD CLOSED 1.8 MILES AHEAD LOCAL TRAFFIC ONLY — (1) R11-3A (60" X 30")

7 — ROAD CLOSED 1.0 MILE AHEAD LOCAL TRAFFIC ONLY — (1) R11-3A (60" X 30")

8 — ROAD CLOSED 5.2 MILES AHEAD LOCAL TRAFFIC ONLY — (1) R11-3A (60" X 30")

9 — ROAD CLOSED HWY. 77 SOUTH LOCAL TRAFFIC ONLY — (1) R11-3A (60" X 30")

10 — DETOUR — (1) M4-10R (48" X 18") 77 — (1) M1-5 (MODIFIED) (24" X 24")

11 — DETOUR — (1) M4-10L (48" X 18") 77 — (1) M1-5 (MODIFIED) (24" X 24")

12 — DETOUR — (1) M4-8 (24" X 12") (1) M6-3 (21" X 15") 77 — (1) M1-5 (MODIFIED) (24" X 24")

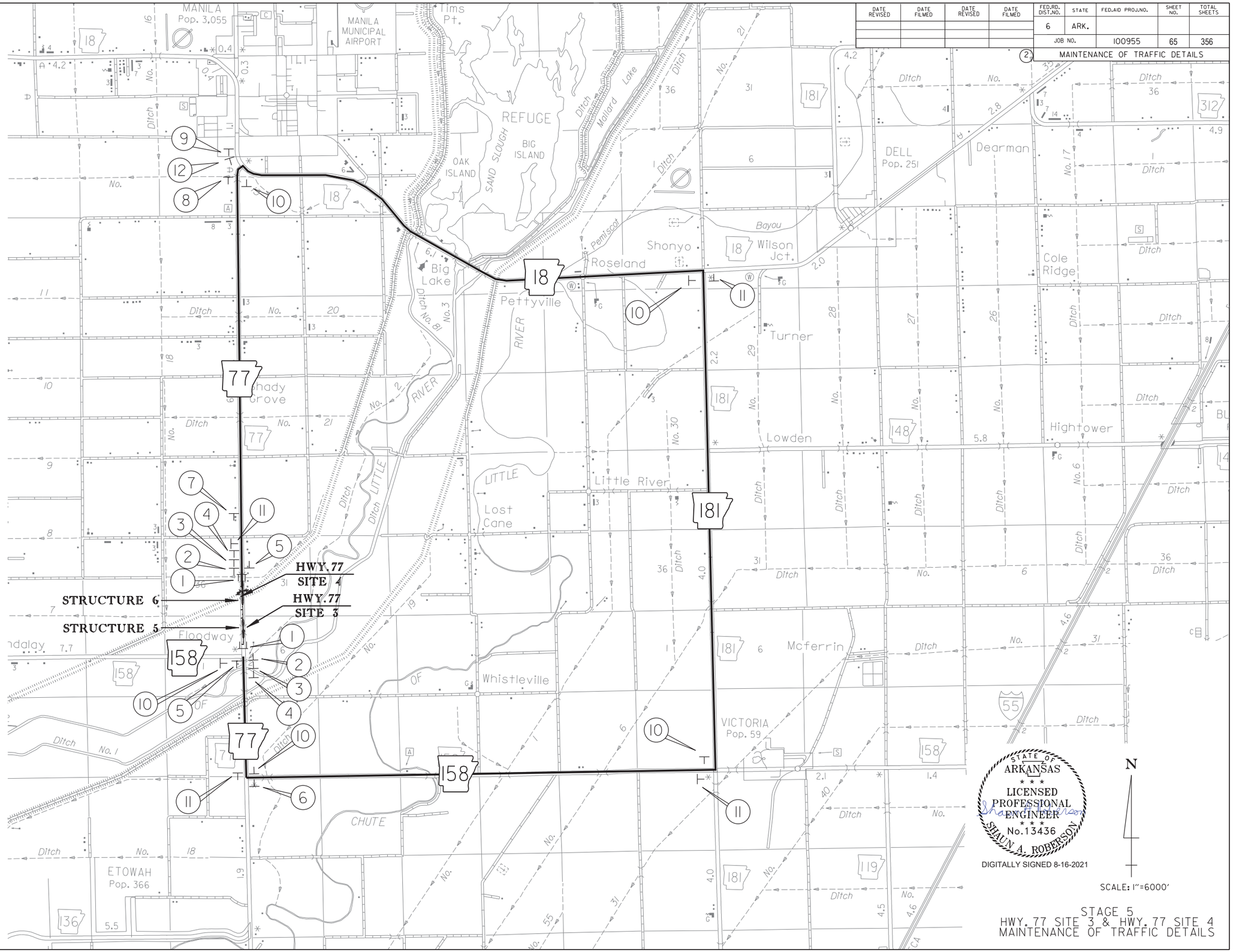

STATE OF ARKANSAS LICENSED PROFESSIONAL ENGINEER No. 13436 SHAUN A. ROBERSON

DIGITALLY SIGNED 8-16-2021

SCALE: 1"=6000'

STAGE 5
HWY. 77 SITE 3 & HWY. 77 SITE 4
MAINTENANCE OF TRAFFIC DETAILS

PJoseph 8/16/2021 4:16:37 PM
WORKSPACE: AHTD
L:\2017\17017642 - ARDOT Job 100955\Drawings\r100955_MOT_DET_HWY. 77 SITE 3 & HWY. 77 SITE 4.dgn
REVISED DATE:

DATE REVISED	DATE FILMED	DATE REVISED	DATE FILMED

FED.RD. DIST.NO.	STATE	FED.AID PROJ.NO.	SHEET NO.	TOTAL SHEETS
6	ARK.			
JOB NO.		100955	66	356

MAINTENANCE OF TRAFFIC DETAILS

1 — ROAD CLOSED — (1) R11-2 (48" X 30") 8' BARR. TYP. III LT. 8' BARR. TYP. III RT.

2 — ROAD CLOSED 500 FT — (1) W20-3 (48" X 48")

3 — ROAD CLOSED 1000 FT — (1) W20-3 (48" X 48")

4 — ROAD CLOSED 1500 FT — (1) W20-3 (48" X 48")

5 — END ROAD WORK — (1) G20-2 (48" X 24")

6 — ROAD CLOSED 3.6 MILES AHEAD LOCAL TRAFFIC ONLY — (1) R11-3A (60" X 30")

7 — ROAD CLOSED 1.0 MILE AHEAD LOCAL TRAFFIC ONLY — (1) R11-3A (60" X 30")

8 — ROAD CLOSED HWY. 181 NORTH LOCAL TRAFFIC ONLY — (1) R11-3A (60" X 30")

9 — ROAD CLOSED HWY. 181 SOUTH LOCAL TRAFFIC ONLY — (1) R11-3A (60" X 30")

10 — ROAD CLOSED 2.1 MILES AHEAD LOCAL TRAFFIC ONLY — (1) R11-3A (60" X 30")

11 — ROAD CLOSED 2.0 MILES AHEAD LOCAL TRAFFIC ONLY — (1) R11-3A (60" X 30")

12 — DETOUR NORTH 181 — (1) M4-10R (48" X 18") (1) M3-1 (24"X12") (1) M1-5 (MODIFIED) (24" X 24")

13 — DETOUR NORTH 181 — (1) M4-10L (48" X 18") (1) M3-1 (24"X12") (1) M1-5 (MODIFIED) (24" X 24")

14 — DETOUR SOUTH 181 — (1) M4-10R (48" X 18") (1) M3-3 (24"X12") (1) M1-5 (MODIFIED) (24" X 24")

15 — DETOUR SOUTH 181 — (1) M4-10L (48" X 18") (1) M3-3 (24"X12") (1) M1-5 (MODIFIED) (24" X 24")

16 — DETOUR 181 — (1) M4-10R (48" X 18") (1) M1-5 (MODIFIED) (24" X 24")

17 — DETOUR 181 — (1) M4-10L (48" X 18") (1) M1-5 (MODIFIED) (24" X 24")

18 — HWY. 181 DETOUR USE EXIT 44 — (1) SPECIAL (48" X 36")

19 — HWY. 181 DETOUR USE EXIT 48 — (1) SPECIAL (48" X 36")

20 — HWY. 181 DETOUR USE EXIT 53 — (1) SPECIAL (48" X 36")

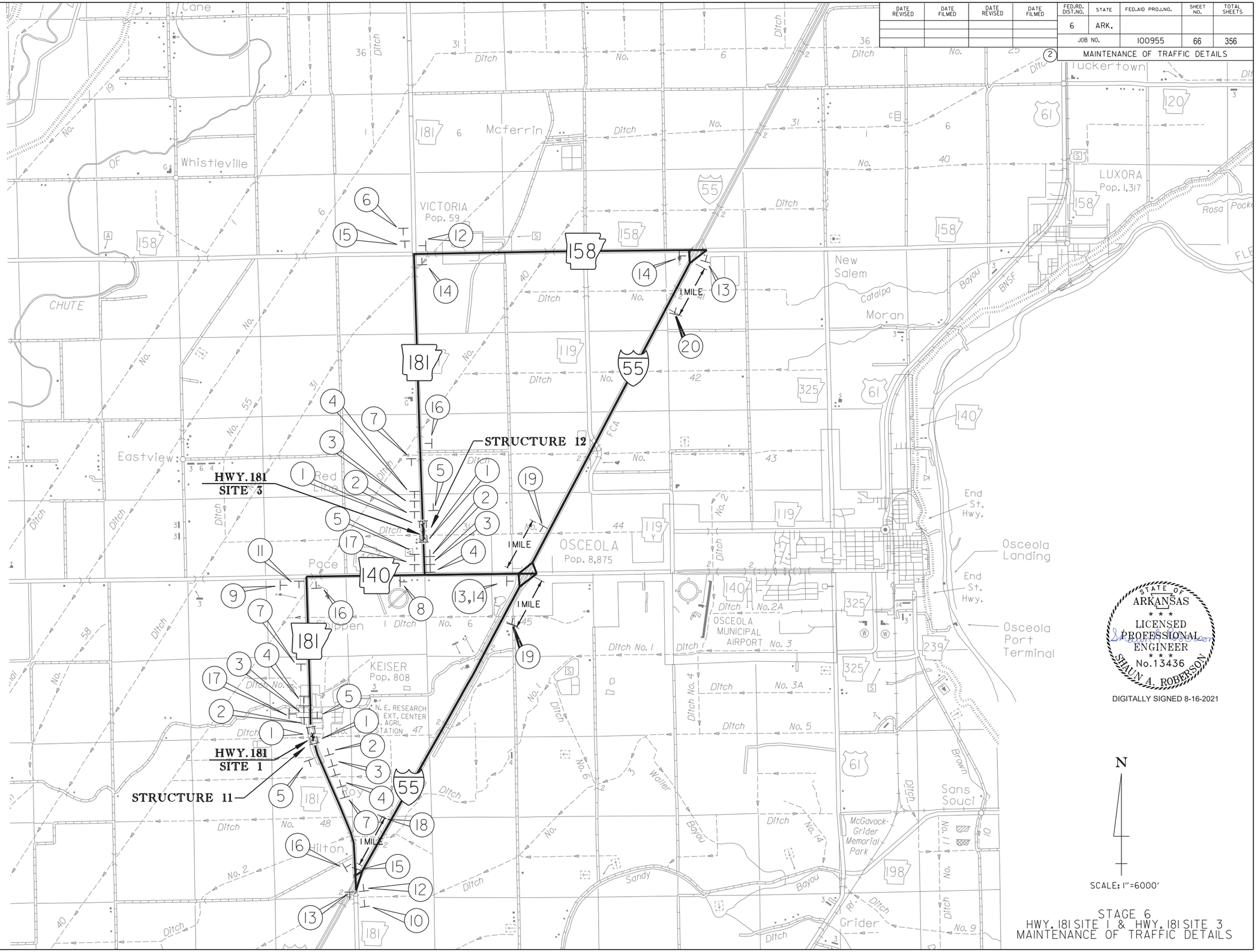

STATE OF ARKANSAS
LICENSED PROFESSIONAL ENGINEER
No. 13436
SHAUN A. ROBERSON

DIGITALLY SIGNED 8-16-2021

STAGE 6
HWY. 181 SITE 1 & HWY. 181 SITE 3
MAINTENANCE OF TRAFFIC DETAILS

PJoseph 8/16/2021 4:16:38 PM
WORKSPACE: AHTD
L:\2017\17017642 - ARDOT Job 100955\Drawings\r100955_MOT_DET_HWY.181 SITE 1 & HWY.181 SITE 3.dgn
REVISED DATE:

DATE REVISED	DATE FILMED	DATE REVISED	DATE FILMED	FED.RD. DIST.NO.	STATE	FED.AID PROJ.NO.	SHEET NO.	TOTAL SHEETS
				6	ARK.			
				JOB NO.		100955	67	356

2 MAINTENANCE OF TRAFFIC DETAILS

1 — ROAD CLOSED — (1) RII-2 (48" X 30") 8' BARR. TYP. III LT. 8' BARR. TYP. III RT.

2 — ROAD CLOSED 500 FT — (1) W20-3 (48" X 48")

3 — ROAD CLOSED 1000 FT — (1) W20-3 (48" X 48")

4 — ROAD CLOSED 1500 FT — (1) W20-3 (48" X 48")

5 — END ROAD WORK — (1) G20-2 (48" X 24")

6 — ROAD CLOSED 7.5 MILES AHEAD LOCAL TRAFFIC ONLY — (1) RII-3A (60" X 30")

7 — ROAD CLOSED 1.0 MILE AHEAD LOCAL TRAFFIC ONLY — (1) RII-3A (60" X 30")

8 — ROAD CLOSED 6.0 MILES AHEAD LOCAL TRAFFIC ONLY — (1) RII-3A (60" X 30")

9 — ROAD CLOSED HWY. 77 SOUTH LOCAL TRAFFIC ONLY — (1) RII-3A (60" X 30")

10 — ROAD CLOSED 1.2 MILES AHEAD LOCAL TRAFFIC ONLY — (1) RII-3A (60" X 30")

11 — ROAD CLOSED 2.8 MILES AHEAD LOCAL TRAFFIC ONLY — (1) RII-3A (60" X 30")

12 — ROAD CLOSED HWY. 140 EAST LOCAL TRAFFIC ONLY — (1) RII-3A (60" X 30")

13 — ROAD CLOSED 1.6 MILES AHEAD LOCAL TRAFFIC ONLY — (1) RII-3A (60" X 30")

14 — DETOUR — (1) M4-10R (48" X 18"); 77 — (1) MI-5 (MODIFIED) (24" X 24")

15 — DETOUR — (1) M4-10L (48" X 18"); 77 — (1) MI-5 (MODIFIED) (24" X 24")

16 — DETOUR — (1) M4-10R (48" X 18"); 140 — (1) MI-5 (MODIFIED) (24" X 24")

17 — DETOUR — (1) M4-10L (48" X 18"); 140 — (1) MI-5 (MODIFIED) (24" X 24")

18 — HWY. 140 DETOUR USE EXIT 44 — (1) SPECIAL (48" X 36")

19 — HWY. 140 DETOUR USE EXIT 48 — (1) SPECIAL (48" X 36")

20 — DETOUR — (1) M4-8 (24" X 12"); (1) M6-3 (21" X 15"); 77 — (1) MI-5 (MODIFIED) (24" X 24")

HWY. 77 SITE 5
STRUCTURE 10

HWY. 140 SITE 3
STRUCTURE 13

CRAIGHEAD COUNTY
POINSETT COUNTY
MISSISSIPPI COUNTY

NOTE: TWO SITES HAVE BEEN PAIRED UP FOR EACH MAINTENANCE OF TRAFFIC DETAIL SO THAT EACH SITE CAN BE CONSTRUCTED WITHOUT IMPACTING THE OTHER SITE'S ALTERNATIVE ROUTE AND TO MAKE SURE NO PARCELS ARE BLOCKED FOR ACCESS.

N

SCALE: 1"=9000'

STATE OF ARKANSAS
LICENSED PROFESSIONAL ENGINEER
No.13436
SHAUN A. ROBERSON
DIGITALLY SIGNED 8-16-2021

STAGE 7
HWY. 77 SITE 5 & HWY. 140 SITE 3
MAINTENANCE OF TRAFFIC DETAILS

Pjoseph 8/16/2021 4:16:40 PM
WORKSPACE: AHTD
L:\2017\17017642 - ARDOT Job 100955\Drawings\r100955_MOT_DET_HWY. 77 SITE 5 & HWY. 140 SITE 3.dgn
REVISED DATE:

DATE REVISED	DATE FILMED	DATE REVISED	DATE FILMED	FED.RD. DIST.NO.	STATE	FED.AID PROJ.NO.	SHEET NO.	TOTAL SHEETS
01-05-2022				6	ARK.			
				JOB NO.		100955	68	356
				(2)	PERMANENT PAVEMENT MARKING DETAILS			



HWY. 77 SITE 1

6" WHITE THERMOPLASTIC PAVEMENT MARKING

STA.	STA.	LOCATION	LIN. FT.
101+00.00	114+00.00	LT.	1300
101+00.00	114+00.00	RT.	1300

6" YELLOW THERMOPLASTIC PAVEMENT MARKING

STA.	STA.	LOCATION	LIN. FT.
101+00.00	114+00.00	C.L.	2600

TYPE II YELLOW/YELLOW RAISED PAVEMENT MARKERS AT 80' SPACING

STA.	STA.	LOCATION	EA.
101+00.00	114+00.00	C.L.	17

HWY. 77 SITE 2

6" WHITE THERMOPLASTIC PAVEMENT MARKING

STA.	STA.	LOCATION	LIN. FT.
204+25.00	236+25.00	LT.	3200
204+25.00	236+25.00	RT.	3200

6" YELLOW THERMOPLASTIC PAVEMENT MARKING

STA.	STA.	LOCATION	LIN. FT.
204+25.00	236+25.00	C.L.	6400

TYPE II YELLOW/YELLOW RAISED PAVEMENT MARKERS AT 80' SPACING

STA.	STA.	LOCATION	EA.
204+25.00	236+25.00	C.L.	40

HWY. 77 SITE 3

6" WHITE THERMOPLASTIC PAVEMENT MARKING

STA.	STA.	LOCATION	LIN. FT.
244+00.00	257+00.00	LT.	1300
244+00.00	257+00.00	RT.	1300

6" YELLOW THERMOPLASTIC PAVEMENT MARKING

STA.	STA.	LOCATION	LIN. FT.
244+00.00	257+00.00	C.L.	2600

TYPE II YELLOW/YELLOW RAISED PAVEMENT MARKERS AT 80' SPACING

STA.	STA.	LOCATION	EA.
244+00.00	257+00.00	C.L.	17

HWY. 77 SITE 4

6" WHITE THERMOPLASTIC PAVEMENT MARKING

STA.	STA.	LOCATION	LIN. FT.
266+00.00	282+75.00	LT.	1675
266+00.00	282+75.00	RT.	1675

6" YELLOW THERMOPLASTIC PAVEMENT MARKING

STA.	STA.	LOCATION	LIN. FT.
266+00.00	282+75.00	C.L.	3350

TYPE II YELLOW/YELLOW RAISED PAVEMENT MARKERS AT 80' SPACING

STA.	STA.	LOCATION	EA.
266+00.00	282+75.00	C.L.	21

HWY. 77 SITE 5

6" WHITE THERMOPLASTIC PAVEMENT MARKING

STA.	STA.	LOCATION	LIN. FT.
501+00.00	508+00.00	LT.	700
501+00.00	508+00.00	RT.	700

6" YELLOW THERMOPLASTIC PAVEMENT MARKING

STA.	STA.	LOCATION	LIN. FT.
501+00.00	508+00.00	C.L.	1400

TYPE II YELLOW/YELLOW RAISED PAVEMENT MARKERS AT 80' SPACING

STA.	STA.	LOCATION	EA.
501+00.00	508+00.00	C.L.	9

HWY. 140 SITE 1

6" WHITE THERMOPLASTIC PAVEMENT MARKING

STA.	STA.	LOCATION	LIN. FT.
102+00.00	117+50.00	LT.	1550
102+00.00	117+50.00	RT.	1550

6" YELLOW THERMOPLASTIC PAVEMENT MARKING

STA.	STA.	LOCATION	LIN. FT.
102+00.00	117+50.00	C.L.	3100

TYPE II YELLOW/YELLOW RAISED PAVEMENT MARKERS AT 80' SPACING

STA.	STA.	LOCATION	EA.
102+00.00	117+50.00	C.L.	20

HWY. 140 SITE 2

6" WHITE THERMOPLASTIC PAVEMENT MARKING

STA.	STA.	LOCATION	LIN. FT.
201+50.00	216+75.00	LT.	1525
201+50.00	216+75.00	RT.	1525

6" YELLOW THERMOPLASTIC PAVEMENT MARKING

STA.	STA.	LOCATION	LIN. FT.
201+50.00	216+75.00	C.L.	3050

TYPE II YELLOW/YELLOW RAISED PAVEMENT MARKERS AT 80' SPACING

STA.	STA.	LOCATION	EA.
201+50.00	216+75.00	C.L.	20

HWY. 140 SITE 3

6" WHITE THERMOPLASTIC PAVEMENT MARKING

STA.	STA.	LOCATION	LIN. FT.
302+00.00	307+00.00	LT.	500
302+00.00	307+00.00	RT.	500

6" YELLOW THERMOPLASTIC PAVEMENT MARKING

STA.	STA.	LOCATION	LIN. FT.
302+00.00	307+00.00	C.L.	1000

TYPE II YELLOW/YELLOW RAISED PAVEMENT MARKERS AT 80' SPACING

STA.	STA.	LOCATION	EA.
302+00.00	307+00.00	C.L.	7

HWY. 181 SITE 1

6" WHITE REFLECTORIZED PAINT PAVEMENT MARKING

STA.	STA.	LOCATION	LIN. FT.
101+00.00	104+00.00	LT.	300
101+00.00	104+00.00	RT.	300

6" YELLOW REFLECTORIZED PAINT PAVEMENT MARKING

STA.	STA.	LOCATION	LIN. FT.
101+00.00	104+00.00	C.L.	600

TYPE II YELLOW/YELLOW RAISED PAVEMENT MARKERS AT 80' SPACING

STA.	STA.	LOCATION	EA.
101+00.00	104+00.00	C.L.	4

HWY. 181 SITE 2

6" WHITE REFLECTORIZED PAINT PAVEMENT MARKING

STA.	STA.	LOCATION	LIN. FT.
201+00.00	204+50.00	LT.	350
201+00.00	204+50.00	RT.	350

6" YELLOW REFLECTORIZED PAINT PAVEMENT MARKING

STA.	STA.	LOCATION	LIN. FT.
201+00.00	204+50.00	C.L.	700

TYPE II YELLOW/YELLOW RAISED PAVEMENT MARKERS AT 80' SPACING

STA.	STA.	LOCATION	EA.
201+00.00	204+50.00	C.L.	5

HWY. 181 SITE 3

6" WHITE REFLECTORIZED PAINT PAVEMENT MARKING

STA.	STA.	LOCATION	LIN. FT.
301+00.00	312+00.00	LT.	1100
301+00.00	312+00.00	RT.	1100

6" YELLOW REFLECTORIZED PAINT PAVEMENT MARKING

STA.	STA.	LOCATION	LIN. FT.
301+00.00	312+00.00	C.L.	2200

TYPE II YELLOW/YELLOW RAISED PAVEMENT MARKERS AT 80' SPACING

STA.	STA.	LOCATION	EA.
301+00.00	312+00.00	C.L.	14

HWY. 158 SITE 1

6" WHITE REFLECTORIZED PAINT PAVEMENT MARKING

STA.	STA.	LOCATION	LIN. FT.
102+25.00	115+50.00	LT.	1325
102+25.00	115+50.00	RT.	1325

6" YELLOW REFLECTORIZED PAINT PAVEMENT MARKING

STA.	STA.	LOCATION	LIN. FT.
102+25.00	115+50.00	C.L.	2650

TYPE II YELLOW/YELLOW RAISED PAVEMENT MARKERS AT 80' SPACING

STA.	STA.	LOCATION	EA.
102+25.00	115+50.00	C.L.	17

STATE OF ARKANSAS
LICENSED PROFESSIONAL ENGINEER
No. 13436
SHAUN A. ROBERSON

DIGITALLY SIGNED 1-5-2022

C.R. 524

6" WHITE REFLECTORIZED PAINT PAVEMENT MARKING

STA.	STA.	LOCATION	LIN. FT.
3+45.00	9+89.00	LT.	644
3+45.00	9+89.00	RT.	644

6" YELLOW REFLECTORIZED PAINT PAVEMENT MARKING

STA.	STA.	LOCATION	LIN. FT.
3+45.00	9+89.00	C.L.	1288

C.R. 538 WEST

6" WHITE REFLECTORIZED PAINT PAVEMENT MARKING

STA.	STA.	LOCATION	LIN. FT.
15+40.00	19+83.00	LT.	443
15+40.00	19+83.00	RT.	443

6" YELLOW REFLECTORIZED PAINT PAVEMENT MARKING

STA.	STA.	LOCATION	LIN. FT.
15+40.00	19+83.00	C.L.	886

C.R. 538 EAST

6" WHITE REFLECTORIZED PAINT PAVEMENT MARKING

STA.	STA.	LOCATION	LIN. FT.
20+17.00	23+70.00	LT.	353
20+17.00	23+70.00	RT.	353

6" YELLOW REFLECTORIZED PAINT PAVEMENT MARKING

STA.	STA.	LOCATION	LIN. FT.
20+17.00	23+70.00	C.L.	706

FARMER LN.

6" WHITE REFLECTORIZED PAINT PAVEMENT MARKING

STA.	STA.	LOCATION	LIN. FT.
10+11.00	12+75.00	LT.	264
10+11.00	12+75.00	RT.	264

6" YELLOW REFLECTORIZED PAINT PAVEMENT MARKING

STA.	STA.	LOCATION	LIN. FT.
10+11.00	12.75.00	C.L.	528

HWY. 158 CONNECTOR

6" WHITE REFLECTORIZED PAINT PAVEMENT MARKING

STA.	STA.	LOCATION	LIN. FT.
10+40.00	14+89.00	LT.	449
10+40.00	14+89.00	RT.	449

6" YELLOW REFLECTORIZED PAINT PAVEMENT MARKING

STA.	STA.	LOCATION	LIN. FT.
10+40.00	14+89.00	C.L.	898

TYPE II YELLOW/YELLOW RAISED PAVEMENT MARKERS AT 80' SPACING

STA.	STA.	LOCATION	EA.
10+40.00	14+89.00	C.L.	6

*THE 6" YELLOW STRIPING QUANTITY HAS BEEN ESTIMATED BASED ON A DOUBLE YELLOW CENTERLINE STRIPE FOR THE ENTIRE PROJECT. THE PROJECT MUST BE MARKED FOR PASSING/NO PASSING ZONES PRIOR TO THE PLACEMENT OF ANY FINAL STRIPING. CONTACT THE MAINTENANCE DIVISION AFTER THE FINAL LIFT OF SURFACE COURSE HAS BEEN PLACED TO SCHEDULE THE ZONING OF THE PROJECT.

PERMANENT PAVEMENT MARKING DETAILS

CGCervosini 1/5/2022 11:57:23 PM
WORKSPACE: AHTD
L:\2017\1701642 - ARDOT Job 100955\Drawings\r100955_PM_01.dgn
REVISED DATE:

DATE REVISED	DATE FILMED	DATE REVISED	DATE FILMED	FED.RD. DIST.NO.	STATE	FED.AID PROJ.NO.	SHEET NO.	TOTAL SHEETS
				6	ARK.			
				JOB NO.		100955	69	356

(2) SOIL BORING LOG

SOIL BORING LOG - HWY. 77

BORING NO.	APPROX. LOG MILE	APPROX. STATION	LOCATION	SAMPLE DEPTH (ft)	WATER CONTENT (%)	ATTERBERG LIMITS			PERCENT PASSING #200, %	UNIFIED CLASS.	AASHTO CLASS.	COLOR
						LIQUID LIMIT	PLASTIC LIMIT	PLASTICITY INDEX				
SITE 1 - HWY. 77												
A1	10.42	106+15	SITE 1 - RT.	1.5-2.5	17	48	20	28	40	SC	A-7-6	BROWN
A1	10.42	106+15	SITE 1 - RT.	6.5-7.5	33	64	25	39	99	CH	A-7-6	GRAY/BROWN
A1	10.42	106+15	SITE 1 - RT.	29-30	20	-	-	-	4	SP	A-3	GRAY
A1	10.42	106+15	SITE 1 - RT.	64-65	19	-	-	-	4	SP	A-3	GRAY
A1	10.42	106+15	SITE 1 - RT.	109-110	12	-	-	-	6	SM-SW	A-1-b	GRAY
A1	10.42	106+15	SITE 1 - RT.	119-120	20	-	-	-	5	SM-SP	A-3	GRAY
A2	10.41	106+80	SITE 1 - RT.	14-15	26	26	23	3	66	ML	A-4	GRAY/BROWN
A2	10.41	106+80	SITE 1 - RT.	24-25	20	-	-	-	2	SW	A-1-b	BROWN
A2	10.41	106+80	SITE 1 - RT.	39-40	18	-	-	-	4	SP	A-3	BROWN
A2	10.41	106+80	SITE 1 - RT.	54-55	15	-	-	-	4	SW	A-1-b	BROWN
A3	10.40	107+50	SITE 1 - RT.	6.5-7.5	21	-	-	-	8	SM-SP	A-3	RED/BROWN
A3	10.40	107+50	SITE 1 - RT.	9-10	30	NP	NP	NP	26	SM	A-2-4	RED/BROWN
A3	10.40	107+50	SITE 1 - RT.	19-20	22	-	-	-	15	SM	A-2-4	BROWN
A3	10.40	107+50	SITE 1 - RT.	54-55	17	-	-	-	4	SW	A-1-b	BROWN
A4	10.38	108+50	SITE 1 - RT.	9-10	31	31	23	8	82	ML	A-4	GRAY/BROWN
A4	10.38	108+50	SITE 1 - RT.	24-25	27	-	-	-	24	SM	A-2-4	GRAY
A4	10.38	108+50	SITE 1 - RT.	39-40	22	-	-	-	4	SW	A-1-b	BROWN
A4	10.38	108+50	SITE 1 - RT.	74-75	16	-	-	-	4	SW	A-1-b	GRAY
A4	10.38	108+50	SITE 1 - RT.	89-90	18	-	-	-	4	SP	A-1-b	GRAY
SITE 2 - HWY. 77												
B1	7.19	207+90	SITE 2 - RT.	4-5	10	NP	NP	NP	28	SM	A-2-4	RED/BROWN
B1	7.19	207+90	SITE 2 - RT.	9-10	18	NP	NP	NP	67	ML	A-4	BROWN
B1	7.19	207+90	SITE 2 - RT.	19-20	23	-	-	-	15	SM	A-4	BROWN
B1	7.19	207+90	SITE 2 - RT.	29-30	26	-	-	-	3	SP	A-3	BROWN
B1	7.19	207+90	SITE 2 - RT.	54-55	24	-	-	-	3	SP	A-3	BROWN
B1	7.19	207+90	SITE 2 - RT.	104-105	17	-	-	-	5	SM-SW	A-1-b	BROWN
B4	7.14	210+65	SITE 2 - RT.	6.5-7.5	27	32	17	15	73	CL	A-6	BROWN
B4	7.14	210+65	SITE 2 - RT.	14-15	17	23	20	3	71	ML	A-4	BROWN
B4	7.14	210+65	SITE 2 - RT.	19-20	19	-	-	-	11	SM-SP	A-2-4	RED/BROWN
B4	7.14	210+65	SITE 2 - RT.	34-35	24	-	-	-	2	SP	A-3	RED/BROWN
B4	7.14	210+65	SITE 2 - RT.	54-55	23	-	-	-	5	SM-SP	A-3	GRAY
B4	7.14	210+65	SITE 2 - RT.	69-70	17	-	-	-	5	SM-SP	A-1-b	GRAY/BROWN
B4	7.14	210+65	SITE 2 - RT.	99-100	12	-	-	-	5	SM-SW	A-1-b	GRAY
B4	7.14	210+65	SITE 2 - RT.	109-110	15	-	-	-	5	SM-SW	A-1-b	GRAY
C1	6.89	223+65	SITE 2 - RT.	9-10	29	30	19	11	73	CL	A-6	GRAY/BROWN
C1	6.89	223+65	SITE 2 - RT.	19-20	24	-	-	-	4	SP	A-3	GRAY
C1	6.89	223+65	SITE 2 - RT.	34-35	16	-	-	-	6	SM-SW	A-1-b	GRAY/BROWN
C1	6.89	223+65	SITE 2 - RT.	59-60	15	-	-	-	5	SM-SW	A-1-b	GRAY/BROWN
C1	6.89	223+65	SITE 2 - RT.	94-95	17	-	-	-	5	SM-SW	A-1-b	GRAY
C2	6.87	224+55	SITE 2 - RT.	9-10	21	NP	NP	NP	21	SM	A-2-4	RED/BROWN
C2	6.87	224+55	SITE 2 - RT.	24-25	18	-	-	-	4	SW	A-1-b	GRAY/BROWN
C2	6.87	224+55	SITE 2 - RT.	69-70	16	-	-	-	4	SW	A-1-b	GRAY/BROWN
C3	6.86	225+15	SITE 2 - RT.	4-5	6	-	-	-	11	GM-GP	A-1-a	GRAY
C3	6.86	225+15	SITE 2 - RT.	19-20	22	-	-	-	2	SP	A-3	RED/BROWN
C3	6.86	225+15	SITE 2 - RT.	49-50	17	-	-	-	3	SW	A-1-a	RED/BROWN
C4	6.82	227+20	SITE 2 - RT.	4-5	26	27	22	5	83	ML	A-4	BROWN
C4	6.82	227+20	SITE 2 - RT.	9-10	24	NP	NP	NP	18	SM	A-2-4	RED/BROWN
C4	6.82	227+20	SITE 2 - RT.	14-15	24	-	-	-	3	SP	A-3	RED/BROWN
C4	6.82	227+20	SITE 2 - RT.	29-30	22	-	-	-	3	SP	A-1-b	GRAY
C4	6.82	227+20	SITE 2 - RT.	49-50	26	-	-	-	3	SP	A-3	GRAY/BROWN
C4	6.82	227+20	SITE 2 - RT.	59-60	19	-	-	-	4	SP	A-3	BROWN
C4	6.82	227+20	SITE 2 - RT.	89-90	22	-	-	-	7	SP	A-3	GRAY/BROWN
C5	6.82	227+55	SITE 2 - RT.	4-5	22	28	18	10	63	CL	A-4	BROWN
C5	6.82	227+55	SITE 2 - RT.	9-10	21	NP	NP	NP	12	SM-SP	A-2-4	BROWN
C5	6.82	227+55	SITE 2 - RT.	29-30	21	-	-	-	2	SP	A-3	BROWN
C5	6.82	227+55	SITE 2 - RT.	49-50	23	-	-	-	4	SP	A-3	GRAY
C5	6.82	227+55	SITE 2 - RT.	59-60	19	-	-	-	4	SP	A-1-b	GRAY
D1	6.79	228+75	SITE 2 - RT.	4-5	23	28	19	9	60	CL	A-4	BROWN
D1	6.79	228+75	SITE 2 - RT.	9-10	19	31	18	13	76	CL	A-6	GRAY/BROWN
D1	6.79	228+75	SITE 2 - RT.	14-15	25	-	-	-	9	SM-SP	A-3	BROWN
D1	6.79	228+75	SITE 2 - RT.	29-30	21	-	-	-	3	SP	A-1-b	BROWN
D1	6.79	228+75	SITE 2 - RT.	44-45	21	-	-	-	5	SM-SP	A-3	BROWN
D1	6.79	228+75	SITE 2 - RT.	54-55	22	-	-	-	4	SP	A-3	BROWN
D1	6.79	228+75	SITE 2 - RT.	89-90	13	-	-	-	5	SM-SW	A-1-b	GRAY
D2	6.78	229+65	SITE 2 - RT.	4-5	21	29	18	11	61	CL	A-6	BROWN
D2	6.78	229+65	SITE 2 - RT.	9-10	25	-	-	-	7	SM-SP	A-3	RED/BROWN
D2	6.78	229+65	SITE 2 - RT.	19-20	27	-	-	-	2	SP	A-3	BROWN
D2	6.78	229+65	SITE 2 - RT.	49-50	26	-	-	-	2	SP	A-3	GRAY
D2	6.78	229+65	SITE 2 - RT.	64-65	17	-	-	-	3	SP	A-1-b	GRAY/BROWN
D2	6.78	229+65	SITE 2 - RT.	79-80	16	-	-	-	3	SW	A-1-b	GRAY/BROWN
D3	6.76	230+55	SITE 2 - RT.	4-5	23	NP	NP	NP	51	ML	A-4	BROWN
D3	6.76	230+55	SITE 2 - RT.	9-10	13	-	-	-	21	SM	A-2-4	RED/BROWN
D3	6.76	230+55	SITE 2 - RT.	24-25	26	-	-	-	3	SP	A-3	BROWN
D3	6.76	230+55	SITE 2 - RT.	49-50	28	-	-	-	4	SP	A-3	BROWN
D3	6.76	230+55	SITE 2 - RT.	64-65	17	-	-	-	4	SW	A-1-b	GRAY/BROWN
D3	6.76	230+55	SITE 2 - RT.	74-75	15	-	-	-	4	SW	A-1-b	BROWN
D4	6.75	231+25	SITE 2 - RT.	4-5	17	NP	NP	NP	30	SM	A-2-4	BROWN
D4	6.75	231+25	SITE 2 - RT.	9-10	10	NP	NP	NP	10	SM-SP	A-3	BROWN
D4	6.75	231+25	SITE 2 - RT.	24-25	23	-	-	-	2	SP	A-3	BROWN
D4	6.75	231+25	SITE 2 - RT.	49-50	25	-	-	-	4	SP	A-3	GRAY
D4	6.75	231+25	SITE 2 - RT.	64-65	25	-	-	-	3	SP	A-1-b	GRAY
D4	6.75	231+25	SITE 2 - RT.	79-80	17	-	-	-	5	SM-SW	A-1-b	GRAY

SOIL CHARACTERISTICS TABULATED ABOVE ARE REPRESENTATIVE AT THE LOCATION OF THE SAMPLE, AND FROM SURFACE INDICATIONS ARE TYPICAL FOR THE LIMITS SHOWN. THESE DATA ARE SHOWN FOR INFORMATION ONLY. THE STATE WILL NOT BE RESPONSIBLE FOR VARIATIONS IN THE SOIL CHARACTERISTICS AND/OR EXTENT OF SAME DIFFERING FROM THE ABOVE TABULATIONS.
NP - NON-PLASTIC

SOIL BORING LOG - HWY. 77

BORING NO.	APPROX. LOG MILE	APPROX. STATION	LOCATION	SAMPLE DEPTH (ft)	WATER CONTENT (%)	ATTERBERG LIMITS			PERCENT PASSING #200, %	UNIFIED CLASS.	AASHTO CLASS.	COLOR
						LIQUID LIMIT	PLASTIC LIMIT	PLASTICITY INDEX				
SITE 3 - HWY. 77												
E1	6.41	249+10	SITE 3 - RT.	4-5	23	NP	NP	NP	41	SM	A-4	BROWN
E1	6.41	249+10	SITE 3 - RT.	19-20	23	-	-	-	2	SP	A-1-b	BROWN
E1	6.41	249+10	SITE 3 - RT.	49-50	22	-	-	-	4	SP	A-3	BROWN
E1	6.41	249+10	SITE 3 - RT.	99-100	21	-	-	-	7	SM-SP	A-3	GRAY/BROWN
E1	6.41	249+10	SITE 3 - RT.	109-110	16	-	-	-	5	SM-SP	A-3	GRAY/BROWN
E1	6.41	249+10	SITE 3 - RT.	119-120	18	-	-	-	9	SM-SP	A-3	GRAY/BROWN
E2	6.40	249+85	SITE 3 - RT.	4-5	28	31	24	7	84	ML	A-4	BROWN
E2	6.40	249+85	SITE 3 - RT.	14-15	20	-	-	-	2	SP	A-1-b	BROWN
E2	6.40	249+85	SITE 3 - RT.	29-30	21	-	-	-	2	SP	A-3	BROWN
E2	6.40	249+85	SITE 3 - RT.	69-70	23	-	-	-	14	SM	A-2-4	BROWN
E2	6.40	249+85	SITE 3 - RT.	79-80	11	-	-	-	5	SW	A-1-b	GRAY
E3	6.38	250+80	SITE 3 - RT.	6-7	24	-	-	-	3	SP	A-3	GRAY/BROWN
E3	6.38	250+80	SITE 3 - RT.	19-20	22	-	-	-	2	SP	A-1-b	GRAY/BROWN
E3	6.38	250+80	SITE 3 - RT.	59-60	19	-	-	-	4	SP	A-3	GRAY/BROWN
E3	6.38	250+80	SITE 3 - RT.	79-80	16	-	-	-	6	SM-SP	A-1-b	GRAY/BROWN
E4	6.36	251+70	SITE 3 - RT.	1.5-2.5	21	29	18	11	63	CL	A-6	BROWN
E4	6.36	251+70	SITE 3 - RT.	4-5	21	NP	NP	NP	19	SM	A-2-4	BROWN
E4	6.36	251+70	SITE 3 - RT.	9-10	16	-	-	-	4	SP	A-3	BROWN
E4	6.36	251+70	SITE 3 - RT.	29-30	20	-	-	-	3	SW	A-1-b	GRAY/BROWN
E4	6.36	251+70	SITE 3 - RT.	69-70	23	-	-	-	6	SM-SP	A-3	GRAY/BROWN
E4	6.36	251+70	SITE 3 - RT.	79-80	23	-	-	-	4	SP	A-1-b	GRAY/BROWN
E5	6.35	252+45	SITE 3 - RT.	4-5	25	28	24	4	53	ML	A-4	GRAY/BROWN
E5	6.35	252+45	SITE 3 - RT.	14-15	21	-	-	-	3	SW	A-1-b	BROWN
E5	6.35	252+45	SITE 3 - RT.	39-40	20	-	-	-	2	SP	A-3	BROWN
E5	6.35	252+45	SITE 3 - RT.	64-65	16	-	-	-	2	SW	A-1-b	BROWN
E5	6.35	252+45	SITE 3 - RT.	89-90	14	-	-	-	6	SM-SP	A-1-b	BROWN
E6	6.33	253+35	SITE 3 - RT.	1.5-2.5	23	32	21	11	76	CL	A-6	GRAY/BROWN
E6	6.33	253+35	SITE 3 - RT.	9-10	21	-	-	-	4	SP	A-3	BROWN
E6	6.33	253+35	SITE 3 - RT.	49-50	18	-	-	-	3	SP	A-1-b	BROWN
E6	6.33	253+35	SITE 3 - RT.	64-65	23	-	-	-	4	SP	A-3	GRAY/BROWN
E6	6.33	253+35	SITE 3 - RT.	74-75	16	-	-	-	7	SW	A-1-b	GRAY
E6	6.33	253+35	SITE 3 - RT.	99-100	13	-	-	-	6	SP	A-1-b	GRAY
SITE 4 - HWY. 77												
F1	6.00	271+25	SITE 4 - RT.	1.5-2.5	14	25	21	4	-	SM	A-2-4	BROWN
F1	6.00	271+25	SITE 4 - RT.	6.5-7.5	28	27	24	3	67	ML	A-4	BROWN
F1	6.00	271+25	SITE 4 - RT.	9-10	30	-	-	-	49	SM	A-4	BROWN
F1	6.00	271+25	SITE 4 - RT.	24-25	17	-	-	-	3	SW	A-1-b	GRAY
F1	6.00	271+25	SITE 4 - RT.	54-55	15	-	-	-	3	SW	A-1-b	GRAY
F1	6.00	271+25	SITE 4 - RT.	64-65	21	-	-	-	5	SM-SP	A-3	BROWN
F1	6.00	271+25	SITE 4 - RT.	74-75	17	-	-	-	4	SP	A-1-b	GRAY
F1	6.00	271+25	SITE 4 - RT.	99-100	14	-	-	-	5	SM-SW	A-1-b	GRAY
F2	5.98	272+25	SITE 4 - RT.	4-5	29	33	22	11	82	CL	A-6	BROWN
F2	5.98	272+25	SITE 4 - RT.	6.5-7.5	32	NP	NP	NP	44	SM	A-4	BROWN
F2	5.98	272+25	SITE 4 - RT.	14-15	20	-	-	-	3	SP	A-3	GRAY/BROWN
F2	5.98	272+25	SITE 4 - RT.	49-50	15	-	-	-	3	SW	A-1-b	GRAY/BROWN
F2	5.98	272+25	SITE 4 - RT.	89-90	13	-	-	-	7	SM-SP	A-1-b	GRAY/BROWN
F3	5.97	272+90	SITE 4 - RT.	4-5	29	NP	NP	NP	61	ML	A-4	GRAY/BROWN
F3	5.97	272+90	SITE 4 - RT.	14-15	18	-	-	-	3	SW	A-1-b	GRAY/BROWN
F3	5.97	272+90	SITE 4 - RT.	69-70	18	-	-	-	2	SP	A-1-b	GRAY/BROWN

SOIL CHARACTERISTICS TABULATED ABOVE ARE REPRESENTATIVE AT THE LOCATION OF THE SAMPLE, AND FROM SURFACE INDICATIONS ARE TYPICAL FOR THE LIMITS SHOWN. THESE DATA ARE SHOWN FOR INFORMATION ONLY. THE STATE WILL NOT BE RESPONSIBLE FOR VARIATIONS IN THE SOIL CHARACTERISTICS AND/OR EXTENT OF SAME DIFFERING FROM THE ABOVE TABULATIONS.
NP - NON-PLASTIC

STATE OF ARKANSAS
LICENSED PROFESSIONAL ENGINEER
No.13436
SHAUN A. ROBERSON

DIGITALLY SIGNED 8-13-2021

SOIL BORING LOG - HWY. 140

BORING NO.	APPROX. LOG MILE	APPROX. STATION	LOCATION	SAMPLE DEPTH (ft)	WATER CONTENT (%)	ATTERBERG LIMITS			PERCENT PASSING #200, %	UNIFIED CLASS.	AASHTO CLASS.	COLOR
						LIQUID LIMIT	PLASTIC LIMIT	PLASTICITY INDEX				
SITE 1 - HWY. 140												
B-1	8.87	97+25	SITE 1	2.5	30	NP	NP	NP	13	SM	A-2-4(0)	BROWN
B-2	8.98	102+75	SITE 1	2.5	41	103	26	77	96	CH	A-7-6(86)	GRAY/BROWN
B-2	8.98	102+75	SITE 1	6.0	43	105	37	68	-	CH	A-7-5	GRAY/BROWN
B-3	9.07	107+60	SITE 1	8.0	46	110	21	89	98	CH	A-7-6(101)	GRAY/BROWN
B-3	9.07	107+60	SITE 1	15.0	42	109	27	82	99	CH	A-7-6(95)	GRAY/BROWN
B-4	9.08	108+20	SITE 1	8.5	37	98	38	60	-	CH	A-7-5	GRAY/BROWN
B-5	9.10	109+25	SITE 1	3.5	35	87	23	64	-	CH	A-7-6	GRAY/BROWN
B-6	9.11	110+00	SITE 1	1.0	39	79	18	61	-	CH	A-7-6	GRAY/BROWN
B-7	9.13	110+75	SITE 1	23.5	30	63	18	45	-	SC	A-7-6	GRAY/BROWN
B-8	9.14	111+25	SITE 1	6.0	42	111	27	84	-	CH	A-7-6	GRAY/BROWN
B-8	9.14	111+25	SITE 1	10.0	45	98	28	70	-	CH	A-7-6	GRAY/BROWN
B-8	9.14	111+25	SITE 1	20.0	34	71	21	50	95	CH	A-7-6(53)	GRAY/BROWN
B-9	9.23	116+25	SITE 1	2.5	10	105	28	77	95	CH	A-7-6(85)	GRAY/BROWN
B-9	9.23	116+25	SITE 1	6.0	44	100	24	76	-	CH	A-7-6	GRAY/BROWN
B-10	9.33	121+25	SITE 1	2.5	46	110	35	75	90	CH	A-7-5(79)	GRAY
SITE 2 - HWY. 140												
B-11	10.33	197+50	SITE 2	2.5	45	89	25	64	90	CH	A-7-6(65)	GRAY/BROWN
B-12	10.42	202+50	SITE 2	3.5	28	61	20	41	49	SC	A-7-6(15)	BROWN
B-13	10.51	207+50	SITE 2	8.0	43	106	29	77	99	CH	A-7-6(90)	GRAY/BROWN
B-13	10.51	207+50	SITE 2	20.0	33	97	31	66	-	CH	A-7-6	GRAY/BROWN
B-13	10.51	207+50	SITE 2	25.0	31	38	23	15	95	CL	A-6(15)	GRAY/BROWN
B-14	10.52	208+00	SITE 2	1.0	49	105	28	77	31	CL	A-2-7(11)	BROWN
B-14	10.52	208+00	SITE 2	6.0	42	116	30	86	100	CH	A-7-5(102)	GRAY/BROWN
B-14	10.52	208+00	SITE 2	10.0	47	103	32	71	99	CH	A-7-5(84)	GRAY/BROWN
B-15	10.54	208+75	SITE 2	3.5	37	95	17	78	-	CH	A-7-6	GRAY/BROWN
B-15	10.54	208+75	SITE 2	15.0	41	100	30	70	-	CH	A-7-5	GRAY/BROWN
B-16	10.55	209+50	SITE 2	8.5	33	52	21	31	-	CH	A-7-6	GRAY/BROWN
B-17	10.57	210+25	SITE 2	3.0	47	111	31	80	96	CH	A-7-5(91)	GRAY/BROWN
B-17	10.57	210+25	SITE 2	8.0	51	119	28	91	-	CH	A-7-6	GRAY/BROWN
B-17	10.57	210+25	SITE 2	23.5	30	30	24	6	94	ML	A-4(6)	GRAY/BROWN
B-17	10.57	210+25	SITE 2	28.5	28	25	18	7	-	SC-SM	A-4	GRAY
B-18	10.58	210+75	SITE 2	3.0	50	104	34	70	91	CH	A-7-5(74)	GRAY/BROWN
B-18	10.58	210+75	SITE 2	8.0	49	106	32	74	-	CH	A-7-5	GRAY/BROWN
B-18	10.58	210+75	SITE 2	10.0	49	103	17	86	-	CH	A-7-6	GRAY/BROWN
B-19	10.67	215+75	SITE 2	2.5	47	104	37	67	96	CH	A-7-5(78)	GRAY/BROWN
B-19	10.67	215+75	SITE 2	3.5	46	106	30	67	-	CH	A-7-5	GRAY/BROWN
B-20	10.76	220+50	SITE 2	2.5	45	113	35	78	95	CH	A-7-5(88)	GRAY/BROWN
SITE 3 - HWY. 140												
B-21	11.83	294+25	SITE 3	2.5	42	96	31	65	67	CH	A-7-5(44)	GRAY/BROWN
B-22	11.92	299+00	SITE 3	2.5	45	100	34	66	91	CH	A-7-5(70)	GRAY/BROWN
B-22	11.92	299+00	SITE 3	3.5	43	96	28	68	-	CH	A-7-6	GRAY/BROWN
B-23	12.00	303+25	SITE 3	23.5	30	32	23	9	-	CL	A-4	GRAY
B-23	12.00	303+25	SITE 3	33.5	29	32	26	6	-	ML	A-4	GRAY
B-24	12.03	304+50	SITE 3	5.0	44	109	32	77	85	CH	A-7-5(74)	GRAY/BROWN
B-24	12.03	304+50	SITE 3	10.0	44	99	37	62	99	CH	A-7-5(76)	GRAY/BROWN
B-24	12.03	304+50	SITE 3	15.0	43	108	34	74	-	CH	A-7-5	GRAY/BROWN
B-25	12.11	309+00	SITE 3	2.5	26	77	26	51	59	CH	A-7-6(28)	GRAY/BROWN
B-26	12.21	314+00	SITE 3	1.0	43	95	35	60	97	CH	A-7-5(71)	GRAY/BROWN
B-26	12.21	314+00	SITE 3	2.5	46	88	25	63	63	CH	A-7-6(37)	GRAY/BROWN
B-26	12.21	314+00	SITE 3	3.5	32	80	27	53	-	CH	A-7-6	GRAY/BROWN

SOIL CHARACTERISTICS TABULATED ABOVE ARE REPRESENTATIVE AT THE LOCATION OF THE SAMPLE, AND FROM SURFACE INDICATIONS ARE TYPICAL FOR THE LIMITS SHOWN. THESE DATA ARE SHOWN FOR INFORMATION ONLY. THE STATE WILL NOT BE RESPONSIBLE FOR VARIATIONS IN THE SOIL CHARACTERISTICS AND/OR EXTENT OF SAME DIFFERING FROM THE ABOVE TABULATIONS.
NP - NON-PLASTIC

SOIL BORING LOG - HWY. 158

BORING NO.	APPROX. LOG MILE	APPROX. STATION	LOCATION	SAMPLE DEPTH (ft)	WATER CONTENT (%)	ATTERBERG LIMITS			PERCENT PASSING #200, %	UNIFIED CLASS.	AASHTO CLASS.	COLOR
						LIQUID LIMIT	PLASTIC LIMIT	PLASTICITY INDEX				
B-1	10.30	112+05	SITE 1	2.5-3.5	33	66	24	42	84	CH	A-7-6	GRAY/BROWN
B-1	10.30	112+05	SITE 1	9-10	47	98	27	71	100	CH	A-7-6	GRAY/RED
B-1	10.30	112+05	SITE 1	24-25	20	-	-	-	17	SM	A-2-4	GRAY/TAN
B-1	10.30	112+05	SITE 1	54-55	20	-	-	-	4	SP	A-3	RED/BROWN
B-1	10.30	112+05	SITE 1	64-65	33	-	-	-	10	SM-SP	A-2-4	GRAY
B-1	10.30	112+05	SITE 1	69-70	19	-	-	-	6	SM-SP	A-2-4	GRAY
B-1	10.30	112+05	SITE 1	99-100	14	-	-	-	3	GP	A-1-a	TAN
B-2	10.25	114+90	SITE 1	0.5-1.5	28	75	23	52	77	CH	A-7-6	GRAY/BROWN
B-2	10.25	114+90	SITE 1	2.5-3.5	35	80	25	55	70	CH	A-7-6	GRAY/RED
B-2	10.25	114+90	SITE 1	9-10	46	88	26	62	99	CH	A-7-6	TAN/RED
B-2	10.25	114+90	SITE 1	29-30	19	-	-	-	4	SP	A-3	GRAY
B-2	10.25	114+90	SITE 1	69-70	14	-	-	-	3	SW	A-1-b	GRAY
B-2	10.25	114+90	SITE 1	84-85	16	-	-	-	4	SW	A-1-b	TAN

SOIL CHARACTERISTICS TABULATED ABOVE ARE REPRESENTATIVE AT THE LOCATION OF THE SAMPLE, AND FROM SURFACE INDICATIONS ARE TYPICAL FOR THE LIMITS SHOWN. THESE DATA ARE SHOWN FOR INFORMATION ONLY. THE STATE WILL NOT BE RESPONSIBLE FOR VARIATIONS IN THE SOIL CHARACTERISTICS AND/OR EXTENT OF SAME DIFFERING FROM THE ABOVE TABULATIONS.
NP - NON-PLASTIC

SOIL BORING LOG

P.Joseph 8/13/2021 5:23:30 PM
WORKSPACE: AHTD
L:\2017\17017642 - ARDOT Job 100955\Drawings\r100955_SBL_01.dgn
REVISED DATE:

DATE REVISED	DATE FILMED	DATE REVISED	DATE FILMED	FED.RD. DIST.NO.	STATE	FED.AID PROJ.NO.	SHEET NO.	TOTAL SHEETS
01-05-2022				6	ARK.			
				JOB NO.		100955	70	356

(2) QUANTITIES

ADVANCE WARNING SIGNS AND DEVICES

SIGN NUMBER	DESCRIPTION	SIGN SIZE	HWY. 77 SITE 5 & HWY. 140 SITE 3	HWY. 158 SITE 1 & HWY. 181 SITE 2	HWY. 181 SITE 1 & HWY. 181 SITE 3	HWY. 77 SITE 3 & HWY. 77 SITE 4	HWY. 77 SITE 2 & HWY. 140 SITE 1	HWY. 77 SITE 2 & HWY. 140 SITE 2	HWY. 77 SITE 1 & HWY. 77 SITE 2	MAXIMUM NUMBER REQUIRED	TOTAL SIGNS REQUIRED		CONSTRUCTION PROJECT INFORMATION SIGN UPDATE	BARRICADES (TYPE III)	
														RIGHT	LEFT
			LIN. FT. - EACH								NO.	SQ. FT.	EACH	LIN. FT.	
W20-3	ROAD CLOSED 1500 FT.	48"x48"	3	3	4	2	4	4	4	4	4	64.0			
W20-3	ROAD CLOSED 1000 FT.	48"x48"	3	3	4	2	4	4	4	4	4	64.0			
W20-3	ROAD CLOSED 500 FT.	48"x48"	3	3	4	2	4	4	4	4	4	64.0			
G20-2	END ROAD WORK	48"x24"	3	3	4	2	4	4	4	4	4	32.0			
G20-1	ROAD WORK NEXT xx MILES	60"x24"				2			4	4	4	40.0			
W1-4AR	REVERSE CURVE RT.	48"x48"				2			4	4	4	64.0			
W1-4AL	REVERSE CURVE LT.	48"x48"				2			4	4	4	64.0			
W13-1	SPEED LIMIT (ADVISORY)	24"x24"				2			4	4	4	16.0			
R11-2	ROAD CLOSED	48"x30"	4	4	4	2	4	4	4	4	4	40.0			
R11-3A	ROAD CLOSED __ XX MILES AHEAD LOCAL TRAFFIC ONLY	60"x30"	9	8	8	4	10	10	10	59	59	737.5			
MI-5 (MODIFIED)	STATE ROUTE 77	24"x24"	9			10	11	10	14	14	14	56.0			
MI-5 (MODIFIED)	STATE ROUTE 140	24"x24"	8				11	11		11	11	44.0			
MI-5 (MODIFIED)	STATE ROUTE 158	24"x24"		8						8	8	32.0			
MI-5 (MODIFIED)	STATE ROUTE 181	24"x24"		5	15					15	15	60.0			
M3-1	NORTH	24"x12"			5				5	5	5	10.0			
M3-3	SOUTH	24"x12"			5				5	5	5	10.0			
M4-8	DETOUR	24"x12"	1			1	1	1	1	1	1	2.0			
M4-10L	DETOUR LEFT	48"x18"	8	7	7	4	11	10	8	11	11	66.0			
M4-10R	DETOUR RIGHT	48"x18"	8	6	8	5	10	10	6	10	10	60.0			
M6-3	STRAIGHT AHEAD ARROW GUIDE SIGN	21"x15"	1			1	1	1	1	1	1	2.2			
SPECIAL	CONSTRUCTION PROJECT INFORMATION SIGN	96"x48"	4	4	4	2	4	4	4	4	4	128.0			
SPECIAL	HWY. 140 DETOUR USE EXIT _ X	48"x36"	1							1	1	12.0			
SPECIAL	HWY. 181 DETOUR USE EXIT _ X	48"x36"	1	2	4					4	4	48.0			
	CONSTRUCTION PROJECT INFORMATION SIGN UPDATE												26		
	TYPE III BARRICADE-RT. (8')		4	4	4	2	4	4	4	4				32	
	TYPE III BARRICADE-LT. (8')		4	4	4	2	4	4	4	4					32
TOTALS:												**1715.7**	**26**	**32**	**32**

NOTE: HWY. 77, HWY. 158, & HWY 181 ARE LOW TRAFFIC VOLUME ROADS AS DEFINED IN SECTION 604.03, STANDARD SPECIFICATIONS FOR HIGHWAY CONSTRUCTION.
HWY. 140 IS A HIGH TRAFFIC VOLUME ROAD AS DEFINED IN SECTION 604.03, STANDARD SPECIFICATIONS FOR HIGHWAY CONSTRUCTION.

STATE OF ARKANSAS
LICENSED PROFESSIONAL ENGINEER
No.13436
SHAUN A. ROBERSON
DIGITALLY SIGNED 1-5-2022

PERMANENT PAVEMENT MARKINGS

DESCRIPTION	END OF JOB	RAISED PAVEMENT MARKERS	THERMOPLASTIC PAVEMENT MARKING		REFLECTORIZED PAINT PAVEMENT MARKING	
		TYPE II	6"		6"	
		(YELLOW/YELLOW)	WHITE	YELLOW	WHITE	YELLOW
	LIN. FT. - EACH	EACH	LIN. FT.		LIN. FT.	
RAISED PAVEMENT MARKERS TYPE II (YELLOW/YELLOW)	197	197				
THERMOPLASTIC PAVEMENT MARKING WHITE (6")	23500		23500			
THERMOPLASTIC PAVEMENT MARKING YELLOW (6")	23500			23500		
REFLECTORIZED PAINT PAVEMENT MARKING WHITE (6")	10456				10456	
REFLECTORIZED PAINT PAVEMENT MARKING YELLOW (6")	10456					10456
TOTALS:		**197**	**23500**	**23500**	**10456**	**10456**

NOTE: HWY. 77, HWY. 158, & HWY 181 ARE LOW TRAFFIC VOLUME ROADS AS DEFINED IN SECTION 604.03, STANDARD SPECIFICATIONS FOR HIGHWAY CONSTRUCTION.
HWY. 140 IS A HIGH TRAFFIC VOLUME ROAD AS DEFINED IN SECTION 604.03, STANDARD SPECIFICATIONS FOR HIGHWAY CONSTRUCTION.

NOTE: THE 6" YELLOW STRIPING QUANTITY HAS BEEN ESTIMATED BASED ON A DOUBLE YELLOW CENTERLINE STRIPE FOR THE ENTIRE PROJECT.
THE PROJECT MUST BE MARKED FOR PASSING/NO PASSING ZONES PRIOR TO THE PLACEMENT OF ANY FINAL STRIPING.
CONTACT THE MAINTENANCE DIVISION AFTER THE FINAL LIFT OF SURFACE COURSE HAS BEEN PLACED TO SCHEDULE THE ZONING OF THE PROJECT.

CLEARING AND GRUBBING

STATION	STATION	LOCATION	CLEARING	GRUBBING
			STATION	
HWY. 77 SITE 1				
105+50	109+50	HWY. 77	4	4
SUBTOTALS HWY. 77 SITE 1:			**4**	**4**
HWY. 77 SITE 2				
204+70	208+70	HWY. 77	4	4
209+35	211+35	HWY. 77	2	2
224+40	225+40	HWY. 77	1	1
226+60	227+80	HWY. 77	2	2
228+85	230+35	HWY. 77	2	2
231+30	231+80	HWY. 77	1	1
232+60	233+60	HWY. 77	1	1
10+30	14+30	HWY. 158 CONNECTOR	4	4
3+25	9+35	C.R. 524	7	7
SUBTOTALS HWY. 77 SITE 2:			**24**	**24**
HWY. 77 SITE 4				
267+00	274+25	HWY. 77	8	8
275+25	281+00	HWY. 77	6	6
282+25	282+75	HWY. 77	1	1
SUBTOTALS HWY. 77 SITE 4:			**15**	**15**
HWY. 77 SITE 5				
500+80	504+80	HWY. 77	4	4
SUBTOTALS HWY. 77 SITE 5:			**4**	**4**
HWY. 140 SITE 1				
110+00	110+50	HWY. 140	1	1
SUBTOTALS HWY. 140 SITE 1:			**1**	**1**
HWY. 140 SITE 2				
203+80	210+50	HWY. 140	7	7
211+80	214+35	HWY. 140	3	3
215+00	216+75	HWY. 140	2	2
SUBTOTALS HWY. 140 SITE 2:			**12**	**12**
HWY. 181 SITE 1				
102+25	102+75	HWY. 181	1	1
130+25	130+75	HWY. 181	1	1
SUBTOTALS HWY. 181 SITE 1:			**2**	**2**
HWY. 181 SITE 3				
300+80	301+50	HWY. 181	1	1
302+30	307+00	HWY. 181	5	5
SUBTOTALS HWY. 181 SITE 3:			**6**	**6**
TOTALS:			**68**	**68**

CGGervasini 1/5/2022 1:57:24 PM
WORKSPACE: AHTD
\\garverinc.local\gdata\Projects\2017\17017642 - ARDOT Job 100955\Drawings\r100955_QTY_01.dgn
REVISED DATE:

DATE REVISED	DATE FILMED	DATE REVISED	DATE FILMED	FED.RD. DIST.NO.	STATE	FED.AID PROJ.NO.	SHEET NO.	TOTAL SHEETS
11-22-2021				6	ARK.			
01-05-2022				JOB NO.		100955	71	356
				(2)		QUANTITIES		

REMOVAL AND DISPOSAL OF ITEMS

STATION	STATION	LOCATION	CURB	MAILBOXES	GUARDRAIL	SIGNS
			LIN. FT.	EACH	LIN. FT.	EACH
HWY. 77 SITE 1						
106+46	106+73	HWY. 77 - RT			27	
106+56	106+84	HWY. 77 - LT.			27	
108+19	108+47	HWY. 77 - RT.			28	
108+29	108+56	HWY. 77 - LT.			27	
SUBTOTALS HWY. 77 SITE 1:					**109**	
HWY. 77 SITE 2						
207+73	208+02	HWY. 77 - LT.			28	
207+89	208+14	HWY. 77 - RT.			25	
210+06	210+35	HWY. 77 - LT.			29	
210+18	210+47	HWY. 77 - RT.			28	
223+61	223+88	HWY. 77 - LT.			28	
223+61	223+88	HWY. 77 - RT.			27	
227+10	227+30	HWY. 77 - LT.			28	
227+10	227+30	HWY. 77 - RT.			28	
228+45	228+74	HWY. 77 - LT.			28	
228+72	228+99	HWY. 77 - RT.			27	
230+78	230+93	HWY. 77 - LT.			15	
231+07	231+33	HWY. 77 - RT.			26	
232+34		HWY. 77 - LT.		2		
SUBTOTALS HWY. 77 SITE 2:				**2**	**317**	
HWY. 77 SITE 3						
249+13	249+42	HWY. 77 - LT.			29	
249+13	249+42	HWY. 77 - RT.			28	
253+07	253+35	HWY. 77 - LT.			27	
253+07	253+35	HWY. 77 - RT.			28	
SUBTOTALS HWY. 77 SITE 3:					**112**	
HWY. 77 SITE 4						
271+19	271+48	HWY. 77 - LT.			28	
271+29	271+55	HWY. 77 - RT.			26	
272+72	273+00	HWY. 77 - LT.			28	
272+82	273+10	HWY. 77 - RT.			28	
SUBTOTALS HWY. 77 SITE 4:					**110**	
HWY. 77 SITE 5						
504+45	504+72	HWY. 77 - LT.			28	
504+45	504+72	HWY. 77 - RT.			27	
505+28	505+55	HWY. 77 - LT.			27	
SUBTOTALS HWY. 77 SITE 5:					**82**	
HWY. 140 SITE 1						
107+72	108+23	HWY. 140 - RT			52	
107+96	108+26	HWY. 140 - RT	31			
108+06	108+44	HWY. 140 - LT.			39	
108+22	108+47	HWY. 140 - LT.	25			
110+55	110+74	HWY. 140 - RT	19			
110+55	110+95	HWY. 140 - RT			40	
110+75	111+05	HWY. 140 - LT.	30			
110+78	111+30	HWY. 140 - LT.			52	
SUBTOTALS HWY. 140 SITE 1:			**105**		**183**	
HWY. 140 SITE 2						
202+33		HWY. 140 - RT		1		
204+47		HWY. 140 - RT		2		
207+27	207+79	HWY. 140 - RT			51	
207+60	207+99	HWY. 140 - LT.			39	
207+52	207+79	HWY. 140 - RT	27			
207+72	208+01	HWY. 140 - LT.	30			
210+11	210+51	HWY. 140 - RT			40	
210+33	210+84	HWY. 140 - LT.			52	
210+10	210+39	HWY. 140 - RT	30			
210+30	210+58	HWY. 140 - LT.	29			
213+85		HWY. 140 - RT		1		
SUBTOTALS HWY. 140 SITE 2:			**116**	**4**	**182**	
HWY. 181 SITE 3						
103+76		HWY. 181 - LT.				1
301+66		HWY. 181 - LT.		1		
303+60		HWY. 181 - LT.		1		
306+25	306+52	HWY. 181 - LT.			28	
306+25	306+52	HWY. 181 - RT			28	
307+00	307+28	HWY. 181 - LT.			28	
307+00	307+28	HWY. 181 - RT			28	
SUBTOTALS HWY. 181 SITE 3:				**2**	**112**	**1**
TOTALS:			**221**	**8**	**1207**	**1**

NOTE: THE QUANTITY SHOWN ABOVE FOR THE REMOVAL AND DISPOSAL OF GUARDRAIL SHALL INCLUDE THE REMOVAL AND DISPOSAL OF ALL GUARDRAIL TERMINALS AND TERMINAL ANCHOR POSTS.

REMOVAL AND DISPOSAL OF FENCE

STATION	STATION	LOCATION	FENCE
			LIN. FT.
HWY. 181 SITE 1			
102+60	103+43	HWY. 181 - RT	157
SUBTOTAL HWY. 181 SITE 1:			**157**
TOTAL:			**157**

EARTHWORK

STATION	STATION	LOCATION / DESCRIPTION	UNCLASSIFIED EXCAVATION			COMPACTED EMBANKMENT	STONE BACKFILL	* SOIL STABILIZATION
			UNDERCUT	TYPICAL	TOTAL	TOTAL		
			CU. YD.				TON	TON
HWY. 77 SITE 1								
101+00	114+00	HWY. 77		1894	1894	6889		
		BRIDGE ENDS (NON-STRUCTURAL)		94	94			
ENTIRE SITE		DRIVEWAYS LT. & RT.				553		
SUBTOTALS HWY. 77 SITE 1:				**1988**	**1988**	**7442**		
HWY. 77 SITE 2								
204+25	236+25	HWY. 77		528	528	12506		
10+40	15+00	HWY. 77 - HWY. 158 CONNECTOR		71	71	1117		
3+45	9+89	HWY. 77 - C R. 524		441	441	6042		
		BRIDGE ENDS (NON-STRUCTURAL)		8104	8104			
ENTIRE SITE		DRIVEWAYS LT. & RT.				8384		
SUBTOTALS HWY. 77 SITE 2:				**9144**	**9144**	**28049**		
HWY. 77 SITE 3								
244+00	256+00	HWY. 77		274	274	6716		
		BRIDGE ENDS (NON-STRUCTURAL)		1050	1050			
ENTIRE SITE		DRIVEWAYS LT. & RT.				230		
SUBTOTALS HWY. 77 SITE 3:				**1324**	**1324**	**6946**		
HWY. 77 SITE 4								
266+00	282+75	HWY. 77		134	134	13108		
15+40	20+00	HWY. 77 - C R. 538 W.		73	73	7044		
20+00	23+70	HWY. 77 - C R. 538 E.		77	77	3230		
		BRIDGE ENDS (NON-STRUCTURAL)		812	812			
ENTIRE SITE		DRIVEWAYS LT. & RT.				215		
SUBTOTALS HWY. 77 SITE 4:				**1096**	**1096**	**23597**		
HWY. 77 SITE 5								
501+00	508+00	HWY. 77		1139	1139	3025		
10+00	12+75	HWY. 77 - FARMER LN.		751	751	185		
505+00		BOX CULVERT ADDITIONAL EXCAVATION & STONE BACKFILL		1660	1660		423	
ENTIRE SITE		DRIVEWAYS LT. & RT.				38		
SUBTOTALS HWY. 77 SITE 5:				**3550**	**3550**	**3248**	**423**	
HWY. 77 (ALL SITES)								
SUBTOTALS HWY. 77 (ALL SITES):				**17101**	**17101**	**69282**	**423**	
HWY. 140 SITE 1								
** 102+00	117+50	HWY. 140	3719	5689	9408	10282		
107+73		HWY. 140 - BERM OVER SIDE DRAIN RT.				298		
108+02		HWY. 140 - BERM OVER SIDE DRAIN LT.				222		
111+00		HWY. 140 - BERM OVER SIDE DRAIN RT.				585		
111+29		HWY. 140 - BERM OVER SIDE DRAIN LT.				377		
		BRIDGE ENDS (NON-STRUCTURAL)		2011	2011			
ENTIRE SITE		DRIVEWAYS LT. & RT.				231		
SUBTOTALS HWY. 140 SITE 1:			**3719**	**7700**	**11419**	**11995**		
HWY. 140 SITE 2								
** 202+50	215+75	HWY. 140	3897	4112	8009	9807		
		BRIDGE ENDS (NON-STRUCTURAL)		3142	3142			
ENTIRE SITE		DRIVEWAYS LT. & RT.				157		
SUBTOTALS HWY. 140 SITE 2:			**3897**	**7254**	**11151**	**9964**		
HWY. 140 SITE 3								
** 302+00	307+00	HWY. 140		2859	2859	2628		
304+23		BOX CULVERT ADDITIONAL EXCAVATION & STONE BACKFILL		519	519		471	
SUBTOTALS HWY. 140 SITE 3:				**3378**	**3378**	**2628**	**471**	
HWY. 140 (ALL SITES)								
SUBTOTALS HWY. 140 (ALL SITES):			**7616**	**18333**	**25949**	**24587**	**471**	
HWY. 158 SITE 1								
102+25	114+50	HWY. 158 - SITE 1	87	4018	4105	4041		
107+15		HWY. 158 - BERM OVER SIDE DRAIN RT.				347		
110+45		HWY. 158 - BERM OVER SIDE DRAIN LT.				320		
		BRIDGE ENDS (NON-STRUCTURAL)		1796	1796			
ENTIRE SITE		DRIVEWAYS LT. & RT.				1208		
SUBTOTALS HWY. 158 SITE 1:			**87**	**5814**	**5901**	**5916**		
HWY. 181 SITE 1								
101+00	104+00	HWY. 181		565	565	394		
102+50		BOX CULVERT ADDITIONAL EXCAVATION & STONE BACKFILL		2281	2281		367	
ENTIRE SITE		DRIVEWAYS LT. & RT.				37		
SUBTOTALS HWY. 181 SITE 1:				**2846**	**2846**	**431**	**367**	
HWY. 181 SITE 2								
201+00	204+50	HWY. 181		1138	1138	1304		
202+91		BOX CULVERT ADDITIONAL EXCAVATION & STONE BACKFILL		3269	3269		559	
ENTIRE SITE		DRIVEWAYS LT. & RT.				12		
SUBTOTALS HWY. 181 SITE 2:				**4407**	**4407**	**1316**	**559**	
HWY. 181 SITE 3								
303+00	312+00	HWY. 181		2800	2800	3496		
306+75		BOX CULVERT ADDITIONAL EXCAVATION & STONE BACKFILL		1597	1597		333	
ENTIRE SITE		DRIVEWAYS LT. & RT.				116		
SUBTOTALS HWY. 181 SITE 3:				**4397**	**4397**	**3612**	**333**	
HWY. 181 SITE (ALL SITES)								
SUBTOTALS HWY. 181 (ALL SITES):				**11650**	**11650**	**5359**	**1259**	
ALL SITES								
* ENTIRE	PROJECT	TO BE USED IF AND WHERE						400
		DIRECTED BY THE ENGINEER						
TOTALS:			**7703**	**52898**	**60601**	**105144**	**2153**	**400**

* QUANTITY ESTIMATED.
SEE SECTION 104.03 OF THE STD. SPECS.

** COMPACTED EMBANKMENT INCLUDES VOLUME OF BACKFILL FOR UNDERCUT.

EARTHWORK QUANTITIES SHOWN ABOVE SHALL BE PAID AS PLAN QUANTITY, EXCEPT FOR UNDERUT AND COMPACTED EMBANKMENT FOR BACKFILL OF UNDERCUT.

BASIS OF ESTIMATE FOR STONE BACKFILL IS 1.89 TON/CU. YD.

REMOVAL AND DISPOSAL OF CULVERTS

STATION	DESCRIPTION	PIPE CULVERTS
		EACH
HWY. 77 SITE 1		
106+10	HWY. 77 - LT.	1
106+33	HWY. 77 - LT.	1
108+70	HWY. 77 - RT.	1
109+50	HWY. 77 - LT.	1
SUBTOTAL HWY. 77 SITE 1:		**4**
HWY. 77 SITE 5		
504+47	HWY. 77 - LT.	1
505+49	HWY. 77 - RT.	2
505+79	HWY. 77 - LT.	1
SUBTOTAL HWY. 77 SITE 5:		**4**
HWY. 140 SITE 1		
107+59	HWY. 140 - RT.	1
110+70	HWY. 140 - RT.	1
112+37	HWY. 140 - LT.	1
SUBTOTAL HWY. 140 SITE 1:		**3**
HWY. 140 SITE 2		
202+28	HWY. 140 - RT.	1
204+56	HWY. 140 - RT.	1
206+79	HWY. 140 - LT.	1
213+34	HWY. 140 - RT.	1
SUBTOTAL HWY. 140 SITE 2:		**4**
HWY. 140 SITE 3		
304+22	HWY. 140 - CROSS DRAINS	3
305+55	HWY. 140 - RT.	1
SUBTOTAL HWY. 140 SITE 3:		**4**
HWY. 158 SITE 1		
105+12	HWY. 158 - RT.	1
106+12	HWY. 158 - LT.	1
108+10	HWY. 158 - LT.	1
110+65	HWY. 158 - LT.	1
SUBTOTAL HWY. 158 SITE 1:		**4**
HWY. 181 SITE 1		
101+17	HWY. 181 - RT.	1
101+41	HWY. 181 - LT.	1
103+96	HWY. 181 - RT.	2
SUBTOTAL HWY. 181 SITE 1:		**4**
HWY. 181 SITE 2		
202+77	HWY. 181 - RT.	1
202+81	HWY. 181 - CROSS DRAIN	1
202+91	HWY. 181 - CROSS DRAIN	1
SUBTOTAL HWY. 181 SITE 2:		**3**
HWY. 181 SITE 3		
301+86	HWY. 181 - LT.	1
303+81	HWY. 181 - LT.	1
305+29	HWY. 181 - RT.	1
307+45	HWY. 181 - RT.	1
309+92	HWY. 181 - RT.	1
309+97	HWY. 181 - LT.	1
SUBTOTAL HWY. 181 SITE 3:		**6**
TOTAL:		**36**

NOTE: QUANTITIES SHOWN ABOVE SHALL INCLUDE REMOVAL & DISPOSAL OF ALL HEADWALLS AND FLARED END SECTIONS IF APPLICABLE.

STATE OF ARKANSAS
LICENSED PROFESSIONAL ENGINEER
No.13436
SHAUN A. ROBERSON

DIGITALLY SIGNED 1-5-2022

QUANTITIES

CGGervasini 1/5/2022 1:57:31 PM
WORKSPACE: AHTD
\\garverinc.local\gdata\Projects\2017\17017642 - ARDOT Job 100955\Drawings\r100955_QTY_01.dgn
REVISED DATE:

DATE REVISED	DATE FILMED	DATE REVISED	DATE FILMED	FED.RD. DIST.NO.	STATE	FED.AID PROJ.NO.	SHEET NO.	TOTAL SHEETS
01-05-2022				6	ARK.			
				JOB NO.		100955	72	356
				(2)		QUANTITIES		

STRUCTURES

STATION	DESCRIPTION	SIDE DRAIN 24"	30"	36"	42"	48"	60"	AUTOMATIC FLOODGATES 36"	42"	REINFORCED CONCRETE PIPE CULVERT (CLASS III) 30"	FLARED END SECTIONS FOR R.C. PIPE 30"	SPAN	HEIGHT	LENGTH	CLASS S CONCRETE-ROADWAY	REINF. STEEL-ROADWAY (GRADE 60)	UNCL.EXC. FOR STR.-ROADWAY	SOLID SODDING	WATER	STD. DWG. NOS.
		LIN. FT.						EACH		LIN. FT.	EACH	LIN. FT.			CU.YD.	POUND	CU.YD.	SQ.YD.	M.GAL.	
HWY. 77 SITE 2																				
9+00	C.R. 524 - CONSTRUCT PIPE CULVERT	82																		PCC-1, PCM-1, PCP-1, PCP-2, PCP-3
SUBTOTALS HWY. 77 SITE 2:		**82**																		
HWY. 77 SITE 5																				
505+80	HWY. 77 - FARMER LN. CONSTRUCT PIPE CULVERT RT.					78														PCC-1, PCM-1, PCP-1, PCP-2, PCP-3
SUBTOTALS HWY. 77 SITE 5:						**78**														
HWY. 140 SITE 1																				
107+71	HWY. 140 - CONSTRUCT PIPE CULVERT RT.						72													PCC-1, PCM-1, PCP-1, PCP-2, PCP-3
108+48	HWY. 140 - CONSTRUCT PIPE CULVERT LT.			166				1												PCC-1, PCM-1, PCP-1, PCP-2, PCP-3
110+81	HWY. 140 - CONSTRUCT PIPE CULVERT RT.				138				1											PCC-1, PCM-1, PCP-1, PCP-2, PCP-3
111+31	HWY. 140 - CONSTRUCT PIPE CULVERT LT.	78																		PCC-1, PCM-1, PCP-1, PCP-2, PCP-3
116+38	HWY. 140 - EXTEND 30" R.C. PIPE 13' LT. & 17' RT.									38	2							26	0.33	FES-1, FES-2, PCC-1
SUBTOTALS HWY. 140 SITE 1:		**78**		**166**	**138**		**72**	**1**	**1**	**38**	**2**							**26**	**0.33**	
HWY. 158 SITE 1																				
107+12	HWY. 158 - CONSTRUCT PIPE CULVERT RT.	74																		PCC-1, PCM-1, PCP-1, PCP-2, PCP-3
110+48	HWY. 158 - CONSTRUCT PIPE CULVERT LT.		74																	PCC-1, PCM-1, PCP-1, PCP-2, PCP-3
SUBTOTALS HWY. 158 SITE 1:		**74**	**74**																	
STRUCTURES OVER 20' - 0" SPAN																				
HWY. 77 SITE 5																				
505+00	HWY. 77 - CONSTRUCT TRP 12'X10' R.C. BOX CULVERT											12	10	84	403.68	47749	168	43	0.54	SPECIAL DETAILS, RCB-1, RCB-2
SUBTOTALS HWY. 77 SITE 5:															**403.68**	**47749**	**168**	**43**	**0.54**	
HWY. 140 SITE 3																				
304+23	HWY. 140 - CONSTRUCT TRP. 11'X9' R.C. BOX CULVERT											11	9	100	400.49	53396	152	50	0.63	SPECIAL DETAILS, RCB-1, RCB-2
SUBTOTALS HWY. 140 SITE 3:															**400.49**	**53396**	**152**	**50**	**0.63**	
HWY. 181 SITE 1																				
102+50	HWY. 181 - CONSTRUCT TRP. 10'X9' R.C. BOX CULVERT											10	9	86	323.28	43647	129	39	0.49	SPECIAL DETAILS, RCB-1, RCB-2
SUBTOTALS HWY. 181 SITE 1:															**323.28**	**43647**	**129**	**39**	**0.49**	
HWY. 181 SITE 2																				
202+91	HWY. 181 - CONSTRUCT TRP. 11'X9' R.C. BOX CULVERT											11	9	119	469.15	65588	181	55	0.69	SPECIAL DETAILS, RCB-1, RCB-2
SUBTOTALS HWY. 181 SITE 2:															**469.15**	**65588**	**181**	**55**	**0.69**	
HWY. 181 SITE 3																				
306+75	HWY. 181 - CONSTRUCT TRP. 9'X9' R.C. BOX CULVERT											9	9	84	274.26	35721	93	38	0.48	SPECIAL DETAILS, RCB-1, RCB-2
SUBTOTALS HWY. 181 SITE 3:															**274.26**	**35721**	**93**	**38**	**0.48**	
TOTALS:		**234**	**74**	**166**	**138**	**78**	**72**	**1**	**1**	**38**	**2**				**1870.86**	**246101**	**723**	**251**	**3.16**	

BASIS OF ESTIMATE:
WATER.....12.6 GAL. / SQ. YD. OF SOLID SODDING

NOTE: FOR R.C. PIPE CULVERT INSTALLATIONS USE TYPE 3 BEDDING UNLESS OTHERWISE SPECIFIED.

STATE OF ARKANSAS
LICENSED PROFESSIONAL ENGINEER
No.13436
SHAUN A. ROBERSON

DIGITALLY SIGNED 1-5-2022

CGervasini 1/5/2022 1:57:41 PM
WORKSPACE: AHTD
\\garverinc.local\gdata\Projects\2017\17017642 - ARDOT Job 100955\Drawings\r100955_QTY_01.dgn
REVISED DATE:

GUARDRAIL

STATION	STATION	LOCATION	GUARDRAIL (TYPE A)	THRIE BEAM GUARDRAIL TERMINAL	GUARDRAIL TERMINAL (TYPE 2)	BRIDGE END TERMINAL
			LIN. FT.	EACH		
HWY. 77 SITE 1						
104+34.53	106+52.68	HWY. 77 RT.	150	1	1	
105+21.91	106+65.06	HWY. 77 LT.	75	1	1	
108+34.94	109+28.05	HWY. 77 RT.	25	1	1	
108+47.32	110+65.47	HWY. 77 LT.	150	1	1	
SUBTOTALS HWY. 77 SITE 1:			**400**	**4**	**4**	
HWY. 77 SITE 2						
205+40.41	207+58.56	HWY. 77 RT.	150	1	1	
205+95.78	207+38.93	HWY. 77 LT.	75	1	1	
210+61.44	212+79.59	HWY. 77 LT.	150	1	1	
210+81.07	212+24.22	HWY. 77 RT.	75	1	1	
221+34.75	223+52.90	HWY. 77 RT.	150	1	1	
222+09.75	223+52.90	HWY. 77 LT.	75	1	1	
	227+34.10	HWY. 77 RT.				1
	227+34.10	HWY. 77 LT.				1
	228+56.99	HWY. 77 LT.				1
	228+80.80	HWY. 77 RT.				1
230+98.42	233+16.57	HWY. 77 LT.	150	1	1	
231+22.23	232+15.34	HWY. 77 RT.	25	1	1	
SUBTOTALS HWY. 77 SITE 2:			**850**	**8**	**8**	**4**
HWY. 77 SITE 3						
247+05.75	249+23.90	HWY. 77 RT.	150	1	1	
247+80.17	249+23.90	HWY. 77 LT.	75	1	1	
253+26.10	254+69.25	HWY. 77 RT.	75	1	1	
253+26.10	255+44.25	HWY. 77 LT.	150	1	1	
SUBTOTALS HWY. 77 SITE 3:			**450**	**4**	**4**	
HWY. 77 SITE 4						
269+14.91	271+33.06	HWY. 77 RT.	150	1	1	
269+77.53	271+20.68	HWY. 77 LT.	75	1	1	
272+92.94	274+61.07	HWY. 77 LT.	100	1	1	
273+05.32	274+48.47	HWY. 77 RT.	75	1	1	
SUBTOTALS HWY. 77 SITE 4:			**400**	**4**	**4**	
HWY. 140 SITE 1						
105+72.52	107+90.67	HWY. 140 RT.	150	1	1	
106+75.53	108+18.68	HWY. 140 LT.	75	1	1	
110+83.32	112+26.47	HWY. 140 RT.	75	1	1	
111+11.33	113+29.48	HWY. 140 LT.	150	1	1	
SUBTOTALS HWY. 140 SITE 1:			**450**	**4**	**4**	
HWY. 140 SITE 2						
205+28.02	207+46.17	HWY. 140 RT.	150	1	1	
206+31.04	207+74.19	HWY. 140 LT.	75	1	1	
210+38.82	211+81.97	HWY. 140 RT.	75	1	1	
210+66.83	212+84.98	HWY. 140 LT.	150	1	1	
SUBTOTALS HWY. 140 SITE 2:			**450**	**4**	**4**	
HWY. 158 SITE 1						
105+14.03	107+32.18	HWY. 158 RT.	150	1	1	
106+10.03	107+53.18	HWY. 158 LT.	75	1	1	
110+04.82	111+47.97	HWY. 158 RT.	75	1	1	
110+25.83	112+43.98	HWY. 158 LT.	150	1	1	
SUBTOTALS HWY 158 SITE 1:			**450**	**4**	**4**	
TOTALS:			**3450**	**32**	**32**	**4**

SELECTED PIPE BEDDING

LOCATION	SELECTED PIPE BEDDING
	CU.YD.
ENTIRE PROJECT TO BE USED IF	
AND WHERE DIRECTED BY THE	100
ENGINEER	
TOTAL:	**100**

NOTE: QUANTITY ESTIMATED.
SEE SECTION 104.03 OF THE STD. SPECS.

FENCING

STATION	STATION	LOCATION	* 4' CHAIN LINK FENCE
			LIN. FT.
HWY. 181 SITE 1			
102+60	103+43	HWY. 181 SITE 1 RT.	98
SUBTOTAL HWY. 181 SITE 1:			**98**
TOTAL:			**98**

* DENOTES ALTERNATE BID ITEM.

NOTE: CHAIN LINK FENCE BEING PLACED ON PRIVATE PROPERTY SHALL INCLUDE A TOP RAIL. ALL LABOR, MATERIALS, EQUIPMENT, TOOLS, AND INCIDENTALS NECESSARY TO COMPLETE THE WORK WILL BE PAID FOR AT THE CONTRACT UNIT BID PER LINEAR FOOT OF CHAIN LINK FENCE.

CONCRETE DITCH PAVING

STATION	STATION	LOCATION	LENGTH	"W"	CONC. DITCH PAVING (TYPE B)	SOLID SODDING	WATER
			LIN. FT.	FEET	SQ. YD.	SQ. YD.	M. GAL.
HWY. 181 SITE 2							
202+50.00	203+50.00	HWY. 181 LT.	100.00	6.00	66.67	44.44	0.56
SUBTOTALS HWY. 181 SITE 2:					**66.67**	**44.44**	**0.56**
HWY. 181 SITE 3							
202+90.00	203+00.00	HWY. 181 LT.	10.00	6.00	6.67	4.44	0.06
SUBTOTALS HWY. 181 SITE 3:					**6.67**	**4.44**	**0.06**
HWY. 140 SITE 3							
303+00.00	304+31.00	HWY. 140 LT.	131.00	6.00	87.33	58.22	0.73
303+00.00	303+70.00	HWY. 140 RT.	70.00	6.00	46.67	31.11	0.39
304+10.00	306+00.00	HWY. 140 RT.	190.00	6.00	126.67	84.44	1.06
SUBTOTALS HWY. 140 SITE 3:					**260.67**	**173.77**	**2.18**
TOTALS:					**334.01**	**222.65**	**2.80**

BASIS OF ESTIMATE:
WATER.....12.6 GAL. / SQ. YD. OF SOLID SODDING.

COLD MILLING ASPHALT PAVEMENT

STATION	STATION	LOCATION	AVG. WIDTH	COLD MILLING ASPHALT PAVEMENT
			FEET	SQ. YD.
HWY. 77 SITE 1				
101+00.00	102+00.00	HWY. 77	26.00	288.89
113+00.00	114+00.00	HWY. 77	26.00	288.89
SUBTOTAL HWY. 77 SITE 1:				**577.78**
HWY. 77 SITE 2				
204+25.00	205+25.00	HWY. 77	26.00	288.89
235+25.00	236+25.00	HWY. 77	26.00	288.89
10+40.00	11+40.00	HWY. 158 CONNECTOR	24.00	266.67
SUBTOTAL HWY. 77 SITE 2:				**844.45**
HWY. 77 SITE 3				
244+00.00	245+00.00	HWY. 77	26.00	288.89
256+00.00	257+00.00	HWY. 77	26.00	288.89
SUBTOTAL HWY. 77 SITE 3:				**577.78**
HWY. 77 SITE 4				
266+00.00	267+00.00	HWY. 77	26.00	288.89
281+75.00	282+75.00	HWY. 77	26.00	288.89
SUBTOTAL HWY. 77 SITE 4:				**577.78**
HWY. 77 SITE 5				
501+00.00	502+00.00	HWY. 77	20.00	222.22
507+00.00	508+00.00	HWY. 77	40.00	444.44
SUBTOTAL HWY. 77 SITE 5:				**666.66**
HWY. 140 SITE 1				
102+00.00	103+00.00	HWY. 140	35.00	388.89
116+50.00	117+50.00	HWY. 140	35.00	388.89
SUBTOTAL HWY. 140 SITE 1:				**777.78**
HWY. 140 SITE 2				
201+50.00	202+50.00	HWY. 140	34.00	377.78
215+75.00	216+75.00	HWY. 140	34.00	377.78
SUBTOTAL HWY. 140 SITE 2:				**755.56**
HWY. 140 SITE 3				
302+00.00	303+00.00	HWY. 140	32.00	355.56
306+00.00	307+00.00	HWY. 140	32.00	355.56
SUBTOTAL HWY. 140 SITE 3:				**711.12**
HWY. 158 SITE 1				
102+25.00	103+25.00	HWY. 158	20.00	222.22
114+50.00	115+50.00	HWY. 158	20.00	222.22
SUBTOTAL HWY. 158 SITE 1:				**444.44**
HWY. 181 SITE 1				
101+00.00	102+00.00	HWY. 181	20.00	222.22
103+00.00	104+00.00	HWY. 181	20.00	222.22
SUBTOTAL HWY. 181 SITE 1:				**444.44**
HWY. 181 SITE 2				
201+00.00	202+00.00	HWY. 181	26.00	288.89
203+50.00	204+50.00	HWY. 181	26.00	288.89
SUBTOTAL HWY. 181 SITE 2:				**577.78**
HWY. 181 SITE 3				
301+00.00	302+00.00	HWY. 181	20.00	222.22
311+00.00	312+00.00	HWY. 181	20.00	222.22
SUBTOTAL HWY. 181 SITE 3:				**444.44**
TOTAL:				**7400.01**

NOTE: AVERAGE MILLING DEPTH 1".

ACHM PATCHING OF EXISTING ROADWAY

DESCRIPTION	TON
ENTIRE PROJECT - TO BE USED IF AND WHERE	100
DIRECTED BY THE ENGINEER	
TOTAL:	**100**

NOTE: QUANTITY ESTIMATED.
SEE SECTION 104.03 OF THE STD. SPECS.

4" PIPE UNDERDRAIN

STATION	STATION	LOCATIONS	4" PIPE UNDERDRAINS	UNDERDRAIN OUTLET PROTECTORS
			LIN. FT.	EACH
* ENTIRE PROJECT TO BE USED IF AND			500	4
WHERE DIRECTED BY THE ENGINEER				
TOTALS:			**500**	**4**

* NOTE: QUANTITY ESTIMATED.
SEE SECTION 104.03 OF THE STD. SPECS.

ASPHALT CONCRETE PATCHING FOR MAINTENANCE OF TRAFFIC

LOCATION	TON	TACK COAT
		GALLON
ENTIRE PROJECT - TO BE USED IF AND WHERE	47	94
DIRECTED BY THE ENGINEER		
TOTALS:	**47**	**94**

NOTE: QUANTITIES ARE ESTIMATED.
SEE SECTION 104.03 OF THE STD. SPECS.
BASIS OF ESTIMATE:
ASPHALT CONCRETE PATCHING FOR MAINTENANCE OF TRAFFIC...25 TON/MILE
TACK COAT FOR MAINTENANCE OF TRAFFIC.....50 GAL./MILE

STATE OF ARKANSAS
LICENSED PROFESSIONAL ENGINEER
SHAUN A. ROBERSON
No.13436
DIGITALLY SIGNED 1-5-2022

DATE REVISED	DATE FILMED	DATE REVISED	DATE FILMED	FED.RD. DIST.NO.	STATE	FED.AID PROJ.NO.	SHEET NO.	TOTAL SHEETS
01-05-2022				6	ARK.			
				JOB NO.		100955	73	356
				(2)		QUANTITIES		

APPROACH GUTTERS AND SLABS

STATION	STATION	LOCATION	APPROACH GUTTER (TYPE SPECIAL)	APPROACH SLABS (TYPE SPECIAL)	REINFORCING STEEL-RDWY. (GR. 60)	AGGREGATE BASE CRS. (CLASS 7)
			CU.YD.		POUND	TON
HWY. 77 SITE 1						
106+26.18	106+64.87	HWY. 77 - RT.	12.75		1169	
106+28.37	106+68.87	HWY. 77		53.42	6580	34.65
106+38.56	106+75.06	HWY. 77 - LT.	12.84		1117	
108+24.94	108+61.44	HWY. 77 - RT.	12.84		1117	
108+31.13	108+71.63	HWY. 77		53.42	6580	34.65
108+35.13	108+73.82	HWY. 77 - LT.	12.75		1169	
SUBTOTALS HWY. 77 SITE 1:			**51.18**	**106.84**	**17732**	**69.30**
HWY. 77 SITE 2						
207+12.43	207+52.40	HWY. 77 - LT.	12.93		1194	
207+15.90	207+58.75	HWY. 77		55.73	6860	36.66
207+32.06	207+68.56	HWY. 77 - RT.	13.06		1096	
210+51.44	210+87.94	HWY. 77 - LT.	13.06		1096	
210+61.25	211+04.10	HWY. 77		55.73	6860	36.66
210+67.60	211+07.57	HWY. 77 - RT.	12.93		1194	
223+26.40	223+62.90	HWY. 77 - LT.	12.46		1111	
223+26.40	223+62.90	HWY. 77		45.00	5540	31.23
223+26.40	223+62.90	HWY. 77 - RT.	12.46		1111	
227+25.10	227+61.60	HWY. 77 - LT.	12.46		1111	
227+25.10	227+61.60	HWY. 77		45.00	5540	31.23
227+25.10	227+61.60	HWY. 77 - RT.	12.46		1111	
228+29.27	228+69.98	HWY. 77 - LT.	13.02		1208	
228+33.48	228+77.68	HWY. 77		57.06	7030	37.82
228+53.08	228+85.38	HWY. 77 - RT.	13.19		1126	
230+92.62	231+24.90	HWY. 77 - LT.	13.19		1126	
231+00.32	231+44.52	HWY. 77		57.06	7030	37.82
231+08.02	231+48.73	HWY. 77 - RT.	13.02		1208	
SUBTOTALS HWY. 77 SITE 2:			**154.24**	**315.58**	**52552**	**211.41**
HWY. 77 SITE 3						
248+97.40	249+33.90	HWY. 77 - LT.	12.46		1111	
248+97.40	249+33.90	HWY. 77		45.00	5540	31.23
248+97.40	249+33.90	HWY. 77 - RT.	12.46		1111	
253+16.10	253+52.60	HWY. 77 - LT.	12.46		1111	
253+16.10	253+52.60	HWY. 77		45.00	5540	31.23
253+16.10	253+52.60	HWY. 77 - RT.	12.46		1111	
SUBTOTALS HWY. 77 SITE 3:			**49.84**	**90.00**	**15524**	**62.46**
HWY. 77 SITE 4						
270+94.18	271+32.87	HWY. 77 - LT.	12.84		1117	
270+96.37	271+36.87	HWY. 77		53.42	6580	34.65
271+06.56	271+43.06	HWY. 77 - RT.	12.75		1169	
272+82.94	273+19.44	HWY. 77 - LT.	12.75		1169	
272+89.13	273+29.63	HWY. 77		53.42	6580	34.65
272+93.13	273+31.82	HWY. 77 - RT.	12.84		1117	
SUBTOTALS HWY. 77 SITE 4:			**51.18**	**106.84**	**17732**	**69.30**
HWY. 140 SITE 1						
107+64.17	108+06.28	HWY. 140 - RT.	16.73		1534	
107+69.78	108+14.68	HWY. 140		63.06	7660	41.91
107+92.18	108+28.68	HWY. 140 - LT.	16.95		1387	
110+73.32	111+09.82	HWY. 140 - RT.	16.95		1387	
110+87.32	111+32.22	HWY. 140		63.06	7660	41.91
110+95.72	111+37.83	HWY. 140 - LT.	16.73		1534	
SUBTOTALS HWY. 140 SITE 1:			**67.36**	**126.12**	**21246**	**83.81**
HWY. 140 SITE 2						
207+19.67	207+61.78	HWY. 140 - RT.	16.73		1534	
207+25.28	207+70.18	HWY. 140		63.06	7660	41.91
207+47.68	207+84.18	HWY. 140 - LT.	16.95		1387	
210+28.82	210+65.32	HWY. 140 - RT.	16.95		1387	
210+42.82	210+87.72	HWY. 140		63.06	7660	41.91
210+51.22	210+93.33	HWY. 140 - LT.	16.73		1534	
SUBTOTALS HWY. 140 SITE 2:			**67.36**	**126.12**	**21246**	**83.81**
HWY. 158 SITE 1						
107+05.69	107+44.98	HWY. 158 - RT.	9.44		900	
107+08.48	107+52.68	HWY. 158		57.06	7030	37.82
107+26.68	107+63.18	HWY. 158 - LT.	9.55		847	
109+94.82	110+31.32	HWY. 158 - RT.	9.55		847	
110+05.32	110+49.52	HWY. 158		57.06	7030	37.82
110+13.02	110+52.33	HWY. 158 - LT.	9.44		900	
SUBTOTALS HWY. 158 SITE 1:			**37.98**	**114.12**	**17554**	**75.63**
TOTALS:			**479.14**	**985.62**	**163586**	**655.72**

CGervasini 1/5/2022 11:57:46 PM
WORKSPACE: AHTD
\\garverinc.local\gdata\Projects\20IT\170I7642 - ARDOT Job 100955\Drawings\r100955_QTY_01.dgn
REVISED DATE:

DATE REVISED	DATE FILMED	DATE REVISED	DATE FILMED	FED.RD. DIST.NO.	STATE	FED.AID PROJ.NO.	SHEET NO.	TOTAL SHEETS
01-05-2022				6	ARK.			
				JOB NO.		100955	74	356
				(2)		QUANTITIES		

EROSION CONTROL

STATION	STATION	LOCATION	PERMANENT EROSION CONTROL					TEMPORARY EROSION CONTROL									
			SEEDING	LIME	MULCH COVER	WATER	SECOND SEEDING APPLICATION	TEMPORARY SEEDING	MULCH COVER	WATER	SAND BAG DITCH CHECKS (E-5)	ROCK DITCH CHECKS (E-6)	SILT FENCE (E-11)	SEDIMENT BASIN (E-14)	OBLITERATION OF SEDIMENT BASIN	*SEDIMENT REMOVAL & DISPOSAL
			ACRE	TON	ACRE	M.GAL.	ACRE	ACRE	ACRE	M.GAL.	BAG	CU.YD.	LIN. FT.	CU.YD.	CU.YD.	CU. YD.
HWY. 77 SITE 1																
ENTIRE	SITE	CLEARING AND GRUBBING										39	355			26
ENTIRE	SITE	STAGE 1										30				10
*ENTIRE SITE TO BE USED IF AND WHERE DIRECTED BY THE ENGINEER.			1.91	3.82	1.91	194.8	1.91	1.91	1.91	39.0				100	100	100
SUBTOTALS HWY. 77 SITE 1:			**1.91**	**3.82**	**1.91**	**194.8**	**1.91**	**1.91**	**1.91**	**39.0**		**69**	**355**	**100**	**100**	**136**
HWY. 77 SITE 2																
ENTIRE	SITE	CLEARING AND GRUBBING										42	8230			319
ENTIRE	SITE	STAGE 1										9				3
*ENTIRE SITE TO BE USED IF AND WHERE DIRECTED BY THE ENGINEER.			5.40	10.80	5.40	550.8	5.40	5.40	5.40	110.2				100	100	100
SUBTOTALS HWY. 77 SITE 2:			**5.40**	**10.80**	**5.40**	**550.8**	**5.40**	**5.40**	**5.40**	**110.2**		**51**	**8230**	**100**	**100**	**422**
HWY. 77 SITE 3																
ENTIRE	SITE	CLEARING AND GRUBBING										18	2310			92
ENTIRE	SITE	STAGE 1										3				1
*ENTIRE SITE TO BE USED IF AND WHERE DIRECTED BY THE ENGINEER.			1.68	3.36	1.68	171.4	1.68	1.68	1.68	34.3				100	100	100
SUBTOTALS HWY. 77 SITE 3:			**1.68**	**3.36**	**1.68**	**171.4**	**1.68**	**1.68**	**1.68**	**34.3**		**21**	**2310**	**100**	**100**	**193**
HWY. 77 SITE 4																
ENTIRE	SITE	CLEARING AND GRUBBING										15	3895			149
ENTIRE	SITE	STAGE 1										6				2
*ENTIRE SITE TO BE USED IF AND WHERE DIRECTED BY THE ENGINEER.			3.53	7.06	3.53	360.1	3.53	3.53	3.53	72.0				100	100	100
SUBTOTALS HWY. 77 SITE 4:			**3.53**	**7.06**	**3.53**	**360.1**	**3.53**	**3.53**	**3.53**	**72.0**		**21**	**3895**	**100**	**100**	**251**
HWY. 77 SITE 5																
ENTIRE	SITE	CLEARING AND GRUBBING										30				10
ENTIRE	SITE	STAGE 1										18	400			21
*ENTIRE SITE TO BE USED IF AND WHERE DIRECTED BY THE ENGINEER.			1.25	2.50	1.25	127.5	1.25	1.25	1.25	25.5				100	100	100
SUBTOTALS HWY. 77 SITE 5:			**1.25**	**2.50**	**1.25**	**127.5**	**1.25**	**1.25**	**1.25**	**25.5**		**48**	**400**	**100**	**100**	**131**
HWY. 140 SITE 1																
ENTIRE	SITE	CLEARING AND GRUBBING										30	645			34
ENTIRE	SITE	STAGE 1										33				11
*ENTIRE SITE TO BE USED IF AND WHERE DIRECTED BY THE ENGINEER.			2.36	4.72	2.36	240.7	2.36	2.36	2.36	48.1				100	100	100
SUBTOTALS HWY. 140 SITE 1:			**2.36**	**4.72**	**2.36**	**240.7**	**2.36**	**2.36**	**2.36**	**48.1**		**63**	**645**	**100**	**100**	**145**
HWY. 140 SITE 2																
ENTIRE	SITE	CLEARING AND GRUBBING										36	1140			54
ENTIRE	SITE	STAGE 1										24				8
*ENTIRE SITE TO BE USED IF AND WHERE DIRECTED BY THE ENGINEER.			1.98	3.96	1.98	202.0	1.98	1.98	1.98	40.4				100	100	100
SUBTOTALS HWY. 140 SITE 2:			**1.98**	**3.96**	**1.98**	**202.0**	**1.98**	**1.98**	**1.98**	**40.4**		**60**	**1140**	**100**	**100**	**162**
HWY. 140 SITE 3																
ENTIRE	SITE	CLEARING AND GRUBBING										33				11
ENTIRE	SITE	STAGE 1										33	580			32
*ENTIRE SITE TO BE USED IF AND WHERE DIRECTED BY THE ENGINEER.			1.16	2.32	1.16	118.3	1.16	1.16	1.16	23.7				100	100	100
SUBTOTALS HWY. 140 SITE 3:			**1.16**	**2.32**	**1.16**	**118.3**	**1.16**	**1.16**	**1.16**	**23.7**		**66**	**580**	**100**	**100**	**143**
HWY. 158 SITE 1																
ENTIRE	SITE	CLEARING AND GRUBBING										33	935			46
ENTIRE	SITE	STAGE 1										27				9
*ENTIRE SITE TO BE USED IF AND WHERE DIRECTED BY THE ENGINEER.			1.97	3.94	1.97	200.9	1.97	1.97	1.97	40.2				100	100	100
SUBTOTALS HWY. 158 SITE 1:			**1.97**	**3.94**	**1.97**	**200.9**	**1.97**	**1.97**	**1.97**	**40.2**		**60**	**935**	**100**	**100**	**155**
HWY. 181 SITE 1																
ENTIRE	SITE	CLEARING AND GRUBBING										24	160			14
ENTIRE	SITE	STAGE 1										12	400			19
*ENTIRE SITE TO BE USED IF AND WHERE DIRECTED BY THE ENGINEER.			0.56	1.12	0.56	57.1	0.56	0.56	0.56	11.4				100	100	100
SUBTOTALS HWY. 181 SITE 1:			**0.56**	**1.12**	**0.56**	**57.1**	**0.56**	**0.56**	**0.56**	**11.4**		**36**	**560**	**100**	**100**	**133**
HWY. 181 SITE 2																
ENTIRE	SITE	CLEARING AND GRUBBING										21	165			13
ENTIRE	SITE	STAGE 1										9	565			24
*ENTIRE SITE TO BE USED IF AND WHERE DIRECTED BY THE ENGINEER.			0.70	1.40	0.70	71.4	0.70	0.70	0.70	14.3				100	100	100
SUBTOTALS HWY. 181 SITE 2:			**0.70**	**1.40**	**0.70**	**71.4**	**0.70**	**0.70**	**0.70**	**14.3**		**30**	**730**	**100**	**100**	**137**
HWY. 181 SITE 3																
ENTIRE	SITE	CLEARING AND GRUBBING										39	300			24
ENTIRE	SITE	STAGE 1										27	380			23
*ENTIRE SITE TO BE USED IF AND WHERE DIRECTED BY THE ENGINEER.			1.86	3.72	1.86	189.7	1.86	1.86	1.86	37.9				100	100	100
SUBTOTALS HWY. 181 SITE 3:			**1.86**	**3.72**	**1.86**	**189.7**	**1.86**	**1.86**	**1.86**	**37.9**		**66**	**680**	**100**	**100**	**147**
*ENTIRE PROJECT TO BE USED IF AND WHERE DIRECTED BY THE ENGINEER.											440					
TOTALS:			**24.36**	**48.72**	**24.36**	**2484.7**	**24.36**	**24.36**	**24.36**	**496.9**	**440**	**591**	**20460**	**1200**	**1200**	**2155**

BASIS OF ESTIMATE:
LIME .....2 TONS / ACRE OF SEEDING
WATER.....102.0 M.G. / ACRE OF SEEDING
WATER.....20.4 M.G. / ACRE OF TEMPORARY SEEDING
SAND BAG DITCH CHECKS.....22 BAGS / LOCATION
ROCK DITCH CHECKS.....3 CU.YD./LOCATION

NOTE: THE TEMPORARY EROSION CONTROL DEVICES SHOWN ABOVE AND ON THE PLANS SHALL BE INSTALLED IN SUCH A SEQUENCE AS TO DETER EROSION AND SEDIMENTATION ON U.S. WATERWAYS AS EXPLAINED BY THE NATIONAL POLLUTANT DISCHARGE ELIMINATION SYSTEM PERMIT.

*QUANTITIES ESTIMATED.
SEE SECTION 104.03 OF THE STD. SPECS.

STATE OF ARKANSAS
LICENSED PROFESSIONAL ENGINEER
No.13436
SHAUN A. ROBERSON
DIGITALLY SIGNED 1-5-2022

CGGervasini 1/5/2022 11:57:56 PM
WORKSPACE: AHTD
\\garverinc.local\gdata\Projects\2017\17017642 - ARDOT Job 100955\Drawings\r100955_QTY_01.dgn
REVISED DATE:

DATE REVISED	DATE FILMED	DATE REVISED	DATE FILMED	FED.RD. DIST.NO.	STATE	FED.AID PROJ.NO.	SHEET NO.	TOTAL SHEETS
01-05-2022				6	ARK.			
				JOB NO.		100955	75	356

(2) QUANTITIES

EROSION CONTROL MATTING

STATION	STATION	LOCATION	LENGTH	CLASS 3
			LIN. FT.	SQ. YD.
HWY. 77 SITE 1				
104+79.00	106+34.00	HWY. 77 LT.	155.00	137.78
108+30.00	111+31.00	HWY. 77 LT.	301.00	267.56
111+69.00	113+00.00	HWY. 77 LT.	131.00	116.44
102+00.00	106+00.00	HWY. 77 RT.	400.00	355.56
108+30.00	109+80.00	HWY. 77 RT.	150.00	133.33
110+30.00	113+00.00	HWY. 77 RT.	270.00	240.00
SUBTOTAL HWY. 77 SITE 1:				**1250.67**
HWY. 77 SITE 4				
278+20.00	281+75.00	HWY. 77 RT.	355.00	315.56
SUBTOTAL HWY. 77 SITE 4:				**315.56**
HWY. 77 SITE 5				
502+00.00	504+48.00	HWY. 77 LT.	248.00	220.44
502+35.00	504+48.00	HWY. 77 RT.	213.00	189.33
SUBTOTAL HWY. 77 SITE 5:				**409.77**
HWY. 140 SITE 1				
103+00.00	105+82.00	HWY. 140 LT.	282.00	250.67
106+32.00	108+30.00	HWY. 140 LT.	198.00	176.00
110+64.00	114+30.00	HWY. 140 LT.	366.00	325.33
114+67.00	116+50.00	HWY. 140 LT.	183.00	162.67
103+00.00	104+65.00	HWY. 140 RT.	165.00	146.67
105+15.00	108+30.00	HWY. 140 RT.	315.00	280.00
110+64.00	112+76.00	HWY. 140 RT.	212.00	188.44
113+46.00	116+50.00	HWY. 140 RT.	304.00	270.22
SUBTOTAL HWY. 140 SITE 1:				**1800.00**
HWY. 140 SITE 2				
202+50.00	205+38.00	HWY. 140 LT.	288.00	256.00
205+92.00	207+30.00	HWY. 140 LT.	138.00	122.67
212+40.00	213+57.00	HWY. 140 LT.	117.00	104.00
214+13.00	215+75.00	HWY. 140 LT.	162.00	144.00
202+53.00	204+37.00	HWY. 140 RT.	184.00	163.56
204+75.00	207+40.00	HWY. 140 RT.	265.00	235.56
210+00.00	215+75.00	HWY. 140 RT.	575.00	511.11
SUBTOTAL HWY. 140 SITE 2:				**1536.90**
HWY. 140 SITE 3				
305+00.00	306+00.00	HWY. 140 LT.	100.00	88.89
SUBTOTAL HWY. 140 SITE 3:				**88.89**
HWY. 158 SITE 1				
103+25.00	104+90.00	HWY. 158 LT.	165.00	146.67
105+50.00	107+50.00	HWY. 158 LT.	200.00	177.78
110+11.00	112+86.00	HWY. 158 LT.	275.00	244.44
113+60.00	114+50.00	HWY. 158 LT.	90.00	80.00
103+25.00	103+79.00	HWY. 158 RT.	54.00	48.00
104+41.00	107+50.00	HWY. 158 RT.	309.00	274.67
110+00.00	112+03.00	HWY. 158 RT.	203.00	180.44
112+67.00	114+50.00	HWY. 158 RT.	183.00	162.67
SUBTOTAL HWY. 158 SITE 1:				**1314.67**
HWY. 181 SITE 1				
101+63.00	102+38.00	HWY. 181 LT.	75.00	66.67
102+65.00	104+00.00	HWY. 181 LT.	135.00	120.00
101+31.00	102+38.00	HWY. 181 RT.	107.00	95.11
102+65.00	103+66.00	HWY. 181 RT.	101.00	89.78
SUBTOTAL HWY. 181 SITE 1:				**371.56**
HWY. 181 SITE 3				
302+04.00	303+57.00	HWY. 181 LT.	153.00	136.00
304+05.00	306+60.00	HWY. 181 LT.	255.00	226.67
308+24.00	309+74.00	HWY. 181 LT.	150.00	133.33
310+20.00	311+00.00	HWY. 181 LT.	80.00	71.11
302+00.00	306+50.00	HWY. 181 RT.	450.00	400.00
307+00.00	307+24.00	HWY. 181 RT.	24.00	21.33
307+66.00	311+00.00	HWY. 181 RT.	334.00	296.89
SUBTOTAL HWY. 181 SITE 3:				**1285.33**
SIDE ROADS				
11+40.00	11+91.00	HWY. 158 CONNECTOR LT.	51.00	45.33
3+95.00	5+30.00	C.R. 524 LT.	135.00	120.00
3+95.00	5+40.00	C.R. 524 RT.	145.00	128.89
16+70.00	17+20.00	C.R. 538 RT.	50.00	44.44
21+60.00	22+30.00	C.R. 538 RT.	70.00	62.22
10+15.00	12+25.00	FARMER LN. LT.	210.00	186.67
10+70.00	12+25.00	FARMER LN. RT.	155.00	137.78
SUBTOTAL SIDE ROADS:				**725.33**
TOTAL:				**9098.68**

NOTE: AVERAGE WIDTH = 8'-0"

RUMBLE STRIPS

STATION	STATION	LOCATION	* CENTERLINE RUMBLE STRIPS IN ASPHALT ROADWAY	* RUMBLE STRIPS IN ASPHALT SHOULDERS
			LIN.FT.	LIN.FT.
HWY. 77 SITE 1				
102+00	106+26	HWY. 77 RT.		340.80
108+61	109+75	HWY. 77 RT.		91.20
110+45	113+00	HWY. 77 RT.		204.00
102+00	104+17	HWY. 77 LT.		173.60
104+83	106+39	HWY. 77 LT.		124.80
108+74	111+17	HWY. 77 LT.		194.40
111+83	113+00	HWY. 77 LT.		93.60
SUBTOTAL HWY. 77 SITE 1:				**1222.40**
HWY. 77 SITE 2				
205+25	207+32	HWY. 77 RT.		165.60
211+08	212+58	HWY. 77 RT.		120.00
213+24	215+00	HWY. 77 RT.		140.80
219+25	223+26	HWY. 77 RT.		320.80
228+38	228+53	HWY. 77 RT.		15.00
231+49	232+57	HWY. 77 RT.		86.40
233+23	235+22	HWY. 77 RT.		159.20
205+25	207+12	HWY. 77 LT.		149.60
210+88	213+25	HWY. 77 LT.		189.60
213+98	215+00	HWY. 77 LT.		81.60
219+25	223+26	HWY. 77 LT.		320.80
227+62	227+67	HWY. 77 LT.		5.00
231+25	233+54	HWY. 77 LT.		183.20
234+67	235+25	HWY. 77 LT.		58.00
SUBTOTAL HWY. 77 SITE 2:				**1995.60**
HWY. 77 SITE 3				
245+00	248+97	HWY. 77 RT.		317.60
253+53	256+00	HWY. 77 RT.		197.60
245+00	246+47	HWY. 77 LT.		117.60
247+13	248+97	HWY. 77 LT.		147.20
253+53	256+00	HWY. 77 LT.		197.60
SUBTOTAL HWY. 77 SITE 3:				**977.60**
HWY. 77 SITE 4				
267+00	271+07	HWY. 77 RT.		325.60
273+32	274+90	HWY. 77 RT.		126.40
276+00	277+17	HWY. 77 RT.		93.60
277+83	281+75	HWY. 77 RT.		313.60
267+00	270+94	HWY. 77 LT.		315.20
273+19	274+87	HWY. 77 LT.		134.40
275+98	277+52	HWY. 77 LT.		123.20
278+18	281+75	HWY. 77 LT.		285.60
SUBTOTAL HWY. 77 SITE 4:				**1717.60**
502+00	505+25	HWY. 77 RT.		260.00
506+35	508+00	HWY. 77 RT.		132.00
502+00	505+37	HWY. 77 LT.		269.60
506+21	508+00	HWY. 77 LT.		143.20
SUBTOTAL HWY. 77 SITE 4:				**804.80**
HWY. 140 SITE 1				
103+00	104+57	HWY. 140 RT.		125.60
105+23	107+64	HWY. 140 RT.		192.80
111+10	112+78	HWY. 140 RT.		134.40
113+44	116+50	HWY. 140 RT.		244.80
102+00	107+70	HWY. 140 C.L.	569.78	
111+32	117+50	HWY. 140 C.L.	617.78	
103+00	105+74	HWY. 140 LT.		219.20
106+40	107+93	HWY. 140 LT.		122.40
111+38	114+16	HWY. 140 LT.		222.40
114+82	116+50	HWY. 140 LT.		134.40
SUBTOTAL HWY. 140 SITE 1:			**1187.56**	**1396.00**
HWY. 140 SITE 2				
202+61	204+23	HWY. 140 RT.		129.60
204+89	207+20	HWY. 140 RT.		184.80
210+65	215+75	HWY. 140 RT.		408.00
201+50	207+25	HWY. 140 C.L.	575.28	
210+88	216+75	HWY. 140 C.L.	587.28	
202+50	205+32	HWY. 140 LT.		225.60
205+98	207+48	HWY. 140 LT.		120.00
210+93	213+52	HWY. 140 LT.		207.20
214+18	215+75	HWY. 140 LT.		125.60
SUBTOTAL HWY. 140 SITE 2:			**1162.56**	**1400.80**
HWY. 140 SITE 3				
303+00	306+00	HWY. 140 RT.		240.00
302+00	307+00	HWY. 140 C.L.	500.00	
303+00	306+00	HWY. 140 LT.		240.00
SUBTOTAL HWY. 140 SITE 3:			**500.00**	**480.00**
TOTAL:			**2850.12**	**9994.80**

* QUANTITY ESTIMATED.
SEE SECTION 104.03 OF THE STD. SPECS.
TO BE USED IF AND WHERE DIRECTED BY THE ENGINEER.

MAILBOXES

STATION	LOCATION	MAILBOXES	MAILBOX SUPPORTS (SINGLE)	MAILBOX SUPPORTS (DOUBLE)
		EACH		
HWY. 77 SITE 2				
232+35	HWY. 77 LT.	2		1
232+35	HWY. 77 LT.	2		1
SUBTOTALS HWY. 77 SITE 2:		**4**		**2**
HWY. 140 SITE 2				
202+32	HWY. 140 RT.	2		1
204+45	HWY. 140 RT.	2	2	
213+84	HWY. 140 RT.	1	1	
SUBTOTALS HWY. 140 SITE 2:		**5**	**3**	**1**
HWY. 181 SITE 3				
301+70	HWY. 181 LT.	1	1	
303+60	HWY. 181 LT.	2		1
SUBTOTALS HWY. 181 SITE 3:		**3**	**1**	**1**
TOTALS:		**12**	**4**	**4**

BENCH MARKS

STATION	LOCATION	BENCH MARKS
		EACH
HWY. 77 SITE 1		
106+60	SE PARAPET WALL	1
SUBTOTAL HWY. 77 SITE 1:		**1**
HWY. 77 SITE 2		
207+45	SW PARAPET WALL	1
223+60	SW PARAPET WALL	1
231+15	NE PARAPET WALL	1
SUBTOTAL HWY. 77 SITE 2:		**3**
HWY. 77 SITE 3		
249+30	SW PARAPET WALL	1
SUBTOTAL HWY. 77 SITE 3:		**1**
HWY. 77 SITE 4		
273+00	NE PARAPET WALL	1
SUBTOTAL HWY. 77 SITE 4:		**1**
HWY. 77 SITE 5		
505+00	WEST HEADWALL	1
SUBTOTAL HWY. 77 SITE 5:		**1**
HWY. 140 SITE 1		
108+25	NW PARAPET WALL	1
SUBTOTAL HWY. 140 SITE 1:		**1**
HWY. 140 SITE 2		
207+80	NW PARAPET WALL	1
SUBTOTAL HWY. 140 SITE 2:		**1**
HWY. 140 SITE 3		
304+00	SOUTH HEADWALL	1
SUBTOTAL HWY. 140 SITE 3:		**1**
HWY. 158 SITE 1		
110+00	SE PARAPET WALL	1
SUBTOTAL HWY. 158 SITE 1:		**1**
HWY. 181 SITE 1		
102+55	WEST HEADWALL	1
SUBTOTAL HWY. 181 SITE 1:		**1**
HWY. 181 SITE 2		
203+30	EAST HEADWALL	1
SUBTOTAL HWY. 181 SITE 2:		**1**
HWY. 181 SITE 3		
306+75	EAST HEADWALL	1
SUBTOTAL HWY. 181 SITE 3:		**1**
TOTAL:		**14**

NOTE: SHOWN FOR INFORMATION ONLY. BENCH MARKS SHALL BE FURNISHED AND PLACED BY STATE FORCES.

STATE OF ARKANSAS
LICENSED PROFESSIONAL ENGINEER
No.13436
SHAUN A. ROBERSON
DIGITALLY SIGNED 1-5-2022

CGGervasini 1/5/2022 1:58:04 PM
WORKSPACE: AHTD
\\garverinc.local\gdata\Projects\2017\170764 2 - ARDOT Job 100955\Drawings\r100955_QTY_01.dgn
REVISED DATE:

DATE REVISED	DATE FILMED	DATE REVISED	DATE FILMED	FED.RD. DIST.NO.	STATE	FED.AID PROJ.NO.	SHEET NO.	TOTAL SHEETS
11-22-2021				6	ARK.			
01-05-2022				JOB NO.		100955	76	356
				(2)		QUANTITIES		

DRIVEWAYS & TURNOUTS

STATION	SIDE	LOCATION	WIDTH	ACHM SURFACE COURSE (1/2") 220 LBS. PER SQ YD. (PG 64-22)		AGGREGATE BASE COURSE (CLASS 7)	SIDE DRAINS					STANDARD DRAWINGS
							18"	24"	30"	36"	42"	
			FEET	SQ. YD.	TON	TON	LIN. FT.					
HWY. 77 SITE 1												
104+50	LT.	HWY. 77	16	30.43	3.35	63.58		58				PCC-1, PCM-1, PCP-1, PCP-2, PCP-3
110+10	RT.	HWY. 77	20	36.65	4.03	258.26		40				PCC-1, PCM-1, PCP-1, PCP-2, PCP-3
111+50	LT.	HWY. 77	16	30.43	3.35	59.80		38				PCC-1, PCM-1, PCP-1, PCP-2, PCP-3
SUBTOTALS HWY. 77 SITE 1:				**97.51**	**10.73**	**381.64**		**136**				
HWY. 77 SITE 2												
212+91	RT.	HWY. 77	16	30.43	3.35	277.02						
213+70	LT.	HWY. 77	20	67.31	7.40	589.02						
228+00	LT.	HWY. 77	16	30.43	3.35	176.99						
228+00	RT.	HWY. 77	26	45.99	5.06	199.26						
232+90	RT.	HWY. 77	16	30.43	3.35	104.83						
235+55	RT.	HWY. 77	16	33.79	3.72	87.82						
235+65	LT.	HWY. 77	16	34.71	3.82	100.24						
5+60	RT.	C.R. 524 - HWY. 77	16	48.58	5.34	85.67	46					PCC-1, PCM-1, PCP-1, PCP-2, PCP-3
SUBTOTALS HWY. 77 SITE 2:				**321.67**	**35.39**	**1620.85**	**46**					
HWY. 77 SITE 3												
246+80	LT.	HWY. 77	16	30.43	3.35	102.96						
SUBTOTALS HWY. 77 SITE 3:				**30.43**	**3.35**	**102.96**						
HWY. 77 SITE 4												
277+50	RT.	HWY. 77	16	30.43	3.35	74.03						
277+85	LT.	HWY. 77	16	30.43	3.35	72.16						
SUBTOTALS HWY. 77 SITE 4:				**60.86**	**6.70**	**146.19**						
HWY. 77 SITE 4												
505+79	LT.	HWY. 77	34	58.43	6.43	111.95					84	PCC-1, PCM-1, PCP-1, PCP-2, PCP-3
SUBTOTALS HWY. 77 SITE 5:				**58.43**	**6.43**	**111.95**					**84**	
SUBTOTALS HWY. 77:				**568.90**	**62.60**	**2363.59**	**46**	**136**			**84**	
HWY. 140 SITE 1												
104+90	RT.	HWY. 140	16	116.30	12.79	47.49		50				PCC-1, PCM-1, PCP-1, PCP-2, PCP-3
106+07	LT.	HWY. 140	16	113.62	12.50	46.40			50			PCC-1, PCM-1, PCP-1, PCP-2, PCP-3
113+11	RT.	HWY. 140	16	154.81	17.03	63.21				70		PCC-1, PCM-1, PCP-1, PCP-2, PCP-3
114+49	LT.	HWY. 140	16	122.51	13.48	50.03						
SUBTOTALS HWY. 140 SITE 1:				**507.24**	**55.80**	**207.13**		**50**	**50**	**70**		
HWY. 140 SITE 2												
202+28	RT.	HWY. 140	16	90.13	9.91	36.80		50				PCC-1, PCM-1, PCP-1, PCP-2, PCP-3
204+56	RT.	HWY. 140	16	95.84	10.54	39.14	38					PCC-1, PCM-1, PCP-1, PCP-2, PCP-3
205+65	LT.	HWY. 140	16	121.31	13.34	49.53		54				PCC-1, PCM-1, PCP-1, PCP-2, PCP-3
213+85	LT.	HWY. 140	16	140.29	15.43	57.28				56		PCC-1, PCM-1, PCP-1, PCP-2, PCP-3
SUBTOTALS HWY. 140 SITE 2:				**447.57**	**49.22**	**182.75**	**38**	**104**		**56**		
SUBTOTALS HWY. 140:				**954.81**	**105.02**	**389.88**	**38**	**154**	**50**	**126**		
HWY. 158												
104+10	RT.	HWY. 158	16	36.96	4.07	66.68			62			PCC-1, PCM-1, PCP-1, PCP-2, PCP-3
105+20	LT.	HWY. 158	16	37.06	4.08	62.85		60				PCC-1, PCM-1, PCP-1, PCP-2, PCP-3
112+35	RT.	HWY. 158	20	44.12	4.85	442.68	64					PCC-1, PCM-1, PCP-1, PCP-2, PCP-3
113+23	LT.	HWY. 158	16	37.06	4.08	58.36			74			PCC-1, PCM-1, PCP-1, PCP-2, PCP-3
SUBTOTALS HWY. 158:				**155.20**	**17.08**	**630.57**	**64**	**60**	**136**			
HWY. 181 SITE 1												
101+17	RT.	HWY. 181	16	67.52	7.43	42.88	42					PCC-1, PCM-1, PCP-1, PCP-2, PCP-3
101+41	LT.	HWY. 181	16	46.51	5.12	44.39	44					PCC-1, PCM-1, PCP-1, PCP-2, PCP-3
103+96	RT.	HWY. 181	16	66.76	7.34	41.96		50				PCC-1, PCM-1, PCP-1, PCP-2, PCP-3
SUBTOTALS HWY. 181 SITE 1:				**180.79**	**19.89**	**129.23**	**86**	**50**				
HWY. 181 SITE 2												
202+40	RT.	HWY. 181	20	58.28	6.41	80.75						
SUBTOTALS HWY. 181 SITE 2:				**58.28**	**6.41**	**80.75**						
HWY. 181 SITE 2												
301+86	LT.	HWY. 181	16	38.82	4.27	58.91			36			PCC-1, PCM-1, PCP-1, PCP-2, PCP-3
303+81	LT.	HWY. 181	16	37.01	4.07	52.98			48			PCC-1, PCM-1, PCP-1, PCP-2, PCP-3
307+45	RT.	HWY. 181	16	37.01	4.07	70.01			42			PCC-1, PCM-1, PCP-1, PCP-2, PCP-3
307+92	LT.	HWY. 181	16	37.01	4.07	59.91						
309+97	LT.	HWY. 181	16	37.01	4.07	51.73	46					PCC-1, PCM-1, PCP-1, PCP-2, PCP-3
SUBTOTALS HWY. 181 SITE 3:				**186.86**	**20.55**	**293.54**	**46**		**126**			
SUBTOTALS HWY.181:				**425.93**	**46.85**	**503.52**	**132**	**50**	**126**			
* ENTIRE PROJECT TEMPORARY DRIVES				100.00	11.00	40.83						
TOTALS:				**2204.84**	**242.55**	**3928.39**	**280**	**400**	**312**	**126**	**84**	

BASIS OF ESTIMATE:
ACHM SURFACE COURSE (1/2")...5% MIN. AGGR...95% ASPHALT BINDER
MAXIMUM NUMBER OF GYRATIONS = 115 FOR PG 64-22

THE CONTRACTOR, WITH THE APPROVAL OF THE ENGINEER, WILL BE ALLOWED TO SUBSTITUTE A HIGHER PERFORMANCE GRADE ASPHALT SURFACE COURSE FOR DRIVEWAYS AND MINOR SIDE STREET CONSTRUCTION AT NO ADDITIONAL COST TO THE DEPARTMENT.

* QUANTITY ESTIMATED
SEE SECTION 104.03 OF THE STD. SPECS.
TO BE USED IF AND WHERE DIRECTED BY THE ENGINEER.

NOTE: FOR R.C. PIPE CULVERT INSTALLATIONS USE TYPE 3 BEDDING UNLESS OTHERWISE SPECIFIED.
NOTE: FOR C.M. PIPE CULVERT INSTALLATIONS USE TYPE 2 BEDDING UNLESS OTHERWISE SPECIFIED.

STATE OF ARKANSAS
LICENSED PROFESSIONAL ENGINEER
No.13436
SHAUN A. ROBERSON
DIGITALLY SIGNED 1-5-2022

CGervasini 1/5/2022 11:58:11 PM
WORKSPACE: AHTD
\\garverinc.local\gdata\Projects\2017\17017642 - ARDOT Job 100955\Drawings\r100955_QTY_01.dgn
REVISED DATE:

DATE REVISED	DATE FILMED	DATE REVISED	DATE FILMED	FED.RD. DIST.NO.	STATE	FED.AID PROJ.NO.	SHEET NO.	TOTAL SHEETS
01-05-2022				6	ARK.			
				JOB NO.		100955	77	356
				(2)		QUANTITIES		

BASE AND SURFACING (BOX 1 OF 5)

STATION	STATION	LOCATION	LENGTH	AGGREGATE BASE COURSE (CLASS 7)		TACK COAT						TOTAL GALLONS	ACHM BINDER COURSE (1")				ACHM SURFACE COURSE (1/2")								TOTAL PG 64-22
				TON / STATION	TON	(0.05 GAL. PER SQ. YD.)			(0.17 GAL. PER SQ. YD.)				AVG. WID.	SQ.YD.	POUND / SQ.YD.	PG 64-22	AVG. WID.	SQ.YD.	POUND / SQ.YD.	PG 64-22	AVG. WID.	SQ.YD.	POUND / SQ.YD.	PG 64-22	
			FEET			TOTAL WID. FEET	SQ.YD.	GALLON	TOTAL WID. FEET	SQ.YD.	GALLON		FEET			TON	FEET			TON	FEET			TON	TON
MAIN LANES- HWY. 77																									
HWY. 77 - SITE 1																									
101+00.00	102+00.00	HWY. 77 - SITE 1 - TRANSITION	100.00	66.50	66.50				26.00	288.89	49.11	49.11									26.00	288.89	220.00	31.78	31.78
102+00.00	103+16.81	HWY. 77 - SITE 1 - NOTCH AND WIDEN	116.81	133.00	155.36	28.73	372.88	18.64				18.64	4.48	58.15	385.00	11.19	4.25	55.16	220.00	6.07	26.00	337.45	220.00	37.12	43.19
103+16.81	106+28.37	HWY. 77 - SITE 1 - FULL DEPTH	311.56	215.50	671.41	44.73	1548.42	77.42				77.42	22.48	778.17	385.00	149.80	22.25	770.25	220.00	84.73	26.00	900.06	220.00	99.01	183.74
108+71.63	111+89.36	HWY. 77 - SITE 1 - FULL DEPTH	317.73	215.50	684.71	44.73	1579.08	78.95				78.95	22.48	793.58	385.00	152.75	22.25	785.50	220.00	86.41	26.00	917.89	220.00	100.97	187.38
111+89.36	113+00.00	HWY. 77 - SITE 1 - NOTCH AND WIDEN	110.64	133.00	147.15	28.73	353.19	17.66				17.66	4.48	55.07	385.00	10.60	4.25	52.25	220.00	5.75	26.00	319.63	220.00	35.16	40.91
113+00.00	114+00.00	HWY. 77 - SITE 1 - TRANSITION	100.00	66.50	66.50				26.00	288.89	49.11	49.11									26.00	288.89	220.00	31.78	31.78
SUBTOTALS HWY. 77 - SITE 1:					**1791.63**		**3853.57**	**192.67**		**577.78**	**98.22**	**290.89**		**1684.97**		**324.35**		**1663.16**		**182.96**		**3052.81**		**335.82**	**518.78**
HWY. 77 - SITE 2																									
204+25.00	205+25.00	HWY. 77 - SITE 2 - TRANSITION	100.00	66.50	66.50				26.00	288.89	49.11	49.11									26.00	288.89	220.00	31.78	31.78
205+25.00	207+15.90	HWY. 77 - SITE 2 - NOTCH AND WIDEN	190.90	133.00	253.90	28.73	609.40	30.47				30.47	4.48	95.03	385.00	18.29	4.25	90.15	220.00	9.92	26.00	551.49	220.00	60.66	70.58
211+04.10	215+00.00	HWY. 77 - SITE 2 - NOTCH AND WIDEN	395.90	133.00	526.55	28.73	1263.80	63.19				63.19	4.48	197.07	385.00	37.94	4.25	186.95	220.00	20.56	26.00	1143.71	220.00	125.81	146.37
215+00.00	216+00.00	HWY. 77 - SITE 2 - TRANSITION	100.00	66.50	66.50				26.00	288.89	49.11	49.11									26.00	288.89	220.00	31.78	31.78
216+00.00	218+25.00	HWY. 77 - SITE 2 - OVERLAY	225.00						26.00	650.00	110.50	110.50									26.00	650.00	220.00	71.50	71.50
218+25.00	219+25.00	HWY. 77 - SITE 2 - TRANSITION	100.00	66.50	66.50				26.00	288.89	49.11	49.11									26.00	288.89	220.00	31.78	31.78
219+25.00	223+26.40	HWY. 77 - SITE 2 - NOTCH AND WIDEN	401.40	133.00	533.86	28.73	1281.36	64.07				64.07	4.48	199.81	385.00	38.46	4.25	189.55	220.00	20.85	26.00	1159.60	220.00	127.56	148.41
227+61.60	228+33.48	HWY. 77 - SITE 2 - NOTCH AND WIDEN	71.88	133.00	95.60	28.73	229.46	11.47				11.47	4.48	35.78	385.00	6.89	4.25	33.94	220.00	3.73	26.00	207.65	220.00	22.84	26.57
231+44.52	235+25.00	HWY. 77 - SITE 2 - NOTCH AND WIDEN	380.48	133.00	506.04	28.73	1214.58	60.73				60.73	4.48	189.39	385.00	36.46	4.25	179.67	220.00	19.76	26.00	1099.16	220.00	120.91	140.67
235+25.00	236+25.00	HWY. 77 - SITE 2 - TRANSITION	100.00	66.50	66.50				26.00	288.89	49.11	49.11									26.00	288.89	220.00	31.78	31.78
SUBTOTALS HWY. 77 - SITE 2:					**2181.95**		**4598.60**	**229.93**		**1805.56**	**306.94**	**536.87**		**717.08**		**138.04**		**680.26**		**74.82**		**5967.17**		**656.40**	**731.22**
HWY. 77 - SITE 3																									
244+00.00	245+00.00	HWY. 77 - SITE 3 - TRANSITION	100.00	66.50	66.50				26.00	288.89	49.11	49.11									26.00	288.89	220.00	31.78	31.78
245+00.00	248+97.40	HWY. 77 - SITE 3 - NOTCH AND WIDEN	397.40	133.00	528.54	28.73	1268.59	63.43				63.43	4.48	197.82	385.00	38.08	4.25	187.66	220.00	20.64	26.00	1148.04	220.00	126.28	146.92
253+52.60	256+00.00	HWY. 77 - SITE 3 - NOTCH AND WIDEN	247.40	133.00	329.04	28.73	789.76	39.49				39.49	4.48	123.15	385.00	23.71	4.25	116.83	220.00	12.85	26.00	714.71	220.00	78.62	91.47
256+00.00	257+00.00	HWY. 77 - SITE 3 - TRANSITION	100.00	66.50	66.50				26.00	288.89	49.11	49.11									26.00	288.89	220.00	31.78	31.78
SUBTOTALS HWY. 77 - SITE 3:					**990.58**		**2058.35**	**102.92**		**577.78**	**98.22**	**201.14**		**320.97**		**61.79**		**304.49**		**33.49**		**2440.53**		**268.46**	**301.95**
HWY. 77 - SITE 4																									
266+00.00	267+00.00	HWY. 77 - SITE 4 - TRANSITION	100.00	66.50	66.50				26.00	288.89	49.11	49.11									26.00	288.89	220.00	31.78	31.78
267+00.00	270+96.37	HWY. 77 - SITE 4 - NOTCH AND WIDEN	396.37	133.00	527.17	28.73	1265.30	63.27				63.27	4.48	197.30	385.00	37.98	4.25	187.17	220.00	20.59	26.00	1145.07	220.00	125.96	146.55
273+29.63	274+61.25	HWY. 77 - SITE 4 - NOTCH AND WIDEN	131.62	133.00	175.05	28.73	420.16	21.01				21.01	4.48	65.52	385.00	12.61	4.25	62.15	220.00	6.84	26.00	380.24	220.00	41.83	48.67
274+61.25	280+38.69	HWY. 77 - SITE 4 - FULL DEPTH	577.44	215.50	1244.38	44.73	2869.81	143.49				143.49	22.48	1442.25	385.00	277.63	22.25	1427.56	220.00	157.03	26.00	1668.16	220.00	183.50	340.53
280+38.69	281+75.00	HWY. 77 - SITE 4 - NOTCH AND WIDEN	136.31	133.00	181.29	28.73	435.13	21.76				21.76	4.48	67.85	385.00	13.06	4.25	64.37	220.00	7.08	26.00	393.78	220.00	43.32	50.40
281+75.00	282+75.00	HWY. 77 - SITE 4 - TRANSITION	100.00	66.50	66.50				26.00	288.89	49.11	49.11									26.00	288.89	220.00	31.78	31.78
SUBTOTALS HWY. 77 - SITE 4:					**2260.89**		**4990.40**	**249.53**		**577.78**	**98.22**	**347.75**		**1772.92**		**341.28**		**1741.25**		**191.54**		**4165.03**		**458.17**	**649.71**
HWY. 77 - SITE 5																									
501+00.00	502+00.00	HWY. 77 - SITE 5 - TRANSITION	100.00	66.50	66.50				23.00	255.56	43.45	43.45									23.00	255.56	220.00	28.11	28.11
502+00.00	504+70.00	HWY. 77 - SITE 5 - NOTCH AND WIDEN	270.00	133.00	359.10	28.73	861.90	43.10				43.10	4.48	134.40	385.00	25.87	4.25	127.50	220.00	14.03	26.00	780.00	220.00	85.80	99.83
504+70.00	505+09.52	HWY. 77 - SITE 5 - FULL DEPTH	39.52	215.50	85.17	44.73	196.41	9.82				9.82	22.48	98.71	385.00	19.00	22.25	97.70	220.00	10.75	26.00	114.17	220.00	12.56	23.31
505+09.52	505+26.20	HWY. 77 - SITE 5 - FULL DEPTH, SE	16.68	215.50	35.95	44.73	82.90	4.15				4.15	22.48	41.66	385.00	8.02	22.25	41.24	220.00	4.54	26.00	48.19	220.00	5.30	9.84
505+26.20	507+00.00	HWY. 77 - SITE 5 - NOTCH AND WIDEN, SE	173.80	133.00	231.15	22.00	424.84	21.24				21.24									26.00	502.09	220.00	55.23	55.23
507+00.00	508+00.00	HWY. 77 - SITE 5 - TRANSITION, SE	100.00	66.50	66.50				33.00	366.67	62.33	62.33									33.00	366.67	220.00	40.33	40.33
SUBTOTALS HWY. 77 - SITE 5:					**844.37**		**1566.05**	**78.31**		**622.23**	**105.78**	**184.09**		**274.77**		**52.89**		**266.44**		**29.32**		**2066.68**		**227.33**	**256.65**
HWY. 158 CONNECTOR & SIDE ROADS																									
10+40.00	11+40.00	HWY. 158 CONN. (SITE 2) - TRANSITION	100.00	53.25	53.25				25.00	277.78	47.22	47.22									25.00	277.78	220.00	30.56	30.56
11+40.00	12+22.00	HWY. 158 CONN. (SITE 2) - NOTCH AND WIDEN	82.00	106.50	87.33	25.87	235.66	11.78				11.78	2.99	27.24	385.00	5.24	2.88	26.19	220.00	2.88	26.00	236.89	220.00	26.06	28.94
12+22.00	14+88.96	HWY. 158 CONN. (SITE 2) - FULL DEPTH	266.96	185.00	493.88	44.73	1326.79	66.34				66.34	22.48	666.81	385.00	128.35	22.25	659.98	220.00	72.60	26.00	771.22	220.00	84.83	157.43
14+44.00	14+83.00	HWY. 158 CONN. (SITE 2) - RADIUS	39.00	VAR.	15.86								VAR.	45.32	385.00	8.72	VAR.	44.28	220.00	4.87	VAR.	43.15	220.00	4.75	9.62
3+45.00	3+95.00	C.R. 524 (HWY. 77 - SITE 2) - TRANSITION	50.00	109.75	54.88																20.00	111.11	220.00	12.22	12.22
3+95.00	9+89.00	C.R. 524 (HWY. 77 - SITE 2) - FULL WIDTH	594.00	109.75	651.92																20.00	1320.00	220.00	145.20	145.20
9+50.00	9+85.00	C.R. 524 (HWY. 77 - SITE 2) - RADIUS	35.00	VAR.	19.87																VAR.	48.67	220.00	5.35	5.35
15+40.00	15+90.00	C.R. 538 W. (HWY. 77 - SITE 4) - TRANSITION	50.00	109.75	54.88																19.50	108.33	220.00	11.92	11.92
15+90.00	19+89.00	C.R. 538 W. (HWY. 77 - SITE 4) - FULL WIDTH	399.00	109.75	437.90																20.00	886.67	220.00	97.53	97.53
19+39.00	19+78.00	C.R. 538 W. (HWY. 77 - SITE 4) -RADIUS	39.00	VAR.	18.85																VAR.	46.16	220.00	5.08	5.08
20+11.00	23+20.00	C.R. 538 E. (HWY. 77 - SITE 4) - FULL WIDTH	309.00	109.75	339.13																20.00	686.67	220.00	75.53	75.53
23+20.00	23+70.00	C.R. 538 E. (HWY. 77 - SITE 4) - TRANSITION	50.00	109.75	54.88																17.00	94.44	220.00	10.39	10.39
20+17.00	20+51.00	C.R. 538 E. (HWY. 77 - SITE 4) - RADIUS	34.00	VAR.	17.15																VAR.	42.00	220.00	4.62	4.62
10+11.00	12+25.00	FARMER LN. (HWY. 77 - SITE 5) - FULL WIDTH	214.00	109.75	234.87																20.00	475.56	220.00	52.31	52.31
12+25.00	12+75.00	FARMER LN. (HWY. 77 - SITE 5) - TRANSITION	50.00	109.75	54.88																19.00	105.56	220.00	11.61	11.61
10+17.00	10+51.00	FARMER LN. (HWY. 77 - SITE 5) - RADIUS	34.00	VAR.	17.15																VAR.	42.00	220.00	4.62	4.62
SUBTOTALS HWY. 158 CONNECTOR & SIDE ROADS					**2606.68**		**1562.45**	**78.12**		**277.78**	**47.22**	**125.34**		**739.37**		**142.32**		**730.45**		**80.35**		**5296.21**		**582.58**	**662.93**
SUBTOTALS HWY. 77 (BOX 1 OF 5):					**10676.10**		**18629.42**	**931.48**		**4438.91**	**754.60**	**1686.08**		**5510.08**		**1060.67**		**5386.05**		**592.48**		**22988.43**		**2528.76**	**3121.24**

BASIS OF ESTIMATE:
ACHM SURFACE COURSE (1/2").....95% MIN. AGGR.....5% ASPHALT BINDER
ACHM BINDER COURSE (1").....95.9% MIN. AGGR.....4.1% ASPHALT BINDER
MAXIMUM NUMBER OF GYRATIONS = 115 FOR PG 64-22
TACK COAT QUANTITIES WERE CALCULATED USING THE EMULSIFIED ASPHALT RATES. REFER TO SS-400-1 FOR THE RESIDUAL ASPHALT APPLICATION RATES.

STATE OF ARKANSAS
LICENSED PROFESSIONAL ENGINEER
No.13436
SHAUN A. ROBERSON
DIGITALLY SIGNED 1-5-2022

QUANTITIES

CGGervasini 1/5/2022 15816 PM
WORKSPACE: AHTD
\\garverinc.local\gdata\Projects\2017\17017642 - ARDOT Job 100955\Drawings\r100955_QTY_01.dgn
REVISED DATE:

DATE REVISED	DATE FILMED	DATE REVISED	DATE FILMED	FED.RD. DIST.NO.	STATE	FED.AID PROJ.NO.	SHEET NO.	TOTAL SHEETS
				6	ARK.			
				JOB NO.		100955	78	356
				(2)		QUANTITIES		

BASE AND SURFACING (BOX 2 OF 5)

STATION	STATION	LOCATION	LENGTH	AGGREGATE BASE COURSE (CLASS 7)		TACK COAT							ACHM BINDER COURSE (1")				ACHM SURFACE COURSE (1/2")							
				TON / STATION	TON	(0.05 GAL. PER SQ. YD.)			(0.17 GAL. PER SQ. YD.)			TOTAL GALLONS	AVG. WID.	SQ.YD.	POUND / SQ.YD.	PG 64-22	AVG. WID.	SQ.YD.	POUND / SQ.YD.	PG 64-22	AVG. WID.	SQ.YD.	POUND / SQ.YD.	PG 64-22	TOTAL PG 64-22
			FEET			TOTAL WID. FEET	SQ.YD.	GALLON	TOTAL WID. FEET	SQ.YD.	GALLON		FEET			TON	FEET			TON	FEET			TON	TON
MAIN LANES- HWY. 77																								
ADDITIONAL FOR LEVELING																								
HWY. 77 - SITE 1																								
102+00.00	103+16.81	HWY. 77 - SITE 1 - NOTCH AND WIDEN	116.81						20.00	259.58	44.13	44.13									20.00	259.58	VAR.	100.49	100.49
111+89.36	113+00.00	HWY. 77 - SITE 1 - NOTCH AND WIDEN	110.64						20.00	245.87	41.80	41.80									20.00	245.87	VAR.	93.51	93.51
SUBTOTALS HWY. 77 - SITE 1:										**505.45**	**85.93**	**85.93**										**505.45**		**194.00**	**194.00**
HWY. 77 - SITE 2																								
205+25.00	207+15.90	HWY. 77 - SITE 2 - NOTCH AND WIDEN	190.90						20.00	424.22	72.12	72.12									20.00	424.22	VAR.	160.87	160.87
211+04.10	215+00.00	HWY. 77 - SITE 2 - NOTCH AND WIDEN	395.90						20.00	879.78	149.56	149.56									20.00	879.78	VAR.	270.22	270.22
219+25.00	223+26.40	HWY. 77 - SITE 2 - NOTCH AND WIDEN	401.40						20.00	892.00	151.64	151.64									20.00	892.00	VAR.	425.52	425.52
227+61.60	228+33.48	HWY. 77 - SITE 2 - NOTCH AND WIDEN	71.88						20.00	159.73	27.15	27.15									20.00	159.73	VAR.	118.71	118.71
231+44.52	235+25.00	HWY. 77 - SITE 2 - NOTCH AND WIDEN	380.48						20.00	845.51	143.74	143.74									20.00	845.51	VAR.	285.03	285.03
11+40.00	12+22.00	HWY. 158 CONN. (SITE 2) - NOTCH AND WIDEN	82.00						18.00	164.00	27.88	27.88									18.00	164.00	VAR.	68.25	68.25
SUBTOTALS HWY. 77 - SITE 2:										**3365.24**	**572.09**	**572.09**										**3365.24**		**1328.60**	**1328.60**
HWY. 77 - SITE 3																								
245+00.00	248+97.40	HWY. 77 - SITE 3 - NOTCH AND WIDEN	397.40						20.00	883.11	150.13	150.13									20.00	883.11	VAR.	249.70	249.70
253+52.60	256+00.00	HWY. 77 - SITE 3 - NOTCH AND WIDEN	247.40						20.00	549.78	93.46	93.46									20.00	549.78	VAR.	158.74	158.74
SUBTOTALS HWY. 77 - SITE 3:										**1432.89**	**243.59**	**243.59**										**1432.89**		**408.44**	**408.44**
HWY. 77 - SITE 4																								
267+00.00	270+96.37	HWY. 77 - SITE 4 - NOTCH AND WIDEN	396.37						20.00	880.82	149.74	149.74									20.00	880.82	VAR.	244.74	244.74
273+29.63	274+61.25	HWY. 77 - SITE 4 - NOTCH AND WIDEN	131.62						20.00	292.49	49.72	49.72									20.00	292.49	VAR.	135.48	135.48
280+38.69	281+75.00	HWY. 77 - SITE 4 - NOTCH AND WIDEN	136.31						20.00	302.91	51.49	51.49									20.00	302.91	VAR.	50.66	50.66
SUBTOTALS HWY. 77 - SITE 4:										**1476.22**	**250.95**	**250.95**										**1476.22**		**430.88**	**430.88**
HWY. 77 - SITE 5																								
502+00.00	504+70.00	HWY. 77 - SITE 5 - NOTCH AND WIDEN	270.00						20.00	600.00	102.00	102.00									20.00	600.00	VAR.	211.24	211.24
505+26.20	507+00.00	HWY. 77 - SITE 5 - NOTCH AND WIDEN, SE	173.80						22.00	424.84	72.22	72.22									22.00	424.84	VAR.	108.08	108.08
SUBTOTALS HWY. 77 - SITE 5:										**1024.84**	**174.22**	**174.22**										**1024.84**		**319.32**	**319.32**
ADDITIONAL FOR SUPERELEVATION																								
HWY. 77 - SITE 5																								
505+09.52	505+26.20	HWY. 77 - SITE 5 - FULL DEPTH, SE	16.68	5.75	0.96																			
505+26.20	507+00.00	HWY. 77 - SITE 5 - NOTCH AND WIDEN, SE	173.80	48.75	84.73																			
507+00.00	508+00.00	HWY. 77 - SITE 5 - TRANSITION, SE	100.00	25.25	25.25																			
SUBTOTALS HWY. 77 - SITE 5:					**110.94**																			
ADDITIONAL FOR GUARDRAILS																								
HWY. 77 - SITE 1																								
103+82.56	106+52.68	HWY. 77 - SITE 1 RT.	270.12																		VAR.	142.96	220.00	15.73	15.73
104+78.94	106+65.06	HWY. 77 - SITE 1 LT.	186.12																		VAR.	82.96	220.00	9.13	9.13
108+34.94	109+71.02	HWY. 77 - SITE 1 RT.	136.08																		VAR.	57.95	220.00	6.37	6.37
108+47.32	111+17.44	HWY. 77 - SITE 1 LT.	270.12																		VAR.	142.96	220.00	15.73	15.73
SUBTOTALS HWY. 77 - SITE 1:																						**426.83**		**46.96**	**46.96**
HWY. 77 - SITE 2																								
204+75.42	207+58.56	HWY. 77 - SITE 2 RT.	283.14																		VAR.	147.37	220.00	16.21	16.21
205+52.82	207+38.93	HWY. 77 - SITE 2 LT.	186.11																		VAR.	82.96	220.00	9.13	9.13
210+61.44	213+31.55	HWY. 77 - SITE 2 LT.	270.11																		VAR.	142.96	220.00	15.73	15.73
210+81.07	212+67.18	HWY. 77 - SITE 2 RT.	186.11																		VAR.	82.96	220.00	9.13	9.13
220+82.78	223+52.90	HWY. 77 - SITE 2 RT.	270.12																		VAR.	142.96	220.00	15.73	15.73
221+66.78	223+52.90	HWY. 77 - SITE 2 LT.	186.12																		VAR.	82.96	220.00	9.13	9.13
227+35.10	228+55.77	HWY. 77 - SITE 2 LT.	120.67																		VAR.	59.59	220.00	6.56	6.56
227+35.10	228+79.58	HWY. 77 - SITE 2 RT.	144.48																		VAR.	68.03	220.00	7.48	7.48
230+98.42	233+68.53	HWY. 77 - SITE 2 LT.	270.11																		VAR.	142.96	220.00	15.73	15.73
231+22.23	232+58.31	HWY. 77 - SITE 2 RT.	136.08																		VAR.	57.99	220.00	6.38	6.38
SUBTOTALS HWY. 77 - SITE 2:																						**1010.74**		**111.21**	**111.21**
HWY. 77 - SITE 3																								
246+53.79	249+23.90	HWY. 77 - SITE 3 RT.	270.11																		VAR.	142.94	220.00	15.72	15.72
247+37.77	249+23.90	HWY. 77 - SITE 3 LT.	186.13																		VAR.	82.96	220.00	9.13	9.13
253+26.10	255+12.24	HWY. 77 - SITE 3 RT.	186.14																		VAR.	82.99	220.00	9.13	9.13
253+26.10	255+96.21	HWY. 77 - SITE 3 LT.	270.11																		VAR.	142.94	220.00	15.72	15.72
SUBTOTALS HWY. 77 - SITE 3:																						**451.83**		**49.70**	**49.70**
HWY. 77 - SITE 4																								
268+62.94	271+33.06	HWY. 77 - SITE 4 RT.	270.12																		VAR.	142.96	220.00	15.73	15.73
269+34.57	271+20.68	HWY. 77 - SITE 4 LT.	186.11																		VAR.	82.96	220.00	9.13	9.13
272+92.94	275+07.06	HWY. 77 - SITE 4 LT.	214.12																		VAR.	101.41	220.00	11.15	11.15
273+05.32	274+91.43	HWY. 77 - SITE 4 RT.	186.11																		VAR.	82.96	220.00	9.13	9.13
SUBTOTALS HWY. 77 - SITE 4:																						**410.29**		**45.14**	**45.14**
SUBTOTALS HWY. 77 (BOX 2 OF 5):					**110.94**					**7804.64**	**1326.78**	**1326.78**										**10104.33**		**2934.25**	**2934.25**

BASIS OF ESTIMATE:
ACHM SURFACE COURSE (1/2").....95% MIN. AGGR.....5% ASPHALT BINDER
ACHM BINDER COURSE (1").....95.9% MIN. AGGR.....4.1% ASPHALT BINDER
MAXIMUM NUMBER OF GYRATIONS = 115 FOR PG 64-22
TACK COAT QUANTITIES WERE CALCULATED USING THE EMULSIFIED ASPHALT RATES. REFER TO SS-400-1 FOR THE RESIDUAL ASPHALT APPLICATION RATES.

STATE OF ARKANSAS
LICENSED PROFESSIONAL ENGINEER
No.13436
SHAUN A. ROBERSON

DIGITALLY SIGNED 8-13-2021

PJoseph 8/13/2021 5:25:30 PM
WORKSPACE: AHTD
\\garverinc.local\gdata\Projects\2017\17017642 - ARDOT Job 100955\Drawings\r100955_QTY_01.dgn
REVISED DATE:

DATE REVISED	DATE FILMED	DATE REVISED	DATE FILMED	FED.RD. DIST.NO.	STATE	FED.AID PROJ.NO.	SHEET NO.	TOTAL SHEETS
				6	ARK.			
				JOB NO.		100955	79	356
				(2)		QUANTITIES		

BASE AND SURFACING (BOX 3 OF 5)

STATION	STATION	LOCATION	LENGTH	AGGREGATE BASE COURSE (CLASS 7)		TACK COAT							ACHM BINDER COURSE (1")				ACHM SURFACE COURSE (1/2")							
				TON / STATION	TON	(0.05 GAL. PER SQ. YD.)			(0.17 GAL. PER SQ. YD.)			TOTAL GALLONS	AVG. WID.	SQ.YD.	POUND / SQ.YD.	PG 64-22	AVG. WID.	SQ.YD.	POUND / SQ.YD.	PG 64-22	AVG. WID.	SQ.YD.	POUND / SQ.YD.	PG 64-22	TOTAL PG 64-22
			FEET			TOTAL WID. FEET	SQ.YD.	GALLON	TOTAL WID. FEET	SQ.YD.	GALLON		FEET			TON	FEET			TON	FEET			TON	TON
MAIN LANES- HWY. 140																								
HWY. 140 - SITE 1																								
102+00.00	103+00.00	HWY. 140 - SITE 1 - TRANSITION	100.00	96.75	96.75				37.50	416.67	70.83	70.83									37.50	416.67	220.00	45.83	45.83
103+00.00	104+43.98	HWY. 140 - SITE 1 - NOTCH AND WIDEN	143.98	193.50	278.60	31.83	509.21	25.46				25.46	4.58	73.27	660.00	24.18	4.25	67.99	220.00	7.48	40.00	639.91	220.00	70.39	77.87
104+43.98	107+69.78	HWY. 140 - SITE 1 - FULL DEPTH	325.80	309.00	1006.72	48.83	1767.65	88.38				88.38	24.58	889.80	660.00	293.63	24.25	877.85	220.00	96.56	40.00	1448.00	220.00	159.28	255.84
111+32.22	115+23.16	HWY. 140 - SITE 1 - FULL DEPTH	390.94	309.00	1208.00	48.83	2121.07	106.05				106.05	24.58	1067.70	660.00	352.34	24.25	1053.37	220.00	115.87	40.00	1737.51	220.00	191.13	307.00
115+23.16	116+50.00	HWY. 140 - SITE 1 - NOTCH AND WIDEN	126.84	193.50	245.44	31.83	448.59	22.43				22.43	4.58	64.55	660.00	21.30	4.25	59.90	220.00	6.59	40.00	563.73	220.00	62.01	68.60
116+50.00	117+50.00	HWY. 140 - SITE 1 - TRANSITION	100.00	96.75	96.75				37.50	416.67	70.83	70.83									37.50	416.67	220.00	45.83	45.83
SUBTOTALS HWY. 140 - SITE 1:					**2932.26**		**4846.52**	**242.32**		**833.34**	**141.66**	**383.98**		**2095.32**		**691.45**		**2059.11**		**226.50**		**5222.49**		**574.47**	**800.97**
HWY. 140 - SITE 2																								
201+50.00	202+50.00	HWY. 140 - SITE 2 - TRANSITION	100.00	109.00	109.00				36.00	400.00	68.00	68.00									36.00	400.00	220.00	44.00	44.00
202+50.00	204+07.65	HWY. 140 - SITE 2 - NOTCH AND WIDEN	157.65	218.00	343.68	28.83	505.01	25.25				25.25	4.58	80.23	660.00	26.48	4.25	74.45	220.00	8.19	40.00	700.67	220.00	77.07	85.26
204+07.65	207+25.28	HWY. 140 - SITE 2 - FULL DEPTH	317.63	309.00	981.48	48.83	1723.32	86.17				86.17	24.58	867.48	660.00	286.27	24.25	855.84	220.00	94.14	40.00	1411.69	220.00	155.29	249.43
210+87.72	214+71.02	HWY. 140 - SITE 2 - FULL DEPTH	383.30	309.00	1134.40	48.83	2079.62	103.98				103.98	24.58	1046.83	660.00	345.45	24.25	1032.78	220.00	113.61	40.00	1703.56	220.00	187.39	301.00
214+71.02	215+75.00	HWY. 140 - SITE 2 - NOTCH AND WIDEN	103.98	218.00	226.68	28.83	333.08	16.55				16.65	4.58	52.91	660.00	17.46	4.25	49.10	220.00	5.40	40.00	462.13	220.00	50.83	56.23
215+75.00	216+75.00	HWY. 140 - SITE 2 - TRANSITION	100.00	109.00	109.00				36.00	400.00	68.00	68.00									36.00	400.00	220.00	44.00	44.00
SUBTOTALS HWY. 140 - SITE 2:					**2954.24**		**4641.03**	**232.05**		**800.00**	**136.00**	**368.05**		**2047.45**		**675.66**		**2012.17**		**221.34**		**5078.05**		**558.58**	**779.92**
HWY. 140 - SITE 3																								
302+00.00	303+00.00	HWY. 140 - SITE 3 - TRANSITION	100.00	109.00	109.00				36.00	400.00	68.00	68.00									36.00	400.00	220.00	44.00	44.00
303+00.00	303+88.84	HWY. 140 - SITE 3 - NOTCH AND WIDEN	88.84	218.00	193.67	28.83	284.58	14.23				14.23	4.58	45.21	660.00	14.92	4.25	41.95	220.00	4.61	40.00	394.84	220.00	43.43	48.04
303+88.84	304+57.18	HWY. 140 - SITE 3 - FULL DEPTH	68.34	309.00	211.17	48.83	370.78	18.54				18.54	24.58	186.64	660.00	61.59	24.25	184.14	220.00	20.26	40.00	303.73	220.00	33.41	53.67
304+57.18	306+00.00	HWY. 140 - SITE 3 - NOTCH AND WIDEN	142.82	218.00	311.35	28.83	457.50	22.88				22.88	4.58	72.68	660.00	23.98	4.25	67.44	220.00	7.42	40.00	634.76	220.00	69.82	77.24
306+00.00	307+00.00	HWY. 140 - SITE 3 - TRANSITION	100.00	109.00	109.00				36.00	400.00	68.00	68.00									36.00	400.00	220.00	44.00	44.00
SUBTOTALS HWY. 140 - SITE 3:					**934.19**		**1112.86**	**55.55**		**800.00**	**136.00**	**191.65**		**304.53**		**100.49**		**293.53**		**32.29**		**2133.33**		**234.66**	**266.95**
ADDITIONAL FOR LEVELING																								
HWY. 140 - SITE 1																								
103+00.00	104+43.98	HWY. 140 - SITE 1 - NOTCH AND WIDEN	143.98						23.00	367.95	62.55	62.55									23.00	367.95	VAR.	70.92	70.92
115+23.16	116+50.00	HWY. 140 - SITE 1 - NOTCH AND WIDEN	126.84						23.00	324.15	55.11	55.11									23.00	324.15	VAR.	34.83	34.83
SUBTOTALS HWY. 140 - SITE 1:										**692.10**	**117.66**	**117.66**										**692.10**		**105.75**	**105.75**
HWY. 140 - SITE 2																								
202+50.00	204+07.65	HWY. 140 - SITE 2 - NOTCH AND WIDEN	157.65						20.00	350.33	59.56	59.56									20.00	350.33	VAR.	113.63	113.63
214+71.02	215+75.00	HWY. 140 - SITE 2 - NOTCH AND WIDEN	103.98						20.00	231.07	39.28	39.28									20.00	231.07	VAR.	67.52	67.52
SUBTOTALS HWY. 140 - SITE 2:										**581.40**	**98.84**	**98.84**										**581.40**		**181.15**	**181.15**
HWY. 140 - SITE 3																								
303+00.00	303+88.84	HWY. 140 - SITE 3 - NOTCH AND WIDEN	88.84						20.00	197.42	33.56	33.56									20.00	197.42	VAR.	2.45	2.45
304+57.18	306+00.00	HWY. 140 - SITE 3 - NOTCH AND WIDEN	142.82						20.00	317.38	53.95	53.95									20.00	317.38	VAR.	1.26	1.26
SUBTOTALS HWY. 140 - SITE 3:										**514.80**	**87.51**	**87.51**										**514.80**		**3.71**	**3.71**
ADDITIONAL FOR GUARDRAILS																								
HWY. 140 - SITE 1																								
105+20.56	107+90.67	HWY. 140 - SITE 1 RT.	270.11																		VAR.	142.96	220.00	15.73	15.73
106+32.57	108+18.68	HWY. 140 - SITE 1 LT.	186.11																		VAR.	82.96	220.00	9.13	9.13
110+83.32	112+69.43	HWY. 140 - SITE 1 RT.	186.11																		VAR.	82.97	220.00	9.13	9.13
111+11.33	113+80.44	HWY. 140 - SITE 1 LT.	269.11																		VAR.	142.57	220.00	15.68	15.68
SUBTOTALS HWY. 140 - SITE 1:																						**451.46**		**49.67**	**49.67**
HWY. 140 - SITE 2																								
204+76.07	207+46.17	HWY. 140 - SITE 2 RT.	270.10																		VAR.	142.88	220.00	15.72	15.72
205+88.07	207+74.18	HWY. 140 - SITE 2 LT.	186.11																		VAR.	82.96	220.00	9.13	9.13
210+38.82	212+24.93	HWY. 140 - SITE 2 RT.	186.11																		VAR.	82.96	220.00	9.13	9.13
210+66.83	213+36.94	HWY. 140 - SITE 2 LT.	270.11																		VAR.	142.96	220.00	15.73	15.73
SUBTOTALS HWY. 140 - SITE 2:																						**451.76**		**49.71**	**49.71**
SUBTOTALS HWY. 140 (BOX 3 OF 5):					**6820.69**		**10600.41**	**530.02**		**4221.64**	**717.67**	**1247.69**		**4447.30**		**1467.60**		**4364.81**		**480.13**		**15125.39**		**1757.70**	**2237.83**

BASIS OF ESTIMATE:
ACHM SURFACE COURSE (1/2").....95% MIN. AGGR.....5% ASPHALT BINDER
ACHM BASE COURSE (1 1/2").....% MIN. AGGR.....% ASPHALT BINDER
MAXIMUM NUMBER OF GYRATIONS = 205 FOR PG 76-22
TACK COAT QUANTITIES WERE CALCULATED USING THE EMULSIFIED ASPHALT RATES. REFER TO SS-400-1 FOR THE RESIDUAL ASPHALT APPLICATION RATES.

STATE OF ARKANSAS
LICENSED PROFESSIONAL ENGINEER
No.13436
SHAUN A. ROBERSON

DIGITALLY SIGNED 8-13-2021

PJoseph 8/13/2021 5:25:44 PM
WORKSPACE: AHTD
\\garverinc.local\gdata\Projects\2017\17017642 - ARDOT Job 100955\Drawings\r100955_QTY_01.dgn
REVISED DATE:

DATE REVISED	DATE FILMED	DATE REVISED	DATE FILMED	FED.RD. DIST.NO.	STATE	FED.AID PROJ.NO.	SHEET NO.	TOTAL SHEETS
01-05-2022				6	ARK.			
				JOB NO.		100955	80	356
				(2)		QUANTITIES		

BASE AND SURFACING (BOX 4 OF 5)

STATION	STATION	LOCATION	LENGTH	AGGREGATE BASE COURSE (CLASS 7)		TACK COAT							ACHM BINDER COURSE (1")				ACHM SURFACE COURSE (1/2")								
						(0.05 GAL. PER SQ. YD.)			(0.17 GAL. PER SQ. YD.)																
				TON / STATION	TON	TOTAL WID.	SQ.YD.	GALLON	TOTAL WID.	SQ.YD.	GALLON	TOTAL GALLONS	AVG. WID.	SQ.YD.	POUND / SQ.YD.	PG 64-22	AVG. WID.	SQ.YD.	POUND / SQ.YD.	PG 64-22	AVG. WID.	SQ.YD.	POUND / SQ.YD.	PG 64-22	TOTAL PG 64-22
			FEET			FEET			FEET				FEET			TON	FEET			TON	FEET			TON	TON
MAIN LANES- HWY. 158																									
HWY. 158 - SITE 1																									
102+25.00	103+25.00	HWY. 158 - SITE 1 - TRANSITION	100.00	48.75	48.75				23.00	255.56	43.45	43.45									23.00	255.56	220.00	28.11	28.11
103+25.00	104+46.40	HWY. 158 - SITE 1 - NOTCH AND WIDEN	121.40	97.50	118.37	28.71	387.24	19.36				19.36	4.46	60.13	330.00	9.92	4.25	57.33	220.00	6.31	26.00	350.71	220.00	38.58	44.89
104+46.40	107+08.48	HWY. 158 - SITE 1 - FULL DEPTH	262.08	178.00	466.50	44.71	1301.90	65.10				65.10	22.46	653.98	330.00	107.91	22.25	647.92	220.00	71.27	26.00	757.12	220.00	83.28	154.55
110+49.52	113+05.10	HWY. 158 - SITE 1 - FULL DEPTH	255.58	178.00	454.93	44.71	1269.61	63.48				63.48	22.46	637.76	330.00	105.23	22.25	631.85	220.00	69.50	26.00	738.34	220.00	81.22	150.72
113+05.10	114+50.00	HWY. 158 - SITE 1 - NOTCH AND WIDEN	144.90	97.50	141.28	28.71	462.20	23.11				23.11	4.46	71.77	330.00	11.84	4.25	68.42	220.00	7.53	26.00	418.60	220.00	46.05	53.58
114+50.00	115+50.00	HWY. 158 - SITE 1 - TRANSITION	100.00	48.75	48.75				23.00	255.56	43.45	43.45									23.00	255.56	220.00	28.11	28.11
SUBTOTALS HWY. 158 - SITE 1:					**1278.58**		**3420.95**	**171.05**		**511.12**	**86.90**	**257.95**		**1423.64**		**234.90**		**1405.52**		**154.61**		**2775.89**		**305.35**	**459.96**
ADDITIONAL FOR LEVELING																									
HWY. 158 - SITE 1																									
103+25.00	104+46.40	HWY. 158 - SITE 1 - NOTCH AND WIDEN	121.40						20.00	269.78	45.86	45.86									20.00	269.78	VAR.	66.51	66.51
113+05.10	114+50.00	HWY. 158 - SITE 1 - NOTCH AND WIDEN	144.90						20.00	322.00	54.74	54.74									20.00	322.00	VAR.	78.24	78.24
SUBTOTALS HWY. 158 - SITE 1:										**591.78**	**100.60**	**100.60**										**591.78**		**144.75**	**144.75**
ADDITIONAL FOR GUARDRAILS																									
HWY. 158 - SITE 1																									
104+61.86	107+32.18	HWY. 158 - SITE 1 RT.	270.32																		VAR.	141.15	220.00	15.53	15.53
105+67.16	107+53.18	HWY. 158 - SITE 1 LT.	186.02																		VAR.	83.22	220.00	9.15	9.15
110+04.82	111+90.92	HWY. 158 - SITE 1 RT.	186.10																		VAR.	82.89	220.00	9.12	9.12
110+25.83	112+95.79	HWY. 158 - SITE 1 LT.	269.96																		VAR.	142.94	220.00	15.72	15.72
SUBTOTALS HWY. 158 - SITE 1:																						**450.20**		**49.52**	**49.52**
SUBTOTALS HWY. 158 (BOX 4 OF 5):					**1278.58**		**3420.95**	**171.05**		**1102.90**	**187.50**	**358.55**		**1423.64**		**234.90**		**1405.52**		**154.61**		**3817.87**		**499.62**	**654.23**

BASIS OF ESTIMATE:
ACHM SURFACE COURSE (1/2").....95% MIN. AGGR.....5% ASPHALT BINDER
ACHM BINDER COURSE (1").....95.9% MIN. AGGR.....4.1% ASPHALT BINDER
MAXIMUM NUMBER OF GYRATIONS = 115 FOR PG 64-22
TACK COAT QUANTITIES WERE CALCULATED USING THE EMULSIFIED ASPHALT RATES. REFER TO SS-400-1 FOR THE RESIDUAL ASPHALT APPLICATION RATES.

BASE AND SURFACING (BOX 5 OF 5)

STATION	STATION	LOCATION	LENGTH	AGGREGATE BASE COURSE (CLASS 7)		TACK COAT							ACHM BINDER COURSE (1")				ACHM SURFACE COURSE (1/2")								
						(0.05 GAL. PER SQ. YD.)			(0.17 GAL. PER SQ. YD.)																
				TON / STATION	TON	TOTAL WID.	SQ.YD.	GALLON	TOTAL WID.	SQ.YD.	GALLON	TOTAL GALLONS	AVG. WID.	SQ.YD.	POUND / SQ.YD.	PG 64-22	AVG. WID.	SQ.YD.	POUND / SQ.YD.	PG 64-22	AVG. WID.	SQ.YD.	POUND / SQ.YD.	PG 64-22	TOTAL PG 64-22
			FEET			FEET			FEET				FEET			TON	FEET			TON	FEET			TON	TON
MAIN LANES- HWY. 181																									
HWY. 181 - SITE 1																									
101+00.00	102+00.00	HWY. 181 - SITE 1 - TRANSITION	100.00	86.50	86.50				25.00	277.78	47.22	47.22									25.00	277.78	220.00	30.56	30.56
102+00.00	102+79.00	HWY. 181 - SITE 1 - FULL DEPTH	79.00	173.00	136.67	44.71	392.44	19.62				19.62	22.46	197.13	330.00	32.53	22.25	195.31	220.00	21.48	30.00	263.33	220.00	28.97	50.45
102+79.00	103+00.00	HWY. 181 - SITE 1 - NOTCH AND WIDEN	21.00	95.25	20.00	24.35	56.83	2.84				2.84	2.23	5.20	330.00	0.86	2.13	4.96	220.00	0.55	30.00	70.00	220.00	7.70	8.25
103+00.00	104+00.00	HWY. 181 - SITE 1 - TRANSITION	100.00	47.63	47.63				25.00	277.78	47.22	47.22									25.00	277.78	220.00	30.56	30.56
SUBTOTALS HWY. 181 - SITE 1:					**290.80**		**449.27**	**22.46**		**555.56**	**94.44**	**116.90**		**202.33**		**33.39**		**200.27**		**22.03**		**888.89**		**97.79**	**119.82**
HWY. 181 - SITE 2																									
201+00.00	202+00.00	HWY. 181 - SITE 2 - TRANSITION	100.00	47.63	47.63				28.00	311.11	52.89	52.89									28.00	311.11	220.00	34.22	34.22
202+00.00	202+49.00	HWY. 181 - SITE 2 - NOTCH AND WIDEN	49.00	95.25	46.67	24.35	132.59	6.63				6.63	2.23	12.14	330.00	2.00	2.13	11.57	220.00	1.27	30.00	163.33	220.00	17.97	19.24
202+49.00	203+33.02	HWY. 181 - SITE 2 -FULL DEPTH	84.02	173.00	145.35	44.71	417.37	20.87				20.87	22.46	209.66	330.00	34.59	22.25	207.72	220.00	22.85	30.00	280.07	220.00	30.81	53.66
203+33.02	203+50.00	HWY. 181 - SITE 2 - NOTCH AND WIDEN	16.98	95.25	16.17	24.35	45.95	2.30				2.30	2.23	4.21	330.00	0.69	2.13	4.01	220.00	0.44	30.00	56.60	220.00	6.23	6.67
203+50.00	204+50.00	HWY. 181 - SITE 2 - TRANSITION	100.00	47.63	47.63				28.00	311.11	52.89	52.89									28.00	311.11	220.00	34.22	34.22
SUBTOTALS HWY. 181 - SITE 2:					**303.45**		**595.91**	**29.80**		**622.22**	**105.78**	**135.58**		**226.01**		**37.28**		**223.30**		**24.56**		**1122.22**		**123.45**	**148.01**
HWY. 181 - SITE 3																									
301+00.00	302+00.00	HWY. 181 - SITE 3 - TRANSITION	100.00	47.63	47.63				25.00	277.78	47.22	47.22									25.00	277.78	220.00	30.56	30.56
302+00.00	304+15.80	HWY. 181 - SITE 3 - NOTCH AND WIDEN	215.80	95.25	205.55	24.35	583.95	29.20				29.20	2.23	53.45	330.00	8.82	2.13	50.95	220.00	5.60	30.00	719.33	220.00	79.13	84.73
304+15.80	309+47.61	HWY. 181 - SITE 3 - FULL DEPTH	531.81	173.00	920.03	44.71	2641.80	132.09				132.09	22.46	1327.04	330.00	218.96	22.25	1314.75	220.00	144.62	30.00	1772.70	220.00	195.00	339.62
309+47.61	311+00.00	HWY. 181 - SITE 3 - NOTCH AND WIDEN	152.39	95.25	145.15	24.35	412.37	20.62				20.62	2.23	37.74	330.00	6.23	2.13	35.98	220.00	3.96	30.00	507.97	220.00	55.88	59.84
311+00.00	312+00.00	HWY. 181 - SITE 3 - TRANSITION	100.00	47.63	47.63				25.00	277.78	47.22	47.22									25.00	277.78	220.00	30.56	30.56
SUBTOTALS HWY. 181 - SITE 3:					**1365.99**		**3638.12**	**181.91**		**555.56**	**94.44**	**276.35**		**1418.23**		**234.01**		**1401.68**		**154.18**		**3555.56**		**391.13**	**545.31**
ADDITIONAL FOR LEVELING - HWY 181																									
202+00.00	202+49.00	HWY. 181 - SITE 2 - NOTCH AND WIDEN	49.00						20.00	108.89	18.51	18.51									20.00	108.89	VAR.	0.53	0.53
203+33.02	203+50.00	HWY. 181 - SITE 2 - NOTCH AND WIDEN	16.98						20.00	37.73	6.41	6.41									20.00	37.73	VAR.	1.11	1.11
302+00.00	304+15.80	HWY. 181 - SITE 3 - NOTCH AND WIDEN	215.80						20.00	479.56	81.53	81.53									20.00	479.56	VAR.	172.93	172.93
309+47.61	311+00.00	HWY. 181 - SITE 3 - NOTCH AND WIDEN	152.39						20.00	338.64	57.57	57.57									20.00	338.64	VAR.	75.78	75.78
SUBTOTALS HWY. 181 SITES 1-3:										**964.82**	**164.02**	**164.02**										**964.82**		**250.35**	**250.35**
SUBTOTALS HWY. 181 (BOX 5 OF 5):					**1960.24**		**4683.30**	**234.17**		**2698.16**	**458.68**	**692.85**		**1846.57**		**304.68**		**1825.25**		**200.77**		**6531.49**		**862.72**	**1063.49**
SUBTOTALS HWY. 77 (BOX 1 OF 5):					**10676.10**		**18629.42**	**931.48**		**4438.91**	**754.60**	**1686.08**		**5510.08**		**1060.67**		**5386.05**		**592.48**		**22988.43**		**2528.76**	**3121.24**
SUBTOTALS HWY. 77 (BOX 2 OF 5):					**110.94**					**7804.64**	**1326.78**	**1326.78**										**10104.33**		**2934.25**	**2934.25**
SUBTOTALS HWY. 140 (BOX 3 OF 5):					**6820.69**		**10600.41**	**530.02**		**4221.64**	**717.67**	**1247.69**		**4447.30**		**1467.60**		**4364.81**		**480.13**		**15125.39**		**1757.70**	**2237.83**
SUBTOTALS HWY. 158 (BOX 4 OF 5):					**1278.58**		**3420.95**	**171.05**		**1102.90**	**187.50**	**358.55**		**1423.64**		**234.90**		**1405.52**		**154.61**		**3817.87**		**499.62**	**654.23**
TOTALS:					**20846.55**		**37334.08**	**1866.72**		**20266.25**	**3445.23**	**5311.95**		**13227.59**		**3067.85**		**12981.63**		**1427.99**		**58567.51**		**8583.05**	**10011.04**

BASIS OF ESTIMATE:
ACHM SURFACE COURSE (1/2").....95% MIN. AGGR.....5% ASPHALT BINDER
ACHM BINDER COURSE (1").....95.9% MIN. AGGR.....4.1% ASPHALT BINDER
MAXIMUM NUMBER OF GYRATIONS = 115 FOR PG 64-22
TACK COAT QUANTITIES WERE CALCULATED USING THE EMULSIFIED ASPHALT RATES. REFER TO SS-400-1 FOR THE RESIDUAL ASPHALT APPLICATION RATES.

STATE OF ARKANSAS
LICENSED PROFESSIONAL ENGINEER
No.13436
SHAUN A. ROBERSON
DIGITALLY SIGNED 1-5-2022

QUANTITIES

CGervasini 1/5/2022 11:58:26 PM
WORKSPACE: AHTD
\\garverinc.local\gdata\Projects\2017\17076.42 - ARDOT Job 100955\Drawings\r100955_QTY_01.dgn
REVISED DATE:

△1 Updated Elastomeric Bearing Quantities at Intermediate Bents
By: JME Date: 1/5/2022
Checked by: JHR Date: 1/5/2022

DATE REVISED	DATE FILMED	DATE REVISED	DATE FILMED	FED. ROAD DIST. NO.	STATE	FED. AID PROJ. NO.	SHEET NO.	TOTAL SHEETS
1/5/2022				6	ARK.			
				JOB NO.		100955	81	356
				(1)	07556-07564	QUANTITIES		64301

SCHEDULE OF BRIDGE QUANTITIES - JOB NO. 100955

BRIDGE NO.	NAME PLATE TITLE	ITEM NO.	205	801	SS & 802	803	SS & 804	SP, SS, & 805	SP, SS, & 805	SP, SS & 805	SS & 805	SP, SS, & 807	SS & 808	SS & 809	812	816	816	SP JOB 100955	SP JOB 100955	SP JOB 100955	SP JOB 100955	SP JOB 100955
		UNIT OF STRUCTURE / ITEM / UNIT	REMOVAL OF EXISTING BRIDGE STRUCTURE (SITE NO. _)	UNCLASSIFIED EXCAVATION FOR STRUCTURES - BRIDGE	CLASS S CONCRETE - BRIDGE	CLASS 2 PROTECTIVE SURFACE TREATMENT (9)	REINFORCING STEEL - BRIDGE (GRADE 60) (1)	STEEL SHELL PILING (24" DIA.) (2)	STEEL SHELL PILING (28" DIA.) (2)(3)(4)	STEEL SHELL PILING (30" DIA.) (2)(3)(4)	PILE ENCASEMENT (5)	STRUCTURAL STEEL IN BEAM SPANS (A709, GR. 50W) (6)	ELASTOMERIC BEARINGS	SILICONE JOINT SEALANT	BRIDGE NAME PLATE (TYPE D)	FILTER BLANKET	DUMPED RIPRAP	PREFABRICATED SUPER-STRUCTURE MODULES (7)	POLYMER OVERLAY (10)	BRIDGE DECK GRINDING (10)	TIMBER COMPACTION PILE	PRECAST CONCRETE BENT CAPS (8)
		UNIT	LUMP SUM	CU. YD.	CU. YD.	SQ. YD.	LB.	LIN. FT.	LIN. FT.	LIN. FT.	LIN. FT.	LB.	CU. INCH	LIN. FT.	EACH	SQ. YD.	CU. YD.	SQ. FT.	SQ. YD.	SQ. YD.	LIN. FT.	LIN. FT.
07556	LEFT HAND CHUTE OF LITTLE RIVER	END BENT NO. 1		56	47.00	13.2	9,705	315				756	2,784.0	39		398	213				4,578	
		INTERMEDIATE BENT NO. 2							320		45		△1 2,320.0 ~~1,160.0~~									41
		INTERMEDIATE BENT NO. 3							320		40		△1 2,320.0 ~~1,160.0~~									41
		END BENT NO. 4		58	47.00	13.2	9,705	315				756	2,784.0	39		372	198				4,662	
		160'-0" CONT. W-BEAM UNIT				736.2						388			1			5,836	913	913		
		SITE NO. 1 (EXISTING BRIDGE NO. 02141)	1																			
		TOTALS FOR BRIDGE NUMBER 07556		114	94.00	762.6	19,410	630	640		85	1,900	△1 10,208.0 ~~7,880.0~~	78	1	770	411	5,836	913	913	9,240	82
07557	DITCH NO. 1	END BENT NO. 1		52	50.25	13.5	10,345	434				821	2,784.0	43		690	371				7,790	
		INTERMEDIATE BENT NO. 2								325	45		△1 2,320.0 ~~1,160.0~~									44
		INTERMEDIATE BENT NO. 3								375	125		△1 2,320.0 ~~1,160.0~~									44
		INTERMEDIATE BENT NO. 4								375	120		△1 2,320.0 ~~1,160.0~~									44
		INTERMEDIATE BENT NO. 5								325	45		△1 2,320.0 ~~1,160.0~~									44
		END BENT NO. 6		57	50.25	13.5	10,345	315				821	2,784.0	43		722	388				6,109	
		300'-0" CONT. W-BEAM UNIT				1,380.7						388			1			10,943	1,456	1,456		
		SITE NO. 2 (EXISTING BRIDGE NO. 02870)	1																			
		TOTALS FOR BRIDGE NUMBER 07557		109	100.50	1,407.7	20,690	749		1,400	335	2,030	△1 14,848.0 ~~10,208.0~~	86	1	1,412	759	10,943	1,456	1,456	13,899	176
07558	RIGHT HAND CHUTE OF LITTLE RIVER	END BENT NO. 1		48	44.75	12.9	9,030	402				711	2,784.0	37		559	294					
		INTERMEDIATE BENT NO. 2								400	35		△1 2,320.0 ~~1,160.0~~									38
		INTERMEDIATE BENT NO. 3								400	35		△1 2,320.0 ~~1,160.0~~									38
		INTERMEDIATE BENT NO. 4								400	85		△1 2,320.0 ~~1,160.0~~									38
		INTERMEDIATE BENT NO. 5								400	120		△1 2,320.0 ~~1,160.0~~									38
		INTERMEDIATE BENT NO. 6								400	75		△1 2,320.0 ~~1,160.0~~									38
		END BENT NO. 7		50	44.75	12.9	9,030	384				711	△1 2,784.0	37		339	181				6,720	
		360'-0" CONT. W-BEAM UNIT				1,656.9						388			1			13,133	1,646	1,646		
		SITE NO. 3 (EXISTING BRIDGE NO. 02871)	1																			
		TOTALS FOR BRIDGE NUMBER 07558		98	89.50	1,682.7	18,060	786		2,000	350	1,810	△1 17,168.0 ~~11,368.0~~	74	1	898	475	13,133	1,646	1,646	6,720	190
07559	DITCH NO. 2	END BENT NO. 1		57	52.60	13.8	10,975	315				866	2,784.0	45		720	383				6,929	
		INTERMEDIATE BENT NO. 2								350	45		△1 2,320.0 ~~1,160.0~~									47
		INTERMEDIATE BENT NO. 3								375	60		△1 2,320.0 ~~1,160.0~~									47
		INTERMEDIATE BENT NO. 4								350	50		△1 2,320.0 ~~1,160.0~~									47
		INTERMEDIATE BENT NO. 5								350	45		△1 2,320.0 ~~1,160.0~~									47
		END BENT NO. 6		55	52.60	13.8	10,975	525				866	2,784.0	45		774	413				8,405	
		220'-0" CONT. W-BEAM UNIT				1,012.2						388			1			8,023	1,162	1,162		
		SITE NO. 4 (EXISTING BRIDGE NO. 02872)	1																			
		TOTALS FOR BRIDGE NUMBER 07559		112	105.20	1,039.8	21,950	840		1,425	200	2,120	△1 14,848.0 ~~10,208.0~~	90	1	1,494	796	8,023	1,162	1,162	15,334	188
07560	RELIEF TO RIGHT HAND CHUTE OF LITTLE RIVER	END BENT NO. 1		49	44.75	12.9	9,030	354				711	2,784.0	37		544	286				6,192	
		INTERMEDIATE BENT NO. 2								375	35		△1 2,320.0 ~~1,160.0~~									38
		INTERMEDIATE BENT NO. 3								375	35		△1 2,320.0 ~~1,160.0~~									38
		INTERMEDIATE BENT NO. 4								375	40		△1 2,320.0 ~~1,160.0~~									38
		INTERMEDIATE BENT NO. 5								375	40		△1 2,320.0 ~~1,160.0~~									38
		INTERMEDIATE BENT NO. 6								375	40		△1 2,320.0 ~~1,160.0~~									38
		INTERMEDIATE BENT NO. 7								375	35		△1 2,320.0 ~~1,160.0~~									38
		END BENT NO. 8		48	44.75	12.9	9,030	270				711	2,784.0	37		520	273				6,360	
		380'-0" CONT. W-BEAM UNIT				1,749.0						388			1			13,863	1,721	1,721		
		SITE NO. 5 (EXISTING BRIDGE NO. 02881)	1																			
		TOTALS FOR BRIDGE NUMBER 07560		97	89.50	1,774.8	18,060	624		2,250	225	1,810	△1 19,488.0 ~~12,528.0~~	74	1	1,064	559	13,863	1,721	1,721	12,552	228
		SHEET 1 TOTALS		530	478.70	6,667.6	98,170	3,629	640	7,075	1,195	9,670	76,560.0 ~~52,200.0~~	402	5	5,638	3,000	51,798	6,898	6,898	57,745	864

(1) Epoxy coated reinforcing steel in end bents shall be paid for as "REINFORCING STEEL - BRIDGE (GRADE 60)".

(2) Steel shell piles shall conform to ASTM A252, Grade 3, Fy = 45 ksi.

(3) Concrete used to fill 28" and 30" Diameter Steel Shell Piles shall be in accordance with SP "CONCRETE FILL FOR LARGE DIAMETER STEEL SHELL PILES".

(4) Piling at intermediate bents shall be installed in accordance with SP "PILE DRIVING TOLERANCES".

(5) Corrugated metal pipe will not be allowed to construct pile encasement.

(6) Structural steel paid for under this item shall consist of expansion joint armor placed at top of backwall and anchor bolts at end bents. All other structural steel shall be included in the cost of the prefabricated modules.

(7) The cost of all concrete, reinforcing steel, structural steel, painting, bridge traffic rail, and Ultra High Performance concrete used in closure pours shall be included in the unit price bid for this item.

(8) The cost of all concrete, reinforcing steel, corrugated steel pipes used in pocket connections, and self-consolidating concrete used to fill pocket connections shall be included in the unit price bid for this item.

(9) Includes quantity applied to barriers on approach gutters

(10) Includes quantity applied to approach slabs and gutters

STATE OF ARKANSAS
LICENSED PROFESSIONAL ENGINEER
No.8017
JOHN H. RUDDELL

DIGITALLY SIGNED 1-5-2022
BRIDGE ENGINEER

SHEET 1 OF 2
SCHEDULE OF BRIDGE QUANTITIES
HWYS. 77, 140, 158, & 181
STRS. & APPRS. (MISSISSIPPI CO.) (S)
MISSISSIPPI COUNTY
ROUTE 77, 140 & 158 SEC. 1 & 2
ARKANSAS STATE HIGHWAY COMMISSION
LITTLE ROCK, ARK.

DRAWN BY: JME DATE: JUNE 2021 FILENAME: b100955_QT1.dgn
CHECKED BY: WMM DATE: JUNE 2021 SCALE: No Scale
DESIGNED BY: JME DATE: JUNE 2021
BRIDGE NO. 07556-07564 DRAWING NO. 64301

abnall 1/5/2022 11:54:32 AM
WORKSPACE: ARDOT Bridge (2019)
L:\20T\T0176\42 - ARDOT Job 100955\Drawings\b100955_SOQ1.OT.dgn
REVISED DATE:

DATE REVISED	DATE FILMED	DATE REVISED	DATE FILMED	FED. ROAD DIST. NO.	STATE	FED. AID PROJ. NO.	SHEET NO.	TOTAL SHEETS
1/5/2022				6	ARK.			
				JOB NO.		100955	82	356
				(1) 07556-07564		QUANTITIES		64302

1 Updated Elastomeric Bearing Quantities at Intermediate Bents
By: JME Date: 1/5/2022
Checked by: JHR Date: 1/5/2022

SCHEDULE OF BRIDGE QUANTITIES - JOB NO. 100955

BRIDGE NO.	NAME PLATE TITLE	UNIT OF STRUCTURE / ITEM NO. / ITEM / UNIT	205 REMOVAL OF EXISTING BRIDGE STRUCTURE (SITE NO. _) LUMP SUM	801 UNCLASSIFIED EXCAVATION FOR STRUCTURES - BRIDGE CU. YD.	SS & 802 CLASS S CONCRETE - BRIDGE CU. YD.	803 CLASS 2 PROTECTIVE SURFACE TREATMENT (9) SQ. YD.	SS & 804 REINFORCING STEEL - BRIDGE (GRADE 60) (1) LB.	SP, SS, & 805 STEEL SHELL PILING (24" DIA.) (2) LIN. FT.	SP, SS, & 805 STEEL SHELL PILING (28" DIA.) (2)(3)(4) LIN. FT.	SP, SS & 805 STEEL SHELL PILING (30" DIA.) (2)(3)(4) LIN. FT.	SS & 805 PILE ENCASEMENT (5) LIN. FT.	SP, SS, & 807 STRUCTURAL STEEL IN BEAM SPANS (A709, GR. 50W) (6) LB.	SS & 808 ELASTOMERIC BEARINGS CU. INCH	SS & 809 SILICONE JOINT SEALANT LIN. FT.	812 BRIDGE NAME PLATE (TYPE D) EACH	816 FILTER BLANKET SQ. YD.	816 DUMPED RIPRAP CU. YD.	SP JOB 100955 PREFABRICATED SUPER-STRUCTURE MODULES (7) SQ. FT.	SP JOB 100955 POLYMER OVERLAY (11) SQ. YD.	SP JOB 100955 BRIDGE DECK GRINDING (11) SQ. YD.	SP JOB 100955 TIMBER COMPACTION PILE LIN. FT.	SP JOB 100955 PRECAST CONCRETE BENT CAPS (8) LIN. FT.
07561	(10)	END BENT NO. 1		50	47.00	13.2	9,705	280				756	2,784.0	39		613	322				4,805	
		INTERMEDIATE BENT NO. 2								375	65		2,320.0 ~~1,160.0~~									41
		INTERMEDIATE BENT NO. 3								375	65		1 2,320.0 ~~1,160.0~~									41
		END BENT NO. 4		50	47.00	13.2	9,705	280				756	2,784.0	39		650	340					
		150'-0" CONT. W-BEAM UNIT				690.2						388			1			5,471	876	876		
		SITE NO. 6 (EXISTING BRIDGE NO. 02873)	1																			
		TOTALS FOR BRIDGE NUMBER 07561		100	94.00	716.6	19,410	560		750	130	1,900	1 10,208.0 ~~7,888.0~~	78	1	1,263	662	5,471	876	876	4,805	82
07562	NATIONAL DITCH NO. 6	END BENT NO. 1		62	60.60	14.6	12,540	441				1,021	3,480.0	52		305	164				3,200	
		INTERMEDIATE BENT NO. 2							330				1 2,900.0 ~~1,450.0~~									54
		INTERMEDIATE BENT NO. 3							372		51		1 2,900.0 ~~1,450.0~~									54
		INTERMEDIATE BENT NO. 4							414		75		1 2,900.0 ~~1,450.0~~									54
		INTERMEDIATE BENT NO. 5							468				1 2,900.0 ~~1,450.0~~									54
		END BENT NO. 6		62	60.60	14.6	12,540	477				1,021	3,480.0	52		369	198					
		270'-0" CONT. W-BEAM UNIT				1,422.3						388			1			11,467	1,593	1,593		
		SITE NO. 7 (EXISTING BRIDGE NO. 03781)	1																			
		TOTALS FOR BRIDGE NUMBER 07562		124	121.20	1,451.5	25,080	918	1,584		126	2,430	1 18,560.0 ~~12,760.0~~	104	1	674	362	11,467	1,593	1,593	3,200	216
07563	DITCH NO. 31	END BENT NO. 1		62	60.60	14.6	12,540	486				1,021	3,480.0	52		183	102					
		INTERMEDIATE BENT NO. 2							348		27		1 2,900.0 ~~1,450.0~~									54
		INTERMEDIATE BENT NO. 3							414		75		1 2,900.0 ~~1,450.0~~									54
		INTERMEDIATE BENT NO. 4							336		75		1 2,900.0 ~~1,450.0~~									54
		INTERMEDIATE BENT NO. 5							342		27		1 2,900.0 ~~1,450.0~~									54
		END BENT NO. 6		62	60.60	14.6	12,540	432				1,021	3,480.0	52		331	178					
		270'-0" CONT. COMP. W-BEAM UNIT				1,422.3						388			1			11,467	1,593	1,593		
		SITE NO. 8 (EXISTING BRIDGE NO. 03782)	1																			
		TOTALS FOR BRIDGE NUMBER 07563		124	121.20	1,451.5	25,080	918	1,440		204	2,430	1 18,560.0 ~~12,760.0~~	104	1	514	280	11,467	1,593	1,593		216
07564	NATIONAL DITCH NO. 6	END BENT NO. 1		53	48.50	13.2	10,100	280				766	2,784.0	40		341	182					
		INTERMEDIATE BENT NO. 2							235				1 2,320.0 ~~1,160.0~~									42
		INTERMEDIATE BENT NO. 3							260		40		1 2,320.0 ~~1,160.0~~									42
		INTERMEDIATE BENT NO. 4							260		50		1 2,320.0 ~~1,160.0~~									42
		INTERMEDIATE BENT NO. 5							235				1 2,320.0 ~~1,160.0~~									42
		END BENT NO. 6		54	48.50	13.2	10,100	280				766	2,784.0	40		269	146					
		250'-0" CONT. W-BEAM UNIT				1,039.4						388			1			8,119	1,127	1,127		
		SITE NO. 9 (EXISTING BRIDGE NO. M4039)	1																			
		TOTALS FOR BRIDGE NUMBER 07564		107	97.00	1,065.8	20,200	560	990		90	1,920	1 14,848.0 ~~10,208.0~~	80	1	610	328	8,119	1,127	1,127		168
		SITE NO. 10 (EXISTING BRIDGE NO. 02138)	1																			
		SITE NO. 11 (EXISTING BRIDGE NO. M2231)	1																			
		SITE NO. 12 (EXISTING BRIDGE NO. 02232)	1																			
		SHEET 2 TOTALS		455	433.40	4,685.4	89,770	2,956	4,014	750	550	8,680	1 62,176.0 ~~43,616.0~~	366	4	3,061	1,632	36,524	5,189	5,189	8,005	682
		TOTALS FOR JOB NO. 100955		985	912.10	11,353.0	187,940	6,585	4,654	7,825	1,745	18,350	1 138,736.0 ~~95,816.0~~	768	9	8,699	4,632	88,322	12,087	12,087	65,750	1,546

(1) Epoxy coated reinforcing steel in end bents shall be paid for as "REINFORCING STEEL - BRIDGE (GRADE 60)".

(2) Steel shell piles shall conform to ASTM A252, Grade 3, Fy = 45 ksi.

(3) Concrete used to fill 28" and 30" Diameter Steel Shell Piles shall be in accordance with SP "CONCRETE FILL FOR LARGE DIAMETER STEEL SHELL PILES".

(4) Piling at intermediate bents shall be installed in accordance with SP "PILE DRIVING TOLERANCES".

(5) Corrugated metal pipe will not be allowed to construct pile encasement.

(6) Structural steel paid for under this item shall consist of expansion joint armor placed at top of backwall and anchor bolts at end bents. All other structural steel shall be included in the cost of the prefabricated modules.

(7) The cost of all concrete, reinforcing steel, structural steel, painting, bridge traffic rail, and Ultra High Performance concrete used in closure pours shall be included in the unit price bid for this item.

(8) The cost of all concrete, reinforcing steel, corrugated steel pipes used in pocket connections, and self-consolidating concrete used to fill pocket connections shall be included in the unit price bid for this item.

(9) Includes quantity applied to barriers on approach gutters

(10) RELIEF TO RIGHT HAND CHUTE OF LITTLE RIVER (BORROW DITCH)

(11) Includes quantity applied to approach slabs and gutters

STATE OF ARKANSAS
LICENSED PROFESSIONAL ENGINEER
No.8017
JOHN H. RUDDELL

DIGITALLY SIGNED 1-5-2022
BRIDGE ENGINEER

SHEET 2 OF 2
SCHEDULE OF BRIDGE QUANTITIES
HWYS. 77, 140, 158, & 181
STRS. & APPRS. (MISSISSIPPI CO.) (S)
MISSISSIPPI COUNTY
ROUTE 77, 140 & 158 SEC. 1 & 2
ARKANSAS STATE HIGHWAY COMMISSION
LITTLE ROCK, ARK.

DRAWN BY: JME DATE: JUNE 2021 FILENAME: b100955_QT2.dgn
CHECKED BY: WMM DATE: JUNE 2021 SCALE: No Scale
DESIGNED BY: JME DATE: JUNE 2021
BRIDGE NO. 07556-07564 DRAWING NO. 64302

abnail 1/5/2022 11:54:33 AM
WORKSPACE: ARDOT Bridge (2019)
L:\20T\170I7642 - ARDOT Job 100955\Drawings\b100955_SO02_QT.dgn
REVISED DATE:

DATE REVISED	DATE FILMED	DATE REVISED	DATE FILMED	FED.RD. DIST.NO.	STATE	FED.AID PROJ.NO.	SHEET NO.	TOTAL SHEETS
09-20-2021				6	ARK.			
11-22-2021				JOB NO.		100955	83	356
01-05-2022								

(2) SUMMARY OF QUANTITIES & REVISIONS

SUMMARY OF QUANTITIES (BOX 1 OF 2)

ITEM NUMBER	ITEM	QUANTITY	UNIT
201	CLEARING	68	STATION
201	GRUBBING	68	STATION
202	REMOVAL AND DISPOSAL OF CURB	221	LIN. FT.
202	REMOVAL AND DISPOSAL OF FENCE	157	LIN. FT.
202	REMOVAL AND DISPOSAL OF PIPE CULVERTS	36	EACH
202	REMOVAL AND DISPOSAL OF GUARDRAIL	1207	LIN. FT.
202	REMOVAL AND DISPOSAL OF SIGNS	1	EACH
202	REMOVAL AND DISPOSAL OF MAILBOXES	8	EACH
207	STONE BACKFILL	2153	TON
SS & 210	UNCLASSIFIED EXCAVATION	60601	CU. YD.
SP & 210	COMPACTED EMBANKMENT	105144	CU. YD.
SP & 210	SOIL STABILIZATION	400	TON
SS & 303	AGGREGATE BASE COURSE (CLASS 7)	25431	TON
SS & 401	TACK COAT	5406	GAL.
SP, SS, & 406	MINERAL AGGREGATE IN ACHM BINDER COURSE (1")	2942	TON
SP, SS, & 406	ASPHALT BINDER (PG 64-22) IN ACHM BINDER COURSE (1")	126	TON
SP, SS, & 407	MINERAL AGGREGATE IN ACHM SURFACE COURSE (1/2")	9741	TON
SP, SS, & 407	ASPHALT BINDER (PG 64-22) IN ACHM SURFACE COURSE (1/2")	513	TON
SP & 412	COLD MILLING ASPHALT PAVEMENT	7400	SQ. YD.
SP, SS, & 414	ASPHALT CONCRETE PATCHING FOR MAINTENANCE OF TRAFFIC	47	TON
SP, SS, & 415	ACHM PATCHING OF EXISTING ROADWAY	100	TON
SP & 504	APPROACH SLABS	985.62	CU. YD.
SP & 504	APPROACH GUTTERS	479.14	CU. YD.
601	MOBILIZATION	1.00	LUMP SUM
SP & 602	FURNISHING FIELD OFFICE	1	EACH
SP, SS & 603	MAINTENANCE OF TRAFFIC	1.00	LUMP SUM
SS & 604	SIGNS	1716	SQ. FT.
SP, SS, & 504	CONSTRUCTION PROJECT INFORMATION SIGN UPDATE	26	EACH
SS & 604	BARRICADES	64	LIN. FT.
SS & 605	CONCRETE DITCH PAVING (TYPE B)	334	SQ. YD.
606	30" REINFORCED CONCRETE PIPE CULVERTS (CLASS III)	38	LIN. FT.
SP, SS, & 606	18" SIDE DRAIN	280	LIN. FT.
SP, SS, & 606	24" SIDE DRAIN	634	LIN. FT.
SP, SS, & 606	30" SIDE DRAIN	386	LIN. FT.
SP, SS, & 606	36" SIDE DRAIN	292	LIN. FT.
SP, SS & 606	42" SIDE DRAIN	222	LIN. FT.
SP, SS, & 606	48" SIDE DRAIN	78	LIN. FT.
SS & 606	60" SIDE DRAIN	72	LIN. FT.
606	30" FLARED END SECTIONS FOR REINFORCED CONCRETE PIPE CULVERTS	2	EACH
606	SELECTED PIPE BEDDING	100	CU. YD.
SS & 611	UNDERDRAIN OUTLET PROTECTORS	4	EACH
SS & 611	4" PIPE UNDERDRAINS	500	LIN. FT.
616	36" AUTOMATIC FLOODGATES	1	EACH
616	42" AUTOMATIC FLOODGATES	1	EACH
SS & 617	GUARDRAIL (TYPE A)	3450	LIN. FT.
SS & 617	GUARDRAIL TERMINAL (TYPE 2)	32	EACH
SS & 617	THRIE BEAM GUARDRAIL TERMINAL	32	EACH
* 619	4' STEEL CHAIN LINK FENCE (ALTERNATE NO. 1)	98	LIN. FT.
* 619	4' ALUMINUM CHAIN LINK FENCE (ALTERNATE NO. 2)	98	LIN. FT.
620	LIME	49	TON
620	SEEDING	24.36	ACRE
SS & 620	MULCH COVER	48.72	ACRE
620	WATER	2987.6	M. GAL.
621	TEMPORARY SEEDING	24.36	ACRE
621	SILT FENCE	20460	LIN. FT.
621	SAND BAG DITCH CHECKS	440	BAG
621	SEDIMENT BASIN	1200	CU. YD.
621	OBLITERATION OF SEDIMENT BASIN	1200	CU. YD.
621	SEDIMENT REMOVAL AND DISPOSAL	2155	CU. YD.
621	ROCK DITCH CHECKS	591	CU. YD.
623	SECOND SEEDING APPLICATION	24.36	ACRE
624	SOLID SODDING	474	SQ. YD.
626	EROSION CONTROL MATTING (CLASS 3)	9099	SQ. YD.
635	ROADWAY CONSTRUCTION CONTROL	1.00	LUMP SUM
637	MAILBOXES	12	EACH
637	MAILBOX SUPPORTS (SINGLE)	4	EACH
637	MAILBOX SUPPORTS (DOUBLE)	4	EACH
642	RUMBLE STRIPS IN ASPHALT SHOULDERS	9995	LIN. FT.
SP & 642	CENTERLINE RUMBLE STRIPES IN ASPHALT ROADWAYS	2850	LIN. FT.
718	REFLECTORIZED PAINT PAVEMENT MARKING WHITE (6")	10456	LIN. FT.
718	REFLECTORIZED PAINT PAVEMENT MARKING YELLOW (6")	10456	LIN. FT.
719	THERMOPLASTIC PAVEMENT MARKING WHITE (6")	23500	LIN. FT.
719	THERMOPLASTIC PAVEMENT MARKING YELLOW (6")	23500	LIN. FT.
721	RAISED PAVEMENT MARKERS (TYPE II)	197	EACH
SS & 734	BRIDGE END TERMINAL	4	EACH
SS & 804	REINFORCING STEEL-ROADWAY (GRADE 60)	163586	POUND

* DENOTES ALTERNATE BID ITEMS.

SUMMARY OF QUANTITIES (BOX 2 OF 2)

ITEM NUMBER	ITEM	QUANTITY	UNIT
	STRUCTURES OVER 20' SPAN		
205	REMOVAL OF EXISTING BRIDGE STRUCTURE (SITE NO. 1)	1.00	LUMP SUM
205	REMOVAL OF EXISTING BRIDGE STRUCTURE (SITE NO. 2)	1.00	LUMP SUM
205	REMOVAL OF EXISTING BRIDGE STRUCTURE (SITE NO. 3)	1.00	LUMP SUM
205	REMOVAL OF EXISTING BRIDGE STRUCTURE (SITE NO. 4)	1.00	LUMP SUM
205	REMOVAL OF EXISTING BRIDGE STRUCTURE (SITE NO. 5)	1.00	LUMP SUM
205	REMOVAL OF EXISTING BRIDGE STRUCTURE (SITE NO. 6)	1.00	LUMP SUM
205	REMOVAL OF EXISTING BRIDGE STRUCTURE (SITE NO. 7)	1.00	LUMP SUM
205	REMOVAL OF EXISTING BRIDGE STRUCTURE (SITE NO. 8)	1.00	LUMP SUM
205	REMOVAL OF EXISTING BRIDGE STRUCTURE (SITE NO. 9)	1.00	LUMP SUM
205	REMOVAL OF EXISTING BRIDGE STRUCTURE (SITE NO. 10)	1.00	LUMP SUM
205	REMOVAL OF EXISTING BRIDGE STRUCTURE (SITE NO. 11)	1.00	LUMP SUM
205	REMOVAL OF EXISTING BRIDGE STRUCTURE (SITE NO. 12)	1.00	LUMP SUM
636	BRIDGE CONSTRUCTION CONTROL	1.00	LUMP SUM
801	UNCLASSIFIED EXCAVATION FOR STRUCTURES-BRIDGE	985	CU. YD.
801	UNCLASSIFIED EXCAVATION FOR STRUCTURES-ROADWAY	723	CU. YD.
SP, SS & 802	CLASS S CONCRETE-ROADWAY	1870.86	CU. YD.
SP, SS & 802	CLASS S CONCRETE-BRIDGE	912.10	CU. YD.
SP	PRECAST CONCRETE BENT CAPS	1546	LIN. FT.
803	CLASS 2 PROTECTIVE SURFACE TREATMENT	11353.0	SQ. YD.
SS & 804	REINFORCING STEEL ROADWAY (GRADE 60)	246101	POUND
SS & 804	REINFORCING STEEL-BRIDGE (GRADE 60)	187940	POUND
SP, SS, & 805	STEEL SHELL PILING (24" DIAMETER)	6585	LIN. FT.
SP, SS, & 805	STEEL SHELL PILING (28" DIAMETER)	4654	LIN. FT.
SP, SS, & 805	STEEL SHELL PILING (30" DIAMETER)	7325	LIN. FT.
SS & 805	PILE ENCASEMENT	1745	LIN. FT.
SP, SS, & 807	STRUCTURAL STEEL N BEAM SPANS (A709, GR.50W)	18350	POUND
SS & 808	ELASTOMERIC BEARINGS	138736.0	CU. IN.
SS & 809	SILICONE JOINT SEALANT	768	LIN. FT.
812	BRIDGE NAME PLATE (TYPE D)	9	EACH
816	FILTER BLANKET	8699	SQ. YD.
816	DUMPED RIPRAP	4632	CU. YD.
SP	TIMBER COMPACTION PILE	65750	LIN. FT.
SP	PREFABRICATED SUPERSTRUCTURE MODULES	88322	SQ. FT.
SP	POLYMER OVERLAY	12087	SQ. YD.
SP	BRIDGE DECK GRINDING	12087	SQ. YD.

REVISIONS

DATE	REVISION	SHEET NUMBER
09-20-2021	REVISED FEDERAL AID PROJECT NUMBER.	1, 83
11-22-2021	REVISED PAY ITEM NUMBERS FOR UNCLASSIFIED EXCAVATION, APPROACH SLABS, APPROACH GUTTERS, CLASS S CONCRETE-ROADWAY, AND CLASS S CONCRETE-BRIDGE IN THE PROPOSAL. REMOVED THE FOLLOWING SP'S: ESTABLISHING CONTRACT TIME – WORKING DAY CONTRACT AND FLEXIBLE BEGINNING OF WORK. ADDED THE FOLLOWING SP'S: ESTABLISHING CONTRACT TIME - CALENDAR DAY CONTRACT, FLEXIBLE BEGINNING OF WORK CALENDAR - DAY CONTRACT, COLD MILLING - COUNTY PROPERTY, PROSECUTION AND PROGRESS WITH BID SCHEDULE, UTILITY REQUIREMENTS AND DELAY IN RIGHT OF WAY OCCUPANCY. REVISED PLANS TO SHOW EARTHWORK AS PLAN QUANTITY. REVISED PROPOSED DRIVEWAY ACCESS TO TRACT 10 ON HWY. 77 SITE 2 AND UPDATED AGGREGATE BASE COURSE (CLASS 7) AND COMPACTED EMBANKMENT QUANTITIES.	4, 71, 76, 83, 103, 104, 265
01-05-2022	REVISED COMPACTED EMBANKMENT SPECIAL PROVISION. HWY. 158 - SITE 1, HWY. 140 - SITE 2, AND C.R. 524 WERE REVISED TO FACILITATE RIGHT OF WAY CHANGES TO LESSEN IMPACTS TO SELECT PARCELS. CLEARING, GRUBBING, EARTHWORK, EROSION CONTROL, PAVING, PERMANENT PAVEMENT MARKINGS, SIDE DRAINS, CONCRETE DITCH PAVING, AND EROSION CONTROL MATTING WERE REVISED. SPECIAL DETAILS WERE ADDED FOR STONE BACKFILL UNDER BOX CULVERT LOCATIONS. STONE BACKFILL PAY ITEM ADDED TO PLANS. REVISED QUANTITY FOR ELASTOMERIC BEARINGS AND UPDATED GENERAL NOTES FOR ELASTOMERIC BEARINGS AT INT. BENTS.	12, 16, 17, 35, 41, 43, 49, 55, 57, 68, 70, 71, 72, 73, 74, 75, 76, 77, 80, 81, 82, 83, 84, 87, 105, 107, 108, 117, 118, 120, 121, 122, 249, 280, 281, 282, 283, 335, 337, 338, 339

STATE OF ARKANSAS
LICENSED PROFESSIONAL ENGINEER
No.13436
SHAUN A. ROBERSON
DIGITALLY SIGNED 1-5-2022

SUMMARY OF QUANTITIES & REVISIONS

CGervosini 1/5/2022 1:58:41 PM
WORKSPACE: AHTD
L:\20\T\70\7642 - ARDOT Job 100955\Drawings\r100955_QTY_SUM_01.dgn
REVISED DATE:

DATE REVISED	DATE FILMED	DATE REVISED	DATE FILMED	FED.RD. DIST.NO.	STATE	FED.AID PROJ.NO.	SHEET NO.	TOTAL SHEETS
01-05-2022				6	ARK.			
				JOB NO.		100955	84	356
				(2)		SURVEY CONTROL DETAILS		

SURVEY CONTROL COORDINATES

Project Name: s100955
Date: 3/19/2020
Coordinate System: ARKANSAS STATE PLANE - NORTH ZONE BASED ON GPS CONTROL, THIS JOB IS IN GRID.

Units: U.S. SURVEY FOOT

Point Name	Northing	Easting	Elev	Feature	Description
1	523117.4824	1852915.5030	233.054	CTL	STD ARDOT CAP STAMPED PN: 1
3	502116.0224	1862282.1400	228.805	CTL	STD ARDOT CAP STAMPED PN: 3
5	523168.2204	1855881.3070	232.553	CTL	STD ARDOT CAP STAMPED PN: 5
15	502378.1840	1877448.4380	231.606	CTL	STD ARDOT CAP STAMPED PN: 15
21	490073.1691	1877716.2460	230.282	CTL	STD ARDOT CAP STAMPED PN: 21
22	490908.5252	1877380.5560	230.644	CTL	STD ARDOT CAP STAMPED PN: 22
23	491684.7402	1877190.1260	231.441	CTL	STD ARDOT CAP STAMPED PN: 23
24	492379.6297	1877048.8210	230.922	CTL	STD ARDOT CAP STAMPED PN: 24
25	493065.8851	1877021.6470	230.330	CTL	STD ARDOT CAP STAMPED PN: 25
26	503317.1353	1884520.9500	231.100	CTL	STD ARDOT CAP STAMPED PN: 26
27	504245.6928	1884479.5650	229.909	CTL	STD ARDOT CAP STAMPED PN: 27
28	505139.5560	1884448.0980	230.499	CTL	STD ARDOT CAP STAMPED PN: 28
29	505961.9303	1884450.1860	229.689	CTL	STD ARDOT CAP STAMPED PN: 29
30	506824.3440	1884419.2670	229.877	CTL	STD ARDOT CAP STAMPED PN: 30
31	509506.7698	1853208.5310	233.425	CTL	STD ARDOT CAP STAMPED PN: 31
32	510424.4650	1853188.3760	233.269	CTL	STD ARDOT CAP STAMPED PN: 32
33	511289.0542	1853198.5120	231.562	CTL	STD ARDOT CAP STAMPED PN: 33
34	512160.2015	1853146.4860	231.853	CTL	STD ARDOT CAP STAMPED PN: 34
35	513034.2433	1853156.0380	233.228	CTL	STD ARDOT CAP STAMPED PN: 35
36	527139.1035	1852791.1190	234.602	CTL	STD ARDOT CAP STAMPED PN: 36
37	527963.3214	1852807.8110	240.837	CTL	STD ARDOT CAP STAMPED PN: 37
38	528816.9501	1852753.3830	245.374	CTL	STD ARDOT CAP STAMPED PN: 38
39	529596.2096	1852767.0340	243.235	CTL	STD ARDOT CAP STAMPED PN: 39
40	530419.0947	1852744.2650	245.013	CTL	STD ARDOT CAP STAMPED PN: 40
41	531089.3963	1852725.9710	244.406	CTL	STD ARDOT CAP STAMPED PN: 41
42	531097.1196	1851935.1040	233.519	CTL	STD ARDOT CAP STAMPED PN: 42
43	531977.5461	1852704.8630	243.059	CTL	STD ARDOT CAP STAMPED PN: 43
44	532593.3817	1852690.2810	244.856	CTL	STD ARDOT CAP STAMPED PN: 44
45	533336.1177	1852638.9100	244.738	CTL	STD ARDOT CAP STAMPED PN: 45
46	534101.1728	1852624.4840	242.916	CTL	STD ARDOT CAP STAMPED PN: 46
47	534793.1374	1852615.5390	245.424	CTL	STD ARDOT CAP STAMPED PN: 47
48	535659.0892	1852604.2660	233.867	CTL	STD ARDOT CAP STAMPED PN: 48
49	536432.1779	1852594.3790	233.958	CTL	STD ARDOT CAP STAMPED PN: 49
50	561175.5807	1852295.1940	236.911	CTL	STD ARDOT CAP STAMPED: PN: 50
51	562098.6974	1852285.9660	236.905	CTL	STD ARDOT CAP STAMPED: PN: 51
52	562752.3583	1852309.7570	237.925	CTL	STD ARDOT CAP STAMPED: PN: 52
53	563348.6641	1852532.1090	250.690	CTL	STD ARDOT CAP STAMPED: PN: 53
54	564164.0701	1852262.6710	240.565	CTL	STD ARDOT CAP STAMPED: PN: 54
55	562945.0008	1853174.9880	247.670	CTL	STD ARDOT CAP STAMPED: PN: 55
100	561521.6165	1861760.9940	241.004	GPS	
813	562747.1885	1859579.1030	238.250	CTL	24" X5/8" REBA2.0" ALUM CAP
910	490461.8565	1877586.7890	226.398	TBM	SQUARE CUT ON E END CU
911	491659.0817	1877236.4450	228.743	TBM	SQUARE CUT ON N END RCP
912	493089.5610	1877085.9120	231.977	TBM	X CUT ON BOLT OF FH
913	502421.8482	1883123.5400	231.295	TBM	X CUT ON BOLT OF FH
914	504351.1910	1884446.1050	231.648	TBM	X CUT ON BOLT OF FH
915	505075.6279	1884481.6270	232.015	TBM	SQUARE CUT ON SE CRNR BR
916	506416.1478	1884399.7550	229.289	TBM	SQUARE CUT CNTR OF W HW
917	509506.8578	1853188.3360	231.264	TBM	RBR W/ALUM CAP
918	511324.3291	1853194.3300	232.485	TBM	SQUARE CUT ON SE CRNR BR
919	512543.5822	1853125.1050	232.970	TBM	SQUARE CUT ON HW
920	525716.8859	1852805.1090	232.265	TBM	SQUARE CUT ON S END RCP
921	527219.6045	1852828.0170	233.419	TBM	SQUARE CUT ON E HW, 22' E OF CL HWY 77
922	528698.8821	1852760.5620	246.461	TBM	SQUARE CUT ON NW CRNR BR
923	530085.2773	1852725.4240	246.484	TBM	SQUARE CUT ON SW CRNR BR
924	531106.8221	1852547.2940	233.374	TBM	RBR W/ALUM CAP
925	533000.3822	1852675.5320	246.498	TBM	SQUARE CUT ON NE CRNR BR
926	534843.4343	1852617.5230	246.387	TBM	SQUARE CUT ON SW CRNR BR
927	536248.6055	1852573.2510	232.463	TBM	RBR W/ALUM CAP
928	561393.6715	1852264.1650	234.729	TBM	RBR W/ALUM CAP
929	562692.7492	1852279.2790	239.158	TBM	SQ CUT
930	563360.3653	1852741.8020	242.489	TBM	CUT SQUARE
931	494562.0824	1876932.5520	232.737	TBM	X CUT ON BOLT OF FH
932	497544.4121	1876942.7350	231.197	TBM	X CUT ON BOLT OF FH
933	515234.2022	1853068.8390	231.102	TBM	SQUARE CUT CNTR OF W HW
934	517719.3155	1853004.8470	230.877	TBM	SQUARE CUT CNTR OF W HW
935	520448.3262	1852928.4620	232.295	TBM	SQUARE CUT CNTR W HW

*Note - Rebar and Cap - Standard - 5/8" Rebar with 2" Aluminum Cap stamped
*(standard markings common to all caps), or as indicated
(other markings indicated in the point description of the individual point).
USE CAF = 1.0 FOR STAKEOUT FOR THIS PROJECT
A PROJECT CAF OF 1.0 HAS BEEN USED TO COMPUTE THE ABOVE GRID COORDINATES.
THIS CAF IS INTENDED FOR USE WITHIN THE PROJECT LIMITS.
GRID DISTANCE = THIS JOB IS IN GRID.
GRID COORDINATES ARE STORED UNDER FILE NAME s100955gi.ctl
HORIZONTAL DATUM: NAD 83 (2011)
VERTICAL DATUM: NAVD 88 POSITIONAL ACCURACY THIRD ORDER, UNLESS SPECIFIED OTHERWISE AT A SPECIFIC POINT.

REFERENCE POINTS (1500 SERIES) ARE TO BE USED TO ESTABLISH CONTROL IF THE PRIMARY CONTROL POINTS LISTED ABOVE HAVE BEEN DESTROYED.
REFERENCE POINTS ARE NOT TO BE USED FOR VERTICAL CONTROL

BASIS OF BEARING:
ARKANSAS STATE PLANE GRID BEARINGS - 0301-NORTH ZONE
DETERMINED FROM GPS CONTROL POINTS: SEGMENT 1 BASED ON PTS 3 AND 15 FROM JOB 100996, SEGMENT 2 BASED ON PTS 1 AND 5 FROM JOB 100999,
SEGMENT 3 BASED ON ARDOT GPS MON 470009A AND PT 813 FROM JOB 100654 5 FROM JOB 100999
CONVERGENCE ANGLE: SEGMENT 1: 01-06-27 RIGHT AT MID POINT LAT N35-41-54 MID POINT LON W090-05-47 SEGMENT 2: 01-03-37 RIGHT MID POINT LAT N35-45-24 MID POINT LON W090-10-40
SEGMENT 3: 01-03-38 RIGHT MID POINT LAT N 35-51-56 MID POINT LON W090-10-39
GRID AZIMUTH = ASTRONOMICAL AZIMUTH - CONVERGENCE ANGLE.

ALIGNMENT NAME: HWY. 77 - SITE 1

POINT	STATION	TYPE	NORTHING	EASTING
8600	100+00.00	POB	510648.6315	1853197.8717
8601	115+00.00	POE	512148.2267	1853162.9355

ALIGNMENT NAME: HWY. 77 DRIVE 110+10

POINT	STATION	TYPE	NORTHING	EASTING
8650	10+00.00	POB	511658.3575	1853174.3480
8651	10+55.98	PC	511659.6613	1853230.3126
8652	12+22.53	PT	511567.0368	1853353.9675
8653	12+42.92	POE	511547.3404	1853359.2433

ALIGNMENT NAME: HWY. 77 - SITES 2-4

POINT	STATION	TYPE	NORTHING	EASTING
8700	200+00.00	POB	527696.4077	1852797.6353
8701	203+60.00	PI	528056.3132	1852789.3898
8702	219+40.00	PI	529635.8102	1852749.5256
8703	240+25.00	PI	531720.1231	1852696.0008
8704	257+55.00	PI	533449.5840	1852652.8133
8705	263+05.00	PI	533999.4882	1852642.5516
8706	278+45.00	PI	535539.3253	1852620.1491
8707	285+00.00	POE	536194.2860	1852613.3388

ALIGNMENT NAME: HWY. 158 CONNECTOR

POINT	STATION	TYPE	NORTHING	EASTING
8800	10+00.00	POB	531081.8830	1852213.0334
8801	11+41.96	PC	531081.9752	1852354.993.6
8802	13+56.42	PT	531094.1426	1852568.9954
8803	15+00.00	POE	531110.3241	1852711.6603

ALIGNMENT NAME: HWY. 77 DRIVE 213+70

POINT	STATION	TYPE	NORTHING	EASTING
8900	4+50.00	POB	528625.7129	1852510.4283
8901	4+79.35	PC	528645.3529	185532.2408
8902	6+47.77	PT	528794.7532	1852598.7580
8903	7+19.99	PC	528866.9720	1852598.7580
8904	9+78.08	PT	529059.7850	1852742.8805
8905	10+00.00	POE	529065.9917	1852763.9070

ALIGNMENT NAME: CO. RD. 524

POINT	STATION	TYPE	NORTHING	EASTING
8610	3+00.00	POB	530469.3521	1852254.7143
8611	3+99.26	PC	530521.4594	1852339.1931
8612	6+42.10	PT	530726.0319	1852447.8631
8613	10+00.00	POE	531083.6201	1852433.0106

ALIGNMENT NAME: CO. RD. 538 EAST

POINT	STATION	TYPE	NORTHING	EASTING
8620	20+00.00	POB	535239.3570	1852624.5132
8621	22+06.04	PC	535242.3542	1852830.5274
8622	23+10.20	PT	535262.5644	1852932.1297
8623	24+00.00	POE	535295.7184	1853015.5835

ALIGNMENT NAME: CO. RD. 538 WEST

POINT	STATION	TYPE	NORTHING	EASTING
8630	15+00.00	POB	534976.1757	1852227.4285
8631	15+98.18	PC	535015.3231	1852317.4613
8632	17+48.32	PRC	535118.8536	1852421.3689
8633	19+78.00	PT	535239.0370	1852602.5155
8620	20+00.00	POE	535239.3570	1852624.5132

ALIGNMENT NAME: HWY. 77 - SITE 5

POINT	STATION	TYPE	NORTHING	EASTING
8640	500+00.00	POB	562219.2249	1852298.1629
8641	506+89.52	PC	562908.7239	1852292.1824
8642	510+76.64	PT	563249.3160	1852448.5871
8643	512+00.00	POE	563328.8971	1852542.8503

ALIGNMENT NAME: FARMER LN

POINT	STATION	TYPE	NORTHING	EASTING
8660	10+00.00	POB	562799.2031	1852293.1324
8661	10+60.64	PC	562799.7290	1852353.7665
8662	11+40.19	PRC	562784.8650	1852431.3935
8663	12+21.30	PT	562770.0204	1852510.5681
8664	13+29.99	POE	562771.7998	1852619.2490

ALIGNMENT NAME: HWY. 181 - SITE 1

POINT	STATION	TYPE	NORTHING	EASTING
8670	100+00.00	POB	491528.1413	1877240.4624
8671	101+00.00	PI	491625.5830	1877217.9874
8672	102+00.00	PI	491723.1955	1877196.2666
8673	103+00.00	PI	491820.7921	1877174.4744
8674	104+00.00	PI	491918.0196	1877151.0901
8675	105+00.00	POE	492015.3687	1877128.2176

ALIGNMENT NAME: HWY. 181 - SITE 3

POINT	STATION	TYPE	NORTHING	EASTING
8680	300+00.00	POB	504421.9694	1884493.3326
8681	301+00.00	PI	504521.9015	1884489.6472
8682	302+00.00	PI	504621.8225	1884485.6736
8683	311+00.00	PI	505521.1983	1884452.1601
8684	312+00.00	PI	505621.1305	1884448.4791
8685	313+00.00	POE	505721.0751	1884445.1449

STATE OF ARKANSAS
LICENSED PROFESSIONAL ENGINEER
No.13436
SHAUN A. ROBERSON
DIGITALLY SIGNED 1-5-2022

SURVEY CONTROL DETAILS

CGervasini 1/5/2022 11:58:48 PM
WORKSPACE: AHTD
L:\20T\170T642 - ARDOT Job 100955\Drawings\r100955_SC_01.dgn
REVISED DATE:

DATE REVISED	DATE FILMED	DATE REVISED	DATE FILMED	FED.RD. DIST.NO.	STATE	FED.AID PROJ.NO.	SHEET NO.	TOTAL SHEETS
				6	ARK.			
				JOB NO.		100955	85	356
				(2)	SURVEY CONTROL DETAILS			

0 100 200

1" = 100'

ALL BEARINGS ARE GRID
BASED ON GPS
ALL DISTANCES ARE GRID

N

STATE OF ARKANSAS
LICENSED PROFESSIONAL ENGINEER
No.13436
SHAUN A. ROBERSON

DIGITALLY SIGNED 8-13-2021

STA. 102+00.00
BEGIN HWY. 77-SITE 1
L.M. 10.50

POB 100+00.00

100+00
8600
PN:32
PD:STD ARDOT CAP STAMPED PN:32

N 00°40'18" E
864.65'

105+00

SURVEY BASELINE

C.L. HWY. 77

PN:33
PD:STD ARDOT CAP STAMPED PN:33

N 03°25'04" W
872.70'

N 01°20'04" W
1500.00'

110+00
8650

STA. 110+10.00 C.L. HWY. 77 =
STA. 10+00.00 C.L. HWY. 77 DRIVE 110+10.00
∢ 90°00' 00"

PC 10+55.98
8651

N 88°39'56" E
55.98'

C.L. HWY. 77 DRIVE 110+10

N 88°39'56" E
98.26'

POE 12+42.92
PT 12+22.53

8652
8653

S 14°59'41" E
98.26'

PI 11+54.24

S 14°59'41" E
20.39'

C.L. HWY. 77 DRIVE 110+10
PI = 11+54.24
Δ = 76°20'23" RT.
D = 45°50'12"
T = 98.26'
L = 166.55'
PC = 10+55.98
PT = 12+22.53
e = NO SUPER

STA. 113+00.00
END HWY. 77-SITE 1
L.M. 10.33

POE 115+00.00

115+00
8601
PN:34
PD:STD ARDOT CAP STAMPED PN:34

SURVEY CONTROL DETAILS

P.Joseph 8/13/2021 5:26:39 PM
WORKSPACE: AHTD
L:\20\T\01\7642 - ARDOT Job 100955\Drawings\r100955_SC_Hwy. 77_Site 1.dgn
REVISED DATE:

DATE REVISED	DATE FILMED	DATE REVISED	DATE FILMED	FED.RD. DIST.NO.	STATE	FED.AID PROJ.NO.	SHEET NO.	TOTAL SHEETS
				6	ARK.			
				JOB NO.		100955	86	356

(2) SURVEY CONTROL DETAILS

STATE OF ARKANSAS
LICENSED PROFESSIONAL ENGINEER
No.13436
SHAUN A. ROBERSON
DIGITALLY SIGNED 8-13-2021

0 100 200
1" = 100'

ALL BEARINGS ARE GRID
BASED ON GPS
ALL DISTANCES ARE GRID

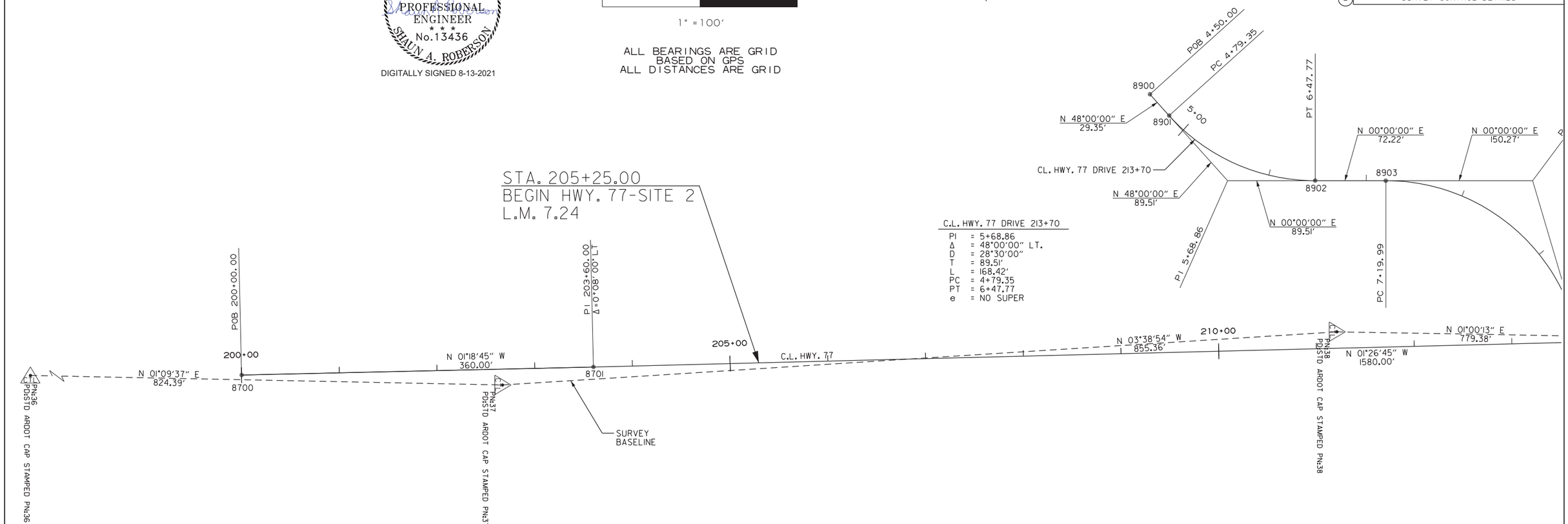

C.L. HWY. 77 DRIVE 213+70
PI = 5+68.86
Δ = 48°00'00" LT.
D = 28°30'00"
T = 89.51'
L = 168.42'
PC = 4+79.35
PT = 6+47.77
e = NO SUPER

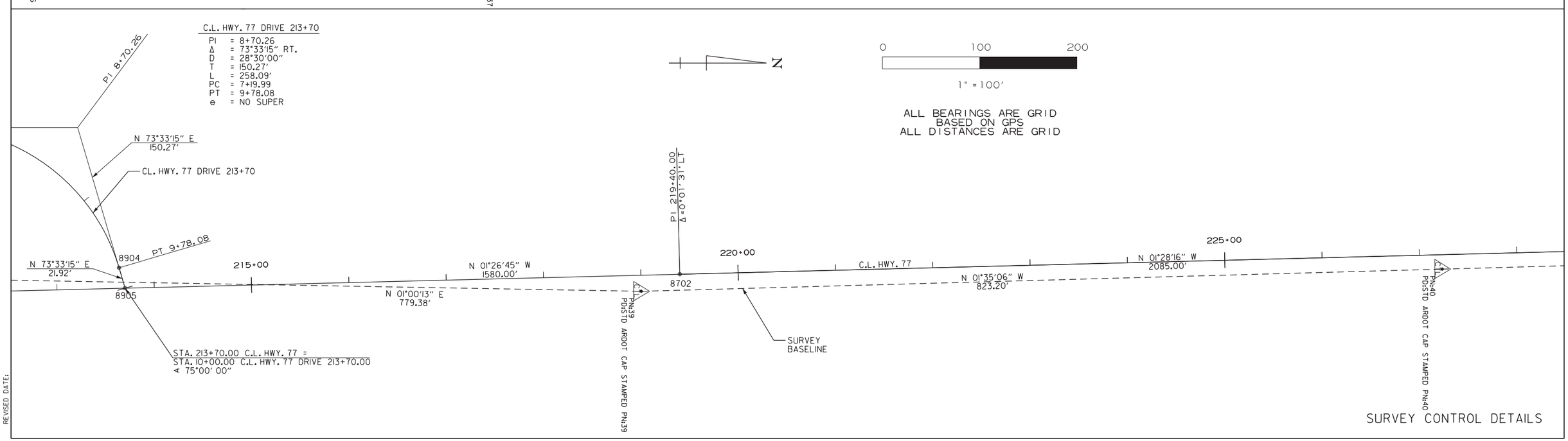

C.L. HWY. 77 DRIVE 213+70
PI = 8+70.26
Δ = 73°33'15" RT.
D = 28°30'00"
T = 150.27'
L = 258.09'
PC = 7+19.99
PT = 9+78.08
e = NO SUPER

ALL BEARINGS ARE GRID
BASED ON GPS
ALL DISTANCES ARE GRID

SURVEY CONTROL DETAILS

PJoseph 8/13/2021 5:26:39 PM
WORKSPACE: AHTD
L:\2017\170176\42 - ARDOT Job 100955\Drawings\r100955_SC_Hwy. 77_Site 2_01.dgn
REVISED DATE:

DATE REVISED	DATE FILMED	DATE REVISED	DATE FILMED	FED.RD. DIST.NO.	STATE	FED.AID PROJ.NO.	SHEET NO.	TOTAL SHEETS
01-05-2022				6	ARK.			
				JOB NO.		100955	87	356
				(2)	SURVEY CONTROL DETAILS			

0 100 200

1" = 100'

ALL BEARINGS ARE GRID
BASED ON GPS
ALL DISTANCES ARE GRID

N

STATE OF ARKANSAS
LICENSED PROFESSIONAL ENGINEER
No. 13436
SHAUN A. ROBERSON
DIGITALLY SIGNED 1-5-2022

C.L. C.R. 524
PI = 5+33.48
Δ = 60°42'42" LT.
D = 25°00'00"
T = 134.22'
L = 242.85'
PC = 3+99.26
PT = 6+42.10
e = NO SUPER

C.L. HWY. 158 CONNECTOR
PI = 12+49.30
Δ = 6°26'02" LT.
D = 3°00'00"
T = 107.34'
L = 214.46'
PC = 11+41.96
PT = 13+56.42
e = NO SUPER

POB 3+00.00
8610
N 58°20'00" E
99.26'
PC 3+99.26
8611
PT 6+42.10
5.00
N 58°20'00" E
134.22'
PI 5+33.48
8612
C.L. C.R. 524
N 02°22'42" W
134.22'
N 02°22'42" W
357.90'
8800 POB 10+00.00
N 89°57'46" E
141.96'
8801 PC 11+41.96
STA. 12+20.00 C.L. HWY. 158 CONNECTOR =
STA. 10+00.00 C.L. C.R. 524
Δ 90°00'00"
N 89°57'46" E
107.34'
10.00
8613
PI 12+49.30
CL. HWY. 158 CONNECTOR
N 83°31'44" E
107.34'
8802 PT 13+56.42
STA. 235+25.00
END HWY. 77-SITE 2
L.M. 6.67
N 83°31'44" E
143.58'
230+00
N 01°33'48" W
670.55'
N 01°28'16" W
2085.00'
C.L. HWY. 77
8803
PN:41
PD:STD ARDOT CAP STAMPED PN:41
235+00
SURVEY
BASELINE
STA. 234+15.00 C.L. HWY. 77 =
STA. 15+00.00 C.L. HWY. 158 CONNECTOR
Δ 85°00'00"
N 01°21'41" W
888.40'
PI 240+25.00
Δ=0°02'29" RT
240+00
8703
N 01°25'50" W
1730.00'
PN:43
PD:STD ARDOT CAP STAMPED PN:43

SURVEY CONTROL DETAILS

CGGer-vasini 1/5/2022 1:58:50 PM
WORKSPACE: AHTD
L:\20I7\I70I7642 - ARDOT Job I00955\Drawings\r100955_SC_Hwy.77_Site 2.02.dgn
REVISED DATE:

DATE REVISED	DATE FILMED	DATE REVISED	DATE FILMED	FED.RD. DIST.NO.	STATE	FED.AID PROJ.NO.	SHEET NO.	TOTAL SHEETS
				6	ARK.			
				JOB NO.		100955	88	356
				(2)	SURVEY CONTROL DETAILS			

0 100 200

1" = 100'

ALL BEARINGS ARE GRID
BASED ON GPS
ALL DISTANCES ARE GRID

N

STATE OF ARKANSAS
LICENSED PROFESSIONAL ENGINEER
No.13436
SHAUN A. ROBERSON

DIGITALLY SIGNED 8-13-2021

STA. 245+00.00
BEGIN HWY. 77-SITE 3
L.M. 6.49

STA. 256+00.00
END HWY. 77-SITE 3
L.M. 6.28

245+00

250+00

255+00

C.L. HWY. 77

N 01°25'50" W
1730.00'

N 01°21'23" W
616.01'

N 03°57'24" W
744.51'

N 01°04'49" W
765.19'

PI 257+55.00
Δ=0°21'41" RT

8704

PN:43
PD:STD ARDOT CAP STAMPED PN:43

PN:44
PD:STD ARDOT CAP STAMPED PN:44

PN:45
PD:STD ARDOT CAP STAMPED PN:45

SURVEY BASELINE

SURVEY CONTROL DETAILS

PJoseph 8/13/2021 5:26:40 PM
WORKSPACE: AHTD
L:\2017\170176\42 - ARDOT Job 100955\Drawings\r100955_SC_Hwy. 77_Site 3.dgn
REVISED DATE:

DATE REVISED	DATE FILMED	DATE REVISED	DATE FILMED	FED.RD. DIST.NO.	STATE	FED.AID PROJ.NO.	SHEET NO.	TOTAL SHEETS
				6	ARK.			
				JOB NO.		100955	89	356
				(2)	SURVEY CONTROL DETAILS			

0 100 200

1" = 100'

ALL BEARINGS ARE GRID
BASED ON GPS
ALL DISTANCES ARE GRID

N

STATE OF ARKANSAS
LICENSED PROFESSIONAL ENGINEER
No.13436
SHAUN A. ROBERSON

DIGITALLY SIGNED 8-13-2021

STA. 267+00.00
BEGIN HWY. 77-SITE 4
L.M. 6.08

SURVEY BASELINE

PI 263+05.00
Δ=0°14'08" RT

260+00

N 01°04'09" W
550.00'

N 01°04'49" W
765.19'

8705

265+00

PN46
PD:STD ARDOT CAP STAMPED PN46

N 00°44'26" W
692.02'

270+00

N 00°50'01" W
1540.00'

PN47
PD:STD ARDOT CAP STAMPED PN47

SURVEY CONTROL DETAILS

PJoseph 8/13/2021 5:26:41PM
WORKSPACE: AHTD
L:\2017\701642 - ARDOT Job 100955\Drawings\r100955_SC_Hwy. 77_Site 4.01.dgn
REVISED DATE:

DATE REVISED	DATE FILMED	DATE REVISED	DATE FILMED	FED.RD. DIST.NO.	STATE	FED.AID PROJ.NO.	SHEET NO.	TOTAL SHEETS
				6	ARK.			
				JOB NO.		100955	90	356
				(2)	SURVEY CONTROL DETAILS			

0 100 200

1" = 100'

ALL BEARINGS ARE GRID
BASED ON GPS
ALL DISTANCES ARE GRID

N

STATE OF ARKANSAS
LICENSED PROFESSIONAL ENGINEER
No. 13436
SHAUN A. ROBERSON
DIGITALLY SIGNED 8-13-2021

C.L. C.R. 538 WEST
PI = 16+76.94
Δ = 42°47'30" LT.
D = 28°30'00"
T = 78.76'
L = 150.14'
PC = 15+98.18
PRC = 17+48.32
e = NO SUPER

C.L. C.R. 538 WEST
PI = 18+77.53
Δ = 65°27'29" RT.
D = 28°30'00"
T = 129.21'
L = 229.68'
PRC = 17+48.32
PT = 19+78.00
e = NO SUPER

C.L. C.R. 538 EAST
PI = 22+58.70
Δ = 20°49'59" LT.
D = 20°00'00"
T = 52.66'
L = 104.16'
PC = 22+06.04
PT = 23+10.20
e = NO SUPER

POB 15+00.00
8630
N 66°30'00" E
98.18'
PC 15+98.18
8631
N 66°30'00" E
78.76'
PRC 17+48.32
C.L. C.R. 538 WEST
N 66°30'00" E
129.21'
PI 16+76.94
N 23°42'30" E
78.76'
8632
PI 18+77.53
N 89°09'59" E
129.21'
PT 19+78.00
8633
N 89°09'59" E
22.00'
275+00
N 00°44'45" W
866.03'
8620
N 00°50'01" W
1540.00'
C.L. HWY. 77
PI 278+45.00
Δ=0°14'16" RT
8706
280+00
PN:48
PD:STD ARDOT CAP STAMPED PN:48
STA. 281+75.00
END HWY. 77-SITE 4
L.M. 5.80
N 00°35'45" W
655.00'
N 00°43'58" W
773.15'
POE 285+00.00
8707
285+00
SURVEY BASELINE
PN:49
PD:STD ARDOT CAP STAMPED PN:49
STA. 275+45.00 C.L. HWY. 77 =
STA. 20+00.00 C.L. C.R. 538 WEST =
STA. 20+00.00 C.L. C.R. 538 EAST
∢ 90°00' 00"
N 89°09'59" E
206.04'
C.L. C.R. 538 EAST
8621
PC 22+06.04
N 89°09'59" E
52.66'
PI 22+58.70
N 68°20'00" E
52.66'
PT 23+10.20
8622
N 68°20'00" E
89.80'
POB 24+00.00
8623

P.Joseph 8/13/2021 5:26:41 PM
WORKSPACE: AHTD
L:\2017\17017642 - ARDOT Job 100955\Drawings\r100955_SC_Hwy.77_Site 4_02.dgn
REVISED DATE:

SURVEY CONTROL DETAILS

DATE REVISED	DATE FILMED	DATE REVISED	DATE FILMED	FED.RD. DIST.NO.	STATE	FED.AID PROJ.NO.	SHEET NO.	TOTAL SHEETS
				6	ARK.			
				JOB NO.		100955	91	356
				(2)	SURVEY CONTROL DETAILS			

0 100 200

1" = 100'

N

ALL BEARINGS ARE GRID
BASED ON GPS
ALL DISTANCES ARE GRID

STATE OF ARKANSAS
LICENSED PROFESSIONAL ENGINEER
No.13436
SHAUN A. ROBERSON
DIGITALLY SIGNED 8-13-2021

STA. 502+00.00
BEGIN HWY. 77-SITE 5
L.M. 0.70

POB 500+00.00

500+00

8640

N 02°05'04" E
654.09'

PN:51
PD:STD ARDOT CAP STAMPED:PN:51

CL. HWY. 77

N 00°29'49" W
689.52'

505+00

STA. 505+80.00 C.L. HWY. 77 =
STA. 10+00.00 C.L. FARMER LN.
∢ 90°00'00"

PN:52
PD:STD ARDOT CAP STAMPED:PN:52

SURVEY BASELINE

8660

N 89°30'11" E
60.64'

PC 506+89.52

8641

STA. 507+00.00
END HWY. 77-SITE 5
L.M. 0.68

PI 508+96.56

N 00°29'49" W
207.04'

C.L. HWY. 77 SITE 5

PI = 508+96.56
Δ = 50°19'28" RT.
D = 13°00'00"
T = 207.04'
L = 387.12'
PC = 506+89.52
PT = 510+76.64
e = 0.100 FT./FT.
LS = 300'

N 49°49'39" E
207.04'

510+00

PC 10+60.64

8661

N 89°30'11" E
40.30'

PI 11+00.94

PRC 11+40.19

S 67°49'25" E
41.11'

S 67°49'25" E
40.30'

8662

PI 11+81.30

CL. FARMER LN

N 89°03'43" E
41.11'

PT 12+21.30

8663

N 89°03'43" E
108.70'

POE 13+29.99

8664

C.L. FARMER LN

PI = 11+00.94
Δ = 22°40'24" RT.
D = 28°30'00"
T = 40.30'
L = 79.55'
PC = 10+60.64
PRC = 11+40.19
e = NO SUPER

C.L. FARMER LN

PI = 11+81.30
Δ = 23°06'52" LT.
D = 28°30'00"
T = 41.11'
L = 81.11'
PRC = 11+40.19
PT = 12+21.30
e = NO SUPER

N 20°26'59" E
636.41'

8642

N 49°49'39" E
123.36'

PT 510+76.64

POE 512+00.00

8643

PN:53
PD:STD ARDOT CAP STAMPED:PN:53

SURVEY CONTROL DETAILS

PJoseph 8/13/2021 5:26:42 PM
WORKSPACE: AHTD
L:\2017\17017642 - ARDOT Job 100955\Drawings\r100955_SC_Hwy. 77_Site 5.dgn
REVISED DATE:

DATE REVISED	DATE FILMED	DATE REVISED	DATE FILMED	FED.RD. DIST.NO.	STATE	FED.AID PROJ.NO.	SHEET NO.	TOTAL SHEETS
				6	ARK.			
				JOB NO.		100955	92	356
				(2)	SURVEY CONTROL DETAILS			

0 100 200

1" = 100'

N

ALL BEARINGS ARE GRID
BASED ON GPS
ALL DISTANCES ARE GRID

STATE OF ARKANSAS
LICENSED PROFESSIONAL ENGINEER
No.13436
SHAUN A. ROBERSON

DIGITALLY SIGNED 8-13-2021

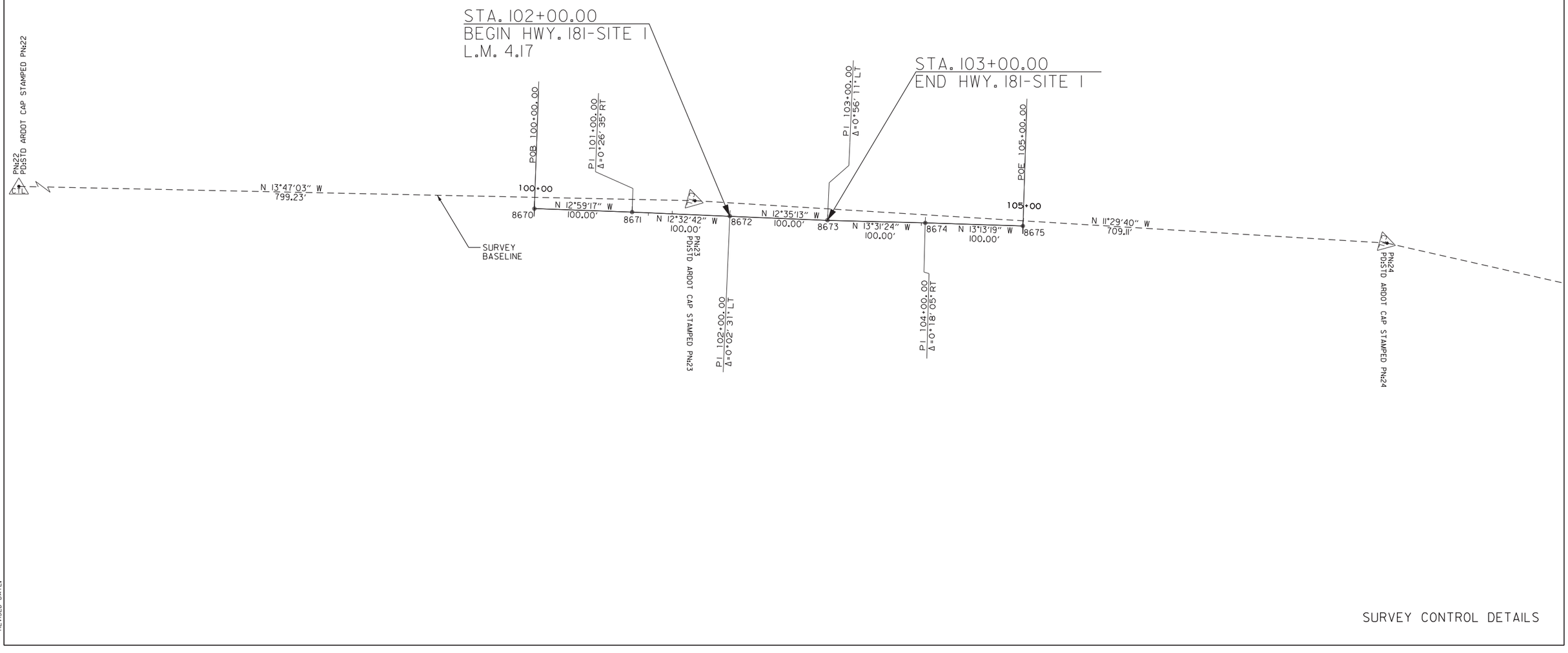

SURVEY CONTROL DETAILS

PJoseph 8/13/2021 5:26:42 PM
WORKSPACE: AHTD
L:\2017\170176\42 - ARDOT Job 100955\Drawings\r100955_SC_Hwy. 181_Site 1.dgn
REVISED DATE:

DATE REVISED	DATE FILMED	DATE REVISED	DATE FILMED	FED.RD. DIST.NO.	STATE	FED.AID PROJ.NO.	SHEET NO.	TOTAL SHEETS
				6	ARK.			
				JOB NO.		100955	93	356
				(2)	SURVEY CONTROL DETAILS			

0 100 200

1" = 100'

ALL BEARINGS ARE GRID
BASED ON GPS
ALL DISTANCES ARE GRID

N

STATE OF ARKANSAS
LICENSED PROFESSIONAL ENGINEER
No.13436
SHAUN A. ROBERSON

DIGITALLY SIGNED 8-13-2021

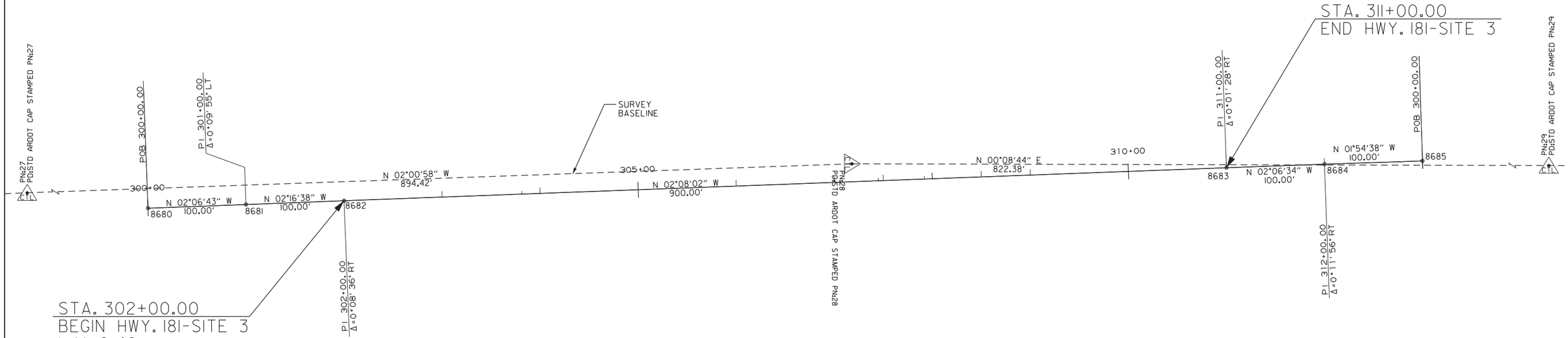

SURVEY CONTROL DETAILS

PJoseph 8/13/2021 5:26:43 PM
WORKSPACE: AHTD
L:\2017\17017642 - ARDOT Job 100955\Drawings\r100955_SC_Hwy.181_Site 3.dgn
REVISED DATE:

DATE REVISED	DATE FILMED	DATE REVISED	DATE FILMED	FED.RD. DIST.NO.	STATE	FED.AID PROJ.NO.	SHEET NO.	TOTAL SHEETS
				6	ARK.			
				JOB NO.		100955	94	356
				(2)	SURVEY CONTROL DETAILS			

SURVEY CONTROL COORDINATES

Project Name: s100996
Date: 2/21/2019
Coordinate System: ARKANSAS STATE PLANE – NORTH ZONE BASED ON STATIC GPS OF PTS 3 AND 15
PROJECTED TO GROUND. VT BASED ON STATIC GPS CONSTRAINING NGS BM K 214
Units: U.S. SURVEY FOOT

Point Name	Northing	Easting	Elev	Feature	Description
1	502122.4631	1860485.8996	227.81	CTL	STD ARDOT CAP STAMPED PN:1
2	502133.4854	1861347.9608	227.59	CTL	STD ARDOT CAP STAMPED PN:2
3	502150.5086	1862410.0447	228.80	CTL	STD ARDOT CAP STAMPED PN:3
4	502116.0134	1863257.8130	227.21	CTL	STD ARDOT CAP STAMPED PN:4
5	502127.0639	1864033.9113	228.16	CTL	STD ARDOT CAP STAMPED PN:5
6	502217.0656	1867988.9039	227.47	CTL	STD ARDOT CAP STAMPED PN:6
7	502189.2885	1868928.7914	227.50	CTL	STD ARDOT CAP STAMPED PN:7
8	502187.9947	1869673.7086	228.98	CTL	STD ARDOT CAP STAMPED PN:8
9	502222.0189	1870630.4853	227.01	CTL	STD ARDOT CAP STAMPED PN:9
10	502238.8198	1871408.9428	227.48	CTL	STD ARDOT CAP STAMPED PN:10
11	500797.4798	1876891.3043	228.41	CTL	STD ARDOT CAP STAMPED PN:11
12	501565.9857	1876865.0345	230.81	CTL	STD ARDOT CAP STAMPED PN:12
13	502340.0599	1876012.8919	229.39	CTL	STD ARDOT CAP STAMPED PN:13
14	502350.0072	1876777.8185	230.52	CTL	STD ARDOT CAP STAMPED PN:14
15	502412.6882	1877577.3844	231.61	CTL	STD ARDOT CAP STAMPED PN:15
16	502430.2893	1878442.6578	230.54	CTL	STD ARDOT CAP STAMPED PN:16
17	502415.3969	1879243.8138	229.82	CTL	STD ARDOT CAP STAMPED PN:17
900	502071.5398	1860428.1576	224.49	TBM	SQUARE CUT ON S END CU
901	502102.5180	1862116.8356	230.05	TBM	SQUARE CUT ON SW END BR
902	502107.6165	1862930.2875	223.82	TBM	SQUARE CUT ON S END CU
903	502235.9130	1868949.2278	225.13	TBM	SQUARE CUT CNTR E HW
904	502246.8132	1869923.1207	230.58	TBM	SQUARE CUT ON NE CRNR BR
905	502270.0213	1870930.9909	226.58	TBM	STD ARDOT CAP 24" REBAR
906	500825.1197	1876950.8224	229.23	TBM	X CUT IN BOLT OF FH
907	502328.8903	1876941.1367	228.68	TBM	X CUT IN BOLT OF FH
908	502372.3177	1877604.6283	230.66	TBM	SQUARE IN CONC
909	502469.0657	1879523.6680	227.91	TBM	SQUARE CUT CNTR E HW
999	503241.9899	1918084.3163	266.24	BM	BRASS DISK ON ROD K 214

*Note – Rebar and Cap – Standard – 5/8" Rebar with 2" Aluminum Cap stamped
*(standard markings common to all caps), or as indicated
(other markings indicated in the point description of the individual point).
ALL DISTANCES ARE GROUND.
USE CAF = 1.0 FOR STAKEOUT FOR THIS PROJECT.
A PROJECT CAF OF 0.999931323 HAS BEEN USED TO COMPUTE THE ABOVE GROUND COORDINATES.
THIS CAF IS INTENDED FOR USE WITHIN THE PROJECT LIMITS.
GRID DISTANCE = GROUND DISTANCE X CAF.
GRID COORDINATES ARE STORED UNDER FILE NAME s100996gi.CTL
HORIZONTAL DATUM: NAD 83 (2011)
VERTICAL DATUM: NAVD 88 POSITIONAL ACCURACY THIRD ORDER, UNLESS SPECIFIED OTHERWISE
AT A SPECIFIC POINT.

REFERENCE POINTS (1500 SERIES) ARE TO BE USED TO ESTABLISH CONTROL
IF THE PRIMARY CONTROL POINTS LISTED ABOVE HAVE BEEN DESTROYED.
REFERENCE POINTS ARE NOT TO BE USED FOR VERTICAL CONTROL

BASIS OF BEARING:
ARKANSAS STATE PLANE GRID BEARINGS – 0301–NORTH ZONE
DETERMINED FROM GPS CONTROL POINTS: STATIC GPS OF PTS 3 AND 15
CONVERGENCE ANGLE: 01–05–32 RIGHT AT PN:8 LT:N 35–41–54 LG:W 090–07–23
GRID AZIMUTH = ASTRONOMICAL AZIMUTH – CONVERGENCE ANGLE.

STATE OF ARKANSAS
LICENSED PROFESSIONAL ENGINEER
No.13436
SHAUN A. ROBERSON

DIGITALLY SIGNED 8-13-2021

ALIGNMENT NAME: HWY. 140 - SITE 1

POINT	STATION	TYPE	NORTHING	EASTING
8200	100+00.00	POB	502112.8382	1861292.2341
8201	119+00.00	POE	502135.4426	1863192.0997

ALIGNMENT NAME: HWY. 140 - SITE 2

POINT	STATION	TYPE	NORTHING	EASTING
8300	200+00.00	POB	502207.8948	1868891.3607
8301	218+00.00	POE	502243.4103	1870691.0103

ALIGNMENT NAME: HWY. 140 - SITE 3

POINT	STATION	TYPE	NORTHING	EASTING
8400	300+00.00	POB	502385.6478	1877167.4652
8401	309+00.00	POE	502406.2506	1878067.2293

ALIGNMENT NAME: HWY. 181 - SITE 2

POINT	STATION	TYPE	NORTHING	EASTING
8500	200+00.00	POB	501135.0527	1876896.3008
8501	201+00.00	PI	501234.9763	1876892.3912
8502	202+00.00	PI	501334.9352	1876889.5282
8503	203+50.00	PI	501484.8152	1876883.5286
8504	204+50.00	PI	501584.7426	1876879.7197
8505	205+50.00	POE	501684.6980	1876876.7321

PJoseph 8/13/2021 5:26:43 PM
WORKSPACE: AHTD
L:\201\1701\7642 - ARDOT Job 100955\Drawings\r100955-100996_SC_01.dgn
REVISED DATE:

DATE REVISED	DATE FILMED	DATE REVISED	DATE FILMED	FED.RD. DIST.NO.	STATE	FED.AID PROJ.NO.	SHEET NO.	TOTAL SHEETS
				6	ARK.			
				JOB NO.		100955	95	356
				(2)	SURVEY CONTROL DETAILS			

0 100 200

1" = 100'

ALL BEARINGS ARE GRID
BASED ON GPS
ALL DISTANCES ARE GROUND

N

STATE OF ARKANSAS
LICENSED PROFESSIONAL ENGINEER
No.13436
SHAUN A. ROBERSON
DIGITALLY SIGNED 8-13-2021

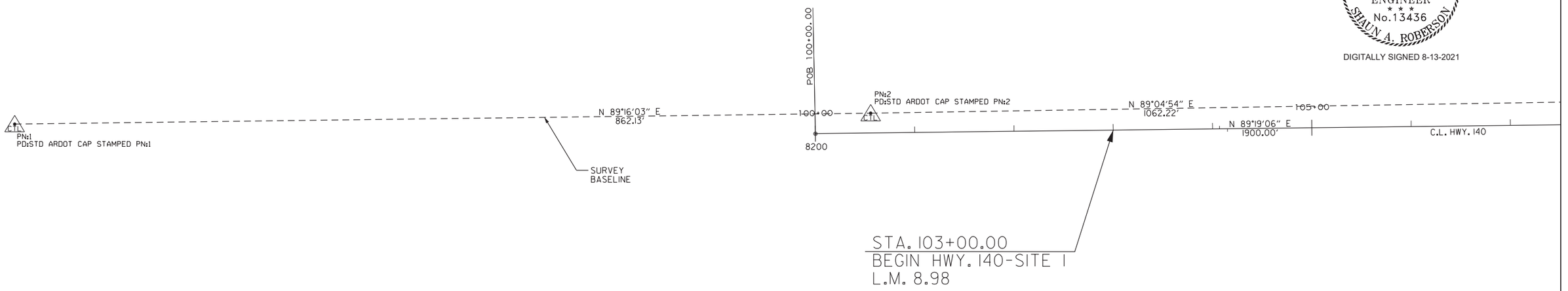

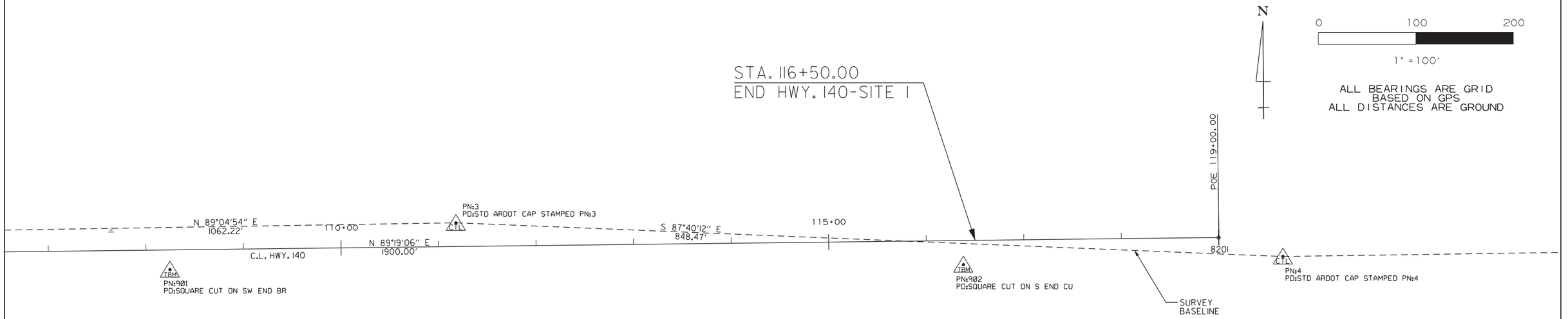

N

0 100 200

1" = 100'

ALL BEARINGS ARE GRID
BASED ON GPS
ALL DISTANCES ARE GROUND

SURVEY CONTROL DETAILS

PJoseph 8/13/2021 5:26:45 PM
WORKSPACE: AHTD
L:\2017\170176\42 - ARDOT Job 100955\Drawings\r100955-100996_SC_Hwy.140_Site 1.dgn
REVISED DATE:

DATE REVISED	DATE FILMED	DATE REVISED	DATE FILMED	FED.RD. DIST.NO.	STATE	FED.AID PROJ.NO.	SHEET NO.	TOTAL SHEETS
				6	ARK.			
				JOB NO.		100955	96	356
				(2)	SURVEY CONTROL DETAILS			

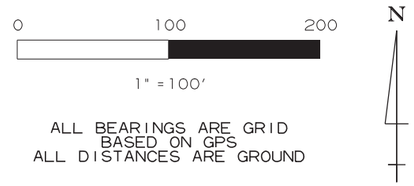



DIGITALLY SIGNED 8-13-2021

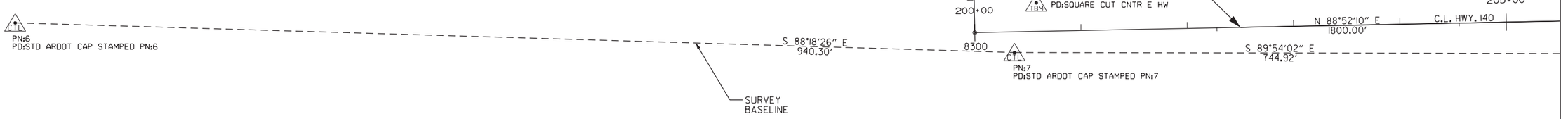

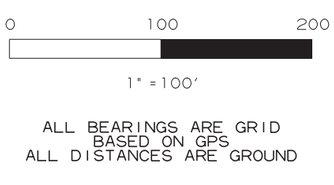

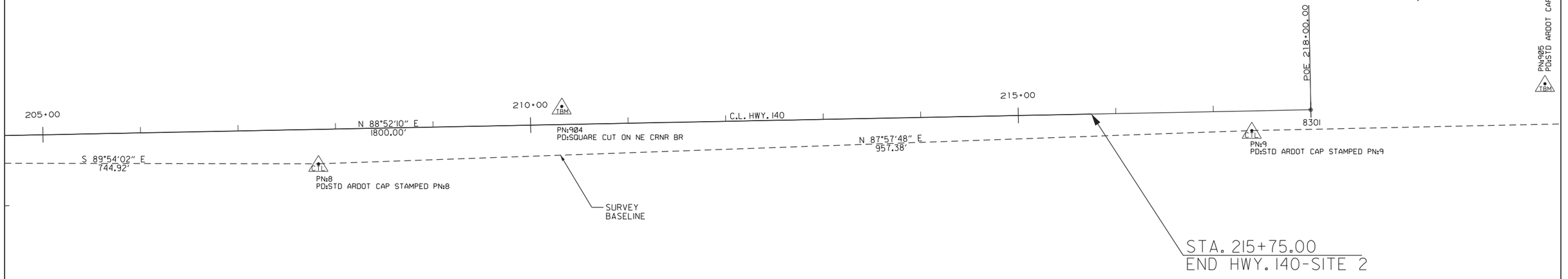

SURVEY CONTROL DETAILS

PJoseph 8/13/2021 5:26:45 PM
WORKSPACE: AHTD
L:\2017\17017642 - ARDOT Job 100955\Drawings\r100955-100996_SC_Hwy.140_Site 2.dgn
REVISED DATE:

DATE REVISED	DATE FILMED	DATE REVISED	DATE FILMED	FED.RD. DIST.NO.	STATE	FED.AID PROJ.NO.	SHEET NO.	TOTAL SHEETS
				6	ARK.			
				JOB NO.		100955	97	356
				(2)	SURVEY CONTROL DETAILS			

0 100 200

1" = 100'

ALL BEARINGS ARE GRID
BASED ON GPS
ALL DISTANCES ARE GROUND

N

STATE OF ARKANSAS
LICENSED PROFESSIONAL ENGINEER
No.13436
SHAUN A. ROBERSON

DIGITALLY SIGNED 8-13-2021

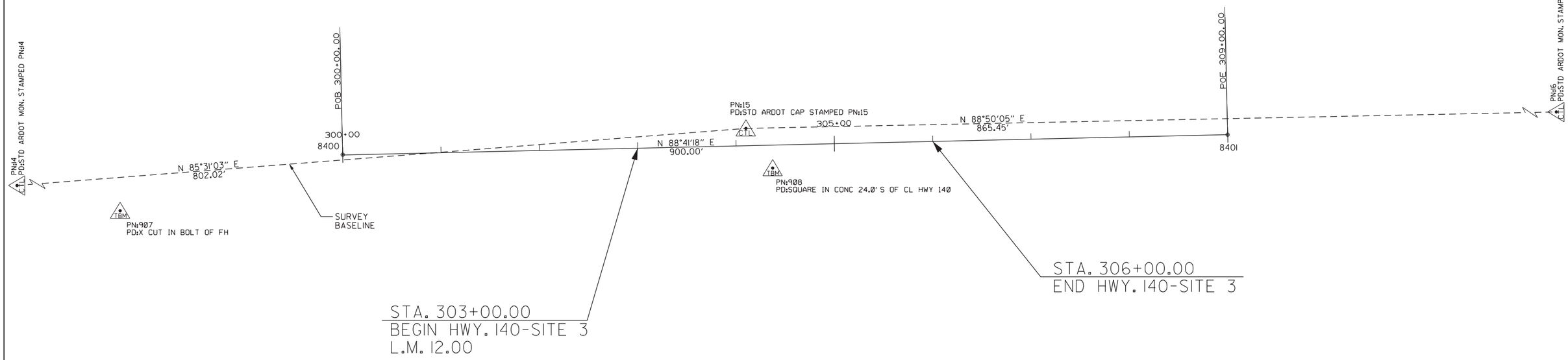

PJoseph 8/13/2021 5:26:46 PM
WORKSPACE: AHTD
L:\2017\17017642 - ARDOT Job 100955\Drawings\r100955-100996_SC_Hwy.140_Site 3.dgn
REVISED DATE:

SURVEY CONTROL DETAILS

DATE REVISED	DATE FILMED	DATE REVISED	DATE FILMED	FED.RD. DIST.NO.	STATE	FED.AID PROJ.NO.	SHEET NO.	TOTAL SHEETS
				6	ARK.			
				JOB NO.		100955	98	356
				(2)	SURVEY CONTROL DETAILS			

0 100 200

1" = 100'

ALL BEARINGS ARE GRID
BASED ON GPS
ALL DISTANCES ARE GROUND

N

PN:13
PD:STD ARDOT CAP STAMPED PN:13

N 47°44'54" W
151.23'

STATE OF ARKANSAS
LICENSED PROFESSIONAL ENGINEER
No.13436
SHAUN A. ROBERSON
DIGITALLY SIGNED 8-13-2021

POB 200+00.00

PI 201+00.00
Δ=0°36'00" LT.

N 1°57'28" W
768.95'

200+00

N 2°14'26" W
100.00'

N 1°38'26" W
100.00'

8500

8501

8502

N 2°17'32" W
150.00'

8503

N 2°10'58" W
100.00'

N 1°42'43" W
100.00'

205+00

8504

POE 205+50.00

8505

PN:12
PD:STD ARDOT CAP STAMPED PN:12

PN:11
PD:STD ARDOT CAP STAMPED PN:11

PBM
PN:9896
PD:X CUT IN BOLT OF FH

SURVEY
BASELINE

STA. 202+00.00
BEGIN HWY. 181-SITE 2
L.M. 5.88

PI 202+00.00
Δ=0°39'06" LT.

PI 203+50.00
Δ=0°06'34" RT.

PI 204+50.00
Δ=0°28'16" RT.

STA. 203+50.00
END HWY. 181-SITE 2

SURVEY CONTROL DETAILS

PJoseph 8/13/2021 5:26:46 PM
WORKSPACE: AHTD
L:\2017\17017642 - ARDOT Job 100955\Drawings\r100955-100996_SC_Hwy.181_Site 2.dgn
REVISED DATE:

DATE REVISED	DATE FILMED	DATE REVISED	DATE FILMED	FED.RD. DIST.NO.	STATE	FED.AID PROJ.NO.	SHEET NO.	TOTAL SHEETS
				6	ARK.			
				JOB NO.		100955	99	356
				(2)	SURVEY CONTROL DETAILS			

SURVEY CONTROL COORDINATES

Project Name: s100763
Date: 2/9/2018
Coordinate System: ARKANSAS STATE PLANE - NORTH ZONE BASED ON GPS CONTROL,
THIS JOB IS IN GRID FEET!!!!!!!
Units: U.S. SURVEY FOOT

Point Name	Northing	Easting	Elev	Feature	Description
1	523413.0141	1874279.9250	230.230	CTL	STD ARDOT MON. STAMPED PN: 1
2	523422.5118	1875145.9490	229.896	CTL	STD ARDOT MON. STAMPED PN: 2
3	523428.9587	1876105.6600	228.820	CTL	STD ARDOT MON. STAMPED PN: 3
4	523455.7781	1876745.0020	229.417	CTL	STD ARDOT MON. STAMPED PN: 4
5	523494.6615	1877607.4100	228.780	CTL	STD ARDOT MON. STAMPED PN: 5
6	523527.3832	1878333.4620	229.269	CTL	STD ARDOT MON. STAMPED PN: 6
900	523480.6141	1874721.5380	230.236	TBM	8 SPIKE IN PP 49.5' N OF CL HWY 158
901	523468.7776	1876307.8730	233.022	TBM	SQUARE CUT NW CORN BR 158 VICTORIA
902	523478.3246	1876539.3950	232.963	TBM	SQUARE CUT ON NE CORN BR 158 VICTORIA
903	523537.7418	1878790.5060	227.558	TBM	SQUARE CUT IN S END CU 158 VICTORIA
998	522918.2950	1927116.5190	269.383	BM	NGS BM F 214 LUXORA
999	566655.0630	1904869.9420	238.705	BM	USACOE BM 312 DELL

*Note - Rebar and Cap - Standard - 5/8" Rebar with 2" Aluminum Cap stamped
*(standard markings common to all caps), or as indicated
(other markings indicated in the point description of the individual point).
USE CAF = 1.0 FOR STAKEOUT FOR THIS PROJECT
A PROJECT CAF OF (ALL COORDS ARE GRID) HAS BEEN USED TO COMPUTE THE ABOVE GROUND COORDINATES.
THIS CAF IS INTENDED FOR USE WITHIN THE PROJECT LIMITS.
GRID DISTANCE = GROUND DISTANCE X CAF.
GRID COORDINATES ARE STORED UNDER FILE NAME s100763gi.ctl
HORIZONTAL DATUM: NAD 83 (1997)
VERTICAL DATUM: NAVD 88 POSITIONAL ACCURACY THIRD ORDER, UNLESS SPECIFIED OTHERWISE
AT A SPECIFIC POINT.

REFERENCE POINTS (1500 SERIES) ARE TO BE USED TO ESTABLISH CONTROL
IF THE PRIMARY CONTROL POINTS LISTED ABOVE HAVE BEEN DESTROYED.
REFERENCE POINTS ARE NOT TO BE USED FOR VERTICAL CONTROL

BASIS OF BEARING:
ARKANSAS STATE PLANE GRID BEARINGS - 0301-NORTH ZONE
DETERMINED FROM GPS CONTROL POINTS: HZ BASED ON STATIC GPS POINTS 1 AND 6
CONVERGENCE ANGLE: 01-06-21 RIGHT AT LT: 35-45-23N LG: 090-05-59W
GRID AZIMUTH = ASTRONOMICAL AZIMUTH - CONVERGENCE ANGLE.

ALIGNMENT NAME: HWY. 158 - SITE 1

POINT	STATION	TYPE	NORTHING	EASTING
8000	100+00.00	POB	523441.2250	1875536.5925
8001	102+01.31	PC	523443.6259	1875737.8882
8002	107+36.91	PT	523456.2709	1876273.3243
8003	112+59.46	PC	523474.7116	1876795.5555
8004	115+32.24	PT	523485.9599	1877068.1023
8005	118+00.00	POE	523498.5933	1877335.5641

ALIGNMENT NAME: HWY. 158 DRIVE 112+35

POINT	STATION	TYPE	NORTHING	EASTING
8100	10+00.00	POB	523473.8482	1876771.1065
8101	10+41.02	PC	523432.8554	1876772.5540
8102	12+62.01	PRC	523305.0774	1876627.4918
8103	13+92.61	PT	523261.0656	1876510.7714
8104	14+00.00	POE	523255.3563	1876506.0804

STATE OF ARKANSAS
LICENSED PROFESSIONAL ENGINEER
No.13436
SHAUN A. ROBERSON

DIGITALLY SIGNED 8-13-2021

PJoseph 8/13/2021 5:26:47 PM
WORKSPACE: AHTD
L:\2017\17017642 - ARDOT Job 100955\Drawings\r100955-100763_SC_01.dgn
REVISED DATE:

DATE REVISED	DATE FILMED	DATE REVISED	DATE FILMED

FED.RD. DIST.NO.	STATE	FED.AID PROJ.NO.	SHEET NO.	TOTAL SHEETS
6	ARK.			
JOB NO.		100955	100	356

(2) SURVEY CONTROL DETAILS

0 100 200

1" = 100'

ALL BEARINGS ARE GRID
BASED ON GPS
ALL DISTANCES ARE GRID

N

C.L. HWY. 158 - SITE 1
PI = 104+69.12
Δ = 01°20'20" LT.
D = 00°15'00"
T = 267.81'
L = 535.60'
PC = 102+01.31
PT = 107+36.91
e = NO SUPER

STATE OF ARKANSAS
LICENSED PROFESSIONAL ENGINEER
No.13436
SHAUN A. ROBERSON
DIGITALLY SIGNED 8-13-2021

STA. 103+25.00
BEGIN HWY. 158-SITE 1
L.M. 10.47

POB 100+00.00

PC 102+01.31

SURVEY BASELINE

PN:1
PD:STD ARDOT MON. STAMPED PN:1158

N 89°22'18" E
866.08'

PN:2
PD:STD ARDOT MON. STAMPED PN:2 158

N 89°36'54" E
959.73'

100+00

8000

N 89°19'00" E
201.31'

8001

105+00

C.L. HWY. 158

N 89°19'00" E
267.81'

PI 104+69.12

C.L. HWY. 158 - SITE 1
PI = 113+95.86
Δ = 00°40'55" LT.
D = 00°15'00"
T = 136.40'
L = 272.78'
PC = 112+59.46
PRC = 115+32.24
e = NO SUPER

0 100 200

1" = 100'

N

ALL BEARINGS ARE GRID
BASED ON GPS
ALL DISTANCES ARE GRID

POE 118+00.00

PT 115+32.24

PC 112+59.46

PT 107+36.91

STA. 112+35.00 C.L. HWY. 158 =
STA. 10+00.00 C.L. DRIVE 112+35
Δ 90°00' 00"

N 87°17'45" E
136.40'

N 87°58'40" E
136.40'

S 02°01'20" E
41.02'

SURVEY BASELINE

105+00

110+00

115+00

CL. HWY. 158

8100

8002

8003

8004

8005

N 87°58'40" E
522.56'

N 87°17'45" E
267.76'

N 87°25'06" E
863.28'

N 87°35'53" E
639.90'

PN:3
PD:STD ARDOT MON. STAMPED PN:3 158

N 87°58'40" E
267.81'

PN:4
PD:STD ARDOT MON. STAMPED PN:4 158

PN:5
PD:STD ARDOT MON. STAMPED PN:5 158

PC 10+41.02

8101

PI 13+33.98

PRC 12+62.01

PI 113+95.86

S 02°01'20" E
152.43'

N 80°43'41" W
71.97'

S 39°24'29" W
71.97'

C.L. HWY. 158 DRIVE 112+35

8102

S 39°24'29" W
7.39'

8103

8104

POE 14+00.00

PT 13+92.61

N 80°43'41" W
152.43'

PI 111+93.45

STA. 114+50.00
END HWY. 158-SITE 1
L.M. 10.26

C.L. HWY. 158 DRIVE 112+35
PI = 13+33.98
Δ = 59°51'50" LT.
D = 45°50'12"
T = 71.97'
L = 130.60'
PRC = 12+62.01
PT = 13+92.61
e = NO SUPER

C.L. HWY. 158 DRIVE 112+35
PI = 11+93.45
Δ = 101°17'39" RT.
D = 45°50'12"
T = 152.43'
L = 220.99'
PC = 10+41.02
PRC = 12+62.01
e = NO SUPER

SURVEY CONTROL DETAILS

PJoseph 8/13/2021 5:26:48 PM
WORKSPACE: AHTD
L:\2017\17017642 - ARDOT Job 100955\Drawings\r100955-100763.SC.Hwy.158.dgn
REVISED DATE:

C.L. HWY. 77 STATIONING	GUARDRAIL (TYPE A)	GUARDRAIL TERMINAL (TYPE 2)	THRIE BEAM GUARDRAIL TERMINAL
STA. 104+34.53 TO STA. 106+52.68 RT.	= 150 LIN. FT.	1 EACH	1 EACH
STA. 105+21.91 TO STA. 106+65.06 LT.	= 75 LIN. FT.	1 EACH	1 EACH
STA. 108+34.94 TO STA. 109+28.05 RT.	= 25 LIN. FT.	1 EACH	1 EACH
STA. 108+47.32 TO STA. 110+65.47 LT.	= 150 LIN. FT.	1 EACH	1 EACH

REMOVAL AND DISPOSAL OF GUARDRAIL

STA.	STA.	SIDE	UNIT
106+46	106+73	RT.	27 LIN. FT.
106+56	106+84	LT.	27 LIN. FT.
108+19	108+47	RT.	28 LIN. FT.
108+29	108+56	LT.	27 LIN. FT.

STA. 104+50 INSTALL
24" X 58' PIPE CULVERT
LT. SIDE DRAIN
CONSTRUCT APPROACH = 70 CU. YDS.

STA. 106+10 IN PLACE
24" X 21' RC PIPE CULVERT
LT. SIDE DRAIN
REMOVE

STA. 106+33 IN PLACE
18" X 31' CM PIPE CULVERT
LT. SIDE DRAIN
REMOVE

STA. 109+50 IN PLACE
18" X 24' CM PIPE CULVERT
LT. SIDE DRAIN
REMOVE

BRIDGE NO. 02141 IN PLACE
144'-0" X 25'-0" BRIDGE CONSISTING OF
A STEEL SUPERSTRUCTURE SUPPORTED
BY A CONCRETE PILE BENT SUBSTRUCTURE. REMOVE AS
EXISTING BRIDGE STRUCTURE = 1.00 LUMP SUM

STA. 108+70 IN PLACE
18" X 24' RC PIPE CULVERT
RT. SIDE DRAIN
REMOVE

STA. 111+50 INSTALL
24" X 38' PIPE CULVERT
LT. SIDE DRAIN
CONSTRUCT APPROACH = 39 CU. YDS.

STA. 110+10 INSTALL
24" X 40' PIPE CULVERT
RT. SIDE DRAIN
CONSTRUCT APPROACH = 444 CU. YDS.

APPROXIMATE FEMA 100 YR. FLOODPLAIN LIMITS

LITTLE RIVER

STA. 102+00.00
BEGIN HWY. 77-SITE 1
L.M. 10.50

STA. 113+00.00
END HWY. 77-SITE 1
L.M. 10.33

C.L. HWY. 77 STA 110+10.00 =
C.L. HWY. 77 DRIVE 110+10 STA 10+00.00
∢ 90°00' 00"

PROP. R/W
EXIST. R/W
CONSTRUCTION LIMITS
EXISTING 3' 20'3"
C.L. HWY. 77
N 01°20'04" W
BEGIN BRIDGE STA. 106+68.87
END BRIDGE STA. 108+31.13
PC 10+55.98
C.L. HWY. 77 DRIVE 110+10
PI 11+54.24
100' TRANSITION TO MATCH EXISTING

STA. 106+68.87 BRIDGE END
BRIDGE NO. 07556 OVER
LT. HAND CHUTE OF LITTLE RIVER
160'-0" CONT. W-BEAM UNIT (50',60',50')
34'-0" CLEAR ROADWAY
162'-3 1/8" BRIDGE LENGTH
STA. 108+31.13 BRIDGE END

STATE OF ARKANSAS
LICENSED PROFESSIONAL ENGINEER
No.13436
SHAUN A. ROBERSON
DIGITALLY SIGNED 8-13-2021

DATE REVISED	DATE FILMED	DATE REVISED	DATE FILMED

FED.RD. DIST.NO.	STATE	FED.AID PROJ.NO.	SHEET NO.	TOTAL SHEETS
6	ARK.			
JOB NO.		100955	101	356

(2) PLAN AND PROFILE - HWY. 77

HWY. 77 - SITE 1

REFER TO SURVEY CONTROL DETAIL SHEETS
FOR HORIZONTAL AND VERTICAL CONTROL POINTS

STA. 102+00.00
BEGIN HWY. 77-SITE 1
ELEV. 233.66

100' VERTICAL TRANSITION TO MATCH EXISTING

PVC 102+00.00 ELEV. 233.66
+00.00 LT. 228.93
+00.00 RT. 229.47
VC=200.00' K=188.68 e=0.26' 1.20%
0.14%
EXISTING GROUND
PVI 103+00.00 ELEV. 233.80
-0.85% RT. DITCH GRADE
-0.65% LT. DITCH GRADE
PVRC 104+00.00 ELEV. 235.00
+70.00 RT. 228.02
PVI 105+25.00 ELEV. 236.50
VC=250.00' K=208.33 e=-0.38'
-0.65% LT. DITCH GRADE
-1.00% RT. DITCH GRADE
+00.00 RT. 225.72
+30.00 LT. 226.14
BEGIN BRIDGE STA 106+68.87
PVT 106+50.00 ELEV. 236.50
DESIGN H.W. (025) ELEV. 230.3
0.00%
END BRIDGE STA 108+31.13
PROFILE GRADE
+30.00 LT. 222.01
+30.00 RT. 224.72
PVC 108+50.00 ELEV. 236.50
PVI 109+75.00 ELEV. 236.50
-1.50%
VC=250.00' K=166.67 e=-0.47'
PVRC 111+00.00 ELEV. 234.63
VC=200.00' K=158.73 e=0.32'
-0.24%
PVI 112+00.00 ELEV. 233.13
0.85% RT. DITCH GRADE
0.87% LT. DITCH GRADE
PVT 113+00.00 ELEV. 232.89
+00.00 LT. 226.10
+00.00 RT. 228.72

STA. 113+00.00
END HWY. 77-SITE 1
ELEV. 232.89

100' VERTICAL TRANSITION TO MATCH EXISTING

FOR THE CONSTRUCTION OF DETOURS, TEMPORARY WORK RAMPS OR HAUL ROADS, THIS STREAM IS CLASSIFIED AS A PERENNIAL STREAM. THE STREAM BANK ELEVATION IS 221FT. M.S.L. BETWEEN STATIONS 107+00 AND 107+85. REFER TO SECTION 110.06(c) OF THE 2014 STANDARD SPECIFICATIONS.

270 260 250 240 230 220 210 200 190 180

100+00 101+00 102+00 103+00 104+00 105+00 106+00 107+00 108+00 109+00 110+00 111+00 112+00 113+00 114+00 115+00

PJoseph 8/13/2021 5:26:49 PM
WORKSPACE: AHTD
L:\2017\170\7642 - ARDOT Job 100955\Drawings\r100955_PP_Hwy_77_Site 1.dgn
REVISED DATE:

DATE REVISED	DATE FILMED	DATE REVISED	DATE FILMED

FED.RD. DIST.NO.	STATE	FED.AID PROJ.NO.	SHEET NO.	TOTAL SHEETS
6	ARK.			
JOB NO.		100955	102	356
(2)	P & P - HWY. 77 DRIVE 110+10			

STATE OF ARKANSAS
LICENSED PROFESSIONAL ENGINEER
No.13436
SHAUN A. ROBERSON

DIGITALLY SIGNED 8-13-2021

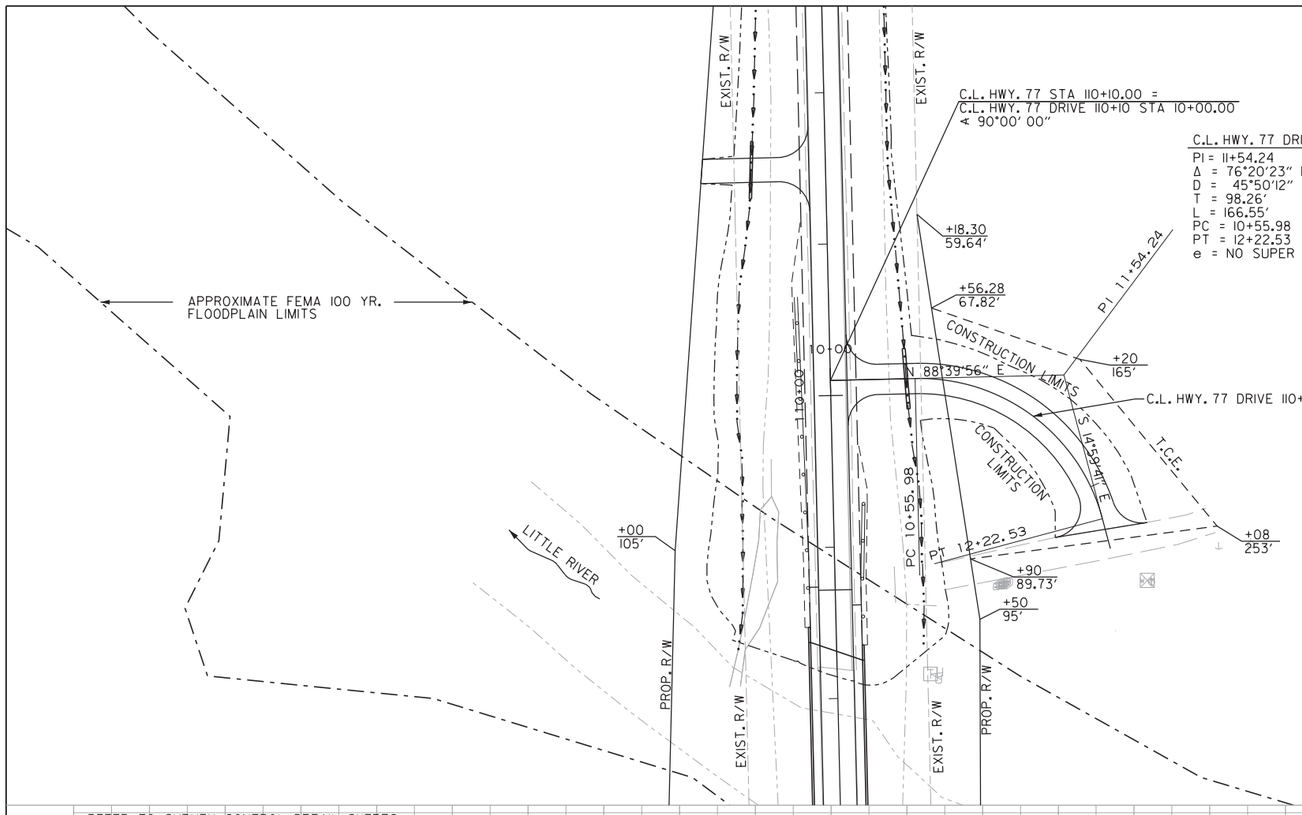

HWY. 77 DRIVE 110+10
(HWY. 77 - SITE 1)

REFER TO SURVEY CONTROL DETAIL SHEETS
FOR HORIZONTAL AND VERTICAL CONTROL POINTS

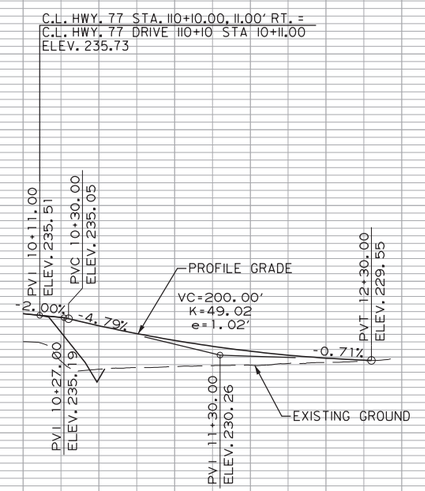

PJoseph 8/13/2021 5:26:49 PM
WORKSPACE: AHTD
L:\2017\17017642 - ARDOT Job 100955\Drawings\r100955_PP_Hwy. 77_Site 1_Drive 110+10.dgn
REVISED DATE:

DATE REVISED	DATE FILMED	DATE REVISED	DATE FILMED
11-22-2021			

FED.RD. DIST.NO.	STATE	FED.AID PROJ.NO.	SHEET NO.	TOTAL SHEETS
6	ARK.			
JOB NO.		100955	103	356

(2) PLAN AND PROFILE - HWY. 77

C.L. HWY. 77 STATIONING	GUARDRAIL (TYPE A)	GUARDRAIL TERMINAL (TYPE 2)	THRIE BEAM GUARDRAIL TERMINAL
STA. 205+40.41 TO STA. 207+58.56 RT.	= 150 LIN. FT.	1 EACH	1 EACH
STA. 205+95.78 TO STA. 207+38.93 LT.	= 75 LIN. FT.	1 EACH	1 EACH
STA. 210+81.07 TO STA. 212+24.22 RT.	= 75 LIN. FT.	1 EACH	1 EACH
STA. 210+61.44 TO STA. 212+79.59 LT.	= 150 LIN. FT.	1 EACH	1 EACH

REMOVAL AND DISPOSAL OF GUARDRAIL STA.	STA.	SIDE	UNIT
207+73	208+02	LT.	28 LIN. FT.
207+89	208+14	RT.	25 LIN. FT.
210+06	210+35	LT.	29 LIN. FT.
210+18	210+47	RT.	28 LIN. FT.

STATE OF ARKANSAS
LICENSED PROFESSIONAL ENGINEER
No. 13436
SHAUN A. ROBERSON

DIGITALLY SIGNED 11-22-2021

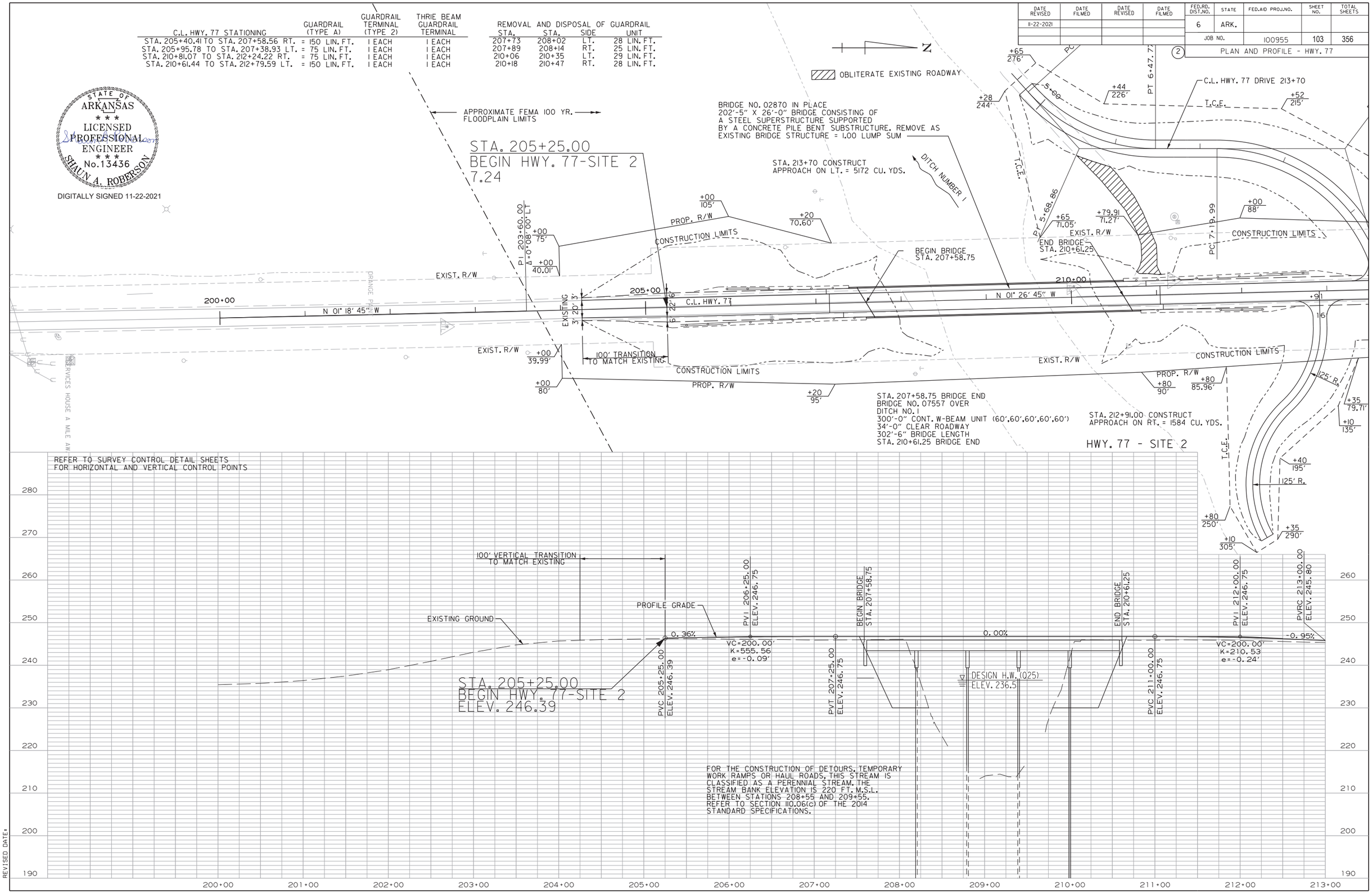

PJoseph 12/2/2021 3:41:33 PM
WORKSPACE: AHTD
L:\2017\17017642 - ARDOT Job 100955\Drawings\r100955_PP_Hwy. 77_Site 2_01.dgn
REVISED DATE:

DATE REVISED	DATE FILMED	DATE REVISED	DATE FILMED
11-22-2021			

FED.RD. DIST.NO.	STATE	FED.AID PROJ.NO.	SHEET NO.	TOTAL SHEETS
6	ARK.			
JOB NO.		100955	104	356

(2) PLAN AND PROFILE - HWY. 77

C.L. HWY. 77 STATIONING	GUARDRAIL (TYPE A)	GUARDRAIL TERMINAL (TYPE 2)	THRIE BEAM GUARDRAIL TERMINAL
STA. 221+34.75 TO STA. 223+52.90 RT.	= 150 LIN. FT.	1 EACH	1 EACH
STA. 222+09.75 TO STA. 223+52.90 LT.	= 75 LIN. FT.	1 EACH	1 EACH

REMOVAL AND DISPOSAL OF GUARDRAIL

STA.	STA.	SIDE	UNIT
223+61	223+88	LT.	28 LIN. FT.
223+61	223+88	RT.	27 LIN. FT.
227+10	227+30	LT.	28 LIN. FT.
227+10	227+30	RT.	28 LIN. FT.

STATE OF ARKANSAS
LICENSED PROFESSIONAL ENGINEER
No. 13436
SHAUN A. ROBERSON
DIGITALLY SIGNED 11-22-2021

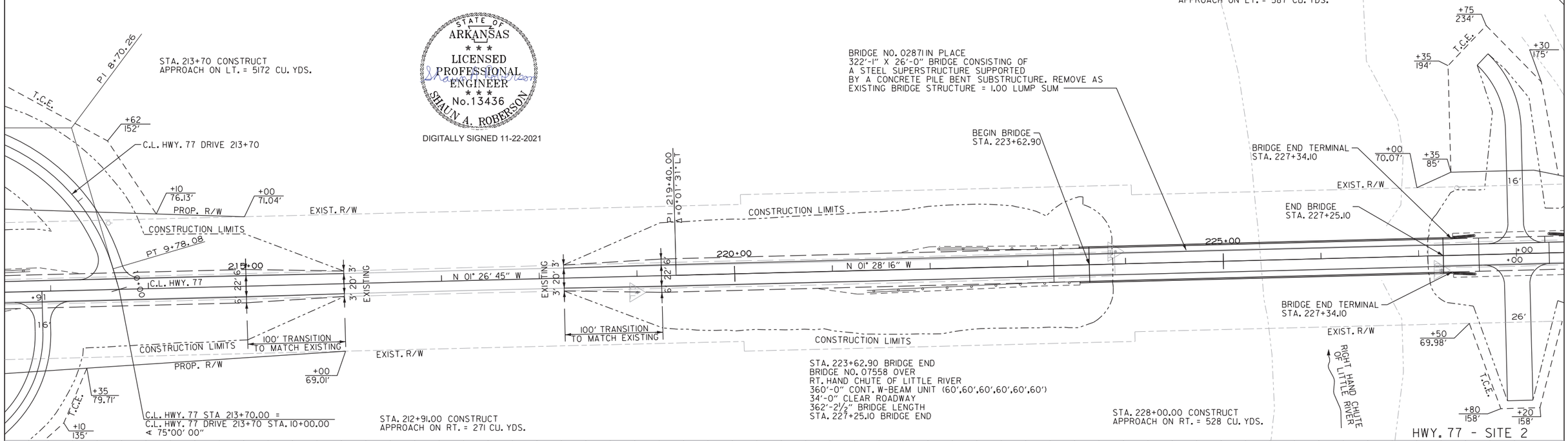

PJoseph 12/2/2021 3:41:34 PM
WORKSPACE: AHTD
L:\2017\17017642 - ARDOT Job 100955\Drawings\r100955_PP_Hwy. 77_Site 2_02.dgn
REVISED DATE:

DATE REVISED	DATE FILMED	DATE REVISED	DATE FILMED	FED.RD. DIST.NO.	STATE	FED.AID PROJ.NO.	SHEET NO.	TOTAL SHEETS
01-05-2022				6	ARK.			
				JOB NO.		100955	105	356
				(2)	PLAN AND PROFILE - HWY. 77			

STA. 235+65.00 CONSTRUCT
APPROACH ON LT. = 81 CU. YDS.

N

C.L. HWY. 77 STATIONING	GUARDRAIL (TYPE A)	GUARDRAIL TERMINAL (TYPE 2)	THRIE BEAM GUARDRAIL TERMINAL
STA. 231+22.23 TO STA. 232+15.34 RT.	= 25 LIN. FT.	1 EACH	1 EACH
STA. 230+98.42 TO STA. 233+16.57 LT.	= 150 LIN. FT.	1 EACH	1 EACH

REMOVAL AND DISPOSAL OF GUARDRAIL

STA.	STA.	SIDE	UNIT
228+45	228+74	LT.	28 LIN. FT.
228+72	228+99	RT.	27 LIN. FT.
230+78	230+93	LT.	15 LIN. FT.
231+07	231+33	RT.	26 LIN. FT.

STATE OF ARKANSAS
LICENSED PROFESSIONAL ENGINEER
No. 13436
SHAUN A. ROBERSON
DIGITALLY SIGNED 1-5-2022

PROP. R/W
STA. 228+00.00 CONSTRUCT
APPROACH ON LT. = 587 CU. YDS.

STA. 235+25.00
END HWY. 77-SITE 2
L.M. 6.67

PI 240+25.00
Δ=0°02'26" RT

BRIDGE END TERMINAL
STA. 228+56.99

END BRIDGE
STA. 231+00.32

BEGIN BRIDGE
STA. 228+77.68

BRIDGE END TERMINAL
STA. 228+80.80

BRIDGE NO. 02872 IN PLACE
202'-11" X 26'-0" BRIDGE CONSISTING OF
A STEEL SUPERSTRUCTURE SUPPORTED
BY A CONCRETE PILE BENT SUBSTRUCTURE. REMOVE AS
EXISTING BRIDGE STRUCTURE = 1.00 LUMP SUM

+45 STA. 228+00.00 CONSTRUCT
70.07' APPROACH ON RT. = 528 CU. YDS.

STA. 232+90.00 CONSTRUCT
APPROACH ON RT. = 251 CU. YDS.

C.L. HWY. 77 STA 234+15.00 =
C.L. HWY. 158 CONNECTOR STA 15+00.00
∢ 85°00' 00"

STA. 235+55.00 CONSTRUCT
APPROACH ON RT. = 153 CU. YDS.

100' TRANSITION
TO MATCH EXISTING

STA. 228+77.68 BRIDGE END
BRIDGE NO. 07559 OVER
DITCH NO. 2
220'-0" CONT. W-BEAM UNIT (40',40',60',40',40')
34-0" CLEAR ROADWAY
222'-7¾" BRIDGE LENGTH
STA. 231+00.32 BRIDGE END

HWY. 77 - SITE 2

REFER TO SURVEY CONTROL DETAIL SHEETS
FOR HORIZONTAL AND VERTICAL CONTROL POINTS

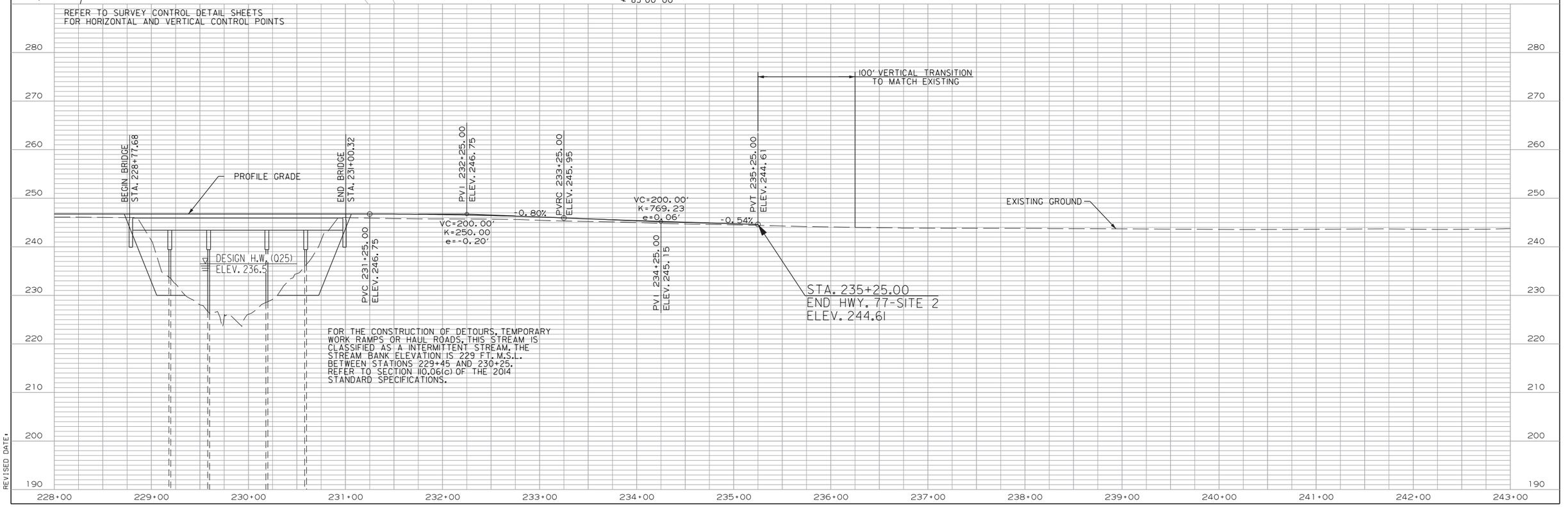

FOR THE CONSTRUCTION OF DETOURS, TEMPORARY WORK RAMPS OR HAUL ROADS, THIS STREAM IS CLASSIFIED AS A INTERMITTENT STREAM. THE STREAM BANK ELEVATION IS 229 FT. M.S.L. BETWEEN STATIONS 229+45 AND 230+25. REFER TO SECTION 110.06(c) OF THE 2014 STANDARD SPECIFICATIONS.

CGervasini 1/5/2022 1:58:51 PM
WORKSPACE: AHTD
L:\2017\17017642 - ARDOT Job 100955\Drawings\r100955_PP_Hwy. 77-Site 2.03.dgn
REVISED DATE:

DATE REVISED	DATE FILMED	DATE REVISED	DATE FILMED

FED.RD. DIST.NO.	STATE	FED.AID PROJ.NO.	SHEET NO.	TOTAL SHEETS
6	ARK.			
JOB NO.		100955	106	356
2	P & P - HWY. 77 DRIVE 213+70			

C.L. HWY. 77 DRIVE 213+70
PI = 5+68.86
Δ = 48°00'00" LT.
D = 28°30'00"
T = 89.51'
L = 168.42'
PC = 4+79.35
PT = 6+47.77
e = NO SUPER

C.L. HWY. 77 DRIVE 213+70
PI = 8+70.26
Δ = 73°33'15" RT.
D = 28°30'00"
T = 150.27'
L = 258.09'
PC = 7+19.99
PT = 9+78.08
e = NO SUPER

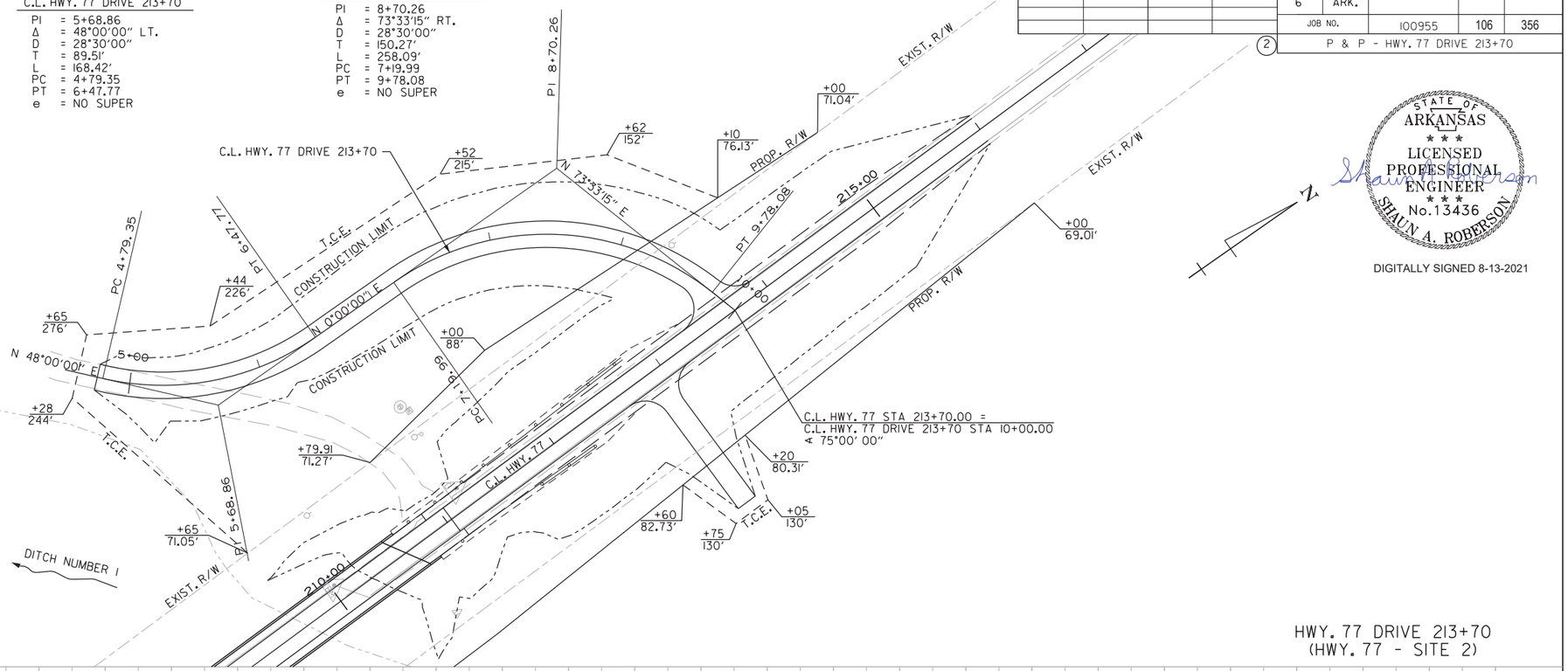

STATE OF ARKANSAS
LICENSED PROFESSIONAL ENGINEER
No.13436
SHAUN A. ROBERSON

DIGITALLY SIGNED 8-13-2021

HWY. 77 DRIVE 213+70
(HWY. 77 - SITE 2)

REFER TO SURVEY CONTROL DETAIL SHEETS
FOR HORIZONTAL AND VERTICAL CONTROL POINTS

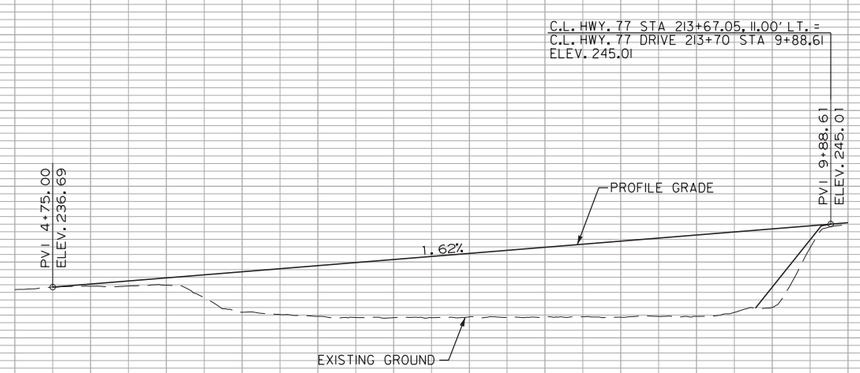

PJoseph 8/13/2021 5:27:02 PM
WORKSPACE: AHTD
L:\2017\17017642 - ARDOT Job 100955\Drawings\r100955_PP_Hwy. 77_Site 2_Drive 213+70.dgn
REVISED DATE:

DATE REVISED	DATE FILMED	DATE REVISED	DATE FILMED
01-05-2022			

FED.RD. DIST.NO.	STATE	FED.AID PROJ.NO.	SHEET NO.	TOTAL SHEETS
6	ARK.			
JOB NO.		100955	107	356

(2) PLAN AND PROFILE - HWY. 158 CONNECTOR

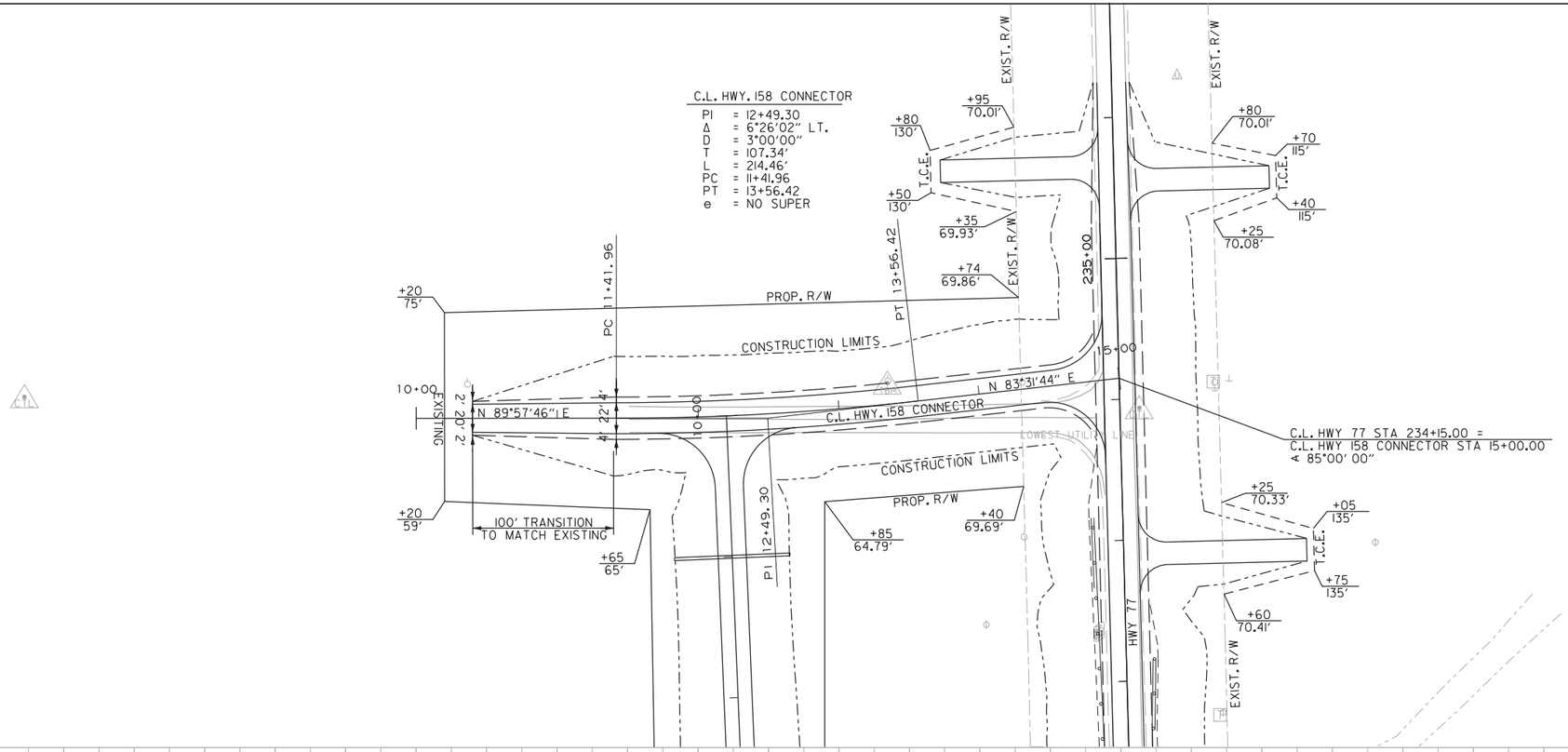

N

STATE OF ARKANSAS
LICENSED PROFESSIONAL ENGINEER
No.13436
SHAUN A. ROBERSON
DIGITALLY SIGNED 1-5-2022

HWY. 158 CONNECTOR
(HWY. 77 - SITE 2)

REFER TO SURVEY CONTROL DETAIL SHEETS
FOR HORIZONTAL AND VERTICAL CONTROL POINTS

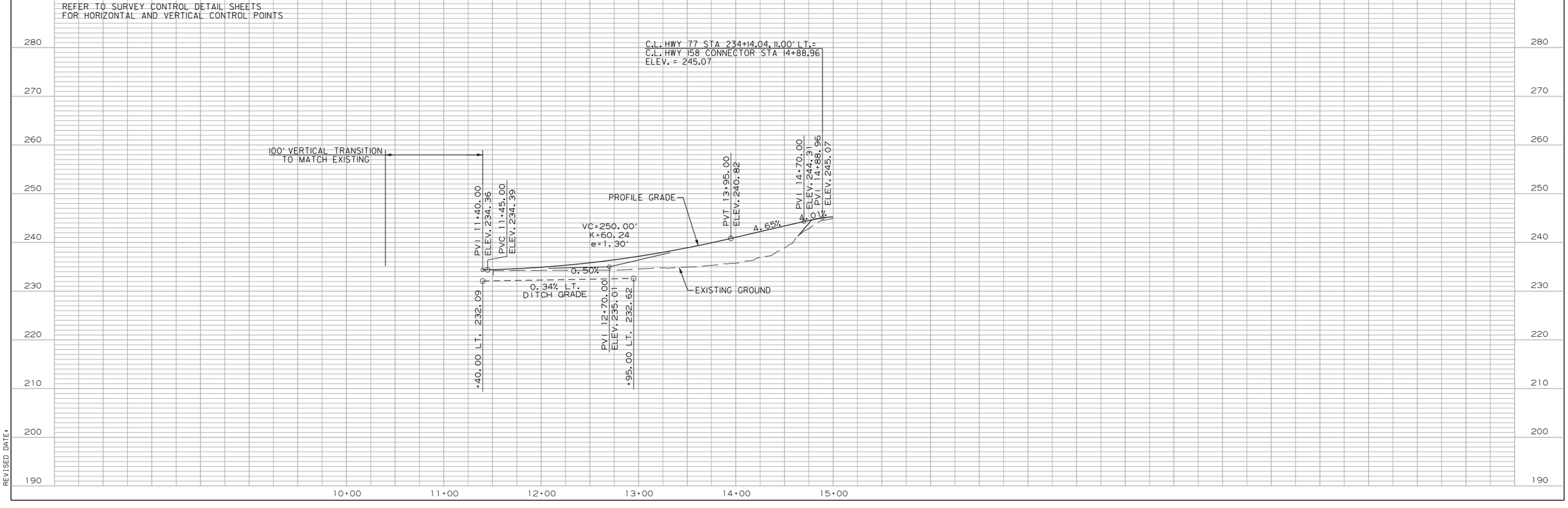

CGervasini 1/5/2022 1:58:51 PM
WORKSPACE: AHTD
L:\2017\17017642 - ARDOT Job 100955\Drawings\r100955_PP_Hwy. 77 Site 2-Hwy. 158.dgn
REVISED DATE:

DATE REVISED	DATE FILMED	DATE REVISED	DATE FILMED
01-05-2022			

FED.RD. DIST.NO.	STATE	FED.AID PROJ.NO.	SHEET NO.	TOTAL SHEETS
6	ARK.			
JOB NO.		100955	108	356

(2) PLAN AND PROFILE - C.R. 524

STATE OF ARKANSAS
LICENSED PROFESSIONAL ENGINEER
No. 13436
SHAUN A. ROBERSON
DIGITALLY SIGNED 1-5-2022

C.L. C.R. 524
PI = 5+33.48
Δ = 60°42'42" LT.
D = 25°00'00"
T = 134.22'
L = 242.85'
PC = 3+99.26
PT = 6+42.10
e = NO SUPER

50' TRANSITION TO MATCH EXISTING
EXISTING 0'-20'-0"
PC 3+99.26
STA. 5+60 INSTALL
18" X 46' PIPE CULVERT
RT. SIDE DRAIN
CONSTRUCT APPROACH = 28 CU. YDS.
STA. 9+00 INSTALL
24" X 82' PIPE CULVERT
SIDE DRAIN
QIO = 4 CFS D.A. = 2 ACRES
PT 6+42.10
PROP. R/W
CONSTRUCTION LIMITS
DITCH NUMBER 2
N 38°00'00" E
C.L. C.R. 524 N 2°22'42" W
PC 11+41.96
C.L. HWY. 158 CONNECTOR STA 12+20.00 = C.L. C.R. 524 STA 10+00.00 ∢ 90°00'00"
PI 12+49.30
PT 13+56.42
PI 5+33.48
T.C.E.
EXIST. R/W
C.L. HWY. 77
LOWEST UTILITY LINE
225+00
230+00
235+00
C.R. 524
(HWY. 77 - SITE 2)

REFER TO SURVEY CONTROL DETAIL SHEETS
FOR HORIZONTAL AND VERTICAL CONTROL POINTS

50' VERTICAL TRANSITION TO MATCH EXISTING
PVI 3+95.00 ELEV. 234.52
+95.00 LT. 231.82
+95.00 RT. 231.82
0.60%
-0.60% LT. DITCH GRADE
-0.64% RT. DITCH GRADE
PVC 5+00.00 ELEV. 235.15
+30.00 LT. 231.01
VC=200.00' K=138.89 e=-0.36'
PVI 6+00.00 ELEV. 235.75
+00.00 RT. 230.51
PROFILE GRADE
PVT 7+00.00 ELEV. 234.91
-0.84%
PVC 8+25.00 ELEV. 233.86
VC=150.00' K=52.82 e=0.53'
PVI 9+00.00 ELEV. 233.23
PVT 9+75.00 ELEV. 234.73
2.00%
PVI 9+89.00 ELEV. 235.01
C.L. HWY. 158 CONNECTOR STA 12+20.00, 11.00' RT. = C.L. C.R. 524 STA 9+89.00 ELEV. = 235.01
EXISTING GROUND
PROP. F.L. = 224.21 LT.
PROP. F.L. = 224.21 RT.

270 260 250 240 230 220 210 200 190 180
3+00 4+00 5+00 6+00 7+00 8+00 9+00 10+00

CGervasini 1/5/2022 11:58:52 PM
WORKSPACE: AHTD
L:\2017\170\1642 - ARDOT Job 100955\Drawings\r100955_PP_Hwy_77_Site 2_C.R. 524.dgn
REVISED DATE:

C.L. HWY. 77 STATIONING	GUARDRAIL (TYPE A)	GUARDRAIL TERMINAL (TYPE 2)	THRIE BEAM GUARDRAIL TERMINAL
STA. 247+05.75 TO STA. 249+23.90 RT.	= 150 LIN. FT.	1 EACH	1 EACH
STA. 247+80.17 TO STA. 249+23.90 LT.	= 75 LIN. FT.	1 EACH	1 EACH
STA. 253+26.10 TO STA. 254+69.25 RT.	= 75 LIN. FT.	1 EACH	1 EACH
STA. 253+26.10 TO STA. 255+44.25 LT.	= 150 LIN. FT.	1 EACH	1 EACH

REMOVAL AND DISPOSAL OF GUARDRAIL

STA.	STA.	SIDE	UNIT
249+13	249+42	LT.	29 LIN. FT.
149+13	249+42	RT.	28 LIN. FT.
253+07	253+35	LT.	27 LIN. FT.
253+07	253+35	RT.	28 LIN. FT.

DATE REVISED	DATE FILMED	DATE REVISED	DATE FILMED	FED.RD. DIST.NO.	STATE	FED.AID PROJ.NO.	SHEET NO.	TOTAL SHEETS
				6	ARK.			
				JOB NO.		100955	109	356
				(2)	PLAN AND PROFILE - HWY. 77			

STATE OF ARKANSAS
LICENSED PROFESSIONAL ENGINEER
No. 13436
SHAUN A. ROBERSON

DIGITALLY SIGNED 8-13-2021

N

STA. 245+00.00
BEGIN HWY. 77-SITE 3
L.M. 6.49

STA. 246+80.00 CONSTRUCT APPROACH ON LT. = 230 CU. YDS.

BRIDGE NO. 02881 IN PLACE
368'-1" X 26'-0" BRIDGE CONSISTING OF A STEEL SUPERSTRUCTURE SUPPORTED BY A CONCRETE PILE BENT SUBSTRUCTURE. REMOVE AS EXISTING BRIDGE STRUCTURE = 1.00 LUMP SUM

RELIEF TO RIGHT HAND CHUTE OF LITTLE RIVER

STA. 256+00.00
END HWY. 77-SITE 3
L.M. 6.28

+65 135' I.C.E. +95 135'
+50 80.12' +10 82.24'
+30 90' +75 70.53'
+80 70.59'
+20 90' +50 70.49'
+20 85' +20 69.58'
+80 69.41' +10 69.48'
+30 115' +50 69.51' +20 90' +20 70.42'

BEGIN BRIDGE STA. 249+33.90
END BRIDGE STA. 253+16.10

PROP. R/W
EXIST. R/W
CONSTRUCTION LIMITS
C.L. HWY. 77
245+00
250+00
255+00
+80
N 01° 25' 50" W
N 01° 04' 09" W
EXISTING 3' 20' 3'
22' 16' 6'
100' TRANSITION TO MATCH EXISTING
P.I. 257+55.00 Δ=0°21'41" RT

STA. 249+33.90 BRIDGE END
BRIDGE NO. 07560 OVER
RELIEF TO RIGHT HAND CHUTE OF LITTLE RIVER
380'-0" CONT. W-BEAM UNIT (40',60',60',60',60',60',40')
34'-0" CLEAR ROADWAY
382'-2½" BRIDGE LENGTH
STA. 253+16.10 BRIDGE END

HWY. 77 - SITE 3

REFER TO SURVEY CONTROL DETAIL SHEETS FOR HORIZONTAL AND VERTICAL CONTROL POINTS

100' VERTICAL TRANSITION TO MATCH EXISTING

PVC 245+00.00 ELEV. 244.52
0.35%
VC=200.00' K=338.98 e=0.15'
PVI 246+00.00 ELEV. 244.87
PVRC 247+00.00 ELEV. 245.81
PVI 248+00.00 ELEV. 246.75
0.94%
VC=200.00' K=212.77 e=-0.24'
EXISTING GROUND
BEGIN BRIDGE STA. 249+33.90
PVT 249+00.00 ELEV. 246.75
0.00%
PROFILE GRADE
END BRIDGE STA. 253+16.10
PVC 253+50.00 ELEV. 246.75
PVI 254+75.00 ELEV. 246.75
-0.81%
VC=250.00' K=308.64 e=-0.25'
PVT 256+00.00 ELEV. 245.74

DESIGN H.W. (025) ELEV. 236.5

-0.05% RT. DITCH GRADE
+70.00 RT. 229.06
+50.00 RT. 229.02

STA. 245+00.00
BEGIN HWY. 77-SITE 3
ELEV. 244.52

STA. 256+00.00
END HWY. 77-SITE 3
ELEV. 245.74

FOR THE CONSTRUCTION OF DETOURS, TEMPORARY WORK RAMPS OR HAUL ROADS, THIS STREAM IS CLASSIFIED AS A INTERMITTENT STREAM. THE STREAM BANK ELEVATION IS 235 FT. M.S.L. BETWEEN STATIONS 249+65 AND 252+85. REFER TO SECTION 110.06(c) OF THE 2014 STANDARD SPECIFICATIONS.

280 270 260 250 240 230 220 210 200 190

243+00 244+00 245+00 246+00 247+00 248+00 249+00 250+00 251+00 252+00 253+00 254+00 255+00 256+00 257+00 258+00

Pjoseph 8/13/2021 5:27:04 PM
WORKSPACE: AHTD
L:\20\T\10\7642 - ARDOT Job 100955\Drawings\r100955_PP.Hwy. 77_Site 3.dgn
REVISED DATE:

DATE REVISED	DATE FILMED	DATE REVISED	DATE FILMED	FED.RD. DIST.NO.	STATE	FED.AID PROJ.NO.	SHEET NO.	TOTAL SHEETS
				6	ARK.			
				JOB NO.		100955	110	356

(2) PLAN AND PROFILE - HWY. 77

C.L. HWY. 77 STATIONING	GUARDRAIL (TYPE A)	GUARDRAIL TERMINAL (TYPE 2)	THRIE BEAM GUARDRAIL TERMINAL
STA. 269+14.91 TO STA. 271+33.06 RT.	= 150 LIN. FT.	1 EACH	1 EACH
STA. 269+77.53 TO STA. 271+20.68 LT.	= 75 LIN. FT.	1 EACH	1 EACH
STA. 273+05.32 TO STA. 274+48.47 RT.	= 75 LIN. FT.	1 EACH	1 EACH
STA. 272+92.94 TO STA. 274+61.07 LT.	= 100 LIN. FT.	1 EACH	1 EACH

REMOVAL AND DISPOSAL OF GUARDRAIL

STA.	STA.	SIDE	UNIT
271+19	271+48	LT.	28 LIN. FT.
271+29	271+55	RT.	26 LIN. FT.
272+72	273+00	LT.	28 LIN. FT.
272+82	273+10	RT.	28 LIN. FT.

STATE OF ARKANSAS
LICENSED PROFESSIONAL ENGINEER
No. 13436
SHAUN A. ROBERSON

DIGITALLY SIGNED 8-13-2021

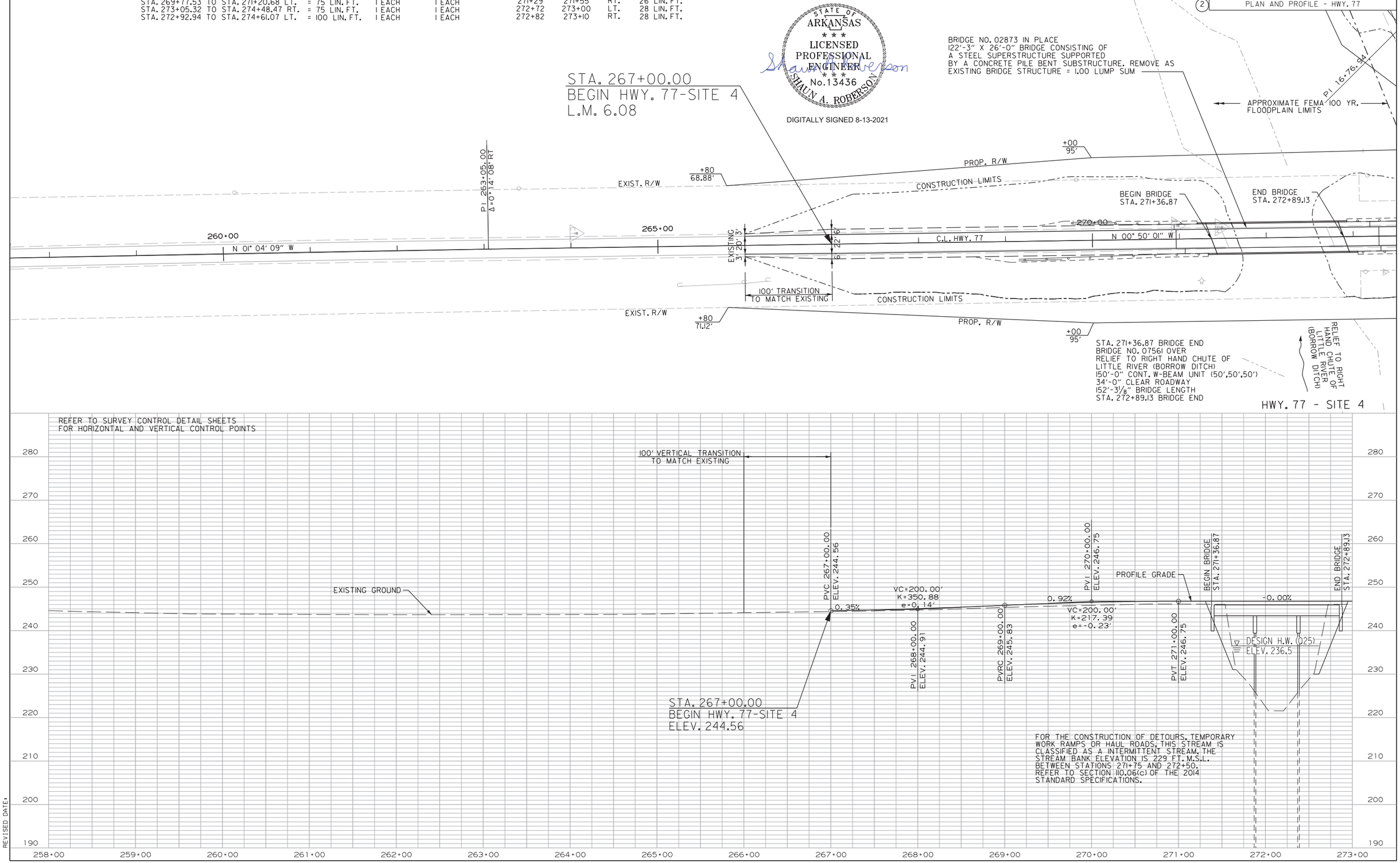

PJoseph 8/13/2021 5:27:04 PM
WORKSPACE: AHTD
L:\2017\17017642 - ARDOT Job 100955\Drawings\r100955_PP_Hwy. 77_Site 4_01.dgn
REVISED DATE:

DATE REVISED	DATE FILMED	DATE REVISED	DATE FILMED	FED.RD. DIST.NO.	STATE	FED.AID PROJ.NO.	SHEET NO.	TOTAL SHEETS
				6	ARK.			
				JOB NO.		100955	111	356
				(2)	PLAN AND PROFILE - HWY. 77			

OBLITERATE EXISTING ROADWAY

STA. 277+85.00 CONSTRUCT APPROACH ON LT. = 109 CU. YDS.

N

PROP. R/W

C.L. C.R. 538 WEST

+55 80'

+49 76'

+75 154.45'

+90 99.38'

T.C.E.

END BRIDGE STA. 272+89.13

CONSTRUCTION LIMITS

+45 100'

+20 80'

+70 100'

+60.05 72.39'

T.C.E.

+00 100'

+09.97 69.68'

P.I. 278+45.00 Δ=0°14'16" RT

+00 65'

PROP. R/W

16'

CONSTRUCTION LIMITS

STA. 281+75.00
END HWY. 77-SITE 4
L.M. 5.80

+95 70'

+95 41.22'

EXIST. R/W

275+00

280+00

285+00

N 00° 50' 01" W

C.L. HWY. 77

+85

+50

N 00° 35' 45" W

22'6"

6'

3' 20'3"

EXISTING

16'

CONSTRUCTION LIMITS

100' TRANSITION TO MATCH EXISTING

+95 38.78'

EXIST. R/W

PROP. R/W

+95 70'

CONSTRUCTION LIMITS

+90 95'

PROP. R/W

+20 75'

+25 68'

+70 65'

+35 105'

T.C.E.

+65 105'

+60 95'

T.C.E.

C.L. HWY. 77 STA. 275+45.00 =
C.L. C.R. 538 WEST STA. 20+00.00 =
C.L. C.R. 538 EAST STA. 20+00.00
∢ 90°00' 00"

C.L. C.R. 538 EAST

STA. 277+50.00 CONSTRUCT APPROACH ON RT. = 106 CU. YDS.

APPROXIMATE FEMA 100 YR. FLOODPLAIN LIMITS

HWY. 77 - SITE 4

STATE OF ARKANSAS
LICENSED PROFESSIONAL ENGINEER
No.13436
SHAUN A. ROBERSON

DIGITALLY SIGNED 8-13-2021

REFER TO SURVEY CONTROL DETAIL SHEETS FOR HORIZONTAL AND VERTICAL CONTROL POINTS

PROFILE GRADE

PVC 273+25.00
ELEV. 246.75

0.0%

PVI 275+50.00
ELEV. 246.75

VC=450.00'
K=171.76
e=-1.47'

-2.62%

PVRC 277+75.00
ELEV. 240.86

VC=400.00'
K=176.21
e=1.13'

PVI 279+75.00
ELEV. 235.62

-0.35%

PVT 281+75.00
ELEV. 234.92

100' VERTICAL TRANSITION TO MATCH EXISTING

EXISTING GROUND

-0.41% RT. DITCH GRADE

+20.00 RT. 231.38

+75.00 RT. 229.94

STA. 281+75.00
END HWY. 77-SITE 4
ELEV. 234.92

280 270 260 250 240 230 220 210 200 190

273+00 274+00 275+00 276+00 277+00 278+00 279+00 280+00 281+00 282+00 283+00 284+00 285+00

PJoseph 8/13/2021 5:27:05 PM
WORKSPACE: AHTD
L:\2017\1701642 - ARDOT Job 100955\Drawings\r100955_PP_Hwy. 77_Site 4.02.dgn
REVISED DATE:

DATE REVISED	DATE FILMED	DATE REVISED	DATE FILMED	FED.RD. DIST.NO.	STATE	FED.AID PROJ.NO.	SHEET NO.	TOTAL SHEETS
				6	ARK.			
				JOB NO.		100955	112	356
				PLAN AND PROFILE - C.R. 538				

C.L. C.R. 538 WEST
PI = 18+77.53
Δ = 65°27'29" RT.
D = 28°30'00"
T = 129.21'
L = 229.68'
PRC = 17+48.32
PT = 19+78.00
e = NO SUPER

C.L. C.R. 538 WEST
PI = 16+76.94
Δ = 42°47'30" LT.
D = 28°30'00"
T = 78.76'
L = 150.14'
PC = 15+98.18
PRC = 17+48.32
e = NO SUPER

C.L. C.R. 538 EAST
PI = 22+58.70
Δ = 20°49'59" LT.
D = 20°00'00"
T = 52.66'
L = 104.16'
PC = 22+06.04
PT = 23+10.20
e = NO SUPER

C.L. HWY. 77 STA 275+45.00 =
C.L. C.R. 538 WEST STA. 20+00.00 =
C.L. C.R. 538 EAST STA. 20+00.00
Δ 90°00' 00"

APPROXIMATE FEMA 100 YR. FLOODPLAIN LIMITS

APPROXIMATE FEMA 100 YR. FLOODPLAIN LIMITS

C.L. C.R. 538 WEST

C.L. C.R. 538 EAST

50' TRANSITION TO MATCH EXISTING

50' TRANSITION TO MATCH EXISTING

PROP. R/W

CONSTRUCTION LIMITS

EXIST. R/W

C.L. HWY. 77

T.C.E.

N 89°09'59" E

N 23°42'30" E

N 66°30'00" E

N 00° 50' 01" W

N 68°20'00" E

PC 15+98.18

PRC 17+48.32

PT 19+78.00

PC 22+06.04

PT 23+10.20

+20 80'

+55 80'

+21 43'

+45 100'

+90 99.38

+75 154.45'

+49 76'

+21 71'

+20 75'

+90 51'

+90 95'

+86 163'

+60 95'

+54 70'

+24 68'

+90 23'

15.00

20.00

24.00

10.00

10.00

10.00

275.00

20.00

70'

70'

70'

EXISTING

PI 15+76.94

PI 22+58.70

STATE OF ARKANSAS
LICENSED PROFESSIONAL ENGINEER
No.13436
SHAUN A. ROBERSON

Shaun A. Roberson

DIGITALLY SIGNED 8-13-2021

N

C.R. 538 WEST AND EAST
(HWY. 77 - SITE 4)

REFER TO SURVEY CONTROL DETAIL SHEETS
FOR HORIZONTAL AND VERTICAL CONTROL POINTS

50' VERTICAL TRANSITION TO MATCH EXISTING

PVI 15+90.00
ELEV. 246.00

C.L. HWY. 77 STA. 275+45.00, 11.00' LT. =
C.L. C.R. 538 WEST STA. 19+89.00
ELEV. 245.12

C.L. HWY. 77 STA. 275+45.00, 11.00' RT. =
C.L. C.R. 538 EAST STA. 20+11.00
ELEV. 245.12

PVI 19+89.00
ELEV. 245.12

PVI 20+11.00
ELEV. 245.12

50' VERTICAL TRANSITION TO MATCH EXISTING

PVI 23+20.00
ELEV. 245.58

PROFILE GRADE

-0.22%

PROFILE GRADE

0.15%

EXISTING GROUND

EXISTING GROUND

280 270 260 250 240 230 220 210 200 190

15+00 16+00 17+00 18+00 19+00 20+00 21+00 22+00 23+00 24+00

PJoseph 8/13/2021 5:27:06 PM
WORKSPACE: AHTD
L:\2017\170T642 - ARDOT Job 100955\Drawings\r100955_PP_Hwy. 77_Site 4_C.R. 538.dgn
REVISED DATE:

REMOVAL AND DISPOSAL OF GUARDRAIL			
STA.	STA.	SIDE	UNIT
504+45	504+72	LT.	28 LIN. FT.
504+45	504+72	RT.	27 LIN. FT.
505+28	505+55	LT.	27 LIN. FT.

STA. 504+47 IN PLACE
30" X 14' RC PIPE CULVERT
LT. SIDE DRAIN
REMOVE

STA. 505+79 IN PLACE
42" X 48' CM PIPE CULVERT
LT. SIDE DRAIN
REMOVE AND INSTALL
42" X 84' CM PIPE CULVERT
LT. SIDE DRAIN
CONSTRUCT APPROACH = 38 CU. YDS.

STA. 505+00 CONSTRUCT
TRP. 12'X10'X84' R.C. BOX CULVERT
WITH 3:1 WINGS LT. & RT.
Q25 = 626 CFS D.A. = 3518 ACRES
SPAN = 38.75'

DATE REVISED	DATE FILMED	DATE REVISED	DATE FILMED	FED.RD. DIST.NO.	STATE	FED.AID PROJ.NO.	SHEET NO.	TOTAL SHEETS
				6	ARK.			
				JOB NO.		100955	113	356
				(2)	PLAN AND PROFILE - HWY. 77			

STATE OF ARKANSAS
LICENSED PROFESSIONAL ENGINEER
No. 13436
SHAUN A. ROBERSON
Shaun A. Roberson
DIGITALLY SIGNED 8-13-2021

STA. 502+00.00
BEGIN HWY. 77-SITE 5
L.M. 0.70

STA. 507+00.00
END HWY. 77-SITE 5
L.M. 0.68

C.L. HWY. 77 STA 505+80.00 =
C.L. FARMER LN STA 10+00.00
Δ 90°00'00"

C.L. HWY. 77 SITE 5
PI = 508+96.56
Δ = 50°19'28" RT.
D = 13°00'00"
T = 207.04'
L = 387.12'
PC = 506+89.52
PT = 510+76.64
e = 0.100 FT./FT.
LS = 300'

BRIDGE NO. 02138 IN PLACE
54'-0" X 26'-0" BRIDGE CONSISTING OF
A CONCRETE SUPERSTRUCTURE SUPPORTED
BY A TIMBER PILE AND CONCRETE CAP SUBSTRUCTURE.
REMOVE AS EXISTING BRIDGE STRUCTURE = 1.00 LUMP SUM

STA. 505+49 IN PLACE
2 - 48" X 50' CM PIPE CULVERT
RT. SIDE DRAIN
REMOVE

STA. 505+80 INSTALL
48" X 78' PIPE CULVERT
RT. SIDE DRAIN

HWY. 77 - SITE 5

REFER TO SURVEY CONTROL DETAIL SHEETS
FOR HORIZONTAL AND VERTICAL CONTROL POINTS

STA. 505+09.52 BEGIN SUPERELEVATION
STA. 507+00.00 MATCH EXISTING SUPERELEVATION (0.0635 FT./FT.)

100' VERTICAL TRANSITION TO MATCH EXISTING

VC=200.00'
K=161.29
e=-0.31'

PVI 502+00.00 ELEV. 238.62
PVC 503+70.00 ELEV. 239.54
PVI 504+70.00 ELEV. 240.08
PVT 505+70.00 ELEV. 239.38
PVI 507+00.00 ELEV. 238.47

PROFILE GRADE
EXISTING GROUND
0.54%
-0.70%
DESIGN H.W. (Q25) ELEV. 234.8
-0.89% LT. DITCH GRADE
-0.79% RT. DITCH GRADE
0.89% RT. DITCH GRADE
1.63% LT. DITCH GRADE

+00.00 LT. 231.98
+35.00 RT. 230.86
+40.00 LT. 229.84
+40.00 RT. 229.24
+20.00 LT. 229.52
+25.00 RT. 230.50
+28.00 RT. 231.41
+28.00 LT. 231.28

STA. 502+00.00
BEGIN HWY 77-SITE 5
ELEV. 238.62

STA. 507+00.00
END HWY 77-SITE 5
ELEV. 238.47

PROP. F.L. = 226.86 LT.
PROP. F.L. = 227.04 RT.

FOR THE CONSTRUCTION OF DETOURS, TEMPORARY WORK RAMPS OR HAUL ROADS, THIS STREAM IS CLASSIFIED AS A INTERMITTENT STREAM. THE STREAM BANK ELEVATION IS 231 FT. M.S.L. BETWEEN STATIONS 504+85 AND 505+20. REFER TO SECTION 110.06(c) OF THE 2014 STANDARD SPECIFICATIONS.

270 260 250 240 230 220 210 200 190 180

500+00 501+00 502+00 503+00 504+00 505+00 506+00 507+00 508+00 509+00 510+00 511+00 512+00

PJoseph 8/13/2021 5:27:06 PM
WORKSPACE: AHTD
L:\2017\17017642 - ARDOT Job 100955\Drawings\r100955_PP_Hwy_77_Site 5.dgn
REVISED DATE:

DATE REVISED	DATE FILMED	DATE REVISED	DATE FILMED	FED.RD. DIST.NO.	STATE	FED.AID PROJ.NO.	SHEET NO.	TOTAL SHEETS
				6	ARK.			
				JOB NO.		100955	114	356
				(2)	PLAN AND PROFILE - FARMER LN.			

STATE OF ARKANSAS
LICENSED PROFESSIONAL ENGINEER
No. 13436
SHAUN A. ROBERSON

DIGITALLY SIGNED 8-13-2021

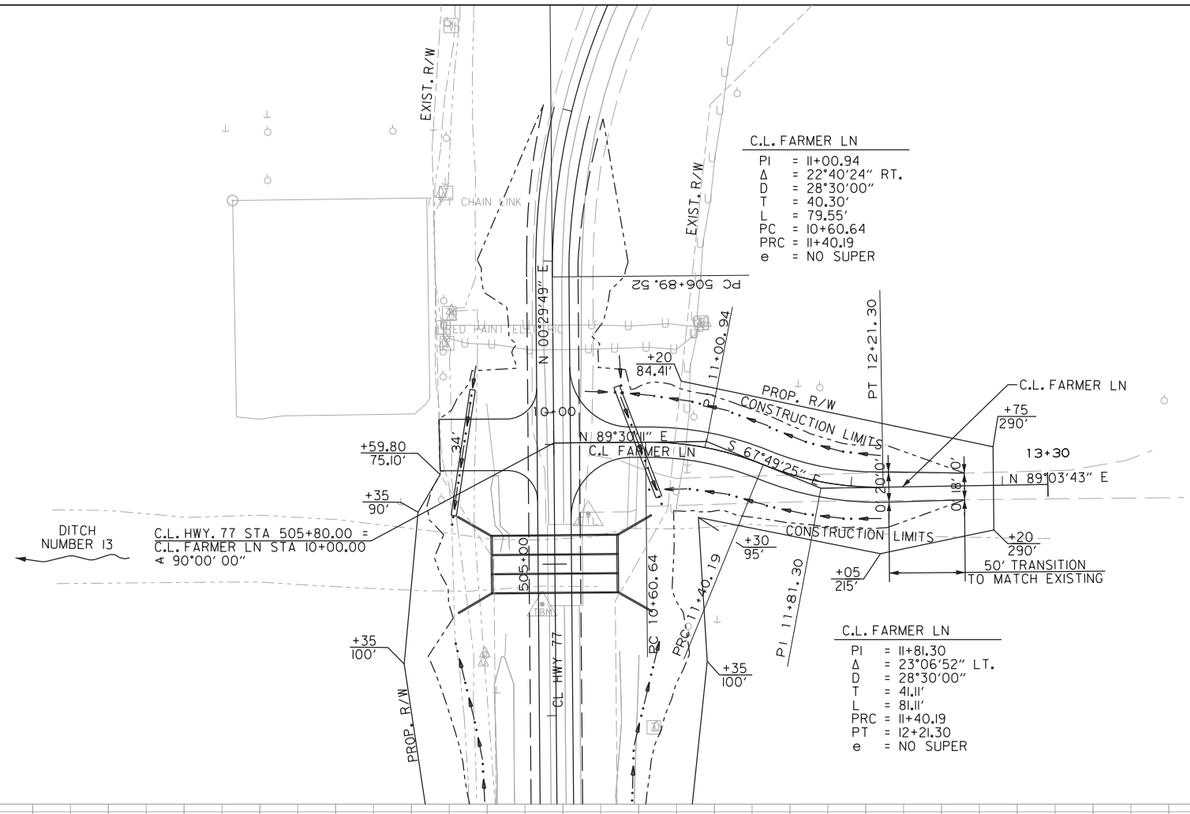

FARMER LN.
(HWY. 77 - SITE 5)

REFER TO SURVEY CONTROL DETAIL SHEETS
FOR HORIZONTAL AND VERTICAL CONTROL POINTS

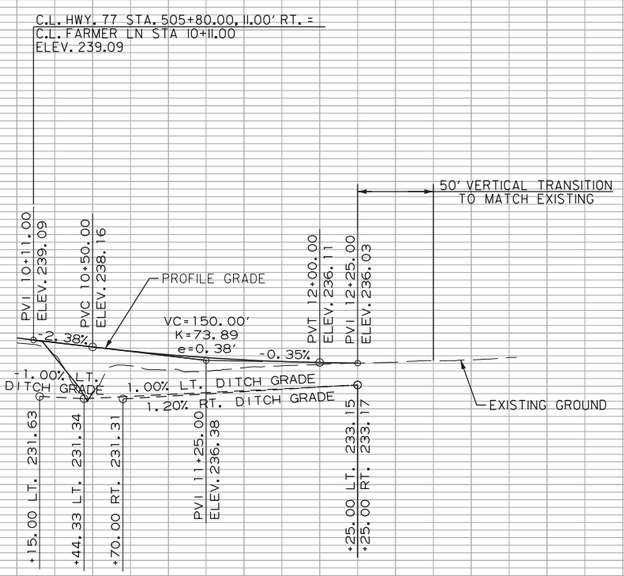

PJoseph 8/13/2021 5:27:07 PM
WORKSPACE: AHTD
L:\2017\170T642 - ARDOT Job 100955\Drawings\r100955_PP_Hwy. 77_Site 5_Farmer LN.dgn
REVISED DATE:

STATE OF ARKANSAS
LICENSED PROFESSIONAL ENGINEER
No.13436
SHAUN A. ROBERSON

DIGITALLY SIGNED 8-13-2021

STA. 106+07 INSTALL
30" X 50' PIPE CULVERT
LT. SIDE DRAIN
CONSTRUCT APPROACH = 36 CU. YDS.

DATE REVISED	DATE FILMED	DATE REVISED	DATE FILMED	FED.RD. DIST.NO.	STATE	FED.AID PROJ.NO.	SHEET NO.	TOTAL SHEETS
				6	ARK.			
				JOB NO.		100955	115	356
				(2)	PLAN AND PROFILE - HWY. 140			

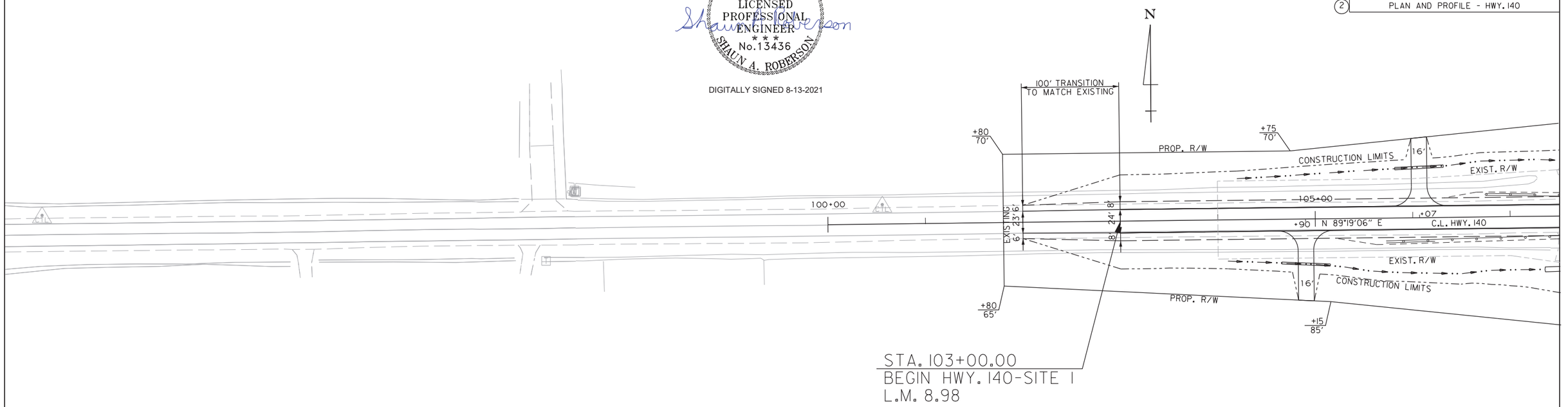

STA. 104+90 INSTALL
24" X 50' PIPE CULVERT
RT. SIDE DRAIN
CONSTRUCT APPROACH = 21 CU. YDS.

HWY. 140 - SITE 1

REFER TO SURVEY CONTROL DETAIL SHEETS
FOR HORIZONTAL AND VERTICAL CONTROL POINTS

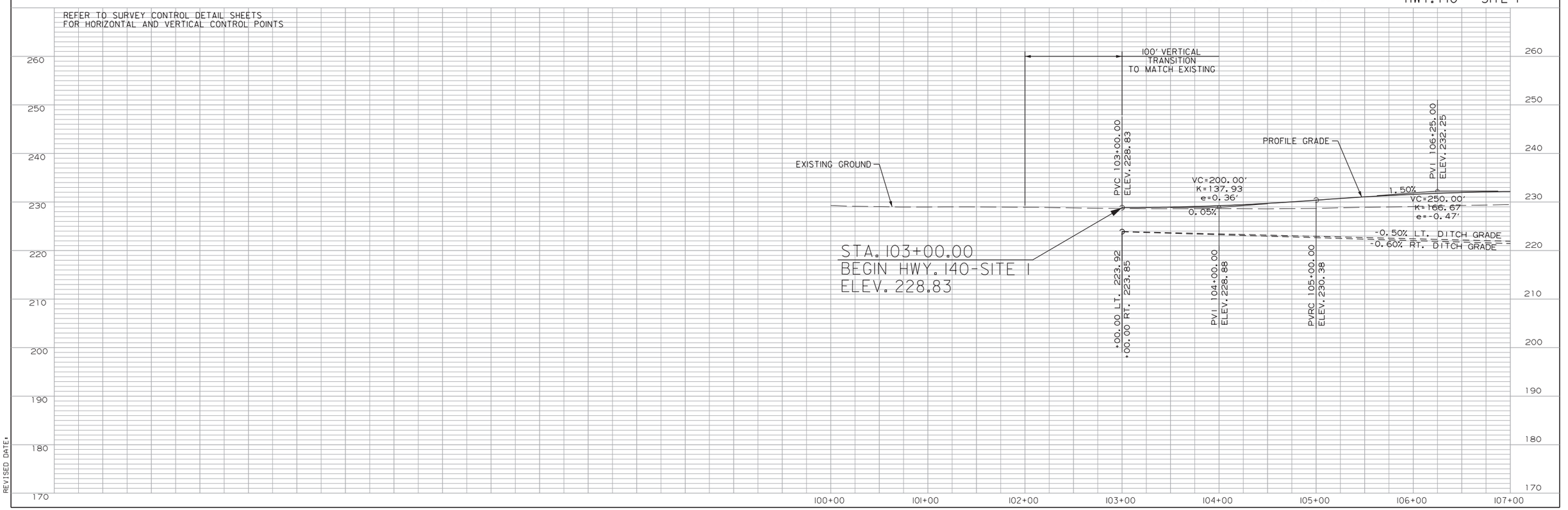

PJoseph
8/13/2021 5:27:08 PM
WORKSPACE: AHTD
L:\2017\17017642 - ARDOT Job 100955\Drawings\r100955-100996_PP_Hwy.140_Site 1.01.dgn
REVISED DATE:

C.L. HWY. 140 STATIONING	GUARDRAIL (TYPE A)	GUARDRAIL TERMINAL (TYPE 2)	THRIE BEAM GUARDRAIL TERMINAL
STA. 105+72.52 TO STA. 107+90.67 RT.	= 150 LIN. FT.	1 EACH	1 EACH
STA. 106+75.53 TO STA. 108+18.68 LT.	= 75 LIN. FT.	1 EACH	1 EACH
STA. 110+83.32 TO STA. 112+26.47 RT.	= 75 LIN. FT.	1 EACH	1 EACH
STA. 111+11.33 TO STA. 113+29.48 LT.	= 150 LIN. FT.	1 EACH	1 EACH

REMOVAL AND DISPOSAL OF GUARDRAIL			
STA.	STA.	SIDE	UNIT
107+72	108+23	RT.	52 LIN. FT.
108+06	108+44	LT.	39 LIN. FT.
110+55	110+95	RT.	40 LIN. FT.
110+78	111+30	LT.	52 LIN. FT.

DATE REVISED	DATE FILMED	DATE REVISED	DATE FILMED

FED.RD. DIST.NO.	STATE	FED.AID PROJ.NO.	SHEET NO.	TOTAL SHEETS
6	ARK.			
JOB NO.		100955	116	356

(2) PLAN AND PROFILE - HWY. 140

BRIDGE NO. 03781 IN PLACE
227'-7" X 316'-0" BRIDGE CONSISTING OF A STEEL SUPERSTRUCTURE SUPPORTED BY A CONCRETE PILE BENT SUBSTRUCTURE. REMOVE AS EXISTING BRIDGE STRUCTURE = 1.00 LUMP SUM

STA. 108+48 INSTALL
36" X 166' PIPE CULVERT
LT. SIDE DRAIN W/ AUTOMATIC FLOODGATE

TOP OF BERM, SEE SPECIAL DETAILS

+60 105' PROP. R/W

CONSTRUCTION LIMITS

EXIST. R/W

110+00

C.L. HWY. 140

N 89°19'06" E

+49

+11

TBM

EXIST. R/W

CONSTRUCTION LIMITS

BEGIN BRIDGE STA. 108+14.68

+80 115'

PROP. R/W

+35 125'

STA. 107+71 INSTALL
60" X 72' PIPE CULVERT
RT. SIDE DRAIN

STA. 107+59 IN PLACE
18" X 35' CM PIPE CULVERT
RT. SIDE DRAIN
REMOVE

DITCH NUMBER 6

STA. 108+14.68 BRIDGE END
BRIDGE NO. 07562 OVER
NATIONAL DITCH NO. 6
270'-0" CONT. W-BEAM UNIT (54',54',54',54',54')
40'-0" CLEAR ROADWAY
272'-7¾" BRIDGE LENGTH
STA. 110+87.32 BRIDGE END

END BRIDGE STA. 110+87.32

+90 110'

TOP OF BERM, SEE SPECIAL DETAILS

TOP OF BERM, SEE SPECIAL DETAILS

STA. 110+70 IN PLACE
30" X 100' CM PIPE CULVERT
RT. SIDE DRAIN
REMOVE

STA. 111+31 INSTALL
24" X 78' PIPE CULVERT
LT. SIDE DRAIN

STA. 112+37 IN PLACE
24" X 24' CM PIPE CULVERT
LT. SIDE DRAIN
REMOVE

STA. 113+11 INSTALL
36" X 70' PIPE CULVERT
RT. SIDE DRAIN
CONSTRUCT APPROACH = 124 CU. YDS.

STA. 110+81 INSTALL
42" X 138' PIPE CULVERT
RT. SIDE DRAIN W/ AUTOMATIC FLOODGATE

STA. 114+49 CONSTRUCT
APPROACH ON LT. = 50 CU. YDS.

+35 95' +30 75' T.C.E. +65 95' +70 75'

PROP. R/W

16'

CONSTRUCTION LIMITS

115+00

PROP. R/W

100' TRANSITION TO MATCH EXISTING

+50 75'

+45 39.91'

EXIST. R/W

119+00

24'

8'

23'6" EXISTING

6'

EXIST. R/W

+00.03 70.03'

STA. 116+38 IN PLACE
30" X 50' R.C. PIPE CULVERT
RETAIN AND EXTEND 13' LT. AND 17' RT.
(CLASS III) (TYPE 3 BEDDING)
Q50 = 33 CFS D.A. = 55 ACRES
30" R.C. PIPE = 38 LIN. FT.
30" F.E.S. = 2 EA.

STA. 116+50.00
END HWY. 140-SITE 1

BERM LOCATIONS FOR SIDE DRAINS. SEE SPECIAL DETAIL.

N

STATE OF ARKANSAS
LICENSED PROFESSIONAL ENGINEER
No. 13436
SHAUN A. ROBERSON

DIGITALLY SIGNED 8-13-2021

HWY. 140 - SITE 1

REFER TO SURVEY CONTROL DETAIL SHEETS
FOR HORIZONTAL AND VERTICAL CONTROL POINTS

PROFILE GRADE

EXISTING GROUND

BEGIN BRIDGE STA. 108+14.68

END BRIDGE STA. 110+87.32

0.00%

DESIGN H.W. (Q50) ELEV. 227.2

PVT 107+50.00 ELEV. 232.25

+30.00 LT. 221.27
+30.00 RT. 220.67

+64.00 LT. 219.51
+64.00 RT. 217.86

PVC 111+50.00 ELEV. 232.25

PVI 113+00.00 ELEV. 232.25

-1.49%

VC=300.00'
K=201.34
e=-0.56'

PVRC 114+50.00 ELEV. 230.02

+49.00 LT. 221.45

0.50% LT. DITCH GRADE

0.30% RT. DITCH GRADE

-0.50% LT. DITCH GRADE

VC=200.00'
K=175.44
e=0.29'

-0.35%

PVI 115+50.00 ELEV. 228.53

+38.00 LT. 220.50

PVT 116+50.00 ELEV. 228.18

1.67% LT. DITCH GRADE

PROP. F.L. = 220.50 LT.
EX. F.L. = 220.23 LT.
EX. F.L. = 219.39 RT.
PROP. F.L. = 219.58 RT.

+50.00 LT. 220.70
+50.00 RT. 219.62

100' VERTICAL TRANSITION TO MATCH EXISTING

STA. 116+50.00
END HWY. 140-SITE 1
ELEV. 228.18

FOR THE CONSTRUCTION OF DETOURS, TEMPORARY WORK RAMPS OR HAUL ROADS, THIS STREAM IS CLASSIFIED AS A PERENNIAL STREAM. THE STREAM BANK ELEVATION IS 215 FT. M.S.L. BETWEEN STATIONS 109+15 AND 110+20. REFER TO SECTION 110.06(c) OF THE 2014 STANDARD SPECIFICATIONS.

260 250 240 230 220 210 200 190 180 170

107+00 108+00 109+00 110+00 111+00 112+00 113+00 114+00 115+00 116+00 117+00 118+00 119+00

PJoseph 8/13/2021 5:27:09 PM
WORKSPACE: AHTD
L:\2017\17017642 - ARDOT Job 100955\Drawings\r100955-100996_PP_Hwy.140_Site 1.02.dgn
REVISED DATE:

STATE OF ARKANSAS
LICENSED PROFESSIONAL ENGINEER
No.13436
SHAUN A. ROBERSON
DIGITALLY SIGNED 1-5-2022

DATE REVISED	DATE FILMED	DATE REVISED	DATE FILMED	FED.RD. DIST.NO.	STATE	FED.AID PROJ.NO.	SHEET NO.	TOTAL SHEETS
01-05-2022				6	ARK.			
				JOB NO.		100955	117	356
				(2)	PLAN AND PROFILE - HWY. 140			

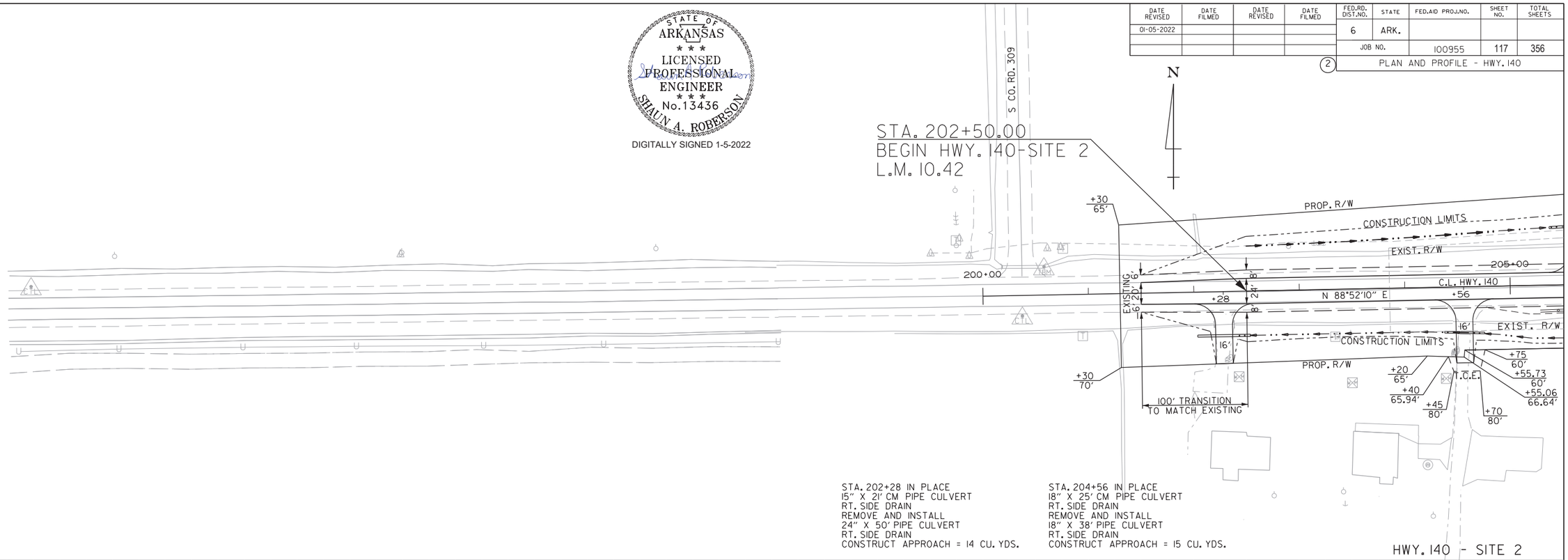

STA. 202+28 IN PLACE
15" X 21' CM PIPE CULVERT
RT. SIDE DRAIN
REMOVE AND INSTALL
24" X 50' PIPE CULVERT
RT. SIDE DRAIN
CONSTRUCT APPROACH = 14 CU. YDS.

STA. 204+56 IN PLACE
18" X 25' CM PIPE CULVERT
RT. SIDE DRAIN
REMOVE AND INSTALL
18" X 38' PIPE CULVERT
RT. SIDE DRAIN
CONSTRUCT APPROACH = 15 CU. YDS.

HWY. 140 - SITE 2

REFER TO SURVEY CONTROL DETAIL SHEETS
FOR HORIZONTAL AND VERTICAL CONTROL POINTS

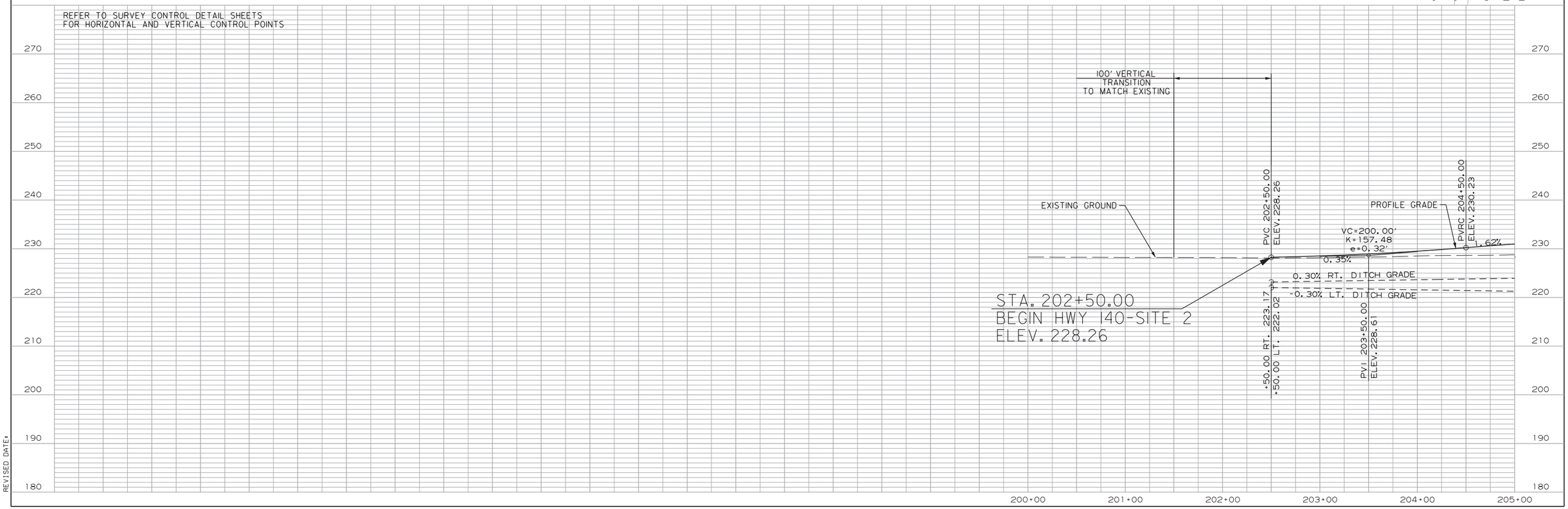

CGervasini 1/5/2022 1:58:52 PM
WORKSPACE: AHTD
L:\2017\1701642 - ARDOT Job 100955\Drawings\r100955-100996_PP_Hwy.140_Site 2.01.dgn
REVISED DATE:

STA. 205+65 INSTALL
24" X 54' PIPE CULVERT
LT. SIDE DRAIN
CONSTRUCT APPROACH = 41 CU. YDS.

C.L. HWY. 140 STATIONING	GUARDRAIL (TYPE A)	GUARDRAIL TERMINAL (TYPE 2)	THRIE BEAM GUARDRAIL TERMINAL
STA. 205+28.02 TO STA. 207+46.17 RT.	= 150 LIN. FT.	1 EACH	1 EACH
STA. 206+31.04 TO STA. 207+74.19 LT.	= 75 LIN. FT.	1 EACH	1 EACH
STA. 210+38.82 TO STA. 211+81.97 RT.	= 75 LIN. FT.	1 EACH	1 EACH
STA. 210+66.83 TO STA. 212+84.98 LT.	= 150 LIN. FT.	1 EACH	1 EACH

REMOVAL AND DISPOSAL OF GUARDRAIL STA.	STA.	SIDE	UNIT
207+27	207+79	RT.	51 LIN. FT.
207+60	207+99	LT.	39 LIN. FT.
210+11	210+51	RT.	40 LIN. FT.
210+33	210+84	LT.	52 LIN. FT.

STA. 213+34 IN PLACE
36" X 24' CM PIPE CULVERT
LT. SIDE DRAIN
REMOVE

STA. 213+85 INSTALL
36" X 56' PIPE CULVERT
LT. SIDE DRAIN
CONSTRUCT APPROACH = 87 CU. YDS.

DATE REVISED	DATE FILMED	DATE REVISED	DATE FILMED	FED.RD. DIST.NO.	STATE	FED.AID PROJ.NO.	SHEET NO.	TOTAL SHEETS
01-05-2022				6	ARK.			
				JOB NO.		100955	118	356
				(2)	PLAN AND PROFILE - HWY. 140			

STATE OF ARKANSAS
LICENSED PROFESSIONAL ENGINEER
No. 13436
SHAUN A. ROBERSON
DIGITALLY SIGNED 1-5-2022

BRIDGE NO. 03782 IN PLACE
227'-7" X 31'-0" BRIDGE CONSISTING OF
A STEEL SUPERSTRUCTURE SUPPORTED
BY A CONCRETE PILE BENT SUBSTRUCTURE. REMOVE AS
EXISTING BRIDGE STRUCTURE = 1.00 LUMP SUM

STA. 206+79 IN PLACE
24" X 30' RC PIPE CULVERT
LT. SIDE DRAIN
REMOVE

N

+40 90' PROP. R/W
16' CONSTRUCTION LIMITS
EXIST. R/W
205+00
+65
210+00
C.L. HWY. 140
N 88°52'10" E
+85
+30 95'
+65 105'
+65 84.84'
T.C.E.
+05 105'
+05 81.83'
PROP. R/W
EXIST. R/W
16'
CONSTRUCTION LIMITS
100' TRANSITION TO MATCH EXISTING
+95 60'
215+00
218+00
81'
24'
8'
EXISTING 6-20'x6'
+30 60' PROP. R/W
CONSTRUCTION LIMITS
EXIST. R/W
EXIST. R/W
CONSTRUCTION LIMITS
+95 75'
+40 80'
+50 95'
PROP. R/W
+00 125'
BEGIN BRIDGE
STA. 207+70.18
END BRIDGE
STA. 210+42.82
DITCH NUMBER 31

STA. 207+70.18 BRIDGE END
BRIDGE NO. 07563 OVER
DITCH NO. 31
270'-0" CONT. W-BEAM UNIT (54',54',54',54',54')
40'-0" CLEAR ROADWAY
272'-7¾" BRIDGE LENGTH
STA. 210+42.82 BRIDGE END

STA. 215+75.00
END HWY. 140-SITE 2

HWY. 140 - SITE 2

REFER TO SURVEY CONTROL DETAIL SHEETS
FOR HORIZONTAL AND VERTICAL CONTROL POINTS

PVI 205+75.00
ELEV. 232.26
VC=250.00'
K=154.32
e=-0.51'
1.62%
0.30% RT. DITCH GRADE
-0.30% LT. DITCH GRADE
+20.00 RT. 224.28
PVT 207+00.00
ELEV. 232.26
+20.00 LT. 220.61
+40.00 RT. 227.85
BEGIN BRIDGE
STA. 207+70.18
PROFILE GRADE
END BRIDGE
STA. 210+42.82
0.00%
DESIGN H.W. (Q50)
ELEV. 227.2
2.98% RT. DITCH GRADE
+00.00 RT. 218.20
PVC 211+25.00
ELEV. 232.26
0.50% RT. DITCH GRADE
PVI 212+50.00
ELEV. 232.26
-1.53%
+40.00 LT. 221.41
PVRC 213+75.00
ELEV. 230.34
VC=250.00'
K=163.40
e=-0.48'
VC=200.00'
K=169.49
e=0.30'
-0.35%
PVI 214+75.00
ELEV. 228.81
0.30% LT. DITCH GRADE
PVT 215+75.00
ELEV. 228.45
+75.00 RT. 221.05
+75.00 LT. 222.42
100' VERTICAL TRANSITION TO MATCH EXISTING
EXISTING GROUND
STA. 215+75.00
END HWY. 140-SITE 2
ELEV. 228.45

FOR THE CONSTRUCTION OF DETOURS, TEMPORARY WORK RAMPS OR HAUL ROADS, THIS STREAM IS CLASSIFIED AS A PERENNIAL STREAM. THE STREAM BANK ELEVATION IS 214 FT. M.S.L. BETWEEN STATIONS 208+70 AND 209+45. REFER TO SECTION 110.06(c) OF THE 2014 STANDARD SPECIFICATIONS.

270 260 250 240 230 220 210 200 190 180
205+00 206+00 207+00 208+00 209+00 210+00 211+00 212+00 213+00 214+00 215+00 216+00 217+00 218+00

CGGervasini 1/5/2022 1:58:53 PM
WORKSPACE: AHTD
L:\20\TO\TO1642 - ARDOT Job 100955\Drawings\r100955-100996_PP_Hwy.140_Site 2.02.dgn
REVISED DATE:

DATE REVISED	DATE FILMED	DATE REVISED	DATE FILMED	FED.RD. DIST.NO.	STATE	FED.AID PROJ.NO.	SHEET NO.	TOTAL SHEETS
				6	ARK.			
				JOB NO.		100955	119	356
				(2)	PLAN AND PROFILE - HWY. 140			

CONCRETE DITCH PAVING (TYPE B)

STA.	STA.	SIDE	"W"	SQ. YDS.
303+00.00	304+31.00	LT. = 131 LIN. FT.	6'-0"	87.33
303+00.00	303+70.00	RT. = 70 LIN. FT.	6'-0"	46.67
304+10.00	306+00.00	RT. = 190 LIN. FT.	6'-0"	126.67

STA. 304+22 IN PLACE
60" X 92' CMP CROSS DRAIN
72" X 97' CMP CROSS DRAIN
60" X 97' CMP CROSS DRAIN
REMOVE

STA. 304+23 CONSTRUCT
TRP. 11'X9'X100' R.C. BOX CULVERT
30° LT. FWD. SKEW
WITH 3:1 WINGS LT. & RT.
Q50 = 1366 CFS D.A. = 125632 ACRES
SPAN = 36.17'

N

STATE OF ARKANSAS
LICENSED PROFESSIONAL ENGINEER
No. 13436
SHAUN A. ROBERSON
DIGITALLY SIGNED 8-13-2021

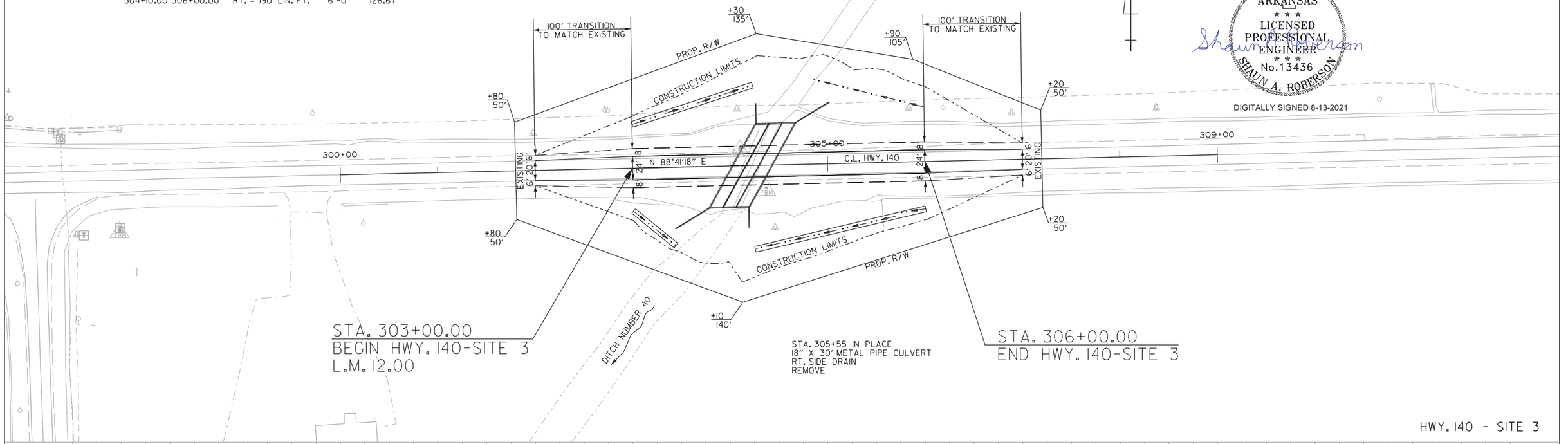

HWY. 140 - SITE 3

REFER TO SURVEY CONTROL DETAIL SHEETS
FOR HORIZONTAL AND VERTICAL CONTROL POINTS

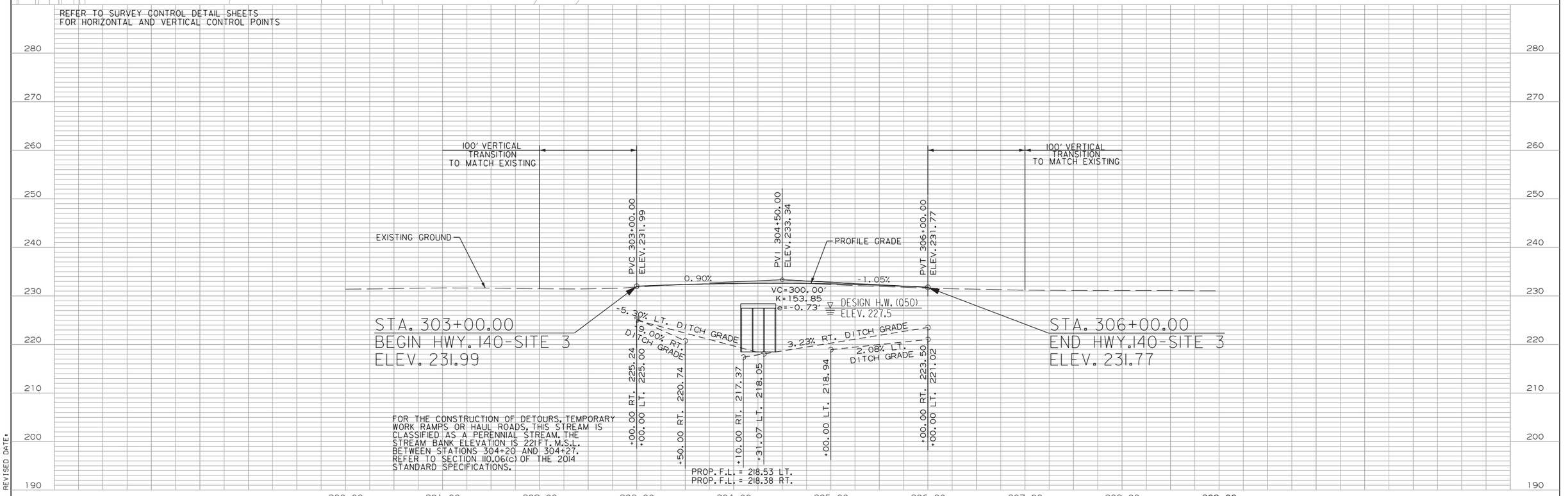

PJoseph 8/13/2021 5:27:11 PM
WORKSPACE: AHTD
L:\20\T\10\17642 - ARDOT Job 100955\Drawings\r100955-100996_PP_Hwy.140_Site 3.dgn
REVISED DATE:

DATE REVISED	DATE FILMED	DATE REVISED	DATE FILMED	FED.RD. DIST.NO.	STATE	FED.AID PROJ.NO.	SHEET NO.	TOTAL SHEETS
01-05-2022				6	ARK.			
				JOB NO.		100955	120	356
				(2)	PLAN AND PROFILE - HWY. 158			

STATE OF ARKANSAS
LICENSED PROFESSIONAL ENGINEER
No.13436
SHAUN A. ROBERSON
DIGITALLY SIGNED 1-5-2022

N

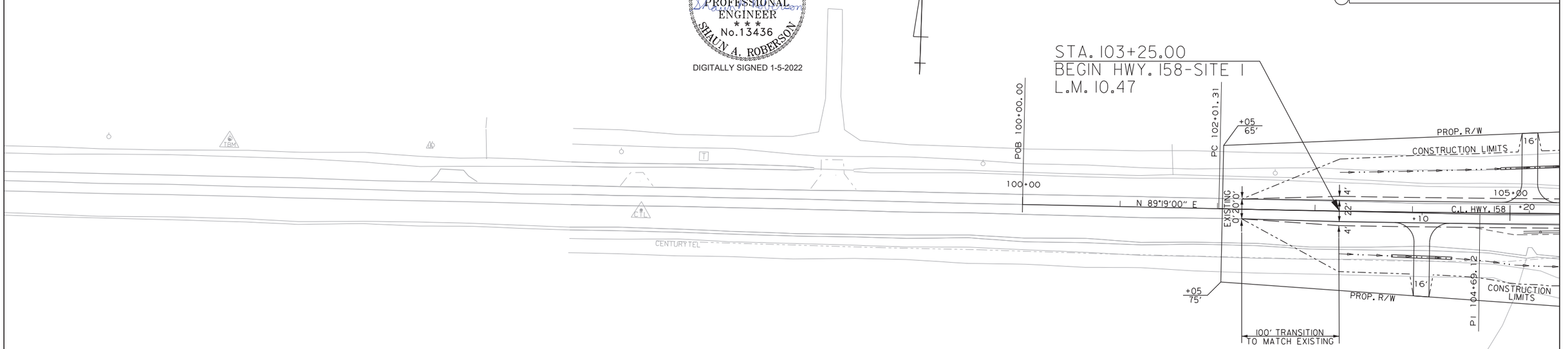

STA. 103+25.00
BEGIN HWY. 158-SITE 1
L.M. 10.47

C.L. HWY. 158 - SITE 1
PI = 104+69.12
Δ = 01°20'20" LT.
D = 00°15'00"
T = 267.81'
L = 535.60'
PC = 102+01.31
PT = 107+36.91
e = NO SUPER

STA. 104+10 INSTALL
30" X 62' PIPE CULVERT
RT. SIDE DRAIN
CONSTRUCT APPROACH = 82 CU. YDS.

HWY. 158 - SITE 1

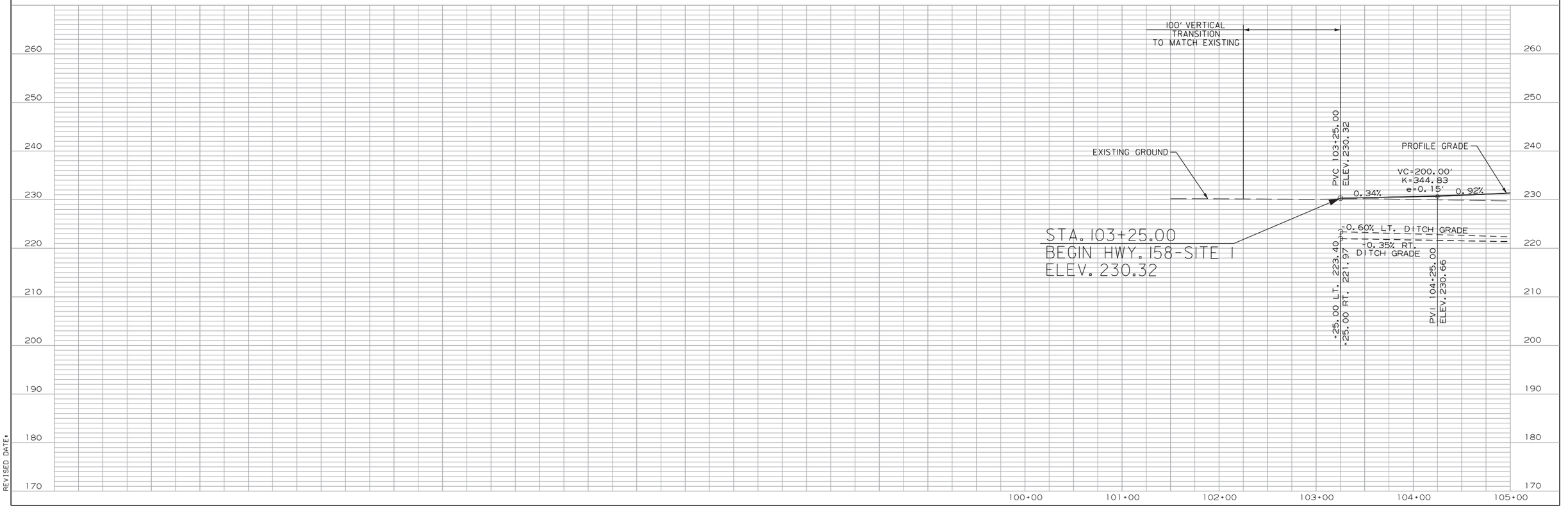

STA. 103+25.00
BEGIN HWY. 158-SITE 1
ELEV. 230.32

CGGervasini 1/5/2022 1:58:53 PM
WORKSPACE: AHTD
L:\2017\7017642 - ARDOT Job 100955\Drawings\r100955-100763_PP_Hwy. 158_01.dgn
REVISED DATE:

DATE REVISED	DATE FILMED	DATE REVISED	DATE FILMED	FED.RD. DIST.NO.	STATE	FED.AID PROJ.NO.	SHEET NO.	TOTAL SHEETS
01-05-2022				6	ARK.			
				JOB NO.		100955	121	356
				(2)	PLAN AND PROFILE - HWY. 158			

STA. 105+20 INSTALL
24" X 60' PIPE CULVERT
LT. SIDE DRAIN
CONSTRUCT APPROACH = 61 CU. YDS.

C.L. HWY. 158 STATIONING	GUARDRAIL (TYPE A)	GUARDRAIL TERMINAL (TYPE 2)	THRIE BEAM GUARDRAIL TERMINAL
STA. 105+14.03 TO STA. 107+32.18 RT.	= 150 LIN. FT.	1 EACH	1 EACH
STA. 106+10.03 TO STA. 107+53.18 LT.	= 75 LIN. FT.	1 EACH	1 EACH
STA. 110+04.82 TO STA. 111+47.97 RT.	= 75 LIN. FT.	1 EACH	1 EACH
STA. 110+25.83 TO STA. 112+43.98 LT.	= 150 LIN. FT.	1 EACH	1 EACH

STA. 108+10 IN PLACE
25" X 99' STEEL PIPE CULVERT
LT. SIDE DRAIN
REMOVE

STA. 110+65 IN PLACE
30" X 101' CM PIPE CULVERT
LT. SIDE DRAIN
REMOVE

STA. 113+23 INSTALL
30" X 74' CM PIPE CULVERT
LT. SIDE DRAIN
CONSTRUCT APPROACH = 153 CU. YDS.

STA. 115+48 IN PLACE
12" X 31' PLASTIC PIPE CULVERT
LT. SIDE DRAIN
RETAIN

BERM LOCATIONS FOR SIDE DRAINS. SEE SPECIAL DETAIL.

C.L. HWY. 158 STA 112+35.00 = C.L. HWY. 158 DRIVE 112+35 STA 10+00.00
∢90°00' 00"

STA. 110+48 INSTALL
30" X 74' PIPE CULVERT
LT. SIDE DRAIN

BRIDGE NO. M4039 IN PLACE
231'-0" X 31'-0" BRIDGE CONSISTING OF
A STEEL SUPERSTRUCTURE SUPPORTED
BY A TIMBER PILE AND CONCRETE BENT SUBSTRUCTURE.
REMOVE AS EXISTING BRIDGE STRUCTURE = 1.00 LUMP SUM

STA. 106+12 IN PLACE
18" X 30' STEEL PIPE CULVERT
LT. SIDE DRAIN
REMOVE

TOP OF BERM, SEE SPECIAL DETAILS

100' TRANSITION TO MATCH EXISTING

PROP. R/W
CONSTRUCTION LIMITS
16'
+00 90'
PT 107+36.91
BEGIN BRIDGE STA. 107+52.68
105+00
+20
LOWEST UTILITY LINE HAND PUNCH
N 87°58'40" E
C.L. HWY. 158
110+00
PC 112+59.46
PT 115+32.24
115+00
+70 50'
118+00
IN 87°17'45" E
22'
4'
20'
EXISTING
+23
PC 10+41.02
PRC 12+62.01
END BRIDGE STA. 110+05.32
+00 70'
+20 79.16'
+75 64.18'
+70 60'
PI 104+69.12
PI 113+95.86
PI 113+33.98
CONSTRUCTION LIMITS
TOP OF BERM, SEE SPECIAL DETAILS
+95 105'
STA. 107+52.68 BRIDGE END
BRIDGE NO. 07564 OVER
NATIONAL DITCH NO. 6
250'-0" CONT. W-BEAM UNIT
(50',50',50',50',50')
30'-0" CLEAR ROADWAY
252'-7¾" BRIDGE LENGTH
STA. 110+05.32 BRIDGE END
C.L. HWY. 158 DRIVE 112+35
+65 120'
+20 185'
+25 175'
+45 206'
+45 215'
T.C.E.
DITCH NUMBER 6
90°+1

STA. 114+50.00
END HWY. 158-SITE 1
L.M. 10.26

C.L. HWY. 158 - SITE 1
PI = 104+69.12
Δ = 01°20'20" LT.
D = 00°15'00"
T = 267.81'
L = 535.60'
PC = 102+01.31
PT = 107+36.91
e = NO SUPER

STA. 105+12 IN PLACE
18" X 41' STEEL PIPE CULVERT
RT. SIDE DRAIN
REMOVE

STA. 107+12 INSTALL
24" X 74' PIPE CULVERT
RT. SIDE DRAIN

STA. 106+63 IN PLACE
36" X 101' CM PIPE CULVERT
RT. SIDE DRAIN
RETAIN

C.L. HWY. 158 - SITE 1
PI = 113+95.86
Δ = 00°40'55" LT.
D = 00°15'00"
T = 136.40'
L = 272.78'
PC = 112+59.46
PRC = 115+32.24
e = NO SUPER

STA. 112+35 INSTALL
18" X 64' CM PIPE CULVERT
RT. SIDE DRAIN
CONSTRUCT APPROACH = 912 CU. YDS.

STATE OF ARKANSAS
LICENSED PROFESSIONAL ENGINEER
No. 13436
SHAUN A. ROBERSON
DIGITALLY SIGNED 1-5-2022

HWY. 158 - SITE 1

REFER TO SURVEY CONTROL DETAIL SHEETS
FOR HORIZONTAL AND VERTICAL CONTROL POINTS

100' VERTICAL TRANSITION TO MATCH EXISTING

EXISTING GROUND

PROFILE GRADE

PVRC 105+25.00 ELEV. 231.58
PVI 106+25.00 ELEV. 232.50
PVT 107+25.00 ELEV. 232.50
BEGIN BRIDGE STA. 107+52.68
END BRIDGE STA. 110+05.32
PVC 110+50.00 ELEV. 232.50
PVI 111+50.00 ELEV. 232.50
PVRC 112+50.00 ELEV. 231.54
PVI 113+50.00 ELEV. 230.58
PVT 114+50.00 ELEV. 230.23

0.92%
VC=200.00'
K=217.39
e=-0.23'
0.00%
DESIGN H.W. (025) ELEV. 227.1
-0.96%
VC=200.00'
K=208.33'
e=-0.24'
VC=200.00'
K=327.87
e=0.15' -0.35%
-0.60% LT. DITCH GRADE
-0.35% RT. DITCH GRADE
-1.00% RT. DITCH GRADE e=-0.24'
-0.30% RT. DITCH GRADE
0.40% LT. DITCH GRADE

+50.00 LT. 220.87
+50.00 RT. 220.47
+00.00 RT. 229.53
+11.00 LT. 220.39
+00.00 RT. 227.53
+50.00 RT. 226.78
+50.00 LT. 222.15

STA. 114+50.00
END HWY. 158-SITE 1
ELEV. 230.23

FOR THE CONSTRUCTION OF DETOURS, TEMPORARY WORK RAMPS OR HAUL ROADS, THIS STREAM IS CLASSIFIED AS A PERENNIAL STREAM. THE STREAM BANK ELEVATION IS 217 FT. M.S.L. BETWEEN STATIONS 108+70 AND 109+15. REFER TO SECTION 110.06(c) OF THE 2014 STANDARD SPECIFICATIONS.

260 250 240 230 220 210 200 190 180 170

105+00 106+00 107+00 108+00 109+00 110+00 111+00 112+00 113+00 114+00 115+00 116+00 117+00 118+00

CGervasini 1/5/2022 1:58:54 PM
WORKSPACE: AHTD
L:\2017\170\7642 - ARDOT Job 100955\Drawings\r100955-100763_PP_Hwy.158_02.dgn
REVISED DATE:

DATE REVISED	DATE FILMED	DATE REVISED	DATE FILMED	FED.RD. DIST.NO.	STATE	FED.AID PROJ.NO.	SHEET NO.	TOTAL SHEETS
01-05-2022				6	ARK.			
				JOB NO.		100955	122	356

(2) PLAN & PROFILE - HWY. 158 DRIVE 112+35

STATE OF ARKANSAS
LICENSED PROFESSIONAL ENGINEER
No. 13436
SHAUN A. ROBERSON

DIGITALLY SIGNED 1-5-2022

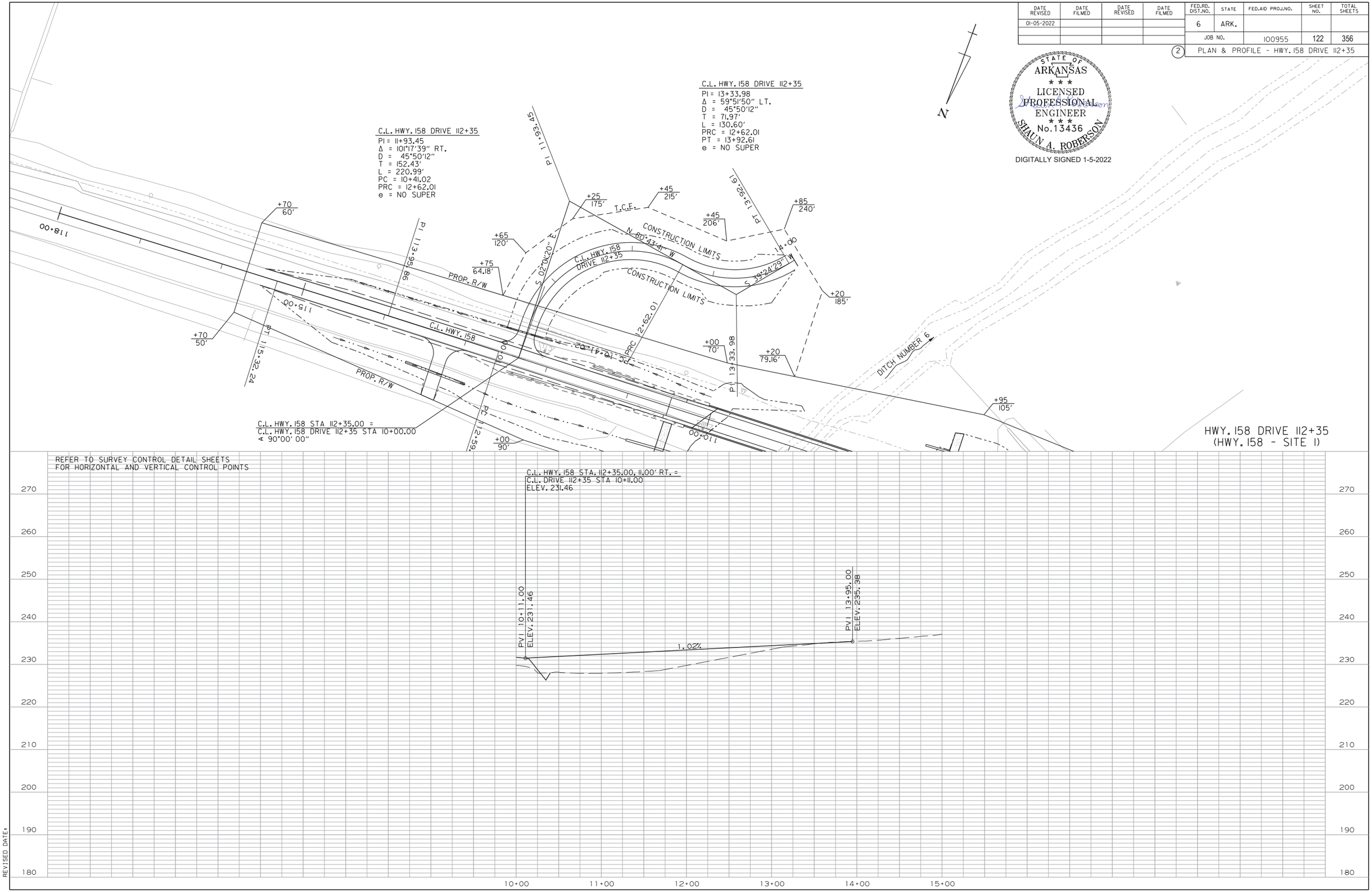

CGGervasini 1/5/2022 1:58:57 PM
WORKSPACE: AHTD
L:\2017\17017642 - ARDOT Job 100955\Drawings\r100955-100763_PP_Hwy.158_Drive 112+35.dgn
REVISED DATE:

DATE REVISED	DATE FILMED	DATE REVISED	DATE FILMED	FED.RD. DIST.NO.	STATE	FED.AID PROJ.NO.	SHEET NO.	TOTAL SHEETS
				6	ARK.			
				JOB NO.		100955	123	356
				(2)	PLAN AND PROFILE - HWY. 181			

STA. 101+41 IN PLACE
15" X 48' METAL PIPE CULVERT
LT. SIDE DRAIN
REMOVE AND INSTALL
18" X 44' PIPE CULVERT
LT. SIDE DRAIN
CONSTRUCT APPROACH = 15 CU. YDS.

BRIDGE NO. M223I IN PLACE
44'-0" X 25'-0" BRIDGE CONSISTING OF A PRECAST CONCRETE SUPERSTRUCTURE SUPPORTED BY A TIMBER PILE BENT SUBSTRUCTURE. REMOVE AS EXISTING BRIDGE STRUCTURE = 1.00 LUMP SUM

STA. 102+29 CONSTRUCT
18" X 18' PIPE CULVERT LT.
TO R.C. BOX CULVERT AT STA. 102+50
18" R.C. PIPE (CLASS III)
(TYPE 3 BEDDING) = 18 LIN. FT.
18" SLPPMCCS PIPE
(TYPE 2 BEDDING) = 18 LIN. FT.

STA. 102+50 CONSTRUCT
TRP. 10'X9'X86' R.C. BOX CULVERT
10° LT FWD. SKEW
WITH 3:1 WINGS LT. & RT.
Q25 = 690 CFS D.A. = 2033 ACRES
SPAN = 32.67'

STA. 102+00.00
BEGIN HWY. 181-SITE 1
L.M. 4.17

STA. 103+00.00
END HWY. 181-SITE 1

DITCH NUMBER 47

P.I. 101+00.00
Δ=0°26'35" RT

P.I. 103+00.00
Δ=0°56'11" LT

P.I. 102+00.00
Δ=0°02'31" LT

P.I. 104+00.00
Δ=0°18'05" RT

CONSTRUCTION LIMITS

PROP. R/W

EXIST. R/W

C.L. HWY. 181

N 12°59'17" W
N 12°32'42" W
N 12°35'13" W
N 13°31'24" W
N 13°13'19" W

100+00
105+00

+35 70'
+30.56 59.15'
+60 60'
+60 58.95'
+25 95'
+25 58.50'
+10 100'
+20 60'
+15.68 38.82'
+17.80 0.44'
+80 38.36'
+80 40'
+95 95'
+82.72 83.93'
+39.97 89.32'
+10 60'
+20 39.38'
+20 50'

16'
20'
4'

100' TRANSITION TO MATCH EXISTING

CURB
CONC PARKING
PAVED
CULVERTED
TANK

STA. 101+17 IN PLACE
18" X 34' R.C. PIPE CULVERT
RT. SIDE DRAIN
REMOVE AND INSTALL
18" X 42' PIPE CULVERT
RT. SIDE DRAIN
CONSTRUCT APPROACH = 14 CU. YDS.

REMOVAL AND DISPOSAL OF FENCE

STA.	STA.	SIDE	UNIT
102+60	103+43	RT.	157 LIN. FT.

FENCING

STA.	STA.	SIDE	6' CHAIN LINK FENCE
102+60	103+43	RT.	98 LIN. FT

STA. 103+96 IN PLACE
18" X 20' CM PIPE CULVERT
18" X 20' RC PILE CULVERT
RT. SIDE DRAINS
REMOVE AND INSTALL
24" X 50' PIPE CULVERT
RT. SIDE DRAIN
CONSTRUCT APPROACH = 8 CU. YDS.

HWY. 181 - SITE 1

STATE OF ARKANSAS
LICENSED PROFESSIONAL ENGINEER
No. 13436
SHAUN A. ROBERSON

DIGITALLY SIGNED 8-13-2021

REFER TO SURVEY CONTROL DETAIL SHEETS
FOR HORIZONTAL AND VERTICAL CONTROL POINTS

100' VERTICAL TRANSITION TO MATCH EXISTING

STA. 102+00.00
BEGIN HWY 181-SITE 1
ELEV. 232.08

PVI 102+00.00
ELEV. 232.08

PVI 103+00.00
ELEV. 232.07

STA. 103+00.00
END HWY 181-SITE 1
ELEV. 232.07

PROFILE GRADE

EXISTING GROUND

-0.01%

-1.00% LT. DITCH GRADE

-0.50% RT. DITCH GRADE

-14.72% LT. DITCH GRADE

0.50% LT. DITCH GRADE

0.50% RT. DITCH GRADE

DESIGN H.W. (Q25)
= ELEV. 228.5

+37.00 LT. 228.12	+00.00 RT. 227.33	+20.00 LT. 227.55	+38.00 RT. 227.14	+38.00 LT. 224.90	+65.00 LT. 225.97	+65.00 RT. 225.80
					+00.00 LT. 226.14	+00.00 RT. 225.96

PROP. F.L. = 220.15 LT.
PROP. F.L. = 220.25 RT.

FOR THE CONSTRUCTION OF DETOURS, TEMPORARY WORK RAMPS OR HAUL ROADS, THIS STREAM IS CLASSIFIED AS A INTERMITTENT STREAM. THE STREAM BANK ELEVATION IS 224 FT. M.S.L. BETWEEN STATIONS 102+45 AND 102+55. REFER TO SECTION 110.06(c) OF THE 2014 STANDARD SPECIFICATIONS.

270 260 250 240 230 220 210 200 190 180

100+00 101+00 102+00 103+00 104+00 105+00

PJoseph 8/13/2021 5:27:19 PM
WORKSPACE: AHTD
L:\201\T01I7642 - ARDOT Job 100955\Drawings\r100955_PP_Hwy.181_Site 1.dgn
REVISED DATE:

DATE REVISED	DATE FILMED	DATE REVISED	DATE FILMED	FED.RD. DIST.NO.	STATE	FED.AID PROJ.NO.	SHEET NO.	TOTAL SHEETS
				6	ARK.			
				JOB NO.		100955	124	356
				(2)	PLAN AND PROFILE - HWY. 181			

STA. 202+91 CONSTRUCT
TRP. 11'X9'X119' R.C. BOX CULVERT
45° RT. FWD. SKEW
WITH 3:1 WINGS LT. & RT.
Q25 = 1184 CFS D.A. = 125632 ACRES
SPAN = 36.17'

STA. 202+77 IN PLACE
24" 'X 24' CM PIPE CULVER
LT. SIDE DRAIN
REMOVE

STA. 202+81 IN PLACE
6'X6'X64' RCB CROSS DRAIN
REMOVE

STA. 202+91 IN PLACE
60" X 70' RCP CROSS DRAIN
REMOVE

CONCRETE DITCH PAVING (TYPE B)

STA.	STA.	SIDE	"W"	SQ. YDS.
202+50	203+50	LT. = 100 LIN. FT.	6'-0"	66.67
202+90	203+00	LT. = 10 LIN. FT.	6'-0"	6.67

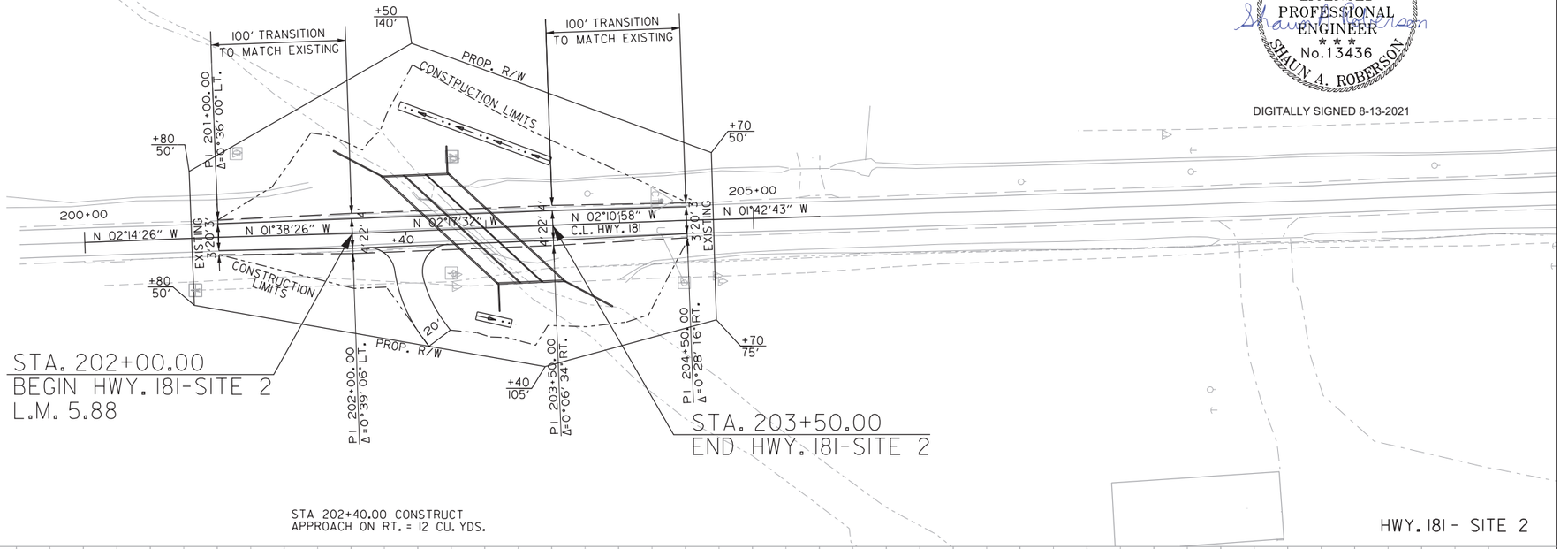

STA 202+40.00 CONSTRUCT
APPROACH ON RT. = 12 CU. YDS.

HWY. 181 - SITE 2

STATE OF ARKANSAS
LICENSED PROFESSIONAL ENGINEER
No. 13436
SHAUN A. ROBERSON

DIGITALLY SIGNED 8-13-2021

REFER TO SURVEY CONTROL DETAIL SHEETS
FOR HORIZONTAL AND VERTICAL CONTROL POINTS

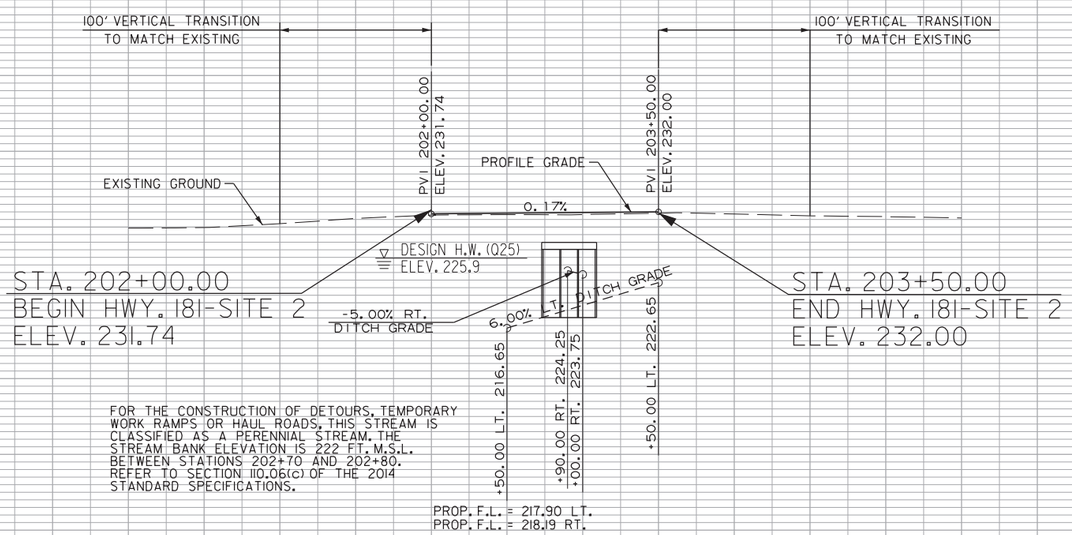

Pjoseph 8/13/2021 5:27:20 PM
WORKSPACE: AHTD
L:\20\T\T0\T642 - ARDOT Job 100955\Drawings\r100955-100996_PP_Hwy.181_Site 2.dgn
REVISED DATE:

DATE REVISED	DATE FILMED	DATE REVISED	DATE FILMED	FED.RD. DIST.NO.	STATE	FED.AID PROJ.NO.	SHEET NO.	TOTAL SHEETS
				6	ARK.			
				JOB NO.		100955	125	356
				(2)	PLAN AND PROFILE - HWY. 181			

STA. 301+86 IN PLACE
15" X 24' CM PIPE CULVERT
LT. SIDE DRAIN
REMOVE AND INSTALL
30" X 36' CM PIPE CULVERT
LT. SIDE DRAIN
CONSTRUCT APPROACH = 15 CU. YDS.

STA. 303+81 IN PLACE
16" X 24' CM PIPE CULVERT
LT. SIDE DRAIN
REMOVE AND INSTALL
30" X 48' CM PIPE CULVERT
LT. SIDE DRAIN
CONSTRUCT APPROACH = 17 CU. YDS.

STA. 307+92.00 CONSTRUCT
APPROACH ON LT. = 33 CU. YDS.

STA. 306+75 CONSTRUCT
TRP. 9'X9'X84' R.C. BOX CULVERT
WITH 3:1 WINGS LT. & RT.
Q25 = 829 CFS D.A. = 2202 ACRES
SPAN = 30.17'

N

STA. 309+97 IN PLACE
18" X 24' CM PIPE CULVERT
LT. SIDE DRAIN
REMOVE AND INSTALL
18" X 46' CM PIPE CULVERT
LT. SIDE DRAIN
CONSTRUCT APPROACH = 17 CU. YDS.

BRIDGE NO. M2232 IN PLACE
45'-0" X 25'-1" BRIDGE CONSISTING OF
A PRECAST CONCRETE SUPERSTRUCTURE SUPPORTED
BY A TIMBER PILE BENT SUBSTRUCTURE. REMOVE AS
EXISTING BRIDGE STRUCTURE = 1.00 LUMP SUM

DITCH NUMBER 44

STA. 311+00.00
END HWY. 181-SITE 3

100' TRANSITION TO MATCH EXISTING

P.I. 301+00.00
Δ=0°09'55" LT

+80 80'

+40 70'

+50 100'

+80 85'

+75 65.62'

+45 65'

+05 85'

+10 66.35'

T.C.E

PROP. R/W

CONSTRUCTION LIMITS

16'

EXIST. R/W

+80 39.10'

300+00

305+00

310+00

313+00

C.L. HWY. 181

N 02°16'39" W

+86

N 02°08'03" W

+81

+45

+92

+97

N 02°06'43" W

N 02°06'34" W

N 01°54'39" W

EXISTING 0'20'0"

4'

22'

P.I. 311+00.00
Δ=0°01'28" RT

+20 75'

+20 39.77'

+20 40.23'

+20 75'

+80 40.90'

+80 80'

+50 75'

+30 70'

P.I. 302+00.00
Δ=0°08'36" RT

P.I. 312+00.00
Δ=0°11'56" RT

100' TRANSITION TO MATCH EXISTING

STA. 302+00.00
BEGIN HWY. 181-SITE 3
L.M. 0.40

STATE OF ARKANSAS
LICENSED PROFESSIONAL ENGINEER
No. 13436
SHAUN A. ROBERSON

DIGITALLY SIGNED 8-13-2021

HWY. 181 - SITE 3

REMOVAL AND DISPOSAL OF GUARDRAIL

STA.	STA.	SIDE	UNIT
306+25	306+52	LT.	28 LIN. FT.
306+25	306+52	RT.	28 LIN. FT.
307+00	307+28	LT.	28 LIN. FT.
307+00	307+28	RT.	28 LIN. FT.

STA. 305+29 IN PLACE
18" X 26' METAL PIPE CULVERT
RT. SIDE DRAIN
REMOVE

STA. 307+45 IN PLACE
30" X 60' CM PIPE CULVERT
RT. SIDE DRAIN
REMOVE AND INSTALL
30" X 42' CM PIPE CULVERT
RT. SIDE DRAIN
CONSTRUCT APPROACH = 34 CU. YDS.

STA. 309+92 IN PLACE
16" X 24' CM PIPE CULVERT
RT. SIDE DRAIN
REMOVE

REFER TO SURVEY CONTROL DETAIL SHEETS
FOR HORIZONTAL AND VERTICAL CONTROL POINTS

100' VERTICAL TRANSITION TO MATCH EXISTING

EXISTING GROUND

PVC 302+00.00
ELEV. 230.46

+00.00 LT. 226.59
+00.00 RT. 225.27

0.35%

VC=250.00'
K=219.30
e=0.36'

PVI 303+25.00
ELEV. 230.90

-1.00% LT. DITCH GRADE
-0.50% RT. DITCH GRADE

PVRC 304+50.00
ELEV. 232.76

-0.50% RT. DITCH GRADE
-1.00% LT. DITCH GRADE

PVI 306+75.00
ELEV. 236.11

VC=450.00'
K=151.52
e=-1.67'

1.49%

-1.48%

PROFILE GRADE

PVRC 309+00.00
ELEV. 232.78

VC=200.00'
K=204.08
e=0.24'

-0.50%

PVT 311+00.00
ELEV. 230.80

-0.50% LT. DITCH GRADE

0.40% RT. DITCH GRADE

DESIGN H.W. (Q25)
ELEV. 228.7

+50.00 RT. 223.00
+60.00 LT. 221.99

+00.00 RT. 224.68

+80.00 LT. 228.30

PVI 310+00.00
ELEV. 231.30

+00.00 LT. 226.70
+00.00 RT. 226.28

STA. 311+00.00
END HWY 181-SITE 3
ELEV. 230.80

FOR THE CONSTRUCTION OF DETOURS, TEMPORARY WORK RAMPS OR HAUL ROADS, THIS STREAM IS CLASSIFIED AS A INTERMITTENT STREAM. THE STREAM BANK ELEVATION IS 223 FT. M.S.L. BETWEEN STATIONS 306+65 AND 306+85. REFER TO SECTION 110.06(c) OF THE 2014 STANDARD SPECIFICATIONS.

PROP. F.L. = 221.44 LT.
PROP. F.L. = 221.62 RT.

270 260 250 240 230 220 210 200 190 180

300+00 301+00 302+00 303+00 304+00 305+00 306+00 307+00 308+00 309+00 310+00 311+00 312+00 313+00

P.Joseph 8/13/2021 5:27:21 PM
WORKSPACE: AHTD
L:\201\170\7642 - ARDOT Job 100955\Drawings\r100955_PP_Hwy.181_Site 3.dgn
REVISED DATE:

DATE REVISED	DATE FILMED	DATE REVISED	DATE FILMED	FED. ROAD DIST. NO.	STATE	FED. AID PROJ. NO.	SHEET NO.	TOTAL SHEETS
				6	ARK.			
				JOB NO.		100955	126	355
				(1) 07556-07564		GENERAL NOTES		64303

PROJECT GENERAL NOTES

BENCHMARK: Vertical Control Data are shown on the Survey Control Data Sheets. The Contractor shall be aware that not all bridges within the project utilize the same survey control. Refer to Survey Control Data Sheets for more Information.

CONSTRUCTION SPECIFICATIONS: Arkansas State Highway and Transportation Department Standard Specifications for Highway Construction (2014 Edition) with applicable Supplemental Specifications and Special Provisions. Unless otherwise noted in the plans, Section and Subsection numbers refer to the Standard Construction Specifications.

DESIGN SPECIFICATIONS: AASHTO LRFD Bridge Design Specifications (2017, 8th Edition)
AASHTO Guide Specifications for LRFD Seismic Bridge Design (2011, 2nd Edition) with current Interims

LIVE LOADING: HL-93

SEISMIC DESIGN CATEGORY (SDC): D S_{D1} = 0.852g Site Class = D

SEISMIC OPERATIONAL CLASSIFICATION: Other

MATERIALS AND STRENGTHS:

Class S(AE) Concrete (Superstructure)	f'c = 4,000 psi
Class S Concrete (Substructure)	f'c = 3,500 psi
Reinforcing Steel (AASHTO M 31 or M 322, Type A)	fy = 60,000 psi
Reinforcing Steel (ASTM A706)	fy = 60,000 psi
Structural Steel (ASTM A709, Gr. 50)	Fy = 50,000 psi
Structural Steel (ASTM A709, Gr. 50W)	Fy = 50,000 psi
Structural Steel (ASTM A709, Gr. 36)	Fy = 36,000 psi

BORING LOGS: Boring Logs may be obtained from the Construction Contract Development Section of the Program Management Division.

PAINTING: All Grade 50W structural steel, except galvanized members, surfaces in contact with concrete, and the expansion device, within six feet of bridge deck expansion joints shall be painted as specified in Subsection 807.75. The color of paint shall be Brown equal or close to Federal Std. 595B, Color Chip No. 30070 and as approved by the Engineer. The finish system may be applied in the shop. Any damage to the paint system occurring during transport or installation shall be corrected according to the Manufacturer's recommendations at no cost to the Department. ASTM F3125, Grade A325 Type 3 bolts shall be used within these painted zones and shall be painted. Painting of beam ends shall not be paid for separately but shall be included in the unit price bid for the item "PREFABRICATED SUPERSTRUCTURE MODULES".

BRIDGE DECK: Bridge decks shall be given a burlap drag finish as specified for initial finishing in Subsection 801.19 for Class 5 Tined Bridge Roadway Surface Finish. The final tine finish shall be omitted. Lithium curing compound will not be permitted as a substitute for curing methods specified in 802.17(b), in accordance with SP "CONCRETE BRIDGE DECK CURING AND SURFACE TREATMENT RESTRICTIONS". The bridge decks shall be given a polymer overlay in accordance with SP "POLYMER OVERLAY".

PROTECTIVE SURFACE TREATMENT: Class 2 Protective Surface Treatment shall be applied to the top of backwalls, the top and roadway faces of bridge rails, and the bridge roadway surface in accordance with Section 803. Class 2 Protective Surface Treatment shall be applied after deck grinding is complete and prior to application of polymer overlay.

ACCELERATED BRIDGE CONSTRUCTION: The use of Prefabricated Superstructure Modules will be required. Prefabricated Superstructure Modules shall be fabricated in accordance with SP "PREFABRICATED SUPERSTRUCTURE MODULES". See "MODULE FABRICATION" below for additional information.

PRECAST CONCRETE BENT CAPS: The use of precast concrete bent caps will be required at intermediate bents. Precast Concrete Bent Caps shall be constructed in accordance with SP "PRECAST CONCRETE BENT CAPS". Shop drawings will be required - See Dwg. No. 64304 for "PRECAST BENT CAP FABRICATION TOLERANCES".

MAINTENANCE OF TRAFFIC: See Roadway Plans.

PILE TOLERANCE: The Contractor shall note that tighter pile location tolerance shall be required for use with the precast concrete bent caps at the intermediate bents. Use of a pile driving template is strongly encouraged. The Contractor shall be permitted to make minor adjustments to the position of the top of pile by jacking or other approved means to facilitate proper fit-up of the precast bent cap. Adjustment methods that damage or permanently deform the pile or pile encasement shall not be permitted. For more information, see SP "PILE DRIVING TOLERANCES". The Contractor may elect to pour the precast cap following the completion of the pile driving operation to determine the actual pile spacing configuration. This will allow the final position of the reinforcing and corrugated steel pocket connections to accommodate the as-driven pile conditions.

MODULE FABRICATION: The Contractor shall be required to submit a module fabrication plan for review and approval by the Engineer. The module fabrication plan shall meet the requirements noted in SP "PREFABRICATED SUPERSTRUCTURE MODULES". Key components of the fabrication plan shall include, but shall not be limited to, the following:

1. Name and experience record of fabricator
2. Location and description of fabrication site
3. Description of proposed equipment
4. Details of temporary supports
5. Sequence and schedule of fabrication operations
6. Description of quality control

The Contractor is strongly encouraged to combine framing/casting operations for all modules within a given span simultaneously, under temporary support conditions that correspond with the relative position (location and elevation) of the design bridge substructure seats. The following is a suggested fabrication procedure for the superstructure modules:

1. Position all structural steel framing components for all modules within a given span to correspond with the relative location(s) and elevation(s) of the final constructed condition.
2. Support structural steel framing components only at designated bearing locations to allow for accurate deflection of the modular units during precasting of the deck sections.
3. Place module reinforcing in accordance with the design plans.
4. Place concrete for all modules within a given span in one combined pour, using formed blockouts at the locations of planned construction joints. Control finished concrete surface to account for the design deck thickness, skew, crown profile, and profile grade.
5. Implement quality control/quality assurance measures as necessary to ensure proper fit of prefabricated superstructure modules in the final assembled condition.

Design and safety of all temporary supports required shall be the sole responsibility of the Contractor. Temporary supports shall remain the property of the Contractor and all temporary supports shall be removed by the Contractor prior to completion of the project. All costs associated with furnishing the superstructure modules, including temporary supports, fabrication, storage, and delivery, shall be incidental to the price bid for "PREFABRICATED SUPERSTRUCTURE MODULES". See Dwg. No. 64305 for suggested sequence of construction.

ULTRA HIGH PERFORMANCE CONCRETE (UHPC) LONGITUDINAL JOINT: Longitudinal joints between prefabricated modules shall be constructed of UHPC in accordance with the SP "ULTRA HIGH PERFORMANCE CONCRETE". The Contractor shall be required to batch and place all UHPC materials in accordance with the manufacturer's recommendations. The Contractor shall be required to provide a representative of the manufacturer on-site during all UHPC placement operations. Material properties of UHPC vary considerably from conventional concrete, both during the plastic state and hardened state. The Contractor shall note that additional forming effort will be required to ensure forms are properly sealed and are capable of resisting the anticipated form pressures. Stay-in-place metal forms will not be allowed within the bays where the UHPC closure pours reside. The Contractor shall note that UHPC placement on grade typically requires top forms for containment of the material within the designated placement area. Top forms commonly require application of mechanical fasteners and/or dead weight to resist pressures created by the fluid UHPC materials. The Contractor shall note that concrete screw anchors shall not be considered an acceptable means of securing top forms to the concrete bridge deck surface, due to the anticipated detrimental impacts of the anchor holes on deck service life. Shallow concrete nails with a maximum embedment of ¾" may be considered an acceptable means of fastening joint forms. Alternate methods for securing joint forms may be proposed by the Contractor, subject to the Engineer's review and approval. The Contractor shall be required to submit a UHPC placement plan and a demonstration UHPC joint mockup in accordance with the SP "ULTRA HIGH PERFORMANCE CONCRETE", for review by the Engineer. The UHPC placement plan shall detail the proposed method of joint surface preparation, the proposed forming method(s), and the proposed sequence and schedule of placement operations. The UHPC demonstration joint mockup shall be as detailed in these plans and shall be constructed using methods and procedures representative of the UHPC placement for bridge longitudinal joints.

ASSEMBLY PLAN: The Contractor shall be required to submit assembly plan(s) of prefabricated superstructure modules and precast concrete bent caps for review by the Engineer. The assembly plan(s) shall meet the requirements noted in SP "PREFABRICATED SUPERSTRUCTURE MODULES" and SP "PRECAST CONCRETE BENT CAPS". Key components of the assembly plan(s) shall include, but shall not be limited to, the following:

Construction Load Analysis:

The prefabricated superstructure and precast caps for this project were designed to support the factored design loads in the final constructed condition. Construction loads will be dependent upon the means and methods utilized for construction, and analysis of construction loads was not included as a part of this design. The Contractor shall be responsible for ensuring that construction loads do not exceed the design capacity of any component of the structure at any stage of construction. Construction load analyses, designed and certified by a Professional Engineer licensed in the state of Arkansas, shall be required as a part of the assembly plan(s). Construction loads that should be considered in the construction load analyses include, but are not limited to the following:

1. Lifting reactions and handling stresses
2. Construction live loads on module deck prior to development of module connections
3. Other construction forces

If required, the Contractor may propose modification (strengthening) of components of the design to accommodate specific construction loads. Design of the component strengthening shall include engineering analysis by the Contractor and shall be subject to the Engineer's review. All costs associated with design and implementation of component strengthening for the purposes of facilitating construction shall be borne by the Contractor.

Lifting Device Design:

Design of lifting devices and/or attachment points shall be submitted as a part of the assembly plan. Lifting devices and/or attachment points shall be designed and certified by a Professional Engineer licensed in the state of Arkansas. The assembly plan submittal shall include design of the specific lifting devices and/or attachment points, and structural analysis of the component to be lifted to determine if auxiliary reinforcing and/or bracing are required to facilitate lifting operations. Design of the lifting devices and/or attachment points shall include a sufficient degree of conservatism and/or redundancy as appropriate for safe, accelerated construction. The assembly plan submittal shall include a description of permissible lifting equipment compatible with the proposed design, along with requirements and parameters for rigging, as required. Lifting devices and/or attachment points shall be removed after lifting in a manner approved by the Engineer. All costs associated with lifting devices and lifting operations shall be included in the cost of the prefabricated components being lifted.

Precast Bent Cap Connection:

Contractor shall submit proposed methods of supporting the precast concrete bent cap during installation. Field welding of brackets to the steel shell piling shall not be permitted. The contractor shall be responsible for the stability of the precast bent caps throughout the construction operation. See SP "PRECAST CONCRETE BENT CAPS" for additional information.

Temporary Supports/Bracing:

The Contractor shall be solely responsible for ensuring the safety, stability, and integrity of structural components during fabrication, transport, lifting and construction. The Contractor shall provide temporary supports and/or bracing as required to satisfy this requirement. Temporary supports and bracing shall be designed and certified by a Professional Engineer licensed in the state of Arkansas and shall be subject to the Engineer's review.

JOINT PREPARATION: Keyed joint surfaces for longitudinal UHPC joints and transverse deck closure shall receive a textured finish consisting of micro- and macro-texture. Joint surfaces shall receive an exposed aggregate texture to Concrete Surface Profile 6 or rougher, as established by the International Concrete Repair Institute (ICRI). Joint texture may be achieved by one or more of the following means:

1. Media blasting
2. Use of a textured formliner
3. Use of a form retarder at the joint surface, followed by pressure washing after initial set to provide an exposed aggregate finish
4. Other means, subject to Engineer's approval

The Contractor shall be responsible for constructing a UHPC Mock Panel prior to performing closure pours, as stated in the SP "ULTRA HIGH PERFORMANCE CONCRETE". See Dwg. No. 64424 for additional information. All work for preparation and texturing of keyed joint surfaces for longitudinal and transverse deck module connections shall be included in the cost of the Prefabricated Superstructure Modules.

DECK GRINDING: After the prefabricated superstructure modules have been set and strength is attained in the transverse closure pour concrete and longitudinal UHPC joints, the deck surface shall be diamond-ground to achieve a uniform profile and smooth riding surface in accordance with the SP "BRIDGE DECK GRINDING". The grinding equipment shall be power-driven and specifically designed to smooth and texture portland cement concrete by means of diamond blades. The bridge decks of the prefabricated superstructure modules have been designed with a ¼" sacrificial thickness. Therefore, the nominal depth of deck grinding shall not exceed ¼". The Contractor shall be required to coordinate with the manufacturer of the UHPC materials to determine the optimum timeframe for grinding of the UHPC. Specialized grinding equipment may be required to grind the UHPC materials. Bid price for deck grinding shall (account for) be based on the strength and composition of the Class S(AE) concrete and the UHPC to be used by the Contractor.

For "STEEL SHELL PILING", "PILE ENCASEMENT", "DRIVING SYSTEM", "EXISTING BRIDGE", and "REMOVAL AND SALVAGE" notes, see "GENERAL NOTES" on each bridge layout.

STATE OF ARKANSAS
LICENSED PROFESSIONAL ENGINEER
No.8017
JOHN H. RUDDELL

DIGITALLY SIGNED 8-13-2021
BRIDGE ENGINEER

PROJECT GENERAL NOTES
HWYS. 77, 140, 158, & 181
STRS. & APPRS. (MISSISSIPPI CO.) (S)
MISSISSIPPI COUNTY
ROUTE 77, 140 & 158 SEC. 1 & 2

ARKANSAS STATE HIGHWAY COMMISSION
LITTLE ROCK, ARK.

DRAWN BY: JME DATE: JUNE 2021 FILENAME: b100955_GN.dgn
CHECKED BY: JHR DATE: JUNE 2021 SCALE: No Scale
DESIGNED BY: JME DATE: JUNE 2021

BRIDGE NO. 07556-07564 DRAWING NO. 64303

abhall 8/13/2021 9:52:18 AM
WORKSPACE: ARDOT Bridge (2019)
L:\20??\??07642 - ARDOT Job 100955\Drawings\b100955_SIOL.GN.dgn
REVISED DATE:

DATE REVISED	DATE FILMED	DATE REVISED	DATE FILMED

FED. ROAD DIST. NO.	STATE	FED. AID PROJ. NO.	SHEET NO.	TOTAL SHEETS
6	ARK.			
JOB NO.		100955	127	356
(1) 07556-07564		INT. BENTS		64304

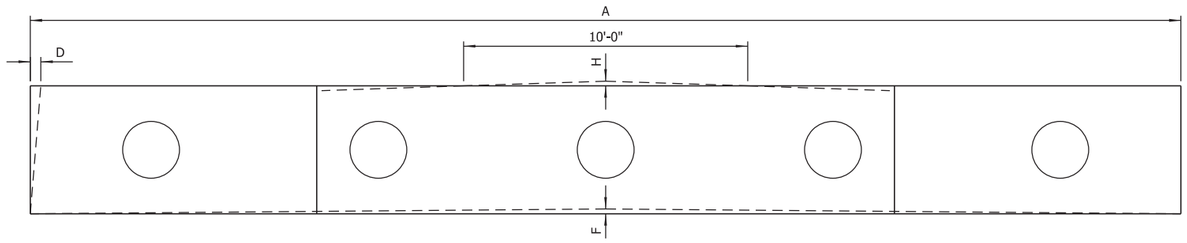

PLAN
Scale: None

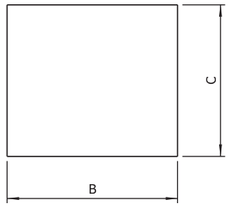

SECTION
Scale: ⅜" = 1'-0"

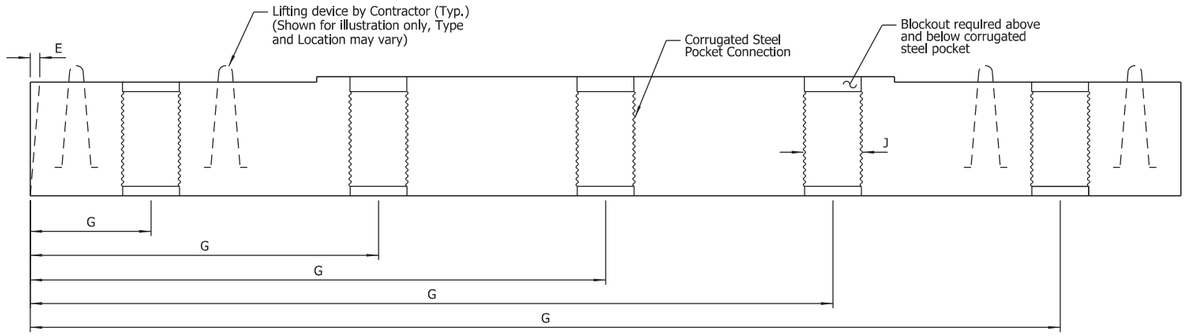

ELEVATION
Scale: None

NOTE:
Number of corrugated steel pocket connections shown is for illustrative purposes only. See details for each individual bent for actual number of pocket connections.

LIFTING DEVICE DESIGN

Design of the lifting device and/or attachment points shall be designed by the Contractor and submitted as a part of Shop Drawings and Assembly Plans to the Engineer for review. Lifting devices shall be removed after lifting in a manner approved by the Engineer. For more information, see SP "PRECAST CONCRETE BENT CAPS".

PRECAST BENT CAP FABRICATION TOLERANCES

A	Length	+ ¼"
B	Width (Overall)	± ¼"
C	Depth (Overall)	± ¼"
D	Variation From Specified Plan End Squareness Or Skew	± ⅛" Per 12 Inch Width ± ½" Maximum
E	Variation From Specified Elevation End Squareness Or Skew	± ⅛" Per 12 Inch Width ± ½" Maximum
F	Sweep, For Member Length: Up To 40 Feet 40 Feet To 60 Feet	± ¼" ± ½"
G	Location Corrugated Steel Pocket Connection Measured From A Common Reference Point	± ¼"
H	Local Smoothness Of Any Surface	± ¼" in 10 Feet
I	Erection Elevation Tolerance	± ¼"
J	Inside Dia. of Corrugated Steel Pocket	± ¼"

STATE OF ARKANSAS
LICENSED PROFESSIONAL ENGINEER
No.8017
JOHN H. RUDDELL

DIGITALLY SIGNED 8-13-2021
BRIDGE ENGINEER

PRECAST BENT CAP TOLERANCES

ROUTE SEC.

ARKANSAS STATE HIGHWAY COMMISSION
LITTLE ROCK, ARK.

DRAWN BY: JME DATE: JUNE 2021 FILENAME: b100955_BT.dgn
CHECKED BY: JHR DATE: JUNE 2021 SCALE: As Shown
DESIGNED BY: ERM DATE: APR. 2021

BRIDGE NO. 07556-07564 DRAWING NO. 64304

abhall 8/13/2021 9:52:20 AM
WORKSPACE: ARDOT Bridge (2019)
L:\2017\017642 - ARDOT Job 100955\Drawings\b100955_SI02.DN.dgn
REVISED DATE:

DATE REVISED	DATE FILMED	DATE REVISED	DATE FILMED

FED. ROAD DIST. NO.	STATE	FED. AID PROJ. NO.	SHEET NO.	TOTAL SHEETS
6	ARK.			
JOB NO.		100955	128	355
(1) 07556-07564		CONSTR. SEQ.		64305

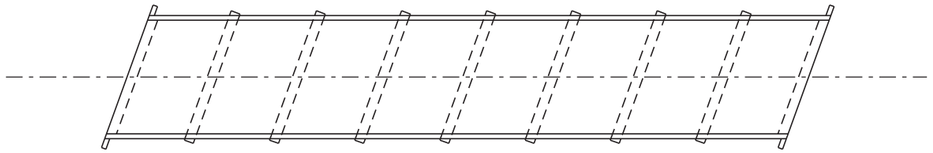

PHASE I
- Prior to closing bridge, install timber compaction piling in areas where required ground improvements do not affect traffic.
- Close existing bridge to traffic in accordance with approved MOT Plans.
- Demolish existing bridge in accordance with approved MOT Plans.

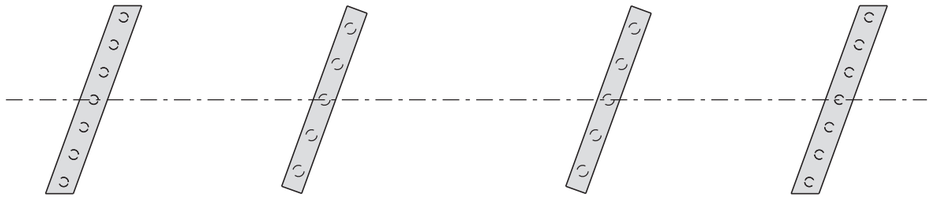

PHASE II
- Complete grading at bridge ends.
- Complete installation of timber compaction piling (where required).
- Install concrete filled steel shell piles at end and intermediate bents.
- Install precast bent caps.
- Construct end bent caps.

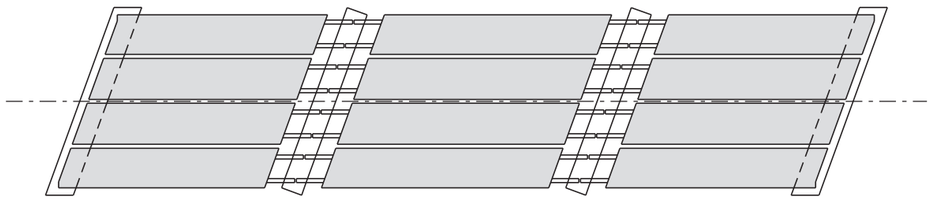

PHASE III
- Install prefabricated modules, progressing outward from the center of the unit.
- Install intermediate bent diaphragm bars as modules are set.
- Install bolts in compression blocks at intermediate bents.

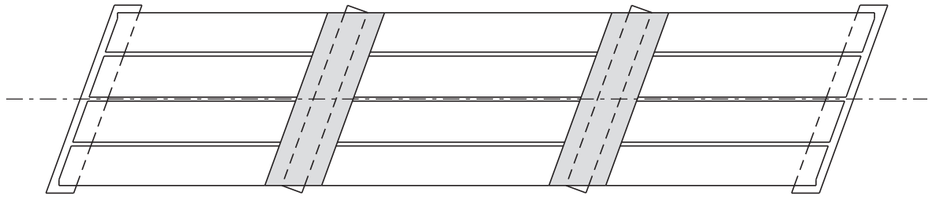

PHASE IV
- Construct diaphragms and transverse deck closure at intermediate bents.

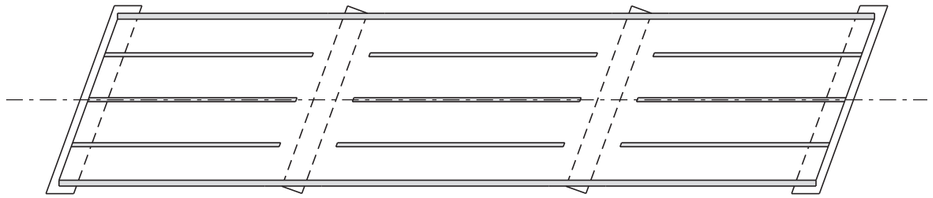

PHASE V
- Construct longitudinal deck closures using UHPC.
- Construct barrier traffic rail.

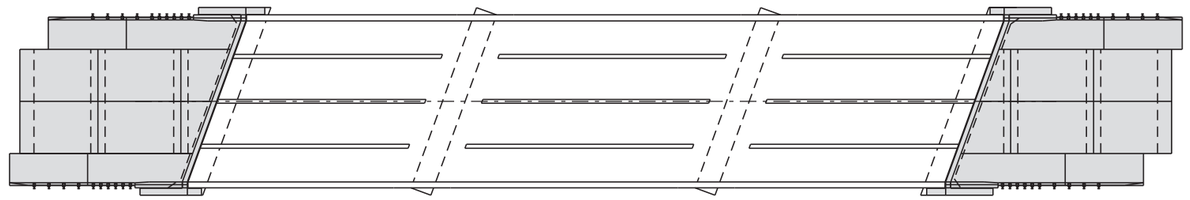

PHASE VI
- Construct end bent backwalls and wings.
- Perform deck grinding and polymer overlay.
- Construct approach slabs and gutters.
- Install guardrail and/or bridge end terminals as required.
- Open new bridge to traffic.

SUGGESTED SEQUENCE OF CONSTRUCTION

NOTE:
Sequence of construction shown is a suggested phasing of a typical bridge within the project. The Contractor may submit an alternate sequence for construction. The number of spans shown is for illustrative purposes only.

STATE OF ARKANSAS
LICENSED PROFESSIONAL ENGINEER
No.8017
JOHN H. RUDDELL

DIGITALLY SIGNED 8-13-2021
BRIDGE ENGINEER

SUGGESTED SEQUENCE OF CONSTRUCTION
HWYS. 77, 140, 158, & 181
STRS. & APPRS. (MISSISSIPPI CO.) (S)
MISSISSIPPI COUNTY

ROUTE 77, 140 & 158 SEC. 1 & 2

ARKANSAS STATE HIGHWAY COMMISSION
LITTLE ROCK, ARK.

DRAWN BY: HEW DATE: JUNE 2021 FILENAME: b100955_sc.dgn
CHECKED BY: JHR DATE: JUNE 2021 SCALE: No Scale
DESIGNED BY: BWD DATE: JUNE 2021

BRIDGE NO. 07556-07564 DRAWING NO. 64305

abhall 8/13/2021 9:52:21 AM
WORKSPACE: ARDOT Bridge (2019)
L:\2017\17017642 - ARDOT Job 100955\Drawings\b100955_SI03_SC.dgn
REVISED DATE:

DATE REVISED	DATE FILMED	DATE REVISED	DATE FILMED	FED. ROAD DIST. NO.	STATE	FED. AID PROJ. NO.	SHEET NO.	TOTAL SHEETS
				6	ARK.			
				JOB NO.		100955	129	356
				(1) 07556		LAYOUT		64306

NOTE:
Excavate existing embankment at both ends of bridge as shown. Approx. 94 cubic yards of excavation (excluding ditch excavation).

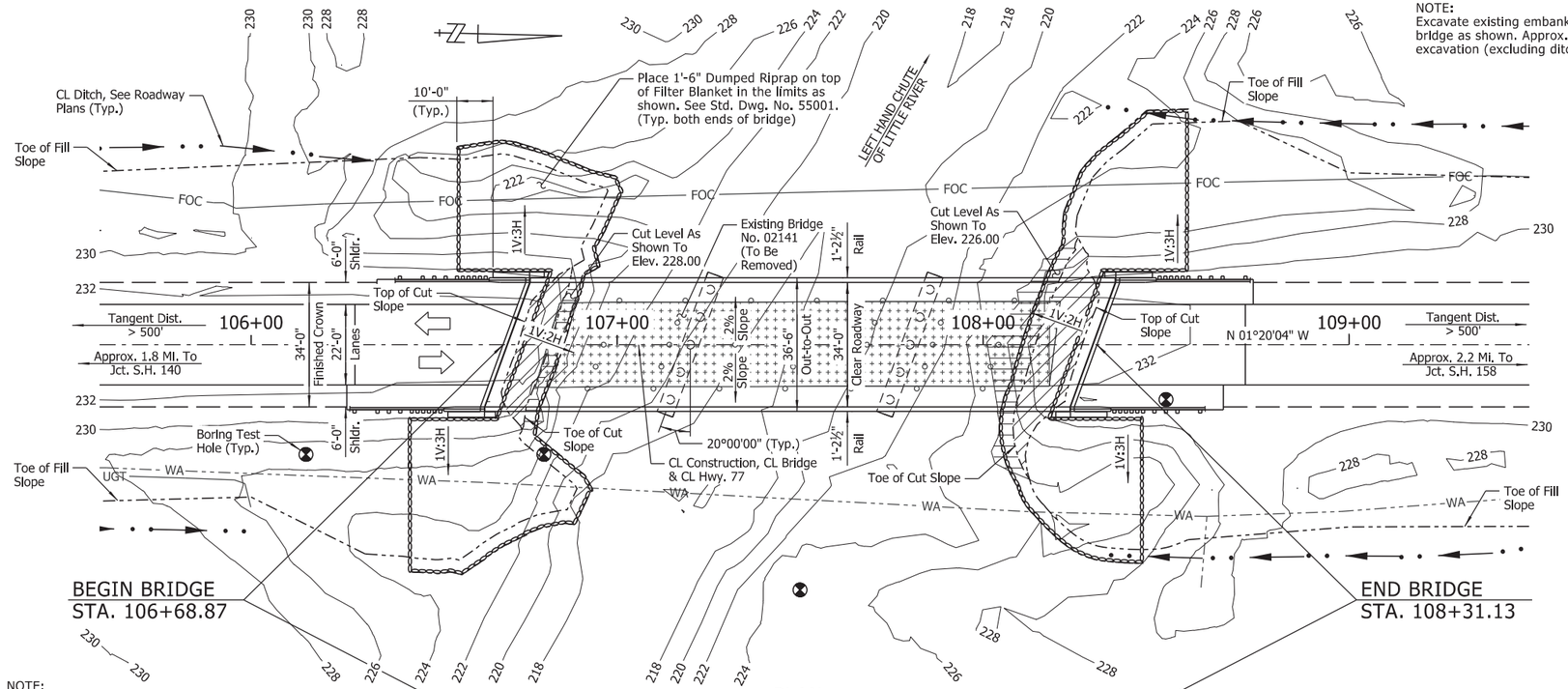

PLAN

NOTE:
The proposed bridge has been positioned to avoid interference with the existing piling. The Contractor shall verify measurements before driving any piling. Any adjustments necessary to fit the proposed bridge to the existing bridge location shall be submitted for the Engineer's approval.

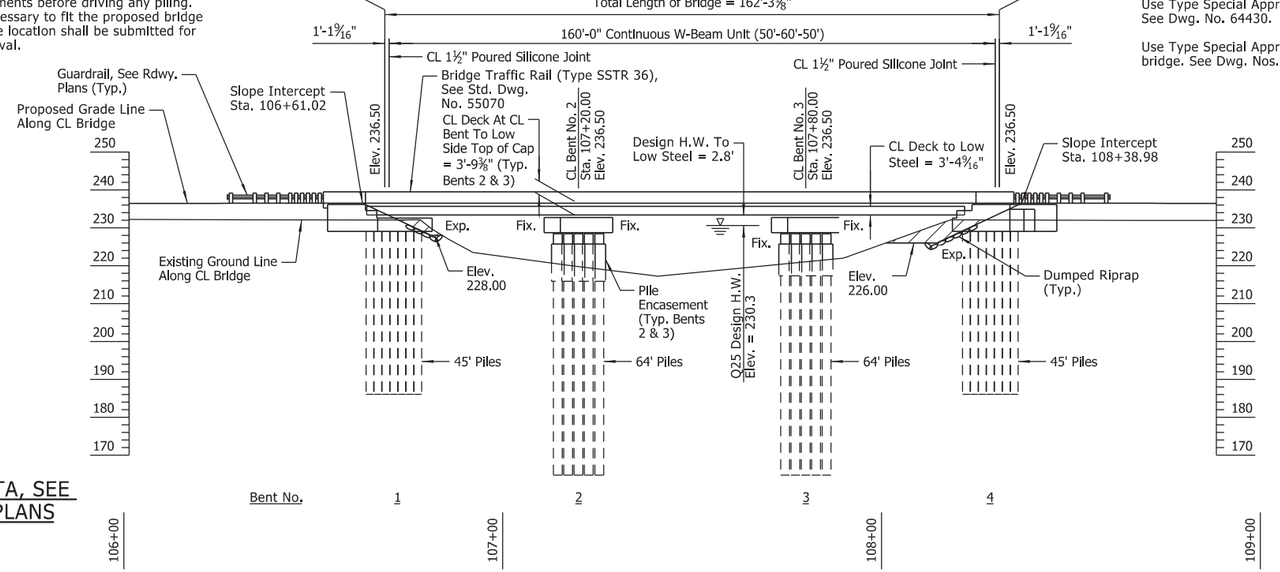

FOR R/W DATA, SEE ROADWAY PLANS

ELEVATION

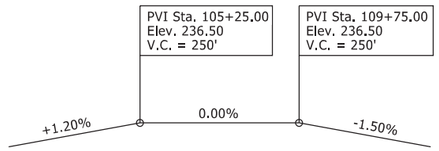

VERTICAL CURVE DATA

Hwy. 77
(Theoretical Grade Along CL Construction)

NOTES:
Use Type Special Approach Slab at each end of bridge. See Dwg. No. 64430.

Use Type Special Approach Gutters at each end of bridge. See Dwg. Nos. 64427-64429.

GENERAL NOTES

STEEL SHELL PILING: Piling in Bents 1 & 4 shall be 24" diameter concrete filled steel shell piles and shall be driven to meet the requirements of the "PILE BEARING TABLE". Piling in Bents 2 & 3 shall be 28" diameter concrete filled steel shell piles and shall be driven to meet the requirements of the "PILE BEARING TABLE". All piling shall be driven with an approved air, steam, or diesel hammer. Piling in end bents shall be driven after embankment to bottom of cap is in place. Lengths of piling shown are assumed for estimating quantities only. Actual lengths are to be determined in the field. No additional payment will be made for cut-off or build-up. Test piles are not required but may be driven for the Contractor's information in accordance with Subsection 805.08(g). No piles will be paid for as Test Piles.

Water jetting or other methods as approved by the Engineer may be required to achieve minimum penetration. This work shall not be paid for directly, but shall be considered Incidental to the Items "STEEL SHELL PILING (24" DIA.)" and "STEEL SHELL PILING (28" DIA.)".

PILE ENCASEMENT: Pile encasement for Bents 2 & 3 shall extend from 3' below bottom of cap to 3' below natural or finished ground. See Dwg. No. 64316 for additional information.

DRIVING SYSTEM: The driving system approval and the ultimate bearing capacity determination for piling shall be based on the requirements of Subsection 805.09(b), "Method B - Wave Equation Analysis (WEAP)" and SP "PILE DRIVING SYSTEM". See the "PILE BEARING TABLE" for the estimated minimum rated hammer energy required to overcome the anticipated driving resistance for all piles at each bent. If the Contractor elects to use water jetting or other approved methods to obtain the minimum tip elevations shown while driving only to the required minimum ultimate bearing capacity, the minimum rated hammer energy required will be lower and shall be accounted for in the driving system chosen by the Contractor.

EXISTING BRIDGE: Existing Bridge No. 02141 (Log Mile 10.39) is 144.0' in length, 26.5' wide (24.0' clear roadway) and consists of concrete slab spans (8 spans total) supported by timber pile bents. Plans of the existing structure, if available, may be obtained upon request to the Construction Contract Development Section of the Program Management Division.

REMOVAL AND SALVAGE: The Contractor shall remove existing Bridge No. 02141 in accordance with Section 205. All material from the existing bridge shall become property of the Contractor.

DETAIL DRAWINGS:	DRAWING NO(S).
Foundation Improvement Plan	64308
End Bents	64309-64313
Intermediate Bents	64314-64317
Common Details Of 34' Clear Roadway Steel Superstructure	64318-64319
160'-0" Continuous W-Beam Unit	64320-64322
Common Superstructure Details	64421-64424
Elastomeric Bearings	64425-64426
Type Special Approach Gutters	64427-64429
Type Special Approach Slabs	64430
Dumped Riprap	55001
General Notes For Steel Bridge Structures	55006
Details For Steel Bridge Structures	55007
Poured Silicone Joint	55008
Concrete Filled Steel Shell Piling	55021
Bridge Traffic Rail	55070

EXISTING UTILITIES LEGEND

FOC = Underground Fiber Optic Cable
UGT = Underground Cable
WA = Water Line

NOTE:
Utilities shown are based on locations at time of survey and do not reflect any potential utility relocations prior to construction.

NOTES:
For "PROJECT GENERAL NOTES", see Dwg. No. 64303.

For "ELEVATION OF SOIL BORINGS", see Dwg. No. 64307.

NOTE:
Stations shown are along CL Construction. Elevations shown are theoretical working point elevations at CL Bridge. Any vertical dimension referenced to CL Deck is based on theoretical working point elevation at CL Bridge. See "ROUNDING DETAIL" on Std. Dwg. No. 55007 for additional information.

HYDRAULIC DATA

FLOOD DESCRIPTION	FREQUENCY	DISCHARGE	(1) NATURAL WATER SURFACE ELEVATION	WATER SURFACE ELEVATION WITH BACKWATER
	YEARS	CFS	FEET	FEET
DESIGN	25	2,600	230.2	230.3
BASE	100	3,103	231.0	231.1
EXTREME	500	3,656	231.6	231.7
OVERTOPPING	>500	N/A	N/A	N/A

(1) Unconstricted water surface elevation without structure or roadway approaches

Q100 backwater elevation for existing structure = 231.3

Proposed Low Bridge Chord Elev. = 233.12
Existing Low Bridge Chord Elev. = 230.84 (survey data)

Drainage Area = 105.9 square miles
Historical High Water Elev. = N/A

PILE BEARING TABLE

BENTS	REQUIRED MINIMUM ULTIMATE BEARING CAPACITY (TONS)	MIN. TIP ELEVATION	ANTICIPATED DRIVING RESISTANCE AT MIN. TIP (TONS)	ESTIMATED MIN. RATED HAMMER ENERGY (FT.-LBS. PER BLOW)
1 & 4	124	186.00	325	73,800
2	323	165.00	375	90,600
3	323	165.00	385	90,600

NOTE:
Required minimum ultimate bearing capacity corresponds to the minimum post driving capacity to be obtained after an allowance for water jetting or any other methods employed to facilitate pile installation.

Anticipated Driving Resistance corresponds to the resistance to be overcome to achieve minimum tip elevation without any water jetting or other methods employed to facilitate pile installation.

STATE OF ARKANSAS
LICENSED PROFESSIONAL ENGINEER
No.14498
ADAM B. HALL

DIGITALLY SIGNED 8-13-2021
BRIDGE ENGINEER

SHEET 1 OF 2
LAYOUT OF BRIDGE
HIGHWAY 77 OVER LEFT HAND CHUTE OF LITTLE RIVER
HWYS. 77, 140, 158, & 181
STRS. & APPRS. (MISSISSIPPI CO.) (S)
MISSISSIPPI COUNTY

ROUTE 77 SEC. 2

ARKANSAS STATE HIGHWAY COMMISSION

LITTLE ROCK, ARK.

DRAWN BY: MRA DATE: JULY 2020 FILENAME: b100955x1_L1.dgn
CHECKED BY: ABH DATE: AUG. 2020 SCALE: 1" = 20'-0"
DESIGNED BY: CSW DATE: JULY 2020

BRIDGE NO. 07556 DRAWING NO. 64306

REVISED DATE:
abhall 8/13/2021 9:52:28 AM
WORKSPACE: ARDOT Bridge (2019)
L:\20DT\1T01T642 - ARDOT Job 100955\Drawings\b100955x1_S01_L1.dgn

DATE REVISED	DATE FILMED	DATE REVISED	DATE FILMED

FED. ROAD DIST. NO.	STATE	FED. AID PROJ. NO.	SHEET NO.	TOTAL SHEETS
6	ARK.			
JOB NO.		100955	130	356
07556		LAYOUT		64307

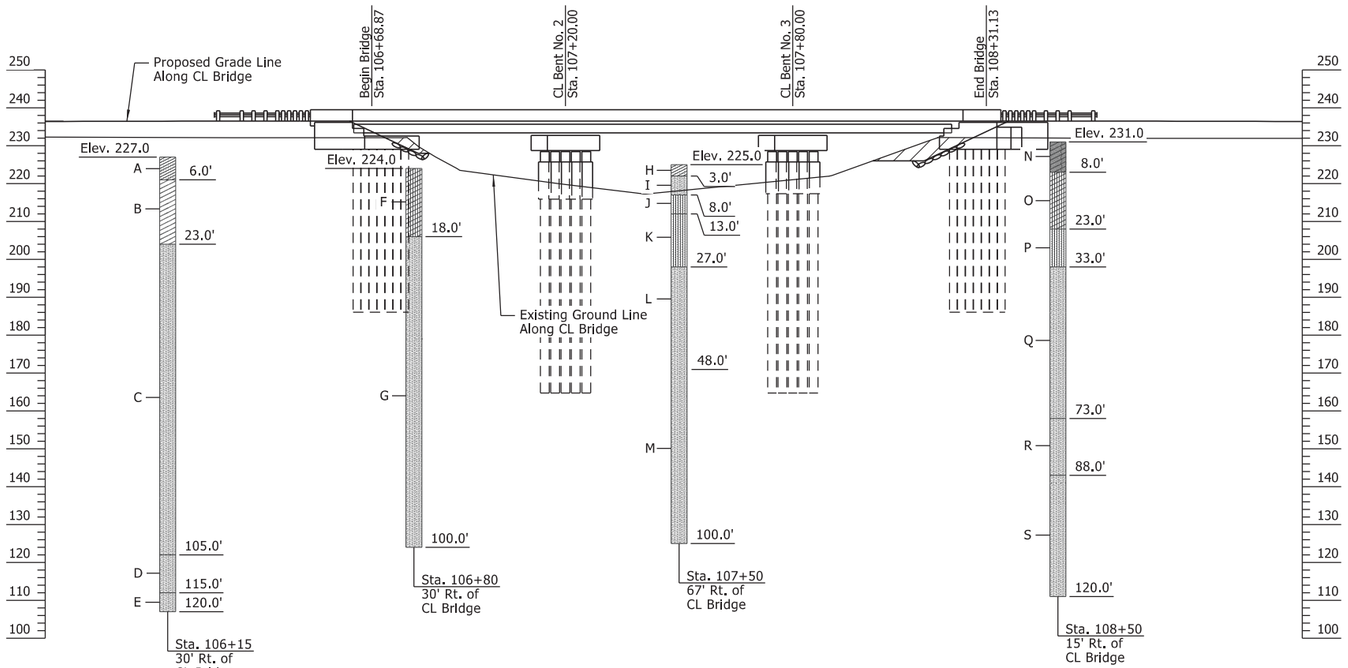

ELEVATION OF SOIL BORINGS

BORING LEGEND

A - Very loose to loose brown clayey fine sand (probable fill)
B - Stiff brown and gray clay
C - Medium dense gray fine to medium sand w/ trace fine gravel
D - Dense fine to coarse sand, slightly silty w/ a little fine gravel
E - Dense to very dense gray fine to medium sand, slightly silty
F - Soft grayish brown silty clay
G - Medium dense brown fine to medium sand
H - Loose brown clayey fine sand
I - Loose reddish brown fine sand, slightly silty
J - Loose reddish brown silty fine sand
K - Loose brown silty fine to medium sand
L - Medium dense to dense brownish gray fine to medium sand, slightly silty
M - Dense light brown fine to medium sand
N - Firm brown fine sandy clay
O - Very soft grayish brown silty clay, slightly sandy
P - Medium dense gray silty fine sand
Q - Medium dense fine to medium sand
R - Dense gray fine to coarse sand w/ trace fine gravel
S - Dense brownish gray fine to medium sand

N-VALUES

Sta. 106+15 Offset 30' Rt.	Sta. 106+80 Offset 30' Rt.	Sta. 107+50 Offset 67' Rt.	Sta. 108+50 Offset 15' Rt.
1.5-2.5, N=4	1.5-2.5, N=4	1.5-2.5, N=8	1.5-2.5, N=8
4.0-5.0, N=4	4.0-5.0, N=3	4.0-5.0, N=5	6.5-7.5, N=2
9.0-10.0, N=5	6.5-7.5, N=3	6.5-7.5, N=6	9.0-10.0, N=2
14.0-15.0, N=10	9.0-10.0, N=4	9.0-10.0, N=5	14.0-15.0, N=1
19.0-20.0, N=11	19.0-20.0, N=12	14.0-15.0, N=5	19.0-20.0, N=3
24.0-25.0, N=12	24.0-25.0, N=19	19.0-20.0, N=13	24.0-25.0, N=11
29.0-30.0, N=22	29.0-30.0, N=34	24.0-25.0, N=10	29.0-30.0, N=9
34.0-35.0, N=24	34.0-35.0, N=28	29.0-30.0, N=16	34.0-35.0, N=14
39.0-40.0, N=32	39.0-40.0, N=26	34.0-35.0, N=30	39.0-40.0, N=15
44.0-45.0, N=27	44.0-45.0, N=45	39.0-40.0, N=25	44.0-45.0, N=24
49.0-50.0, N=20	49.0-50.0, N=32	44.0-45.0, N=38	49.0-50.0, N=37
54.0-55.0, N=16	54.0-55.0, N=33	49.0-50.0, N=38	54.0-55.0, N=48
59.0-60.0, N=40	59.0-60.0, N=39	54.0-55.0, N=31	59.0-60.0, N=36
64.0-65.0, N=34	64.0-65.0, N=33	59.0-60.0, N=27	64.0-65.0, N=28
69.0-70.0, N=42	69.0-70.0, N=37	64.0-65.0, N=11	69.0-70.0, N=38
74.0-75.0, N=29	74.0-75.0, N=54	69.0-70.0, N=15	74.0-75.0, N=34
79.0-80.0, N=37	79.0-80.0, N=40	74.0-75.0, N=42	79.0-80.0, N=58
89.0-90.0, N=40	89.0-90.0, N=41	79.0-80.0, N=41	89.0-90.0, N=44
99.0-100.0, N=72	99.0-100.0, N=50/6"	89.0-90.0, N=69	99.0-100.0, N=43
109.0-110.0, N=61		99.0-100.0, N=30	109.0-110.0, N=52
119.0-120.0, N=80			119.0-120.0, N=50/6"

STATE OF ARKANSAS
LICENSED PROFESSIONAL ENGINEER
No.14498
ADAM B. HALL

DIGITALLY SIGNED 8-13-2021
BRIDGE ENGINEER

SHEET 2 OF 2
LAYOUT OF BRIDGE
HIGHWAY 77 OVER LEFT HAND CHUTE OF LITTLE RIVER
HWYS. 77, 140, 158, & 181
STRS. & APPRS. (MISSISSIPPI CO.) (S)
MISSISSIPPI COUNTY
ROUTE 77 SEC. 2
ARKANSAS STATE HIGHWAY COMMISSION
LITTLE ROCK, ARK.

DRAWN BY: HEW DATE: JUNE 2021 FILENAME: b100955x1_L2.dgn
CHECKED BY: ABH DATE: JUNE 2021 SCALE: 1" = 20'-0"
DESIGNED BY: CSW DATE: JUNE 2021
BRIDGE NO. 07556 DRAWING NO. 64307

abhall 8/13/2021 9:52:30 AM
WORKSPACE: ARDOT Bridge (2019)
L:\2017\07642 - ARDOT Job 100955\Drawings\b100955x1_S02_L0.dgn
REVISED DATE:

DATE REVISED	DATE FILMED	DATE REVISED	DATE FILMED	FED. ROAD DIST. NO.	STATE	FED. AID PROJ. NO.	SHEET NO.	TOTAL SHEETS
				6	ARK.			
				JOB NO.		100955	131	356
				1	07556	FNDN. IMP. PLAN		64308

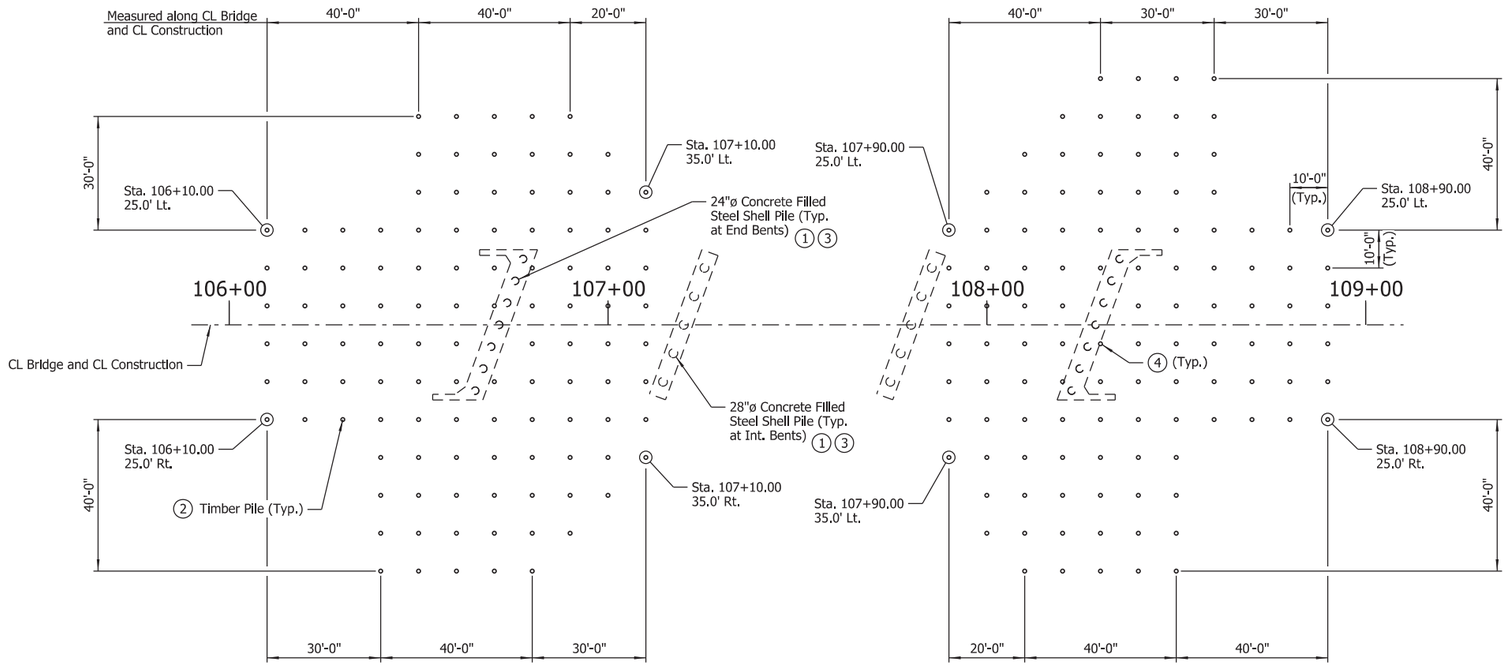

TIMBER PILE LAYOUT FOR FOUNDATION IMPROVEMENT

Scale: 1" = 20'-0"

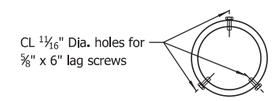

PLAN

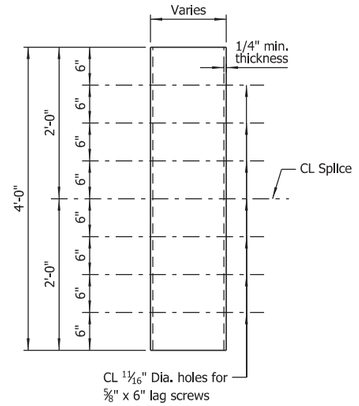

ELEVATION

TYPICAL SPLICE DETAILS

Scale: 1" = 1'-0"

TIMBER PILE DATA

Bent No.	Estimated No. of Piles	Min. Tip Elevation	5 Estimated Pile Length (FT)
1	109	191	42
4	111	191	42

NOTES:
Diameter(s) of timber piles shall be in accordance with SP "TIMBER PILING FOR SOIL DENSIFICATION".

Drive number and length of timber piles as directed by the Engineer.

Contractor shall coordinate with the Engineer to avoid any and all utilities within the soil densification areas.

Timber piling outside the limits of the existing bridge and roadway shall be driven prior to closing existing bridge to traffic.

1. Steel shell piling shall be driven prior to timber piling at each bent.
2. Timber piling shall be in accordance with SP "TIMBER PILING FOR SOIL DENSIFICATION".
3. Any existing riprap interfering with the driving of timber pile or steel shell pile shall be removed prior to driving as directed by the Engineer. Cost of removing riprap shall be considered subsidiary to the item "Removal of Existing Bridge Structure (Site No. 1)".
4. Shift timber piling as required to avoid conflicts with proposed caps.
5. Contractor may drive 40' long piles to minimum tip elevation utilizing a follower device to achieve required penetration.

STATE OF ARKANSAS
LICENSED PROFESSIONAL ENGINEER
No.8017
JOHN H. RUDDELL

DIGITALLY SIGNED 8-13-2021
BRIDGE ENGINEER

DETAILS OF FOUNDATION IMPROVEMENT PLAN
HWY. 77 OVER LEFT HAND CHUTE OF LITTLE RIVER

ROUTE SEC.

ARKANSAS STATE HIGHWAY COMMISSION
LITTLE ROCK, ARK.

DRAWN BY: CWT DATE: JUNE 2021 FILENAME: b100955x1_FN.dgn
CHECKED BY: JHR DATE: JUNE 2021 SCALE: As Shown
DESIGNED BY: JME DATE: JUNE 2021
BRIDGE NO. 07556 DRAWING NO. 64308

abhall 8/13/2021 9:52:33 AM
WORKSPACE: ARDOT Bridge (2019)
L:\2017\17017642 - ARDOT Job 100955\Drawings\b100955x1_SI03_FIP.dgn
REVISED DATE:

DATE REVISED	DATE FILMED	DATE REVISED	DATE FILMED	FED. ROAD DIST. NO.	STATE	FED. AID PROJ. NO.	SHEET NO.	TOTAL SHEETS
				6	ARK.			
				JOB NO.		100955	132	356
				(1) 07556		END BENTS		64309

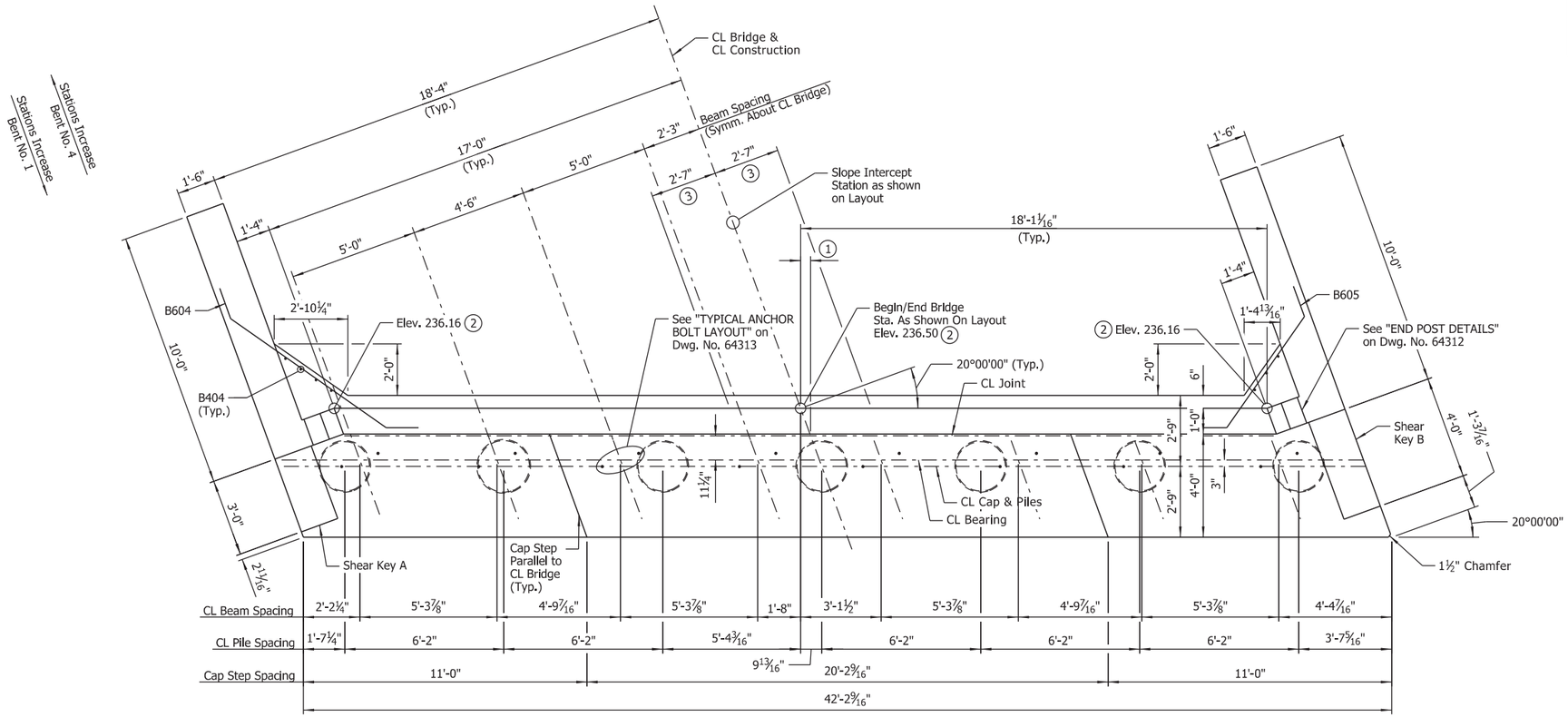

PLAN

Scale: 3/8" = 1'-0"

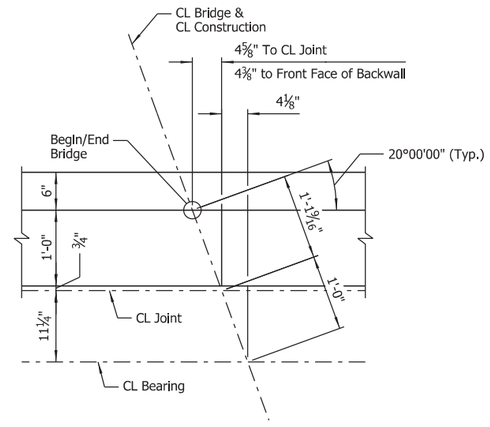

DETAIL A

Scale: 1" = 1'-0"

(1) See "DETAIL A"

(2) Top of Backwall is to be constructed level longitudinally.

(3) See "ROUNDING DETAIL" on Std. Dwg. No. 55007

(4) See "REINFORCEMENT DETAIL" on Dwg. No. 64312

NOTES:
1. For "SECTIONS", see Dwg. No. 64310.
2. For "GENERAL NOTES" and "BAR LIST", see Dwg. No. 64313.

LEGEND

BF = Back Face
FF = Front Face
EF = Each Face

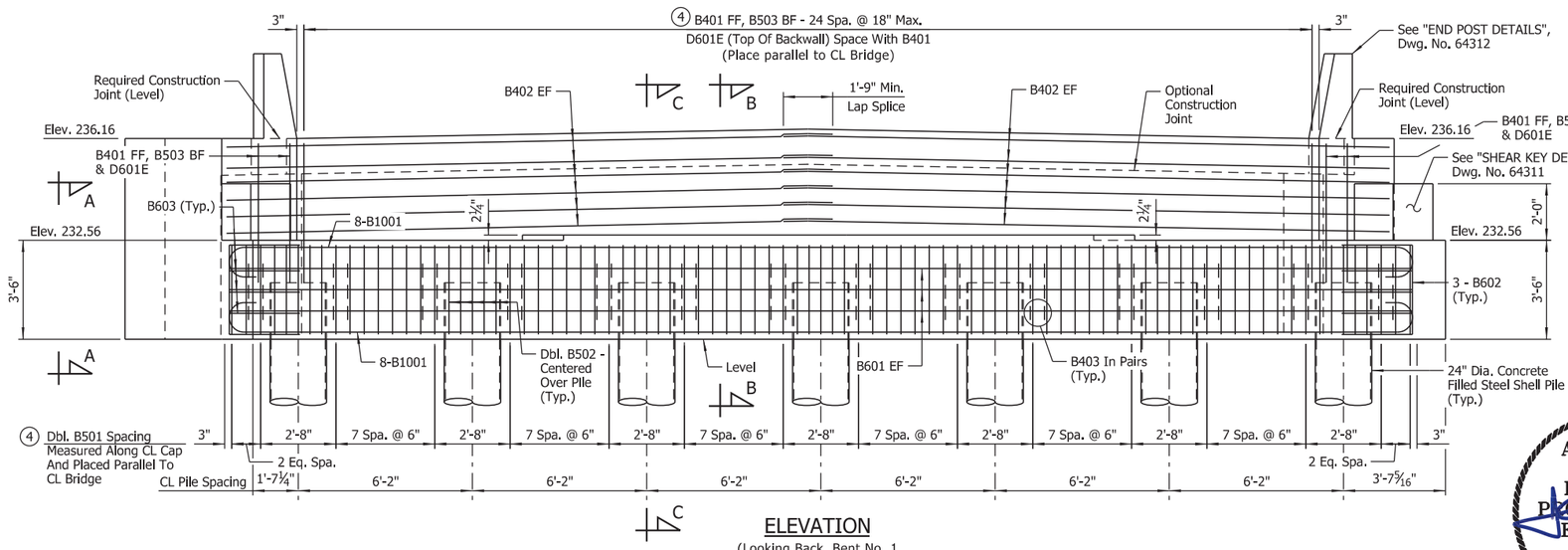

ELEVATION

(Looking Back, Bent No. 1
Looking Ahead, Bent No. 4)
Scale: 3/8" = 1'-0"

NOTE:
No portion of the backwall above the required construction joint shall be poured until the prefabricated superstructure is in place. No heavy construction equipment shall be allowed within 10' of the backwall until the prefabricated superstructure for the adjacent span has been installed.

STATE OF ARKANSAS
LICENSED PROFESSIONAL ENGINEER
No.8017
JOHN H. RUDDELL

DIGITALLY SIGNED 8-13-2021
BRIDGE ENGINEER

SHEET 1 OF 5
DETAILS OF END BENTS
HWY. 77 OVER LEFT HAND CHUTE
OF LITTLE RIVER

ROUTE SEC.

ARKANSAS STATE HIGHWAY COMMISSION
LITTLE ROCK, ARK.

DRAWN BY: HEW DATE: APR. 2021 FILENAME: b100955x1_A1.dgn
CHECKED BY: JHR DATE: JUNE 2021 SCALE: As Shown
DESIGNED BY: CSW DATE: APR. 2021

BRIDGE NO. 07556 DRAWING NO. 64309

abnall 8/13/2021 9:52:34 AM
WORKSPACE: ARDOT Bridge (209)
L:\20\T\07\f642 - ARDOT Job 100955\Drawings\b100955x1_S20I_AB.dgn
REVISED DATE:

DATE REVISED	DATE FILMED	DATE REVISED	DATE FILMED

FED. ROAD DIST. NO.	STATE	FED. AID PROJ. NO.	SHEET NO.	TOTAL SHEETS
6	ARK.			
JOB NO.		100955	133	356
(1) 07556-07561, 07564		END BENTS		64310

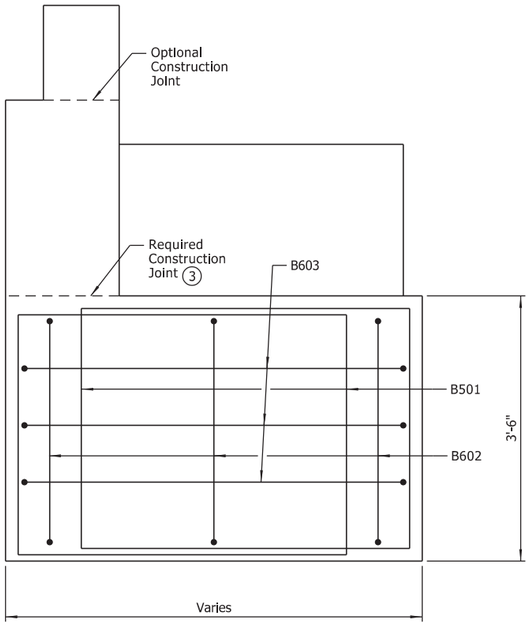

VIEW A-A
Scale: N.T.S.

NOTE:
Longitudinal bars in cap omitted for clarity.

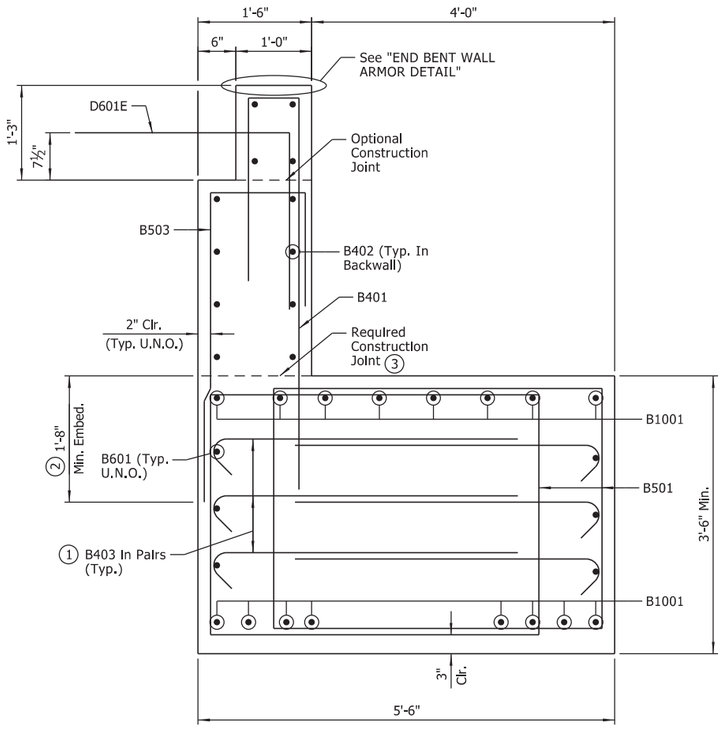

SECTION B-B
Scale: 1" = 1'-0"

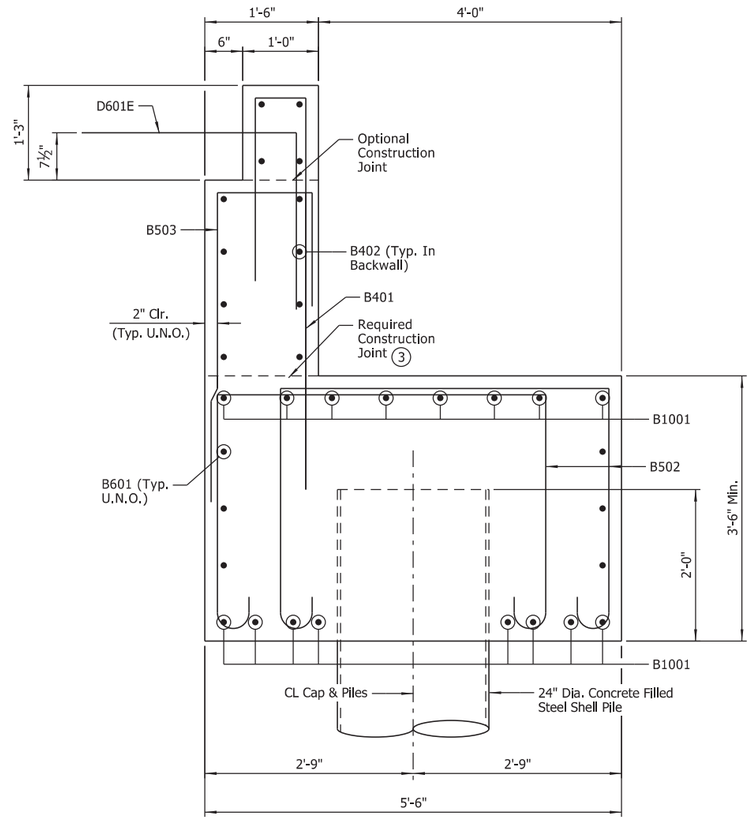

SECTION C-C
Scale: 1" = 1'-0"

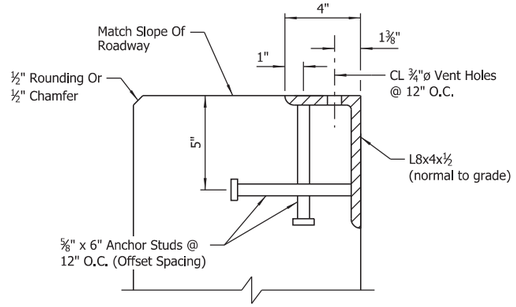

NOTES:
Transverse spacing between vertical anchor studs and vent holes shall be 6".

Concrete shall be hand packed under joint armor.

Special care shall be taken to properly and thoroughly consolidate the concrete in the vicinity of the expansion joint device in the backwall, see Section 802.09(a)(3).

For additional joint details, see Std. Dwg. No. 55008.

END BENT WALL ARMOR DETAIL
No Scale

LEGEND
U.N.O. = Unless Noted Otherwise

(1) See "ELEVATION" view for each bridge for location and spacing.

(2) Adjust embedment as required to maintain 2" clear cover at top of backwall.

(3) No portion of the backwall above the required construction joint shall be poured until the prefabricated superstructure is in place. No heavy construction equipment shall be allowed within 10' of the backwall until the prefabricated superstructure for the adjacent span has been installed.

STATE OF ARKANSAS
LICENSED PROFESSIONAL ENGINEER
No.8017
JOHN H. RUDDELL

DIGITALLY SIGNED 8-13-2021
BRIDGE ENGINEER

SHEET 2 OF 5
DETAILS OF END BENTS
HWY. 77 OVER LEFT HAND CHUTE OF LITTLE RIVER

ROUTE SEC.

ARKANSAS STATE HIGHWAY COMMISSION
LITTLE ROCK, ARK.

DRAWN BY: HEW DATE: APR. 2021 FILENAME: b100955x1_A2.dgn
CHECKED BY: JHR DATE: JUNE 2021 SCALE: As Shown
DESIGNED BY: CSW DATE: APR. 2021

BRIDGE NO. 07556-07561, 07564 DRAWING NO. 64310

abhall 8/13/2021 9:52:36 AM
WORKSPACE: ARDOT Bridge (2019)
L:\2017\1701642 - ARDOT Job 100955\Drawings\b100955x1_S202_AB.dgn
REVISED DATE:

DATE REVISED	DATE FILMED	DATE REVISED	DATE FILMED

FED. ROAD DIST. NO.	STATE	FED. AID PROJ. NO.	SHEET NO.	TOTAL SHEETS
6	ARK.			
JOB NO.		100955	134	356
① 07556		END BENTS		64311

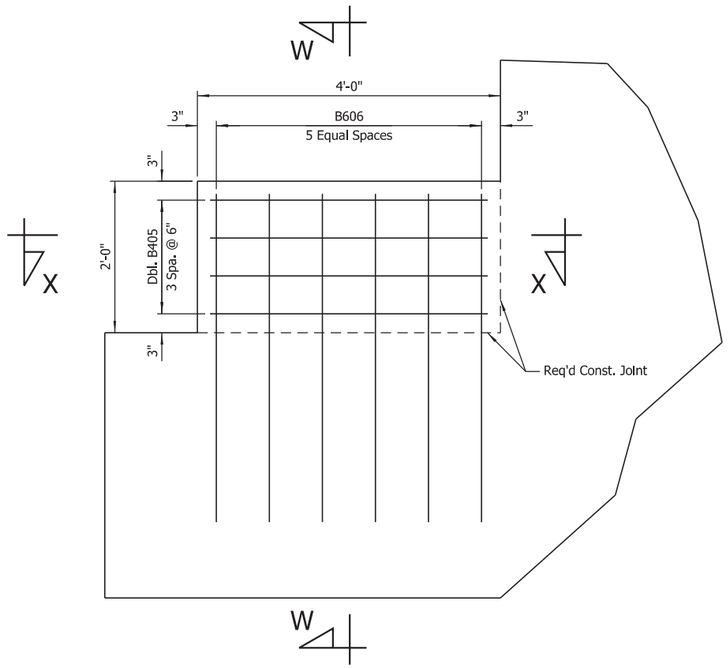

SHEAR KEY B

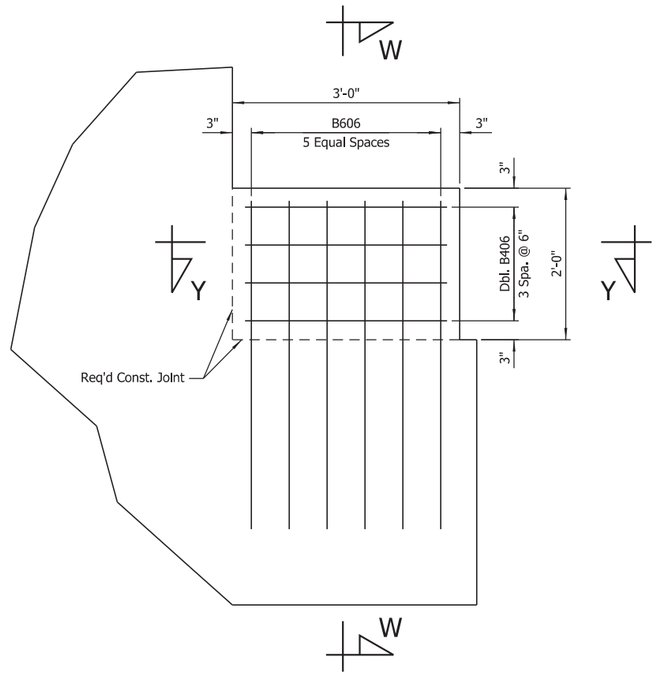

SHEAR KEY A

SHEAR KEY DETAILS
Scale: 1" = 1'-0"

SECTION X-X
Scale: 1" = 1'-0"

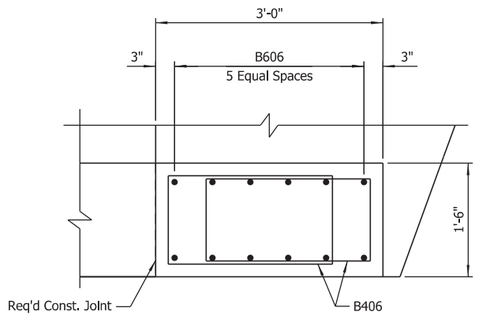

SECTION Y-Y
Scale: 1" = 1'-0"

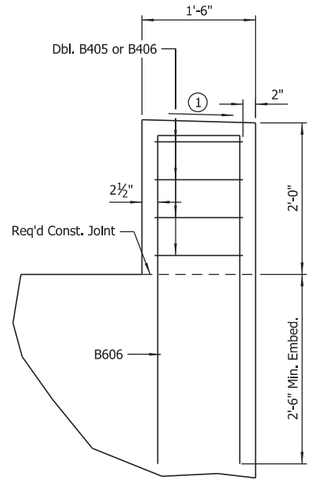

SECTION W-W
Scale: 1" = 1'-0"

① Slope to drain, provide minimum ½" wash across top width

STATE OF ARKANSAS
LICENSED PROFESSIONAL ENGINEER
No.8017
JOHN H. RUDDELL

DIGITALLY SIGNED 8-13-2021
BRIDGE ENGINEER

SHEET 3 OF 5
DETAILS OF END BENTS
HWY. 77 OVER LEFT HAND CHUTE
OF LITTLE RIVER

ROUTE SEC.

ARKANSAS STATE HIGHWAY COMMISSION
LITTLE ROCK, ARK.

DRAWN BY: HEW DATE: APR. 2021 FILENAME: b100955x1_A3.dgn
CHECKED BY: JHR DATE: JUNE 2021 SCALE: As Shown
DESIGNED BY: CSW DATE: APR. 2021

BRIDGE NO. 07556 DRAWING NO. 64311

abhall 8/13/2021 9:52:37 AM
WORKSPACE: ARDOT Bridge (2019)
L:\2017\1701642 - ARDOT Job 100955\Drawings\b100955x1_5203_AB.dgn
REVISED DATE:

DATE REVISED	DATE FILMED	DATE REVISED	DATE FILMED	FED. ROAD DIST. NO.	STATE	FED. AID PROJ. NO.	SHEET NO.	TOTAL SHEETS
				6	ARK.			
				JOB NO.		100955	135	356
				(1) 07556-07564		END BENTS		64312

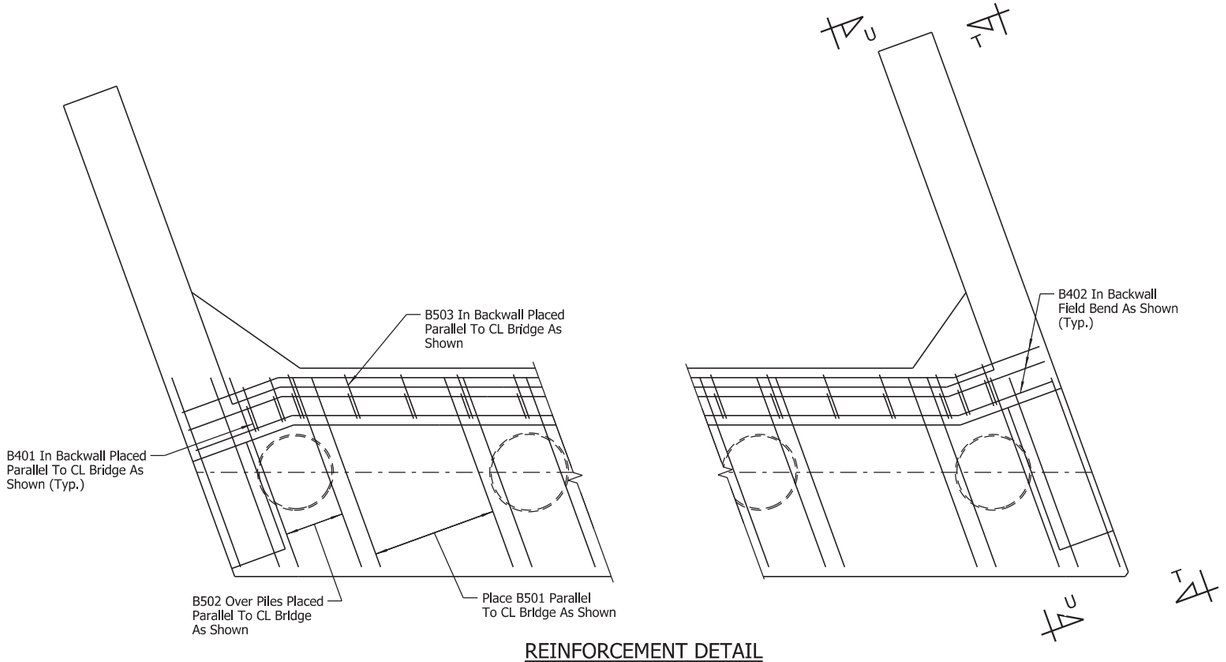

REINFORCEMENT DETAIL

Scale: ½" = 1'-0"

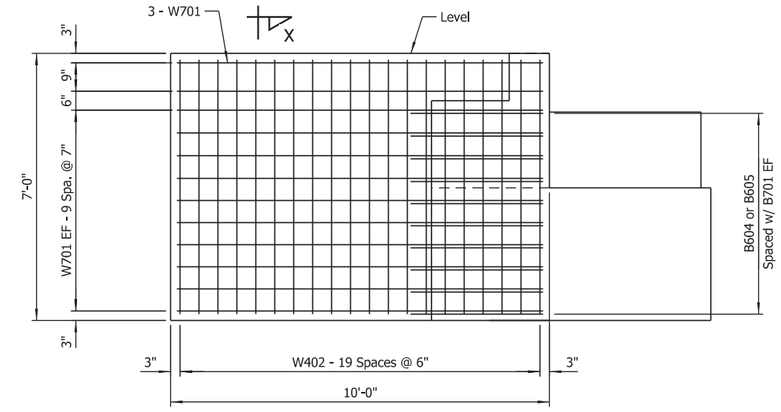

VIEW U-U

Scale: ½" = 1'-0"

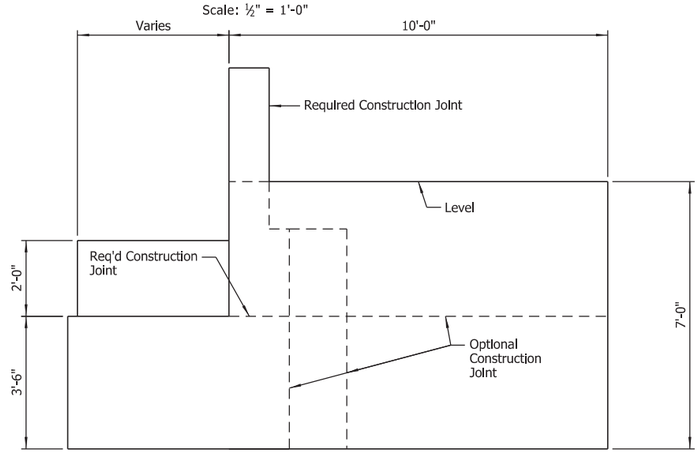

VIEW T-T

Scale: ½" = 1'-0"

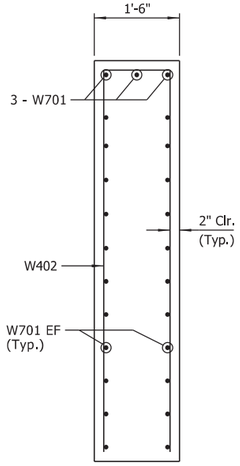

SECTION X-X

Scale: ¾" = 1'-0"

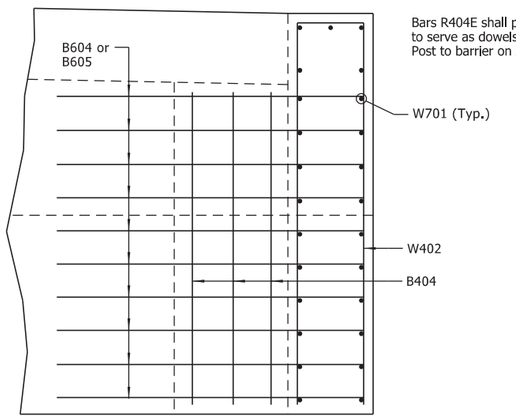

SECTION X-X

Scale: ¾" = 1'-0"

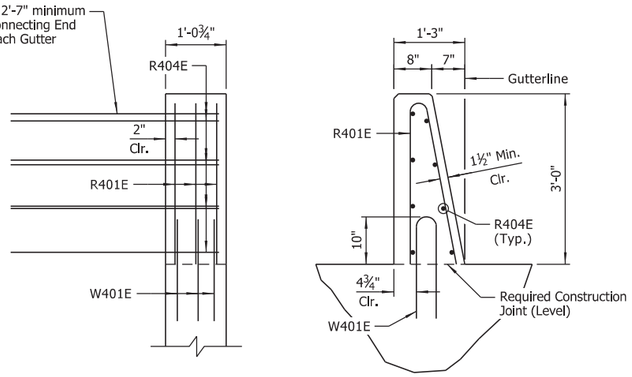

END BENT POST DETAILS

Scale: ½" = 1'-0"

STATE OF ARKANSAS
LICENSED PROFESSIONAL ENGINEER
No.8017
JOHN H. RUDDELL

DIGITALLY SIGNED 8-13-2021
BRIDGE ENGINEER

SHEET 4 OF 5
DETAILS OF END BENTS
HWY. 77 OVER LEFT HAND CHUTE OF LITTLE RIVER

ROUTE SEC.

ARKANSAS STATE HIGHWAY COMMISSION
LITTLE ROCK, ARK.

DRAWN BY: HEW DATE: APR. 2021 FILENAME: b100955x1_A4.dgn
CHECKED BY: JHR DATE: JUNE 2021 SCALE: As Shown
DESIGNED BY: CSW DATE: APR. 2021

BRIDGE NO. 07556-07564 DRAWING NO. 64312

abhall 8/13/2021 9:52:38 AM
WORKSPACE: ARDOT Bridge (2019)
L:\2021\T01T642 - ARDOT Job 100955\Drawings\b100955x1_S204_AB.dgn
REVISED DATE:

DATE REVISED	DATE FILMED	DATE REVISED	DATE FILMED	FED. ROAD DIST. NO.	STATE	FED. AID PROJ. NO.	SHEET NO.	TOTAL SHEETS
				6	ARK.			
				JOB NO.		100955	136	356
				1 07556		END BENTS		64313

BAR LIST (PER BENT)

	MARK	NO. REQ'D	LENGTH	"A"	"B"	P.D.
	B401	29	8'-3"			2"
	B402	24	21'-8"			Str.
	B403	168	4'-6"			3"
	B404	7	5'-5"			Str.
	B405	8	8'-8"	1'-2"	3'-0"	2"
	B406	8	7'-0"	1'-2"	2'-2"	2"
	B501	108	16'-0"			2½"
	B502	70	11'-10"			2½"
	B503	29	6'-6"			2½"
	B601	6	41'-10"			Str.
	B602	6	7'-7"	2'-11"	2'-6"	4½"
	B603	6	10'-0"			4½"
	B604	10	9'-10"			4½"
	B605	10	7'-9"			4½"
	B606	12	9'-5"	1'-1"	4'-4"	4½"
	B1001	16	44'-8"			10"
1	D601E	29	5'-2"			4½"
1	R401E	6	5'-11"			2½"
1	R404E	16	3'-8"			Str.
1	W401E	6	3'-11"			3¾"
	W402	40	14'-4"	1'-2"	6'-8"	2"
	W701	50	9'-8"			Str.

NOTES:
Number of bars shown is for one end bent only.

Dimensions of bars are out-to-out.

Bars designated with "E" suffix shall be epoxy coated.

1 Epoxy coated reinforcing in end bents shall be paid for as "REINFORCING STEEL - BRIDGE (GRADE 60)".

BAR BENDING DIAGRAMS

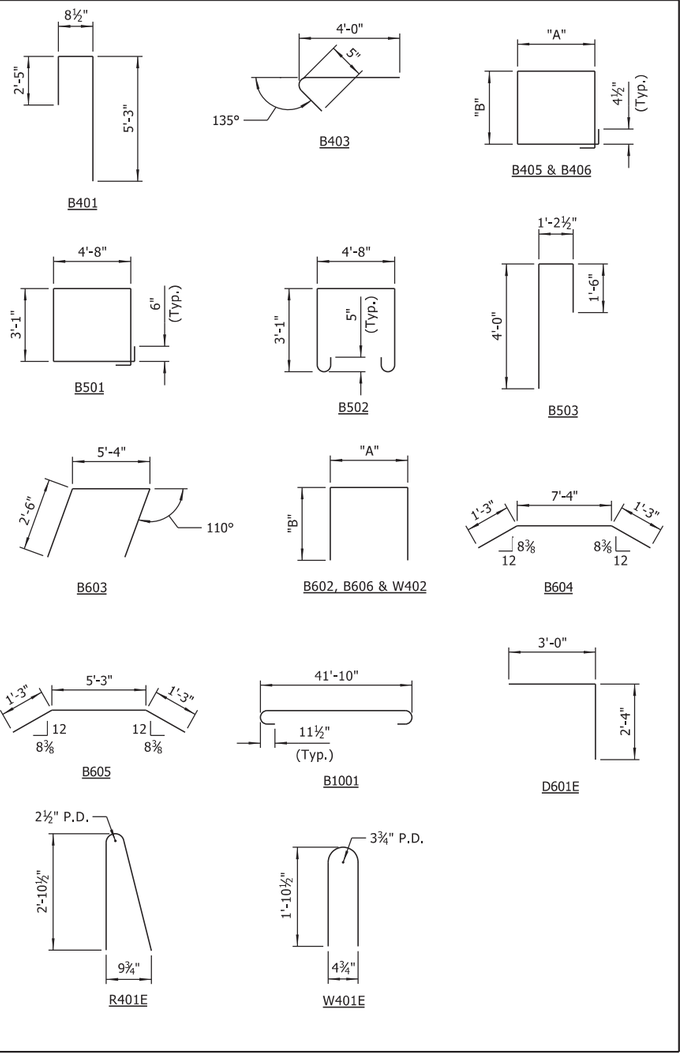

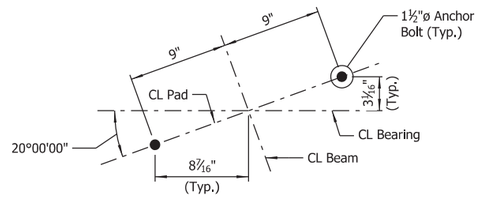

TYPICAL ANCHOR BOLT LAYOUT

No Scale

NOTE:
For Details of Elastomeric Bearings, see Dwg. No. 64425.

GENERAL NOTES:

Structural steel in end bents shall be ASTM A709, Gr. 50W and shall be paid for as "STRUCTURAL STEEL IN BEAM SPANS (A709, Gr. 50W)".

Class 2 Protective Surface Treatment shall be applied to the top of backwall and the roadway face and top of end posts.

For details of steel shell piling, see Std. Dwg. No. 55021.

See Std. Dwg. No. 55006 for additional notes.

STATE OF ARKANSAS
LICENSED PROFESSIONAL ENGINEER
No.8017
JOHN H. RUDDELL

DIGITALLY SIGNED 8-13-2021
BRIDGE ENGINEER

SHEET 5 OF 5
DETAILS OF END BENTS
HWY. 77 OVER LEFT HAND CHUTE
OF LITTLE RIVER

ROUTE SEC.

ARKANSAS STATE HIGHWAY COMMISSION
LITTLE ROCK, ARK.

DRAWN BY: HEW DATE: APR. 2021 FILENAME: b100955x1_A5.dgn
CHECKED BY: JHR DATE: JUNE 2021 SCALE: As Shown
DESIGNED BY: CSW DATE: APR. 2021
BRIDGE NO. 07556 DRAWING NO. 64313

abhall 8/13/2021 9:52:39 AM
WORKSPACE: ARDOT Bridge (2019)
L:\2017\170\17642 - ARDOT Job 100955\Drawings\b100955x1_S205_AB.dgn
REVISED DATE:

DATE REVISED	DATE FILMED	DATE REVISED	DATE FILMED

FED. ROAD DIST. NO.	STATE	FED. AID PROJ. NO.	SHEET NO.	TOTAL SHEETS
6	ARK.			
JOB NO.		100955	137	356
(1) 07556		INT. BENTS		64314

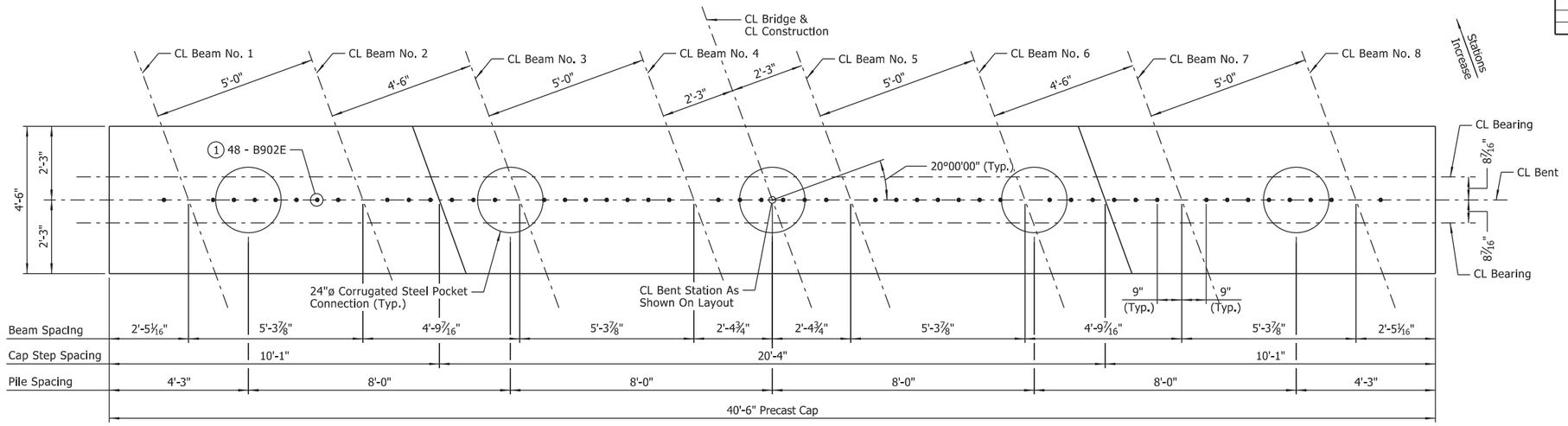

PLAN - BENT NOS. 2 & 3

Scale: ½" = 1'-0"

(1) Bars B902E within corrugated steel pocket connection shall be installed in the field at the time the pockets are filled. Minimum embedment = 2'-9".

(2) Dimension shown is for distance from outer limit of concrete cap to the limits of the corrugated steel pipe forming the pocket.

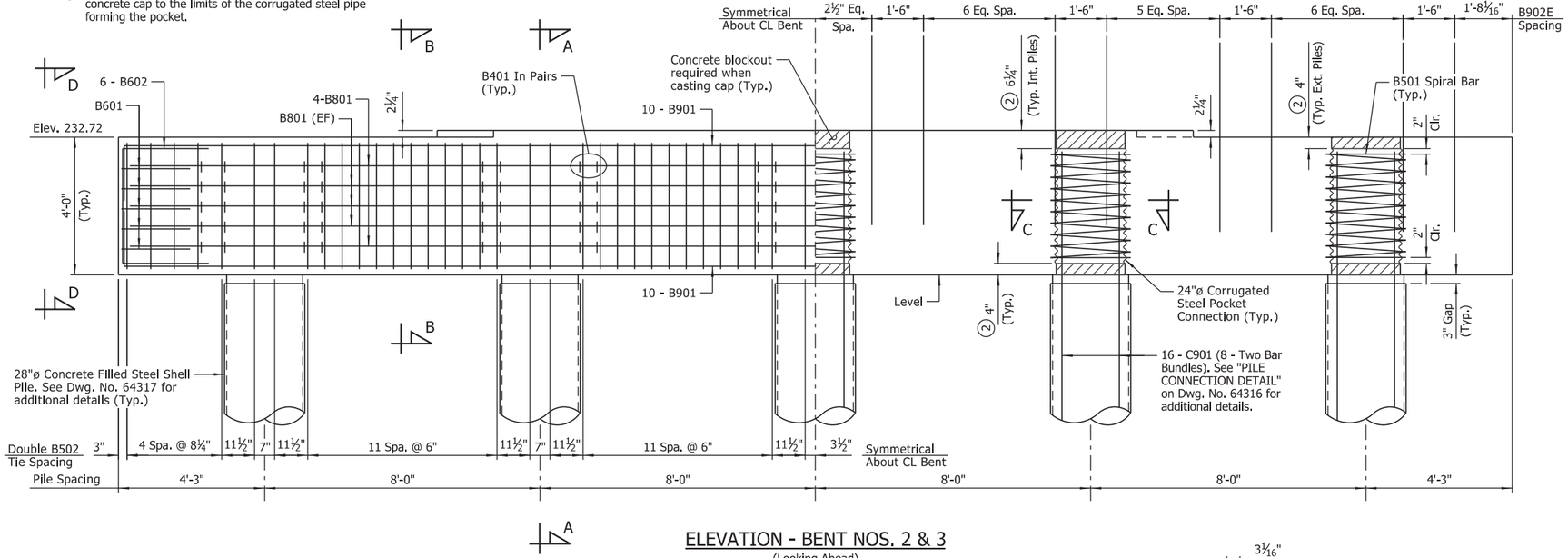

ELEVATION - BENT NOS. 2 & 3

(Looking Ahead)
Scale: ½" = 1'-0"

NOTES:
Precast bent caps at Bent Nos. 2 and 3 shall be fabricated and installed in accordance with SP "PRECAST CONCRETE BENT CAPS".

For "GENERAL NOTES - PRECAST CONCRETE BENT CAPS", see Dwg. No. 64316.

For details of elastomeric bearings, see Dwg. Nos. 64425 & 64426.

For "SECTIONS", see Dwg. No. 64315.

For "PROJECT GENERAL NOTES", see Dwg. No. 64303.

For additional information, see Layout.

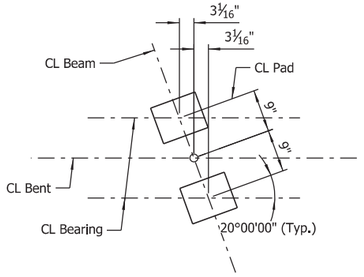

BEARING PAD LAYOUT

Scale: ¾" = 1'-0"

BAR LIST (PER BENT)

MARK	NO. REQ'D	LENGTH	P.D.
B401	200	4'-0"	3"
B501	5	90'-9"	28¼"
B502	136	15'-2"	2½"
B601	10	8'-9"	4½"
B602	12	8'-3"	4½"
B801	14	39'-11"	Str.
B901	20	42'-10"	9"
B902E	48	5'-6"	Str.
C501	5	229'-5"	19¾"
(3) C901	80	14'-0"	Str.

(3) **Bars C901 shall be ASTM A706, Grade 60.**

BAR BENDING DIAGRAMS

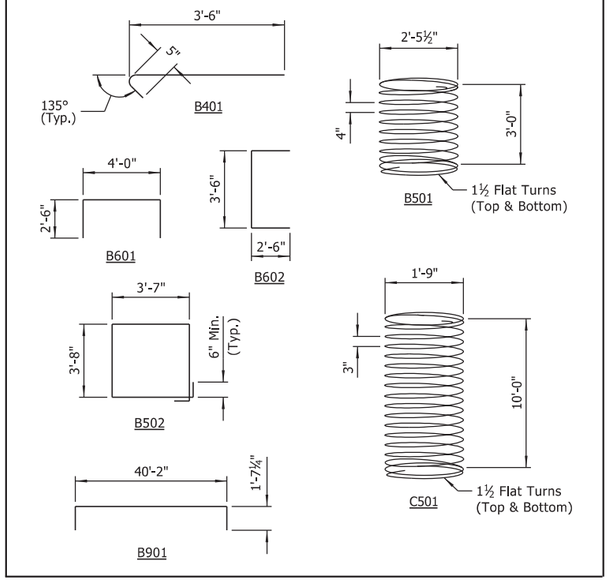

NOTES:
Dimensions of bars are out-to-out.

Bars designated with "E" suffix shall be epoxy coated.

No direct payment for bars in bent cap or concrete filled steel shell piles. Payment of all reinforcing steel to be subsidiary to unit price for "PRECAST CONCRETE BENT CAPS".

STATE OF ARKANSAS
LICENSED PROFESSIONAL ENGINEER
No.8017
JOHN H. RUDDELL

DIGITALLY SIGNED 8-13-2021
BRIDGE ENGINEER

SHEET 1 OF 4
DETAILS OF INTERMEDIATE BENTS
HWY. 77 OVER LEFT HAND CHUTE OF LITTLE RIVER

ROUTE SEC.

ARKANSAS STATE HIGHWAY COMMISSION
LITTLE ROCK, ARK.

DRAWN BY: CWT DATE: APR. 2021 FILENAME: b100955x1_BE1.dgn
CHECKED BY: JHR DATE: MAY 2021 SCALE: As Shown
DESIGNED BY: ERM DATE: APR. 2021

BRIDGE NO. 07556 DRAWING NO. 64314

abhall 8/13/2021 9:52:40 AM
WORKSPACE: ARDOT Bridge (2019)
L:\2017\1701642 - ARDOT Job 100955\Drawings\b100955x1_S206_BE.dgn
REVISED DATE:

DATE REVISED	DATE FILMED	DATE REVISED	DATE FILMED

FED. ROAD DIST. NO.	STATE	FED. AID PROJ. NO.	SHEET NO.	TOTAL SHEETS
6	ARK.			
JOB NO.		100955	138	356
(1) 07556, 07562-07564		INT. BENTS		64315

(1) Gap varies - see "ELEVATION" view of each bent.

(2) Dimension shown is for distance from outer limit of concrete cap to the limits of the corrugated steel pipe forming the pocket.

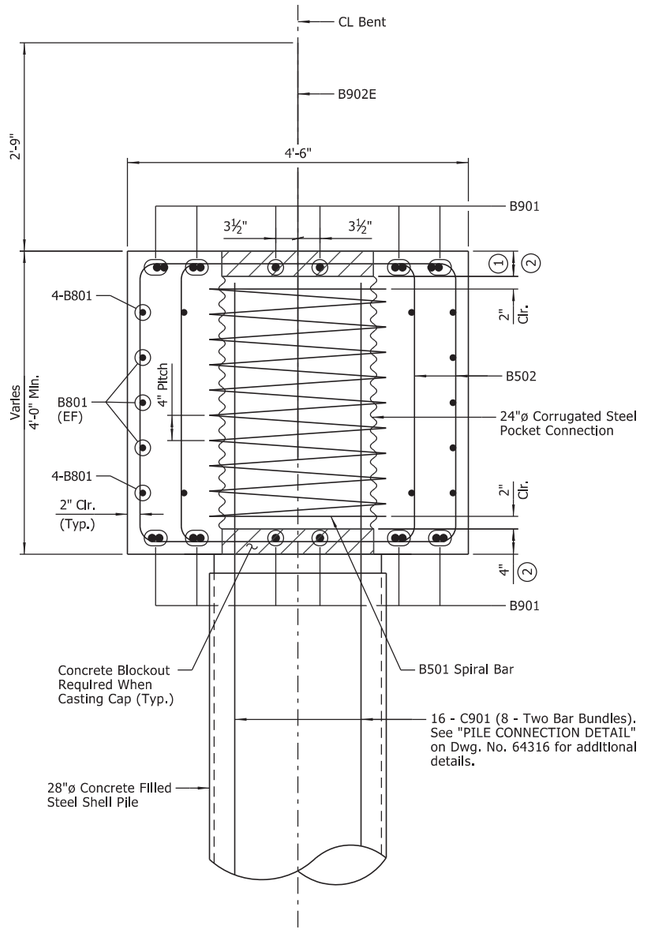

SECTION A-A
Scale: 1" = 1'-0"

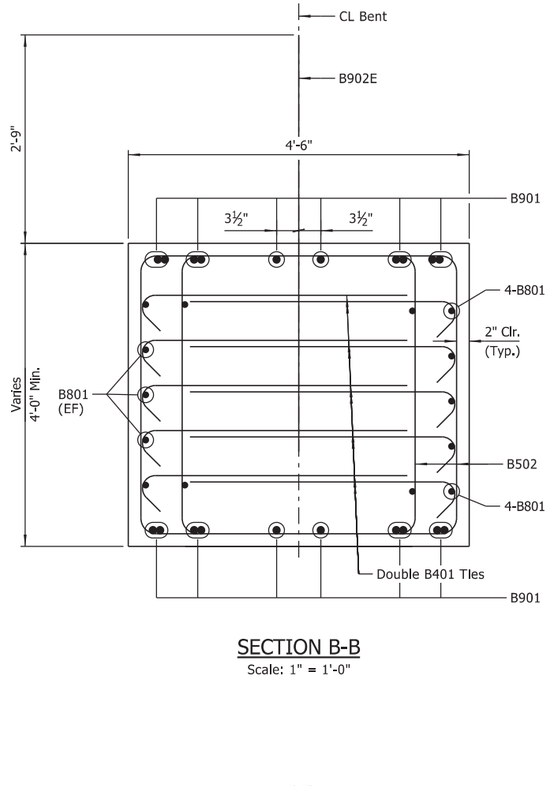

SECTION B-B
Scale: 1" = 1'-0"

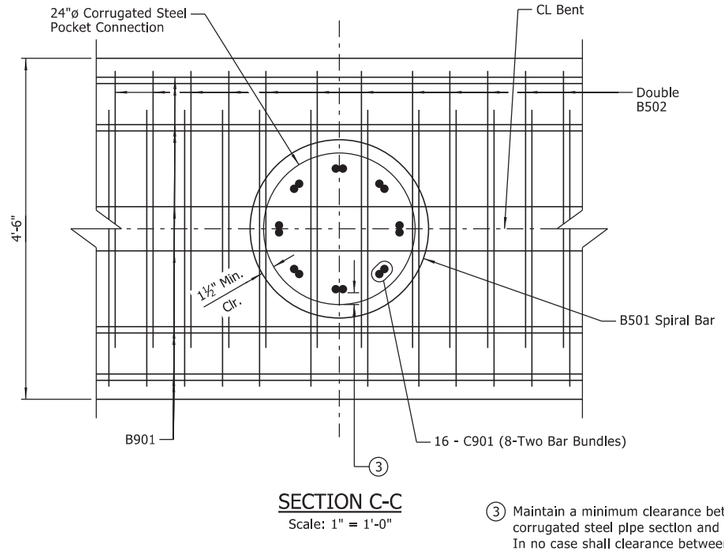

SECTION C-C
Scale: 1" = 1'-0"

(3) Maintain a minimum clearance between inside of corrugated steel pipe section and C901 bar of 1⅛". In no case shall clearance between corrugated steel pipe and vertical C901 exceed 4".

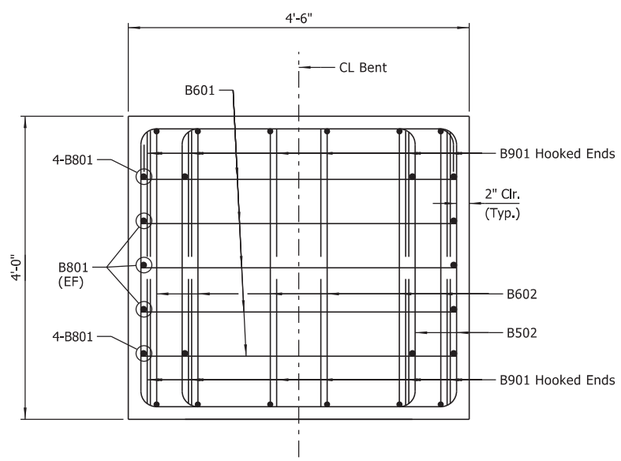

VIEW D-D
Scale: 1" = 1'-0"

STATE OF ARKANSAS
LICENSED PROFESSIONAL ENGINEER
No.8017
JOHN H. RUDDELL

DIGITALLY SIGNED 8-13-2021
BRIDGE ENGINEER

SHEET 2 OF 4
DETAILS OF INTERMEDIATE BENTS
HWY. 77 OVER LEFT HAND CHUTE
OF LITTLE RIVER

ROUTE SEC.

ARKANSAS STATE HIGHWAY COMMISSION
LITTLE ROCK, ARK.

DRAWN BY: CWT DATE: APR. 2021 FILENAME: b100955x1_BE2.dgn
CHECKED BY: JHR DATE: MAY 2021 SCALE: As Shown
DESIGNED BY: ERM DATE: APR. 2021
BRIDGE NO. 07556, 07562-07564 DRAWING NO. 64315

abholl 8/13/2021 9:52:42 AM
WORKSPACE: ARDOT Bridge (2019)
L:\20IT\1701642 - ARDOT Job 100955\Drawings\b100955x1_S207_BE.dgn
REVISED DATE:

DATE REVISED	DATE FILMED	DATE REVISED	DATE FILMED	FED. ROAD DIST. NO.	STATE	FED. AID PROJ. NO.	SHEET NO.	TOTAL SHEETS
				6	ARK.			
				JOB NO.		100955	139	356
				(1) 07556, 07562-07564		INT. BENTS		64316

(1) C501 Spiral Bar shall be placed 1" clear from the bottom of the cap.

(2) Gap between the top of the pile and bottom of cap shall be 3"±1".

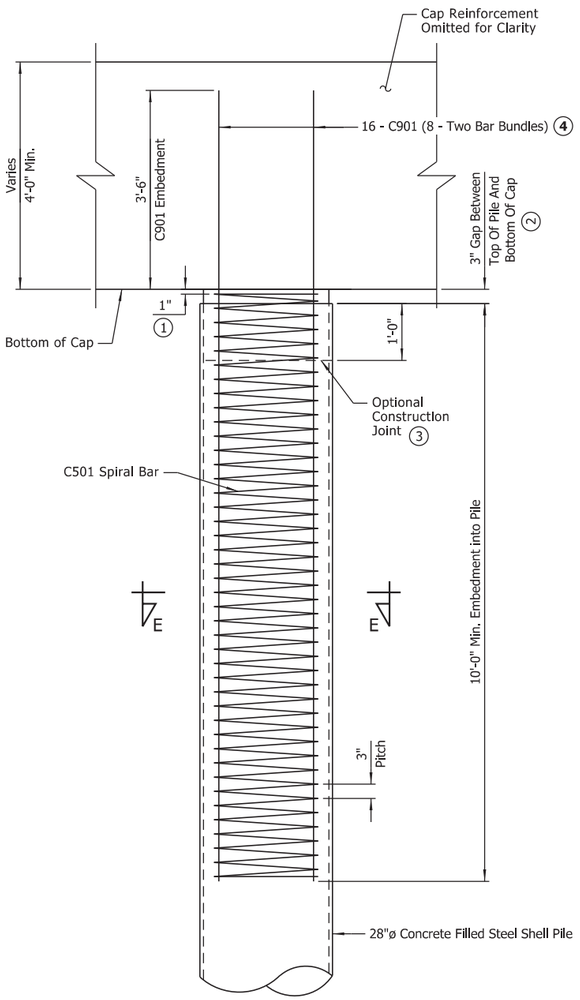

PILE CONNECTION DETAIL

Scale: ¾" = 1'-0"

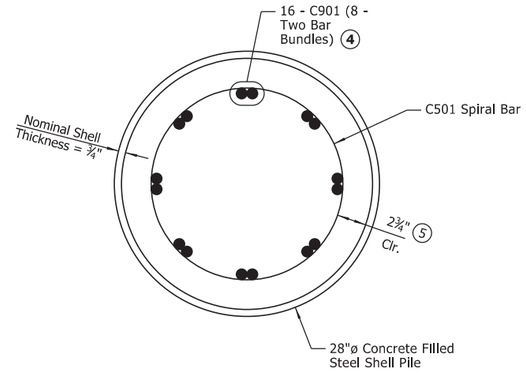

SECTION E-E

Scale: 1½" = 1'-0"

(3) If optional construction joint is used, the upper one foot of the pile, along with the nominal 3" gap, shall be poured with self-consolidating concrete at the same time the pocket connection is filled.

(4) **ASTM A706, Grade 60 reinforcing steel required.**

(5) Reinforcing cage may be shifted within the steel shell section to facilitate connection to the precast cap. Maintain 2" min. clear cover within "gap" section.

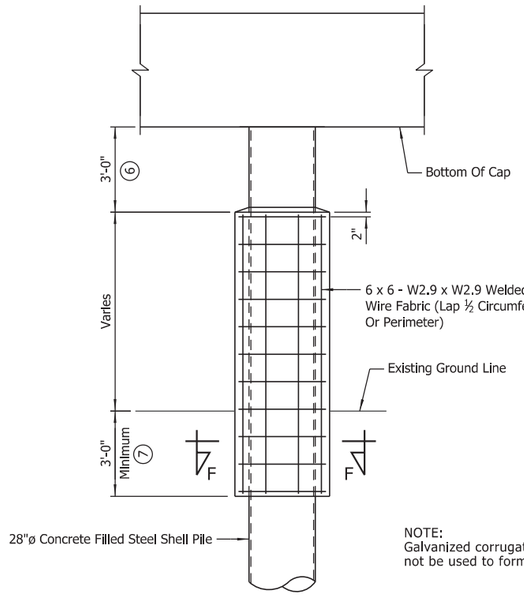

NOTE:
Galvanized corrugated steel pipe shall not be used to form pile encasement.

PILE ENCASEMENT DETAIL FOR 28" STEEL SHELL PILES

Scale: ⅜" = 1'-0"

(6) Pile encasement terminated as shown to facilitate support of precast cap during cap installation. Upper 3'-0" of pile shall be painted in accordance with Subsection 805.02 after precast cap installation is complete.

(7) Unless otherwise noted on Bridge Layout.

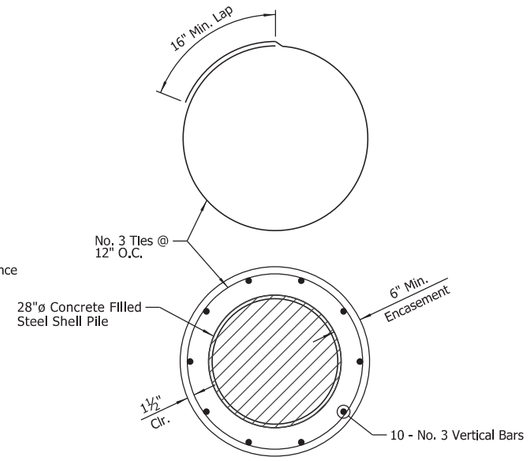

SECTION F-F

GENERAL NOTES - PRECAST CONCRETE BENT CAPS

Corrugated steel pipe for pocket connections shall be AASHTO M 36, Type 1, 14 Gage. The corrugated steel pipe shall have helical corrugations with continuous lock-seams extending the full length of the pipe section. Individual pockets shall consist of a single length of the pipe (splicing of pipe will not be allowed). The pile pocket shall be filled to the top of cap using self-consolidating concrete in accordance with SP "SELF-CONSOLIDATING CONCRETE".

Concrete for precast bent caps shall be Class S except that the coarse aggregate size shall meet AASHTO M 43, Size 67 (¾" Max.).

Drawings show general features of design only. Shop drawings for precast bent caps shall be submitted and approval secured before fabrication is to begin. The Contractor's proposed lifting details shall be submitted in the shop drawings.

Bent caps shall be precast. Concrete (including pocket connections), reinforcing, corrugated steel pipes, and bar supports are considered subsidiary to the pay item "PRECAST CONCRETE BENT CAPS". See SP "PRECAST CONCRETE BENT CAPS".

All reinforcing steel in precast bent caps shall be Grade 60 (yield strength = 60,000 psi) conforming to AASHTO M 31 or M 322, Type A, with mill test reports unless noted otherwise.

For additional information, see Layout.

GENERAL NOTES FOR 28" ø STEEL SHELL PILE ENCASEMENTS:

See Bridge Layout for additional notes and required location of pile encasements.

Concrete shall be Class S with a minimum 28-day compressive strength, f'c = 3,500 psi. If concrete cannot be placed in the dry, seal concrete may be used from top to bottom of encasement.

Reinforcing steel shall be Grade 60 conforming to AASHTO M 31 or M 322, Type A.

Welded wire fabric shall conform to AASHTO M 55 or M 221.

Concrete, welded wire fabric or reinforcing steel shall not be paid for directly, but shall be considered subsidiary to the item "PILE ENCASEMENT". Galvanized corrugated steel pipe shall not be used to form pile encasement.

STATE OF ARKANSAS
LICENSED PROFESSIONAL ENGINEER
No.8017
JOHN H. RUDDELL

DIGITALLY SIGNED 8-13-2021
BRIDGE ENGINEER

SHEET 3 OF 4
DETAIL OF INTERMEDIATE BENTS
HWY. 77 OVER LEFT HAND CHUTE
OF LITTLE RIVER

ROUTE SEC.

ARKANSAS STATE HIGHWAY COMMISSION
LITTLE ROCK, ARK.

DRAWN BY: CWT DATE: APR. 2021 FILENAME: b100955x1_BE3.dgn
CHECKED BY: JHR DATE: MAY 2021 SCALE: As Shown
DESIGNED BY: ERM DATE: APR. 2021

BRIDGE NO. 07556, 07562-07564 DRAWING NO. 64316

abhall 8/13/2021 9:52:42 AM
WORKSPACE: ARDOT Bridge (2019)
L:\20\TO1\07642 - ARDOT Job 100955\Drawings\b100955x1_S208_BE.dgn
REVISED DATE:

DATE REVISED	DATE FILMED	DATE REVISED	DATE FILMED

FED. ROAD DIST. NO.	STATE	FED. AID PROJ. NO.	SHEET NO.	TOTAL SHEETS
6	ARK.			
JOB NO.		100955	140	356
(1) 07556, 07562-07564		INT. BENTS		64317

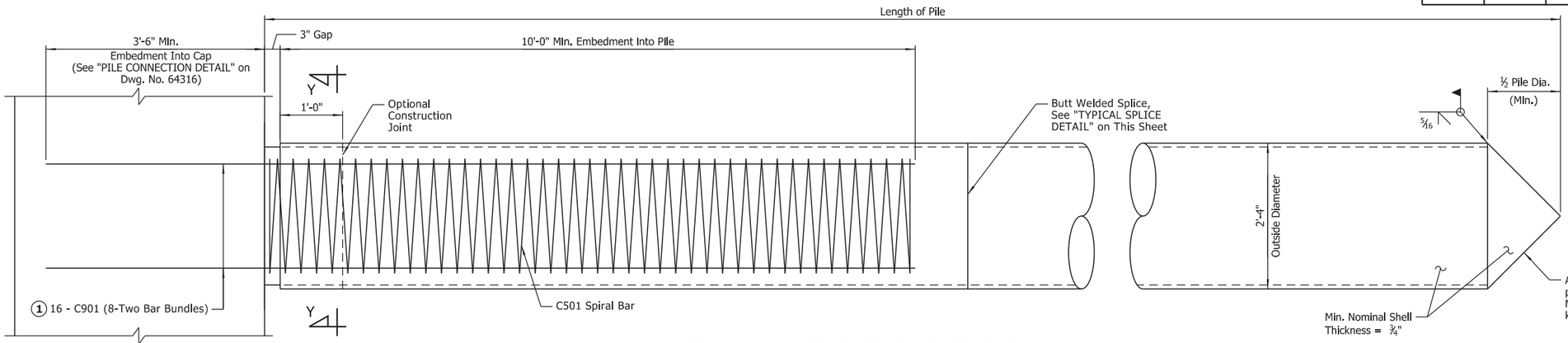

NOTE:
Steel pile tip will not be paid for directly, but shall be subsidiary to the item "STEEL SHELL PILING (28" DIA.)".

28" DIAMETER CONCRETE FILLED STEEL SHELL PILE

Scale: 1" = 1'-0"

(1) **C901 bars shall be ASTM A706, Grade 60.**

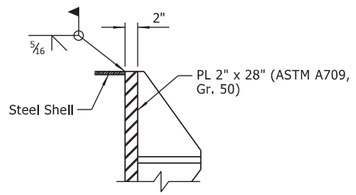

PART SECTION

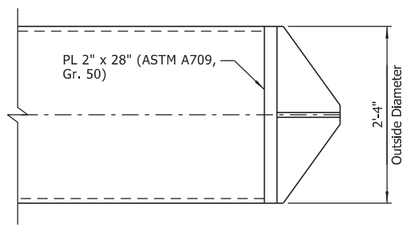

ELEVATION

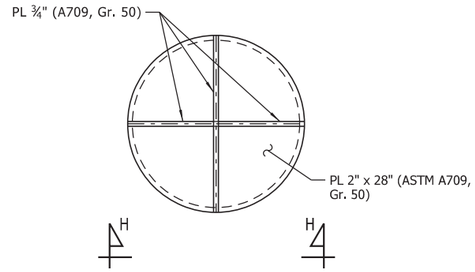

VIEW H-H

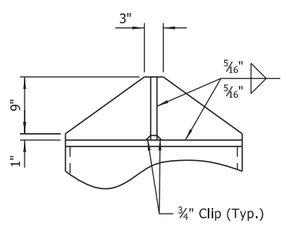

ALTERNATE VANED TIP DETAIL FOR 28" PIPE

Scale: 1" = 1'-0"

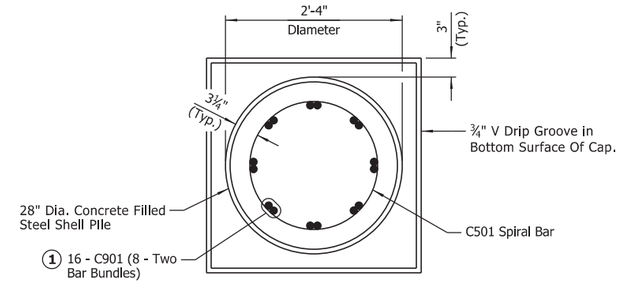

SECTION Y-Y

Scale: 1" = 1'-0"

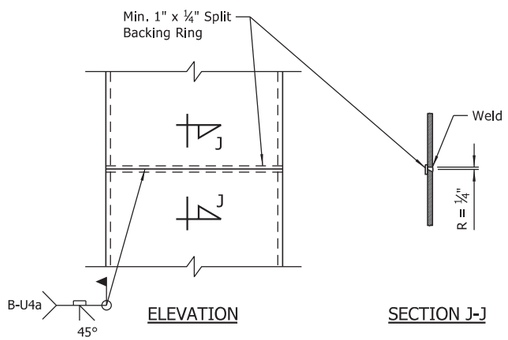

ELEVATION SECTION J-J

TYPICAL SPLICE DETAIL

Scale: 1" = 1'-0"

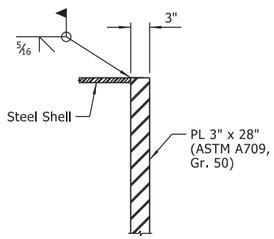

PART SECTION

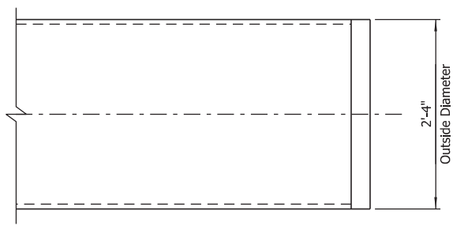

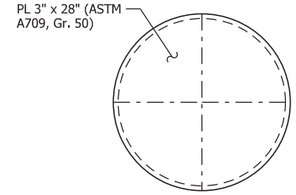

ELEVATION

ALTERNATE FLAT TIP DETAIL FOR 28" PIPE

Scale: 1" = 1'-0"

GENERAL NOTES - 28" CONCRETE FILLED STEEL SHELL PILES

Steel shells shall conform to ASTM A252, Grade 3 (Fy = 45,000 psi).

Concrete used for filling of steel shell shall be Class S with a minimum 28-day compressive strength, f'c = 3,500 psi and shall be poured in the dry. Shrinkage at 28 days shall be less than 0.032 percent in accordance with AASHTO T160. Approved admixtures may be used to obtain desired workability, shrinkage and early strength gain. See SP "CONCRETE FILL FOR LARGE DIA. STEEL SHELL PILES" for additional information.

Reinforcing steel shall be Grade 60 conforming to AASHTO M 31 or M 322, Type A with mill test reports unless otherwise noted.

Steel shell piling shall be encased with concrete in accordance with "PILE ENCASEMENT DETAIL FOR 28" STEEL SHELL PILES" on Dwg. No. 64316. Steel shell piling that extends above the ground and is not protected by pile encasement shall be painted in accordance with Subsection 805.02.

See Bridge Layout for size and estimated length of steel shell piles and for driving information.

Concrete and structural steel shall not be paid for directly, but shall be considered subsidiary to the item "STEEL SHELL PILING (28" DIA.)". Reinforcing steel shall be included in the item "PRECAST CONCRETE BENT CAPS".

STATE OF ARKANSAS
LICENSED PROFESSIONAL ENGINEER
No.8017
JOHN H. RUDDELL

DIGITALLY SIGNED 8-13-2021
BRIDGE ENGINEER

SHEET 4 OF 4
DETAILS OF INTERMEDIATE BENTS
HWY. 77 OVER LEFT HAND CHUTE
OF LITTLE RIVER

ROUTE SEC.

ARKANSAS STATE HIGHWAY COMMISSION
LITTLE ROCK, ARK.

DRAWN BY: CWT DATE: APR. 2021 FILENAME: b100955x1_BE4.dgn
CHECKED BY: JHR DATE: MAY 2021 SCALE: As Shown
DESIGNED BY: ERM DATE: APR. 2021

BRIDGE NO. 07556, 07562-07564 DRAWING NO. 64317

abhall 8/13/2021 9:52:43 AM
WORKSPACE: ARDOT Bridge (2019)
L:\2017\1701642 - ARDOT Job 100955\Drawings\b100955x1_S209_BE.dgn
REVISED DATE:

DATE REVISED	DATE FILMED	DATE REVISED	DATE FILMED	FED. ROAD DIST. NO.	STATE	FED. AID PROJ. NO.	SHEET NO.	TOTAL SHEETS
				6	ARK.			
				JOB NO.		100955	141	355
				(1) 07556-07561		COMMON-34' RDWY.		64318

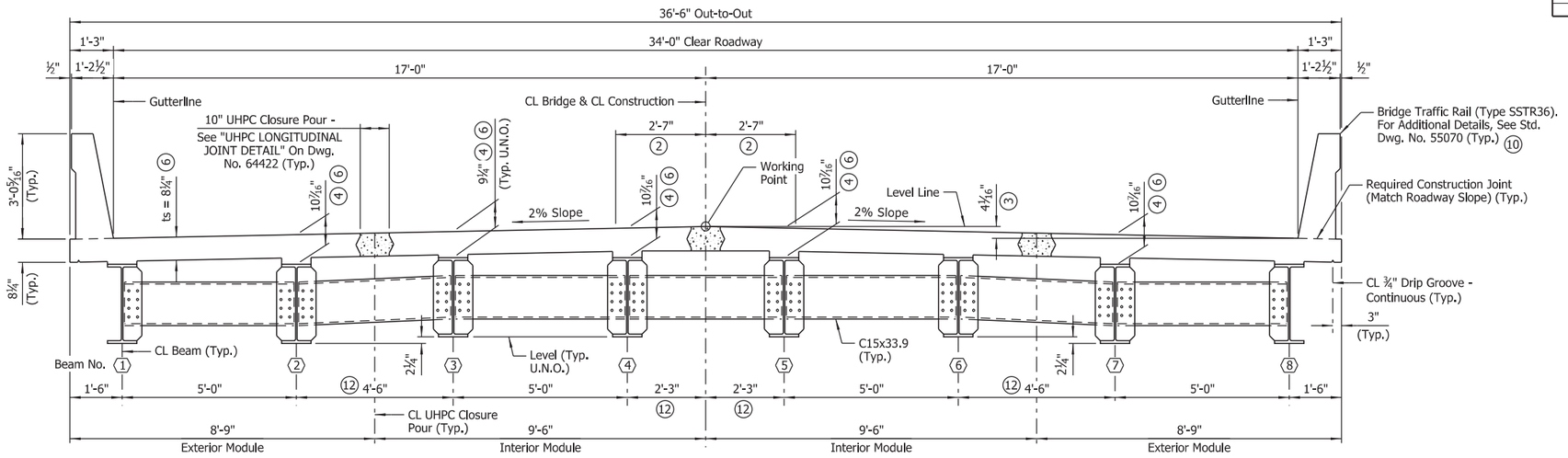

TYPICAL ROADWAY SECTION

(Looking Ahead)
Scale: ½" = 1'-0"

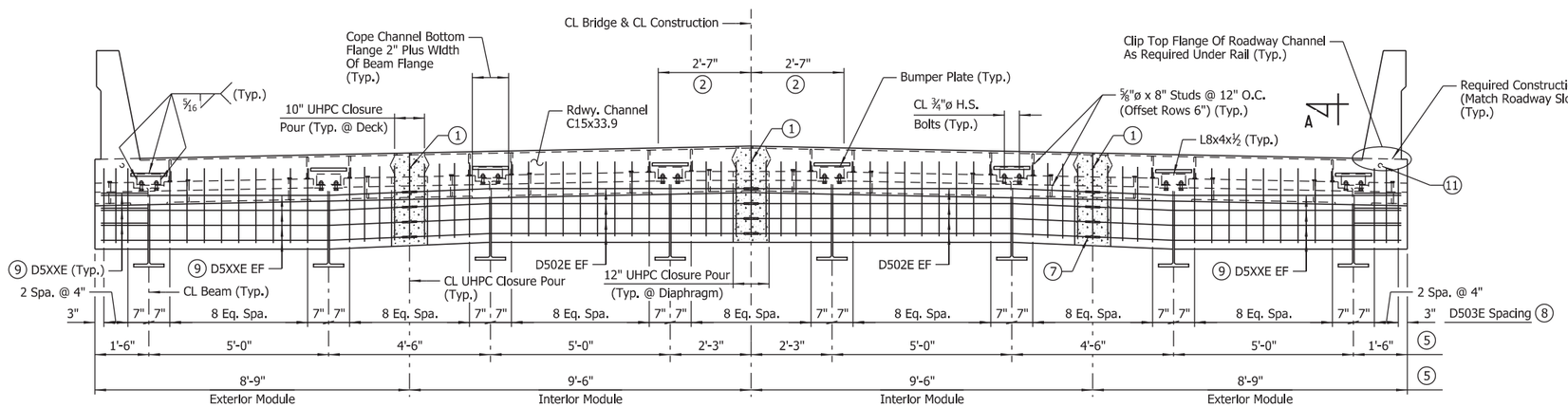

TYPICAL SECTION THRU JOINT AT END BENTS

(Looking Ahead at Begin Bridge, Diaphragm At End Bridge Similar)
No Scale

EXPANSION DEVICE:
Rdwy. Channel - C15x33.9
Conn. Angles - L8x4x½
Detail Device ⅛" high and provide ¼" shims using 2-1⁄16" and 1-⅛" plates.

NOTE:
D503E bars oriented parallel to CL Bridge.

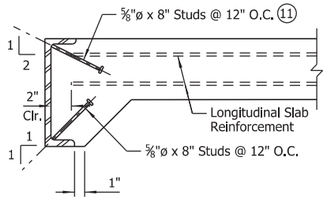

DETAIL OF ANCHORS AND PLACEMENT OF LONGITUDINAL REINFORCEMENT

No Scale

NOTE:
As an alternate to ⅝"ø studs, ½"ø x 8" studs spaced @ 8" O.C. may be used.

NOTES:
For Standard General Notes, See Std. Dwg. Nos. 55006.

For prefabricated module reinforcing details, see Dwg. No. 64319.

For "SECTION A-A", see Dwg. No. 64421.

Class 2 Protective Surface Treatment shall be applied to the top and roadway faces of bridge traffic rails and the bridge roadway surface.

The bridge deck shall be given a polymer overlay as specified in SP "POLYMER OVERLAY".

(1) See "WELD DETAIL FOR EXPANSION DEVICE" on Dwg. No. 64421.

(2) See "ROUNDING DETAIL" on Std. Dwg. No. 55007.

(3) Working Point to Gutterline (Typ.)

(4) Measured from top of deck to top of beam flange at CL Bearing

(5) Dimensions shown normal to CL Construction. Elements of the expansion device shall be fabricated to accommodate skew where applicable.

(6) The bridge deck as shown includes ¼" of sacrificial surface for deck grinding.

(7) The mechanical couplers shall be Dayton Superior D250SCA Bar Lock Epoxy Couplers or an alternate approved type in accordance with the ARDOT Qualified Products List (QPL). The cost of mechanical couplers shall not be measured for separate payment but shall be included in the cost of the prefabricated superstructure modules. Mechanical couplers shall develop at least 125% of the specified yield strength of the reinforcing steel.

(8) Dimensions shown are normal to CL Bridge & CL Construction.

(9) See "PLAN - END BENT DIAPHRAGM" on superstructure details for each bridge for bar designations.

(10) Bridge Traffic Rail shall be cast in field following placement of all closure pours.

(11) Place studs affected by clipped flange horizontally on channel web.

(12) Permanent steel bridge deck forms will not be allowed within bays that contain UHPC closure pours. Removable deck forming will be required at these locations.

LEGEND

EF = Each Face
U.N.O. = Unless Noted Otherwise
UHPC = Ultra High Performance Concrete

SILICONE JOINT DATA					
Bridge No., Bent No.	"A" Width Perpendicular To Joint At 24 Hour Average Temperature (13) Of:			"B" Perpendicular To Joint At 60°F	Bumper Plate Size
	40°F	60°F	80°F		
07556	1⅝"	1½"	1⅜"	2"±	1" x ¾" x 1'-0"
07557	2³⁄₁₆"	2"	1¹³⁄₁₆"	2¼"±	1" x 1" x 1'-0"
07558, Bent 1	2¹¹⁄₁₆"	2½"	2⁵⁄₁₆"	2½"±	1" x 1¼" x 1'-0"
07558, Bent 7	2⅞"	2½"	2⅛"	2½"±	1" x 1¼" x 1'-0"
07559	2⅛"	2"	1⅞"	2¼"±	1" x 1" x 1'-0"
07560	2¹³⁄₁₆"	2½"	2³⁄₁₆"	2½"±	1" x 1¼" x 1'-0"
07561	1⅝"	1½"	1⅜"	2"±	1" x ¾" x 1'-0"

(13) The temperature used to set the joint opening shall be the approximate average air temperature during the 24 hour period immediately before the end bent backwalls are poured. The Engineer shall establish the temperature. Interpolation of the table may be be necessary.

NOTES:
If only bridge number is given, joint data is the same for begin bridge and end bridge.

For additional details of poured silicone joints, see Std. Dwg. No. 55008.

STATE OF ARKANSAS
LICENSED PROFESSIONAL ENGINEER
No.8017
JOHN H. RUDDELL

DIGITALLY SIGNED 8-13-2021
BRIDGE ENGINEER

SHEET 1 OF 2
COMMON DETAILS OF 34' CLEAR ROADWAY STEEL SUPERSTRUCTURE

ROUTE SEC.

ARKANSAS STATE HIGHWAY COMMISSION
LITTLE ROCK, ARK.

DRAWN BY: RAK DATE: DEC. 2020 FILENAME: b100955_s1.dgn
CHECKED BY: JHR DATE: MAY 2021 SCALE: As Shown
DESIGNED BY: RAK DATE: DEC. 2020

BRIDGE NO. 07556-07561 DRAWING NO. 64318

abhall 8/13/2021 9:52:45 AM
WORKSPACE: ARDOT Bridge (2019)
L:\2017\1701642 - ARDOT Job 100955\Drawings\b100955_S40_SX.dgn
REVISED DATE:

DATE REVISED	DATE FILMED	DATE REVISED	DATE FILMED	FED. ROAD DIST. NO.	STATE	FED. AID PROJ. NO.	SHEET NO.	TOTAL SHEETS
				6	ARK.			
				JOB NO.		100955	142	355
				(1) 07556-07561		COMMON-34' RDWY.		64319

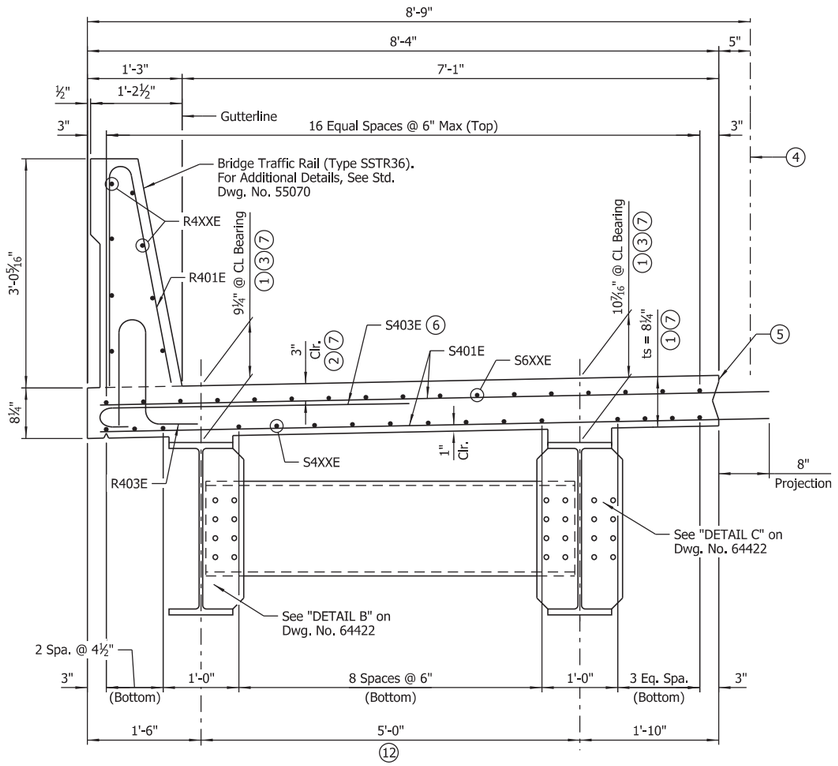

EXTERIOR MODULE REINFORCING DETAIL

Scale: 1" = 1'-0"

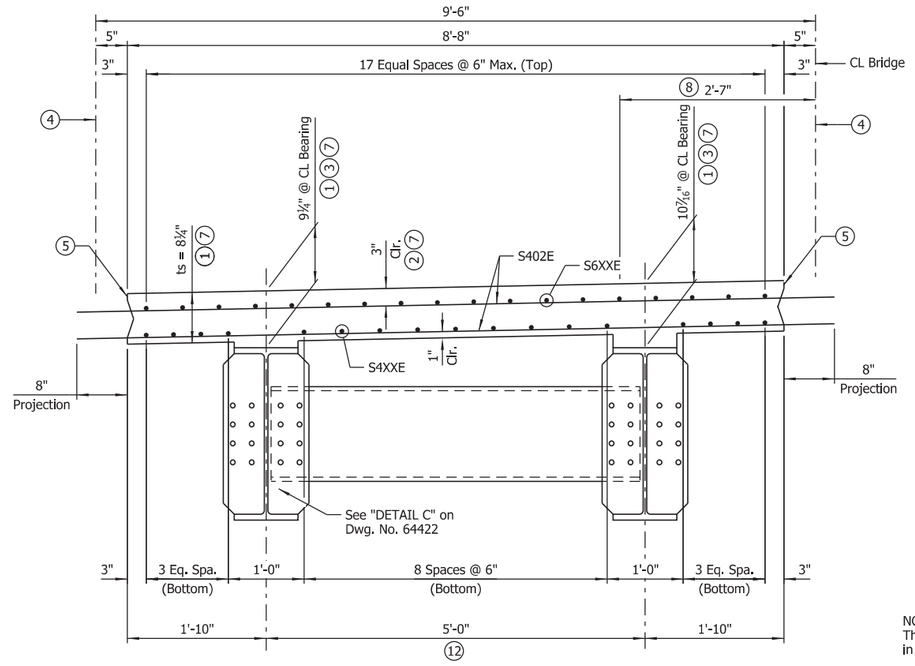

INTERIOR MODULE REINFORCING DETAIL

Scale: 1" = 1'-0"

NOTE:
Bridge Traffic Rail to be poured after all prefabricated modules and cast-in-place closure pours are placed.

LEGEND

EF = Each Face

1. See "ADJUSTMENT FOR SLAB THICKNESS TOLERANCE" on Dwg. No. 64421.
2. TOLERANCE:
   Minus = ¼"
   Plus = Amount of slab thickening used to meet slab thickness tolerance - See "ADJUSTMENT FOR SLAB THICKNESS TOLERANCE" on Dwg. No. 64421.
3. Measured from top of deck to top of beam flange at CL Bearing.
4. CL 10" Ultra High Performance Concrete Closure Pour. See "UHPC LONGITUDINAL DETAIL" on Dwg. No. 64422.
5. Provide joint surface with Class 4, Exposed Aggregate Finish per Subsection 802.19(b)(4) with "Concrete Surface Profile 6" or rougher, as established by the International Concrete Repair Institute.
6. Rotate S403E as needed to avoid interference with bottom mat of deck reinforcement.
7. The bridge deck as shown includes ¼" of sacrificial surface for deck grinding.
8. See "ROUNDING DETAIL" on Std. Dwg. No. 55007.
9. Dimensions shown are normal to CL Bridge & CL Construction.
10. See "DETAILS OF INTERMEDIATE BENTS" of each individual bridge for additional details.
11. See "PLAN - INTERMEDIATE BENT DIAPHRAGM" of each individual bridge for bar designations.
12. Permanent steel bridge deck forms are allowed in designated bays only.

NOTES:
The prefabricated superstructure modules shall be fabricated and assembled in accordance with SP "PREFABRICATED SUPERSTRUCTURE MODULES".

The cost of all concrete (including those portions precast and cast-in-place), reinforcing steel and structural steel shall be included in the unit cost of the prefabricated module.

The concrete used for the longitudinal closure pour shall be in accordance with SP "ULTRA HIGH PERFORMANCE CONCRETE". Cost of UHPC shall be included in the unit cost of the prefabricated module.

Bar positions and clearances from the forms shall be maintained by means of stays, ties, hangers, or other approved devices per Subsection 804.06. Placement of slab bolsters or high-chairs with full-length lower runners directly on removable deck forms will not be allowed.

SLAB REINFORCING:
Transverse: S401E or S402E @ 6" o.c. Top and Bottom
S403E @ 6" o.c. in Top of Overhang Beneath Bridge Traffic Rail (Bundled with No. 4 Bars)
Longitudinal:
S6XXE In Top As Shown — See "REINFORCING PLAN" of each individual bridge for bar designation
S4XXE In Bottom As Shown —

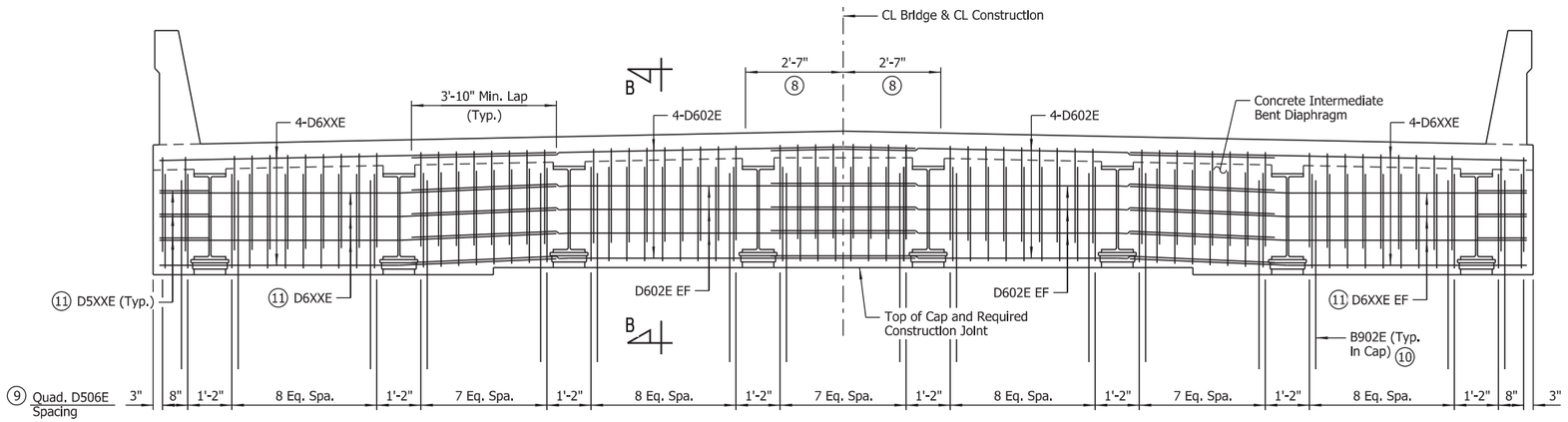

TYPICAL SECTION AT INTERMEDIATE BENTS

(Looking Ahead)
No Scale

NOTE:
D506E bars oriented parallel to CL Bridge.

NOTE:
C15x33.9 Diaphragms and deck reinforcing not shown for clarity.

NOTE:
For "SECTION B-B", see Dwg. No. 64421.

STATE OF ARKANSAS
LICENSED PROFESSIONAL ENGINEER
No.8017
JOHN H. RUDDELL

DIGITALLY SIGNED 8-13-2021
BRIDGE ENGINEER

SHEET 2 OF 2
COMMON DETAILS OF 34' CLEAR ROADWAY STEEL SUPERSTRUCTURE

ROUTE SEC.

ARKANSAS STATE HIGHWAY COMMISSION
LITTLE ROCK, ARK.

DRAWN BY: RAK DATE: DEC. 2020 FILENAME: b100955_s2.dgn
CHECKED BY: JHR DATE: MAY 2021 SCALE: As Shown
DESIGNED BY: RAK DATE: DEC. 2020

BRIDGE NO. 07556-07561 DRAWING NO. 64319

REVISED DATE:
abholl 8/13/2021 9:52:47 AM
WORKSPACE: ARDOT Bridge (2019)
L:\20T\1701642 - ARDOT Job 100955\Drawings\b100955_S402_SX.dgn

DATE REVISED	DATE FILMED	DATE REVISED	DATE FILMED

FED. ROAD DIST. NO.	STATE	FED. AID PROJ. NO.	SHEET NO.	TOTAL SHEETS
6	ARK.			
JOB NO.		100955	143	356
(1) 07556		160' UNIT		64320

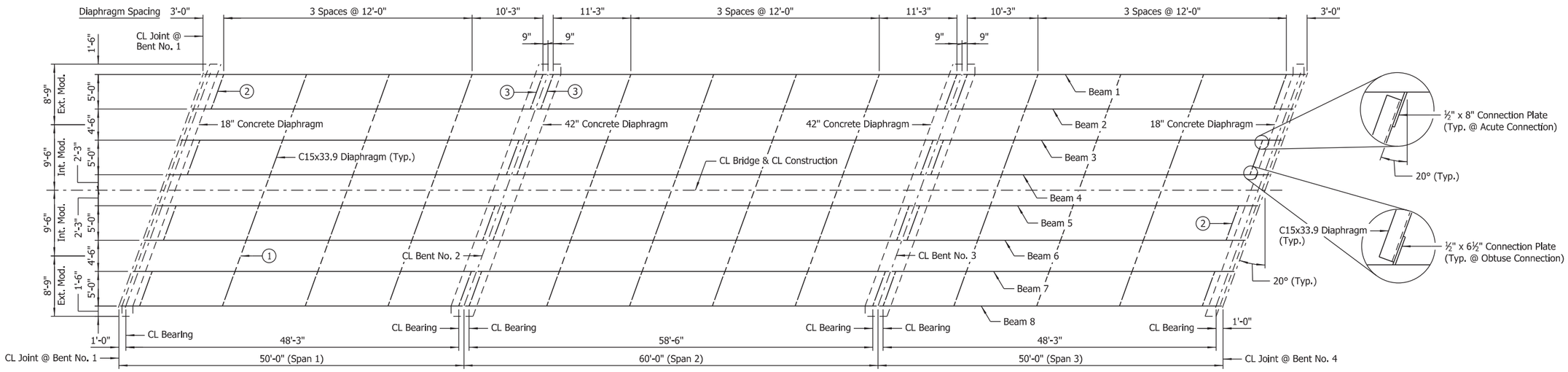

FRAMING PLAN

Scale: ⅛" = 1'-0"

(1) Diaphragms between modules shall be installed after prefabricated modules are installed and prior to constructing closure pours.

(2) Diaphragms adjacent to concrete End Bent diaphragms shall be fabricated such that the channel flanges project away from concrete end bent diaphragms. Note that orientation of flange projection shall be considered when determining obtuse/acute connection locations.

(3) Diaphragms at Intermediate Bents shall be fabricated such that the channel flanges project away from CL Bent. Note that orientation of flange projection shall be considered when determining obtuse/acute connection locations.

NOTES:
For Standard General Notes, see Std. Dwg. No. 55006.

For "SHEAR CONNECTOR DETAIL," see Std. Dwg. No. 55007.

All structural steel shall be ASTM A709, Gr. 50W unless noted otherwise. The cost of the structural steel shall be subsidiary to the unit price bid for item "PREFABRICATED SUPERSTRUCTURE MODULES". Diaphragms placed between separate modules shall be included in the cost of the prefabricated modules.

For painting of beam ends adjacent to bridge deck expansion joints, see "PROJECT GENERAL NOTES" on Dwg. No. 64303.

For diaphragm and connection plate details, see "DETAIL B" and "DETAIL C" on Dwg. No. 64422.

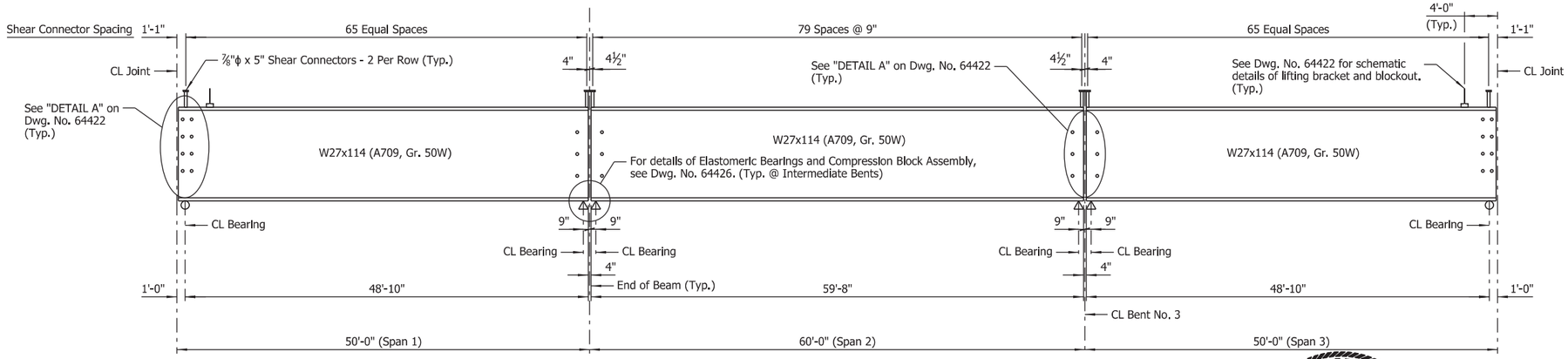

BEAM ELEVATION

No Scale

STATE OF ARKANSAS
LICENSED PROFESSIONAL ENGINEER
No.8017
JOHN H. RUDDELL

DIGITALLY SIGNED 8-13-2021
BRIDGE ENGINEER

SHEET 1 OF 3
DETAILS OF 160'-0" CONTINUOUS W-BEAM UNIT HWY. 77 OVER LEFT HAND CHUTE OF LITTLE RIVER

ROUTE SEC.

ARKANSAS STATE HIGHWAY COMMISSION
LITTLE ROCK, ARK.

DRAWN BY: HEW DATE: DEC. 2020 FILENAME: b100955x1_s1.dgn
CHECKED BY: JHR DATE: JUNE 2021 SCALE: As Shown
DESIGNED BY: BWD DATE: DEC. 2020

BRIDGE NO. 07556 DRAWING NO. 64320

abhall 8/13/2021 9:52:50 AM
WORKSPACE: ARDOT Bridge (2019)
L:\2017\17017642 - ARDOT Job 100955\Drawings\b100955x1_S401_SF.dgn
REVISED DATE:

DATE REVISED	DATE FILMED	DATE REVISED	DATE FILMED

FED. ROAD DIST. NO.	STATE	FED. AID PROJ. NO.	SHEET NO.	TOTAL SHEETS
6	ARK.			
JOB NO.		100955	144	356
(1) 07556		160' UNIT		64321

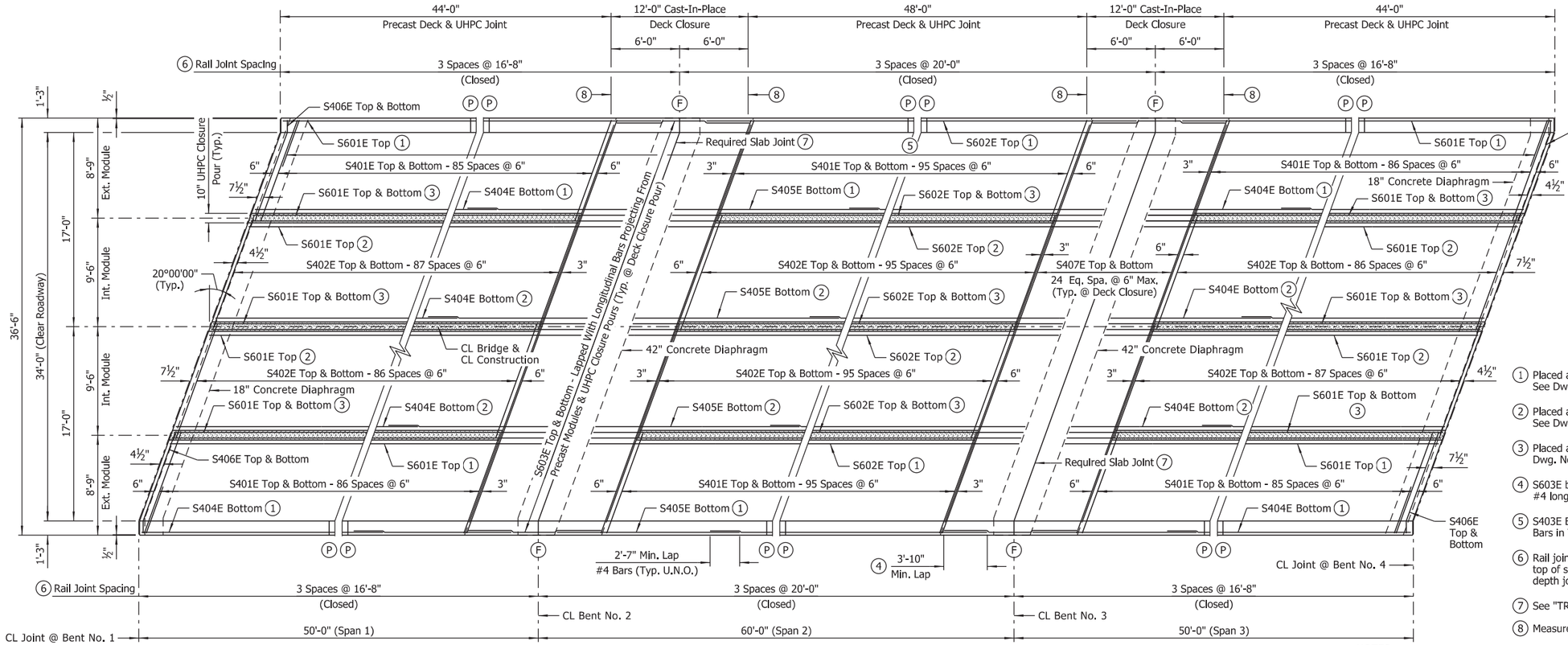

REINFORCING PLAN

Scale: 3/16" = 1'-0"

LEGEND

U.N.O. = Unless Noted Otherwise

RIGHT SIDE DECK DRAIN STATIONS
106+85.81
107+43.81
108+01.81

LEFT SIDE DECK DRAIN STATIONS
106+98.19
107+56.19
108+14.19

NOTE:
Stations shown are to CL Drain. For details of deck drains, see Dwg. No. 64423.

(1) Placed as shown in "EXTERIOR MODULE REINFORCING DETAIL." See Dwg. No. 64319.

(2) Placed as shown in "INTERIOR MODULE REINFORCING DETAIL." See Dwg. No. 64319.

(3) Placed as shown in "UHPC LONGITUDINAL JOINT DETAIL." See Dwg. No. 64422.

(4) S603E bars shall have 3'-10" minimum lap with both #6 and #4 longitudinal bars.

(5) S403E Bundled with #4 Bars in Top of Exterior Modules and #4 Bars in Top of Closure Pours (Typ. on Both Sides of Bridge)

(6) Rail joints designated with symbol (F) shall be stopped 6" from top of slab. All other rail joints with symbol (P) shall be partial depth joints stopped 16" from top of slabs.

(7) See "TRANSVERSE SLAB JOINT DETAIL" on Std. Dwg. No. 55007.

(8) Measured at gutterline

BAR LIST

MARK	NO. REQ'D	LENGTH	"A"	"B"	P.D.
S401E	1,076	9'-5"			Str.
S402E	1,084	10'-8"			Str.
S403E	638	5'-4"			3"
S404E	264	25'-3"			Str.
S405E	132	29'-4"			Str.
S406E	8	9'-4"	8'-3"	1'-1"	3"
S407E	100	38'-6"			Str.
S601E	164	48'-2"			Str.
S602E	82	56'-0"			Str.
S603E	296	11'-8"			Str.
D500E	16	9'-1"			Str.
D501E	16	9'-0"	7'-8"	1'-4"	3¾"
D502E	32	10'-0"			Str.
D503E	138	6'-0"			2½"
D504E	6	3'-8½"			2½"
D505E	6	3'-4½"	1'-1"	1'-3"	2½"
D506E	512	7'-3½"	2'-2"	2'-8"	2½"
D507E	12	5'-2"			2½"

BAR LIST

MARK	NO. REQ'D	LENGTH	"A"	"B"	P.D.
D600E	20	11'-0"	9'-8"	1'-4"	4½"
D601E	36	11'-1"			Str.
D602E	56	14'-0"			Str.
R401E	648	5'-11"			2½"
R402E	48	5'-6"			Str.
R403E	648	3'-6"			3", 3¾"
R404E	96	16'-4"			Str.
R405E	48	19'-8"			Str.

BAR BENDING DIAGRAMS

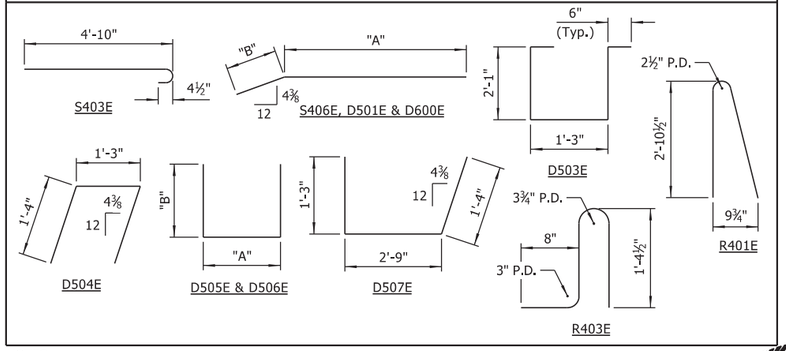

NOTES:
Dimensions of bars are out-to-out.

Bar designations ending with "E" indicate epoxy coated bars.

TABLE OF VARIABLES

CLOSED RAIL PANELS			OPEN RAIL PANELS						
PANEL LENGTH	A	R4XXE	PANEL LENGTH	B	C	D	E	F	R4XXE
16'-8"	33	R404E							
20'-0"	39	R405E							

NOTES:
For Standard General Notes, see Std. Dwg. No. 55006.

For "PROJECT GENERAL NOTES," see Dwg. No. 64303.

Unless noted otherwise, spacing shown for all transverse reinforcing is measured along CL Bridge. Transverse reinforcing shall be placed parallel to skewed supports as shown.

For bridge traffic rail reinforcing details and details of partial-depth and full-depth rail joints, see Std. Dwg. No. 55070.

For details of concrete diaphragms, see Dwg. Nos. 64318, 64319, 64421 & 64322.

Edges of precast deck adjacent to cast-in-place closure pours shall be keyed and textured in accordance with details and notes on Dwg. No. 64422.

For additional clarity in transverse reinforcing placement near end of precast deck, see "TRANSVERSE REINFORCING SCHEMATICS" on Dwg. No. 64421.

Concrete in bridge superstructure shall be placed, consolidated and screeded off for the entire pour before any concrete has taken its initial set.

A minimum of 72 hours shall elapse between completion of the slab and the pouring of the bridge railing. Any railing pours made before the entire slab unit has been placed must be approved by the Engineer.

Concrete diaphragms shall be poured monolithically with the slab.

Removable forms shall be used when pouring diaphragms.

STATE OF ARKANSAS
LICENSED PROFESSIONAL ENGINEER
No.14498
ADAM B. HALL

DIGITALLY SIGNED 8-13-2021
BRIDGE ENGINEER

SHEET 2 OF 3
DETAILS OF 160'-0"
CONTINUOUS W-BEAM UNIT
HWY. 77 OVER LEFT HAND CHUTE
OF LITTLE RIVER

ROUTE SEC.

ARKANSAS STATE HIGHWAY COMMISSION
LITTLE ROCK, ARK.

DRAWN BY: JME DATE: JAN. 2021 FILENAME: b100955x1_s2.dgn
CHECKED BY: ABH DATE: JUNE 2021 SCALE: As Shown
DESIGNED BY: BWD DATE: DEC. 2020

BRIDGE NO. 07556 DRAWING NO. 64321

abhall 8/13/2021 9:52:51 AM
WORKSPACE: ARDOT Bridge (2019)
L:\2017\17017642 - ARDOT Job 100955\Drawings\b100955x1_S402_SB.dgn
REVISED DATE:

DATE REVISED	DATE FILMED	DATE REVISED	DATE FILMED	FED. ROAD DIST. NO.	STATE	FED. AID PROJ. NO.	SHEET NO.	TOTAL SHEETS
				6	ARK.			
				JOB NO.		100955	145	356
				(1) 07556		160' UNIT		64322

TABLE OF DEAD LOAD DEFLECTIONS (INCHES)

	Point Of Deflection	Beams 1 & 8			Beams 2, 4, 5 & 7			Beams 3 & 6		
		Structural Steel	Structural Steel + Slab	Structural Steel + Slab + UHPC + Rail	Structural Steel	Structural Steel + Slab	Structural Steel + Slab + UHPC + Rail	Structural Steel	Structural Steel + Slab	Structural Steel + Slab + UHPC + Rail
Span No. 1	1.0	0.000	0.000	0.000	0.000	0.000	0.000	0.000	0.000	0.000
	1.1	0.040	0.180	0.190	0.043	0.204	0.218	0.043	0.200	0.214
	1.2	0.077	0.341	0.361	0.081	0.386	0.414	0.081	0.378	0.407
	1.3	0.105	0.467	0.487	0.110	0.528	0.557	0.110	0.518	0.546
	1.4	0.123	0.547	0.567	0.129	0.618	0.647	0.129	0.606	0.635
	1.5	0.129	0.575	0.595	0.136	0.649	0.678	0.136	0.637	0.665
	1.6	0.123	0.547	0.567	0.129	0.618	0.647	0.129	0.606	0.635
	1.7	0.105	0.467	0.477	0.110	0.528	0.542	0.110	0.518	0.532
	1.8	0.077	0.341	0.351	0.081	0.386	0.400	0.081	0.378	0.393
	1.9	0.040	0.180	0.180	0.043	0.204	0.204	0.043	0.200	0.200
Span No. 2	2.0	0.000	0.000	0.000	0.000	0.000	0.000	0.000	0.000	0.000
	2.1	0.086	0.385	0.385	0.091	0.435	0.435	0.091	0.426	0.426
	2.2	0.163	0.728	0.738	0.172	0.822	0.837	0.172	0.806	0.821
	2.3	0.223	0.996	1.016	0.235	1.126	1.155	0.235	1.104	1.132
	2.4	0.262	1.167	1.187	0.276	1.319	1.347	0.276	1.293	1.321
	2.5	0.275	1.225	1.245	0.289	1.385	1.413	0.289	1.357	1.386
	2.6	0.262	1.167	1.187	0.276	1.319	1.347	0.276	1.293	1.321
	2.7	0.223	0.996	1.016	0.235	1.126	1.155	0.235	1.104	1.132
	2.8	0.163	0.728	0.738	0.172	0.822	0.837	0.172	0.806	0.821
	2.9	0.086	0.385	0.385	0.091	0.435	0.435	0.091	0.426	0.426
Span No. 3	3.0	0.000	0.000	0.000	0.000	0.000	0.000	0.000	0.000	0.000
	3.1	0.040	0.180	0.180	0.043	0.204	0.204	0.043	0.200	0.200
	3.2	0.077	0.341	0.351	0.081	0.386	0.400	0.081	0.378	0.393
	3.3	0.105	0.467	0.477	0.110	0.528	0.542	0.110	0.518	0.532
	3.4	0.123	0.547	0.567	0.129	0.618	0.647	0.129	0.606	0.635
	3.5	0.129	0.575	0.595	0.136	0.649	0.678	0.136	0.637	0.665
	3.6	0.123	0.547	0.567	0.129	0.618	0.647	0.129	0.606	0.635
	3.7	0.105	0.467	0.487	0.110	0.528	0.557	0.110	0.518	0.546
	3.8	0.077	0.341	0.361	0.081	0.386	0.414	0.081	0.378	0.407
	3.9	0.040	0.180	0.190	0.043	0.204	0.218	0.043	0.200	0.214
	4.0	0.000	0.000	0.000	0.000	0.000	0.000	0.000	0.000	0.000

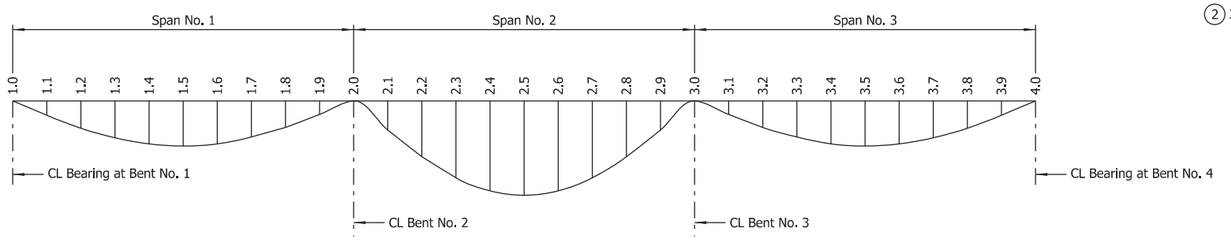

DEAD LOAD DEFLECTION DIAGRAM

No Scale

NOTES:
Camber for dead load deflection plus vertical curve +/- ¼" tolerance. Deflections shown for end spans are along CL Beam from CL Bearing at End Bent to CL Int. Bent. Deflections shown for interior span are along CL Beam from CL Int. Bent to CL Int. Bent. Negative sign (-) indicates point above chord.

Dead load deflections shown include an assumed loading of 15 psf in bays without UHPC closures to account for stay-in-place metal deck forms.

Revision to the deflection tables may be necessary upon review of the Contractor's submitted forming details.

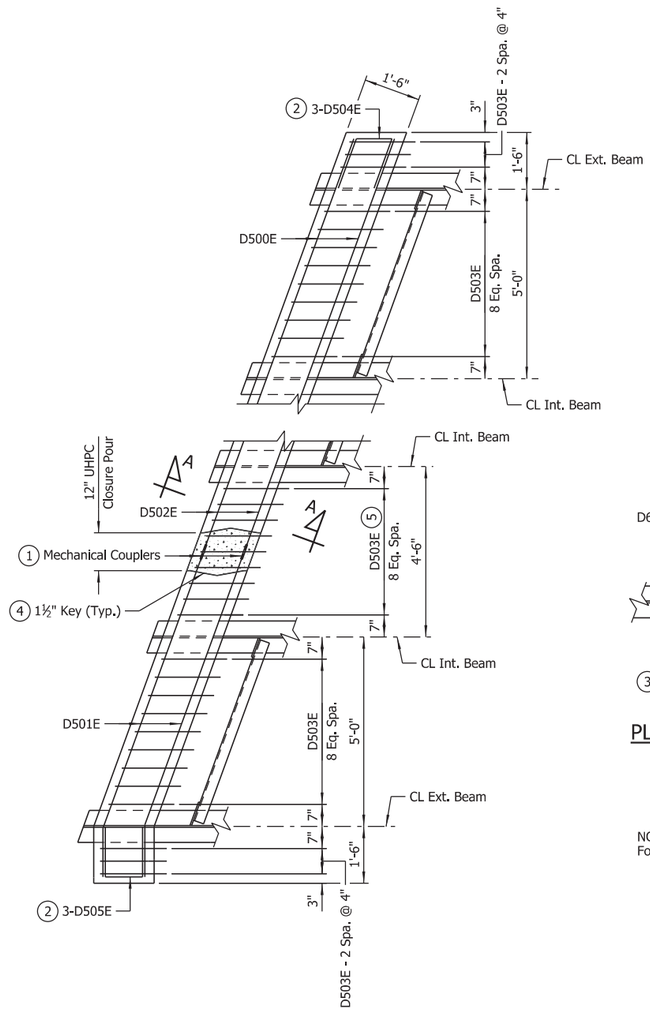

PLAN - END BENT DIAPHRAGM

Scale: ½" = 1'-0"

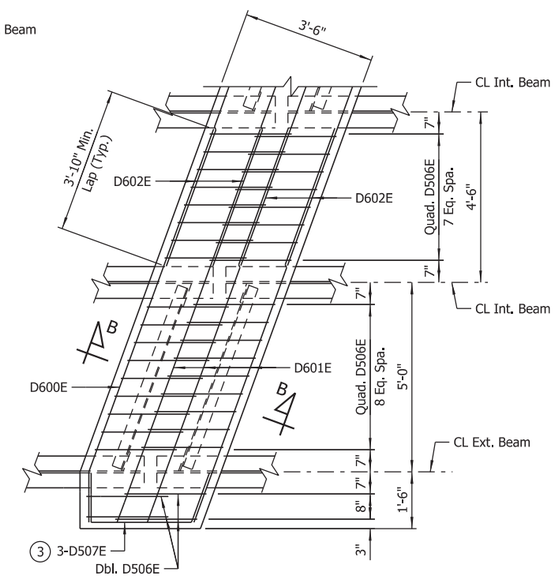

PLAN - INTERMEDIATE BENT DIAPHRAGM

Scale: ½" = 1'-0"

NOTE:
For "SECTION A-A" and "SECTION B-B", see Dwg. No. 64421.

(2) Spaced with top 3 rows of D500E or D501E bars.

(3) Spaced with D600E and D601E bars passing through beam web.

(4) Provide joint surface with Class 4, Exposed Aggregate Finish per Subsection 802.19(b)(4) with "Concrete Surface Profile 6" or rougher, as established by the International Concrete Repair Institute.

(5) Shift D503E as required to avoid conflict with Mechanical Couplers. Maintain 8" max. spacing between stirrups.

(1) The mechanical couplers shall be Dayton Superior D250SCA Bar Lock Epoxy Couplers or an alternate approved type in accordance with the ARDOT Qualified Products List (QPL). Due to space constraints, the shear bolts on the couplers between adjacent modules shall not be tightened until both modules are in their final positions. It will be necessary to loosely install the couplers on each module's end diaphragm reinforcing, remove the center stop pins, and slide the couplers against the module's concrete immediately prior to setting an adjacent module. Once the adjacent module is in place, the mechanical couplers shall be slid over the adjacent module's reinforcing and centered between the ends of the modules, prior to re-inserting the center stop pins and torquing the shear bolts. The cost of mechanical couplers shall not be measured for separate payment but shall be subsidiary to the price bid for item "PREFABRICATED SUPERSTRUCTURE MODULES." Mechanical couplers shall develop at least 125% of the specified yield strength of the reinforcing steel.

STATE OF ARKANSAS
LICENSED PROFESSIONAL ENGINEER
No.14498
ADAM B. HALL

DIGITALLY SIGNED 8-13-2021
BRIDGE ENGINEER

SHEET 3 OF 3
DETAILS OF 160'-0" CONTINUOUS W-BEAM UNIT HWY. 77 OVER LEFT HAND CHUTE OF LITTLE RIVER

ROUTE SEC.

ARKANSAS STATE HIGHWAY COMMISSION
LITTLE ROCK, ARK.

DRAWN BY: JLD DATE: FEB. 2021 FILENAME: b100955x1_s3.dgn
CHECKED BY: ABH DATE: JUNE 2021 SCALE: As Shown
DESIGNED BY: BWD DATE: JAN. 2021

BRIDGE NO. 07556 DRAWING NO. 64322

abhall 8/13/2021 9:52:53 AM
WORKSPACE: ARDOT Bridge (2019)
L:\2017\1701642 - ARDOT Job 100955\Drawings\b100955x1_S403_DF.dgn
REVISED DATE:

NOTE:
Excavate existing embankment at both ends of bridge as shown. Approx. 4,674 cubic yards of excavation.

NOTE:
The proposed bridge has been positioned to avoid interference with the existing piling. The Contractor shall verify measurements before driving any piling. Any adjustments necessary to fit the proposed bridge to the existing bridge location shall be submitted for the Engineer's approval.

NOTE:
Use Type Special Approach Slab at each end of Bridge. See Dwg. No. 64430.

NOTE:
Use Type Special Approach Gutters at each end of Bridge. See Dwg. Nos. 64427-64429.

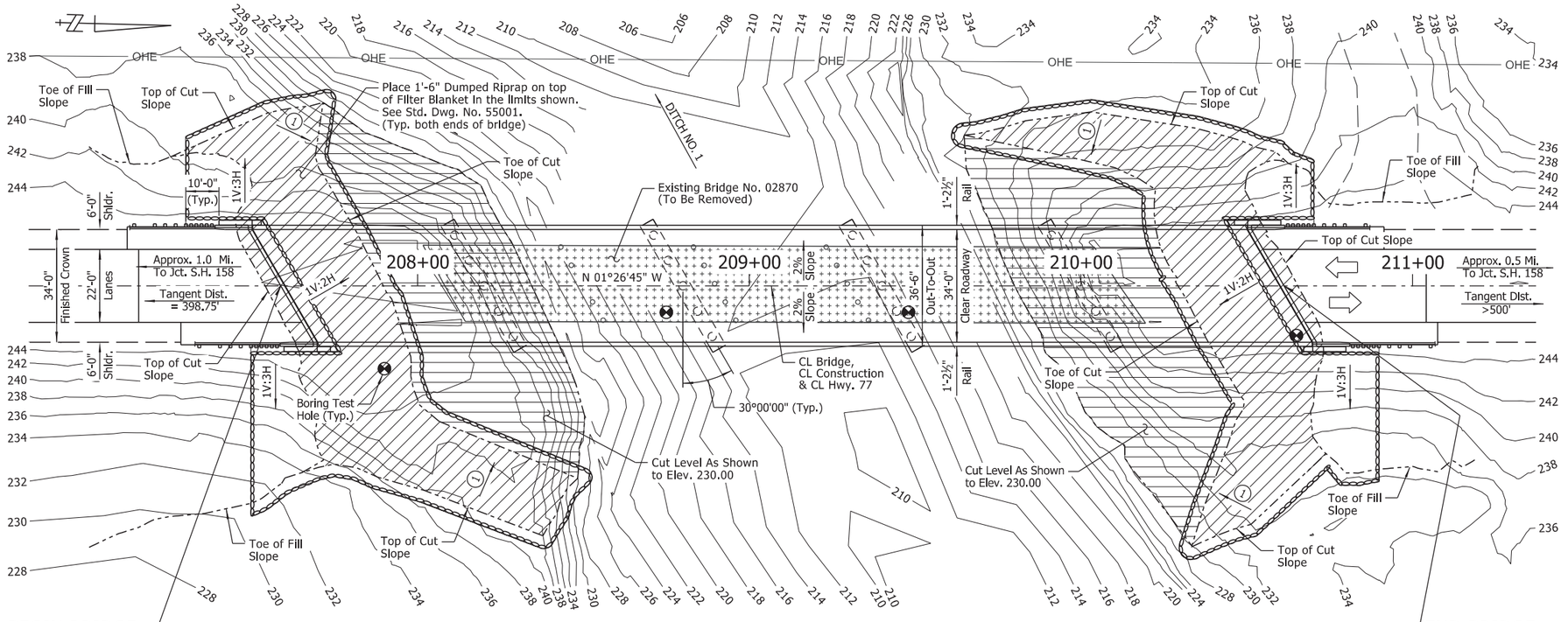

BEGIN BRIDGE
STA. 207+58.75

END BRIDGE
STA. 210+61.25

EXISTING UTILITIES LEGEND

OHE = Overhead Electric

NOTE:
Utilities shown are based on locations at time of survey and do not reflect any potential utility relocations prior to construction.

(1) 1V:2H or flatter in grading transition regions. Cut to limits shown.

PLAN

NOTE:
Stations shown are along CL Construction. Elevations shown are theoretical working point elevations at CL Bridge. Any vertical dimension referenced to CL Deck is based on theoretical working point elevation at CL Bridge. See "ROUNDING DETAIL" on Std. Dwg. No. 55007 for additional information.

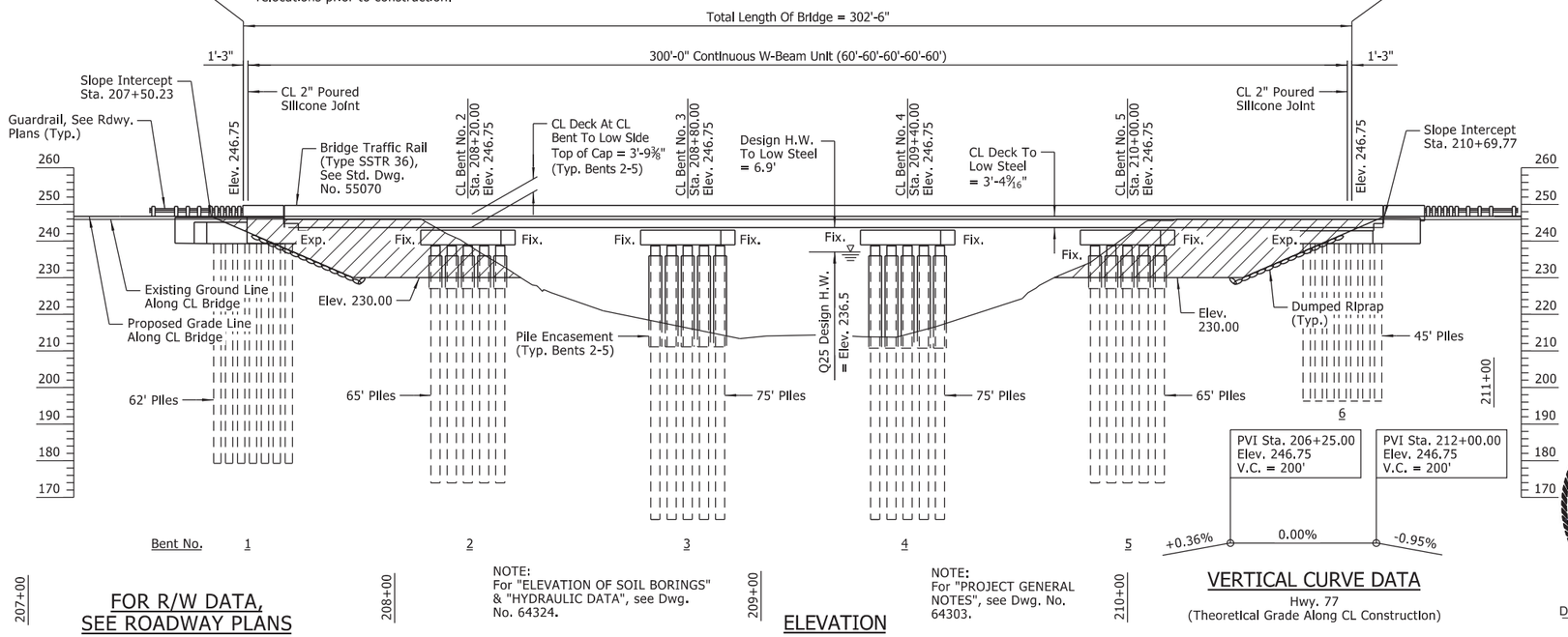

FOR R/W DATA, SEE ROADWAY PLANS

NOTE:
For "ELEVATION OF SOIL BORINGS" & "HYDRAULIC DATA", see Dwg. No. 64324.

NOTE:
For "PROJECT GENERAL NOTES", see Dwg. No. 64303.

ELEVATION

VERTICAL CURVE DATA

Hwy. 77
(Theoretical Grade Along CL Construction)

DATE REVISED	DATE FILMED	DATE REVISED	DATE FILMED

FED. ROAD DIST. NO.	STATE	FED. AID PROJ. NO.	SHEET NO.	TOTAL SHEETS
6	ARK.			
JOB NO.		100955	146	355
(1) 07557		LAYOUT		64323

GENERAL NOTES

STEEL SHELL PILING: Piling in Bents 1 & 6 shall be 24" diameter concrete filled steel shell piles and shall be driven to meet the requirements of the "PILE BEARING TABLE". Piling in Bents 2-5 shall be 30" diameter concrete filled steel shell piles and shall be driven to meet the requirements of the "PILE BEARING TABLE". All piling shall be driven with an approved air, steam, or diesel hammer. Piling in end bents shall be driven after embankment to bottom of cap is in place. Lengths of piling shown are assumed for estimating quantities only. Actual lengths are to be determined in the field. No additional payment will be made for cut-off or build-up. Test piles are not required but may be driven for the Contractor's information in accordance with Subsection 805.08(g). No piles will be paid for as Test Piles.

Water jetting or other methods as approved by the Engineer may be required to achieve minimum penetration. This work shall not be paid for directly, but shall be considered incidental to the items "STEEL SHELL PILING (24" DIA.)" and "STEEL SHELL PILING (30" DIA.)".

PILE ENCASEMENT: Pile encasement for Bents 2-5 shall extend from 3' below bottom of cap to 3' below natural or finished ground. See Dwg. No. 64333 for additional information.

DRIVING SYSTEM: The driving system approval and the ultimate bearing capacity determination for piling shall be based on the requirements of Subsection 805.09(b), "Method B - Wave Equation Analysis (WEAP)" and SP "PILE DRIVING SYSTEM". See the "PILE BEARING TABLE" for the estimated minimum rated hammer energy required to overcome the anticipated driving resistance for all piles at each bent. If the Contractor elects to use water jetting or other approved methods to obtain the minimum tip elevations shown while driving only to the required minimum ultimate bearing capacity, the minimum rated hammer energy required will be lower and shall be accounted for in the driving system chosen by the Contractor.

EXISTING BRIDGE: Existing Bridge No. 02870 (Log Mile 7.13) is 202.4' in length, 28.5' wide (24.0' clear roadway) and consists of a concrete slab on I-beam spans (5 spans total) supported by concrete pile bents. Plans of the existing structure, if available, may be obtained upon request to the Construction Contract Development Section of the Program Management Division.

REMOVAL AND SALVAGE: The Contractor shall remove existing Bridge No. 02870 in accordance with Section 205. Existing dumped riprap shall also be removed. This work shall be considered subsidiary to the item "REMOVAL OF EXISTING BRIDGE STRUCTURE (SITE NO. 2)". All material from the existing bridge, including existing riprap, shall become property of the Contractor.

DETAIL DRAWINGS:	DRAWING NO(S).
Foundation Improvement Plan	64325
End Bents	64310, 64312, 64326-64329
Intermediate Bents	64330-64334
Common Details Of 34' Clear Roadway Steel Superstructure	64318-64319
300'-0" Continuous W-Beam Unit	64335-64338
Common Superstructure Details	64421-64424
Elastomeric Bearings	64425-64426
Type Special Approach Gutters	64427-64429
Type Special Approach Slabs	64430
Dumped Riprap	55001
General Notes For Steel Bridge Structures	55006
Details For Steel Bridge Structures	55007
Poured Silicone Joint	55008
Concrete Filled Steel Shell Piling	55021
Bridge Traffic Rail	55070

PILE BEARING TABLE

BENTS	REQUIRED MINIMUM ULTIMATE BEARING CAPACITY (TONS)	MIN. TIP ELEVATION	ANTICIPATED DRIVING RESISTANCE AT MIN. TIP (TONS)	ESTIMATED MIN. RATED HAMMER ENERGY (FT.-LBS. PER BLOW)
1	309	179.00	550	164,600
2	489	174.00	625	186,200
3	376	164.00	600	186,200
4	373	164.00	575	186,200
5	366	174.00	640	186,200
6	135	196.00	400	164,600

NOTE:
Required minimum ultimate bearing capacity corresponds to the minimum post driving capacity to be obtained after an allowance for water jetting or any other methods employed to facilitate pile installation.

Anticipated Driving Resistance corresponds to the resistance to be overcome to achieve minimum tip elevation without any water jetting or other methods employed to facilitate pile installation.

STATE OF ARKANSAS
LICENSED PROFESSIONAL ENGINEER
No.14498
ADAM B. HALL

DIGITALLY SIGNED 8-13-2021
BRIDGE ENGINEER

SHEET 1 OF 2
LAYOUT OF BRIDGE
HIGHWAY 77 OVER DITCH NO. 1
HWYS. 77, 140, 158, & 181
STRS. & APPRS. (MISSISSIPPI CO.) (S)
MISSISSIPPI COUNTY

ROUTE 77 SEC. 2

ARKANSAS STATE HIGHWAY COMMISSION

LITTLE ROCK, ARK.

DRAWN BY: CWT DATE: AUG. 2020 FILENAME: b100955x2_L1.dgn
CHECKED BY: ABH DATE: AUG. 2020 SCALE: 1" = 20'-0"
DESIGNED BY: JME DATE: AUG. 2020

BRIDGE NO. 07557 DRAWING NO. 64323

abhall 8/13/2021 9:52:58 AM
WORKSPACE: ARDOT Bridge (2019)
L:\20FY\1701642 - ARDOT Job 100955\Drawings\b100955x2_SIG0_LO.dgn
REVISED DATE:

DATE REVISED	DATE FILMED	DATE REVISED	DATE FILMED

FED. ROAD DIST. NO.	STATE	FED. AID PROJ. NO.	SHEET NO.	TOTAL SHEETS
6	ARK.			
JOB NO.		100955	147	355
07557		LAYOUT		64324

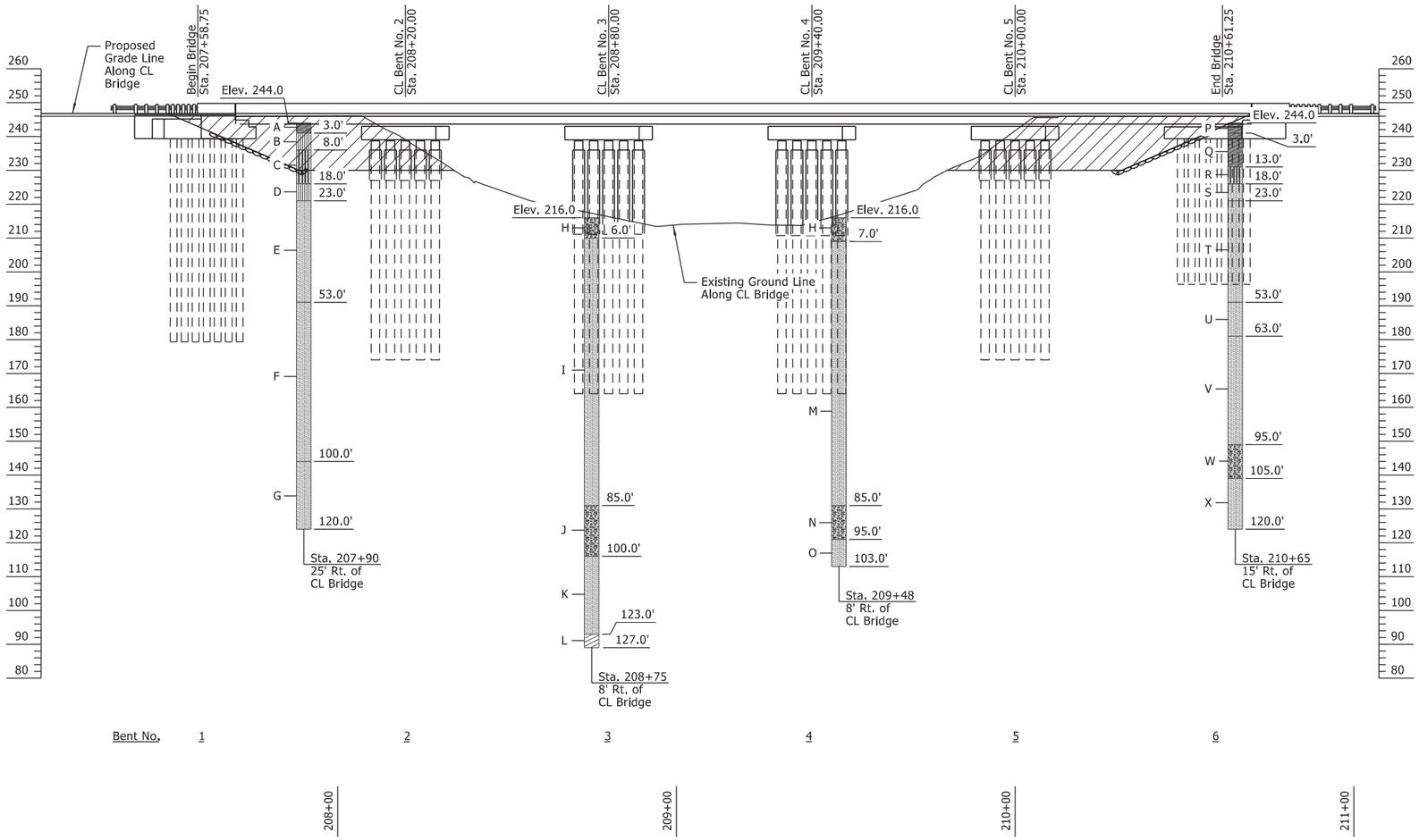

ELEVATION OF SOIL BORINGS

BORING LEGEND

A - Stiff brown fine sandy clay (fill)
B - Very loose to loose reddish brown silty fine sand
C - Loose brown fine sandy silt
D - Loose brown silty fine sand
E - Loose brown fine to medium sand
F - Medium dense brown fine sand
G - Dense to very dense brown fine to medium sand
H - Rock riprap and sand (fill)
I - Loose grayish brown fine to medium sand w/ a little fine to coarse gravel
J - Dense to very dense tan fine to coarse sand w/ some fine to coarse gravel
K - Dense to very dense grayish tan fine to medium sand, slightly silty
L - Very stiff light gray clay, blocky w/ organic stains and inclusions
M - Medium dense light gray and tan fine to medium sand
N - Dense tan fine to coarse sand, slightly silty w/ some fine gravel
O - Dense to very dense brownish gray fine to medium sand, slightly silty
P - Soft brown fine sandy clay (fill)
Q - Very soft brown fine sandy clay
R - Medium dense brown fine sandy silt, slightly clayey w/ ferrous stains
S - Loose reddish brown fine sand, slightly silty
T - Loose reddish brown fine to medium sand
U - Dense to very dense gray fine sand, slightly silty
V - Dense to very dense gray and brown fine to medium sand, slightly silty
W - Dense gray fine to coarse sand w/ some fine gravel
X - Dense to very dense gray fine to medium sand, slightly silty

N-VALUES

Sta. 207+90 Offset 25' Rt.	Sta. 208+75 Offset 8' Rt.	Sta. 209+48 Offset 8' Rt.	Sta. 210+65 Offset 15' Rt.
1.5-2.5, N=11	11.0-12.0, N=7	10.0-11.0, N=23	1.5-2.5, N=5
4.0-5.0, N=4	16.0-17.0, N=11	15.0-16.0, N=23	4.0-5.0, N=2
6.5-7.5, N=4	21.0-22.0, N=25	20.0-21.0, N=23	6.5-7.5, N=3
9.0-10.0, N=5	26.0-27.0, N=16	27.0-28.0, N=36	9.0-10.0, N=3
14.0-15.0, N=7	31.0-32.0, N=45	32.0-33.0, N=37	14.0-15.0, N=12
19.0-20.0, N=6	36.0-37.0, N=30	37.0-38.0, N=26	19.0-20.0, N=9
24.0-25.0, N=9	41.0-42.0, N=45	42.0-43.0, N=46	24.0-25.0, N=6
29.0-30.0, N=13	46.0-47.0, N=30	47.0-48.0, N=32	29.0-30.0, N=17
34.0-35.0, N=9	51.0-52.0, N=47	52.0-53.0, N=50	34.0-35.0, N-12
39.0-40.0, N=20	56.0-57.0, N=30	57.0-58.0, N=50/9"	39.0-40.0, N=23
44.0-45.0, N=17	61.0-62.0, N=50/9"	62.0-63.0, N=50/6"	44.0-45.0, N=36
49.0-50.0, N=24	66.0-67.0, N=47	67.0-68.0, N=43	49.0-50.0, N=29
54.0-55.0, N=23	71.0-72.0, N=50/7"	72.0-73.0, N=50/6"	54.0-55.0, N=60
59.0-60.0, N=21	76.0-77.0, N=50/8"	77.0-78.0, N=50/5"	59.0-60.0, N=28
64.0-65.0, N=47	81.0-82.0, N=50/11"	82.0-83.0, N=50/7"	64.0-65.0, N=72
69.0-70.0, N=39	86.0-87.0, N=50/2"	87.0-88.0, N=33	69.0-70.0, N=54
74.0-75.0, N=46	91.0-92.0, N=27	92.0-93.0, N=42	74.0-75.0, N=31
79.0-80.0, N=40	96.0-97.0, N=25	97.0-98.0, N=50/9"	79.0-80.0, N=33
89.0-90.0, N=27	101.0-102.0, N=50/9"	102.0-103.0, N=59	89.0-90.0, N=35
94.0-95.0, N=62	106.0-107.0, N=50/11"		99.0-100.0, N=37
104.0-105.0, N=66	116.0-117.0, N=50/9"		109.0-110.0, N=50/6"
114.0-115.0, N=33	126.0-127.0, N=28		119.0-120.0, N=50/5"

HYDRAULIC DATA

FLOOD DESCRIPTION	FREQUENCY	TOTAL DISCHARGE (2)	DISCHARGE THIS SITE	(1) NATURAL WATER SURFACE ELEVATION	WATER SURFACE ELEVATION WITH BACKWATER
	YEARS	CFS	CFS	FEET	FEET
DESIGN	25	42,656	13,992	235.5	236.5
BASE	100	59,368	18,281	236.3	237.8
EXTREME	500	69,379	20,928	237.1	238.6
OVERTOPPING	>500	N/A	N/A	N/A	N/A

(1) Unconstricted water surface without structure or roadway approaches

(2) The total discharge includes flow at this site, Hwy. 77 over Right Hand Chute of Little River, Hwy. 77 over Ditch No. 2, Hwy. 77 over Relief to Right Hand Chute of Little River, and Hwy. 77 over Relief to Right Hand Chute of Little River (Borrow Ditch).

Q100 Backwater Elevation For Existing Structure = 238.1

Proposed Low Bridge Chord Elev. = 243.37
Existing Low Bridge Chord Elev. = 243.25 (survey data)

Drainage Area = 2,098.0 square miles.
Historical High Water Elev. = N/A

STATE OF ARKANSAS
LICENSED PROFESSIONAL ENGINEER
No.14498
ADAM B. HALL

DIGITALLY SIGNED 8-13-2021
BRIDGE ENGINEER

SHEET 2 OF 2
LAYOUT OF BRIDGE
HIGHWAY 77 OVER DITCH NO. 1
HWYS. 77, 140, 158, & 181
STRS. & APPRS. (MISSISSIPPI CO.) (S)
MISSISSIPPI COUNTY

ROUTE 77 SEC. 2

ARKANSAS STATE HIGHWAY COMMISSION
LITTLE ROCK, ARK.

DRAWN BY: CWT DATE: JUNE 2021 FILENAME: b100955x2_L2.dgn
CHECKED BY: ABH DATE: JUNE 2021 SCALE: 1" = 20'-0"
DESIGNED BY: JME DATE: JUNE 2021
BRIDGE NO. 07557 DRAWING NO. 64324

abhall 8/13/2021 9:53:00 AM
WORKSPACE: ARDOT Bridge (2019)
L:\2017\701f642 - ARDOT Job 100955\Drawings\b100955x2_SI02_L0.dgn
REVISED DATE:

DATE REVISED	DATE FILMED	DATE REVISED	DATE FILMED

FED. ROAD DIST. NO.	STATE	FED. AID PROJ. NO.	SHEET NO.	TOTAL SHEETS
6	ARK.			
JOB NO.		100955	148	355
(1) 07557		FNDN. IMP. PLAN		64325

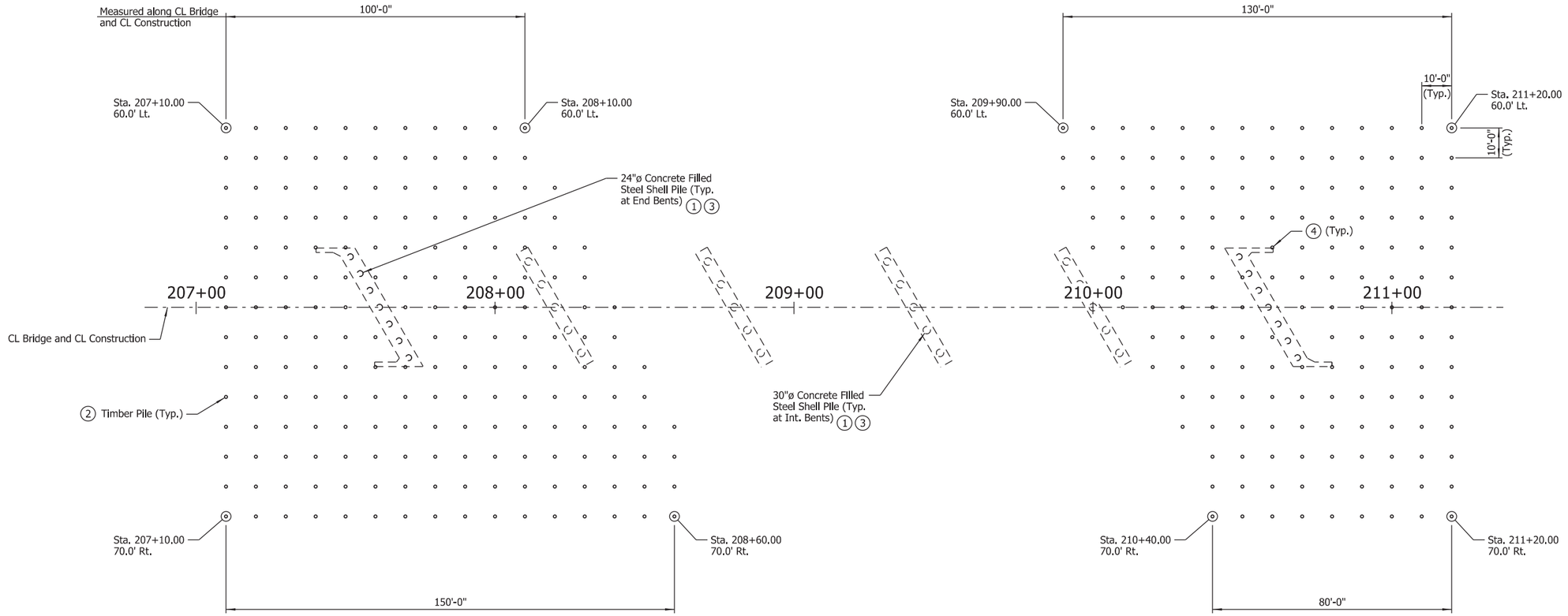

TIMBER PILE LAYOUT FOR FOUNDATION IMPROVEMENT

Scale: 1" = 20'-0"

TIMBER PILE DATA

Bent No.	Estimated No. of Piles	Min. Tip Elevation	(5) Estimated Pile Length (FT)
1	190	202	41
6	149	202	41

NOTE:
For "DETAILS OF TIMBER PILE TIP" and "TYPICAL SPLICE DETAILS", see Dwg. No. 64308.

NOTES:
Diameter(s) of timber piles shall be in accordance with SP "TIMBER PILING FOR SOIL DENSIFICATION".

Drive number and length of timber piles as directed by the Engineer.

Contractor shall coordinate with the Engineer to avoid any and all utilities within the soil densification areas.

Timber piling outside the limits of the existing bridge and roadway shall be driven prior to closing existing bridge to traffic.

(1) Steel shell piling shall be driven prior to timber piling at each bent.

(2) Timber piling shall be in accordance with SP "TIMBER PILING FOR SOIL DENSIFICATION".

(3) Any existing riprap interfering with the driving of timber pile or steel shell pile shall be removed prior to driving as directed by the Engineer. Cost of removing riprap shall be considered subsidiary to the item "Removal of Existing Bridge Structure (Site No. 2)".

(4) Shift timber piling as required to avoid conflicts with proposed caps.

(5) Contractor may drive 40' long piles to minimum tip elevation utilizing a follower device to achieve required penetration.

STATE OF ARKANSAS
LICENSED PROFESSIONAL ENGINEER
No.8017
JOHN H. RUDDELL

DIGITALLY SIGNED 8-13-2021
BRIDGE ENGINEER

DETAILS OF FOUNDATION IMPROVEMENT PLAN HWY. 77 OVER DITCH NO. 1

ROUTE SEC.

ARKANSAS STATE HIGHWAY COMMISSION

LITTLE ROCK, ARK.

DRAWN BY: CWT DATE: JUNE 2021 FILENAME: b100955x2_FN.dgn
CHECKED BY: JHR DATE: JUNE 2021 SCALE: As Shown
DESIGNED BY: JME DATE: JUNE 2021

BRIDGE NO. 07557 DRAWING NO. 64325

abhall 8/13/2021 9:53:03 AM
WORKSPACE: ARDOT Bridge (2019)
L:\20FY\TO1\642 - ARDOT Job 100955\Drawings\b100955x2_SI03_FIP.dgn
REVISED DATE:

DATE REVISED	DATE FILMED	DATE REVISED	DATE FILMED

FED. ROAD DIST. NO.	STATE	FED. AID PROJ. NO.	SHEET NO.	TOTAL SHEETS
6	ARK.			
JOB NO.		100955	149	356
(1) 07557		END BENTS		64326

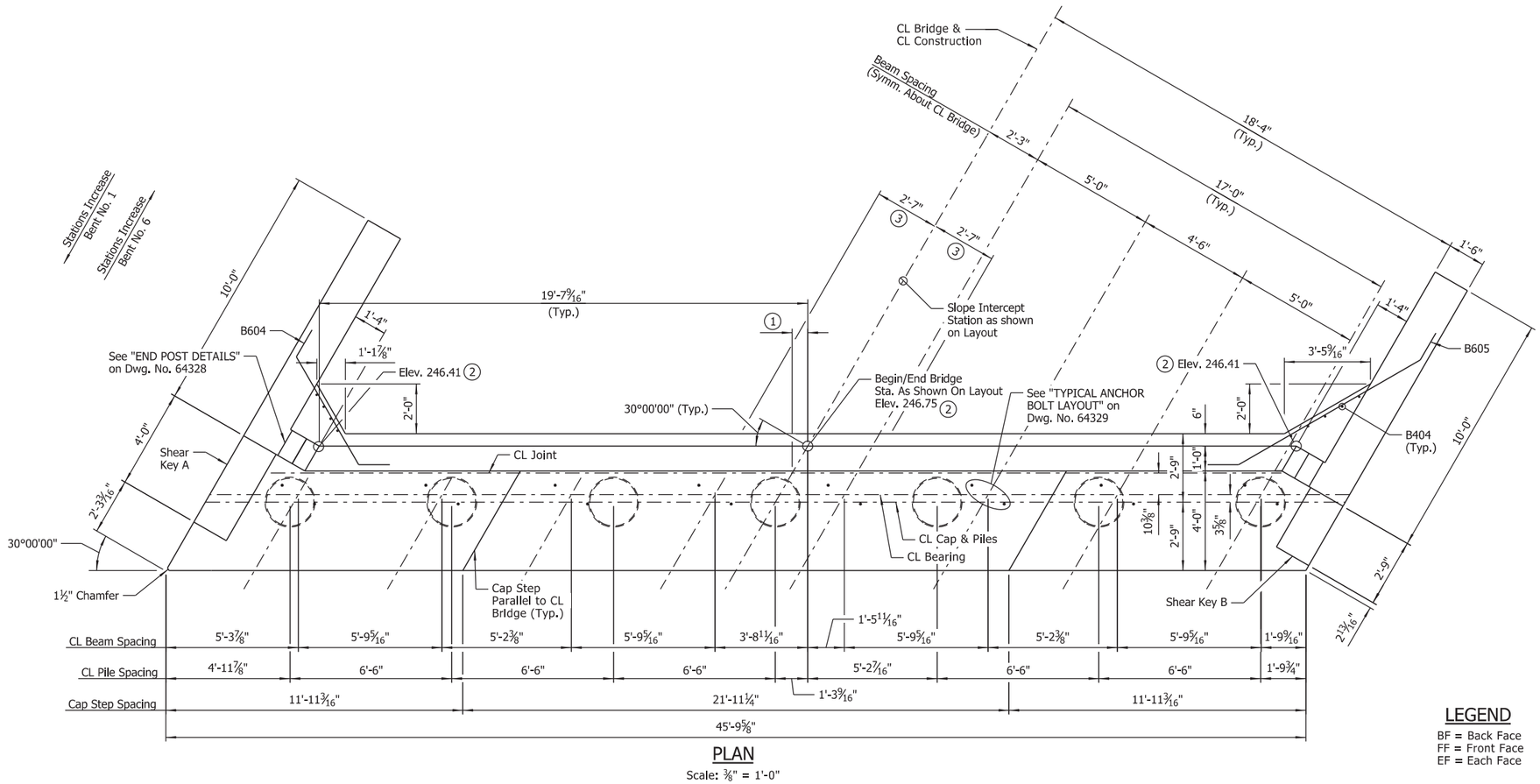

PLAN

Scale: ⅜" = 1'-0"

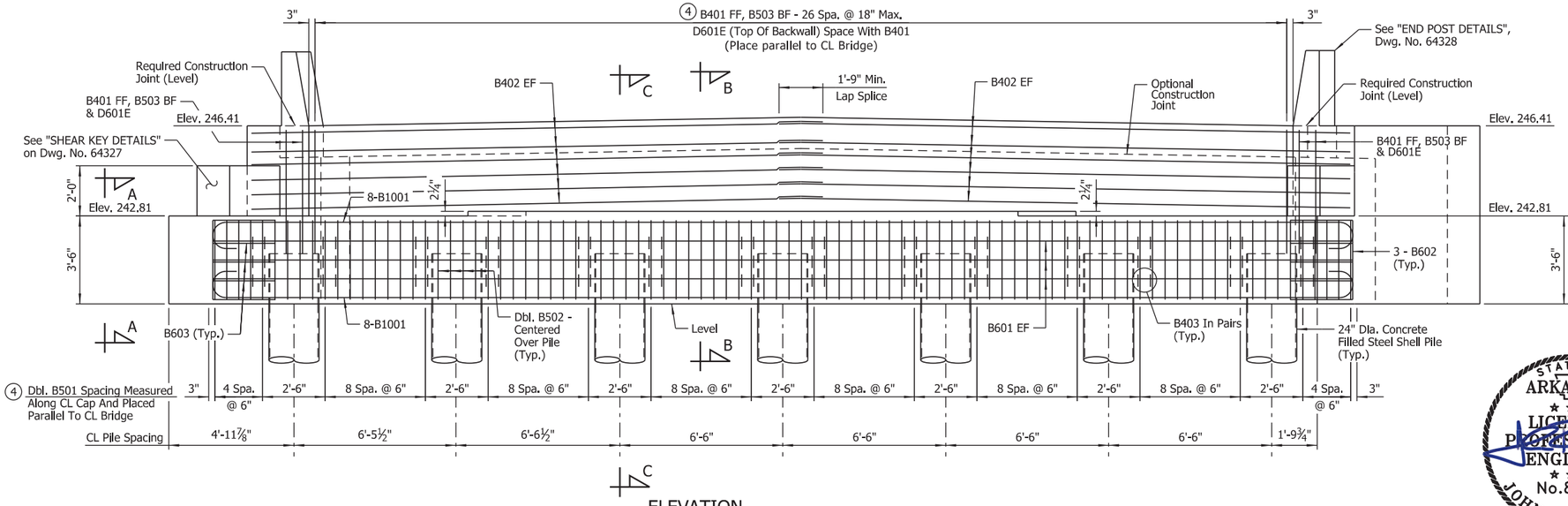

ELEVATION

(Looking Back Bent No. 1, Looking Ahead Bent No. 6)

Scale: ⅜" = 1'-0"

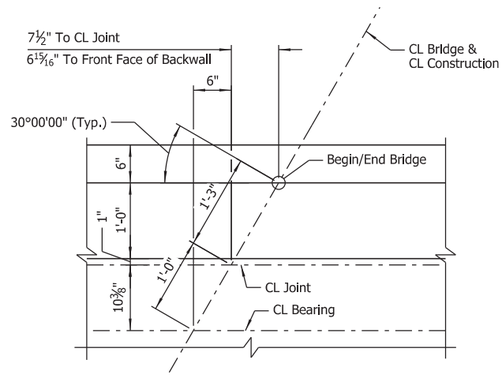

DETAIL A

Scale: 1" = 1'-0"

NOTES:
1. For "SECTIONS" and "END BENT WALL ARMOR DETAIL", see Dwg. No. 64310.
2. For "GENERAL NOTES" and "BAR LIST", see Dwg. No. 64329.

LEGEND

BF = Back Face
FF = Front Face
EF = Each Face

(1) See "DETAIL A"
(2) Top of Backwall is to be constructed level longitudinally.
(3) See "ROUNDING DETAIL" on Std. Dwg. No. 55007
(4) See "REINFORCEMENT DETAIL" on Dwg. No. 64328

NOTE:
No portion of the backwall above the required construction joint shall be poured until the prefabricated superstructure is in place. No heavy construction equipment shall be allowed within 10' of the backwall until the prefabricated superstructure for the adjacent span has been installed.

STATE OF ARKANSAS
LICENSED PROFESSIONAL ENGINEER
No.8017
JOHN H. RUDDELL

DIGITALLY SIGNED 8-13-2021
BRIDGE ENGINEER

SHEET 1 OF 4
DETAILS OF END BENTS
HWY. 77 OVER DITCH NO. 1
ROUTE SEC.
ARKANSAS STATE HIGHWAY COMMISSION
LITTLE ROCK, ARK.

DRAWN BY: HEW DATE: APR. 2021 FILENAME: b100955x2_A1.dgn
CHECKED BY: JHR DATE: JUNE 2021 SCALE: As Shown
DESIGNED BY: CSW DATE: APR. 2021
BRIDGE NO. 07557 DRAWING NO. 64326

abholl 8/13/2021 9:53:04 AM
WORKSPACE: ARDOT Bridge (2019)
L:\20IT\1701642 - ARDOT Job 100955\Drawings\b100955x2_S20I_AB.dgn
REVISED DATE:

DATE REVISED	DATE FILMED	DATE REVISED	DATE FILMED

FED. ROAD DIST. NO.	STATE	FED. AID PROJ. NO.	SHEET NO.	TOTAL SHEETS
6	ARK.			
JOB NO.		100955	150	356
① 07557		END BENTS		64327

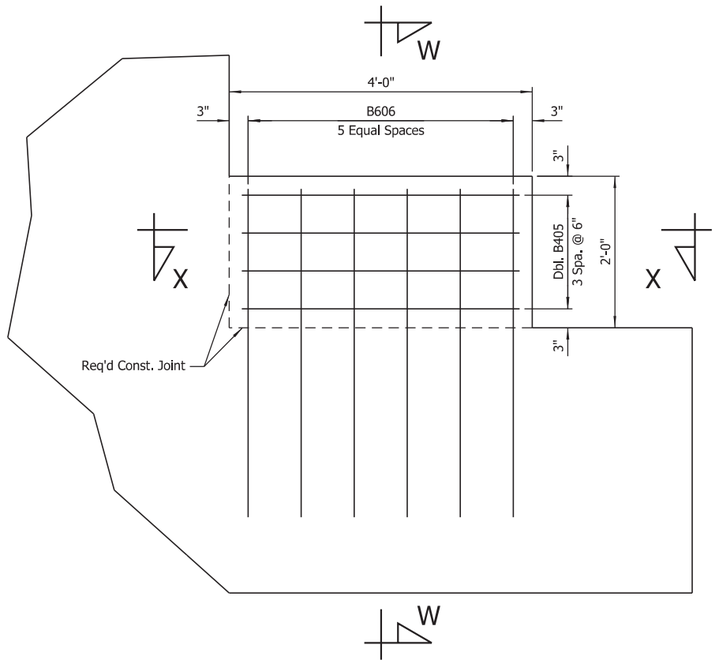

SHEAR KEY A

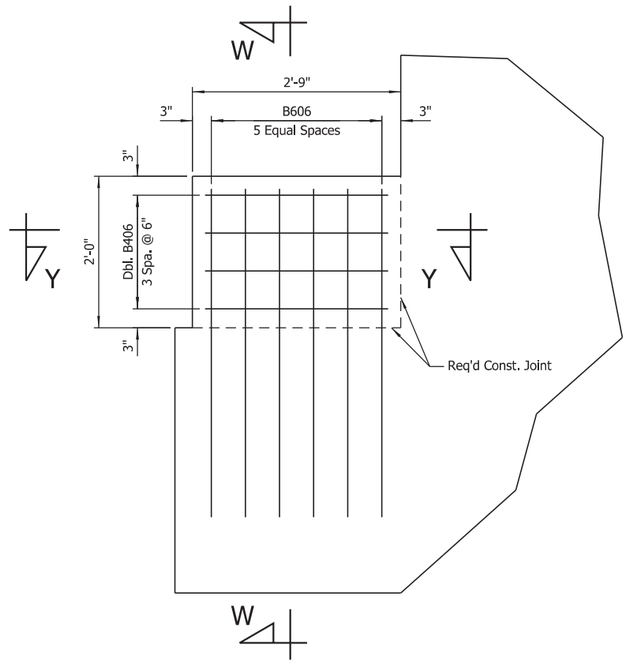

SHEAR KEY B

SHEAR KEY DETAILS

Scale: 1" = 1'-0"

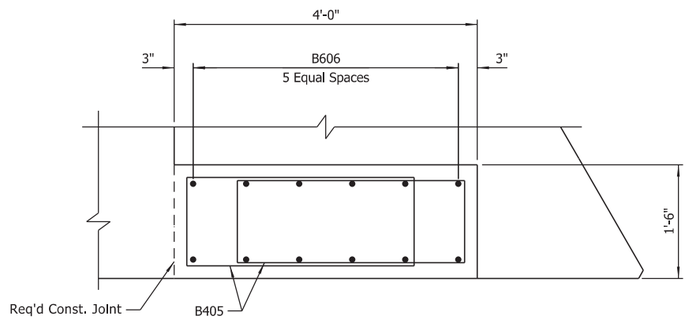

SECTION X-X

Scale: 1" = 1'-0"

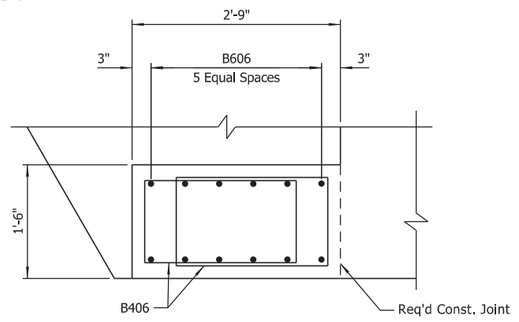

SECTION Y-Y

Scale: 1" = 1'-0"

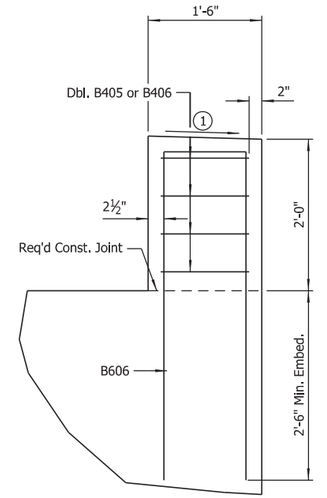

SECTION W-W

Scale: 1" = 1'-0"

① Slope to drain, provide minimum ½" wash across top width

STATE OF ARKANSAS
LICENSED PROFESSIONAL ENGINEER
No.8017
JOHN H. RUDDELL

DIGITALLY SIGNED 8-13-2021
BRIDGE ENGINEER

SHEET 2 OF 4
DETAILS OF END BENTS
HWY. 77 OVER DITCH NO. 1
ROUTE SEC.

ARKANSAS STATE HIGHWAY COMMISSION
LITTLE ROCK, ARK.

DRAWN BY: HEW DATE: APR. 2021 FILENAME: b100955x2_A2.dgn
CHECKED BY: JHR DATE: JUNE 2021 SCALE: As Shown
DESIGNED BY: CSW DATE: APR. 2021

BRIDGE NO. 07557 DRAWING NO. 64327

abhall 8/13/2021 9:53:05 AM
WORKSPACE: ARDOT Bridge (2019)
L:\2019\1701642 - ARDOT Job 100955\Drawings\b100955x2_S202_AB.dgn
REVISED DATE:

DATE REVISED	DATE FILMED	DATE REVISED	DATE FILMED

FED. ROAD DIST. NO.	STATE	FED. AID PROJ. NO.	SHEET NO.	TOTAL SHEETS
6	ARK.			
JOB NO.		100955	151	356
(1) 07557		END BENTS		64328

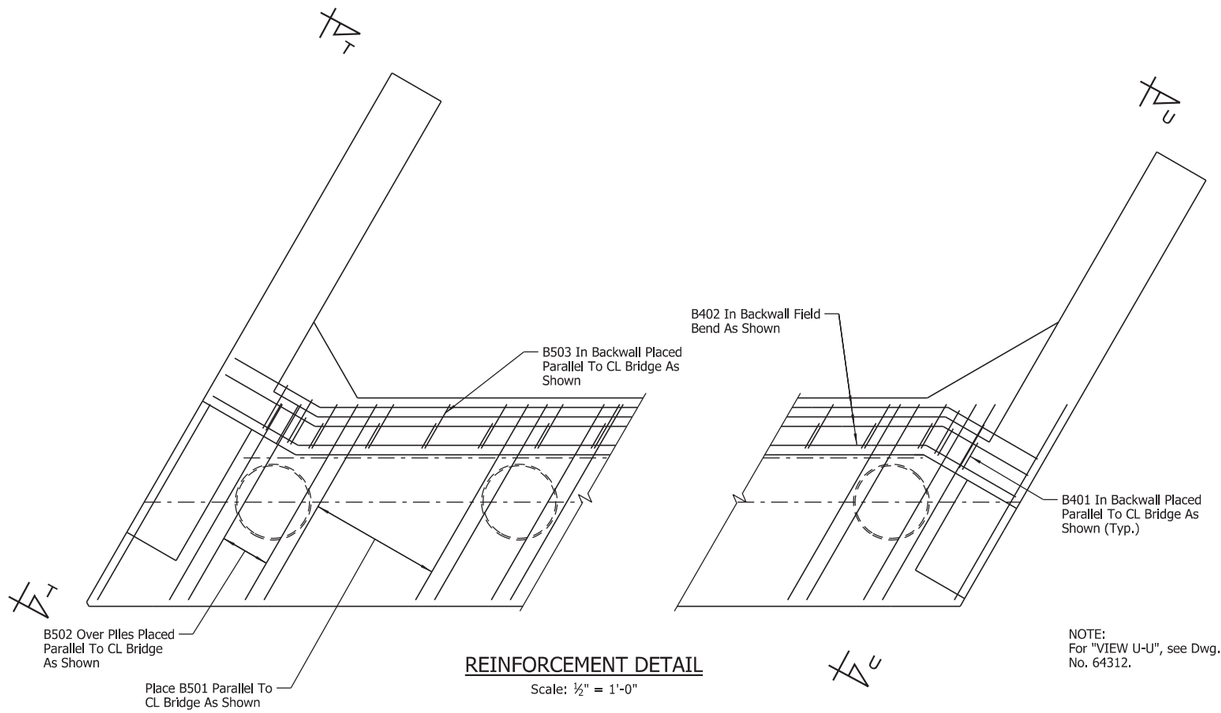

REINFORCEMENT DETAIL

Scale: ½" = 1'-0"

NOTE:
For "VIEW U-U", see Dwg. No. 64312.

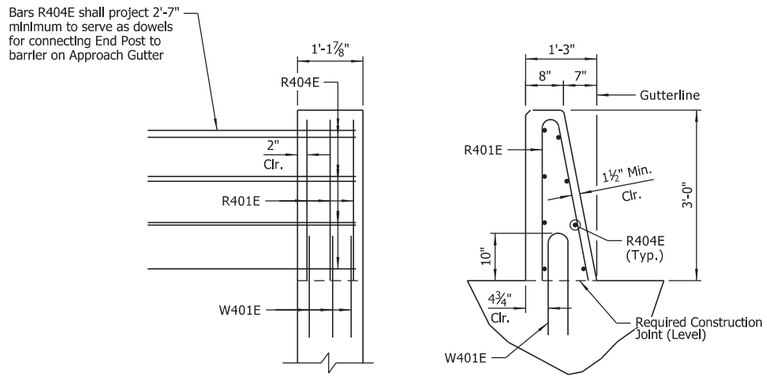

END BENT POST DETAILS

Scale: ½" = 1'-0"

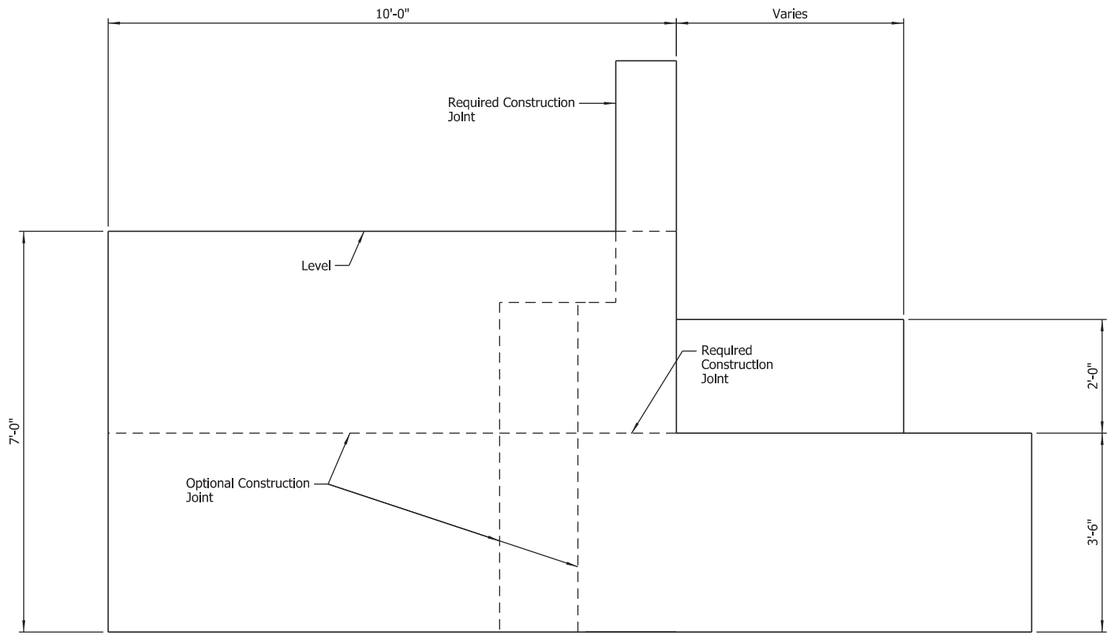

VIEW T-T

Scale: ¾" = 1'-0"

STATE OF ARKANSAS
LICENSED PROFESSIONAL ENGINEER
No.8017
JOHN H. RUDDELL

DIGITALLY SIGNED 8-13-2021
BRIDGE ENGINEER

SHEET 3 OF 4
DETAILS OF END BENTS
HWY. 77 OVER DITCH NO. 1
ROUTE SEC.

ARKANSAS STATE HIGHWAY COMMISSION
LITTLE ROCK, ARK.

DRAWN BY: HEW DATE: APR. 2021 FILENAME: b100955x2_A3.dgn
CHECKED BY: JHR DATE: JUNE 2021 SCALE: As Shown
DESIGNED BY: CSW DATE: APR. 2021

BRIDGE NO. 07557 DRAWING NO. 64328

abhall 8/13/2021 9:53:06 AM
WORKSPACE: ARDOT Bridge (2019)
L:\2017\701642 - ARDOT Job 100955\Drawings\b100955x2_5203_AB.dgn
REVISED DATE:

DATE REVISED	DATE FILMED	DATE REVISED	DATE FILMED	FED. ROAD DIST. NO.	STATE	FED. AID PROJ. NO.	SHEET NO.	TOTAL SHEETS
				6	ARK.			
				JOB NO.		100955	152	356
				(1) 07557		END BENTS		64329

BAR LIST (PER BENT)

	MARK	NO. REQ'D	LENGTH	"A"	"B"	P.D.
	B401	31	8'-3"			2"
	B402	24	23'-3"			Str.
	B403	168	4'-6"			3"
	B404	9	5'-5"			Str.
	B405	8	8'-8"	1'-2"	3'-0"	2"
	B406	8	6'-8"	1'-2"	2'-0"	2"
	B501	128	16'-8"			2½"
	B502	56	12'-2"			2½"
	B503	31	6'-8"			2½"
	B601	6	45'-5"			Str.
	B602	6	7'-7"	2'-11"	2'-6"	4½"
	B603	6	10'-5"			4½"
	B604	10	7'-6"			4½"
	B605	10	10'-11"			4½"
	B606	12	9'-5"	1'-1"	4'-4"	4½"
	B1001	16	48'-3"			10"
(1)	D601E	31	5'-2"			4½"
(1)	R401E	6	5'-11"			2½"
(1)	R404E	16	3'-8"			Str.
(1)	W401E	6	3'-11"			3¾"
	W402	40	14'-4"	1'-2"	6'-8"	2"
	W701	50	9'-8"			Str.

NOTES:
Number of bars shown is for one end bent only.

Dimensions of bars are out-to-out.

Bars designated with "E" suffix shall be epoxy coated.

(1) Epoxy coated reinforcing in end bents shall be paid for as "REINFORCING STEEL - BRIDGE (GRADE 60)".

BAR BENDING DIAGRAMS

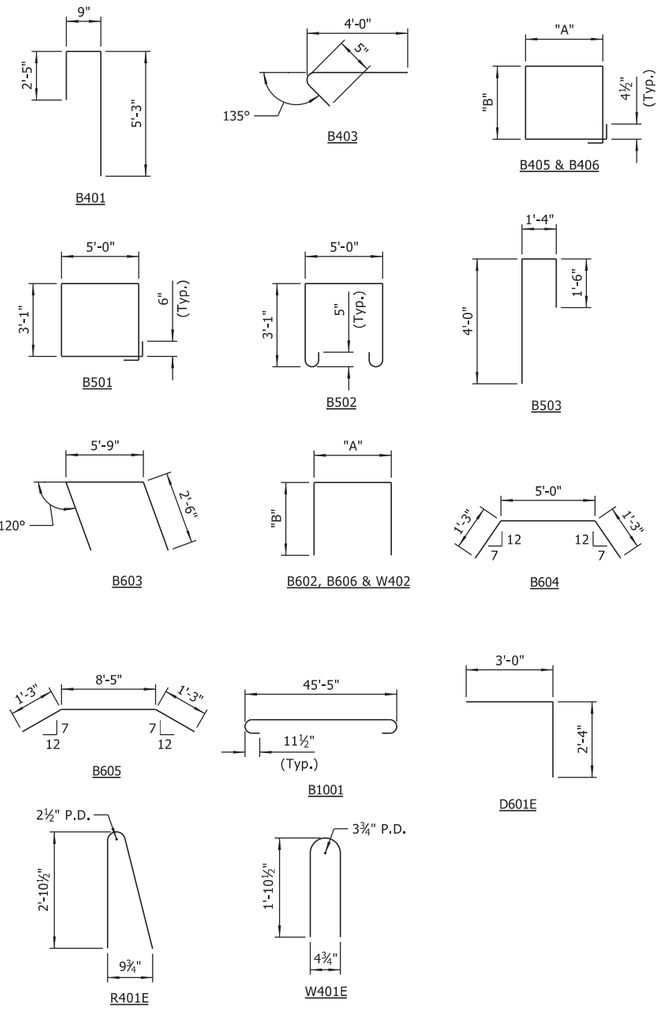

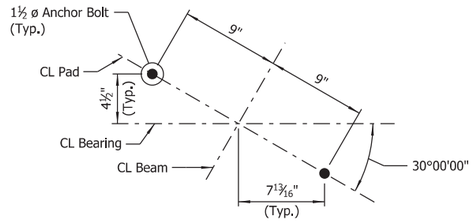

TYPICAL ANCHOR BOLT LAYOUT

No Scale

NOTE:
For Details of Elastomeric Bearings, see Dwg. No. 64425.

GENERAL NOTES:

Structural steel in end bents shall be ASTM A709, Gr. 50W and shall be paid for as "STRUCTURAL STEEL IN BEAM SPANS (A709, Gr. 50W)".

Class 2 Protective Surface Treatment shall be applied to the top of backwall and the roadway face and top of end posts.

For details of steel shell piling, see Std. Dwg. No. 55021.

See Std. Dwg. No. 55006 for additional notes.

STATE OF ARKANSAS
LICENSED PROFESSIONAL ENGINEER
No.8017
JOHN H. RUDDELL

DIGITALLY SIGNED 8-13-2021
BRIDGE ENGINEER

SHEET 4 OF 4
DETAILS OF END BENTS
HWY. 77 OVER DITCH NO. 1
ROUTE SEC.
ARKANSAS STATE HIGHWAY COMMISSION
LITTLE ROCK, ARK.

DRAWN BY: HEW DATE: APR. 2021 FILENAME: b100955x2_A4.dgn
CHECKED BY: JHR DATE: JUNE 2021 SCALE: As Shown
DESIGNED BY: CSW DATE: APR. 2021
BRIDGE NO. 07557 DRAWING NO. 64329

abhall 8/13/2021 9:53:06 AM
WORKSPACE: ARDOT Bridge (2019)
L:\2017\1701642 - ARDOT Job 100955\Drawings\b100955x2_S204_AB.dgn
REVISED DATE:

DATE REVISED	DATE FILMED	DATE REVISED	DATE FILMED

FED. ROAD DIST. NO.	STATE	FED. AID PROJ. NO.	SHEET NO.	TOTAL SHEETS
6	ARK.			
JOB NO.		100955	153	356
(1) 07557		INT. BENTS		64330

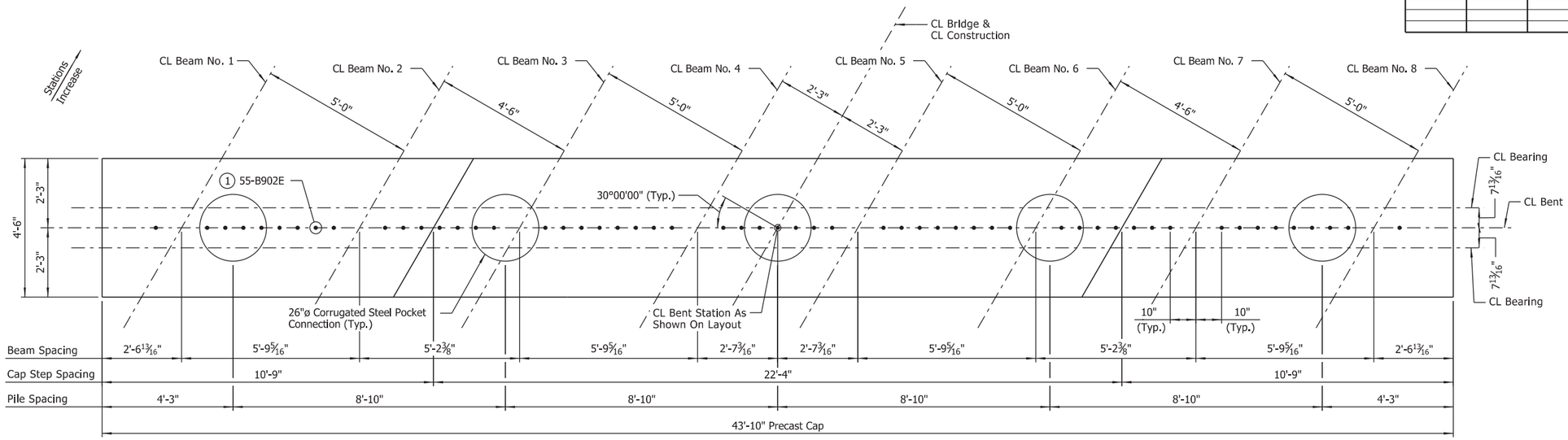

PLAN - BENT NOS. 2-5

Scale: ½" = 1'-0"

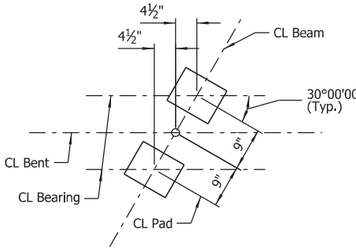

BEARING PAD LAYOUT

Scale: ¾" = 1'-0"

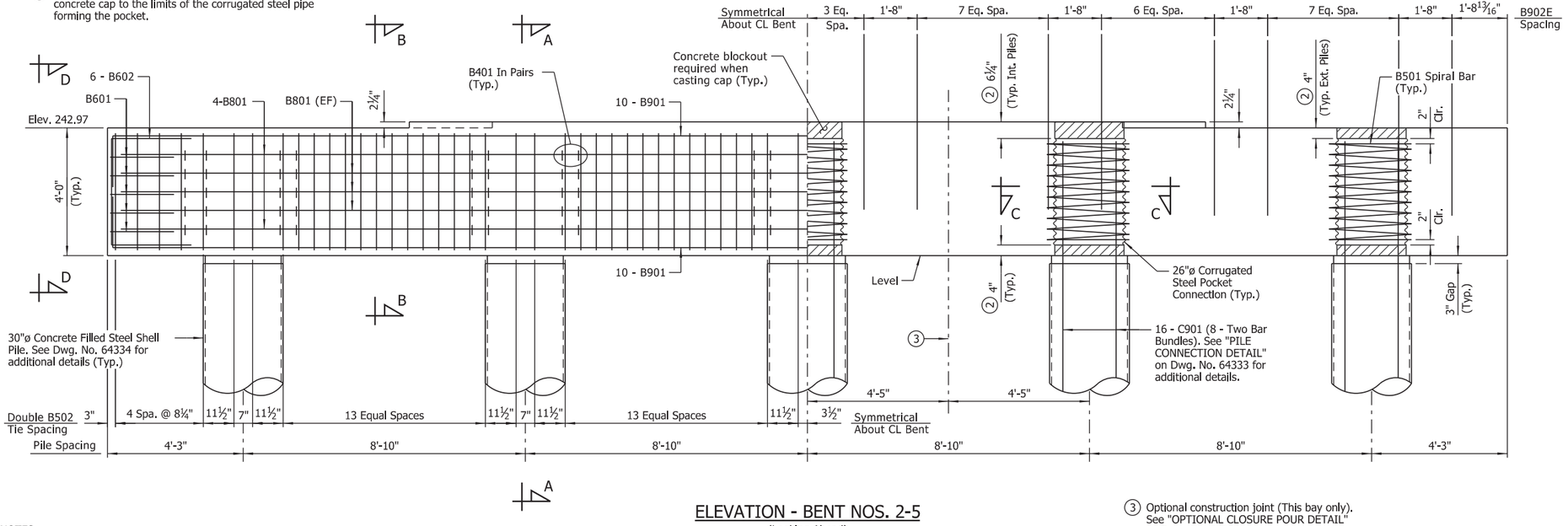

ELEVATION - BENT NOS. 2-5

(Looking Ahead)
Scale: ½" = 1'-0"

(1) Bars B902E within corrugated steel pocket connection shall be installed in the field at the time the pockets are filled. Minimum embedment = 2'-9".

(2) Dimension shown is for distance from outer limit of concrete cap to the limits of the corrugated steel pipe forming the pocket.

(3) Optional construction joint (This bay only). See "OPTIONAL CLOSURE POUR DETAIL" on Dwg. No. 64331.

NOTES:
Precast bent caps at Bent Nos. 2 through 5 shall be fabricated and installed in accordance with SP "PRECAST CONCRETE BENT CAPS".

For "GENERAL NOTES - PRECAST CONCRETE BENT CAPS", see Dwg. No. 64333.

For details of elastomeric bearings, see Dwg. Nos. 64425 & 64426.

For "BAR LIST (PER BENT)", see Dwg. No. 64331.

For "SECTIONS", see Dwg. No. 64332.

For "PROJECT GENERAL NOTES", see Dwg. No. 64303.

For additional information, see Layout.

STATE OF ARKANSAS
LICENSED PROFESSIONAL ENGINEER
No.8017
JOHN H. RUDDELL

DIGITALLY SIGNED 8-13-2021
BRIDGE ENGINEER

SHEET 1 OF 5
DETAILS OF INTERMEDIATE BENTS
HWY. 77 OVER DITCH NO. 1
ROUTE SEC.
ARKANSAS STATE HIGHWAY COMMISSION
LITTLE ROCK, ARK.

DRAWN BY: CWT DATE: APR. 2021 FILENAME: b100955x2_BE1.dgn
CHECKED BY: JHR DATE: MAY 2021 SCALE: As Shown
DESIGNED BY: ERM DATE: APR. 2021
BRIDGE NO. 07557 DRAWING NO. 64330

abhall 8/13/2021 9:53:08 AM
WORKSPACE: ARDOT Bridge (2019)
L:\20T\170T642 - ARDOT Job 100955\Drawings\b100955x2_S205_BE.dgn
REVISED DATE:

DATE REVISED	DATE FILMED	DATE REVISED	DATE FILMED	FED. ROAD DIST. NO.	STATE	FED. AID PROJ. NO.	SHEET NO.	TOTAL SHEETS
				6	ARK.			
				JOB NO.		100955	154	356
				(1) 07557		INT. BENTS		64331

BAR LIST (PER BENT)			
MARK	NO. REQ'D	LENGTH	P.D.
B401	200	4'-0"	3"
B501	5	97'-0"	30¼"
B502	152	15'-2"	2½"
B601	10	8'-9"	4½"
B602	12	8'-3"	4½"
B801	14	43'-3"	Str.
B901	20	46'-2"	9"
B902E	55	5'-6"	Str.
C501	5	251'-11"	21¾"
(3) C901	80	14'-0"	Str.

(3) **Bars C901 shall be ASTM A706, Grade 60.**

BAR BENDING DIAGRAMS

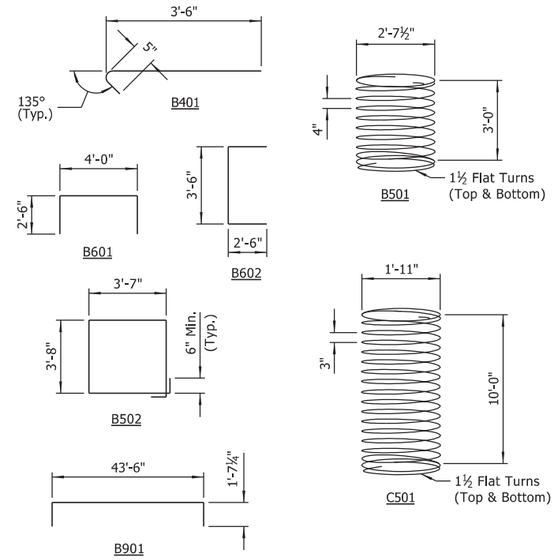

NOTES:
Dimensions of bars are out-to-out.

Bars designated with "E" suffix shall be epoxy coated.

No direct payment for bars in bent cap or concrete filled steel shell piles. Payment of all reinforcing steel to be subsidiary to unit price for "PRECAST CONCRETE BENT CAPS".

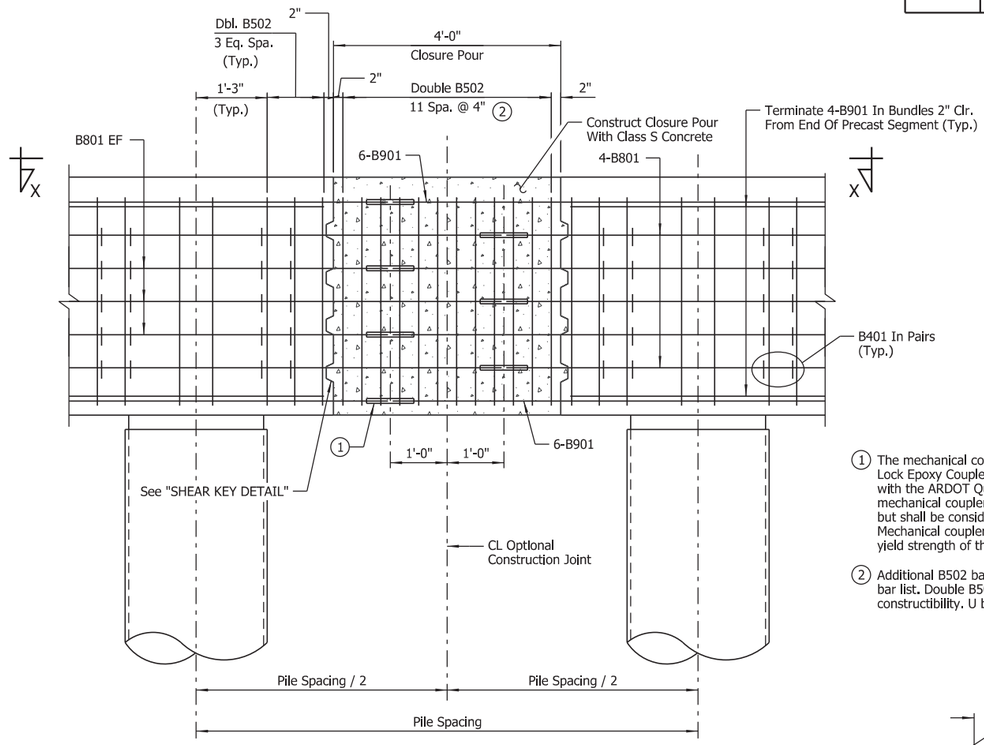

OPTIONAL CLOSURE POUR DETAIL
Scale: ¾" = 1'-0"

(1) The mechanical couplers shall be Dayton Superior D250SCA Bar Lock Epoxy Couplers or an alternate approved Type in accordance with the ARDOT Qualified Products List (QPL). The cost of mechanical couplers shall not be measured for separate payment but shall be considered subsidiary to the precast bent cap. Mechanical couplers shall develop at least 125% of the specified yield strength of the reinforcing steel.

(2) Additional B502 bars required within closure pour are not included in bar list. Double B502 bars may be replaced with 4 U-bars for constructibility. U bars shall have a minimum lap length of 2'-3".

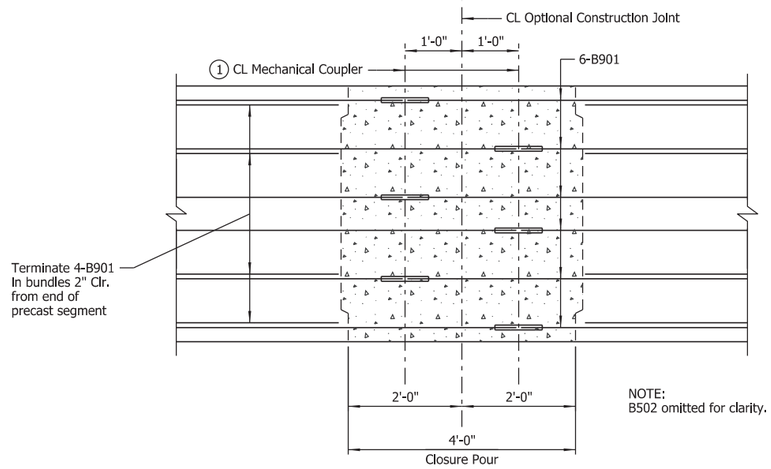

NOTE:
B502 omitted for clarity.

VIEW X-X
Scale: ¾" = 1'-0"

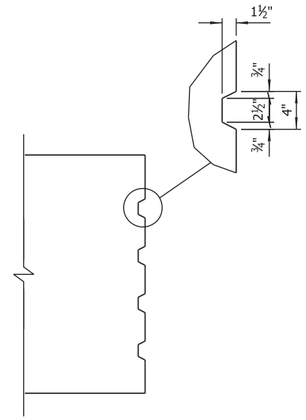

SECTION

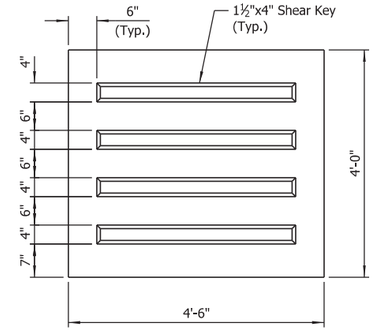

END ELEVATION

SHEAR KEY DETAIL
Scale: ¾" = 1'-0"

STATE OF ARKANSAS
LICENSED PROFESSIONAL ENGINEER
No.8017
JOHN H. RUDDELL

DIGITALLY SIGNED 8-13-2021
BRIDGE ENGINEER

SHEET 2 OF 5
DETAILS OF INTERMEDIATE BENTS
HWY. 77 OVER DITCH NO. 1
ROUTE SEC.
ARKANSAS STATE HIGHWAY COMMISSION
LITTLE ROCK, ARK.

DRAWN BY: HEW DATE: APR. 2021 FILENAME: b100955x2_BE2.dgn
CHECKED BY: JHR DATE: MAY 2021 SCALE: As Shown
DESIGNED BY: ERM DATE: APR. 2021
BRIDGE NO. 07557 DRAWING NO. 64331

abhall 8/13/2021 9:53:09 AM
WORKSPACE: ARDOT Bridge (2019)
L:\20IT\10IT642 - ARDOT Job 100955\Drawings\b100955x2_5206_BE.dgn
REVISED DATE:

DATE REVISED	DATE FILMED	DATE REVISED	DATE FILMED	FED. ROAD DIST. NO.	STATE	FED. AID PROJ. NO.	SHEET NO.	TOTAL SHEETS
				6	ARK.			
				JOB NO.		100955	155	356
				(1) 07557-07561		INT. BENTS		64332

(1) Gap varies - See "ELEVATION" view of each bent.

(2) Dimension shown is for distance from outer limit of concrete cap to the limits of the corrugated steel pipe forming the pocket.

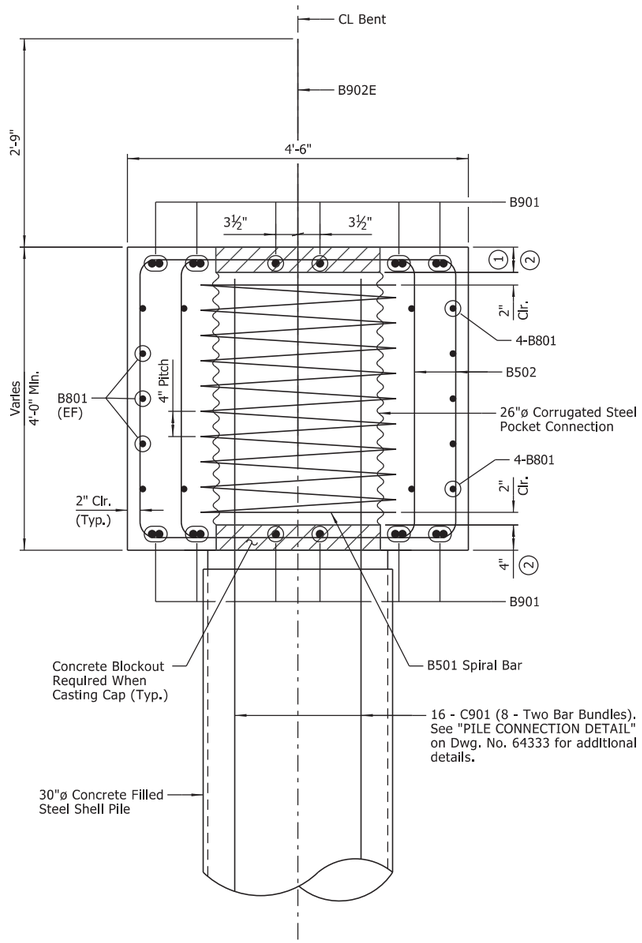

SECTION A-A
Scale: 1" = 1'-0"

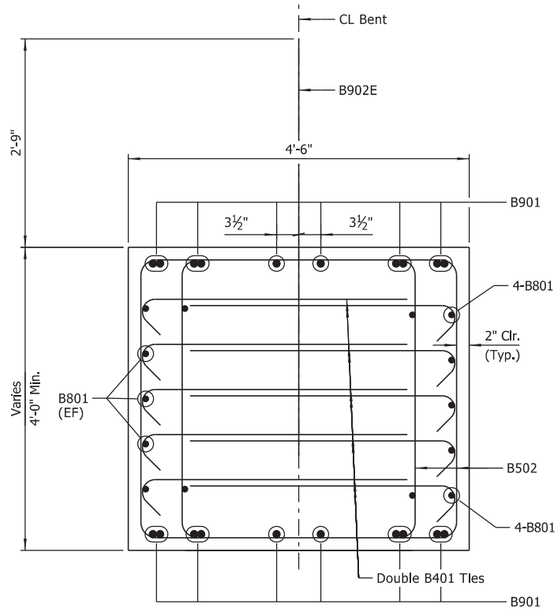

SECTION B-B
Scale: 1" = 1'-0"

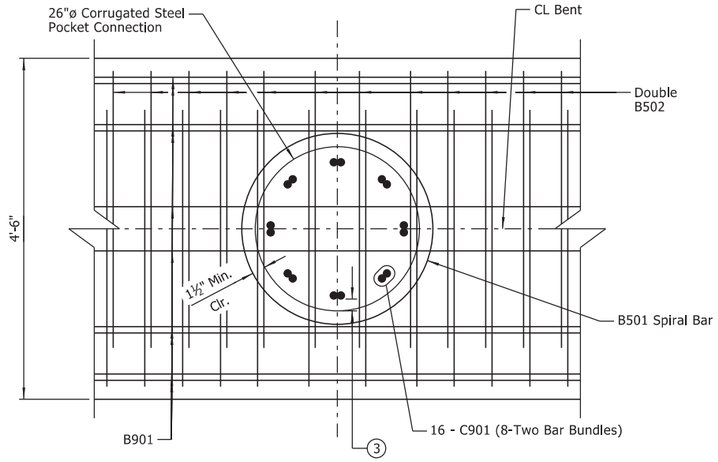

SECTION C-C
Scale: 1" = 1'-0"

(3) Maintain a minimum clearance between inside of corrugated steel pipe section and C901 bar of 1½". In no case shall clearance between corrugated steel pipe and vertical C901 exceed 4".

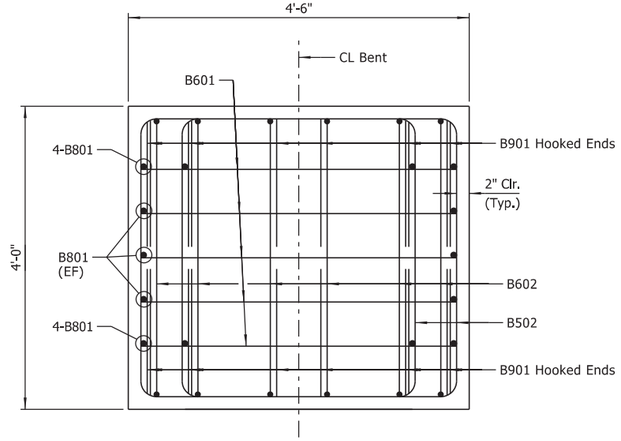

VIEW D-D
Scale: 1" = 1'-0"

STATE OF ARKANSAS
LICENSED PROFESSIONAL ENGINEER
No.8017
JOHN H. RUDDELL

DIGITALLY SIGNED 8-13-2021
BRIDGE ENGINEER

SHEET 3 OF 5
DETAILS OF INTERMEDIATE BENTS
HWY. 77 OVER DITCH NO. 1
ROUTE SEC.
ARKANSAS STATE HIGHWAY COMMISSION
LITTLE ROCK, ARK.

DRAWN BY: CWT DATE: APR. 2021 FILENAME: b100955x2_BE3.dgn
CHECKED BY: JHR DATE: MAY 2021 SCALE: As Shown
DESIGNED BY: ERM DATE: APR. 2021
BRIDGE NO. 07557-07561 DRAWING NO. 64332

abhall 8/13/2021 9:53:10 AM
WORKSPACE: ARDOT Bridge (2019)
L:\2017\1701642 - ARDOT Job 100955\Drawings\b100955x2_S207_BE.dgn
REVISED DATE:

DATE REVISED	DATE FILMED	DATE REVISED	DATE FILMED	FED. ROAD DIST. NO.	STATE	FED. AID PROJ. NO.	SHEET NO.	TOTAL SHEETS
				6	ARK.			
				JOB NO.		100955	156	356
				(1) 07557-07561		INT. BENTS		64333

(1) C501 Spiral Bar shall be placed 1" clear from the bottom of the cap.

(2) Gap between the top of the pile and bottom of cap shall be 3"±1".

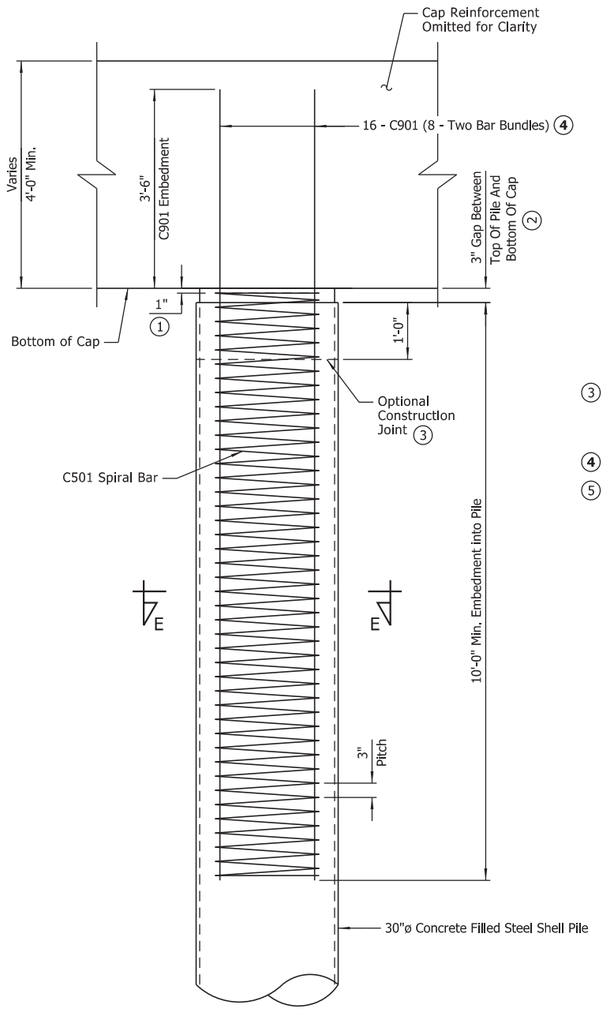

PILE CONNECTION DETAIL

Scale: ¾" = 1'-0"

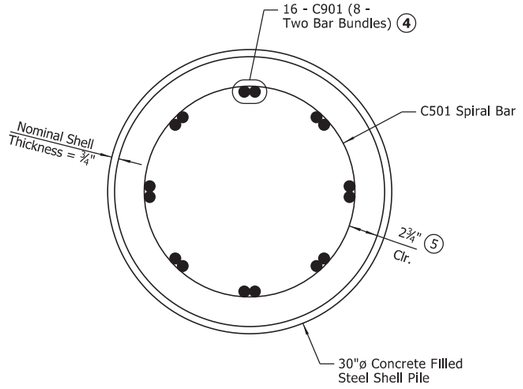

SECTION E-E

Scale: 1½" = 1'-0"

(3) If optional construction joint is used, the upper one foot of the pile, along with the nominal 3" gap, shall be poured with self-consolidating concrete at the same time the pocket connection is filled.

(4) **ASTM A706, Grade 60 reinforcing steel required.**

(5) Reinforcing cage may be shifted within the steel shell section to facilitate connection to the precast cap. Maintain 2" min. clear cover within "gap" section.

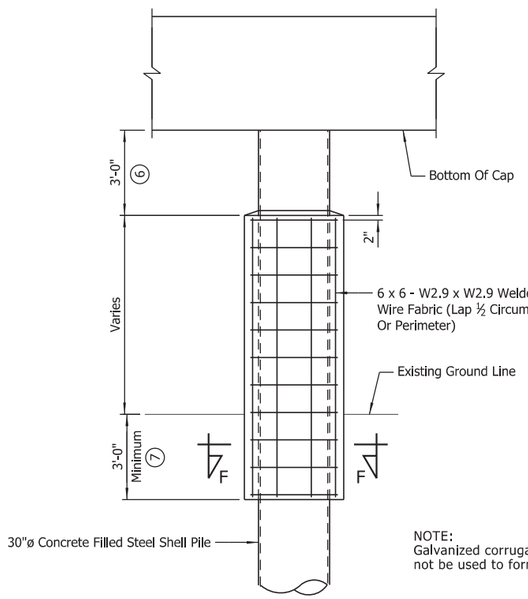

NOTE:
Galvanized corrugated steel pipe shall not be used to form pile encasement.

PILE ENCASEMENT DETAIL FOR 30" STEEL SHELL PILES

Scale: ⅜" = 1'-0"

(6) Pile encasement terminated as shown to facilitate support of precast cap during cap installation. Upper 3'-0" of pile shall be painted in accordance with Subsection 805.02 after precast cap installation is complete.

(7) Unless otherwise noted on Bridge Layout.

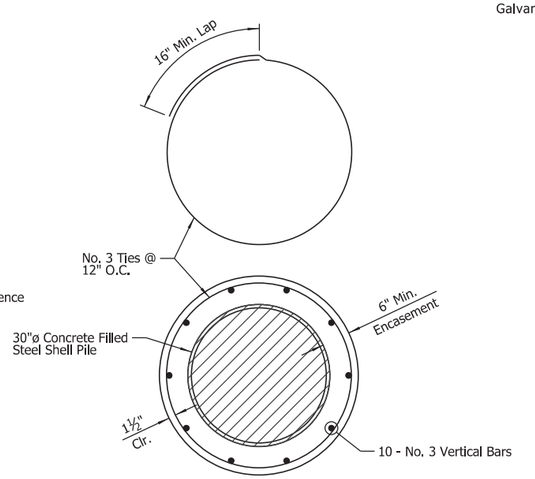

SECTION F-F

GENERAL NOTES - PRECAST CONCRETE BENT CAPS

Corrugated steel pipe for pocket connections shall be AASHTO M 36, Type 1, 14 Gage. The corrugated steel pipe shall have helical corrugations with continuous lock-seams extending the full length of the pipe section. Individual pockets shall consist of a single length of the pipe (splicing of pipe will not be allowed). The pile pocket shall be filled to the top of cap using self-consolidating concrete in accordance with SP "SELF-CONSOLIDATING CONCRETE".

Concrete for precast bent caps shall be Class S except that the coarse aggregate size shall meet AASHTO M 43, Size 67 (¾" Max.).

Drawings show general features of design only. Shop drawings for precast bent caps shall be submitted and approval secured before fabrication is to begin. The Contractor's proposed lifting details shall be submitted in the shop drawings.

Bent caps shall be precast. Concrete (including pocket connections), reinforcing, corrugated pipes, and bar supports are considered subsidiary to the pay item "PRECAST CONCRETE BENT CAPS". See SP "PRECAST CONCRETE BENT CAPS".

All reinforcing steel in precast bent caps shall be Grade 60 (yield strength = 60,000 psi) conforming to AASHTO M 31 or M 322, Type A, with mill test reports unless noted otherwise.

For additional information, see Layout.

GENERAL NOTES FOR 30" ø STEEL SHELL PILE ENCASEMENTS:

See Bridge Layout for additional notes and required location of pile encasements.

Concrete shall be Class S with a minimum 28-day compressive strength, f'c = 3,500 psi. If concrete cannot be placed in the dry. Seal concrete may be used from top to bottom of encasement.

Reinforcing steel shall be Grade 60 conforming to AASHTO M 31 or M 322, Type A.

Welded wire fabric shall conform to AASHTO M 55 or M 221.

Concrete, welded wire fabric or reinforcing steel and galvanized pipe shall not be paid for directly, but shall be considered subsidiary to the item "PILE ENCASEMENT". Galvanized corrugated steel pipe shall not be used to form pile encasement.

STATE OF ARKANSAS
LICENSED PROFESSIONAL ENGINEER
No.8017
JOHN H. RUDDELL

DIGITALLY SIGNED 8-13-2021
BRIDGE ENGINEER

SHEET 4 OF 5
DETAILS OF INTERMEDIATE BENTS
HWY. 77 OVER DITCH NO. 1
ROUTE SEC.
ARKANSAS STATE HIGHWAY COMMISSION
LITTLE ROCK, ARK.

DRAWN BY: HEW DATE: APR. 2021 FILENAME: b100955x2_BE4.dgn
CHECKED BY: JHR DATE: MAY 2021 SCALE: As Shown
DESIGNED BY: ERM DATE: APR. 2021
BRIDGE NO. 07557-07561 DRAWING NO. 64333

abhall 8/13/2021 9:53:11 AM
WORKSPACE: ARDOT Bridge (2019)
L:\20TY\07\07642 - ARDOT Job 100955\Drawings\b100955x2_S208_BE.dgn
REVISED DATE:

DATE REVISED	DATE FILMED	DATE REVISED	DATE FILMED

FED. ROAD DIST. NO.	STATE	FED. AID PROJ. NO.	SHEET NO.	TOTAL SHEETS
6	ARK.			
JOB NO.		100955	157	356
① 07557-07561		INT. BENTS		64334

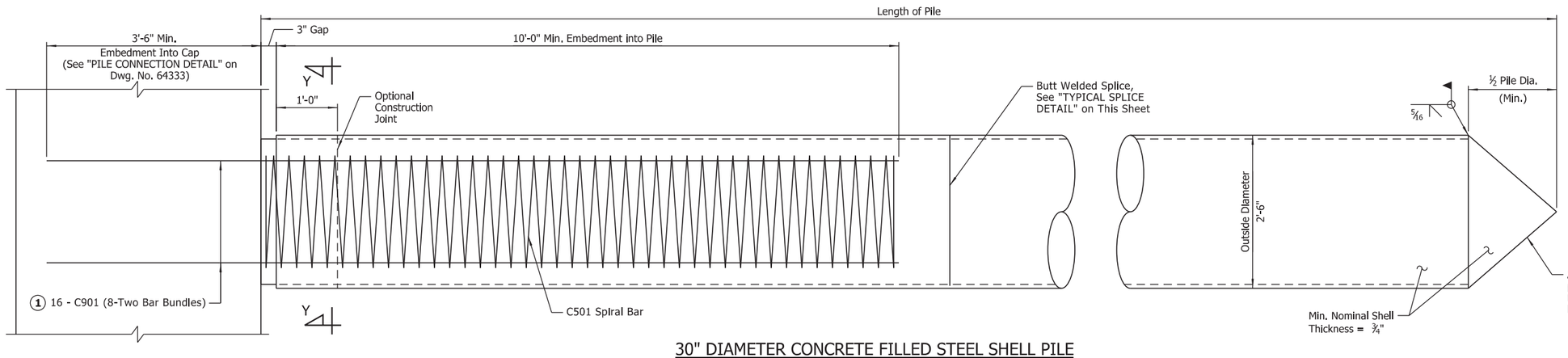

30" DIAMETER CONCRETE FILLED STEEL SHELL PILE

Scale: 1" = 1'-0"

① **C901 bars shall be ASTM A706, Grade 60.**

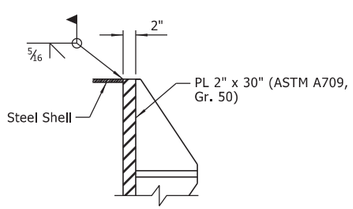

PART SECTION

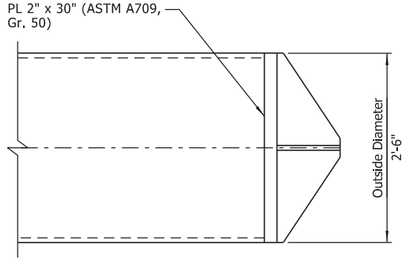

ELEVATION

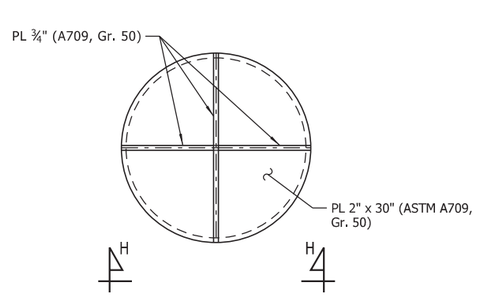

VIEW H-H

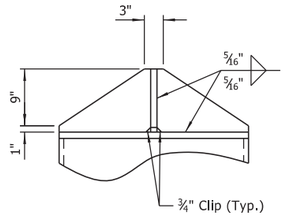

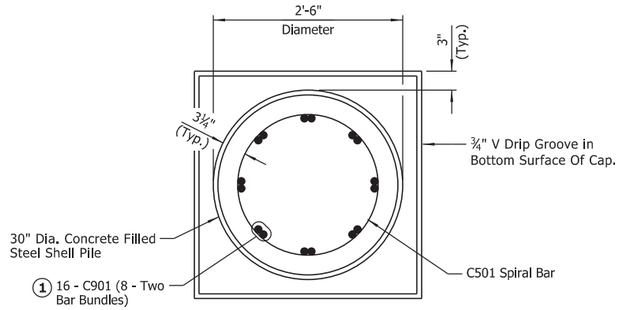

SECTION Y-Y

Scale: 1" = 1'-0"

ALTERNATE VANED TIP DETAIL FOR 30" PIPE

Scale: 1" = 1'-0"

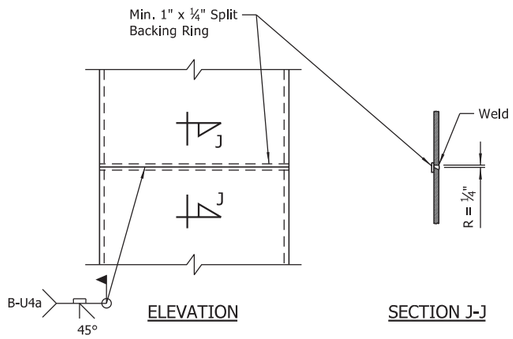

ELEVATION SECTION J-J

TYPICAL SPLICE DETAIL

Scale: 1" = 1'-0"

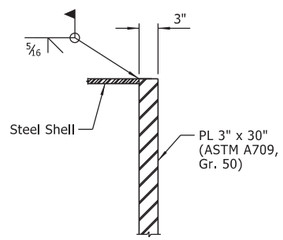

PART SECTION

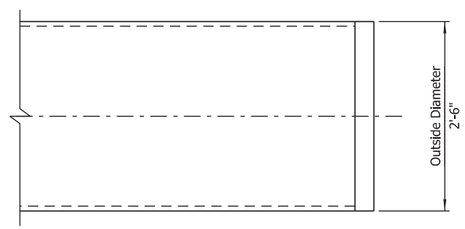

ELEVATION

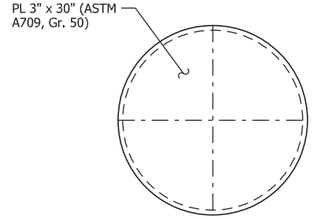

ALTERNATE FLAT TIP DETAIL FOR 30" PIPE

Scale: 1" = 1'-0"

GENERAL NOTES - 30" CONCRETE FILLED STEEL SHELL PILES

Steel shells shall conform to ASTM A252, Grade 3 (Fy = 45,000 psi).

Concrete used for filling of steel shell shall be Class S with a minimum 28-day compressive strength, f'c = 3,500 psi and shall be poured in the dry. Shrinkage at 28 days shall be less than 0.032 percent in accordance with AASHTO T160. Approved admixtures may be used to obtain desired workability, shrinkage and early strength gain. See SP "CONCRETE FILL FOR LARGE DIA. STEEL SHELL PILES" for additional information.

Reinforcing steel shall be Grade 60 conforming to AASHTO M 31 or M 322, Type A with mill test reports unless otherwise noted.

Steel shell piling shall be encased with concrete in accordance with "PILE ENCASEMENT DETAIL FOR 30" STEEL SHELL PILES" on Dwg. No. 64333. Steel shell piling that extends above the ground and is not protected by pile encasement shall be painted in accordance with Subsection 805.02.

See Bridge Layout for size and estimated length of steel shell piles and for driving information.

Concrete and structural steel shall not be paid for directly, but shall be considered subsidiary to the item "STEEL SHELL PILING (30" DIA.)". Reinforcing steel shall be included in the item "PRECAST CONCRETE BENT CAPS".

STATE OF ARKANSAS
LICENSED PROFESSIONAL ENGINEER
No.8017
JOHN H. RUDDELL

DIGITALLY SIGNED 8-13-2021
BRIDGE ENGINEER

SHEET 5 OF 5
DETAILS OF INTERMEDIATE BENTS
HWY. 77 OVER DITCH NO. 1

ROUTE SEC.

ARKANSAS STATE HIGHWAY COMMISSION

LITTLE ROCK, ARK.

DRAWN BY: CWT DATE: APR. 2021 FILENAME: b100955x2_BE5.dgn
CHECKED BY: JHR DATE: JUNE 2021 SCALE: As Shown
DESIGNED BY: ERM DATE: APR. 2021

BRIDGE NO. 07557-07561 DRAWING NO. 64334

abhall 8/13/2021 9:53:12 AM
WORKSPACE: ARDOT Bridge (2019)
L:\20TV\T01T642 - ARDOT Job 100955\Drawings\b100955x2_S209_BE.dgn
REVISED DATE:

DATE REVISED	DATE FILMED	DATE REVISED	DATE FILMED	FED. ROAD DIST. NO.	STATE	FED. AID PROJ. NO.	SHEET NO.	TOTAL SHEETS
				6	ARK.			
				JOB NO.		100955	158	356
				1	07557	300' UNIT		64335

NOTES:
For Standard General Notes, see Std. Dwg. No. 55006.

For "SHEAR CONNECTOR DETAIL," see Std. Dwg. No. 55007.

All structural steel shall be ASTM A709, Gr. 50W unless noted otherwise. The cost of the structural steel shall be subsidiary to the unit price bid for item "PREFABRICATED SUPERSTRUCTURE MODULES". Diaphragms placed between separate modules shall be included in the cost of the prefabricated modules.

For painting of beam ends adjacent to bridge deck expansion joints, see "PROJECT GENERAL NOTES" on Dwg. No. 64303.

For diaphragm and connection plate details, see "DETAIL B and "DETAIL C" on Dwg. No. 64422.

1. Diaphragms between modules shall be installed after prefabricated modules are installed and prior to constructing closure pours.
2. Diaphragms adjacent to concrete End Bent diaphragms shall be fabricated such that the channel flanges project away from concrete end bent diaphragms. Note that orientation of flange projection shall be considered when determining obtuse/acute connection locations.
3. Diaphragms at Intermediate Bents shall be fabricated such that the channel flanges project away from CL Bent. Note that orientation of flange projection shall be considered when determining obtuse/acute connection locations.

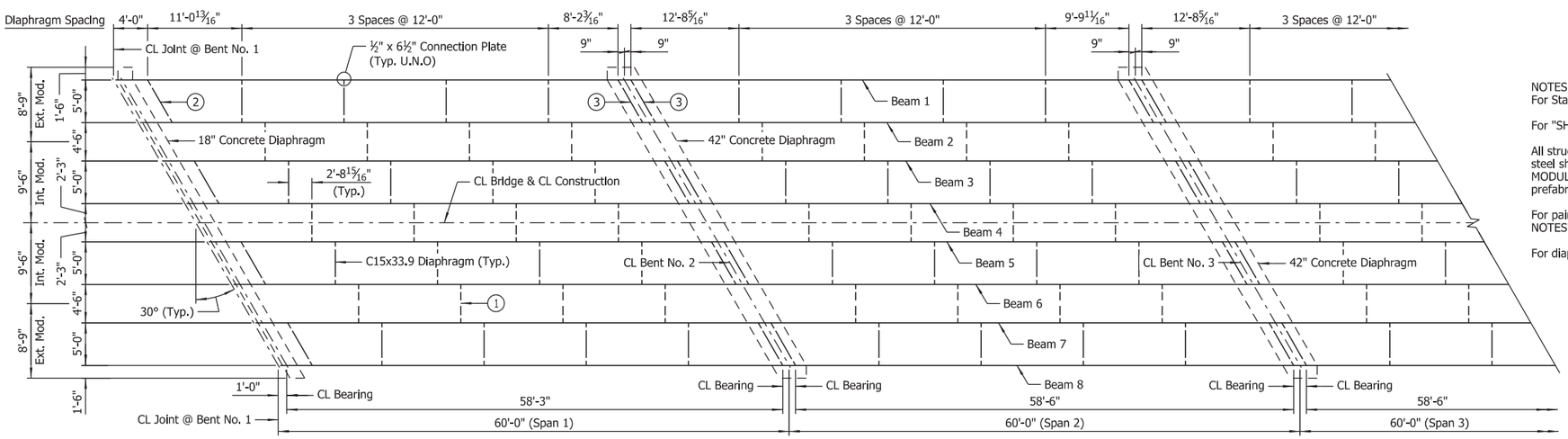

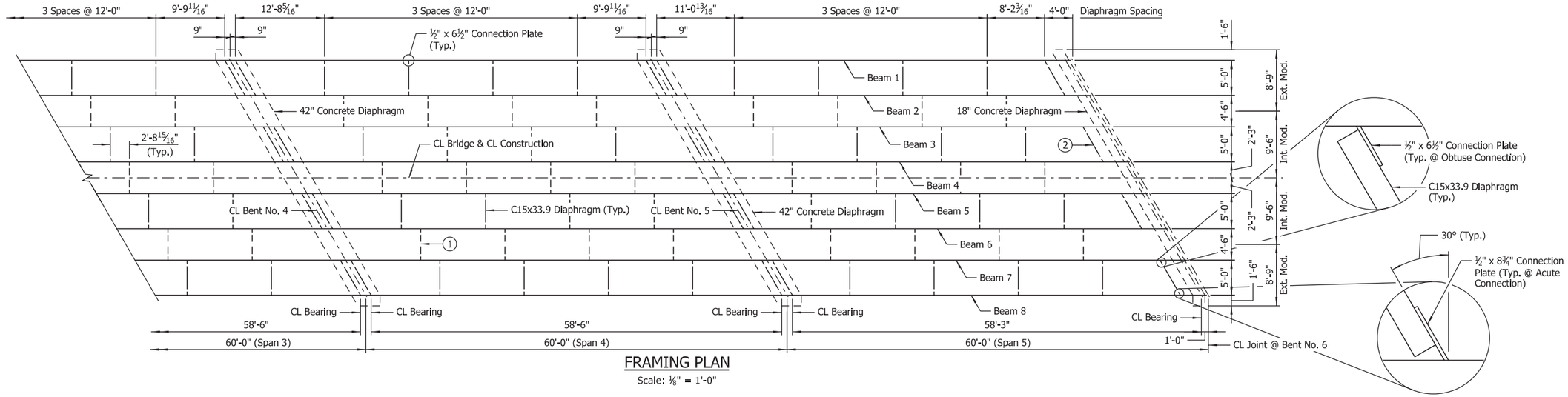

FRAMING PLAN
Scale: ⅛" = 1'-0"

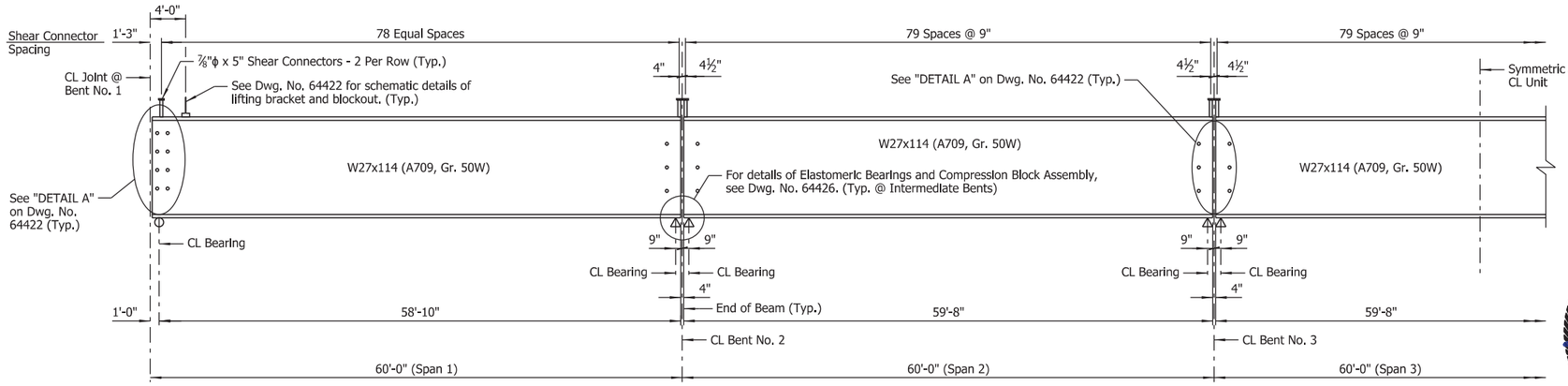

HALF-BEAM ELEVATION
No Scale

STATE OF ARKANSAS
LICENSED PROFESSIONAL ENGINEER
No.8017
JOHN H. RUDDELL
DIGITALLY SIGNED 8-13-2021
BRIDGE ENGINEER

SHEET 1 OF 4
DETAILS OF 300'-0"
CONTINUOUS W-BEAM UNIT
HWY. 77 OVER DITCH NO. 1
ROUTE SEC.
ARKANSAS STATE HIGHWAY COMMISSION
LITTLE ROCK, ARK.

DRAWN BY: BWD DATE: MAR. 2021 FILENAME: b100955x2_s1.dgn
CHECKED BY: JHR DATE: JUNE 2021 SCALE: As Shown
DESIGNED BY: BWD DATE: FEB. 2021
BRIDGE NO. 07557 DRAWING NO. 64335

abhall 8/13/2021 9:53:14 AM
WORKSPACE: ARDOT Bridge (2019)
L:\2017\170T642 - ARDOT Job 100955\Drawings\b100955x2_S401_SF.dgn
REVISED DATE:

(1) Placed as shown in "EXTERIOR MODULE REINFORCING DETAIL." See Dwg. No. 64319.

(2) Placed as shown in "INTERIOR MODULE REINFORCING DETAIL." See Dwg. No. 64319.

(3) Top and bottom, placed as shown in "UHPC LONGITUDINAL JOINT DETAIL." See Dwg. No. 64422. In Spans 2-4, bars shall be centered longitudinally (in plan view) with the UHPC joint.

(4) S672E bars shall have 3'-10" minimum lap with both #6 and #4 longitudinal bars. (Typ. at Deck Closure)

(5) S403E Bundled with #4 Bars in Top of Exterior Modules and #4 Bars in Top of Closure Pours (Typ. on Both Sides of Bridge)

(6) Top & Bottom - Lapped With Longitudinal Bars Projecting From Precast Modules & UHPC Closure Pours

(7) Top & Bottom - 11 Spaces @ 6"

(8) Top & Bottom - 10 Spaces @ 6"

(9) Top & Bottom - 9 Spaces @ 6"

(10) S601E-S617E Top
S443E-S458E Bottom

(11) S618E-S635E Top
S459E-S475E Bottom

(12) S636E-S653E Top
S476E-S492E Bottom

(13) S654E-S670E Top
S493E-S4108E Bottom

(14) 2'-7" Min. Lap (Typ. for transverse #4 bars in deck closure, including noncontact splices)

(15) Rail joints designated with symbol (F) shall be stopped 6" from top of slab. All other rail joints with symbol (P) shall be partial depth joints stopped 16" from top of slab.

(16) See "TRANSVERSE SLAB JOINT DETAIL" on Std. Dwg. No. 55007.

DATE REVISED	DATE FILMED	DATE REVISED	DATE FILMED	FED. ROAD DIST. NO.	STATE	FED. AID PROJ. NO.	SHEET NO.	TOTAL SHEETS
				6	ARK.			
				JOB NO.		100955	159	356
				(I) 07557		300' UNIT		64336

NOTES:
For Standard General Notes, see Std. Dwg. No. 55006.

For "PROJECT GENERAL NOTES," see Dwg. No. 64303.

For bridge traffic rail reinforcing details and details of partial-depth and full-depth rail joints, see Std. Dwg. No. 55070.

For details of concrete diaphragms, see Dwg. Nos. 64318, 64319, 64421 & 64338.

Edges of precast deck adjacent to cast-in-place closure pours shall be keyed and textured in accordance with details and notes on Dwg. No. 64422.

For additional clarity in transverse reinforcing placement near end of precast deck, see "TRANSVERSE REINFORCING SCHEMATICS" on Dwg. No. 64421.

Concrete in bridge superstructure shall be placed, consolidated and screeded off for the entire pour before any concrete has taken its initial set.

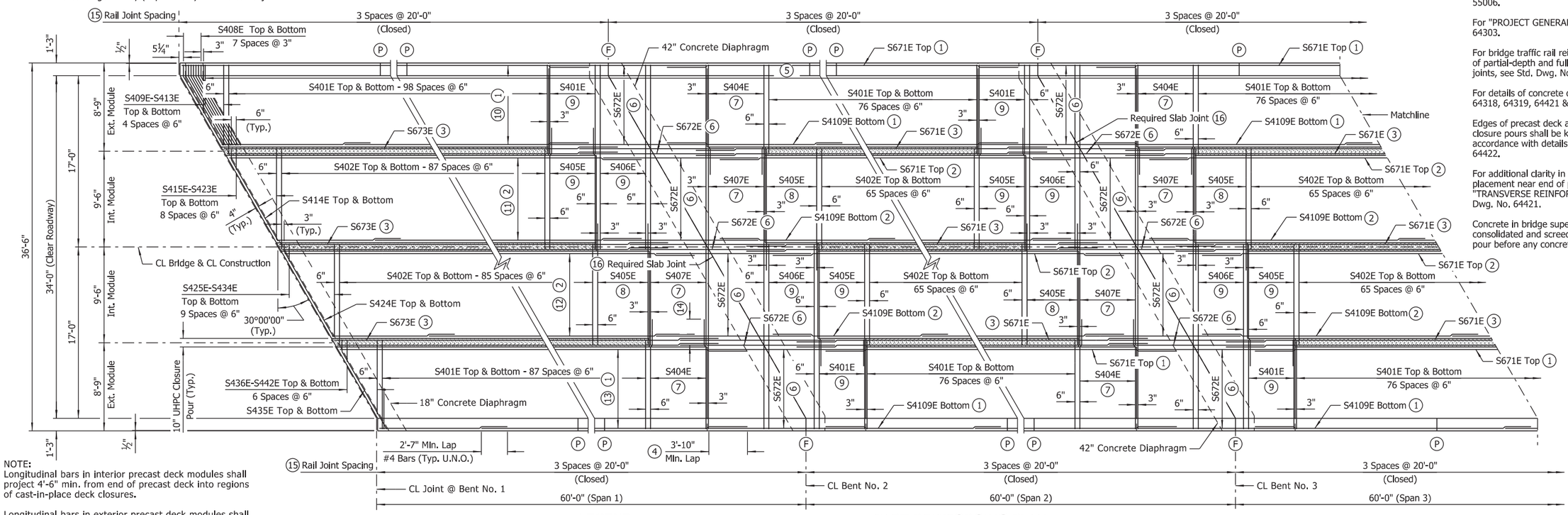

NOTE:
Longitudinal bars in interior precast deck modules shall project 4'-6" min. from end of precast deck into regions of cast-in-place deck closures.

Longitudinal bars in exterior precast deck modules shall project 4'-0" min. from end of precast deck into regions of cast-in-place deck closures.

BAR LIST

MARK	NO. REQ'D	LENGTH	"A"	"B"	P.D.
S401E	1,832	8'-10"			Str.
S402E	1,488	10'-0"			Str.
S403E	1,198	5'-0"			3"
S404E	192	10'-11"			Str.
S405E	336	12'-1"			Str.
S406E	160	18'-4"			Str.
S407E	192	27'-10"			Str.
S408E	32	9'-0"	7'-10"	1'-2"	3"
S409E To S413E	4 Ea.	8'-0" To 4'-9"			Str.
S414E	4	10'-5"	9'-4"	1'-1"	3"
S415E To S423E	4 Ea.	9'-0" To 2'-1"			Str.
S424E	4	10'-5"	9'-9"	8"	3"
S425E To S434E	4 Ea.	9'-2" To 1'-8"			Str.
S435E	4	10'-0"	8'-11"	1'-1"	3"
S436E To S442E	4 Ea.	7'-4" To 2'-2"			Str.
S443E To S458E	4 Ea.	30'-6" To 28'-3"			Str.
S459E To S475E	4 Ea.	30'-6" To 28'-2"			Str.
S476E To S492E	4 Ea.	30'-4" To 28'-0"			Str.

BAR LIST

MARK	NO. REQ'D	LENGTH	"A"	"B"	P.D.
S493E To S4108E	4 Ea.	30'-3" To 28'-4"			Str.
S4109E	396	27'-5"			Str.
S601E To S617E	2 Ea.	58'-4" To 53'-10"			Str.
S618E To S635E	2 Ea.	58'-4" To 53'-8"			Str.
S636E To S653E	2 Ea.	58'-1" To 53'-5"			Str.
S654E To S670E	2 Ea.	57'-10" To 53'-11"			Str.
S671E	246	52'-3"			Str.
S672E	592	15'-5"			Str.
S673E	24	56'-6"			Str.

BAR LIST

MARK	NO. REQ'D	LENGTH	"A"	"B"	P.D.
D500E	16	9'-10"			Str.
D501E	16	9'-8"	8'-4"	1'-4"	3¾"
D502E	32	10'-10½"			Str.
D503E	138	6'-1"			2½"
D504E	5	3'-9½"			2½"
D505E	6	3'-5½"	1'-3"	1'-2"	2½"
D506E	1,024	7'-5½"	2'-4"	2'-8"	2½"
D507E	24	5'-2"			2½"
D600E	40	11'-8"	10'-4"	1'-4"	4½"
D601E	72	11'-10"			Str.
D602E	112	14'-10"			Str.
R401E	1,200	5'-11"			2½"
R402E	80	5'-6"			Str.
R403E	1,200	3'-6"			3", 3¾"
R404E	240	19'-8"			Str.

LEGEND

U.N.O. = Unless Noted Otherwise

TABLE OF VARIABLES

CLOSED RAIL PANELS			OPEN RAIL PANELS						
PANEL LENGTH	A	R4XXE	PANEL LENGTH	B	C	D	E	F	R4XXE
20'-0"	39	R404E							

NOTE:
For layout of precast deck segments, UHPC joints and cast-in-place deck closures, see "MODULE & CLOSURE POUR SCHEMATIC" on Dwg. No. 64337.

PART REINFORCING PLAN

Scale: 3/16" = 1'-0"

BAR BENDING DIAGRAMS

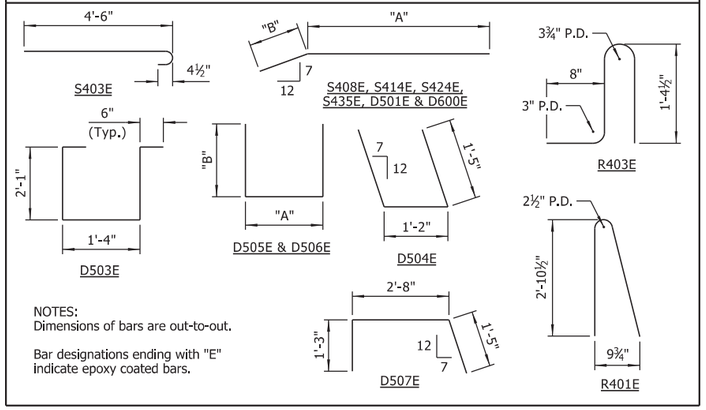

NOTES:
Dimensions of bars are out-to-out.

Bar designations ending with "E" indicate epoxy coated bars.

NOTES:
A minimum of 72 hours shall elapse between completion of the slab and the pouring of the bridge railing. Any railing pours made before the entire slab unit has been placed must be approved by the Engineer.

Concrete diaphragms shall be poured monolithically with the slab.

Removable forms shall be used when pouring diaphragms.

NOTE:
Stations shown are to CL Drain. For details of deck drains, see Dwg. No. 64423.

RIGHT SIDE DECK DRAIN STATIONS
207+99.82
208+59.82
209+19.82
209+79.82
210+39.82

LEFT SIDE DECK DRAIN STATIONS
207+80.19
208+40.19
209+00.19
209+60.19
210+20.19

STATE OF ARKANSAS
LICENSED PROFESSIONAL ENGINEER
No.14498
ADAM B. HALL

DIGITALLY SIGNED 8-13-2021
BRIDGE ENGINEER

SHEET 2 OF 4
DETAILS OF 300'-0" CONTINUOUS W-BEAM UNIT HWY. 77 OVER DITCH NO. 1

ROUTE SEC.

ARKANSAS STATE HIGHWAY COMMISSION
LITTLE ROCK, ARK.

DRAWN BY: HEW DATE: FEB. 2021 FILENAME: b100955x2_s2.dgn
CHECKED BY: ABH DATE: JUNE 2021 SCALE: As Shown
DESIGNED BY: BWD DATE: FEB. 2021

BRIDGE NO. 07557 DRAWING NO. 64336

abhall 8/13/2021 9:53:16 AM
WORKSPACE: ARDOT Bridge (2019)
L:\2017\07642 - ARDOT Job 100955\Drawings\b100955x2_S402_SB.dgn
REVISED DATE:

(1) Placed as shown In "EXTERIOR MODULE REINFORCING DETAIL." See Dwg. No. 64319.

(2) Placed as shown in "INTERIOR MODULE REINFORCING DETAIL." See Dwg. No. 64319.

(3) Top and bottom, placed as shown in "UHPC LONGITUDINAL JOINT DETAIL." See Dwg. No. 64422. In Spans 2-4, bars shall be centered longitudinally (in plan view) with the UHPC joint.

(4) S672E bars shall have 3'-10" minimum lap with both #6 and #4 longitudinal bars. (Typ. at Deck Closure)

(5) S403E Bundled with #4 Bars in Top of Exterior Modules and #4 Bars in Top of Closure Pours (Typ. on Both Sides of Bridge)

(6) Top & Bottom - Lapped With Longitudinal Bars Projecting From Precast Modules & UHPC Closure Pours

(7) Top & Bottom - 11 Spaces @ 6"

(8) Top & Bottom - 10 Spaces @ 6"

(9) Top & Bottom - 9 Spaces @ 6"

(10) S601E-S617E Top
S443E-S458E Bottom

(11) S618E-S635E Top
S459E-S475E Bottom

(12) S636E-S653E Top
S476E-S492E Bottom

(13) S654E-S670E Top
S493E-S4108E Bottom

(14) 2'-7" Min. Lap (Typ. for transverse #4 bars in deck closure, including noncontact splices)

(15) Rail joints designated with symbol (F) shall be stopped 6" from top of slab. All other rail joints with symbol (P) shall be partial depth joints stopped 16" from top of slab.

(16) See "TRANSVERSE SLAB JOINT DETAIL" on Std. Dwg. No. 55007.

DATE REVISED	DATE FILMED	DATE REVISED	DATE FILMED	FED. ROAD DIST. NO.	STATE	FED. AID PROJ. NO.	SHEET NO.	TOTAL SHEETS
				6	ARK.			
				JOB NO.		100955	160	356
				(I) 07557		300' UNIT		64337

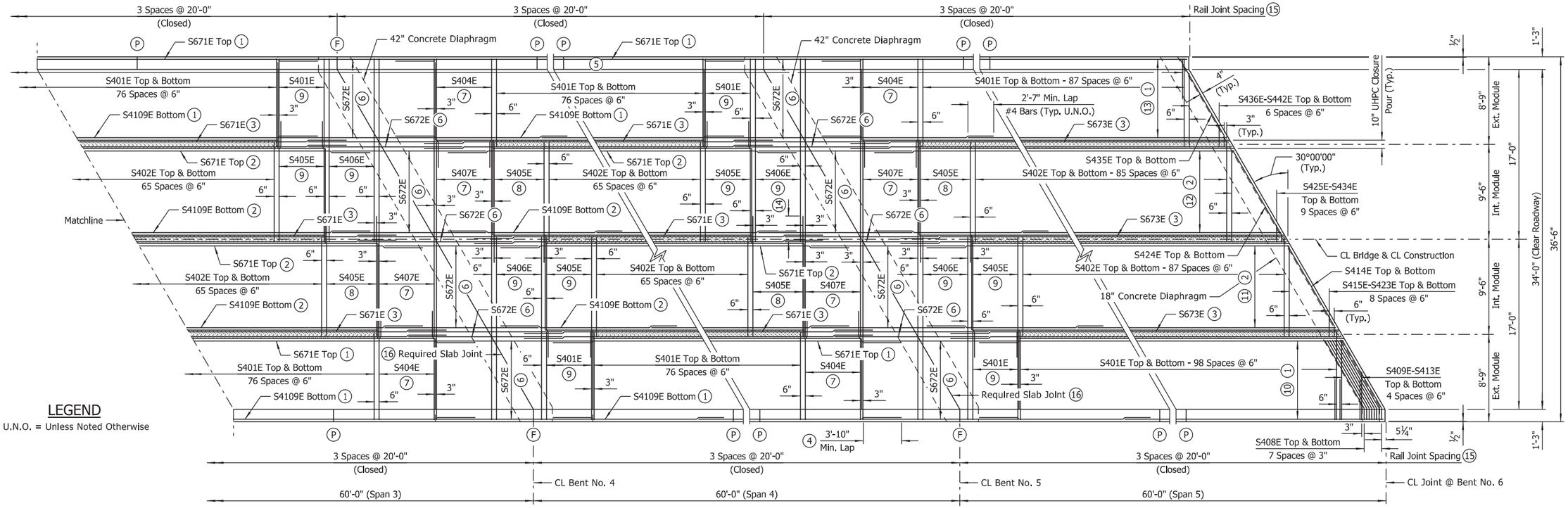

LEGEND

U.N.O. = Unless Noted Otherwise

PART REINFORCING PLAN

Scale: 3/16" = 1'-0"

NOTE:
Longitudinal bars in interior precast deck modules shall project 4'-6" min. from end of precast deck into regions of cast-in-place deck closures.

Longitudinal bars in exterior precast deck modules shall project 4'-0" min. from end of precast deck into regions of cast-in-place deck closures.

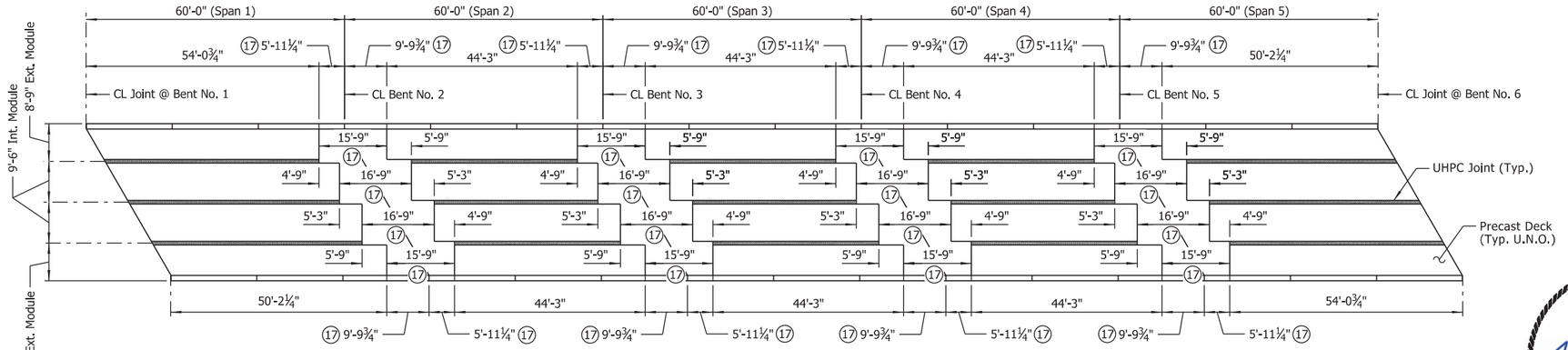

(17) Cast-in-place deck closure

MODULE & CLOSURE POUR SCHEMATIC

Scale: 1/16" = 1'-0"

NOTES:
For Standard General Notes, see Std. Dwg. No. 55006.

For "PROJECT GENERAL NOTES," see Dwg. No. 64303.

For "BAR LIST", "BAR BENDING DIAGRAMS", Rail Panel "TABLE OF VARIABLES" and deck drain stations, see Dwg. No. 64336.

For bridge traffic rail reinforcing details and details of partial-depth and full-depth rail joints, see Std. Dwg. No. 55070.

For details of concrete diaphragms, see Dwg. Nos. 64318, 64319, 64421 & 64338.

Edges of precast deck adjacent to cast-in-place closure pours shall be keyed and textured in accordance with details and notes on Dwg. No. 64422.

For additional clarity in transverse reinforcing placement near end of precast deck, see "TRANSVERSE REINFORCING SCHEMATICS" on Dwg. No. 64421.

Concrete in bridge superstructure shall be placed, consolidated and screeded off for the entire pour before any concrete has taken its initial set.

A minimum of 72 hours shall elapse between completion of the slab and the pouring of the bridge railing. Any railing pours made before the entire slab unit has been placed must be approved by the Engineer.

Concrete diaphragms shall be poured monolithically with the slab.

Removable forms shall be used when pouring diaphragms.

STATE OF ARKANSAS
LICENSED PROFESSIONAL ENGINEER
No.14498
ADAM B. HALL

DIGITALLY SIGNED 8-13-2021
BRIDGE ENGINEER

SHEET 3 OF 4
DETAILS OF 300'-0" CONTINUOUS W-BEAM UNIT HWY. 77 OVER DITCH NO. 1

ROUTE SEC.

ARKANSAS STATE HIGHWAY COMMISSION
LITTLE ROCK, ARK.

DRAWN BY: HEW DATE: FEB. 2021 FILENAME: b100955x2_s3.dgn
CHECKED BY: ABH DATE: JUNE 2021 SCALE: As Shown
DESIGNED BY: BWD DATE: FEB. 2021

BRIDGE NO. 07557 DRAWING NO. 64337

abhall 8/13/2021 9:53:18 AM
WORKSPACE: ARDOT Bridge (2019)
L:\20\T\07\f642 - ARDOT Job 100955\Drawings\b100955x2_S403_SB.dgn
REVISED DATE:

DATE REVISED	DATE FILMED	DATE REVISED	DATE FILMED	FED. ROAD DIST. NO.	STATE	FED. AID PROJ. NO.	SHEET NO.	TOTAL SHEETS
				6	ARK.			
				JOB NO.		100955	161	356
				(1) 07557		300' UNIT		64338

TABLE OF DEAD LOAD DEFLECTIONS (INCHES)

	Point Of Deflection	Beams 1 & 8			Beams 2, 4, 5 & 7			Beams 3 & 6		
		Structural Steel	Structural Steel + Slab	Structural Steel + Slab + UHPC + Rail	Structural Steel	Structural Steel + Slab	Structural Steel + Slab + UHPC + Rail	Structural Steel	Structural Steel + Slab	Structural Steel + Slab + UHPC + Rail
Span No. 1	1.0	0.000	0.000	0.000	0.000	0.000	0.000	0.000	0.000	0.000
	1.1	0.086	0.385	0.405	0.091	0.435	0.463	0.091	0.426	0.455
	1.2	0.163	0.728	0.768	0.172	0.822	0.880	0.172	0.806	0.864
	1.3	0.223	0.996	1.046	0.235	1.126	1.198	0.235	1.104	1.176
	1.4	0.262	1.167	1.227	0.276	1.319	1.405	0.276	1.293	1.379
	1.5	0.275	1.225	1.285	0.289	1.385	1.471	0.289	1.357	1.444
	1.6	0.262	1.167	1.217	0.276	1.319	1.390	0.276	1.293	1.365
	1.7	0.223	0.996	1.036	0.235	1.126	1.183	0.235	1.104	1.161
	1.8	0.163	0.728	0.748	0.172	0.822	0.851	0.172	0.806	0.835
	1.9	0.086	0.385	0.395	0.091	0.435	0.449	0.091	0.426	0.440
	2.0	0.000	0.000	0.000	0.000	0.000	0.000	0.000	0.000	0.000
Span No. 2	2.1	0.086	0.385	0.385	0.091	0.435	0.435	0.091	0.426	0.426
	2.2	0.163	0.728	0.728	0.172	0.822	0.822	0.172	0.806	0.806
	2.3	0.223	0.996	1.006	0.235	1.126	1.140	0.235	1.104	1.118
	2.4	0.262	1.167	1.177	0.276	1.319	1.333	0.276	1.293	1.307
	2.5	0.275	1.225	1.245	0.289	1.385	1.413	0.289	1.357	1.386
	2.6	0.262	1.167	1.177	0.276	1.319	1.333	0.276	1.293	1.307
	2.7	0.223	0.996	1.006	0.235	1.126	1.140	0.235	1.104	1.118
	2.8	0.163	0.728	0.738	0.172	0.822	0.837	0.172	0.806	0.821
	2.9	0.086	0.385	0.385	0.091	0.435	0.435	0.091	0.426	0.426
	3.0	0.000	0.000	0.000	0.000	0.000	0.000	0.000	0.000	0.000
Half Span No. 3	3.1	0.086	0.385	0.385	0.091	0.435	0.435	0.091	0.426	0.426
	3.2	0.163	0.728	0.738	0.172	0.822	0.837	0.172	0.806	0.821
	3.3	0.223	0.996	1.016	0.235	1.126	1.155	0.235	1.104	1.132
	3.4	0.262	1.167	1.197	0.276	1.319	1.362	0.276	1.293	1.336
	3.5	0.275	1.225	1.255	0.289	1.385	1.428	0.289	1.357	1.401

NOTE:
This table is symmetric about CL unit.

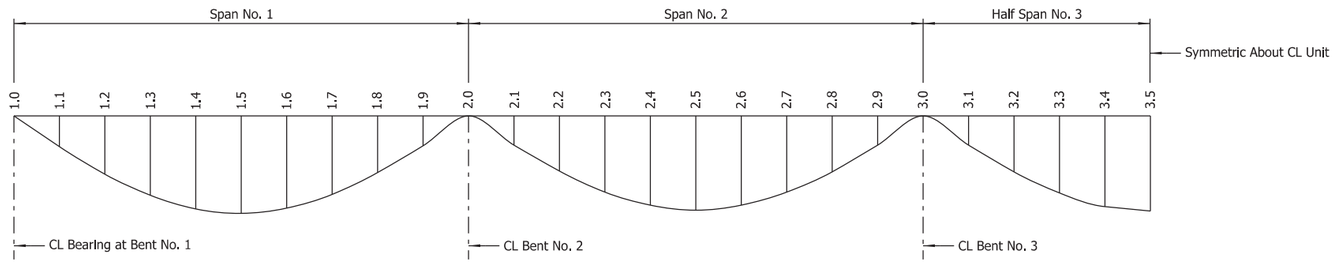

DEAD LOAD DEFLECTION DIAGRAM
No Scale

NOTES:
Camber for dead load deflection plus vertical curve +/- ¼" tolerance.
Deflections shown for end spans are along CL Beam from CL Bearing at End Bent to CL Int. Bent. Deflections shown for interior spans are along CL Beam from CL Int. Bent to CL Int. Bent. Negative sign (-) indicates point above chord.

Dead load deflections shown include an assumed loading of 15 psf in bays without UHPC closures to account for stay-in-place metal deck forms.

Revision to the deflection tables may be necessary upon review of the Contractor's submitted forming details.

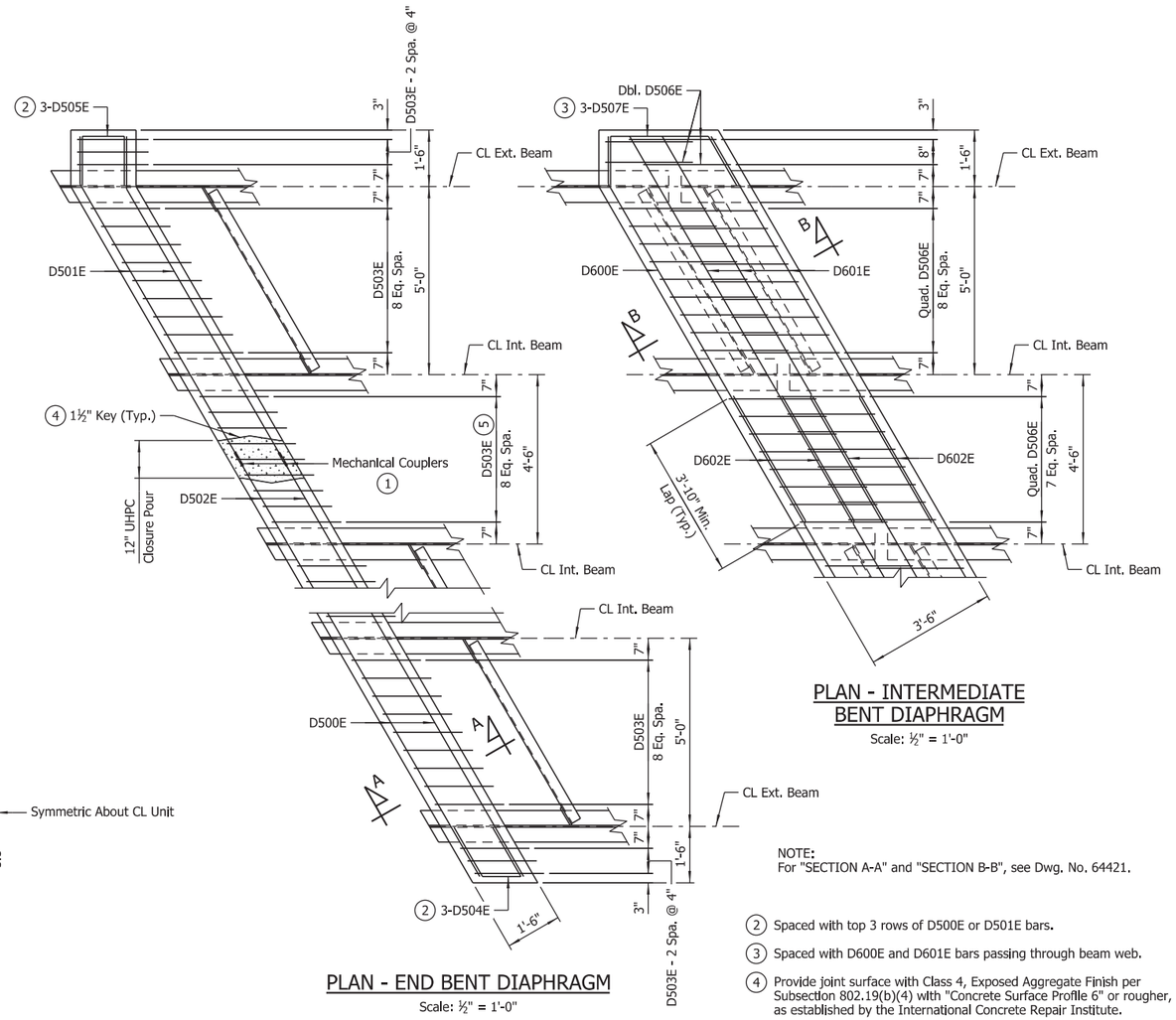

PLAN - INTERMEDIATE BENT DIAPHRAGM
Scale: ½" = 1'-0"

PLAN - END BENT DIAPHRAGM
Scale: ½" = 1'-0"

NOTE:
For "SECTION A-A" and "SECTION B-B", see Dwg. No. 64421.

(2) Spaced with top 3 rows of D500E or D501E bars.

(3) Spaced with D600E and D601E bars passing through beam web.

(4) Provide joint surface with Class 4, Exposed Aggregate Finish per Subsection 802.19(b)(4) with "Concrete Surface Profile 6" or rougher, as established by the International Concrete Repair Institute.

(5) Shift D503E as required to avoid conflict with Mechanical Couplers. Maintain 8" max. spacing between stirrups.

(1) The mechanical couplers shall be Dayton Superior D250SCA Bar Lock Epoxy Couplers or an alternate approved type in accordance with the ARDOT Qualified Products List (QPL). Due to space constraints, the shear bolts on the couplers between adjacent modules shall not be tightened until both modules are in their final positions. It will be necessary to loosely install the couplers on each module's end diaphragm reinforcing, remove the center stop pins, and slide the couplers against the module's concrete immediately prior to setting an adjacent module. Once the adjacent module is in place, the mechanical couplers shall be slid over the adjacent module's reinforcing and centered between the ends of the modules, prior to re-inserting the center stop pins and torquing the shear bolts. The cost of mechanical couplers shall not be measured for separate payment but shall be subsidiary to the price bid for item "PREFABRICATED SUPERSTRUCTURE MODULES". Mechanical couplers shall develop at least 125% of the specified yield strength of the reinforcing steel.

STATE OF ARKANSAS
LICENSED PROFESSIONAL ENGINEER
No.14498
ADAM B. HALL

DIGITALLY SIGNED 8-13-2021
BRIDGE ENGINEER

SHEET 4 OF 4
DETAILS OF 300'-0"
CONTINUOUS W-BEAM UNIT
HWY. 77 OVER DITCH NO. 1
ROUTE SEC.
ARKANSAS STATE HIGHWAY COMMISSION
LITTLE ROCK, ARK.

DRAWN BY: JLD DATE: FEB. 2021 FILENAME: b100955x2_s4.dgn
CHECKED BY: ABH DATE: JUNE 2021 SCALE: As Shown
DESIGNED BY: BWD DATE: JAN. 2021
BRIDGE NO. 07557 DRAWING NO. 64338

abholl 8/13/2021 9:53:22 AM
WORKSPACE: ARDOT Bridge (2019)
L:\2017\1701642 - ARDOT Job 100955\Drawings\b100955x2_S404_DF.dgn
REVISED DATE:

DATE REVISED	DATE FILMED	DATE REVISED	DATE FILMED	FED. ROAD DIST. NO.	STATE	FED. AID PROJ. NO.	SHEET NO.	TOTAL SHEETS
				6	ARK.			
				JOB NO.		100955	162	355
				(1) 07558		LAYOUT		64339

NOTE:
Excavate existing embankment at both ends of bridge as shown. Approx. 1,639 cubic yards of excavation.

NOTE:
Use Type Special Approach Slab at each end of bridge. See Dwg. No. 64430.

Use Type Special Approach Gutters at each end of bridge. See Dwg. Nos. 64427-64429. Eliminate or modify Approach Gutter curb section to fit bridge end terminal. No additional payment will be made for this work.

NOTE:
For "PROJECT GENERAL NOTES", see Dwg. No. 64303.

(1) Bridge End Terminal, See Roadway Plans (Typ.)

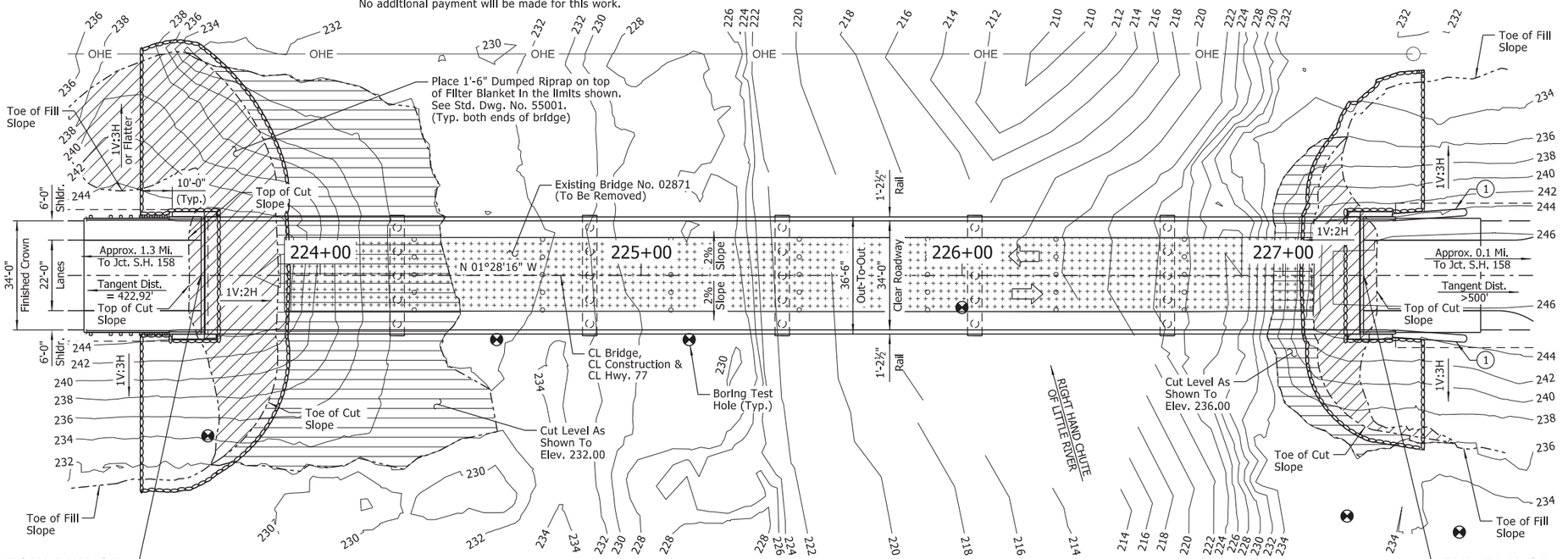

BEGIN BRIDGE
STA. 223+62.90

END BRIDGE
STA. 227+25.10

NOTE:
The proposed bridge has been positioned to avoid interference with the existing piling. The Contractor shall verify measurements before driving any piling. Any adjustments necessary to fit the proposed bridge to the existing bridge location shall be submitted for the Engineer's approval.

PLAN

NOTE:
Stations shown are along CL Construction. Elevations shown are theoretical working point elevations at CL Bridge. Any vertical dimension referenced to CL Deck is based on theoretical working point elevation at CL Bridge. See "ROUNDING DETAIL" on Std. Dwg. No. 55007 for additional information.

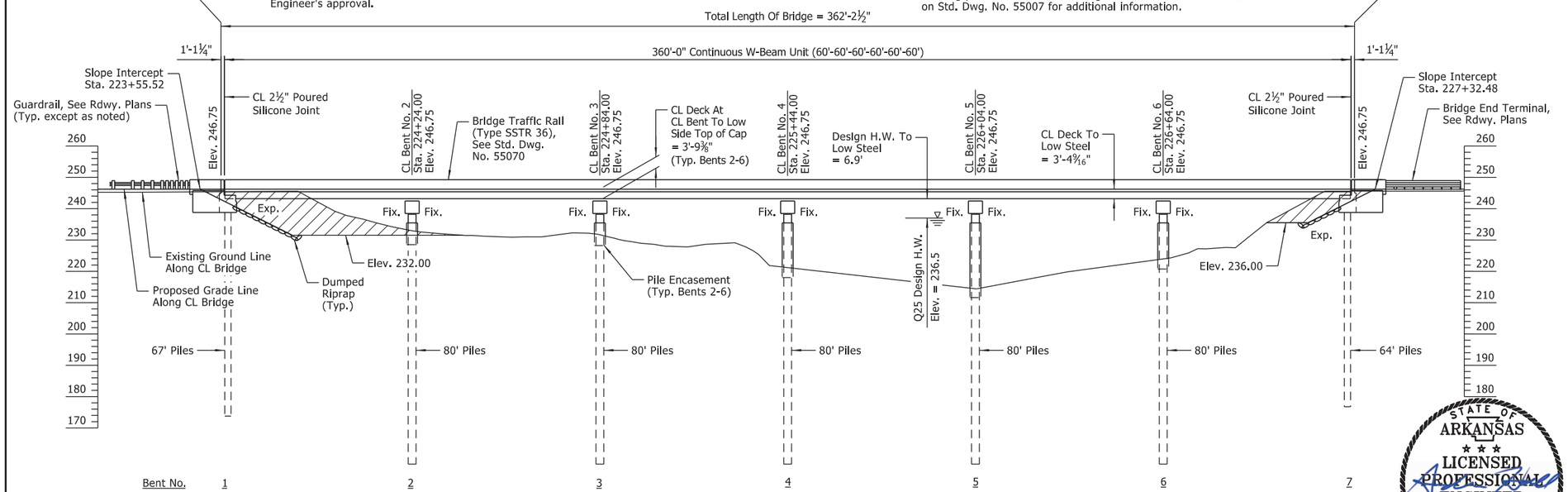

EXISTING UTILITIES LEGEND

OHE = Overhead Electric

FOR R/W DATA, SEE ROADWAY PLANS

NOTE:
Utilities shown are based on locations at time of survey and do not reflect any potential utility relocations prior to construction.

ELEVATION

NOTE:
For "ELEVATION OF SOIL BORINGS" & "HYDRAULIC DATA", see Dwg. No. 64340.

GENERAL NOTES

STEEL SHELL PILING: Piling in Bents 1 & 7 shall be 24" diameter concrete filled steel shell piles and shall be driven to meet the requirements of the "PILE BEARING TABLE" on Dwg. No. 64340. Piling in Bents 2-6 shall be 30" diameter concrete filled steel shell piles and shall be driven to meet the requirements of the "PILE BEARING TABLE" on Dwg. No. 64340. All piling shall be driven with an approved air, steam, or diesel hammer. Piling in end bents shall be driven after embankment to bottom of cap is in place. Lengths of piling shown are assumed for estimating quantities only. Actual lengths are to be determined in the field. No additional payment will be made for cut-off or build-up. Test piles are not required but may be driven for the Contractor's information in accordance with Subsection 805.08(g). No piles will be paid for as Test Piles.

Water jetting or other methods as approved by the Engineer may be required to achieve minimum penetration. This work shall not be paid for directly, but shall be considered incidental to the items "STEEL SHELL PILING (24" DIA.)" and "STEEL SHELL PILING (30" DIA.)".

PILE ENCASEMENT: Pile encasement for Bents 2-6 shall extend from 3' below bottom of cap to 3' below natural or finished ground. See Dwg. No. 64333 for additional information.

DRIVING SYSTEM: The driving system approval and the ultimate bearing capacity determination for piling shall be based on the requirements of Subsection 805.09(b), "Method B - Wave Equation Analysis (WEAP)" and SP "PILE DRIVING SYSTEM". See the "PILE BEARING TABLE" on Dwg. No. 64340 for the estimated minimum rated hammer energy required to overcome the anticipated driving resistance for all piles at each bent. If the Contractor elects to use water jetting or other approved methods to obtain the minimum tip elevations shown while driving only to the required minimum ultimate bearing capacity, the minimum rated hammer energy required will be lower and shall be accounted for in the driving system chosen by the Contractor.

EXISTING BRIDGE: Existing Bridge No. 02871 (Log Mile 6.80) is 322.1' in length, 28.5' wide (24.0' clear roadway) and consists of a concrete slab on I-beam spans (8 spans total) supported by concrete pile bents. Plans of the existing structure, if available, may be obtained upon request to the Construction Contract Development Section of the Program Management Division.

REMOVAL AND SALVAGE: The Contractor shall remove existing Bridge No. 02871 in accordance with Section 205. All material from the existing bridge shall become property of the Contractor.

DETAIL DRAWINGS:	DRAWING NO(S).
Foundation Improvement Plan	64341
End Bents	64310, 64312, 64342-64344,
Intermediate Bents	64332-64334, 64345
Common Details Of 34' Clear Roadway Steel Superstructure	64318-64319
360'-0" Continuous W-Beam Unit	64346-64349
Common Superstructure Details	64421-64424
Elastomeric Bearings	64425-64426
Type Special Approach Gutters	64427-64429
Type Special Approach Slabs	64430
Dumped Riprap	55001
General Notes For Steel Bridge Structures	55006
Details For Steel Bridge Structures	55007
Poured Silicone Joint	55008
Concrete Filled Steel Shell Piling	55021
Bridge Traffic Rail	55070

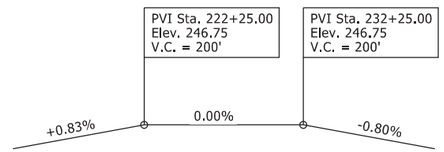

VERTICAL CURVE DATA

Hwy. 77
(Theoretical Grade Along CL Construction)

STATE OF ARKANSAS ★★★ LICENSED PROFESSIONAL ENGINEER ★★★ No.14498 ADAM B. HALL

DIGITALLY SIGNED 8-13-2021
BRIDGE ENGINEER

SHEET 1 OF 2
LAYOUT OF BRIDGE
HIGHWAY 77 OVER RIGHT HAND CHUTE OF LITTLE RIVER
HWYS. 77, 140, 158, & 181
STRS. & APPRS. (MISSISSIPPI CO.) (S)
MISSISSIPPI COUNTY

ROUTE 77 SEC. 2

ARKANSAS STATE HIGHWAY COMMISSION

LITTLE ROCK, ARK.

DRAWN BY: HEW DATE: AUG. 2020 FILENAME: b100955x3_L1.dgn
CHECKED BY: ABH DATE: AUG. 2020 SCALE: 1" = 20'-0"
DESIGNED BY: JME DATE: AUG. 2020

BRIDGE NO. 07558 DRAWING NO. 64339

abholl 8/13/2021 9:53:25 AM
WORKSPACE: ARDOT Bridge (2019)
L:\20IT\1701642 - ARDOT Job 100955\Drawings\b100955x3_SIDI_LLO.dgn
REVISED DATE:

DATE REVISED	DATE FILMED	DATE REVISED	DATE FILMED	FED. ROAD DIST. NO.	STATE	FED. AID PROJ. NO.	SHEET NO.	TOTAL SHEETS
				6	ARK.			
				JOB NO.		100955	163	355
				(1) 07558		LAYOUT		64340

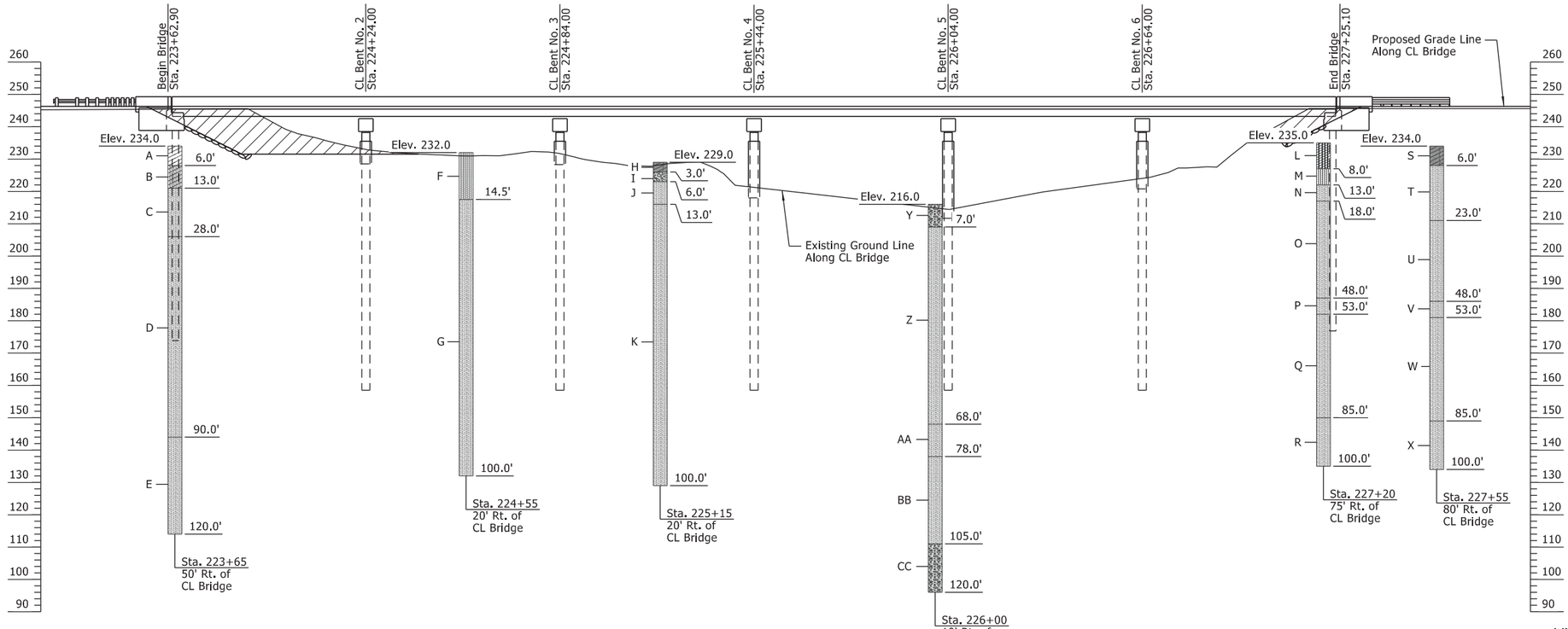

BORING LEGEND

A - Soft grayish brown clay
B - Very soft grayish brown silty clay, sandy
C - Very loose to loose gray fine sand
D - Medium dense grayish brown fine to medium sand, slightly silty
E - Dense gray fine to coarse sand, slightly silty w/ trace fine gravel
F - Very loose reddish brown silty fine to medium sand
G - Loose gray and brown fine to medium sand
H - Very soft brown fine sandy clay
I - Medium dense gray sandy fine to coarse gravel, slightly silty
J - Medium dense gray fine to coarse sand, slightly silty w/ a fine gravel
K - Loose reddish brown fine to medium sand
L - Firm brown clayey silt, slightly sandy
M - Very loose to loose reddish brown silty fine sand
N - Loose reddish brown fine sand
O - Very loose gray fine to medium sand
P - Medium dense grayish brown fine sand
Q - Dense brown fine to medium sand
R - Dense to very dense grayish brown fine sand, slightly silty
S - Firm brown fine sandy clay
T - Very loose brown fine sand, slightly silty
U - Medium dense brown fine to medium sand
V - Dense gray fine sand
W - Dense gray fine to medium sand
X - Medium dense gray fine sand
Y - Rock riprap and sand (fill)
Z - Medium dense gray fine to medium sand, slightly silty
AA - Dense to very dense gray fine sand, slightly silty
BB - Dense to very dense gray fine to medium sand
CC- Dense to very dense fine to coarse sand w/ some fine gravel

HYDRAULIC DATA

FLOOD DESCRIPTION	FREQUENCY	TOTAL DISCHARGE (2)	DISCHARGE THIS SITE	(1) NATURAL WATER SURFACE ELEVATION	WATER SURFACE ELEVATION WITH BACKWATER
	YEARS	CFS	CFS	FEET	FEET
DESIGN	25	42,656	12,789	235.5	236.5
BASE	100	59,368	17,264	236.3	237.8
EXTREME	500	69,379	19,889	237.1	238.6
OVERTOPPING	>500	N/A	N/A	N/A	N/A

(1) Unconstricted water surface without structure or roadway approaches

(2) The total discharge includes flow at this site, Hwy. 77 over Ditch No. 1, Hwy. 77 over Ditch No. 2, Hwy. 77 over Relief to Right Hand Chute of Little River, and Hwy. 77 over Relief to Right Hand Chute of Little River (Borrow Ditch).

Q100 Backwater Elevation For Existing Structure = 238.1

Proposed Low Bridge Chord Elev. = 243.37
Existing Low Bridge Chord Elev. = 243.24 (survey data)

Drainage Area = 2,098.0 square miles
Historical High Water Elev. = N/A

ELEVATION OF SOIL BORINGS

N-VALUES

Sta. 223+65 Offset 50' Rt.	Sta. 224+55 Offset 20' Rt.	Sta. 225+15 Offset 20' Rt.	Sta. 227+20 Offset 75' Rt.	Sta. 227+55 Offset 80' Rt.	Sta. 226+00 Offset 10' Rt.
1.5-2.5, N=5	1.5-2.5, N=3	1.5-2.5, N=3	1.5-2.5, N=7	1.5-2.5, N=7	9.0-10.0, N=15
6.5-7.5, N=2	4.0-5.0, N=4	4.0-5.0, N=20	4.0-5.0, N=4	4.0-5.0, N=4	14.0-15.0, N=20
9.0-10.0, N=5	6.5-7.5, N=2	6.5-7.5, N=10	6.5-7.5, N=3	6.5-7.5, N=2	19.0-20.0, N=14
14.0-15.0, N=4	9.0-10.0, N=7	9.0-10.0, N=5	9.0-10.0, N=4	9.0-10.0, N=6	24.0-25.0, N=40
19.0-20.0, N=14	14.0-15.0, N=6	14.0-15.0, N=5	14.0-15.0, N=5	14.0-15.0, N=11	29.0-30.0, N=56
24.0-25.0, N=13	19.0-20.0, N=14	19.0-20.0, N=14	19.0-20.0, N=3	19.0-20.0, N=5	34.0-35.0, N=43
29.0-30.0, N=20	24.0-25.0, N=28	24.0-25.0, N=19	24.0-25.0, N=12	24.0-25.0, N=16	39.0-40.0, N=50/7″
34.0-35.0, N=26	29.0-30.0, N=29	29.0-30.0, N=34	29.0-30.0, N=21	29.0-30.0, N=14	44.0-45.0, N=33
39.0-40.0, N=20	34.0-35.0, N=40	34.0-35.0, N=13	34.0-35.0, N=26	34.0-35.0, N=15	49.0-50.0, N=50/10″
44.0-45.0, N=16	39.0-40.0, N=20	39.0-40.0, N=14	39.0-40.0, N=28	39.0-40.0, N=13	54.0-55.0, N=40
49.0-50.0, N=9	44.0-45.0, N=10	44.0-45.0, N=17	44.0-45.0, N=19	44.0-45.0, N=17	59.0-60.0, N=49
54.0-55.0, N=15	49.0-50.0, N=18	49.0-50.0, N=21	49.0-50.0, N=23	49.0-50.0, N=31	64.0-65.0, N=47
59.0-60.0, N=35	54.0-55.0, N=20	54.0-55.0, N=23	54.0-55.0, N=43	54.0-55.0, N=42	69.0-70.0, N=50/10″
64.0-65.0, N=34	59.0-60.0, N=19	59.0-60.0, N=39	59.0-60.0, N=22	59.0-60.0, N=36	74.0-75.0, N=50/7″
69.0-70.0, N=21	64.0-65.0, N=12	64.0-65.0, N=42	64.0-65.0, N=87	64.0-65.0, N=43	79.0-80.0, N=50/8″
74.0-75.0, N=29	69.0-70.0, N=22	69.0-70.0, N=35	69.0-70.0, N=42	69.0-70.0, N=46	89.0-90.0, N=50/5″
79.0-80.0, N=29	74.0-75.0, N=51	74.0-75.0, N=24	74.0-75.0, N=33	74.0-75.0, N=41	99.0-100.0, N=50/10″
84.0-85.0, N=67	79.0-80.0, N=42	79.0-80.0, N=31	79.0-80.0, N=32	79.0-80.0, N=41	109.0-110.0, N=50/11″
89.0-90.0, N=30	89.0-90.0, N=43	89.0-90.0, N=71	89.0-90.0, N=53	89.0-90.0, N=29	119.0-120.0, N=50/7″
94.0-95.0, N=70	99.0-100.0, N=45	99.0-100.0, N=84	99.0-100.0, N=25	99.0-100.0, N=62	
109.0-110.0, N=67					
119.0-120.0, N=25					

PILE BEARING TABLE

BENTS	REQUIRED MINIMUM ULTIMATE BEARING CAPACITY (TONS)	MIN. TIP ELEVATION	ANTICIPATED DRIVING RESISTANCE AT MIN. TIP (TONS)	ESTIMATED MIN. RATED HAMMER ENERGY (FT.-LBS. PER BLOW)
1	226	174.00	600	152,400
2	503	159.00	560	186,200
3	503	159.00	575	186,200
4	369	159.00	530	186,200
5	359	159.00	450	186,200
6	364	159.00	560	186,200
7	271	177.00	560	152,400

NOTE:
Required minimum ultimate bearing capacity corresponds to the minimum post driving capacity to be obtained after an allowance for water jetting or any other methods employed to facilitate pile installation.

Anticipated Driving Resistance corresponds to the resistance to be overcome to achieve minimum tip elevation without any water jetting or other methods employed to facilitate pile installation.

STATE OF ARKANSAS
LICENSED PROFESSIONAL ENGINEER
No.14498
ADAM B. HALL

DIGITALLY SIGNED 8-13-2021
BRIDGE ENGINEER

SHEET 2 OF 2
LAYOUT OF BRIDGE
HIGHWAY 77 OVER RIGHT HAND CHUTE OF LITTLE RIVER
HWYS. 77, 140, 158, & 181
STRS. & APPRS. (MISSISSIPPI CO.) (S)
MISSISSIPPI COUNTY

ROUTE 77 SEC. 2

ARKANSAS STATE HIGHWAY COMMISSION

LITTLE ROCK, ARK.

DRAWN BY: CWT DATE: JUNE 2021 FILENAME: b100955x3_L2.dgn
CHECKED BY: ABH DATE: JUNE 2021 SCALE: 1" = 20'-0"
DESIGNED BY: JME DATE: JUNE 2021

BRIDGE NO. 07558 DRAWING NO. 64340

abhall 8/13/2021 9:53:26 AM
WORKSPACE: ARDOT Bridge (209)
L:\20ITV\07f642 - ARDOT Job 100955\Drawings\b100955x3_SH02_L0.dgn
REVISED DATE:

DATE REVISED	DATE FILMED	DATE REVISED	DATE FILMED	FED. ROAD DIST. NO.	STATE	FED. AID PROJ. NO.	SHEET NO.	TOTAL SHEETS
				6	ARK.			
				JOB NO.		100955	164	355
				1	07558	FNDN. IMP. PLAN		64341

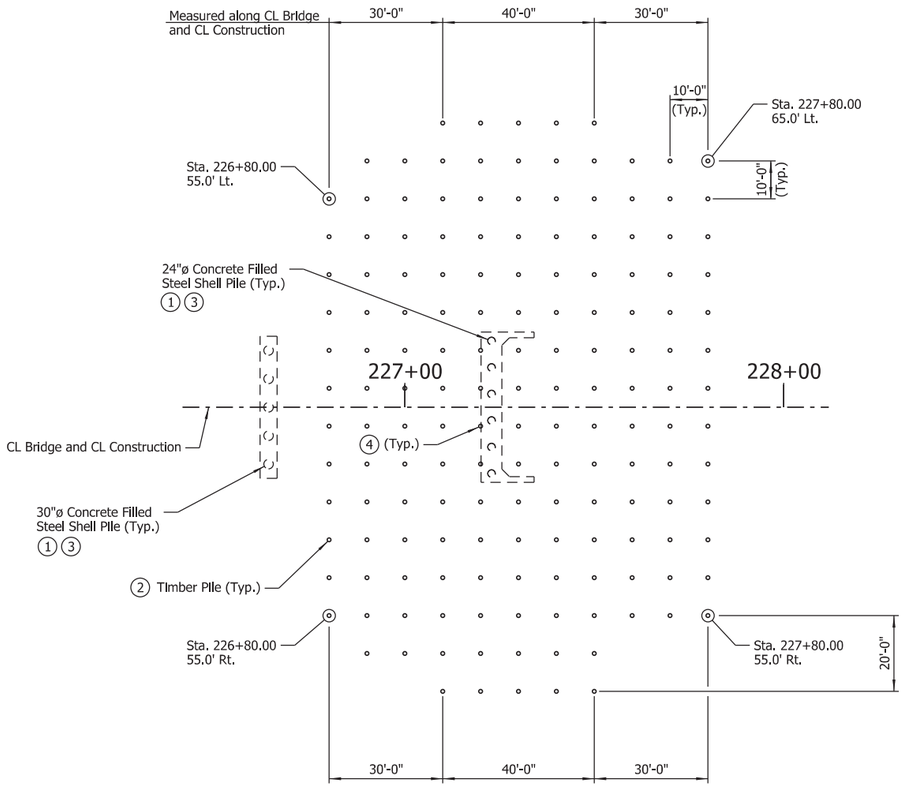

TIMBER PILE LAYOUT FOR FOUNDATION IMPROVEMENT

Scale: 1" = 20'-0"

TIMBER PILE DATA

Bent No.	Estimated No. of Piles	Min. Tip Elevation	5 Estimated Pile Length (FT)
7	160	200	42

NOTES:
Diameter(s) of timber piles shall be in accordance with SP "TIMBER PILING FOR SOIL DENSIFICATION".

Drive number and length of timber piles as directed by the Engineer.

Contractor shall coordinate with the Engineer to avoid any and all utilities within the soil densification areas.

Timber piling outside the limits of the existing bridge and roadway shall be driven prior to closing existing bridge to traffic.

1. Steel shell piling shall be driven prior to timber piling at each bent.
2. Timber piling shall be in accordance with SP "TIMBER PILING FOR SOIL DENSIFICATION".
3. Any existing riprap interfering with the driving of timber pile or steel shell pile shall be removed prior to driving as directed by the Engineer. Cost of removing riprap shall be considered subsidiary to the item "Removal of Existing Bridge Structure (Site No. 3)".
4. Shift timber piling as required to avoid conflicts with proposed caps.
5. Contractor may drive 40' long piles to minimum tip elevation utilizing a follower device to achieve required penetration.

NOTE:
For "DETAILS OF TIMBER PILE TIP" and "TYPICAL SPLICE DETAILS", see Dwg. No. 64308.

STATE OF ARKANSAS
LICENSED PROFESSIONAL ENGINEER
No.8017
JOHN H. RUDDELL

DIGITALLY SIGNED 8-13-2021
BRIDGE ENGINEER

DETAILS OF FOUNDATION IMPROVEMENT PLAN
HWY. 77 OVER RIGHT HAND CHUTE OF LITTLE RIVER

ROUTE SEC.

ARKANSAS STATE HIGHWAY COMMISSION
LITTLE ROCK, ARK.

DRAWN BY: CWT DATE: JUNE 2021 FILENAME: b100955x3_FN.dgn
CHECKED BY: JHR DATE: JUNE 2021 SCALE: As Shown
DESIGNED BY: JME DATE: JUNE 2021
BRIDGE NO. 07558 DRAWING NO. 64341

abhall 8/13/2021 9:53:31 AM
WORKSPACE: ARDOT Bridge (2019)
L:\2017\170176\42 - ARDOT Job 100955\Drawings\b100955x3_SI03_FIP.dgn
REVISED DATE:

DATE REVISED	DATE FILMED	DATE REVISED	DATE FILMED	FED. ROAD DIST. NO.	STATE	FED. AID PROJ. NO.	SHEET NO.	TOTAL SHEETS
				6	ARK.			
				JOB NO.		100955	165	356
				(1) 07558		END BENTS		64342

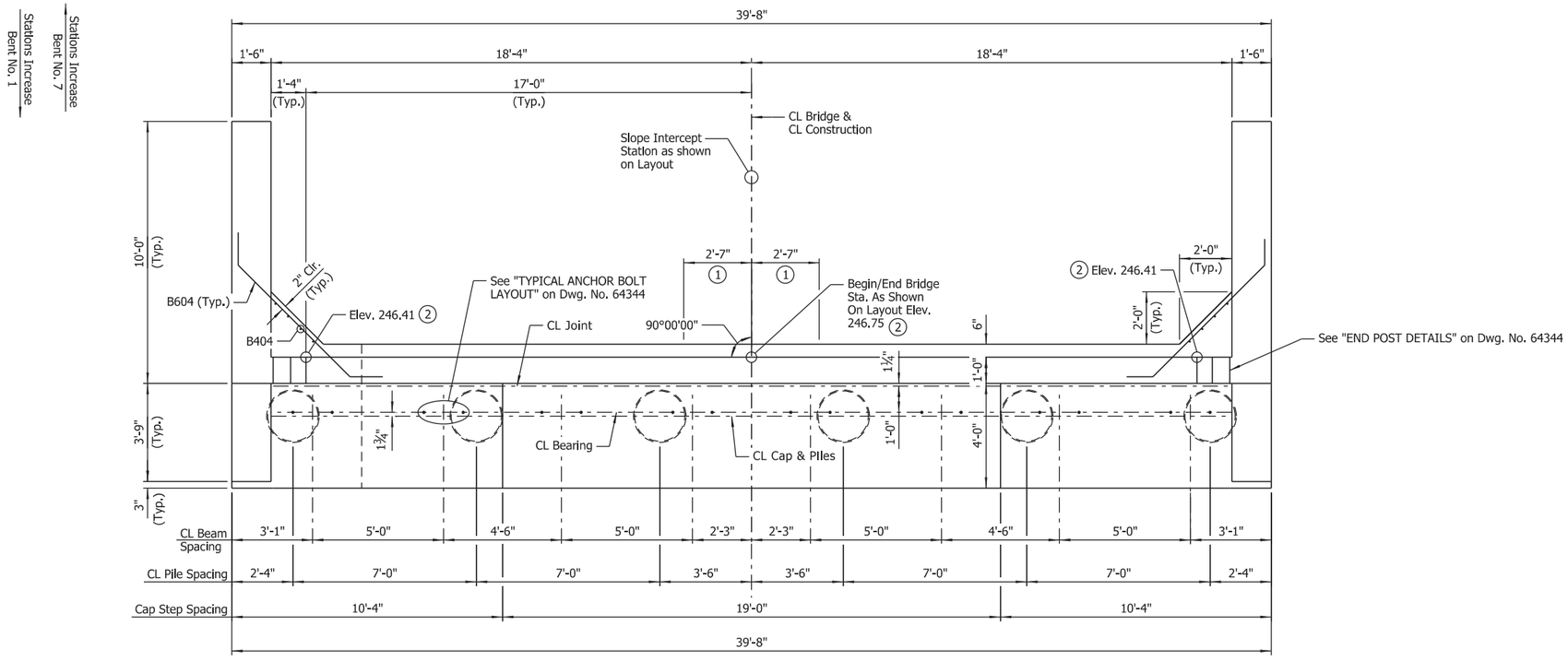

PLAN

Scale: ⅜" = 1'-0"

(1) See "ROUNDING DETAIL" on Std. Dwg. No. 55007

(2) Top of Backwall is to be constructed level longitudinally.

NOTES:
1. For "SECTIONS" and END BENT WALL ARMOR DETAIL", see Dwg. No. 64310.
2. For "GENERAL NOTES" and "BAR LIST", see Dwg. No. 64344.

LEGEND

BF = Back Face
FF = Front Face
EF = Each Face

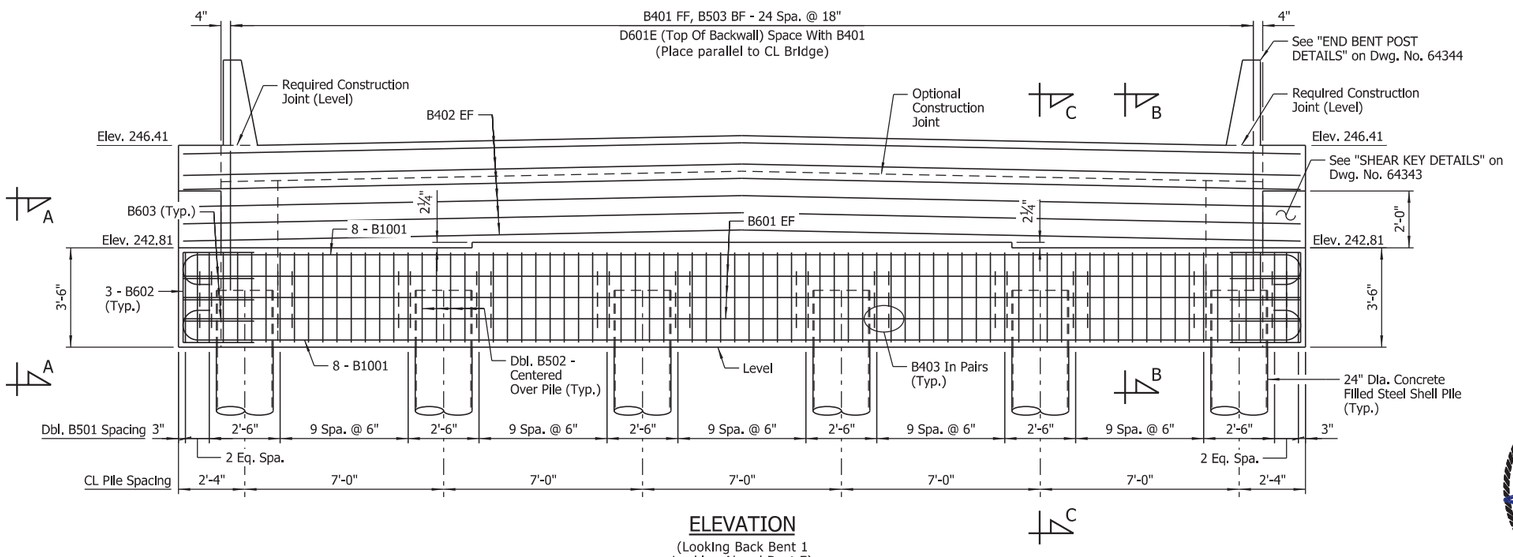

ELEVATION

(Looking Back Bent 1
Looking Ahead Bent 7)
Scale: ⅜" = 1'-0"

NOTE:
No portion of the backwall above the required construction joint shall be poured until the prefabricated superstructure is in place. No heavy construction equipment shall be allowed within 10' of the backwall until the prefabricated superstructure for the adjacent span has been installed.

STATE OF ARKANSAS
LICENSED PROFESSIONAL ENGINEER
No.8017
JOHN H. RUDDELL

DIGITALLY SIGNED 8-13-2021
BRIDGE ENGINEER

SHEET 1 OF 3
DETAILS OF END BENTS
HWY. 77 OVER RIGHT HAND CHUTE OF LITTLE RIVER

ROUTE SEC.

ARKANSAS STATE HIGHWAY COMMISSION
LITTLE ROCK, ARK.

DRAWN BY: CSW DATE: APR. 2021 FILENAME: b100955x3_A1.dgn
CHECKED BY: JHR DATE: JUNE 2021 SCALE: As Shown
DESIGNED BY: CSW DATE: APR. 2021

BRIDGE NO. 07558 DRAWING NO. 64342

abholl 8/13/2021 9:53:32 AM
WORKSPACE: ARDOT Bridge (2019)
L:\20IT\I70I7642 - ARDOT Job I00955\Drawings\bI00955x3_S20I_AB.dgn
REVISED DATE:

DATE REVISED	DATE FILMED	DATE REVISED	DATE FILMED

FED. ROAD DIST. NO.	STATE	FED. AID PROJ. NO.	SHEET NO.	TOTAL SHEETS
6	ARK.			
JOB NO.		100955	166	356
(1) 07558		END BENTS		64343

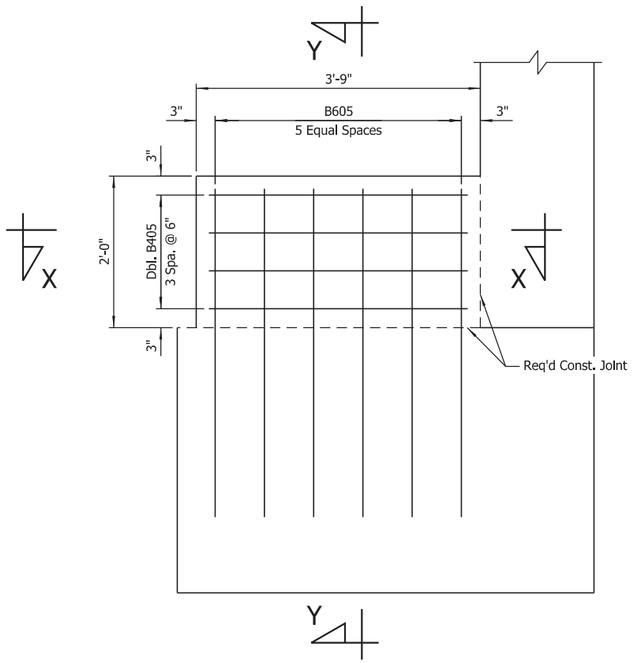

SHEAR KEY DETAILS
Scale: 1" = 1'-0"

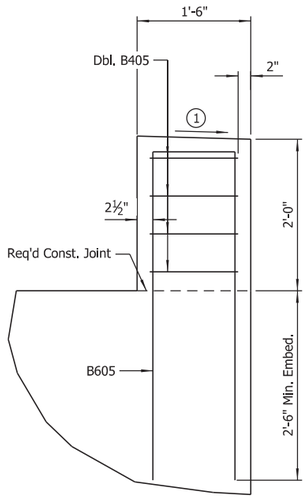

SECTION Y-Y
Scale: 1" = 1'-0"

(1) Slope to drain, provide minimum ½" wash across top width

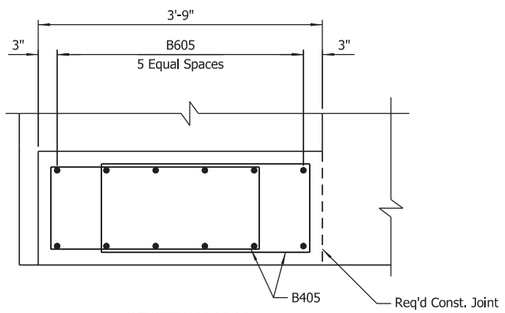

SECTION X-X
Scale: 1" = 1'-0"

STATE OF ARKANSAS
LICENSED PROFESSIONAL ENGINEER
No.8017
JOHN H. RUDDELL

DIGITALLY SIGNED 8-13-2021
BRIDGE ENGINEER

SHEET 2 OF 3
DETAILS OF END BENTS
HWY. 77 OVER RIGHT HAND CHUTE
OF LITTLE RIVER

ROUTE SEC.

ARKANSAS STATE HIGHWAY COMMISSION
LITTLE ROCK, ARK.

DRAWN BY: CSW DATE: APR. 2021 FILENAME: b100955x3_A2.dgn
CHECKED BY: JHR DATE: JUNE 2021 SCALE: As Shown
DESIGNED BY: CSW DATE: APR. 2021

BRIDGE NO. 07558 DRAWING NO. 64343

abhall 8/13/2021 9:53:33 AM
WORKSPACE: ARDOT Bridge (2019)
L:\2017\1701642 - ARDOT Job 100955\Drawings\b100955x3_S202_AB.dgn
REVISED DATE:

DATE REVISED	DATE FILMED	DATE REVISED	DATE FILMED	FED. ROAD DIST. NO.	STATE	FED. AID PROJ. NO.	SHEET NO.	TOTAL SHEETS
				6	ARK.			
				JOB NO.		100955	167	356
				①	07558	END BENTS		64344

BAR LIST (PER BENT)

	MARK	NO. REQ'D	LENGTH	"A"	"B"	P.D.
	B401	25	8'-2"			2"
	B402	12	39'-4"			Str.
	B403	144	4'-6"			3"
	B404	8	5'-5"			Str.
	B405	16	8'-2"	1'-2"	2'-9"	2"
	B501	112	15'-6"			2½"
	B502	48	11'-7"			2½"
	B503	25	6'-5"			2½"
	B601	6	39'-4"			Str.
	B602	6	7'-7"	2'-11"	2'-6"	4½"
	B603	6	9'-8"	5'-0"	2'-6"	4½"
	B604	20	8'-6"			4½"
	B605	12	9'-5"	1'-1"	4'-4"	4½"
	B1001	16	42'-2"			10"
①	D601E	25	5'-2"			4½"
①	R401E	4	5'-11"			2½"
①	R404E	16	3'-8"			Str.
①	W401E	4	3'-11"			3¾"
	W402	40	14'-4"	1'-2"	6'-8"	2"
	W701	50	9'-8"			Str.

NOTES:
Number of bars shown is for one end bent only.

Dimensions of bars are out-to-out.

Bars designated with "E" suffix shall be epoxy coated.

① Epoxy coated reinforcing in end bents shall be paid for as "REINFORCING STEEL - BRIDGE (GRADE 60)".

BAR BENDING DIAGRAMS

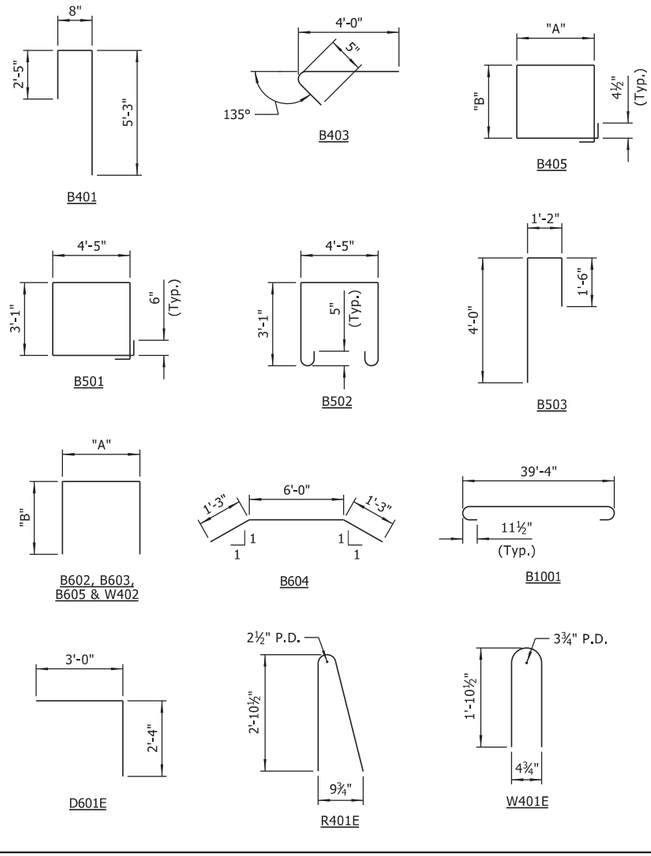

GENERAL NOTES:

Structural steel in end bents shall be ASTM A709, Gr. 50W and shall be paid for as "STRUCTURAL STEEL IN BEAM SPANS (A709, Gr. 50W)".

Class 2 Protective Surface Treatment shall be applied to the top of backwall and the roadway face and top of end posts.

For details of steel shell piling, see Std. Dwg. No. 55021.

See Std. Dwg. No. 55006 for additional notes.

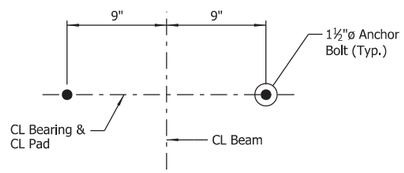

TYPICAL ANCHOR BOLT LAYOUT

No Scale

NOTE:
For Details of Elastomeric Bearings, see Dwg. No. 64425.

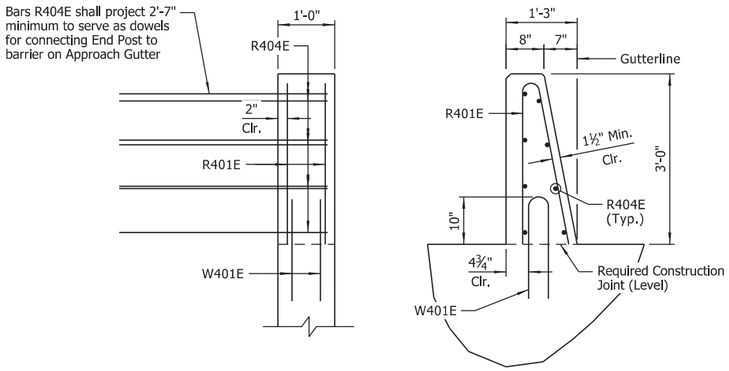

END BENT POST DETAILS

Scale: ½" = 1'-0"

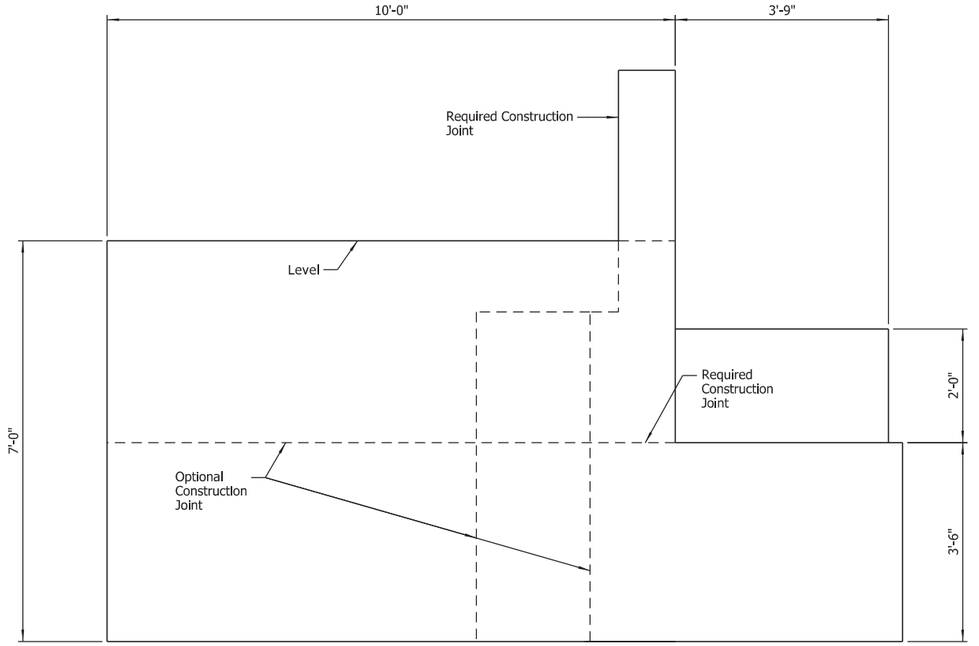

VIEW T-T

Scale: ¾" = 1'-0"

NOTE:
For Reinforcing Details of Wingwall, see "VIEW U-U on Dwg. No. 64312.

STATE OF ARKANSAS
LICENSED PROFESSIONAL ENGINEER
No.8017
JOHN H. RUDDELL

DIGITALLY SIGNED 8-13-2021
BRIDGE ENGINEER

SHEET 3 OF 3
DETAILS OF END BENTS
HWY. 77 OVER RIGHT HAND CHUTE OF LITTLE RIVER

ROUTE SEC.

ARKANSAS STATE HIGHWAY COMMISSION
LITTLE ROCK, ARK.

DRAWN BY: HEW DATE: APR. 2021 FILENAME: b100955x3_A3.dgn
CHECKED BY: JHR DATE: JUNE 2021 SCALE: As Shown
DESIGNED BY: CSW DATE: APR. 2021

BRIDGE NO. 07558 DRAWING NO. 64344

abhall 8/13/2021 9:53:34 AM
WORKSPACE: ARDOT Bridge (2019)
L:\20\TV10176\42 - ARDOT Job 100955\Drawings\b100955x3_S203_AB.dgn
REVISED DATE:

DATE REVISED	DATE FILMED	DATE REVISED	DATE FILMED

FED. ROAD DIST. NO.	STATE	FED. AID PROJ. NO.	SHEET NO.	TOTAL SHEETS
6	ARK.			
JOB NO.		100955	168	356
(1) 07558		INT. BENTS		64345

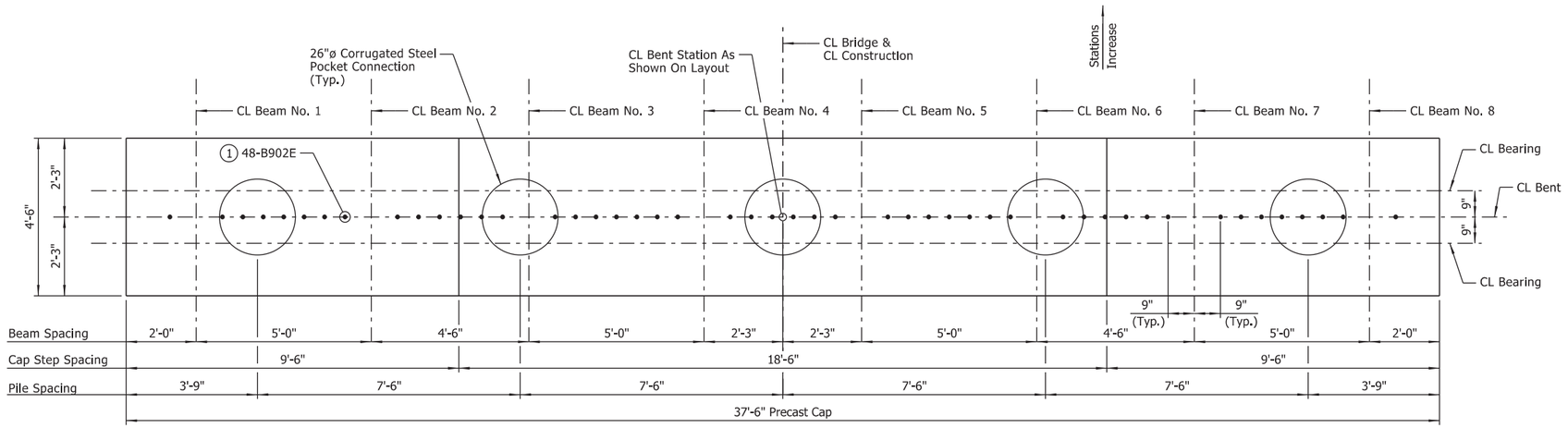

PLAN - BENT NOS. 2-6

Scale: ½" = 1'-0"

(1) Bars B902E within corrugated steel pocket connection shall be installed in the field at the time the pockets are filled. Minimum embedment = 2'-9"

(2) Dimension shown is for distance from outer limit of concrete cap to the limits of the corrugated steel pipe forming the pocket.

LEGEND

O.C. = On Center

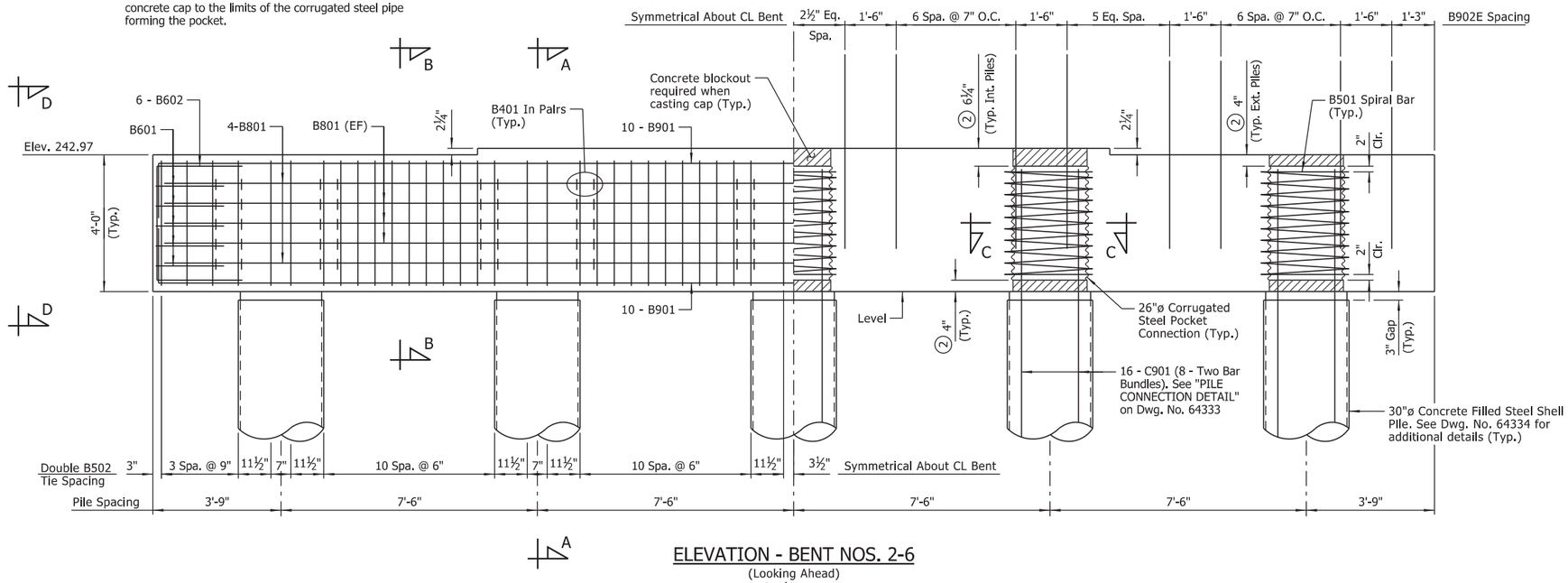

ELEVATION - BENT NOS. 2-6

(Looking Ahead)
Scale: ½" = 1'-0"

NOTES:
Precast bent caps at Bent Nos. 2 through 6 shall be fabricated and installed in accordance with SP "PRECAST CONCRETE BENT CAPS".

For "GENERAL NOTES - PRECAST CONCRETE BENT CAPS", see Dwg. No. 64333.

For details of elastomeric bearings, see Dwg. Nos. 64425 & 64426.

For "SECTIONS", see Dwg. No. 64332.

For "PROJECT GENERAL NOTES", see Dwg. No. 64303.

For additional information, see Layout.

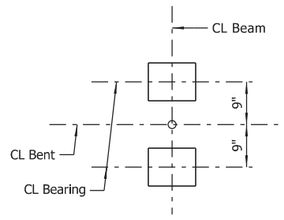

BEARING PAD LAYOUT

Scale: ¾" = 1'-0"

BAR LIST (PER BENT)

MARK	NO. REQ'D	LENGTH	P.D.
B401	200	4'-0"	3"
B501	5	97'-0"	30¼"
B502	124	15'-2"	2½"
B601	10	8'-9"	4½"
B602	12	8'-3"	4½"
B801	14	36'-11"	Str.
B901	20	39'-10"	9"
B902E	48	5'-6"	Str.
C501	5	251'-11"	21¾"
(3) C901	80	14'-0"	Str.

(3) **Bars C901 shall be ASTM A706, Grade 60.**

BAR BENDING DIAGRAMS

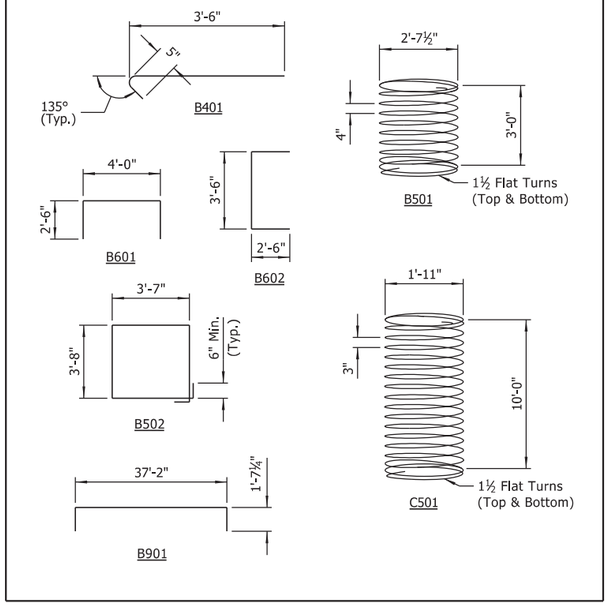

NOTES:
Dimensions of bars are out-to-out.

Bars designated with "E" suffix shall be epoxy coated.

No direct payment for bars in bent cap or concrete filled steel shell piles. Payment of all reinforcing steel to be subsidiary to unit price for "PRECAST CONCRETE BENT CAPS".

STATE OF ARKANSAS
LICENSED PROFESSIONAL ENGINEER
No.8017
JOHN H. RUDDELL

DIGITALLY SIGNED 8-13-2021
BRIDGE ENGINEER

DETAILS OF INTERMEDIATE BENTS HWY. 77 OVER RIGHT HAND CHUTE OF LITTLE RIVER

ROUTE SEC.

ARKANSAS STATE HIGHWAY COMMISSION

LITTLE ROCK, ARK.

DRAWN BY: CWT DATE: APR. 2021 FILENAME: b100955x3_BE1.dgn
CHECKED BY: JHR DATE: MAY 2021 SCALE: As Shown
DESIGNED BY: ERM DATE: APR. 2021

BRIDGE NO. 07558 DRAWING NO. 64345

abnall 8/13/2021 9:53:35 AM
WORKSPACE: ARDOT Bridge (2019)
L:\20TV\10176\42 - ARDOT Job 100955\Drawings\b100955x3_S204_BE.dgn
REVISED DATE:

DATE REVISED	DATE FILMED	DATE REVISED	DATE FILMED

FED. ROAD DIST. NO.	STATE	FED. AID PROJ. NO.	SHEET NO.	TOTAL SHEETS
6	ARK.			
JOB NO.		100955	169	356
(1) 07558		360' UNIT		64346

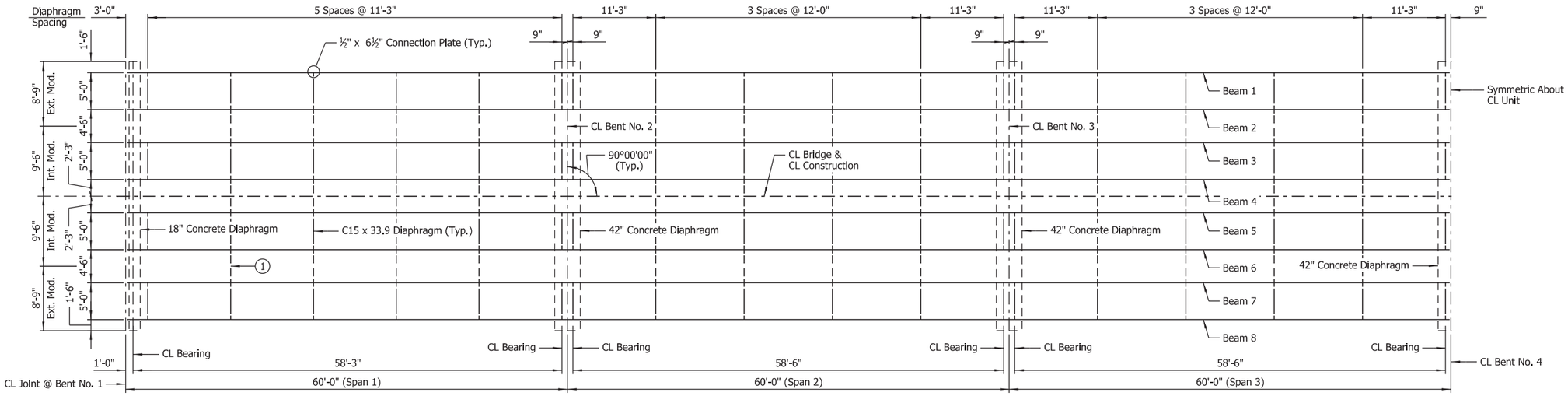

LEGEND

U.N.O. = Unless Noted Otherwise

HALF-FRAMING PLAN

Scale: ⅛" = 1'-0"

(1) Diaphragms between modules shall be installed after prefabricated modules are installed and prior to constructing closure pours.

NOTES:
For Standard General Notes, see Std. Dwg. No. 55006.

For "SHEAR CONNECTOR DETAIL," see Std. Dwg. No. 55007.

All structural steel shall be ASTM A709, Gr. 50W unless noted otherwise. The cost of the structural steel shall be subsidiary to the unit price bid for item "PREFABRICATED SUPERSTRUCTURE MODULES". Diaphragms placed between separate modules shall be included in the cost of the prefabricated modules.

For painting of beam ends adjacent to bridge deck expansion joints, see "PROJECT GENERAL NOTES" on Dwg. No. 64303.

For diaphragm and connection plate details, see "DETAIL B" and "DETAIL C" on Dwg. No. 64422.

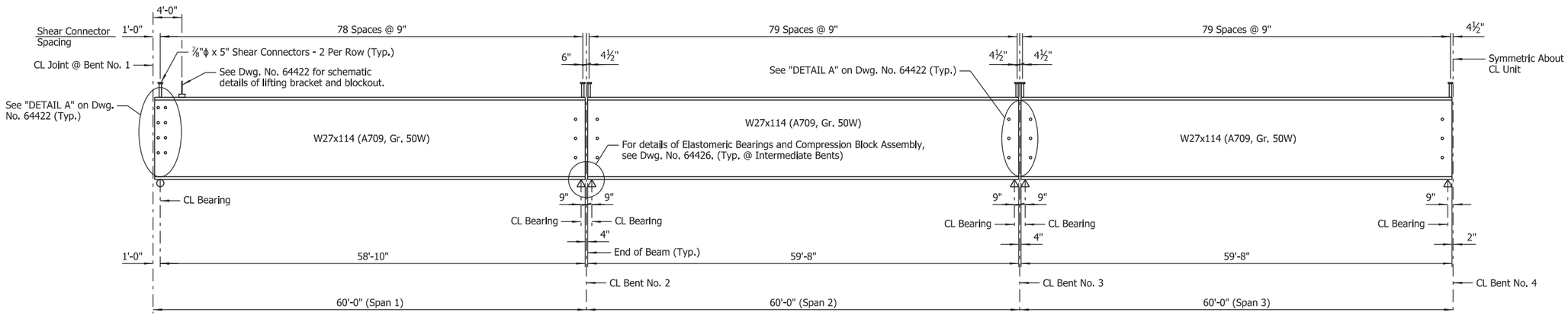

HALF-BEAM ELEVATION

No Scale

STATE OF ARKANSAS
LICENSED PROFESSIONAL ENGINEER
No.8017
JOHN H. RUDDELL

DIGITALLY SIGNED 8-13-2021
BRIDGE ENGINEER

SHEET 1 OF 4
DETAILS OF 360'-0" CONTINUOUS W-BEAM UNIT HWY. 77 OVER RIGHT HAND CHUTE OF LITTLE RIVER

ROUTE SEC.

ARKANSAS STATE HIGHWAY COMMISSION

LITTLE ROCK, ARK.

DRAWN BY: HEW DATE: MAR. 2021 FILENAME: b100955x3_s1.dgn
CHECKED BY: JHR DATE: JUNE 2021 SCALE: As Shown
DESIGNED BY: BWD DATE: FEB. 2021

BRIDGE NO. 07558 DRAWING NO. 64346

abhall 8/13/2021 9:53:37 AM
WORKSPACE: ARDOT Bridge (2019)
L:\20\7\01\7642 - ARDOT Job 100955\Drawings\b100955x3_S401_SF.dgn
REVISED DATE:

DATE REVISED	DATE FILMED	DATE REVISED	DATE FILMED

FED. ROAD DIST. NO.	STATE	FED. AID PROJ. NO.	SHEET NO.	TOTAL SHEETS
6	ARK.			
JOB NO.		100955	170	356
(I) 07558		360' UNIT		64347

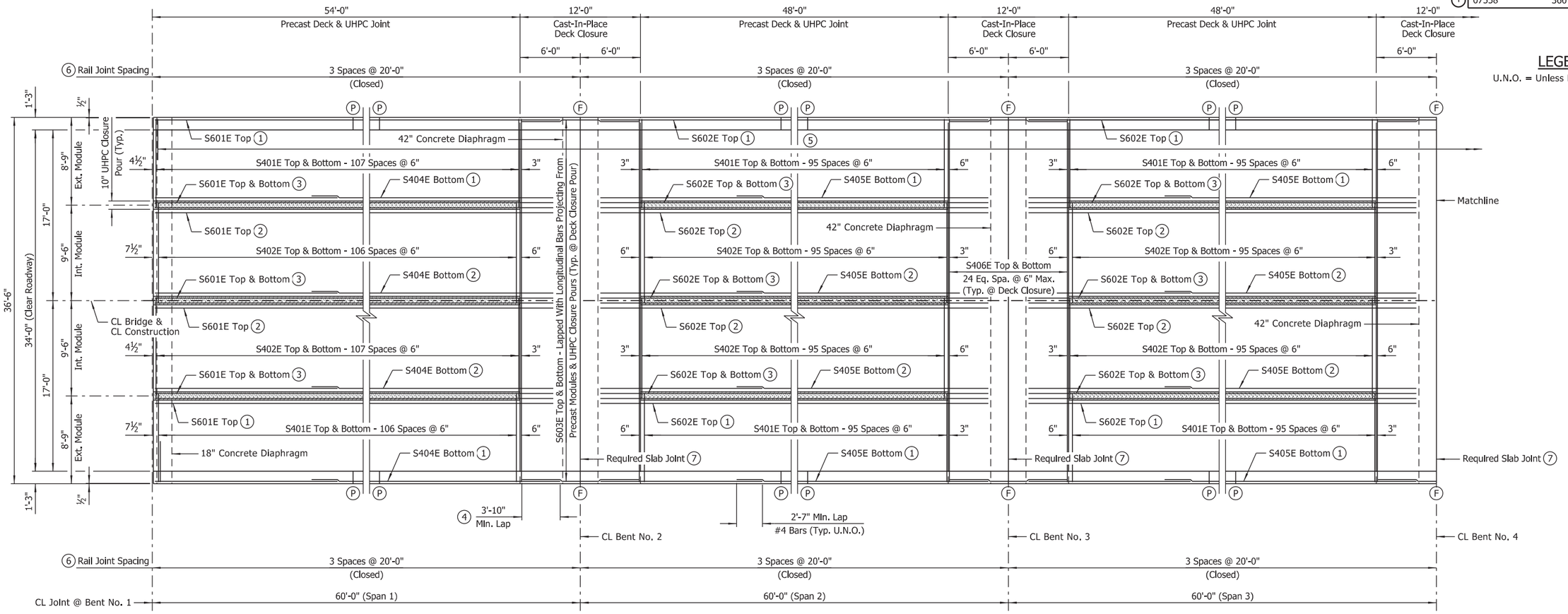

LEGEND

U.N.O. = Unless Noted Otherwise

BAR LIST

MARK	NO. REQ'D	LENGTH	"A"	"B"	P.D.
S401E	2,396	8'-10"			Str.
S402E	2,396	10'-0"			Str.
S403E	1,448	5'-0"			3"
S404E	264	30'-2"			Str.
S405E	528	29'-4"			Str.
S406E	250	36'-2"			Str.
S601E	164	57'-9"			Str.
S602E	328	56'-0"			Str.
S603E	740	11'-8"			Str.
D501E	32	8'-6½"			Str.
D502E	32	9'-5"			Str.
D503E	138	5'-11"			2½"
D504E	12	3'-4"	1'-0½"	1'-3"	2½"
D505E	30	5'-4"	3'-0½"	1'-3"	2½"
D506E	1,280	7'-2½"	2'-1"	2'-8"	2½"
D601E	140	10'-6"			Str.
D602E	140	13'-4"			Str.
R401E	1,440	5'-11"			2½"
R402E	96	5'-6"			Str.
R403E	1,440	3'-6"			3", 3¾"
R404E	288	19'-8"			Str.

BAR BENDING DIAGRAMS

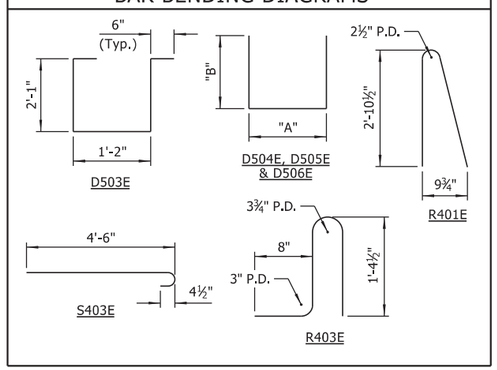

NOTES:
Dimensions of bars are out-to-out.

Bar designations ending with "E" indicate epoxy coated bars.

TABLE OF VARIABLES

CLOSED RAIL PANELS			OPEN RAIL PANELS						
PANEL LENGTH	A	R4XXE	PANEL LENGTH	B	C	D	E	F	R4XXE
20'-0"	39	R404E							

PART REINFORCING PLAN

Scale: 3/16" = 1'-0"

NOTES:
For Standard General Notes, see Std. Dwg. No. 55006.

For "PROJECT GENERAL NOTES," see Dwg. No. 64303.

For bridge traffic rail reinforcing details and details of partial-depth and full-depth rail joints, see Std. Dwg. No. 55070.

For details of concrete diaphragms, see Dwg. Nos. 64318, 64319, 64421 & 64349.

Edges of precast deck adjacent to cast-in-place closure pours shall be keyed and textured in accordance with details and notes on Dwg. No. 64422.

For additional clarity in transverse reinforcing placement near end of precast deck, see "TRANSVERSE REINFORCING SCHEMATICS" on Dwg. No. 64421.

Concrete in bridge superstructure shall be placed, consolidated and screeded off for the entire pour before any concrete has taken its initial set.

A minimum of 72 hours shall elapse between completion of the slab and the pouring of the bridge railing. Any railing pours made before the entire slab unit has been placed must be approved by the Engineer.

Concrete diaphragms shall be poured monolithically with the slab.

Removable forms shall be used when pouring diaphragms.

(1) Placed as shown in "EXTERIOR MODULE REINFORCING DETAIL." See Dwg. No. 64319.

(2) Placed as shown in "INTERIOR MODULE REINFORCING DETAIL." See Dwg. No. 64319.

(3) Placed as shown in "UHPC LONGITUDINAL JOINT DETAIL." See Dwg. No. 64422.

(4) S603E bars shall have 3'-10" minimum lap with both #6 and #4 longitudinal bars.

(5) S403E Bundled with #4 Bars In Top of Exterior Modules and #4 Bars in Top of Closure Pours (Typ. on Both Sides of Bridge)

(6) Rail joints designated with symbol (F) shall be stopped 6" from top of slab. All other rail joints with symbol (P) shall be partial depth joints stopped 16" from top of slab.

(7) See "TRANSVERSE SLAB JOINT DETAIL" on Std. Dwg. No. 55007.

LEFT SIDE & RIGHT SIDE DECK DRAIN STATIONS
223+94.00
224+54.00
225+14.00
225+74.00
226+34.00
226+94.00

NOTE:
Stations shown are to CL Drain. For details of deck drains, see Dwg. No. 64423.

STATE OF ARKANSAS
LICENSED PROFESSIONAL ENGINEER
No.14498
ADAM B. HALL

DIGITALLY SIGNED 8-13-2021
BRIDGE ENGINEER

SHEET 2 OF 4
DETAILS OF 360'-0" CONTINUOUS W-BEAM UNIT HWY. 77 OVER RIGHT HAND CHUTE OF LITTLE RIVER

ROUTE SEC.

ARKANSAS STATE HIGHWAY COMMISSION
LITTLE ROCK, ARK.

DRAWN BY: BWD DATE: FEB. 2021 FILENAME: b100955x3_s2.dgn
CHECKED BY: ABH DATE: JUNE 2021 SCALE: As Shown
DESIGNED BY: BWD DATE: FEB. 2021

BRIDGE NO. 07558 DRAWING NO. 64347

abholl 8/13/2021 9:53:38 AM
WORKSPACE: ARDOT Bridge (2019)
L:\2017\T017642 - ARDOT Job 100955\Drawings\b100955x3_S402_SB.dgn
REVISED DATE:

DATE REVISED	DATE FILMED	DATE REVISED	DATE FILMED	FED. ROAD DIST. NO.	STATE	FED. AID PROJ. NO.	SHEET NO.	TOTAL SHEETS
				6	ARK.			
				JOB NO.		100955	171	356
				(I) 07558		360' UNIT		64348

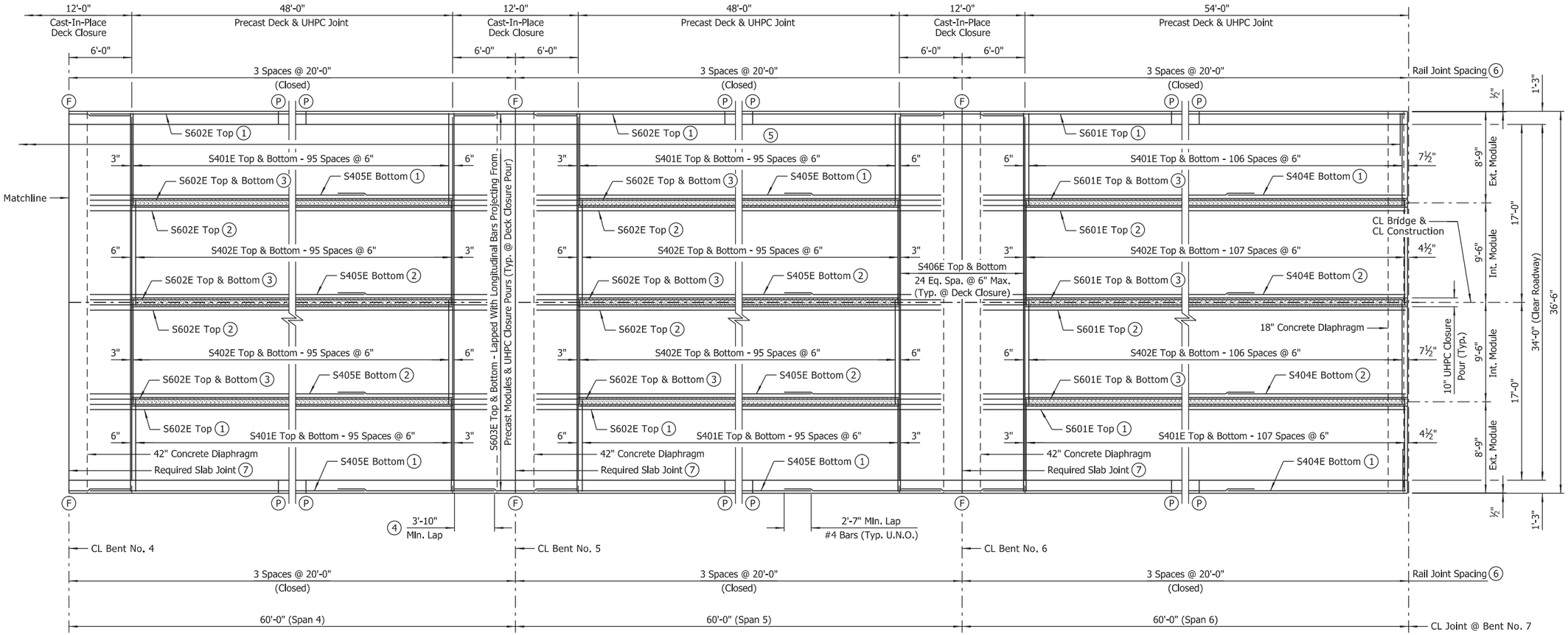

PART REINFORCING PLAN

Scale: 3/16" = 1'-0"

(1) Placed as shown in "EXTERIOR MODULE REINFORCING DETAIL." See Dwg. No. 64319.

(2) Placed as shown in "INTERIOR MODULE REINFORCING DETAIL." See Dwg. No. 64319.

(3) Placed as shown in "UHPC LONGITUDINAL JOINT DETAIL." See Dwg. No. 64422.

(4) S603E bars shall have 3'-10" minimum lap with both #6 and #4 longitudinal bars.

(5) S403E Bundled with #4 Bars in Top of Exterior Modules and #4 Bars in Top of Closure Pours (Typ. on Both Sides of Bridge)

(6) Rail joints designated with symbol (F) shall be stopped 6" from top of slab. All other rail joints with symbol (P) shall be partial depth joints stopped 16" from top of slab.

(7) See "TRANSVERSE SLAB JOINT DETAIL" on Std. Dwg. No. 55007.

NOTES:
For Standard General Notes, see Std. Dwg. No. 55006.

For "PROJECT GENERAL NOTES," see Dwg. No. 64303.

For "BAR LIST", "BAR BENDING DIAGRAMS", Rail Panel "TABLE OF VARIABLES" and deck drain stations, see Dwg. No. 64347.

For bridge traffic rail reinforcing details and details of partial-depth and full-depth rail joints, see Std. Dwg. No. 55070.

For details of concrete diaphragms, see Dwg. Nos. 64318, 64319, 64421 & 64349.

Edges of precast deck adjacent to cast-in-place closure pours shall be keyed and textured in accordance with details and notes on Dwg. No. 64422.

For additional clarity in transverse reinforcing placement near end of precast deck, see "TRANSVERSE REINFORCING SCHEMATICS" on Dwg. No. 64421.

Concrete in bridge superstructure shall be placed, consolidated and screeded off for the entire pour before any concrete has taken its initial set.

A minimum of 72 hours shall elapse between completion of the slab and the pouring of the bridge railing. Any railing pours made before the entire slab unit has been placed must be approved by the Engineer.

Concrete diaphragms shall be poured monolithically with the slab.

Removable forms shall be used when pouring diaphragms.

LEGEND

U.N.O. = Unless Noted Otherwise

STATE OF ARKANSAS
LICENSED PROFESSIONAL ENGINEER
No.14498
ADAM B. HALL

DIGITALLY SIGNED 8-13-2021
BRIDGE ENGINEER

SHEET 3 OF 4
DETAILS OF 360'-0"
CONTINUOUS W-BEAM UNIT
HWY. 77 OVER RIGHT HAND CHUTE
OF LITTLE RIVER

ROUTE SEC.

ARKANSAS STATE HIGHWAY COMMISSION
LITTLE ROCK, ARK.

DRAWN BY: BWD DATE: FEB. 2021 FILENAME: b100955x3_s3.dgn
CHECKED BY: ABH DATE: JUNE 2021 SCALE: As Shown
DESIGNED BY: BWD DATE: FEB. 2021

BRIDGE NO. 07558 DRAWING NO. 64348

abhall 8/13/2021 9:53:41 AM
WORKSPACE: ARDOT Bridge (2019)
L:\20ITI01T642 - ARDOT Job 100955\Drawings\b100955x3_S403_SB.dgn
REVISED DATE:

DATE REVISED	DATE FILMED	DATE REVISED	DATE FILMED	FED. ROAD DIST. NO.	STATE	FED. AID PROJ. NO.	SHEET NO.	TOTAL SHEETS
				6	ARK.			
				JOB NO.		100955	172	356
				(1) 07558		360' UNIT		64349

TABLE OF DEAD LOAD DEFLECTIONS (INCHES)

	Point Of Deflection	Beams 1 & 8			Beams 2, 4, 5 & 7			Beams 3 & 6		
		Structural Steel	Structural Steel + Slab	Structural Steel + Slab + UHPC + Rail	Structural Steel	Structural Steel + Slab	Structural Steel + Slab + UHPC + Rail	Structural Steel	Structural Steel + Slab	Structural Steel + Slab + UHPC + Rail
Span No. 1	1.0	0.000	0.000	0.000	0.000	0.000	0.000	0.000	0.000	0.000
	1.1	0.086	0.385	0.405	0.091	0.435	0.463	0.091	0.426	0.455
	1.2	0.163	0.728	0.768	0.172	0.822	0.880	0.172	0.806	0.864
	1.3	0.223	0.996	1.046	0.235	1.126	1.198	0.235	1.104	1.176
	1.4	0.262	1.167	1.227	0.276	1.319	1.405	0.276	1.293	1.379
	1.5	0.275	1.225	1.285	0.289	1.385	1.471	0.289	1.357	1.444
	1.6	0.262	1.167	1.217	0.276	1.319	1.390	0.276	1.293	1.365
	1.7	0.223	0.996	1.036	0.235	1.126	1.183	0.235	1.104	1.161
	1.8	0.163	0.728	0.748	0.172	0.822	0.851	0.172	0.806	0.835
	1.9	0.086	0.385	0.395	0.091	0.435	0.449	0.091	0.426	0.440
Span No. 2	2.0	0.000	0.000	0.000	0.000	0.000	0.000	0.000	0.000	0.000
	2.1	0.086	0.385	0.385	0.091	0.435	0.435	0.091	0.426	0.426
	2.2	0.163	0.728	0.728	0.172	0.822	0.822	0.172	0.806	0.806
	2.3	0.223	0.996	1.006	0.235	1.126	1.140	0.235	1.104	1.118
	2.4	0.262	1.167	1.177	0.276	1.319	1.333	0.276	1.293	1.307
	2.5	0.275	1.225	1.245	0.289	1.385	1.413	0.289	1.357	1.386
	2.6	0.262	1.167	1.187	0.276	1.319	1.347	0.276	1.293	1.321
	2.7	0.223	0.996	1.006	0.235	1.126	1.140	0.235	1.104	1.118
	2.8	0.163	0.728	0.738	0.172	0.822	0.837	0.172	0.806	0.821
	2.9	0.086	0.385	0.385	0.091	0.435	0.435	0.091	0.426	0.426
Span No. 3	3.0	0.000	0.000	0.000	0.000	0.000	0.000	0.000	0.000	0.000
	3.1	0.086	0.385	0.385	0.091	0.435	0.435	0.091	0.426	0.426
	3.2	0.163	0.728	0.738	0.172	0.822	0.837	0.172	0.806	0.821
	3.3	0.223	0.996	1.016	0.235	1.126	1.155	0.235	1.104	1.132
	3.4	0.262	1.167	1.187	0.276	1.319	1.347	0.276	1.293	1.321
	3.5	0.275	1.225	1.255	0.289	1.385	1.428	0.289	1.357	1.401
	3.6	0.262	1.167	1.187	0.276	1.319	1.347	0.276	1.293	1.321
	3.7	0.223	0.996	1.016	0.235	1.126	1.155	0.235	1.104	1.132
	3.8	0.163	0.728	0.738	0.172	0.822	0.837	0.172	0.806	0.821
	3.9	0.086	0.385	0.385	0.091	0.435	0.435	0.091	0.426	0.426
	4.0	0.000	0.000	0.000	0.000	0.000	0.000	0.000	0.000	0.000

NOTE:
This table is symmetric about CL unit.

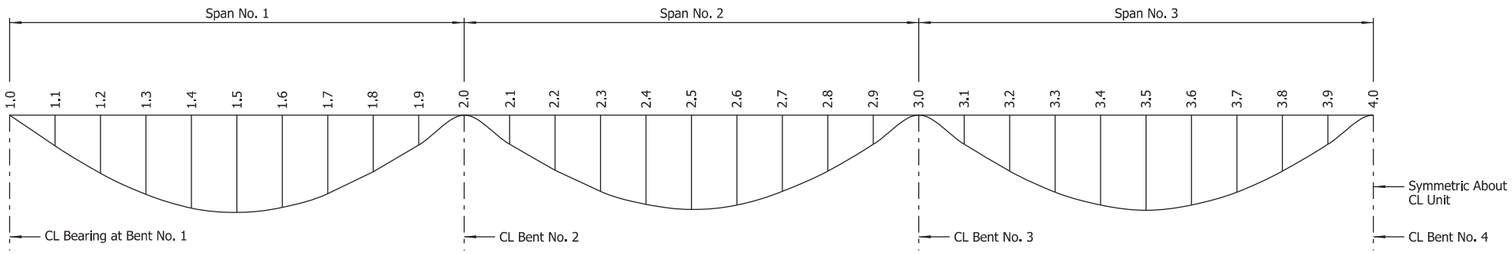

DEAD LOAD DEFLECTION DIAGRAM
No Scale

NOTES:
Camber for dead load deflection plus vertical curve +/- ¼" tolerance.
Deflections shown for end spans are along CL Beam from CL Bearing at End Bent to CL Int. Bent. Deflections shown for interior spans are along CL Beam from CL Int. Bent to CL Int. Bent. Negative sign (-) indicates point above chord.

Dead load deflections shown include an assumed loading of 15 psf in bays without UHPC closures to account for stay-in-place metal deck forms.

Revision to the deflection tables may be necessary upon review of the Contractor's submitted forming details.

(1) The mechanical couplers shall be Dayton Superior D250SCA Bar Lock Epoxy Couplers or an alternate approved type in accordance with the ARDOT Qualified Products List (QPL). Due to space constraints, the shear bolts on the couplers between adjacent modules shall not be tightened until both modules are in their final positions. It will be necessary to loosely install the couplers on each module's end diaphragm reinforcing, remove the center stop pins, and slide the couplers against the module's concrete immediately prior to setting an adjacent module. Once the adjacent module is in place, the mechanical couplers shall be slid over the adjacent module's reinforcing and centered between the ends of the modules, prior to re-inserting the center stop pins and torquing the shear bolts. The cost of mechanical couplers shall not be measured for separate payment but shall be subsidiary to the price bid for Item "PREFABRICATED SUPERSTRUCTURE MODULES". Mechanical couplers shall develop at least 125% of the specified yield strength of the reinforcing steel.

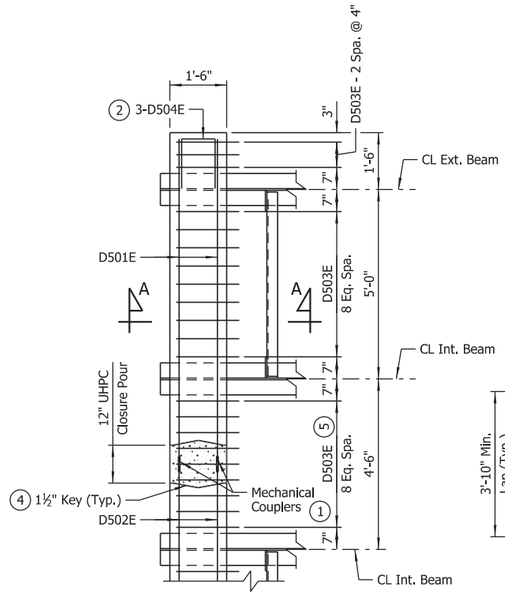

PLAN - END BENT DIAPHRAGM
Scale: ½" = 1'-0"

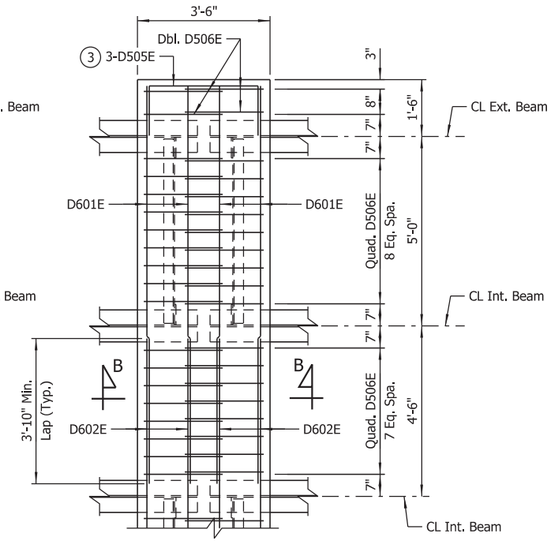

PLAN - INTERMEDIATE BENT DIAPHRAGM
Scale: ½" = 1'-0"

NOTE:
For "SECTION A-A" and "SECTION B-B", see Dwg. No. 64421.

(2) Spaced with top 3 rows of D501E bars.

(3) Spaced with D601E bars passing through beam web.

(4) Provide joint surface with Class 4, Exposed Aggregate Finish per Subsection 802.19(b)(4) with "Concrete Surface Profile 6" or rougher, as established by the International Concrete Repair Institute.

(5) Shift D503E as required to avoid conflict with Mechanical Couplers. Maintain 8" max. spacing between stirrups.

STATE OF ARKANSAS
LICENSED PROFESSIONAL ENGINEER
No.14498
ADAM B. HALL

DIGITALLY SIGNED 8-13-2021
BRIDGE ENGINEER

SHEET 4 OF 4
DETAILS OF 360'-0" CONTINUOUS W-BEAM UNIT HWY. 77 OVER RIGHT HAND CHUTE OF LITTLE RIVER

ROUTE SEC.

ARKANSAS STATE HIGHWAY COMMISSION
LITTLE ROCK, ARK.

DRAWN BY: JLD DATE: FEB. 2021 FILENAME: b100955x3_s4.dgn
CHECKED BY: ABH DATE: JUNE 2021 SCALE: As Shown
DESIGNED BY: BWD DATE: JAN. 2021

BRIDGE NO. 07558 DRAWING NO. 64349

abhall 8/13/2021 9:53:43 AM
WORKSPACE: ARDOT Bridge (2019)
L:\2017\17017642 - ARDOT Job 100955\Drawings\b100955x3_S404_DF.dgn
REVISED DATE:

NOTE:
Excavate existing embankment at both ends of bridge as shown. Approx. 1,793 cubic yards of excavation.

NOTE:
The proposed bridge has been positioned to avoid interference with the existing piling. The Contractor shall verify measurements before driving any piling. Any adjustments necessary to fit the proposed bridge to the existing bridge location shall be submitted for the Engineer's approval.

NOTE:
Stations shown are along CL Construction. Elevations shown are theoretical working point elevations at CL Bridge. Any vertical dimension referenced to CL Deck is based on theoretical working point elevation at CL Bridge. See "ROUNDING DETAIL" on Std. Dwg. No. 55007 for additional information.

NOTE:
Use Type Special Approach Gutters at each end of bridge. See Dwg. Nos. 64427-64429. Eliminate or modify Approach Gutter curb section to fit bridge end terminal. No additional payment will be made for this work.

DATE REVISED	DATE FILMED	DATE REVISED	DATE FILMED	FED. ROAD DIST. NO.	STATE	FED. AID PROJ. NO.	SHEET NO.	TOTAL SHEETS
				6	ARK.			
				JOB NO.		100955	173	355
				(1) 07559		LAYOUT		64350

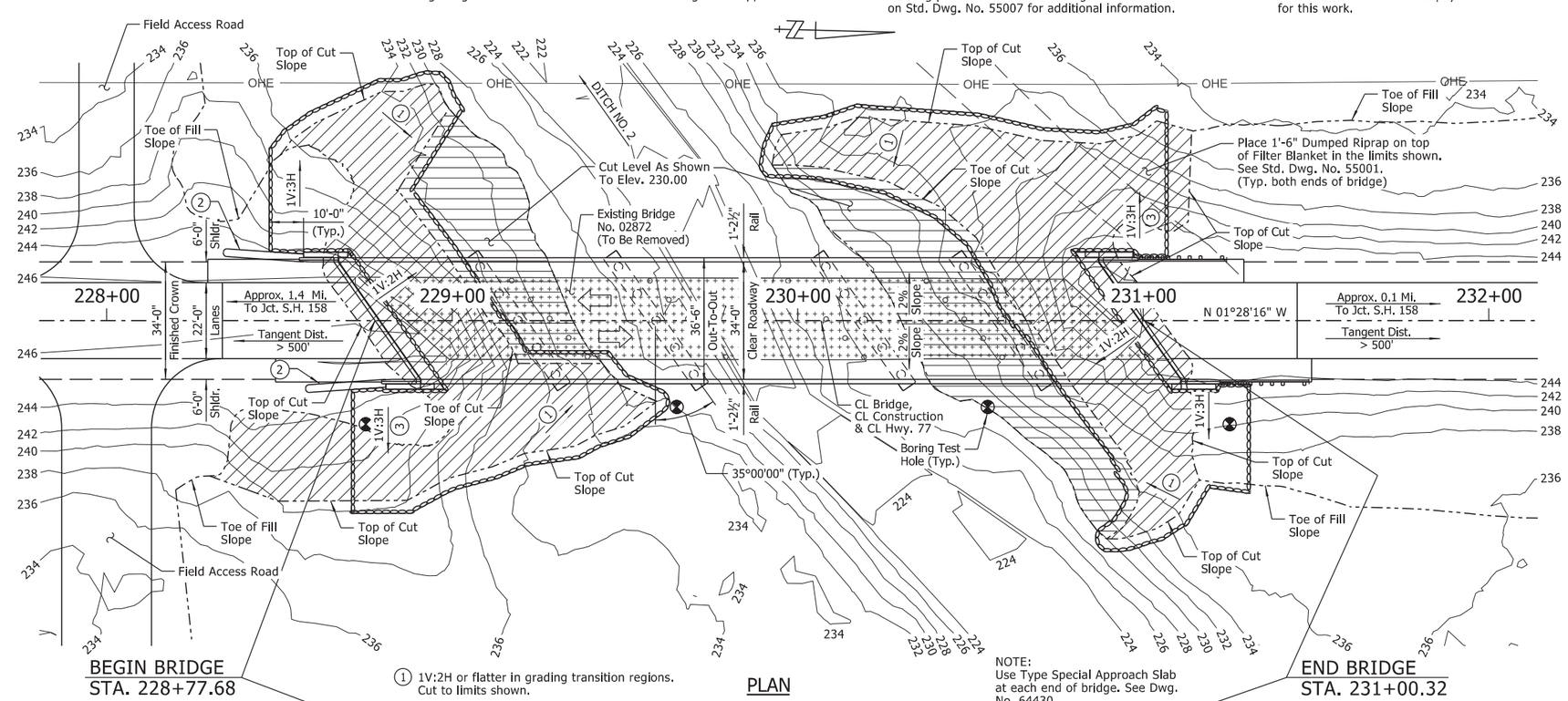

PLAN

(1) 1V:2H or flatter in grading transition regions. Cut to limits shown.

NOTE:
Use Type Special Approach Slab at each end of bridge. See Dwg. No. 64430.

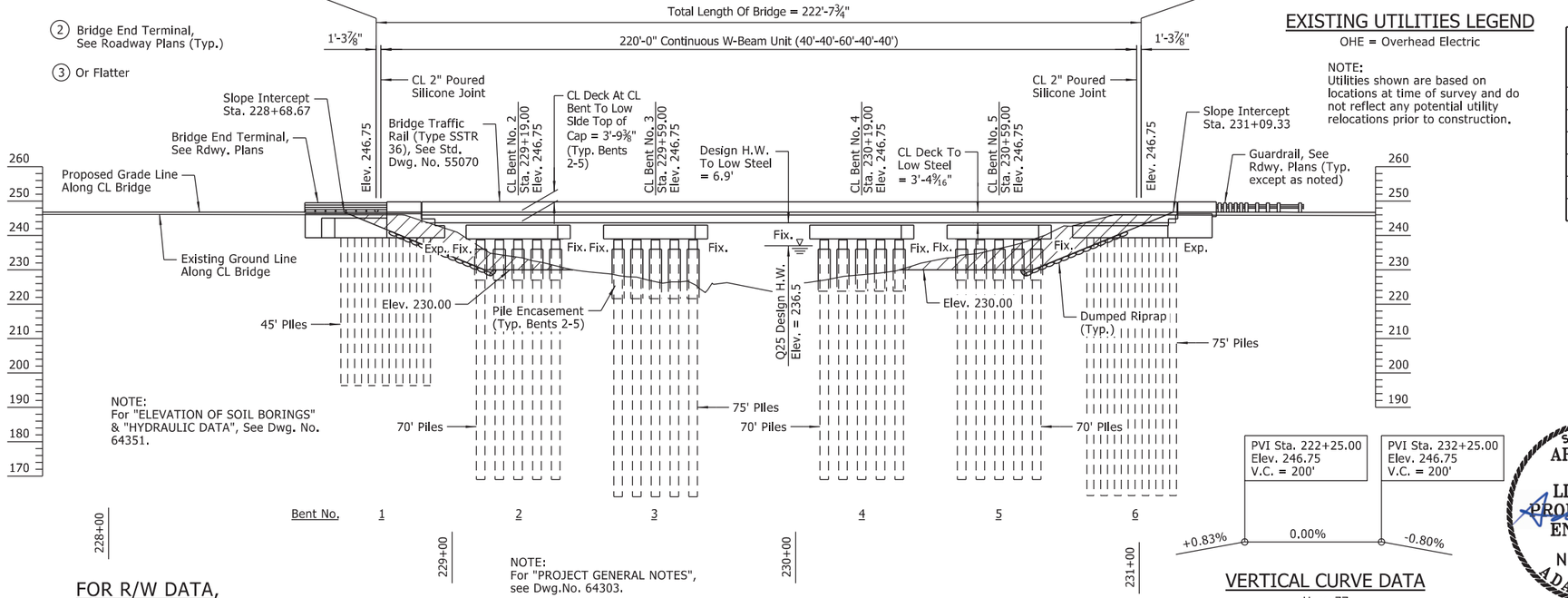

NOTE:
For "ELEVATION OF SOIL BORINGS" & "HYDRAULIC DATA", See Dwg. No. 64351.

NOTE:
For "PROJECT GENERAL NOTES", see Dwg.No. 64303.

ELEVATION

FOR R/W DATA, SEE ROADWAY PLANS

VERTICAL CURVE DATA
Hwy. 77
(Theoretical Grade Along CL Construction)

EXISTING UTILITIES LEGEND

OHE = Overhead Electric

NOTE:
Utilities shown are based on locations at time of survey and do not reflect any potential utility relocations prior to construction.

GENERAL NOTES

STEEL SHELL PILING: Piling in Bents 1 & 6 shall be 24" diameter concrete filled steel shell piles and shall be driven to meet the requirements of the "PILE BEARING TABLE". Piling in Bents 2-5 shall be 30" diameter concrete filled steel shell piles and shall be driven to meet the requirements of the "PILE BEARING TABLE". All piling shall be driven with an approved air, steam, or diesel hammer. Piling in end bents shall be driven after embankment to bottom of cap is in place. Lengths of piling shown are assumed for estimating quantities only. Actual lengths are to be determined in the field. No additional payment will be made for cut-off or build-up. Test piles are not required but may be driven for the Contractor's information in accordance with Subsection 805.08(g). No piles will be paid for as Test Piles.

Water jetting or other methods as approved by the Engineer may be required to achieve minimum penetration. This work shall not be paid for directly, but shall be considered incidental to the items "STEEL SHELL PILING (24" DIA.)" and "STEEL SHELL PILING (30" DIA.)".

PILE ENCASEMENT: Pile encasement for Bents 2-5 shall extend from 3' below bottom of cap to 3' below natural or finished ground. See Dwg. No. 64333 for additional information.

DRIVING SYSTEM: The driving system approval and the ultimate bearing capacity determination for piling shall be based on the requirements of Subsection 805.09(b), "Method B - Wave Equation Analysis (WEAP)" and SP "PILE DRIVING SYSTEM". See the "PILE BEARING TABLE" for the estimated minimum rated hammer energy required to overcome the anticipated driving resistance for all piles at each bent. If the Contractor elects to use water jetting or other approved methods to obtain the minimum tip elevations shown while driving only to the required minimum ultimate bearing capacity, the minimum rated hammer energy required will be lower and shall be accounted for in the driving system chosen by the Contractor.

EXISTING BRIDGE: Existing Bridge No. 02872 (Log Mile 6.73) is 202.9' in length, 28.5' wide (24.0' clear roadway) and consists of a concrete slab on I-beam spans (5 spans total) supported by concrete pile bents. Plans of the existing structure, if available, may be obtained upon request to the Construction Contract Development Section of the Program Management Division.

REMOVAL AND SALVAGE: The Contractor shall remove existing Bridge No. 02872 in accordance with Section 205. All material from the existing bridge shall become property of the Contractor.

DETAIL DRAWINGS:	DRAWING NO(S).
Foundation Improvement Plan	64352
End Bents	64310, 64312, 64353-64356
Intermediate Bents	64332-64334, 64357-64358
Common Details Of 34' Clear Roadway Steel Superstructure	64318-64319
220'-0" Continuous W-Beam Unit	64359-64362
Common Superstructure Details	64421-64424
Elastomeric Bearings	64425-64426
Type Special Approach Gutters	64427-64429
Type Special Approach Slabs	64430
Dumped Riprap	55001
General Notes For Steel Bridge Structures	55006
Details For Steel Bridge Structures	55007
Poured Silicone Joint	55008
Concrete Filled Steel Shell Piling	55021
Bridge Traffic Rail	55070

PILE BEARING TABLE

BENTS	REQUIRED MINIMUM ULTIMATE BEARING CAPACITY (TONS)	MIN. TIP ELEVATION	ANTICIPATED DRIVING RESISTANCE AT MIN. TIP (TONS)	ESTIMATED MIN. RATED HAMMER ENERGY (FT.-LBS. PER BLOW)
1	225	196.00	360	198,400
2	423	169.00	595	198,400
3	484	164.00	740	198,400
4	425	164.00	660	198,400
5	456	169.00	710	198,400
6	323	166.00	680	198,400

NOTE:
Required minimum ultimate bearing capacity corresponds to the minimum post driving capacity to be obtained after an allowance for water jetting or any other methods employed to facilitate pile installation.

Anticipated Driving Resistance corresponds to the resistance to be overcome to achieve minimum tip elevation without any water jetting or other methods employed to facilitate pile installation.

STATE OF ARKANSAS
LICENSED PROFESSIONAL ENGINEER
No.14498
ADAM B. HALL

DIGITALLY SIGNED 8-13-2021
BRIDGE ENGINEER

SHEET 1 OF 2
LAYOUT OF BRIDGE
HIGHWAY 77 OVER DITCH NO. 2
HWYS. 77, 140, 158, & 181
STRS. & APPRS. (MISSISSIPPI CO.) (S)
MISSISSIPPI COUNTY

ROUTE 77 SEC. 2

ARKANSAS STATE HIGHWAY COMMISSION
LITTLE ROCK, ARK.

DRAWN BY: CWT DATE: AUG. 2020 FILENAME: b100955x4_L1.dgn
CHECKED BY: ABH DATE: AUG. 2020 SCALE: 1" = 20'-0"
DESIGNED BY: JME DATE: AUG. 2020

BRIDGE NO. 07559 DRAWING NO. 64350

abhall 8/13/2021 9:53:49 AM
WORKSPACE: ARDOT Bridge (2019)
L:\2017\1701642 - ARDOT Job 100955\Drawings\b100955x4_SIOL_LO.dgn
REVISED DATE:

DATE REVISED	DATE FILMED	DATE REVISED	DATE FILMED

FED. ROAD DIST. NO.	STATE	FED. AID PROJ. NO.	SHEET NO.	TOTAL SHEETS
6	ARK.			
JOB NO.		100955	174	355
(1) 07559		LAYOUT		64351

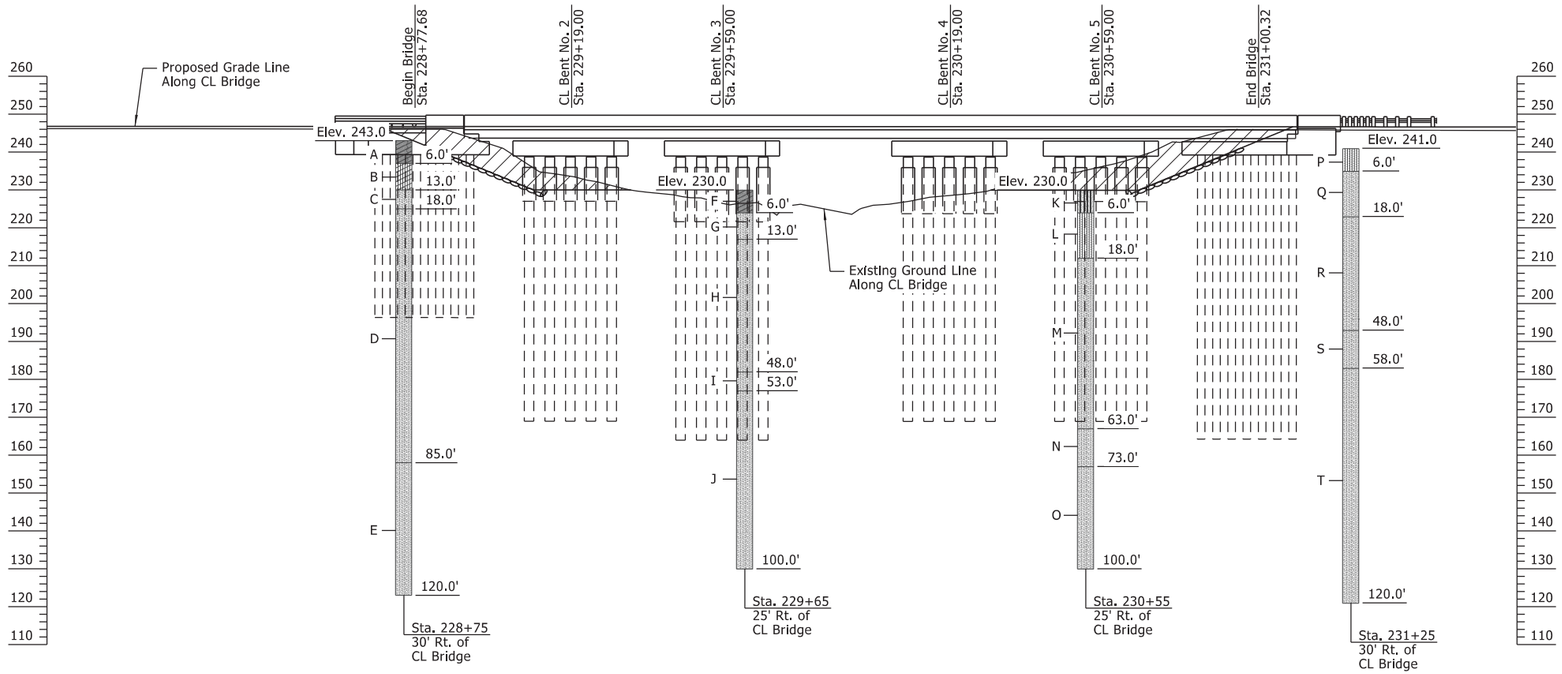

HYDRAULIC DATA

FLOOD DESCRIPTION	FREQUENCY	TOTAL DISCHARGE (2)	DISCHARGE THIS SITE	(1) NATURAL WATER SURFACE ELEVATION	WATER SURFACE ELEVATION WITH BACKWATER
	YEARS	CFS	CFS	FEET	FEET
DESIGN	25	42,656	2,014	235.5	236.5
BASE	100	59,368	3,371	236.3	237.8
EXTREME	500	69,379	4,333	237.1	238.6
OVERTOPPING	>500	N/A	N/A	N/A	N/A

(1) Unconstricted water surface without structure or roadway approaches

(2) The total discharge includes flow at this site, Hwy. 77 over Ditch No. 1, Hwy. 77 over Right Hand Chute of Little River, Hwy. 77 over Relief to Right Hand Chute of Little River, and Hwy. 77 over Relief to Right Hand Chute of Little River (Borrow Ditch).

Q100 Backwater Elevation For Existing Structure = 238.1

Proposed Low Bridge Chord Elev. = 243.37
Existing Low Bridge Chord Elev. = 243.33 (survey data)

Drainage Area = 2,098.0 square miles.
Historical High Water Elev. = N/A

ELEVATION OF SOIL BORINGS

BORING LEGEND

A - Soft brown fine sandy clay
B - Soft brown and gray silty clay, sandy
C - Loose brown fine sand, slightly silty
D - Loose brown fine to medium sand
E - Dense gray fine to coarse sand, slightly silty w/ a little fine gravel
F - Firm brown fine sandy clay
G - Loose reddish brown fine sand, slightly silty
H - Medium dense brown fine to medium sand
I - Medium dense gray fine sand
J - Medium dense gray and brown fine to medium sand
K - Very loose to loose brown fine sandy silt
L - Loose reddish brown silty fine sand
M - Loose brown fine sand
N - Dense brown and gray fine to medium sand
O - Dense brown fine to coarse sand w/ trace fine gravel
P - Loose brown silty fine sand
Q - Very loose brown fine sand, slightly silty
R - Loose to medium dense brown fine to medium sand
S - Medium dense gray fine sand w/ decayed organics
T - Medium dense gray fine to coarse sand w/ trace fine gravel

N-VALUES

Sta. 228+75 Offset 30' Rt.	Sta. 229+65 Offset 25' Rt.	Sta. 230+55 Offset 25' Rt.	Sta. 231+25 Offset 30' Rt.
1.0-2.0, N=5	1.5-2.5, N=8	1.5-2.5, N=4	1.5-2.5, N=8
4.0-5.0, N=3	4.0-5.0, N=5	4.0-5.0, N=3	4.0-5.0, N=6
6.5-7.5, N=4	6.5-7.5, N=5	9.0-10.0, N=4	6.5-7.5, N=3
9.0-10.00, N=9	9.0-10.0, N=7	14.0-15.0, N=8	9.0-10.0, N=5
14.0-15.0, N=5	14.0-15.0, N=15	19.0-20.0, N=8	14.0-15.0, N=4
19.0-20.0, N=8	19.0-20.0, N=9	24.0-25.0, N=13	19.0-20.0, N=10
24.0-25.0, N=8	24.0-25.0, N=9	29.0-30.0, N=14	24.0-25.0, N=11
29.0-30.0, N=14	29.0-30.0, N=18	34.0-35.0, N=9	29.0-30.0, N=14
34.0-35.0, N=32	34.0-35.0, N=20	39.0-40.0, N=14	34.0-35.0, N=26
39.0-40.0, N=18	39.0-40.0, N=16	44.0-45.0, N=15	39.0-40.0, N=16
44.0-45.0, N=35	44.0-45.0, N=28	49.0-50.0, N=13	44.0-45.0, N=28
49.0-50.0, N=21	49.0-50.0, N=12	54.0-55.0, N=31	49.0-50.0, N=23
54.0-55.0, N=34	54.0-55.0, N=11	59.0-60.0, N=10	54.0-55.0, N=21
59.0-60.0, N=27	59.0-60.0, N=15	64.0-65.0, N=31	59.0-60.0, N=11
64.0-65.0, N=33	64.0-65.0, N=39	69.0-70.0, N=23	64.0-65.0, N=18
69.0-70.0, N=46	69.0-70.0, N=35	74.0-75.0, N=46	74.0-75.0, N=13
74.0-75.0, N=48	74.0-75.0, N=35	79.0-80.0, N=55	79.0-80.0, N=56
79.0-80.0, N=26	79.0-80.0, N=35	89.0-90.0, N=60	89.0-90.0, N=63
89.0-90.0, N=38	89.0-90.0, N=66	99.0-100.0, N=65	99.0-100.0, N=52
99.0-100.0, N=90	99.0-100.0, N=73		109.0-110.0, N=64
109.0-110.0, N=49			119.0-120.0, N=50/5"
119.0-120.0, N=67			

STATE OF ARKANSAS
LICENSED PROFESSIONAL ENGINEER
No.14498
ADAM B. HALL

DIGITALLY SIGNED 8-13-2021
BRIDGE ENGINEER

SHEET 2 OF 2
LAYOUT OF BRIDGE
HIGHWAY 77 OVER DITCH NO. 2
HWYS. 77, 140, 158, & 181
STRS. & APPRS. (MISSISSIPPI CO.) (S)
MISSISSIPPI COUNTY
ROUTE 77 SEC. 2

ARKANSAS STATE HIGHWAY COMMISSION
LITTLE ROCK, ARK.

DRAWN BY: CWT DATE: JUNE 2021 FILENAME: b100955x4_L2.dgn
CHECKED BY: ABH DATE: JUNE 2021 SCALE: 1" = 20'-0"
DESIGNED BY: JME DATE: JUNE 2021
BRIDGE NO. 07559 DRAWING NO. 64351

abholl 8/13/2021 9:53:51 AM
WORKSPACE: ARDOT Bridge (2019)
L:\20IT\1701642 - ARDOT Job 100955\Drawings\b100955x4_Si02_L0.dgn
REVISED DATE:

DATE REVISED	DATE FILMED	DATE REVISED	DATE FILMED

FED. ROAD DIST. NO.	STATE	FED. AID PROJ. NO.	SHEET NO.	TOTAL SHEETS
6	ARK.			
JOB NO.		100955	175	355
(1) 07559		FNDN. IMP. PLAN		64352

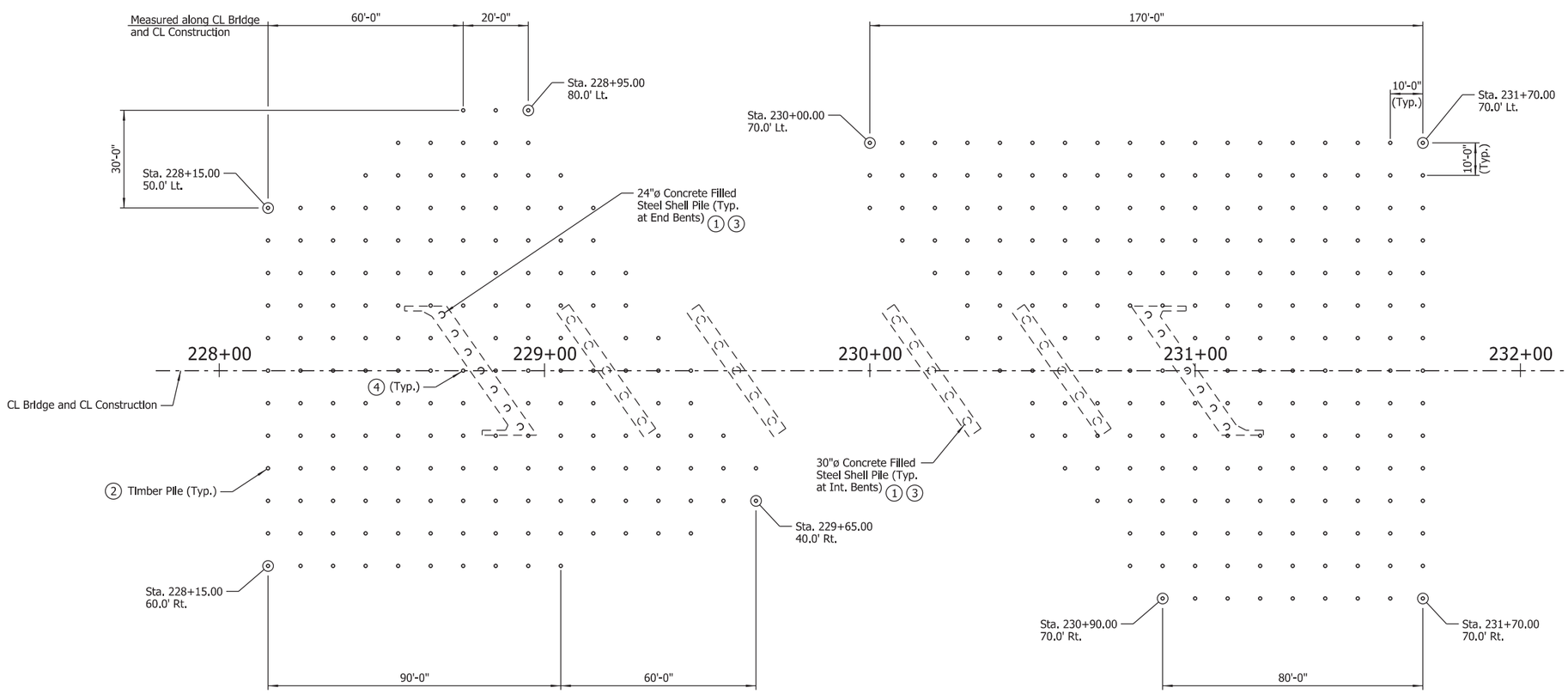

TIMBER PILE LAYOUT FOR FOUNDATION IMPROVEMENT

Scale: 1" = 20'-0"

TIMBER PILE DATA

Bent No.	Estimated No. of Piles	Min. Tip Elevation	(5) Estimated Pile Length (FT)
1	169	205	41
6	205	205	41

NOTES:
Diameter(s) of timber piles shall be in accordance with SP "TIMBER PILING FOR SOIL DENSIFICATION".

Drive number and length of timber piles as directed by the Engineer.

Contractor shall coordinate with the Engineer to avoid any and all utilities within the soil densification areas.

Timber piling outside the limits of the existing bridge and roadway shall be driven prior to closing existing bridge to traffic.

(1) Steel shell piling shall be driven prior to timber piling at each bent.

(2) Timber piling shall be in accordance with SP "TIMBER PILING FOR SOIL DENSIFICATION".

(3) Any existing riprap interfering with the driving of timber pile or steel shell pile shall be removed prior to driving as directed by the Engineer. Cost of removing riprap shall be considered subsidiary to the item "Removal of Existing Bridge Structure (Site No. 4)".

(4) Shift timber piling as required to avoid conflicts with proposed caps.

(5) Contractor may drive 40' long piles to minimum tip elevation utilizing a follower device to achieve required penetration.

NOTE:
For "DETAILS OF TIMBER PILE TIP" and "TYPICAL SPLICE DETAILS", see Dwg. No. 64308.

STATE OF ARKANSAS
LICENSED PROFESSIONAL ENGINEER
No.8017
JOHN H. RUDDELL

DIGITALLY SIGNED 8-13-2021
BRIDGE ENGINEER

DETAILS OF FOUNDATION IMPROVEMENT PLAN
HWY. 77 OVER DITCH NO. 2

ROUTE SEC.

ARKANSAS STATE HIGHWAY COMMISSION

LITTLE ROCK, ARK.

DRAWN BY: CWT DATE: JUNE 2021 FILENAME: b100955x4_FN.dgn
CHECKED BY: JHR DATE: JUNE 2021 SCALE: As Shown
DESIGNED BY: JME DATE: JUNE 2021

BRIDGE NO. 07559 DRAWING NO. 64352

abnall 8/13/2021 9:53:53 AM
WORKSPACE: ARDOT Bridge (2019)
L:\20T\170I7642 - ARDOT Job 100955\Drawings\b100955x4_SI03_FIP.dgn
REVISED DATE:

DATE REVISED	DATE FILMED	DATE REVISED	DATE FILMED	FED. ROAD DIST. NO.	STATE	FED. AID PROJ. NO.	SHEET NO.	TOTAL SHEETS
				6	ARK.			
				JOB NO.		100955	176	356
				(1) 07559		END BENTS		64353

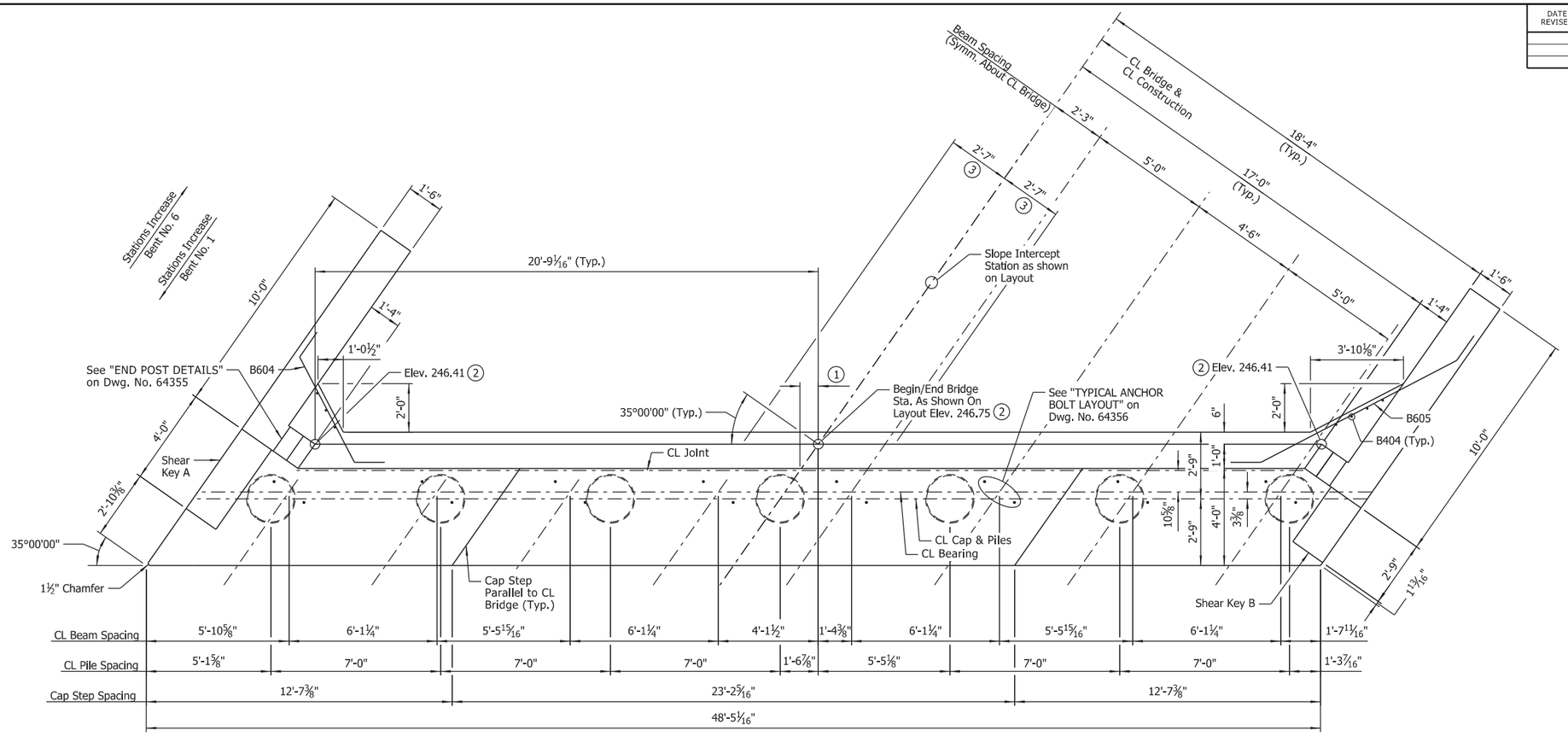

PLAN

Scale: 3/8" = 1'-0"

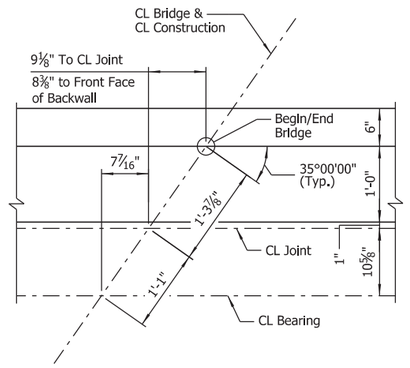

DETAIL A

Scale: 1" = 1'-0"

(1) See "DETAIL A"

(2) Top of Backwall is to be constructed level longitudinally.

(3) See "ROUNDING DETAIL" on Std. Dwg. No. 55007.

(4) See "REINFORCEMENT DETAIL" on Dwg. No. 64355

NOTES:
1. For "SECTIONS" and "END BENT WALL ARMOR DETAIL", see Dwg. No. 64310.
2. For "GENERAL NOTES" and "BAR LIST", see Dwg. No. 64356.

LEGEND

BF = Back Face
FF = Front Face
EF = Each Face

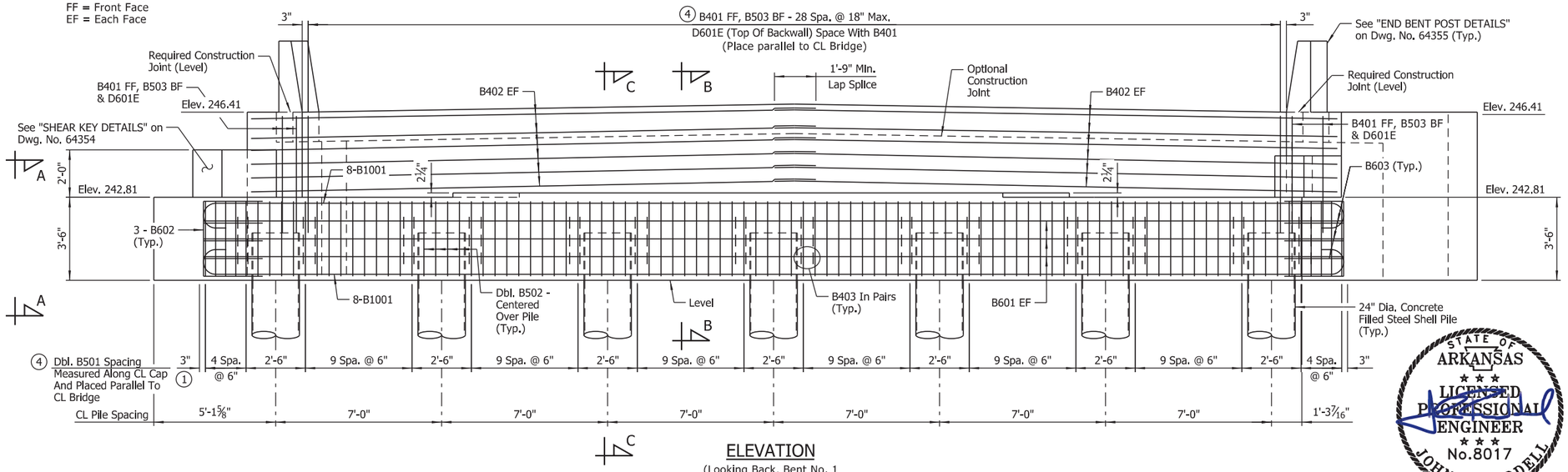

ELEVATION

(Looking Back, Bent No. 1
Looking Ahead, Bent No. 6)
Scale: 3/8" = 1'-0"

NOTE:
No portion of the backwall above the required construction joint shall be poured until the prefabricated superstructure is in place. No heavy construction equipment shall be allowed within 10' of the backwall until the prefabricated superstructure for the adjacent span has been installed.

STATE OF ARKANSAS
LICENSED PROFESSIONAL ENGINEER
No.8017
JOHN H. RUDDELL

DIGITALLY SIGNED 8-13-2021
BRIDGE ENGINEER

SHEET 1 OF 4
DETAILS OF END BENTS
HWY. 77 OVER DITCH NO. 2

ROUTE SEC.

ARKANSAS STATE HIGHWAY COMMISSION

LITTLE ROCK, ARK.

DRAWN BY: HEW DATE: APR. 2021 FILENAME: b100955x4_A1.dgn
CHECKED BY: JHR DATE: JUNE 2021 SCALE: As Shown
DESIGNED BY: CSW DATE: APR. 2021

BRIDGE NO. 07559 DRAWING NO. 64353

abhall 8/13/2021 9:53:55 AM
WORKSPACE: ARDOT Bridge (2019)
L:\20??\??07642 - ARDOT Job 100955\Drawings\b100955x4_S201_A1.dgn
REVISED DATE:

DATE REVISED	DATE FILMED	DATE REVISED	DATE FILMED	FED. ROAD DIST. NO.	STATE	FED. AID PROJ. NO.	SHEET NO.	TOTAL SHEETS
				6	ARK.			
				JOB NO.		100955	177	356
				1 07559		END BENTS		64354

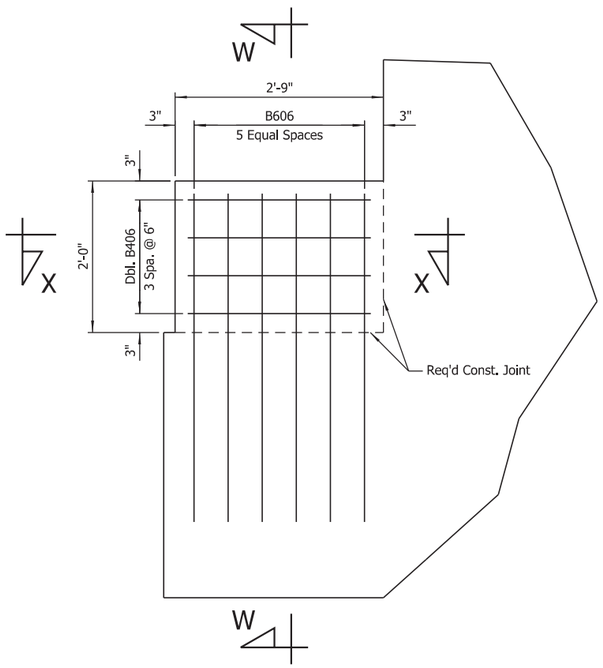

SHEAR KEY B

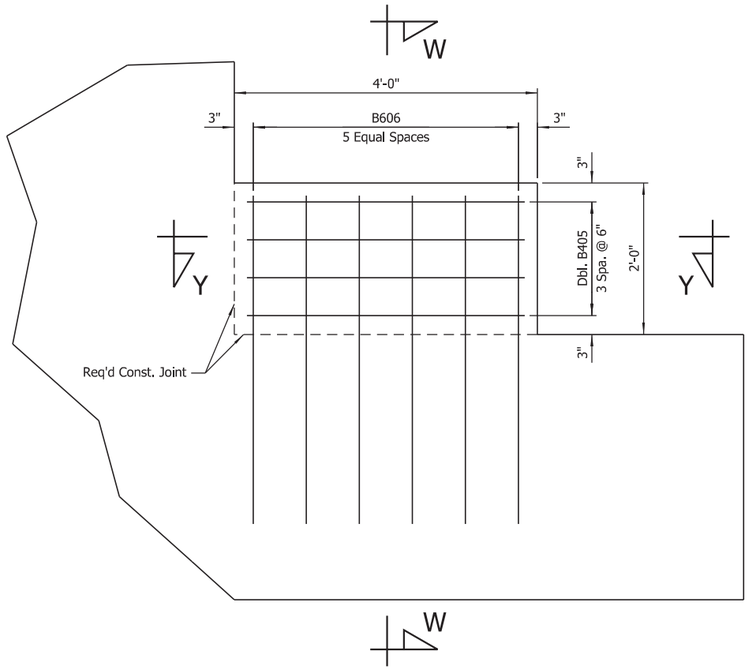

SHEAR KEY A

SHEAR KEY DETAILS
Scale: 1" = 1'-0"

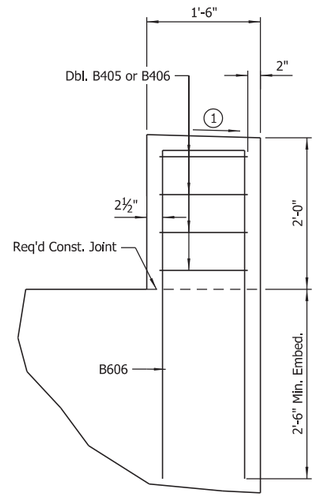

SECTION W-W
Scale: 1" = 1'-0"

1 Slope to drain, provide minimum ½" wash across top width

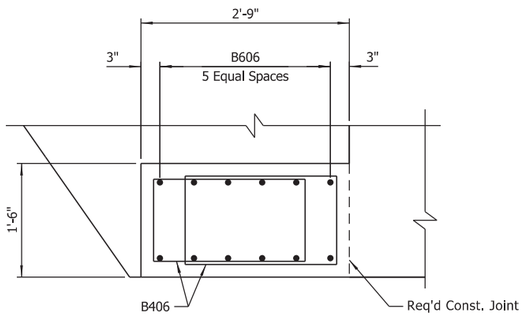

SECTION X-X
Scale: 1" = 1'-0"

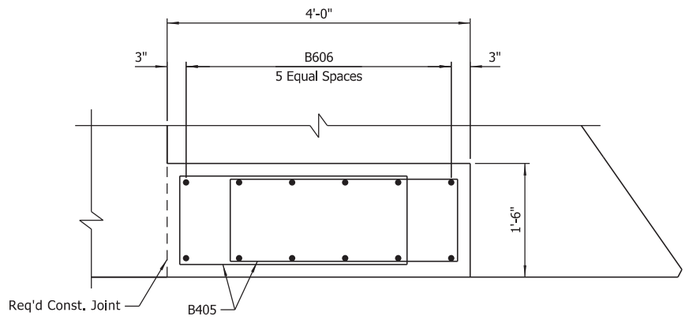

SECTION Y-Y
Scale: 1" = 1'-0"

STATE OF ARKANSAS
LICENSED PROFESSIONAL ENGINEER
No.8017
JOHN H. RUDDELL

DIGITALLY SIGNED 8-13-2021
BRIDGE ENGINEER

SHEET 2 OF 4
DETAILS OF END BENTS
HWY. 77 OVER DITCH NO. 2

ROUTE SEC.

ARKANSAS STATE HIGHWAY COMMISSION
LITTLE ROCK, ARK.

DRAWN BY:	HEW	DATE:	APR. 2021	FILENAME:	b100955x4_A2.dgn
CHECKED BY:	JHR	DATE:	JUNE 2021	SCALE:	As Shown
DESIGNED BY:	CSW	DATE:	APR. 2021		

BRIDGE NO. 07559 DRAWING NO. 64354

abhall 8/13/2021 9:53:56 AM
WORKSPACE: ARDOT Bridge (2019)
L:\2017\170176\42 - ARDOT Job 100955\Drawings\b100955x4_S202_AB.dgn
REVISED DATE:

DATE REVISED	DATE FILMED	DATE REVISED	DATE FILMED

FED. ROAD DIST. NO.	STATE	FED. AID PROJ. NO.	SHEET NO.	TOTAL SHEETS
6	ARK.			
JOB NO.		100955	178	356
(I) 07559		END BENTS		64355

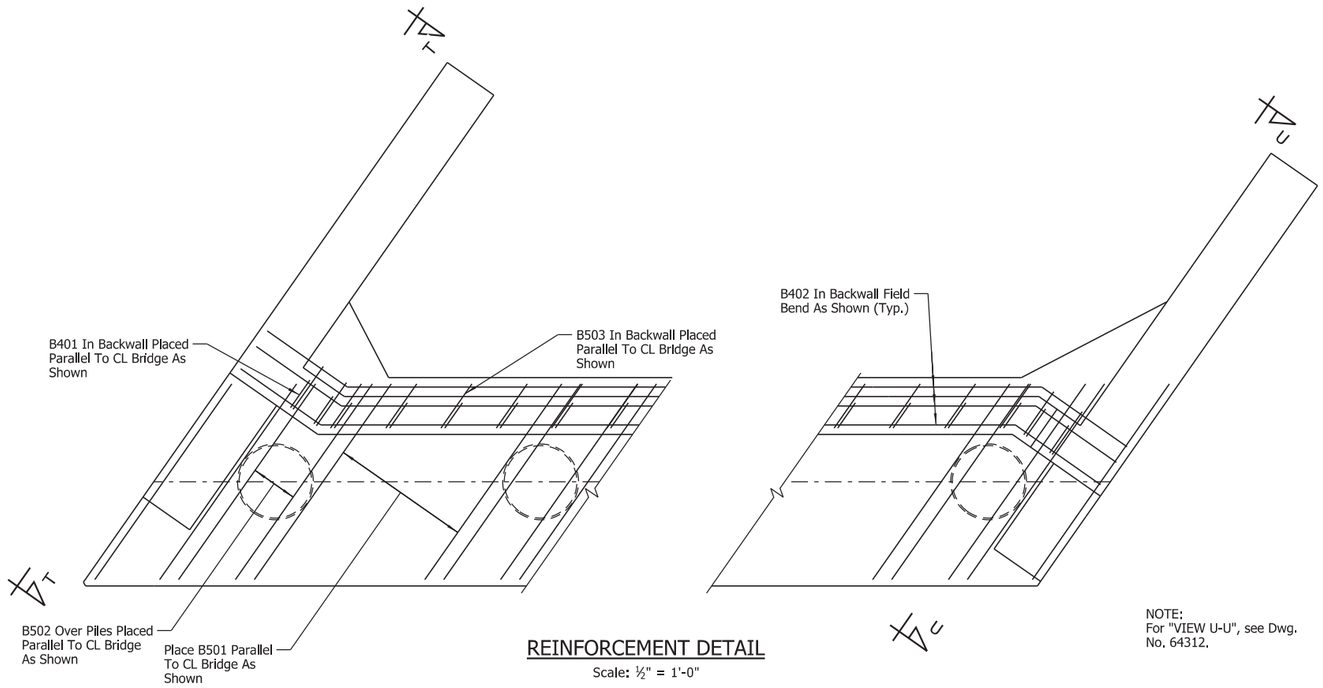

REINFORCEMENT DETAIL

Scale: ½" = 1'-0"

NOTE:
For "VIEW U-U", see Dwg. No. 64312.

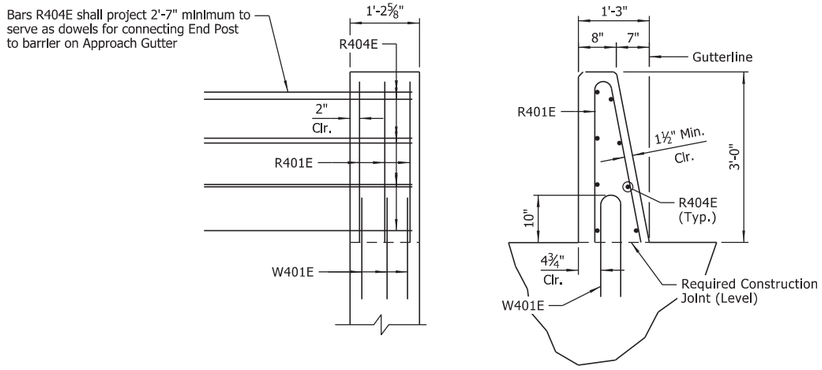

END BENT POST DETAILS

Scale: ½" = 1'-0"

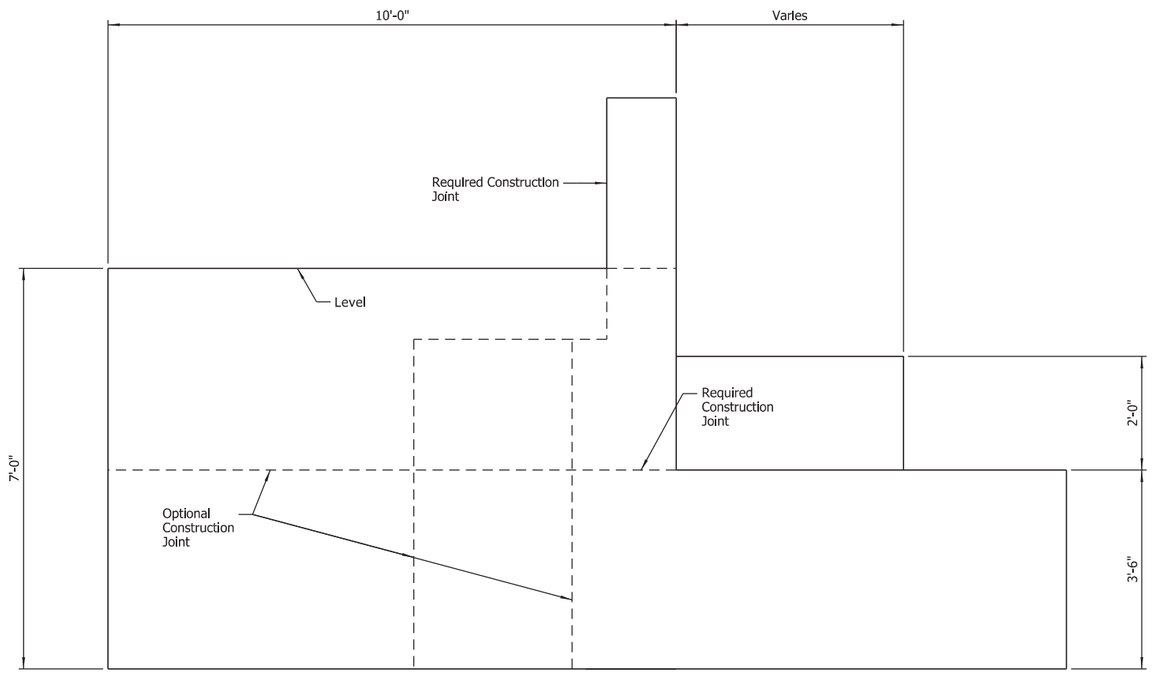

VIEW T-T

Scale: ¾" = 1'-0"

STATE OF ARKANSAS
LICENSED PROFESSIONAL ENGINEER
No.8017
JOHN H. RUDDELL

DIGITALLY SIGNED 8-13-2021
BRIDGE ENGINEER

SHEET 3 OF 4
DETAILS OF END BENTS
HWY. 77 OVER DITCH NO. 2
ROUTE SEC.

ARKANSAS STATE HIGHWAY COMMISSION
LITTLE ROCK, ARK.

DRAWN BY: HEW DATE: APR. 2021 FILENAME: b100955x4_A3.dgn
CHECKED BY: JHR DATE: JUNE 2021 SCALE: As Shown
DESIGNED BY: CSW DATE: APR. 2021

BRIDGE NO. 07559 DRAWING NO. 64355

abhall 8/13/2021 9:53:57 AM
WORKSPACE: ARDOT Bridge (2019)
L:\20ft\70ft642 - ARDOT Job 100955\Drawings\b100955x4_5203_AB.dgn
REVISED DATE:

DATE REVISED	DATE FILMED	DATE REVISED	DATE FILMED	FED. ROAD DIST. NO.	STATE	FED. AID PROJ. NO.	SHEET NO.	TOTAL SHEETS
				6	ARK.			
				JOB NO.		100955	179	356
				(1) 07559		END BENTS		64356

BAR LIST (PER BENT)

	MARK	NO. REQ'D	LENGTH	"A"	"B"	P.D.
	B401	33	8'-4"			2"
	B402	24	24'-4"			Str.
	B403	168	4'-6"			3"
	B404	7	5'-5"			Str.
	B405	8	8'-8"	1'-2"	3'-0"	2"
	B406	8	6'-8"	1'-2"	2'-0"	2"
	B501	140	17'-6"			2½"
	B502	56	12'-7"			2½"
	B503	33	6'-9"			2½"
	B601	6	48'-1"			Str.
	B602	6	7'-7"	2'-11"	2'-6"	4½"
	B603	6	10'-9"			4½"
	B604	10	7'-5"			4½"
	B605	10	11'-7"			4½"
	B606	12	9'-5"	1'-1"	4'-4"	4½"
	B1001	16	50'-11"			10"
(1)	D601E	33	5'-2"			4½"
(1)	R401E	6	5'-11"			2½"
(1)	R404E	16	3'-8"			Str.
(1)	W401E	6	3'-11"			3¾"
	W402	40	14'-4"	1'-2"	6'-8"	2"
	W701	50	9'-8"			Str.

NOTES:
Number of bars is for one end bent only.

Dimensions of bars are out-to-out.

Bars designated with "E" suffix shall be epoxy coated.

(1) Epoxy coated reinforcing in end bents shall be paid for as "REINFORCING STEEL - BRIDGE (GRADE 60)".

BAR BENDING DIAGRAMS

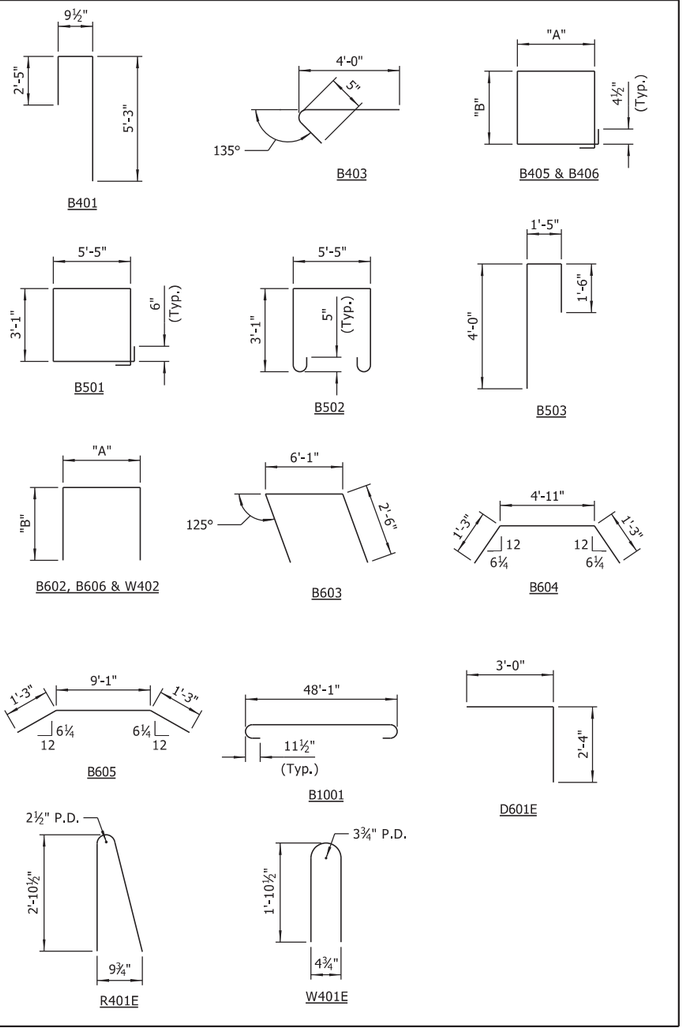

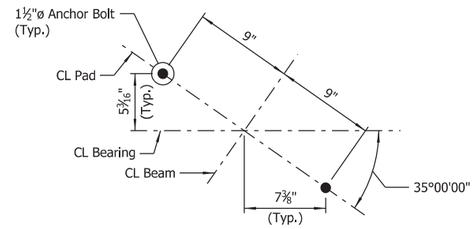

TYPICAL ANCHOR BOLT LAYOUT

No Scale

NOTE:
For Details of Elastomeric Bearings, see Dwg. No. 64425.

GENERAL NOTES:

Structural steel in end bents shall be ASTM A709, Gr. 50W and shall be paid for as "STRUCTURAL STEEL IN BEAM SPANS (A709, Gr. 50W)".

Class 2 Protective Surface Treatment shall be applied to the top of backwall and the roadway face and top of end posts.

For details of steel shell piling, see Std. Dwg. No. 55021.

See Std. Dwg. No. 55006 for additional notes.

STATE OF ARKANSAS
LICENSED PROFESSIONAL ENGINEER
No.8017
JOHN H. RUDDELL

DIGITALLY SIGNED 8-13-2021
BRIDGE ENGINEER

SHEET 4 OF 4
DETAILS OF END BENTS
HWY. 77 OVER DITCH NO. 2
ROUTE SEC.
ARKANSAS STATE HIGHWAY COMMISSION
LITTLE ROCK, ARK.

DRAWN BY: HEW DATE: APR. 2021 FILENAME: b100955x4_A4.dgn
CHECKED BY: JHR DATE: JUNE 2021 SCALE: As Shown
DESIGNED BY: CSW DATE: APR. 2021
BRIDGE NO. 07559 DRAWING NO. 64356

abhall 8/13/2021 9:53:58 AM
WORKSPACE: ARDOT Bridge (2019)
L:\2017\701642 - ARDOT Job 100955\Drawings\b100955x4_5204_AB.dgn
REVISED DATE:

DATE REVISED	DATE FILMED	DATE REVISED	DATE FILMED	FED. ROAD DIST. NO.	STATE	FED. AID PROJ. NO.	SHEET NO.	TOTAL SHEETS
				6	ARK.			
				JOB NO.		100955	180	356
				1	07559	INT. BENTS		64357

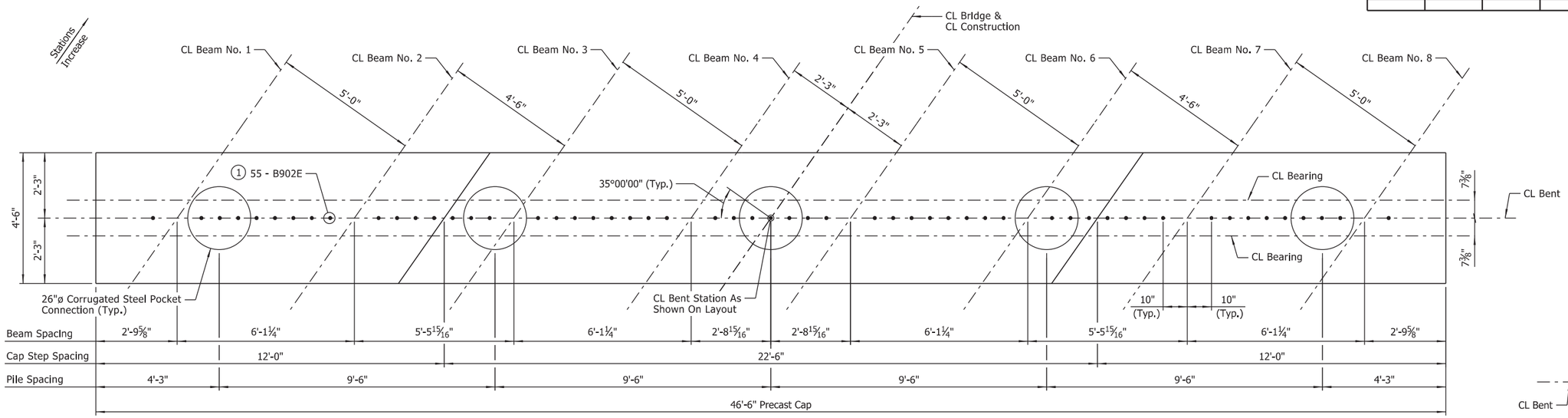

PLAN - BENT NOS. 2-5

Scale: ½" = 1'-0"

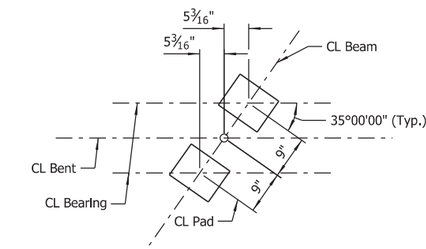

BEARING PAD LAYOUT

Scale: ¾" = 1'-0"

1 Bars B902E within corrugated steel pocket connection shall be installed in the field at the time the pockets are filled. Minimum embedment = 2'-9"

2 Dimension shown is for distance from outer limit of concrete cap to the limits of the corrugated steel pipe forming the pocket.

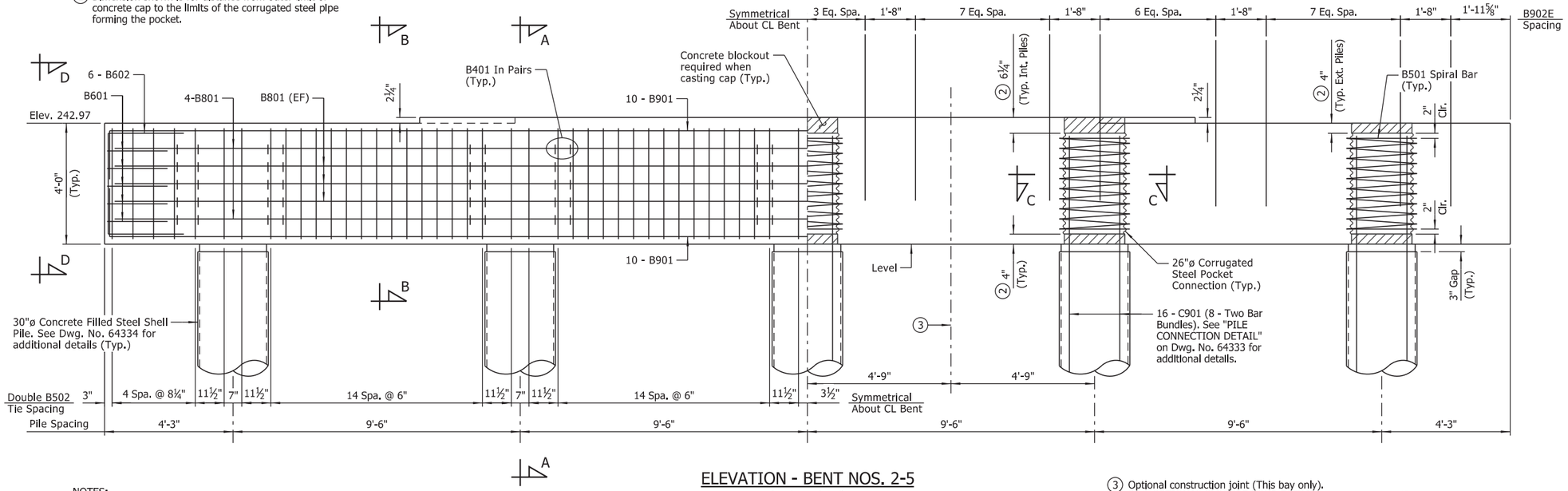

ELEVATION - BENT NOS. 2-5

(Looking Ahead)
Scale: ½" = 1'-0"

3 Optional construction joint (This bay only). See "OPTIONAL CLOSURE POUR DETAIL" on Dwg. No. 64331.

NOTES:
Precast bent caps at Bent Nos. 2 through 5 shall be fabricated and installed in accordance with SP "PRECAST CONCRETE BENT CAPS".

For "GENERAL NOTES - PRECAST CONCRETE BENT CAPS", see Dwg. No. 64333.

For details of elastomeric bearings, see Dwg. Nos. 64425 & 64426.

For "BAR LIST (PER BENT)", see Dwg. No. 64358.

For "SECTIONS", see Dwg. No. 64332.

For "PROJECT GENERAL NOTES", see Dwg. No. 64303.

For additional information, see Layout.

STATE OF ARKANSAS
LICENSED PROFESSIONAL ENGINEER
No.8017
JOHN H. RUDDELL

DIGITALLY SIGNED 8-13-2021
BRIDGE ENGINEER

SHEET 1 OF 2
DETAILS OF INTERMEDIATE BENTS
HWY. 77 OVER DITCH NO. 2

ROUTE SEC.

ARKANSAS STATE HIGHWAY COMMISSION

LITTLE ROCK, ARK.

DRAWN BY: CWT DATE: APR. 2021 FILENAME: b100955x4_BE1.dgn
CHECKED BY: JHR DATE: MAY 2021 SCALE: As Shown
DESIGNED BY: ERM DATE: APR. 2021
BRIDGE NO. 07559 DRAWING NO. 64357

abhall 8/13/2021 9:53:59 AM
WORKSPACE: ARDOT Bridge (2019)
L:\2017\170176\42 - ARDOT Job 100955\Drawings\b100955x4_S205_BE.dgn
REVISED DATE:

DATE REVISED	DATE FILMED	DATE REVISED	DATE FILMED

FED. ROAD DIST. NO.	STATE	FED. AID PROJ. NO.	SHEET NO.	TOTAL SHEETS
6	ARK.			
JOB NO.		100955	181	356
(1) 07559		INT. BENTS		64358

BAR LIST (PER BENT)

MARK	NO. REQ'D	LENGTH	P.D.
B401	200	4'-0"	3"
B501	5	97'-0"	30¼"
B502	160	15'-2"	2½"
B601	10	8'-9"	4½"
B602	12	8'-3"	4½"
B801	14	45'-11"	Str.
B901	20	48'-10"	9"
B902E	55	5'-6"	Str.
C501	5	251'-11"	21¾"
(1) C901	80	14'-0"	Str.

(1) **Bars C901 shall be ASTM A706, Grade 60.**

BAR BENDING DIAGRAMS

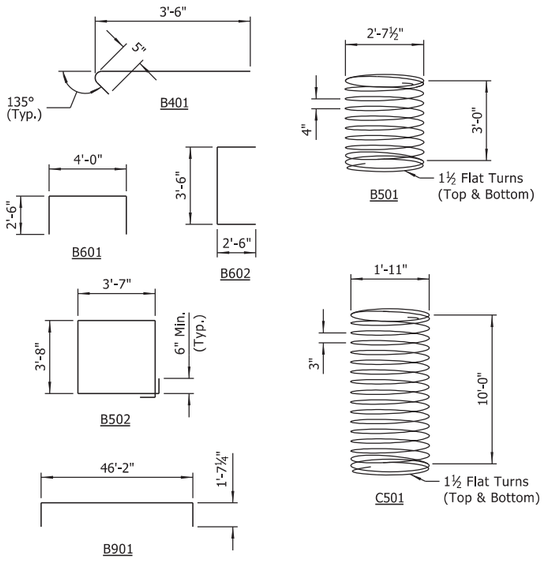

NOTES:
Dimensions of bars are out-to-out.

Bars designated with "E" suffix shall be epoxy coated.

No direct payment for bars in bent cap or concrete filled steel shell piles. Payment of all reinforcing steel to be subsidiary to unit price for "PRECAST CONCRETE BENT CAPS".

STATE OF ARKANSAS
LICENSED PROFESSIONAL ENGINEER
No.8017
JOHN H. RUDDELL

DIGITALLY SIGNED 8-13-2021
BRIDGE ENGINEER

SHEET 2 OF 2
DETAILS OF INTERMEDIATE BENTS
HWY. 77 OVER DITCH NO. 2
ROUTE SEC.
ARKANSAS STATE HIGHWAY COMMISSION
LITTLE ROCK, ARK.

DRAWN BY: CWT DATE: APR. 2021 FILENAME: b100955x4_BE2.dgn
CHECKED BY: JHR DATE: MAY 2021 SCALE: As Shown
DESIGNED BY: ERM DATE: APR. 2021
BRIDGE NO. 07559 DRAWING NO. 64358

abhall 8/13/2021 9:54:01 AM
WORKSPACE: ARDOT Bridge (2019)
L:\20T\170T642 - ARDOT Job 100955\Drawings\b100955x4_S206_BE.dgn
REVISED DATE:

DATE REVISED	DATE FILMED	DATE REVISED	DATE FILMED	FED. ROAD DIST. NO.	STATE	FED. AID PROJ. NO.	SHEET NO.	TOTAL SHEETS
				6	ARK.			
				JOB NO.		100955	182	356
				(1) 07559		220' UNIT		64359

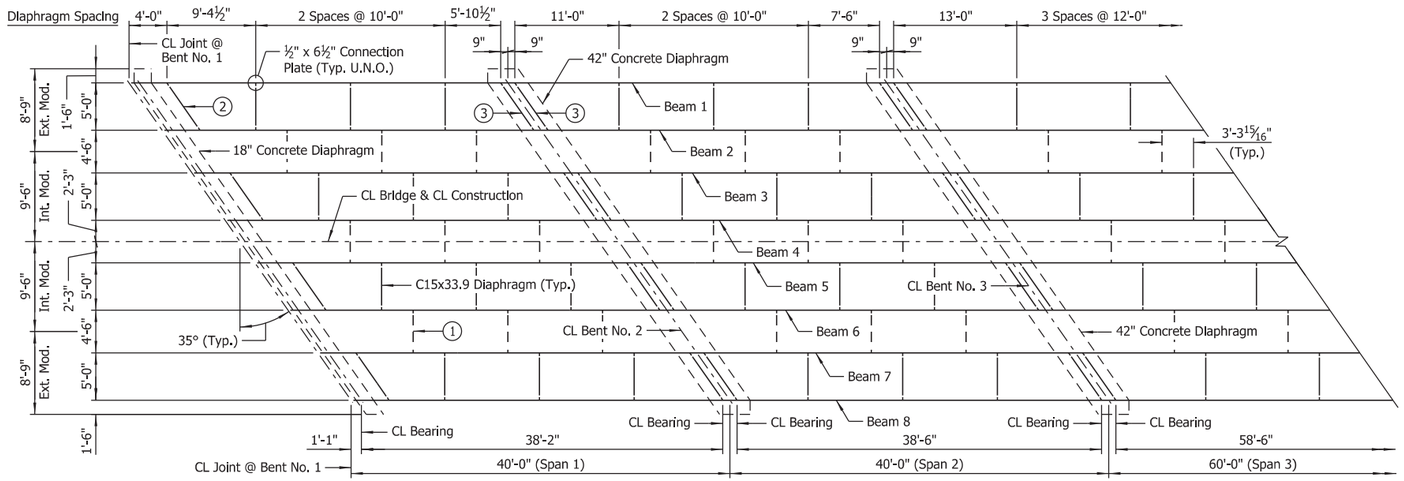

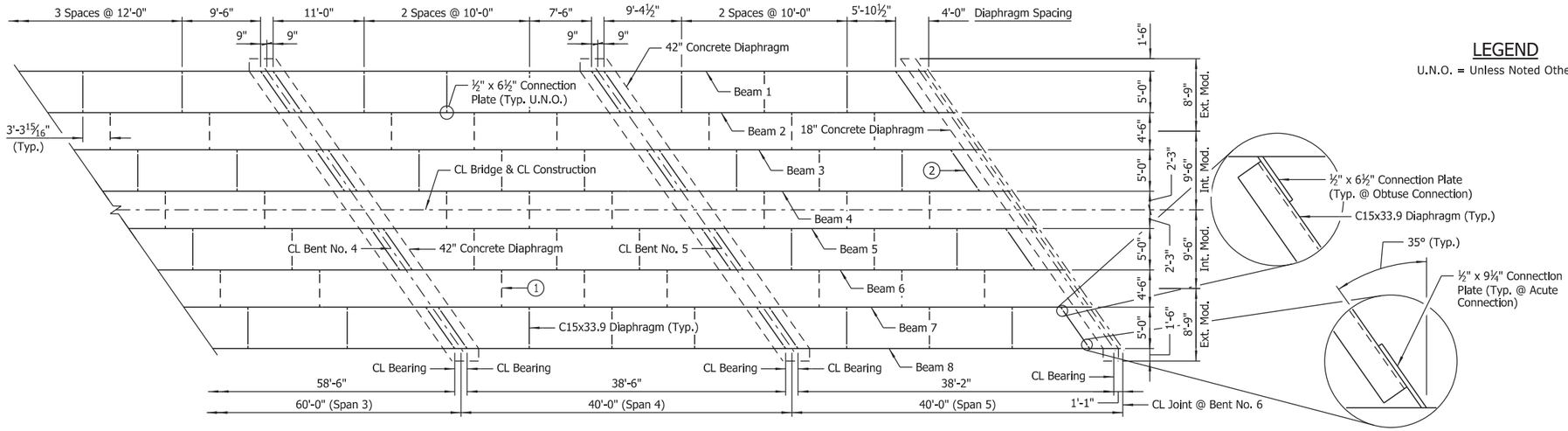

FRAMING PLAN

Scale: ⅛" = 1'-0"

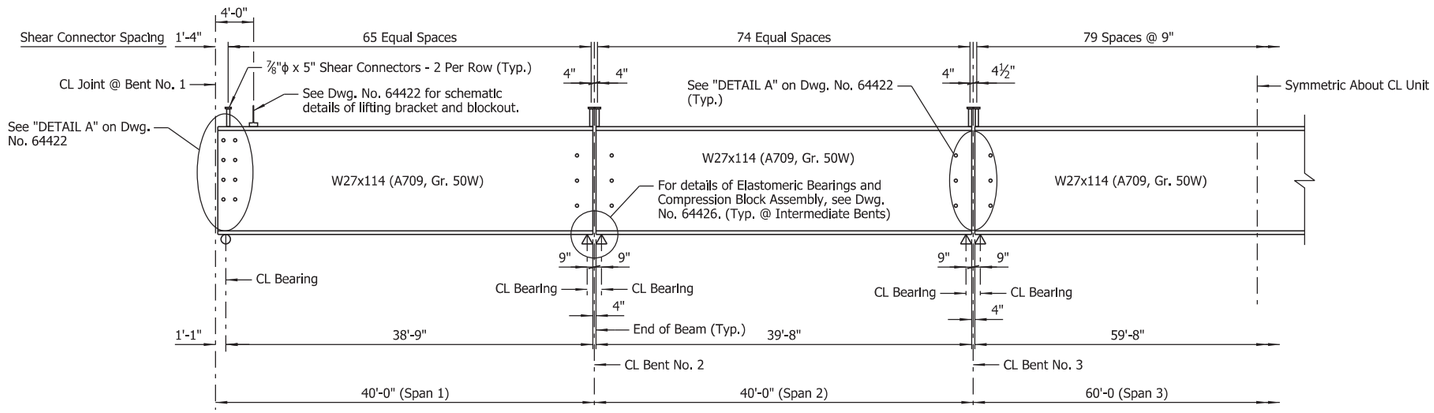

HALF-BEAM ELEVATION

No Scale

NOTES:
For Standard General Notes, see Std. Dwg. No. 55006.

For "SHEAR CONNECTOR DETAIL," see Std. Dwg. No. 55007.

All structural steel shall be ASTM A709, Gr. 50W unless noted otherwise. The cost of the structural steel shall be subsidiary to the unit price bid for Item "PREFABRICATED SUPERSTRUCTURE MODULES". Diaphragms placed between separate modules shall be included in the cost of the prefabricated modules.

For painting of beam ends adjacent to bridge deck expansion joints, see "PROJECT GENERAL NOTES" on Dwg. No. 64303.

For diaphragm and connection plate details, see "DETAIL A" and "DETAIL B" on Dwg. No. 64422.

(1) Diaphragms between modules shall be installed after prefabricated modules are installed and prior to constructing closure pours.

(2) Diaphragms adjacent to concrete End Bent diaphragms shall be fabricated such that the channel flanges project away from concrete end bent diaphragms. Note that orientation of flange projection shall be considered when determining obtuse/acute connection locations.

(3) Diaphragms at Intermediate Bents shall be fabricated such that the channel flanges project away from CL Bent. Note that orientation of flange projection shall be considered when determining obtuse/acute connection locations.

LEGEND

U.N.O. = Unless Noted Otherwise

STATE OF ARKANSAS
LICENSED PROFESSIONAL ENGINEER
No.8017
JOHN H. RUDDELL

DIGITALLY SIGNED 8-13-2021
BRIDGE ENGINEER

SHEET 1 OF 4
DETAILS OF 220'-0" CONTINUOUS W-BEAM UNIT
HWY. 77 OVER DITCH NO. 2
ROUTE SEC.

ARKANSAS STATE HIGHWAY COMMISSION
LITTLE ROCK, ARK.

DRAWN BY: BWD DATE: FEB. 2021 FILENAME: b100955x4_s1.dgn
CHECKED BY: JHR DATE: JUNE 2021 SCALE: As Shown
DESIGNED BY: BWD DATE: FEB. 2021

BRIDGE NO. 07559 DRAWING NO. 64359

abhall 8/13/2021 9:54:02 AM
WORKSPACE: ARDOT Bridge (2019)
L:\2017\1701642 - ARDOT Job 100955\Drawings\b100955x4_S401_SF.dgn
REVISED DATE:

DATE REVISED	DATE FILMED	DATE REVISED	DATE FILMED	FED. ROAD DIST. NO.	STATE	FED. AID PROJ. NO.	SHEET NO.	TOTAL SHEETS
				6	ARK.			
				JOB NO.		100955	183	356
				(I) 07559		220' UNIT		64360

(1) Placed as shown in "EXTERIOR MODULE REINFORCING DETAIL." See Dwg. No. 64319.

(2) Placed as shown in "INTERIOR MODULE REINFORCING DETAIL." See Dwg. No. 64319.

(3) Top and bottom, placed as shown in "UHPC LONGITUDINAL JOINT DETAIL." See Dwg. No. 64422. In Spans 2-4, bars shall be centered longitudinally (in plan view) with the UHPC joint.

(4) S673E bars shall have 3'-10" minimum lap with both #6 and #4 longitudinal bars. (Typ. at Deck Closure)

(5) S403E Bundled with #4 Bars in Top of Exterior Modules and #4 Bars in Top of Closure Pours (Typ. on Both Sides of Bridge)

(6) S673E Top & Bottom - Lapped With Longitudinal Bars Projecting From Precast Modules & UHPC Closure Pours

(7) Top & Bottom - 14 Spaces @ 6"

(8) Top & Bottom - 13 Spaces @ 6"

(9) Top & Bottom - 11 Spaces @ 6"

(10) Top & Bottom - 12 Spaces @ 6"

(11) S407E Top & Bottom - 5 Spaces @ 6"

(12) S601E-S617E Top S451E-S466E Bottom

(13) S618E-S635E Top S467E-S483E Bottom

(14) S636E-S653E Top S484E-S4100E Bottom

(15) S654E-S670E Top S4101E-S4116E Bottom

(16) 2'-7" Min. Lap (Typ. for transverse #4 bars in deck closure, including noncontact splices)

(17) Rail joints designated with symbol (F) shall be stopped 6" from top of slab. All other rail joints with symbol (P) shall be partial depth joints stopped 16" from top of slab.

(18) See "TRANSVERSE SLAB JOINT DETAIL" on Std. Dwg. No. 55007.

RIGHT SIDE DECK DRAIN STATIONS
229+13.90
229+52.90
230+00.90
230+52.90
230+90.90

LEFT SIDE DECK DRAIN STATIONS
228+87.10
229+25.10
229+77.10
230+25.10
230+64.10

NOTE:
Stations shown are to CL Drain. For details of deck drains, see Dwg. No. 64423.

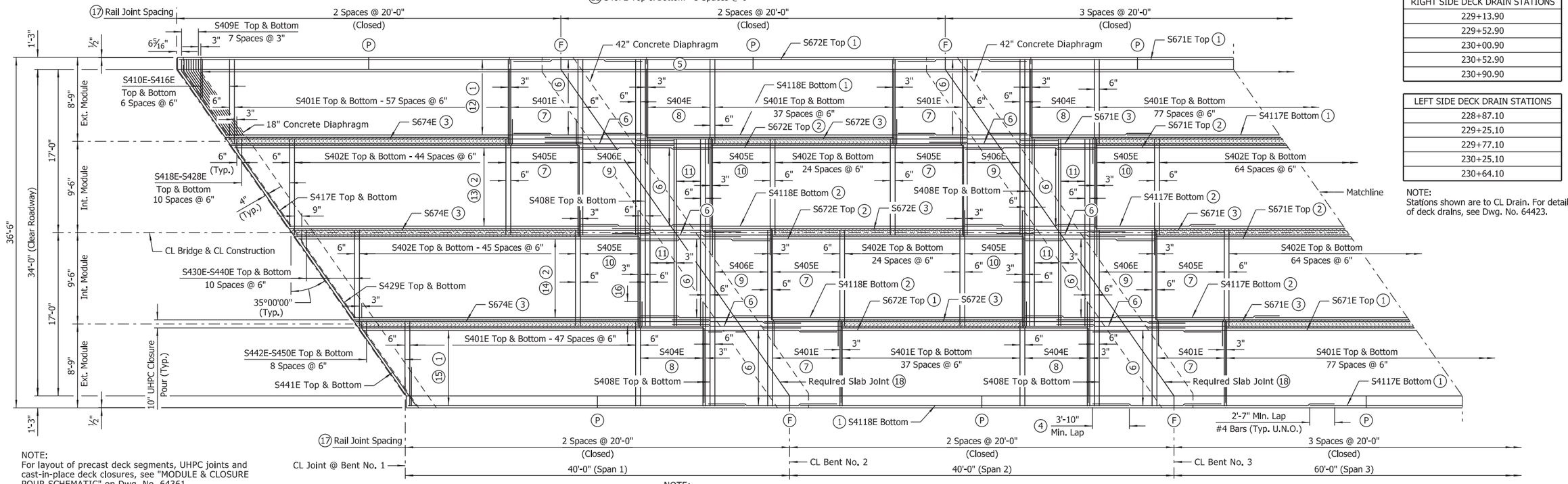

NOTE:
For layout of precast deck segments, UHPC joints and cast-in-place deck closures, see "MODULE & CLOSURE POUR SCHEMATIC" on Dwg. No. 64361.

LEGEND

U.N.O. = Unless Noted Otherwise

NOTE:
For "GENERAL NOTES", see Dwg. No. 64361.

PART REINFORCING PLAN

Scale: 3/16" = 1'-0"

BAR LIST

MARK	NO. REQ'D	LENGTH	"A"	"B"	P.D.
S401E	1,280	8'-10"			Str.
S402E	824	10'-0"			Str.
S403E	878	5'-0"			3"
S404E	224	10'-11"			Str.
S405E	448	12'-1"			Str.
S406E	192	18'-4"			Str.
S407E	96	19'-6"			Str.
S408E	32	27'-10"			Str.
S409E	32	9'-6"	1'-3"	8'-3"	3"
S410E To S416E	4 Ea.	8'-0" To 4'-3"			Str.
S417E	4	10'-11"	1'-2"	9'-9"	3"
S418E To S428E	4 Ea.	9'-2" To 2'-0"			Str.
S429E	4	10'-10"	1'-3"	9'-7"	3"
S430E To S440E	4 Ea.	9'-2" To 2'-2"			Str.
S441E	4	10'-7"	8"	9'-11"	3"
S442E To S450E	4 Ea.	7'-3" To 1'-7"			Str.
S451E To S466E	2 Ea.	39'-4" To 33'-10"			Str.
S467E To S483E	2 Ea.	39'-11" To 34'-2"			Str.

BAR LIST

MARK	NO. REQ'D	LENGTH	"A"	"B"	P.D.
S484E To S4100E	2 Ea.	39'-6" To 33'-10"			Str.
S4101E To S4116E	2 Ea.	39'-10" To 35'-1"			Str.
S4117E	132	28'-5"			Str.
S4118E	132	34'-3"			Str.
S601E To S617E	2 Ea.	39'-4" To 33'-10"			Str.
S618E To S635E	2 Ea.	39'-11" To 34'-2"			Str.
S636E To S653E	2 Ea.	39'-6" To 33'-10"			Str.
S654E To S670E	2 Ea.	39'-10' To 35'-1"			Str.
S671E	82	54'-3"			Str.
S672E	164	34'-3"			Str.
S673E	592	13'-6"			Str.
S674E	24	37'-2"			Str.

BAR LIST

MARK	NO. REQ'D	LENGTH	"A"	"B"	P.D.
D500E	16	10'-5"			Str.
D501E	16	10'-2"	8'-10"	1'-4"	3¾"
D502E	32	11'-6"			Str.
D503E	138	6'-2"			2½"
D504E	6	4'-1"			2½"
D505E	6	3'-5"	1'-3½"	1'-2"	2½"
D506E	1,024	7'-7½"	2'-6"	2'-8"	2½"
D507E	24	5'-3"			2½"
D600E	40	12'-2"	10'-10"	1'-4"	4½"
D601E	72	12'-5"			Str.
D602E	112	15'-6"			Str.
R401E	880	5'-11"			2½"
R402E	48	5'-6"			Str.
R403E	880	3'-6"			3", 3¾"
R404E	176	19'-8"			Str.

NOTE:
Longitudinal bars in interior precast deck modules shall project 4'-0" min. from end of precast deck into regions of cast-in-place deck closures.

Longitudinal bars in exterior precast deck modules shall project 4'-3" min. from end of precast deck into regions of cast-in-place deck closures.

BAR BENDING DIAGRAMS

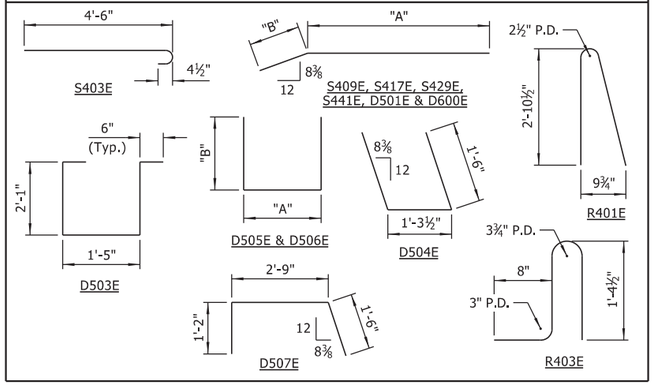

NOTES:
Dimensions of bars are out-to-out.

Bar designations ending with "E" indicate epoxy coated bars.

TABLE OF VARIABLES

CLOSED RAIL PANELS			OPEN RAIL PANELS						
PANEL LENGTH	A	R4XXE	PANEL LENGTH	B	C	D	E	F	R4XXE
20'-0"	39	R404E							

STATE OF ARKANSAS
LICENSED PROFESSIONAL ENGINEER
No.14498
ADAM B. HALL

DIGITALLY SIGNED 8-13-2021
BRIDGE ENGINEER

SHEET 2 OF 4
DETAILS OF 220'-0" CONTINUOUS W-BEAM UNIT
HWY. 77 OVER DITCH NO. 2

ROUTE SEC.

ARKANSAS STATE HIGHWAY COMMISSION
LITTLE ROCK, ARK.

DRAWN BY: BWD DATE: FEB. 2021 FILENAME: b100955x4_s2.dgn
CHECKED BY: ABH DATE: JUNE 2021 SCALE: As Shown
DESIGNED BY: BWD DATE: FEB. 2021

BRIDGE NO. 07559 DRAWING NO. 64360

abhall 8/13/2021 9:54:04 AM
WORKSPACE: ARDOT Bridge (2019)
L:\2017\1701642 - ARDOT Job 100955\Drawings\b100955x4_S402_SB.dgn
REVISED DATE:

DATE REVISED	DATE FILMED	DATE REVISED	DATE FILMED	FED. ROAD DIST. NO.	STATE	FED. AID PROJ. NO.	SHEET NO.	TOTAL SHEETS
				6	ARK.			
				JOB NO.		100955	184	356
				(I) 07559		220' UNIT		64361

(1) Placed as shown in "EXTERIOR MODULE REINFORCING DETAIL." See Dwg. No. 64319.

(2) Placed as shown in "INTERIOR MODULE REINFORCING DETAIL." See Dwg. No. 64319.

(3) Top and bottom, placed as shown in "UHPC LONGITUDINAL JOINT DETAIL." See Dwg. No. 64422. In Spans 2-4, bars shall be centered longitudinally (in plan view) with the UHPC joint.

(4) S673E bars shall have 3'-10" minimum lap with both #6 and #4 longitudinal bars. (Typ. at Deck Closure)

(5) S403E Bundled with #4 Bars in Top of Exterior Modules and #4 Bars in Top of Closure Pours (Typ. on Both Sides of Bridge)

(6) S673E Top & Bottom - Lapped With Longitudinal Bars Projecting From Precast Modules & UHPC Closure Pours

(7) Top & Bottom - 14 Spaces @ 6"

(8) Top & Bottom - 13 Spaces @ 6"

(9) Top & Bottom - 11 Spaces @ 6"

(10) Top & Bottom - 12 Spaces @ 6"

(11) S407E Top & Bottom - 5 Spaces @ 6"

(12) S601E-S617E Top
S451E-S466E Bottom

(13) S618E-S635E Top
S467E-S483E Bottom

(14) S636E-S653E Top
S484E-S4100E Bottom

(15) S654E-S670E Top
S4101E-S4116E Bottom

(16) 2'-7" Min. Lap (Typ. for transverse #4 bars in deck closure, including noncontact splices)

(17) Rail joints designated with symbol (F) shall be stopped 6" from top of slab. All other rail joints with symbol (P) shall be partial depth joints stopped 16" from top of slab.

(18) See "TRANSVERSE SLAB JOINT DETAIL" on Std. Dwg. No. 55007.

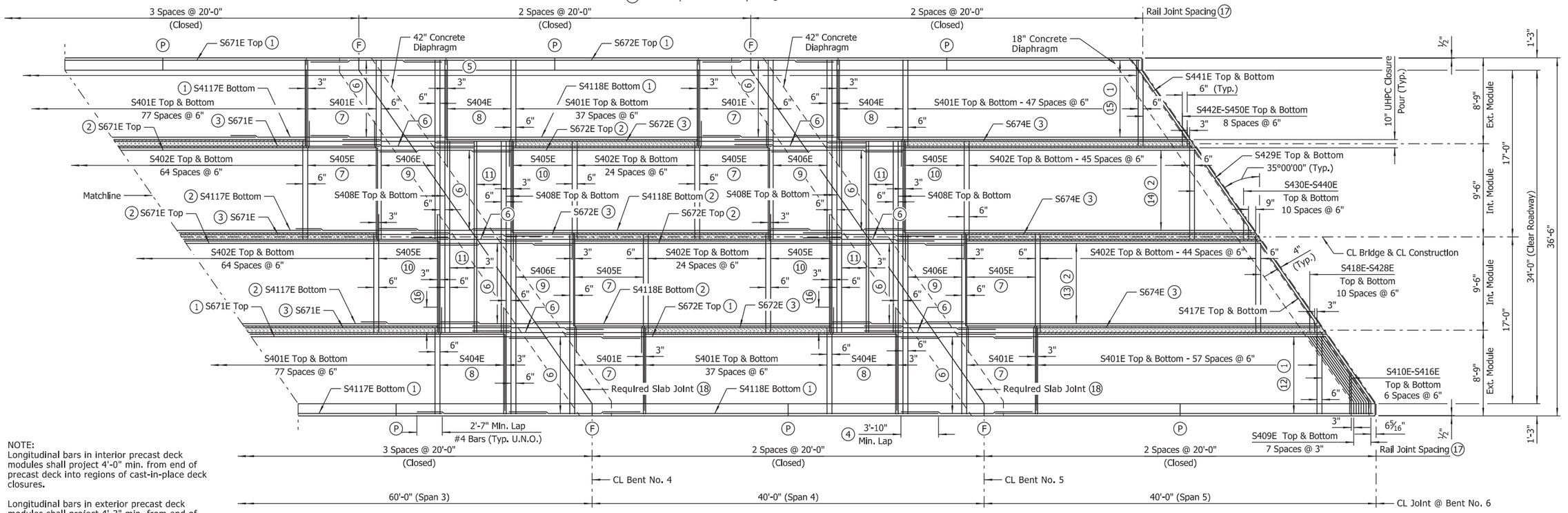

NOTE:
Longitudinal bars in interior precast deck modules shall project 4'-0" min. from end of precast deck into regions of cast-in-place deck closures.

Longitudinal bars in exterior precast deck modules shall project 4'-3" min. from end of precast deck into regions of cast-in-place deck closures.

LEGEND

U.N.O. = Unless Noted Otherwise

PART REINFORCING PLAN

Scale: 3/16" = 1'-0"

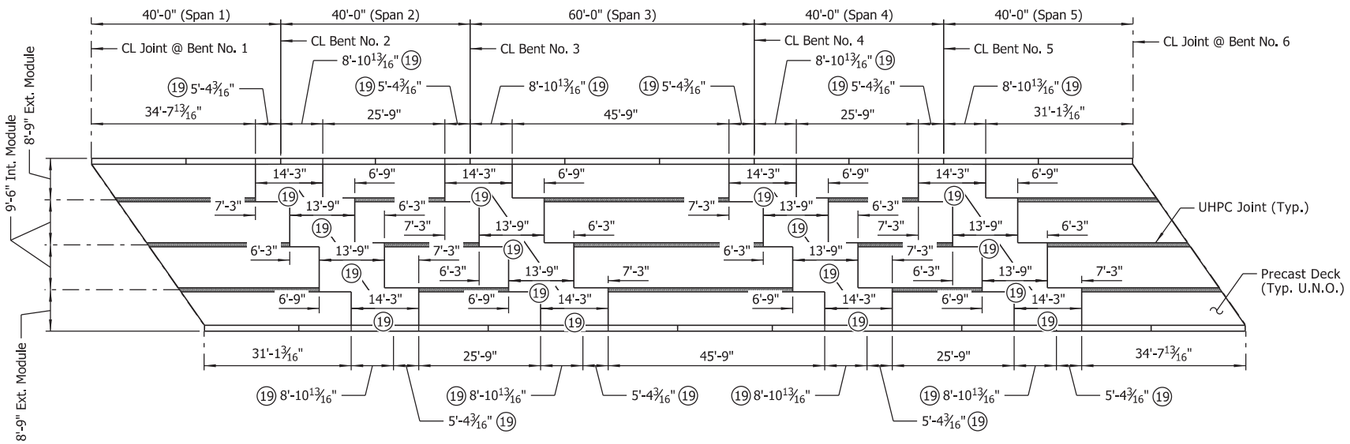

MODULE & CLOSURE POUR SCHEMATIC

Scale: 1/16" = 1'-0"

GENERAL NOTES

For Standard General Notes, see Std. Dwg. No. 55006.

For "PROJECT GENERAL NOTES," see Dwg. No. 64303.

For bridge traffic rail reinforcing details and details of partial-depth and full-depth rail joints, see Std. Dwg. No. 55070.

For details of concrete diaphragms, see Dwg. Nos. 64318, 64319, 64421 & 64362.

Edges of precast deck adjacent to cast-in-place closure pours shall be keyed and textured in accordance with details and notes on Dwg. No. 64422.

For additional clarity in transverse reinforcing placement near end of precast deck, see "TRANSVERSE REINFORCING SCHEMATICS" on Dwg. No. 64421.

Concrete in bridge superstructure shall be placed, consolidated and screeded off for the entire pour before any concrete has taken its initial set.

A minimum of 72 hours shall elapse between completion of the slab and the pouring of the bridge railing. Any railing pours made before the entire slab unit has been placed must be approved by the Engineer.

Concrete diaphragms shall be poured monolithically with the slab.

Removable forms shall be used when pouring diaphragms.

NOTE:
For "BAR LIST", "BAR BENDING DIAGRAMS", Rail Panel "TABLE OF VARIABLES" and deck drain stations, see Dwg. No. 64360.

STATE OF ARKANSAS
LICENSED PROFESSIONAL ENGINEER
No.14498
ADAM B. HALL

DIGITALLY SIGNED 8-13-2021
BRIDGE ENGINEER

SHEET 3 OF 4
DETAILS OF 220'-0"
CONTINUOUS W-BEAM UNIT
HWY. 77 OVER DITCH NO. 2

ROUTE SEC.

ARKANSAS STATE HIGHWAY COMMISSION
LITTLE ROCK, ARK.

DRAWN BY: BWD DATE: FEB. 2021 FILENAME: b100955x4_s3.dgn
CHECKED BY: ABH DATE: JUNE 2021 SCALE: As Shown
DESIGNED BY: BWD DATE: FEB. 2021

BRIDGE NO. 07559 DRAWING NO. 64361

abhall 8/13/2021 9:54:06 AM
WORKSPACE: ARDOT Bridge (2019)
L:\2019\T01\T642 - ARDOT Job 100955\Drawings\b100955x4_S403_SB.dgn
REVISED DATE:

DATE REVISED	DATE FILMED	DATE REVISED	DATE FILMED	FED. ROAD DIST. NO.	STATE	FED. AID PROJ. NO.	SHEET NO.	TOTAL SHEETS
				6	ARK.			
				JOB NO.		100955	185	356
				(1) 07559		220' UNIT		64362

TABLE OF DEAD LOAD DEFLECTIONS (INCHES)

	Point Of Deflection	Beams 1 & 8			Beams 2, 4, 5 & 7			Beams 3 & 6		
		Structural Steel	Structural Steel + Slab	Structural Steel + Slab + UHPC + Rail	Structural Steel	Structural Steel + Slab	Structural Steel + Slab + UHPC + Rail	Structural Steel	Structural Steel + Slab	Structural Steel + Slab + UHPC + Rail
Span No. 1	1.0	0.000	0.000	0.000	0.000	0.000	0.000	0.000	0.000	0.000
	1.1	0.016	0.071	0.071	0.017	0.080	0.080	0.017	0.079	0.079
	1.2	0.030	0.134	0.144	0.032	0.152	0.166	0.032	0.149	0.163
	1.3	0.041	0.184	0.194	0.043	0.207	0.222	0.043	0.203	0.218
	1.4	0.048	0.215	0.225	0.051	0.243	0.257	0.051	0.238	0.253
	1.5	0.051	0.226	0.236	0.053	0.255	0.269	0.053	0.250	0.264
	1.6	0.048	0.215	0.225	0.051	0.243	0.257	0.051	0.238	0.253
	1.7	0.041	0.184	0.194	0.043	0.207	0.222	0.043	0.203	0.218
	1.8	0.030	0.134	0.144	0.032	0.152	0.166	0.032	0.149	0.163
	1.9	0.016	0.071	0.071	0.017	0.080	0.080	0.017	0.079	0.079
	2.0	0.000	0.000	0.000	0.000	0.000	0.000	0.000	0.000	0.000
Span No. 2	2.1	0.016	0.071	0.071	0.017	0.080	0.080	0.017	0.079	0.079
	2.2	0.030	0.134	0.134	0.032	0.152	0.152	0.032	0.149	0.149
	2.3	0.041	0.184	0.184	0.043	0.207	0.207	0.043	0.203	0.203
	2.4	0.048	0.215	0.215	0.051	0.243	0.243	0.051	0.238	0.238
	2.5	0.051	0.226	0.226	0.053	0.255	0.255	0.053	0.250	0.250
	2.6	0.048	0.215	0.215	0.051	0.243	0.243	0.051	0.238	0.238
	2.7	0.041	0.184	0.184	0.043	0.207	0.207	0.043	0.203	0.203
	2.8	0.030	0.134	0.134	0.032	0.152	0.152	0.032	0.149	0.149
	2.9	0.016	0.071	0.071	0.017	0.080	0.080	0.017	0.079	0.079
	3.0	0.000	0.000	0.000	0.000	0.000	0.000	0.000	0.000	0.000
Half Span No. 3	3.1	0.086	0.385	0.395	0.091	0.435	0.449	0.091	0.426	0.440
	3.2	0.163	0.728	0.748	0.172	0.822	0.851	0.172	0.806	0.835
	3.3	0.223	0.996	1.026	0.235	1.126	1.169	0.235	1.104	1.147
	3.4	0.262	1.167	1.207	0.276	1.319	1.376	0.276	1.293	1.350
	3.5	0.275	1.225	1.265	0.289	1.385	1.442	0.289	1.357	1.415

NOTE:
This table is symmetric about CL unit.

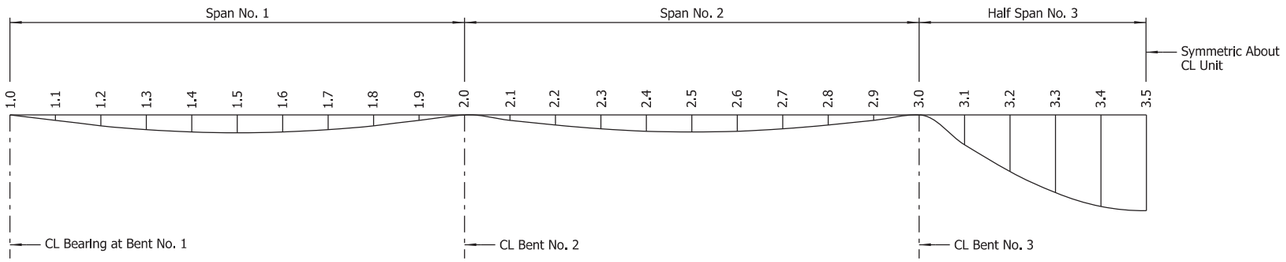

DEAD LOAD DEFLECTION DIAGRAM
No Scale

NOTES:
Camber for dead load deflection plus vertical curve +/- ¼" tolerance. Deflections shown for end spans are along CL Beam from CL Bearing at End Bent to CL Int. Bent. Deflections shown for interior spans are along CL Beam from CL Int. Bent to CL Int. Bent. Negative sign (-) indicates point above chord.

Dead load deflections shown include an assumed loading of 15 psf in bays without UHPC closures to account for stay-in-place metal deck forms.

Revision to the deflection tables may be necessary upon review of the Contractor's submitted forming details.

(2) Spaced with top 3 rows of D500E or D501E bars.

(3) Spaced with D600E and D601E bars passing through beam web.

(4) Provide joint surface with Class 4, Exposed Aggregate Finish per Subsection 802.19(b)(4) with "Concrete Surface Profile 6" or rougher, as established by the International Concrete Repair Institute.

(5) Shift D503E as required to avoid conflict with Mechanical Couplers. Maintain 8" max. spacing between stirrups.

NOTE:
For "SECTION A-A" and "SECTION B-B", see Dwg. No. 64421.

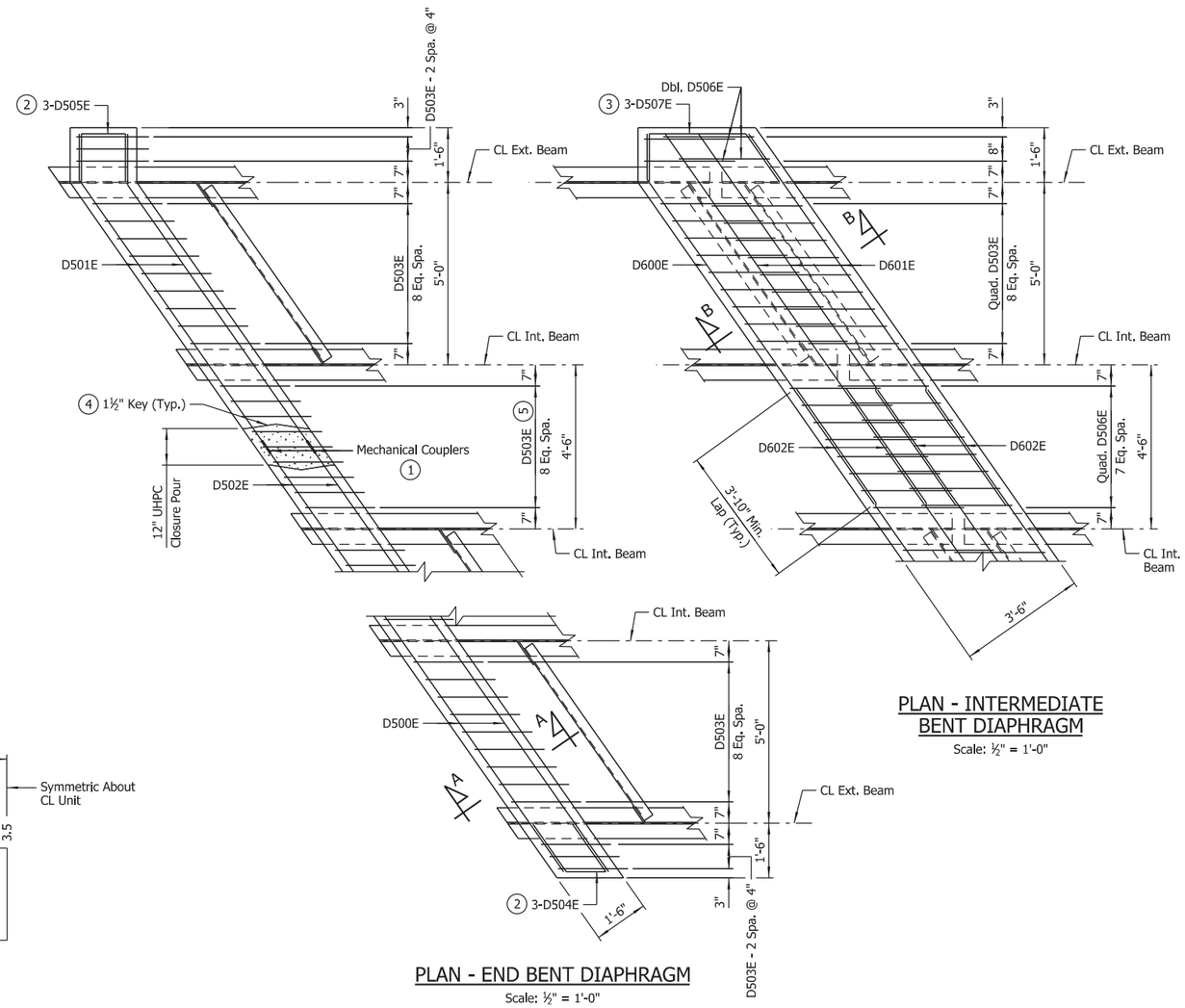

PLAN - INTERMEDIATE BENT DIAPHRAGM
Scale: ½" = 1'-0"

PLAN - END BENT DIAPHRAGM
Scale: ½" = 1'-0"

(1) The mechanical couplers shall be Dayton Superior D250SCA Bar Lock Epoxy Couplers or an alternate approved type in accordance with the ARDOT Qualified Products List (QPL). Due to space constraints, the shear bolts on the couplers between adjacent modules shall not be tightened until both modules are in their final positions. It will be necessary to loosely install the couplers on each module's end diaphragm reinforcing, remove the center stop pins, and slide the couplers against the module's concrete immediately prior to setting an adjacent module. Once the adjacent module is in place, the mechanical couplers shall be slid over the adjacent module's reinforcing and centered between the ends of the modules, prior to re-inserting the center stop pins and torquing the shear bolts. The cost of mechanical couplers shall not be measured for separate payment but shall be subsidiary to the price bid for item "PREFABRICATED SUPERSTRUCTURE MODULES". Mechanical couplers shall develop at least 125% of the specified yield strength of the reinforcing steel.

STATE OF ARKANSAS
LICENSED PROFESSIONAL ENGINEER
No.14498
ADAM B. HALL
DIGITALLY SIGNED 8-13-2021
BRIDGE ENGINEER

SHEET 4 OF 4
DETAILS OF 220'-0" CONTINUOUS W-BEAM UNIT HWY. 77 OVER DITCH NO. 2

ROUTE SEC.

ARKANSAS STATE HIGHWAY COMMISSION
LITTLE ROCK, ARK.

DRAWN BY: JLD DATE: FEB. 2021 FILENAME: b100955x4_s4.dgn
CHECKED BY: ABH DATE: JUNE 2021 SCALE: As Shown
DESIGNED BY: BWD DATE: JAN. 2021

BRIDGE NO. 07559 DRAWING NO. 64362

abnall 8/13/2021 9:54:09 AM
WORKSPACE: ARDOT Bridge (2019)
L:\20\T\T017642 - ARDOT Job 100955\Drawings\b100955x4_S404_DF.dgn
REVISED DATE:

DATE REVISED	DATE FILMED	DATE REVISED	DATE FILMED

FED. ROAD DIST. NO.	STATE	FED. AID PROJ. NO.	SHEET NO.	TOTAL SHEETS
6	ARK.			
JOB NO.		100955	186	356
① 07560		LAYOUT		64363

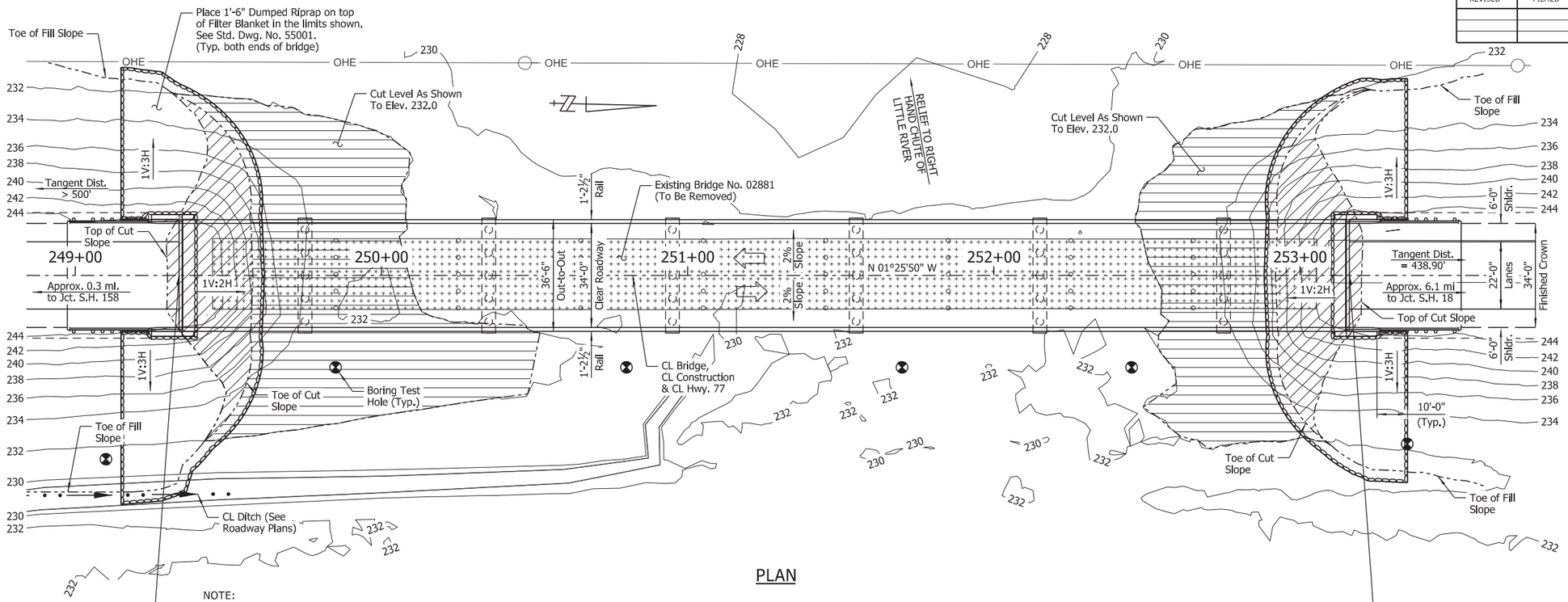

PLAN

NOTE:
The proposed bridge has been positioned to avoid interference with the existing piling. The Contractor shall verify measurements before driving any piling. Any adjustments necessary to fit the proposed bridge to the existing bridge location shall be submitted for the Engineer's approval.

NOTE:
Use Type Special Approach Slab each end of bridge. See Dwg. No. 64430.

Use Type Special Approach Gutters at each end of bridge. See Dwg. Nos. 64427-64429.

NOTE:
Excavate existing embankment at both ends of bridge as shown. Approx. 1,050 cubic yards of excavation (excluding ditch excavation).

EXISTING UTILITIES LEGEND

OHE = Overhead Electric

NOTE:
Utilities shown are based on locations at time of survey and do not reflect any potential utility relocations prior to construction.

NOTE:
Stations shown are along CL Construction. Elevations shown are theoretical working point elevations at CL Bridge. Any vertical dimension referenced to CL Deck is based on theoretical working point elevation at CL Bridge. See "ROUNDING DETAIL" on Std. Dwg. No. 55007 for additional information.

NOTES:
For "GENERAL NOTES", "ELEVATION OF SOIL BORINGS" and "HYDRAULIC DATA", see Dwg. No. 64364.

For "PROJECT GENERAL NOTES", see Dwg. No. 64303.

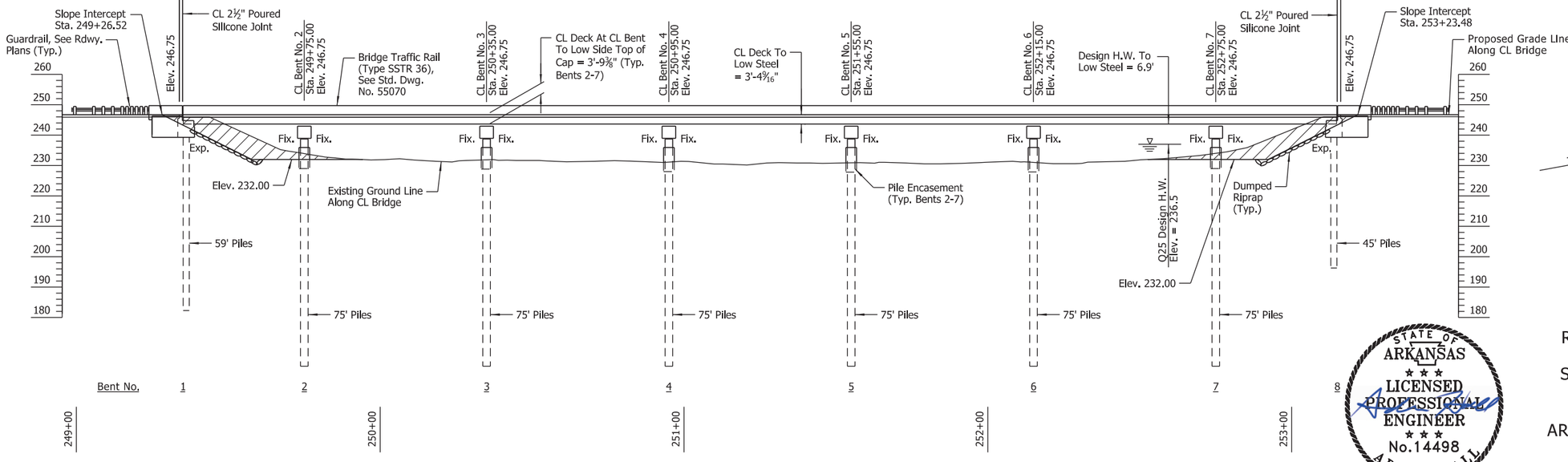

ELEVATION

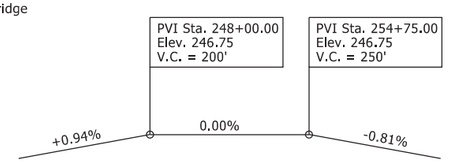

VERTICAL CURVE DATA

Hwy. 77
(Theoretical Grade Along CL Construction)

FOR R/W DATA, SEE ROADWAY PLANS

STATE OF ARKANSAS
LICENSED PROFESSIONAL ENGINEER
No.14498
ADAM B. HALL

DIGITALLY SIGNED 8-13-2021
BRIDGE ENGINEER

SHEET 1 OF 2
LAYOUT OF BRIDGE
HIGHWAY 77 OVER RELIEF TO RIGHT HAND CHUTE OF LITTLE RIVER
HWYS. 77, 140, 158, & 181
STRS. & APPRS. (MISSISSIPPI CO.) (S)
MISSISSIPPI COUNTY

ROUTE 77 SEC. 2

ARKANSAS STATE HIGHWAY COMMISSION
LITTLE ROCK, ARK.

DRAWN BY: MRA DATE: AUG. 2020 FILENAME: b100955x5_L1.dgn
CHECKED BY: ABH DATE: AUG. 2020 SCALE: 1" = 20'-0"
DESIGNED BY: CSW DATE: AUG. 2020
BRIDGE NO. 07560 DRAWING NO. 64363

REVISED DATE:
WORKSPACE: ARDOT Bridge (2019)
L:\2017\17017642 - ARDOT Job 100955\Drawings\b100955x5_SIOL_L0.dgn
abhall 8/13/2021 9:54:12 AM

DATE REVISED	DATE FILMED	DATE REVISED	DATE FILMED	FED. ROAD DIST. NO.	STATE	FED. AID PROJ. NO.	SHEET NO.	TOTAL SHEETS
				6	ARK.			
				JOB NO.		100955	187	356
				(1) 07560		LAYOUT		64364

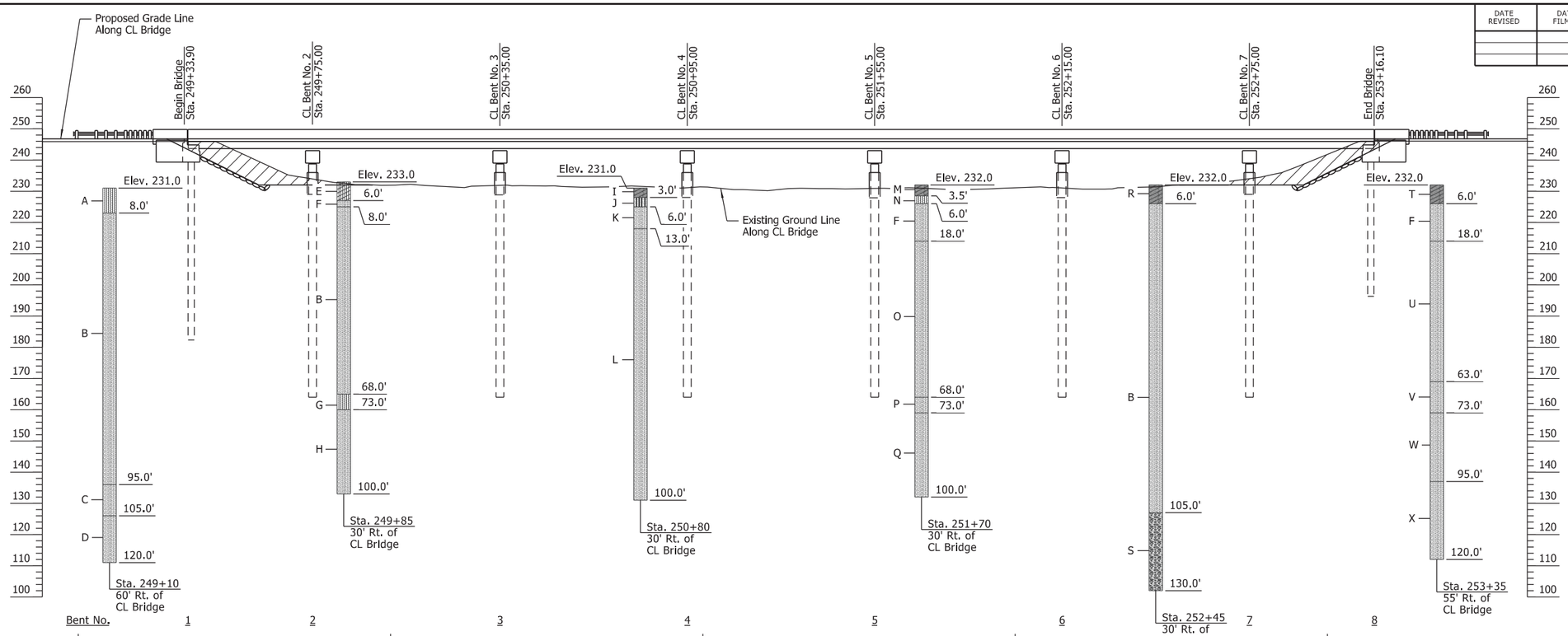

BORING LEGEND

A - Very loose to loose brown silty fine sand
B - Loose brown fine to medium sand
C - Dense grayish brown fine sand
D - Dense to very dense grayish brown fine to coarse sand, slightly silty
E - Very soft to soft brown silty clay, slightly sandy
F - Loose brown fine sand
G - Medium dense gray silty fine sand
H - Medium dense gray fine to medium sand, slightly silty
I - Very soft to soft brown and gray fine sandy clay, silty
J - Very loose to loose brown fine sandy silt, slightly clayey
K - Loose brown and gray fine sand
L - Medium dense brown and gray fine to medium sand
M - Soft brown fine sandy clay
N - Loose brown silty fine sand
O - Medium dense grayish brown fine to medium sand
P - Dense gray and brown fine sand, slightly silty
Q - Dense grayish brown fine to medium sand
R - Stiff grayish brown fine sandy clay, silty
S - Dense to very dense tan fine to coarse sand, slightly silty w/ a little fine gravel
T - Soft brownish gray fine sandy clay
U - Medium dense fine to medium sand
V - Medium dense brownish gray fine sand
W - Dense to very dense gray fine to medium sand, slightly silty
X - Dense to very dense gray fine to coarse sand, slightly silty w/ a little fine gravel

GENERAL NOTES

STEEL SHELL PILING: Piling in Bents 1 & 8 shall be 24" diameter concrete filled steel shell piles and shall be driven to meet the requirements of the "PILE BEARING TABLE". Piling in Bents 2-7 shall be 30" diameter concrete filled steel shell piles and shall be driven to meet the requirements of the "PILE BEARING TABLE". All piling shall be driven with an approved air, steam, or diesel hammer. Piling in end bents shall be driven after embankment to bottom of cap is in place. Lengths of piling shown are assumed for estimating quantities only. Actual lengths are to be determined in the field. No additional payment will be made for cut-off or build-up. Test piles are not required but may be driven for the Contractor's information in accordance with Subsection 805.08(g). No piles will be paid for as Test Piles.

Water jetting or other methods as approved by the Engineer may be required to achieve minimum penetration. This work shall not be paid for directly, but shall be considered incidental to the items "STEEL SHELL PILING (24" DIA.)" and "STEEL SHELL PILING (30" DIA.)".

PILE ENCASEMENT: Pile encasement for Bents 2-7 shall extend from 3' below bottom of cap to 3' below natural or finished ground. See Dwg. No. 64333 for additional information.

DRIVING SYSTEM: The driving system approval and the ultimate bearing capacity determination for piling shall be based on the requirements of Subsection 805.09(b), "Method B - Wave Equation Analysis (WEAP)" and SP "PILE DRIVING SYSTEM". See the "PILE BEARING TABLE" for the estimated minimum rated hammer energy required to overcome the anticipated driving resistance for all piles at each bent. If the Contractor elects to use water jetting or other approved methods to obtain the minimum tip elevations shown while driving only to the required minimum ultimate bearing capacity, the minimum rated hammer energy required will be lower and shall be accounted for in the driving system chosen by the Contractor.

EXISTING BRIDGE: Existing Bridge No. 02881 (Log Mile 6.31) is 360.0' in length, 28.5' wide (24.0' clear roadway) and consists of a concrete slab on I-beam spans (9 spans total) supported by concrete pile bents. Plans of the existing structure, if available, may be obtained upon request to the Construction Contract Development Section of the Program Management Division.

REMOVAL AND SALVAGE: The Contractor shall remove existing Bridge No. 02881 in accordance with Section 205. All material from the existing bridge shall become property of the Contractor.

DETAIL DRAWINGS:	DRAWING NO(S).
Foundation Improvement Plan	64365
End Bents	64310, 64312, 64366-64368
Intermediate Bents	64332-64334, 64369
Common Details Of 34' Clear Roadway Steel Superstructure	64318-64319
380'-0" Continuous W-Beam Unit	64370-64373
Common Superstructure Details	64421-64424
Elastomeric Bearings	64425-64426
Type Special Approach Gutters	64427-64429
Type Special Approach Slabs	64430
Dumped Riprap	55001
General Notes For Steel Bridge Structures	55006
Details For Steel Bridge Structures	55007
Poured Silicone Joint	55008
Concrete Filled Steel Shell Piling	55021
Bridge Traffic Rail	55070

ELEVATION OF SOIL BORINGS

HYDRAULIC DATA

FLOOD DESCRIPTION	FREQUENCY	TOTAL DISCHARGE (2)	DISCHARGE THIS SITE	(1) NATURAL WATER SURFACE ELEVATION	WATER SURFACE ELEVATION WITH BACKWATER
	YEARS	CFS	CFS	FEET	FEET
DESIGN	25	42,656	8,936	235.5	236.5
BASE	100	59,368	13,539	236.3	237.8
EXTREME	500	69,379	16,203	237.1	238.6
OVERTOPPING	>500	N/A	N/A	N/A	N/A

(1) Unconstricted water surface without structure or roadway approaches

(2) The total discharge includes flow at this site, Hwy. 77 over Ditch No. 1, Hwy. 77 over Right Hand Chute of Little River, Hwy. 77 over Ditch No. 2, and Hwy. 77 over Relief to Right Hand Chute of Little River (Borrow Ditch).

Q100 Backwater Elevation For Existing Structure = 238.1

Proposed Low Bridge Chord Elev. = 243.37
Existing Low Bridge Chord Elev. = 243.16 (survey data)

Drainage Area = 2,098.0 square miles
Historical High Water Elev. = N/A

N-VALUES

Sta. 249+10 Offset 60' Rt.	Sta. 249+85 Offset 30' Rt.	Sta. 250+80 Offset 30' Rt.	Sta. 251+70 Offset 30' Rt.	Sta. 252+45 Offset 30' Rt.	Sta. 253+35 Offset 55' Rt.
1.5-2.5, N=4	1.5-2.5, N=4	1.5-2.5, N=4	1.5-2.5, N=5	1.5-2.5, N=11	1.5-2.5, N=5
4.0-5.0, N=2	4.0-5.0, N=5	4.5-5.5, N=4	4.0-5.0, N=7	4.0-5.0, N=4	4.0-5.0, N=6
6.5-7.5, N=4	6.5-7.5, N=5	6.5-7.5, N=5	6.5-7.5, N=5	6.5-7.5, N=5	6.5-7.5, N=7
9.0-10.0, N=5	9.0-10.0, N=9	9.0-10.0, N=4	9.0-10.0, N=3	9.0-10.0, N=5	9.0-10.0, N=13
14.0-15.0, N=6	14.0-15.0, N=5	14.0-15.0, N=10	14.0-15.0, N=10	14.0-15.0, N=11	14.0-15.0, N=9
19.0-20.0, N=12	19.0-20.0, N=18	19.0-20.0, N=17	19.0-20.0, N=17	19.0-20.0, N=24	19.0-20.0, N=18
24.0-25.0, N=14	24.0-25.0, N=9	24.0-25.0, N=13	24.0-25.0, N=18	24.0-25.0, N=10	24.0-25.0, N=17
29.0-30.0, N=17	29.0-30.0, N=16	29.0-30.0, N=20	29.0-30.0, N=31	29.0-30.0, N=27	29.0-30.0, N=29
34.0-35.0, N=19	34.0-35.0, N=17	34.0-35.0, N=16	34.0-35.0, N=16	34.0-35.0, N=16	34.0-35.0, N=23
39.0-40.0, N=21	39.0-40.0, N=23	39.0-40.0, N=18	39.0-40.0, N=19	39.0-40.0, N=14	39.0-40.0, N=29
44.0-45.0, N=9	44.0-45.0, N=26	44.0-45.0, N=19	44.0-45.0, N=21	44.0-45.0, N=33	44.0-45.0, N=41
49.0-50.0, N=32	49.0-50.0, N=20	49.0-50.0, N=23	49.0-50.0, N=26	49.0-50.0, N=25	49.0-50.0, N=29
54.0-55.0, N=37	54.0-55.0, N=37	54.0-55.0, N=35	54.0-55.0, N=33	54.0-55.0, N=22	54.0-55.0, N=32
59.0-60.0, N=30	59.0-60.0, N=32	59.0-60.0, N=33	59.0-60.0, N=49	59.0-60.0, N=37	59.0-60.0, N=31
64.0-65.0, N=27	64.0-65.0, N=30	64.0-65.0, N=25	64.0-65.0, N=15	64.0-65.0, N=28	64.0-65.0, N=23
69.0-70.0, N=33	69.0-70.0, N=25	69.0-70.0, N=33	69.0-70.0, N=43	69.0-70.0, N=26	69.0-70.0, N=15
74.0-75.0, N=41	74.0-75.0, N=19	74.0-75.0, N=35	74.0-75.0, N=34	74.0-75.0, N=40	74.0-75.0, N=51
79.0-80.0, N=58	79.0-80.0, N=55	79.0-80.0, N=55	79.0-80.0, N=72	79.0-80.0, N=79	79.0-80.0, N=80
89.0-90.0, N=65	89.0-90.0, N=80	89.0-90.0, N=68	89.0-90.0, N=42	89.0-90.0, N=50/6"	89.0-90.0, N=49
99.0-100.0, N=48	99.0-100.0, N=44	99.0-100.0, N=50/6"	99.0-100.0, N=68	99.0-100.0, N=72	99.0-100.0, N=67
109.0-110.0, N=50/4"				109.0-110.0, N=50/9"	109.0-110.0, N=44
119.0-120.0, N=84				119.0-120.0, N=50/5"	119.0-120.0, N=60
				129.0-130.0, N=50/10"	

PILE BEARING TABLE

BENTS	REQUIRED MINIMUM ULTIMATE BEARING CAPACITY (TONS)	MIN. TIP ELEVATION	ANTICIPATED DRIVING RESISTANCE AT MIN. TIP (TONS)	ESTIMATED MIN. RATED HAMMER ENERGY (FT.-LBS. PER BLOW)
1	299	196.00	520	154,400
2	346	164.00	820	198,400
3	375	164.00	810	198,400
4	420	164.00	810	198,400
5	395	164.00	810	198,400
6	386	164.00	810	198,400
7	374	164.00	820	198,400
8	147	196.00	350	154,400

NOTE:
Required minimum ultimate bearing capacity corresponds to the minimum post driving capacity to be obtained after an allowance for water jetting or any other methods employed to facilitate pile installation.

Anticipated Driving Resistance corresponds to the resistance to be overcome to achieve minimum tip elevation without any water jetting or other methods employed to facilitate pile installation.

STATE OF ARKANSAS
LICENSED PROFESSIONAL ENGINEER
No.14498
ADAM B. HALL

DIGITALLY SIGNED 8-13-2021
BRIDGE ENGINEER

SHEET 2 OF 2
LAYOUT OF BRIDGE
HIGHWAY 77 OVER RELIEF TO RIGHT HAND CHUTE OF LITTLE RIVER
HWYS. 77, 140, 158, & 181
STRS. & APPRS. (MISSISSIPPI CO.) (S)
MISSISSIPPI COUNTY

ROUTE 77 SEC. 2

ARKANSAS STATE HIGHWAY COMMISSION
LITTLE ROCK, ARK.

DRAWN BY: MRA DATE: JUNE 2021 FILENAME: b100955x5_L2.dgn
CHECKED BY: ABH DATE: JUNE 2021 SCALE: 1" = 20'-0"
DESIGNED BY: CSW DATE: JUNE 2021

BRIDGE NO. 07560 DRAWING NO. 64364

abhall 8/13/2021 9:54:43 AM
WORKSPACE: ARDOT Bridge (2019)
L:\2017\1701642 - ARDOT Job 100955\Drawings\b100955x5_Sht2_L0.dgn
REVISED DATE:

DATE REVISED	DATE FILMED	DATE REVISED	DATE FILMED

FED. ROAD DIST. NO.	STATE	FED. AID PROJ. NO.	SHEET NO.	TOTAL SHEETS
6	ARK.			
JOB NO.		100955	188	356
(1) 07560		FNDN. IMP. PLAN		64365

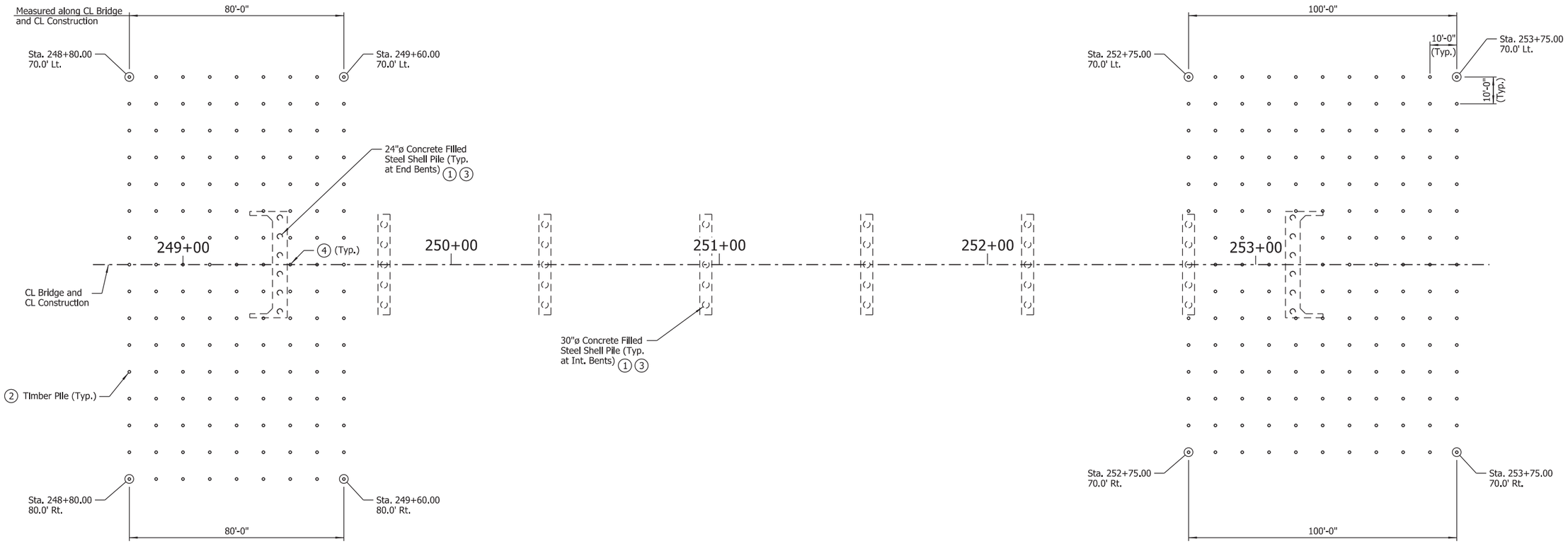

TIMBER PILE LAYOUT FOR FOUNDATION IMPROVEMENT

Scale: 1" = 20'-0"

TIMBER PILE DATA

Bent No.	Estimated No. of Piles	Min. Tip Elevation	(5) Estimated Pile Length (FT)
1	144	202	43
8	159	202	40

NOTE:
For "DETAILS OF TIMBER PILE TIP" and "TYPICAL SPLICE DETAILS", see Dwg. No. 64308.

NOTES:
Diameter(s) of timber piles shall be in accordance with SP "TIMBER PILING FOR SOIL DENSIFICATION".

Drive number and length of timber piles as directed by the Engineer.

Contractor shall coordinate with the Engineer to avoid any and all utilities within the soil densification areas.

Timber piling outside the limits of the existing bridge and roadway shall be driven prior to closing existing bridge to traffic.

(1) Steel shell piling shall be driven prior to timber piling at each bent.

(2) Timber piling shall be in accordance with SP "TIMBER PILING FOR SOIL DENSIFICATION".

(3) Any existing riprap interfering with the driving of timber pile or steel shell pile shall be removed prior to driving as directed by the Engineer. Cost of removing riprap shall be considered subsidiary to the item "Removal of Existing Bridge Structure (Site No. 5)".

(4) Shift timber piling as required to avoid conflicts with proposed caps.

(5) Contractor may drive 40' long piles to minimum tip elevation utilizing a follower device to achieve required penetration.

STATE OF ARKANSAS
LICENSED PROFESSIONAL ENGINEER
No.8017
JOHN H. RUDDELL

DIGITALLY SIGNED 8-13-2021
BRIDGE ENGINEER

DETAILS OF FOUNDATION IMPROVEMENT PLAN HWY. 77 OVER RELIEF TO RIGHT HAND CHUTE OF LITTLE RIVER

ROUTE SEC.

ARKANSAS STATE HIGHWAY COMMISSION

LITTLE ROCK, ARK.

DRAWN BY: CWT DATE: JUNE 2021 FILENAME: b100955x5_FN.dgn
CHECKED BY: JHR DATE: JUNE 2021 SCALE: As Shown
DESIGNED BY: JME DATE: JUNE 2021

BRIDGE NO. 07560 DRAWING NO. 64365

abhall 8/13/2021 9:54:17 AM
WORKSPACE: ARDOT Bridge (2019)
L:\2017\1701642 - ARDOT Job 100955\Drawings\b100955x5_SI03_FIP.dgn
REVISED DATE:

DATE REVISED	DATE FILMED	DATE REVISED	DATE FILMED	FED. ROAD DIST. NO.	STATE	FED. AID PROJ. NO.	SHEET NO.	TOTAL SHEETS
				6	ARK.			
				JOB NO.		100955	189	356
				(1) 07560		END BENTS		64366

Stations Increase
Bent No. 8

Stations Increase
Bent No. 1

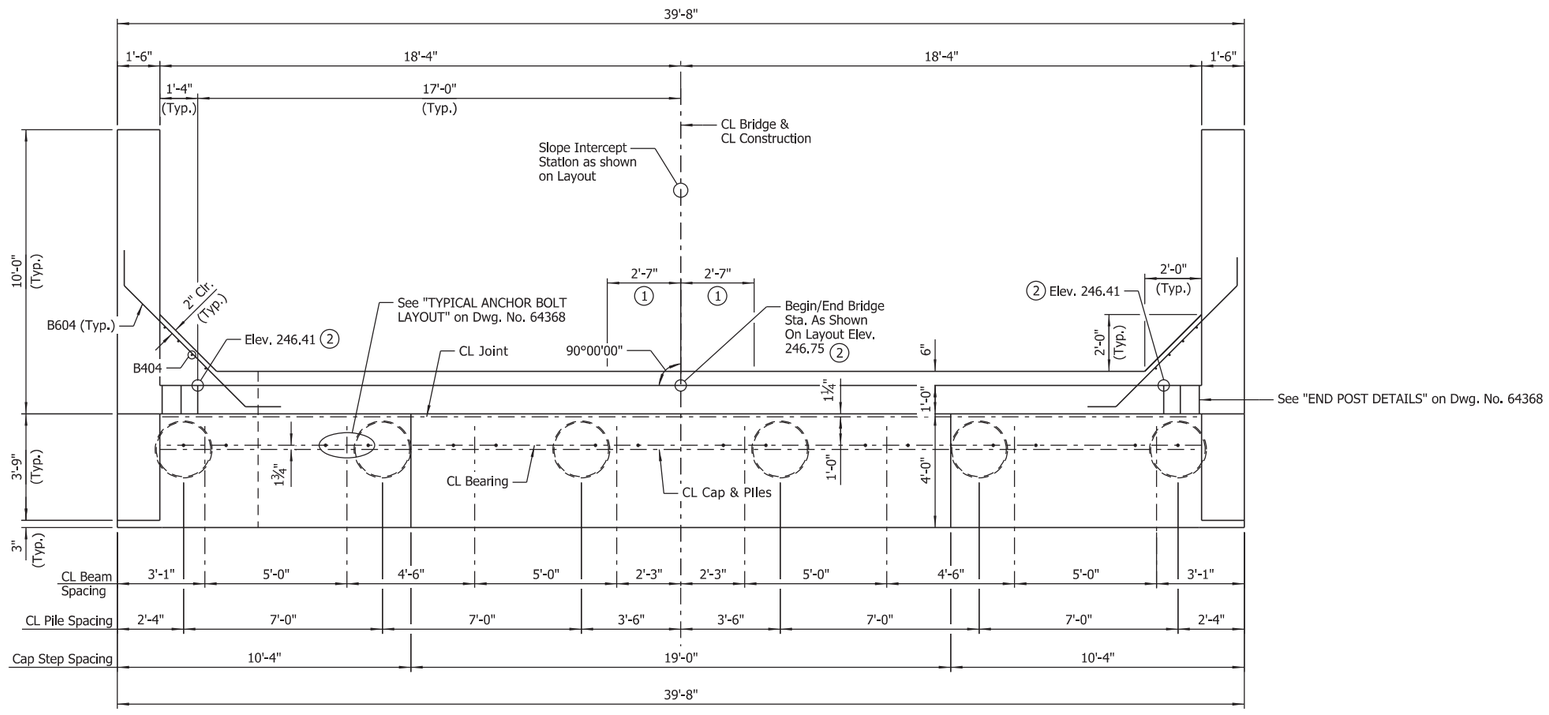

PLAN
Scale: ⅜" = 1'-0"

(1) See "ROUNDING DETAIL" on Std. Dwg. No. 55007

(2) Top of Backwall is to be constructed level longitudinally.

NOTES:
1. For "SECTIONS" and END BENT WALL ARMOR DETAIL", see Dwg. No. 64310.
2. For "GENERAL NOTES" and "BAR LIST", see Dwg. No. 64368.

LEGEND

BF = Back Face
FF = Front Face
EF = Each Face

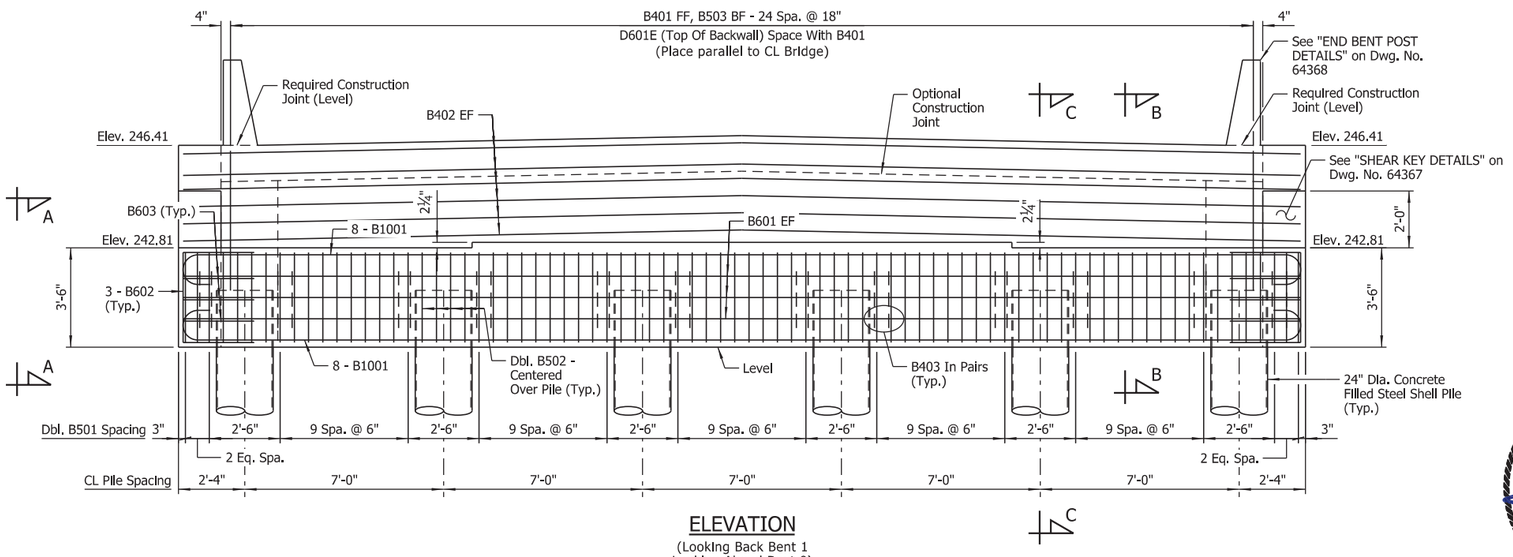

ELEVATION
(Looking Back Bent 1
Looking Ahead Bent 8)
Scale: ⅜" = 1'-0"

NOTE:
No portion of the backwall above the required construction joint shall be poured until the prefabricated superstructure is in place. No heavy construction equipment shall be allowed within 10' of the backwall until the prefabricated superstructure for the adjacent span has been installed.

STATE OF ARKANSAS
LICENSED PROFESSIONAL ENGINEER
No.8017
JOHN H. RUDDELL

DIGITALLY SIGNED 8-13-2021
BRIDGE ENGINEER

SHEET 1 OF 3
DETAILS OF END BENTS
HWY. 77 OVER RELIEF TO
RIGHT HAND CHUTE OF LITTLE RIVER

ROUTE SEC.

ARKANSAS STATE HIGHWAY COMMISSION
LITTLE ROCK, ARK.

DRAWN BY: CSW DATE: APR. 2021 FILENAME: b100955x5_A1.dgn
CHECKED BY: JHR DATE: JUNE 2021 SCALE: As Shown
DESIGNED BY: CSW DATE: APR. 2021

BRIDGE NO. 07560 DRAWING NO. 64366

abholl 8/13/2021 9:54:18 AM
WORKSPACE: ARDOT Bridge (2019)
L:\20TY\170\7642 - ARDOT Job 100955\Drawings\b100955x5_S20_AB.dgn
REVISED DATE:

DATE REVISED	DATE FILMED	DATE REVISED	DATE FILMED

FED. ROAD DIST. NO.	STATE	FED. AID PROJ. NO.	SHEET NO.	TOTAL SHEETS
6	ARK.			
JOB NO.		100955	190	356
(1) 07560		END BENTS		64367

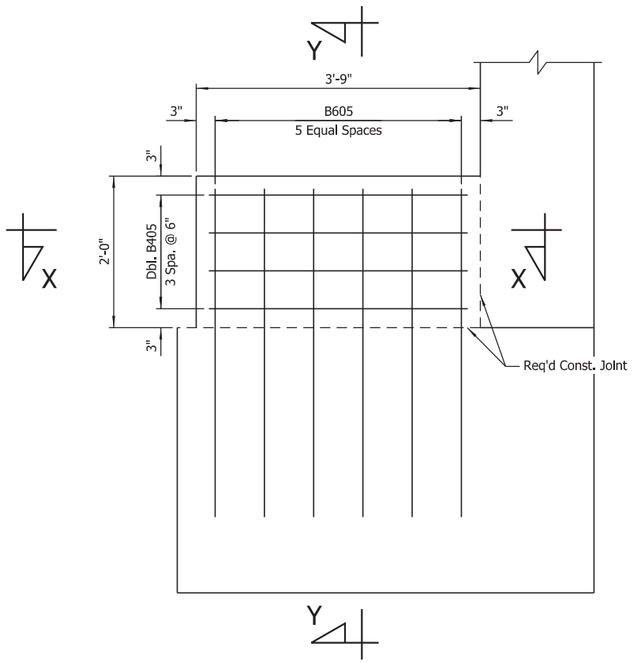

SHEAR KEY DETAILS
Scale: 1" = 1'-0"

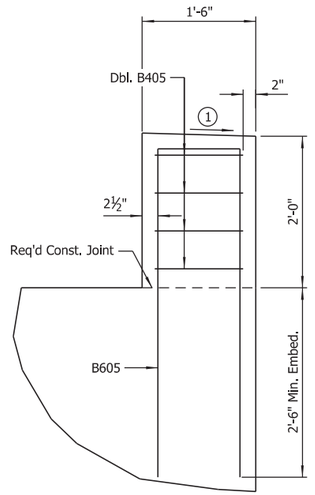

SECTION Y-Y
Scale: 1" = 1'-0"

(1) Slope to drain, provide minimum ½" wash across top width

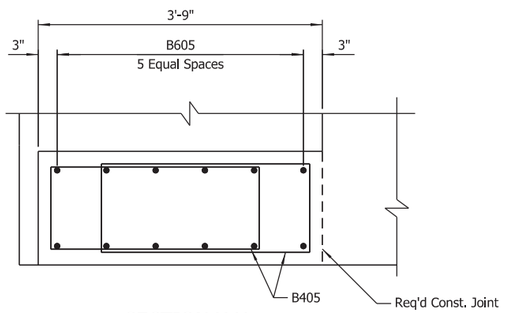

SECTION X-X
Scale: 1" = 1'-0"

STATE OF ARKANSAS
LICENSED PROFESSIONAL ENGINEER
No.8017
JOHN H. RUDDELL

DIGITALLY SIGNED 8-13-2021
BRIDGE ENGINEER

SHEET 2 OF 3
DETAILS OF END BENTS
HWY. 77 OVER RELIEF OF
RIGHT HAND CHUTE OF LITTLE RIVER
ROUTE SEC.
ARKANSAS STATE HIGHWAY COMMISSION
LITTLE ROCK, ARK.

DRAWN BY: CSW DATE: APR. 2021 FILENAME: b100955x5_A2.dgn
CHECKED BY: JHR DATE: JUNE 2021 SCALE: As Shown
DESIGNED BY: CSW DATE: APR. 2021
BRIDGE NO. 07560 DRAWING NO. 64367

abhall 8/13/2021 9:54:20 AM
WORKSPACE: ARDOT Bridge (2019)
L:\2017\1701642 - ARDOT Job 100955\Drawings\b100955x5_S202_AB.dgn
REVISED DATE:

DATE REVISED	DATE FILMED	DATE REVISED	DATE FILMED	FED. ROAD DIST. NO.	STATE	FED. AID PROJ. NO.	SHEET NO.	TOTAL SHEETS
				6	ARK.			
				JOB NO.		100955	191	356
				①	07560	END BENTS		64368

BAR LIST (PER BENT)

	MARK	NO. REQ'D	LENGTH	"A"	"B"	P.D.
	B401	25	8'-2"			2"
	B402	12	39'-4"			Str.
	B403	144	4'-6"			3"
	B404	8	5'-5"			Str.
	B405	16	8'-2"	1'-2"	2'-9"	2"
	B501	112	15'-6"			2½"
	B502	48	11'-7"			2½"
	B503	25	6'-5"			2½"
	B601	6	39'-4"			Str.
	B602	6	7'-7"	2'-11"	2'-6"	4½"
	B603	6	9'-8"	5'-0"	2'-6"	4½"
	B604	20	8'-6"			4½"
	B605	12	9'-5"	1'-1"	4'-4"	4½"
	B1001	16	42'-2"			10"
①	D601E	25	5'-2"			4½"
①	R401E	4	5'-11"			2½"
①	R404E	16	3'-8"			Str.
①	W401E	4	3'-11"			3¾"
	W402	40	14'-4"	1'-2"	6'-8"	2"
	W701	50	9'-8"			Str.

NOTES:
Number of bars shown is for one end bent only.

Dimensions of bars are out-to-out.

Bars designated with "E" suffix shall be epoxy coated.

① Epoxy coated reinforcing in end bents shall be paid for as "REINFORCING STEEL - BRIDGE (GRADE 60)".

BAR BENDING DIAGRAMS

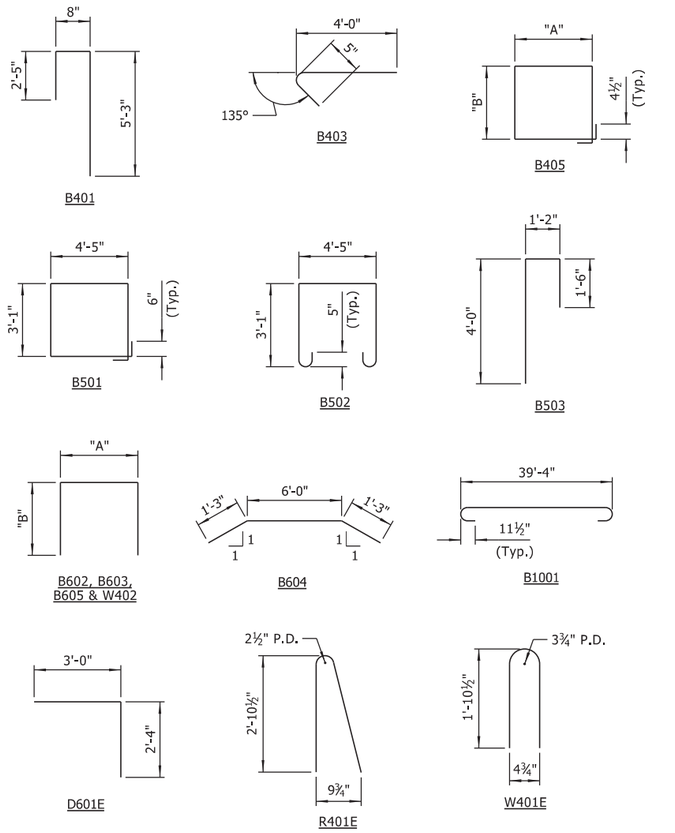

GENERAL NOTES:

Structural steel in end bents shall be ASTM A709, Gr. 50W and shall be paid for as "STRUCTURAL STEEL IN BEAM SPANS (A709, Gr. 50W)".

Class 2 Protective Surface Treatment shall be applied to the top of backwall and the roadway face and top of end posts.

For details of steel shell piling, see Std. Dwg. No. 55021.

See Std. Dwg. No. 55006 for additional notes.

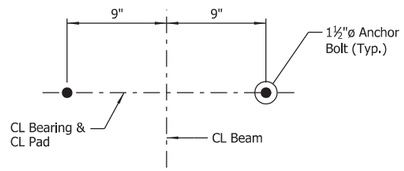

TYPICAL ANCHOR BOLT LAYOUT

No Scale

NOTE:
For Details of Elastomeric Bearings, see Dwg. No. 64425.

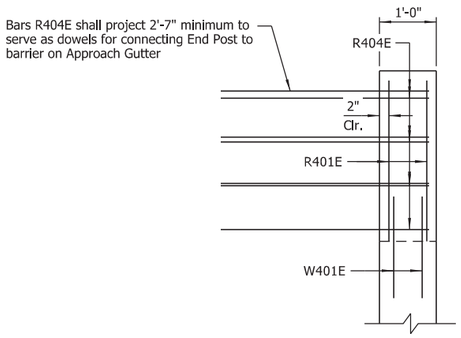

END BENT POST DETAILS

Scale: ½" = 1'-0"

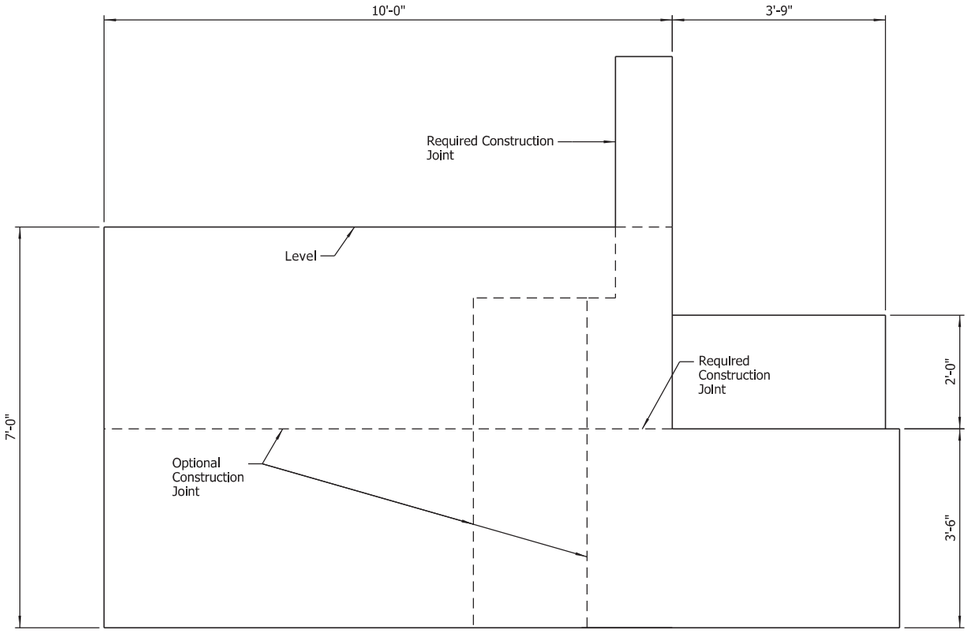

VIEW T-T

Scale: ¾" = 1'-0"

NOTE:
For Reinforcing Details of Wingwall, see "VIEW U-U" on Dwg. No. 64312.

STATE OF ARKANSAS
LICENSED PROFESSIONAL ENGINEER
No.8017
JOHN H. RUDDELL

DIGITALLY SIGNED 8-13-2021
BRIDGE ENGINEER

SHEET 3 OF 3
DETAILS OF END BENTS
HWY. 77 OVER RELIEF TO
RIGHT HAND CHUTE OF LITTLE RIVER

ROUTE SEC.

ARKANSAS STATE HIGHWAY COMMISSION
LITTLE ROCK, ARK.

DRAWN BY: HEW DATE: APR. 2021 FILENAME: b100955x5_A3.dgn
CHECKED BY: JHR DATE: JUNE 2021 SCALE: As Shown
DESIGNED BY: CSW DATE: APR. 2021

BRIDGE NO. 07560 DRAWING NO. 64368

abhall 8/13/2021 9:54:20 AM
WORKSPACE: ARDOT Bridge (2019)
L:\20\T\T01\642 - ARDOT Job 100955\Drawings\b100955x5_5203_AB.dgn
REVISED DATE:

DATE REVISED	DATE FILMED	DATE REVISED	DATE FILMED

FED. ROAD DIST. NO.	STATE	FED. AID PROJ. NO.	SHEET NO.	TOTAL SHEETS
6	ARK.			
JOB NO.		100955	192	356
(1) 07560		INT. BENTS		64369

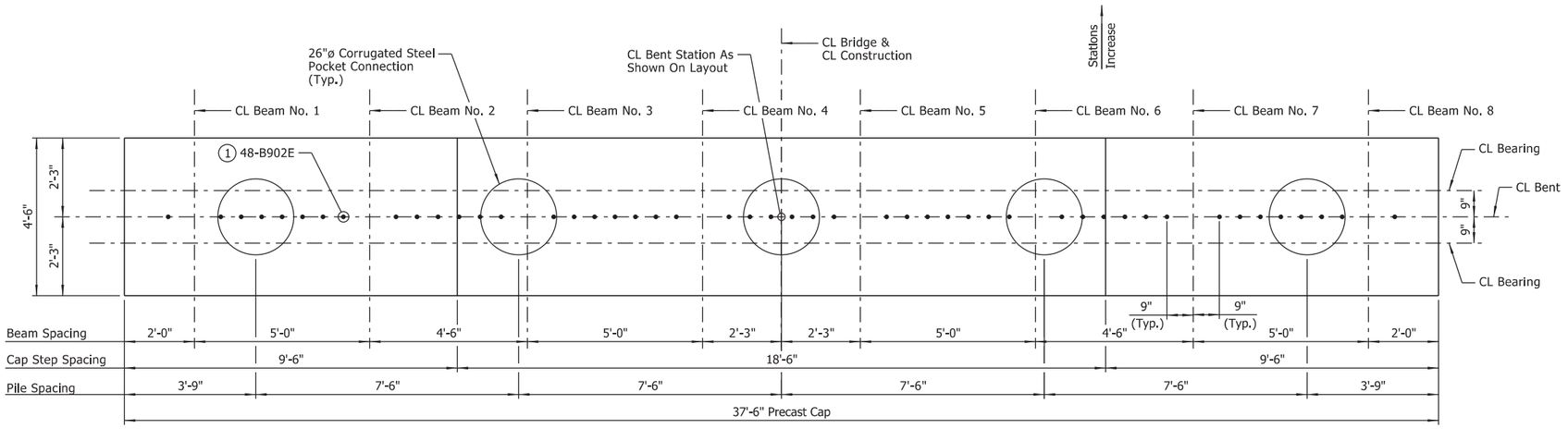

PLAN - BENT NOS. 2-7

Scale: ½" = 1'-0"

(1) Bars B902E within corrugated steel pocket connection shall be installed in the field at the time the pockets are filled. Minimum embedment = 2'-9"

(2) Dimension shown is for distance from outer limit of concrete cap to the limits of the corrugated steel pipe forming the pocket.

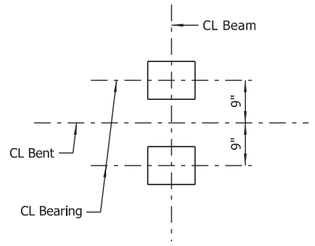

BEARING PAD LAYOUT

Scale: ¾" = 1'-0"

(3) **Bars C901 shall be ASTM A706, Grade 60.**

BAR LIST (PER BENT)

MARK	NO. REQ'D	LENGTH	P.D.
B401	200	4'-0"	3"
B501	5	97'-0"	30¼"
B502	124	15'-2"	2½"
B601	10	8'-9"	4½"
B602	12	8'-3"	4½"
B801	14	36'-11"	Str.
B901	20	39'-10"	9"
B902E	48	5'-6"	Str.
C501	5	251'-11"	21¾"
(3) C901	80	14'-0"	Str.

BAR BENDING DIAGRAMS

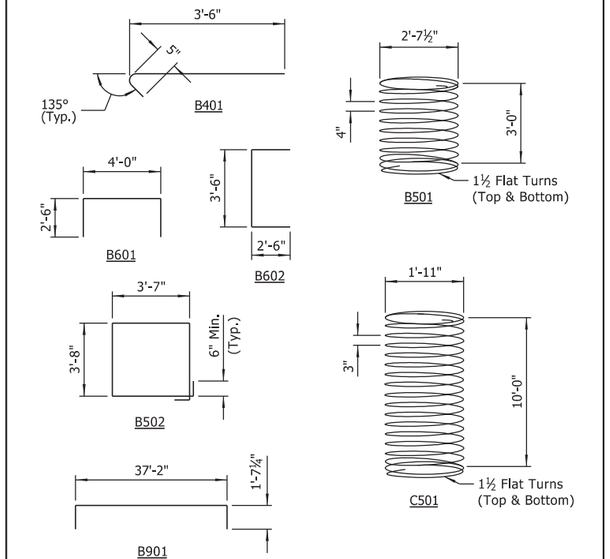

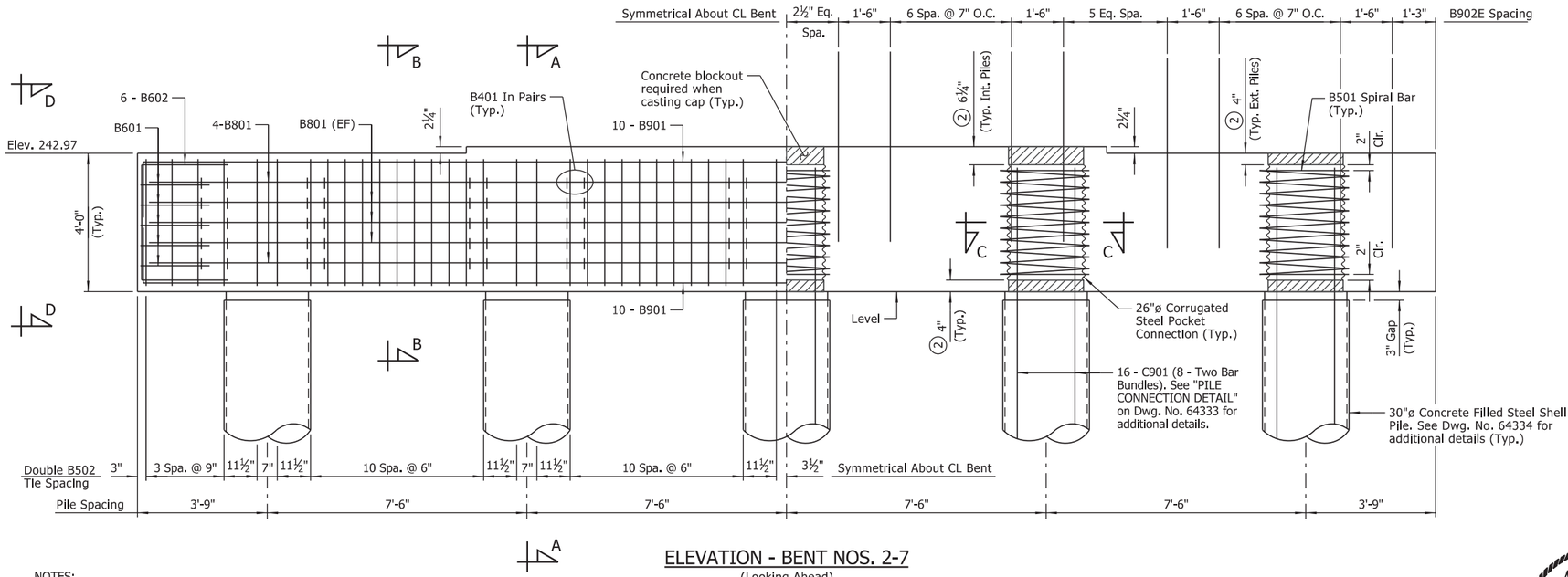

ELEVATION - BENT NOS. 2-7

(Looking Ahead)
Scale: ½" = 1'-0"

NOTES:
Precast bent caps at Bent Nos. 2 through 7 shall be fabricated and installed in accordance with SP "PRECAST CONCRETE BENT CAPS".

For "GENERAL NOTES - PRECAST CONCRETE BENT CAPS", see Dwg. No. 64333.

For details of elastomeric bearings, see Dwg. Nos. 64425 & 64426.

For "SECTIONS", see Dwg. No. 64332.

For "PROJECT GENERAL NOTES", see Dwg. No. 64303.

For additional information, see Layout.

NOTES:
Dimensions of bars are out-to-out.

Bars designated with "E" suffix shall be epoxy coated.

No direct payment for bars in bent cap or concrete filled steel shell piles. Cost of all reinforcing steel to be included in unit price for "PRECAST CONCRETE BENT CAPS".

STATE OF ARKANSAS
LICENSED PROFESSIONAL ENGINEER
No.8017
JOHN H. RUDDELL

DIGITALLY SIGNED 8-13-2021
BRIDGE ENGINEER

DETAILS OF INTERMEDIATE BENTS HWY. 77 OVER RELIEF TO RIGHT HAND CHUTE OF LITTLE RIVER

ROUTE SEC.

ARKANSAS STATE HIGHWAY COMMISSION

LITTLE ROCK, ARK.

DRAWN BY: CWT DATE: APR. 2021 FILENAME: b100955x5_BE1.dgn
CHECKED BY: JHR DATE: MAY 2021 SCALE: As Shown
DESIGNED BY: ERM DATE: APR. 2021

BRIDGE NO. 07560 DRAWING NO. 64369

dbhall 8/13/2021 9:54:22 AM
WORKSPACE: ARDOT Bridge (2019)
L:\20ft\70ft642 - ARDOT Job 100955\Drawings\b100955x5_5204_BE.dgn
REVISED DATE:

DATE REVISED	DATE FILMED	DATE REVISED	DATE FILMED

FED. ROAD DIST. NO.	STATE	FED. AID PROJ. NO.	SHEET NO.	TOTAL SHEETS
6	ARK.			
JOB NO.		100955	193	356
(1) 07560		380' UNIT		64370

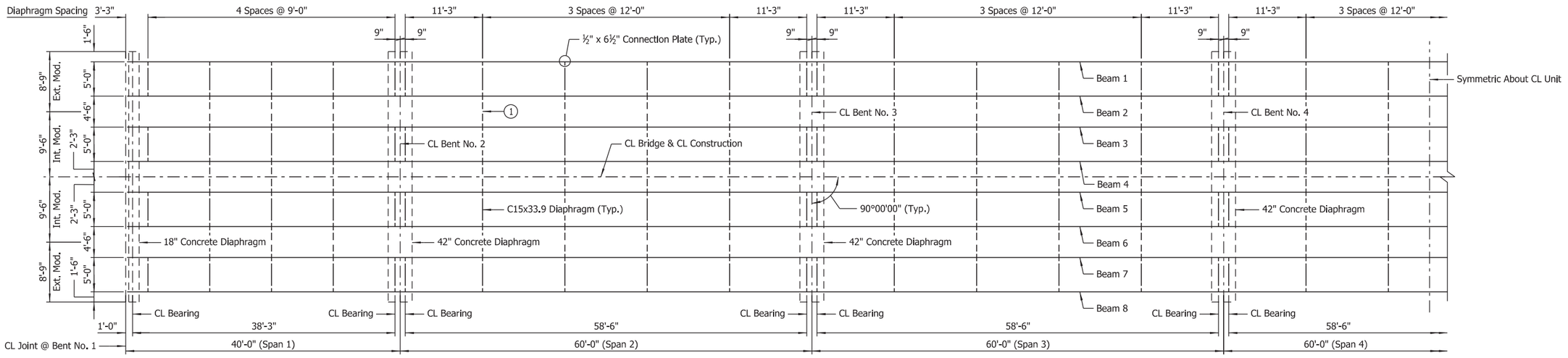

HALF-FRAMING PLAN

Scale: ⅛" = 1'-0"

(1) Diaphragms between modules shall be installed after prefabricated modules are installed and prior to constructing closure pours.

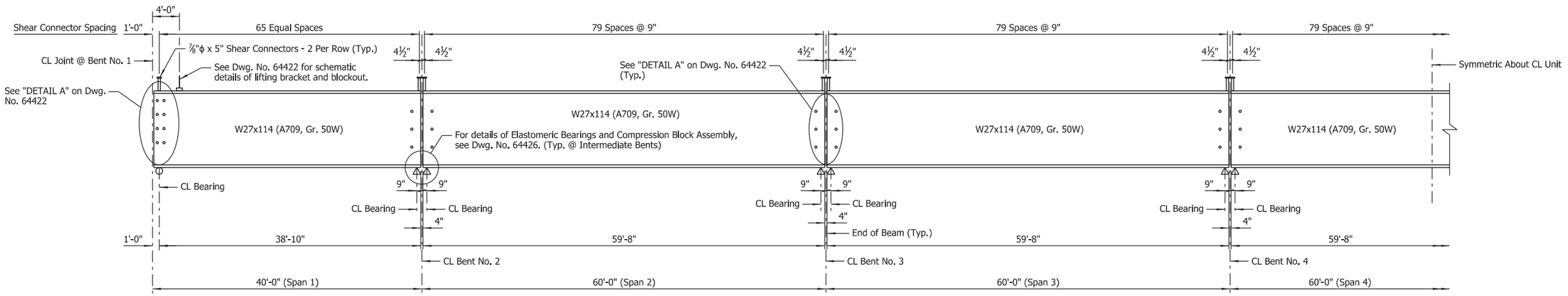

HALF-BEAM ELEVATION

No Scale

NOTES:
For Standard General Notes, see Std. Dwg. No. 55006.

For "SHEAR CONNECTOR DETAIL," see Std. Dwg. No. 55007.

All structural steel shall be ASTM A709, Gr. 50W unless noted otherwise. The cost of the structural steel shall be subsidiary to the unit price bid for item "PREFABRICATED SUPERSTRUCTURE MODULES". Diaphragms placed between separate modules shall be included in the cost of the prefabricated modules.

For painting of beam ends adjacent to bridge deck expansion joints, see "PROJECT GENERAL NOTES" on Dwg. No. 64303.

For diaphragm and connection plate details, see "DETAIL B" and "DETAIL C" on Dwg. No. 64422.

STATE OF ARKANSAS
LICENSED PROFESSIONAL ENGINEER
No.8017
JOHN H. RUDDELL

DIGITALLY SIGNED 8-13-2021
BRIDGE ENGINEER

SHEET 1 OF 4
DETAILS OF 380'-0" CONTINUOUS W-BEAM UNIT HWY. 77 OVER RELIEF TO RIGHT HAND CHUTE OF LITTLE RIVER

ROUTE SEC.

ARKANSAS STATE HIGHWAY COMMISSION
LITTLE ROCK, ARK.

DRAWN BY: CWT DATE: FEB. 2021 FILENAME: b100955x5_s1.dgn
CHECKED BY: JHR DATE: JUNE 2021 SCALE: As Shown
DESIGNED BY: BWD DATE: FEB. 2021

BRIDGE NO. 07560 DRAWING NO. 64370

abhall 8/13/2021 9:54:23 AM
WORKSPACE: ARDOT Bridge (2019)
L:\2017\17017642 - ARDOT Job 100955\Drawings\b100955x5_540_SF.dgn
REVISED DATE:

DATE REVISED	DATE FILMED	DATE REVISED	DATE FILMED

FED. ROAD DIST. NO.	STATE	FED. AID PROJ. NO.	SHEET NO.	TOTAL SHEETS
6	ARK.			
JOB NO.		100955	194	356
(1) 07560		380' UNIT		64371

LEGEND

U.N.O. = Unless Noted Otherwise

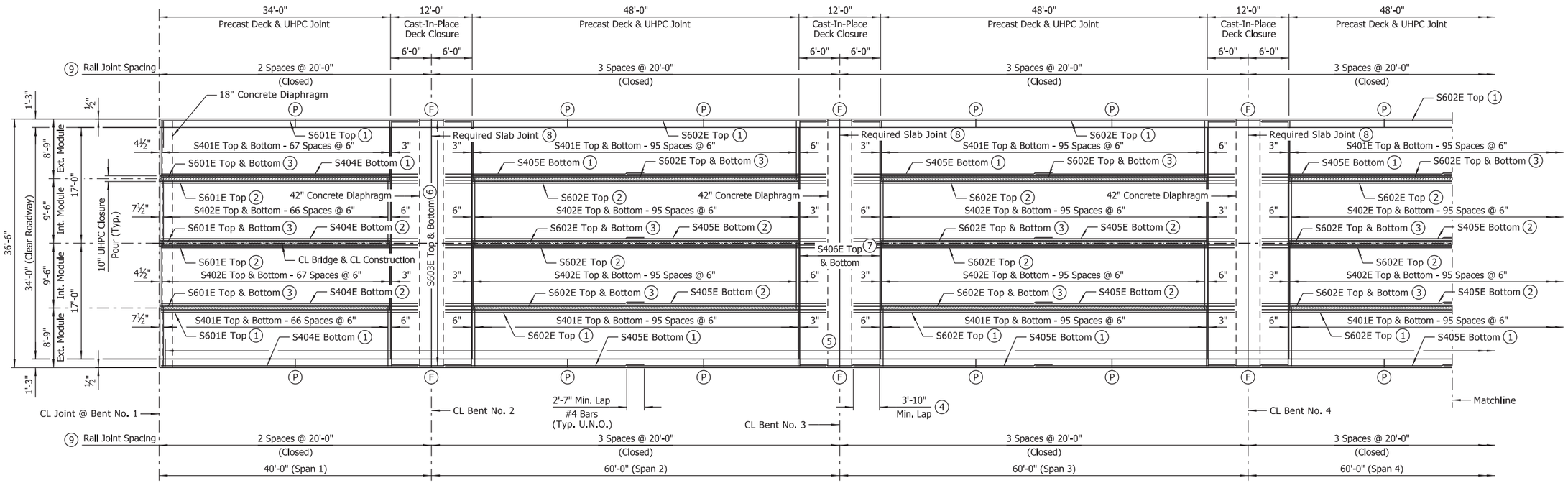

PART REINFORCING PLAN

Scale: ⅛" = 1'-0"

BAR LIST

MARK	NO. REQ'D	LENGTH	"A"	"B"	P.D.
S401E	2,460	8'-10"			Str.
S402E	2,460	10'-0"			Str.
S403E	1,530	5'-0"			3"
S404E	132	37'-9"			Str.
S405E	660	29'-4"			Str.
S406E	300	36'-2"			Str.
S601E	164	37'-9"			Str.
S602E	410	56'-0"			Str.
S603E	888	11'-8"			Str.
D501E	32	8'-6½"			Str.
D502E	32	9'-5"			Str.
D503E	138	5'-11"			2½"
D504E	12	3'-4"	1'-0½"	1'-3"	2½"
D505E	36	5'-4"	3'-0½"	1'-3"	2½"
D506E	1,536	7'-2½"	2'-1"	2'-8"	2½"
D601E	168	10'-6"			Str.
D602E	168	13'-4"			Str.
R401E	1,520	5'-11"			2½"
R402E	96	5'-6"			Str.
R403E	1,520	3'-6"			3", 3¾"
R404E	304	19'-8"			Str.

BAR BENDING DIAGRAMS

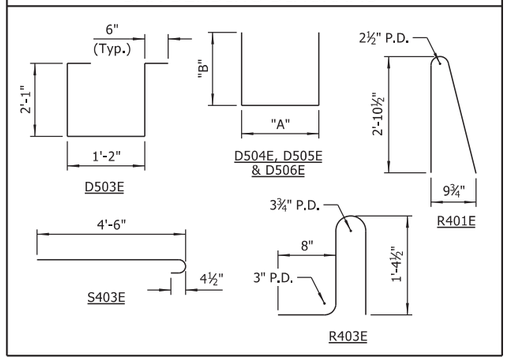

NOTES:
Dimensions of bars are out-to-out.

Bar designations ending with "E" indicate epoxy coated bars.

TABLE OF VARIABLES

CLOSED RAIL PANELS			OPEN RAIL PANELS						
PANEL LENGTH	A	R4XXE	PANEL LENGTH	B	C	D	E	F	R4XXE
20'-0"	39	R404E							

LEFT SIDE & RIGHT SIDE DECK DRAIN STATIONS
249+52.00
250+05.00
250+65.00
251+25.00
251+85.00
252+45.00
252+98.00

NOTE:
Stations shown are to CL Drain. For details of deck drains, see Dwg. No. 64423.

(1) Placed as shown in "EXTERIOR MODULE REINFORCING DETAIL." See Dwg. No. 64319.

(2) Placed as shown in "INTERIOR MODULE REINFORCING DETAIL." See Dwg. No. 64319.

(3) Placed as shown in "UHPC LONGITUDINAL JOINT DETAIL." See Dwg. No. 64422.

(4) S603E bars shall have 3'-10" minimum lap with both #6 and #4 longitudinal bars.

(5) S403E Bundled with #4 Bars in Top of Exterior Modules and #4 Bars in Top of Closure Pours (Typ. on Both Sides of Bridge)

(6) Lapped With Longitudinal Bars Projecting From Precast Modules & UHPC Closure Pours (Typ. @ Deck Closure Pour)

(7) 24 Eq. Spaces @ 6" Max. (Typ. @ Deck Closure)

(8) See "TRANSVERSE SLAB JOINT DETAIL" on Std. Dwg. No. 55007.

(9) Rail joints designated with symbol (F) shall be stopped 6" from top of slab. All other rail joints with symbol (P) shall be partial depth joints stopped 16" from top of slab.

NOTES:
For Standard General Notes, see Std. Dwg. No. 55006.

For "PROJECT GENERAL NOTES," see Dwg. No. 64303.

For bridge traffic rail reinforcing details and details of partial-depth and full-depth rail joints, see Std. Dwg. No. 55070.

For details of concrete diaphragms, see Dwg. Nos. 64318, 64319, 64421 & 64373.

Edges of precast deck adjacent to cast-in-place closure pours shall be keyed and textured in accordance with details and notes on Dwg. No. 64422.

For additional clarity in transverse reinforcing placement near end of precast deck, see "TRANSVERSE REINFORCING SCHEMATICS" on Dwg. No. 64421.

Concrete in bridge superstructure shall be placed, consolidated and screeded off for the entire pour before any concrete has taken its initial set.

A minimum of 72 hours shall elapse between completion of the slab and the pouring of the bridge railing. Any railing pours made before the entire slab unit has been placed must be approved by the Engineer.

Concrete diaphragms shall be poured monolithically with the slab.

Removable forms shall be used when pouring diaphragms.

STATE OF ARKANSAS
LICENSED PROFESSIONAL ENGINEER
No.14498
ADAM B. HALL

DIGITALLY SIGNED 8-13-2021
BRIDGE ENGINEER

SHEET 2 OF 4
DETAILS OF 380'-0" CONTINUOUS W-BEAM UNIT HWY. 77 OVER RELIEF TO RIGHT HAND CHUTE OF LITTLE RIVER

ROUTE SEC.

ARKANSAS STATE HIGHWAY COMMISSION

LITTLE ROCK, ARK.

DRAWN BY: HEW DATE: FEB. 2021 FILENAME: b100955x5_s2.dgn
CHECKED BY: ABH DATE: JUNE 2021 SCALE: As Shown
DESIGNED BY: BWD DATE: FEB. 2021

BRIDGE NO. 07560 DRAWING NO. 64371

abhall 8/13/2021 9:54:24 AM
WORKSPACE: ARDOT Bridge (2019)
L:\2017\1701642 - ARDOT Job 100955\Drawings\b100955x5_S402_SB.dgn
REVISED DATE:

DATE REVISED	DATE FILMED	DATE REVISED	DATE FILMED	FED. ROAD DIST. NO.	STATE	FED. AID PROJ. NO.	SHEET NO.	TOTAL SHEETS
				6	ARK.			
				JOB NO.		100955	195	356
				(1) 07560		380' UNIT		64372

LEGEND

U.N.O. = Unless Noted Otherwise

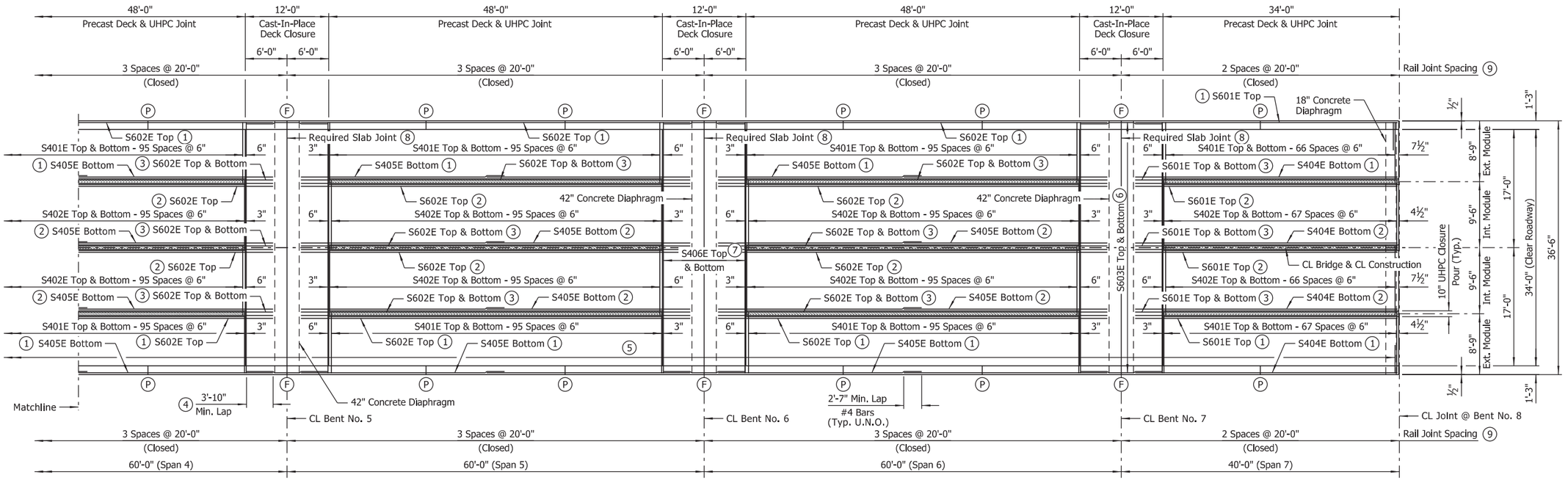

PART REINFORCING PLAN

Scale: ⅛" = 1'-0"

(1) Placed as shown in "EXTERIOR MODULE REINFORCING DETAIL." See Dwg. No. 64319.

(2) Placed as shown in "INTERIOR MODULE REINFORCING DETAIL." See Dwg. No. 64319.

(3) Placed as shown in "UHPC LONGITUDINAL JOINT DETAIL." See Dwg. No. 64422.

(4) S603E bars shall have 3'-10" minimum lap with both #6 and #4 longitudinal bars.

(5) S403E Bundled with #4 Bars In Top of Exterior Modules and #4 Bars in Top of Closure Pours (Typ. on Both Sides of Bridge)

(6) Lapped With Longitudinal Bars Projecting From Precast Modules & UHPC Closure Pours (Typ. @ Deck Closure Pour)

(7) 24 Eq. Spaces @ 6" Max. (Typ. @ Deck Closure)

(8) See "TRANSVERSE SLAB JOINT DETAIL" on Std. Dwg. No. 55007.

(9) Rail joints designated with symbol (F) shall be stopped 6" from top of slab. All other rail joints with symbol (P) shall be partial depth joints stopped 16" from top of slab.

NOTES:
For Standard General Notes, see Std. Dwg. No. 55006.

For "PROJECT GENERAL NOTES," see Dwg. No. 64303.

For "BAR LIST", "BAR BENDING DIAGRAMS", Rail Panel "TABLE OF VARIABLES" and deck drain stations, see Dwg. No. 64371.

For bridge traffic rail reinforcing details and details of partial-depth and full-depth rail joints, see Std. Dwg. No. 55070.

For details of concrete diaphragms, see Dwg. Nos. 64318, 64319, 64421 & 64373.

Edges of precast deck adjacent to cast-in-place closure pours shall be keyed and textured in accordance with details and notes on Dwg. No. 64422.

For additional clarity in transverse reinforcing placement near end of precast deck, see "TRANSVERSE REINFORCING SCHEMATICS" on Dwg. No. 64421.

Concrete in bridge superstructure shall be placed, consolidated and screeded off for the entire pour before any concrete has taken its initial set.

A minimum of 72 hours shall elapse between completion of the slab and the pouring of the bridge railing. Any railing pours made before the entire slab unit has been placed must be approved by the Engineer.

Concrete diaphragms shall be poured monolithically with the slab.

Removable forms shall be used when pouring diaphragms.

STATE OF ARKANSAS
LICENSED PROFESSIONAL ENGINEER
No.14498
ADAM B. HALL

DIGITALLY SIGNED 8-13-2021
BRIDGE ENGINEER

SHEET 3 OF 4
DETAILS OF 380'-0"
CONTINUOUS W-BEAM UNIT
HWY. 77 OVER RELIEF TO
RIGHT HAND CHUTE OF LITTLE RIVER

ROUTE SEC.

ARKANSAS STATE HIGHWAY COMMISSION
LITTLE ROCK, ARK.

DRAWN BY: HEW DATE: FEB. 2021 FILENAME: b100955x5_s3.dgn
CHECKED BY: ABH DATE: JUNE 2021 SCALE: As Shown
DESIGNED BY: BWD DATE: FEB. 2021

BRIDGE NO. 07560 DRAWING NO. 64372

abholl 8/13/2021 9:54:27 AM
WORKSPACE: ARDOT Bridge (2019)
L:\2017\17017642 - ARDOT Job 100955\Drawings\b100955x5_S403_SB.dgn
REVISED DATE:

DATE REVISED	DATE FILMED	DATE REVISED	DATE FILMED	FED. ROAD DIST. NO.	STATE	FED. AID PROJ. NO.	SHEET NO.	TOTAL SHEETS
				6	ARK.			
				JOB NO.		100955	196	356
				(1) 07560		380' UNIT		64373

TABLE OF DEAD LOAD DEFLECTIONS (INCHES)

	Point Of Deflection	Beams 1 & 8			Beams 2, 4, 5 & 7			Beams 3 & 6		
		Structural Steel	Structural Steel + Slab	Structural Steel + Slab + UHPC + Rail	Structural Steel	Structural Steel + Slab	Structural Steel + Slab + UHPC + Rail	Structural Steel	Structural Steel + Slab	Structural Steel + Slab + UHPC + Rail
Span No. 1	1.0	0.000	0.000	0.000	0.000	0.000	0.000	0.000	0.000	0.000
	1.1	0.016	0.071	0.071	0.017	0.080	0.080	0.017	0.079	0.079
	1.2	0.030	0.134	0.134	0.032	0.152	0.152	0.032	0.149	0.149
	1.3	0.041	0.184	0.194	0.043	0.207	0.222	0.043	0.203	0.218
	1.4	0.048	0.215	0.225	0.051	0.243	0.257	0.051	0.238	0.253
	1.5	0.051	0.226	0.226	0.053	0.255	0.255	0.053	0.250	0.250
	1.6	0.048	0.215	0.215	0.051	0.243	0.243	0.051	0.238	0.238
	1.7	0.041	0.184	0.184	0.043	0.207	0.207	0.043	0.203	0.203
	1.8	0.030	0.134	0.134	0.032	0.152	0.152	0.032	0.149	0.149
	1.9	0.016	0.071	0.071	0.017	0.080	0.080	0.017	0.079	0.079
Span No. 2	2.0	0.000	0.000	0.000	0.000	0.000	0.000	0.000	0.000	0.000
	2.1	0.086	0.385	0.395	0.091	0.435	0.449	0.091	0.426	0.440
	2.2	0.163	0.728	0.738	0.172	0.822	0.837	0.172	0.806	0.821
	2.3	0.223	0.996	1.016	0.235	1.126	1.155	0.235	1.104	1.132
	2.4	0.262	1.167	1.197	0.276	1.319	1.362	0.276	1.293	1.336
	2.5	0.275	1.225	1.255	0.289	1.385	1.428	0.289	1.357	1.401
	2.6	0.262	1.167	1.197	0.276	1.319	1.362	0.276	1.293	1.336
	2.7	0.223	0.996	1.016	0.235	1.126	1.155	0.235	1.104	1.132
	2.8	0.163	0.728	0.738	0.172	0.822	0.837	0.172	0.806	0.821
	2.9	0.086	0.385	0.385	0.091	0.435	0.435	0.091	0.426	0.426
Span No. 3	3.0	0.000	0.000	0.000	0.000	0.000	0.000	0.000	0.000	0.000
	3.1	0.086	0.385	0.385	0.091	0.435	0.435	0.091	0.426	0.426
	3.2	0.163	0.728	0.738	0.172	0.822	0.837	0.172	0.806	0.821
	3.3	0.223	0.996	1.016	0.235	1.126	1.155	0.235	1.104	1.132
	3.4	0.262	1.167	1.187	0.276	1.319	1.347	0.276	1.293	1.321
	3.5	0.275	1.225	1.245	0.289	1.385	1.413	0.289	1.357	1.386
	3.6	0.262	1.167	1.187	0.276	1.319	1.347	0.276	1.293	1.321
	3.7	0.223	0.996	1.016	0.235	1.126	1.155	0.235	1.104	1.132
	3.8	0.163	0.728	0.738	0.172	0.822	0.837	0.172	0.806	0.821
	3.9	0.086	0.385	0.385	0.091	0.435	0.435	0.091	0.426	0.426
Half Span No. 4	4.0	0.000	0.000	0.000	0.000	0.000	0.000	0.000	0.000	0.000
	4.1	0.086	0.385	0.385	0.091	0.435	0.435	0.091	0.426	0.426
	4.2	0.163	0.728	0.738	0.172	0.822	0.837	0.172	0.806	0.821
	4.3	0.223	0.996	1.016	0.235	1.126	1.155	0.235	1.104	1.132
	4.4	0.262	1.167	1.187	0.276	1.319	1.347	0.276	1.293	1.321
	4.5	0.275	1.225	1.255	0.289	1.385	1.428	0.289	1.357	1.401

NOTE:
This table is symmetric about CL unit.

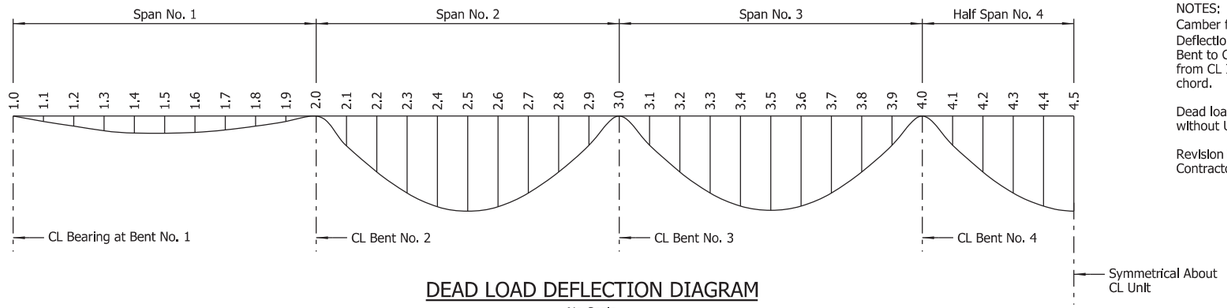

DEAD LOAD DEFLECTION DIAGRAM
No Scale

(1) The mechanical couplers shall be Dayton Superior D250SCA Bar Lock Epoxy Couplers or an alternate approved type in accordance with the ARDOT Qualified Products List (QPL). Due to space constraints, the shear bolts on the couplers between adjacent modules shall not be tightened until both modules are in their final positions. It will be necessary to loosely install the couplers on each module's end diaphragm reinforcing, remove the center stop pins, and slide the couplers against the module's concrete immediately prior to setting an adjacent module. Once the adjacent module is in place, the mechanical couplers shall be slid over the adjacent module's reinforcing and centered between the ends of the modules, prior to re-inserting the center stop pins and torquing the shear bolts. The cost of mechanical couplers shall not be measured for separate payment but shall be subsidiary to the price bid for Item "PREFABRICATED SUPERSTRUCTURE MODULES". Mechanical couplers shall develop at least 125% of the specified yield strength of the reinforcing steel.

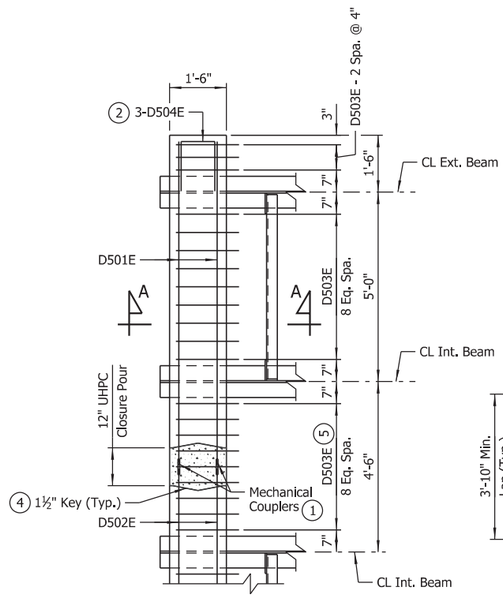

PLAN - END BENT DIAPHRAGM
Scale: ½" = 1'-0"

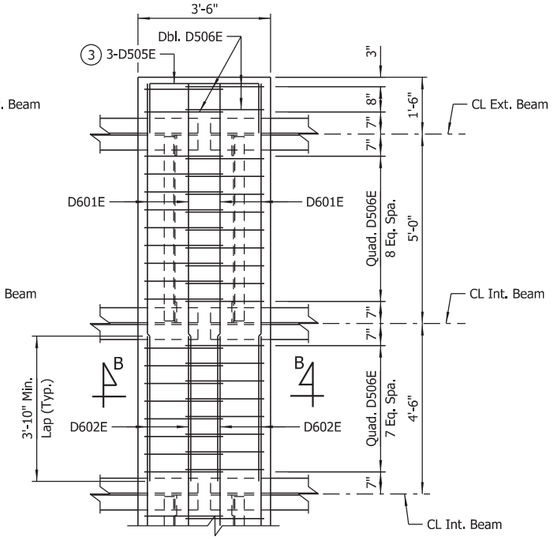

PLAN - INTERMEDIATE BENT DIAPHRAGM
Scale: ½" = 1'-0"

NOTE:
For "SECTION A-A" and "SECTION B-B", see Dwg. No. 64421.

(2) Spaced with top 3 rows of D501E bars.

(3) Spaced with D601E bars passing through beam web.

(4) Provide joint surface with Class 4, Exposed Aggregate Finish per Subsection 802.19(b)(4) with "Concrete Surface Profile 6" or rougher, as established by the International Concrete Repair Institute.

(5) Shift D503E as required to avoid conflict with Mechanical Couplers. Maintain 8" max. spacing between stirrups.

NOTES:
Camber for dead load deflection plus vertical curve +/- ¼" tolerance. Deflections shown for end spans are along CL Beam from CL Bearing at End Bent to CL Int. Bent. Deflections shown for interior spans are along CL Beam from CL Int. Bent to CL Int. Bent. Negative sign (-) indicates point above chord.

Dead load deflections shown include an assumed loading of 15 psf in bays without UHPC closures to account for stay-in-place metal deck forms.

Revision to the deflection tables may be necessary upon review of the Contractor's submitted forming details.

STATE OF ARKANSAS
LICENSED PROFESSIONAL ENGINEER
No.14498
ADAM B. HALL

DIGITALLY SIGNED 8-13-2021
BRIDGE ENGINEER

SHEET 4 OF 4
DETAILS OF 380'-0"
CONTINUOUS W-BEAM UNIT
HWY. 77 OVER RELIEF TO
RIGHT HAND CHUTE OF LITTLE RIVER

ROUTE SEC.

ARKANSAS STATE HIGHWAY COMMISSION
LITTLE ROCK, ARK.

DRAWN BY: JLD DATE: FEB. 2021 FILENAME: b100955x5_s4.dgn
CHECKED BY: ABH DATE: JUNE 2021 SCALE: As Shown
DESIGNED BY: BWD DATE: JAN. 2021
BRIDGE NO. 07560 DRAWING NO. 64373

abhall 8/13/2021 9:54:30 AM
WORKSPACE: ARDOT Bridge (2019)
L:\2017\1701642 - ARDOT Job 100955\Drawings\b100955x5_S404_DF.dgn
REVISED DATE:

DATE REVISED	DATE FILMED	DATE REVISED	DATE FILMED	FED. ROAD DIST. NO.	STATE	FED. AID PROJ. NO.	SHEET NO.	TOTAL SHEETS
				6	ARK.			
				JOB NO.		100955	197	356
				(1) 07561		LAYOUT		64374

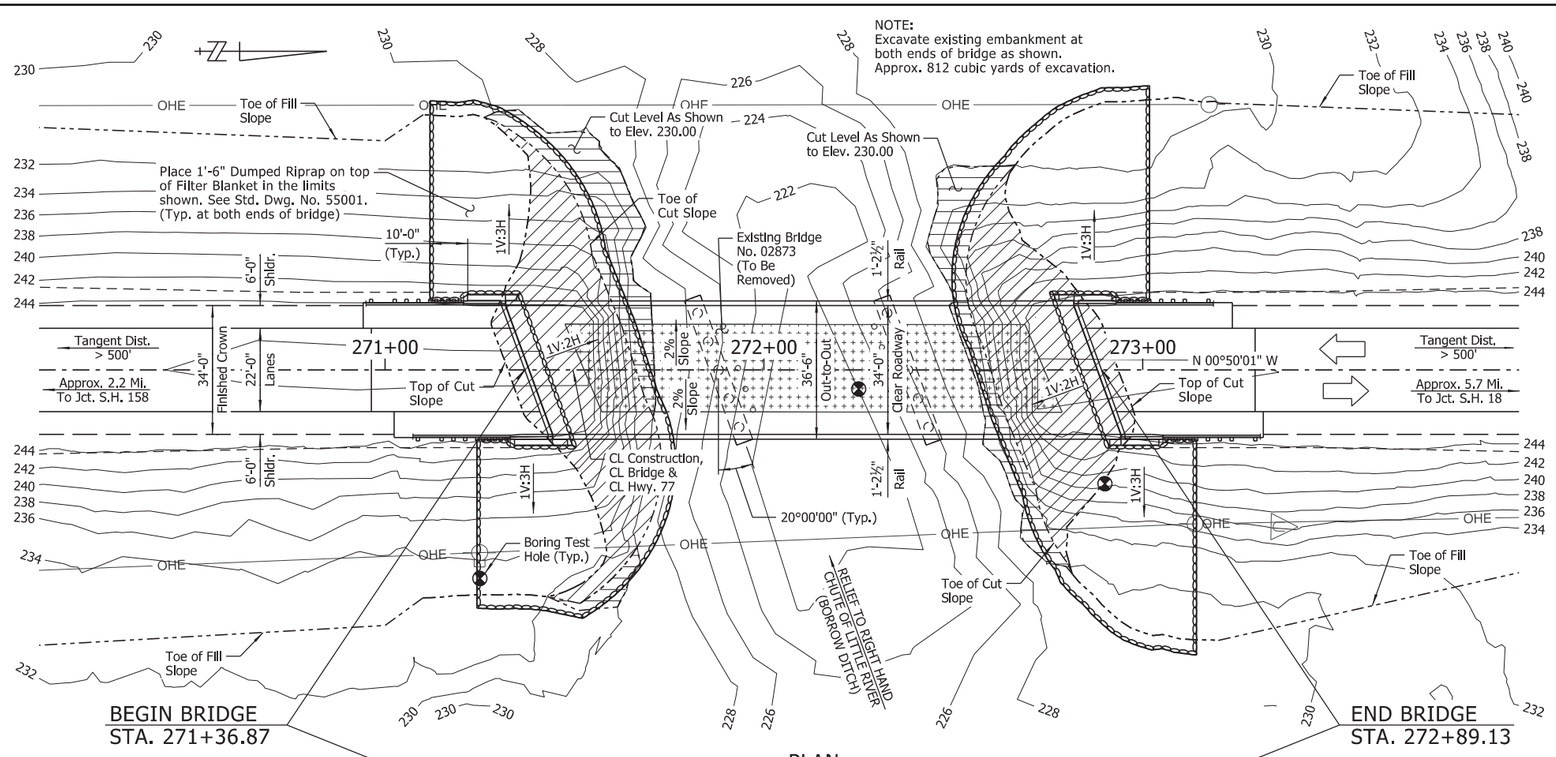

PLAN

NOTE:
The proposed bridge has been positioned to avoid interference with the existing piling. The Contractor shall verify measurements before driving any piling. Any adjustments necessary to fit the proposed bridge to the existing bridge location shall be submitted for the Engineer's approval.

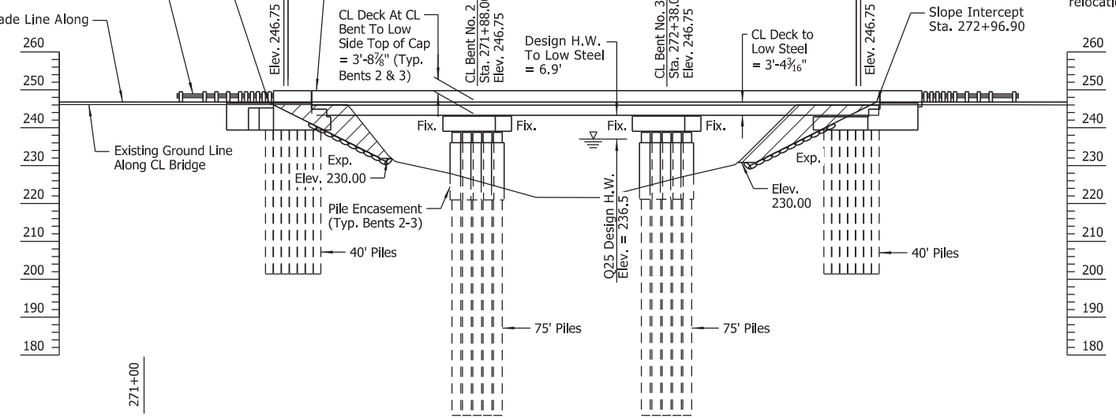

NOTES:
For "PROJECT GENERAL NOTES", see Dwg. No. 64303.

For "ELEVATION OF SOIL BORINGS", see Dwg. No. 64375.

FOR R/W DATA, SEE ROADWAY PLANS

NOTE:
Stations shown are along CL Construction. Elevations shown are theoretical working point elevations at CL Bridge. Any vertical dimension referenced to CL Deck is based on theoretical working point elevation at CL Bridge. See "ROUNDING DETAIL" on Std. Dwg. No. 55007 for additional information.

NOTE:
Use Type Special Approach Slab at each end of bridge. See Dwg. No. 64430.

Use Type Special Approach Gutters at each end of bridge. See Dwg. Nos. 64427-64429.

PILE BEARING TABLE

BENTS	REQUIRED MINIMUM ULTIMATE BEARING CAPACITY (TONS)	MIN. TIP ELEVATION	ANTICIPATED DRIVING RESISTANCE AT MIN. TIP (TONS)	ESTIMATED MIN. RATED HAMMER ENERGY (FT.-LBS. PER BLOW)
1	124	201.00	320	107,100
2	377	164.00	740	212,500
3	358	164.00	740	212,500
4	124	201.00	340	107,100

ELEVATION

NOTE:
Required minimum ultimate bearing capacity corresponds to the minimum post driving capacity to be obtained after an allowance for water jetting or any other methods employed to facilitate pile installation.

Anticipated Driving Resistance corresponds to the resistance to be overcome to achieve minimum tip elevation without any water jetting or other methods employed to facilitate pile installation.

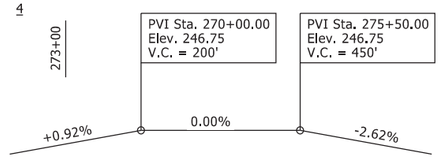

VERTICAL CURVE DATA

Hwy. 77
(Theoretical Grade Along CL Construction)

EXISTING UTILITIES LEGEND

OHE = Overhead Electric

NOTE:
Utilities shown are based on locations at time of survey and do not reflect any potential utility relocations prior to construction.

GENERAL NOTES

STEEL SHELL PILING: Piling in Bents 1 & 4 shall be 24" diameter concrete filled steel shell piles and shall be driven to meet the requirements of the "PILE BEARING TABLE". Piling in Bents 2 & 3 shall be 30" diameter concrete filled steel shell piles and shall be driven to meet the requirements of the "PILE BEARING TABLE". All piling shall be driven with an approved air, steam, or diesel hammer. Piling in end bents shall be driven after embankment to bottom of cap is in place. Lengths of piling shown are assumed for estimating quantities only. Actual lengths are to be determined in the field. No additional payment will be made for cut-off or build-up. Test piles are not required but may be driven for the Contractor's information in accordance with Subsection 805.08(g). No piles will be paid for as Test Piles.

Water jetting or other methods as approved by the Engineer may be required to achieve minimum penetration. This work shall not be paid for directly, but shall be considered incidental to the items "STEEL SHELL PILING (24" DIA.)" and "STEEL SHELL PILING (30" DIA.)".

PILE ENCASEMENT: Pile encasement for Bents 2 and 3 shall extend from 3' below bottom of cap to 3' below natural or finished ground. See Dwg. No. 64333 for additional information.

DRIVING SYSTEM: The driving system approval and the ultimate bearing capacity determination for piling shall be based on the requirements of Subsection 805.09(b), "Method B - Wave Equation Analysis (WEAP)" and SP "PILE DRIVING SYSTEM". See the "PILE BEARING TABLE" for the estimated minimum rated hammer energy required to overcome the anticipated driving resistance for all piles at each bent. If the Contractor elects to use water jetting or other approved methods to obtain the minimum tip elevations shown while driving only to the required minimum ultimate bearing capacity, the minimum rated hammer energy required will be lower and shall be accounted for in the driving system chosen by the Contractor.

EXISTING BRIDGE: Existing Bridge No. 02873 (Log Mile 5.94) is 122.2' in length, 28.5' wide (24.0' clear roadway) and consists of a concrete slab on I-beam spans (3 spans total) supported by 16" precast concrete pile bents. Plans of the existing structure, if available, may be obtained upon request to the Construction Contract Development Section of the Program Management Division.

REMOVAL AND SALVAGE: The Contractor shall remove existing Bridge No. 02873 in accordance with Section 205. All material from the existing bridge shall become property of the Contractor.

DETAIL DRAWINGS:	DRAWING NO(S).
Foundation Improvement Plan	64376
End Bents	64310, 64312, 64377-64380
Intermediate Bents	64332-64334, 64381
Common Details Of 34' Clear Roadway Steel Superstructure	64318-64319
150'-0" Continuous W-Beam Unit	64382-64384
Common Superstructure Details	64421-64424
Elastomeric Bearings	64425-64426
Type Special Approach Gutters	64427-64429
Type Special Approach Slabs	64430
Dumped Riprap	55001
General Notes For Steel Bridge Structures	55006
Details For Steel Bridge Structures	55007
Poured Silicone Joint	55008
Concrete Filled Steel Shell Piling	55021
Bridge Traffic Rail	55070

HYDRAULIC DATA

FLOOD DESCRIPTION	FREQUENCY	TOTAL DISCHARGE (2)	DISCHARGE THIS SITE	(1) NATURAL WATER SURFACE ELEVATION	WATER SURFACE ELEVATION WITH BACKWATER
	YEARS	CFS	CFS	FEET	FEET
DESIGN	25	42,656	4,925	235.5	236.5
BASE	100	59,368	6,872	236.3	237.8
EXTREME	500	69,379	8,027	237.1	238.6
OVERTOPPING	>500	N/A	N/A	N/A	N/A

(1) Unconstricted water surface without structure or roadway approaches

(2) The total discharge includes flow at this site, Hwy. 77 over Ditch No. 1, Hwy. 77 over Right Hand Chute of Little River, Hwy. 77 over Ditch No. 2, and Hwy. 77 over Relief to Right Hand Chute of Little River.

Q100 Backwater Elevation For Existing Structure = 238.1

Proposed Low Bridge Chord Elev. = 243.40
Existing Low Bridge Chord Elev. = 242.86 (survey data)

Drainage Area = 2,098.0 square miles.
Historical High Water Elev. = N/A

STATE OF ARKANSAS ★★★ LICENSED PROFESSIONAL ENGINEER ★★★ No.14498 ADAM B. HALL

DIGITALLY SIGNED 8-13-2021
BRIDGE ENGINEER

SHEET 1 OF 2
LAYOUT OF BRIDGE
HIGHWAY 77 OVER RELIEF TO RIGHT HAND CHUTE OF LITTLE RIVER (BORROW DITCH)
HWYS. 77, 140, 158, & 181
STRS. & APPRS. (MISSISSIPPI CO.) (S)
MISSISSIPPI COUNTY

ROUTE 77 SEC. 2

ARKANSAS STATE HIGHWAY COMMISSION

LITTLE ROCK, ARK.

DRAWN BY: MRA DATE: AUG. 2020 FILENAME: b100955x6_L1.dgn
CHECKED BY: DRG DATE: AUG. 2020 SCALE: 1" = 20'-0"
DESIGNED BY: CSW DATE: AUG. 2020

BRIDGE NO. 07561 DRAWING NO. 64374

abnall 8/13/2021 9:54:35 AM
WORKSPACE: ARDOT Bridge (2019)
L:\20\7\07f642 - ARDOT Job 100955\Drawings\b100955x6_SI0L_L0.dgn
REVISED DATE:

DATE REVISED	DATE FILMED	DATE REVISED	DATE FILMED

FED. ROAD DIST. NO.	STATE	FED. AID PROJ. NO.	SHEET NO.	TOTAL SHEETS
6	ARK.			
JOB NO.		100955	198	356
(1) 07561		LAYOUT		64375

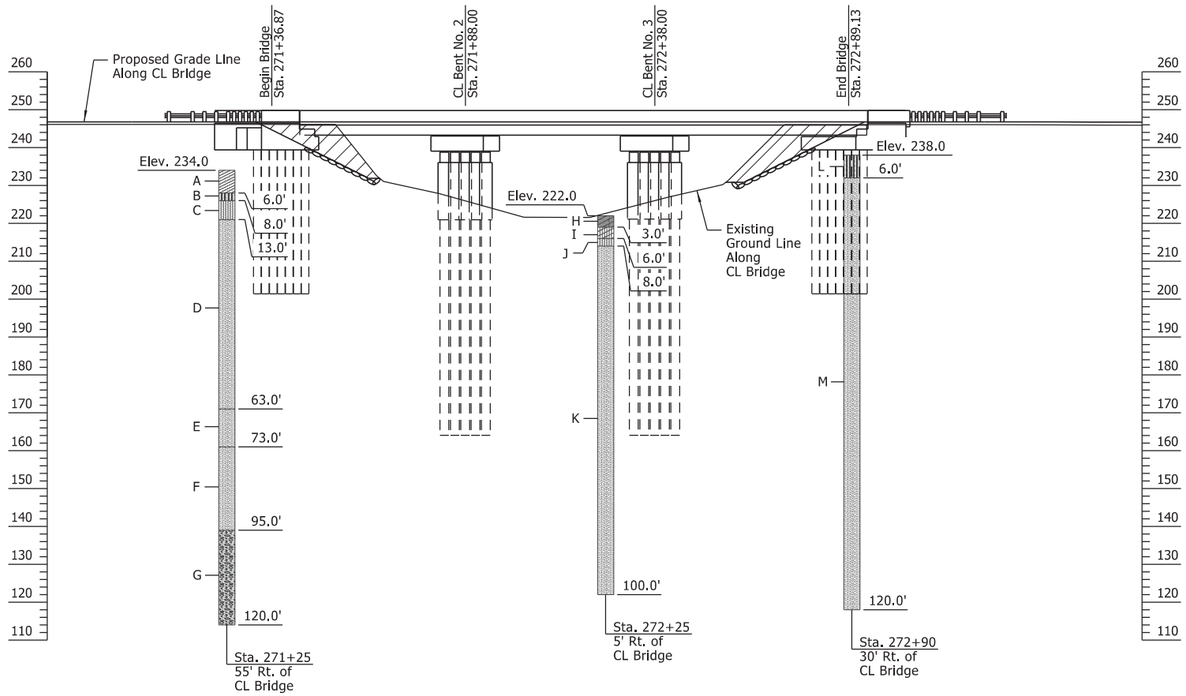

ELEVATION OF SOIL BORINGS

BORING LEGEND

A - Loose brown clayey fine sand
B - Loose brown fine sandy silt, slightly clayey
C - Loose brown silty fine sand
D - Very loose gray fine to medium sand
E - Medium dense brown fine sand, slightly silty w/ occasional decayed organics
F - Dense to very dense gray fine to medium sand
G - Dense to very dense gray fine to coarse sand, slightly silty w/ a little fine gravel
H - Soft brown fine sandy clay
I - Soft brown silty clay, slightly sandy
J - Very loose silty fine sand
K - Very loose grayish brown fine to medium sand w/ trace fine gravel
L - Very loose brown and gray fine sandy silt
M - Loose brown and gray fine to medium sand

N-VALUES

Sta. 271+25 Offset 55' Rt.	Sta. 272+25 Offset 5' Rt.	Sta. 272+90 Offset 30' Rt.
1.5-2.5, N=7	1.5-2.5, N=5	1.5-2.5, N=3
4.0-5.0, N=6	4.0-5.0, N=5	4.0-5.0, N=4
6.5-7.5, N=5	6.5-7.5, N=3	9.0-10.0, N=5
9.0-10.0, N=5	9.0-10.0, N=3	14.0-15.0, N=19
14.0-15.0, N=3	14.0-15.0, N=13	19.0-20.0, N=24
19.0-20.0, N=20	19.0-20.0, N=8	24.0-25.0, N=28
24.0-25.0, N=23	24.0-25.0, N=19	29.0-30.0, N=23
29.0-30.0, N=28	29.0-30.0, N=24	34.0-35.0, N=27
34.0-35.0, N=29	34.0-35.0, N=27	39.0-40.0, N=27
39.0-40.0, N=29	39.0-40.0, N=28	44.0-45.0, N=19
44.0-45.0, N=27	44.0-45.0, N=20	49.0-50.0, N=20
49.0-50.0, N=27	49.0-50.0, N=20	54.0-55.0, N=20
54.0-55.0, N=30	54.0-55.0, N=23	59.0-60.0, N=26
59.0-60.0, N=30	59.0-60.0, N=25	64.0-65.0, N=25
64.0-65.0, N=27	64.0-65.0, N=37	69.0-70.0, N=39
69.0-70.0, N=51	69.0-70.0, N=30	74.0-75.0, N=31
74.0-75.0, N=76	74.0-75.0, N=79	79.0-80.0, N=47
79.0-80.0, N=43	79.0-80.0, N=35	89.0-90.0, N=85
89.0-90.0, N=37	89.0-90.0, N=84	99.0-100.0, N=50
99.0-100.0, N=50/2"	99.0-100.0, N=50/9"	109.0-110.0, N=34
109.0-110.0, N=56		119.0-120.0, N=68
119.0-120.0, N=50/6"		

STATE OF ARKANSAS
LICENSED PROFESSIONAL ENGINEER
No.14498
ADAM B. HALL

DIGITALLY SIGNED 8-13-2021
BRIDGE ENGINEER

SHEET 2 OF 2
LAYOUT OF BRIDGE
HIGHWAY 77 OVER RELIEF TO RIGHT HAND CHUTE OF LITTLE RIVER (BORROW DITCH)
HWYS. 77, 140, 158, & 181
STRS. & APPRS. (MISSISSIPPI CO.) (S)
MISSISSIPPI COUNTY

ROUTE 77 SEC. 2

ARKANSAS STATE HIGHWAY COMMISSION
LITTLE ROCK, ARK.

DRAWN BY: CSW DATE: AUG. 2020 FILENAME: b100955x6_L2.dgn
CHECKED BY: ABH DATE: JUNE 2021 SCALE: 1" = 20'-0"
DESIGNED BY: CSW DATE: AUG. 2020

BRIDGE NO. 07561 DRAWING NO. 64375

abhall 8/13/2021 9:54:36 AM
WORKSPACE: ARDOT Bridge (2019)
L:\20T\170764 - ARDOT Job 100955\Drawings\b100955x6_S02_L0.dgn
REVISED DATE:

DATE REVISED	DATE FILMED	DATE REVISED	DATE FILMED

FED. ROAD DIST. NO.	STATE	FED. AID PROJ. NO.	SHEET NO.	TOTAL SHEETS
6	ARK.			
JOB NO.		100955	199	356
(1) 07561		FNDN. IMP. PLAN		64376

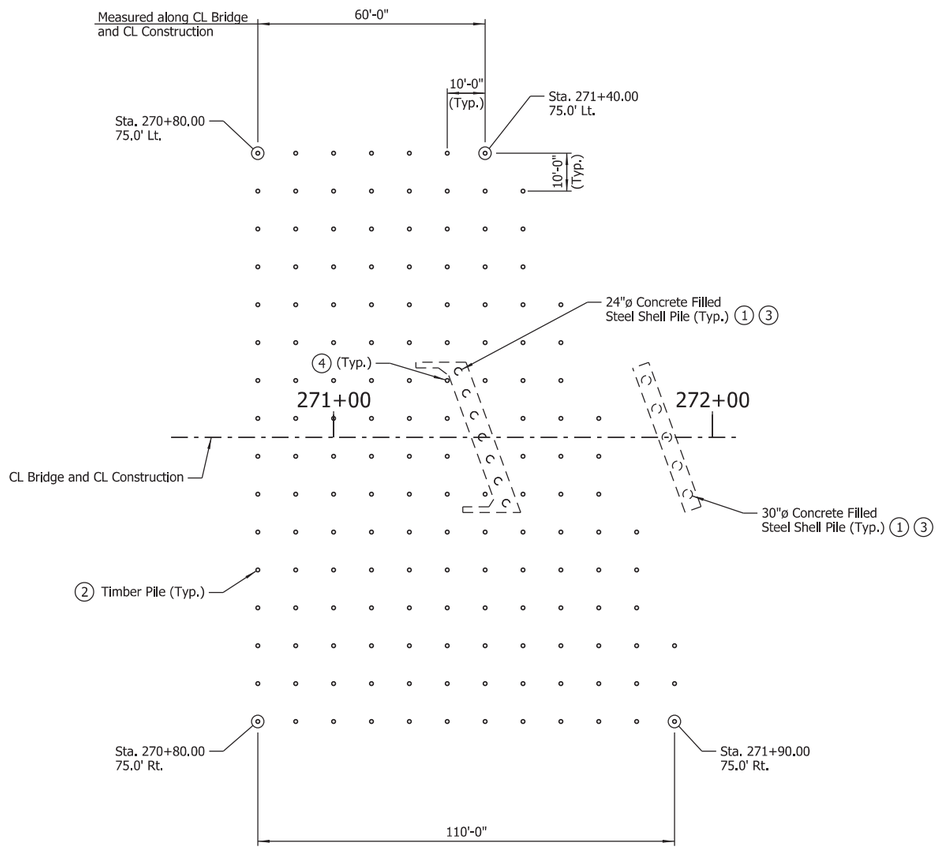

TIMBER PILE LAYOUT FOR FOUNDATION IMPROVEMENT

Scale: 1" = 20'-0"

TIMBER PILE DATA

Bent No.	Estimated No. of Piles	Min. Tip Elevation	Estimated Pile Length (FT)
1	155	215	31

NOTES:
Diameter(s) of timber piles shall be in accordance with SP "TIMBER PILING FOR SOIL DENSIFICATION".

Drive number and length of timber piles as directed by the Engineer.

Contractor shall coordinate with the Engineer to avoid any and all utilities within the soil densification areas.

Timber piling outside the limits of the existing bridge and roadway shall be driven prior to closing existing bridge to traffic.

(1) Steel shell piling shall be driven prior to timber piling at each bent.

(2) Timber piling shall be in accordance with SP "TIMBER PILING FOR SOIL DENSIFICATION".

(3) Any existing riprap interfering with the driving of timber pile or steel shell pile shall be removed prior to driving as directed by the Engineer. Cost of removing riprap shall be considered subsidiary to the item "Removal of Existing Bridge Structure (Site No. 6)".

(4) Shift timber piling as required to avoid conflicts with proposed caps.

NOTE:
For "DETAILS OF TIMBER PILE TIP" and "TYPICAL SPLICE DETAILS", see Dwg. No. 64308.

STATE OF ARKANSAS
LICENSED PROFESSIONAL ENGINEER
No.8017
JOHN H. RUDDELL

DIGITALLY SIGNED 8-13-2021
BRIDGE ENGINEER

DETAILS OF FOUNDATION IMPROVEMENT PLAN
HWY. 77 OVER RELIEF TO RIGHT HAND CHUTE OF LITTLE RIVER (BORROW DITCH)

ROUTE SEC.

ARKANSAS STATE HIGHWAY COMMISSION

LITTLE ROCK, ARK.

DRAWN BY: CWT DATE: JUNE 2021 FILENAME: b100955x6_FN.dgn
CHECKED BY: JHR DATE: JUNE 2021 SCALE: 1" = 20'-0"
DESIGNED BY: JME DATE: JUNE 2021

BRIDGE NO. 07561 DRAWING NO. 64376

abhall 8/13/2021 9:54:38 AM
WORKSPACE: ARDOT Bridge (2019)
L:\2017\17017642 - ARDOT Job 100955\Drawings\b100955x6_SI03_FIP.dgn
REVISED DATE:

DATE REVISED	DATE FILMED	DATE REVISED	DATE FILMED	FED. ROAD DIST. NO.	STATE	FED. AID PROJ. NO.	SHEET NO.	TOTAL SHEETS
				6	ARK.			
				JOB NO.		100955	200	356
				(1) 07561		END BENTS		64377

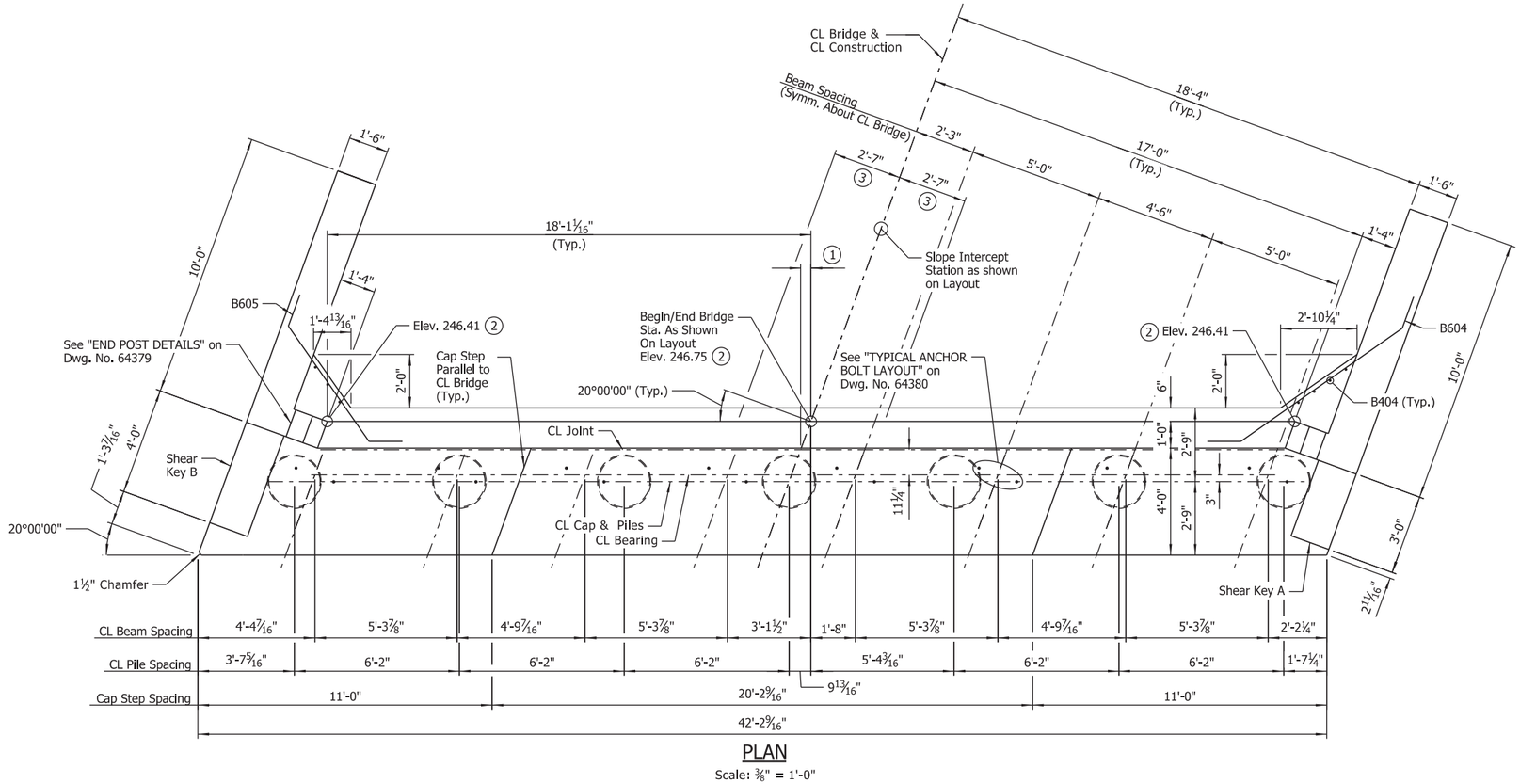

PLAN

Scale: ⅜" = 1'-0"

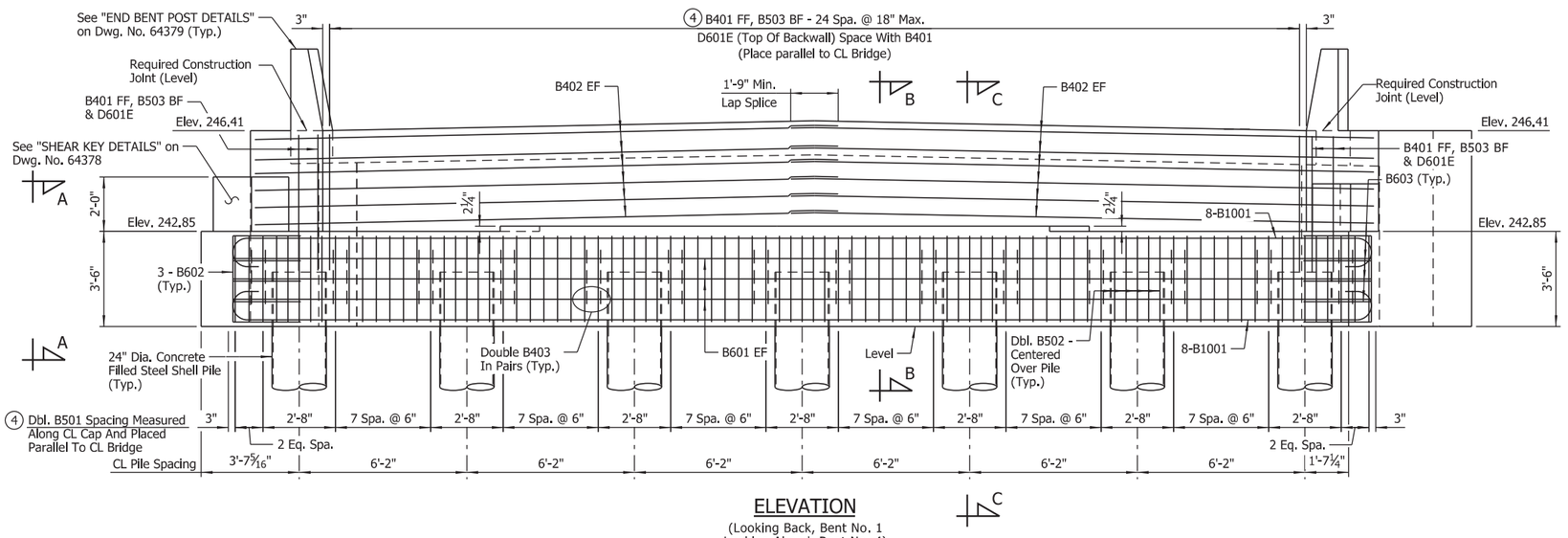

ELEVATION

(Looking Back, Bent No. 1
Looking Ahead, Bent No. 4)
Scale: ⅜" = 1'-0"

Bent No. 1 Stations Increase

Bent No. 4 Stations Increase

(1) See "DETAIL A"

(2) Top of Backwall is to be constructed level longitudinally.

(3) See "ROUNDING DETAIL" on Std. Dwg. No. 55007

(4) See "REINFORCEMENT DETAIL" on Dwg. No. 64379

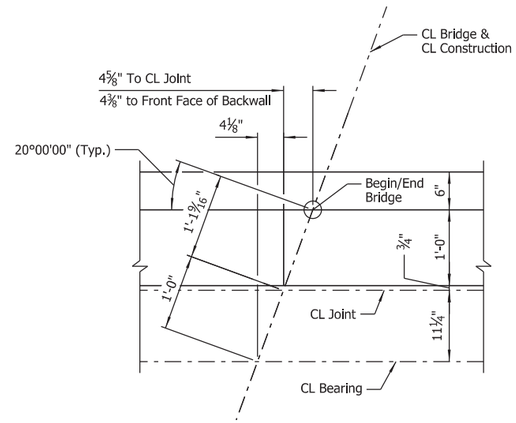

DETAIL A

Scale: 1" = 1'-0"

NOTES:
1. For "SECTIONS" and "END BENT WALL ARMOR DETAIL", see Dwg. No. 64310.
2. For "GENERAL NOTES" and "BAR LIST", see Dwg. No. 64380.

NOTE:
No portion of the backwall above the required construction joint shall be poured until the prefabricated superstructure is in place. No heavy construction equipment shall be allowed within 10' of the backwall until the prefabricated superstructure for the adjacent span has been installed.

STATE OF ARKANSAS
LICENSED PROFESSIONAL ENGINEER
No.8017
JOHN H. RUDDELL

DIGITALLY SIGNED 8-13-2021
BRIDGE ENGINEER

SHEET 1 OF 4
DETAILS OF END BENTS
HWY. 77 OVER RELIEF TO RIGHT HAND CHUTE OF LITTLE RIVER (BORROW DITCH)

ROUTE SEC.

ARKANSAS STATE HIGHWAY COMMISSION
LITTLE ROCK, ARK.

DRAWN BY: HEW DATE: APR. 2021 FILENAME: b100955x6_A1.dgn
CHECKED BY: JHR DATE: JUNE 2021 SCALE: As Shown
DESIGNED BY: CSW DATE: APR. 2021
BRIDGE NO. 07561 DRAWING NO. 64377

abhall 8/13/2021 9:54:39 AM
WORKSPACE: ARDOT Bridge (2019)
L:\2017\1701642 - ARDOT Job 100955\Drawings\b100955x6_520I_AB.dgn
REVISED DATE:

DATE REVISED	DATE FILMED	DATE REVISED	DATE FILMED

FED. ROAD DIST. NO.	STATE	FED. AID PROJ. NO.	SHEET NO.	TOTAL SHEETS
6	ARK.			
JOB NO.		100955	201	356
① 07561		END BENTS		64378

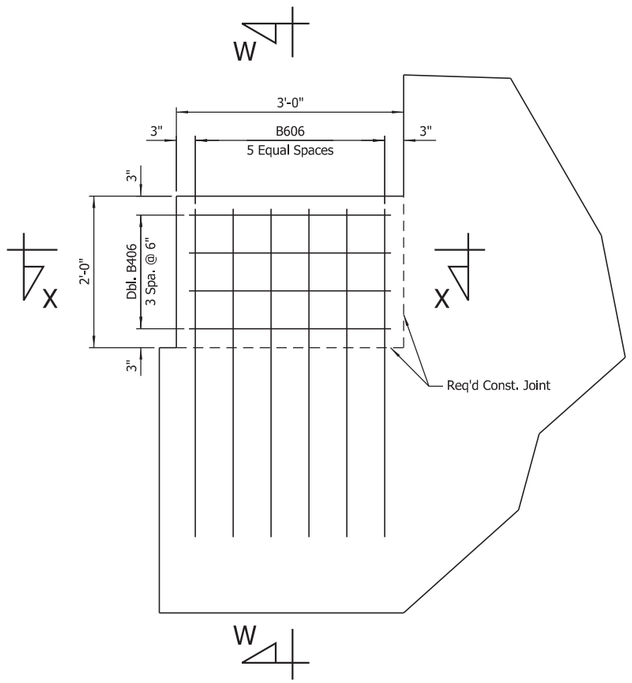

SHEAR KEY A

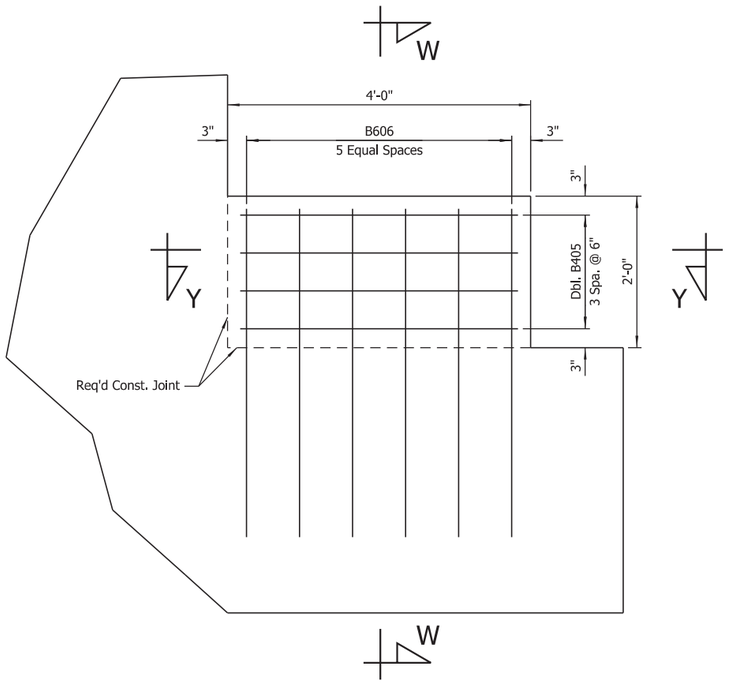

SHEAR KEY B

SHEAR KEY DETAILS
Scale: 1" = 1'-0"

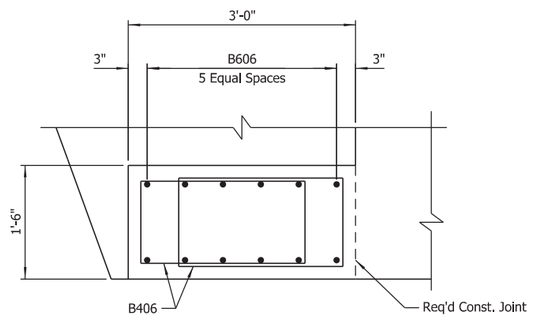

SECTION X-X
Scale: 1" = 1'-0"

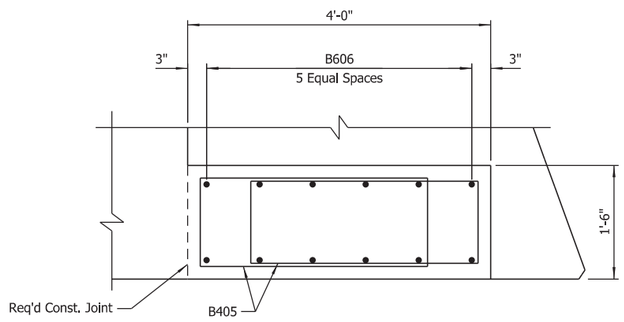

SECTION Y-Y
Scale: 1" = 1'-0"

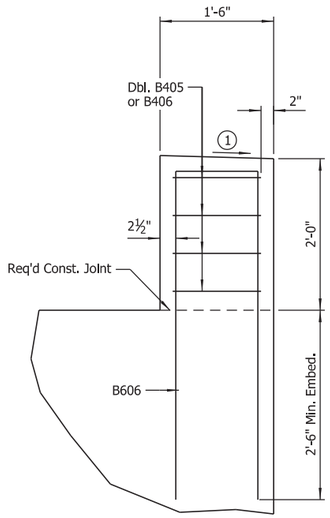

SECTION W-W
Scale: 1" = 1'-0"

① Slope to drain, provide minimum ½" wash across top width

STATE OF ARKANSAS
LICENSED PROFESSIONAL ENGINEER
No.8017
JOHN H. RUDDELL
DIGITALLY SIGNED 8-13-2021
BRIDGE ENGINEER

SHEET 2 OF 4
DETAILS OF END BENTS
HWY. 77 OVER RELIEF TO RIGHT HAND CHUTE OF LITTLE RIVER (BORROW DITCH)
ROUTE SEC.
ARKANSAS STATE HIGHWAY COMMISSION
LITTLE ROCK, ARK.

DRAWN BY: HEW DATE: APR. 2021 FILENAME: b100955x6_A2.dgn
CHECKED BY: JHR DATE: JUNE 2021 SCALE: As Shown
DESIGNED BY: CSW DATE: APR. 2021
BRIDGE NO. 07561 DRAWING NO. 64378

abholl 8/13/2021 9:54:41 AM
WORKSPACE: ARDOT Bridge (2019)
L:\20IT\170IT642 - ARDOT Job 100955\Drawings\b100955x6_S202_AB.dgn
REVISED DATE:

DATE REVISED	DATE FILMED	DATE REVISED	DATE FILMED

FED. ROAD DIST. NO.	STATE	FED. AID PROJ. NO.	SHEET NO.	TOTAL SHEETS
6	ARK.			
JOB NO.		100955	202	356
① 07561		END BENTS		64379

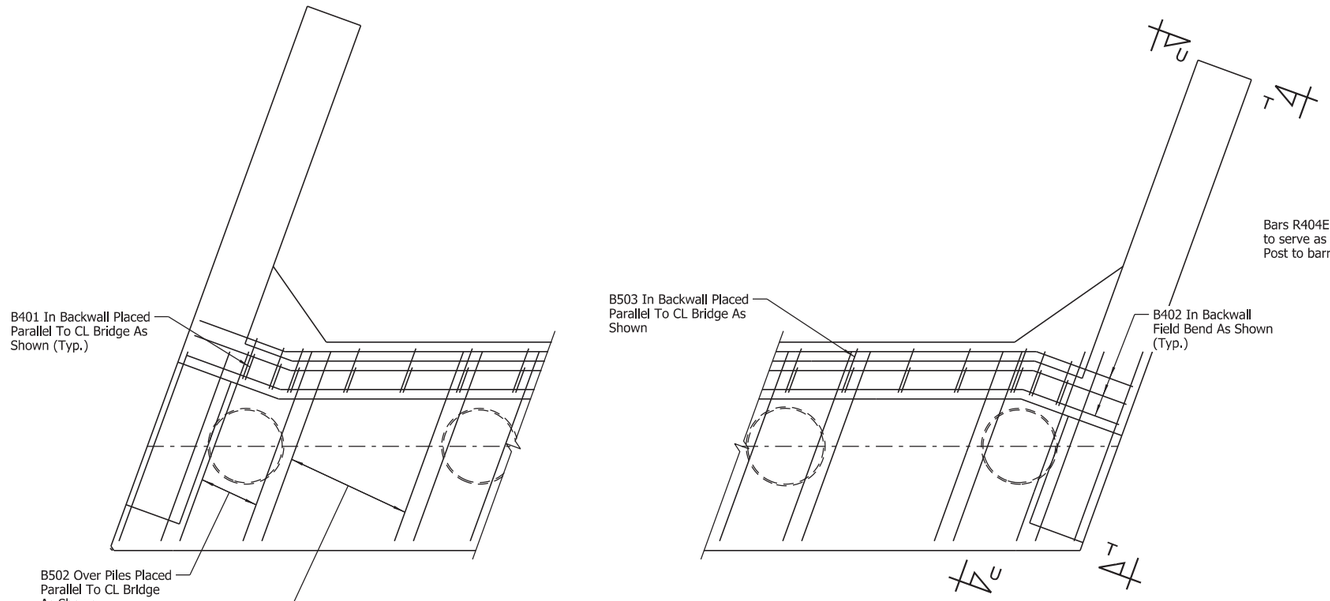

REINFORCEMENT DETAIL

Scale: ½" = 1'-0"

NOTE:
For "VIEW U-U", see Dwg. No. 64312.

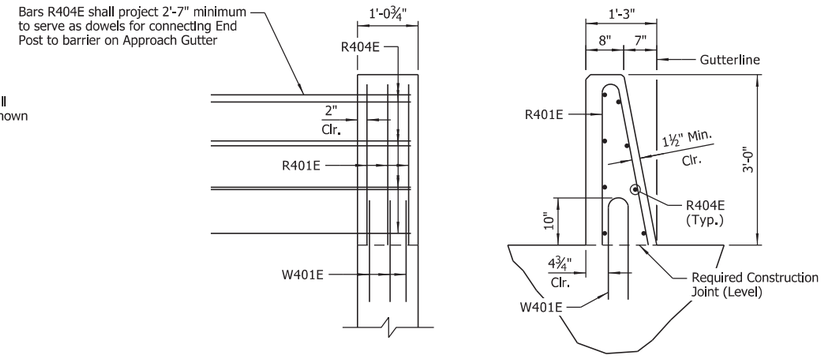

END BENT POST DETAILS

Scale: ½" = 1'-0"

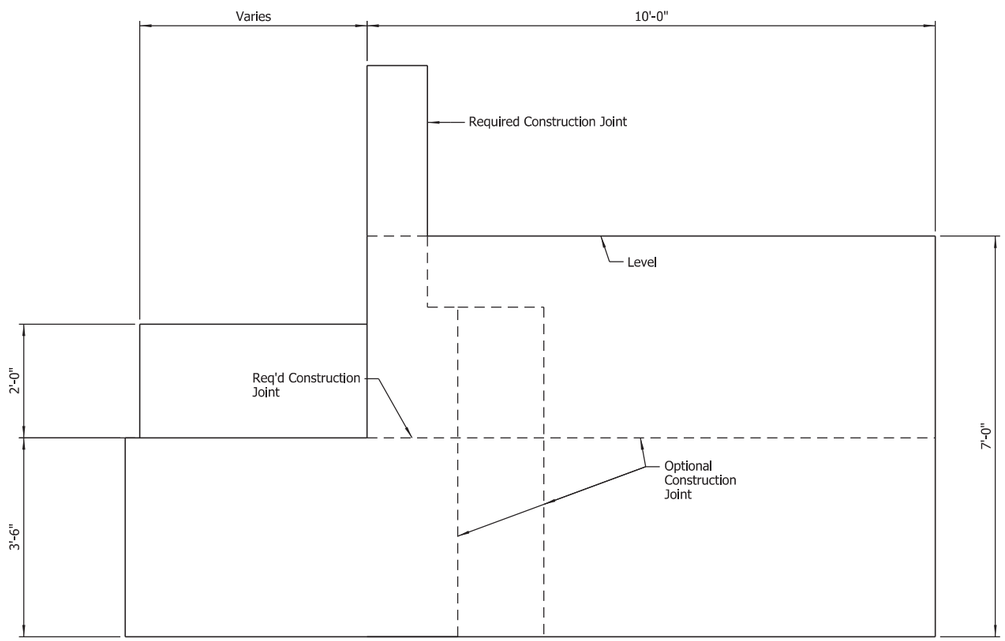

VIEW T-T

Scale: ¾" = 1'-0"

STATE OF ARKANSAS
LICENSED PROFESSIONAL ENGINEER
No.8017
JOHN H. RUDDELL

DIGITALLY SIGNED 8-13-2021
BRIDGE ENGINEER

SHEET 3 OF 4
DETAILS OF END BENTS
HWY. 77 OVER RELIEF TO RIGHT HAND CHUTE OF LITTLE RIVER (BORROW DITCH)

ROUTE SEC.

ARKANSAS STATE HIGHWAY COMMISSION
LITTLE ROCK, ARK.

DRAWN BY: HEW DATE: APR. 2021 FILENAME: b100955x6_A3.dgn
CHECKED BY: JHR DATE: JUNE 2021 SCALE: As Shown
DESIGNED BY: CSW DATE: APR. 2021

BRIDGE NO. 07561 DRAWING NO. 64379

abholl 8/13/2021 9:54:41 AM
WORKSPACE: ARDOT Bridge (2019)
L:\2017\1701642 - ARDOT Job 100955\Drawings\b100955x6_S203_AB.dgn
REVISED DATE:

DATE REVISED	DATE FILMED	DATE REVISED	DATE FILMED	FED. ROAD DIST. NO.	STATE	FED. AID PROJ. NO.	SHEET NO.	TOTAL SHEETS
				6	ARK.			
				JOB NO.		100955	203	356
				(1) 07561		END BENTS		64380

BAR LIST (PER BENT)

MARK	NO. REQ'D	LENGTH	"A"	"B"	P.D.
B401	29	8'-3"			2"
B402	24	21'-8"			Str.
B403	168	4'-6"			3"
B404	7	5'-5"			Str.
B405	8	8'-8"	1'-2"	3'-0"	2"
B406	8	7'-0"	1'-2"	2'-2"	2"
B501	108	16'-0"			2½"
B502	70	11'-10"			2½"
B503	29	6'-6"			2½"
B601	6	41'-10"			Str.
B602	6	7'-7"	2'-11"	2'-6"	4½"
B603	6	10'-0"			4½"
B604	10	9'-10"			4½"
B605	10	7'-9"			4½"
B606	12	9'-5"	1'-1"	4'-4"	4½"
B1001	16	44'-8"			10"
(1) D601E	29	5'-2"			4½"
(1) R401E	6	5'-11"			2½"
(1) R404E	16	3'-8"			Str.
(1) W401E	6	3'-11"			3¾"
W402	40	14'-4"	1'-2"	6'-8"	2"
W701	50	9'-8"			Str.

NOTES:
Number of bars shown is for one end bent only.

Dimensions of bars are out-to-out.

Bars designated with "E" suffix shall be epoxy coated.

(1) Epoxy coated reinforcing in end bents shall be paid for as "REINFORCING STEEL - BRIDGE (GRADE 60)".

BAR BENDING DIAGRAMS

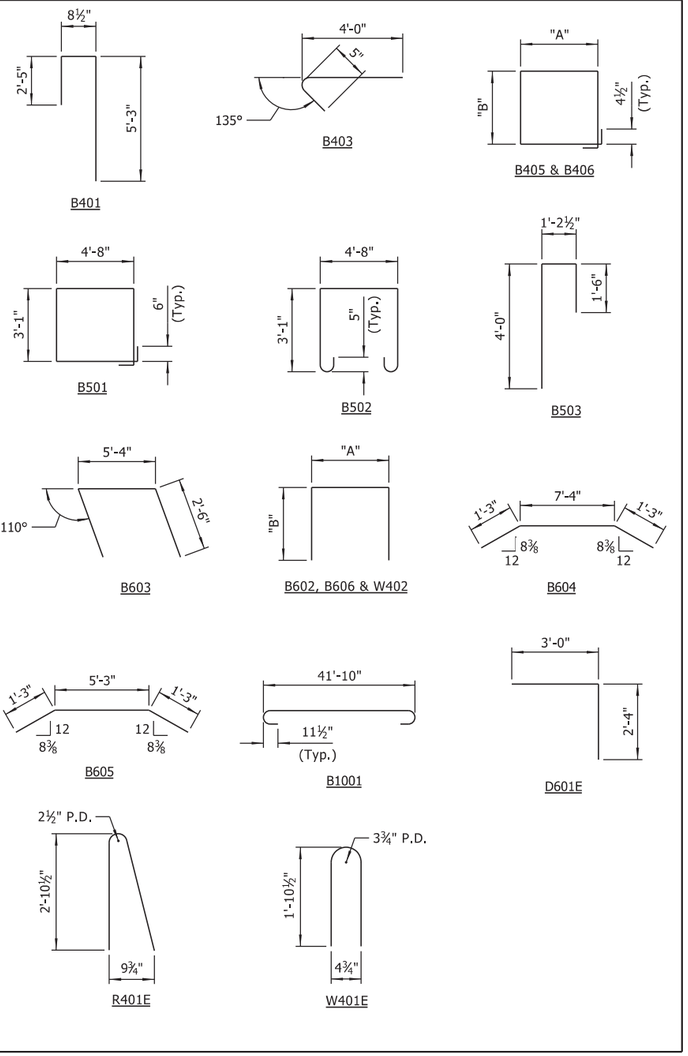

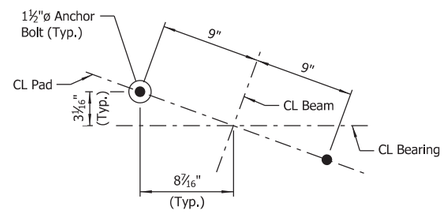

TYPICAL ANCHOR BOLT LAYOUT

No Scale

NOTE:
For Details of Elastomeric Bearings, see Dwg. No. 64425.

GENERAL NOTES:

Structural steel in end bents shall be ASTM A709, Gr. 50W and shall be paid for as "STRUCTURAL STEEL IN BEAM SPANS (A709, Gr. 50W)".

Class 2 Protective Surface Treatment shall be applied to the top of backwall and the roadway face and top of end posts.

For details of steel shell piling, see Std. Dwg. No. 55021.

See Std. Dwg. No. 55006 for additional notes.

STATE OF ARKANSAS
LICENSED PROFESSIONAL ENGINEER
No.8017
JOHN H. RUDDELL

DIGITALLY SIGNED 8-13-2021
BRIDGE ENGINEER

SHEET 4 OF 4
DETAILS OF END BENTS
HWY. 77 OVER RELIEF TO RIGHT HAND CHUTE OF LITTLE RIVER (BORROW DITCH)

ROUTE SEC.

ARKANSAS STATE HIGHWAY COMMISSION
LITTLE ROCK, ARK.

DRAWN BY: HEW DATE: APR. 2021 FILENAME: b100955x6_A4.dgn
CHECKED BY: JHR DATE: JUNE 2021 SCALE: As Shown
DESIGNED BY: CSW DATE: APR. 2021

BRIDGE NO. 07561 DRAWING NO. 64380

abnall 8/13/2021 9:54:42 AM
WORKSPACE: ARDOT Bridge (2019)
L:\20\T\07\642 - ARDOT Job 100955\Drawings\b100955x6_S204_AB.dgn
REVISED DATE:

DATE REVISED	DATE FILMED	DATE REVISED	DATE FILMED

FED. ROAD DIST. NO.	STATE	FED. AID PROJ. NO.	SHEET NO.	TOTAL SHEETS
6	ARK.			
JOB NO.		100955	204	356
(1) 07561		INT. BENTS		64381

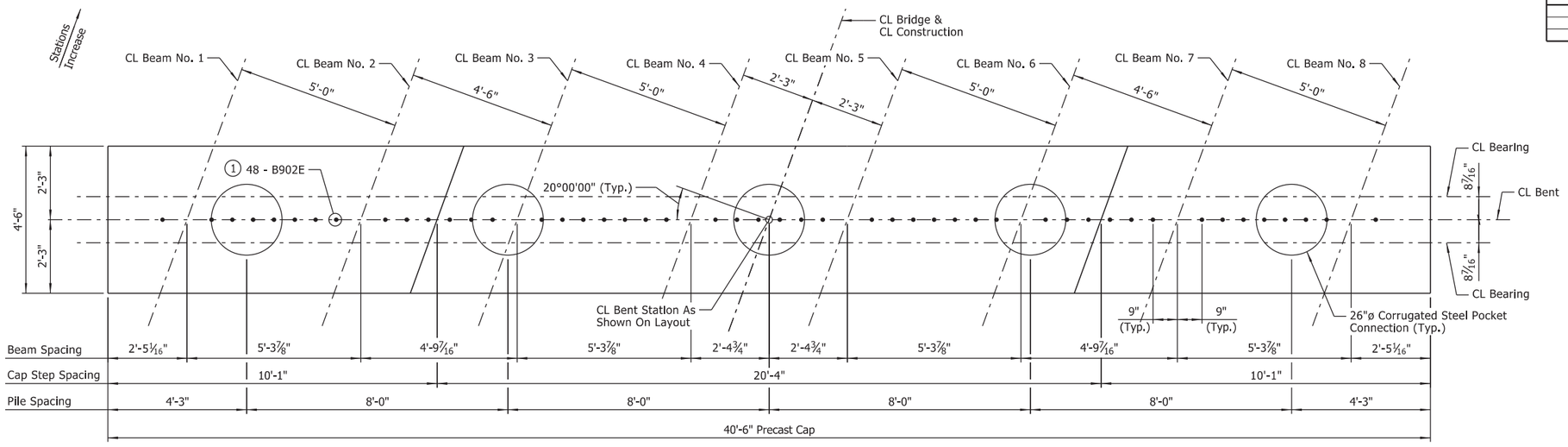

PLAN - BENT NOS. 2 & 3

Scale: ½" = 1'-0"

NOTES:
Precast bent caps at Bent Nos. 2 and 3 shall be fabricated and installed in accordance with SP "PRECAST CONCRETE BENT CAPS".

For "GENERAL NOTES - PRECAST CONCRETE BENT CAPS", see Dwg. No. 64333.

For details of elastomeric bearings, see Dwg. Nos. 64425 & 64426.

For "SECTIONS", see Dwg. No. 64332.

For "PROJECT GENERAL NOTES", see Dwg. No. 64303.

For additional information, see Layout.

(1) Bars B902E within corrugated steel pocket connection shall be installed in the field at the time the pockets are filled. Minimum embedment = 2'-9".

(2) Dimension shown is for distance from outer limit of concrete cap to the limits of the corrugated steel pipe forming the pocket.

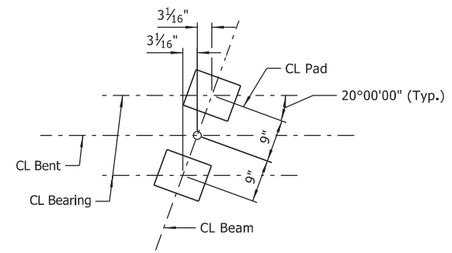

BEARING PAD LAYOUT

Scale: ¾" = 1'-0"

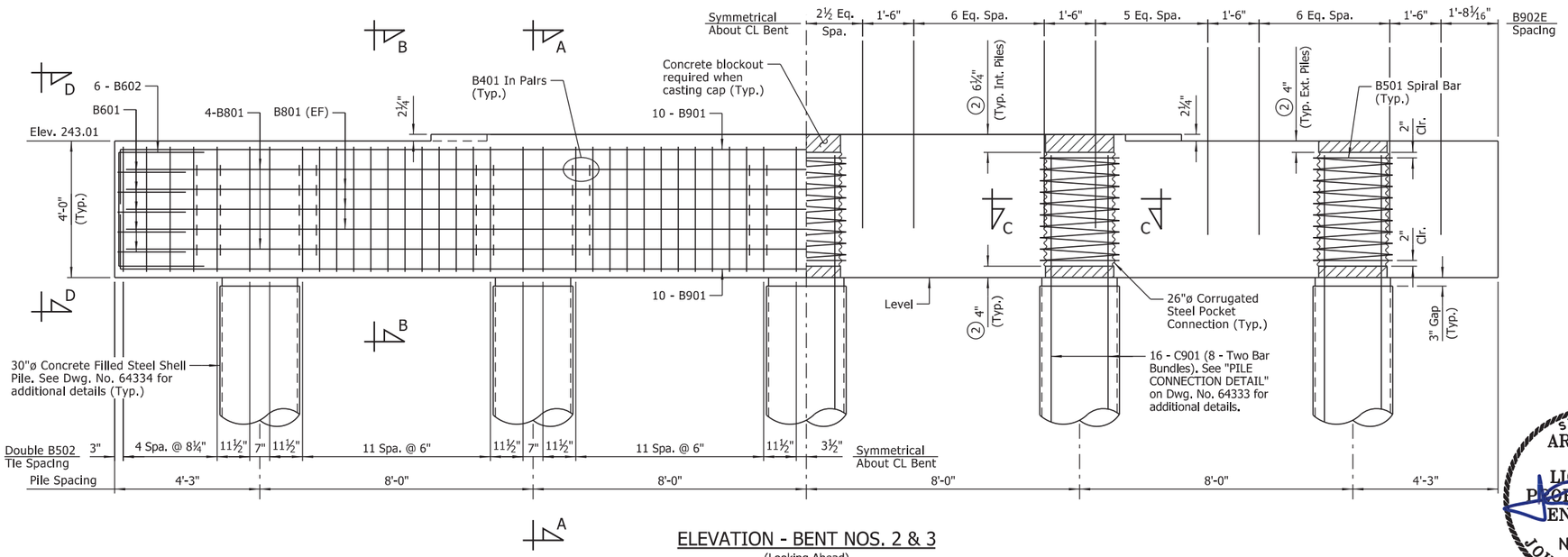

ELEVATION - BENT NOS. 2 & 3

(Looking Ahead)
Scale: ½" = 1'-0"

BAR LIST (PER BENT)

MARK	NO. REQ'D	LENGTH	P.D.
B401	200	4'-0"	3"
B501	5	97'-0"	30¼"
B502	136	15'-2"	2½"
B601	10	8'-9"	4½"
B602	12	8'-3"	4½"
B801	14	39'-11"	Str.
B901	20	42'-10"	9"
B902E	48	5'-6"	Str.
C501	5	251'-11"	21¾"
(3) C901	80	14'-0"	Str.

(3) **Bars C901 shall be ASTM A706, Grade 60.**

BAR BENDING DIAGRAMS

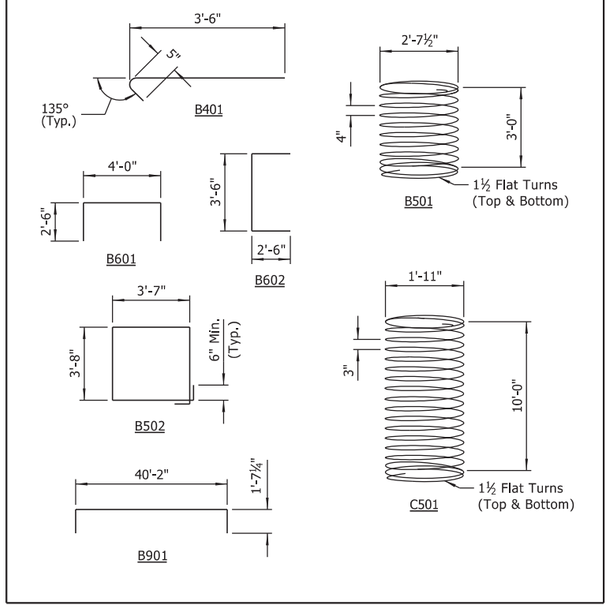

NOTES:
Dimensions of bars are out-to-out.

Bars designated with "E" suffix shall be epoxy coated.

No direct payment for bars in bent cap or concrete filled steel shell piles. Cost of all reinforcing steel to be included in unit price for "PRECAST CONCRETE BENT CAPS".

STATE OF ARKANSAS
LICENSED PROFESSIONAL ENGINEER
No.8017
JOHN H. RUDDELL

DIGITALLY SIGNED 8-13-2021
BRIDGE ENGINEER

DETAILS OF INTERMEDIATE BENTS HWY. 77 OVER RELIEF TO RIGHT HAND CHUTE OF LITTLE RIVER (BORROW DITCH)

ROUTE SEC.

ARKANSAS STATE HIGHWAY COMMISSION

LITTLE ROCK, ARK.

DRAWN BY: CWT DATE: APR. 2021 FILENAME: b100955x6_BE1.dgn
CHECKED BY: JHR DATE: MAY 2021 SCALE: As Shown
DESIGNED BY: ERM DATE: APR. 2021

BRIDGE NO. 07561 DRAWING NO. 64381

abhall 8/13/2021 9:54:43 AM
WORKSPACE: ARDOT Bridge (2019)
L:\2019\1701642 - ARDOT Job 100955\Drawings\b100955x6_5205_BE.dgn
REVISED DATE:

DATE REVISED	DATE FILMED	DATE REVISED	DATE FILMED	FED. ROAD DIST. NO.	STATE	FED. AID PROJ. NO.	SHEET NO.	TOTAL SHEETS
				6	ARK.			
				JOB NO.		100955	205	356
				1	07561	150' UNIT		64382

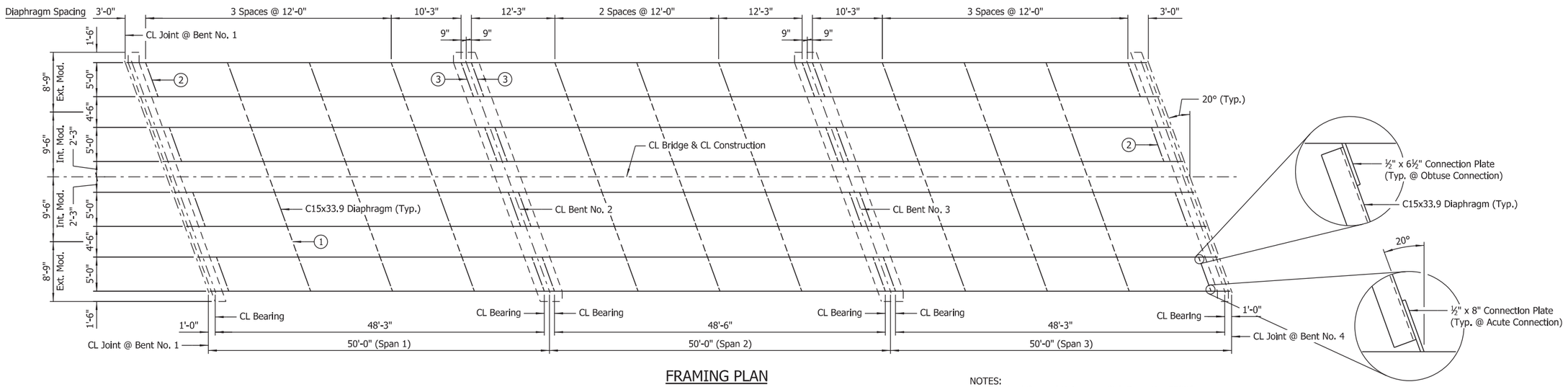

FRAMING PLAN

Scale: ⅛" = 1'-0"

1. Diaphragms between modules shall be installed after prefabricated modules are installed and prior to constructing closure pours.
2. Diaphragms adjacent to concrete End Bent diaphragms shall be fabricated such that the channel flanges project away from concrete end bent diaphragms. Note that orientation of flange projection shall be considered when determining obtuse/acute connection locations.
3. Diaphragms at Intermediate Bents shall be fabricated such that the channel flanges project away from CL Bent. Note that orientation of flange projection shall be considered when determining obtuse/acute connection locations.

NOTES:
For Standard General Notes, see Std. Dwg. No. 55006.

For "SHEAR CONNECTOR DETAIL," see Std. Dwg. No. 55007.

All structural steel shall be ASTM A709, Gr. 50W unless noted otherwise. The cost of the structural steel shall be subsidiary to the unit price bid for item "PREFABRICATED SUPERSTRUCTURE MODULES". Diaphragms placed between separate modules shall be included in the cost of the prefabricated modules.

For painting of beam ends adjacent to bridge deck expansion joints, see "PROJECT GENERAL NOTES" on Dwg. No. 64303.

For diaphragm and connection plate details, see "DETAIL B" and "DETAIL C" on Dwg. No. 64422.

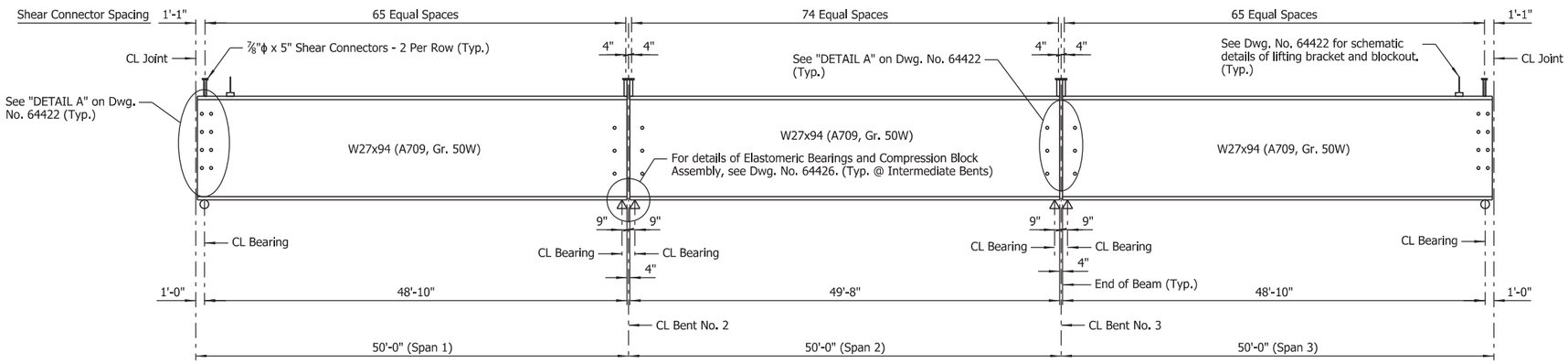

BEAM ELEVATION

No Scale

STATE OF ARKANSAS
LICENSED PROFESSIONAL ENGINEER
No.8017
JOHN H. RUDDELL

DIGITALLY SIGNED 8-13-2021
BRIDGE ENGINEER

SHEET 1 OF 3
DETAILS OF 150'-0"
CONTINUOUS W-BEAM UNIT
HWY. 77 OVER RELIEF TO RIGHT HAND
CHUTE OF LITTLE RIVER (BORROW DITCH)

ROUTE SEC.

ARKANSAS STATE HIGHWAY COMMISSION
LITTLE ROCK, ARK.

DRAWN BY:	HEW	DATE:	JAN. 2021	FILENAME:	b100955x6_s1.dgn
CHECKED BY:	JHR	DATE:	JUNE 2021	SCALE:	As Shown
DESIGNED BY:	BWD	DATE:	DEC. 2020		

BRIDGE NO. 07561 DRAWING NO. 64382

abhall 8/13/2021 9:54:46 AM
WORKSPACE: ARDOT Bridge (2019)
L:\2017\17017642 - ARDOT Job 100955\Drawings\b100955x6_S401_SF.dgn
REVISED DATE:

DATE REVISED	DATE FILMED	DATE REVISED	DATE FILMED

FED. ROAD DIST. NO.	STATE	FED. AID PROJ. NO.	SHEET NO.	TOTAL SHEETS
6	ARK.			
JOB NO.		100955	206	356

(I)	07561	150' UNIT	64383

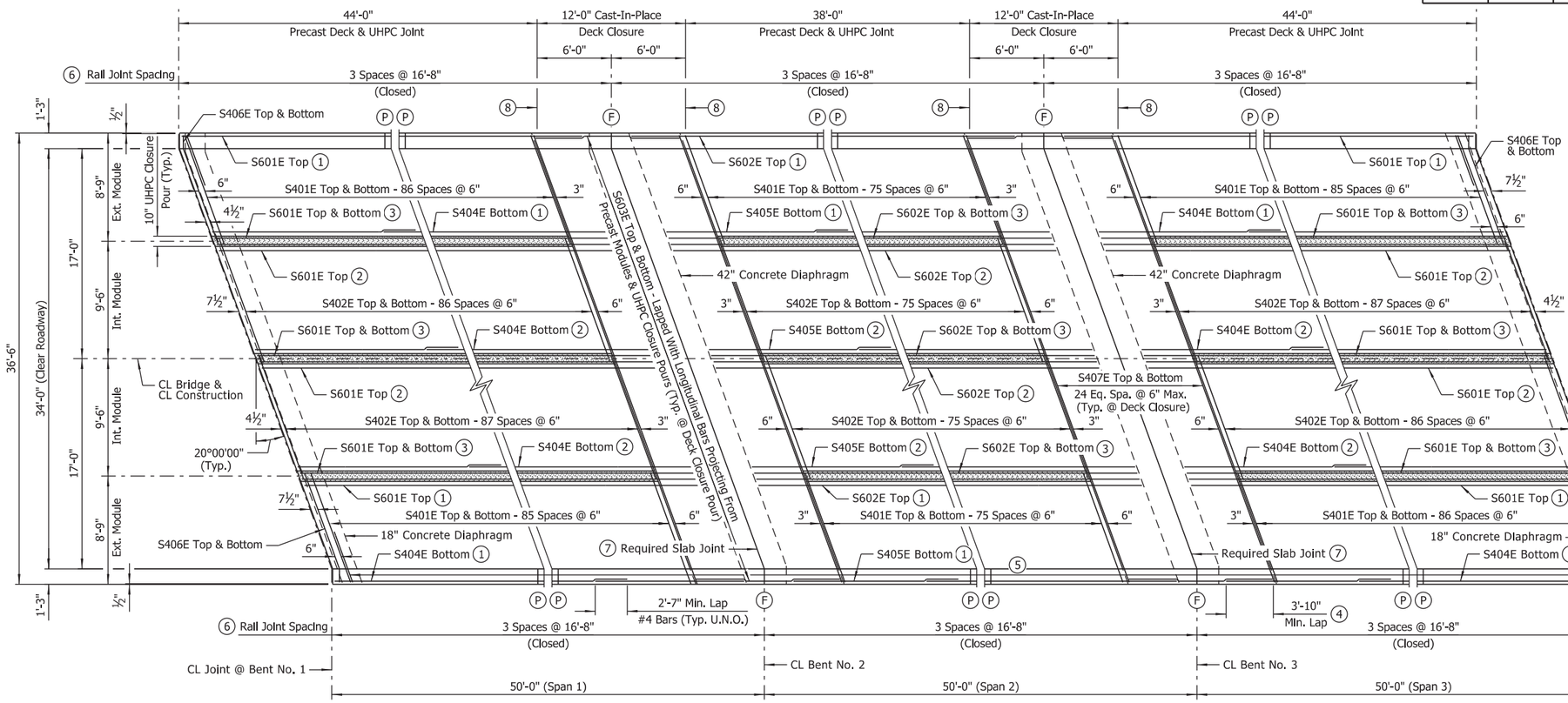

(1) Placed as shown in "EXTERIOR MODULE REINFORCING DETAIL." See Dwg. No. 64319.

(2) Placed as shown in "INTERIOR MODULE REINFORCING DETAIL." See Dwg. No. 64319.

(3) Placed as shown in "UHPC LONGITUDINAL JOINT DETAIL." See Dwg. No. 64422.

(4) S603E bars shall have 3'-10" minimum lap with both #6 and #4 longitudinal bars.

(5) S403E Bundled with #4 Bars in Top of Exterior Modules and #4 Bars In Top of Closure Pours (Typ. on Both Sides of Bridge)

(6) Rail joints designated with symbol (F) shall be stopped 6" from top of slab. All other rail joints with symbol (P) shall be partial depth joints stopped 16" from top of slab.

(7) See "TRANSVERSE SLAB JOINT DETAIL" on Std. Dwg. No. 55007.

(8) Measured at gutterline

LEGEND

U.N.O. = Unless Noted Otherwise

BAR LIST

MARK	NO. REQ'D	LENGTH	"A"	"B"	P.D.
S401E	996	9'-5"			Str.
S402E	1,004	10'-8"			Str.
S403E	598	5'-4"			3"
S404E	264	25'-3"			Str.
S405E	132	24'-4"			Str.
S406E	8	9'-4"	8'-3"	1'-1"	3"
S407E	100	38'-6"			Str.
S601E	164	48'-2"			Str.
S602E	82	46'-0"			Str.
S603E	296	11'-8"			Str.
D500E	16	9'-1"			Str.
D501E	16	9'-0"	7'-8"	1'-4"	3¾"
D502E	32	10'-0"			Str.
D503E	138	6'-0"			2½"
D504E	6	3'-8½"			2½"
D505E	6	3'-4½"	1'-1"	1'-3"	2½"
D506E	512	7'-3½"	2'-2"	2'-8"	2½"
D507E	12	5'-2"			2½"

BAR LIST

MARK	NO. REQ'D	LENGTH	"A"	"B"	P.D.
D600E	20	11'-0"	9'-8"	1'-4"	4½"
D601E	36	11'-1"			Str.
D602E	56	14'-0"			Str.
R401E	612	5'-11"			2½"
R402E	48	5'-6"			Str.
R403E	612	3'-6"			3", 3¾"
R404E	144	16'-4"			Str.

REINFORCING PLAN

Scale: 3/16" = 1'-0"

LEFT SIDE DECK DRAIN STATIONS
271+53.81
272+03.81
272+59.81

RIGHT SIDE DECK DRAIN STATIONS
271+66.19
272+16.19
272+72.19

NOTE:
Stations shown are to CL Drain. For details of deck drains, see Dwg. No. 64423.

TABLE OF VARIABLES

CLOSED RAIL PANELS			OPEN RAIL PANELS						
PANEL LENGTH	A	R4XXE	PANEL LENGTH	B	C	D	E	F	R4XXE
16'-8"	33	R404E							

BAR BENDING DIAGRAMS

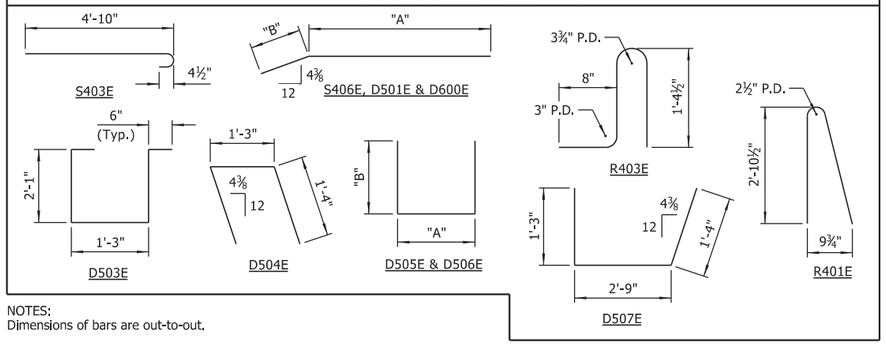

NOTES:
Dimensions of bars are out-to-out.

Bar designations ending with "E" indicate epoxy coated bars.

NOTES:
For Standard General Notes, see Std. Dwg. No. 55006.

For "PROJECT GENERAL NOTES," see Dwg. No. 64303.

Unless noted otherwise, spacing shown for all transverse reinforcing is measured along CL Bridge. Transverse reinforcing shall be placed parallel to skewed supports as shown.

For bridge traffic rail reinforcing details and details of partial-depth and full-depth rail joints, see Std. Dwg. No. 55070.

For details of concrete diaphragms, see Dwg. Nos. 64318, 64319, 64421 & 64384.

Edges of precast deck adjacent to cast-in-place closure pours shall be keyed and textured in accordance with details and notes on Dwg. No. 64422.

For additional clarity in transverse reinforcing placement near end of precast deck, see "TRANSVERSE REINFORCING SCHEMATICS" on Dwg. No. 64421.

Concrete in bridge superstructure shall be placed, consolidated and screeded off for the entire pour before any concrete has taken its initial set.

A minimum of 72 hours shall elapse between completion of the slab and the pouring of the bridge railing. Any railing pours made before the entire slab unit has been placed must be approved by the Engineer.

Concrete diaphragms shall be poured monolithically with the slab.

Removable forms shall be used when pouring diaphragms.

STATE OF ARKANSAS
LICENSED PROFESSIONAL ENGINEER
No.14498
ADAM B. HALL

DIGITALLY SIGNED 8-13-2021
BRIDGE ENGINEER

SHEET 2 OF 3
DETAILS OF 150'-0" CONTINUOUS W-BEAM UNIT
HWY. 77 OVER RELIEF TO RIGHT HAND CHUTE OF LITTLE RIVER (BORROW DITCH)

ROUTE SEC.

ARKANSAS STATE HIGHWAY COMMISSION
LITTLE ROCK, ARK.

DRAWN BY: JME DATE: JAN. 2021 FILENAME: b100955x6_s2.dgn
CHECKED BY: ABH DATE: JUNE 2021 SCALE: As Shown
DESIGNED BY: BWD DATE: DEC. 2020

BRIDGE NO. 07561 DRAWING NO. 64383

abhall 8/13/2021 9:54:48 AM
WORKSPACE: ARDOT Bridge (2019)
L:\20ITV\T01642 - ARDOT Job 100955\Drawings\b100955x6_S402_SB.dgn
REVISED DATE:

DATE REVISED	DATE FILMED	DATE REVISED	DATE FILMED	FED. ROAD DIST. NO.	STATE	FED. AID PROJ. NO.	SHEET NO.	TOTAL SHEETS
				6	ARK.			
				JOB NO.		100955	207	356
				(1) 07561		150' UNIT		64384

TABLE OF DEAD LOAD DEFLECTIONS (INCHES)

	Point Of Deflection	Beams 1 & 8			Beams 2, 4, 5 & 7			Beams 3 & 6		
		Structural Steel	Structural Steel + Slab	Structural Steel + Slab + UHPC + Rail	Structural Steel	Structural Steel + Slab	Structural Steel + Slab + UHPC + Rail	Structural Steel	Structural Steel + Slab	Structural Steel + Slab + UHPC + Rail
Span No. 1	1.0	0.000	0.000	0.000	0.000	0.000	0.000	0.000	0.000	0.000
	1.1	0.042	0.216	0.226	0.044	0.245	0.259	0.044	0.240	0.254
	1.2	0.079	0.409	0.429	0.083	0.464	0.492	0.083	0.454	0.483
	1.3	0.108	0.560	0.590	0.114	0.635	0.678	0.114	0.622	0.665
	1.4	0.126	0.656	0.686	0.133	0.743	0.786	0.133	0.728	0.771
	1.5	0.133	0.689	0.719	0.140	0.780	0.824	0.140	0.765	0.808
	1.6	0.126	0.656	0.686	0.133	0.743	0.786	0.133	0.728	0.771
	1.7	0.108	0.560	0.580	0.114	0.635	0.663	0.114	0.622	0.651
	1.8	0.079	0.409	0.419	0.083	0.464	0.478	0.083	0.454	0.469
	1.9	0.042	0.216	0.226	0.044	0.245	0.259	0.044	0.240	0.254
Span No. 2	2.0	0.000	0.000	0.000	0.000	0.000	0.000	0.000	0.000	0.000
	2.1	0.042	0.216	0.216	0.044	0.245	0.245	0.044	0.240	0.240
	2.2	0.079	0.409	0.409	0.083	0.464	0.464	0.083	0.454	0.454
	2.3	0.108	0.560	0.560	0.114	0.635	0.635	0.114	0.622	0.622
	2.4	0.126	0.656	0.656	0.133	0.743	0.743	0.133	0.728	0.728
	2.5	0.133	0.689	0.689	0.140	0.780	0.780	0.140	0.765	0.765
	2.6	0.126	0.656	0.656	0.133	0.743	0.743	0.133	0.728	0.728
	2.7	0.108	0.560	0.560	0.114	0.635	0.635	0.114	0.622	0.622
	2.8	0.079	0.409	0.409	0.083	0.464	0.464	0.083	0.454	0.454
	2.9	0.042	0.216	0.216	0.044	0.245	0.245	0.044	0.240	0.240
Span No. 3	3.0	0.000	0.000	0.000	0.000	0.000	0.000	0.000	0.000	0.000
	3.1	0.042	0.216	0.226	0.044	0.245	0.259	0.044	0.240	0.254
	3.2	0.079	0.409	0.419	0.083	0.464	0.478	0.083	0.454	0.469
	3.3	0.108	0.560	0.580	0.114	0.635	0.663	0.114	0.622	0.651
	3.4	0.126	0.656	0.686	0.133	0.743	0.786	0.133	0.728	0.771
	3.5	0.133	0.689	0.719	0.140	0.780	0.824	0.140	0.765	0.808
	3.6	0.126	0.656	0.686	0.133	0.743	0.786	0.133	0.728	0.771
	3.7	0.108	0.560	0.590	0.114	0.635	0.678	0.114	0.622	0.665
	3.8	0.079	0.409	0.429	0.083	0.464	0.492	0.083	0.454	0.483
	3.9	0.042	0.216	0.226	0.044	0.245	0.259	0.044	0.240	0.254
	4.0	0.000	0.000	0.000	0.000	0.000	0.000	0.000	0.000	0.000

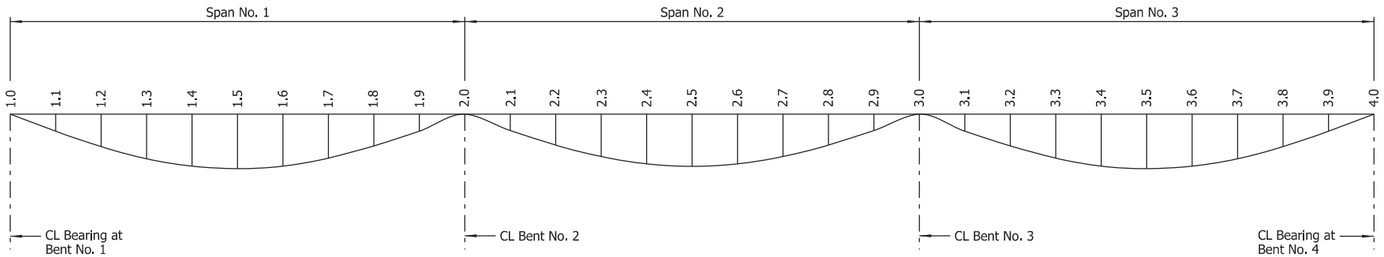

DEAD LOAD DEFLECTION DIAGRAM

No Scale

NOTES:

Camber for dead load deflection plus vertical curve +/- ¼" tolerance. Deflections shown for end spans are along CL Beam from CL Bearing at End Bent to CL Int. Bent. Deflections shown for interior span are along CL Beam from CL Int. Bent to CL Int. Bent. Negative sign (-) indicates point above chord.

Dead load deflections shown include an assumed loading of 15 psf in bays without UHPC closures to account for stay-in-place metal deck forms.

Revision to the deflection tables may be necessary upon review of the Contractor's submitted forming details.

(1) The mechanical couplers shall be Dayton Superior D250SCA Bar Lock Epoxy Couplers or an alternate approved type in accordance with the ARDOT Qualified Products List (QPL). Due to space constraints, the shear bolts on the couplers between adjacent modules shall not be tightened until both modules are in their final positions. It will be necessary to loosely install the couplers on each module's end diaphragm reinforcing, remove the center stop pins, and slide the couplers against the module's concrete immediately prior to setting an adjacent module. Once the adjacent module is in place, the mechanical couplers shall be slid over the adjacent module's reinforcing and centered between the ends of the modules, prior to re-inserting the center stop pins and torquing the shear bolts. The cost of mechanical couplers shall not be measured for separate payment but shall be subsidiary to the price bid for item "PREFABRICATED SUPERSTRUCTURE MODULES". Mechanical couplers shall develop at least 125% of the specified yield strength of the reinforcing steel.

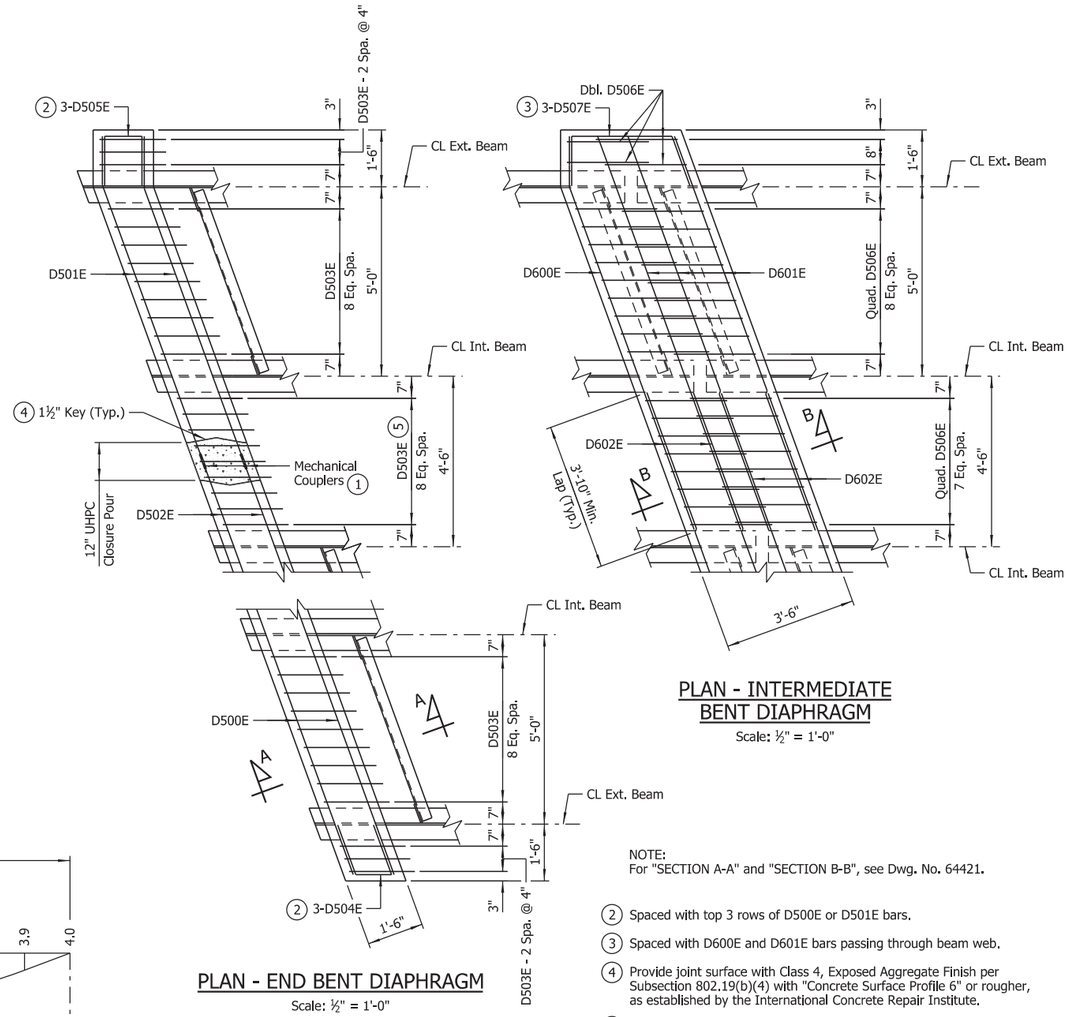

PLAN - INTERMEDIATE BENT DIAPHRAGM

Scale: ½" = 1'-0"

PLAN - END BENT DIAPHRAGM

Scale: ½" = 1'-0"

NOTE:
For "SECTION A-A" and "SECTION B-B", see Dwg. No. 64421.

(2) Spaced with top 3 rows of D500E or D501E bars.

(3) Spaced with D600E and D601E bars passing through beam web.

(4) Provide joint surface with Class 4, Exposed Aggregate Finish per Subsection 802.19(b)(4) with "Concrete Surface Profile 6" or rougher, as established by the International Concrete Repair Institute.

(5) Shift D503E as required to avoid conflict with Mechanical Couplers. Maintain 8" max. spacing between stirrups.

STATE OF ARKANSAS
LICENSED PROFESSIONAL ENGINEER
No.14498
ADAM B. HALL

DIGITALLY SIGNED 8-13-2021
BRIDGE ENGINEER

SHEET 3 OF 3
DETAILS OF 150'-0" CONTINUOUS W-BEAM UNIT
HWY. 77 OVER RELIEF TO RIGHT HAND CHUTE OF LITTLE RIVER (BORROW DITCH)

ROUTE SEC.

ARKANSAS STATE HIGHWAY COMMISSION

LITTLE ROCK, ARK.

DRAWN BY: JLD DATE: FEB. 2021 FILENAME: b100955x6_s3.dgn
CHECKED BY: ABH DATE: JUNE 2021 SCALE: As Shown
DESIGNED BY: BWD DATE: JAN. 2021

BRIDGE NO. 07561 DRAWING NO. 64384

abhall 8/13/2021 9:54:50 AM
WORKSPACE: ARDOT Bridge (2019)
L:\2017\07642 - ARDOT Job 100955\Drawings\b100955x6_S403_DF.dgn
REVISED DATE:

DATE REVISED	DATE FILMED	DATE REVISED	DATE FILMED	FED. ROAD DIST. NO.	STATE	FED. AID PROJ. NO.	SHEET NO.	TOTAL SHEETS
				6	ARK.			
				JOB NO.		100955	208	355
				(1) 07562		LAYOUT		64385

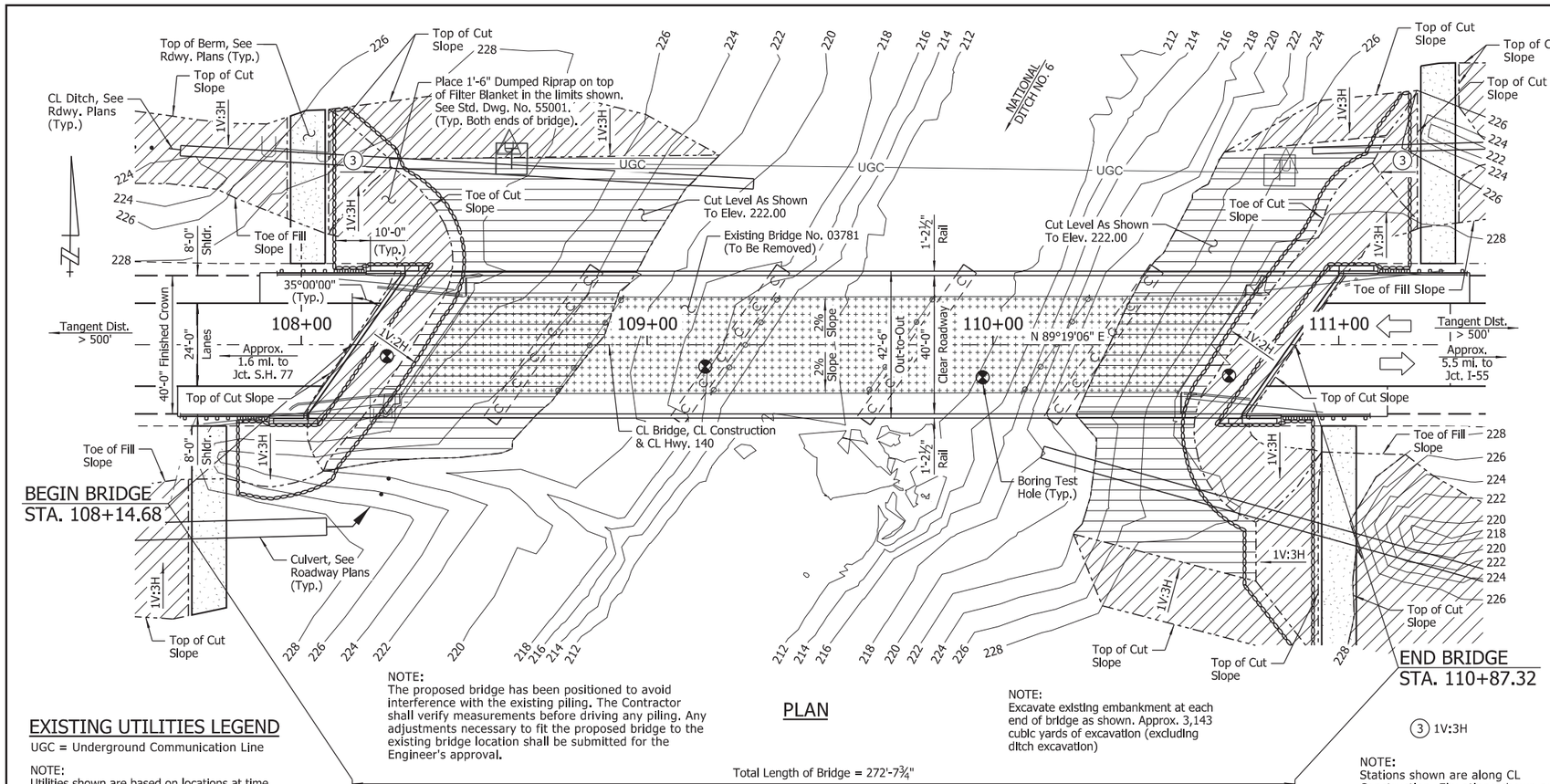

PLAN

NOTE:
The proposed bridge has been positioned to avoid interference with the existing piling. The Contractor shall verify measurements before driving any piling. Any adjustments necessary to fit the proposed bridge to the existing bridge location shall be submitted for the Engineer's approval.

NOTE:
Excavate existing embankment at each end of bridge as shown. Approx. 3,143 cubic yards of excavation (excluding ditch excavation)

③ 1V:3H

NOTE:
Stations shown are along CL Construction. Elevations shown are theoretical working point elevations at CL Bridge. Any vertical dimension referenced to CL Deck is based on theoretical working point elevation at CL Bridge. See "ROUNDING DETAIL" on Std. Dwg. No. 55007 for additional information.

EXISTING UTILITIES LEGEND

UGC = Underground Communication Line

NOTE:
Utilities shown are based on locations at time of survey and do not reflect ant potential utility relocations prior to construction.

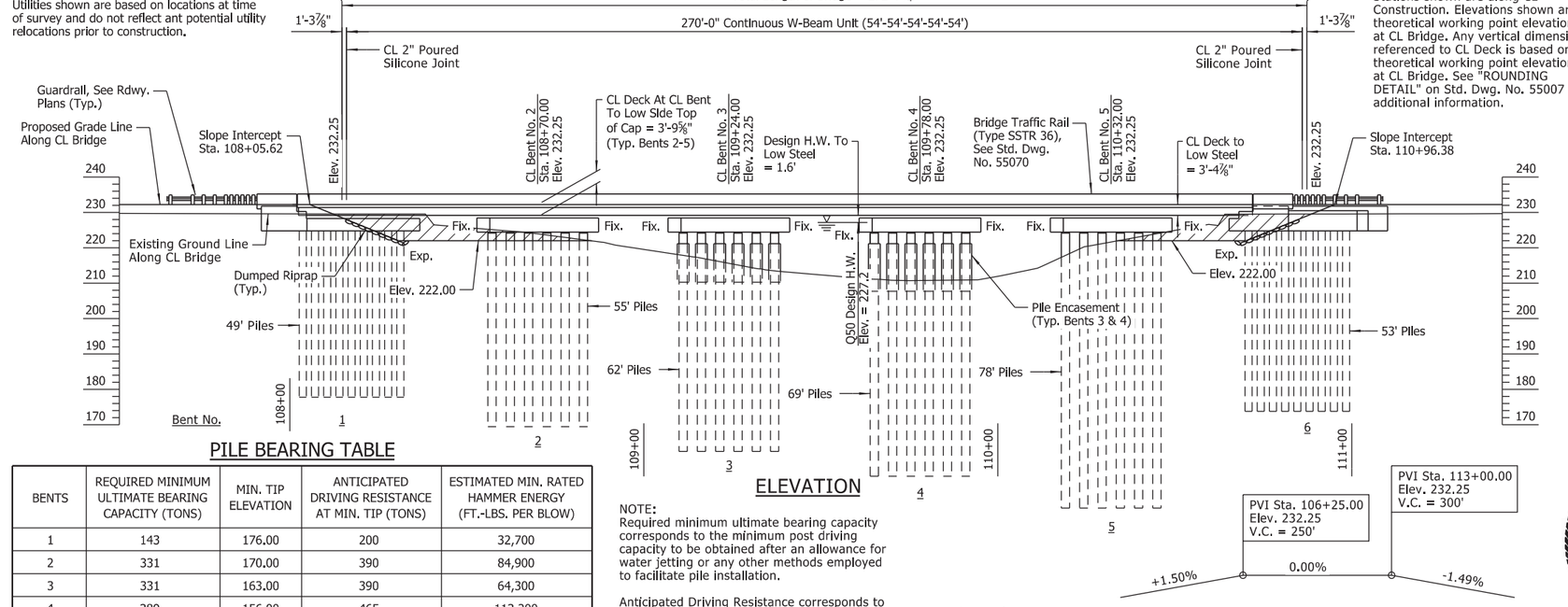

ELEVATION

PILE BEARING TABLE

BENTS	REQUIRED MINIMUM ULTIMATE BEARING CAPACITY (TONS)	MIN. TIP ELEVATION	ANTICIPATED DRIVING RESISTANCE AT MIN. TIP (TONS)	ESTIMATED MIN. RATED HAMMER ENERGY (FT.-LBS. PER BLOW)
1	143	176.00	200	32,700
2	331	170.00	390	84,900
3	331	163.00	390	64,300
4	389	156.00	465	113,200
5	554	147.00	700	158,200
6	175	172.00	330	47,500

NOTE:
Required minimum ultimate bearing capacity corresponds to the minimum post driving capacity to be obtained after an allowance for water jetting or any other methods employed to facilitate pile installation.

Anticipated Driving Resistance corresponds to the resistance to be overcome to achieve minimum tip elevation without any water jetting or other methods employed to facilitate pile installation.

FOR R/W DATA, SEE ROADWAY PLANS

VERTICAL CURVE DATA

Hwy. 140
(Theoretical Grade Along CL Construction)

GENERAL NOTES

STEEL SHELL PILING: Piling in Bents 1 & 6 shall be 24" diameter concrete filled steel shell piles and shall be driven to meet the requirements of the "PILE BEARING TABLE". Piling in Bents 2-5 shall be 28" diameter concrete filled steel shell piles and shall be driven to meet the requirements of the "PILE BEARING TABLE". All piling shall be driven with an approved air, steam, or diesel hammer. Piling in end bents shall be driven after embankment to bottom of cap is in place. Lengths of piling shown are assumed for estimating quantities only. Actual lengths are to be determined in the field. No additional payment will be made for cut-off or build-up. Test piles are not required but may be driven for the Contractor's information in accordance with Subsection 805.08(g). No piles will be paid for as Test Piles.

Water jetting or other methods as approved by the Engineer may be required to achieve minimum penetration. This work shall not be paid for directly, but shall be considered incidental to the items "STEEL SHELL PILING (24" DIA.)" and "STEEL SHELL PILING (28" DIA.)".

PILE ENCASEMENT: Pile encasement for Bents 3 & 4 shall extend from 3' below bottom of cap to 3' below natural or finished ground. See Dwg. No. 64316 for additional information.

DRIVING SYSTEM: The driving system approval and the ultimate bearing capacity determination for piling shall be based on the requirements of Subsection 805.09(b), "Method B - Wave Equation Analysis (WEAP)" and SP "PILE DRIVING SYSTEM". See the "PILE BEARING TABLE" for the estimated minimum rated hammer energy required to overcome the anticipated driving resistance for all piles at each bent. If the Contractor elects to use water jetting or other approved methods to obtain the minimum tip elevations shown while driving only to the required minimum ultimate bearing capacity, the minimum rated hammer energy required will be lower and shall be accounted for in the driving system chosen by the Contractor.

EXISTING BRIDGE: Existing Bridge No. 03781 (Log Mile 4.49) is 227.5' in length, 31.0' wide (28.0' clear roadway) and consists a concrete slab on I-beam spans (5 spans total) supported by concrete pile bents. Plans of the existing structure, if available, may be obtained upon request to the Construction Contract Development Section of the Program Management Division.

REMOVAL AND SALVAGE: The Contractor shall remove existing Bridge No. 03781 in accordance with Section 205. All material from the existing bridge shall become property of the Contractor.

DETAIL DRAWINGS:	DRAWING NO(S).
Foundation Improvement Plan	64387
End Bents	64312, 64388-64392
Intermediate Bents	64315-64317, 64393-64394
270'-0" Continuous W-Beam Unit	64395-64400
Common Superstructure Details	64421-64424
Elastomeric Bearings	64425-64426
Type Special Approach Gutters	64427-64429
Dumped Riprap	55001
General Notes For Steel Bridge Structures	55006
Details For Steel Bridge Structures	55007
Poured Silicone Joint	55008
Concrete Filled Steel Shell Piling	55021
Type C2 Approach Slabs	55040C2
Bridge Traffic Rail	55070

NOTES:
Use Type C2 Approach Slab at each end of bridge. See Std. Dwg. No. 55040C2.

Use Type Special Approach Gutters at each end of bridge. See Dwg. Nos. 64427-64429.

For "ELEVATION OF SOIL BORINGS", see Dwg. No. 64386.

For "PROJECT GENERAL NOTES", see Dwg. No. 64303.

HYDRAULIC DATA

Drainage Area = 196.0 square miles.
Historical High Water Elev. = N/A

FLOOD DESCRIPTION	FREQUENCY YEARS	TOTAL DISCHARGE (2) CFS	DISCHARGE THIS SITE CFS	(1) NATURAL WATER SURFACE ELEVATION FEET	WATER SURFACE ELEVATION WITH BACKWATER FEET
DESIGN	50	8,363	3,929	227.2	227.2
BASE	100	9,290	4,187	227.4	227.5
EXTREME	500	11,458	5,483	227.6	227.8
OVERTOPPING	>500	N/A	N/A	N/A	N/A

(1) Unconstricted water surface without structure or roadway approaches.

(2) The total discharge includes flow at this site, Hwy. 140 over Ditch No. 31, and Hwy. 140 over Ditch No. 40.

Q100 Backwater Elevation For Existing Structure = 227.6

Proposed Low Bridge Chord Elev. = 228.84
Existing Low Bridge Chord Elev. = 226.78

STATE OF ARKANSAS
LICENSED PROFESSIONAL ENGINEER
No.14498
ADAM B. HALL

DIGITALLY SIGNED 8-13-2021
BRIDGE ENGINEER

SHEET 1 OF 2
LAYOUT OF BRIDGE
HIGHWAY 140 OVER NATIONAL DITCH NO. 6
HWYS. 77, 140, 158, & 181
STRS. & APPRS. (MISSISSIPPI CO.) (S)
MISSISSIPPI COUNTY
ROUTE 140 SEC. 2

ARKANSAS STATE HIGHWAY COMMISSION
LITTLE ROCK, ARK.

DRAWN BY: CSW DATE: JULY 2020 FILENAME: b100955x7_L1.dgn
CHECKED BY: DRG DATE: AUG. 2020 SCALE: 1" = 20'-0"
DESIGNED BY: CSW DATE: JULY 2020

BRIDGE NO. 07562 DRAWING NO. 64385

abhall 8/13/2021 9:54:55 AM
WORKSPACE: ARDOT Bridge (2019)
L:\2017\170742 - ARDOT Job 100955\Drawings\b100955x7_SIOLLO.dgn
REVISED DATE:

DATE REVISED	DATE FILMED	DATE REVISED	DATE FILMED

FED. ROAD DIST. NO.	STATE	FED. AID PROJ. NO.	SHEET NO.	TOTAL SHEETS
6	ARK.			
JOB NO.		100955	209	355
(1) 07562		LAYOUT		64386

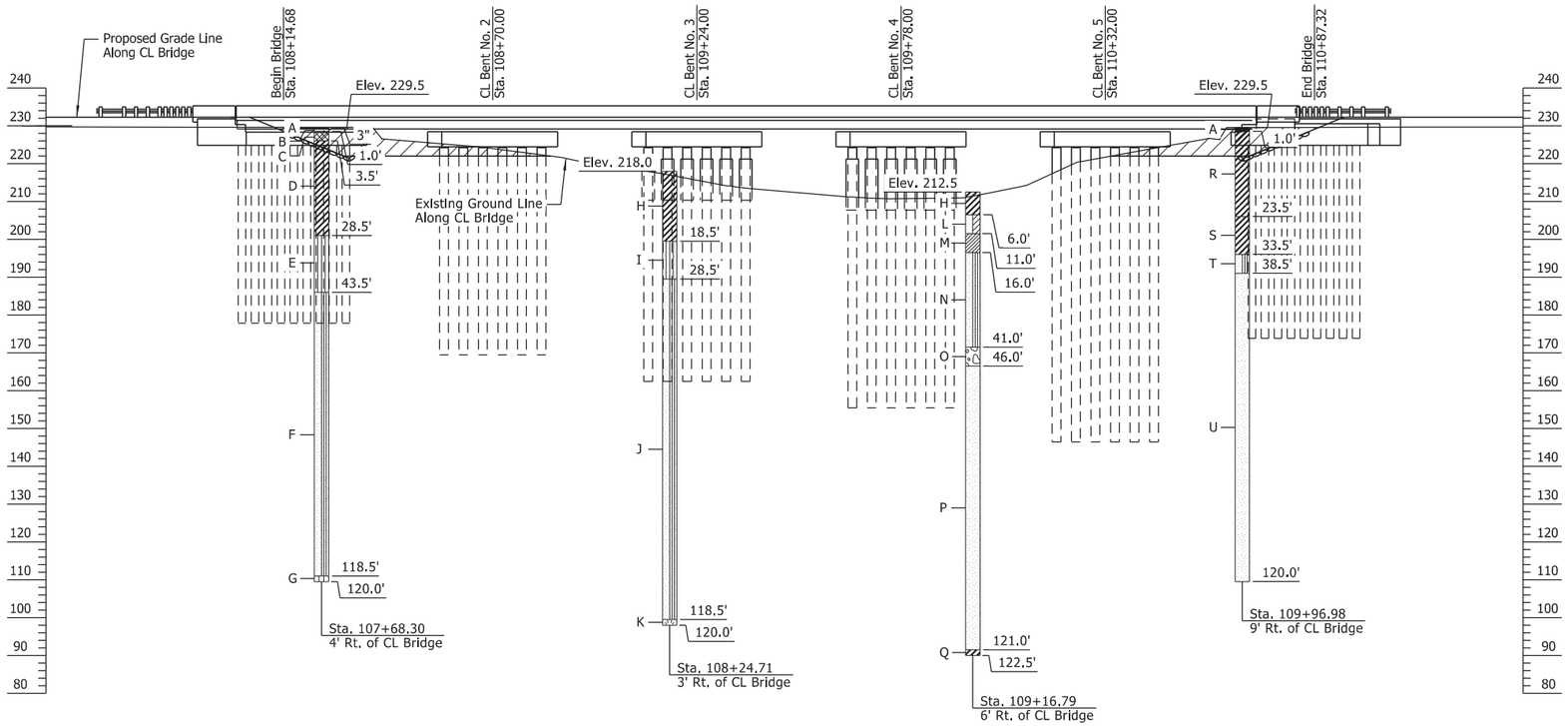

ELEVATION OF SOIL BORINGS

BORING LEGEND

A - Asphalt
B - Concrete
C - Fill: Brown and black gravel with clay, trace asphalt debris
D - Soft to medium stiff, gray to gray and brown, FAT CLAY
E - Medium stiff to very stiff, gray SILT, some sand, little clay
F - Medium dense to very dense, gray to gray and black SAND with SILT
G - Medium dense, gray, SILTY SAND
H - Soft, gray and brown to gray, FAT CLAY
I - Medium stiff to stiff, gray and brown, sandy SILT, little clay
J - Loose to very dense, brown and gray SAND with SILT
K - Black lignite
L - Very loose, gray and brown SAND WITH CLAY
M - Medium stiff, gray, LEAN CLAY some sand
N - Loose to medium dense, gray SAND with SILT
O - Dense, gray GRAVEL
P - Medium dense to very dense, gray and brown to gray SAND, trace silt and gravel
Q - Very stiff, gray, FAT CLAY
R - Stiff to medium stiff, brown and gray, FAT CLAY
S - Soft, gray and brown, FAT CLAY, little sand
T - Medium dense, brown and gray SAND with SILT
U - Medium dense to very dense, gray and brown SAND, trace silt

N-VALUES

Sta. 108+24.71 Offset 3' Rt.	Sta. 109+16.79 Offset 6' Rt.	Sta. 109+96.98 Offset 9' Rt.	Sta. 110+68.24 Offset 9' Rt.
1.0-2.5, N=6	1.0-2.5, N=4	0.0-1.5, N=2	1.0-2.5, N=12
3.5-5.0, N=4	3.5-5.0, N=2	6.0-7.5, N=4	3.5-5.0, N=7
8.5-10.0, N=5	8.5-10.0, N=4	11.0-12.5, N=5	8.5-10.0, N=6
13.5-15.0, N=5	13.5-15.0, N=4	16.0-17.5, N=8	13.5-15.0, N=7
18.5-20.0, N=7	18.5-20.0, N=5	21.0-22.5, N=5	18.5-20.0, N=6
23.5-25.0, N=5	23.5-25.0, N=14	26.0-27.5, N=22	23.5-25.0, N=2
28.5-30.0, N=7	28.5-30.0, N=10	31.0-32.5, N=26	28.5-30.0, N=3
33.5-35.0, N=5	33.5-35.0, N=23	36.0-37.5, N=20	33.5-35.0, N=19
38.5-40.0, N=27	38.5-40.0, N=32	41.0-42.5, N=43	38.5-40.0, N=27
43.5-45.0, N=25	43.5-45.0, N=58	46.0-47.5, N=28	43.5-45.0, N=32
48.5-50.0, N=22	48.5-50.0, N=43	51.0-52.5, N=38	48.5-50.0, N=32
53.5-55.0, N=33	53.5-55.0, N=47	56.0-57.5, N=56	53.5-55.0, N=27
58.5-60.0, N=37	58.5-60.0, N=45	61.0-62.5, N=45	58.5-60.0, N=24
63.5-65.0, N=42	63.5-65.0, N=50	66.0-67.5, N=46	63.5-65.0, N=28
68.5-70.0, N=42	68.5-70.0, N=41	71.0-72.5, N=56	68.5-70.0, N=32
78.5-80.0, N=36	78.5-80.0, N=31	81.0-82.5, N=48	73.5-75.0, N=42
88.5-90.0, N=47	88.5-90.0, N=74	91.0-92.5, N=35	78.5-80.0, N=37
98.5-100.0, N=40	98.5-100.0, N=50/5"	101.0-102.5, N=50/5"	83.5-85.0, N=40
108.5-110.0, N=75	108.5-110.0, N=34	111.0-112.5, N=73	88.5-90.0, N=49
118.5-120.0, N=27	118.5-120.0, N=50/4"	121.0-122.5, N=26	93.5-95.0, N=61
			98.5-100.0, N=75
			108.5-110.0, N=61
			118.5-120.0, N=50/4"

STATE OF ARKANSAS
LICENSED PROFESSIONAL ENGINEER
No.14498
ADAM B. HALL

DIGITALLY SIGNED 8-13-2021
BRIDGE ENGINEER

SHEET 2 OF 2
LAYOUT OF BRIDGE
HIGHWAY 140 OVER NATIONAL DITCH NO. 6
HWYS. 77, 140, 158, & 181
STRS. & APPRS. (MISSISSIPPI CO.) (S)
MISSISSIPPI COUNTY
ROUTE 140 SEC. 2

ARKANSAS STATE HIGHWAY COMMISSION
LITTLE ROCK, ARK.

DRAWN BY: CWT DATE: AUG. 2020 FILENAME: b100955x7_L2.dgn
CHECKED BY: ABH DATE: JUNE 2021 SCALE: 1" = 20'-0"
DESIGNED BY: CSW DATE: AUG. 2020

BRIDGE NO. 07562 DRAWING NO. 64386

abhall 8/13/2021 9:54:56 AM
WORKSPACE: ARDOT Bridge (2019)
L:\20T\1701642 - ARDOT Job 100955\Drawings\b100955x7_S02_L0.dgn
REVISED DATE:

DATE REVISED	DATE FILMED	DATE REVISED	DATE FILMED

FED. ROAD DIST. NO.	STATE	FED. AID PROJ. NO.	SHEET NO.	TOTAL SHEETS
6	ARK.			
JOB NO.		100955	210	355
(1) 07562		FNDN. IMP. PLAN		64387

TIMBER PILE DATA

Bent No.	Estimated No. of Piles	Min. Tip Elevation	Estimated Pile Length (FT)
1	80	180	40

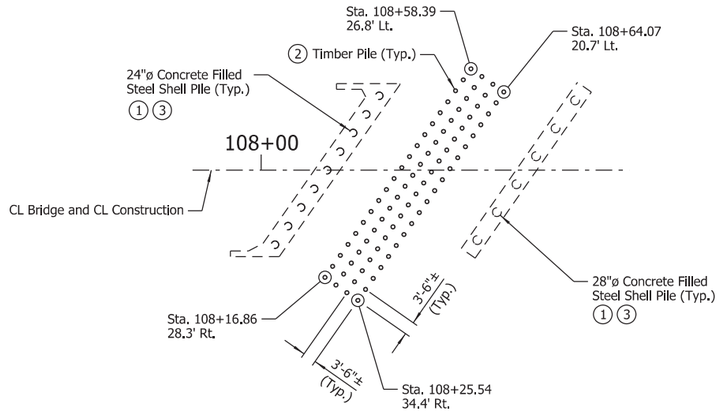

TIMBER PILE LAYOUT FOR FOUNDATION IMPROVEMENT

Scale: 1" = 20'-0"

NOTES:
Diameter(s) of timber piles shall be in accordance with SP "TIMBER PILING FOR SOIL DENSIFICATION".

Drive number and length of timber piles as directed by the Engineer.

Contractor shall coordinate with the Engineer to avoid any and all utilities within the soil densification areas.

Timber piling outside the limits of the existing bridge and roadway shall be driven prior to closing existing bridge to traffic.

(1) Steel shell piling shall be driven prior to timber piling at each bent.

(2) Timber piling shall be in accordance with SP "TIMBER PILING FOR SOIL DENSIFICATION".

(3) Any existing riprap interfering with the driving of timber pile or steel shell pile shall be removed prior to driving as directed by the Engineer. Cost of removing riprap shall be considered subsidiary to the item "Removal of Existing Bridge Structure (Site No. 7)".

(4) Shift timber piling as required to avoid conflicts with proposed caps.

NOTE:
For "DETAILS OF TIMBER PILE TIP" and "TYPICAL SPLICE DETAILS", see Dwg. No. 64308.

STATE OF ARKANSAS
LICENSED PROFESSIONAL ENGINEER
No.8017
JOHN H. RUDDELL

DIGITALLY SIGNED 8-13-2021
BRIDGE ENGINEER

DETAILS OF FOUNDATION IMPROVEMENT PLAN
HWY. 140 OVER NATIONAL DITCH NO. 6

ROUTE SEC.

ARKANSAS STATE HIGHWAY COMMISSION

LITTLE ROCK, ARK.

DRAWN BY: CWT DATE: JUNE 2021 FILENAME: b100955x7_FN.dgn
CHECKED BY: JHR DATE: JUNE 2021 SCALE: As Shown
DESIGNED BY: JME DATE: JUNE 2021

BRIDGE NO. 07562 DRAWING NO. 64387

abhall 8/13/2021 9:54:57 AM
WORKSPACE: ARDOT Bridge (2019)
L:\2019\11019642 - ARDOT Job 100955\Drawings\b100955x7_SI03_FIP.dgn
REVISED DATE:

DATE REVISED	DATE FILMED	DATE REVISED	DATE FILMED	FED. ROAD DIST. NO.	STATE	FED. AID PROJ. NO.	SHEET NO.	TOTAL SHEETS
				6	ARK.			
				JOB NO.		100955	211	355
				(1) 07562		END BENTS		64388

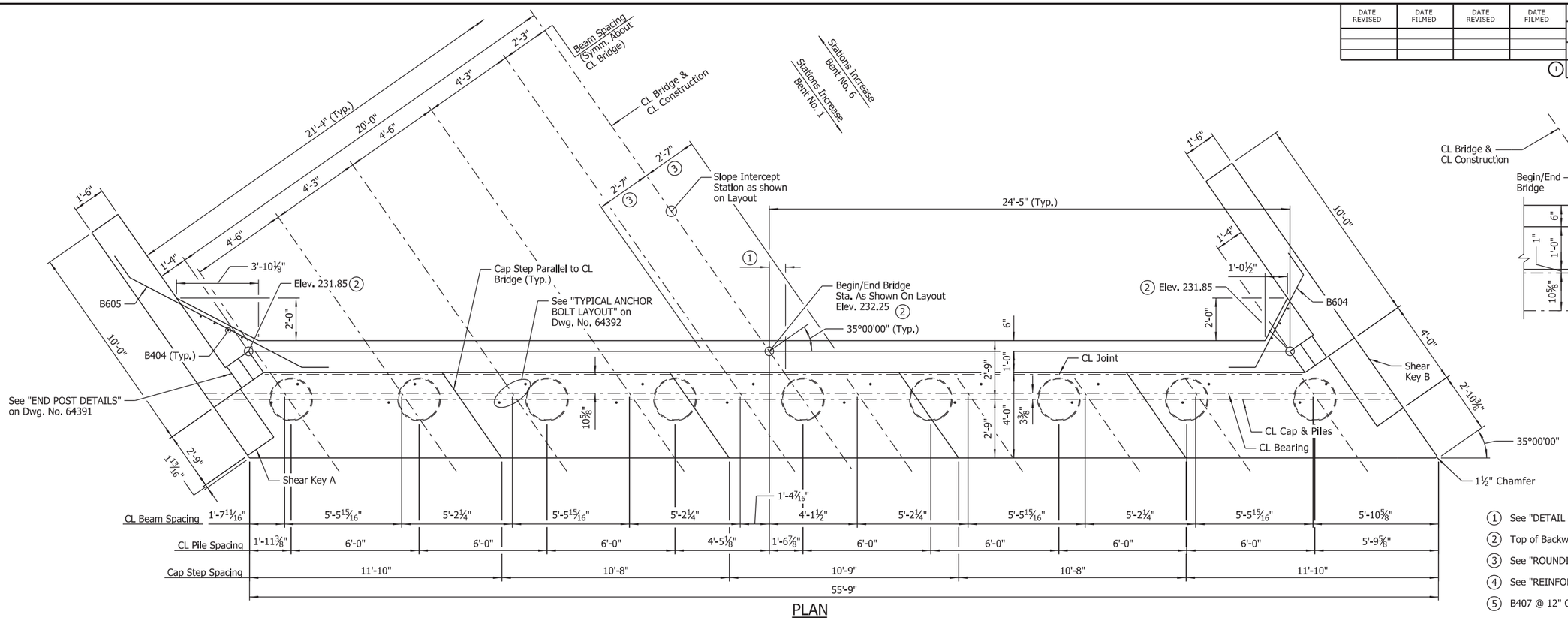

PLAN

Scale: ⅜" = 1'-0"

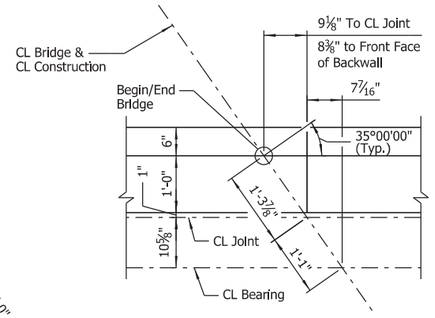

DETAIL A

Scale: 1" = 1'-0"

LEGEND

BF = Back Face
FF = Front Face
EF = Each Face

(1) See "DETAIL A"
(2) Top of Backwall is to be constructed level longitudinally.
(3) See "ROUNDING DETAIL" on Std. Dwg. No. 55007
(4) See "REINFORCEMENT DETAIL" on Dwg. No. 64391
(5) B407 @ 12" O.C. Max. (Place parallel to CL Bridge)

NOTES:
1. For "SECTIONS", see Dwg. No. 64389.
2. For "GENERAL NOTES" and "BAR LIST", see Dwg. No. 64392.

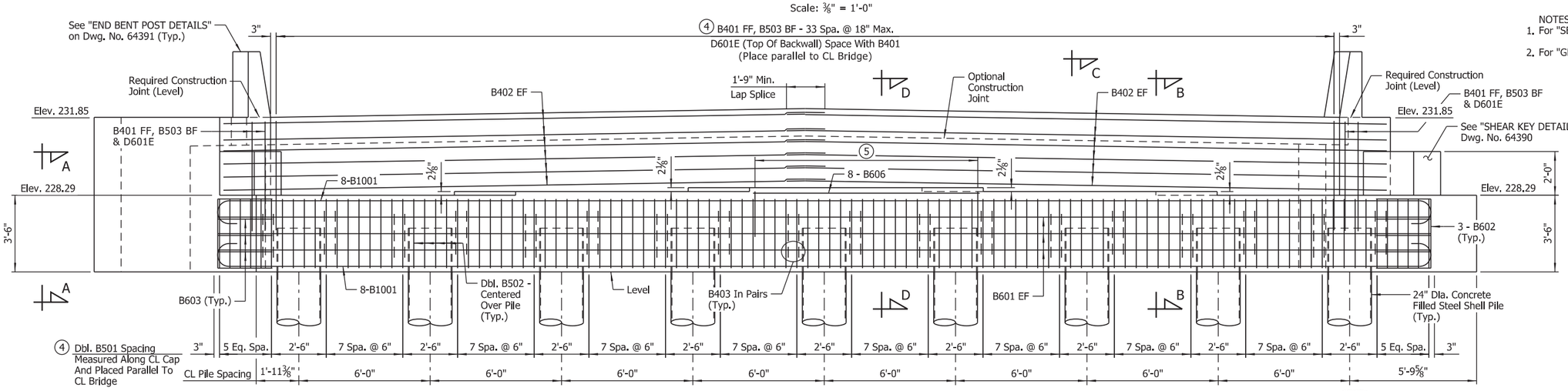

ELEVATION

(Looking Back, Bent No. 1
Looking Ahead, Bent No. 6)
Scale: ⅜" = 1'-0"

NOTE:
No portion of the backwall above the required construction joint shall be poured until the prefabricated superstructure is in place. No heavy construction equipment shall be allowed within 10' of the backwall until the prefabricated superstructure for the adjacent span has been installed.

STATE OF ARKANSAS
LICENSED PROFESSIONAL ENGINEER
No.8017
JOHN H. RUDDELL

DIGITALLY SIGNED 8-13-2021
BRIDGE ENGINEER

SHEET 1 OF 5
DETAILS OF END BENTS
HWY. 140 OVER NATIONAL DITCH NO. 6
ROUTE SEC.
ARKANSAS STATE HIGHWAY COMMISSION
LITTLE ROCK, ARK.

DRAWN BY: HEW DATE: APR. 2021 FILENAME: b100955x7_A1.dgn
CHECKED BY: JHR DATE: JUNE 2021 SCALE: As Shown
DESIGNED BY: CSW DATE: APR. 2021
BRIDGE NO. 07562 DRAWING NO. 64388

abhall 8/13/2021 9:54:58 AM
WORKSPACE: ARDOT Bridge (2019)
L:\20T\T01T642 - ARDOT Job 100955\Drawings\b100955x7_S20l_AB.dgn
REVISED DATE:

DATE REVISED	DATE FILMED	DATE REVISED	DATE FILMED	FED. ROAD DIST. NO.	STATE	FED. AID PROJ. NO.	SHEET NO.	TOTAL SHEETS
				6	ARK.			
				JOB NO.		100955	212	356
				(1) 07562-07563		END BENTS		64389

LEGEND

U.N.O. = Unless Noted Otherwise

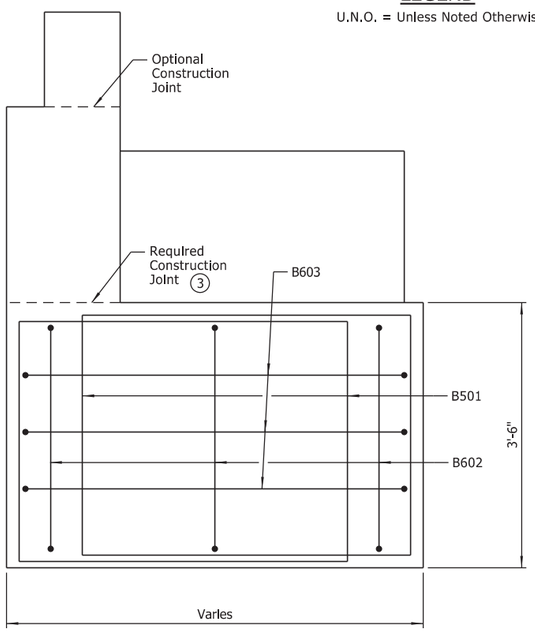

VIEW A-A

Scale: N.T.S.

NOTE:
Longitudinal bars in cap omitted for clarity.

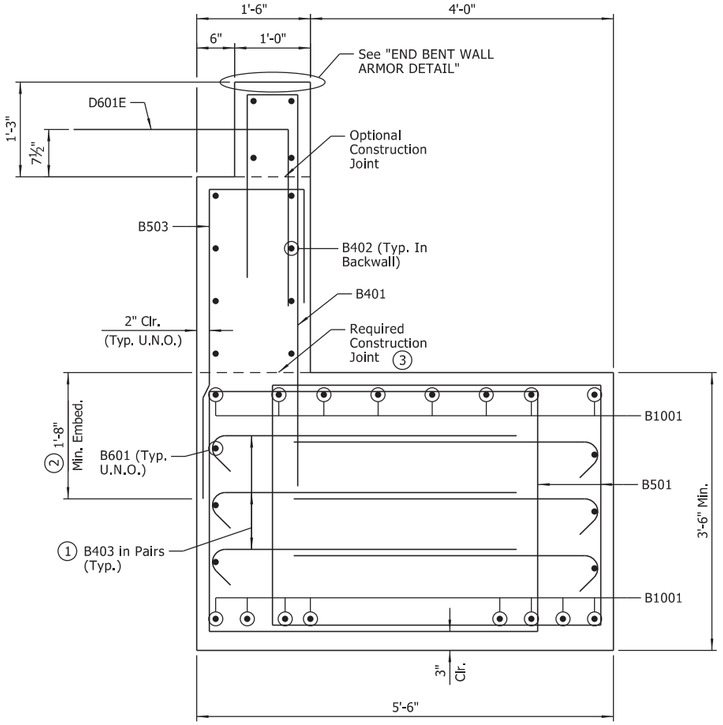

SECTION B-B

Scale: 1" = 1'-0"

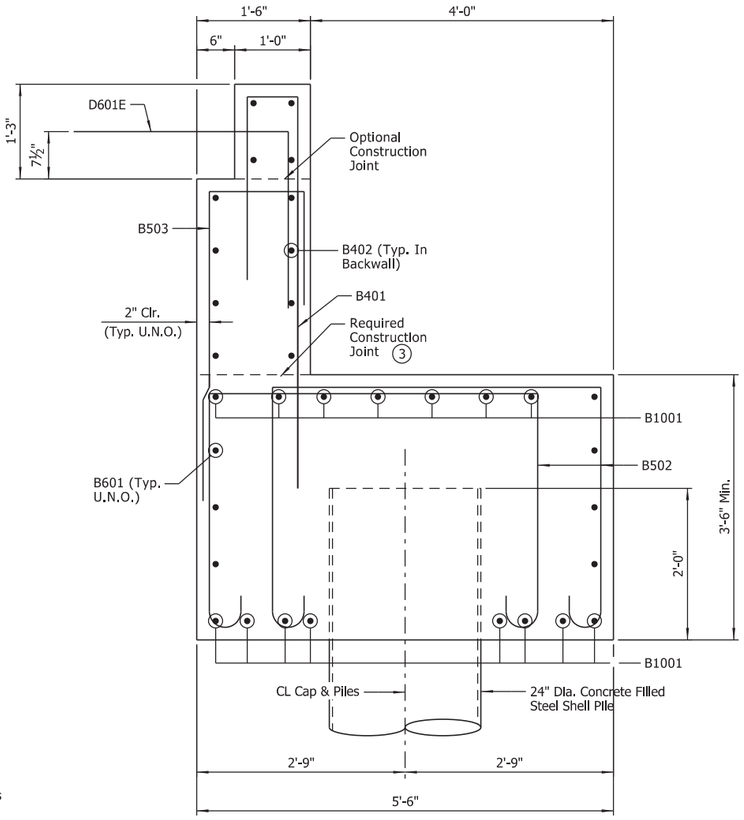

SECTION C-C

Scale: 1" = 1'-0"

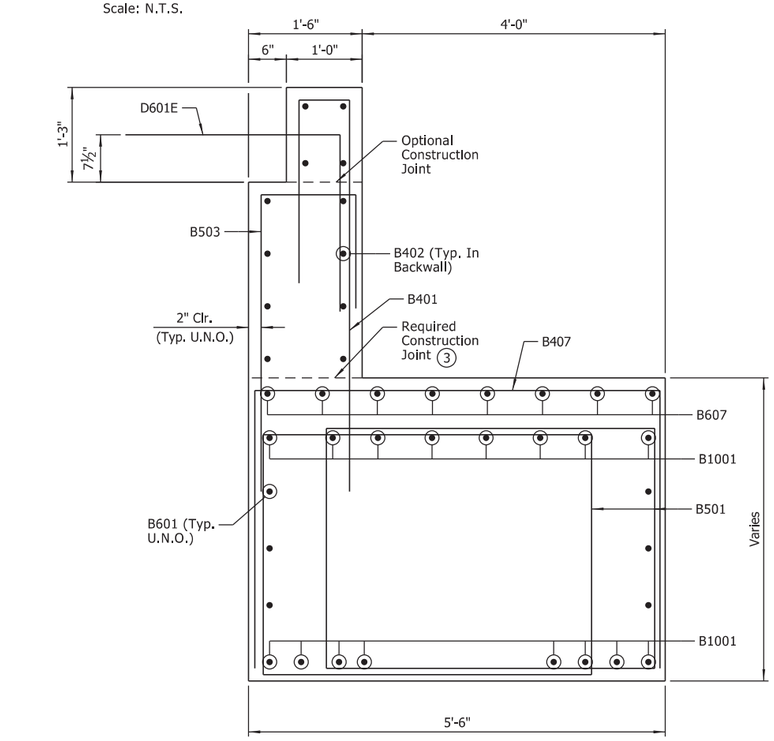

SECTION D-D

Scale: 1" = 1'-0"

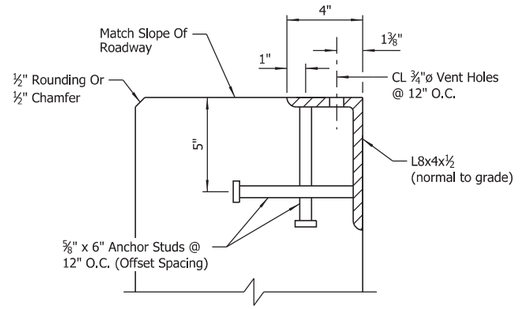

NOTES:
Transverse spacing between vertical anchor studs and vent holes shall be 6".

Concrete shall be hand packed under joint armor.

Special care shall be taken to properly and thoroughly consolidate the concrete in the vicinity of the expansion joint device in the backwall, see Section 802.09(a)(3).

For additional joint details, see Std. Dwg. No. 55008.

END BENT WALL ARMOR DETAIL

No Scale

(1) See "ELEVATION" view for each bridge for location and spacing.

(2) Adjust embedment as required to maintain 2" clear cover at top of backwall.

(3) No portion of the backwall above the required construction joint shall be poured until the prefabricated superstructure is in place. No heavy construction equipment shall be allowed within 10' of the backwall until the prefabricated superstructure for the adjacent span has been installed.

STATE OF ARKANSAS
LICENSED PROFESSIONAL ENGINEER
No.8017
JOHN H. RUDDELL

DIGITALLY SIGNED 8-13-2021
BRIDGE ENGINEER

SHEET 2 OF 5
DETAILS OF END BENTS
HWY. 140 OVER NATIONAL DITCH NO. 6
ROUTE SEC.
ARKANSAS STATE HIGHWAY COMMISSION
LITTLE ROCK, ARK.

DRAWN BY: HEW DATE: APR. 2021 FILENAME: b100955x7_A2.dgn
CHECKED BY: JHR DATE: JUNE 2021 SCALE: As Shown
DESIGNED BY: CSW DATE: APR. 2021
BRIDGE NO. 07562-07563 DRAWING NO. 64389

abhall 8/13/2021 9:55:01 AM
WORKSPACE: ARDOT Bridge (2019)
L:\2017\17017642 - ARDOT Job 100955\Drawings\b100955x7_S202_AB.dgn
REVISED DATE:

DATE REVISED	DATE FILMED	DATE REVISED	DATE FILMED	FED. ROAD DIST. NO.	STATE	FED. AID PROJ. NO.	SHEET NO.	TOTAL SHEETS
				6	ARK.			
				JOB NO.		100955	213	355
				1	07562	END BENTS		64390

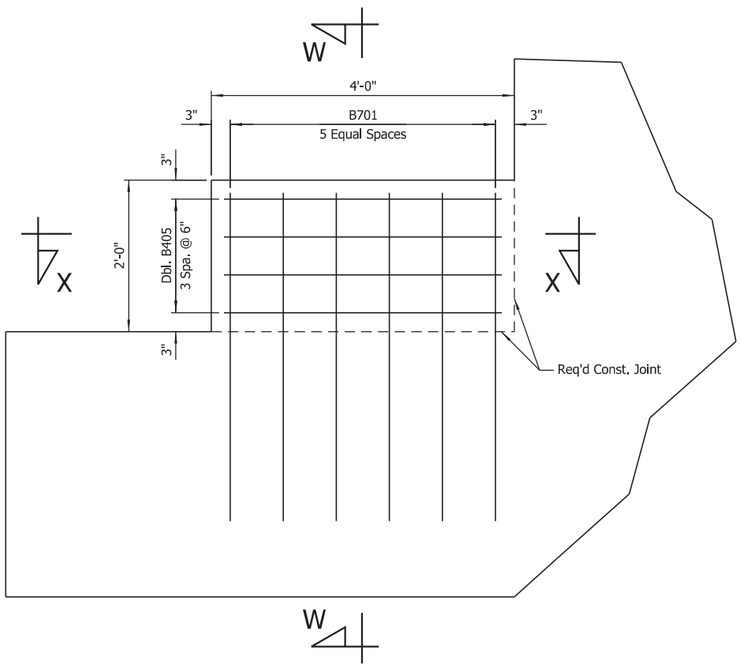

SHEAR KEY B

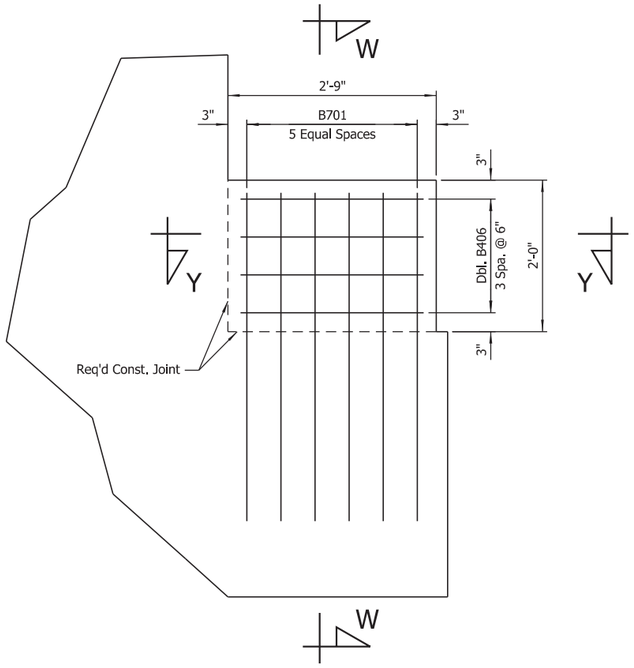

SHEAR KEY A

SHEAR KEY DETAILS
Scale: 1" = 1'-0"

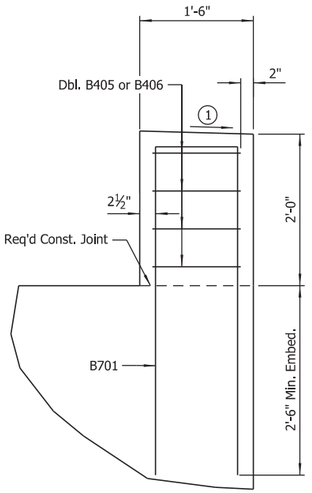

SECTION W-W
Scale: 1" = 1'-0"

1 Slope to drain, provide minimum ½" wash across top width

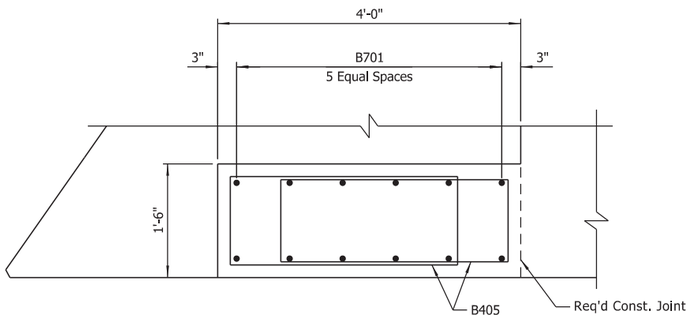

SECTION X-X
Scale: 1" = 1'-0"

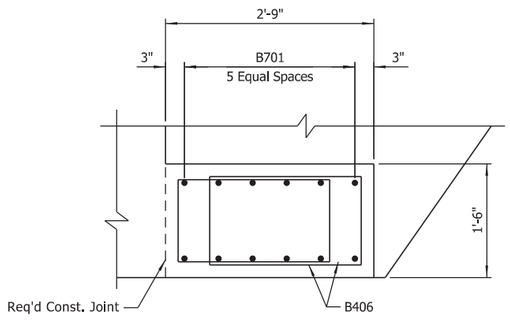

SECTION Y-Y
Scale: 1" = 1'-0"

STATE OF ARKANSAS
LICENSED PROFESSIONAL ENGINEER
No.8017
JOHN H. RUDDELL

DIGITALLY SIGNED 8-13-2021
BRIDGE ENGINEER

SHEET 3 OF 5
DETAILS OF END BENTS
HWY. 140 OVER NATIONAL DITCH NO. 6
ROUTE SEC.
ARKANSAS STATE HIGHWAY COMMISSION
LITTLE ROCK, ARK.

DRAWN BY: HEW DATE: APR. 2021 FILENAME: b100955x7_A3.dgn
CHECKED BY: JHR DATE: JUNE 2021 SCALE: As Shown
DESIGNED BY: CSW DATE: APR. 2021
BRIDGE NO. 07562 DRAWING NO. 64390

abhall 8/13/2021 9:55:03 AM
WORKSPACE: ARDOT Bridge (2019)
L:\2017\170\17642 - ARDOT Job 100955\Drawings\b100955x7_S203_AB.dgn
REVISED DATE:

DATE REVISED	DATE FILMED	DATE REVISED	DATE FILMED

FED. ROAD DIST. NO.	STATE	FED. AID PROJ. NO.	SHEET NO.	TOTAL SHEETS
6	ARK.			
JOB NO.		100955	214	355
(1) 07562-07563		END BENTS		64391

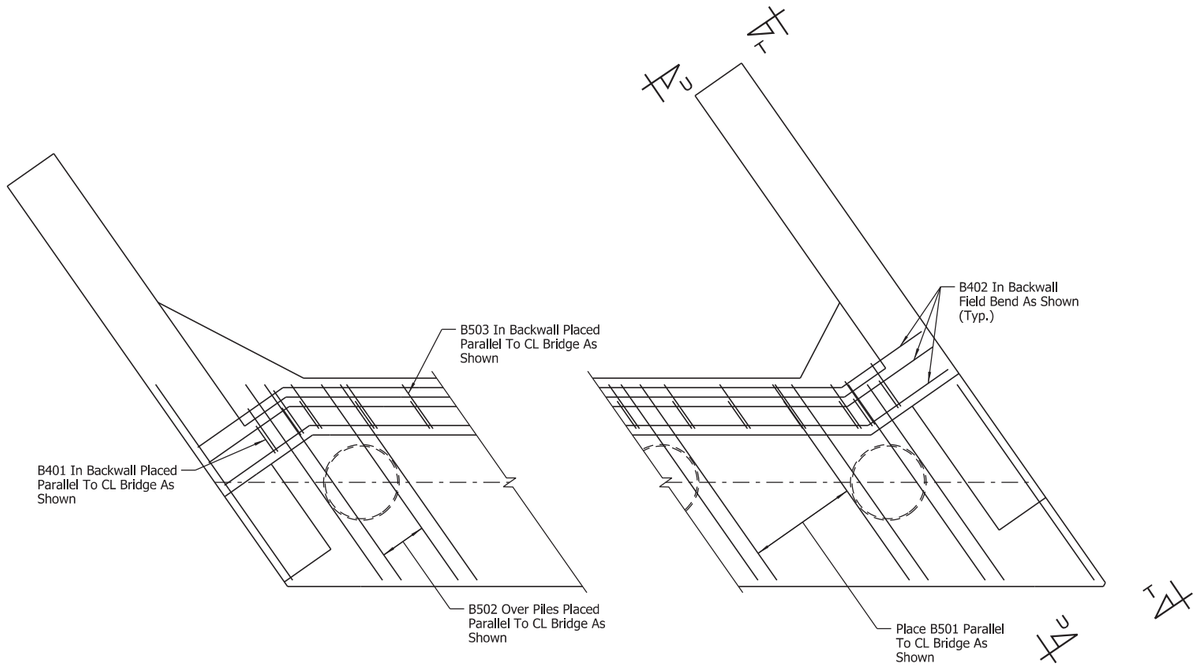

REINFORCEMENT DETAIL

Scale: ½" = 1'-0"

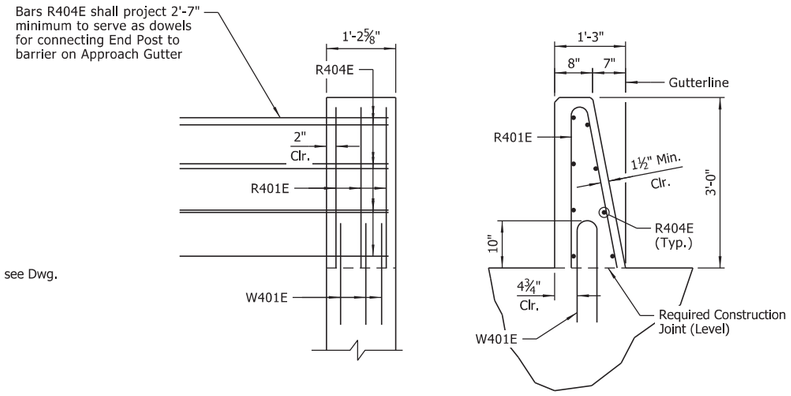

NOTE:
For "VIEW U-U", see Dwg. No. 64312.

END BENT POST DETAILS

Scale: ¾" = 1'-0"

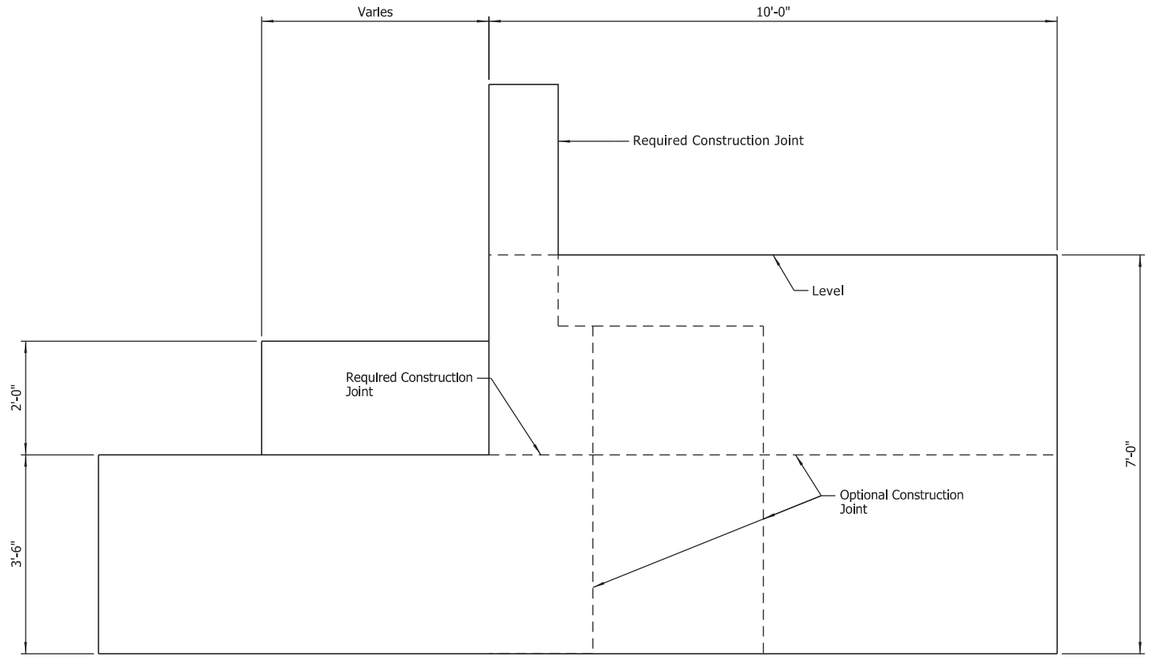

VIEW T-T

Scale: ¾" = 1'-0"

STATE OF ARKANSAS
LICENSED PROFESSIONAL ENGINEER
No.8017
JOHN H. RUDDELL

DIGITALLY SIGNED 8-13-2021
BRIDGE ENGINEER

SHEET 4 OF 5
DETAILS OF END BENTS
HWY. 140 OVER NATIONAL DITCH NO. 6
ROUTE SEC.
ARKANSAS STATE HIGHWAY COMMISSION
LITTLE ROCK, ARK.

DRAWN BY: HEW DATE: APR. 2021 FILENAME: b100955x7_A4.dgn
CHECKED BY: JHR DATE: JUNE 2021 SCALE: As Shown
DESIGNED BY: CSW DATE: APR. 2021
BRIDGE NO. 07562-07563 DRAWING NO. 64391

abnall 8/13/2021 9:55:03 AM
WORKSPACE: ARDOT Bridge (2019)
L:\20T\T0T642 - ARDOT Job 100955\Drawings\b100955x7_S204_AB.dgn
REVISED DATE:

DATE REVISED	DATE FILMED	DATE REVISED	DATE FILMED	FED. ROAD DIST. NO.	STATE	FED. AID PROJ. NO.	SHEET NO.	TOTAL SHEETS
				6	ARK.			
				JOB NO.		100955	215	355
				(1) 07562		END BENTS		64392

BAR LIST (PER BENT)

	MARK	NO. REQ'D	LENGTH	"A"	"B"	P.D.
	B401	38	8'-4"			2"
	B402	24	28'-0"			Str.
	B403	216	4'-6"			3"
	B404	7	5'-5"			Str.
	B405	8	8'-8"	1'-2"	3'-0"	2"
	B406	8	6'-8"	1'-2"	2'-0"	2"
	B407	11	10'-1"	6'-3"	2'-0"	2"
	B501	152	17'-6"			2½"
	B502	72	12'-7"			2½"
	B503	38	6'-9"			2½"
	B601	6	55'-5"			Str.
	B602	6	7'-7"	2'-11"	2'-6"	4½"
	B603	6	10'-9"			4½"
	B604	10	7'-5"			4½"
	B605	10	11'-7"			4½"
	B606	8	10'-5"			Str.
	B701	12	9'-5"	1'-1"	4'-4"	5¼"
	B1001	16	58'-3"			10"
(1)	D601E	38	5'-2"			4½"
(1)	R401E	6	5'-11"			2½"
(1)	R404E	16	3'-8"			Str.
(1)	W401E	6	3'-11"			3¾"
	W402	40	14'-4"	1'-2"	6'-8"	2"
	W701	50	9'-8"			Str.

NOTES:
Number of bars shown is for one end bent only.

Dimensions of bars are out-to-out.

Bars designated with "E" suffix shall be epoxy coated.

(1) Epoxy coated reinforcing in end bents shall be paid for as "REINFORCING STEEL - BRIDGE (GRADE 60)".

BAR BENDING DIAGRAMS

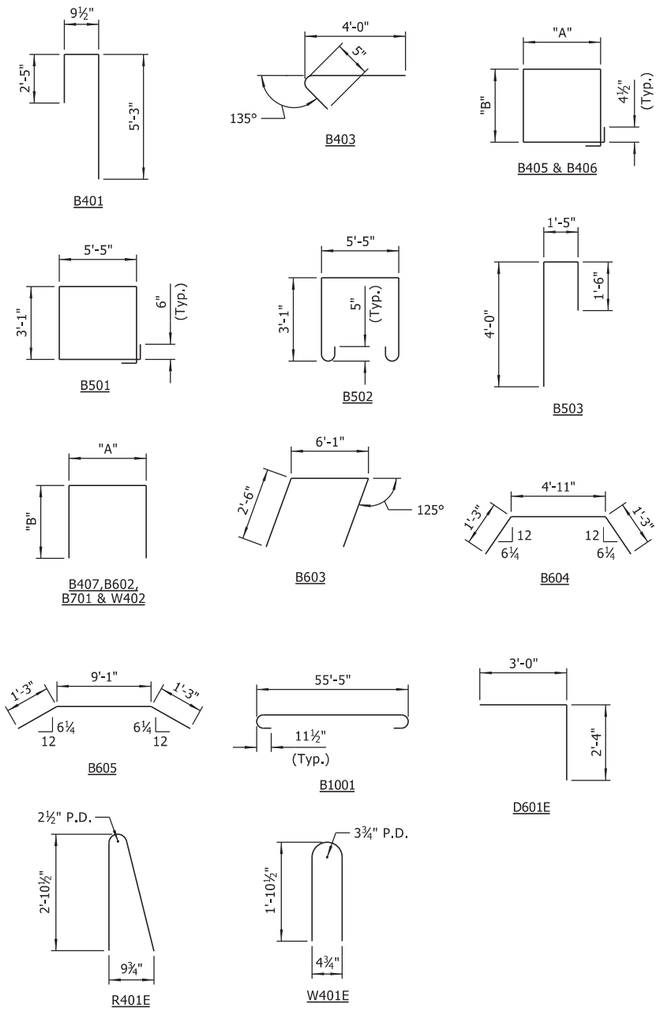

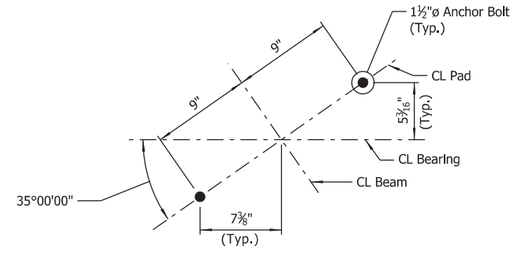

TYPICAL ANCHOR BOLT LAYOUT

No Scale

NOTE:
For Details of Elastomeric Bearings, see Dwg. No. 64425.

GENERAL NOTES:

Structural steel in end bents shall be ASTM A709, Gr. 50W and shall be paid for as "STRUCTURAL STEEL IN BEAM SPANS (A709, Gr. 50W)".

Class 2 Protective Surface Treatment shall be applied to the top of backwall and the roadway face and top of end posts.

For details of steel shell piling, see Std. Dwg. No. 55021.

See Std. Dwg. No. 55006 for additional notes.

STATE OF ARKANSAS
LICENSED PROFESSIONAL ENGINEER
No.8017
JOHN H. RUDDELL

DIGITALLY SIGNED 8-13-2021
BRIDGE ENGINEER

SHEET 5 OF 5
DETAILS OF END BENTS
HWY. 140 OVER NATIONAL DITCH NO. 6
ROUTE SEC.
ARKANSAS STATE HIGHWAY COMMISSION
LITTLE ROCK, ARK.

DRAWN BY: HEW DATE: APR. 2021 FILENAME: b100955x7_A5.dgn
CHECKED BY: JHR DATE: JUNE 2021 SCALE: As Shown
DESIGNED BY: CSW DATE: APR. 2021
BRIDGE NO. 07562 DRAWING NO. 64392

abhall 8/13/2021 9:55:04 AM
WORKSPACE: ARDOT Bridge (2019)
L:\20TV\70T642 - ARDOT Job 100955\Drawings\b100955x7_S205_AB.dgn
REVISED DATE:

DATE REVISED	DATE FILMED	DATE REVISED	DATE FILMED

FED. ROAD DIST. NO.	STATE	FED. AID PROJ. NO.	SHEET NO.	TOTAL SHEETS
6	ARK.			
JOB NO.		100955	216	356
07562		INT. BENTS		64393

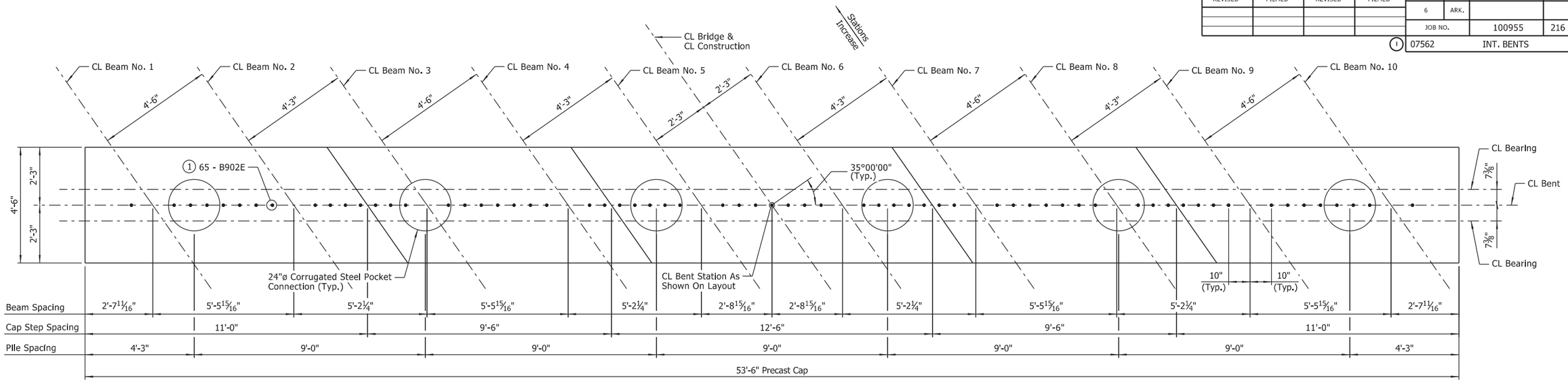

1 Bars B902E within corrugated steel pocket connection shall be installed in the field at the time the pockets are filled. Minimum embedment = 2'-9".

2 Dimension shown is for distance from outer limit of concrete cap to the limits of the corrugated steel pipe forming the pocket.

3 Bars B402 - 12 Spa. @ 1'-0" (Placed parallel to CL Bridge)

PLAN - BENT NOS. 2-5

Scale: ½" = 1'-0"

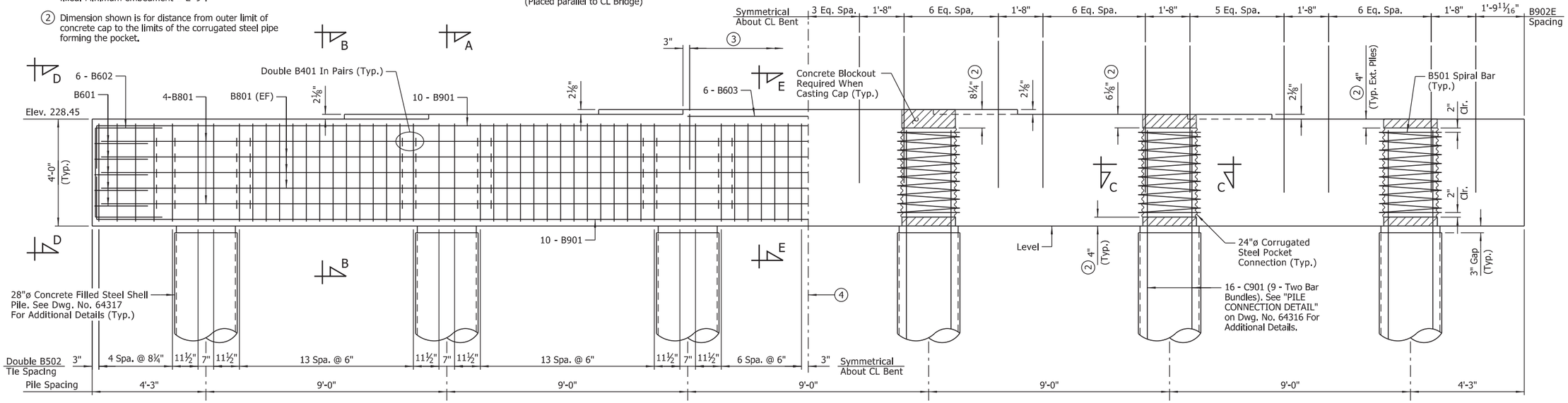

ELEVATION - BENT NOS. 2-5

(Looking Ahead)
Scale: ½" = 1'-0"

4 Optional construction joint (This bay only). See "OPTIONAL CLOSURE POUR DETAIL" on Dwg. No. 64394.

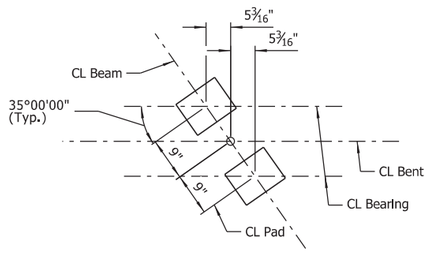

BEARING PAD LAYOUT

Scale: ¾" = 1'-0"

NOTES:
Precast bent caps at Bent Nos. 2 through 5 shall be fabricated and installed in accordance with SP "PRECAST CONCRETE BENT CAPS".

For "GENERAL NOTES - PRECAST CONCRETE BENT CAPS", see Dwg. No. 64316.

For details of elastomeric bearings, see Dwg. Nos. 64425 & 64426.

For "SECTIONS A-A THRU C-C" and "VIEW D-D", see Dwg. No. 64315.

For "BAR LIST (PER BENT)", see Dwg. No. 64394.

For "SECTION E-E", see Dwg. No. 64394.

For "PROJECT GENERAL NOTES", see Dwg. No. 64303.

For additional information, see Layout.

STATE OF ARKANSAS
LICENSED PROFESSIONAL ENGINEER
No.8017
JOHN H. RUDDELL

DIGITALLY SIGNED 8-13-2021
BRIDGE ENGINEER

SHEET 1 OF 2
DETAILS OF INTERMEDIATE BENTS
HWY. 140 OVER NATIONAL DITCH NO. 6

ROUTE SEC.

ARKANSAS STATE HIGHWAY COMMISSION

LITTLE ROCK, ARK.

DRAWN BY: CWT DATE: APR. 2021 FILENAME: b100955x7_BE1.dgn
CHECKED BY: JHR DATE: MAY 2021 SCALE: As Shown
DESIGNED BY: ERM DATE: APR. 2021

BRIDGE NO. 07562 DRAWING NO. 64393

abhall 8/13/2021 9:55:05 AM
WORKSPACE: ARDOT Bridge (2019)
L:\2019\1701642 - ARDOT Job 100955\Drawings\b100955x7_5206_BE.dgn
REVISED DATE:

DATE REVISED	DATE FILMED	DATE REVISED	DATE FILMED	FED. ROAD DIST. NO.	STATE	FED. AID PROJ. NO.	SHEET NO.	TOTAL SHEETS
				6	ARK.			
				JOB NO.		100955	217	356
				(1) 07562		INT. BENTS		64394

BAR LIST (PER BENT)

MARK	NO. REQ'D	LENGTH	P.D.
B401	240	4'-0"	3"
B402	13	8'-11"	2"
B501	6	90'-9"	28¼"
B502	184	15'-2"	2½"
B601	10	8'-9"	4½"
B602	12	8'-3"	4½"
B603	6	12'-2"	Str.
B801	14	52'-11"	Str.
B901	20	55'-10"	9"
B902E	65	5'-6"	Str.
C501	6	229'-5"	19¾"
(3) C901	96	14'-0"	Str.

(3) **Bars C901 shall be ASTM A706, Grade 60.**

BAR BENDING DIAGRAMS

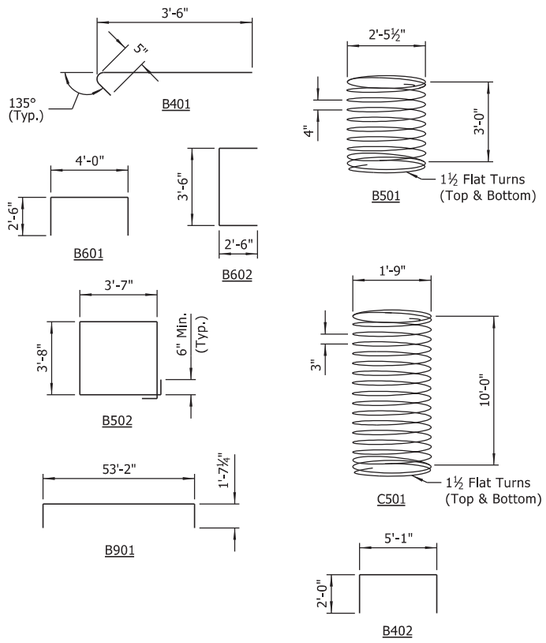

NOTES:
Dimensions of bars are out-to-out.

Bars designated with "E" suffix shall be epoxy coated.

No direct payment for bars in bent cap or concrete filled steel shell piles. Payment of all reinforcing steel to be subsidiary to unit price for "PRECAST CONCRETE BENT CAPS".

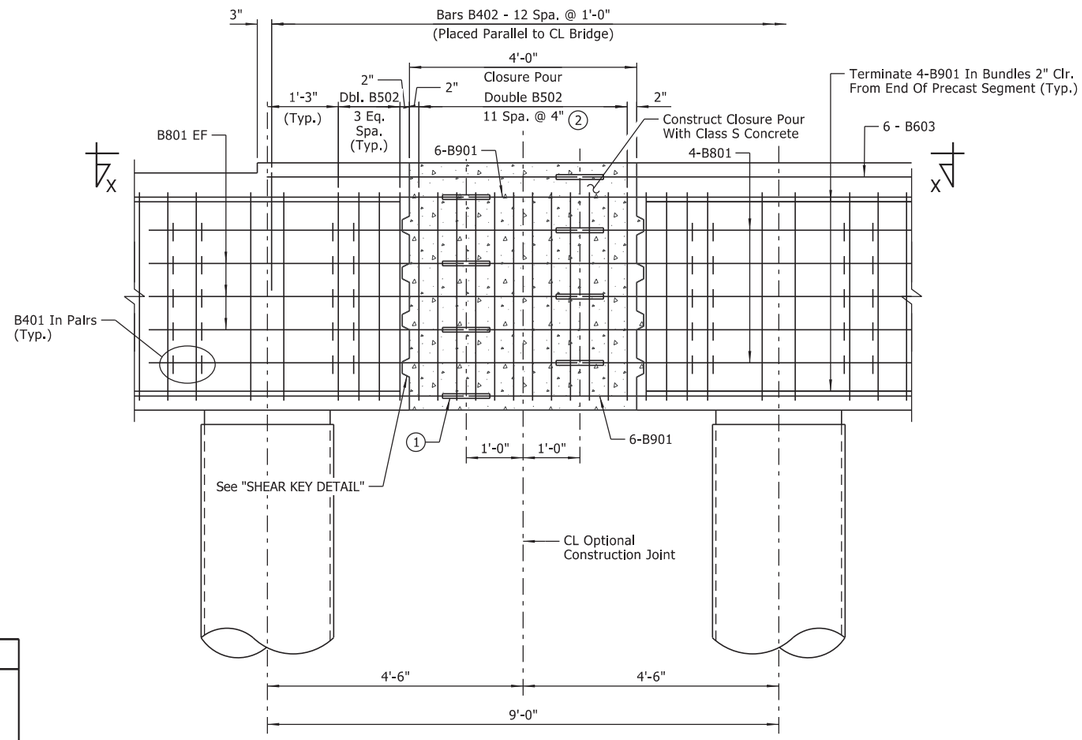

OPTIONAL CLOSURE POUR DETAIL

Scale: ¾" = 1'-0"

(1) The mechanical couplers shall be Dayton Superior D250SCA Bar Lock Epoxy Couplers or an alternate approved Type in accordance with the ARDOT Qualified Products List (QPL). The cost of mechanical couplers shall not be measured for separate payment but shall be considered subsidiary to the precast bent cap. Mechanical couplers shall develop at least 125% of the specified yield strength of the reinforcing steel.

(2) Additional B502 bars required within closure pour are not included in bar list. Double B502 bars may be replaced with 4 U-shaped bars for constructibility. U bars shall have a minimum lap length of 2'-3".

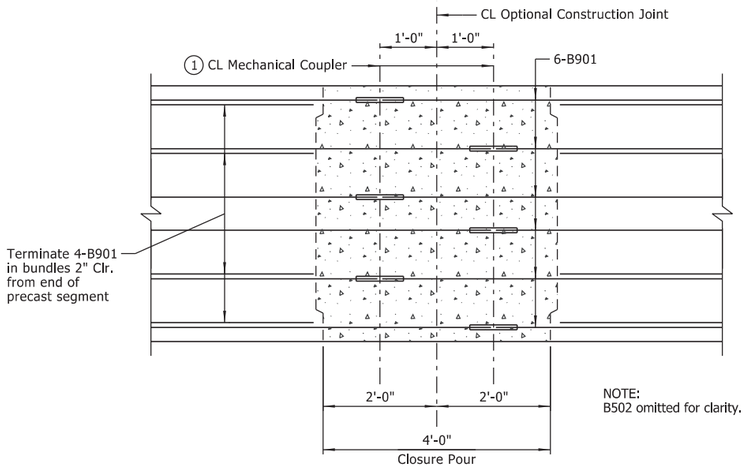

NOTE:
B502 omitted for clarity.

VIEW X-X

Scale: ¾" = 1'-0"

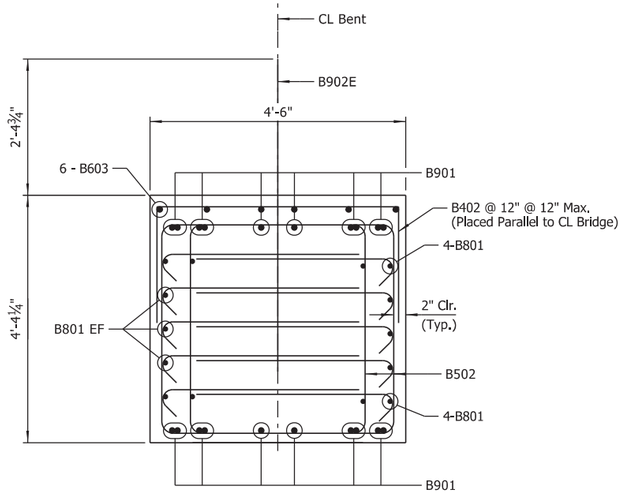

SECTION E-E

Scale: 1" = 1'-0"

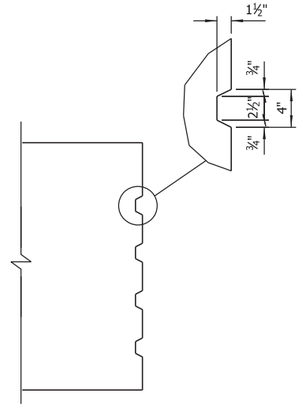

SECTION

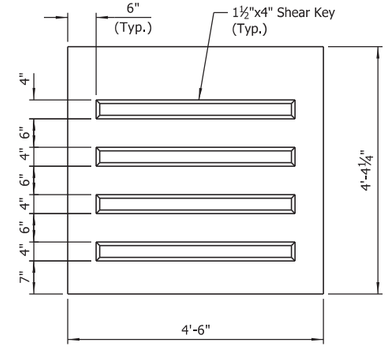

END ELEVATION

SHEAR KEY DETAIL

Scale: ¾" = 1'-0"

STATE OF ARKANSAS
LICENSED PROFESSIONAL ENGINEER
No.8017
JOHN H. RUDDELL

DIGITALLY SIGNED 8-13-2021
BRIDGE ENGINEER

SHEET 2 OF 2
DETAILS OF INTERMEDIATE BENTS
HWY. 140 OVER NATIONAL DITCH NO. 6

ROUTE SEC.

ARKANSAS STATE HIGHWAY COMMISSION
LITTLE ROCK, ARK.

DRAWN BY: CWT DATE: APR. 2021 FILENAME: b100955x7_BE2.dgn
CHECKED BY: JHR DATE: MAY 2021 SCALE: As Shown
DESIGNED BY: ERM DATE: APR. 2021

BRIDGE NO. 07562 DRAWING NO. 64394

abhall 8/13/2021 9:55:06 AM
WORKSPACE: ARDOT Bridge (209)
L:\20\7\07f642 - ARDOT Job 100955\Drawings\b100955x7_S207_BE.dgn
REVISED DATE:

DATE REVISED	DATE FILMED	DATE REVISED	DATE FILMED	FED. ROAD DIST. NO.	STATE	FED. AID PROJ. NO.	SHEET NO.	TOTAL SHEETS
				6	ARK.			
				JOB NO.		100955	218	355
				(1) 07562-07563		270' UNIT		64395

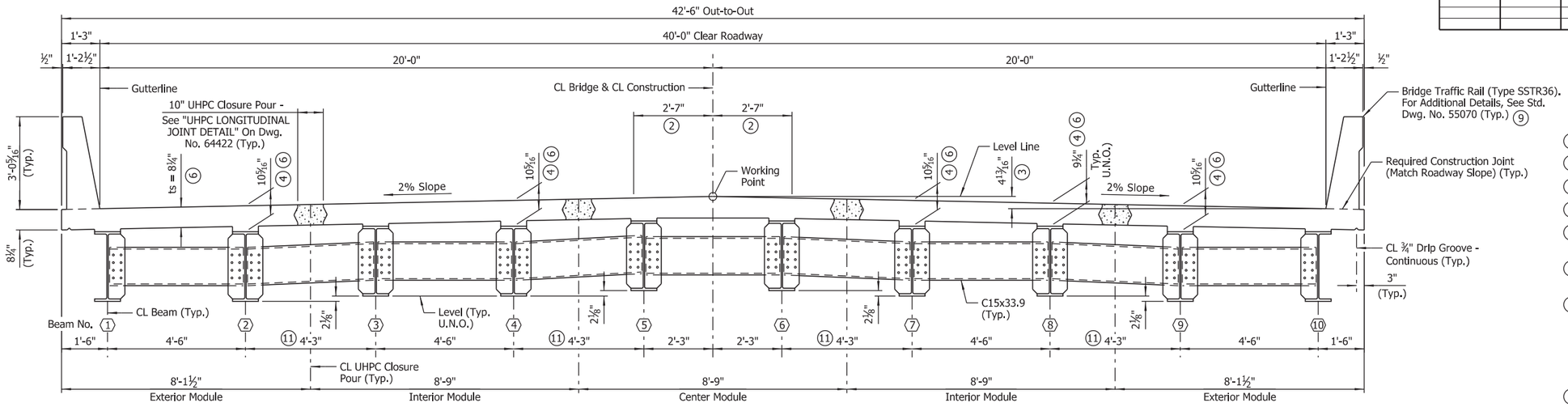

TYPICAL ROADWAY SECTION

(Looking Ahead)
Scale: ½" = 1'-0"

1. See "WELD DETAIL FOR EXPANSION DEVICE" on Dwg. No. 64421.
2. See "ROUNDING DETAIL" on Std. Dwg. No. 55007.
3. Working Point to Gutterline (Typ.)
4. Measured from top of deck to top of beam flange at CL Bearing
5. Dimensions shown normal to CL Construction. Elements of the expansion device shall be fabricated to accommodate skew.
6. The bridge deck as shown includes ½" of sacrificial surface for deck grinding.
7. The mechanical couplers shall be Dayton Superior D250SCA Bar Lock Epoxy Couplers or an alternate approved type in accordance with the ARDOT Qualified Products List (QPL). The cost of mechanical couplers shall not be measured for separate payment but shall be included in the cost of the prefabricated superstructure modules. Mechanical couplers shall develop at least 125% of the specified yield strength of the reinforcing steel.
8. Dimensions shown are normal to CL Bridge & CL Construction.
9. Bridge Traffic Rail shall be cast in field following placement of all closure pours.
10. Place studs affected by clipped flange horizontally on channel web
11. Permanent steel bridge deck forms will not be allowed within bays that contain UHPC closure pours. Removable deck forming will be required at these locations.

LEGEND

EF = Each Face
U.N.O. = Unless Noted Otherwise
UHPC = Ultra High Performance Concrete

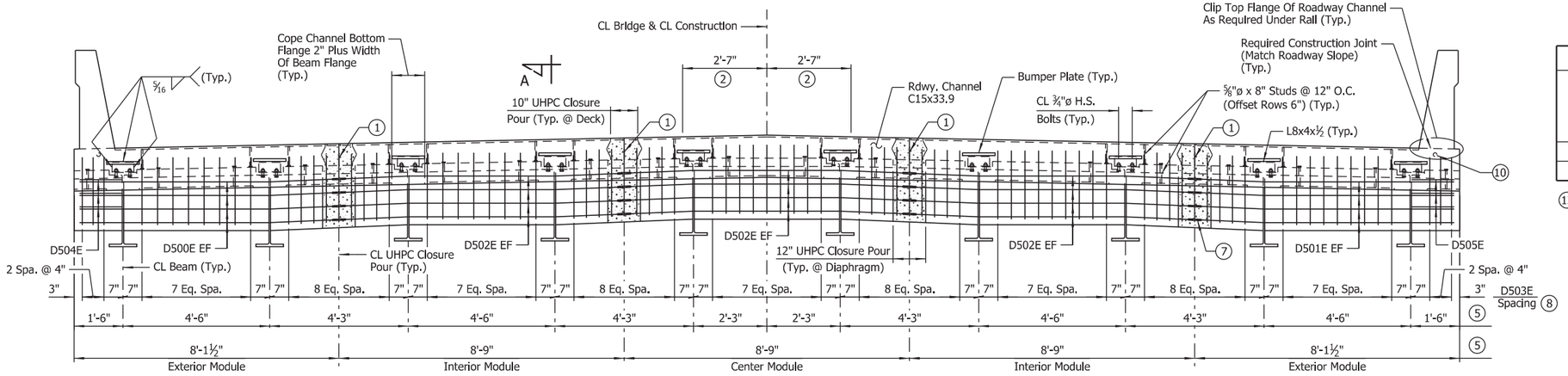

TYPICAL SECTION THRU JOINT AT END BENTS

(Looking Ahead at Begin Bridge)
No Scale

SILICONE JOINT DATA					
Bridge No.	"A" Width Perpendicular To Joint At 24 Hour Average Temperature (12) Of:			"B" Perpendicular To Joint At 60°F	Bumper Plate Size
	40°F	60°F	80°F		
07562	2 3/16"	2"	1 13/16"	2¼"	1" x 1" x 1'-0"
07563	2 3/16"	2"	1 13/16"	2¼"	1" x 1" x 1'-0"

(12) The temperature used to set the joint opening shall be the approximate average air temperature during the 24 hour period immediately before the end bent backwalls are poured. The Engineer shall establish the temperature. Interpolation of the table may be necessary.

NOTES:
Joint data is the same for begin bridge and end bridge at each location.

For additional details of poured silicone joints, see Std. Dwg. No. 55008.

EXPANSION DEVICE:
Rdwy. Channel - C15x33.9
Conn. Angles - L8x4x½
Detail Device ⅛" high and provide ¼" shims using 2-1/16" and 1-⅛" plates.

NOTES:
D503E bars oriented parallel to CL Bridge.

Diaphragm at End Bridge similar.

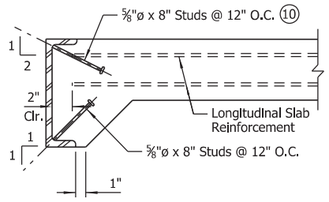

DETAIL OF ANCHORS AND PLACEMENT OF LONGITUDINAL REINFORCEMENT

No Scale

NOTE:
As an alternate to ⅝"ø studs, ½"ø x 8" studs spaced @ 8" O.C. may be used.

NOTES:
For Standard General Notes and Details, See Std. Dwg. Nos. 55006.

For prefabricated module reinforcing details, see Dwg. No. 64396.

For "SECTION A-A", see Dwg. No. 64421.

Class 2 Protective Surface Treatment shall be applied to the top and roadway faces of bridge traffic rails and the bridge roadway surface.

The bridge deck shall be given a polymer overlay as specified in SP "POLYMER OVERLAY".

STATE OF ARKANSAS
LICENSED PROFESSIONAL ENGINEER
No.8017
JOHN H. RUDDELL

DIGITALLY SIGNED 8-13-2021
BRIDGE ENGINEER

SHEET 1 OF 6
DETAILS OF 270'-0"
CONTINUOUS W-BEAM UNIT
HWY. 140 OVER NATIONAL DITCH NO. 6
HWY. 140 OVER DITCH NO. 31

ROUTE SEC.

ARKANSAS STATE HIGHWAY COMMISSION
LITTLE ROCK, ARK.

DRAWN BY: RAK DATE: JAN. 2021 FILENAME: b100955x7_s1.dgn
CHECKED BY: JHR DATE: MAY 2021 SCALE: As Shown
DESIGNED BY: RAK DATE: JAN. 2021

BRIDGE NO. 07562-07563 DRAWING NO. 64395

abhall 8/13/2021 9:55:07 AM
WORKSPACE: ARDOT Bridge (2019)
L:\2017\1701642 - ARDOT Job 100955\Drawings\b100955x7_S401_SX.dgn
REVISED DATE:

DATE REVISED	DATE FILMED	DATE REVISED	DATE FILMED	FED. ROAD DIST. NO.	STATE	FED. AID PROJ. NO.	SHEET NO.	TOTAL SHEETS
				6	ARK.			
				JOB NO.		100955	219	355
				(1) 07562-07563		270' UNIT		64396

SLAB REINFORCING:
Transverse: S401E or S402E @ 6" o.c. Top and Bottom
S403E @ 6" o.c. in Top of Overhang Beneath Bridge Traffic Rail (Bundled with No. 4 Bars)

Longitudinal: S6XXE In Top As Shown, S4XXE In Bottom As Shown — See "PART REINFORCING PLAN" on Dwg. Nos. 64398 & 64399

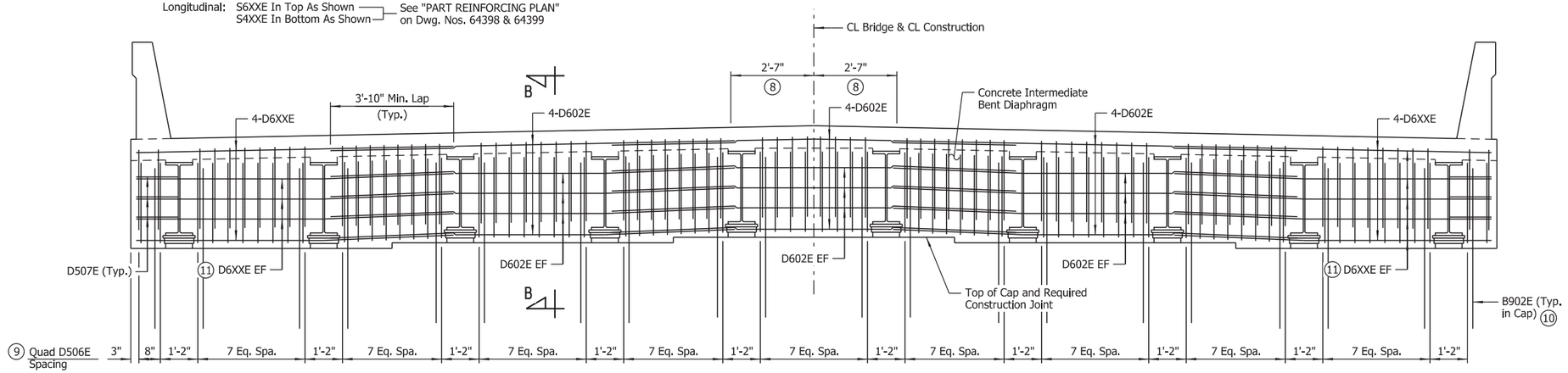

(1) See "ADJUSTMENT FOR SLAB THICKNESS TOLERANCE" on Dwg. No. 64421.

(2) TOLERANCE:
Minus = ¼"
Plus = Amount of slab thickening used to meet slab thickness tolerance - See "ADJUSTMENT FOR SLAB THICKNESS TOLERANCE" on Dwg. No. 64421.

(3) Measured from top of deck to top of beam flange at CL Bearing.

(4) CL 10" Ultra High Performance Concrete Closure Pour. See "UHPC LONGITUDINAL JOINT DETAIL" on Dwg. No. 64422.

(5) Provide joint surface with Class 4, Exposed Aggregate Finish per Subsection 802.19(b)(4) with "Concrete Surface Profile 6" or rougher, as established by the International Concrete Repair Institute.

(6) Rotate S403E as needed to avoid interference with bottom mat of deck reinforcement.

(7) The bridge deck as shown includes ¼" of sacrificial surface for deck grinding.

(8) See "ROUNDING DETAIL" on Std. Dwg. No. 55007.

(9) Dimensions shown are normal to CL Bridge & CL Construction.

(10) See "DETAILS OF INTERMEDIATE BENTS" on Dwg. Nos. 64393 & 64394 for additional details.

(11) See "PLAN - INTERMEDIATE BENT DIAPHRAGM" on Dwg. No. 64400 for bar designations.

NOTE:
D506E bars oriented parallel to CL Bridge.

NOTE:
Bar positions and clearances from the forms shall be maintained by means of stays, ties, hangers, or other approved devices per Subsection 804.06. Placement of slab bolsters or high-chairs with full-length lower runners directly on removable deck forms will not be allowed.

TYPICAL SECTION AT INTERMEDIATE BENTS

(Looking Ahead)
No Scale

NOTES:
The prefabricated superstructure modules shall be fabricated and assembled in accordance with SP "PREFABRICATED SUPERSTRUCTURE MODULES".

The cost of all concrete (including those portions precast and cast-in-place), reinforcing steel and structural steel shall be subsidiary to the unit price bid for item "PREFABRICATED SUPERSTRUCTURE MODULES".

The concrete used for the longitudinal closure pour shall be in accordance with SP "ULTRA HIGH PERFORMANCE CONCRETE".

For "SECTION B-B", see Dwg. No. 64421.

NOTE:
C15x33.9 Diaphragms and deck reinforcing not shown for clarity.

LEGEND

EF = Each Face

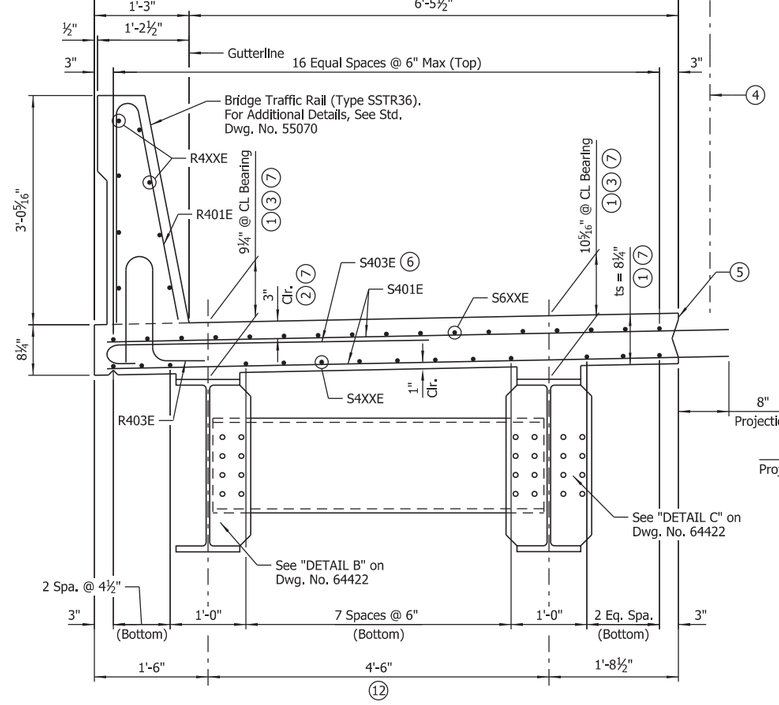

EXTERIOR MODULE REINFORCING DETAIL

Scale: 1" = 1'-0"

NOTE:
Bridge Traffic Rail to be poured after all prefabricated modules and cast-in-place closure pours are placed.

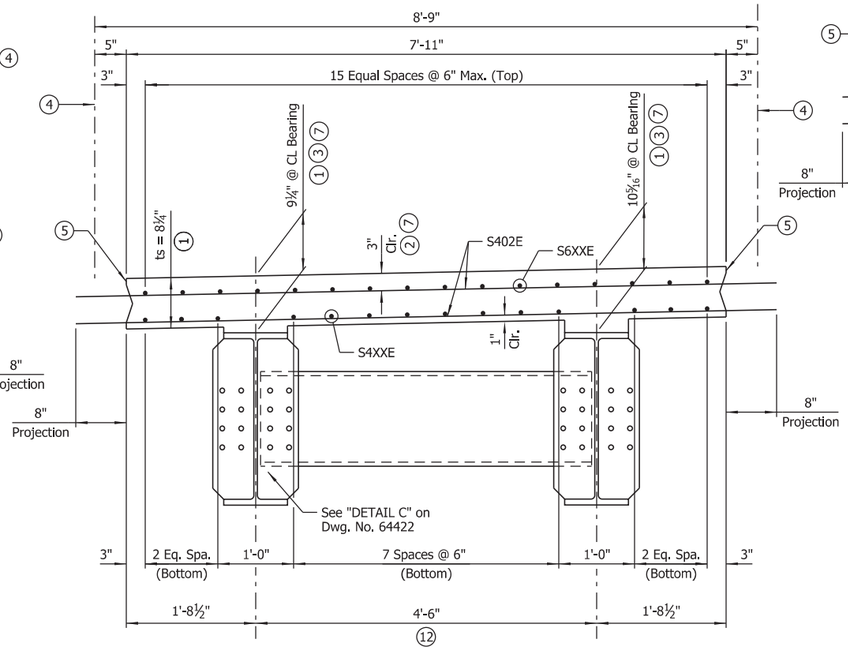

INTERIOR MODULE REINFORCING DETAIL

Scale: 1" = 1'-0"

(12) Permanent steel bridge deck forms are allowed in designated bays only.

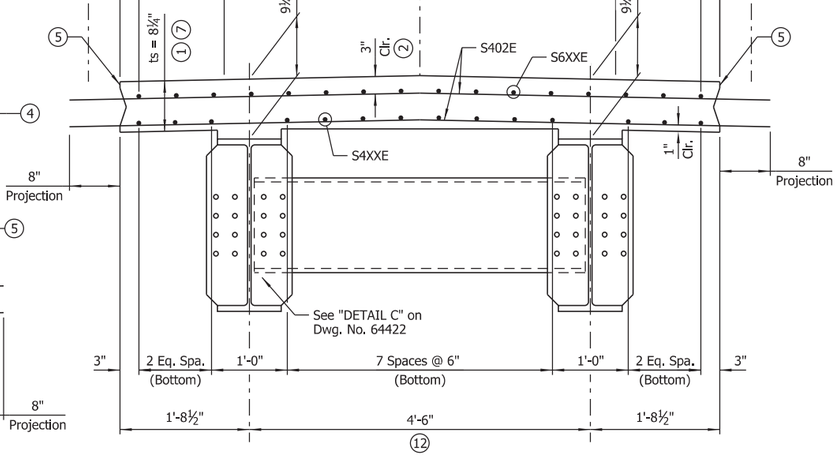

CENTER MODULE REINFORCING DETAIL

Scale: 1" = 1'-0"

STATE OF ARKANSAS
LICENSED PROFESSIONAL ENGINEER
No.8017
JOHN H. RUDDELL

DIGITALLY SIGNED 8-13-2021
BRIDGE ENGINEER

SHEET 2 OF 6
DETAILS OF 270'-0"
CONTINUOUS W-BEAM UNIT
HWY. 140 OVER NATIONAL DITCH NO. 6
HWY. 140 OVER DITCH NO. 31
ROUTE SEC.

ARKANSAS STATE HIGHWAY COMMISSION
LITTLE ROCK, ARK.

DRAWN BY: RAK DATE: JAN. 2021 FILENAME: b100955x7_s2.dgn
CHECKED BY: JHR DATE: MAY 2021 SCALE: As Shown
DESIGNED BY: RAK DATE: JAN. 2021

BRIDGE NO. 07562-07563 DRAWING NO. 64396

abhall 8/13/2021 9:55:09 AM
WORKSPACE: ARDOT Bridge (2019)
L:\2017\17017642 - ARDOT Job 100955\Drawings\b100955x7_S402_SX.dgn
REVISED DATE:

DATE REVISED	DATE FILMED	DATE REVISED	DATE FILMED	FED. ROAD DIST. NO.	STATE	FED. AID PROJ. NO.	SHEET NO.	TOTAL SHEETS
				6	ARK.			
				JOB NO.		100955	220	356
				(1) 07562-07563		270' UNIT		64397

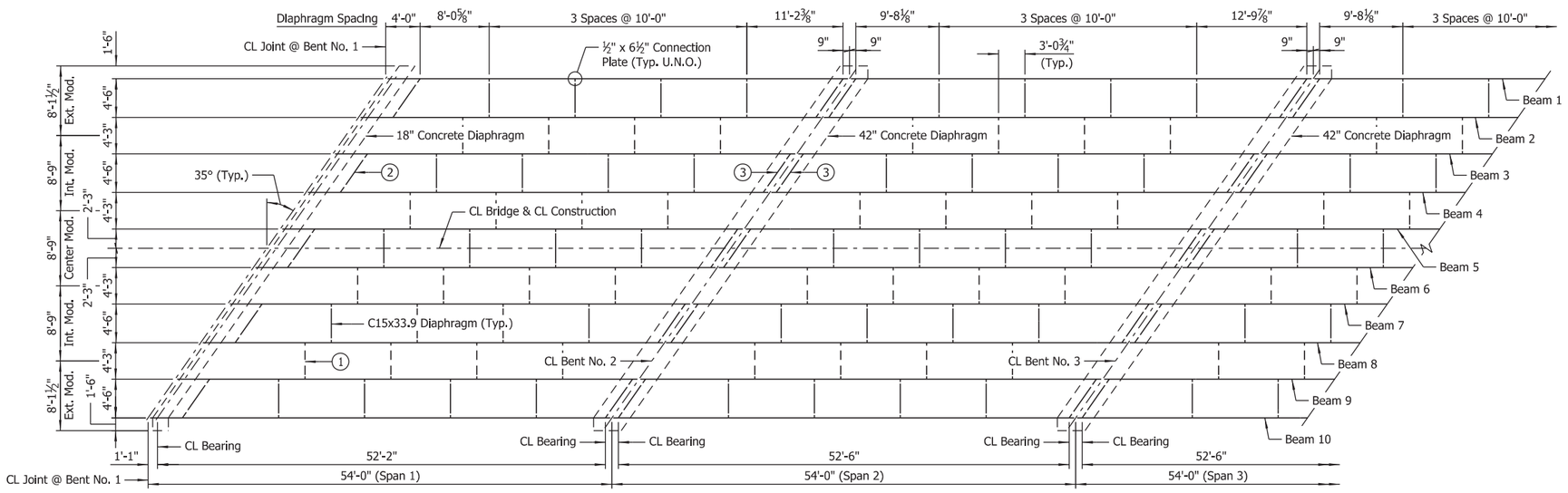

NOTES:
For Standard General Notes, see Std. Dwg. No. 55006.

For "SHEAR CONNECTOR DETAIL," see Std. Dwg. No. 55007.

All structural steel shall be ASTM A709, Gr. 50W unless noted otherwise. The cost of the structural steel shall be subsidiary to the unit price bid for item "PREFABRICATED SUPERSTRUCTURE MODULES". Diaphragms placed between separate modules shall be included in the cost of the prefabricated modules.

For painting of beam ends adjacent to bridge deck expansion joints, see "PROJECT GENERAL NOTES" on Dwg. No. 64303.

For diaphragm and connection plate details, see "DETAIL B" and "DETAIL C" on Dwg. No. 64422.

(1) Diaphragms between modules shall be installed after prefabricated modules are installed and prior to constructing closure pours.

(2) Diaphragms adjacent to concrete End Bent diaphragms shall be fabricated such that the channel flanges project away from concrete end bent diaphragms. Note that orientation of flange projection shall be considered when determining obtuse/acute connection locations.

(3) Diaphragms at Intermediate Bents shall be fabricated such that the channel flanges project away from CL Bent. Note that orientation of flange projection shall be considered when determining obtuse/acute connection locations.

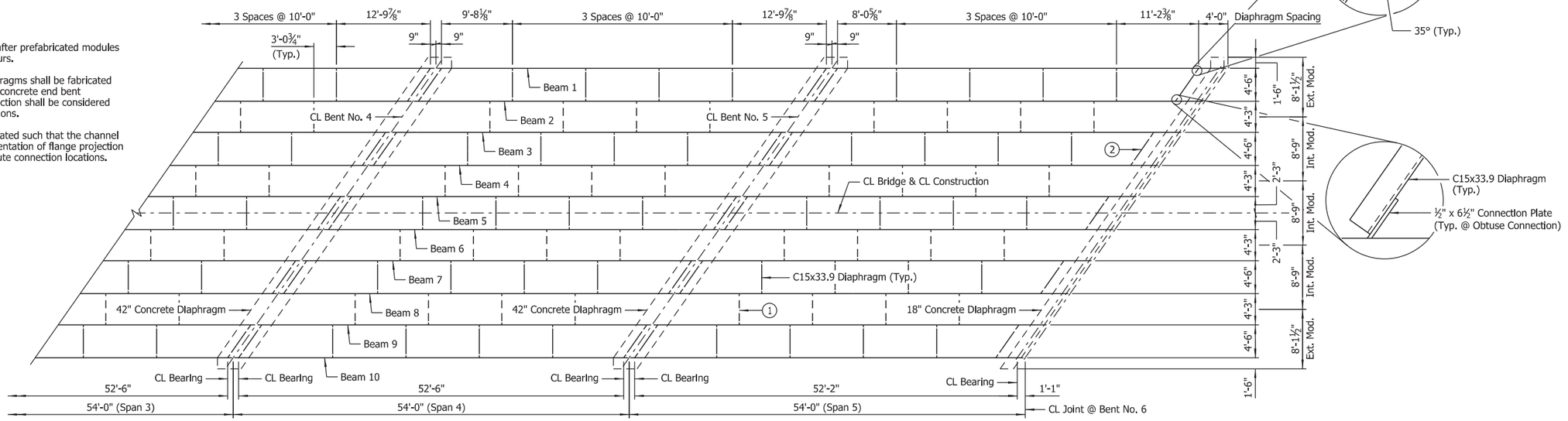

FRAMING PLAN
Scale: ⅛" = 1'-0"

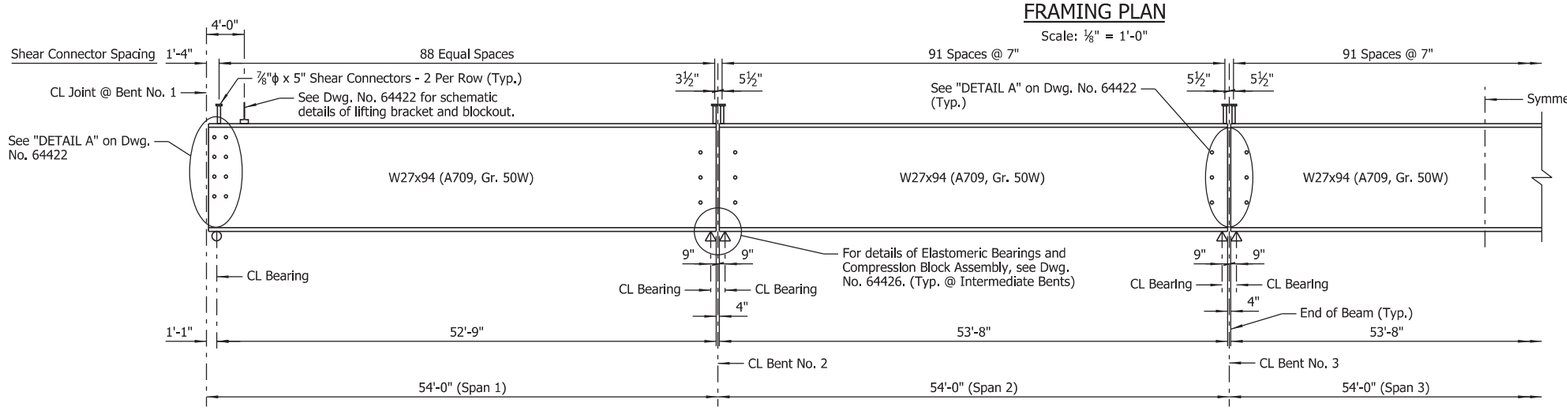

HALF-BEAM ELEVATION
No Scale

LEGEND
U.N.O. = Unless Noted Otherwise

STATE OF ARKANSAS
LICENSED PROFESSIONAL ENGINEER
No.8017
JOHN H. RUDDELL

DIGITALLY SIGNED 8-13-2021
BRIDGE ENGINEER

SHEET 3 OF 6
DETAILS OF 270'-0"
CONTINUOUS W-BEAM UNIT
HWY. 140 OVER NATIONAL DITCH NO. 6
HWY. 140 OVER DITCH NO. 31

ROUTE SEC.

ARKANSAS STATE HIGHWAY COMMISSION
LITTLE ROCK, ARK.

DRAWN BY: HEW DATE: FEB. 2021 FILENAME: b100955x7_s3.dgn
CHECKED BY: JHR DATE: JUNE 2021 SCALE: As Shown
DESIGNED BY: BWD DATE: FEB. 2021

BRIDGE NO. 07562-07563 DRAWING NO. 64397

abhall 8/13/2021 9:55:12 AM
WORKSPACE: ARDOT Bridge (2019)
L:\201\701642 - ARDOT Job 100955\Drawings\b100955x7_S403_SF.dgn
REVISED DATE:

(1) Placed as shown in "EXTERIOR MODULE REINFORCING DETAIL." See Dwg. No. 64396.

(2) Placed as shown in "INTERIOR MODULE REINFORCING DETAIL." See Dwg. No. 64396.

(3) Placed as shown in "CENTER MODULE REINFORCING DETAIL." See Dwg. No. 64396.

(4) Top and bottom, placed as shown in "UHPC LONGITUDINAL JOINT DETAIL." See Dwg. No. 64422. In Spans 2-4, bars shall be centered longitudinally (in plan view) with the UHPC joint.

(5) S635E bars shall have 3'-10" minimum lap with both #6 and #4 longitudinal bars. (Typ. at Deck Closure)

(6) S403E Bundled with #4 Bars in Top of Exterior Modules and #4 Bars in Top of Closure Pours (Typ. on Both Sides of Bridge)

(7) S635E Top & Bottom - Lapped With Longitudinal Bars Projecting From Precast Modules & UHPC Closure Pours

(8) S601E-S617E Top S460E-S473E Bottom

(9) S618E-S633E Top S474E-S487E Bottom

(10) Top & Bottom - 11 Spaces @ 6"

(11) Top & Bottom - 12 Spaces @ 6"

(12) Top & Bottom - 8 Spaces @ 6"

(13) Top & Bottom - 3 Spaces @ 6"

(14) 2'-7" Min. Lap (Typ. for transverse #4 bars In deck closure, Including noncontact splices)

(15) Rail joints designated with symbol (F) shall be stopped 6" from top of slab. All other rail joints with symbol (P) shall be partial depth joints stopped 16" from top of slab.

(16) See "TRANSVERSE SLAB JOINT DETAIL" on Std. Dwg. No. 55007.

DATE REVISED	DATE FILMED	DATE REVISED	DATE FILMED	FED. ROAD DIST. NO.	STATE	FED. AID PROJ. NO.	SHEET NO.	TOTAL SHEETS
				6	ARK.			
				JOB NO.		100955	221	356
				(1) 07562-07563		270' UNIT		64398

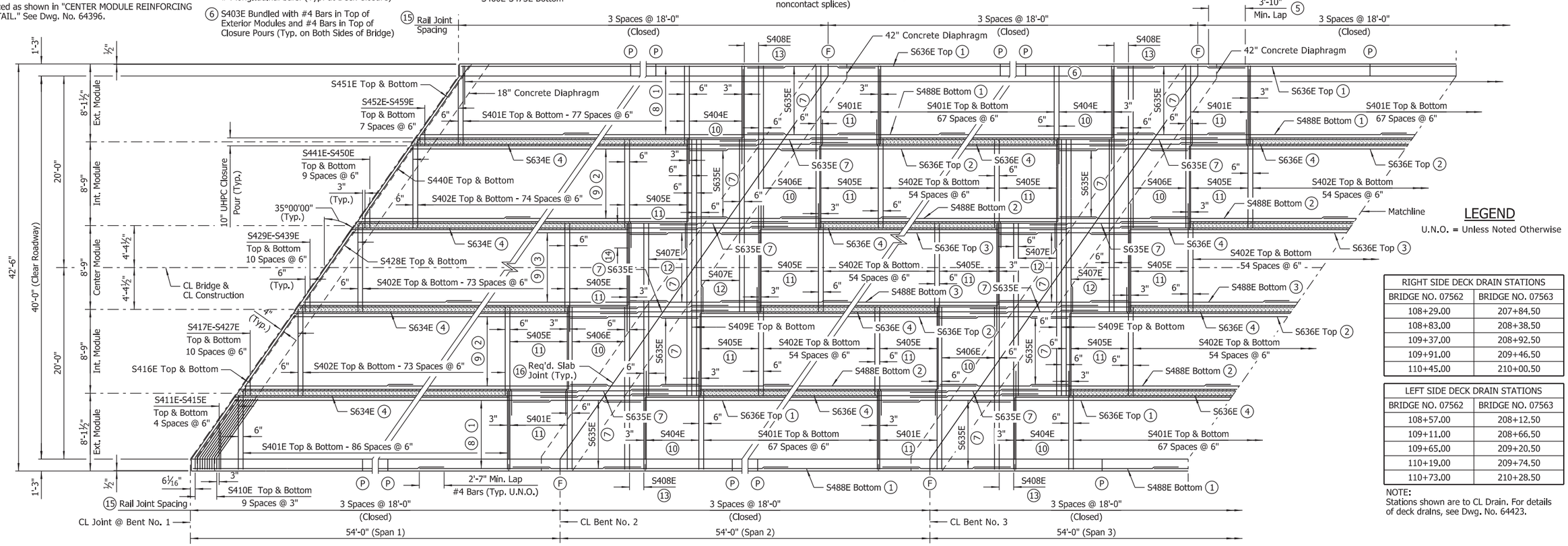

NOTE:
For layout of precast deck segments, UHPC joints and cast-in-place deck closures, see "MODULE & CLOSURE POUR SCHEMATIC" on Dwg. No. 64399.

NOTE:
For "GENERAL NOTES", see Dwg. No. 64399.

PART REINFORCING PLAN

Scale: 3/16" = 1'-0"

LEGEND

U.N.O. = Unless Noted Otherwise

RIGHT SIDE DECK DRAIN STATIONS	
BRIDGE NO. 07562	BRIDGE NO. 07563
108+29.00	207+84.50
108+83.00	208+38.50
109+37.00	208+92.50
109+91.00	209+46.50
110+45.00	210+00.50

LEFT SIDE DECK DRAIN STATIONS	
BRIDGE NO. 07562	BRIDGE NO. 07563
108+57.00	208+12.50
109+11.00	208+66.50
109+65.00	209+20.50
110+19.00	209+74.50
110+73.00	210+28.50

NOTE:
Stations shown are to CL Drain. For details of deck drains, see Dwg. No. 64423.

BAR LIST

MARK	NO. REQ'D	LENGTH	"A"	"B"	P.D.
S401E	1,684	8'-3"			Str.
S402E	1,882	9'-3"			Str.
S403E	1,076	5'-0"			3"
S404E	192	10'-4"			Str.
S405E	624	11'-4"			Str.
S406E	192	17'-0"			Str.
S407E	144	18'-0"			Str.
S408E	64	25'-9"			Str.
S409E	16	26'-9"			Str.
S410E	40	8'-9"	7'-6"	1'-3"	3"
S411E To S415E	4 Ea.	7'-10" To 4'-11"			Str.
S416E	4	10'-0"	9'-0"	1'-0"	3"
S417E To S427E	4 Ea.	9'-0" To 1'-10"			Str.
S428E	4	10'-0"	8'-10"	1'-2"	3"
S429E To S439E	4 Ea.	9'-2" To 2'-0"			Str.
S440E	4	9'-11"	8'-7"	1'-4"	3"
S441E To S450E	4 Ea.	8'-8" To 2'-2"			Str.
S451E	4	9'-10"	9'-0"	10"	3"

BAR LIST

MARK	NO. REQ'D	LENGTH	"A"	"B"	P.D.
S452E To S459E	4 Ea.	6'-8" To 1'-8"			Str.
S460E To S473E	8 Ea.	28'-1" To 25'-11"			Str.
S474E To S487E	12 Ea.	28'-1" To 25'-7"			Str.
S488E	420	25'-5"			Str.
S601E To S617E	4 Ea.	53'-4" To 49'-1"			Str.
S618E To S633E	6 Ea.	53'-6" To 48'-5"			Str.
S634E	32	51'-3"			Str.
S635E	672	13'-5"			Str.
S636E	294	48'-3"			Str.

BAR LIST

MARK	NO. REQ'D	LENGTH	"A"	"B"	P.D.
D500E	16	9'-8"			Str.
D501E	16	9'-5"	8'-1"	1'-4"	3¾"
D502E	48	10'-7"			Str.
D503E	164	6'-2"			2½"
D504E	6	4'-1"			2½"
D505E	6	3'-5"	1'-3½"	1'-2"	2½"
D506E	1,216	7'-7½"	2'-6"	2'-8"	2½"
D507E	24	5'-3"			2½"
D600E	40	11'-4"	10'-0"	1'-4"	4½"
D601E	72	11'-8"			Str.
D602E	168	14'-7"			Str.
R401E	1,080	5'-11"			2½"
R402E	80	5'-6"			Str.
R403E	1,080	3'-6"			3", 3¾"
R404E	240	17'-8"			Str.

TABLE OF VARIABLES

CLOSED RAIL PANELS			OPEN RAIL PANELS						
PANEL LENGTH	A	R4XXE	PANEL LENGTH	B	C	D	E	F	R4XXE
18'-0"	35	R404E							

NOTE:
Longitudinal bars in interior precast deck modules shall project 4'-0" min. from end of precast deck into regions of cast-in-place deck closures.

Longitudinal bars in exterior precast deck modules shall project 4'-3" min. from end of precast deck into regions of cast-in-place deck closures.

BAR BENDING DIAGRAMS

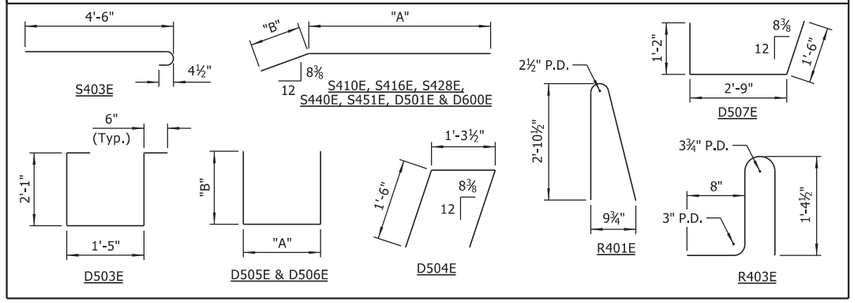

NOTES:
Dimensions of bars are out-to-out.

Bar designations ending with "E" indicate epoxy coated bars.

STATE OF ARKANSAS
LICENSED PROFESSIONAL ENGINEER
No.14498
ADAM B. HALL

DIGITALLY SIGNED 8-13-2021
BRIDGE ENGINEER

SHEET 4 OF 6
DETAILS OF 270'-0" CONTINUOUS W-BEAM UNIT
HWY. 140 OVER NATIONAL DITCH NO. 6
HWY. 140 OVER DITCH NO. 31

ROUTE SEC.

ARKANSAS STATE HIGHWAY COMMISSION
LITTLE ROCK, ARK.

DRAWN BY: BWD DATE: FEB. 2021 FILENAME: b100955x7_s4.dgn
CHECKED BY: ABH DATE: JUNE 2021 SCALE: As Shown
DESIGNED BY: BWD DATE: FEB. 2021

BRIDGE NO. 07562-07563 DRAWING NO. 64398

abhall 8/13/2021 9:55:14 AM
WORKSPACE: ARDOT Bridge (2019)
L:\2017\17017642 - ARDOT Job 100955\Drawings\b100955x7_S404_SB.dgn
REVISED DATE:

(1) Placed as shown in "EXTERIOR MODULE REINFORCING DETAIL." See Dwg. No. 64396.

(2) Placed as shown in "INTERIOR MODULE REINFORCING DETAIL." See Dwg. No. 64396.

(3) Placed as shown in "CENTER MODULE REINFORCING DETAIL." See Dwg. No. 64396.

(4) Top and bottom, placed as shown in "UHPC LONGITUDINAL JOINT DETAIL." See Dwg. No. 64422. In Spans 2-4, bars shall be centered longitudinally (in plan view) with the UHPC joint.

(5) S635E bars shall have 3'-10" minimum lap with both #6 and #4 longitudinal bars. (Typ. at Deck Closure)

(6) S403E Bundled with #4 Bars in Top of Exterior Modules and #4 Bars in Top of Closure Pours (Typ. on Both Sides of Bridge)

(7) S635E Top & Bottom - Lapped With Longitudinal Bars Projecting From Precast Modules & UHPC Closure Pours

(8) S601E-S617E Top S460E-S473E Bottom

(9) S618E-S633E Top S474E-S487E Bottom

(10) Top & Bottom - 11 Spaces @ 6"

(11) Top & Bottom - 12 Spaces @ 6"

(12) Top & Bottom - 8 Spaces @ 6"

(13) Top & Bottom - 3 Spaces @ 6"

(14) 2'-7" Min. Lap (Typ. for transverse #4 bars in deck closure, including noncontact splices)

(15) Rail joints designated with symbol (F) shall be stopped 6" from top of slab. All other rail joints with symbol (P) shall be partial depth joints stopped 16" from top of slab.

(16) See "TRANSVERSE SLAB JOINT DETAIL" on Std. Dwg. No. 55007.

DATE REVISED	DATE FILMED	DATE REVISED	DATE FILMED

FED. ROAD DIST. NO.	STATE	FED. AID PROJ. NO.	SHEET NO.	TOTAL SHEETS
6	ARK.			
JOB NO.		100955	222	356
(I) 07562-07563		270' UNIT		64399

LEGEND

U.N.O. = Unless Noted Otherwise

NOTE:
Longitudinal bars in interior precast deck modules shall project 4'-0" min. from end of precast deck into regions of cast-in-place deck closures.

Longitudinal bars in exterior precast deck modules shall project 4'-3" min. from end of precast deck into regions of cast-in-place deck closures.

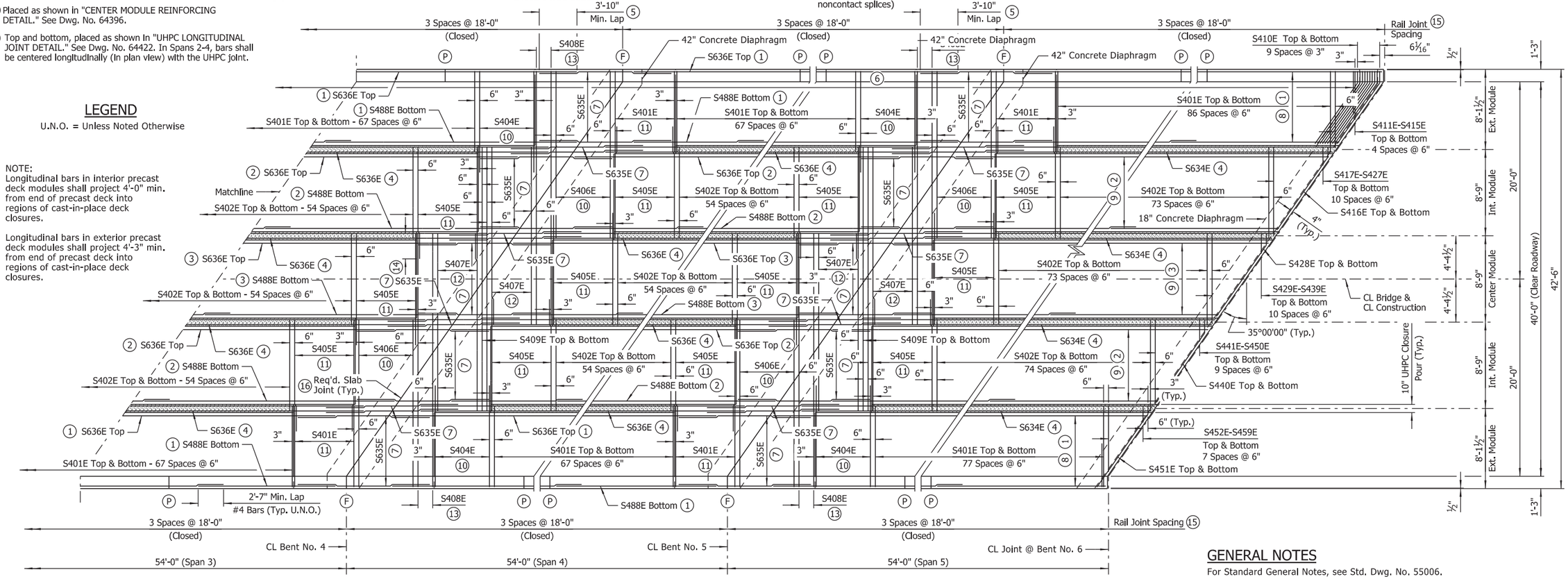

PART REINFORCING PLAN

Scale: 3/16" = 1'-0"

NOTE:
For "BAR LIST", "BAR BENDING DIAGRAMS", Rail Panel "TABLE OF VARIABLES" and eck drain stations, see Dwg. No. 64398.

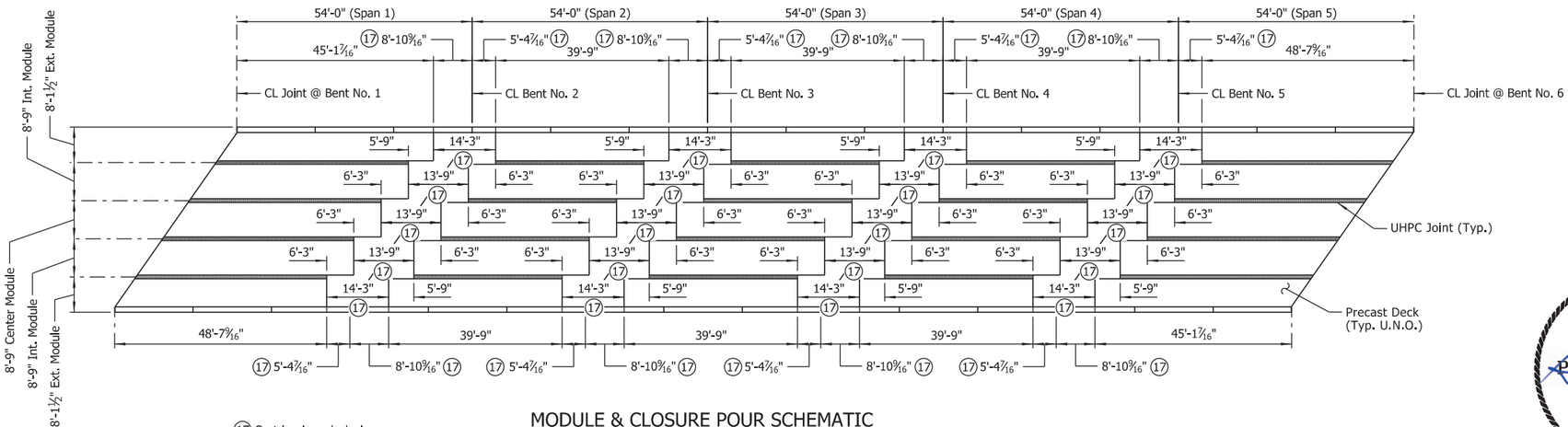

(17) Cast-in-place deck closure

MODULE & CLOSURE POUR SCHEMATIC

Scale: 1/16" = 1'-0"

GENERAL NOTES

For Standard General Notes, see Std. Dwg. No. 55006.

For "PROJECT GENERAL NOTES," see Dwg. No. 64303.

For bridge traffic rail reinforcing details and details of partial-depth and full-depth rail joints, see Std. Dwg. No. 55070.

For details of concrete diaphragms, see Dwg. Nos. 64395, 64396, 64400 & 64421.

Edges of precast deck adjacent to cast-in-place closure pours shall be keyed and textured in accordance with details and notes on Dwg. No. 64422.

For additional clarity in transverse reinforcing placement near end of precast deck, see "TRANSVERSE REINFORCING SCHEMATICS" on Dwg. No. 64421.

Concrete in bridge superstructure shall be placed, consolidated and screeded off for the entire pour before any concrete has taken its initial set.

A minimum of 72 hours shall elapse between completion of the slab and the pouring of the bridge railing. Any railing pours made before the entire slab unit has been placed must be approved by the Engineer.

Concrete diaphragms shall be poured monolithically with the slab.

Removable forms shall be used when pouring diaphragms.

STATE OF ARKANSAS
LICENSED PROFESSIONAL ENGINEER
No.14498
ADAM B. HALL

DIGITALLY SIGNED 8-13-2021
BRIDGE ENGINEER

SHEET 5 OF 6
DETAILS OF 270'-0"
CONTINUOUS W-BEAM UNIT
HWY. 140 OVER NATIONAL DITCH NO. 6
HWY. 140 OVER DITCH NO. 31

ROUTE SEC.

ARKANSAS STATE HIGHWAY COMMISSION
LITTLE ROCK, ARK.

DRAWN BY: CWT DATE: APR. 2021 FILENAME: b100955x7_s5.dgn
CHECKED BY: ABH DATE: JUNE 2021 SCALE: As Shown
DESIGNED BY: BWD DATE: FEB. 2021

BRIDGE NO. 07562-07563 DRAWING NO. 64399

abhall 8/13/2021 9:55:16 AM
WORKSPACE: ARDOT Bridge (2019)
L:\2017\17017642 - ARDOT Job 100955\Drawings\b100955x7_S405_SB.dgn
REVISED DATE:

DATE REVISED	DATE FILMED	DATE REVISED	DATE FILMED	FED. ROAD DIST. NO.	STATE	FED. AID PROJ. NO.	SHEET NO.	TOTAL SHEETS
				6	ARK.			
				JOB NO.		100955	223	356
				(1) 07562-07563		270' UNIT		64400

TABLE OF DEAD LOAD DEFLECTIONS (INCHES)

	Point Of Deflection	Beams 1 & 10			Beams 2, 4, 7 & 9			Beams 3, 5, 6 & 8		
		Structural Steel	Structural Steel + Slab	Structural Steel + Slab + UHPC + Rail	Structural Steel	Structural Steel + Slab	Structural Steel + Slab + UHPC + Rail	Structural Steel	Structural Steel + Slab	Structural Steel + Slab + UHPC + Rail
Span No. 1	1.0	0.000	0.000	0.000	0.000	0.000	0.000	0.000	0.000	0.000
	1.1	0.057	0.282	0.292	0.060	0.313	0.329	0.060	0.307	0.323
	1.2	0.108	0.534	0.554	0.114	0.593	0.624	0.114	0.581	0.612
	1.3	0.149	0.731	0.761	0.156	0.811	0.858	0.156	0.796	0.842
	1.4	0.174	0.856	0.896	0.183	0.950	1.012	0.183	0.932	0.994
	1.5	0.183	0.899	0.929	0.192	0.998	1.044	0.192	0.979	1.025
	1.6	0.174	0.856	0.886	0.183	0.950	0.997	0.183	0.932	0.978
	1.7	0.149	0.731	0.751	0.156	0.811	0.842	0.156	0.796	0.827
	1.8	0.108	0.534	0.544	0.114	0.593	0.608	0.114	0.581	0.597
	1.9	0.057	0.282	0.292	0.060	0.313	0.329	0.060	0.307	0.323
	2.0	0.000	0.000	0.000	0.000	0.000	0.000	0.000	0.000	0.000
Span No. 2	2.1	0.057	0.282	0.282	0.060	0.313	0.313	0.060	0.307	0.307
	2.2	0.108	0.534	0.534	0.114	0.593	0.593	0.114	0.581	0.581
	2.3	0.149	0.731	0.741	0.156	0.811	0.827	0.156	0.796	0.811
	2.4	0.174	0.856	0.866	0.183	0.950	0.966	0.183	0.932	0.947
	2.5	0.183	0.899	0.909	0.192	0.998	1.013	0.192	0.979	0.994
	2.6	0.174	0.856	0.866	0.183	0.950	0.966	0.183	0.932	0.947
	2.7	0.149	0.731	0.741	0.156	0.811	0.827	0.156	0.796	0.811
	2.8	0.108	0.534	0.534	0.114	0.593	0.593	0.114	0.581	0.581
	2.9	0.057	0.282	0.282	0.060	0.313	0.313	0.060	0.307	0.307
	3.0	0.000	0.000	0.000	0.000	0.000	0.000	0.000	0.000	0.000
Half Span No. 3	3.1	0.057	0.282	0.282	0.060	0.313	0.313	0.060	0.307	0.307
	3.2	0.108	0.534	0.544	0.114	0.593	0.608	0.114	0.581	0.597
	3.3	0.149	0.731	0.741	0.156	0.811	0.827	0.156	0.796	0.811
	3.4	0.174	0.856	0.876	0.183	0.950	0.981	0.183	0.932	0.963
	3.5	0.183	0.899	0.919	0.192	0.998	1.029	0.192	0.979	1.009

NOTE:
This table is symmetric about CL unit.

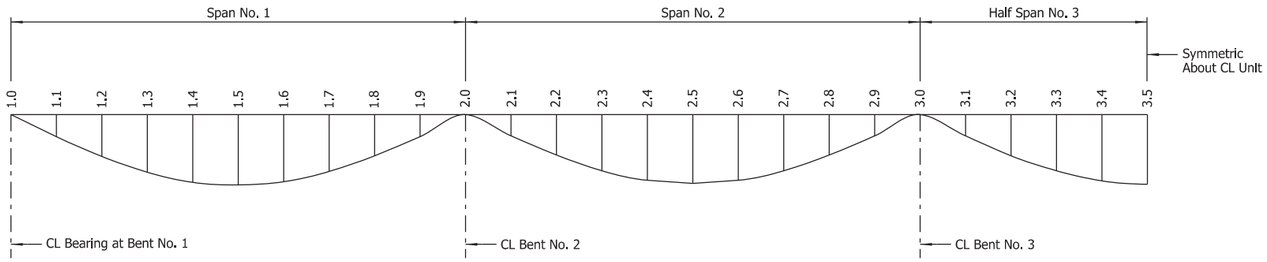

DEAD LOAD DEFLECTION DIAGRAM

No Scale

NOTES:
Camber for dead load deflection plus vertical curve +/- ¼" tolerance.
Deflections shown for end spans are along CL Beam from CL Bearing at End Bent to CL Int. Bent. Deflections shown for interior spans are along CL Beam from CL Int. Bent to CL Int. Bent. Negative sign (-) indicates point above chord.

Dead load deflections shown include an assumed loading of 15 psf in bays without UHPC closures to account for stay-in-place metal deck forms.

Revision to the deflection tables may be necessary upon review of the Contractor's submitted forming details.

(2) Spaced with top 3 rows of D500E or D501E bars.

(3) Spaced with D600E and D601E bars passing through beam web.

(4) Provide joint surface with Class 4, Exposed Aggregate Finish per Subsection 802.19(b)(4) with "Concrete Surface Profile 6" or rougher, as established by the International Concrete Repair Institute.

(5) Shift D503E as required to avoid conflict with Mechanical Couplers. Maintain 8" max. spacing between stirrups.

NOTE:
For "SECTION A-A" and "SECTION B-B", see Dwg. No. 64421.

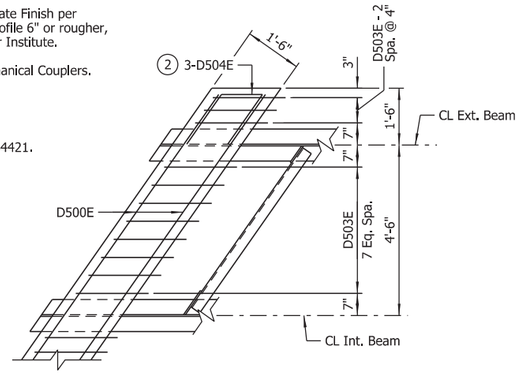

PLAN - END BENT DIAPHRAGM

Scale: ½" = 1'-0"

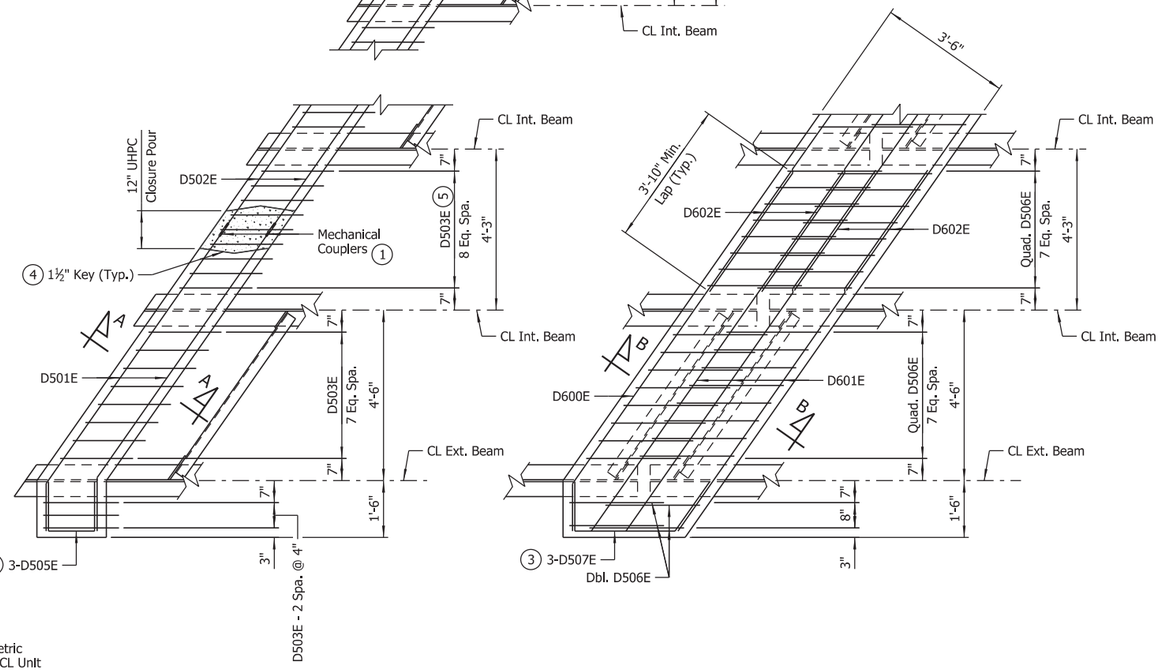

PLAN - INTERMEDIATE BENT DIAPHRAGM

Scale: ½" = 1'-0"

(1) The mechanical couplers shall be Dayton Superior D250SCA Bar Lock Epoxy Couplers or an alternate approved type in accordance with the ARDOT Qualified Products List (QPL). Due to space constraints, the shear bolts on the couplers between adjacent modules shall not be tightened until both modules are in their final positions. It will be necessary to loosely install the couplers on each module's end diaphragm reinforcing, remove the center stop pins, and slide the couplers against the module's concrete immediately prior to setting an adjacent module. Once the adjacent module is in place, the mechanical couplers shall be slid over the adjacent module's reinforcing and centered between the ends of the modules, prior to re-inserting the center stop pins and torquing the shear bolts. The cost of mechanical couplers shall not be measured for separate payment but shall be subsidiary to the price bid for item "PREFABRICATED SUPERSTRUCTURE MODULES". Mechanical couplers shall develop at least 125% of the specified yield strength of the reinforcing steel.

STATE OF ARKANSAS
LICENSED PROFESSIONAL ENGINEER
No.14498
ADAM B. HALL

DIGITALLY SIGNED 8-13-2021
BRIDGE ENGINEER

SHEET 6 OF 6
DETAILS OF 270'-0"
CONTINUOUS W-BEAM UNIT
HWY. 140 OVER NATIONAL DITCH NO. 6
HWY. 140 OVER DITCH NO. 31
ROUTE SEC.

ARKANSAS STATE HIGHWAY COMMISSION
LITTLE ROCK, ARK.

DRAWN BY: JLD DATE: FEB. 2021 FILENAME: b100955x7_s6.dgn
CHECKED BY: ABH DATE: JUNE 2021 SCALE: As Shown
DESIGNED BY: BWD DATE: JAN. 2021

BRIDGE NO. 07562-07563 DRAWING NO. 64400

abhall 8/13/2021 9:55:21 AM
WORKSPACE: ARDOT Bridge (2019)
L:\20\T\01\07642 - ARDOT Job 100955\Drawings\b100955x7_S406_DF.dgn
REVISED DATE:

DATE REVISED	DATE FILMED	DATE REVISED	DATE FILMED

FED. ROAD DIST. NO.	STATE	FED. AID PROJ. NO.	SHEET NO.	TOTAL SHEETS
6	ARK.			
JOB NO.		100955	224	355
① 07563		LAYOUT		64401

NOTE:
The proposed bridge has been positioned to avoid interference with the existing piling. The Contractor shall verify measurements before driving any piling. Any adjustments necessary to fit the proposed bridge to the existing bridge location shall be submitted for the Engineer's approval.

NOTE:
Excavate existing embankment at each end of bridge as shown. Approximately XXX cubic yards of excavation (excluding ditch excavation).

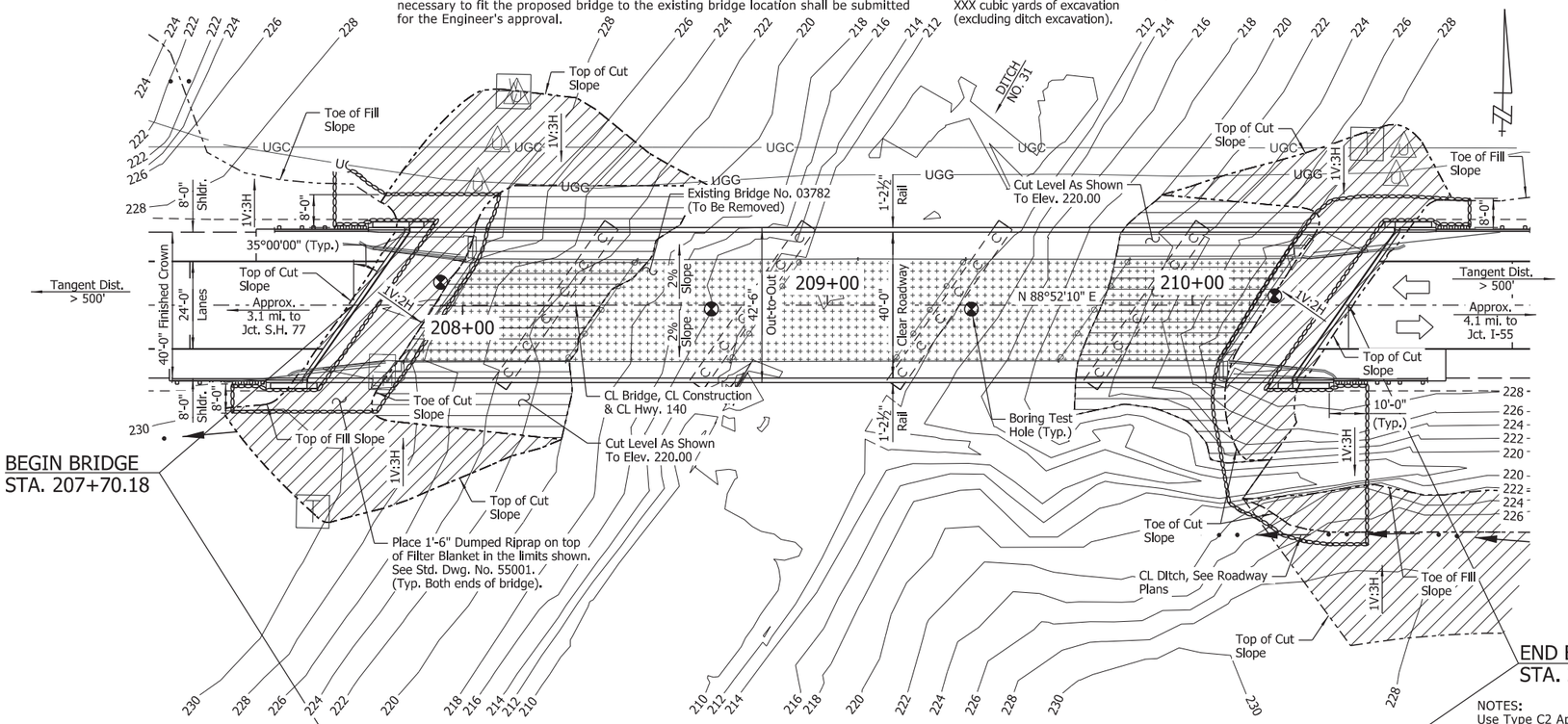

PLAN

FOR R/W DATA, SEE ROADWAY PLANS

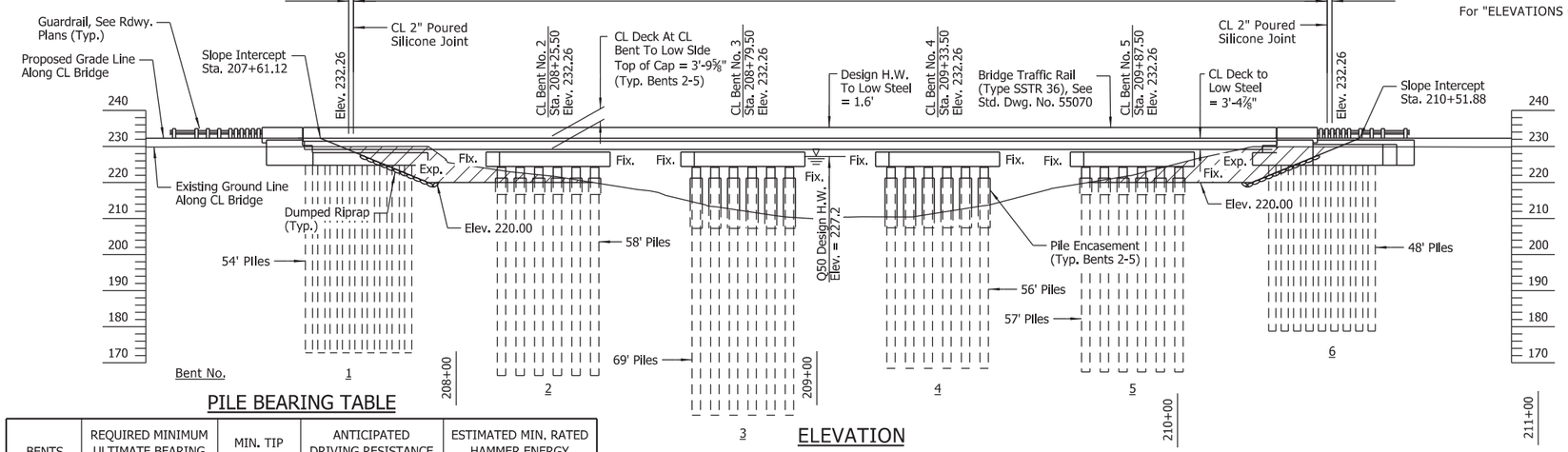

ELEVATION

PILE BEARING TABLE

BENTS	REQUIRED MINIMUM ULTIMATE BEARING CAPACITY (TONS)	MIN. TIP ELEVATION	ANTICIPATED DRIVING RESISTANCE AT MIN. TIP (TONS)	ESTIMATED MIN. RATED HAMMER ENERGY (FT.-LBS. PER BLOW)
1	178	171.00	230	30,400
2	331	167.00	415	83,000
3	331	156.00	350	59,900
4	331	169.00	400	85,900
5	331	168.00	385	64,400
6	182	177.00	270	39,400

NOTE:
Required minimum ultimate bearing capacity corresponds to the minimum post driving capacity to be obtained after an allowance for water jetting or any other methods employed to facilitate pile installation.

Anticipated Driving Resistance corresponds to the resistance to be overcome to achieve minimum tip elevation without any water jetting or other methods employed to facilitate pile installation.

NOTE:
Stations shown are along CL Construction. Elevations shown are theoretical working point elevations at CL Bridge. Any vertical dimension referenced to CL Deck is based on theoretical working point elevation at CL Bridge. See "ROUNDING DETAIL" on Std. Dwg. No. 55007 for additional information.

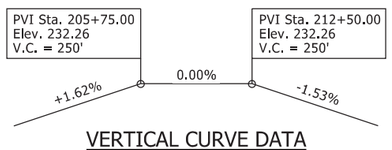

VERTICAL CURVE DATA

Hwy. 140
(Theoretical Grade Along CL Construction)

GENERAL NOTES

STEEL SHELL PILING: Piling in Bents 1 & 6 shall be 24" diameter concrete filled steel shell piles and shall be driven to meet the requirements of the "PILE BEARING TABLE". Piling in Bents 2-5 shall be 28" diameter concrete filled steel shell piles and shall be driven to meet the requirements of the "PILE BEARING TABLE". All piling shall be driven with an approved air, steam, or diesel hammer. Piling in end bents shall be driven after embankment to bottom of cap is in place. Lengths of piling shown are assumed for estimating quantities only. Actual lengths are to be determined in the field. No additional payment will be made for cut-off or build-up. Test piles are not required but may be driven for the Contractor's information in accordance with Subsection 805.08(g). No piles will be paid for as Test Piles.

Water jetting or other methods as approved by the Engineer may be required to achieve minimum penetration. This work shall not be paid for directly, but shall be considered incidental to the items "STEEL SHELL PILING (24" DIA.)" and "STEEL SHELL PILING (28" DIA.)".

PILE ENCASEMENT: Pile encasement for Bents 2-5 shall extend from 3' below bottom of cap to 3' below natural or finished ground. See Dwg. No. 64316 for additional information.

DRIVING SYSTEM: The driving system approval and the ultimate bearing capacity determination for piling shall be based on the requirements of Subsection 805.09(b), "Method B - Wave Equation Analysis (WEAP)" and SP "PILE DRIVING SYSTEM". See the "PILE BEARING TABLE" for the estimated minimum rated hammer energy required to overcome the anticipated driving resistance for all piles at each bent. If the Contractor elects to use water jetting or other approved methods to obtain the minimum tip elevations shown while driving only to the required minimum ultimate bearing capacity, the minimum rated hammer energy required will be lower and shall be accounted for in the driving system chosen by the Contractor.

EXISTING BRIDGE: Existing Bridge No. 03782 (Log Mile 4.49) is 227.5' in length, 31.0' wide (28.0' clear roadway) and consists of a concrete slab on I-beam spans (5 spans total) supported by concrete pile bents. Plans of the existing structure, if available, may be obtained upon request to the Construction Contract Development Section of the Program Management Division.

REMOVAL AND SALVAGE: The Contractor shall remove existing Bridge No. 03782 in accordance with Section 205. All material from the existing bridge shall become property of the Contractor.

DETAIL DRAWINGS:	DRAWING NO(S).
End Bents	64312, 64389, 64391, 64403-64405
Intermediate Bents	64315-64317, 64406-64407
270'-0" Continuous W-Beam Unit	64395-64400
Common Superstructure Details	64421-64424
Elastomeric Bearings	64425-64426
Type Special Approach Gutters	64427-64429
Dumped Riprap	55001
General Notes For Steel Bridge Structures	55006
Details For Steel Bridge Structures	55007
Poured Silicone Joint	55008
Concrete Filled Steel Shell Piling	55021
Type C2 Approach Slabs	55040C2
Bridge Traffic Rail	55070

NOTES:
Use Type C2 Approach Slab at each end of bridge. See Std. Dwg. No. 55040C2.

Use Type Special Approach Gutters at each end of bridge. See Dwg. Nos. 64427-64429.

For "PROJECT GENERAL NOTES", see Dwg. No. 64303.

For "ELEVATIONS OF SOIL BORINGS", see Dwg. No. 64402.

EXISTING UTILITIES LEGEND

UGC = Underground Communication Line
UGG = Underground Gas Line

NOTES:
Utilities shown are based on locations at time of survey and do not reflect ant potential utility relocations prior to construction.

HYDRAULIC DATA

FLOOD DESCRIPTION	FREQUENCY	TOTAL DISCHARGE ②	DISCHARGE THIS SITE	① NATURAL WATER SURFACE ELEVATION	WATER SURFACE ELEVATION WITH BACKWATER
	YEARS	CFS	CFS	FEET	FEET
DESIGN	50	8,363	4,116	227.2	227.2
BASE	100	9,290	4,662	227.4	227.5
EXTREME	500	11,458	5,457	227.6	227.8
OVERTOPPING	>500	N/A	N/A	N/A	N/A

① Unconstricted water surface without structure or roadway approaches.
② The total discharge includes flow at this site, Hwy. 140 over Ditch No. 6, and Hwy. 140 over Ditch No. 40.

Q100 Backwater Elevation For Existing Structure = 227.6

Proposed Low Bridge Chord Elev. = 228.85
Existing Low Bridge Chord Elev. = 227.23

Drainage Area = 196.0 square miles.
Historical High Water Elev. = N/A

STATE OF ARKANSAS
LICENSED PROFESSIONAL ENGINEER
No.14498
ADAM B. HALL

DIGITALLY SIGNED 8-13-2021
BRIDGE ENGINEER

SHEET 1 OF 2
LAYOUT OF BRIDGE
HIGHWAY 140 OVER DITCH NO. 31
HWYS. 77, 140, 158, & 181
STRS. & APPRS. (MISSISSIPPI CO.) (S)
MISSISSIPPI COUNTY

ROUTE 140 SEC. 2

ARKANSAS STATE HIGHWAY COMMISSION
LITTLE ROCK, ARK.

DRAWN BY: CSW DATE: JULY 2020 FILENAME: b100955x8_L1.dgn
CHECKED BY: DRG DATE: AUG. 2020 SCALE: 1" = 20'-0"
DESIGNED BY: CSW DATE: JULY 2020

BRIDGE NO. 07563 DRAWING NO. 64401

REVISED DATE:
abholl 8/13/2021 9:55:32 AM
WORKSPACE: ARDOT Bridge (2019)
L:\20IT\1701642 - ARDOT Job 100955\Drawings\b100955x8_SIO1_LO.dgn

DATE REVISED	DATE FILMED	DATE REVISED	DATE FILMED

FED. ROAD DIST. NO.	STATE	FED. AID PROJ. NO.	SHEET NO.	TOTAL SHEETS
6	ARK.			
JOB NO.		100955	225	355
(1) 07563		LAYOUT		64402

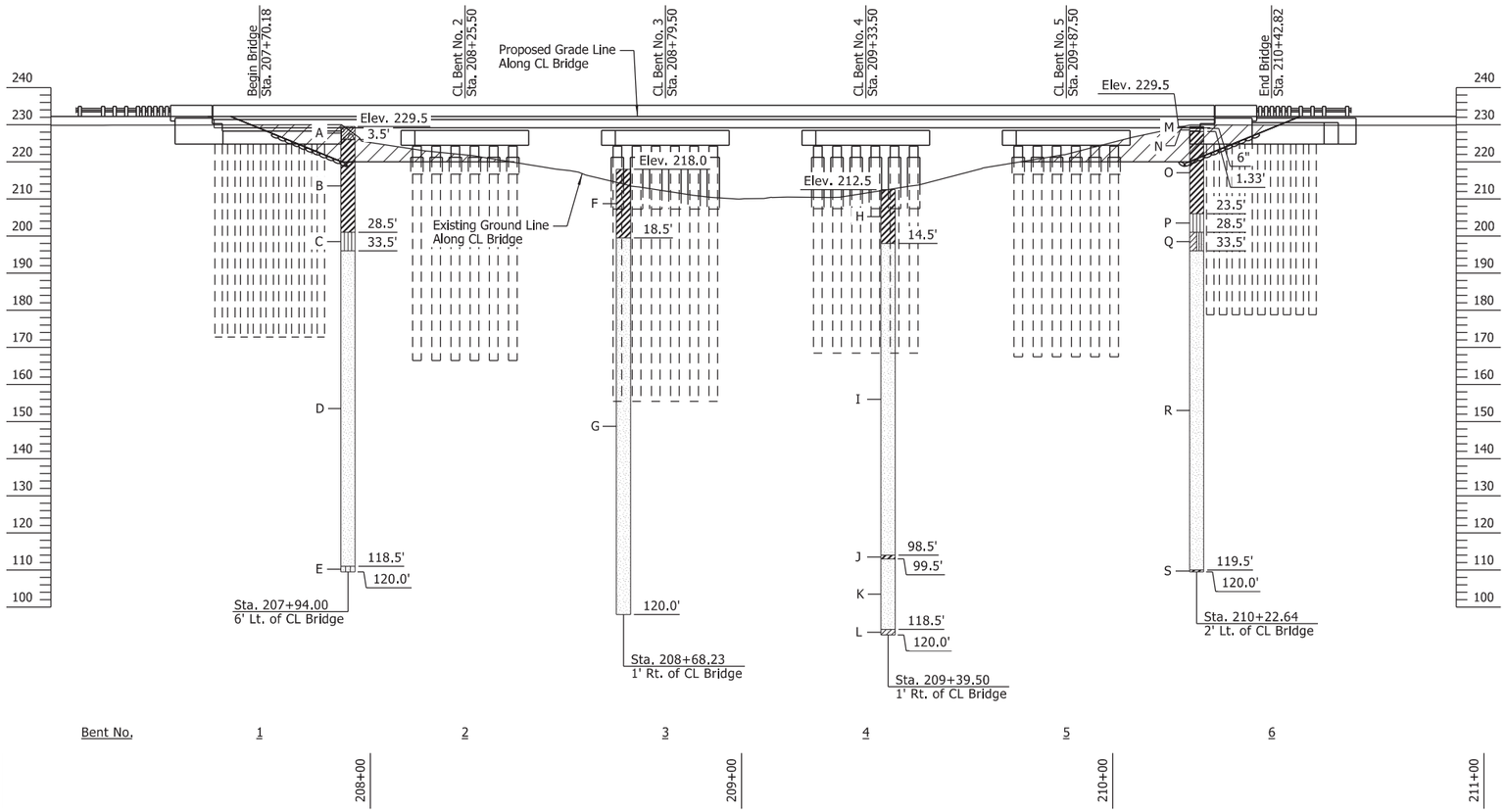

ELEVATION OF SOIL BORINGS

BORING LEGEND

A - Brown, sandy, CLAYEY GRAVEL
B - Soft to medium stiff, gray and brown to gray, FAT CLAY
C - Medium stiff, gray, SILT
D - Medium dense to very dense, gray and brown SAND
E - Dense, gray and tan, SILTY SAND, lignite fragments
F - Soft to medium stiff, gray and brown, FAT CLAY
G - Loose to very dense, gray to brown SAND
H - Soft, gray and brown, FAT CLAY
I - Medium dense to very dense, gray to brown SAND
J - Gray, FAT CLAY
K - Medium dense to dense, white to brown SAND
L - Very dense, gray, CLAYEY SAND
M - Asphalt
N - Concrete
O - Medium stiff, gray to gray and brown, FAT CLAY
P - Soft, gray SILT, trace clay
Q - Loose, gray, SILTY, CLAYEY SAND
R - Medium dense to very dense, gray SAND
S - Gray and brown, FAT CLAY

N-VALUES

Sta. 207+94.00 Offset 6' Lt.	Sta. 208+68.23 Offset 1' Rt.	Sta. 209+39.50 Offset 1' Rt.	Sta. 210+22.64 Offset 2' Lt.
3.5-5.0, N=4	1.0-2.5, N=4	1.0-2.5, N=3	13.5-15.0, N=5
8.5-10.0, N=3	3.5-5.0, N=3	8.5-10.0, N=2	18.5-20.0, N=7
13.5-15.0, N=5	8.5-10.0, N=5	13.5-15.0, N=17	23.5-25.0, N=4
18.5-20.0, N=5	13.5-15.0, N=4	18.5-20.0, N=13	28.5-30.0, N=7
23.5-25.0, N=4	18.5-20.0, N=5	23.5-25.0, N=31	33.5-35.0, N=11
28.5-30.0, N=8	23.5-25.0, N=20	28.5-30.0, N=22	38.5-40.0, N=25
33.5-35.0, N=18	28.5-30.0, N=23	33.5-35.0, N=12	43.5-45.0, N=22
38.5-40.0, N=26	33.5-35.0, N=25	38.5-40.0, N=47	48.5-50.0, N=58
43.5-45.0, N=31	38.5-40.0, N=15	43.5-45.0, N=46	53.5-55.0, N=29
48.5-50.0, N=32	43.5-45.0, N=46	48.5-50.0, N=38	58.5-60.0, N=44
53.5-55.0, N=21	48.5-50.0, N=31	53.5-55.0, N=30	68.5-70.0, N=22
58.5-60.0, N=25	53.5-55.0, N=49	58.5-60.0, N=59	78.5-80.0, N=48
63.5-65.0, N=37	58.5-60.0, N=31	68.5-70.0, N=30	88.5-90.0, N=56
68.5-70.0, N=31	63.5-65.0, N=31	78.5-80.0, N=81	98.5-100.0, N=90
73.5-75.0, N=30	68.5-70.0, N=41	88.5-90.0, N=50/5"	108.5-110.0, N=30
78.5-80.0, N=62	78.5-80.0, N=33	98.5-100.0, N=18	118.5-120.0, N=46
83.5-85.0, N=40	88.5-90.0, N=76	108.5-110.0, N=40	
88.5-90.0, N=58	98.5-100.0, N=80	118.5-120.0, N=51	
93.5-95.0, N=59	108.5-110.0, N=50/3"		
98.5-100.0, N=50	118.5-120.0, N=73		
108.5-110.0, N=60			
118.5-120.0, N=47			

STATE OF ARKANSAS
LICENSED PROFESSIONAL ENGINEER
No.14498
ADAM B. HALL

DIGITALLY SIGNED 8-13-2021
BRIDGE ENGINEER

SHEET 2 OF 2
LAYOUT OF BRIDGE
HIGHWAY 140 OVER DITCH NO. 31
HWYS. 77, 140, 158, & 181
STRS. & APPRS. (MISSISSIPPI CO.) (S)
MISSISSIPPI COUNTY
ROUTE 140 SEC. 2
ARKANSAS STATE HIGHWAY COMMISSION
LITTLE ROCK, ARK.

DRAWN BY: CWT DATE: AUG. 2020 FILENAME: b100955x8_L2.dgn
CHECKED BY: ABH DATE: JUNE 2021 SCALE: 1" = 20'-0"
DESIGNED BY: CSW DATE: AUG. 2020
BRIDGE NO. 07563 DRAWING NO. 64402

abhall 8/13/2021 9:55:33 AM
WORKSPACE: ARDOT Bridge (2019)
L:\2017\701642 - ARDOT Job 100955\Drawings\b100955x8_SI02_L0.dgn
REVISED DATE:

DATE REVISED	DATE FILMED	DATE REVISED	DATE FILMED

FED. ROAD DIST. NO.	STATE	FED. AID PROJ. NO.	SHEET NO.	TOTAL SHEETS
6	ARK.			
JOB NO.		100955	226	355
① 07563		END BENTS		64403

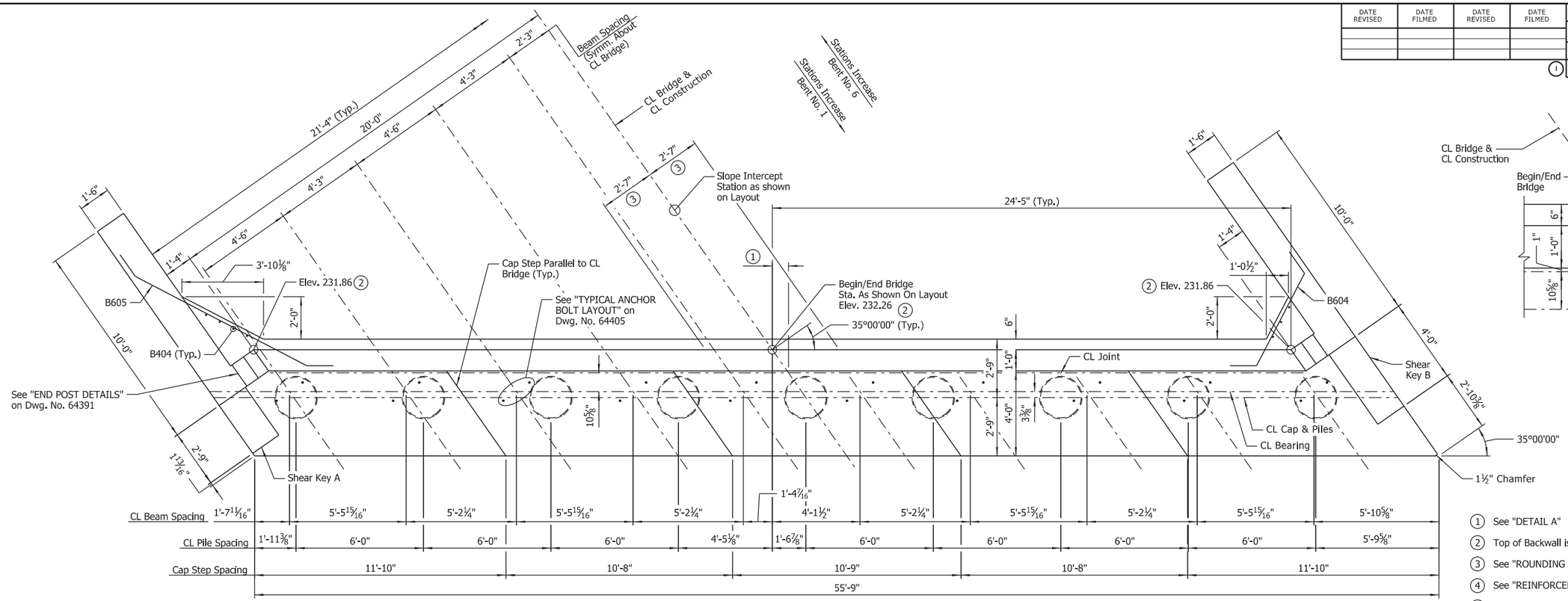

PLAN

Scale: ⅜" = 1'-0"

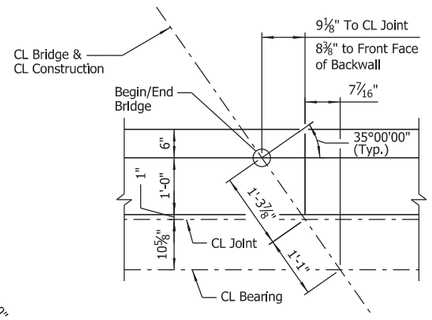

DETAIL A

Scale: 1" = 1'-0"

LEGEND

BF = Back Face
FF = Front Face
EF = Each Face

① See "DETAIL A"

② Top of Backwall is to be constructed level longitudinally.

③ See "ROUNDING DETAIL" on Std. Dwg. No. 55007

④ See "REINFORCEMENT DETAIL" on Dwg. No. 64391

⑤ B407 @ 12" O.C. Max. (Place parallel to CL Bridge)

NOTES:
1. For "SECTIONS" and "END BENT WALL ARMOR DETAIL, see Dwg. No. 64389.
2. For "GENERAL NOTES" and "BAR LIST", see Dwg. No. 64405.

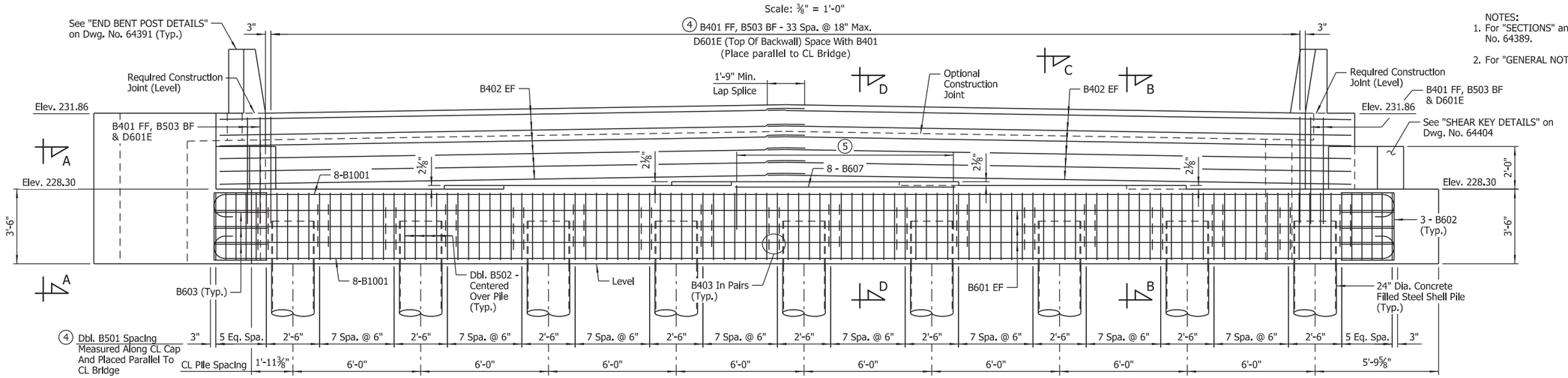

ELEVATION

(Looking Back, Bent No. 1
Looking Ahead, Bent No. 6)
Scale: ⅜" = 1'-0"

NOTE:
No portion of the backwall above the required construction joint shall be poured until the prefabricated superstructure is in place. No heavy construction equipment shall be allowed within 10' of the backwall until the prefabricated superstructure for the adjacent span has been installed.

STATE OF ARKANSAS
LICENSED PROFESSIONAL ENGINEER
No.8017
JOHN H. RUDDELL

DIGITALLY SIGNED 8-13-2021
BRIDGE ENGINEER

SHEET 1 OF 3
DETAILS OF END BENTS
HWY. 140 OVER DITCH NO. 31
ROUTE SEC.
ARKANSAS STATE HIGHWAY COMMISSION
LITTLE ROCK, ARK.

DRAWN BY: HEW DATE: APR. 2021 FILENAME: b100955x8_A1.dgn
CHECKED BY: JHR DATE: JUNE 2021 SCALE: As Shown
DESIGNED BY: CSW DATE: APR. 2021
BRIDGE NO. 07563 DRAWING NO. 64403

abholl 8/13/2021 9:55:34 AM
WORKSPACE: ARDOT Bridge (2019)
L:\2017\T017642 - ARDOT Job 100955\Drawings\b100955x8_S201_AB.dgn
REVISED DATE:

DATE REVISED	DATE FILMED	DATE REVISED	DATE FILMED	FED. ROAD DIST. NO.	STATE	FED. AID PROJ. NO.	SHEET NO.	TOTAL SHEETS
				6	ARK.			
				JOB NO.		100955	227	355
				1 07563		END BENTS		64404

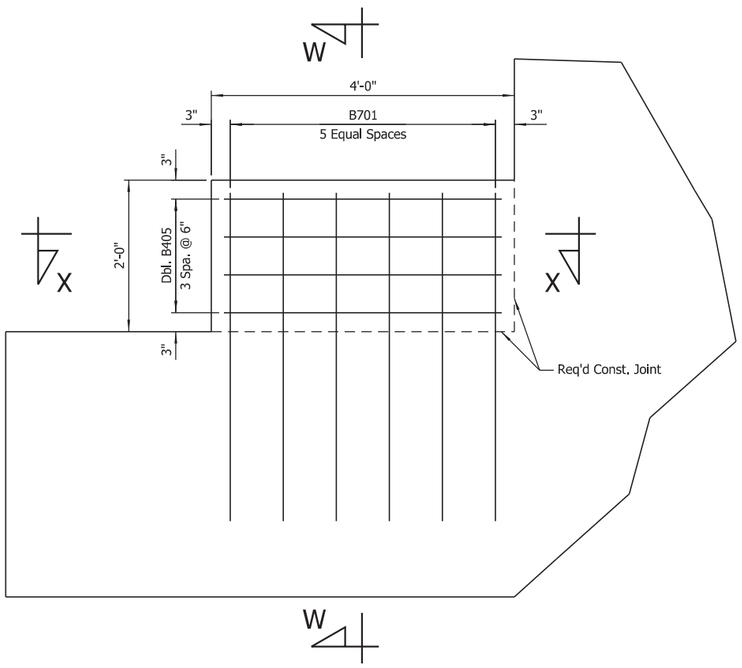

SHEAR KEY B

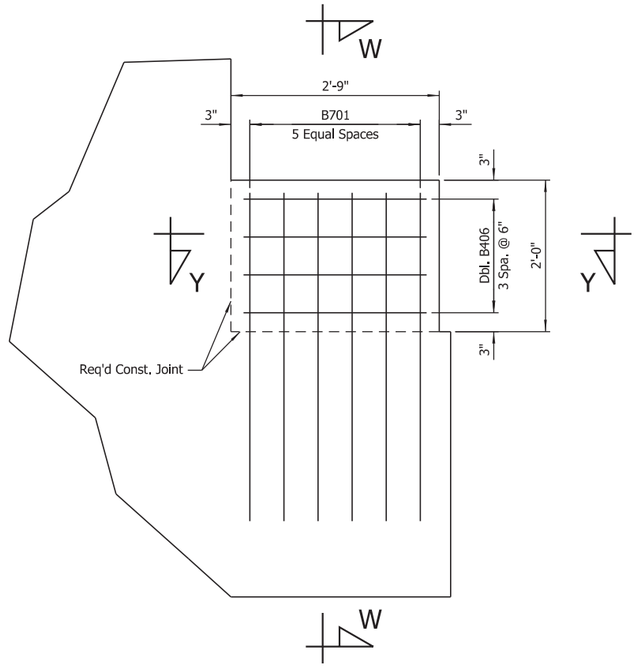

SHEAR KEY A

SHEAR KEY DETAILS
Scale: 1" = 1'-0"

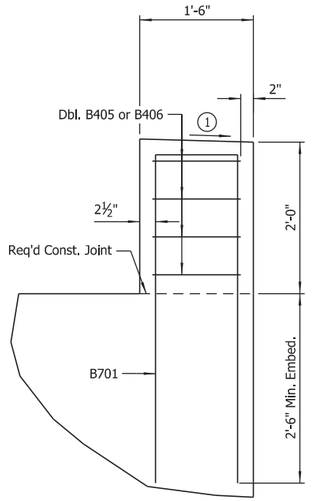

SECTION W-W
Scale: 1" = 1'-0"

1 Slope to drain, provide minimum ½" wash across top width

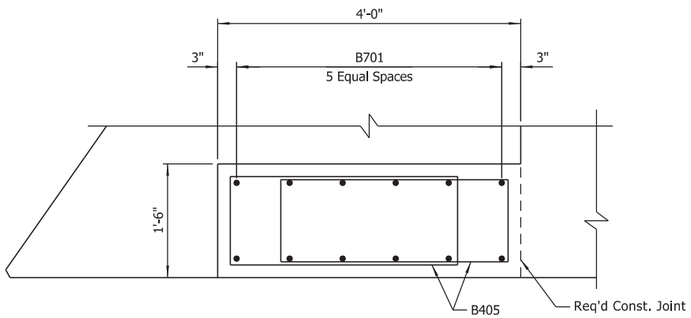

SECTION X-X
Scale: 1" = 1'-0"

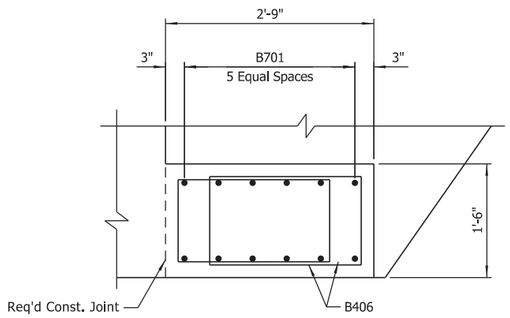

SECTION Y-Y
Scale: 1" = 1'-0"

STATE OF ARKANSAS
LICENSED PROFESSIONAL ENGINEER
No.8017
JOHN H. RUDDELL

DIGITALLY SIGNED 8-13-2021
BRIDGE ENGINEER

SHEET 2 OF 3
DETAILS OF END BENTS
HWY. 140 OVER DITCH NO. 31

ROUTE SEC.

ARKANSAS STATE HIGHWAY COMMISSION
LITTLE ROCK, ARK.

DRAWN BY: HEW DATE: APR. 2021 FILENAME: b100955x8_A2.dgn
CHECKED BY: JHR DATE: JUNE 2021 SCALE: As Shown
DESIGNED BY: CSW DATE: APR. 2021
BRIDGE NO. 07563 DRAWING NO. 64404

abhall 8/13/2021 9:55:35 AM
WORKSPACE: ARDOT Bridge (2019)
L:\2017\170176\42 - ARDOT Job 100955\Drawings\b100955x8_S202_AB.dgn
REVISED DATE:

DATE REVISED	DATE FILMED	DATE REVISED	DATE FILMED	FED. ROAD DIST. NO.	STATE	FED. AID PROJ. NO.	SHEET NO.	TOTAL SHEETS
				6	ARK.			
				JOB NO.		100955	228	355
				①	07563	END BENTS		64405

BAR LIST (PER BENT)

	MARK	NO. REQ'D	LENGTH	"A"	"B"	P.D.
	B401	38	8'-4"			2"
	B402	24	28'-0"			Str.
	B403	216	4'-6"			3"
	B404	7	5'-5"			Str.
	B405	8	8'-8"	1'-2"	3'-0"	2"
	B406	8	6'-8"	1'-2"	2'-0"	2"
	B407	11	10'-1"	6'-3"	2'-0"	2"
	B501	152	17'-6"			2½"
	B502	72	12'-7"			2½"
	B503	38	6'-9"			2½"
	B601	6	55'-5"			Str.
	B602	6	7'-7"	2'-11"	2'-6"	4½"
	B603	6	10'-9"			4½"
	B604	10	7'-5"			4½"
	B605	10	11'-7"			4½"
	B606	8	10'-5"			Str.
	B701	12	9'-5"	1'-1"	4'-4"	5¼"
	B1001	16	58'-3"			10"
①	D601E	38	5'-2"			4½"
①	R401E	6	5'-11"			2½"
①	R404E	16	3'-8"			Str.
①	W401E	6	3'-11"			3¾"
	W402	40	14'-4"	1'-2"	6'-8"	2"
	W701	50	9'-8"			Str.

NOTES:
Number of bars shown is for one end bent only.

Dimensions of bars are out-to-out.

Bars designated with "E" suffix shall be epoxy coated.

① Epoxy coated reinforcing in end bents shall be paid for as "REINFORCING STEEL - BRIDGE (GRADE 60)".

BAR BENDING DIAGRAMS

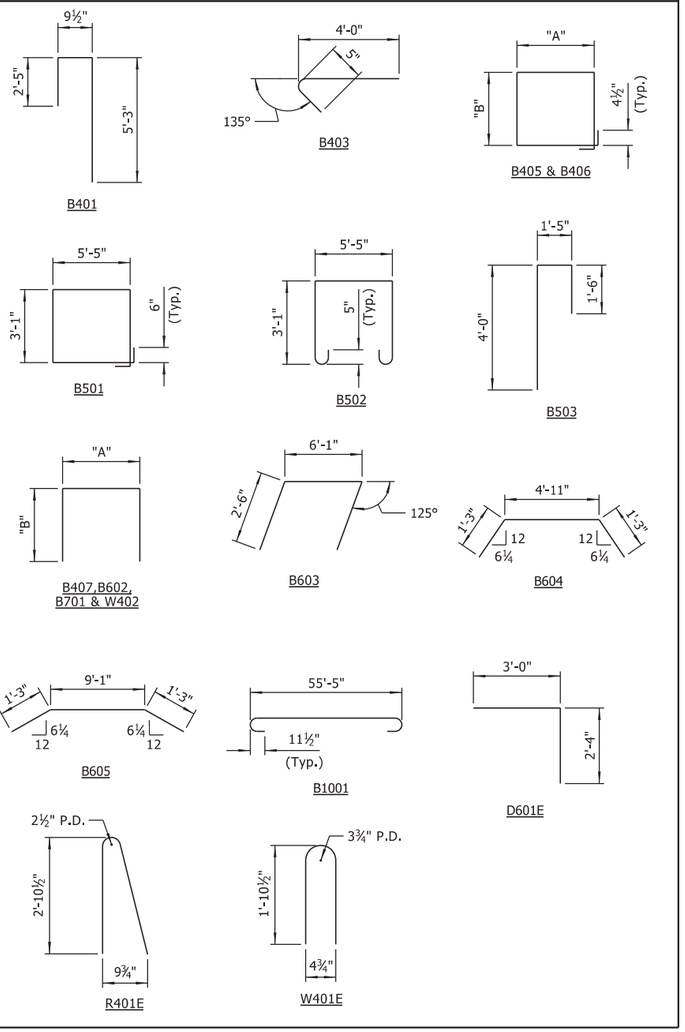

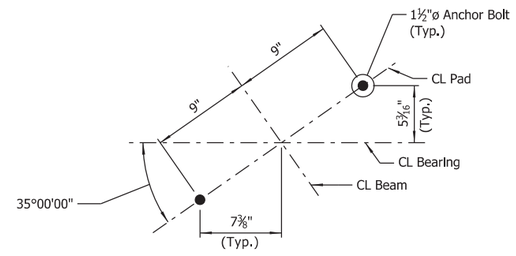

TYPICAL ANCHOR BOLT LAYOUT

No Scale

NOTE:
For Details of Elastomeric Bearings, see Dwg. No. 64425.

GENERAL NOTES:

Structural steel in end bents shall be ASTM A709, Gr. 50W and shall be paid for as "STRUCTURAL STEEL IN BEAM SPANS (A709, Gr. 50W)".

Class 2 Protective Surface Treatment shall be applied to the top of backwall and the roadway face and top of end posts.

For details of steel shell piling, see Std. Dwg. No. 55021.

See Std. Dwg. No. 55006 for additional notes.

STATE OF ARKANSAS
LICENSED PROFESSIONAL ENGINEER
No.8017
JOHN H. RUDDELL

DIGITALLY SIGNED 8-13-2021
BRIDGE ENGINEER

SHEET 3 OF 3
DETAILS OF END BENTS
HWY. 140 OVER DITCH NO. 31
ROUTE SEC.
ARKANSAS STATE HIGHWAY COMMISSION
LITTLE ROCK, ARK.

DRAWN BY: HEW DATE: APR. 2021 FILENAME: b100955x8_A3.dgn
CHECKED BY: JHR DATE: JUNE 2021 SCALE: As Shown
DESIGNED BY: CSW DATE: APR. 2021

BRIDGE NO. 07563 DRAWING NO. 64405

abhall 8/13/2021 9:55:36 AM
WORKSPACE: ARDOT Bridge (2019)
L:\2017\1701642 - ARDOT Job 100955\Drawings\b100955x8.5203.AB.dgn
REVISED DATE:

DATE REVISED	DATE FILMED	DATE REVISED	DATE FILMED

FED. ROAD DIST. NO.	STATE	FED. AID PROJ. NO.	SHEET NO.	TOTAL SHEETS
6	ARK.			
JOB NO.		100955	229	356
(1) 07563		INT. BENTS		64406

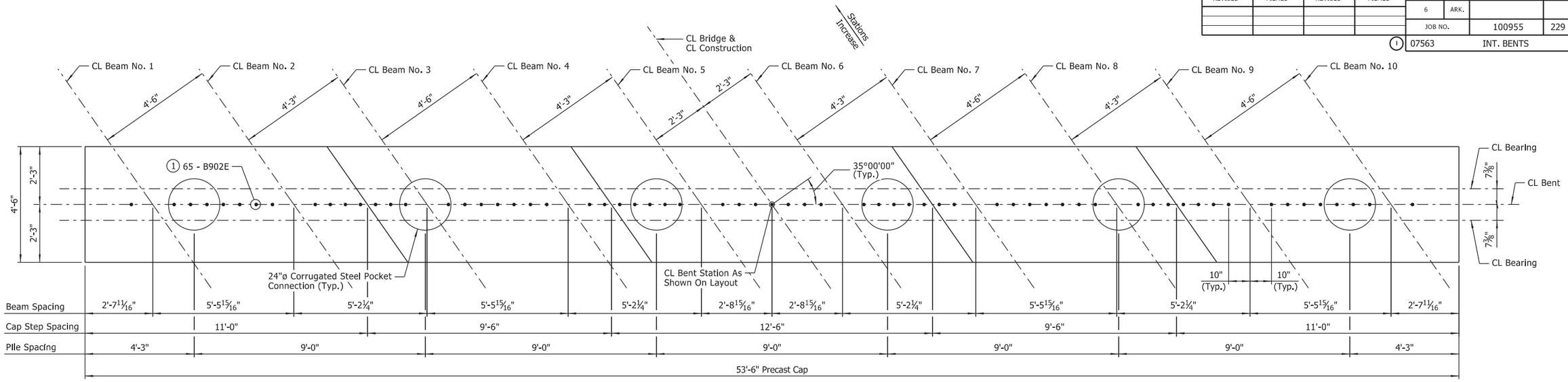

PLAN - BENT NOS. 2-5

Scale: ½" = 1'-0"

(1) Bars B902E within corrugated steel pocket connection shall be installed in the field at the time the pockets are filled. Minimum embedment = 2'-9".

(2) Dimension shown is for distance from outer limit of concrete cap to the limits of the corrugated steel pipe forming the pocket.

(3) Bars B402 - 12 Spa. @ 1'-0" (Placed parallel to CL Bridge)

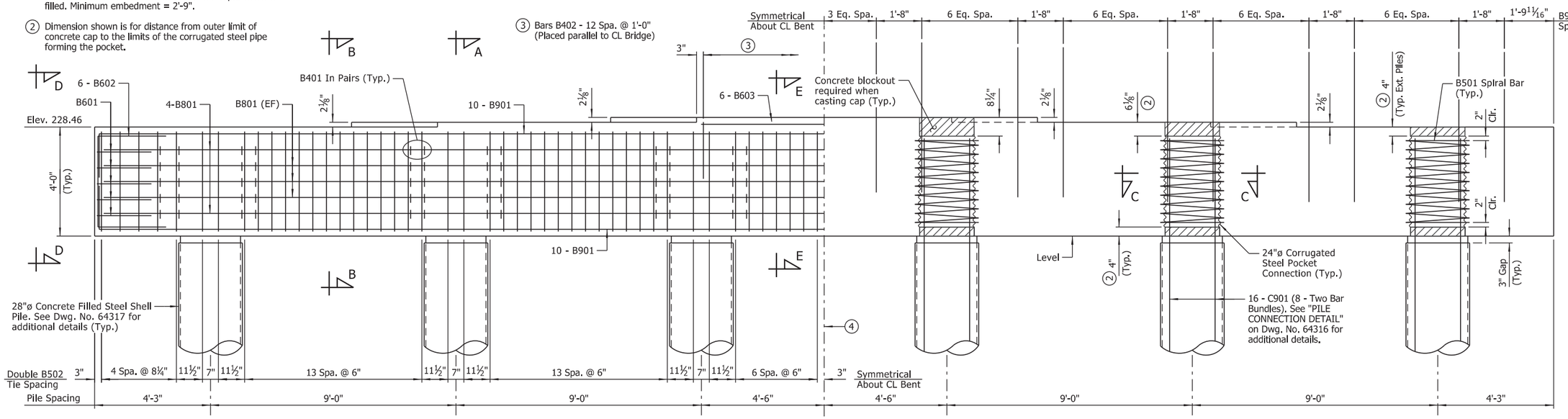

ELEVATION - BENT NOS. 2-5

(Looking Ahead)
Scale: ½" = 1'-0"

(4) Optional construction joint (This bay only). See "OPTIONAL CLOSURE POUR DETAIL" on Dwg. No. 64394.

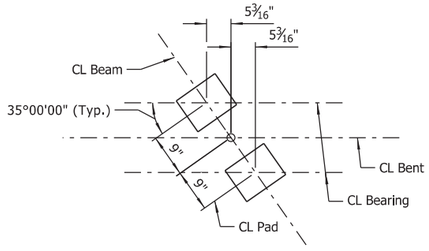

BEARING PAD LAYOUT

Scale: ¾" = 1'-0"

NOTES:
Precast bent caps at Bent Nos. 2 through 5 shall be fabricated and installed in accordance with SP "PRECAST CONCRETE BENT CAPS".

For "GENERAL NOTES - PRECAST CONCRETE BENT CAPS", see Dwg. No. 64316.

For details of elastomeric bearings, see Dwg. Nos. 64425 & 64426.

For "BAR LIST (PER BENT)", see Dwg. No. 64407.

For "SECTIONS A-A THRU C-C" and "VIEW D-D", see Dwg. No. 64315.

For "SECTION E-E", see Dwg. No. 64394.

For "PROJECT GENERAL NOTES", see Dwg. No. 64303.

For additional information, see Layout.

STATE OF ARKANSAS
LICENSED PROFESSIONAL ENGINEER
No.8017
JOHN H. RUDDELL

DIGITALLY SIGNED 8-13-2021
BRIDGE ENGINEER

SHEET 1 OF 2
DETAILS OF INTERMEDIATE BENTS
HWY. 140 OVER DITCH NO. 31

ROUTE SEC.

ARKANSAS STATE HIGHWAY COMMISSION
LITTLE ROCK, ARK.

DRAWN BY: CWT DATE: APR. 2021 FILENAME: b100955x8_BE1.dgn
CHECKED BY: JHR DATE: MAY 2021 SCALE: As Shown
DESIGNED BY: ERM DATE: APR. 2021
BRIDGE NO. 07563 DRAWING NO. 64406

abhall 8/13/2021 9:55:37 AM
WORKSPACE: ARDOT Bridge (2019)
L:\20\T\T01\T642 - ARDOT Job 100955\Drawings\b100955x8_5204_BE.dgn
REVISED DATE:

DATE REVISED	DATE FILMED	DATE REVISED	DATE FILMED

FED. ROAD DIST. NO.	STATE	FED. AID PROJ. NO.	SHEET NO.	TOTAL SHEETS
6	ARK.			
JOB NO.		100955	230	356
(1) 07563		INT. BENTS		64407

BAR LIST (PER BENT)

MARK	NO. REQ'D	LENGTH	P.D.
B401	240	4'-0"	3"
B402	13	8'-11"	2"
B501	6	90'-9"	28¼"
B502	184	15'-2"	2½"
B601	10	8'-9"	4½"
B602	12	8'-3"	4½"
B603	6	12'-2"	Str.
B801	14	52'-11"	Str.
B901	20	55'-10"	9"
B902E	65	5'-6"	Str.
C501	6	229'-5"	19¾"
(1) C901	96	14'-0"	Str.

(1) **Bars C901 shall be ASTM A706, Grade 60.**

BAR BENDING DIAGRAMS

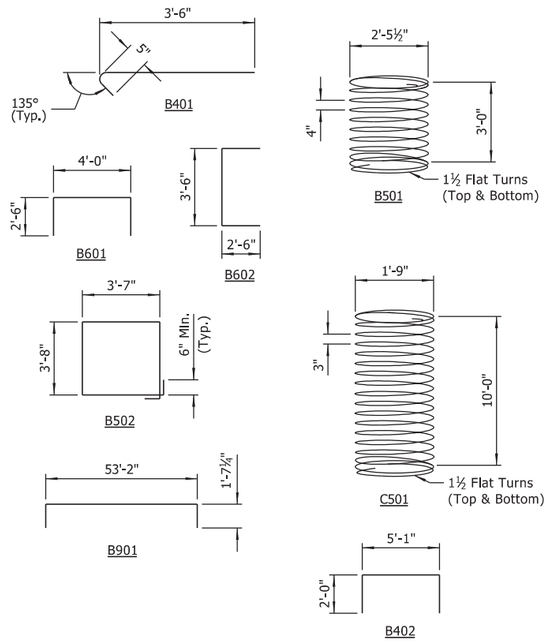

NOTES:
Dimensions of bars are out-to-out.

Bars designated with "E" suffix shall be epoxy coated.

No direct payment for bars in bent cap or concrete filled steel shell piles. Payment of all reinforcing steel to be subsidiary to unit price for "PRECAST CONCRETE BENT CAPS".

NOTE:
For "OPTIONAL CLOSURE POUR DETAIL" and SECTION E-E, See Dwg. No. 64394.

STATE OF ARKANSAS
LICENSED PROFESSIONAL ENGINEER
No.8017
JOHN H. RUDDELL

DIGITALLY SIGNED 8-13-2021
BRIDGE ENGINEER

SHEET 2 OF 2
DETAILS OF INTERMEDIATE BENTS
HWY. 140 OVER DITCH NO. 31

ROUTE SEC.

ARKANSAS STATE HIGHWAY COMMISSION
LITTLE ROCK, ARK.

DRAWN BY: CWT DATE: APR. 2021 FILENAME: b100955x8_BE2.dgn
CHECKED BY: JHR DATE: MAY 2021 SCALE: As Shown
DESIGNED BY: ERM DATE: APR. 2021

BRIDGE NO. 07563 DRAWING NO. 64407

abhall 8/13/2021 9:55:38 AM
WORKSPACE: ARDOT Bridge (2019)
L:\20TY\01f642 - ARDOT Job 100955\Drawings\b100955x8_S205_BE.dgn
REVISED DATE:

DATE REVISED	DATE FILMED	DATE REVISED	DATE FILMED	FED. ROAD DIST. NO.	STATE	FED. AID PROJ. NO.	SHEET NO.	TOTAL SHEETS
				6	ARK.			
				JOB NO.		100955	231	355
				(1) 07564		LAYOUT		64408

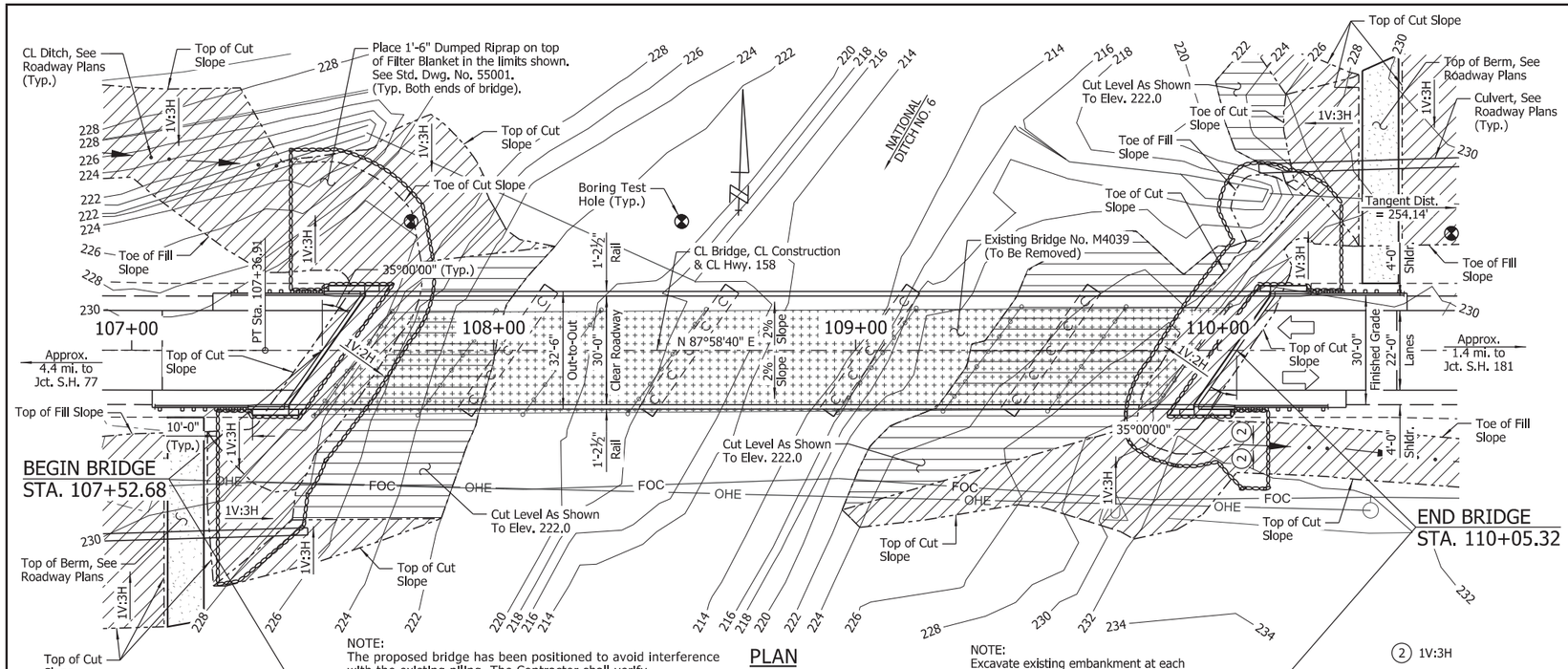

NOTE:
The proposed bridge has been positioned to avoid interference with the existing piling. The Contractor shall verify measurements before driving any piling. Any adjustments necessary to fit the proposed bridge to the existing bridge location shall be submitted for the Engineer's approval.

NOTE:
Excavate existing embankment at each end of bridge as shown. Approx. 1,796 cubic yards of excavation (excluding ditch excavation).

EXISTING UTILITIES LEGEND

FOC = Fiber Optic Cable
OHE = Overhead Electric

NOTE:
Utilities shown are based on locations at time of survey and do not reflect any potential utility relocations prior to construction.

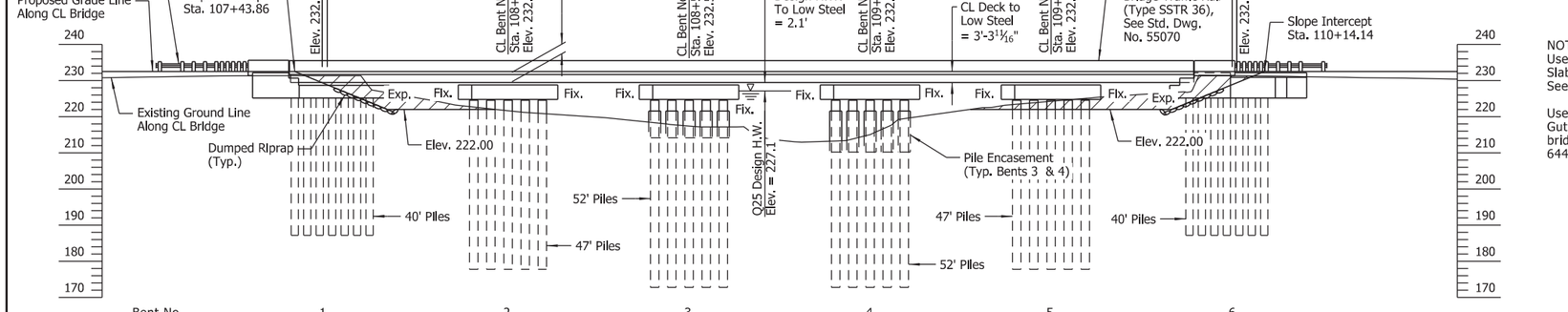

NOTE:
Use Type Special Approach Slab at each end of bridge. See Dwg. No. 64430.

Use Type Special Approach Gutters at each end of bridge. See Dwg. Nos. 64427-64429.

GENERAL NOTES

STEEL SHELL PILING: Piling in Bents 1 & 6 shall be 24" diameter concrete filled steel shell piles and shall be driven to meet the requirements of the "PILE BEARING TABLE". Piling in Bents 2-5 shall be 28" diameter concrete filled steel shell piles and shall be driven to meet the requirements of the "PILE BEARING TABLE". All piling shall be driven with an approved air, steam, or diesel hammer. Piling in end bents shall be driven after embankment to bottom of cap is in place. Lengths of piling shown are assumed for estimating quantities only. Actual lengths are to be determined in the field. No additional payment will be made for cut-off or build-up. Test piles are not required but may be driven for the Contractor's information in accordance with Subsection 805.08(g). No piles will be paid for as Test Piles.

Water jetting or other methods as approved by the Engineer may be required to achieve minimum penetration. This work shall not be paid for directly, but shall be considered incidental to the items "STEEL SHELL PILING (24" DIA.)" and "STEEL SHELL PILING (28" DIA.)".

PILE ENCASEMENT: Pile encasement for Bents 3 & 4 shall extend from 3' below bottom of cap to 3' below natural or finished ground. See Dwg. No. 64316 for additional information.

DRIVING SYSTEM: The driving system approval and the ultimate bearing capacity determination for piling shall be based on the requirements of Subsection 805.09(b), "Method B - Wave Equation Analysis (WEAP)" and SP "PILE DRIVING SYSTEM". See the "PILE BEARING TABLE" for the estimated minimum rated hammer energy required to overcome the anticipated driving resistance for all piles at each bent. If the Contractor elects to use water jetting or other approved methods to obtain the minimum tip elevations shown while driving only to the required minimum ultimate bearing capacity, the minimum rated hammer energy required will be lower and shall be accounted for in the driving system chosen by the Contractor.

EXISTING BRIDGE: Existing Bridge No. M4039 (Log Mile 10.35) is 231.0' in length, 31.0' wide (28.0' clear roadway) and consists of a concrete slab on I-beam spans (7 spans total) supported by timber pile bents. Plans of the existing structure, if available, may be obtained upon request to the Construction Contract Development Section of the Program Management Division.

REMOVAL AND SALVAGE: The Contractor shall remove existing Bridge No. M4039 in accordance with Section 205. All material from the existing bridge shall become property of the Contractor.

DETAIL DRAWINGS:	DRAWING NO(S).
End Bents	64310, 64312, 64410-64413
Intermediate Bents	64315-64317, 64414
250'-0" Continuous W-Beam Unit	64415-64420
Common Superstructure Details	64421-64424
Elastomeric Bearings	64425-64426
Type Special Approach Gutters	64427-64429
Type Special Approch Slabs	64430
Dumped Riprap	55001
General Notes For Steel Bridge Structures	55006
Details For Steel Bridge Structures	55007
Poured Silicone Joint	55008
Concrete Filled Steel Shell Piling	55021
Bridge Traffic Rail	55070

HYDRAULIC DATA

FLOOD DESCRIPTION	FREQUENCY	DISCHARGE	(1) NATURAL WATER SURFACE ELEVATION	WATER SURFACE ELEVATION WITH BACKWATER
	YEARS	CFS	FEET	FEET
DESIGN	25	3,663	227.0	227.1
BASE	100	4,642	228.4	228.5
EXTREME	500	5,783	230.1	230.1
OVERTOPPING	>500	N/A	N/A	N/A

(1) Unconstricted water surface without structure or roadway approaches.

Q100 Backwater Elevation For Existing Structure = 228.6

Proposed Low Bridge Chord Elev. = 229.19
Existing Low Bridge Chord Elev. = 228.44

Drainage Area = 65.8 square miles.
Historical High Water Elev. = N/A

PILE BEARING TABLE

BENTS	REQUIRED MINIMUM ULTIMATE BEARING CAPACITY (TONS)	MIN. TIP ELEVATION	ANTICIPATED DRIVING RESISTANCE AT MIN. TIP (TONS)	ESTIMATED MIN. RATED HAMMER ENERGY (FT.-LBS. PER BLOW)
1	132	187.00	280	73,800
2	312	178.00	335	186,200
3	312	173.00	595	186,200
4	312	173.00	390	186,200
5	312	178.00	380	186,200
6	132	187.00	240	73,800

ELEVATION

NOTE:
Required minimum ultimate bearing capacity corresponds to the minimum post driving capacity to be obtained after an allowance for water jetting or any other methods employed to facilitate pile installation.

Anticipated Driving Resistance corresponds to the resistance to be overcome to achieve minimum tip elevation without any water jetting or other methods employed to facilitate pile installation.

NOTE:
Stations shown are along CL Construction. Elevations shown are theoretical working point elevations at CL Bridge. Any vertical dimension referenced to CL Deck is based on theoretical working point elevation at CL Bridge. See "ROUNDING DETAIL" on Std. Dwg. No. 55007 for additional information.

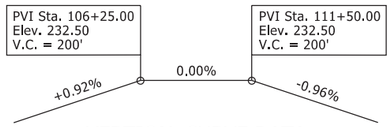

VERTICAL CURVE DATA

Hwy. 158
(Thoretical Grade Along CL Construction)

HORIZONTAL CURVE DATA

CL Hwy. 158
PI = 104+69.12
Δ = 1°20'20" Lt.
D = 0°15'00"
T = 267.81'
L = 535.60'
R = 22,918.31'

FOR R/W DATA, SEE ROADWAY PLANS

NOTES:
For "PROJECT GENERAL NOTES", see Dwg. No. 64303.

For "ELEVATIONS OF SOIL BORINGS", see Dwg. No. 64409.

STATE OF ARKANSAS
LICENSED PROFESSIONAL ENGINEER
No.14498
ADAM B. HALL

DIGITALLY SIGNED 8-13-2021
BRIDGE ENGINEER

SHEET 1 OF 2
LAYOUT OF BRIDGE
HIGHWAY 158 OVER NATIONAL DITCH NO. 6
HWYS. 77, 140, 158, & 181
STRS. & APPRS. (MISSISSIPPI CO.) (S)
MISSISSIPPI COUNTY

ROUTE 158 SEC. 1

ARKANSAS STATE HIGHWAY COMMISSION

LITTLE ROCK, ARK.

DRAWN BY: CSW DATE: JULY 2020 FILENAME: b100955x9_L1.dgn
CHECKED BY: ABH DATE: JUNE 2021 SCALE: 1" = 20'-0"
DESIGNED BY: CSW DATE: JULY 2020

BRIDGE NO. 07564 DRAWING NO. 64408

abholl 8/13/2021 9:55:40 AM
WORKSPACE: ARDOT Bridge (2019)
L:\2017\T017642 - ARDOT Job 100955\Drawings\b100955x9_SIO1_LO.dgn
REVISED DATE:

DATE REVISED	DATE FILMED	DATE REVISED	DATE FILMED

FED. ROAD DIST. NO.	STATE	FED. AID PROJ. NO.	SHEET NO.	TOTAL SHEETS
6	ARK.			
JOB NO.		100955	232	355
(1) 07564		LAYOUT		64409

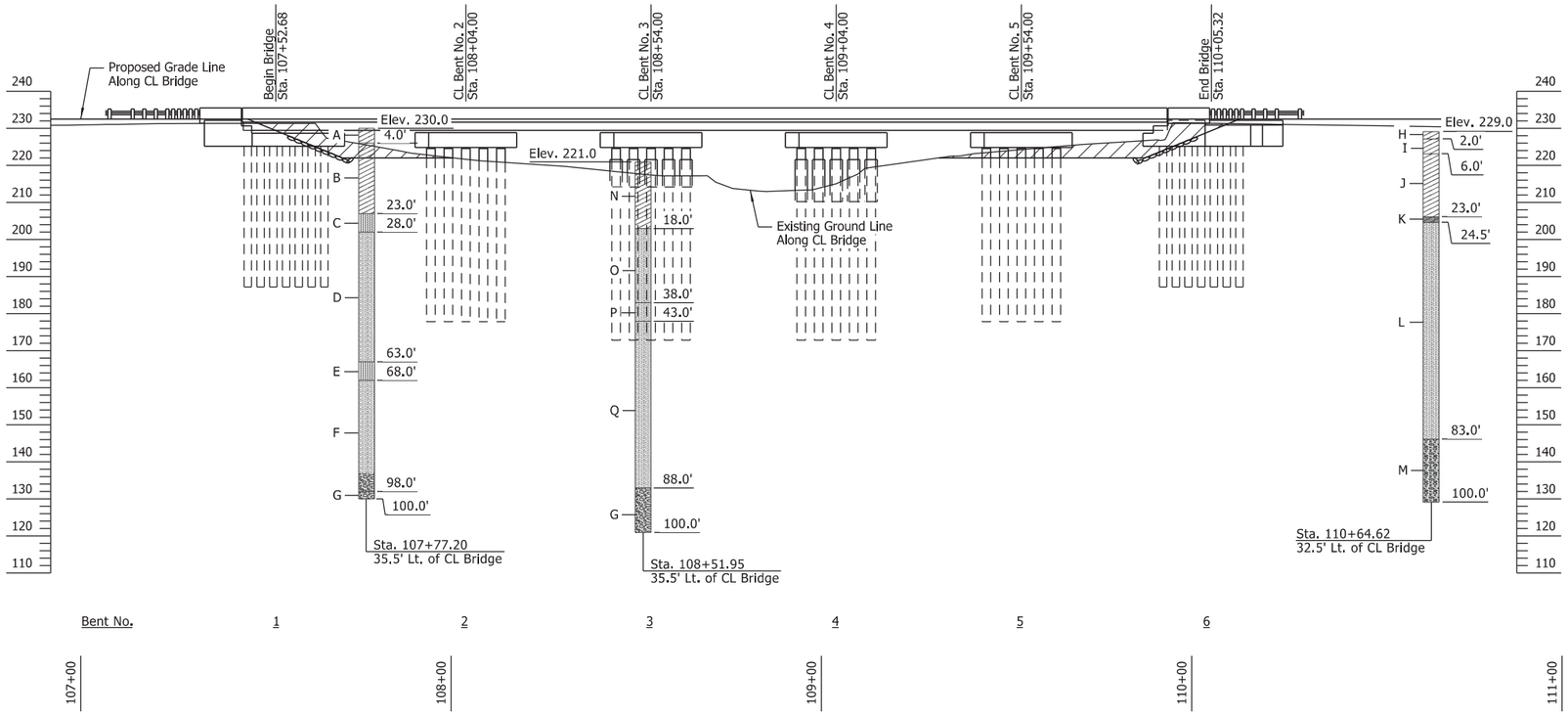

ELEVATION OF SOIL BORINGS

BORING LEGEND

- A - Firm grayish brown clay w/organic stains and occasional rootlets (fill)
- B - Firm gray and reddish tan clay w/ferrous stains
- C - Loose gray and tan silty fine sand w/occasional organic stains
- D - Dense reddish brown and tan fine to medium sand
- E - Dense gray silty fine sand w/organic stains
- F - Dense to very dense gray fine to medium sand, slightly silty w/trace fine gravel
- G - Dense to very dense tan sandy fine to coarse gravel
- H - Firm grayish brown clay w/occasional rootlets (fill)
- I - Soft gray and reddish tan clay (fill)
- J - Soft tan and reddish tan clay w/ferrous stains
- K - Firm gray fine sandy clay
- L - Loose gray fine to medium sand
- M - Dense to very dense tan fine to medium sand w/a little fine gravel
- N - Soft brown clay w/ferrous stains
- O - Medium dense tan fine to medium sand, slightly silty w/organic stains
- P - Dense to very dense tan fine to coarse sand
- Q - Dense to very dense tan fine to medium sand, slightly silty w/organic stains

N-VALUES

Sta. 107+77.20 Offset 35.5' Lt.	Sta. 108+51.95 Offset 35.5' Lt.	Sta. 110+64.62 Offset 32.5' Lt.
0.5-1.5, N=7	0.5-1.5, N=5	0.5-1.5, N=8
2.5-3.5, N=8	2.5-3.5, N=4	2.5-3.5, N=6
4.5-5.5, N=9	4.5-5.5, N=2	4.5-5.5, N=7
6.5-7.5, N=8	6.5-7.5, N=5	6.5-7.5, N=5
9.0-10.0, N=6	9.0-10.0, N=11	9.0-10.0, N=7
14.0-15.0, N=9	14.0-15.0, N=7	14.0-15.0, N=10
19.0-20.0, N=10	19.0-20.0, N=21	19.0-20.0, N=9
24.0-25.0, N=9	24.0-25.0, N=36	24.0-25.0, N=7
29.0-30.0, N=40	29.0-30.0, N=50/10"	29.0-30.0, N=42
34.0-35.0, N=37	34.0-35.0, N=50/11"	34.0-35.0, N=46
39.0-40.0, N=49	39.0-40.0, N=50/11"	39.0-40.0, N=18
44.0-45.0, N=50	44.0-45.0, N=50	44.0-45.0, N=45
49.0-50.0, N=41	49.0-50.0, N=50/9"	49.0-50.0, N=34
54.0-55.0, N=40	54.0-55.0, N=50/11"	54.0-55.0, N=50/9"
59.0-60.0, N=50/11"	59.0-60.0, N=50/9"	59.0-60.0, N=50/11"
64.0-65.0, N=39	64.0-65.0, N=50/10"	64.0-65.0, N=50/9"
69.0-70.0, N=50/11"	69.0-70.0, N=50/9"	69.0-70.0, N=49
74.0-75.0, N=50/11"	74.0-75.0, N=50/9"	74.0-75.0, N=50
79.0-80.0, N=33	79.0-80.0, N=50/5"	79.0-80.0, N=31
84.0-85.0, N=50/9"	84.0-85.0, N=50/6"	84.0-85.0, N=50/9"
89.0-90.0, N=50/9"	89.0-90.0, N=50/8"	89.0-90.0, N=50/9"
94.0-95.0, N=50/10"	94.0-95.0, N=50	94.0-95.0, N=50/10"
99.0-100.0, N=50/11"	99.0-100.0, N=50/10"	99.0-100.0, N=50/11"

STATE OF ARKANSAS
LICENSED PROFESSIONAL ENGINEER
No.14498
ADAM B. HALL

DIGITALLY SIGNED 8-13-2021
BRIDGE ENGINEER

SHEET 2 OF 2
LAYOUT OF BRIDGE
HIGHWAY 158 OVER NATIONAL DITCH NO. 6
HWYS. 77, 140, 158, & 181
STRS. & APPRS. (MISSISSIPPI CO.) (S)
MISSISSIPPI COUNTY
ROUTE 158 SEC. 1

ARKANSAS STATE HIGHWAY COMMISSION
LITTLE ROCK, ARK.

DRAWN BY: JME DATE: JUNE 2021 FILENAME: b100955x9_L2.dgn
CHECKED BY: ABH DATE: JUNE 2021 SCALE: 1" = 20'-0"
DESIGNED BY: CSW DATE: AUG. 2020
BRIDGE NO. 07564 DRAWING NO. 64409

abhall 8/13/2021 9:55:41 AM
WORKSPACE: ARDOT Bridge (2019)
L:\20T\170764Z - ARDOT Job 100955\Drawings\b100955x9_S02_L0.dgn
REVISED DATE:

DATE REVISED	DATE FILMED	DATE REVISED	DATE FILMED	FED. ROAD DIST. NO.	STATE	FED. AID PROJ. NO.	SHEET NO.	TOTAL SHEETS
				6	ARK.			
				JOB NO.		100955	233	355
				(1) 07564		END BENTS		64410

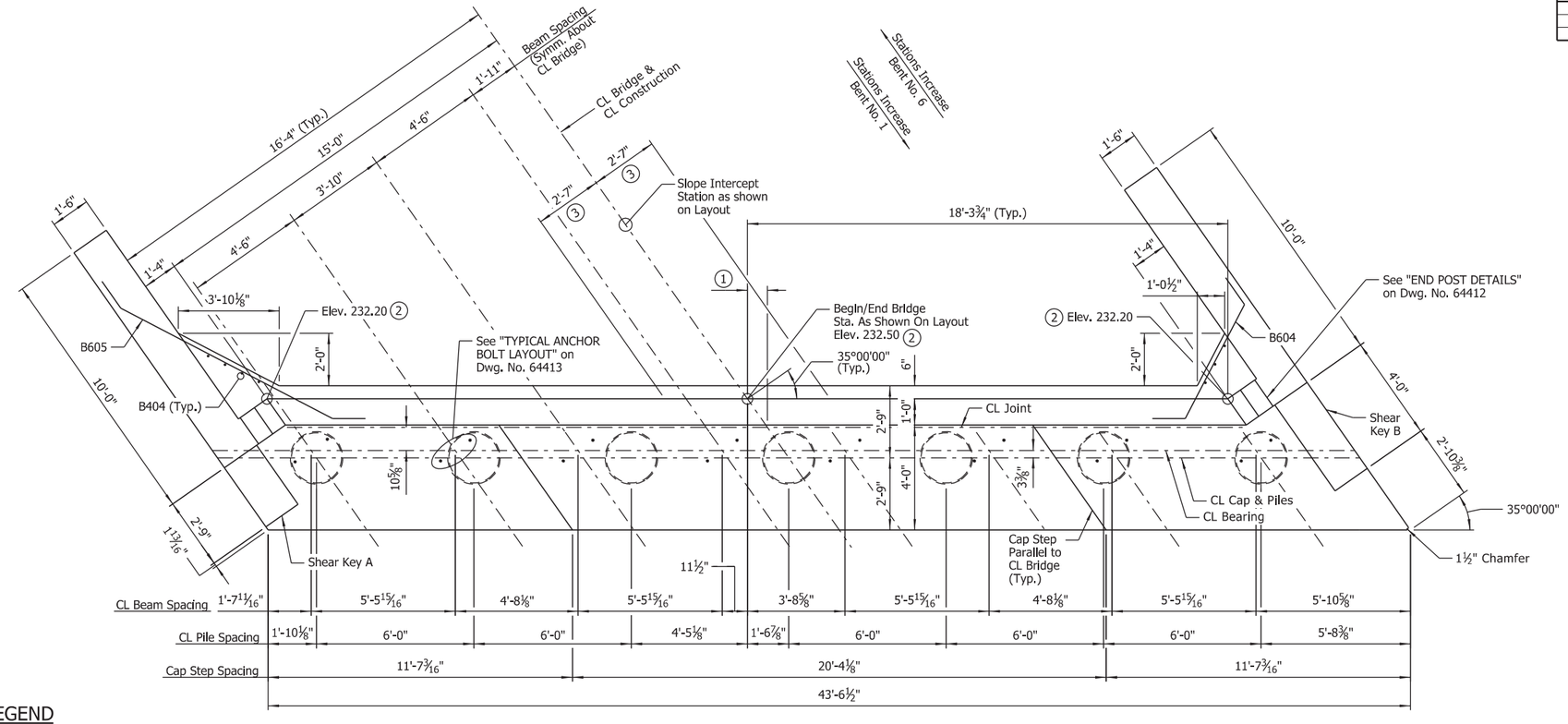

PLAN

Scale: ⅜" = 1'-0"

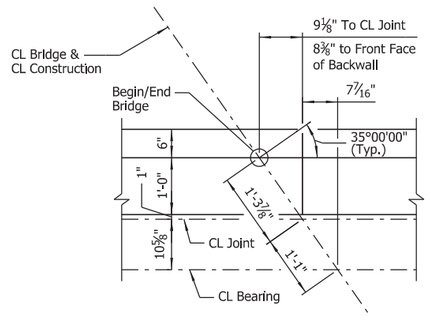

DETAIL A

Scale: ¾" = 1'-0"

LEGEND

BF = Back Face
FF = Front Face
EF = Each Face

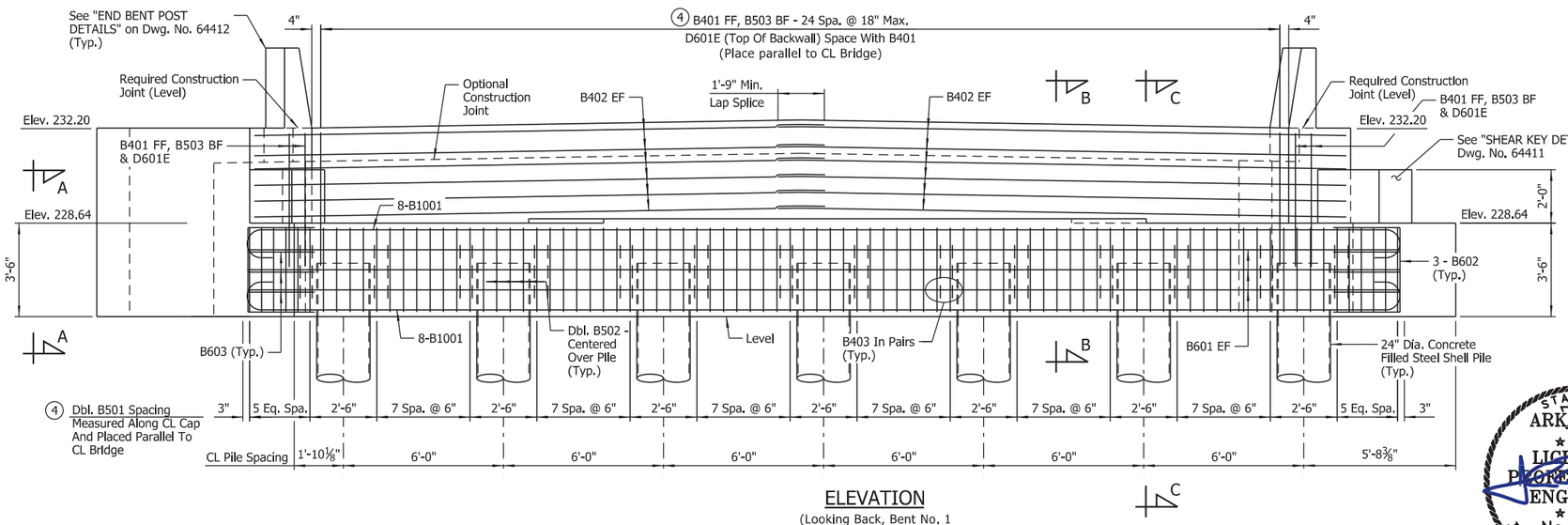

ELEVATION

(Looking Back, Bent No. 1
Looking Ahead, Bent No. 6)
Scale: ⅜" = 1'-0"

(1) See "DETAIL A"
(2) Top of Backwall is to be constructed level longitudinally.
(3) See "ROUNDING DETAIL" on Std. Dwg. No. 55007
(4) See "REINFORCEMENT DETAIL" on Dwg. No. 64312

NOTES:
1. For "SECTIONS" and "END BENT WALL ARMOR DETAIL", see Dwg. No. 64310.
2. For "GENERAL NOTES" and "BAR LIST", see Dwg. No. 64413
.

NOTE:
No portion of the backwall above the required construction joint shall be poured until the prefabricated superstructure is in place. No heavy construction equipment shall be allowed within 10' of the backwall until the prefabricated superstructure for the adjacent span has been installed.

STATE OF ARKANSAS
LICENSED PROFESSIONAL ENGINEER
No.8017
JOHN H. RUDDELL

DIGITALLY SIGNED 8-13-2021
BRIDGE ENGINEER

SHEET 1 OF 4
DETAILS OF END BENTS
HWY. 158 OVER NATIONAL DITCH NO. 6

ROUTE SEC.

ARKANSAS STATE HIGHWAY COMMISSION
LITTLE ROCK, ARK.

DRAWN BY: HEW DATE: APR. 2021 FILENAME: b100955x9_A1.dgn
CHECKED BY: JHR DATE: JUNE 2021 SCALE: As Shown
DESIGNED BY: CSW DATE: APR. 2021

BRIDGE NO. 07564 DRAWING NO. 64410

abnall 8/13/2021 9:55:43 AM
WORKSPACE: ARDOT Bridge (2019)
L:\20T\T01T642 - ARDOT Job 100955\Drawings\b100955x9_S20i_AB.dgn
REVISED DATE:

DATE REVISED	DATE FILMED	DATE REVISED	DATE FILMED

FED. ROAD DIST. NO.	STATE	FED. AID PROJ. NO.	SHEET NO.	TOTAL SHEETS
6	ARK.			
JOB NO.		100955	234	355
(1) 07564		END BENTS		64411

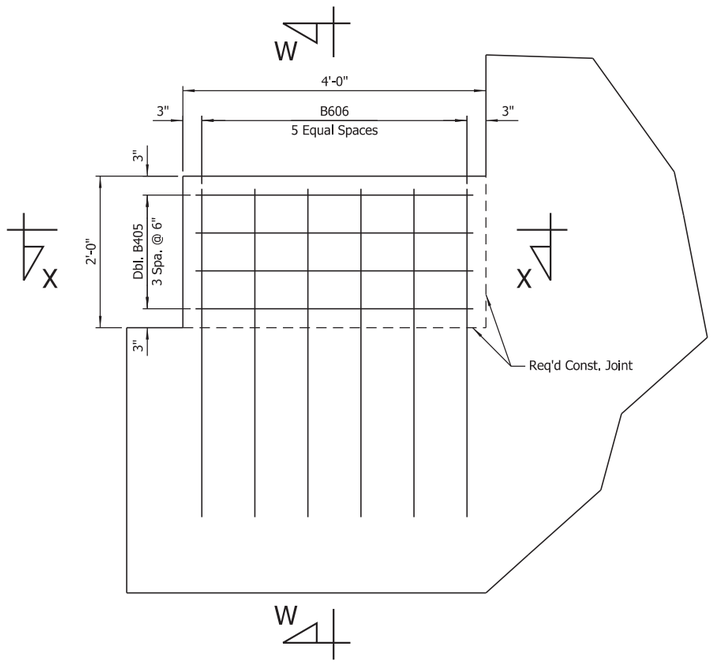

SHEAR KEY B

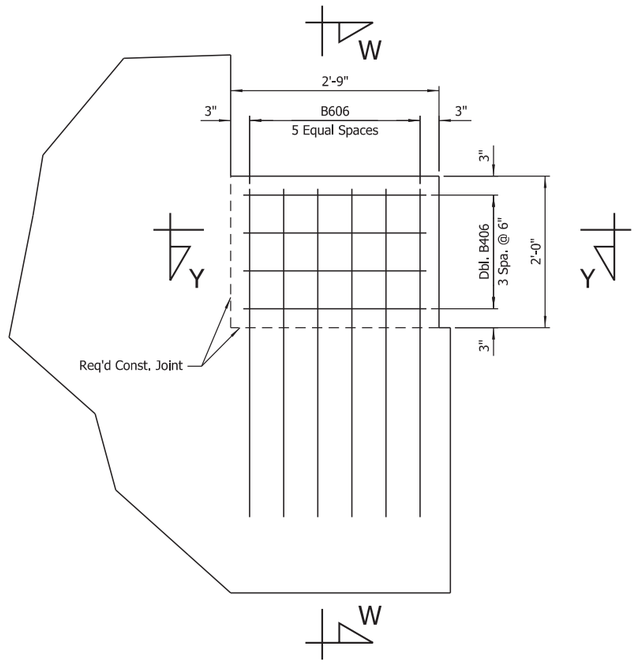

SHEAR KEY A

SHEAR KEY DETAILS
Scale: 1" = 1'-0"

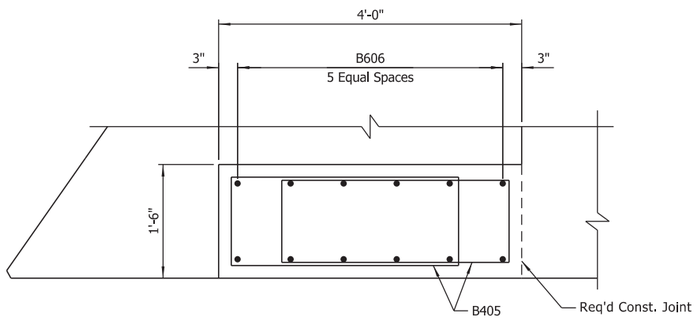

SECTION X-X
Scale: 1" = 1'-0"

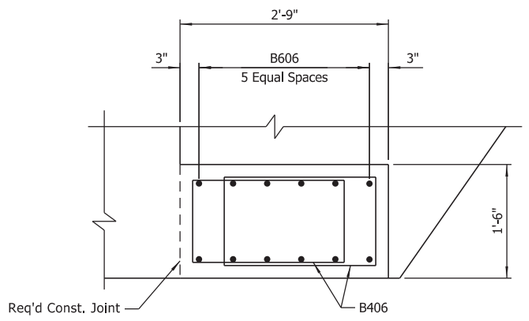

SECTION Y-Y
Scale: 1" = 1'-0"

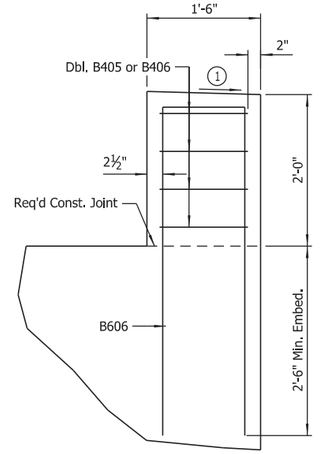

SECTION W-W
Scale: 1" = 1'-0"

(1) Slope to drain, provide minimum ½" wash across top width

STATE OF ARKANSAS
LICENSED PROFESSIONAL ENGINEER
No.8017
JOHN H. RUDDELL

DIGITALLY SIGNED 8-13-2021
BRIDGE ENGINEER

SHEET 2 OF 4
DETAILS OF END BENTS
HWY. 158 OVER NATIONAL DITCH NO. 6
ROUTE SEC.
ARKANSAS STATE HIGHWAY COMMISSION
LITTLE ROCK, ARK.

DRAWN BY: HEW DATE: APR. 2021 FILENAME: b100955x9_A2.dgn
CHECKED BY: JHR DATE: JUNE 2021 SCALE: As Shown
DESIGNED BY: CSW DATE: APR. 2021
BRIDGE NO. 07564 DRAWING NO. 64411

abnall 8/13/2021 9:55:45 AM
WORKSPACE: ARDOT Bridge (2019)
L:\20IT\10I7642 - ARDOT Job 100955\Drawings\b100955x9_S202_AB.dgn
REVISED DATE:

DATE REVISED	DATE FILMED	DATE REVISED	DATE FILMED	FED. ROAD DIST. NO.	STATE	FED. AID PROJ. NO.	SHEET NO.	TOTAL SHEETS
				6	ARK.			
				JOB NO.		100955	235	355
				(1) 07564		END BENTS		64412

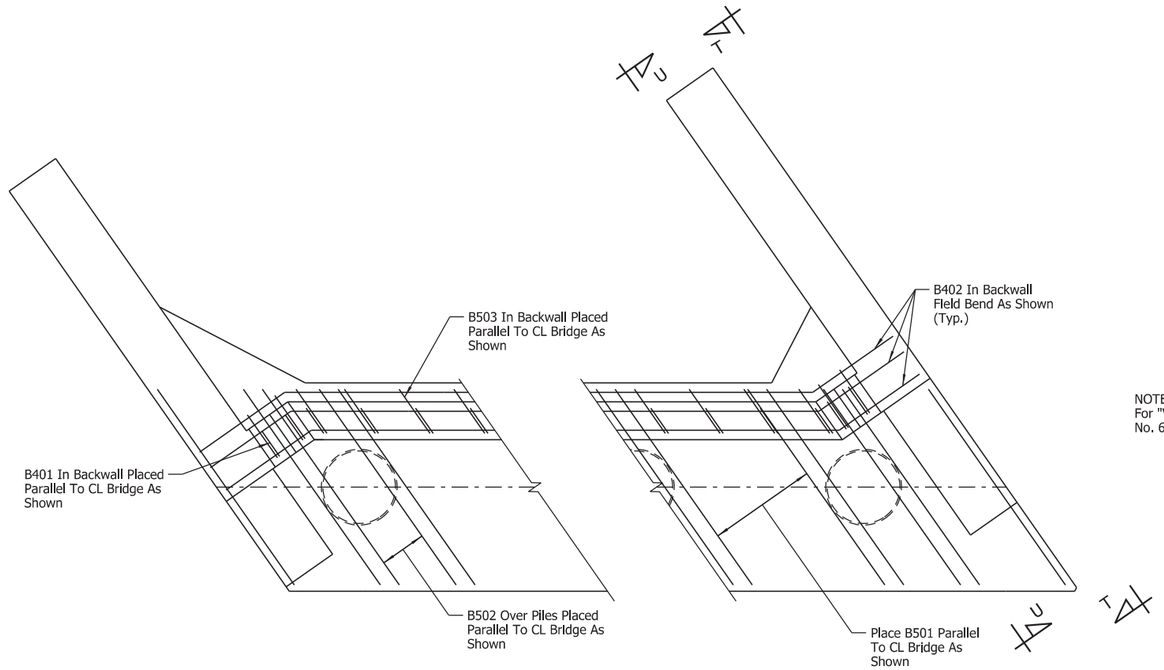

NOTE:
For "VIEW U-U", see Dwg. No. 64312.

REINFORCEMENT DETAIL

Scale: ½" = 1'-0"

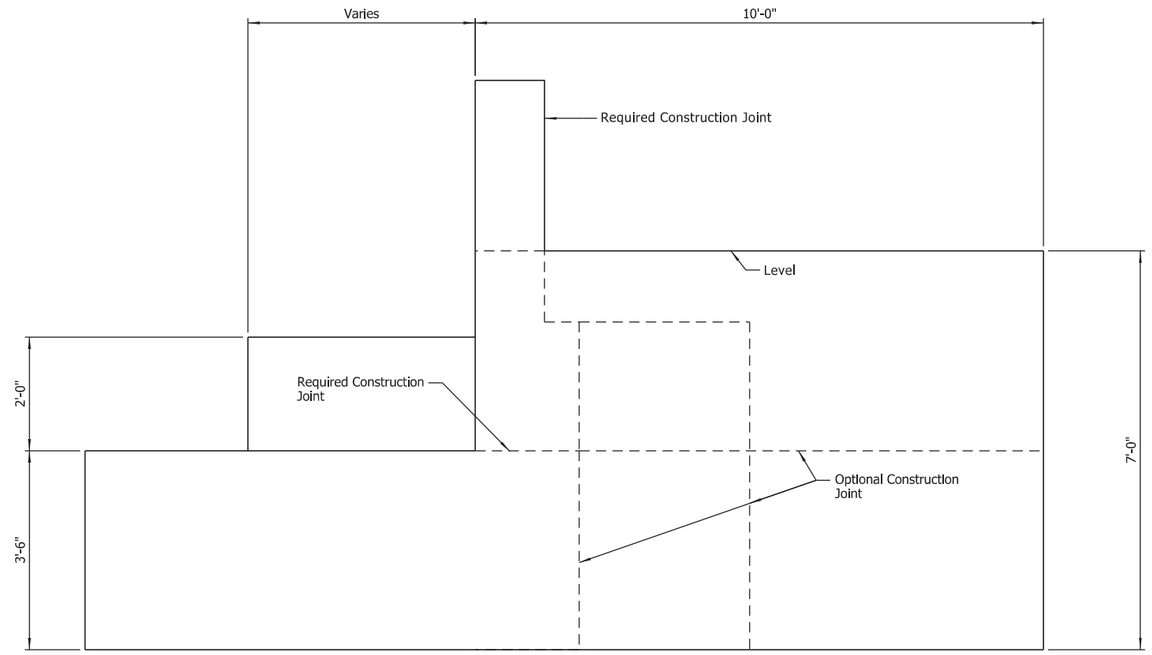

VIEW T-T

Scale: ¾" = 1'-0"

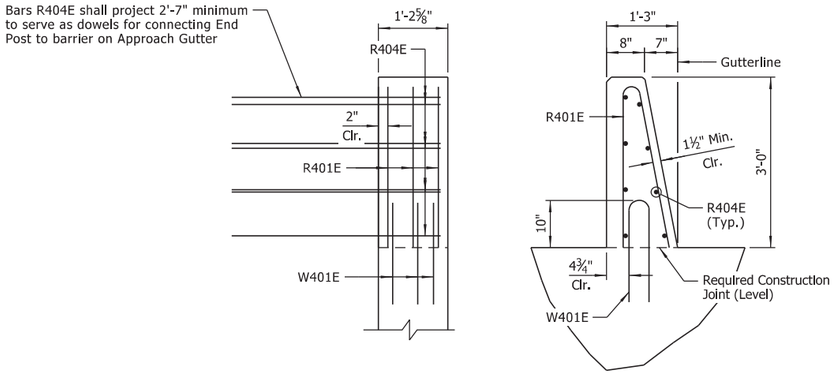

END BENT POST DETAILS

Scale: ¾" = 1'-0"

STATE OF ARKANSAS
LICENSED PROFESSIONAL ENGINEER
No.8017
JOHN H. RUDDELL

DIGITALLY SIGNED 8-13-2021
BRIDGE ENGINEER

SHEET 3 OF 4
DETAILS OF END BENTS
HWY. 158 OVER NATIONAL DITCH NO. 6
ROUTE SEC.
ARKANSAS STATE HIGHWAY COMMISSION
LITTLE ROCK, ARK.

DRAWN BY: HEW DATE: APR. 2021 FILENAME: b100955x9_A3.dgn
CHECKED BY: JHR DATE: JUNE 2021 SCALE: As Shown
DESIGNED BY: CSW DATE: APR. 2021
BRIDGE NO. 07564 DRAWING NO. 64412

abhall 8/13/2021 9:55:46 AM
WORKSPACE: ARDOT Bridge (2019)
L:\20IT\70IT642 - ARDOT Job I00955\Drawings\b100955x9_5203_AB.dgn
REVISED DATE:

DATE REVISED	DATE FILMED	DATE REVISED	DATE FILMED	FED. ROAD DIST. NO.	STATE	FED. AID PROJ. NO.	SHEET NO.	TOTAL SHEETS
				6	ARK.			
				JOB NO.		100955	236	355
				(1) 07564		END BENTS		64413

BAR LIST (PER BENT)

	MARK	NO. REQ'D	LENGTH	"A"	"B"	P.D.
	B401	29	8'-4"			2"
	B402	24	21'-10"			Str.
	B403	168	4'-6"			3"
	B404	7	5'-5"			Str.
	B405	8	8'-8"	1'-2"	3'-0"	2"
	B406	8	6'-8"	1'-2"	2'-0"	2"
	B501	120	17'-6"			2½"
	B502	56	12'-7"			2½"
	B503	29	6'-9"			2½"
	B601	6	43'-1"			Str.
	B602	6	7'-7"	2'-11"	2'-6"	4½"
	B603	6	10'-9"			4½"
	B604	10	7'-5"			4½"
	B605	10	11'-7"			4½"
	B606	12	9'-5"	1'-1"	4'-4"	4½"
	B1001	16	45'-11"			10"
(1)	D601E	29	5'-2"			4½"
(1)	R401E	6	5'-11"			2½"
(1)	R404E	16	3'-8"			Str.
(1)	W401E	6	3'-11"			3¾"
	W402	40	14'-4"	1'-2"	6'-8"	2"
	W701	50	9'-8"			Str.

NOTES:
Number of bars shown is for one end bent only.

Dimensions of bars are out-to-out.

Bars designated with "E" suffix shall be epoxy coated.

(1) Epoxy coated reinforcing in end bents shall be paid for as "REINFORCING STEEL - BRIDGE (GRADE 60)".

BAR BENDING DIAGRAMS

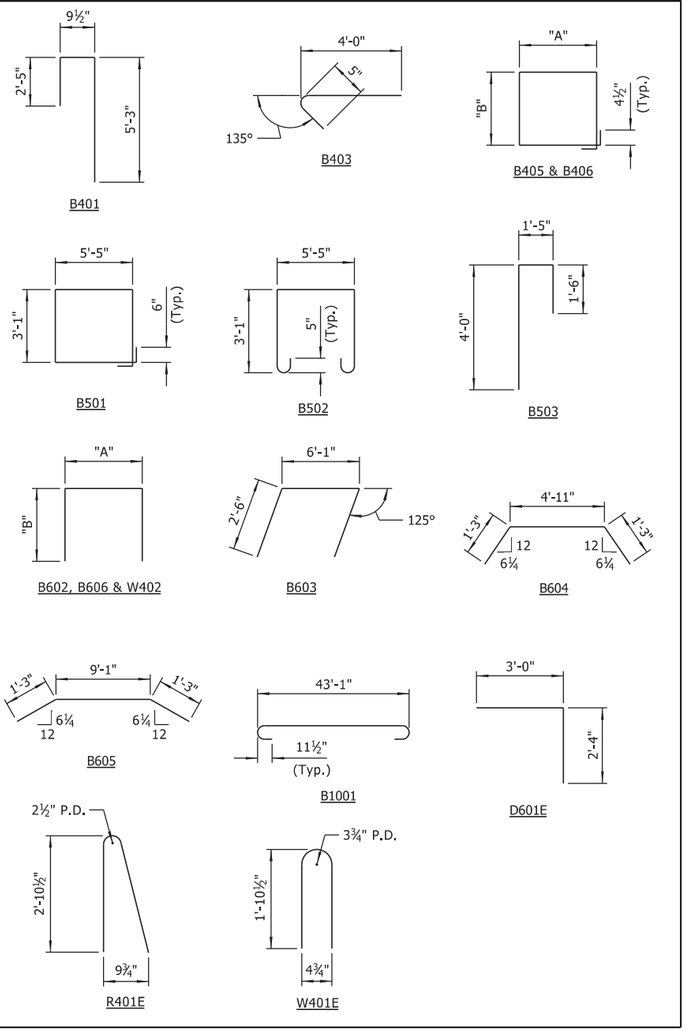

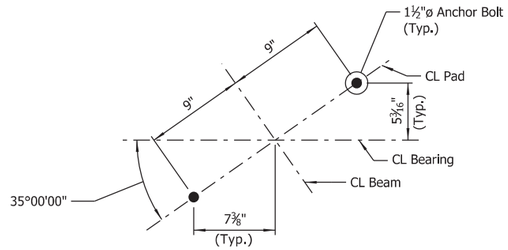

TYPICAL ANCHOR BOLT LAYOUT

No Scale

NOTE:
For Details of Elastomeric Bearings, see Dwg. No. 64425.

GENERAL NOTES:

Structural steel in end bents shall be ASTM A709, Gr. 50W and shall be paid for as "STRUCTURAL STEEL IN BEAM SPANS (A709, Gr. 50W)".

Class 2 Protective Surface Treatment shall be applied to the top of backwall and the roadway face and top of end posts.

For details of steel shell piling, see Std. Dwg. No. 55021.

See Std. Dwg. No. 55006 for additional notes.

STATE OF ARKANSAS
LICENSED PROFESSIONAL ENGINEER
No.8017
JOHN H. RUDDELL

DIGITALLY SIGNED 8-13-2021
BRIDGE ENGINEER

SHEET 4 OF 4
DETAILS OF END BENTS
HWY. 158 OVER NATIONAL DITCH NO. 6
ROUTE SEC.
ARKANSAS STATE HIGHWAY COMMISSION
LITTLE ROCK, ARK.

DRAWN BY: HEW DATE: APR. 2021 FILENAME: b100955x9_A4.dgn
CHECKED BY: JHR DATE: JUNE 2021 SCALE: As Shown
DESIGNED BY: CSW DATE: APR. 2021
BRIDGE NO. 07564 DRAWING NO. 64413

abhall 8/13/2021 9:55:46 AM
WORKSPACE: ARDOT Bridge (2019)
L:\2017\17017642 - ARDOT Job 100955\Drawings\b100955x9_5204_AB.dgn
REVISED DATE:

DATE REVISED	DATE FILMED	DATE REVISED	DATE FILMED

FED. ROAD DIST. NO.	STATE	FED. AID PROJ. NO.	SHEET NO.	TOTAL SHEETS
6	ARK.			
JOB NO.		100955	237	356
① 07564		INT. BENTS		64414

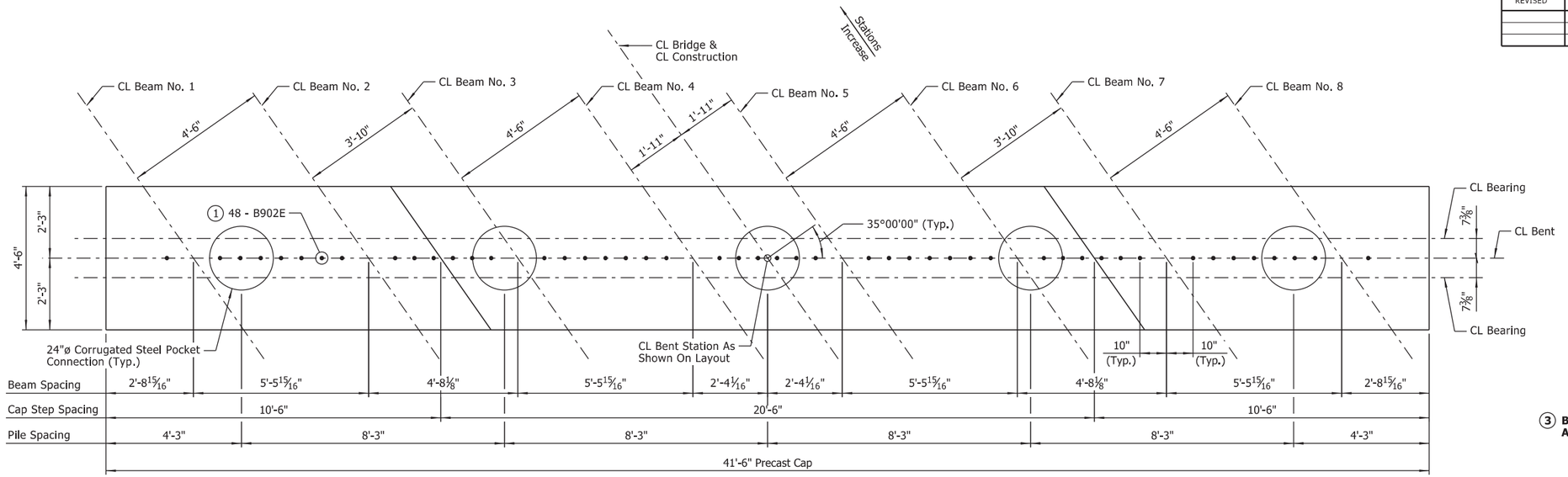

① Bars B902E within corrugated steel pocket connection shall be installed in the field at the time the pockets are filled. Minimum embedment = 2'-9".

② Dimension shown is for distance from outer limit of concrete cap to the limits of the corrugated steel pipe forming the pocket.

PLAN - BENT NOS. 2-5

Scale: ½" = 1'-0"

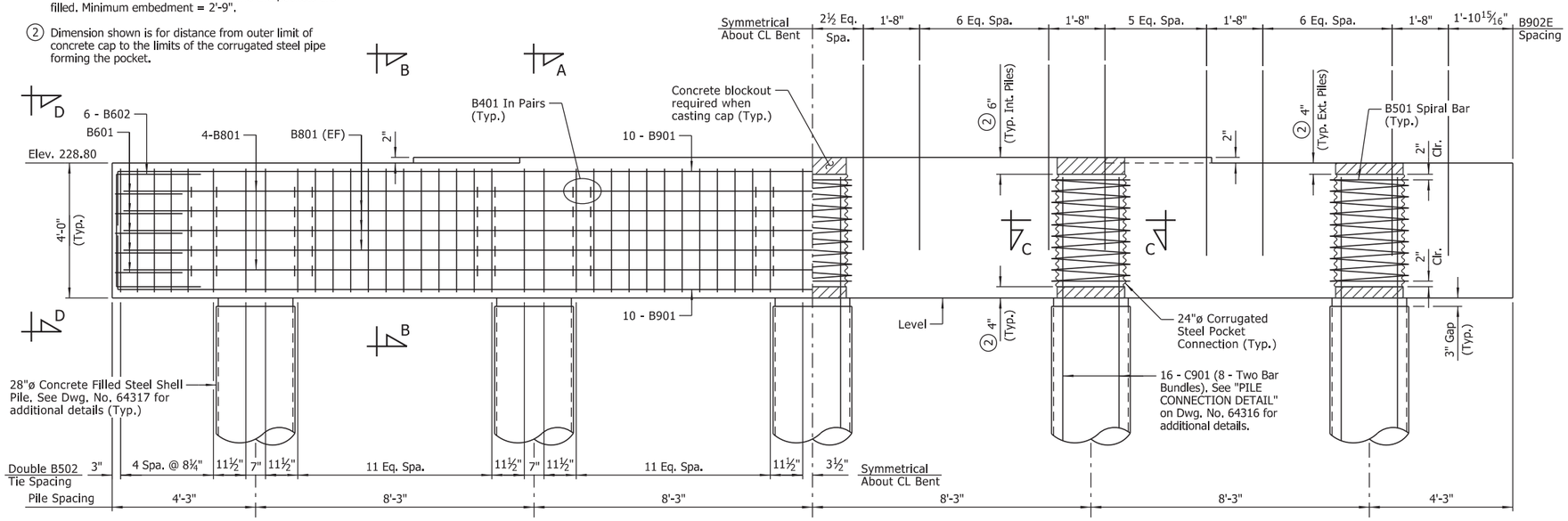

ELEVATION - BENT NOS. 2-5

(Looking Ahead)
Scale: ½" = 1'-0"

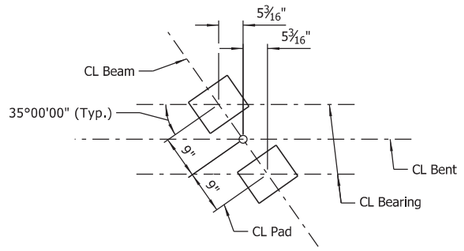

BEARING PAD LAYOUT

Scale: ¾" = 1'-0"

NOTES:
Precast bent caps at Bent Nos. 2 through 5 shall be fabricated and installed in accordance with SP "PRECAST CONCRETE BENT CAPS".

For "GENERAL NOTES - PRECAST CONCRETE BENT CAPS", see Dwg. No. 64316.

For details of elastomeric bearings, see Dwg. Nos. 64425 & 64426.

For "SECTIONS", see Dwg. No. 64315.

For "PROJECT GENERAL NOTES", see Dwg. No. 64303.

For additional information, see Layout.

BAR LIST (PER BENT)

MARK	NO. REQ'D	LENGTH	P.D.
B401	200	4'-0"	3"
B501	5	90'-9"	28¼"
B502	136	15'-2"	2½"
B601	10	8'-9"	4½"
B602	12	8'-3"	4½"
B801	14	40'-11"	Str.
B901	20	43'-10"	9"
B902E	48	5'-6"	Str.
C501	5	229'-5"	19¾"
③ C901	80	14'-0"	Str.

③ **Bars C901 shall be ASTM A706, Grade 60.**

BAR BENDING DIAGRAMS

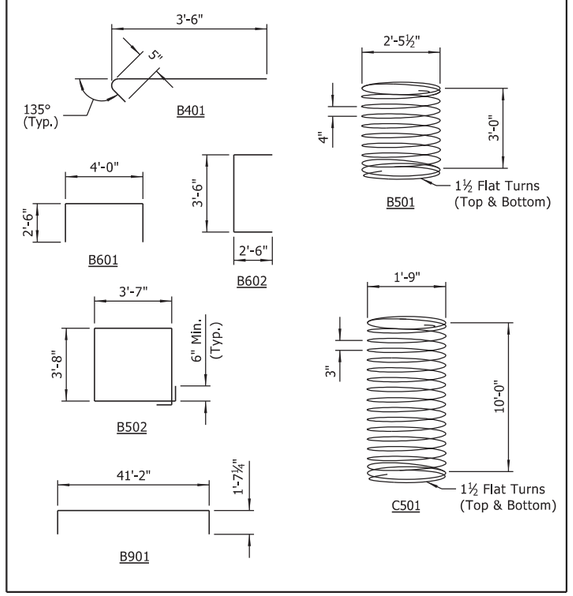

NOTES:
Dimensions of bars are out-to-out.

Bars designated with "E" suffix shall be epoxy coated.

No direct payment for bars in bent cap or concrete filled steel shell piles. Payment of all reinforcing steel to be subsidiary to unit price for "PRECAST CONCRETE BENT CAPS".

STATE OF ARKANSAS
LICENSED PROFESSIONAL ENGINEER
No.8017
JOHN H. RUDDELL

DIGITALLY SIGNED 8-13-2021
BRIDGE ENGINEER

DETAILS OF INTERMEDIATE BENTS
HWY. 158 OVER NATIONAL DITCH NO. 6

ROUTE SEC.

ARKANSAS STATE HIGHWAY COMMISSION

LITTLE ROCK, ARK.

DRAWN BY: CWT DATE: APR. 2021 FILENAME: b100955x9_BE1.dgn
CHECKED BY: JHR DATE: MAY 2021 SCALE: As Shown
DESIGNED BY: ERM DATE: APR. 2021

BRIDGE NO. 07564 DRAWING NO. 64414

abnall 8/13/2021 9:55:47 AM
WORKSPACE: ARDOT Bridge (2019)
L:\20TV\T0\T642 - ARDOT Job 100955\Drawings\b100955x9_S205_BE.dgn
REVISED DATE:

DATE REVISED	DATE FILMED	DATE REVISED	DATE FILMED	FED. ROAD DIST. NO.	STATE	FED. AID PROJ. NO.	SHEET NO.	TOTAL SHEETS
				6	ARK.			
				JOB NO.		100955	238	355
				(1) 07564		250' UNIT		64415

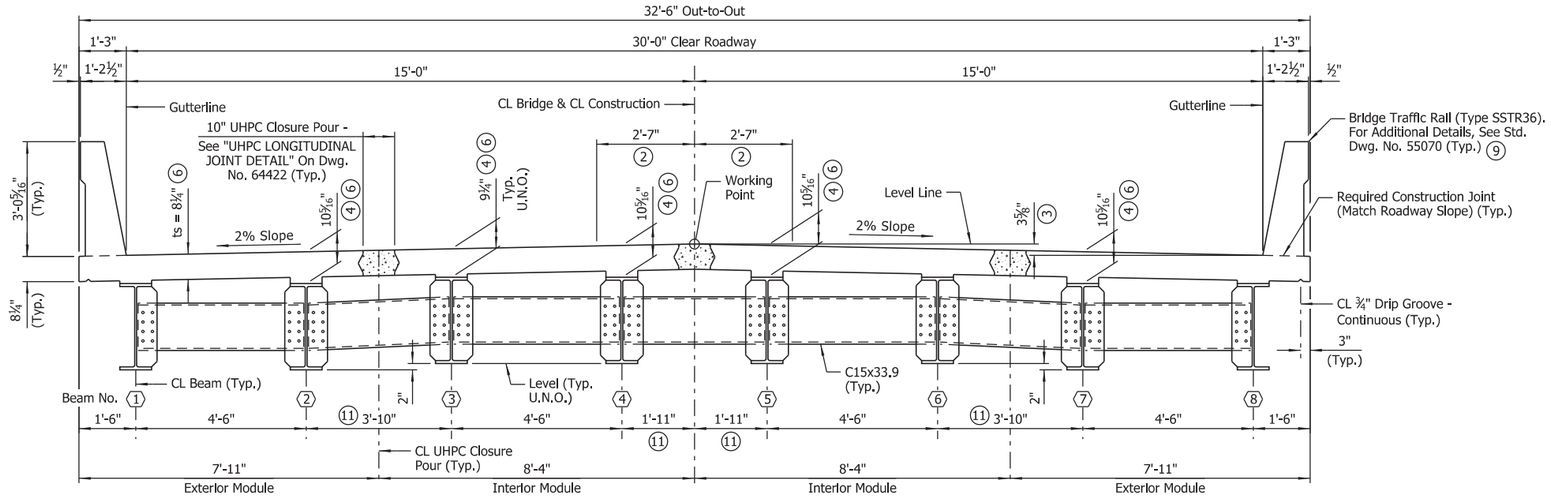

TYPICAL ROADWAY SECTION

(Looking Ahead)
Scale: ½" = 1'-0"

LEGEND

U.N.O. = Unless Noted Otherwise
UHPC = Ultra High Performance Concrete
EF = Each Face

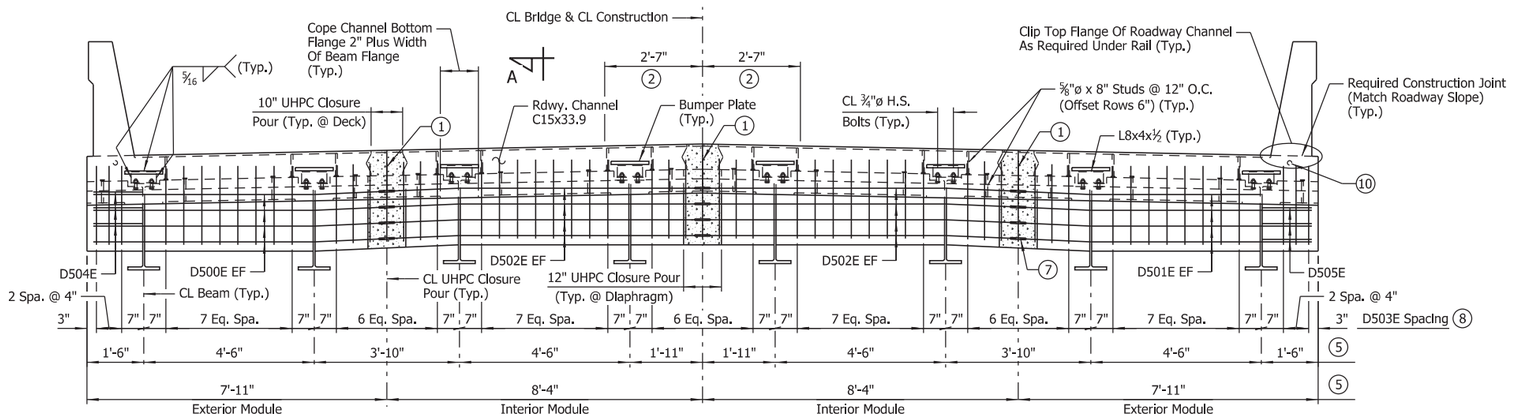

EXPANSION DEVICE:
Rdwy. Channel - C15x33.9
Conn. Angles - L8x4x½
Detail Device ⅛" high and provide ¼" shims using 2-$\frac{1}{16}$" and 1-⅛" plates.

TYPICAL SECTION THRU JOINT AT END BENTS

(Looking Ahead at Begin Bridge)
No Scale

NOTES:
D503E bars oriented parallel to CL Bridge.

Diaphragm at End Bridge similar.

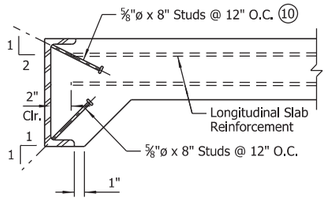

DETAIL OF ANCHORS AND PLACEMENT OF LONGITUDINAL REINFORCEMENT

No Scale

NOTE:
As an alternate to ⅝"ø studs, ½"ø x 8" studs spaced @ 8" O.C. may be used.

NOTES:
For Standard General Notes and Details, See Std. Dwg. No. 55006.

For prefabricated module reinforcing details, see Dwg. No. 64416.

For "SECTION A-A", see Dwg. No. 64421.

Class 2 Protective Surface Treatment shall be applied to the top and roadway faces of bridge traffic rails and the bridge roadway surface.

The bridge deck shall be given a polymer overlay as specified in SP "POLYMER OVERLAY".

(1) See "WELD DETAIL FOR EXPANSION DEVICE" on Dwg. No. 64421.

(2) See "ROUNDING DETAIL" on Std. Dwg. No. 55007.

(3) Working Point to Gutterline (Typ.)

(4) Measured from top of deck to top of beam flange at CL Bearing

(5) Dimensions shown normal to CL Construction. Elements of the expansion device shall be fabricated to accommodate skew.

(6) The bridge deck as shown includes ¼" of sacrificial surface for deck grinding.

(7) The mechanical couplers shall be Dayton Superior D250SCA Bar Lock Epoxy Couplers or an alternate approved type in accordance with the ARDOT Qualified Products List (QPL). The cost of mechanical couplers shall not be measured for separate payment but shall be included in the cost of the prefabricated superstructure modules. Mechanical couplers shall develop at least 125% of the specified yield strength of the reinforcing steel.

(8) Dimensions shown are normal to CL Bridge & CL Construction.

(9) Bridge Traffic Rail shall be cast in field following placement of all closure pours.

(10) Place studs affected by clipped flange horizontally on channel web

(11) Permanent steel bridge deck forms will not be allowed within bays that contain UHPC closure pours. Removable deck forming will be required at these locations.

SILICONE JOINT DATA					
Bridge No.	"A" Width Perpendicular To Joint At 24 Hour Average Temperature (12) Of:			"B" Perpendicular To Joint At 60°F	Bumper Plate Size
	40°F	60°F	80°F		
07564	2³⁄₁₆"	2"	1¹³⁄₁₆"	2¼"	1" x 1" x 1'-0"

(12) The temperature used to set the joint opening shall be the approximate average air temperature during the 24 hour period immediately before the end bent backwalls are poured. The Engineer shall establish the temperature. Interpolation of the table may be be necessary.

NOTES:
Joint data is the same for begin bridge and end bridge at each location.

For additional details of poured silicone joints, see Std. Dwg. No. 55008.

STATE OF ARKANSAS
LICENSED PROFESSIONAL ENGINEER
No.8017
JOHN H. RUDDELL
DIGITALLY SIGNED 8-13-2021
BRIDGE ENGINEER

SHEET 1 OF 6
DETAILS OF 250'-0" CONTINUOUS W-BEAM UNIT
HWY. 158 OVER NATIONAL DITCH NO. 6

ROUTE SEC.

ARKANSAS STATE HIGHWAY COMMISSION

LITTLE ROCK, ARK.

DRAWN BY: RAK DATE: JAN. 2021 FILENAME: b100955x9_s1.dgn
CHECKED BY: JHR DATE: JUNE 2021 SCALE: As Shown
DESIGNED BY: RAK DATE: JAN. 2021
BRIDGE NO. 07564 DRAWING NO. 64415

abhall 8/13/2021 9:55:49 AM
WORKSPACE: ARDOT Bridge (2019)
L:\2017\1701642 - ARDOT Job 100955\Drawings\b100955x9_S40_SX.dgn
REVISED DATE:

DATE REVISED	DATE FILMED	DATE REVISED	DATE FILMED	FED. ROAD DIST. NO.	STATE	FED. AID PROJ. NO.	SHEET NO.	TOTAL SHEETS
				6	ARK.			
				JOB NO.		100955	239	355
				(1) 07564		250' UNIT		64416

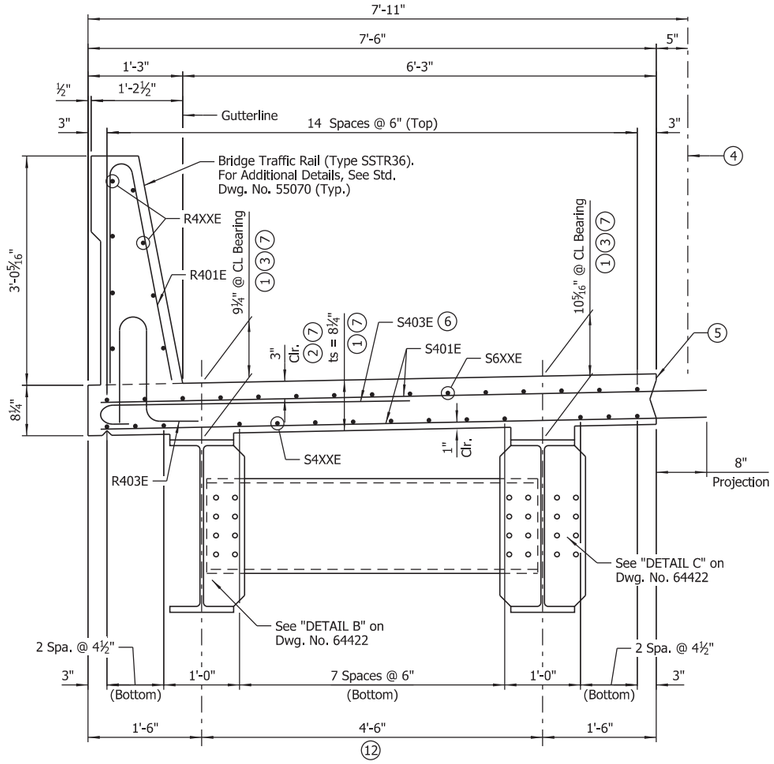

EXTERIOR MODULE REINFORCING DETAIL

Scale: 1" = 1'-0"

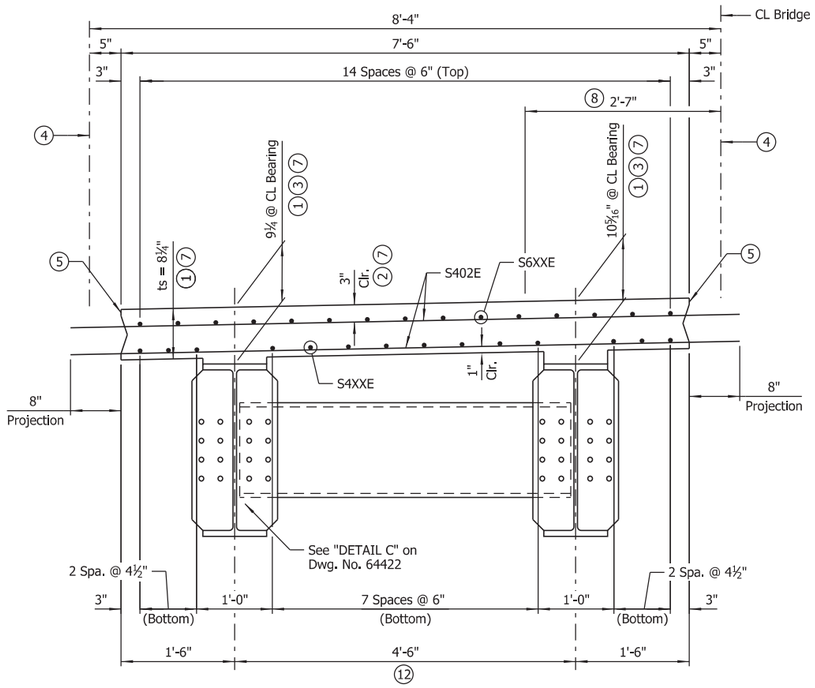

INTERIOR MODULE REINFORCING DETAIL

Scale: 1" = 1'-0"

LEGEND

EF = Each Face

NOTE:
Bridge Traffic Rail to be poured after all prefabricated modules and cast-in-place closure pours are placed.

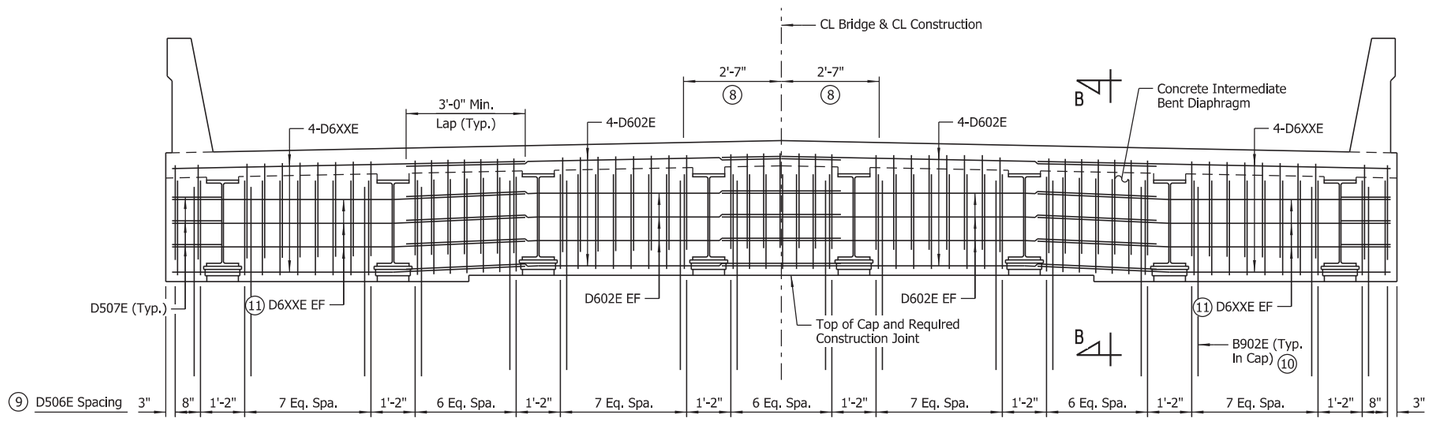

NOTE:
D506E bars oriented parallel to CL Bridge.

TYPICAL SECTION AT INTERMEDIATE BENTS

(Looking Ahead)
No Scale

NOTE:
C15x33.9 Diaphragms and deck reinforcing not shown for clarity.

NOTE:
For "SECTION B-B", see Dwg. No. 64421.

(1) See "ADJUSTMENT FOR SLAB THICKNESS TOLERANCE" on Dwg. No. 64421.

(2) TOLERANCE:
Minus = ¼"
Plus = Amount of slab thickening used to meet slab thickness tolerance - See "ADJUSTMENT FOR SLAB THICKNESS TOLERANCE" on Dwg. No. 64421.

(3) Measured from top of deck to top of beam flange at CL Bearing.

(4) CL 10" Ultra High Performance Concrete Closure Pour. See "UHPC LONGITUDINAL JOINT DETAIL" on Dwg. No. 64422.

(5) Provide joint surface with Class 4, Exposed Aggregate Finish per Subsection 802.19(b)(4) with "Concrete Surface Profile 6" or rougher, as established by the International Concrete Repair Institute.

(6) Rotate S403E as needed to avoid interference with bottom mat of deck reinforcement.

(7) The bridge deck as shown includes ¼" of sacrificial surface for deck grinding.

(8) See "ROUNDING DETAIL" on Std. Dwg. No. 55007.

(9) Dimensions shown are normal to CL Bridge & CL Construction.

(10) See "DETAILS OF INTERMEDIATE BENTS" on Dwg. No. 64414 for additional details.

(11) See "PLAN - INTERMEDIATE BENT DIAPHRAGM" on Dwg. No. 64420 for bar designations.

(12) Permanent steel bridge deck forms are allowed in designated bays only.

NOTES:
The prefabricated superstructure modules shall be fabricated and assembled in accordance with SP "PREFABRICATED SUPERSTRUCTURE MODULES".

The cost of all concrete (including those portions precast and cast-in-place), reinforcing steel and structural steel shall be included in the unit cost of the prefabricated module.

The concrete used for the longitudinal closure pour shall be in accordance with SP "ULTRA HIGH PERFORMANCE CONCRETE".

Bar positions and clearances from the forms shall be maintained by means of stays, ties, hangers, or other approved devices per Subsection 804.06. Placement of slab bolsters or high-chairs with full-length lower runners directly on removable deck forms will not be allowed.

SLAB REINFORCING:

Transverse: S401E or S402E @ 6" o.c. Top and Bottom
S403E @ 6" o.c. in Top of Overhang (Bundled with No. 4 Bars)

Longitudinal: S6XXE In Top As Shown — See "PART REINFORCING PLAN" on Dwg. Nos. 64418 & 64419
S4XXE In Bottom As Shown —

STATE OF ARKANSAS
LICENSED PROFESSIONAL ENGINEER
No.8017
JOHN H. RUDDELL

DIGITALLY SIGNED 8-13-2021
BRIDGE ENGINEER

SHEET 2 OF 6
DETAILS OF 250'-0"
CONTINUOUS W-BEAM UNIT
HWY. 158 OVER NATIONAL DITCH NO. 6

ROUTE SEC.

ARKANSAS STATE HIGHWAY COMMISSION
LITTLE ROCK, ARK.

DRAWN BY: RAK DATE: JAN. 2021 FILENAME: b100955x9_s2.dgn
CHECKED BY: JHR DATE: JUNE 2021 SCALE: As Shown
DESIGNED BY: RAK DATE: JAN. 2021

BRIDGE NO. 07564 DRAWING NO. 64416

abhall 8/13/2021 9:55:51 AM
WORKSPACE: ARDOT Bridge (2019)
L:\2017\1701642 - ARDOT Job 100955\Drawings\b100955x9_S402_SX.dgn
REVISED DATE:

DATE REVISED	DATE FILMED	DATE REVISED	DATE FILMED	FED. ROAD DIST. NO.	STATE	FED. AID PROJ. NO.	SHEET NO.	TOTAL SHEETS
				6	ARK.			
				JOB NO.		100955	240	356
				(1) 07564		250' UNIT		64417

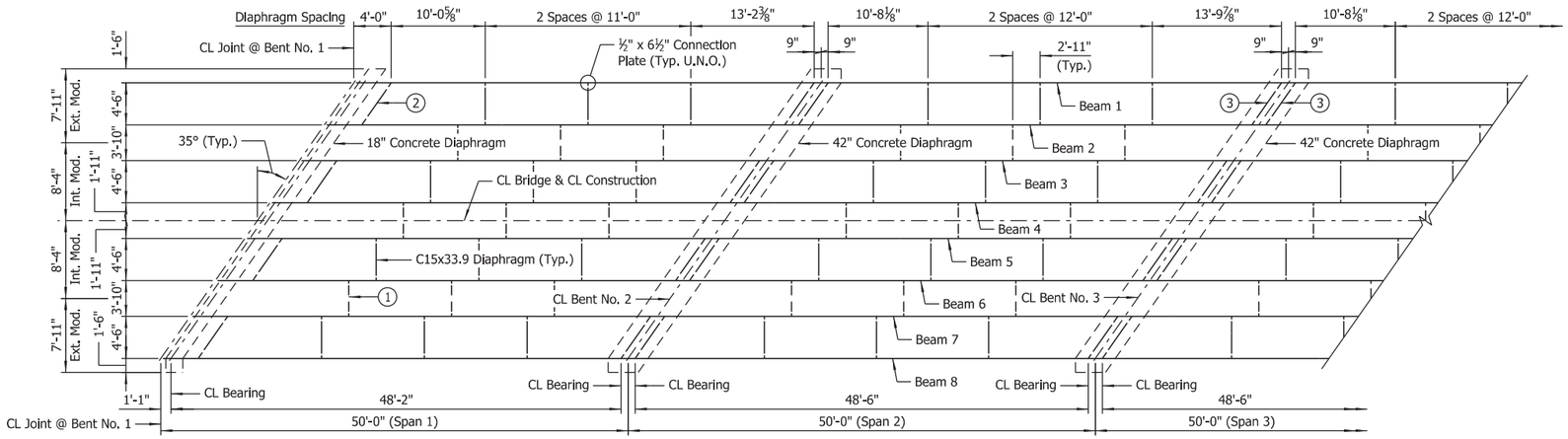

1. Diaphragms between modules shall be installed after prefabricated modules are installed and prior to constructing closure pours.
2. Diaphragms adjacent to concrete End Bent diaphragms shall be fabricated such that the channel flanges project away from concrete end bent diaphragms. Note that orientation of flange projection shall be considered when determining obtuse/acute connection locations.
3. Diaphragms at Intermediate Bents shall be fabricated such that the channel flanges project away from CL Bent. Note that orientation of flange projection shall be considered when determining obtuse/acute connection locations.

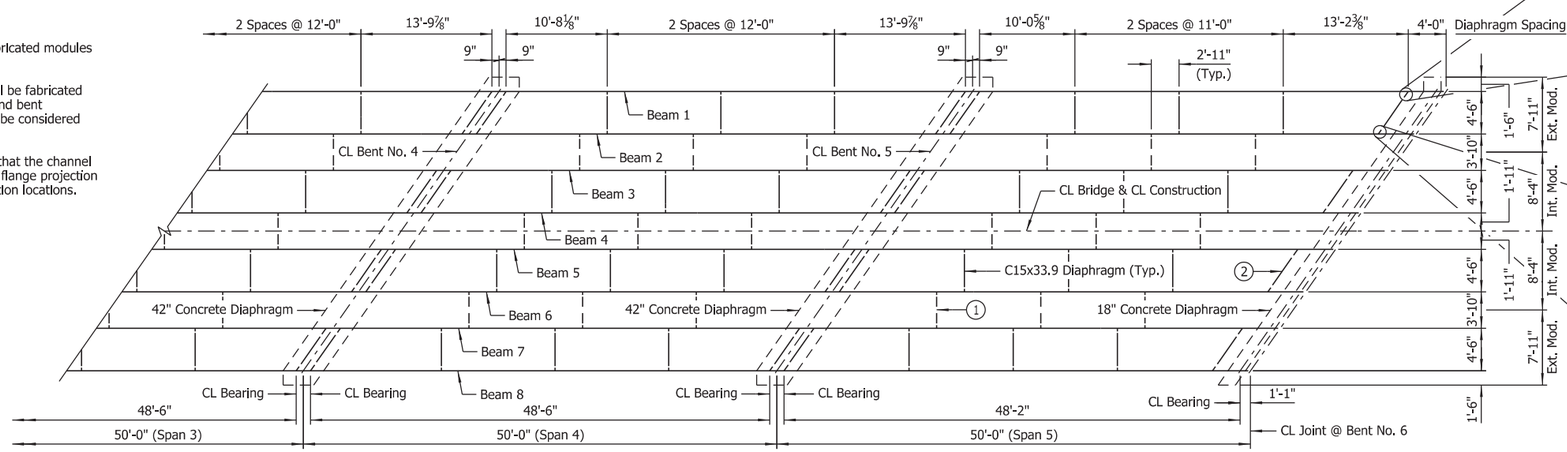

FRAMING PLAN
Scale: ⅛" = 1'-0"

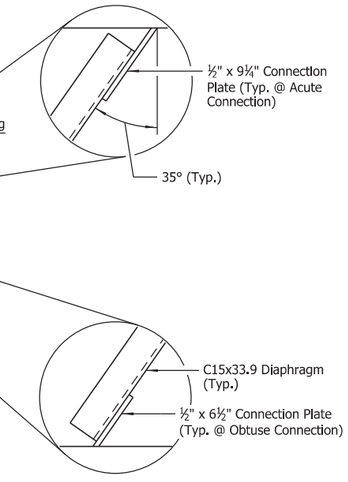

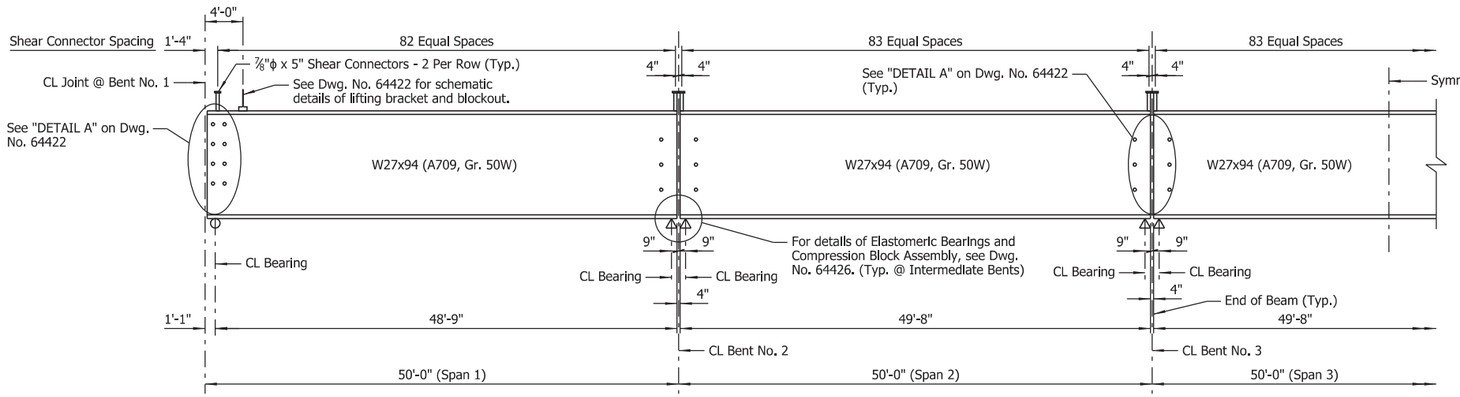

HALF-BEAM ELEVATION
No Scale

NOTES:
For Standard General Notes, see Std. Dwg. No. 55006.

For "SHEAR CONNECTOR DETAIL," see Std. Dwg. No. 55007.

All structural steel shall be ASTM A709, Gr. 50W unless noted otherwise. The cost of the structural steel shall be subsidiary to the unit price bid for item "PREFABRICATED SUPERSTRUCTURE MODULES". Diaphragms placed between separate modules shall be included in the cost of the prefabricated modules.

For painting of beams ends adjacent to bridge deck expansion joints, see "PROJECT GENERAL NOTES" on Dwg. No. 64303.

For diaphragm and connection plate details, see "DETAIL B" and "DETAIL C" on Dwg. No. 64422.

LEGEND
U.N.O. = Unless Noted Otherwise

STATE OF ARKANSAS
LICENSED PROFESSIONAL ENGINEER
No.8017
JOHN H. RUDDELL

DIGITALLY SIGNED 8-13-2021
BRIDGE ENGINEER

SHEET 3 OF 6
DETAILS OF 250'-0"
CONTINUOUS W-BEAM UNIT
HWY. 158 OVER NATIONAL DITCH NO. 6
ROUTE SEC.
ARKANSAS STATE HIGHWAY COMMISSION
LITTLE ROCK, ARK.

DRAWN BY: HEW DATE: FEB. 2021 FILENAME: b100955x9_s3.dgn
CHECKED BY: JHR DATE: JUNE 2021 SCALE: As Shown
DESIGNED BY: BWD DATE: FEB. 2021
BRIDGE NO. 07564 DRAWING NO. 64417

abnall 8/13/2021 9:55:54 AM
WORKSPACE: ARDOT Bridge (2019)
L:\20T\170\7642 - ARDOT Job 100955\Drawings\b100955x9_5403_SF.dgn
REVISED DATE:

DATE REVISED	DATE FILMED	DATE REVISED	DATE FILMED	FED. ROAD DIST. NO.	STATE	FED. AID PROJ. NO.	SHEET NO.	TOTAL SHEETS
				6	ARK.			
				JOB NO.		100955	241	356
				(I) 07564		250' UNIT		64418

(1) Placed as shown in "EXTERIOR MODULE REINFORCING DETAIL." See Dwg. No. 64416.

(2) Placed as shown in "INTERIOR MODULE REINFORCING DETAIL." See Dwg. No. 64416.

(3) Top and bottom, placed as shown in "UHPC LONGITUDINAL JOINT DETAIL." See Dwg. No. 64422. In Spans 2-4, bars shall be centered longitudinally (in plan view) with the UHPC joint.

(4) S662E bars shall have 3'-10" minimum lap with both #6 and #4 longitudinal bars. (Typ. at Deck Closure)

(5) S403E Bundled with #4 Bars in Top of Exterior Modules and #4 Bars in Top of Closure Pours (Typ. on Both Sides of Bridge)

(6) Top & Bottom - Lapped With Longitudinal Bars Projecting From Precast Modules & UHPC Closure Pours

(7) Top & Bottom - 7 Spaces @ 6"

(8) Top & Bottom - 11 Spaces @ 6"

(9) Top & Bottom - 12 Spaces @ 6"

(10) S601E-S615E Top
S445E-S458E Bottom

(11) S616E-S630E Top
S459E-S472E Bottom

(12) S631E-S645E Top
S473E-S486E Bottom

(13) S646E-S660E Top
S487E-S4100E Bottom

(14) 2'-7" Min. Lap (Typ. for transverse #4 bars in deck closure, including noncontact splices)

(15) Rail joints designated with symbol (F) shall be stopped 6" from top of slab. All other rail joints with symbol (P) shall be partial depth joints stopped 16" from top of slab.

(16) See "TRANSVERSE SLAB JOINT DETAIL" on Std. Dwg. No. on 55007.

LEGEND

U.N.O. = Unless Noted Otherwise

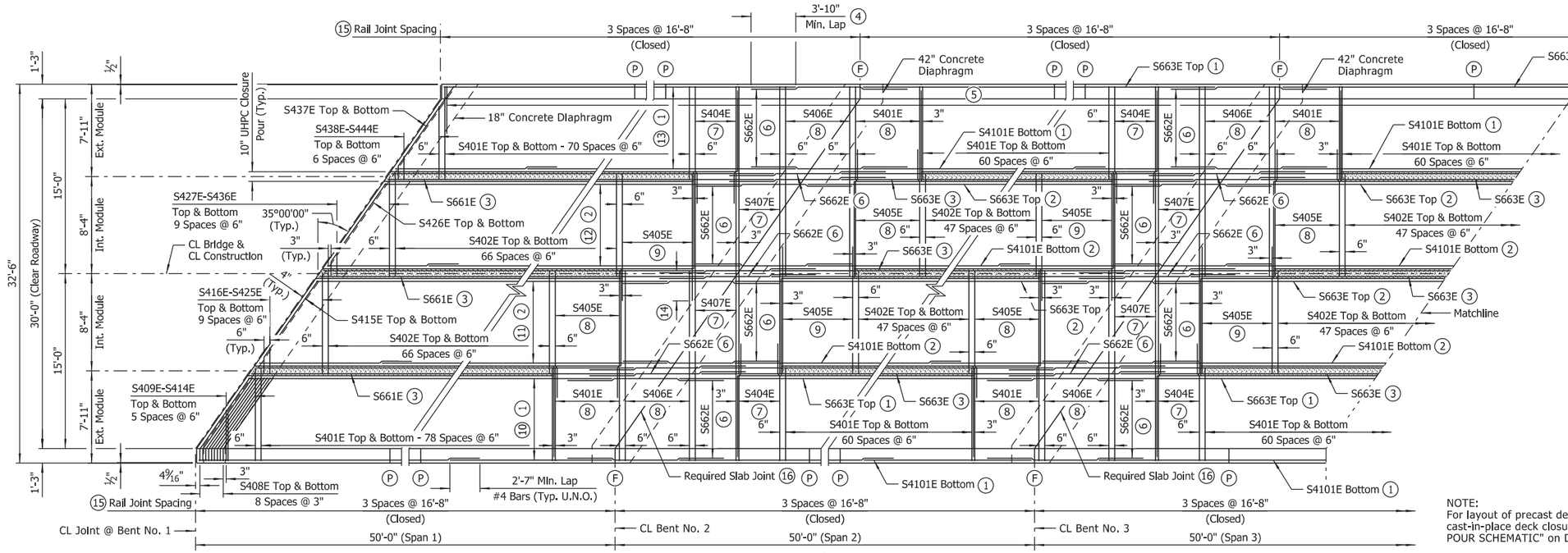

PART REINFORCING PLAN

Scale: 3/16" = 1'-0"

NOTES:
For Standard General Notes, see Std. Dwg. No. 55006.

For "PROJECT GENERAL NOTES," see Dwg. No. 64303.

For bridge traffic rail reinforcing details and details of partial-depth and full-depth rail joints, see Std. Dwg. No. 55070.

For details of concrete diaphragms, see Dwg. Nos. 64415, 64416, 64420 & 64421.

Edges of precast deck adjacent to cast-in-place closure pours shall be keyed and textured in accordance with details and notes on Dwg. No. 64422.

For additional clarity in transverse reinforcing placement near end of precast deck, see "TRANSVERSE REINFORCING SCHEMATICS" on Dwg. No. 64421.

Concrete in bridge superstructure shall be placed, consolidated and screeded off for the entire pour before any concrete has taken its initial set.

A minimum of 72 hours shall elapse between completion of the slab and the pouring of the bridge railing. Any railing pours made before the entire slab unit has been placed must be approved by the Engineer.

Concrete diaphragms shall be poured monolithically with the slab.

Removable forms shall be used when pouring diaphragms.

NOTE:
For layout of precast deck segments, UHPC joints and cast-in-place deck closures, see "MODULE & CLOSURE POUR SCHEMATIC" on Dwg. No. 64419.

BAR LIST

MARK	NO. REQ'D	LENGTH	"A"	"B"	P.D.
S401E	1,524	8'-0"			Str.
S402E	1,112	8'-10"			Str.
S403E	998	5'-0"			3"
S404E	128	10'-1"			Str.
S405E	400	10'-11"			Str.
S406E	192	16'-4"			Str.
S407E	128	24'-8"			Str.
S408E	36	8'-6"	7'-6"	1'-0"	3"
S409E To S414E	4 Ea.	8'-0" To 4'-5"			Str.
S415E	4	9'-6"	8'-1"	1'-5"	3"
S416E To S425E	4 Ea.	8'-8" To 2'-3"			Str.
S426E	4	9'-5"	8'-2"	1'-3"	3"
S427E To S436E	4 Ea.	8'-7" To 2'-2"			Str.
S437E	4	9'-6"	8'-4"	1'-2"	3"
S438E To S444E	4 Ea.	6'-4" To 2'-0"			Str.
S445E To S458E	4 Ea.	26'-5" To 23'-11"			Str.
S459E To S472E	4 Ea.	25'-10" To 23'-5"			Str.
S473E To S486E	4 Ea.	26'-1" To 23'-7"			Str.

BAR LIST

MARK	NO. REQ'D	LENGTH	"A"	"B"	P.D.
S487E To S4100E	4 Ea.	25'-6" To 23'-5"			Str.
S4101E	336	23'-5"			Str.
S601E To S615E	2 Ea.	50'-2" To 45'-3"			Str.
S616E To S630E	2 Ea.	49'-1" To 44'-2"			Str.
S631E To S645E	2 Ea.	49'-6" To 44'-7"			Str.
S646E To S660E	2 Ea.	48'-5" To 44'-3"			Str.
S661E	24	47'-2"			Str.
S662E	512	13'-5"			Str.
S663E	216	44'-3"			Str.

BAR LIST

MARK	NO. REQ'D	LENGTH	"A"	"B"	P.D.
D500E	16	9'-5"			Str.
D501E	16	9'-2"	7'-10"	1'-4"	3¾"
D502E	32	10'-1"			Str.
D503E	118	6'-2"			2½"
D504E	6	4'-1"			2½"
D505E	6	3'-5"	1'-3½"	1'-2"	2½"
D506E	912	7'-7½"	2'-6"	2'-8"	2½"
D507E	24	5'-3"			2½"
D600E	40	11'-2"	9'-10"	1'-4"	4½"
D601E	72	11'-5"			Str.
D602E	112	14'-1"			Str.
R401E	1,020	5'-11"			2½"
R402E	80	5'-6"			Str.
R403E	1,020	3'-6"			3", 3¾"
R404E	240	16'-4"			Str.

TABLE OF VARIABLES

CLOSED RAIL PANELS			OPEN RAIL PANELS						
PANEL LENGTH	A	R4XXE	PANEL LENGTH	B	C	D	E	F	R4XXE
16'-8"	33	R404E							

NOTE:
Longitudinal bars in interior precast deck modules shall project 4'-0" min. from end of precast deck into regions of cast-in-place deck closures.

Longitudinal bars in exterior precast deck modules shall project 5'-0" min. from end of precast deck into regions of cast-in-place deck closures.

BAR BENDING DIAGRAMS

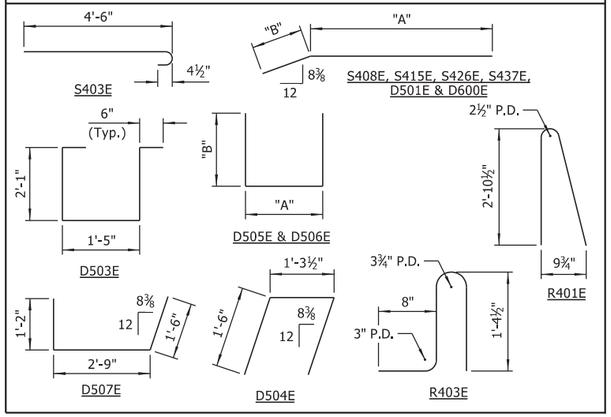

NOTES:
Dimensions of bars are out-to-out.

Bar designations ending with "E" indicate epoxy coated bars.

RIGHT SIDE DECK DRAIN STATIONS
107+68.50
108+18.50
108+68.50
109+18.50
109+65.50

LEFT SIDE DECK DRAIN STATIONS
107+92.50
108+39.50
108+89.50
109+39.50
109+89.50

NOTE:
Stations shown are to CL Drain. For details of deck drains, see Dwg. No. 64423.

STATE OF ARKANSAS
LICENSED PROFESSIONAL ENGINEER
No.14498
ADAM B. HALL

DIGITALLY SIGNED 8-13-2021
BRIDGE ENGINEER

SHEET 4 OF 6
DETAILS OF 250'-0"
CONTINUOUS W-BEAM UNIT
HWY. 158 OVER NATIONAL DITCH NO. 6

ROUTE SEC.

ARKANSAS STATE HIGHWAY COMMISSION
LITTLE ROCK, ARK.

DRAWN BY: BWD DATE: FEB. 2021 FILENAME: b100955x9_s4.dgn
CHECKED BY: ABH DATE: JUNE 2021 SCALE: As Shown
DESIGNED BY: BWD DATE: FEB. 2021

BRIDGE NO. 07564 DRAWING NO. 64418

abhall 8/13/2021 9:55:56 AM
WORKSPACE: ARDOT Bridge (2019)
L:\2017\1701742 - ARDOT Job 100955\Drawings\b100955x9_S404_SB.dgn
REVISED DATE:

DATE REVISED	DATE FILMED	DATE REVISED	DATE FILMED	FED. ROAD DIST. NO.	STATE	FED. AID PROJ. NO.	SHEET NO.	TOTAL SHEETS
				6	ARK.			
				JOB NO.		100955	242	356
				(I) 07564		250' UNIT		64419

(1) Placed as shown in "EXTERIOR MODULE REINFORCING DETAIL." See Dwg. No. 64416.

(2) Placed as shown in "INTERIOR MODULE REINFORCING DETAIL." See Dwg. No. 64416.

(3) Top and bottom, placed as shown in "UHPC LONGITUDINAL JOINT DETAIL." See Dwg. No. 64422. In Spans 2-4, bars shall be centered longitudinally (in plan view) with the UHPC joint.

(4) S662E bars shall have 3'-10" minimum lap with both #6 and #4 longitudinal bars. (Typ. at Deck Closure)

(5) S403E Bundled with #4 Bars in Top of Exterior Modules and #4 Bars in Top of Closure Pours (Typ. on Both Sides of Bridge)

(6) Top & Bottom - Lapped With Longitudinal Bars Projecting From Precast Modules & UHPC Closure Pours

(7) Top & Bottom - 7 Spaces @ 6"

(8) Top & Bottom - 11 Spaces @ 6"

(9) Top & Bottom - 12 Spaces @ 6"

(10) S601E-S615E Top
S445E-S458E Bottom

(11) S616E-S630E Top
S459E-S472E Bottom

(12) S631E-S645E Top
S473E-S486E Bottom

(13) S646E-S660E Top
S487E-S4100E Bottom

(14) 2'-7" Min. Lap (Typ. for transverse #4 bars in deck closure, including noncontact splices)

(15) Rail joints designated with symbol (F) shall be stopped 6" from top of slab. All other rail joints with symbol (P) shall be partial depth joints stopped 16" from top of slab.

(16) See "TRANSVERSE SLAB JOINT DETAIL" on Std. Dwg. No. on 55007.

LEGEND

U.N.O. = Unless Noted Otherwise

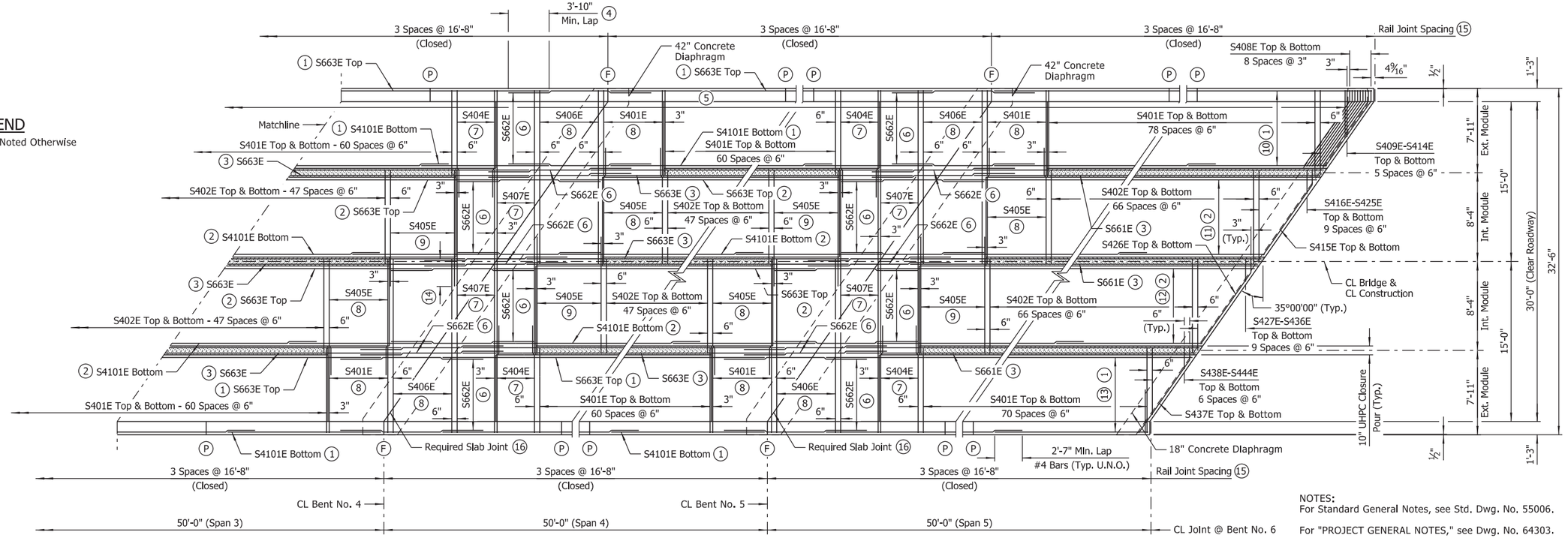

PART REINFORCING PLAN

Scale: 3/16" = 1'-0"

NOTE:
Longitudinal bars in interior precast deck modules shall project 4'-0" min. from end of precast deck into regions of cast-in-place deck closures.

Longitudinal bars in exterior precast deck modules shall project 5'-0" min. from end of precast deck into regions of cast-in-place deck closures.

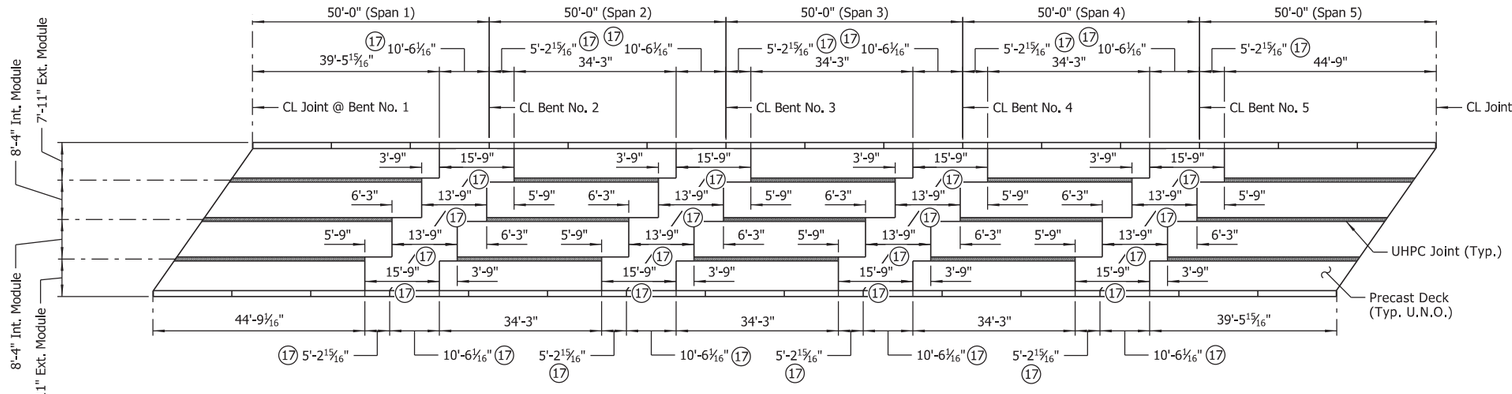

MODULE & CLOSURE POUR SCHEMATIC

Scale: 1/16" = 1'-0"

NOTES:
For Standard General Notes, see Std. Dwg. No. 55006.

For "PROJECT GENERAL NOTES," see Dwg. No. 64303.

For "BAR LIST", "BAR BENDING DIAGRAMS", Rail Panel "TABLE OF VARIABLES" and deck drain stations, see Dwg. No. 64418.

For bridge traffic rail reinforcing details and details of partial-depth and full-depth rail joints, see Std. Dwg. No. 55070.

For details of concrete diaphragms, see Dwg. Nos. 64415, 64416, 64420 & 64421.

Edges of precast deck adjacent to cast-in-place closure pours shall be keyed and textured in accordance with details and notes on Dwg. No. 64422.

For additional clarity in transverse reinforcing placement near end of precast deck, see "TRANSVERSE REINFORCING SCHEMATICS" on Dwg. No. 64421.

Concrete in bridge superstructure shall be placed, consolidated and screeded off for the entire pour before any concrete has taken its initial set.

A minimum of 72 hours shall elapse between completion of the slab and the pouring of the bridge railing. Any railing pours made before the entire slab unit has been placed must be approved by the Engineer.

Concrete diaphragms shall be poured monolithically with the slab.

Removable forms shall be used when pouring diaphragms.

STATE OF ARKANSAS
LICENSED PROFESSIONAL ENGINEER
No.14498
ADAM B. HALL

DIGITALLY SIGNED 8-13-2021
BRIDGE ENGINEER

SHEET 5 OF 6
DETAILS OF 250'-0"
CONTINUOUS W-BEAM UNIT
HWY. 158 OVER NATIONAL DITCH NO. 6

ROUTE SEC.

ARKANSAS STATE HIGHWAY COMMISSION
LITTLE ROCK, ARK.

DRAWN BY: CWT DATE: APR. 2021 FILENAME: b100955x9_s5.dgn
CHECKED BY: ABH DATE: JUNE 2021 SCALE: As Shown
DESIGNED BY: BWD DATE: FEB. 2021

BRIDGE NO. 07564 DRAWING NO. 64419

abhall 8/13/2021 9:55:58 AM
WORKSPACE: ARDOT Bridge (2019)
L:\2017\17017642 - ARDOT Job 100955\Drawings\b100955x9_S405_SB.dgn
REVISED DATE:

DATE REVISED	DATE FILMED	DATE REVISED	DATE FILMED

FED. ROAD DIST. NO.	STATE	FED. AID PROJ. NO.	SHEET NO.	TOTAL SHEETS
6	ARK.			
JOB NO.		100955	243	356
(1) 07564		250' UNIT		64420

TABLE OF DEAD LOAD DEFLECTIONS (INCHES)

	Point Of Deflection	Beams 1 & 8			Beams 2, 4, 5 & 7			Beams 3 & 6		
		Structural Steel	Structural Steel + Slab	Structural Steel + Slab + UHPC + Rail	Structural Steel	Structural Steel + Slab	Structural Steel + Slab + UHPC + Rail	Structural Steel	Structural Steel + Slab	Structural Steel + Slab + UHPC + Rail
Span No. 1	1.0	0.000	0.000	0.000	0.000	0.000	0.000	0.000	0.000	0.000
	1.1	0.042	0.205	0.215	0.044	0.218	0.232	0.044	0.214	0.228
	1.2	0.079	0.388	0.408	0.083	0.412	0.441	0.083	0.404	0.433
	1.3	0.108	0.531	0.561	0.114	0.565	0.608	0.114	0.553	0.596
	1.4	0.126	0.622	0.652	0.133	0.661	0.704	0.133	0.648	0.691
	1.5	0.133	0.653	0.683	0.140	0.694	0.738	0.140	0.680	0.723
	1.6	0.126	0.622	0.652	0.133	0.661	0.704	0.133	0.648	0.691
	1.7	0.108	0.531	0.551	0.114	0.565	0.593	0.114	0.553	0.582
	1.8	0.079	0.388	0.398	0.083	0.412	0.427	0.083	0.404	0.418
	1.9	0.042	0.205	0.215	0.044	0.218	0.232	0.044	0.214	0.228
Span No. 2	2.0	0.000	0.000	0.000	0.000	0.000	0.000	0.000	0.000	0.000
	2.1	0.042	0.205	0.205	0.044	0.218	0.218	0.044	0.214	0.214
	2.2	0.079	0.388	0.388	0.083	0.412	0.412	0.083	0.404	0.404
	2.3	0.108	0.531	0.531	0.114	0.565	0.565	0.114	0.553	0.553
	2.4	0.126	0.622	0.632	0.133	0.661	0.676	0.133	0.648	0.662
	2.5	0.133	0.653	0.663	0.140	0.694	0.709	0.140	0.680	0.695
	2.6	0.126	0.622	0.632	0.133	0.661	0.676	0.133	0.648	0.662
	2.7	0.108	0.531	0.541	0.114	0.565	0.579	0.114	0.553	0.568
	2.8	0.079	0.388	0.388	0.083	0.412	0.412	0.083	0.404	0.404
	2.9	0.042	0.205	0.205	0.044	0.218	0.218	0.044	0.214	0.214
Half Span No. 3	3.0	0.000	0.000	0.000	0.000	0.000	0.000	0.000	0.000	0.000
	3.1	0.042	0.205	0.205	0.044	0.218	0.218	0.044	0.214	0.214
	3.2	0.079	0.388	0.398	0.083	0.412	0.427	0.083	0.404	0.418
	3.3	0.108	0.531	0.541	0.114	0.565	0.579	0.114	0.553	0.568
	3.4	0.126	0.622	0.642	0.133	0.661	0.690	0.133	0.648	0.677
	3.5	0.133	0.653	0.673	0.140	0.694	0.723	0.140	0.680	0.709

NOTE:
This table is symmetric about CL unit.

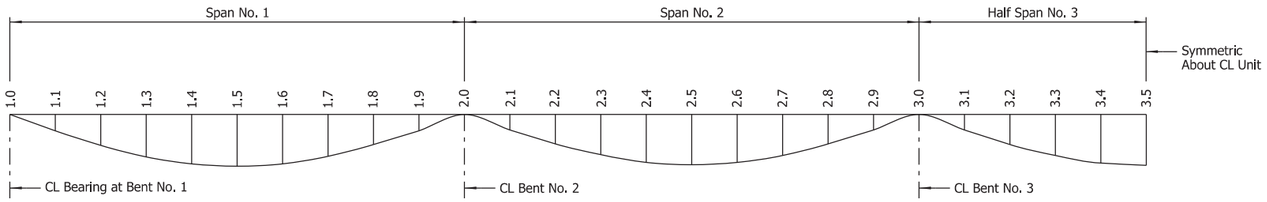

DEAD LOAD DEFLECTION DIAGRAM
No Scale

(2) Spaced with top 3 rows of D500E or D501E bars.

(3) Spaced with D600E and D601E bars passing through beam web.

(4) Provide joint surface with Class 4, Exposed Aggregate Finish per Subsection 802.19(b)(4) with "Concrete Surface Profile 6" or rougher, as established by the International Concrete Repair Institute.

(5) Shift D503E as required to avoid conflict with Mechanical Couplers. Maintain 8" max. spacing between stirrups.

NOTE:
For "SECTION A-A" and "SECTION B-B", see Dwg. No. 64421.

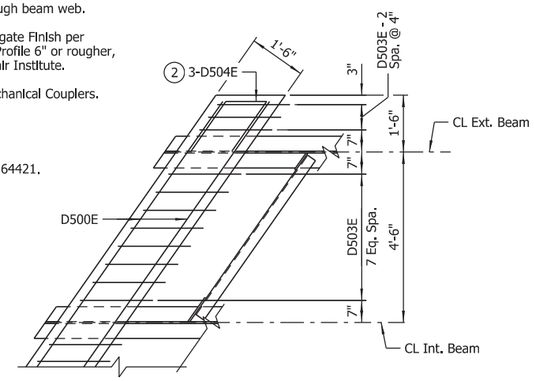

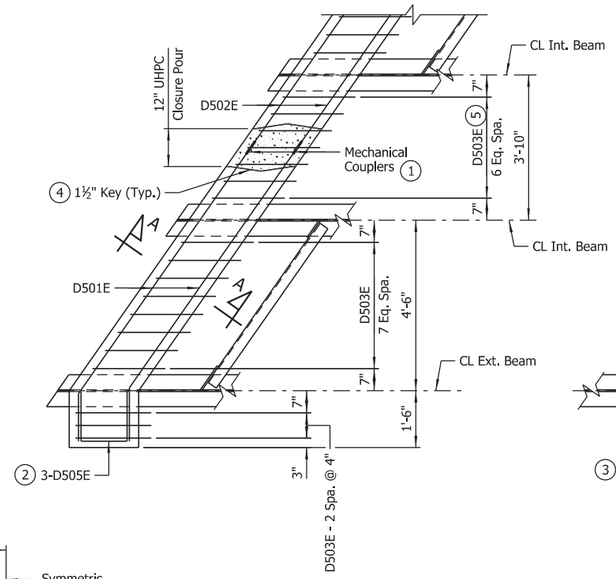

PLAN - END BENT DIAPHRAGM
Scale: ½" = 1'-0"

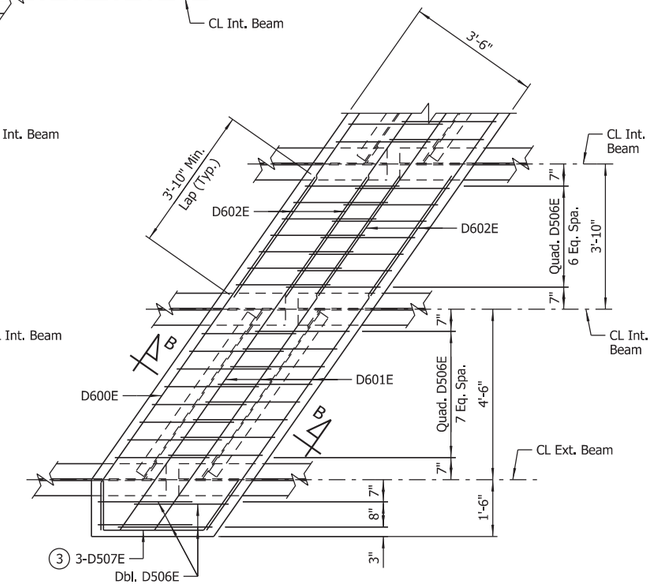

PLAN - INTERMEDIATE BENT DIAPHRAGM
Scale: ½" = 1'-0"

NOTES:
Camber for dead load deflection plus vertical curve +/- ¼" tolerance.
Deflections shown for end spans are along CL Beam from CL Bearing at End Bent to CL Int. Bent. Deflections shown for interior spans are along CL Beam from CL Int. Bent to CL Int. Bent. Negative sign (-) indicates point above chord.

Dead load deflections shown include an assumed loading of 15 psf in bays without UHPC closures to account for stay-in-place metal deck forms.

Revision to the deflection tables may be necessary upon review of the Contractor's submitted forming details.

(1) The mechanical couplers shall be Dayton Superior D250SCA Bar Lock Epoxy Couplers or an alternate approved type in accordance with the ARDOT Qualified Products List (QPL). Due to space constraints, the shear bolts on the couplers between adjacent modules shall not be tightened until both modules are in their final positions. It will be necessary to loosely install the couplers on each module's end diaphragm reinforcing, remove the center stop pins, and slide the couplers against the module's concrete immediately prior to setting an adjacent module. Once the adjacent module is in place, the mechanical couplers shall be slid over the adjacent module's reinforcing and centered between the ends of the modules, prior to re-inserting the center stop pins and torquing the shear bolts. The cost of mechanical couplers shall not be measured for separate payment but shall be subsidiary to the price bid for item "PREFABRICATED SUPERSTRUCTURE MODULES". Mechanical couplers shall develop at least 125% of the specified yield strength of the reinforcing steel.

STATE OF ARKANSAS
LICENSED PROFESSIONAL ENGINEER
No.14498
ADAM B. HALL

DIGITALLY SIGNED 8-13-2021
BRIDGE ENGINEER

SHEET 6 OF 6
DETAILS OF 250'-0"
CONTINUOUS W-BEAM UNIT
HWY. 158 OVER NATIONAL DITCH NO. 6
ROUTE SEC.
ARKANSAS STATE HIGHWAY COMMISSION
LITTLE ROCK, ARK.

DRAWN BY: JLD DATE: FEB. 2021 FILENAME: b100955x9_s6.dgn
CHECKED BY: ABH DATE: JUNE 2021 SCALE: As Shown
DESIGNED BY: BWD DATE: JAN. 2021
BRIDGE NO. 07564 DRAWING NO. 64420

abhall 8/13/2021 9:56:01 AM
WORKSPACE: ARDOT Bridge (2019)
L:\2017\7017642 - ARDOT Job 100955\Drawings\b100955x9_S406_DF.dgn
REVISED DATE:

DATE REVISED	DATE FILMED	DATE REVISED	DATE FILMED	FED. ROAD DIST. NO.	STATE	FED. AID PROJ. NO.	SHEET NO.	TOTAL SHEETS
				6	ARK.			
				JOB NO.		100955	244	356
				(1) 07556-07564		COMMON		64421

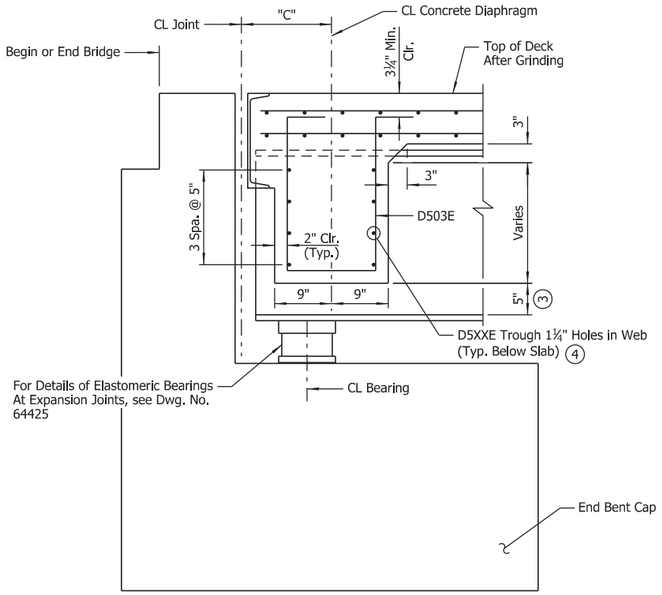

SECTION A-A

Scale: 1" = 1'-0"

NOTE:
"SECTION A-A" & "SECTION B-B" are taken normal to concrete diaphragm. Dimensions shown are perpendicular to CL Joint and CL Bent.

(1) Measured along CL Beam

(2) See "PLAN - INTERMEDIATE BENT DIAPHRAGM" of each individual bridge for bar designations.

(3) (Typ. @ Face of Web)

(4) See "PLAN - END BENT DIAPHRAGM" of each individual bridge for bar designations.

LEGEND

U.N.O. = Unless Noted Otherwise

Bridge No.	Dimension "C"
07556	1'-2"
07557	1'-2¼"
07558	1'-2½"
07559	1'-2¾"
07560	1'-2½"
07561	1'-2"
07562	1'-2¼"
07563	1'-2¼"
07564	1'-2¼"

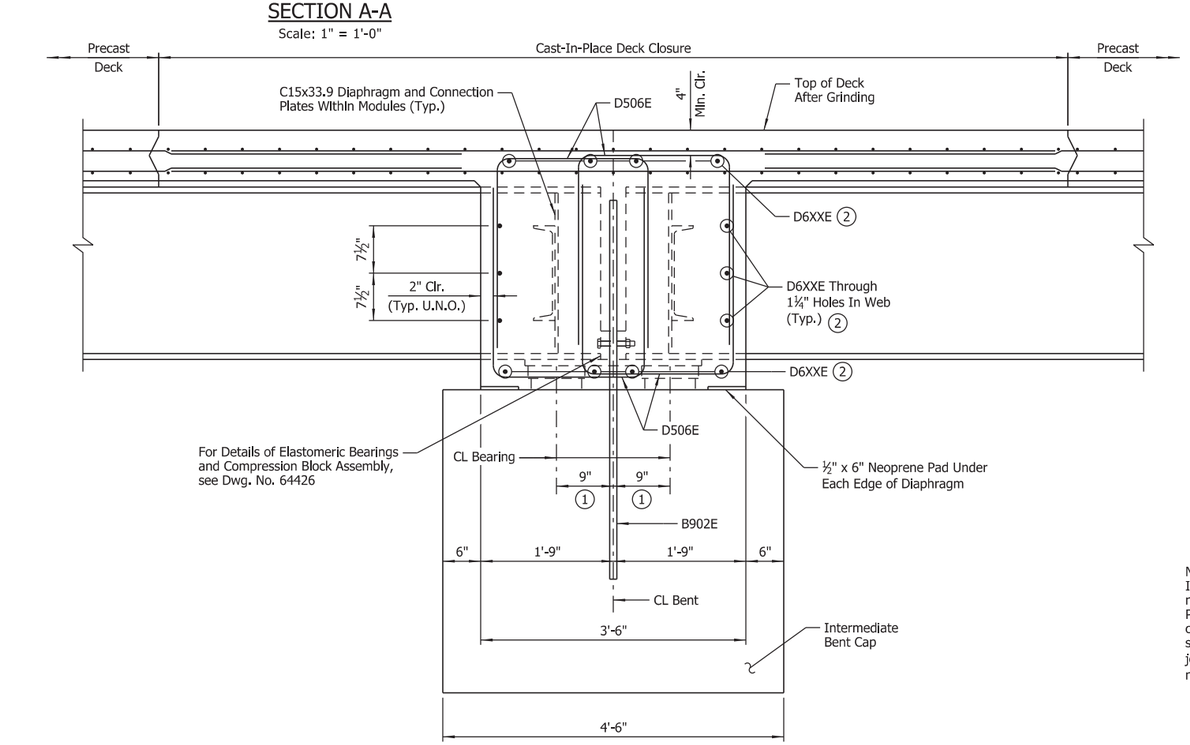

SECTION B-B

Scale: 1" = 1'-0"

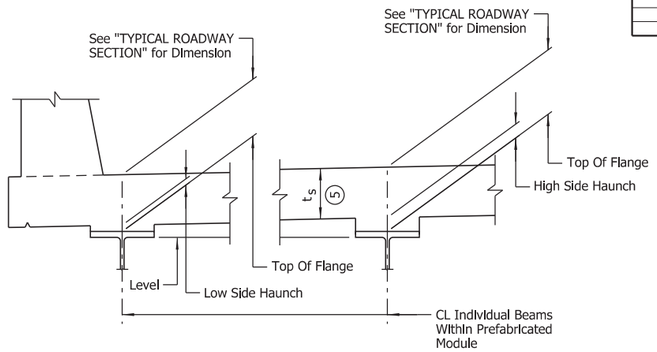

ADJUSTMENT FOR SLAB THICKNESS TOLERANCE

Scale: 1" = 1'-0"

(5) Tolerance when removable deck forming is used is + ½", -¼". Haunch forming is required and shall be adjusted to maintain slab thickness tolerance.

NOTES:
Haunch dimensions may vary within the following limits to maintain the grade and slab thickness tolerance. Minimum occurs when the low side haunch dimension is -⅜" (top of the flange at CL beam protrudes ⅜" into the deck); Maximum occurs when the high side haunch dimension is 2⅞".

Tolerances ahown are applicable whether removable deck forming is used or permanent steel deck forms are used.

For CENTER MODULES on 07562 & 07563, where there is not a high side or low side, the minimum and maximum haunch dimensions above apply to both beams.

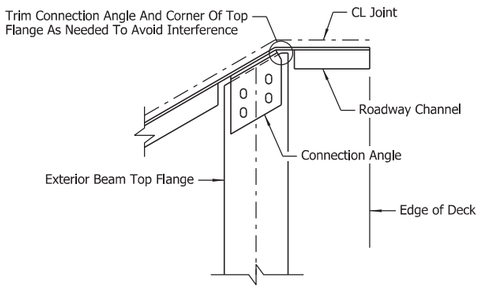

TRIM DETAIL FOR ROADWAY CHANNEL

(Applicable to all skewed bridges)
Scale: 1" = 1'-0"

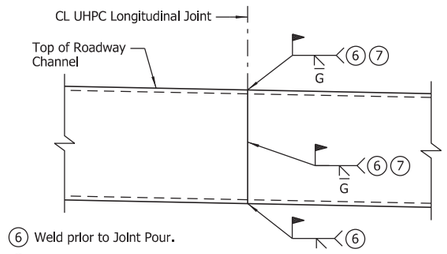

(6) Weld prior to Joint Pour.

(7) Grind flush from top of deck to top of bumper plate.

WELD DETAIL FOR EXPANSION DEVICE

No Scale

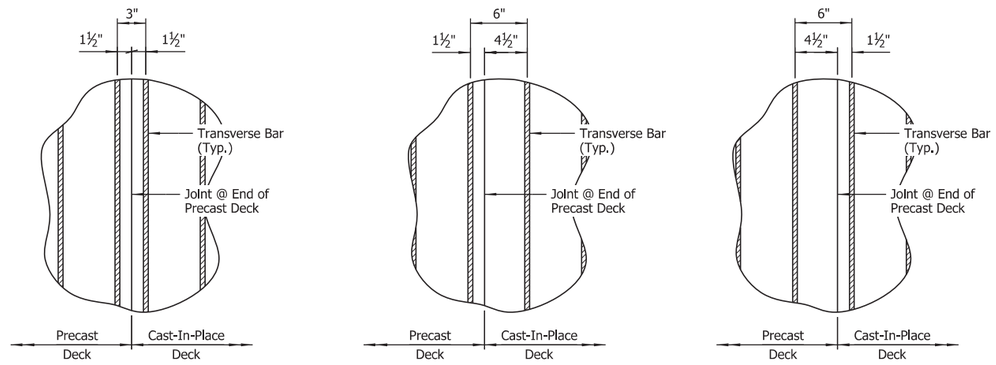

EXAMPLE A | EXAMPLE B | EXAMPLE C

TRANSVERSE REINFORCING SCHEMATICS

(Plan View Near Joint At End Of Precast Deck)
No Scale

NOTE:
In "REINFORCING PLAN" and "PART REINFORCING PLAN" details, the nominal transverse reinforcing spacing shown near the joint between Precast Deck and Cast-In-Place Deck is measured to and from the center of the adjacent bars (3" or 6" dimension shown in the example schematics above). Actual placement of transverse bars adjacent to joints shall be adjusted as required to provide 1½" clear cover to the nearest face of the keyed joint.

STATE OF ARKANSAS
LICENSED PROFESSIONAL ENGINEER
No.8017
JOHN H. RUDDELL

DIGITALLY SIGNED 8-13-2021
BRIDGE ENGINEER

SHEET 1 OF 4
COMMON SUPERSTRUCTURE DETAILS
ROUTE SEC.

ARKANSAS STATE HIGHWAY COMMISSION
LITTLE ROCK, ARK.

DRAWN BY: CWT DATE: APR. 2021 FILENAME: b100955_s3.dgn
CHECKED BY: JHR DATE: JUNE 2021 SCALE: As Shown
DESIGNED BY: BWD DATE: MAR. 2021

BRIDGE NO. 07556-07564 DRAWING NO. 64421

REVISED DATE:
abnall 8/13/2021 9:56:02 AM
WORKSPACE: ARDOT Bridge (2019)
L:\20IT\10IT642 - ARDOT Job 100955\Drawings\b100955_S407_MD.dgn

DATE REVISED	DATE FILMED	DATE REVISED	DATE FILMED	FED. ROAD DIST. NO.	STATE	FED. AID PROJ. NO.	SHEET NO.	TOTAL SHEETS
				6	ARK.			
				JOB NO.		100955	245	356
				(1) 07556-07564		COMMON		64422

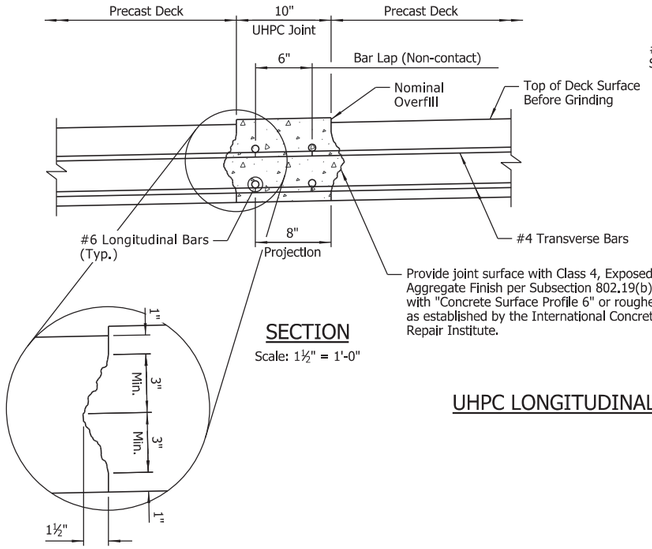

SECTION

Scale: 1½" = 1'-0"

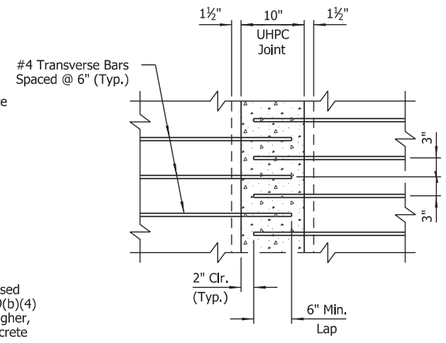

PLAN

Scale: 1" = 1'-0"

UHPC LONGITUDINAL JOINT DETAIL

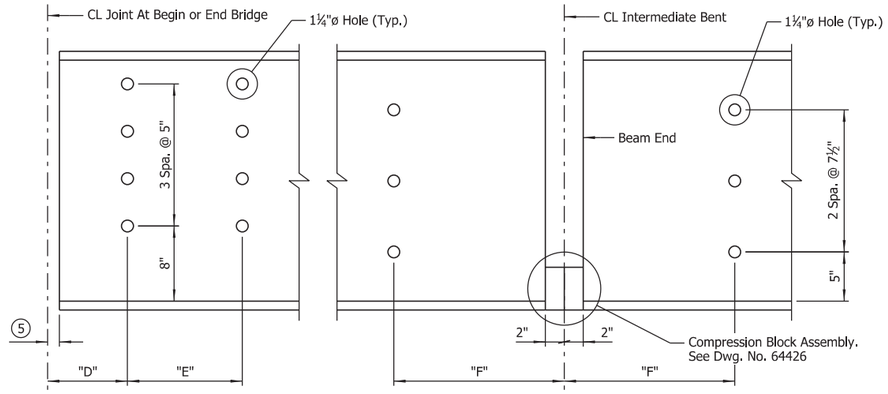

DETAIL A

Scale: 1½" = 1'-0"

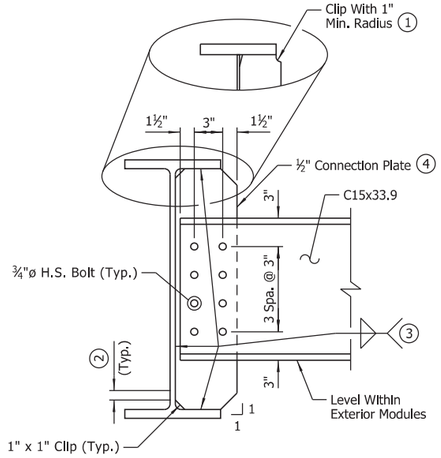

DETAIL B

Scale: 1½" = 1'-0"

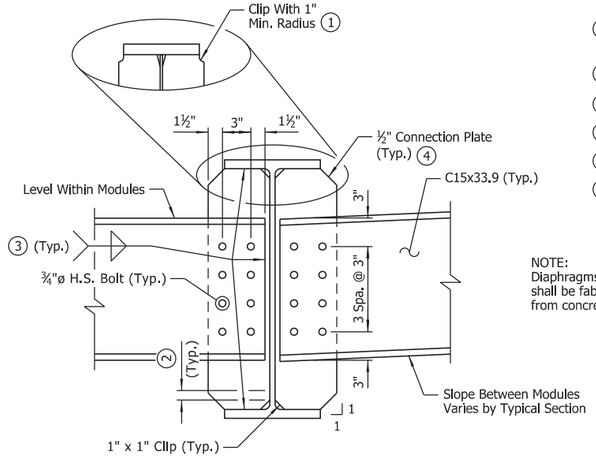

DETAIL C

Scale: 1½" = 1'-0"

1. If permanent steel bridge deck forms are used, the Fabricator shall clip plate as necessary to accommodate the deck form supports.
2. Stop weld ¼" to 1" from end of clip.
3. See "WELD TABLE" on Std. Dwg. No. 55007 for minimum weld size.
4. See "FRAMING PLAN" for connection plate sizes for each bridge.
5. See "SILICONE JOINT DATA" on Dwg. Nos. 64318, 64395 & 64415.
6. Details of lifting bracket are schematic in nature. Contractor is responsible for the development of the final detail used.

NOTE:
Diaphragms adjacent to concrete end bent diaphragms shall be fabricated such that channel flanges face away from concrete end bent diaphragms.

Bridge No.	Dimension "D"	Dimension "E"	Dimension "F"
07556	8½"	1'-1"	1'-7⅛"
07557	9½"	1'-2"	1'-8 13/16"
07558	8½"	1'-0"	1'-6"
07559	10"	1'-3"	1'-10"
07560	8½"	1'-0"	1'-6"
07561	8½"	1'-1"	1'-7⅛"
07562	10"	1'-3"	1'-10"
07563	10"	1'-3"	1'-10"
07564	10"	1'-3"	1'-10"

NOTE:
Dimensions "D", "E" and "F" are measured parallel to CL Beam.

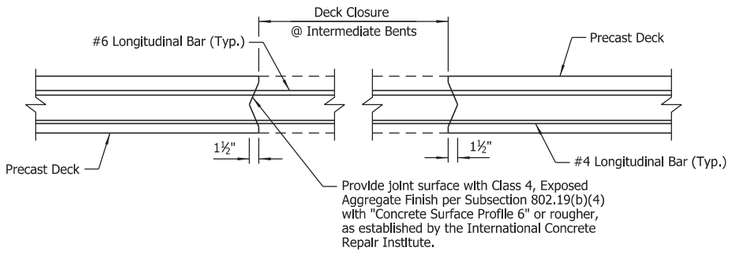

JOINT PREPARATION AT TRANSVERSE CLOSURE POUR

Scale: 1" = 1'-0"

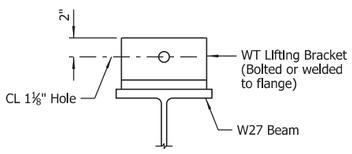

VIEW A-A

Scale: 1½" = 1'-0"

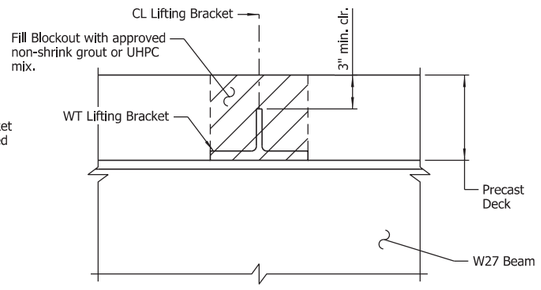

(6) LIFTING BRACKET DETAIL

(Where Slab Blockout Required)

Scale: 1½" = 1'-0"

NOTE:
In locations where top of beam is exposed, Contractor shall propose lifting method.

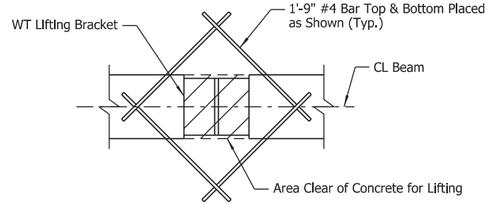

VIEW B-B

Scale: 1" = 1'-0"

STATE OF ARKANSAS
LICENSED PROFESSIONAL ENGINEER
No.8017
JOHN H. RUDDELL

DIGITALLY SIGNED 8-13-2021
BRIDGE ENGINEER

SHEET 2 OF 4
COMMON SUPERSTRUCTURE DETAILS

ROUTE SEC.

ARKANSAS STATE HIGHWAY COMMISSION
LITTLE ROCK, ARK.

DRAWN BY: CWT DATE: APR. 2021 FILENAME: b100955_s4.dgn
CHECKED BY: JHR DATE: JUNE 2021 SCALE: As Shown
DESIGNED BY: BWD DATE: MAR. 2021

BRIDGE NO. 07556-07564 DRAWING NO. 64422

abhall 8/13/2021 9:56:04 AM
WORKSPACE: ARDOT Bridge (209)
L:\20170170642 - ARDOT Job 100955\Drawings\b100955_S408.MD.dgn
REVISED DATE:

DATE REVISED	DATE FILMED	DATE REVISED	DATE FILMED

FED. ROAD DIST. NO.	STATE	FED. AID PROJ. NO.	SHEET NO.	TOTAL SHEETS
6	ARK.			
JOB NO.		100955	246	355
(1) 07556-07564		COMMON		64423

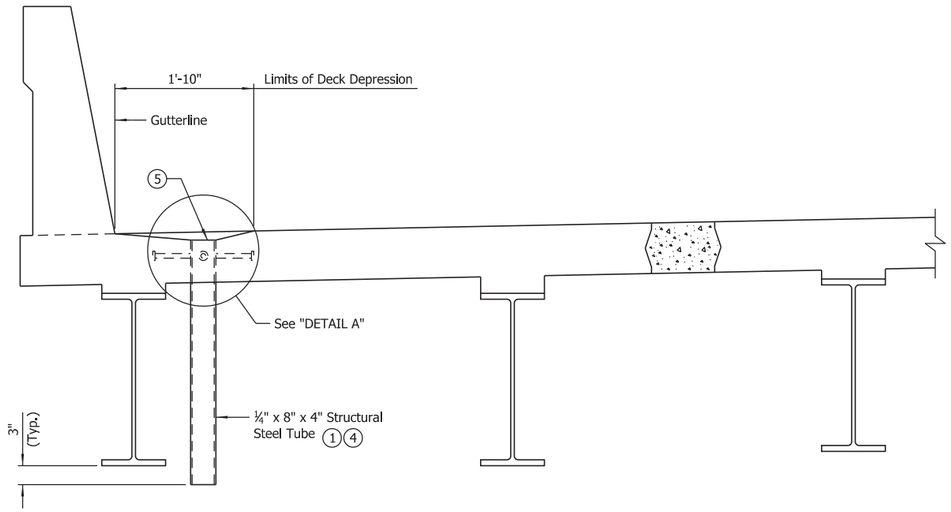

PART SECTION NEAR DECK DRAIN

Scale: 1" = 1'-0"

(1) Contractor may substitute an downspout fabricated using ¼" plate.

(2) Trim transverse bars 2" clear of drain. Adjust longitudinal bars to avoid conflicts with drains.

(3) Add 2-#4's x 6'-0" transverse reinforcing (Top & bottom) both sides of drain.

(4) In general, drains shall be located at the mid-point of each span. See Superstructure Details of each individual bridge for exact locations.

(5) Cover/Plug drain opening during placement of polymer overlay.

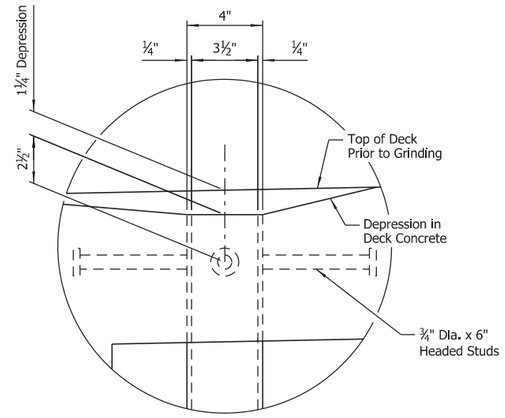

DETAIL A

Scale: ⅜" = 1'-0"

GENERAL NOTES

Drain assembly may be adjusted to clear diaphragm connections and minimize conflicts with reinforcing bars.

Drain assembly shall conform to ASTM A709, Gr. 36 or ASTM A 500-Grade B, and shall be galvanized after fabrication in accordance with Subsection 806.02(c).

Structural steel in deck drains shall not be paid for directly but shall be considered subsidiary to the Item "PREFABRICATED SUPERSTRUCTRUAL MODULES".

Top longitudinal reinforcing steel in the slab shall be adjusted as required to avoid conflicts with the drains.

Top and bottom transverse reinforcing steel in the slab shall be cut as shown in the "REINFORCING DETAIL".

Repair all cut or damaged epoxy bars according to the Standard Construction Specifications.

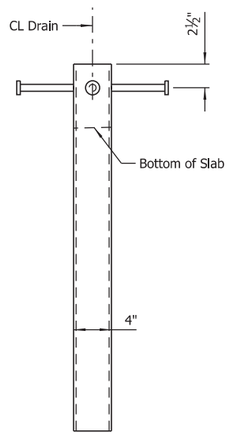

ELEVATION OF DRAIN

Scale: ⅜" = 1'-0"

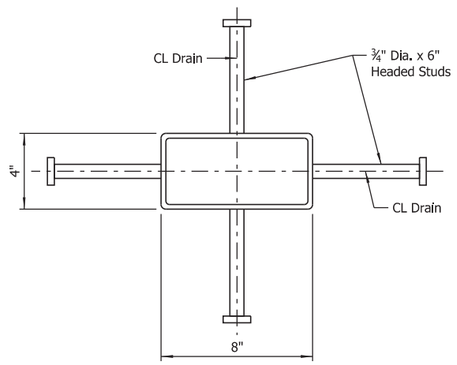

PLAN VIEW OF DRAIN

Scale: ⅜" = 1'-0"

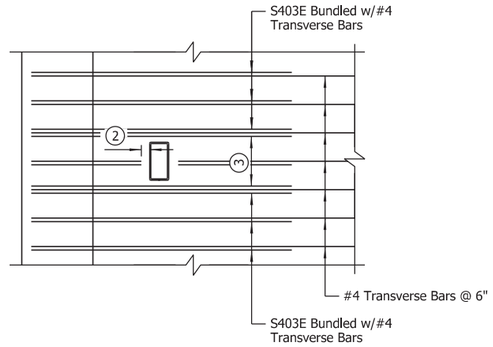

REINFORCING DETAIL

Scale: ¾" = 1'-0"

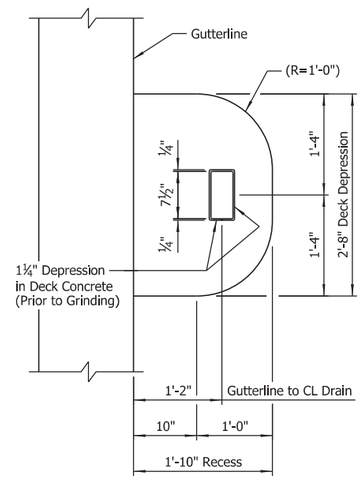

PART OF PLAN VIEW

Scale: ⅜" = 1'-0"

STATE OF ARKANSAS
LICENSED PROFESSIONAL ENGINEER
No.8017
JOHN H. RUDDELL

DIGITALLY SIGNED 8-13-2021
BRIDGE ENGINEER

SHEET 3 OF 4
COMMON SUPERSTRUCTURE DETAILS

ROUTE SEC.

ARKANSAS STATE HIGHWAY COMMISSION

LITTLE ROCK, ARK.

DRAWN BY: HEW DATE: JUNE 2021 FILENAME: b100955_s5.dgn
CHECKED BY: JHR DATE: JUNE 2021 SCALE: As Shown
DESIGNED BY: RAK DATE: FEB. 2021

BRIDGE NO. 07556-07564 DRAWING NO. 64423

abhall 8/13/2021 9:56:05 AM
WORKSPACE: ARDOT Bridge (2019)
L:\2017\1707642 - ARDOT Job 100955\Drawings\b100955_5409_MD.dgn
REVISED DATE:

DATE REVISED	DATE FILMED	DATE REVISED	DATE FILMED

FED. ROAD DIST. NO.	STATE	FED. AID PROJ. NO.	SHEET NO.	TOTAL SHEETS
6	ARK.			
JOB NO.		100955	247	356
(1) 07556-07564		COMMON		64424

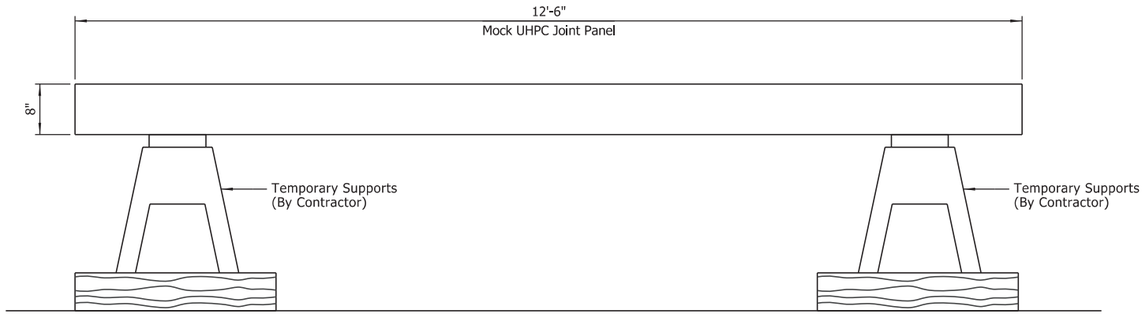

MOCK UHPC JOINT PANEL - ELEVATION

Scale: 1" = 1'-0"

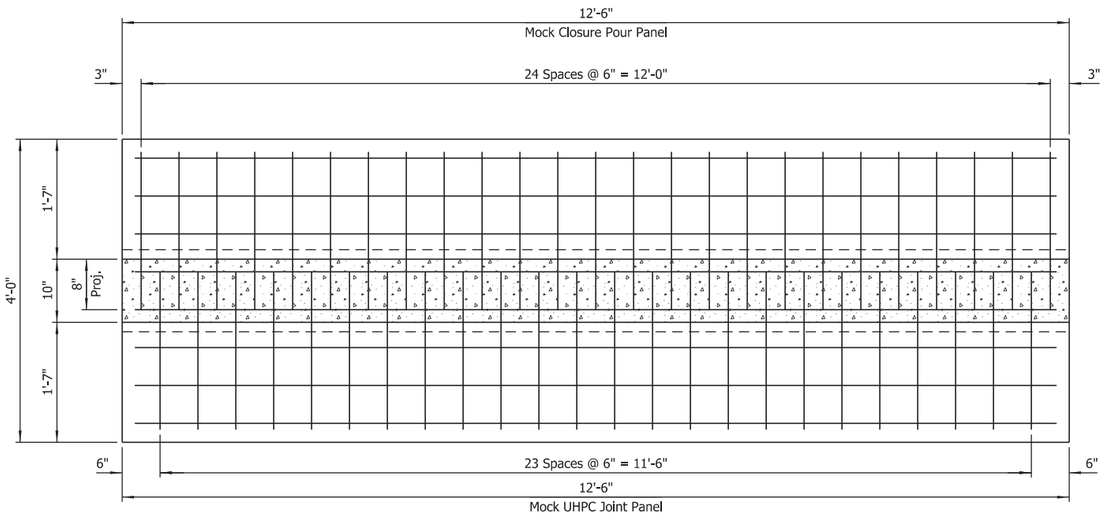

MOCK UHPC JOINT PANEL - PLAN

Scale: 1" = 1'-0"

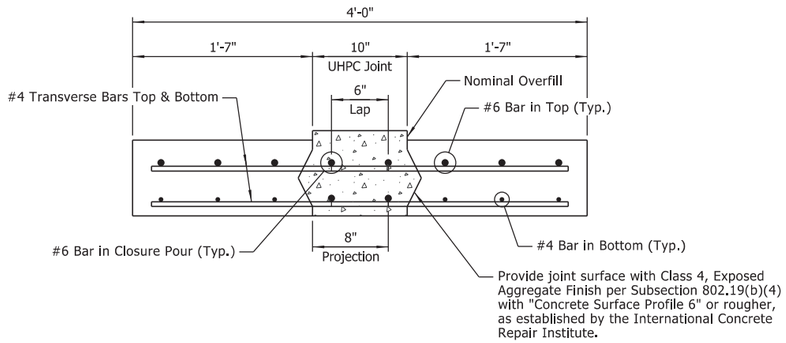

SECTION THROUGH MOCK UHPC JOINT PANEL

Scale: 1" = 1'-0"

MOCK ULTRA HIGH PERFORMANCE CONCRETE JOINT NOTES:

The Contractor shall be required to construct a mock ultra high performance concrete (UHPC) joint, as detailed in these plans, to demonstrate joint surface preparation and UHPC forming and placement operations. The mock UHPC joint panel shall be available for review and approval by the Engineer no less than 28 calendar days prior to scheduled date of closure pour placement for the bridge superstructure modules. Final prepared (roughened) joint surfaces must be reviewed and approved by the Engineer prior to placement of UHPC within the mock UHPC joint. Representatives of the Engineer and Manufacturer shall be present during placement of the closure pour.

Precast concrete joint surfaces shall be roughened to a minimum of ¼" amplitude or rougher. Methods to achieve joint surface texture shall match the methods intended for use on the superstructure modules.

Methods and materials for forming and placing the mock UHPC joint shall match those intended for use on the superstructure modules.

The mock UHPC joint panel shall be supported above grade. The Contractor shall be responsible for providing an appropriate means to support the mock panel during demonstration closure pour placement.

Following set of the closure pour concrete and development of sufficient strength, the completed mock UHPC joint panel shall be cut transversely by the Contractor at two locations, to be determined by the Engineer, to allow for visual inspection by the Engineer of the joint interface and material bond.

All costs associated with construction of the mock UHPC joint panel shall be subsidiary to the item "PREFABRICATED SUPERSTRUCTURE MODULES."

STATE OF ARKANSAS
LICENSED PROFESSIONAL ENGINEER
No.8017
JOHN H. RUDDELL

DIGITALLY SIGNED 8-13-2021
BRIDGE ENGINEER

SHEET 4 OF 4
COMMON SUPERSTRUCTURE DETAILS

ROUTE SEC.

ARKANSAS STATE HIGHWAY COMMISSION
LITTLE ROCK, ARK.

DRAWN BY: CWT DATE: APR. 2021 FILENAME: b100955_s6.dgn
CHECKED BY: JHR DATE: MAY 2021 SCALE: As Shown
DESIGNED BY: BWD DATE: MAR. 2021

BRIDGE NO. 07556-07564 DRAWING NO. 64424

abhall 8/13/2021 9:56:06 AM
WORKSPACE: ARDOT Bridge (2019)
L:\2017\1701642 - ARDOT Job 100955\Drawings\b100955_S40_MD.dgn
REVISED DATE:

DATE REVISED	DATE FILMED	DATE REVISED	DATE FILMED	FED. ROAD DIST. NO.	STATE	FED. AID PROJ. NO.	SHEET NO.	TOTAL SHEETS
				6	ARK.			
				JOB NO.		100955	248	356
				(1) 07556-07564		ELASTOMERIC BEARINGS		64425

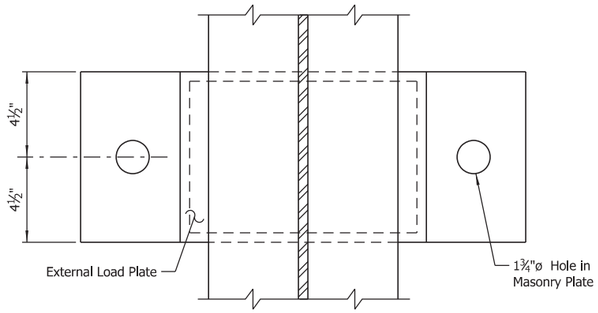

PLAN VIEW

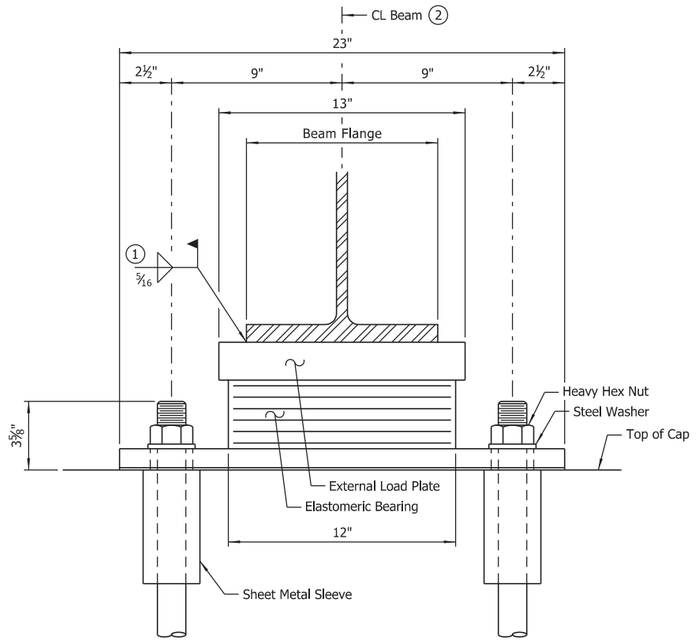

FRONT VIEW

(1) Care shall be taken to ensure that the external load plate is in full and complete contact with the beam flange before welding begins.

(2) CL elastomeric pad shall be aligned with CL beam.

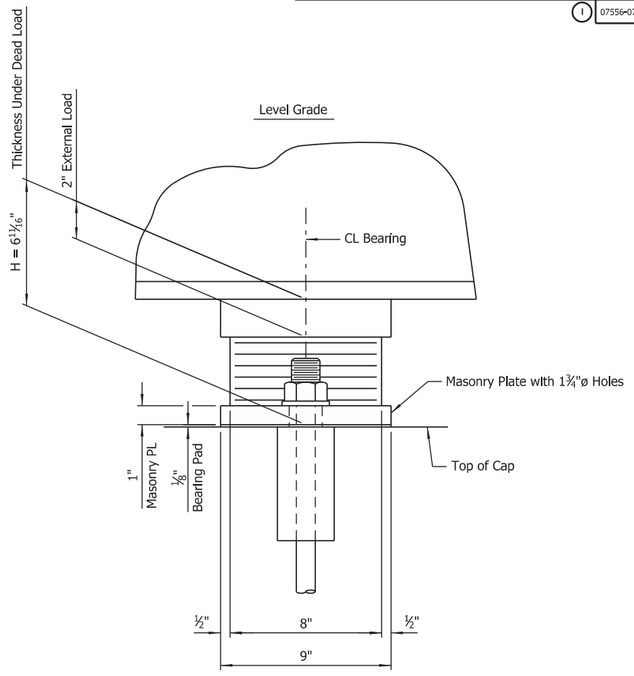

SIDE VIEW

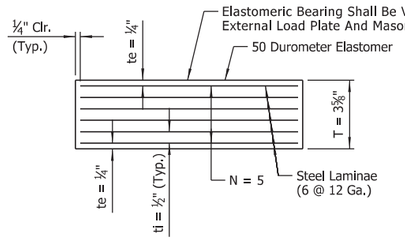

t_e = Thickness Of Elastomer Cover On Top And Bottom Of Pad
t_i = Thickness Of Elastomer Between Steel Laminae
N = Number Of Elastomer Layers Of Thickness t_i

ELASTOMERIC BEARING

BEARING TABLE

Location			Bearing Type	No. Of Bearings Each Bent
Bridge No.	Bent No.	Beam No.		
07556	1	All	Exp.	8
	4	All	Exp.	8
07557	1	All	Exp.	8
	6	All	Exp.	8
07558	1	All	Exp.	8
	7	All	Exp.	8
07559	1	All	Exp.	8
	6	All	Exp.	8
07560	1	All	Exp.	8
	8	All	Exp.	8
07561	1	All	Exp.	8
	4	All	Exp.	8
07562	1	All	Exp.	10
	6	All	Exp.	10
07563	1	All	Exp.	10
	6	All	Exp.	10
07564	1	All	Exp.	8
	6	All	Exp.	8

NOTE:
Unless otherwise approved by the Engineer, welding of the external load plate to the beam at expansion bearings will be allowed only when: 1) the approximate average air temperature during the 24 hour period immediately preceding welding is between 40°F and 80°F; 2) no horizontal deformation of the elastomeric pad is evident. If welding at other temperatures is required, the Engineer will provide adjustment data.

GENERAL NOTES

Elastomeric bearings shall conform to Section 808 and shall be paid for at the unit price bid for "ELASTOMERIC BEARINGS."

All expansion bearings are designed for a maximum LRFD Service I Limit State load of 67 kips.

External load plates and masonry plates shall conform to ASTM A709, Grade 50W.

External load plates and masonry plates shall be completely fabricated (including bolt holes and all shop welding) and shall be cleaned before vulcanizing to the elastomeric bearing. The surfaces in contact with the elastomeric bearing shall be cleaned in accordance with Subsection 808.03. Other surfaces shall be blast cleaned in accordance with Subsection 807.84(b) for painted steel and 807.84(e) for unpainted Grade 50W steel.

Anchor bolts, washers and nuts shall conform to Subsection 807.07. The anchor bolt grade of steel shall be Grade 55. Indentations shall be circular with rounded bottoms and staggered as shown in the details.

Anchor bolts, washers and nuts shall be paid for at the unit price bid for "STRUCTURAL STEEL IN BEAM SPANS (A709, GR. 50W)". External load plates, masonry plates and ⅛" bearing pads will not be measured or paid for separately, but will be considered subsidiary to the unit price bid for "ELASTOMERIC BEARINGS."

Bearings with masonry plates shall be seated in accordance with Subsection 807.66. This work and materials are considered subsidiary to the item "ELASTOMERIC BEARINGS" and will not be paid for directly.

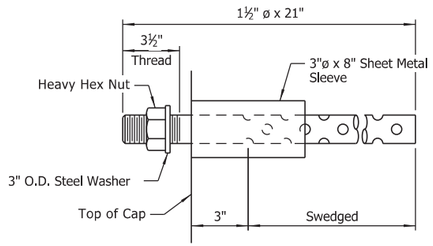

ANCHOR BOLT DETAIL

NOTES:
Anchor bolts may be cast in place or drilled and grouted into place. If anchor bolts are to be cast in place, the galvanized sheet metal sleeves will not be required.

If anchor bolts are to be drilled and grouted into place, the galvanized sheet metal sleeves shall be cast in place as shown. Sleeves shall be dry packed with styrofoam, urethane foam or approved equal prior to pouring of concrete. After pouring of the cap and prior to erection of structural steel, the dry pack shall be removed and holes for the anchor bolts shall be accurately drilled into the concrete. Bolts placed in drilled holes shall be accurately set and fixed using a QPL approved epoxy or non-shrink grout that completely fills the holes. Galvanized sheet metal sleeves shall meet the requirements of ASTM 653, CS Type B or approved equivalent, be of minimum 16 gage thickness, and be galvanized according to ASTM B695, Class 50. Sheet metal sleeves will not be paid for directly but will be considered subsidiary to the item "STRUCTURAL STEEL IN BEAM SPANS (A709, GR. 50W)".

STATE OF ARKANSAS
LICENSED PROFESSIONAL ENGINEER
No.8017
JOHN H. RUDDELL

DIGITALLY SIGNED 8-13-2021
BRIDGE ENGINEER

SHEET 1 OF 2
DETAILS OF ELASTOMERIC BEARINGS
ROUTE SEC.
ARKANSAS STATE HIGHWAY COMMISSION
LITTLE ROCK, ARK.

DRAWN BY: CWT DATE: MAR. 2021 FILENAME: b100955_e1.dgn
CHECKED BY: JHR DATE: MAY 2021 SCALE: No Scale
DESIGNED BY: BWD DATE: MAR. 2021
BRIDGE NO. 07556-07564 DRAWING NO. 64425

abhall 8/13/2021 9:56:07 AM
WORKSPACE: ARDOT Bridge (2019)
L:\20FY\T01\642 - ARDOT Job 100955\Drawings\b100955_S301.BG.dgn
REVISED DATE:

DATE REVISED	DATE FILMED	DATE REVISED	DATE FILMED
1/5/2022			

FED. ROAD DIST. NO.	STATE	FED. AID PROJ. NO.	SHEET NO.	TOTAL SHEETS
6	ARK.			
JOB NO.		100955	249	356
(1) 07556-07564		ELASTOMERIC BEARINGS		64426

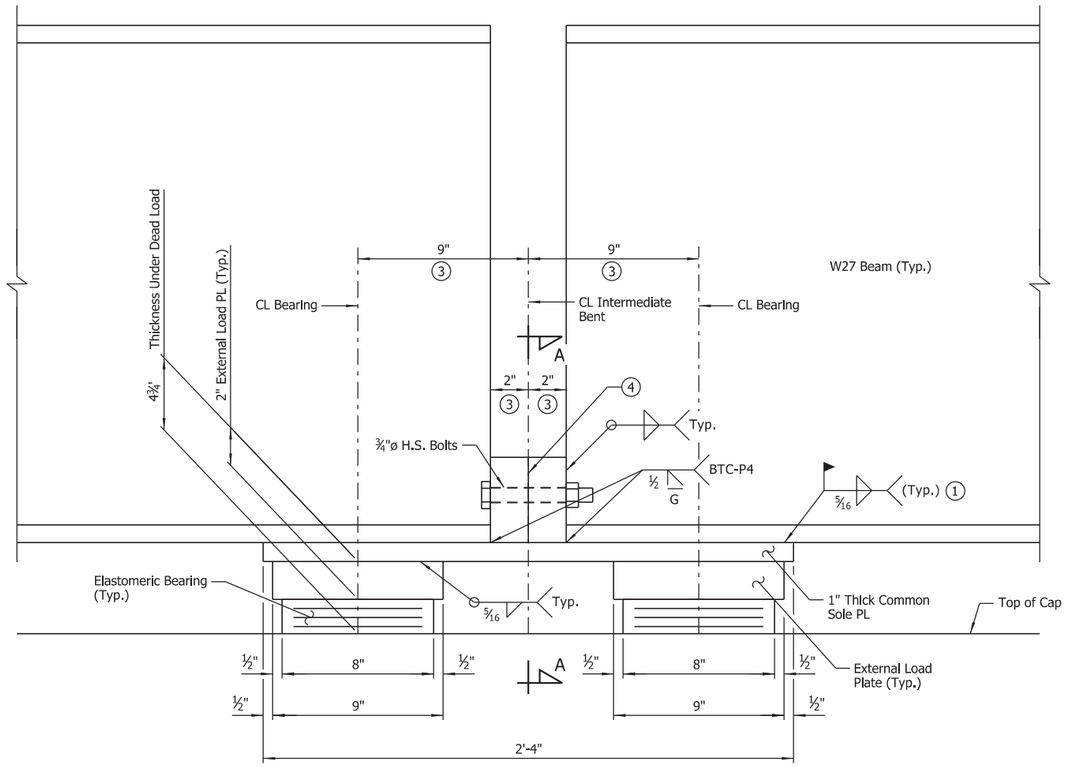

ELEVATION

Scale: 3" = 1'-0"

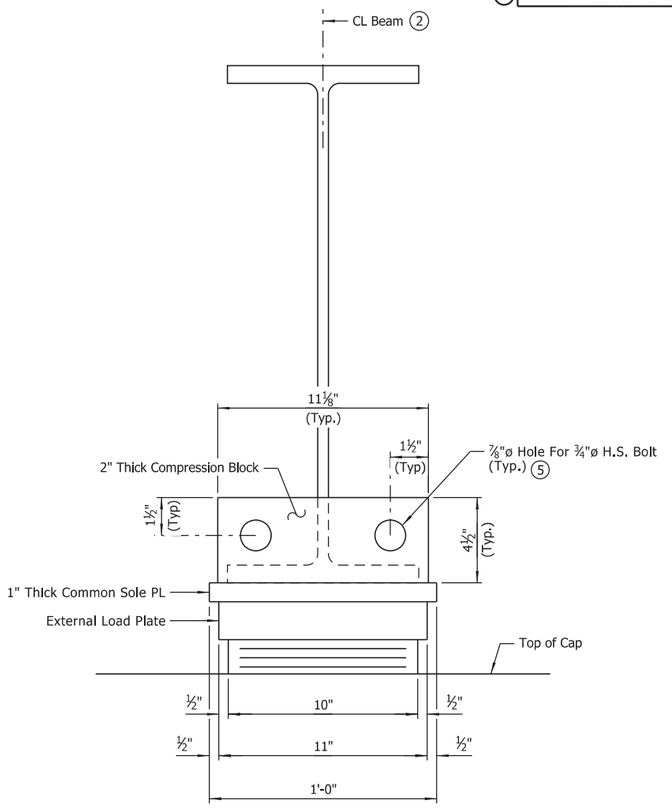

SECTION A-A

Scale: 3" = 1'-0"

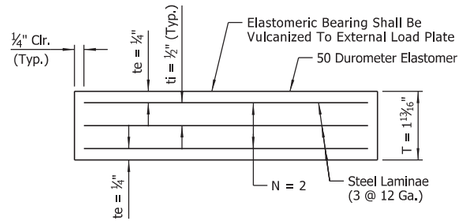

t_e = Thickness Of Elastomer Cover On Top And Bottom Of Pad
t_i = Thickness Of Elastomer Between Steel Laminae
N = Number Of Elastomer Layers Of Thickness t_i

ELASTOMERIC BEARING

BEARING TABLE

Location			Bearing Type	No. Of Bearings Each Bent ⚠1
Bridge No.	Bent No.	Beam No.		
07556	2-3	All	Fix.	~~8~~ 16
07557	2-5	All	Fix.	~~8~~ 16
07558	2-6	All	Fix.	~~8~~ 16
07559	2-5	All	Fix.	~~8~~ 16
07560	2-7	All	Fix.	~~8~~ 16
07561	2-3	All	Fix.	~~8~~ 16
07562	2-5	All	Fix.	~~10~~ 20
07563	2-5	All	Fix.	~~10~~ 20
07564	2-5	All	Fix.	~~8~~ 16

GENERAL NOTES ⚠1

Elastomeric bearings shall conform to Section 808 and shall be paid for at the unit price bid for "ELASTOMERIC BEARINGS."

External load plates, common sole plates and compression blocks shall conform to ASTM A709, Grade 50W.

External load plates shall be cleaned before vulcanizing to the elastomeric bearing. The surfaces in contact with the elastomeric bearing shall be cleaned in accordance with Subsection 808.03. Other surfaces shall be blast cleaned in accordance with Subsection 807.84(b) for painted steel and 807.84(e) for unpainted Grade 50W steel.

~~External load plates will not be measured or paid for separately, but will be considered subsidiary to the unit price bid for "ELASTOMERIC BEARINGS." Common sole plates, compression blocks and compression block hardware will not be measured or paid for separately, but will be considered subsidiary to the Item "PREFABRICATED SUPERSTRUCTURE MODULES."~~

External load plates and common sole plates will not be measured or paid for separately, but will be considered subsidiary to the unit price bid for "ELASTOMERIC BEARINGS." Compression blocks and compression block hardware will not be measured or paid for separately, but will be considered subsidiary to the Item "PREFABRICATED SUPERSTRUCTURE MODULES."

Bearings shall be seated in accordance with Subsection 808.08. This work and materials are considered subsidiary to the item "ELASTOMERIC BEARINGS" and will not be paid for directly.

(1) Care shall be taken to ensure that the common sole load plate is in full and complete contact with the beam flange before welding begins. ¾"ø bolts through compression block shall be installed and tightened prior to welding.

(2) CL elastomeric pad shall be aligned with CL beam.

(3) Measured along CL beam.

(4) Compression blocks on beam ends shall be in full and complete contact. Shim plates matching the length and width of the compression block may be placed between the compression blocks to accommodate field tolerances.

(5) ⅞"ø Hole may be field drilled to assist with alignment and fit-up between modules.

⚠1 Revised BEARING TABLE and GENERAL NOTES
By: JHR Date: 1/5/2022
Checked by: ABH Date: 1/5/2022

STATE OF ARKANSAS
LICENSED PROFESSIONAL ENGINEER
No.8017
JOHN H. RUDDELL

DIGITALLY SIGNED 1-5-2022
BRIDGE ENGINEER

SHEET 2 OF 2
DETAILS OF ELASTOMERIC BEARINGS
ROUTE SEC.
ARKANSAS STATE HIGHWAY COMMISSION
LITTLE ROCK, ARK.

DRAWN BY: CWT DATE: MAY 2021 FILENAME: b100955_e2.dgn
CHECKED BY: JHR DATE: MAY 2021 SCALE: As Shown
DESIGNED BY: BWD DATE: MAY 2021

BRIDGE NO. 07556-07564 DRAWING NO. 64426

abhall 1/5/2022 11:54:34 AM
WORKSPACE: ARDOT Bridge (2019)
L:\20T\170764 - ARDOT Job 100955\Drawings\b100955_S302_B6.dgn
REVISED DATE:

DATE REVISED	DATE FILMED	DATE REVISED	DATE FILMED	FED. ROAD DIST. NO.	STATE	FED. AID PROJ. NO.	SHEET NO.	TOTAL SHEETS
				6	ARK.			
				JOB NO.		100955	250	356
				① 07556-07564		APPROACH GUTTERS		64427

② Increase as required at bridge end terminal locations. The cost of modification will not be paid for directly, but shall be considered subsidiary to the cost of the bridge end terminal.

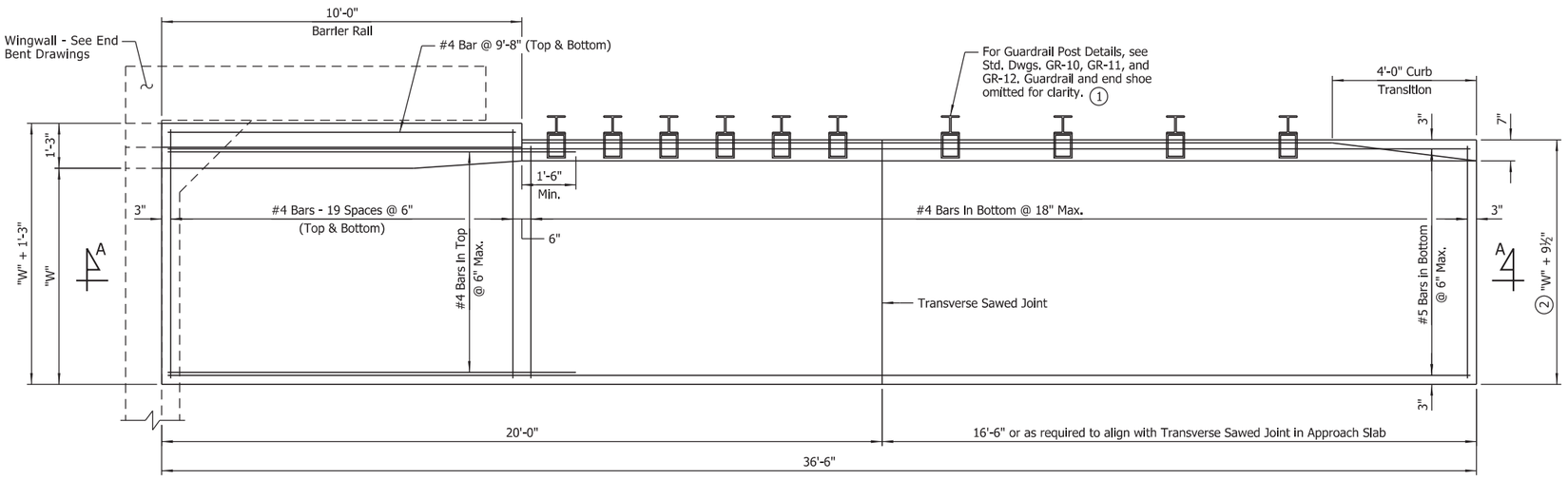

HALF PLAN OF APPROACH GUTTER FOR SQUARE END BENT

Scale: ½" = 1'-0"

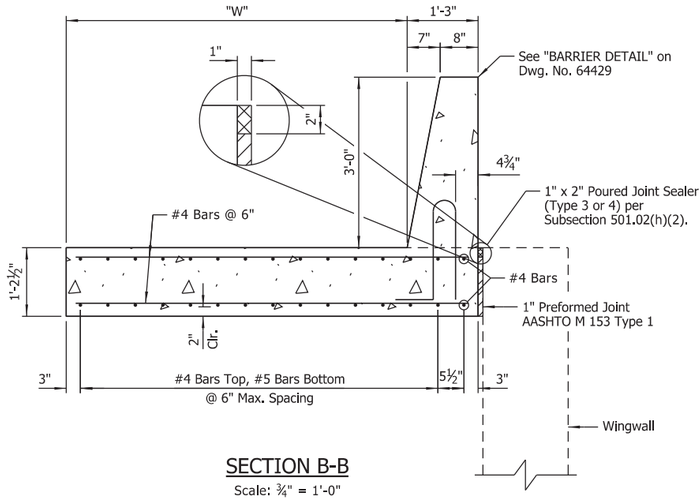

SECTION B-B

Scale: ¾" = 1'-0"

① Modify and/or eliminate guardrail accommodations at locations where bridge end terminals are required.

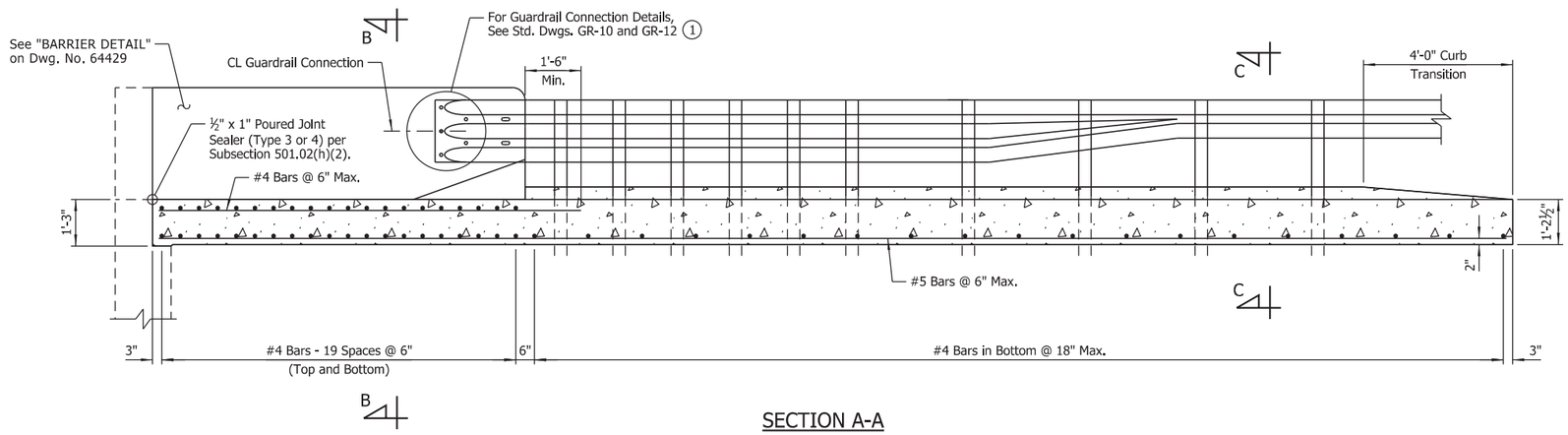

SECTION A-A

Scale: ½" = 1'-0"

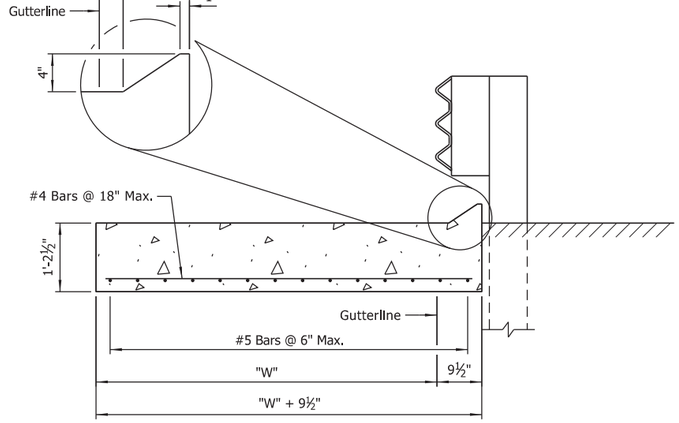

SECTION C-C

Scale: ¾" = 1'-0"

GENERAL NOTES

All concrete shall be Class S(AE) with a minimum 28-day compressive strength f'c = 4,000 psi and shall be poured in the dry.

All reinforcing steel shall be Grade 60 (yield strength = 60,000 psi) conforming to AASHTO M 31 or M 322, Type A, with mill test reports.

Approach Gutters will be measured and paid for in accordance with Section 504.

Approach Gutters shall be given a burlap drag finish as specified for initial finishing in Subsection 801.19 for Class 5 Tined Bridge Roadway Surface Finish. The final tine finish shall be omitted. The Approach Gutters shall be given a polymer overlay in accordance with SP "POLYMER OVERLAY".

The surface of the Approach Gutters shall be diamond-ground to achieve a uniform profile in accordance with the SP "BRIDGE DECK GRINDING".

NOTE:
For "QUANTITIES FOR APPROACH GUTTERS", see Dwg. No. 64429.

STATE OF ARKANSAS
LICENSED PROFESSIONAL ENGINEER
No.8017
JOHN H. RUDDELL

DIGITALLY SIGNED 8-13-2021
BRIDGE ENGINEER

SHEET 1 OF 3
DETAILS OF TYPE SPECIAL APPROACH GUTTERS

ROUTE SEC.

ARKANSAS STATE HIGHWAY COMMISSION
LITTLE ROCK, ARK.

DRAWN BY: CWT DATE: APR. 2021 FILENAME: b100955_AG1.dgn
CHECKED BY: JME DATE: MAY 2021 SCALE: As Shown
DESIGNED BY: JHR DATE: APR. 2021
BRIDGE NO. 07556-07564 DRAWING NO. 64427

dbhall 8/13/2021 9:56:09 AM
WORKSPACE: ARDOT Bridge (2019)
L:\2017\1701642 - ARDOT Job 100955\Drawings\b100955_550i_AG.dgn
REVISED DATE:

DATE REVISED	DATE FILMED	DATE REVISED	DATE FILMED

FED. ROAD DIST. NO.	STATE	FED. AID PROJ. NO.	SHEET NO.	TOTAL SHEETS
6	ARK.			
JOB NO.		100955	251	356
① 07556-07557, 07559, 07561-07564		APPROACH GUTTERS		64428

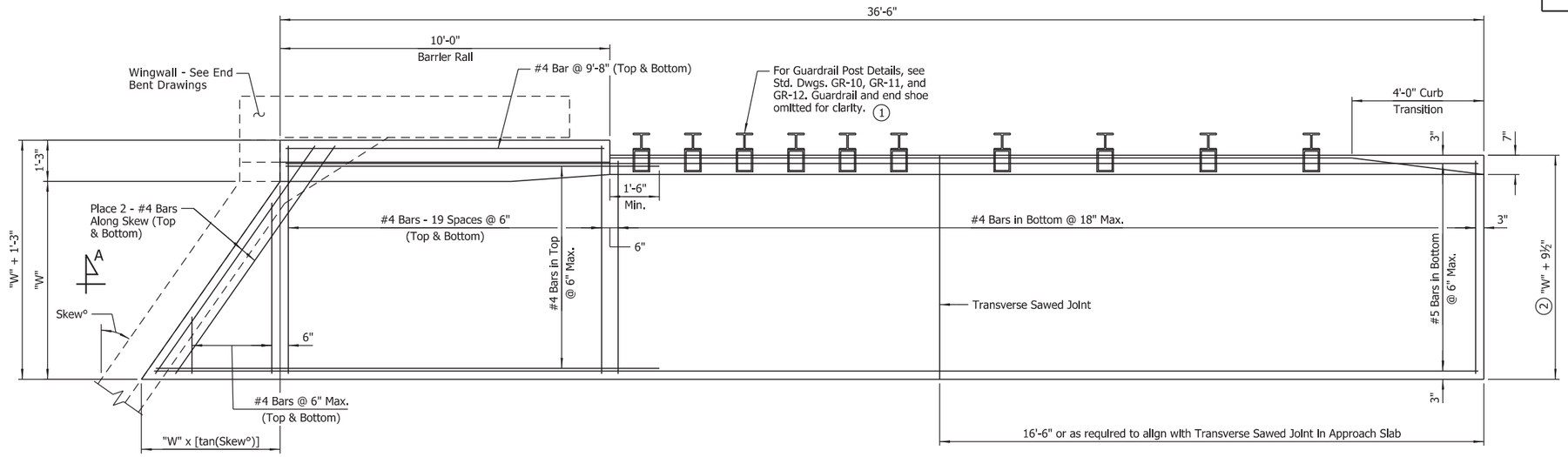

(2) Increase as required at bridge end terminal locations. The cost of modification will not be paid for directly, but shall be considered subsidiary to the cost of the bridge end terminal.

NOTE:
For "SECTIONS", see Dwg. No. 64427.

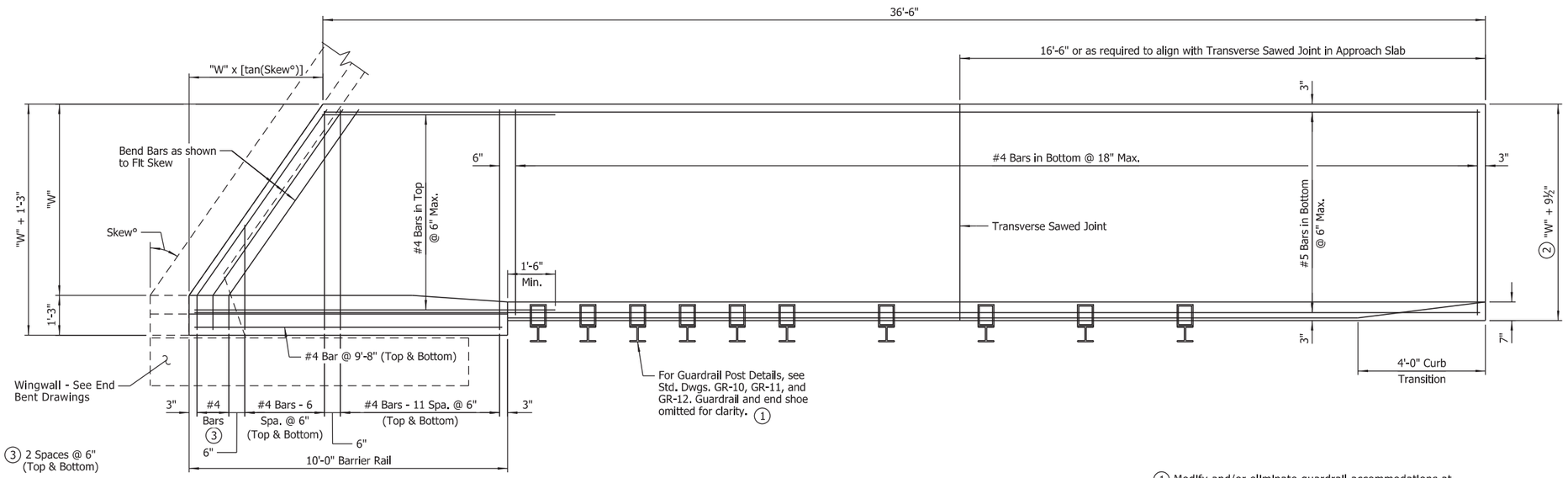

(1) Modify and/or eliminate guardrail accommodations at locations where bridge end terminals are required.

PLAN OF SKEWED APPROACH GUTTERS FOR SKEWED END BENT

Scale: ½" = 1'-0"

STATE OF ARKANSAS
LICENSED PROFESSIONAL ENGINEER
No.8017
JOHN H. RUDDELL

DIGITALLY SIGNED 8-13-2021
BRIDGE ENGINEER

SHEET 2 OF 3
DETAILS OF TYPE SPECIAL APPROACH GUTTERS

ROUTE SEC.

ARKANSAS STATE HIGHWAY COMMISSION
LITTLE ROCK, ARK.

DRAWN BY: CWT DATE: APR. 2021 FILENAME: b100955_AG2.dgn
CHECKED BY: JME DATE: MAY 2021 SCALE: As Shown
DESIGNED BY: JHR DATE: APR. 2021
BRIDGE NO. 07556-07557, 07559 07561-07564 DRAWING NO. 64428

abhall 8/13/2021 9:56:10 AM
WORKSPACE: ARDOT Bridge (2019)
L:\20T\T01764 - ARDOT Job 100955\Drawings\b100955_SS02_AG.dgn
REVISED DATE:

DATE REVISED	DATE FILMED	DATE REVISED	DATE FILMED	FED. ROAD DIST. NO.	STATE	FED. AID PROJ. NO.	SHEET NO.	TOTAL SHEETS
				6	ARK.			
				JOB NO.		100955	252	356
				(1) 07556-07564		APPROACH GUTTERS		64429

(1) Modify and/or eliminate guardrail accommodations at locations where bridge end terminals are required.

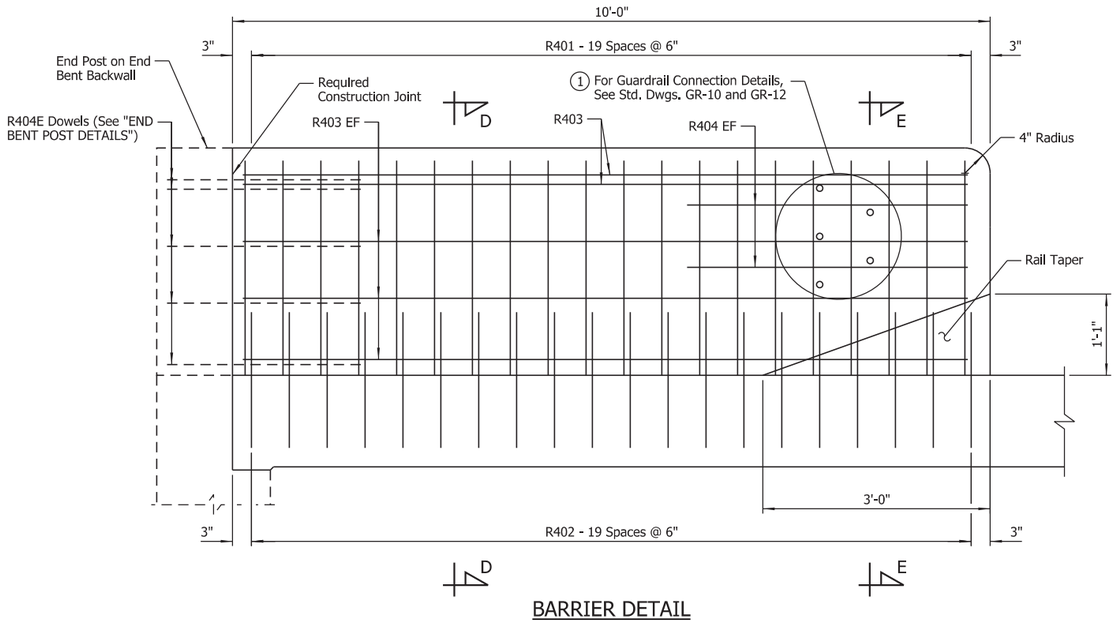

BARRIER DETAIL
Scale: 1" = 1'-0"

NOTE:
See "RAIL TERMINUS DETAIL" on Std. Dwg. No. 55070 for more information.

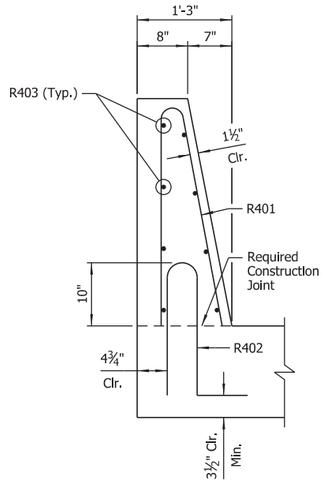

SECTION D-D
Scale: 1" = 1'-0"

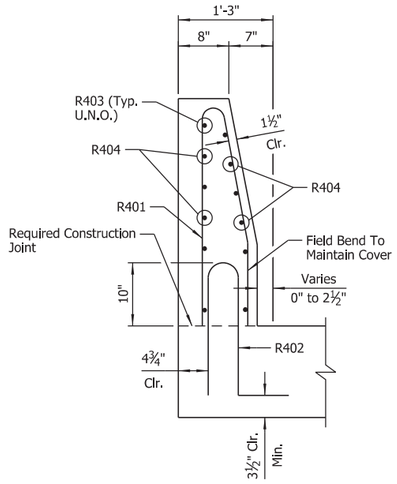

SECTION E-E
Scale: 1" = 1'-0"

LEGEND
EF = Each Face
U.N.O. = Unless Noted Otherwise

QUANTITIES FOR APPROACH GUTTERS
(For Information Only)

Bridge #	Location	Skew	"W" (ft)	Concrete-Left (Cu. Yds.)	Reinforcing Steel-Left (lbs.)	Concrete-Right (Cu. Yds.)	Reinforcing Steel-Right (lbs.)
07556	Begin Bridge	20	6	12.84	1,117	12.75	1,169
	End Bridge	20	6	12.75	1,169	12.84	1,117
07557	Begin Bridge	30	6	12.93	1,194	13.06	1,096
	End Bridge	30	6	13.06	1,096	12.93	1,194
(2) 07558	All	Str.	6	12.46	1,111	12.46	1,111
(2) 07559	Begin Bridge	35	6	13.02	1,208	13.19	1,126
	End Bridge	35	6	13.19	1,126	13.02	1,208
07560	All	Str.	6	12.46	1,111	12.46	1,111
07561	Begin Bridge	20	6	12.75	1,169	12.84	1,117
	End Bridge	20	6	12.84	1,117	12.75	1,169
07562	Begin Bridge	35	8	16.95	1,387	16.73	1,534
	End Bridge	35	8	16.73	1,534	16.95	1,387
07563	Begin Bridge	35	8	16.95	1,387	16.73	1,534
	End Bridge	35	8	16.73	1,534	16.95	1,387
07564	Begin Bridge	35	4	9.55	847	9.44	900
	End Bridge	35	4	9.44	900	9.55	847

(2) Modify dimensions of approach gutter as required to accommodate bridge end terminal. The cost of modification will not be paid for directly, but shall be considered subsidiary to the cost of the bridge end terminal.

BAR BENDING DIAGRAMS

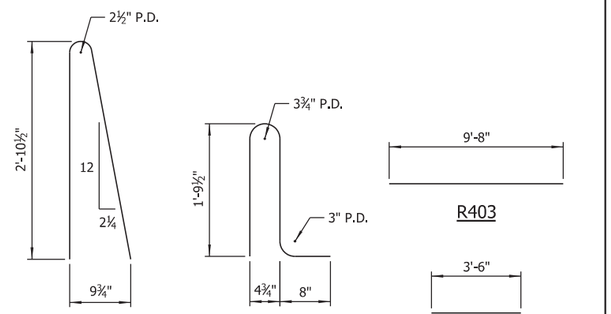

STATE OF ARKANSAS
LICENSED PROFESSIONAL ENGINEER
No.8017
JOHN H. RUDDELL

DIGITALLY SIGNED 8-13-2021
BRIDGE ENGINEER

SHEET 3 OF 3
DETAILS OF TYPE SPECIAL APPROACH GUTTERS
ROUTE SEC.
ARKANSAS STATE HIGHWAY COMMISSION
LITTLE ROCK, ARK.

DRAWN BY: CWT DATE: APR. 2021 FILENAME: b100955_AG3.dgn
CHECKED BY: JME DATE: MAY 2021 SCALE: As Shown
DESIGNED BY: JHR DATE: APR. 2021
BRIDGE NO. 07556-07564 DRAWING NO. 64429

dbhall 8/13/2021 9:56:10 AM
WORKSPACE: ARDOT Bridge (2019)
L:\2017\1701642 - ARDOT Job 100955\Drawings\b100955_5503_AG.dgn
REVISED DATE:

DATE REVISED	DATE FILMED	DATE REVISED	DATE FILMED	FED. ROAD DIST. NO.	STATE	FED. AID PROJ. NO.	SHEET NO.	TOTAL SHEETS
				6	ARK.			
				JOB NO.		100955	253	356
				(1) 07556-07561, 07564		APPROACH SLABS		64430

(1) Modify Type C2 Approach Slab (Width = 24'-0") to accommodate the width as shown. Adjust length of reinforcement as necessary.

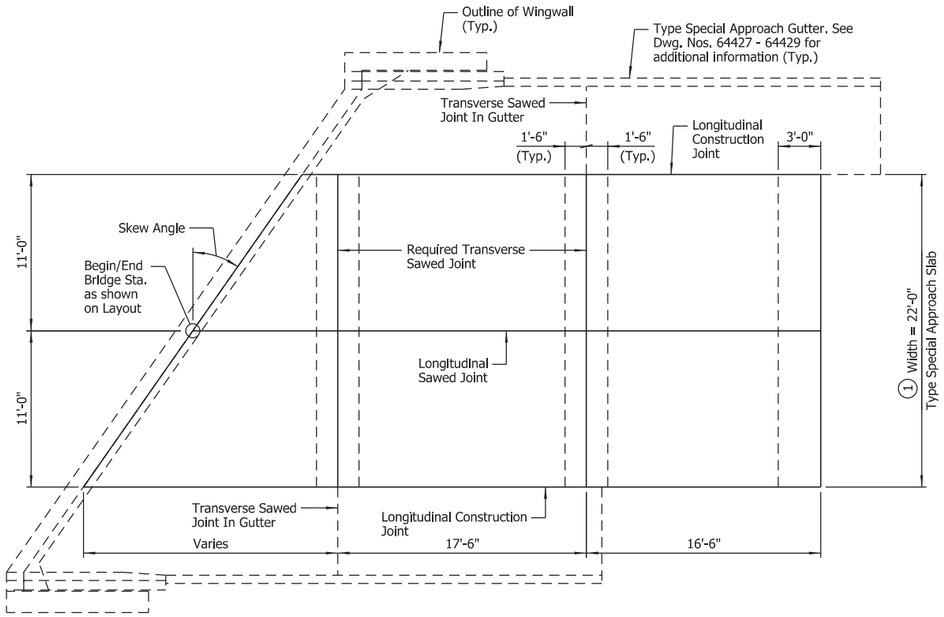

PLAN - SKEWED APPROACH SLAB WITH APPROACH GUTTERS

Scale: 3/16" = 1'-0"

Place Type C2 Approach Slab as shown. See Std. Dwg. No. 55040C2 for details not shown.

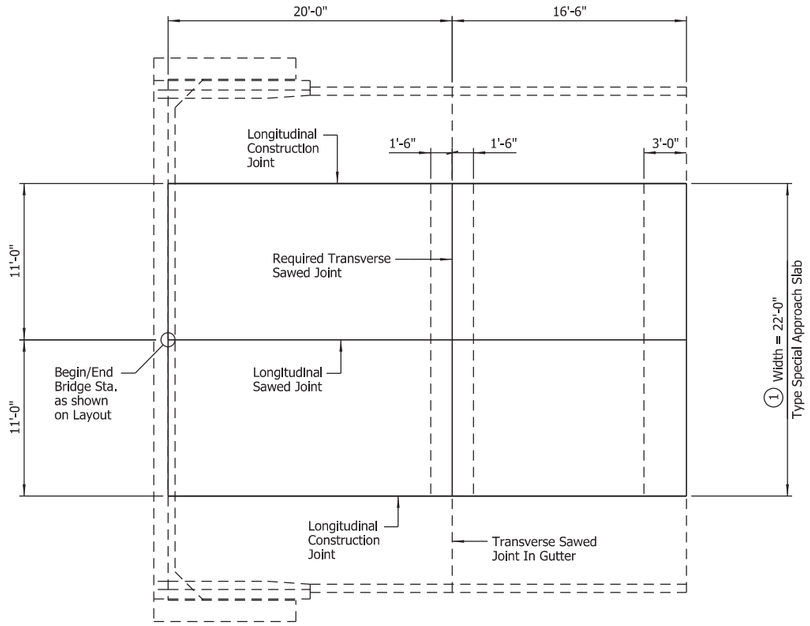

PLAN - SQUARE APPROACH SLAB WITH APPROACH GUTTERS

Scale: 3/16" = 1'-0"

Place Type C2 Approach Slab as shown. See Std. Dwg. No. 55040C2 for details not shown.

TABLE OF QUANTITIES

(For Information Only)

SKEW ANGLE	REINFORCING STEEL (LBS.)	CONCRETE (CU. YDS.)
0	5540	45.00
20	6580	53.42
30	6860	55.73
35	7030	57.06

GENERAL NOTES

All concrete shall be Class S (AE) with a minimum 28-day compressive strength f'c = 4,000 psi and shall be poured in the dry.

All reinforcing steel shall be Grade 60 (yield strength = 60,000 psi) conforming to AASHTO M 31 or M 322, Type A, with mill test reports.

Approach Slabs will be measured and paid for in accordance with Section 504.

The surface finish for Approach Slabs shall be given a tine finish as specified for final finishing in Subsection 802.19 for Class 5 Tined Bridge Roadway Surface Finish.

Approach Slabs shall be given a burlap drag finish as specified for initial finishing in Subsection 801.19 for Class 5 Tined Bridge Roadway Surface Finish. The final tine finish shall be omitted. The Approach Slabs shall be given a polymer overlay in accordance with SP "POLYMER OVERLAY".

The surface of the Approach Slabs shall be diamond-ground to achieve a uniform profile in accordance with the SP "BRIDGE DECK GRINDING".

STATE OF ARKANSAS
LICENSED PROFESSIONAL ENGINEER
No.8017
JOHN H. RUDDELL

DIGITALLY SIGNED 8-13-2021
BRIDGE ENGINEER

DETAILS OF TYPE SPECIAL APPROACH SLABS

ROUTE SEC.

ARKANSAS STATE HIGHWAY COMMISSION

LITTLE ROCK, ARK.

DRAWN BY: JJB DATE: JUN. 2021 FILENAME: b100955_AS.dgn
CHECKED BY: JHR DATE: JUN. 2021 SCALE: As Shown
DESIGNED BY: JJB DATE: JUN. 2021
BRIDGE NO. 07556-07561, 07564 DRAWING NO. 64430

abnall 8/13/2021 9:56:11 AM
WORKSPACE: ARDOT Bridge (2019)
L:\20\T\10\7642 - ARDOT Job 100955\Drawings\b100955_SS04_AS.dgn
REVISED DATE:

DATE REVISED	DATE FILMED	DATE REVISED	DATE FILMED	FED.RD. DIST.NO.	STATE	FED.AID PROJ.NO.	SHEET NO.	TOTAL SHEETS
				6	ARK.			
				JOB NO.		100955	254	356
				(2)	CROSS SECTIONS			

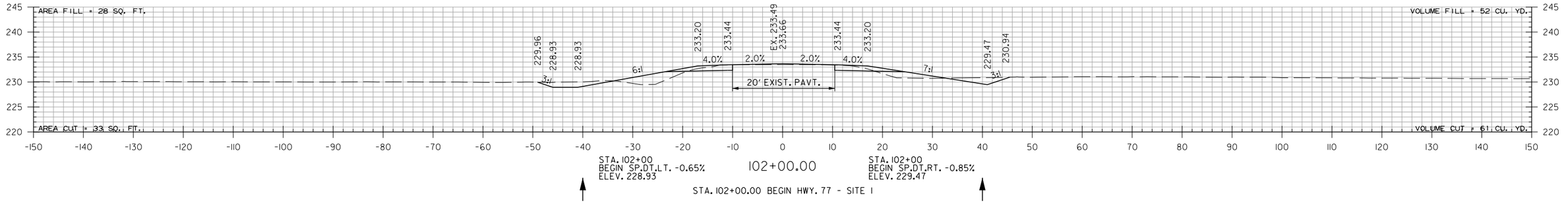

STA. 102+00
BEGIN SP.DT.LT. -0.65%
ELEV. 228.93

102+00.00

STA. 102+00
BEGIN SP.DT.RT. -0.85%
ELEV. 229.47

STA. 102+00.00 BEGIN HWY. 77 - SITE 1

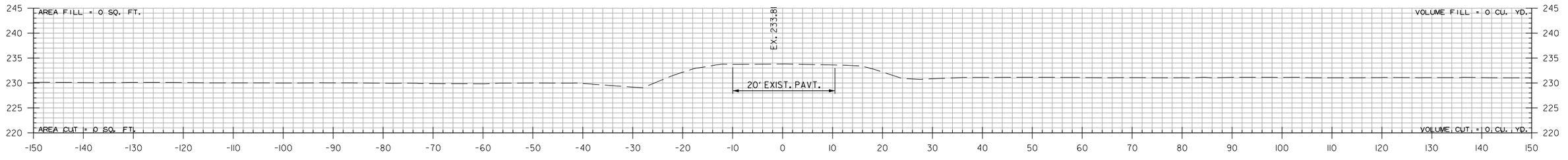

101+00.00

STA. 101+00.00 BEGIN 100' TRANSITION

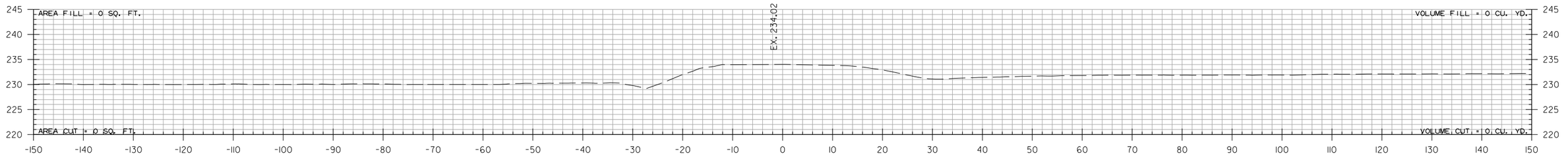

100+00.00

HWY. 77 - SITE 1
STA. 100+00 TO STA. 102+00

PJoseph 8/13/2021 5:27:21 PM
WORKSPACE: AHTD
L:\2017\17017642 - ARDOT Job 100955\Drawings\r100955_CX_Hwy. 77 Site 1.dgn
REVISED DATE:

DATE REVISED	DATE FILMED	DATE REVISED	DATE FILMED

FED.RD. DIST.NO.	STATE	FED.AID PROJ.NO.	SHEET NO.	TOTAL SHEETS
6	ARK.			
JOB NO.		100955	255	356

(2) CROSS SECTIONS

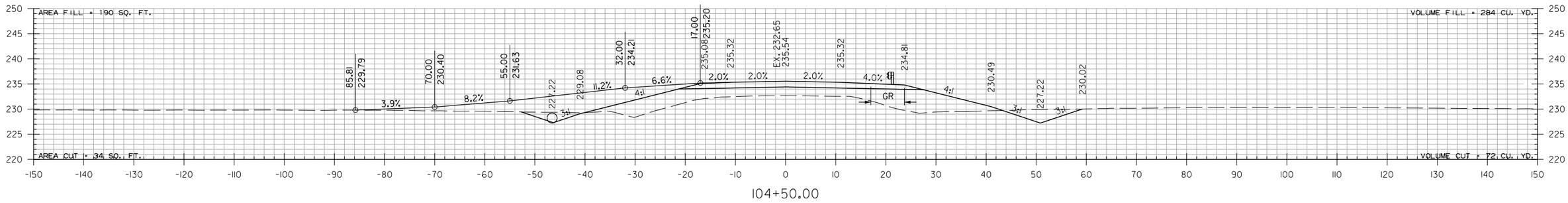

104+50.00

STA. 104+50 INSTALL
24" X 58' PIPE CULVERT
LT. SIDE DRAIN
CONSTRUCT APPROACH = 70 CU. YDS.

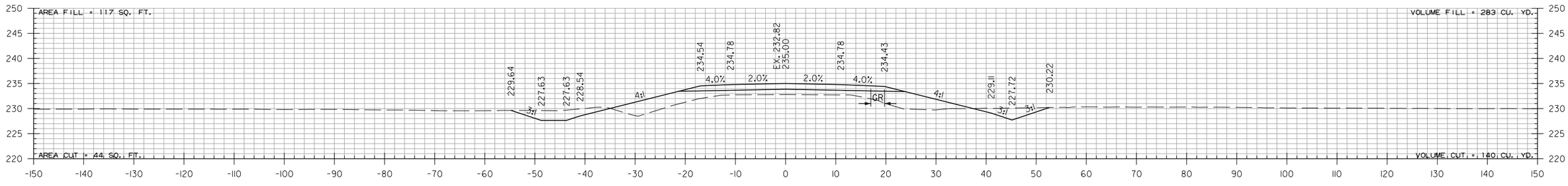

104+00.00

STA. 103+70
END SP.DT.RT. -0.85%
BEGIN SP.DT.RT. -1.00%
ELEV. 228.02

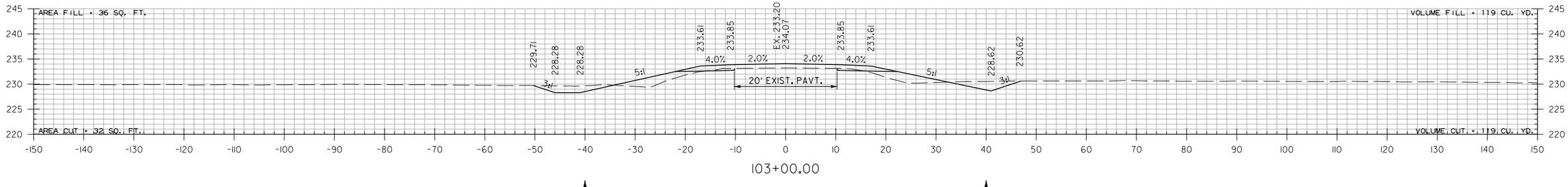

103+00.00

HWY. 77 - SITE 1
STA. 103+00 TO STA. 104+50

PJoseph 8/13/2021 5:27:22 PM
WORKSPACE: AHTD
L:\2017\17017642 - ARDOT Job 100955\Drawings\r100955_CX_Hwy. 77 Site 1.dgn
REVISED DATE:

DATE REVISED	DATE FILMED	DATE REVISED	DATE FILMED	FED.RD. DIST.NO.	STATE	FED.AID PROJ.NO.	SHEET NO.	TOTAL SHEETS
				6	ARK.			
				JOB NO.		100955	256	356
				(2)		CROSS SECTIONS		

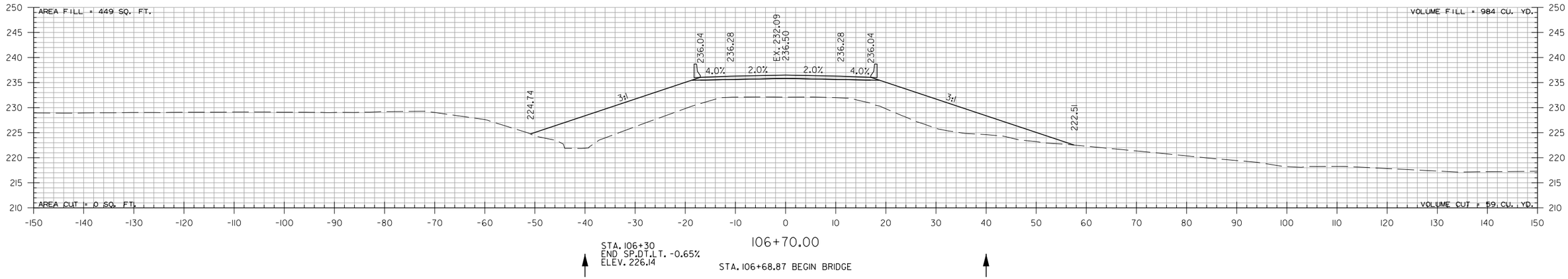

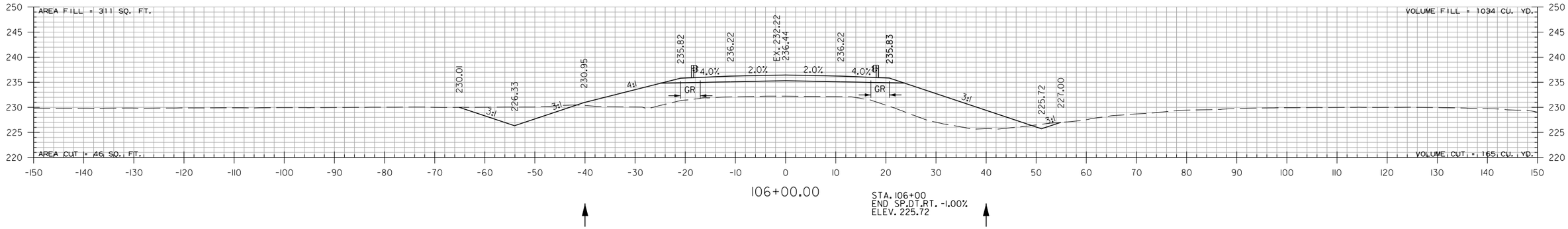

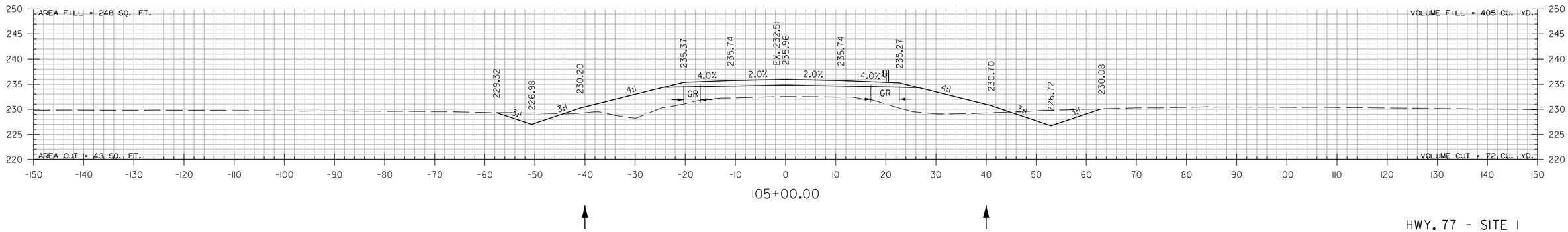

HWY. 77 - SITE 1
STA. 105+00 TO STA. 106+70

PJoseph 8/13/2021 5:27:22 PM
WORKSPACE: AHTD
L:\2017\17017642 - ARDOT Job 100955\Drawings\r100955_CX_Hwy. 77 Site 1.dgn
REVISED DATE:

DATE REVISED	DATE FILMED	DATE REVISED	DATE FILMED	FED.RD. DIST.NO.	STATE	FED.AID PROJ.NO.	SHEET NO.	TOTAL SHEETS
				6	ARK.			
				JOB NO.		100955	257	356
				(2)	CROSS SECTIONS			

STA. 108+31.13 END BRIDGE

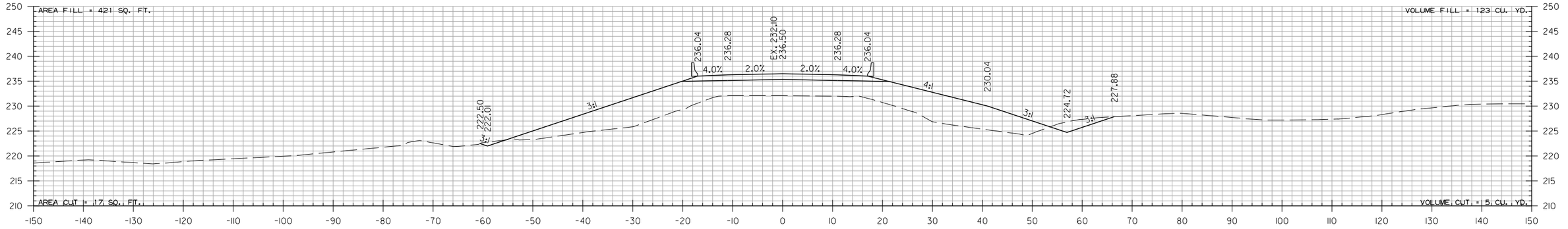

108+30.00

STA. 108+30
BEGIN SP.DT.LT. 0.87%
ELEV. 222.01

STA. 108+30
BEGIN SP.DT.RT. 0.85%
ELEV. 224.72



108+14.26

STA. 108+14.26 BEGIN TOE OF SLOPE

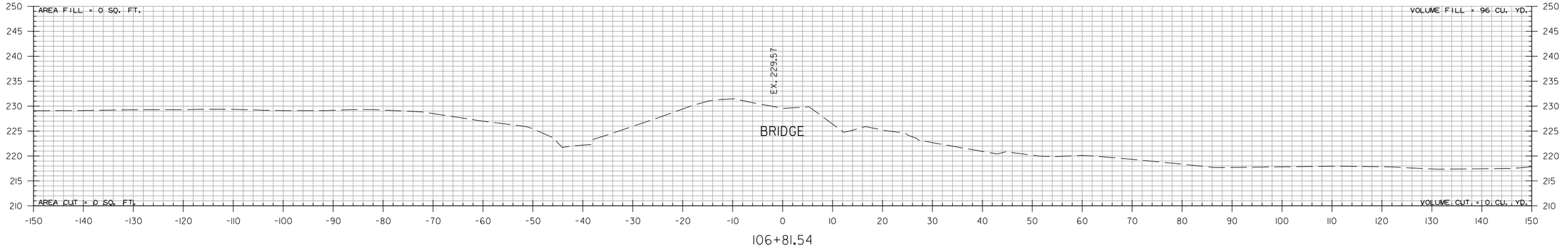

106+81.54

STA. 106+81.54 END TOE OF SLOPE

HWY. 77 - SITE 1
STA. 106+82 TO STA. 108+30

PJoseph 8/13/2021 5:27:22 PM
WORKSPACE: AHTD
L:\2017\170T642 - ARDOT Job 100955\Drawings\r100955_CX_Hwy. 77 Site 1.dgn
REVISED DATE:

DATE REVISED	DATE FILMED	DATE REVISED	DATE FILMED	FED.RD. DIST.NO.	STATE	FED.AID PROJ.NO.	SHEET NO.	TOTAL SHEETS
				6	ARK.			
				JOB NO.		100955	258	356
				(2)		CROSS SECTIONS		

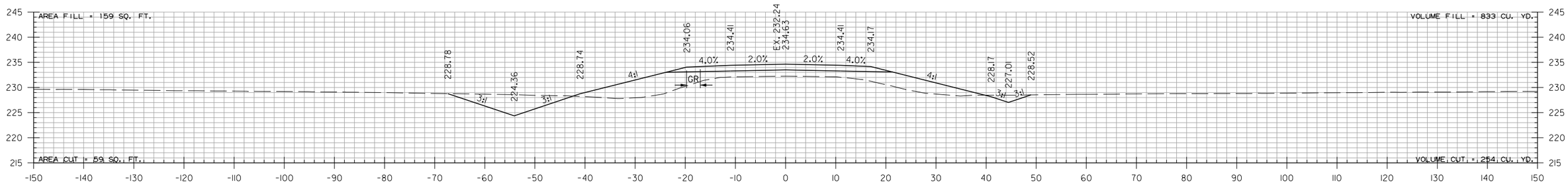

STA. 110+10 INSTALL
24" X 40' PIPE CULVERT
RT. SIDE DRAIN
CONSTRUCT APPROACH = 444 CU. YDS.

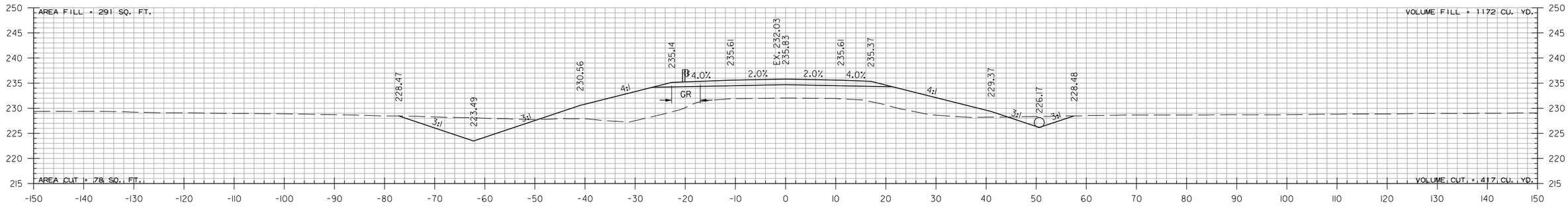

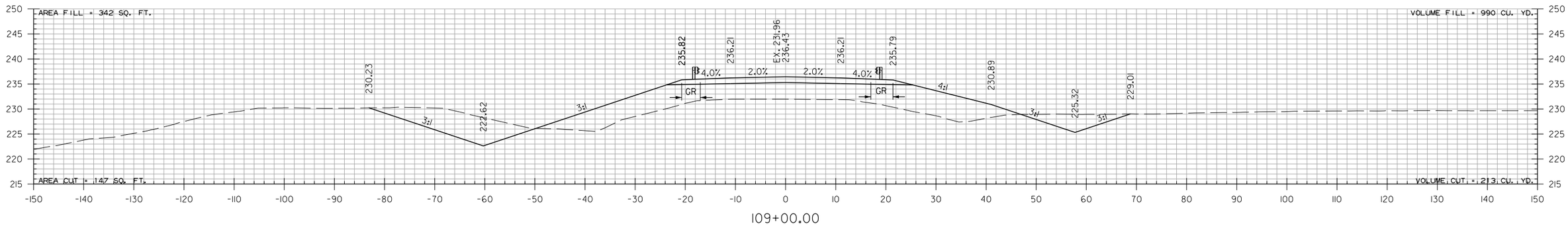

HWY. 77 - SITE 1
STA. 109+00 TO STA. 111+00

PJoseph 8/13/2021 5:27:23 PM
WORKSPACE: AHTD
L:\2017\17017642 - ARDOT Job 100955\Drawings\r100955_CX_Hwy. 77 Site 1.dgn
REVISED DATE:

DATE REVISED	DATE FILMED	DATE REVISED	DATE FILMED

FED.RD. DIST.NO.	STATE	FED.AID PROJ.NO.	SHEET NO.	TOTAL SHEETS
6	ARK.			
JOB NO.		100955	259	356

(2) CROSS SECTIONS

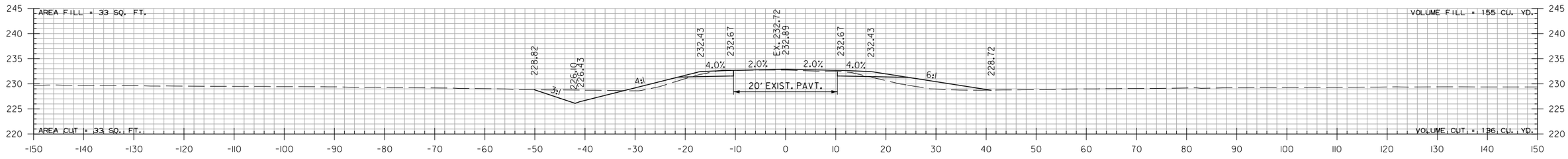

113+00.00

STA. 113+00
END SP.DT.LT. 0.87%
ELEV. 226.10

STA. 113+00
END SP.DT.RT. 0.85%
ELEV. 228.72

STA. 113+00.00 END HWY. 77 - SITE 1

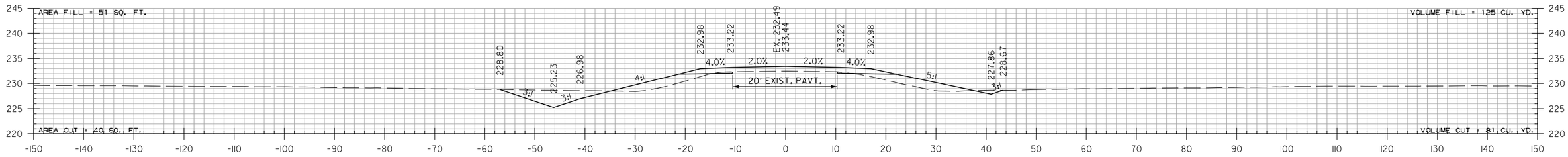

112+00.00

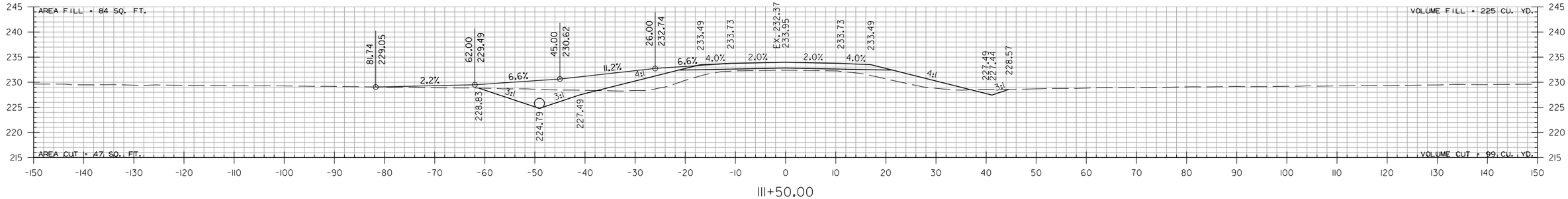

111+50.00

STA. 111+50 INSTALL
24" X 38' PIPE CULVERT
LT. SIDE DRAIN
CONSTRUCT APPROACH = 39 CU. YDS.

HWY. 77 - SITE 1
STA. 111+50 TO STA. 113+00

PJoseph 8/13/2021 5:27:23 PM
WORKSPACE: AHTD
L:\2017\17017642 - ARDOT Job 100955\Drawings\r100955.CX.Hwy. 77 Site 1.dgn
REVISED DATE:

DATE REVISED	DATE FILMED	DATE REVISED	DATE FILMED

FED.RD. DIST.NO.	STATE	FED.AID PROJ.NO.	SHEET NO.	TOTAL SHEETS
6	ARK.			
JOB NO.		100955	260	356

(2) CROSS SECTIONS

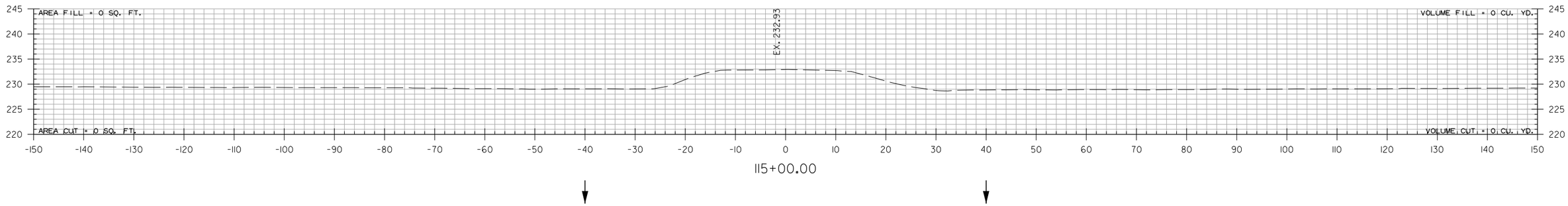

115+00.00

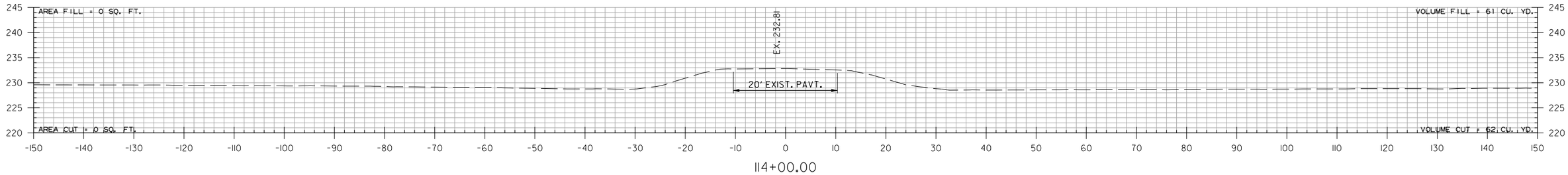

114+00.00

STA. 114+00.00 END 100' TRANSITION

HWY. 77 - SITE 1
STA. 114+00 TO STA. 115+00

PJoseph 8/13/2021 5:27:23 PM
WORKSPACE: AHTD
L:\2017\17017642 - ARDOT Job 100955\Drawings\r100955_CX_Hwy. 77 Site 1.dgn
REVISED DATE:

DATE REVISED	DATE FILMED	DATE REVISED	DATE FILMED	FED.RD. DIST.NO.	STATE	FED.AID PROJ.NO.	SHEET NO.	TOTAL SHEETS
				6	ARK.			
				JOB NO.		100955	261	356
				(2)	CROSS SECTIONS			

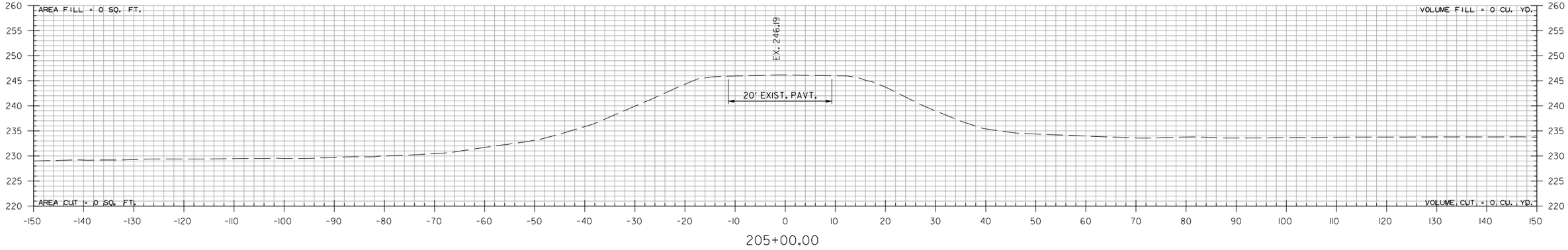

205+00.00

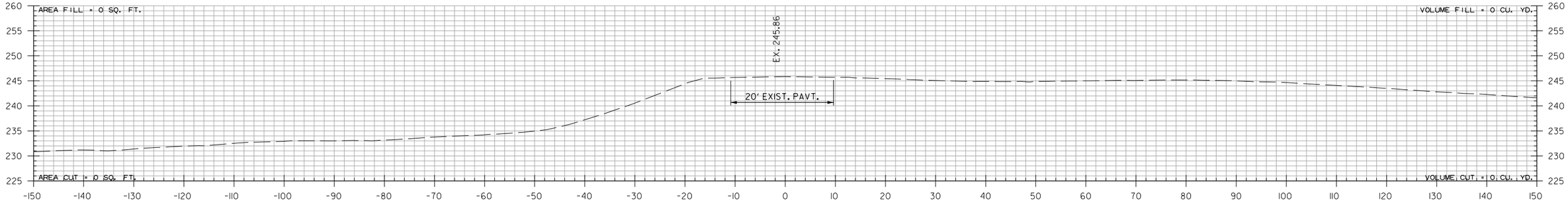

204+25.00

STA. 204+25.00 BEGIN 100' TRANSITION

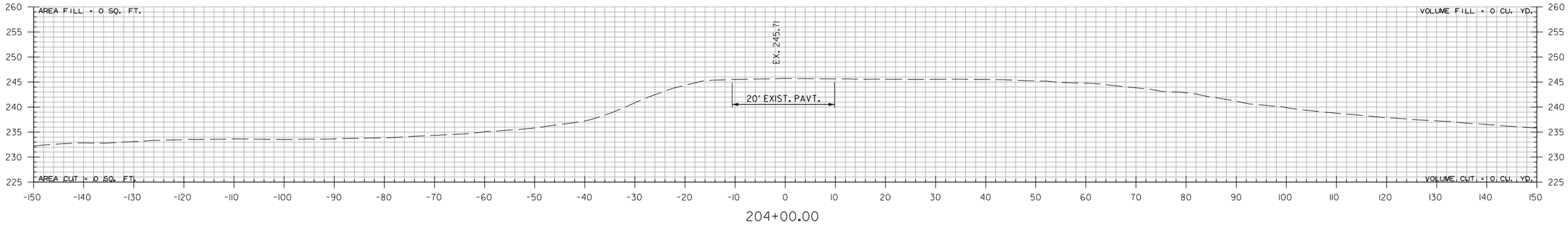

204+00.00

HWY. 77 - SITE 2
STA. 204+00 TO STA. 205+00

PJoseph 8/13/2021 5:27:27 PM
WORKSPACE: AHTD
L:\20\T\170\T642 - ARDOT Job 100955\Drawings\r100955_CX_Hwy. 77 Site 2.dgn
REVISED DATE:

DATE REVISED	DATE FILMED	DATE REVISED	DATE FILMED	FED.RD. DIST.NO.	STATE	FED.AID PROJ.NO.	SHEET NO.	TOTAL SHEETS
				6	ARK.			
				JOB NO.		100955	262	356
				(2)		CROSS SECTIONS		

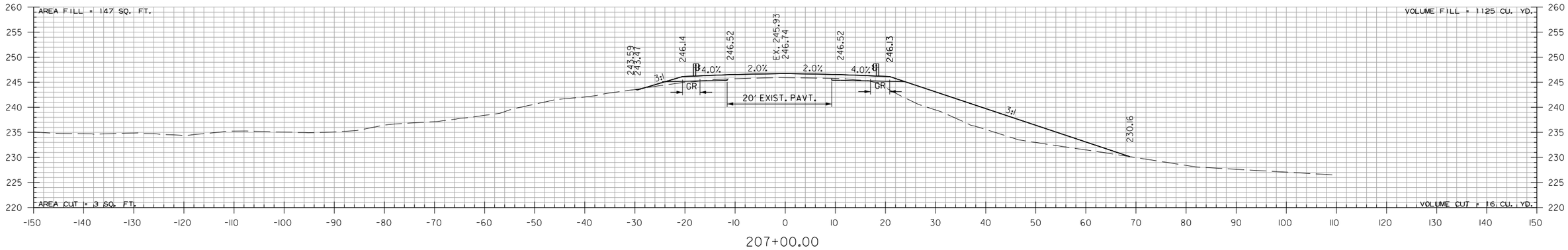

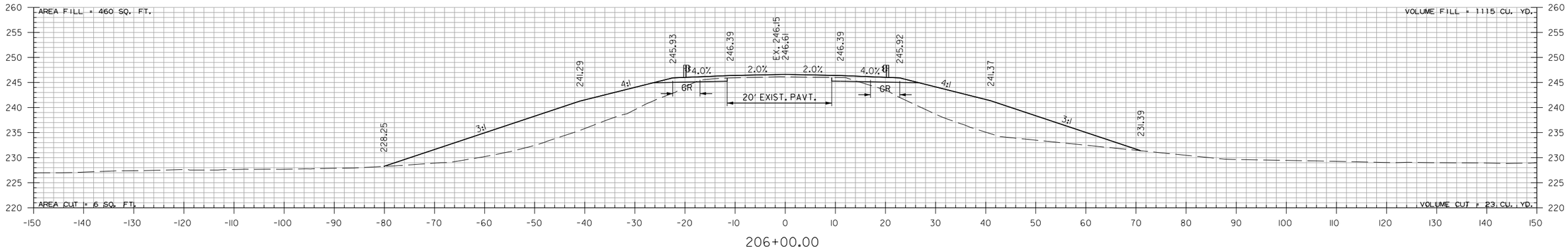

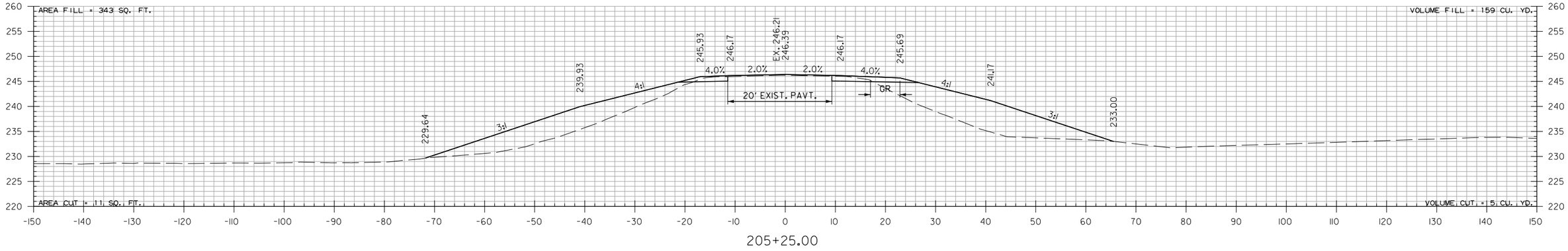

STA. 205+25.00 BEGIN HWY. 77 - SITE 2

HWY. 77 - SITE 2
STA. 205+25 TO STA. 207+00

PJoseph 8/13/2021 5:27:27 PM
WORKSPACE: AHTD
L:\2017\17017642 - ARDOT Job 100955\Drawings\r100955_CX_Hwy. 77 Site 2.dgn
REVISED DATE:

DATE REVISED	DATE FILMED	DATE REVISED	DATE FILMED

FED.RD. DIST.NO.	STATE	FED.AID PROJ.NO.	SHEET NO.	TOTAL SHEETS
6	ARK.			
JOB NO.		100955	263	356
(2)	CROSS SECTIONS			

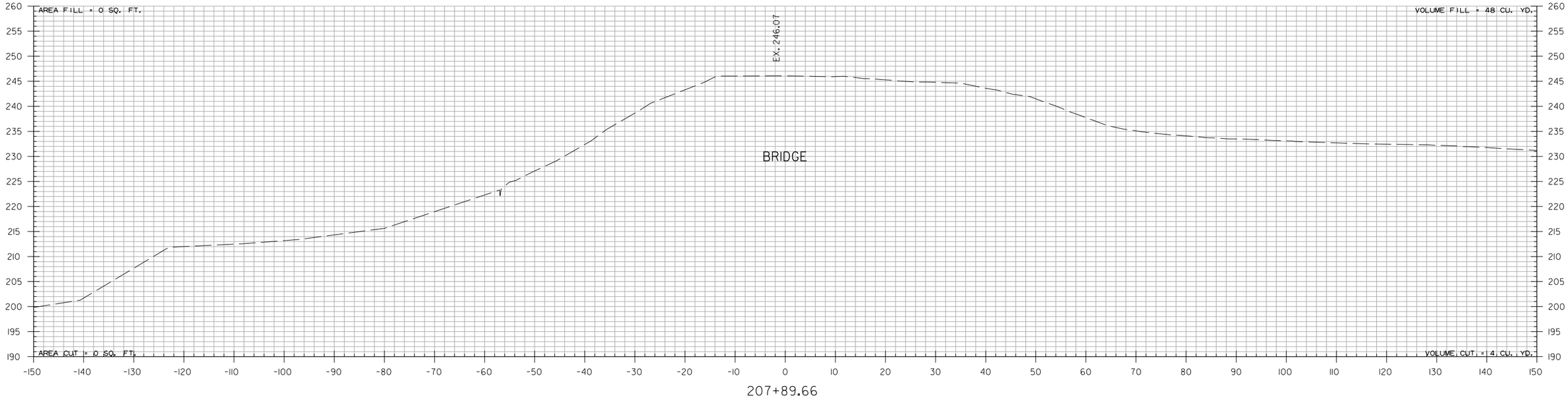

207+89.66

STA. 207+89.66 END TOE OF SLOPE

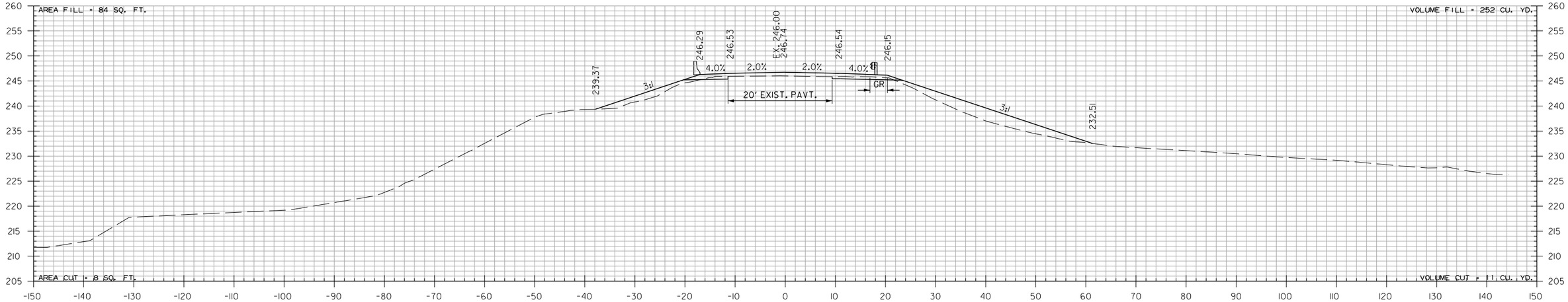

207+58.75

STA. 207+58.75 BEGIN BRIDGE

HWY. 77 - SITE 2
STA. 207+59 TO STA. 207+90

PJoseph 8/13/2021 5:27:27 PM
WORKSPACE: AHTD
L:\2017\170764 2 - ARDOT Job 100955\Drawings\r100955_CX_Hwy. 77 Site 2.dgn
REVISED DATE:

DATE REVISED	DATE FILMED	DATE REVISED	DATE FILMED

FED.RD. DIST.NO.	STATE	FED.AID PROJ.NO.	SHEET NO.	TOTAL SHEETS
6	ARK.			
JOB NO.		100955	264	356
(2)	CROSS SECTIONS			

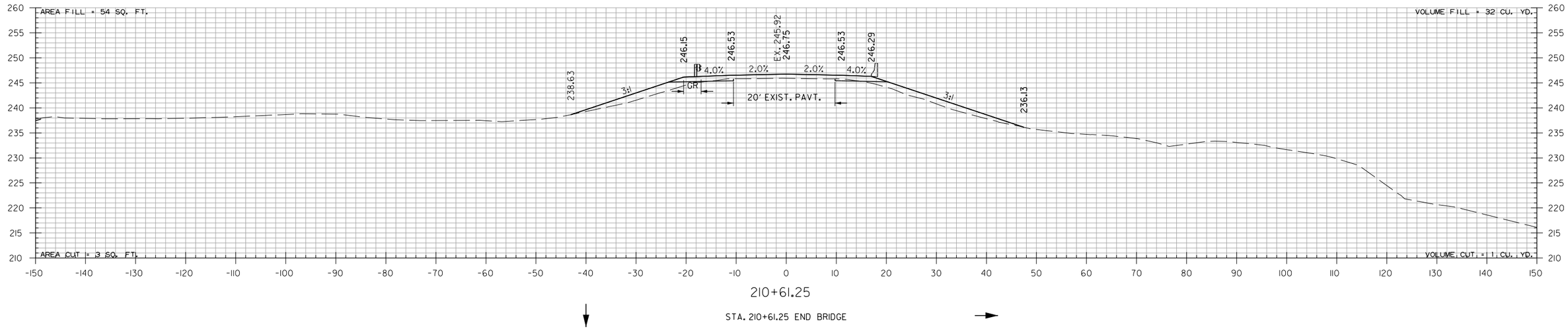

210+61.25

STA. 210+61.25 END BRIDGE

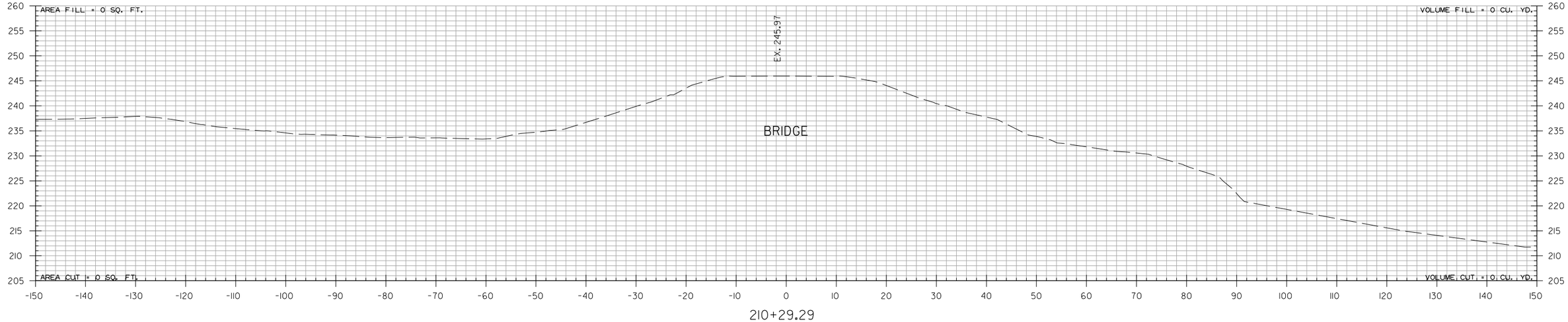

210+29.29

STA. 210+29.29 BEGIN TOE OF SLOPE

HWY. 77 - SITE 2
STA. 210+29 TO STA. 210+61

PJoseph 8/13/2021 5:27:28 PM
WORKSPACE: AHTD
L:\2017\170I642 - ARDOT Job I00955\Drawings\r100955_CX_Hwy. 77 Site 2.dgn
REVISED DATE:

DATE REVISED	DATE FILMED	DATE REVISED	DATE FILMED	FED.RD. DIST.NO.	STATE	FED.AID PROJ.NO.	SHEET NO.	TOTAL SHEETS
11-22-2021				6	ARK.			
				JOB NO.		100955	265	356
				(2)	CROSS SECTIONS			

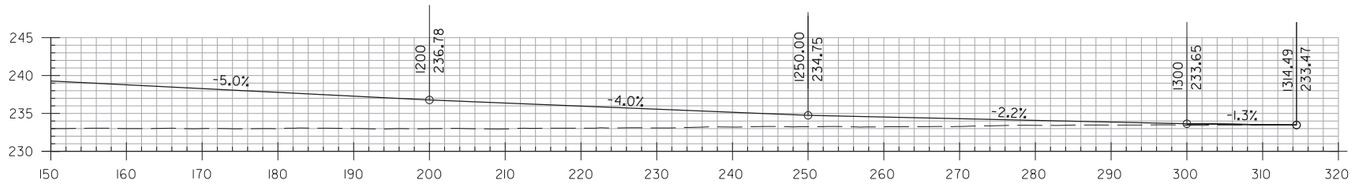

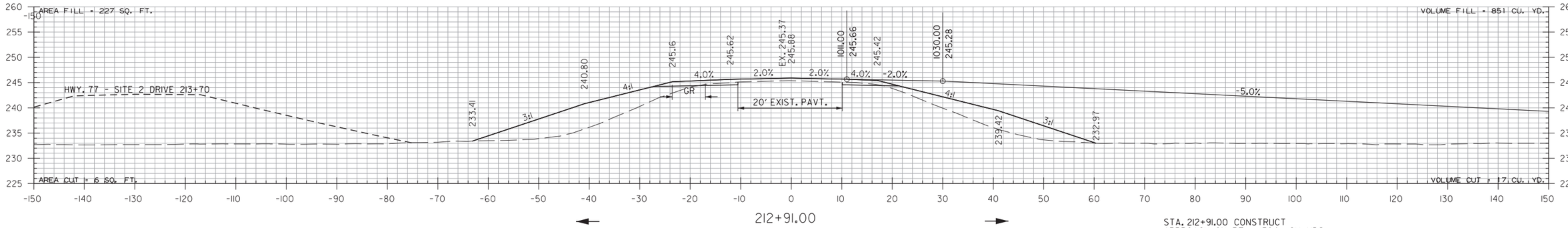

212+91.00

STA. 212+91.00 CONSTRUCT APPROACH ON RT. = 1584 CU. YDS.

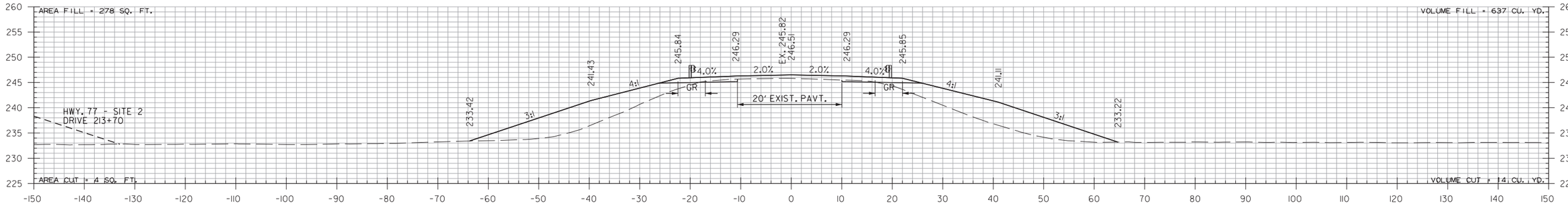

212+00.00

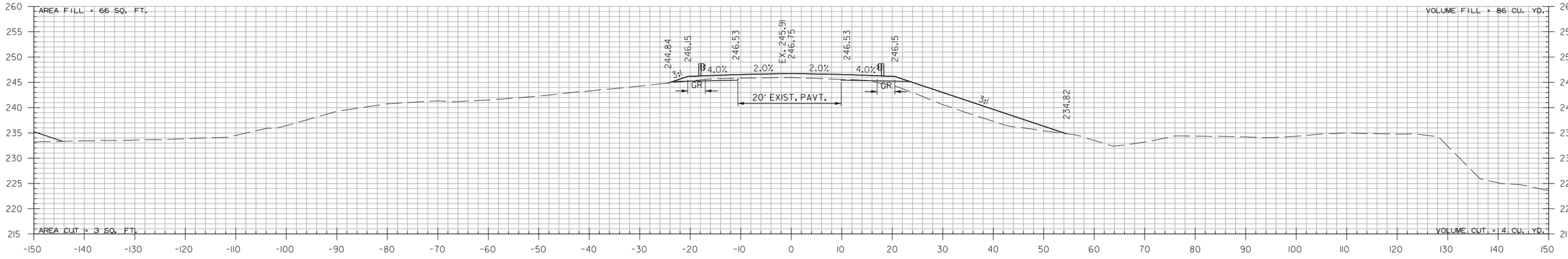

211+00.00

HWY. 77 - SITE 2
STA. 211+00 TO STA. 212+91

P.Joseph 12/2/2021 3:41:35 PM
WORKSPACE: AHTD
L:\2017\17017642 - ARDOT Job 100955\Drawings\r100955_CX_Hwy. 77 Site 2.dgn
REVISED DATE:

DATE REVISED	DATE FILMED	DATE REVISED	DATE FILMED	FED.RD. DIST.NO.	STATE	FED.AID PROJ.NO.	SHEET NO.	TOTAL SHEETS
				6	ARK.			
				JOB NO.		100955	266	356
				(2)		CROSS SECTIONS		

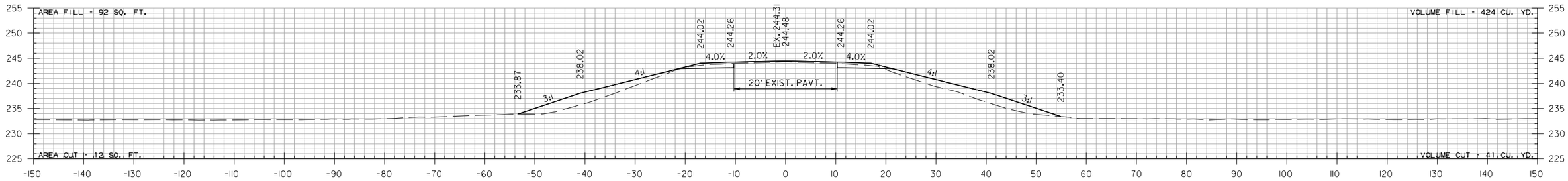

215+00.00

STA. 215+00.00 BEGIN 100' TRANSITION

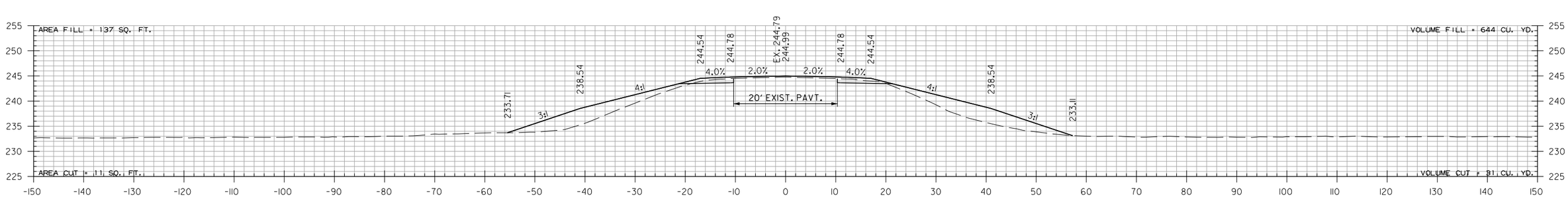

214+00.00

STA. 213+70 CONSTRUCT
APPROACH ON LT. = 5172 CU. YDS.

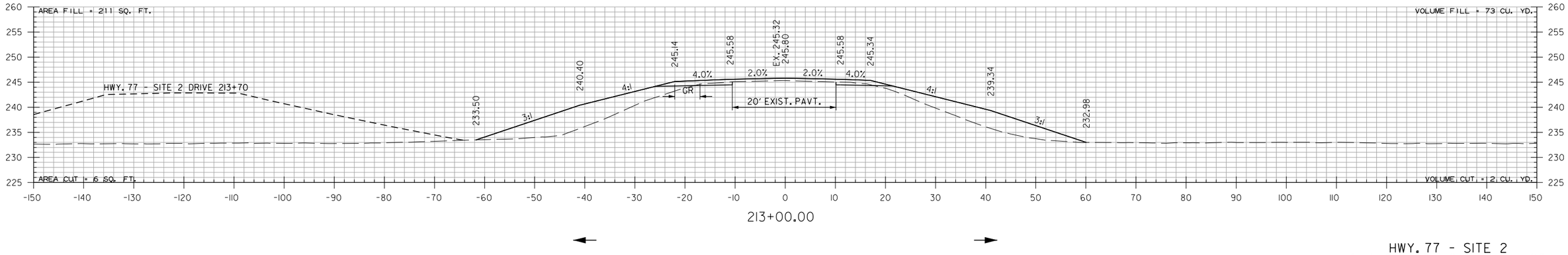

213+00.00

HWY. 77 - SITE 2
STA. 213+00 TO STA. 215+00

PJoseph 8/13/2021 5:27:28 PM
WORKSPACE: AHTD
L:\20\7\701\7642 - ARDOT Job 100955\Drawings\r100955_CX_Hwy. 77 Site 2.dgn
REVISED DATE:

DATE REVISED	DATE FILMED	DATE REVISED	DATE FILMED

FED.RD. DIST.NO.	STATE	FED.AID PROJ.NO.	SHEET NO.	TOTAL SHEETS
6	ARK.			
JOB NO.		100955	267	356
(2)	CROSS SECTIONS			

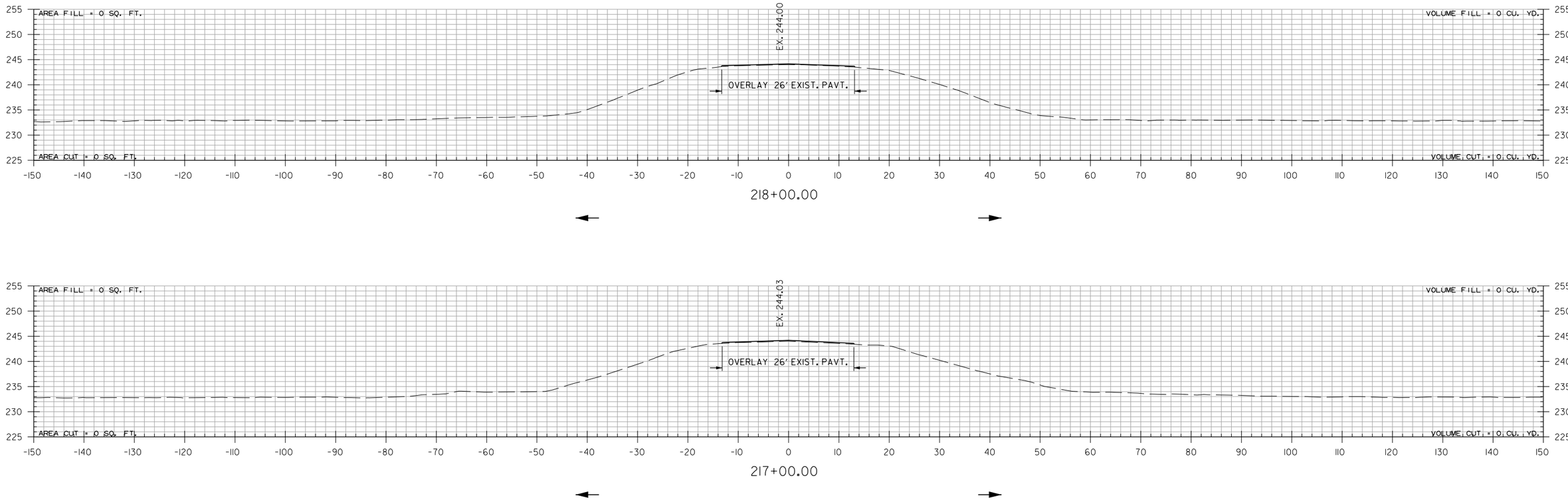

218+00.00

217+00.00

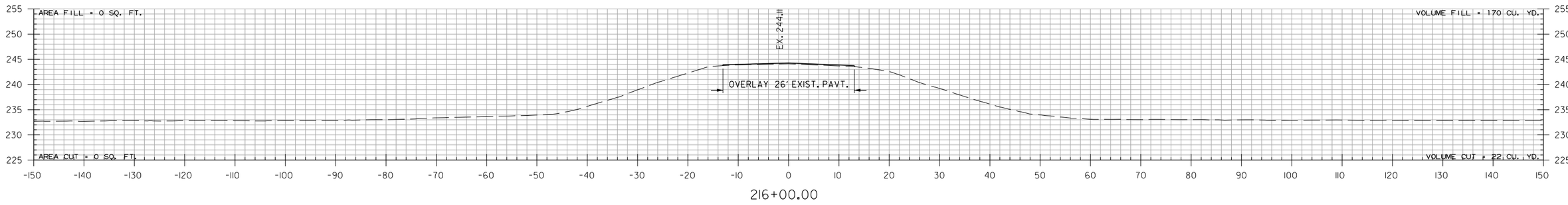

216+00.00

STA. 216+00.00 END 100' TRANSITION

HWY. 77 - SITE 2
STA. 216+00 TO STA. 218+00

PJoseph 8/13/2021 5:27:29 PM
WORKSPACE: AHTD
L:\2017\170176\42 - ARDOT Job 100955\Drawings\r100955_CX_Hwy. 77 Site 2.dgn
REVISED DATE:

DATE REVISED	DATE FILMED	DATE REVISED	DATE FILMED	FED.RD. DIST.NO.	STATE	FED.AID PROJ.NO.	SHEET NO.	TOTAL SHEETS
				6	ARK.			
				JOB NO.		100955	268	356
				(2)	CROSS SECTIONS			

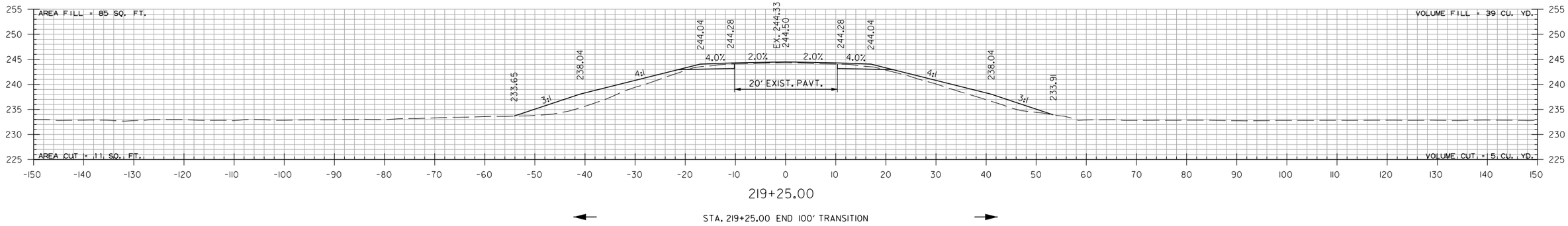

219+25.00

STA. 219+25.00 END 100' TRANSITION

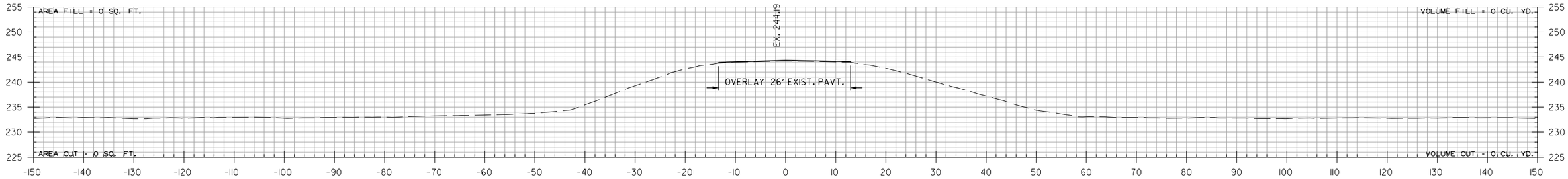

219+00.00

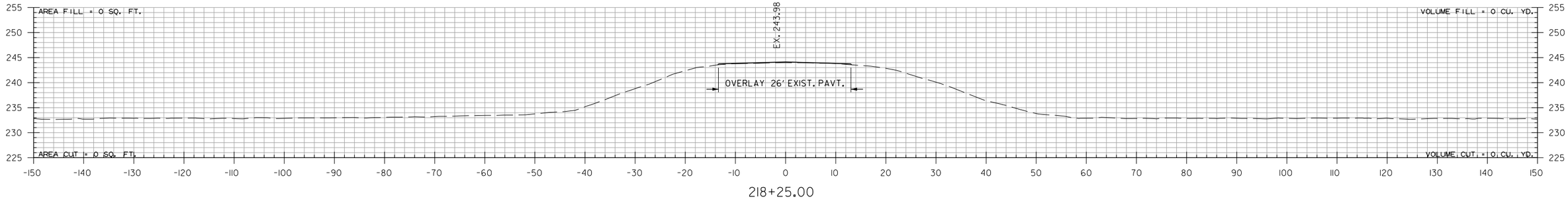

218+25.00

STA. 218+25.00 BEGIN 100' TRANSITION

HWY. 77 - SITE 2
STA. 218+25 TO STA. 219+25

PJoseph 8/13/2021 5:27:29 PM
WORKSPACE: AHTD
L:\2017\17017642 - ARDOT Job 100955\Drawings\r100955_CX_Hwy. 77 Site 2.dgn
REVISED DATE:

DATE REVISED	DATE FILMED	DATE REVISED	DATE FILMED	FED.RD. DIST.NO.	STATE	FED.AID PROJ.NO.	SHEET NO.	TOTAL SHEETS
				6	ARK.			
				JOB NO.		100955	269	356
				(2)	CROSS SECTIONS			

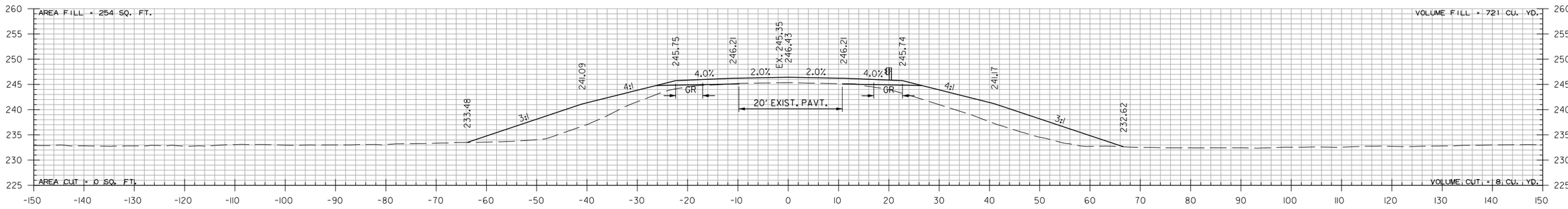

222+00.00

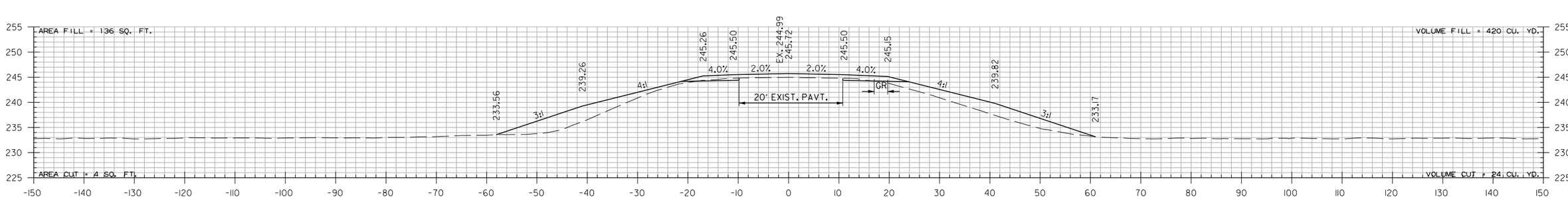

221+00.00

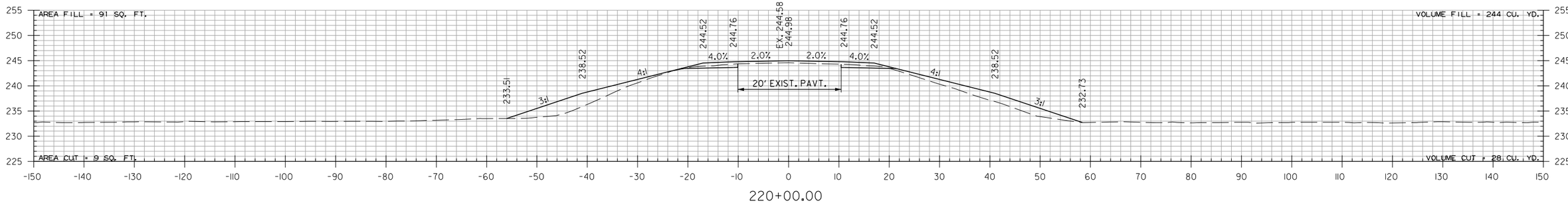

220+00.00

HWY. 77 - SITE 2
STA. 220+00 TO STA. 222+00

PJoseph 8/13/2021 5:27:30 PM
WORKSPACE: AHTD
L:\2017\17017642 - ARDOT Job 100955\Drawings\r100955_CX_Hwy. 77 Site 2.dgn
REVISED DATE:

DATE REVISED	DATE FILMED	DATE REVISED	DATE FILMED

FED.RD. DIST.NO.	STATE	FED.AID PROJ.NO.	SHEET NO.	TOTAL SHEETS
6	ARK.			
JOB NO.		100955	270	356
(2)	CROSS SECTIONS			

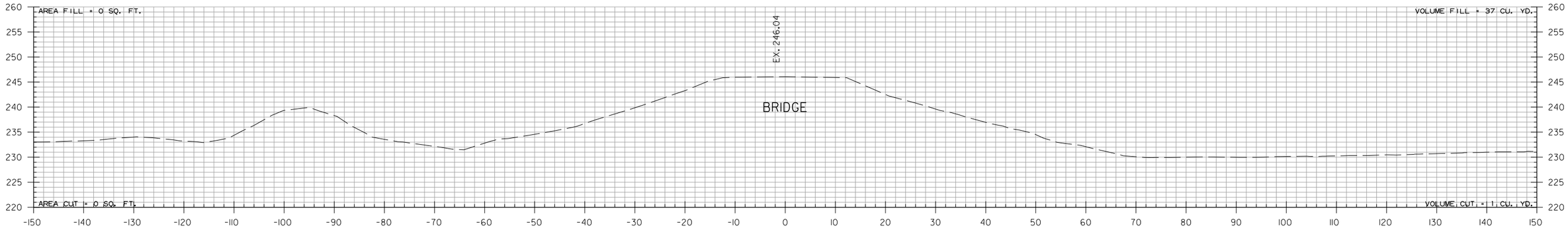

223+87.01

STA. 223+87.01 END TOE OF SLOPE

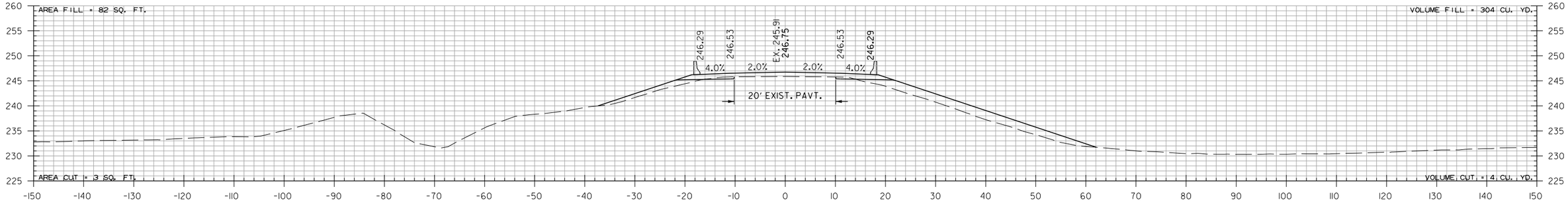

223+62.90

STA. 223+62.90 BEGIN BRIDGE

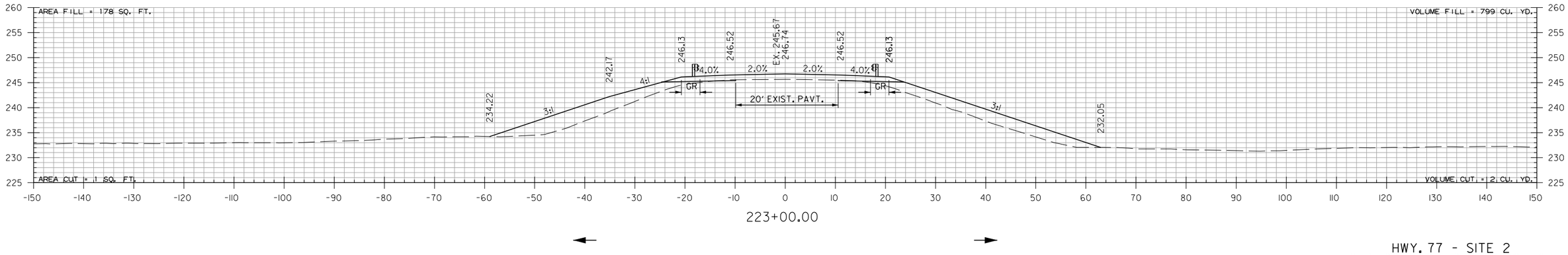

223+00.00

HWY. 77 - SITE 2
STA. 223+00 TO STA. 223+87

PJoseph 8/13/2021 5:27:30 PM
WORKSPACE: AHTD
L:\20\7\701\642 - ARDOT Job 100955\Drawings\r100955_CX_Hwy. 77 Site 2.dgn
REVISED DATE:

DATE REVISED	DATE FILMED	DATE REVISED	DATE FILMED	FED.RD. DIST.NO.	STATE	FED.AID PROJ.NO.	SHEET NO.	TOTAL SHEETS
				6	ARK.			
				JOB NO.		100955	271	356
				(2)	CROSS SECTIONS			

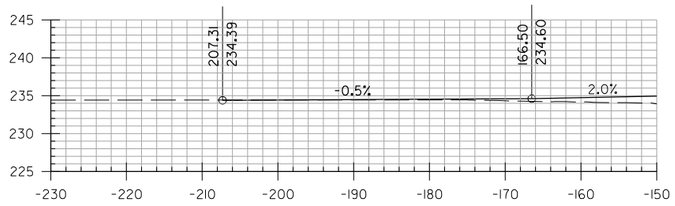

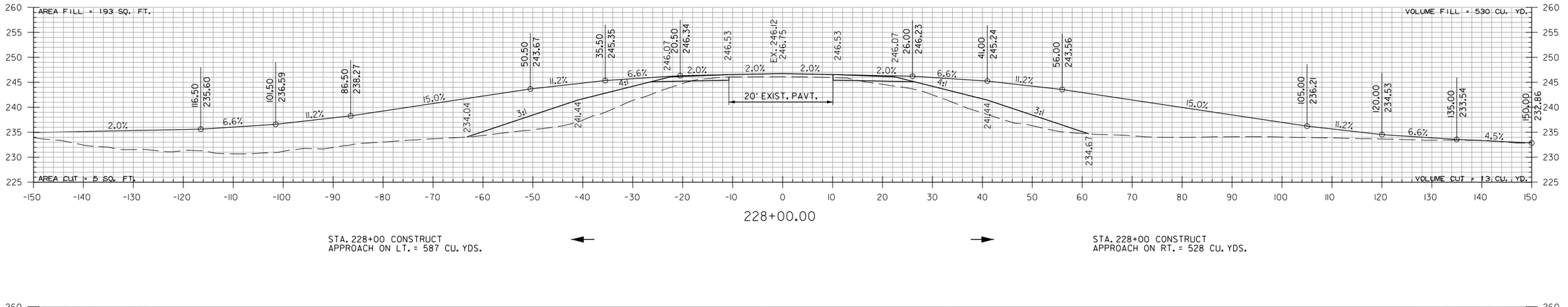

228+00.00

STA. 228+00 CONSTRUCT
APPROACH ON LT. = 587 CU. YDS.

STA. 228+00 CONSTRUCT
APPROACH ON RT. = 528 CU. YDS.

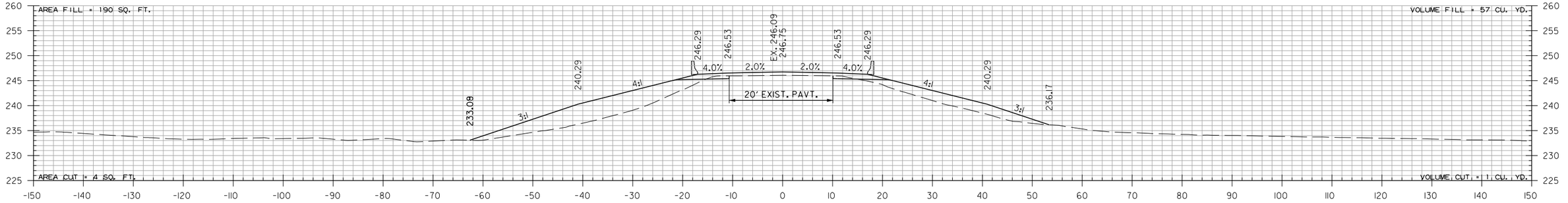

227+25.10

STA. 227+25.10 END BRIDGE

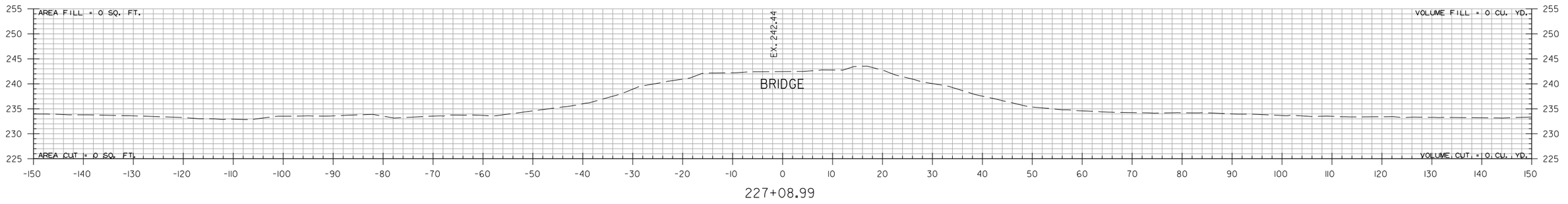

227+08.99

STA. 227+08.99 BEGIN TOE OF SLOPE

HWY. 77 - SITE 2
STA. 227+09 TO STA. 228+00

PJoseph 8/13/2021 5:27:30 PM
WORKSPACE: AHTD
L:\20\T\T01\T642 - ARDOT Job 100955\Drawings\r100955_CX_Hwy. 77 Site 2.dgn
REVISED DATE:

DATE REVISED	DATE FILMED	DATE REVISED	DATE FILMED	FED.RD. DIST.NO.	STATE	FED.AID PROJ.NO.	SHEET NO.	TOTAL SHEETS
				6	ARK.			
				JOB NO.		100955	272	356
				(2)		CROSS SECTIONS		

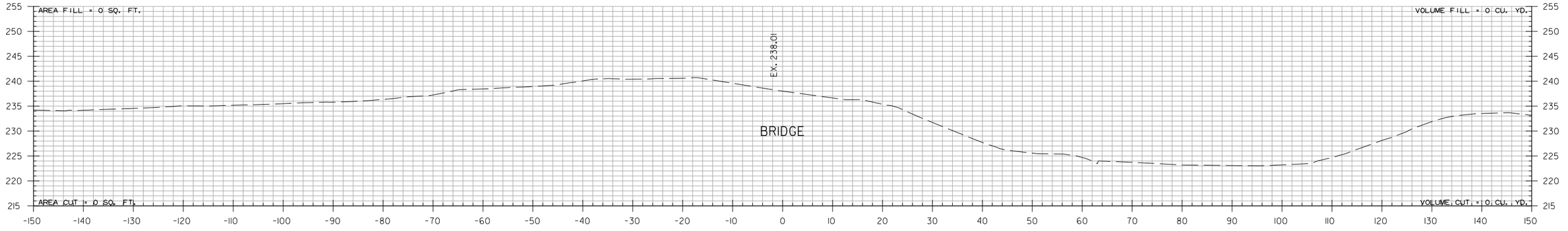

230+66.20

STA. 230+66.20 BEGIN TOE OF SLOPE

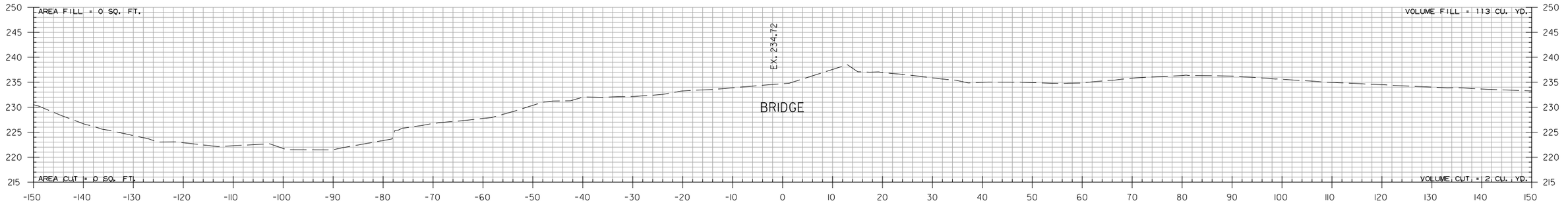

229+11.41

STA. 229+11.41 END TOE OF SLOPE

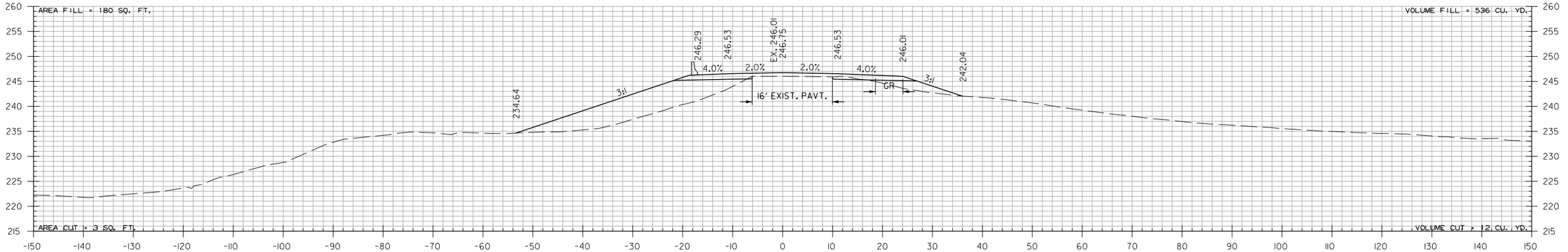

228+77.68

STA. 228+77.68 BEGIN BRIDGE

HWY. 77 - SITE 2
STA. 228+78 TO STA. 230+66

PJoseph 8/13/2021 5:27:31 PM
WORKSPACE: AHTD
L:\201\T\101\7642 - ARDOT Job 100955\Drawings\r100955_CX_Hwy. 77 Site 2.dgn
REVISED DATE:

DATE REVISED	DATE FILMED	DATE REVISED	DATE FILMED	FED.RD. DIST.NO.	STATE	FED.AID PROJ.NO.	SHEET NO.	TOTAL SHEETS
				6	ARK.			
				JOB NO.		100955	273	356
				(2)		CROSS SECTIONS		

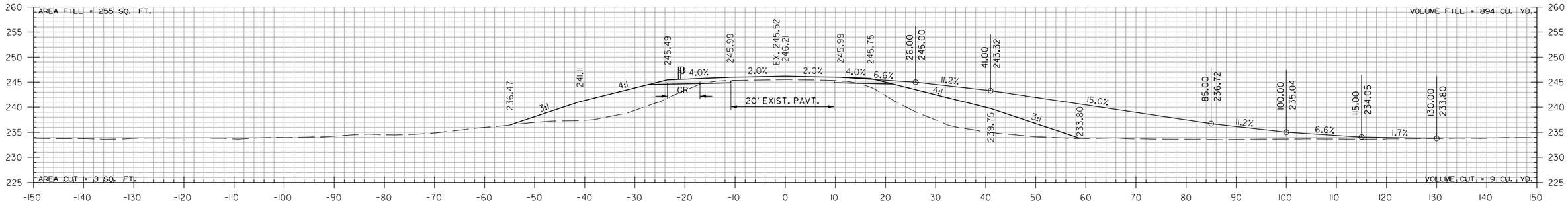

232+90.00

STA. 232+90.00 CONSTRUCT APPROACH ON RT. = 251 CU. YDS.

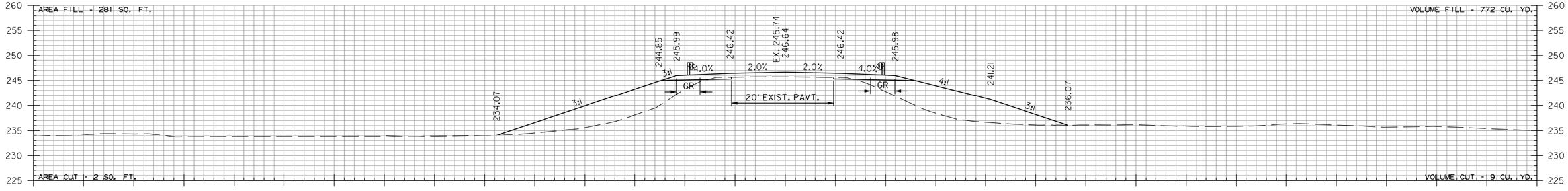

232+00.00

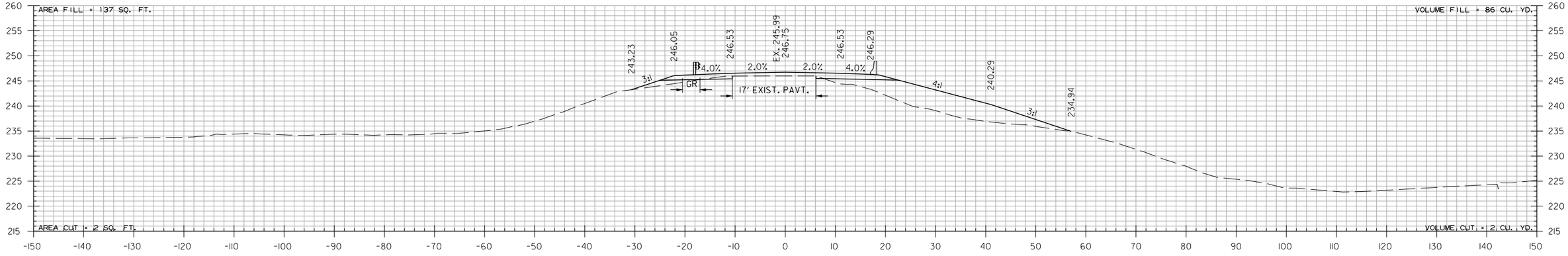

231+00.32

STA. 231+00.32 END BRIDGE

HWY. 77 - SITE 2
STA. 231+00 TO STA. 232+90

P.Joseph 8/13/2021 5:27:31 PM
WORKSPACE: AHTD
L:\2017\17017642 - ARDOT Job 100955\Drawings\r100955_CX_Hwy. 77 Site 2.dgn
REVISED DATE:

DATE REVISED	DATE FILMED	DATE REVISED	DATE FILMED	FED.RD. DIST.NO.	STATE	FED.AID PROJ.NO.	SHEET NO.	TOTAL SHEETS
				6	ARK.			
				JOB NO.		100955	274	356

(2) CROSS SECTIONS

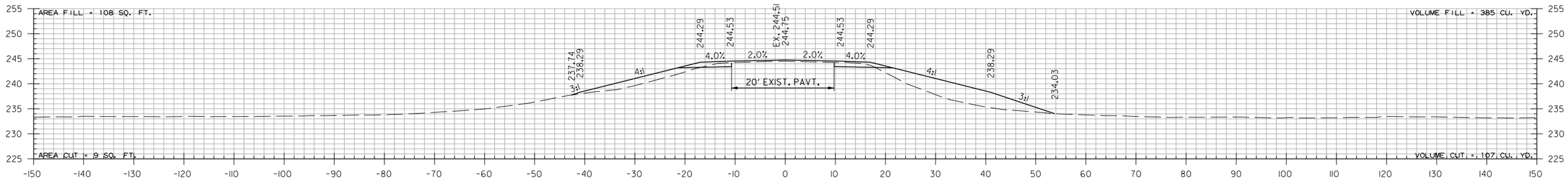

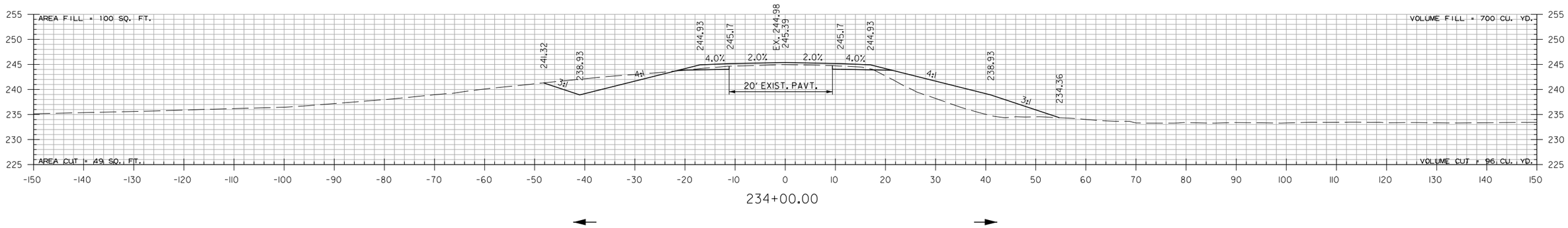

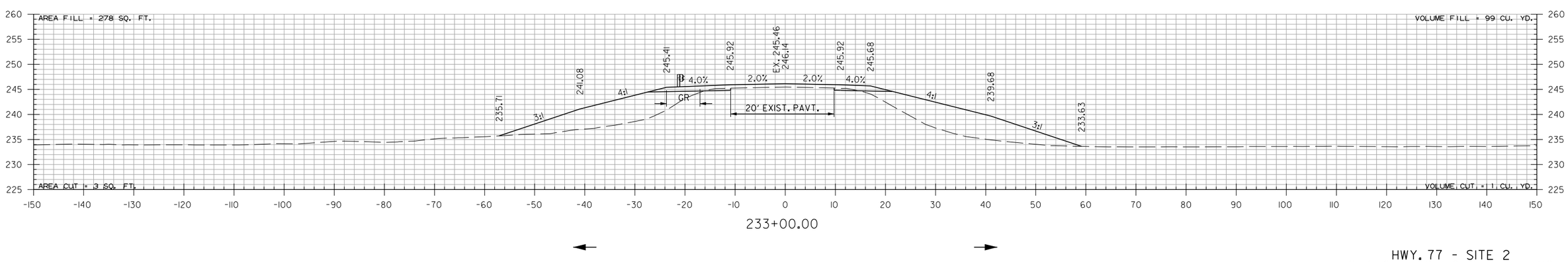

HWY. 77 - SITE 2
STA. 233+00 TO STA. 235+00

PJoseph 8/13/2021 5:27:31 PM
WORKSPACE: AHTD
L:\2017\170176\42 - ARDOT Job 100955\Drawings\r100955_CX_Hwy. 77 Site 2.dgn
REVISED DATE:

DATE REVISED	DATE FILMED	DATE REVISED	DATE FILMED	FED.RD. DIST.NO.	STATE	FED.AID PROJ.NO.	SHEET NO.	TOTAL SHEETS
				6	ARK.			
				JOB NO.		100955	275	356
				(2)	CROSS SECTIONS			

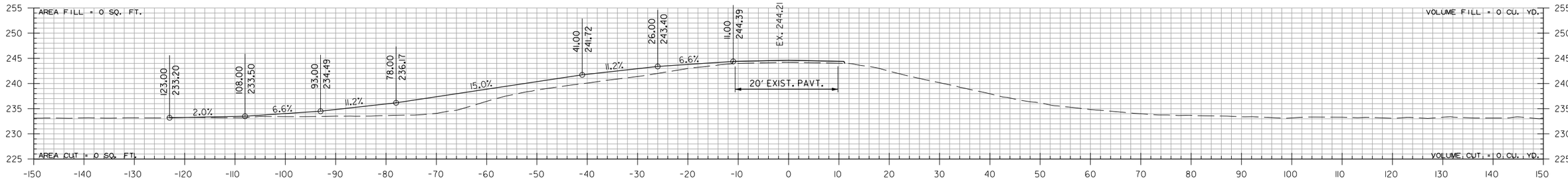

235+65.00

STA. 235+65.00 CONSTRUCT
APPROACH ON LT. = 81 CU. YDS.

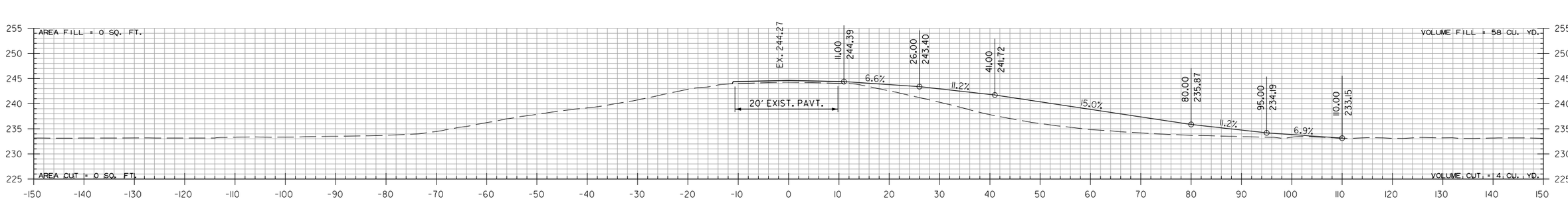

235+55.00

STA. 235+55.00 CONSTRUCT
APPROACH ON RT. = 153 CU. YDS.

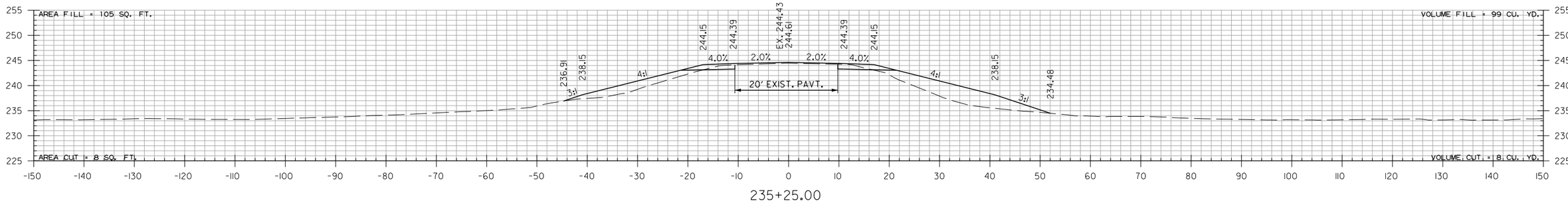

235+25.00

STA. 235+25.00 END HWY. 77 - SITE 2

HWY. 77 - SITE 2
STA. 235+25 TO STA. 235+65

P.Joseph 8/13/2021 5:27:32 PM
WORKSPACE: AHTD
L:\2017\17017642 - ARDOT Job 100955\Drawings\r100955_CX_Hwy. 77 Site 2.dgn
REVISED DATE:

DATE REVISED	DATE FILMED	DATE REVISED	DATE FILMED

FED.RD. DIST.NO.	STATE	FED.AID PROJ.NO.	SHEET NO.	TOTAL SHEETS
6	ARK.			
JOB NO.		100955	276	356

(2) CROSS SECTIONS

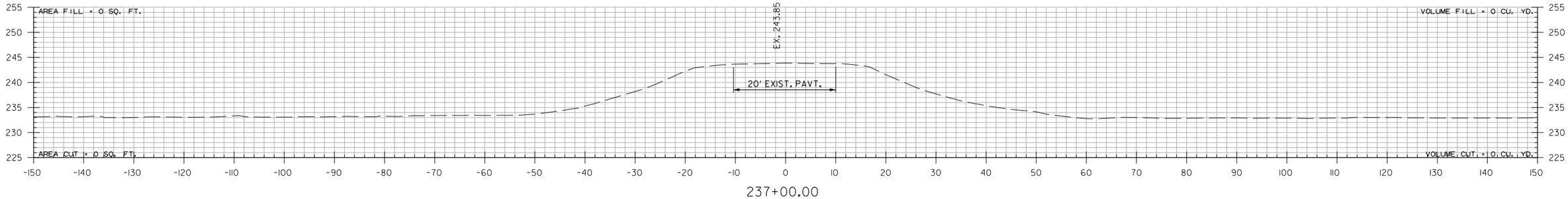

237+00.00

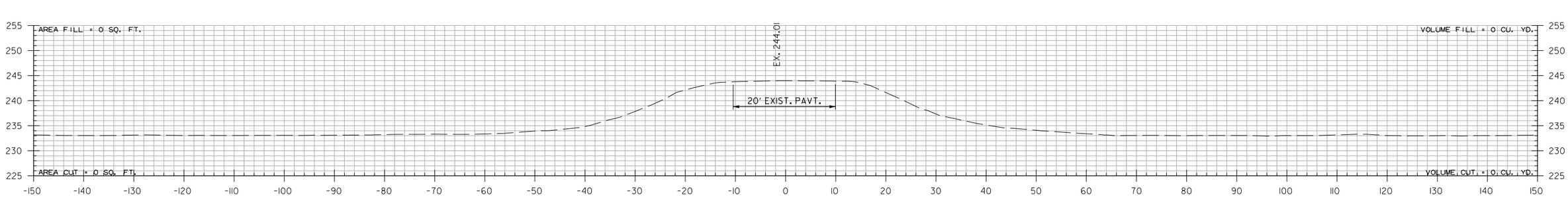

236+25.00

STA. 236+25.00 END 100' TRANSITION

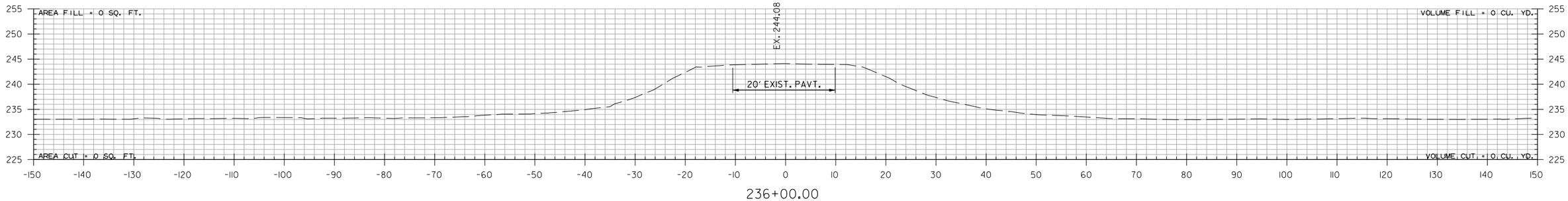

236+00.00

HWY. 77 - SITE 2
STA. 236+00 TO STA. 237+00

PJoseph 8/13/2021 5:27:32 PM
WORKSPACE: AHTD
L:\2017\17017642 - ARDOT Job 100955\Drawings\r100955_CX_Hwy. 77 Site 2.dgn
REVISED DATE:

DATE REVISED	DATE FILMED	DATE REVISED	DATE FILMED	FED.RD. DIST.NO.	STATE	FED.AID PROJ.NO.	SHEET NO.	TOTAL SHEETS
				6	ARK.			
				JOB NO.		100955	277	356
				(2)	CROSS SECTIONS			

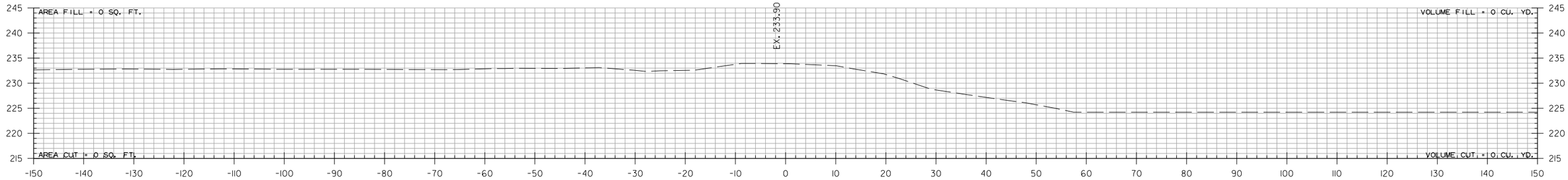

11+00.00

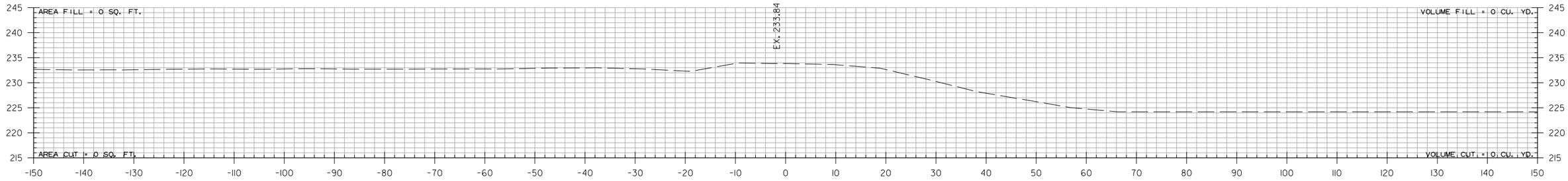

10+40.00

STA. 10+40.00 BEGIN 100' TRANSITION

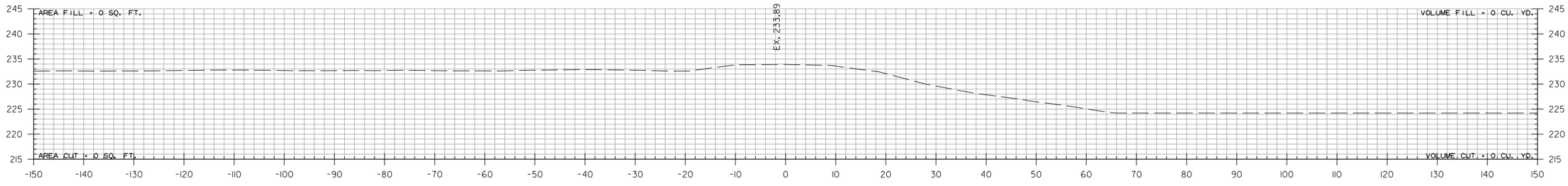

10+00.00

HWY. 158 CONNECTOR
STA. 10+00 TO STA. 11+00

PJoseph 8/13/2021 5:27:35 PM
WORKSPACE: AHTD
L:\2017\17017642 - ARDOT Job 100955\Drawings\r100955_CX_158 Connector.dgn
REVISED DATE:

DATE REVISED	DATE FILMED	DATE REVISED	DATE FILMED

FED.RD. DIST.NO.	STATE	FED.AID PROJ.NO.	SHEET NO.	TOTAL SHEETS
6	ARK.			
JOB NO.		100955	278	356

(2) CROSS SECTIONS

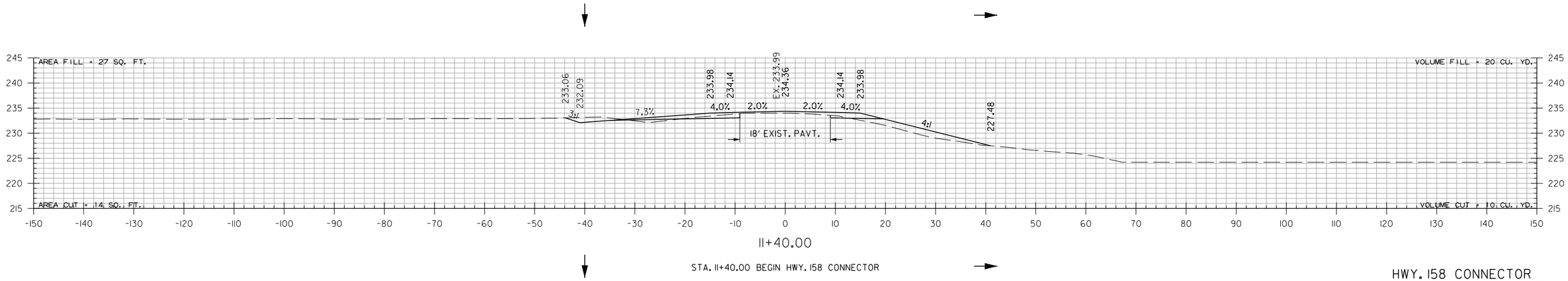

11+40.00

STA. 11+40.00 BEGIN HWY. 158 CONNECTOR

HWY. 158 CONNECTOR
STA. 11+40 TO STA. 11+40

PJoseph 8/13/2021 5:27:35 PM
WORKSPACE: AHTD
L:\2017\17017642 - ARDOT Job 100955\Drawings\r100955_CX_158 Connector.dgn
REVISED DATE:

DATE REVISED	DATE FILMED	DATE REVISED	DATE FILMED

FED.RD. DIST.NO.	STATE	FED.AID PROJ.NO.	SHEET NO.	TOTAL SHEETS
6	ARK.			
JOB NO.		100955	279	356
(2)	CROSS SECTIONS			

STA. 14+88.96 END HWY. 158 CONNECTOR

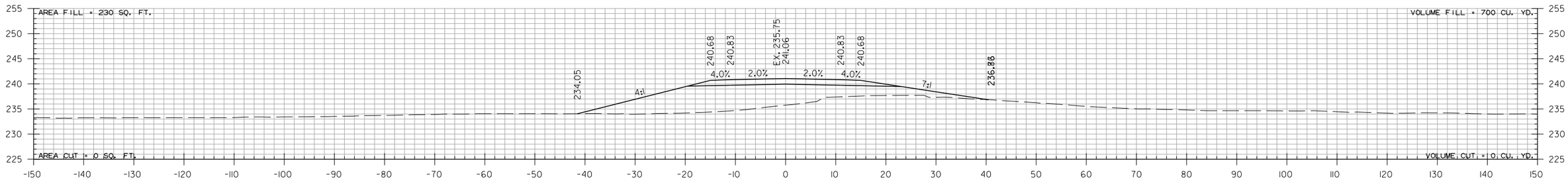

14+00.00

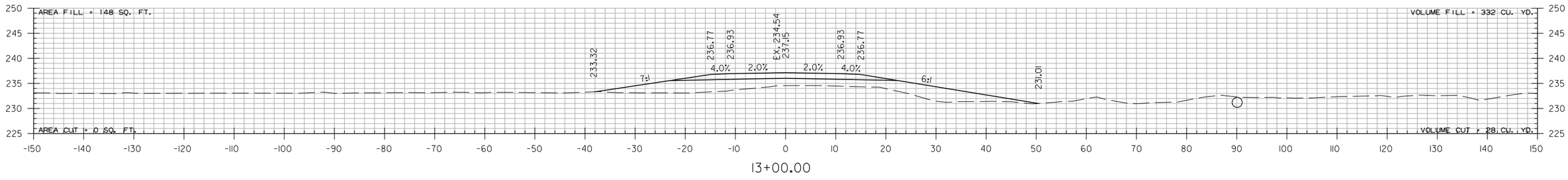

13+00.00

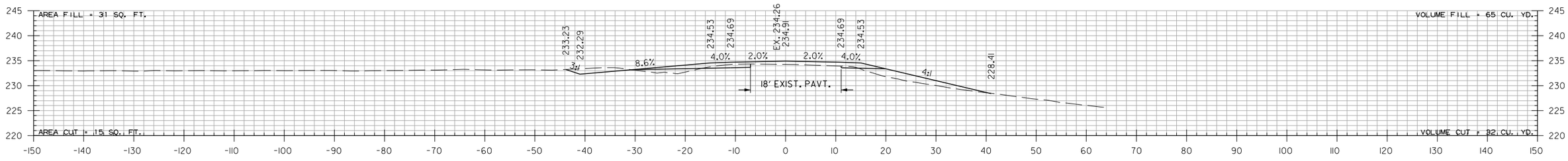

12+00.00

HWY. 158 CONNECTOR
STA. 12+00 TO STA. 14+00

PJoseph 8/13/2021 5:27:36 PM
WORKSPACE: AHTD
L:\2017\170176\42 - ARDOT Job 100955\Drawings\r100955_CX_158 Connector.dgn
REVISED DATE:

DATE REVISED	DATE FILMED	DATE REVISED	DATE FILMED	FED.RD. DIST.NO.	STATE	FED.AID PROJ.NO.	SHEET NO.	TOTAL SHEETS
01-05-2022				6	ARK.			
				JOB NO.		100955	280	356
				(2)		CROSS SECTIONS		

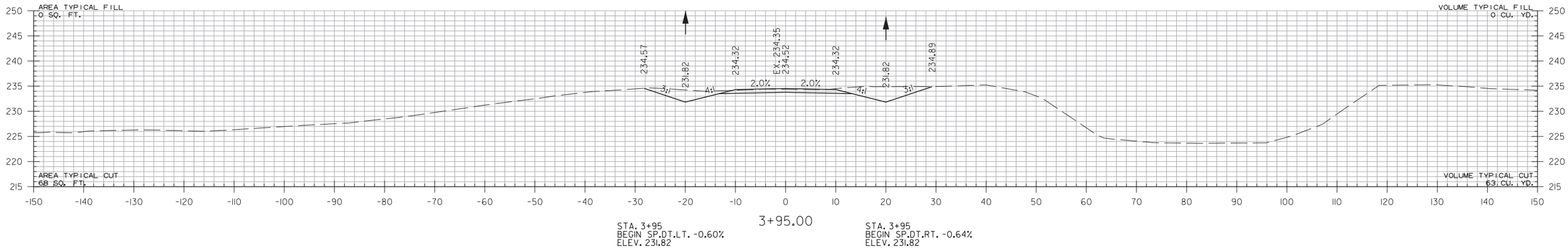

3+95.00

STA. 3+95
BEGIN SP.DT.LT. -0.60%
ELEV. 231.82

STA. 3+95
BEGIN SP.DT.RT. -0.64%
ELEV. 231.82

STA. 3+95.00 BEGIN C.R. 524

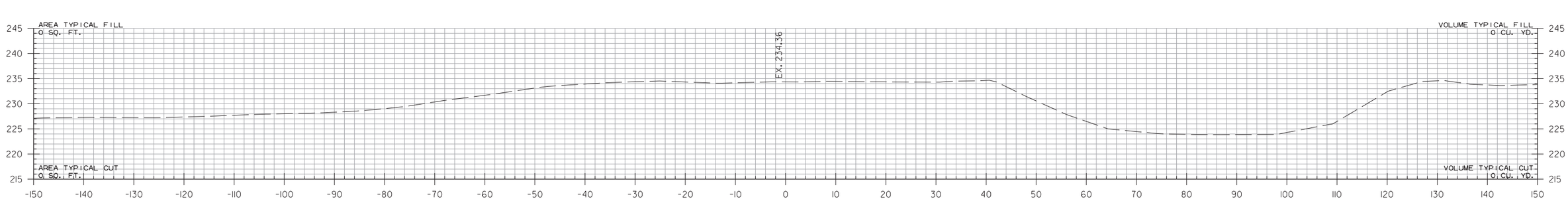

3+45.00

STA. 3+45.00 BEGIN 50' TRANSITION

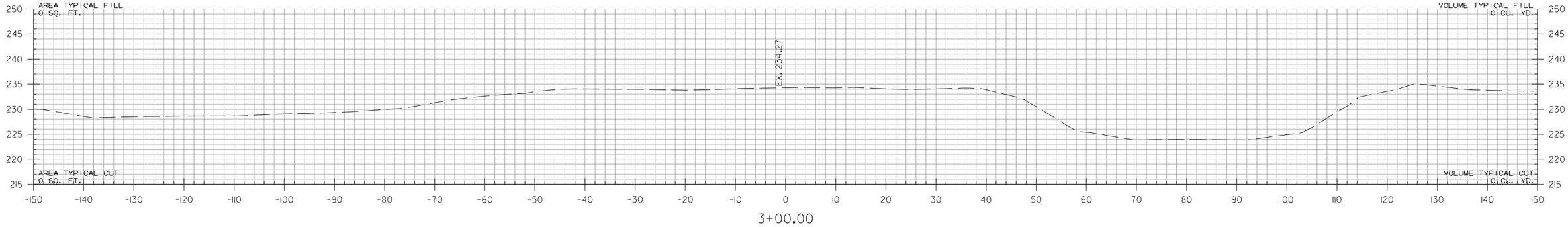

3+00.00

C.R. 524
STA. 3+00 TO STA. 3+95

CGervasini 1/5/2022 1:58:58 PM
WORKSPACE: AHTD
L:\2017\1701642 - ARDOT Job 100955\Drawings\r100955_CX_CR 524.dgn
REVISED DATE:

DATE REVISED	DATE FILMED	DATE REVISED	DATE FILMED
01-05-2022			

FED.RD. DIST.NO.	STATE	FED.AID PROJ.NO.	SHEET NO.	TOTAL SHEETS
6	ARK.			
JOB NO.		100955	281	356

(2) CROSS SECTIONS

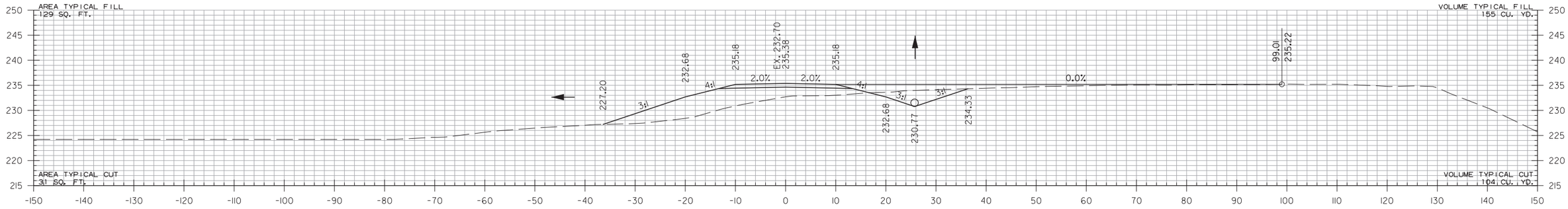

5+60.00

STA. 5+30
END SP.DT.LT. -0.60%
ELEV. 231.01

STA. 5+60 INSTALL
18" X 46' PIPE CULVERT
RT. SIDE DRAIN
CONSTRUCT APPROACH = 28 CU. YDS.

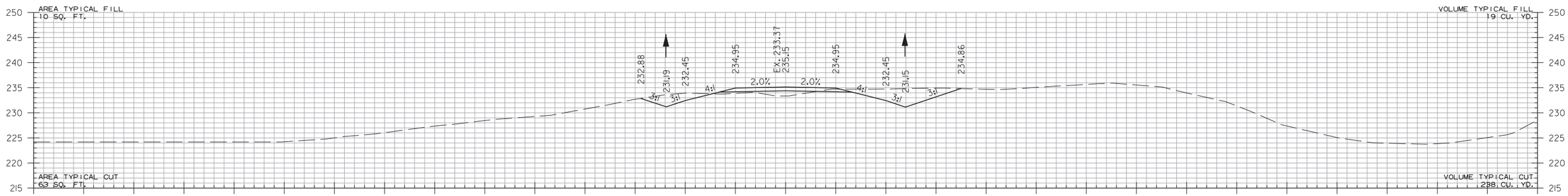

5+00.00

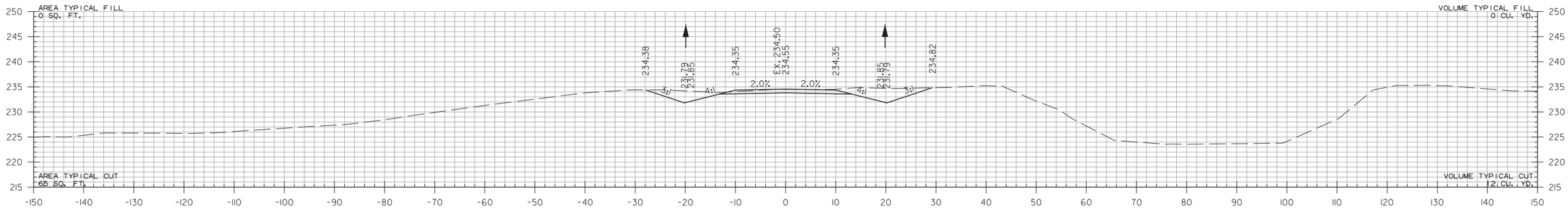

4+00.00

C.R. 524
STA. 4+00 TO STA. 5+60

CGervasini 1/5/2022 11:58:58 PM
WORKSPACE: AHTD
L:\2017\1701642 - ARDOT Job 100955\Drawings\r100955_CX_CR 524.dgn
REVISED DATE:

DATE REVISED	DATE FILMED	DATE REVISED	DATE FILMED
01-05-2022			

FED.RD. DIST.NO.	STATE	FED.AID PROJ.NO.	SHEET NO.	TOTAL SHEETS
6	ARK.			
JOB NO.		100955	282	356
(2)	CROSS SECTIONS			

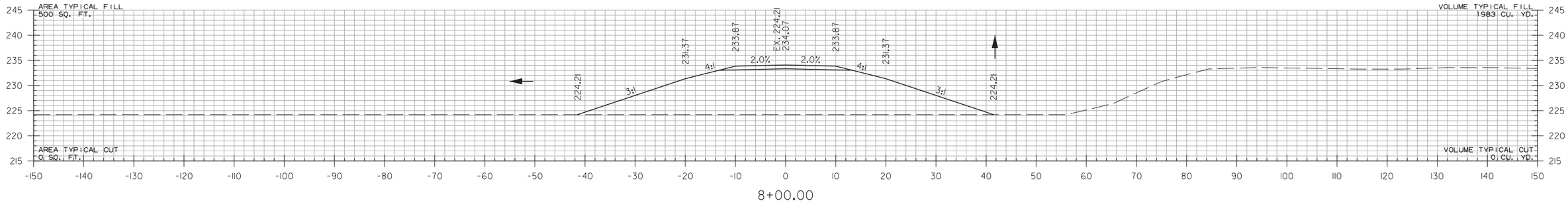

8+00.00

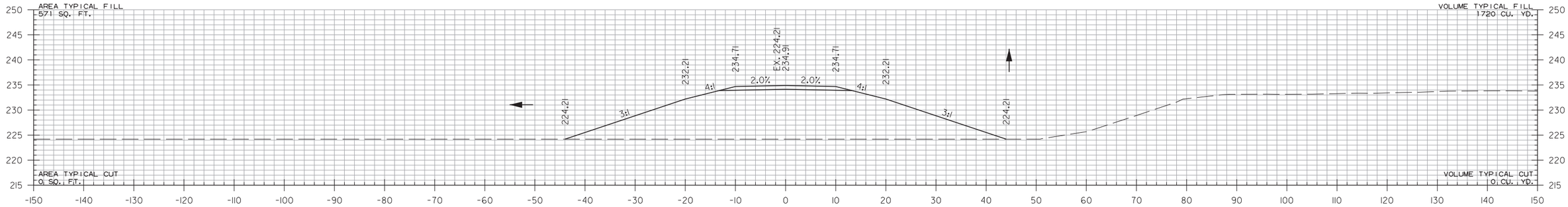

7+00.00

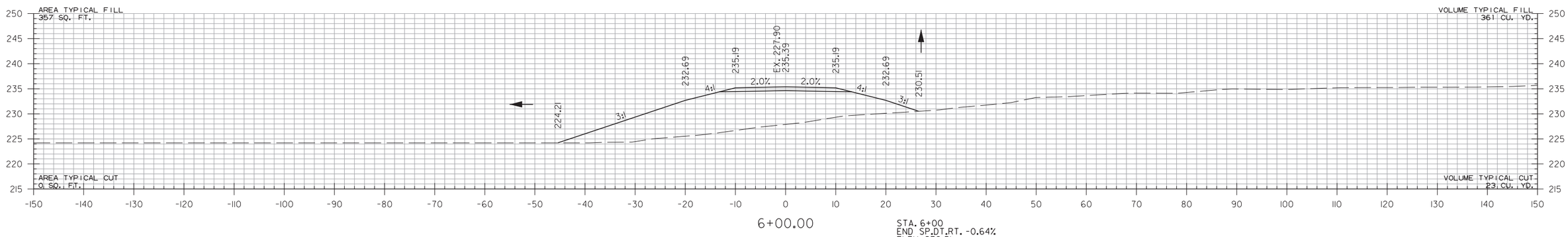

6+00.00

STA. 6+00
END SP.DT.RT. -0.64%
ELEV. 230.51

C.R. 524
STA. 6+00 TO STA. 8+00

CGervosini 1/5/2022 11:58:58 PM
WORKSPACE: AHTD
L:\2017\1701642 - ARDOT Job 100955\Drawings\r100955_CX_CR 524.dgn
REVISED DATE:

DATE REVISED	DATE FILMED	DATE REVISED	DATE FILMED
01-05-2022			

FED.RD. DIST.NO.	STATE	FED.AID PROJ.NO.	SHEET NO.	TOTAL SHEETS
6	ARK.			
JOB NO.		100955	283	356

(2) CROSS SECTIONS

STA. 9+89.00 END C.R. 524

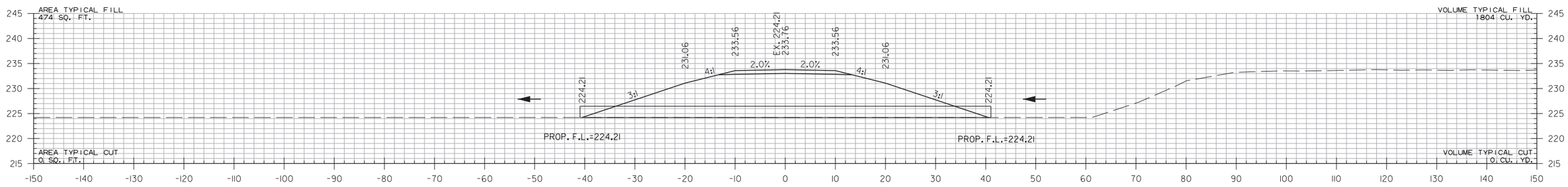

9+00.00

STA. 9+00 INSTALL
24" X 82' PIPE CULVERT
SIDE DRAIN
QI0= 4 CFS D.A.= 2 ACRES

C.R. 524
STA. 9+00 TO STA. 9+00

CGervasini 1/5/2022 I:58:59 PM
WORKSPACE: AHTD
L:\2017\17017642 - ARDOT Job 100955\Drawings\r100955_CX_CR 524.dgn
REVISED DATE:

DATE REVISED	DATE FILMED	DATE REVISED	DATE FILMED

FED.RD. DIST.NO.	STATE	FED.AID PROJ.NO.	SHEET NO.	TOTAL SHEETS
6	ARK.			
JOB NO.		100955	284	356
(2)	CROSS SECTIONS			

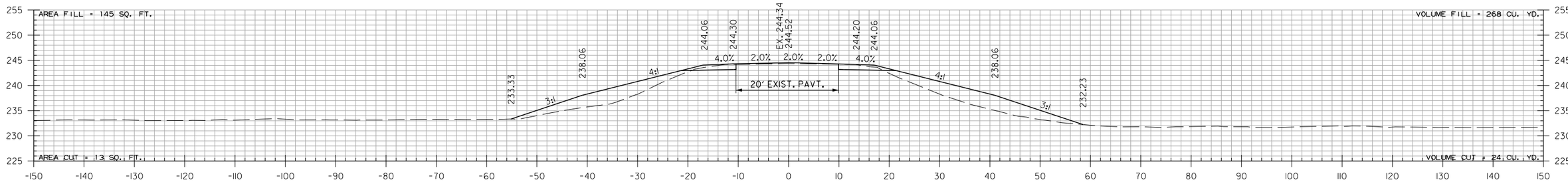

245+00.00

STA. 245+00.00 BEGIN HWY. 77 - SITE 3

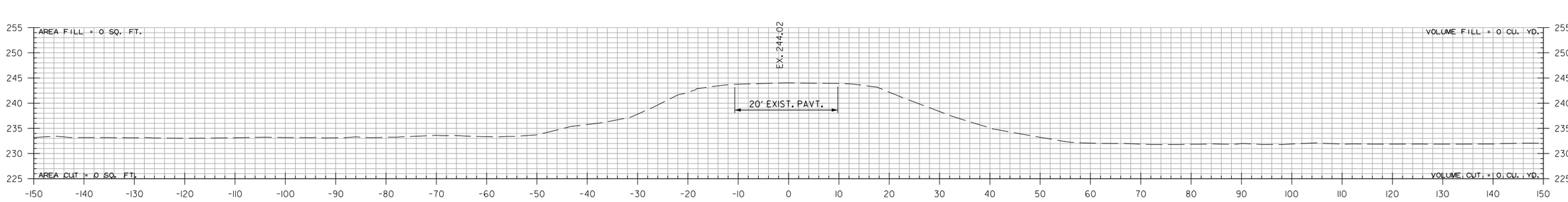

244+00.00

STA. 244+00.00 BEGIN 100' TRANSITION

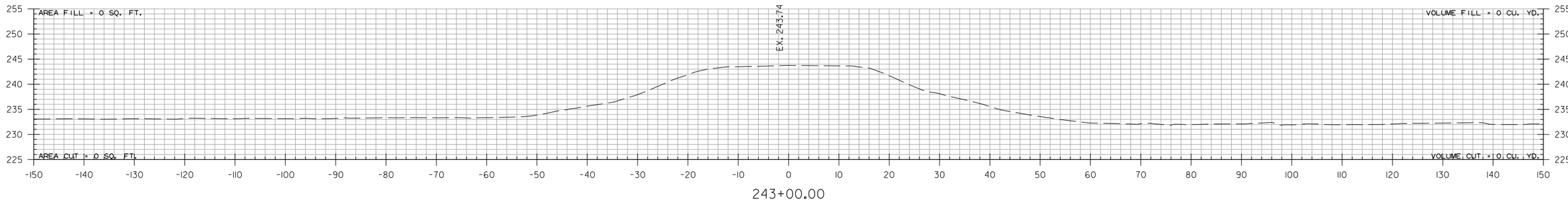

243+00.00

HWY. 77 - SITE 3
STA. 243+00 TO STA. 245+00

PJoseph 8/13/2021 5:27:38 PM
WORKSPACE: AHTD
L:\20177\170176\42 - ARDOT Job 100955\Drawings\r100955_CX_Hwy. 77 Site 3.dgn
REVISED DATE:

DATE REVISED	DATE FILMED	DATE REVISED	DATE FILMED	FED.RD. DIST.NO.	STATE	FED.AID PROJ.NO.	SHEET NO.	TOTAL SHEETS
				6	ARK.			
				JOB NO.		100955	285	356
				(2)		CROSS SECTIONS		

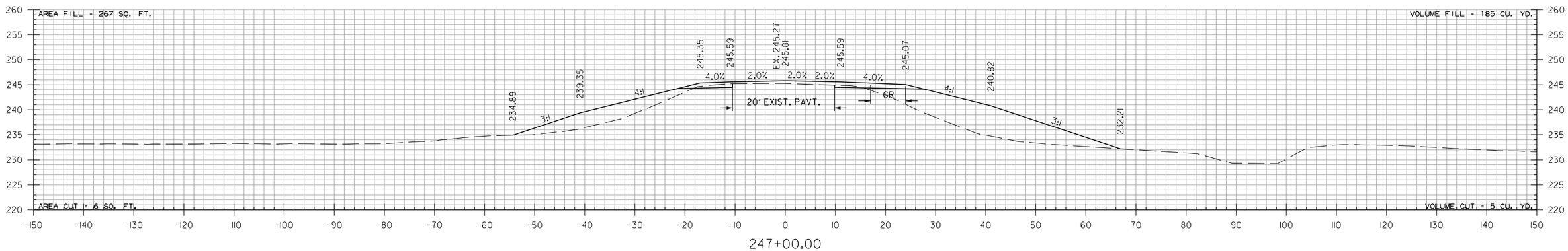

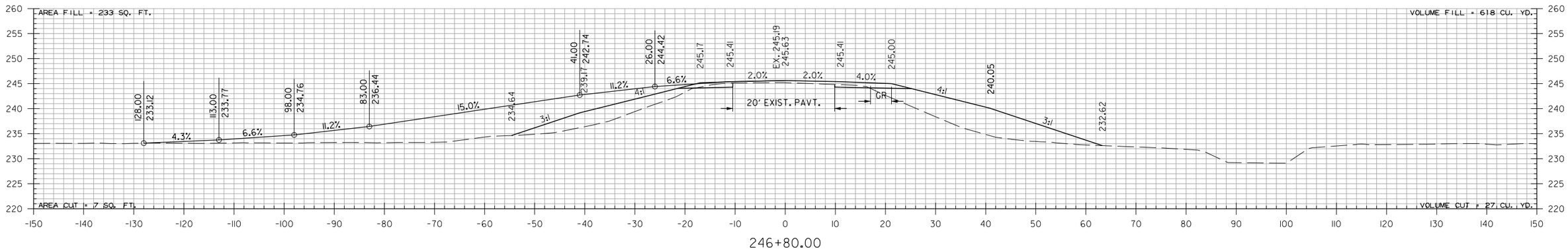

STA. 246+80.00 CONSTRUCT
APPROACH ON LT. = 230 CU. YDS.

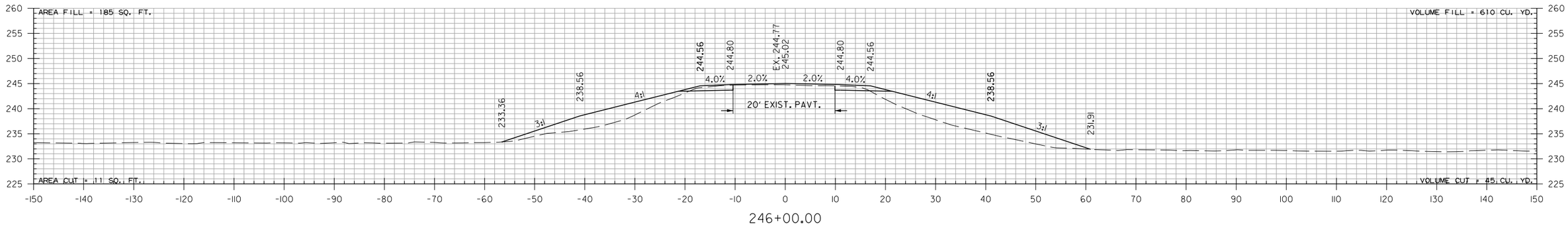

HWY. 77 - SITE 3
STA. 246+00 TO STA. 247+00

PJoseph 8/13/2021 5:27:39 PM
WORKSPACE: AHTD
L:\2017\17017642 - ARDOT Job 100955\Drawings\r100955_CX_Hwy. 77 Site 3.dgn
REVISED DATE:

DATE REVISED	DATE FILMED	DATE REVISED	DATE FILMED	FED.RD. DIST.NO.	STATE	FED.AID PROJ.NO.	SHEET NO.	TOTAL SHEETS
				6	ARK.			
				JOB NO.		100955	286	356
				(2)		CROSS SECTIONS		

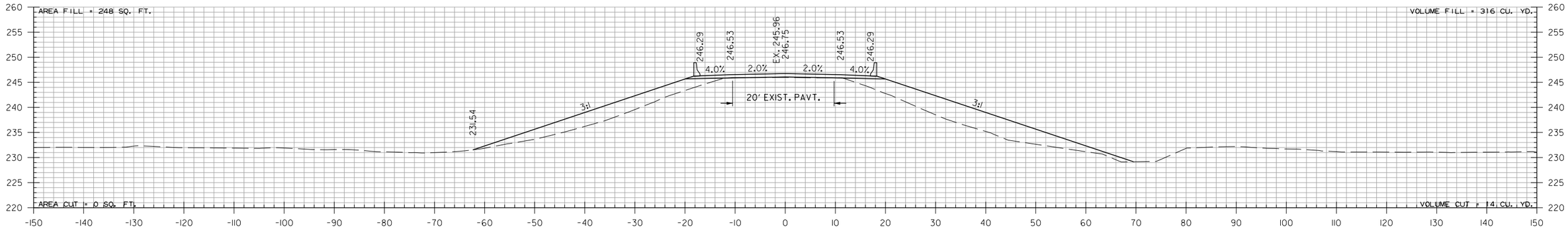

249+33.90

STA. 249+33.90 BEGIN BRIDGE

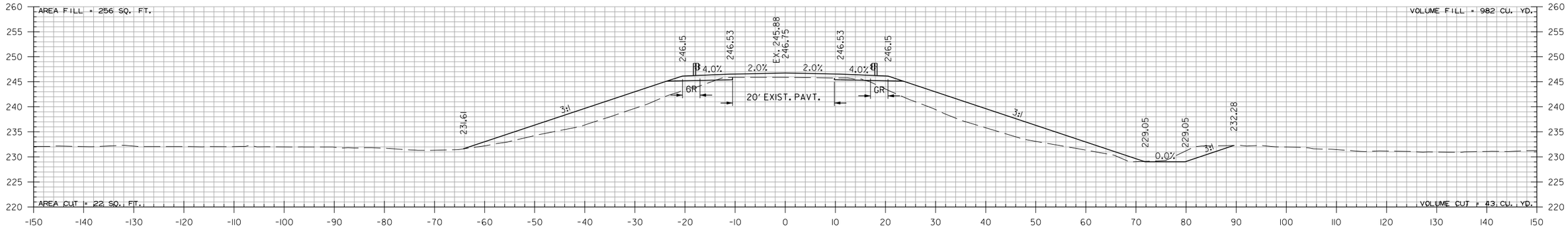

249+00.00

STA. 248+70
BEGIN SP.DT.RT. -0.05%
ELEV. 229.06

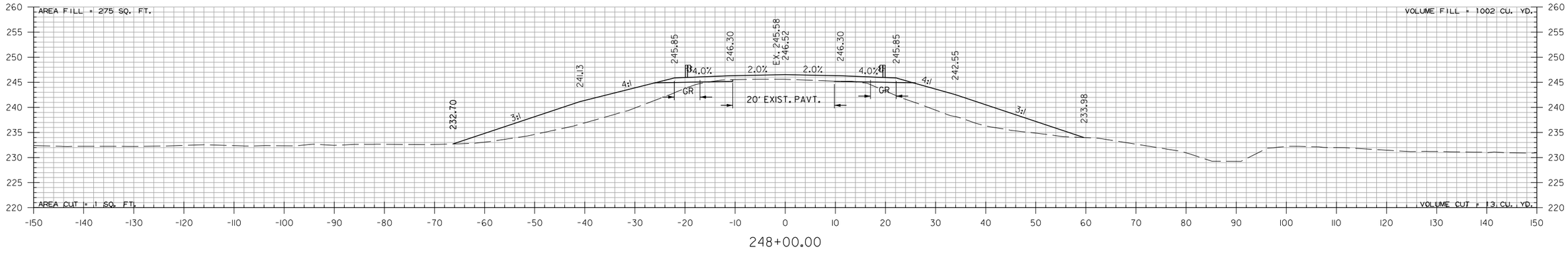

248+00.00

HWY. 77 - SITE 3
STA. 248+00 TO STA. 249+34

PJoseph 8/13/2021 5:27:39 PM
WORKSPACE: AHTD
L:\2017\17017642 - ARDOT Job 100955\Drawings\r100955_CX_Hwy. 77 Site 3.dgn
REVISED DATE:

DATE REVISED	DATE FILMED	DATE REVISED	DATE FILMED	FED.RD. DIST.NO.	STATE	FED.AID PROJ.NO.	SHEET NO.	TOTAL SHEETS
				6	ARK.			
				JOB NO.		100955	287	356
				(2)		CROSS SECTIONS		

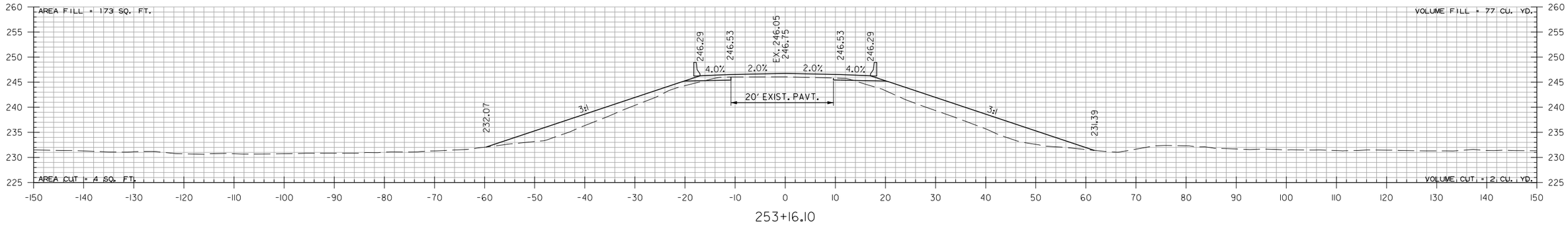

253+16.10

STA. 253+16.10 END BRIDGE

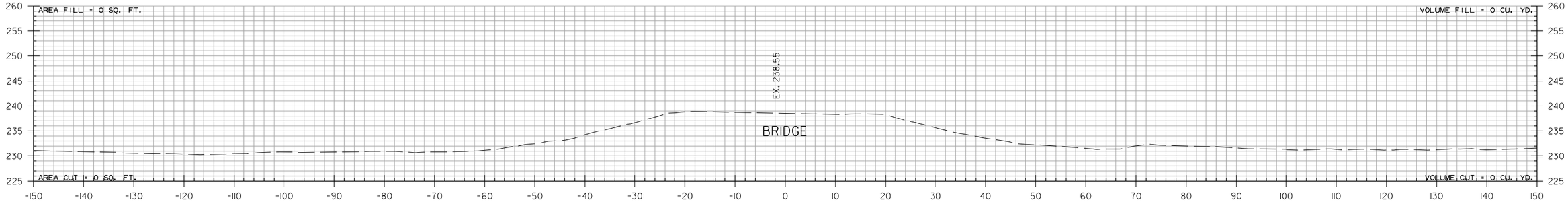

252+91.99

STA. 252+91.99 BEGIN TOE OF SLOPE

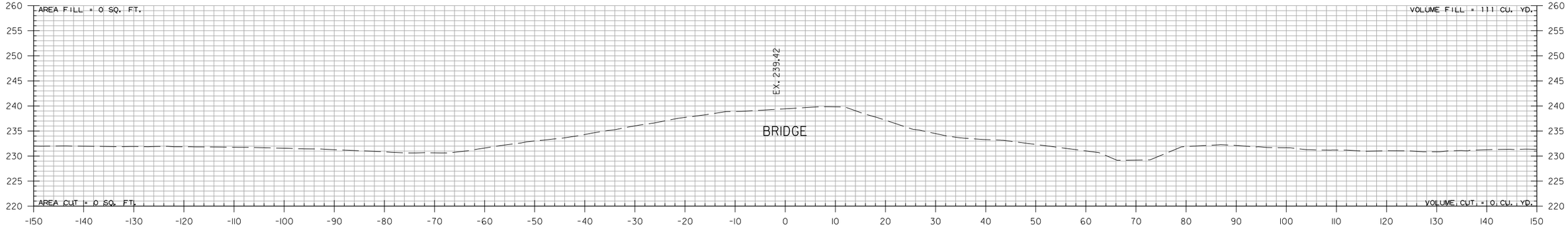

249+58.01

STA. 249+58.01 END TOE OF SLOPE

STA. 249+50
END SP.DT.RT. -0.05%
ELEV. 229.02

HWY. 77 - SITE 3
STA. 249+58 TO STA. 253+16

P.Joseph 8/13/2021 5:27:39 PM
WORKSPACE: AHTD
L:\2017\17017642 - ARDOT Job 100955\Drawings\r100955_CX_Hwy. 77 Site 3.dgn
REVISED DATE:

DATE REVISED	DATE FILMED	DATE REVISED	DATE FILMED	FED.RD. DIST.NO.	STATE	FED.AID PROJ.NO.	SHEET NO.	TOTAL SHEETS
				6	ARK.			
				JOB NO.		100955	288	356
				(2)		CROSS SECTIONS		

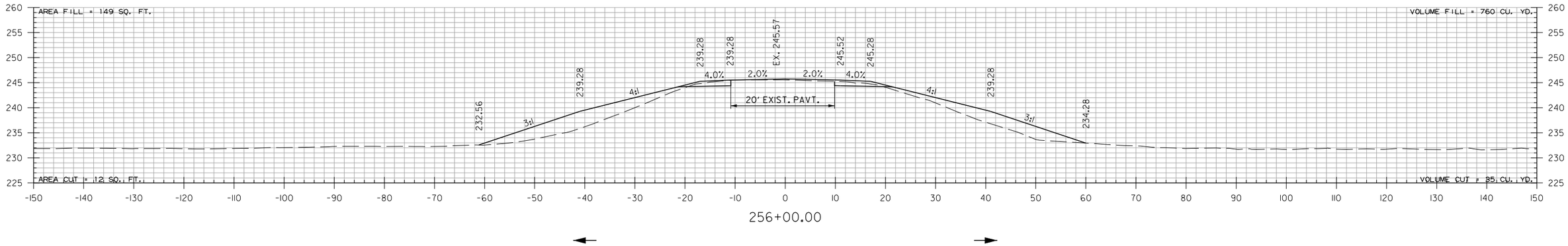

STA. 256+00.00 END HWY. 77 - SITE 3

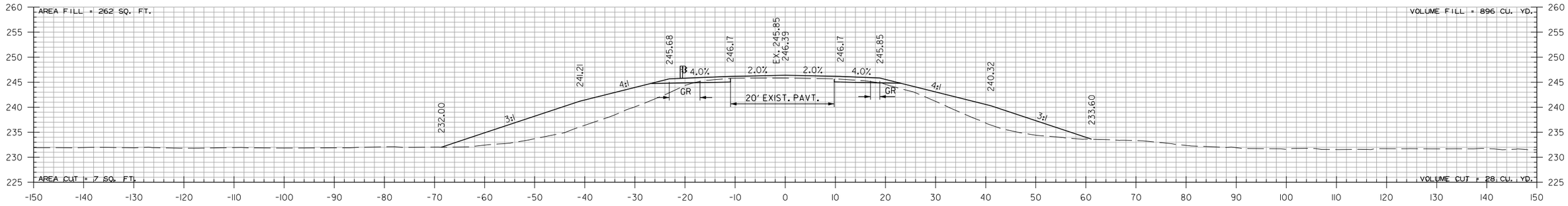

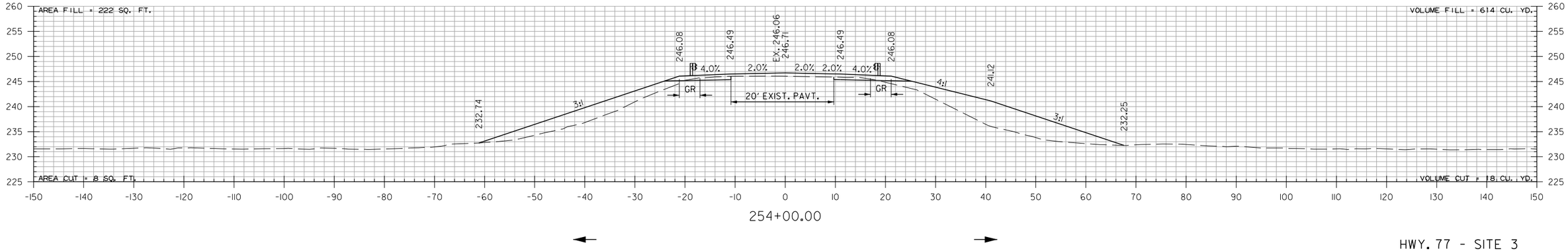

HWY. 77 - SITE 3
STA. 254+00 TO STA. 256+00

PJoseph 8/13/2021 5:27:40 PM
WORKSPACE: AHTD
L:\20\T\T01\7642 - ARDOT Job 100955\Drawings\r100955_CX_Hwy. 77 Site 3.dgn
REVISED DATE:

DATE REVISED	DATE FILMED	DATE REVISED	DATE FILMED

FED.RD. DIST.NO.	STATE	FED.AID PROJ.NO.	SHEET NO.	TOTAL SHEETS
6	ARK.			
JOB NO.		100955	289	356

(2) CROSS SECTIONS

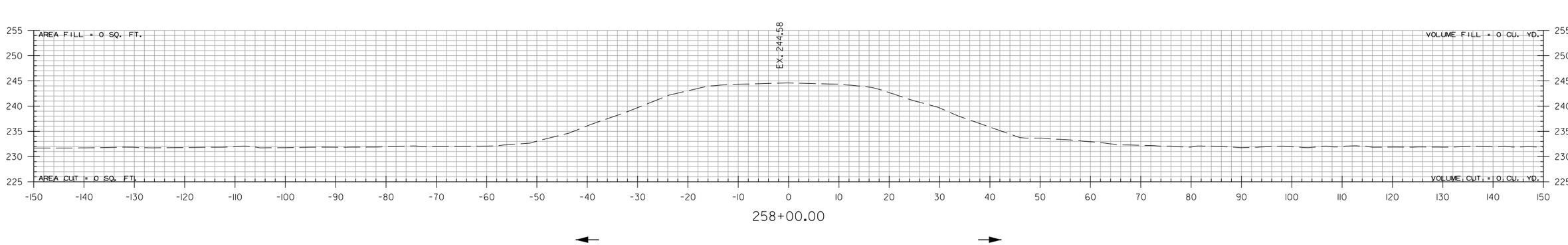

258+00.00

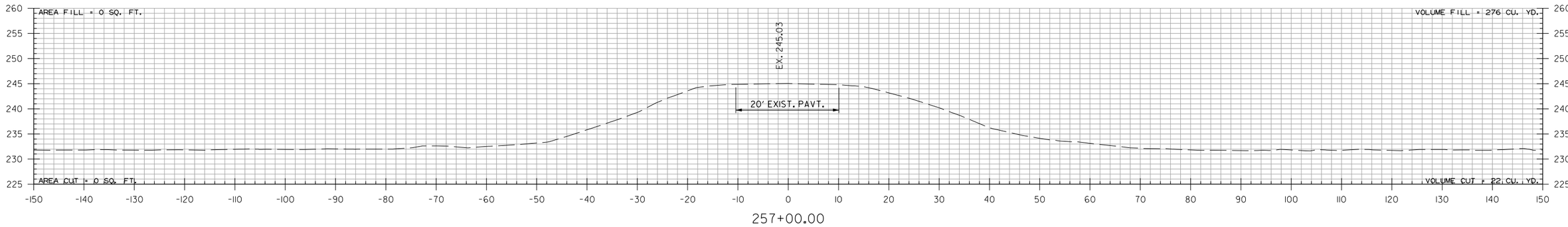

257+00.00

STA. 257+00.00 END 100' TRANSITION

HWY. 77 - SITE 3
STA. 257+00 TO STA. 258+00

Pjoseph 8/13/2021 5:27:40 PM
WORKSPACE: AHTD
L:\2017\170176\42 - ARDOT Job 100955\Drawings\r100955_CX_Hwy. 77 Site 3.dgn
REVISED DATE:

DATE REVISED	DATE FILMED	DATE REVISED	DATE FILMED	FED.RD. DIST.NO.	STATE	FED.AID PROJ.NO.	SHEET NO.	TOTAL SHEETS
				6	ARK.			
				JOB NO.		100955	290	356
				(2)		CROSS SECTIONS		

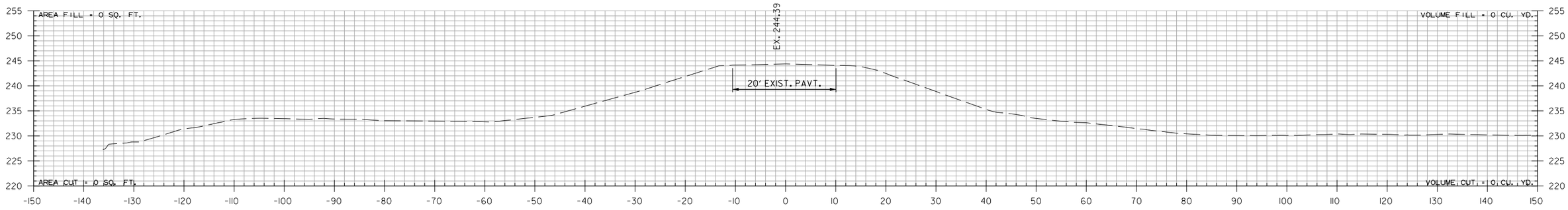

267+00.00

STA. 267+00.00 BEGIN HWY. 77 - SITE 4

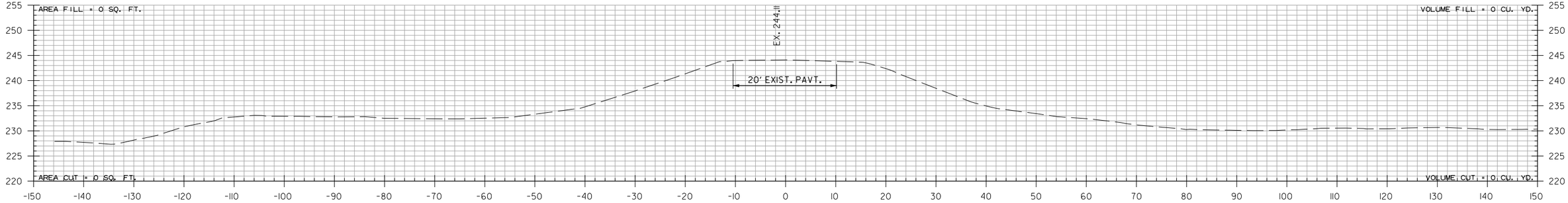

266+00.00

STA. 266+00.00 BEGIN 100' TRANSITION

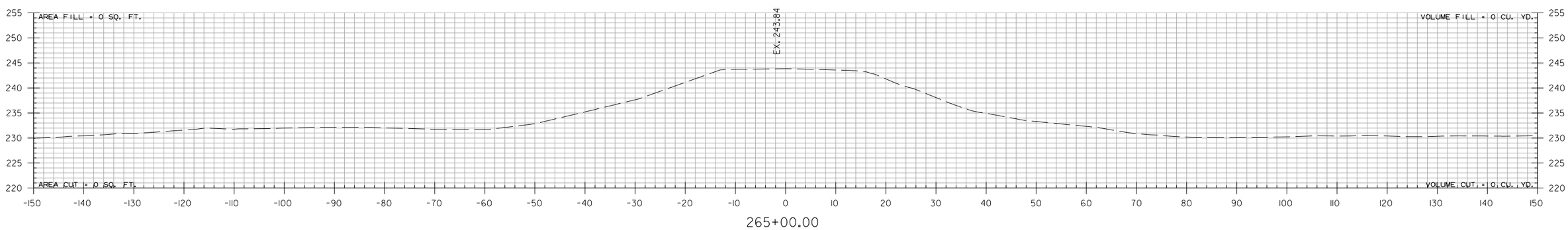

265+00.00

HWY. 77 - SITE 4
STA. 265+00 TO STA. 267+00

PJoseph 8/13/2021 5:27:41 PM
WORKSPACE: AHTD
L:\2017\17017642 - ARDOT Job 100955\Drawings\r100955_CX_Hwy. 77 Site 4.dgn
REVISED DATE:

DATE REVISED	DATE FILMED	DATE REVISED	DATE FILMED	FED.RD. DIST.NO.	STATE	FED.AID PROJ.NO.	SHEET NO.	TOTAL SHEETS
				6	ARK.			
				JOB NO.		100955	291	356
				(2)		CROSS SECTIONS		

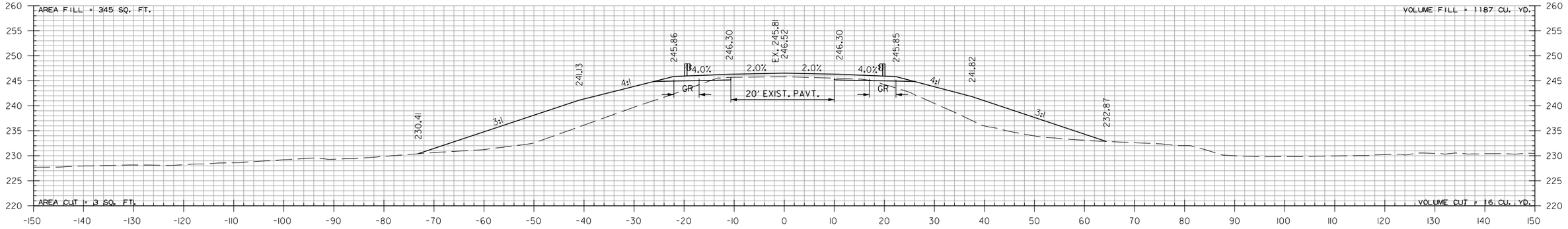

270+00.00

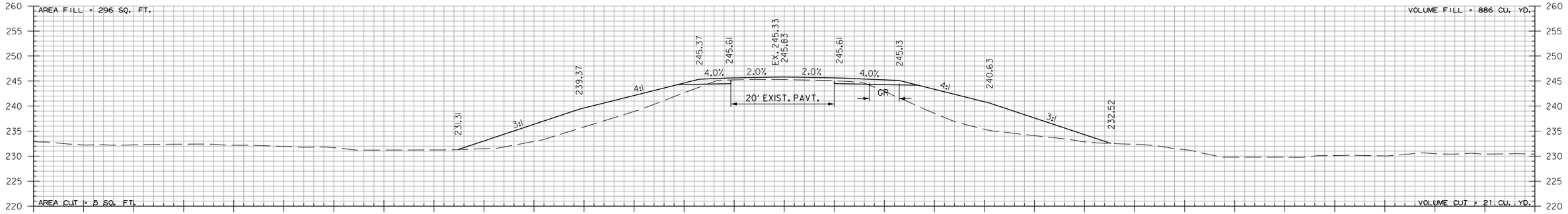

269+00.00

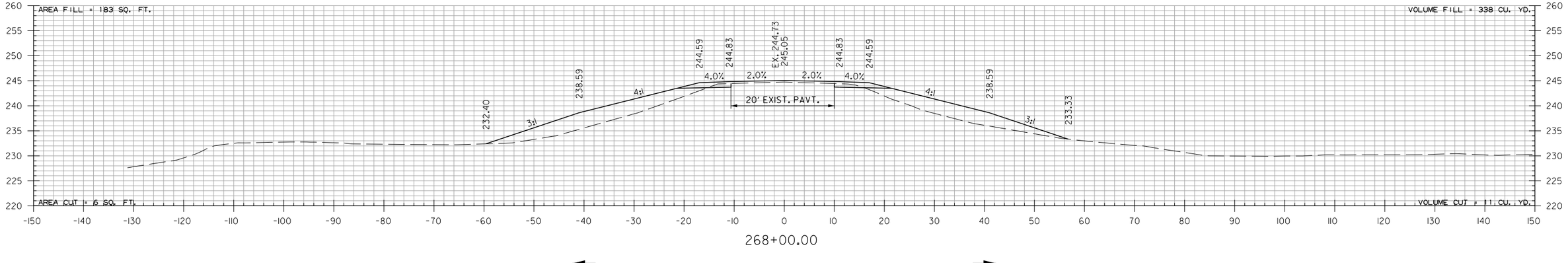

268+00.00

HWY. 77 - SITE 4
STA. 268+00 TO STA. 270+00

PJoseph 8/13/2021 5:27:41 PM
WORKSPACE: AHTD
L:\201\101\7642 - ARDOT Job 100955\Drawings\r100955_CX_Hwy. 77 Site 4.dgn
REVISED DATE:

DATE REVISED	DATE FILMED	DATE REVISED	DATE FILMED	FED.RD. DIST.NO.	STATE	FED.AID PROJ.NO.	SHEET NO.	TOTAL SHEETS
				6	ARK.			
				JOB NO.		100955	292	356
				(2)		CROSS SECTIONS		

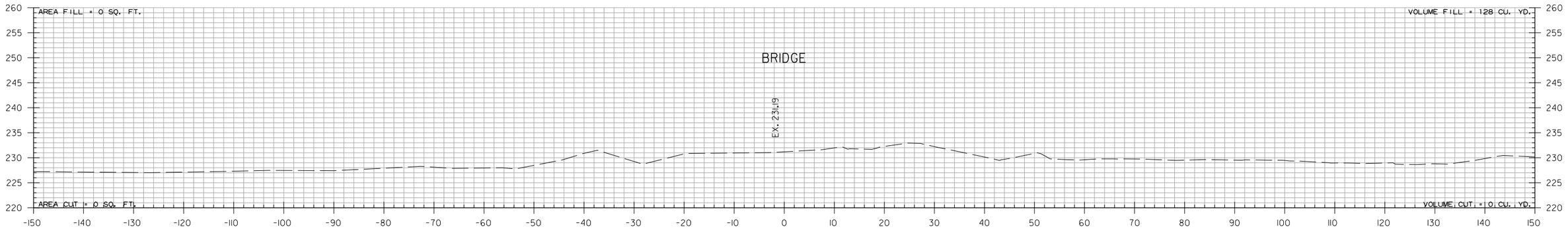

271+66.18

STA. 271+66.18 END TOE OF SLOPE

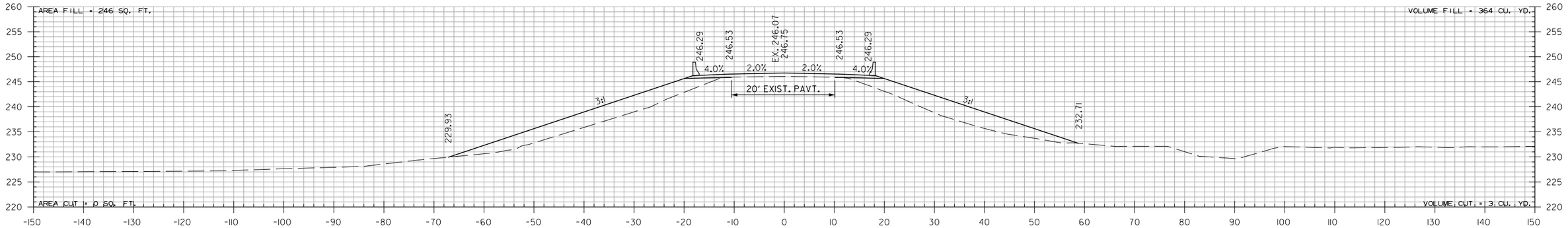

271+38.00

STA. 271+36.87 BEGIN BRIDGE

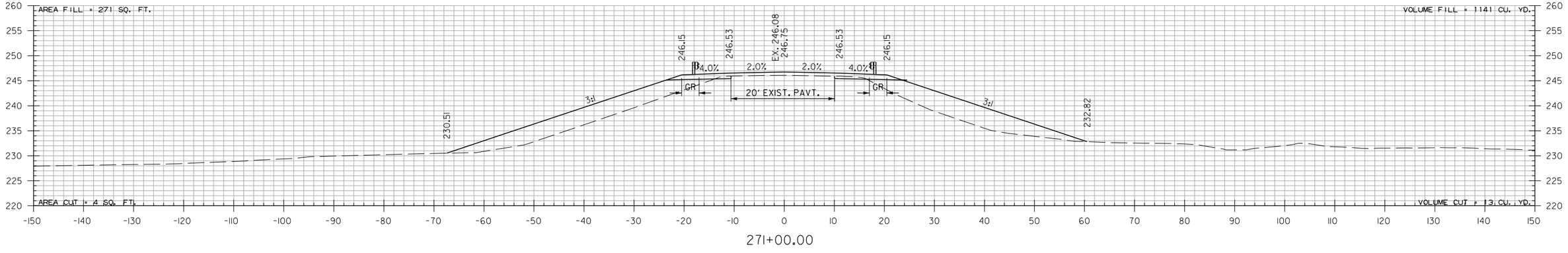

271+00.00

HWY. 77 - SITE 4
STA. 271+00 TO STA. 271+66

PJoseph 8/13/2021 5:27:41 PM
WORKSPACE: AHTD
L:\20\7\101\7642 - ARDOT Job 100955\Drawings\r100955_CX_Hwy. 77 Site 4.dgn
REVISED DATE:

DATE REVISED	DATE FILMED	DATE REVISED	DATE FILMED	FED.RD. DIST.NO.	STATE	FED.AID PROJ.NO.	SHEET NO.	TOTAL SHEETS
				6	ARK.			
				JOB NO.		100955	293	356
				(2)		CROSS SECTIONS		

STA. 272+89.13 END BRIDGE

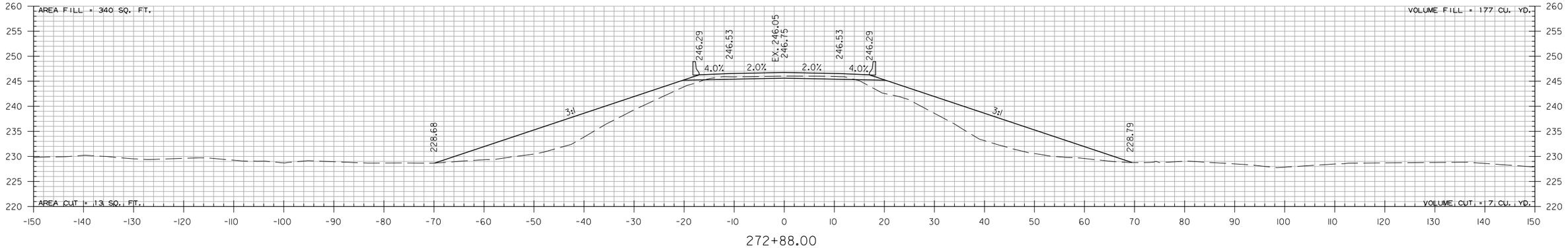

272+88.00

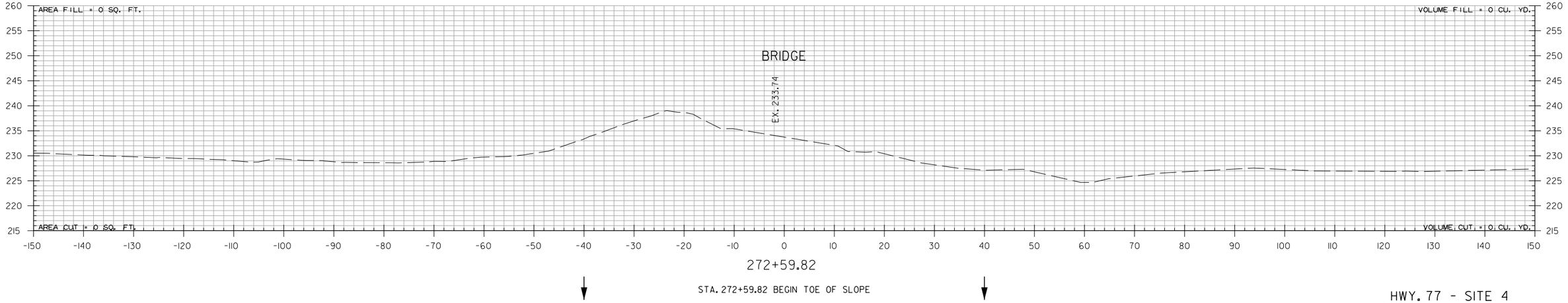

272+59.82

STA. 272+59.82 BEGIN TOE OF SLOPE

HWY. 77 - SITE 4
STA. 272+60 TO STA. 272+88

PJoseph 8/13/2021 5:27:42 PM
WORKSPACE: AHTD
L:\2017\17017642 - ARDOT Job 100955\Drawings\r100955_CX_Hwy. 77 Site 4.dgn
REVISED DATE:

DATE REVISED	DATE FILMED	DATE REVISED	DATE FILMED	FED.RD. DIST.NO.	STATE	FED.AID PROJ.NO.	SHEET NO.	TOTAL SHEETS
				6	ARK.			
				JOB NO.		100955	294	356
				(2)		CROSS SECTIONS		

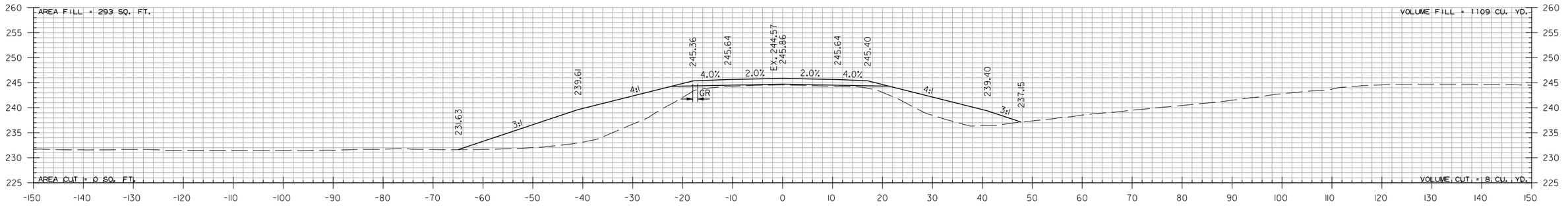

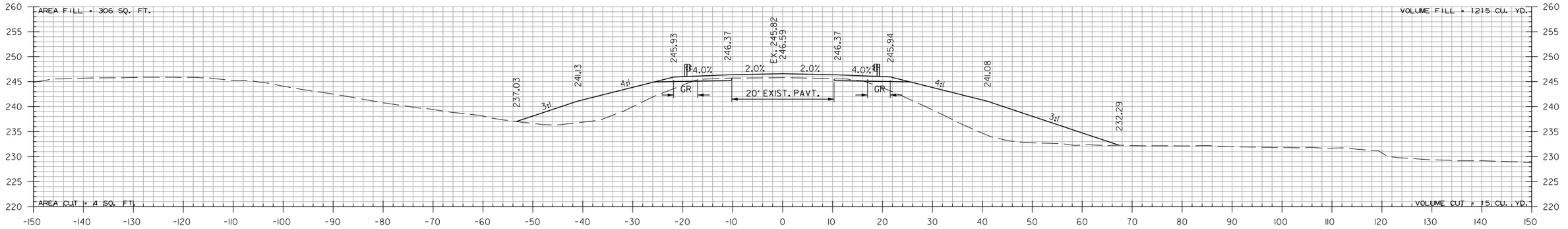

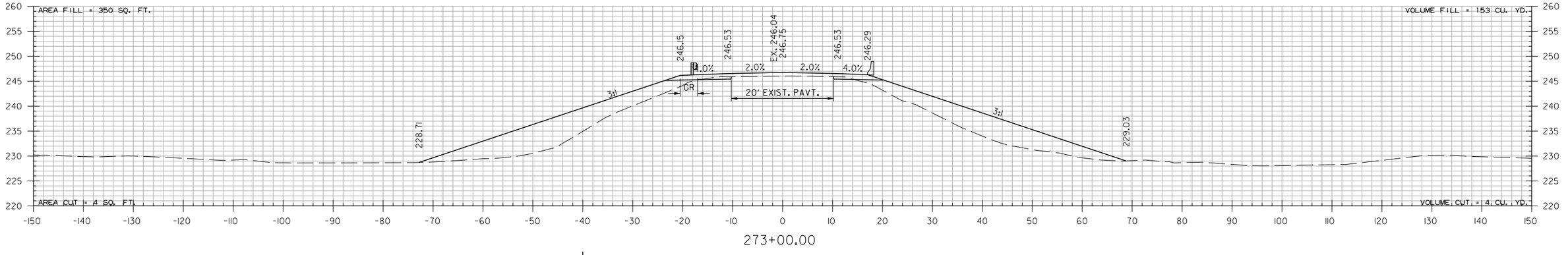

HWY. 77 - SITE 4
STA. 273+00 TO STA. 275+00

PJoseph 8/13/2021 5:27:42 PM
WORKSPACE: AHTD
L:\20\T\T01\7642 - ARDOT Job 100955\Drawings\r100955_CX_Hwy. 77 Site 4.dgn
REVISED DATE:

DATE REVISED	DATE FILMED	DATE REVISED	DATE FILMED

FED.RD. DIST.NO.	STATE	FED.AID PROJ.NO.	SHEET NO.	TOTAL SHEETS
6	ARK.			
JOB NO.		100955	295	356
(2)	CROSS SECTIONS			

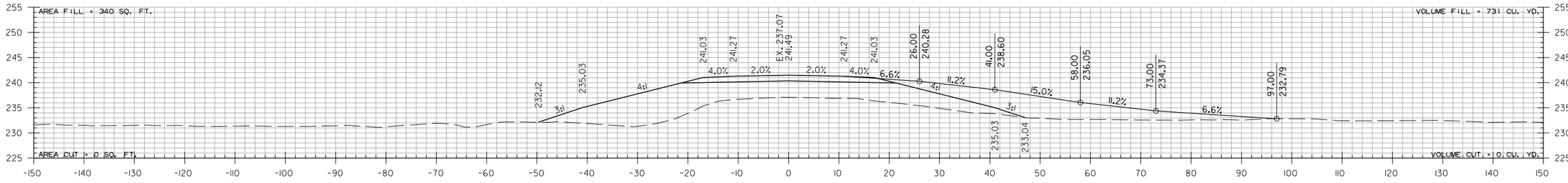

277+50.00

STA. 277+50.00 CONSTRUCT
APPROACH ON RT. = 106 CU. YDS.

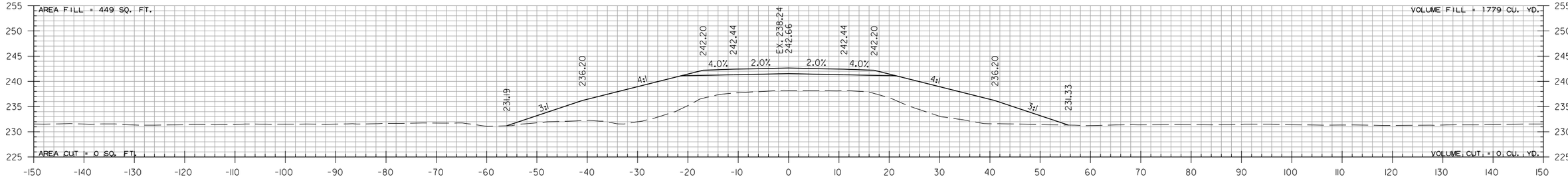

277+00.00

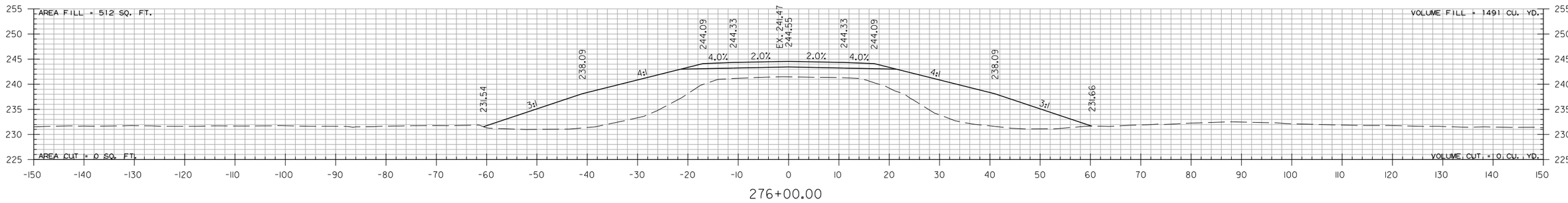

276+00.00

HWY. 77 - SITE 4
STA. 276+00 TO STA. 277+50

PJoseph 8/13/2021 5:27:42 PM
WORKSPACE: AHTD
L:\2017\17017642 - ARDOT Job 100955\Drawings\r100955_CX_Hwy. 77 Site 4.dgn
REVISED DATE:

DATE REVISED	DATE FILMED	DATE REVISED	DATE FILMED

FED.RD. DIST.NO.	STATE	FED.AID PROJ.NO.	SHEET NO.	TOTAL SHEETS
6	ARK.			
JOB NO.		100955	296	356
(2)	CROSS SECTIONS			

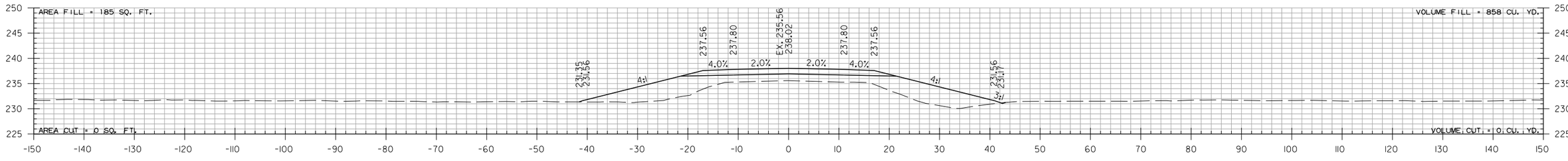

279+00.00

STA. 278+20
BEGIN SP.DT.RT. -0.41%
ELEV. 231.38

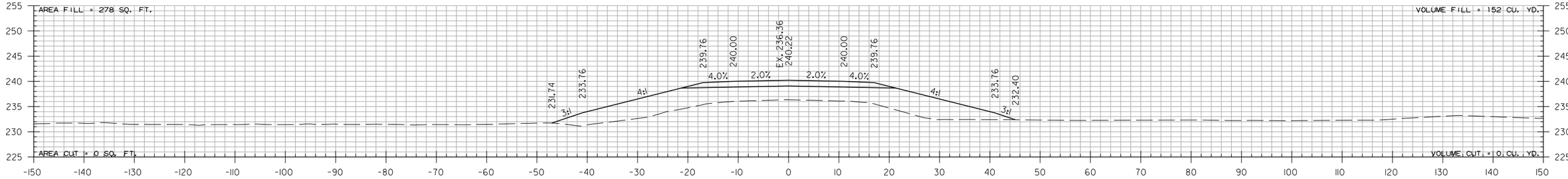

278+00.00

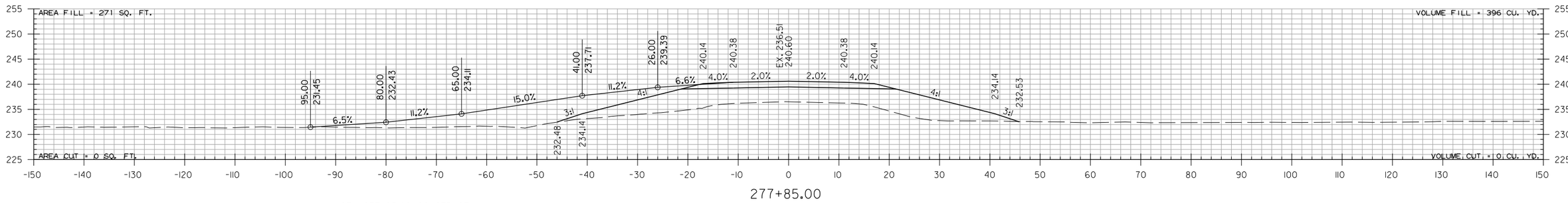

277+85.00

STA. 277+85.00 CONSTRUCT
APPROACH ON LT. = 109 CU. YDS.

HWY. 77 - SITE 4
STA. 277+85 TO STA. 279+00

PJoseph 8/13/2021 5:27:43 PM
WORKSPACE: AHTD
L:\2017\17017642 - ARDOT Job 100955\Drawings\r100955_CX_Hwy. 77 Site 4.dgn
REVISED DATE:

DATE REVISED	DATE FILMED	DATE REVISED	DATE FILMED	FED.RD. DIST.NO.	STATE	FED.AID PROJ.NO.	SHEET NO.	TOTAL SHEETS
				6	ARK.			
				JOB NO.		100955	297	356
				(2)	CROSS SECTIONS			

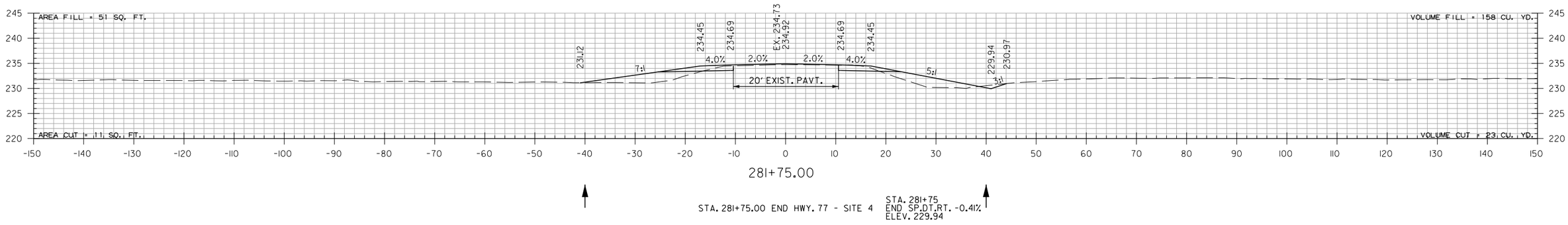

281+75.00

STA. 281+75.00 END HWY. 77 - SITE 4

STA. 281+75
END SP.DT.RT. -0.41%
ELEV. 229.94

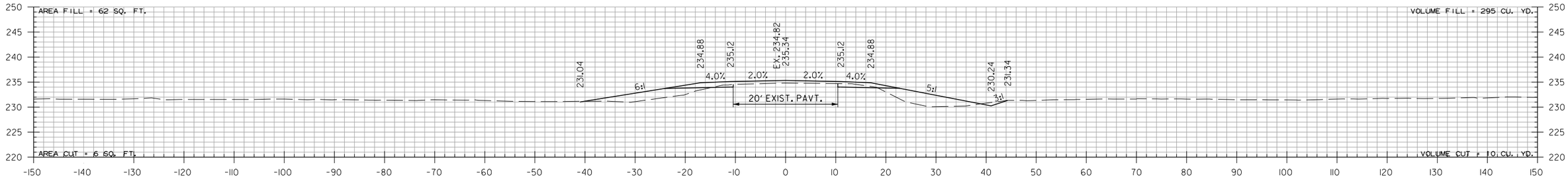

281+00.00

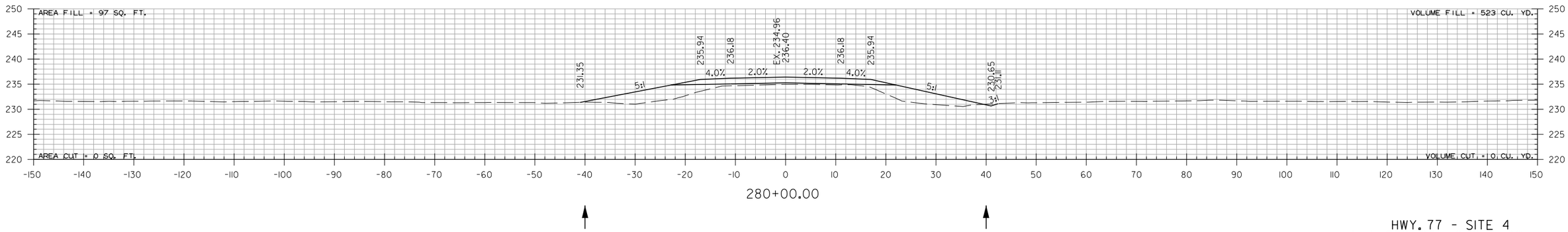

280+00.00

HWY. 77 - SITE 4
STA. 280+00 TO STA. 281+75

PJoseph 8/13/2021 5:27:43 PM
WORKSPACE: AHTD
L:\2017\17017642 - ARDOT Job 100955\Drawings\r100955_CX_Hwy. 77 Site 4.dgn
REVISED DATE:

DATE REVISED	DATE FILMED	DATE REVISED	DATE FILMED

FED.RD. DIST.NO.	STATE	FED.AID PROJ.NO.	SHEET NO.	TOTAL SHEETS
6	ARK.			
JOB NO.		100955	298	356
(2)	CROSS SECTIONS			

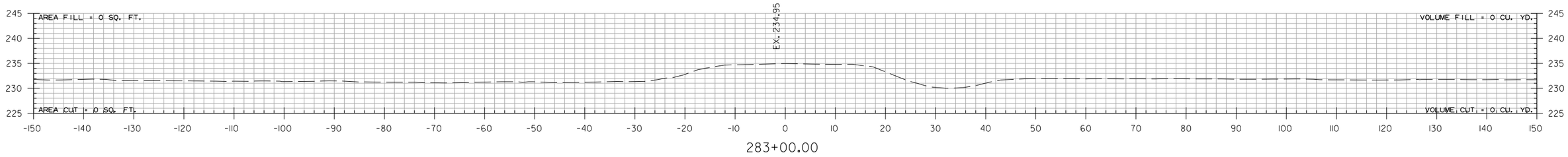

283+00.00

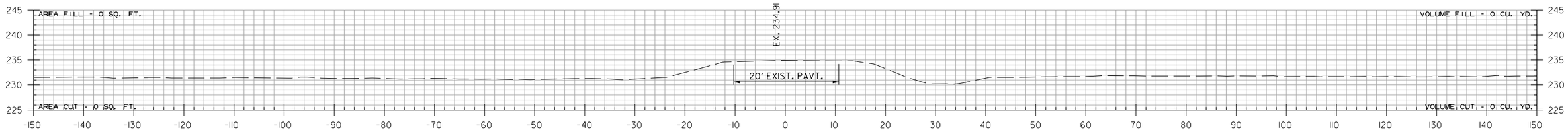

282+75.00

STA. 282+75.00 END 100' TRANSITION

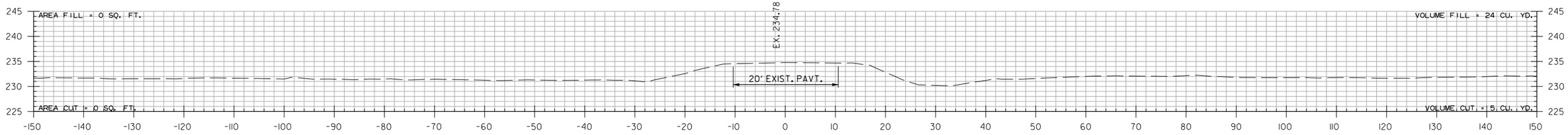

282+00.00

HWY. 77 - SITE 4
STA. 282+00 TO STA. 283+00

PJoseph 8/13/2021 5:27:43 PM
WORKSPACE: AHTD
L:\2017\17017642 - ARDOT Job 100955\Drawings\r100955_CX_Hwy. 77 Site 4.dgn
REVISED DATE:

DATE REVISED	DATE FILMED	DATE REVISED	DATE FILMED

FED.RD. DIST.NO.	STATE	FED.AID PROJ.NO.	SHEET NO.	TOTAL SHEETS
6	ARK.			
JOB NO.		100955	299	356

(2) CROSS SECTIONS

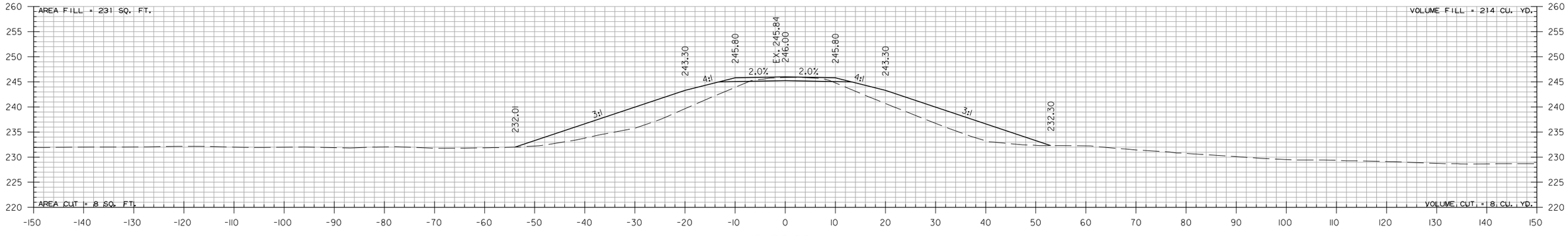

15+90.00

STA. 15+90.00 BEGIN C.R. 538 WEST

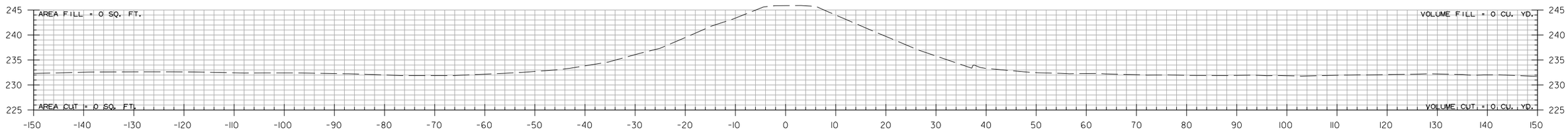

15+40.00

STA. 15+40.00 BEGIN 50' TRANSITION

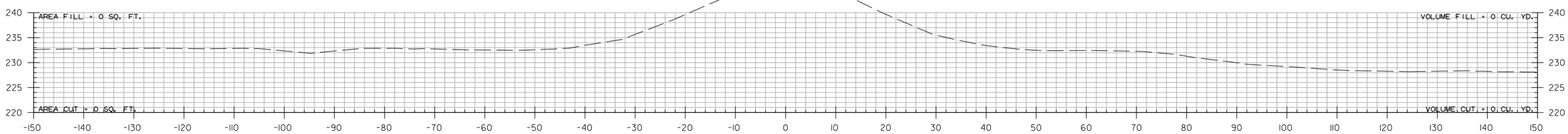

15+00.00

C.R. 538 WEST
STA. 15+00 TO STA. 15+90

PJoseph 8/13/2021 5:27:44 PM
WORKSPACE: AHTD
L:\2017\1701642 - ARDOT Job 100955\Drawings\r100955_CX_CR 538W.dgn
REVISED DATE:

DATE REVISED	DATE FILMED	DATE REVISED	DATE FILMED

FED.RD. DIST.NO.	STATE	FED.AID PROJ.NO.	SHEET NO.	TOTAL SHEETS
6	ARK.			
JOB NO.		100955	300	356

(2) CROSS SECTIONS

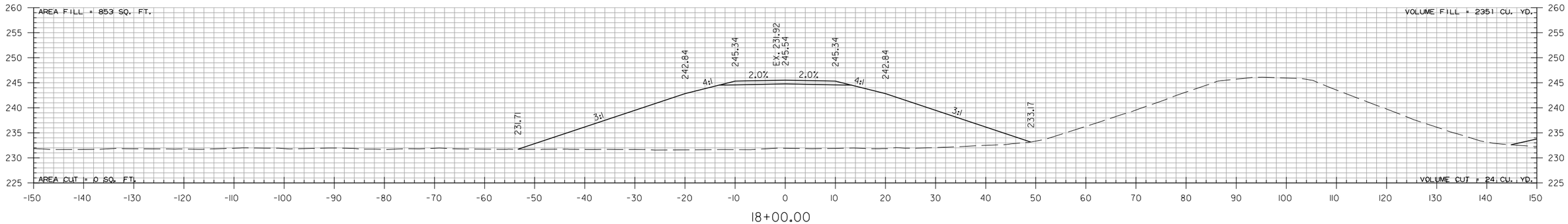

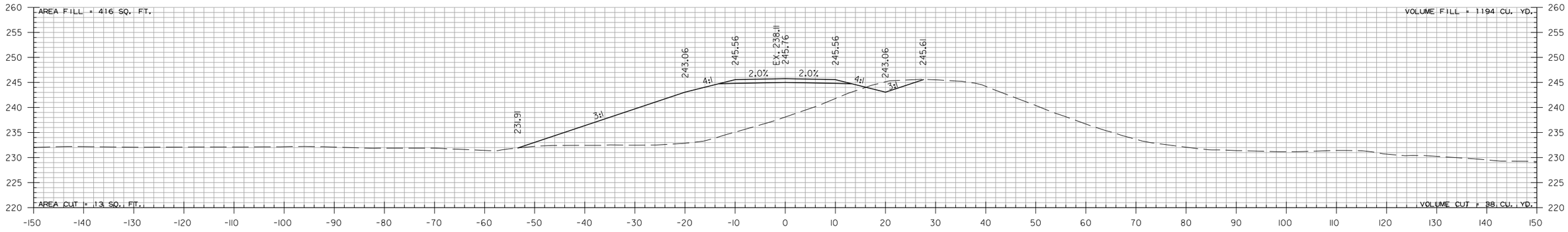

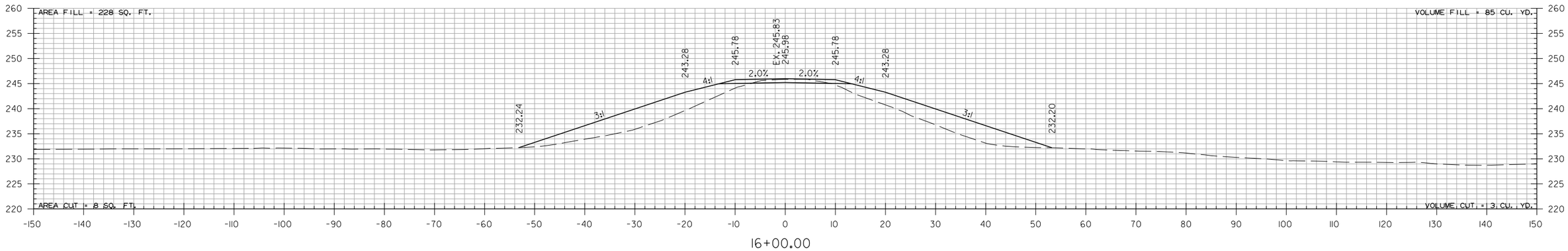

C.R. 538 WEST
STA. 16+00 TO STA. 18+00

PJoseph 8/13/2021 5:27:45 PM
WORKSPACE: AHTD
L:\2017\17017642 - ARDOT Job 100955\Drawings\r100955_CX_CR 538W.dgn
REVISED DATE:

DATE REVISED	DATE FILMED	DATE REVISED	DATE FILMED

FED.RD. DIST.NO.	STATE	FED.AID PROJ.NO.	SHEET NO.	TOTAL SHEETS
6	ARK.			
JOB NO.		100955	301	356

(2) CROSS SECTIONS

STA. 19+89.00 END C.R. 538 WEST

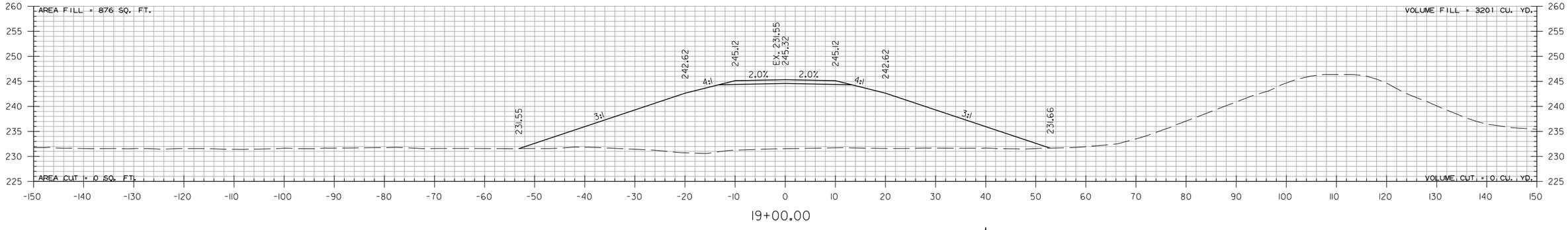

19+00.00

C.R. 538 WEST
STA. 19+00 TO STA. 19+00

PJoseph 8/13/2021 5:27:45 PM
WORKSPACE: AHTD
L:\2017\17017642 - ARDOT Job 100955\Drawings\r100955_CX_CR 538W.dgn
REVISED DATE:

DATE REVISED	DATE FILMED	DATE REVISED	DATE FILMED	FED.RD. DIST.NO.	STATE	FED.AID PROJ.NO.	SHEET NO.	TOTAL SHEETS
				6	ARK.			
				JOB NO.		100955	302	356
				(2)	CROSS SECTIONS			

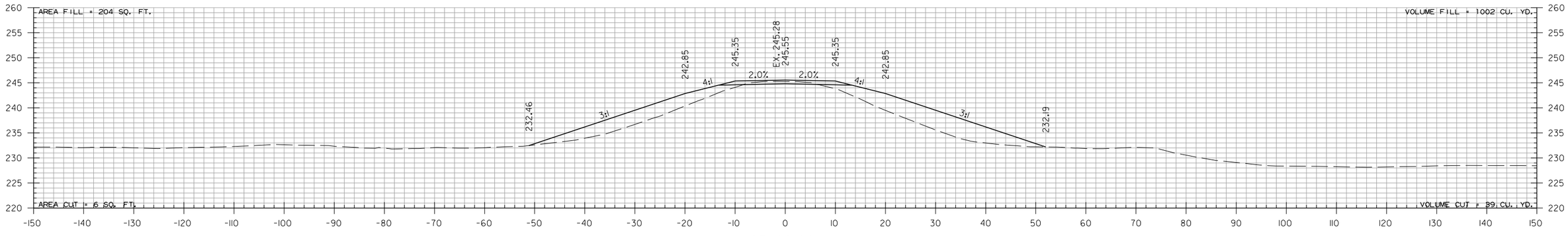

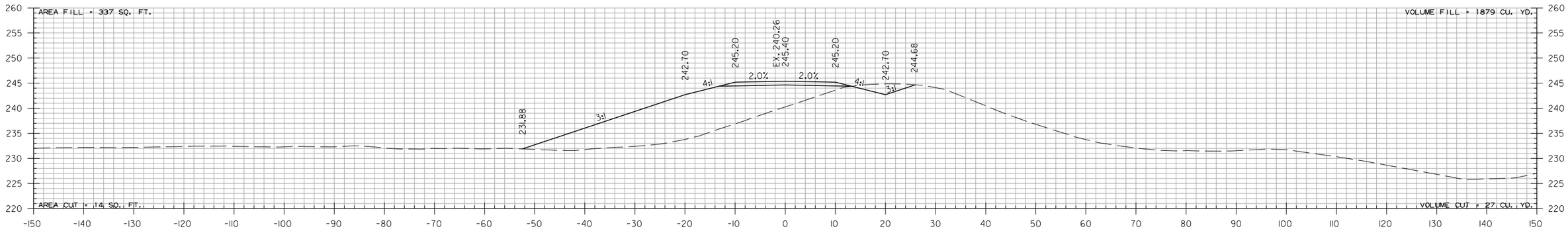

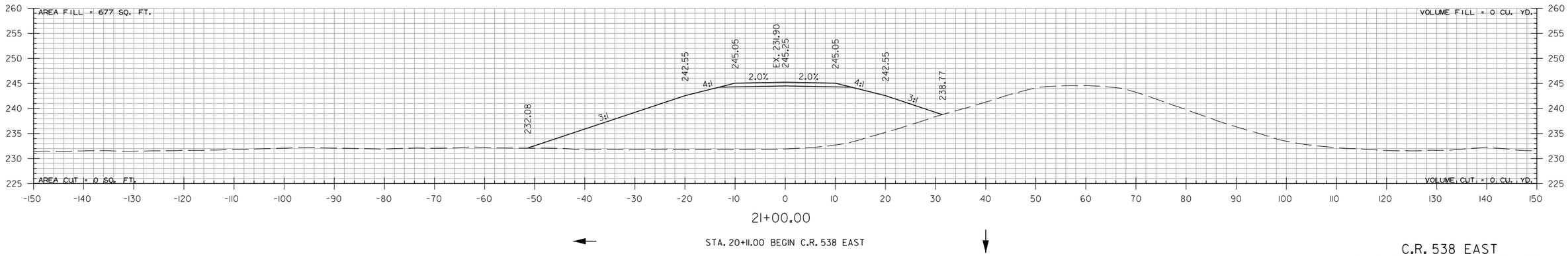

STA. 20+11.00 BEGIN C.R. 538 EAST

C.R. 538 EAST
STA. 21+00 TO STA. 23+00

PJoseph 8/13/2021 5:27:45 PM
WORKSPACE: AHTD
L:\20\7\7017642 - ARDOT Job 100955\Drawings\r100955_CX_CR 538E.dgn
REVISED DATE:

DATE REVISED	DATE FILMED	DATE REVISED	DATE FILMED

FED.RD. DIST.NO.	STATE	FED.AID PROJ.NO.	SHEET NO.	TOTAL SHEETS
6	ARK.			
JOB NO.		100955	303	356

(2) CROSS SECTIONS

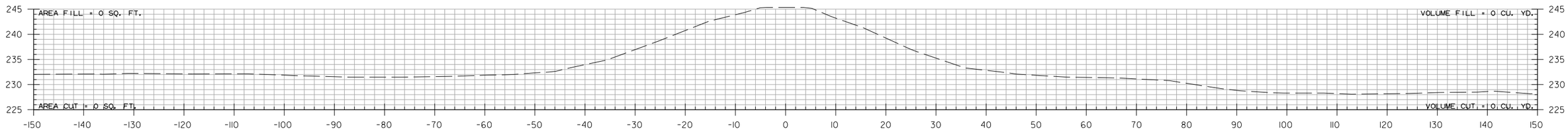

24+00.00

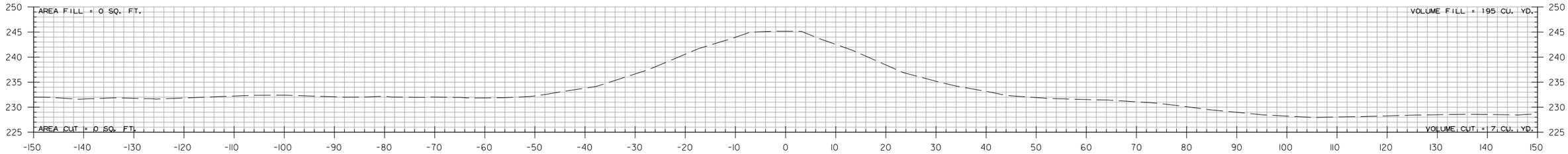

23+70.00

STA. 23+70.00 END 50' TRANSITION

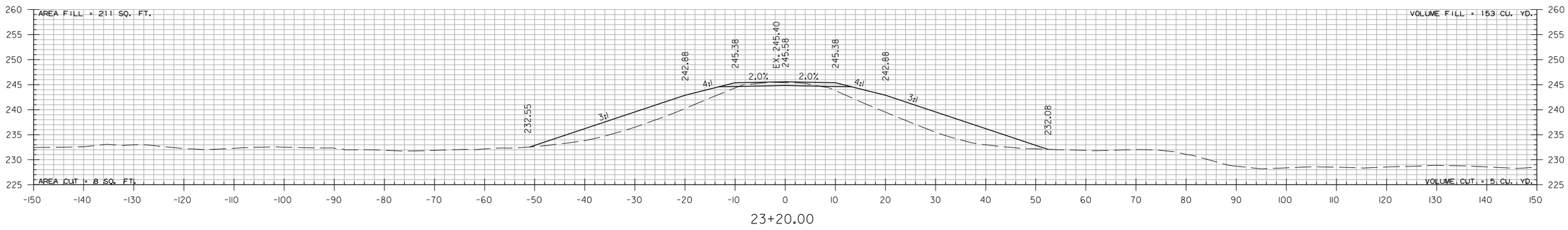

23+20.00

STA. 23+20.00 END C.R. 538 EAST

C.R. 538 EAST
STA. 23+20 TO STA. 24+00

PJoseph 8/13/2021 5:27:46 PM
WORKSPACE: AHTD
L:\2017\17017642 - ARDOT Job 100955\Drawings\r100955_CX_CR 538E.dgn
REVISED DATE:

DATE REVISED	DATE FILMED	DATE REVISED	DATE FILMED	FED.RD. DIST.NO.	STATE	FED.AID PROJ.NO.	SHEET NO.	TOTAL SHEETS
				6	ARK.			
				JOB NO.		100955	304	356

(2) CROSS SECTIONS

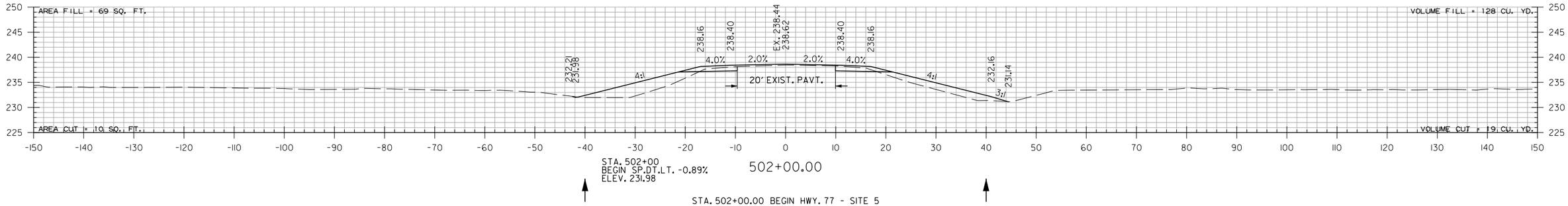

STA. 502+00
BEGIN SP.DT.LT. -0.89%
ELEV. 231.98

502+00.00

STA. 502+00.00 BEGIN HWY. 77 - SITE 5

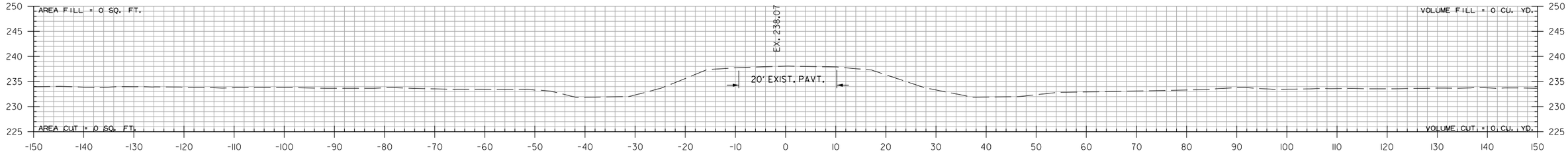

501+00.00

STA. 501+00.00 BEGIN 100' TRANSITION

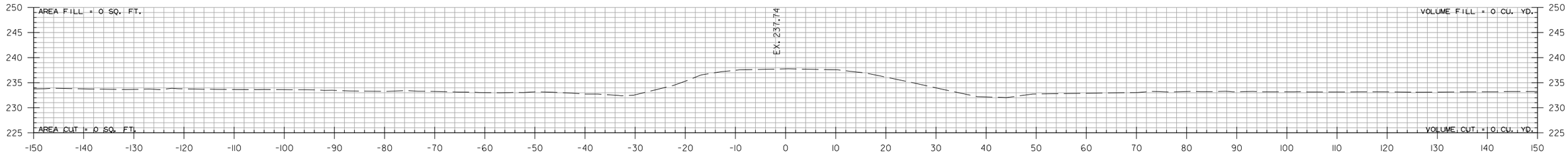

500+00.00

HWY. 77 - SITE 5
STA. 500+00 TO STA. 502+00

PJoseph
8/13/2021 5:27:46 PM
WORKSPACE: AHTD
L:\2017\17017642 - ARDOT Job 100955\Drawings\r100955_CX_Hwy. 77 Site 5.dgn
REVISED DATE:

DATE REVISED	DATE FILMED	DATE REVISED	DATE FILMED	FED.RD. DIST.NO.	STATE	FED.AID PROJ.NO.	SHEET NO.	TOTAL SHEETS
				6	ARK.			
				JOB NO.		100955	305	356
				(2)	CROSS SECTIONS			

STA. 505+09.52 BEGIN SUPERELEVATION

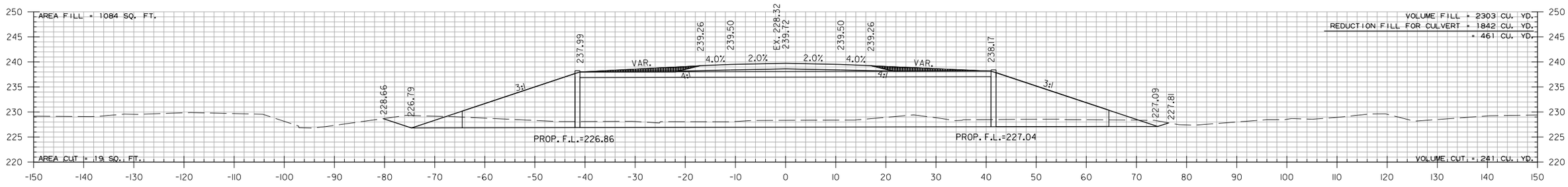

STA. 504+40
END SP.DT.LT. -0.89%
ELEV. 229.84

505+00.00

STA. 504+40
END SP.DT.RT. -0.79%
ELEV. 229.24

STA. 505+00 CONSTRUCT
TRP. 12'X10'X84' R.C. BOX CULVERT
WITH 3:1 WINGS LT. & RT.
Q25 = 626 CFS D.A. = 3518 ACRES
SPAN = 38.75'

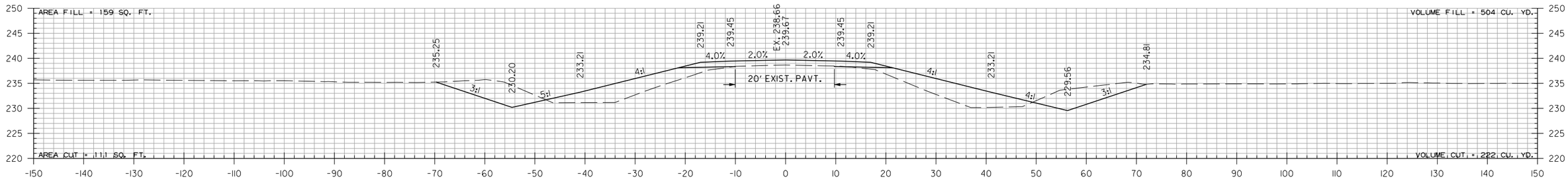

504+00.00

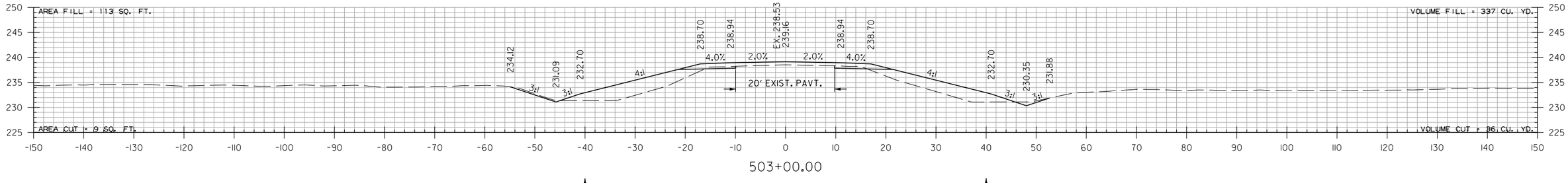

503+00.00

STA. 502+35
BEGIN SP.DT.RT. -0.79%
ELEV. 230.86

HWY. 77 - SITE 5
STA. 503+00 TO STA. 505+00

PJoseph 8/13/2021 5:27:47 PM
WORKSPACE: AHTD
L:\2017\17017642 - ARDOT Job 100955\Drawings\r100955_CX_Hwy. 77 Site 5.dgn
REVISED DATE:

DATE REVISED	DATE FILMED	DATE REVISED	DATE FILMED	FED.RD. DIST.NO.	STATE	FED.AID PROJ.NO.	SHEET NO.	TOTAL SHEETS
				6	ARK.			
				JOB NO.		100955	306	356
				(2)	CROSS SECTIONS			

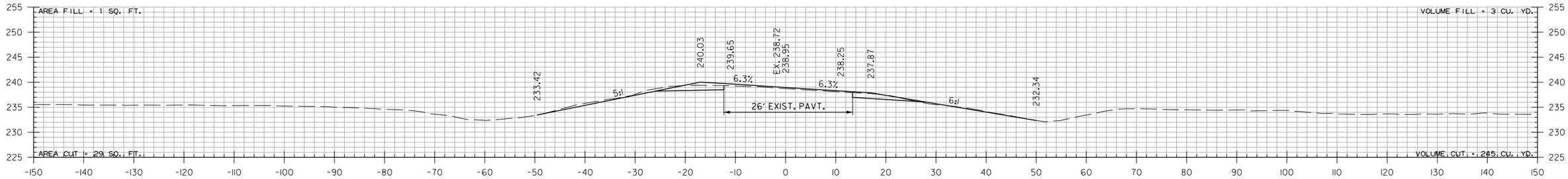

STA. 506+28
END SP.DT.LT. 1.63%
ELEV. 231.28

507+00.00

STA. 506+28
END SP.DT.RT. 0.89%
ELEV. 231.41

STA. 507+00.00 END HWY. 77 - SITE 5
STA. 507+00.00 MATCH EXISTING SUPERELEVATION (0.0635 FT./FT.)

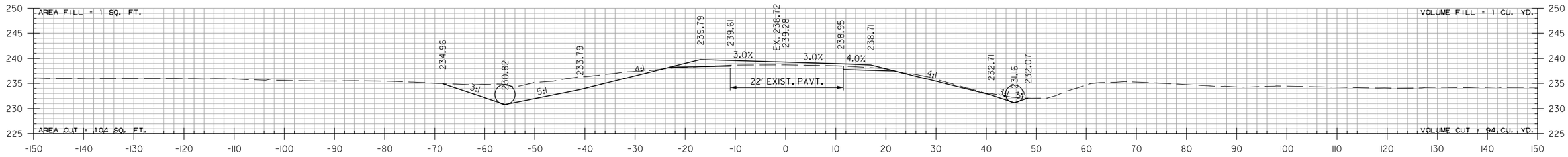

506+00.00

FARMER LANE
MATCH LINE

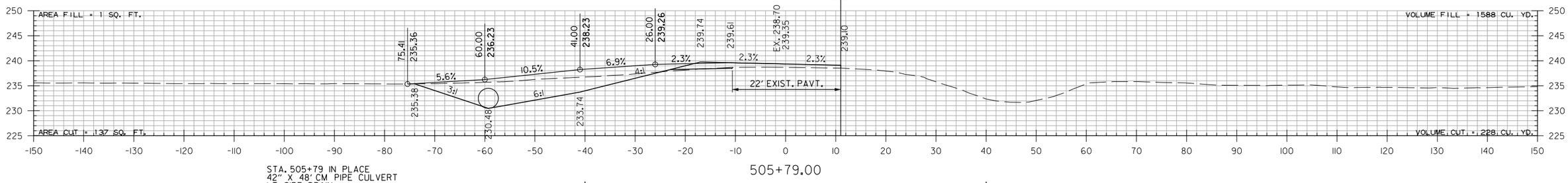

505+79.00

STA. 505+79 IN PLACE
42" X 48' CM PIPE CULVERT
LT. SIDE DRAIN
REMOVE AND INSTALL
42" X 84' PIPE CULVERT
LT. SIDE DRAIN
CONSTRUCT APPROACH = 38 CU. YDS.

STA. 505+20
BEGIN SP.DT.LT. 1.63%
ELEV. 229.52

STA. 505+25
BEGIN SP.DT.RT. 0.89%
ELEV. 230.50

STA. 505+80 INSTALL
48" X 78' PIPE CULVERT
RT. SIDE DRAIN
CONSTRUCT APPROACH = XX CU. YDS.

HWY. 77 - SITE 5
STA. 505+79 TO STA. 507+00

PJoseph 8/13/2021 5:27:47 PM
WORKSPACE: AHTD
L:\20IT\TOI7642 - ARDOT Job 100955\Drawings\r100955_CX_Hwy. 77 Site 5.dgn
REVISED DATE:

DATE REVISED	DATE FILMED	DATE REVISED	DATE FILMED

FED.RD. DIST.NO.	STATE	FED.AID PROJ.NO.	SHEET NO.	TOTAL SHEETS
6	ARK.			
JOB NO.		100955	307	356

(2) CROSS SECTIONS

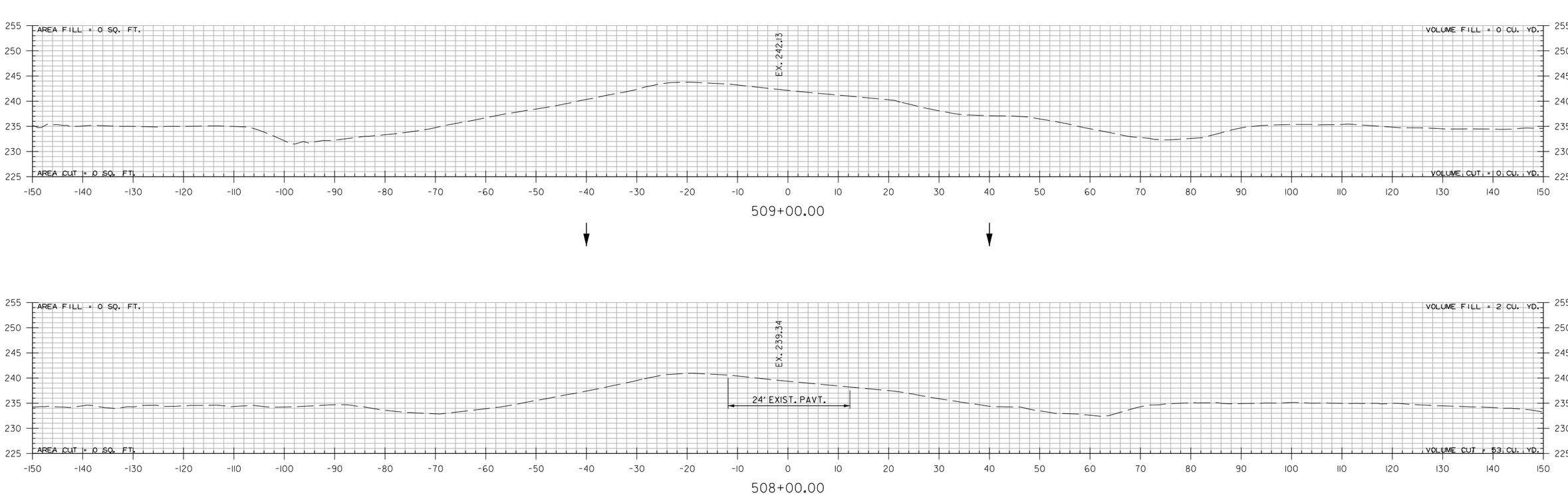

HWY. 77 - SITE 5
STA. 508+00 TO STA. 509+00

PJoseph 8/13/2021 5:27:47 PM
WORKSPACE: AHTD
L:\2017\17017642 - ARDOT Job 100955\Drawings\r100955_CX_Hwy. 77 Site 5.dgn
REVISED DATE:

DATE REVISED	DATE FILMED	DATE REVISED	DATE FILMED	FED.RD. DIST.NO.	STATE	FED.AID PROJ.NO.	SHEET NO.	TOTAL SHEETS
				6	ARK.			
				JOB NO.		100955	308	356
				(2)		CROSS SECTIONS		

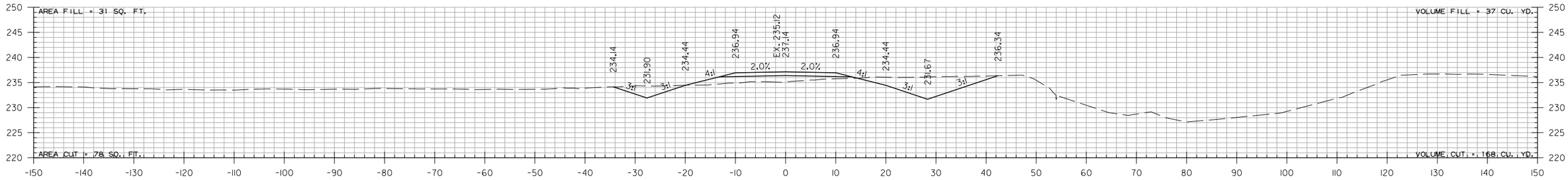

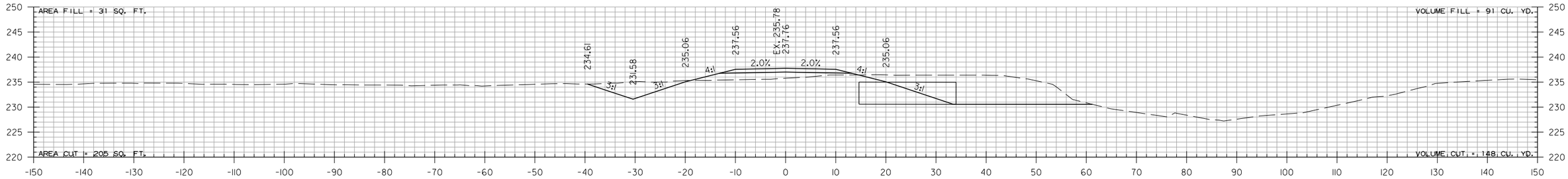

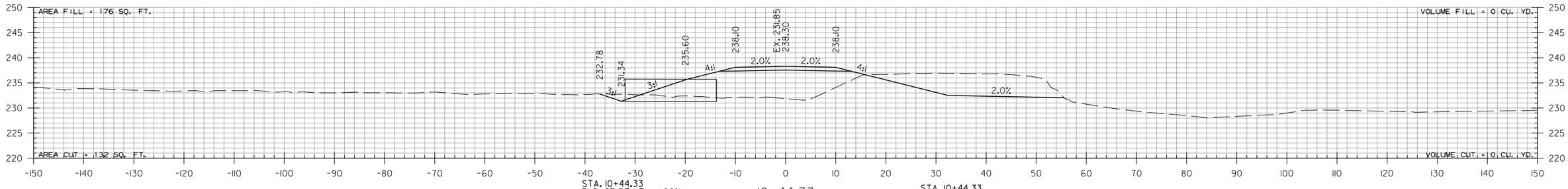

FARMER LN.
STA. 10+44 TO STA. 11+00

PJoseph 8/13/2021 5:27:48 PM
WORKSPACE: AHTD
L:\2017\17017642 - ARDOT Job 100955\Drawings\r100955_CX_Farmer.dgn
REVISED DATE:

DATE REVISED	DATE FILMED	DATE REVISED	DATE FILMED

FED.RD. DIST.NO.	STATE	FED.AID PROJ.NO.	SHEET NO.	TOTAL SHEETS
6	ARK.			
JOB NO.		100955	309	356

(2) CROSS SECTIONS

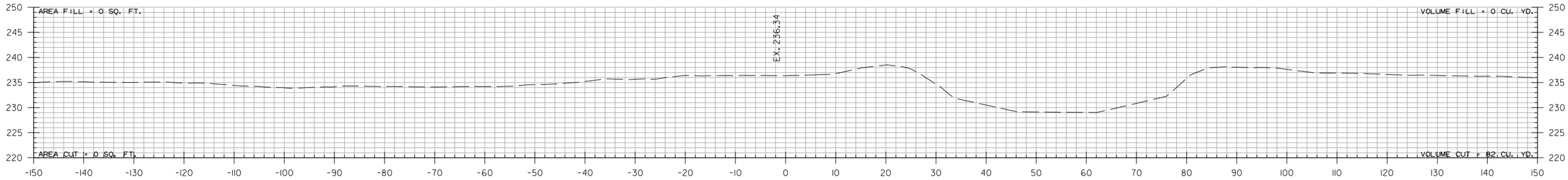

12+75.00

STA. 12+75 END 50' TRANSITION

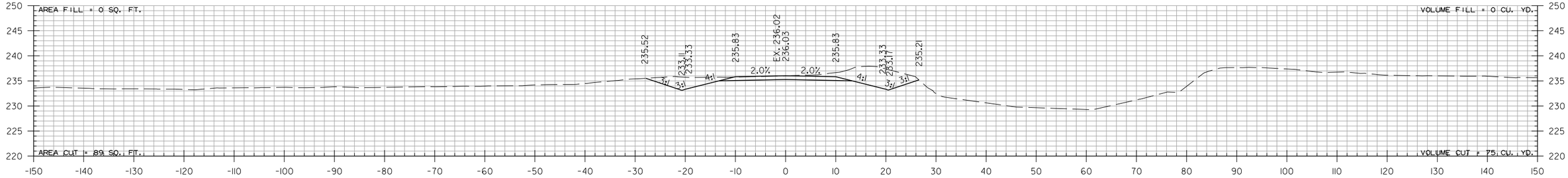

12+25.00

STA. 12+21.30
END SP.DT.LT. 1.00%
ELEV. 233.11

STA. 12+25.00 END FARMER LN.

STA. 12+25
END SP.DT.RT. 1.20%
ELEV. 233.17

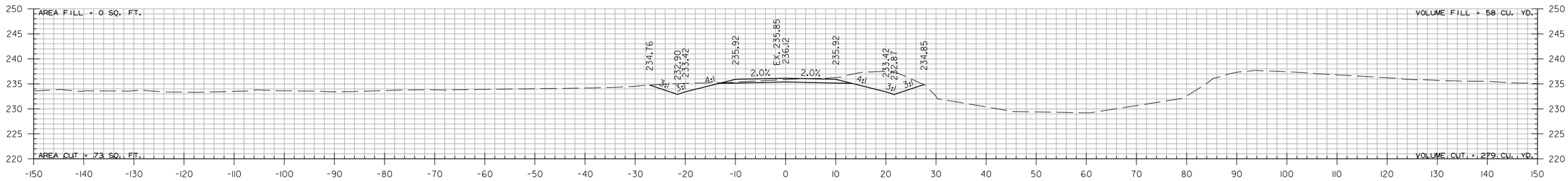

12+00.00

FARMER LN.
STA. 12+00 TO STA. 12+75

PJoseph 8/13/2021 5:27:49 PM
WORKSPACE: AHTD
L:\2017\17017642 - ARDOT Job 100955\Drawings\r100955_CX_Farmer.dgn
REVISED DATE:

DATE REVISED	DATE FILMED	DATE REVISED	DATE FILMED

FED.RD. DIST.NO.	STATE	FED.AID PROJ.NO.	SHEET NO.	TOTAL SHEETS
6	ARK.			
JOB NO.		100955	310	356

(2) CROSS SECTIONS

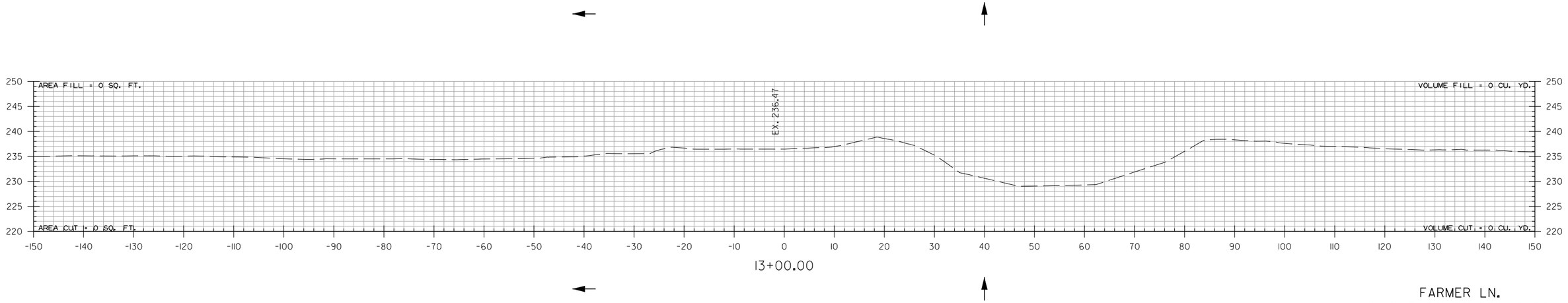

FARMER LN.
STA. 13+00 TO STA. 13+00

PJoseph 8/13/2021 5:27:49 PM
WORKSPACE: AHTD
L:\2017\17017642 - ARDOT Job 100955\Drawings\r100955_CX_Farmer.dgn
REVISED DATE:

DATE REVISED	DATE FILMED	DATE REVISED	DATE FILMED

FED.RD. DIST.NO.	STATE	FED.AID PROJ.NO.	SHEET NO.	TOTAL SHEETS
6	ARK.			
JOB NO.		100955	311	356
(2)	CROSS SECTIONS			

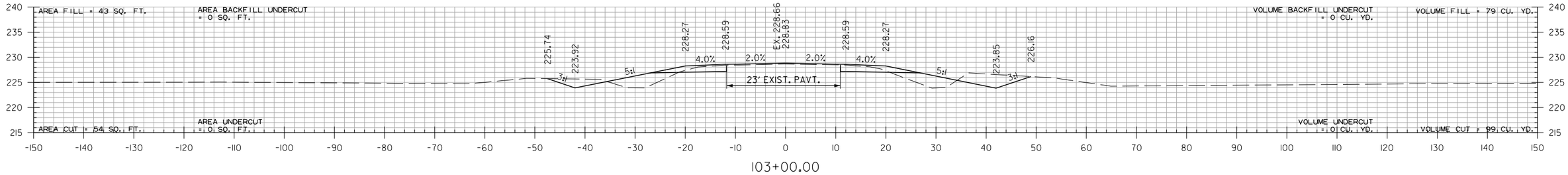

103+00.00

STA. 103+00.00 BEGIN HWY. 140 - SITE 1

STA. 103+00
BEGIN SP.DT.LT. -0.50%
ELEV. 223.92

STA. 103+00
BEGIN SP.DT.RT. -0.60%
ELEV. 223.85

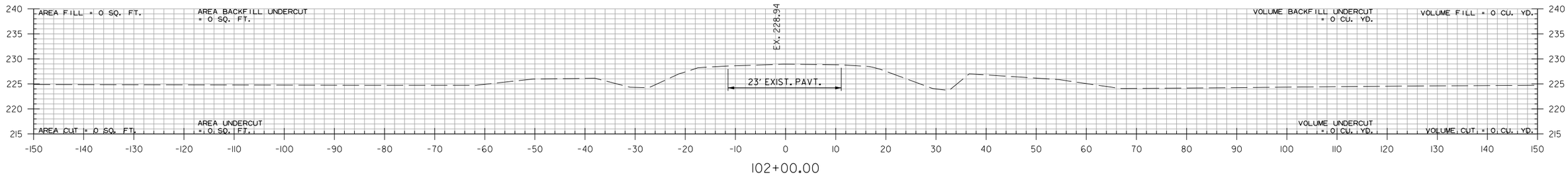

102+00.00

STA. 102+00.00 BEGIN 100' TRANSITION

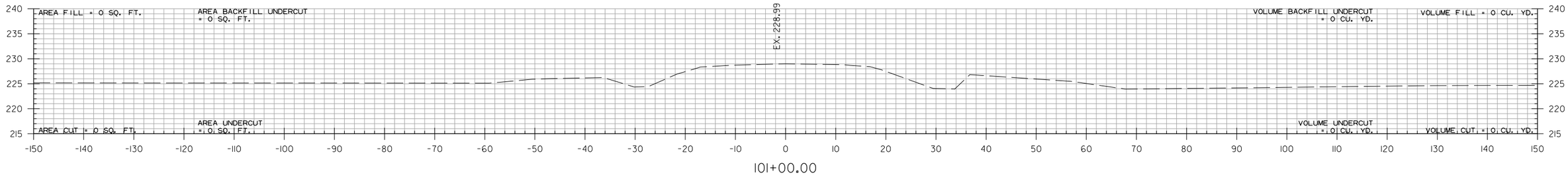

101+00.00

HWY. 140 - SITE 1
STA. 101+00 TO STA. 103+00

PJoseph 8/13/2021 5:27:50 PM
WORKSPACE: AHTD
L:\2017\1701764 2 - ARDOT Job 100955\Drawings\r100955-100996_CX_Hwy.140 Site 1.dgn
REVISED DATE:

DATE REVISED	DATE FILMED	DATE REVISED	DATE FILMED

FED.RD. DIST.NO.	STATE	FED.AID PROJ.NO.	SHEET NO.	TOTAL SHEETS
6	ARK.			
JOB NO.		100955	312	356

(2) CROSS SECTIONS

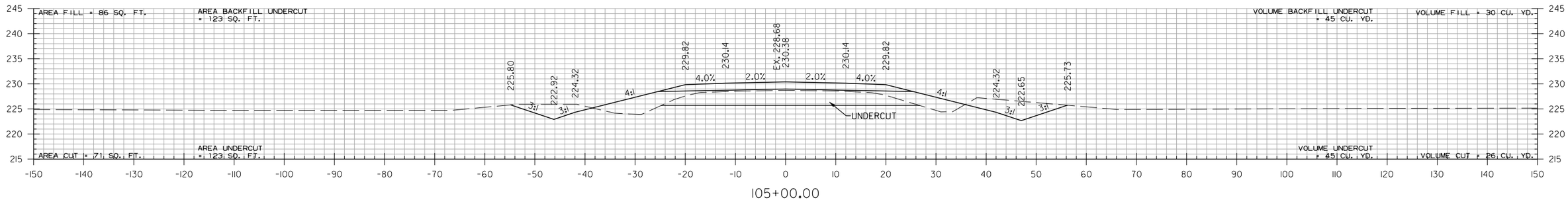

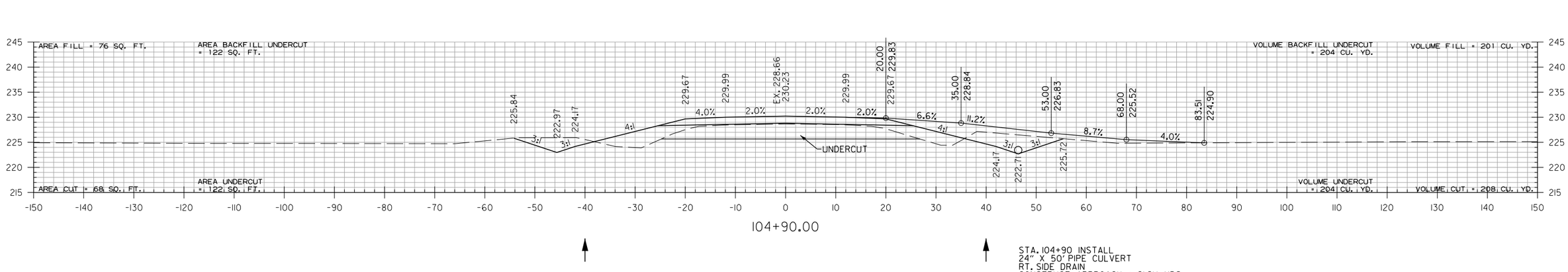

STA. 104+90 INSTALL
24" X 50' PIPE CULVERT
RT. SIDE DRAIN
CONSTRUCT APPROACH = 21 CU. YDS.

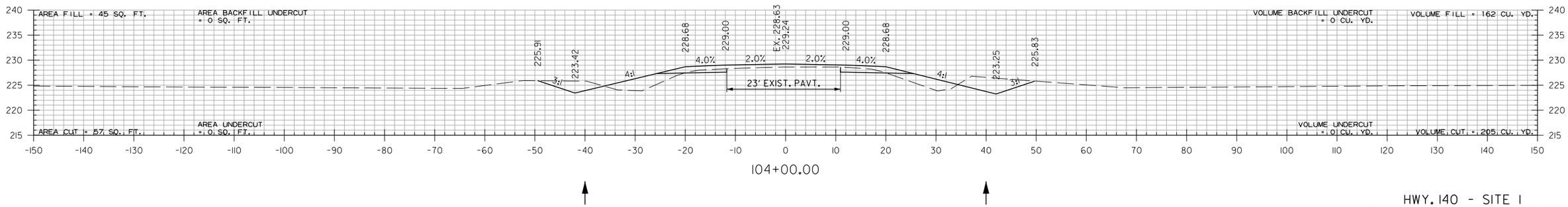

HWY. 140 - SITE 1
STA. 104+00 TO STA. 105+00

PJoseph 8/13/2021 5:27:50 PM
WORKSPACE: AHTD
L:\2017\17017642 - ARDOT Job 100955\Drawings\r100955-100996_CX_Hwy.140 Site 1.dgn
REVISED DATE:

DATE REVISED	DATE FILMED	DATE REVISED	DATE FILMED	FED.RD. DIST.NO.	STATE	FED.AID PROJ.NO.	SHEET NO.	TOTAL SHEETS
				6	ARK.			
				JOB NO.		100955	313	356
				(2)	CROSS SECTIONS			

STA. 107+73.33 RT.
BERM LOCATION
SEE SPECIAL DETAILS

STA. 107+71 INSTALL
60" X 72' PIPE CULVERT
RT. SIDE DRAIN

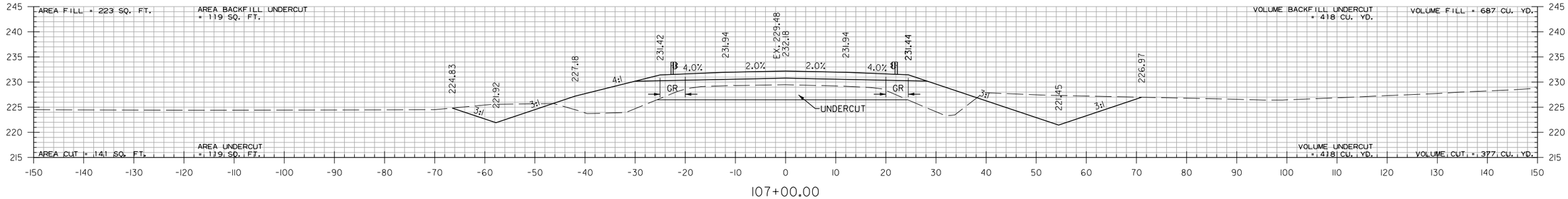

107+00.00

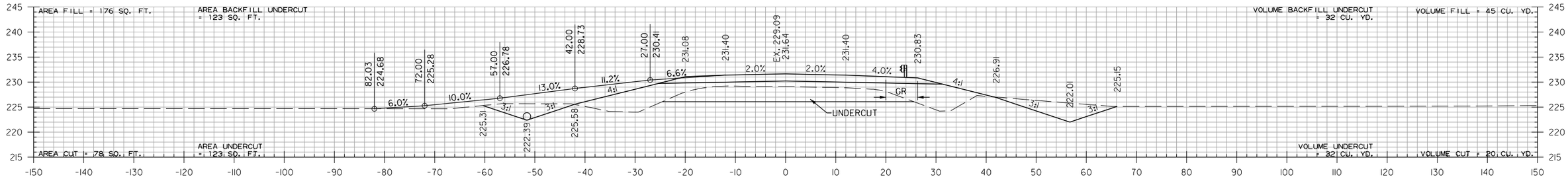

106+07.00

STA. 106+07 INSTALL
30" X 50' PIPE CULVERT
LT. SIDE DRAIN
CONSTRUCT APPROACH = 36 CU. YDS.

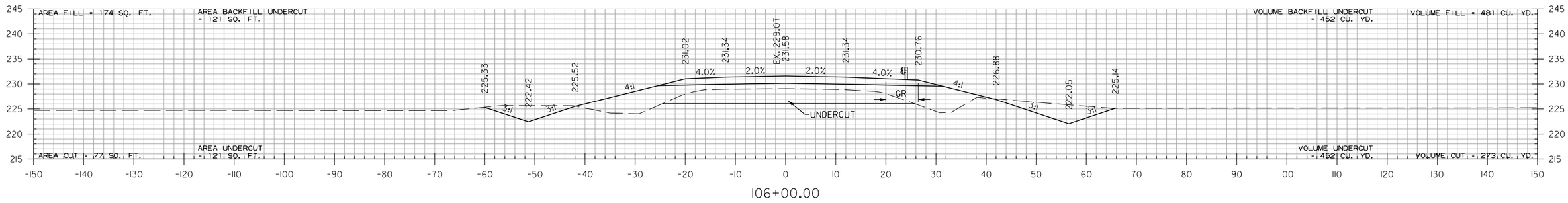

106+00.00

HWY. 140 - SITE 1
STA. 106+00 TO STA. 107+00

PJoseph 8/13/2021 5:27:50 PM
WORKSPACE: AHTD
L:\2017\1701642 - ARDOT Job 100955\Drawings\r100955-100996_CX_Hwy.140 Site 1.dgn
REVISED DATE:

DATE REVISED	DATE FILMED	DATE REVISED	DATE FILMED	FED.RD. DIST.NO.	STATE	FED.AID PROJ.NO.	SHEET NO.	TOTAL SHEETS
				6	ARK.			
				JOB NO.		100955	314	356
				(2)		CROSS SECTIONS		

STA. 108+48 INSTALL
36" X 166' PIPE CULVERT
LT. SIDE DRAIN W/ AUTOMATIC FLOODGATE

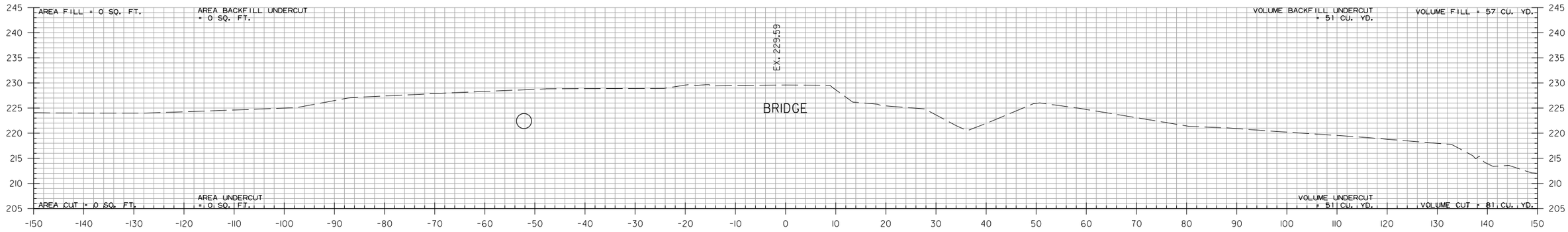

108+32.22

STA. 108+32.22 END TOE OF SLOPE

STA. 108+30
END SP.DT.LT. -0.50%
ELEV. 221.27

STA. 108+30
END SP.DT.RT. -0.60%
ELEV. 220.67

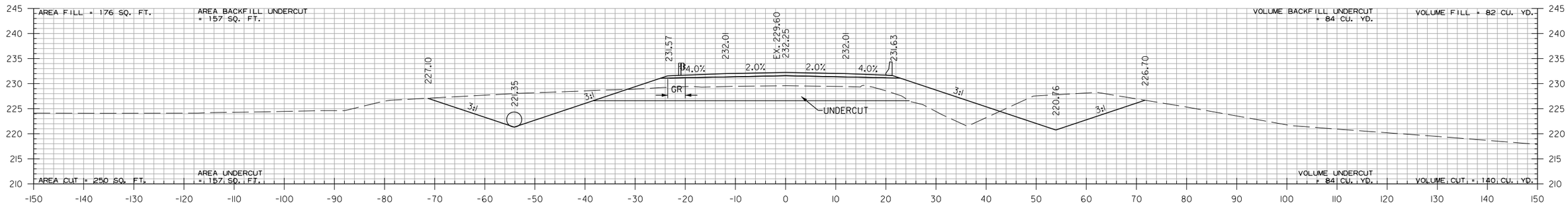

108+14.68

STA. 108+14.68 BEGIN BRIDGE

STA. 108+01.89 LT.
BERM LOCATION
SEE SPECIAL DETAILS

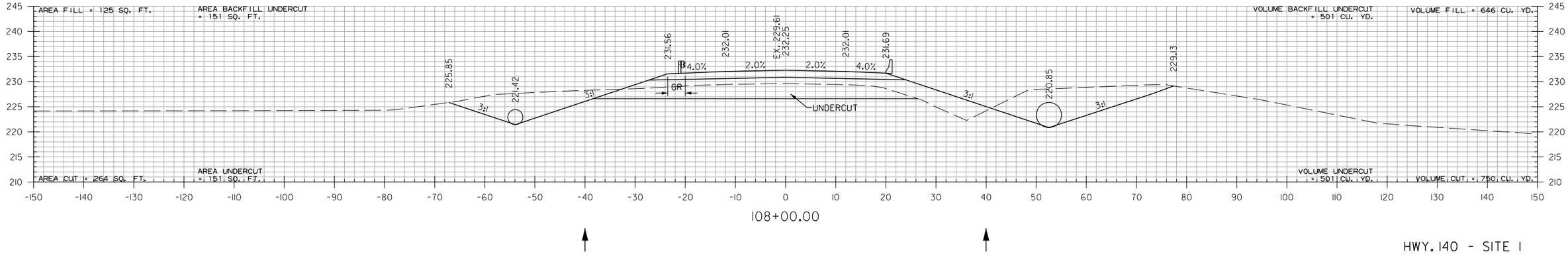

108+00.00

HWY. 140 - SITE 1
STA. 108+00 TO STA. 108+32

PJoseph 8/13/2021 5:27:51 PM
WORKSPACE: AHTD
L:\201\7\01\7642 - ARDOT Job 100955\Drawings\r100955-100996_CX_Hwy.140 Site 1.dgn
REVISED DATE:

DATE REVISED	DATE FILMED	DATE REVISED	DATE FILMED	FED.RD. DIST.NO.	STATE	FED.AID PROJ.NO.	SHEET NO.	TOTAL SHEETS
				6	ARK.			
				JOB NO.		100955	315	356
				(2)	CROSS SECTIONS			

STA. 111+31 INSTALL
24" X 78' PIPE CULVERT
LT. SIDE DRAIN

STA. 111+28.70 LT.
BERM LOCATION
SEE SPECIAL DETAILS

STA. 111+00.04 RT.
BERM LOCATION
SEE SPECIAL DETAILS

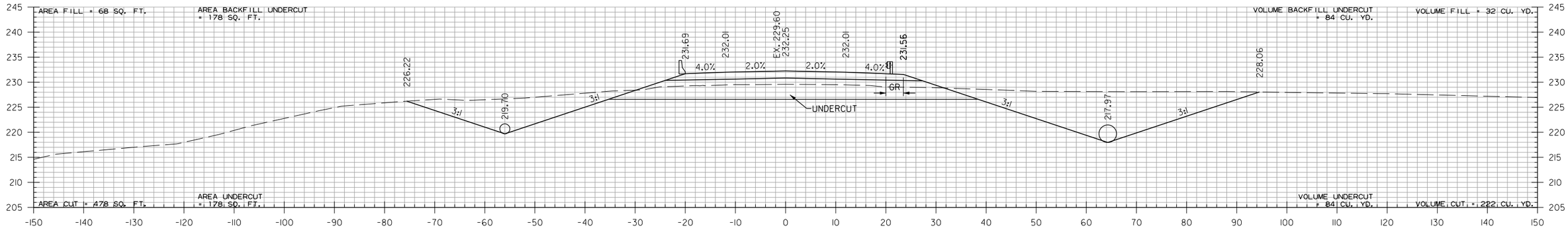

111+00.00

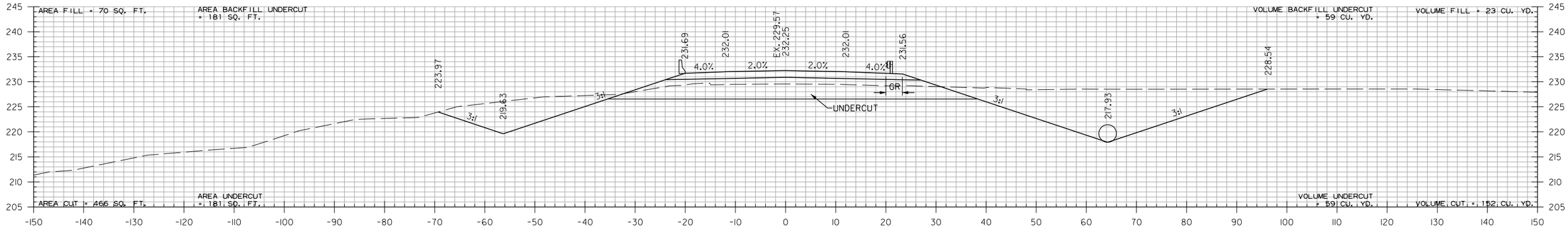

110+87.32

STA. 110+64
BEGIN SP.DT.LT. 0.50%
ELEV. 219.51

STA. 110+87.32 END BRIDGE

STA. 110+64
BEGIN SP.DT.RT. 0.30%
ELEV. 217.86

STA. 110+81 INSTALL
42" X 138' PIPE CULVERT
RT. SIDE DRAIN W/ AUTOMATIC FLOODGATE

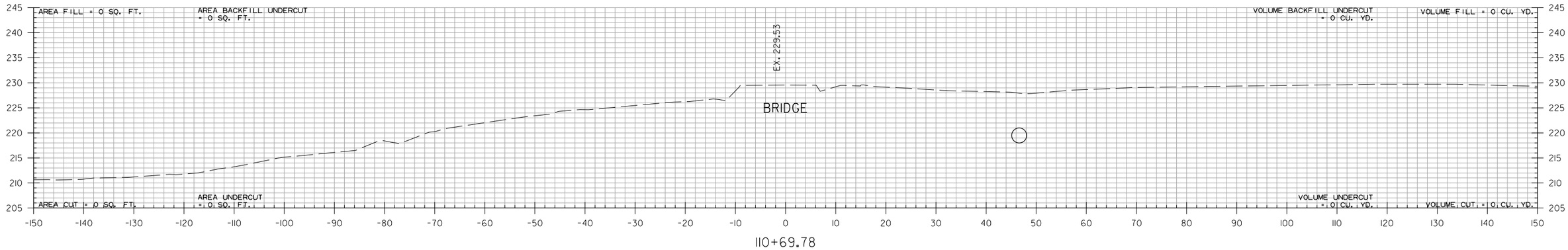

110+69.78

STA. 110+69.78 BEGIN TOE OF SLOPE

HWY. 140 - SITE 1
STA. 110+70 TO STA. 111+00

P.Joseph 8/13/2021 5:27:51 PM
WORKSPACE: AHTD
L:\2017\1701764 - ARDOT Job 100955\Drawings\r100955-100996_CX_Hwy.140 Site 1.dgn
REVISED DATE:

DATE REVISED	DATE FILMED	DATE REVISED	DATE FILMED	FED.RD. DIST.NO.	STATE	FED.AID PROJ.NO.	SHEET NO.	TOTAL SHEETS
				6	ARK.			
				JOB NO.		100955	316	356
				(2)	CROSS SECTIONS			

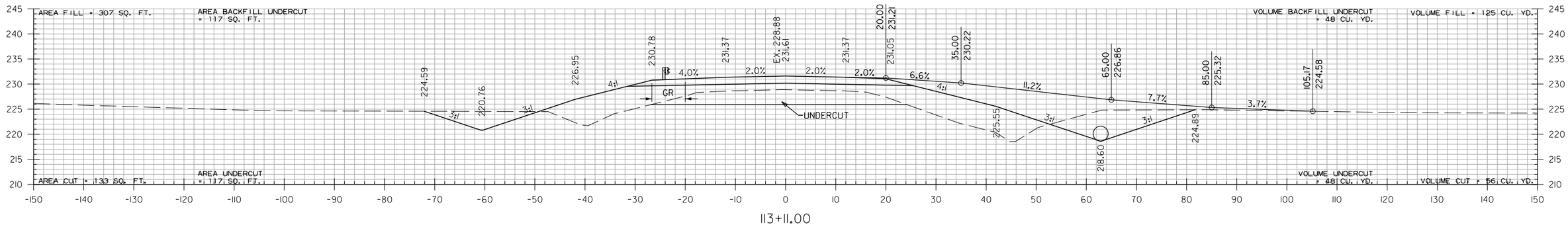

113+11.00

STA. 113+11 INSTALL
36" X 70' PIPE CULVERT
RT. SIDE DRAIN
CONSTRUCT APPROACH = 124 CU. YDS.

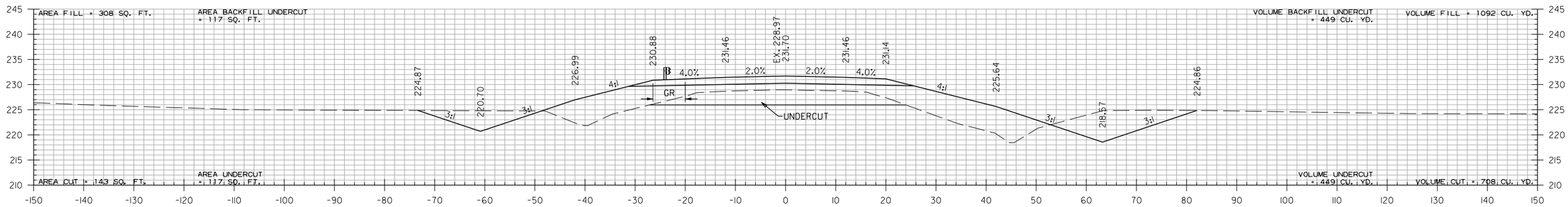

113+00.00

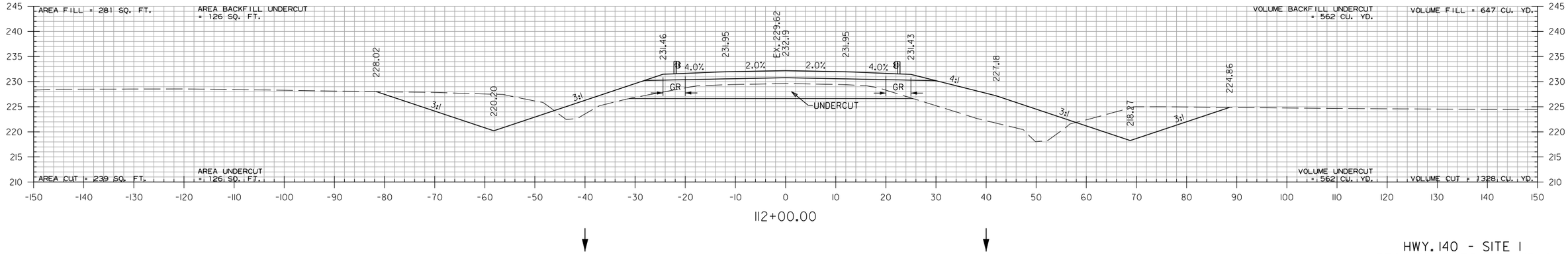

112+00.00

HWY. 140 - SITE 1
STA. 112+00 TO STA. 113+11

PJoseph 8/13/2021 5:27:51 PM
WORKSPACE: AHTD
L:\201\701\642 - ARDOT Job 100955\Drawings\r100955-100996_CX_Hwy.140 Site 1.dgn
REVISED DATE:

DATE REVISED	DATE FILMED	DATE REVISED	DATE FILMED	FED.RD. DIST.NO.	STATE	FED.AID PROJ.NO.	SHEET NO.	TOTAL SHEETS
				6	ARK.			
				JOB NO.		100955	317	356
				(2)	CROSS SECTIONS			

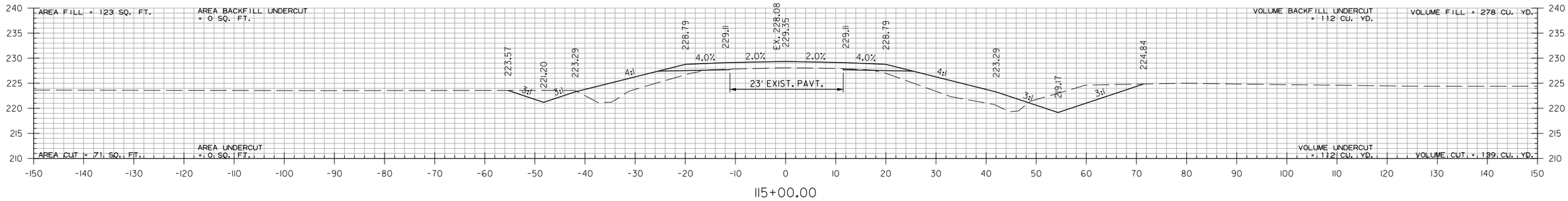

115+00.00

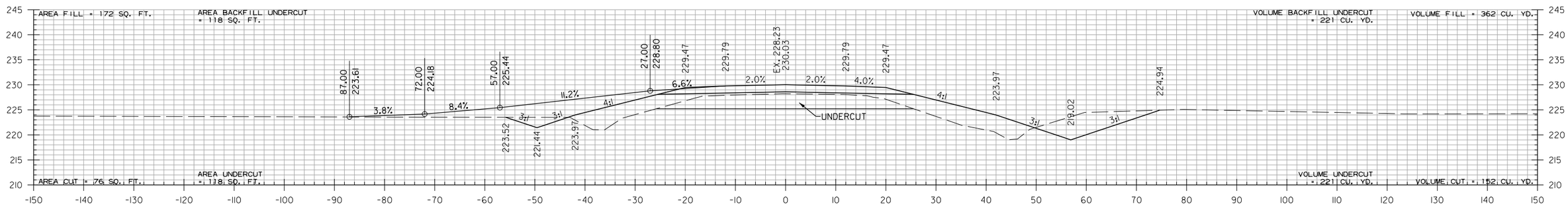

114+49.00

STA. 114+49.00 CONSTRUCT APPROACH ON LT. = 50 CU. YDS.

STA. 114+49
END SP.DT.LT. 0.50%
BEGIN SP.DT.LT. -0.50%
ELEV. 221.45

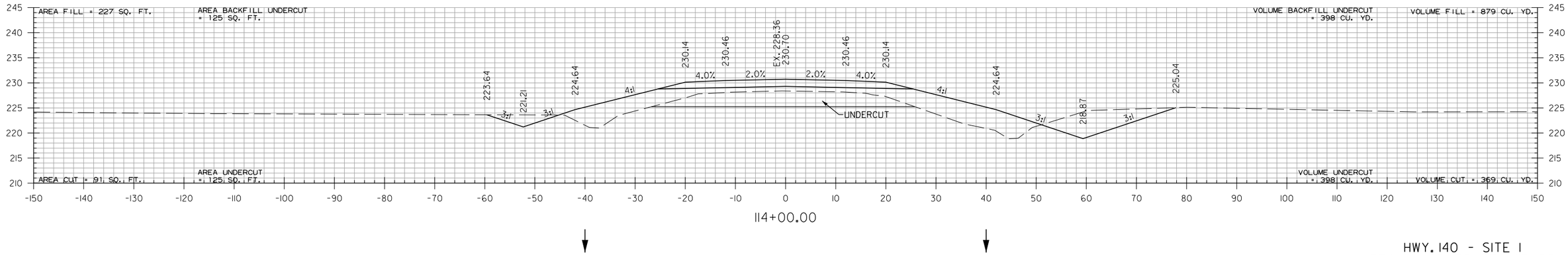

114+00.00

HWY. 140 - SITE 1
STA. 114+00 TO STA. 115+00

PJoseph 8/13/2021 5:27:52 PM
WORKSPACE: AHTD
L:\20\T\T01\T642 - ARDOT Job 100955\Drawings\r100955-100996.CX_Hwy.140 Site 1.dgn
REVISED DATE:

DATE REVISED	DATE FILMED	DATE REVISED	DATE FILMED	FED.RD. DIST.NO.	STATE	FED.AID PROJ.NO.	SHEET NO.	TOTAL SHEETS
				6	ARK.			
				JOB NO.		100955	318	356
				(2)	CROSS SECTIONS			

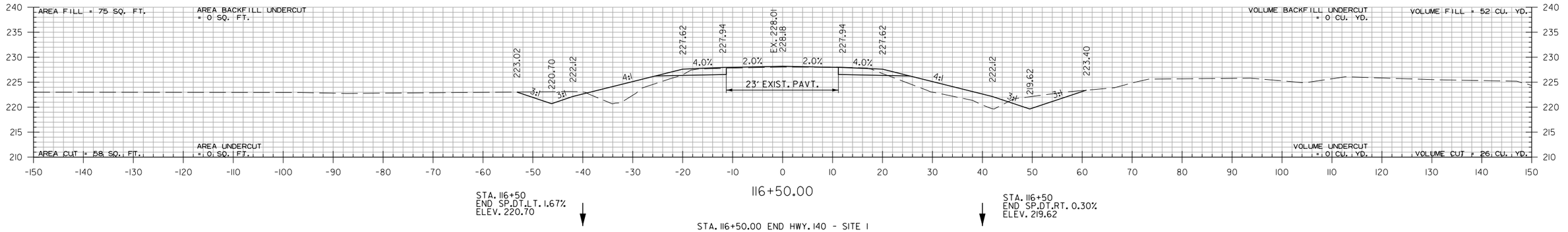

STA. 116+50
END SP.DT.LT. 1.67%
ELEV. 220.70

116+50.00

STA. 116+50.00 END HWY. 140 - SITE 1

STA. 116+50
END SP.DT.RT. 0.30%
ELEV. 219.62

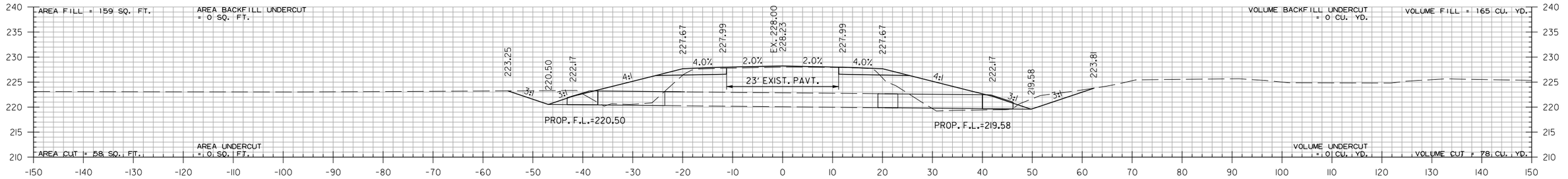

STA. 116+38
END SP.DT.LT. -0.50%
BEGIN SP.DT.LT. 1.67%
ELEV. 220.50

116+38.00

STA. 116+38 IN PLACE
30" X 50' R.C. PIPE CULVERT
WITH HDWLS. LT. AND RT.
REMOVE AND REPLACE
CLASS III (TYPE 3 BEDDING)
Q50 = 33 CFS D.A. = 55 ACRES
30" R.C. PIPE = 38 LIN. FT.
30" F.E.S. = 2 EA.

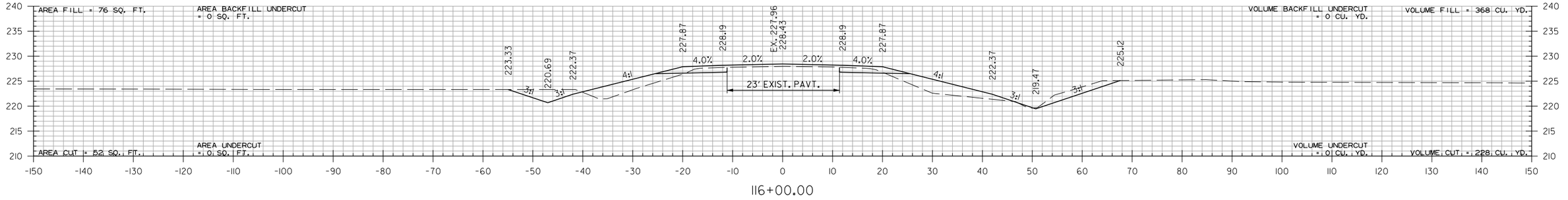

116+00.00

HWY. 140 - SITE 1
STA. 116+00 TO STA. 116+50

PJoseph 8/13/2021 5:27:52 PM
WORKSPACE: AHTD
L:\2017\17017642 - ARDOT Job 100955\Drawings\r100955-100996.CX.Hwy.140 Site 1.dgn
REVISED DATE:

DATE REVISED	DATE FILMED	DATE REVISED	DATE FILMED	FED.RD. DIST.NO.	STATE	FED.AID PROJ.NO.	SHEET NO.	TOTAL SHEETS
				6	ARK.			
				JOB NO.		100955	319	356
				(2)	CROSS SECTIONS			

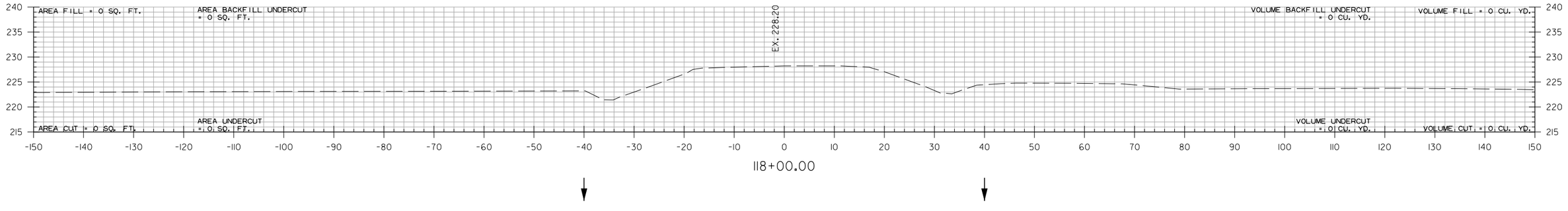

118+00.00

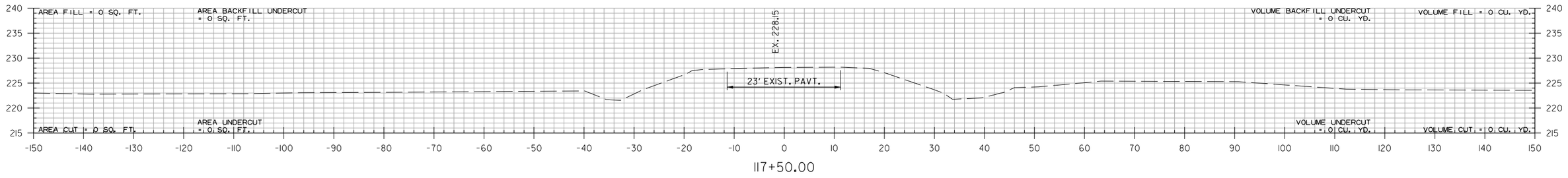

117+50.00

STA. 117+50.00 END 100' TRANSITION

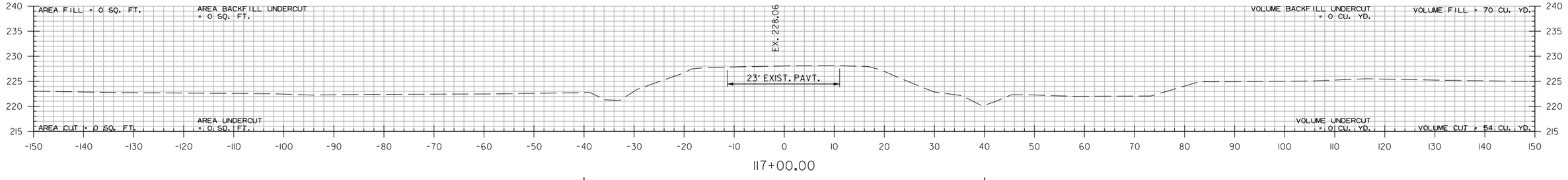

117+00.00

HWY. 140 - SITE 1
STA. 117+00 TO STA. 118+00

PJoseph 8/13/2021 5:27:52 PM
WORKSPACE: AHTD
L:\2017\17017642 - ARDOT Job 100955\Drawings\r100955-100996_CX_Hwy.140 Site 1.dgn
REVISED DATE:

DATE REVISED	DATE FILMED	DATE REVISED	DATE FILMED	FED.RD. DIST.NO.	STATE	FED.AID PROJ.NO.	SHEET NO.	TOTAL SHEETS
				6	ARK.			
				JOB NO.		100955	320	356
				(2)		CROSS SECTIONS		

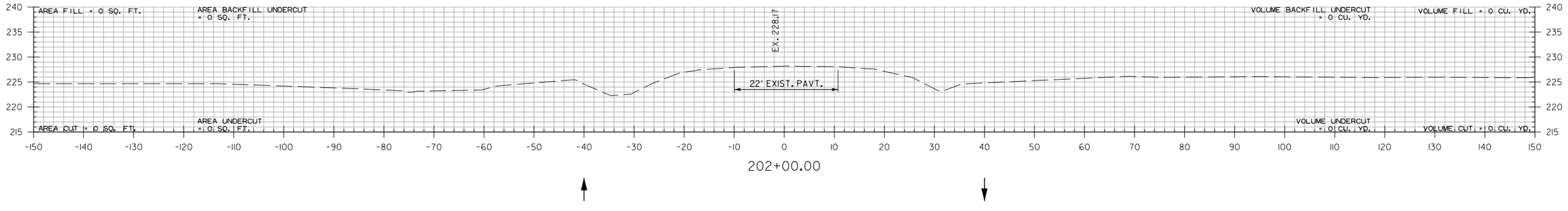

202+00.00

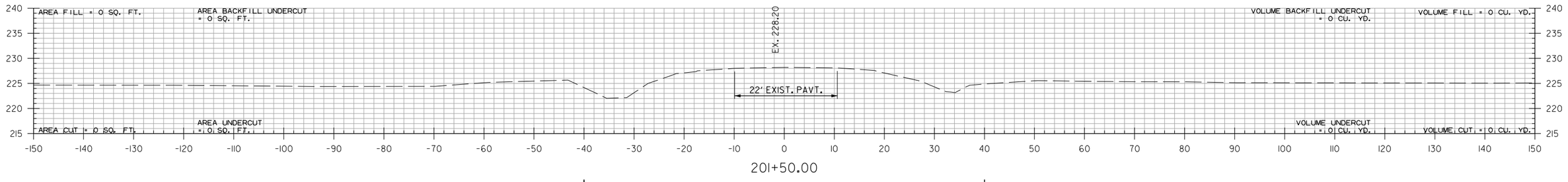

201+50.00

STA. 201+50.00 BEGIN 100' TRANSITION

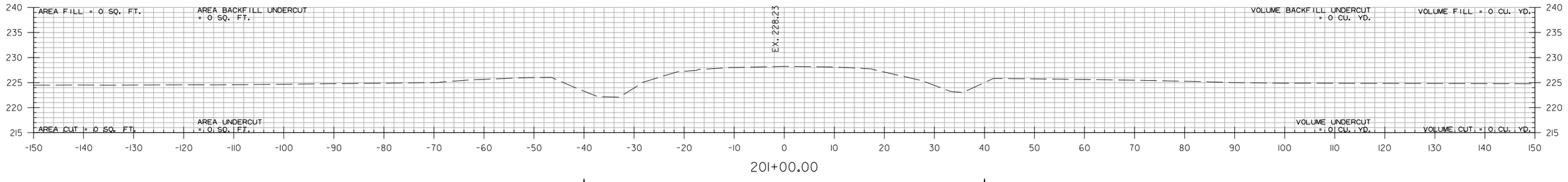

201+00.00

HWY. 140 - SITE 2
STA. 201+00 TO STA. 202+00

PJoseph 8/13/2021 5:27:53 PM
WORKSPACE: AHTD
L:\2017\17017642 - ARDOT Job 100955\Drawings\r100955-100996_CX_Hwy.140 Site 2.dgn
REVISED DATE:

DATE REVISED	DATE FILMED	DATE REVISED	DATE FILMED	FED.RD. DIST.NO.	STATE	FED.AID PROJ.NO.	SHEET NO.	TOTAL SHEETS
				6	ARK.			
				JOB NO.		100955	321	356
				(2)	CROSS SECTIONS			

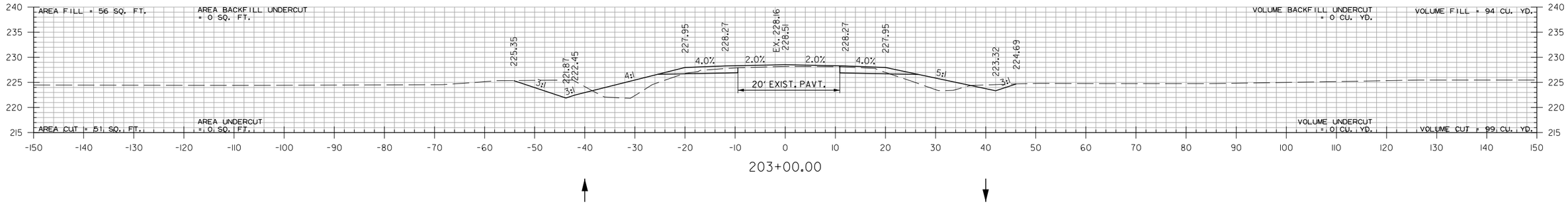

203+00.00

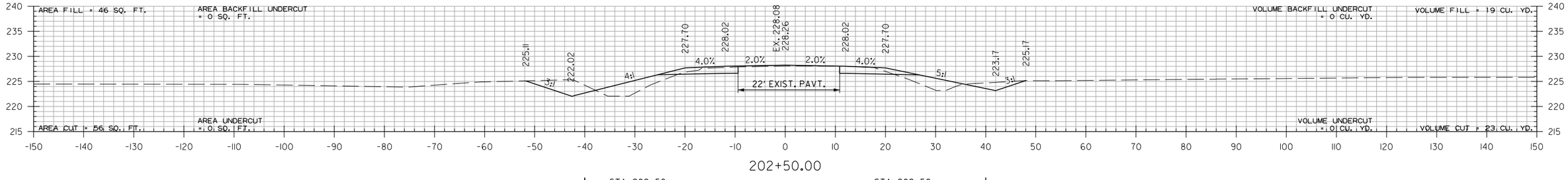

202+50.00

STA. 202+50
BEGIN SP.DT.LT. -0.30%
ELEV. 222.02

STA. 202+50
BEGIN SP.DT.RT. 0.30%
ELEV. 223.17

STA. 202+50.00 BEGIN HWY. 140 - SITE 2

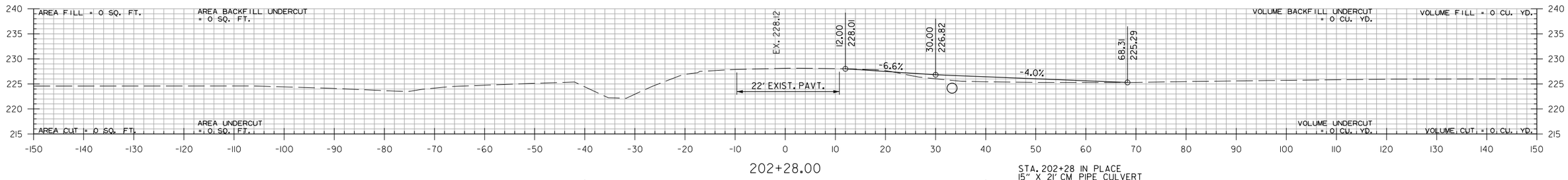

202+28.00

STA. 202+28 IN PLACE
15" X 21' CM PIPE CULVERT
RT. SIDE DRAIN
REMOVE AND INSTALL
24" X 50' PIPE CULVERT
RT. SIDE DRAIN
CONSTRUCT APPROACH = 14 CU. YDS.

HWY. 140 - SITE 2
STA. 202+28 TO STA. 203+00

PJoseph 8/13/2021 5:27:54 PM
WORKSPACE: AHTD
L:\2017\170176\42 - ARDOT Job 100955\Drawings\r100955-100996_CX_Hwy.140 Site 2.dgn
REVISED DATE:

DATE REVISED	DATE FILMED	DATE REVISED	DATE FILMED	FED.RD. DIST.NO.	STATE	FED.AID PROJ.NO.	SHEET NO.	TOTAL SHEETS
				6	ARK.			
				JOB NO.		100955	322	356

(2) CROSS SECTIONS

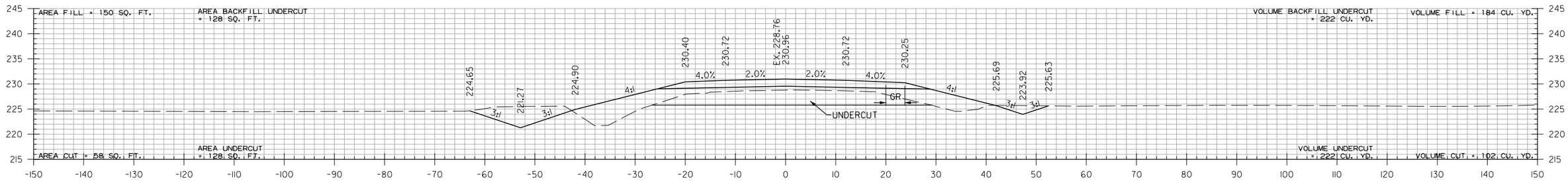

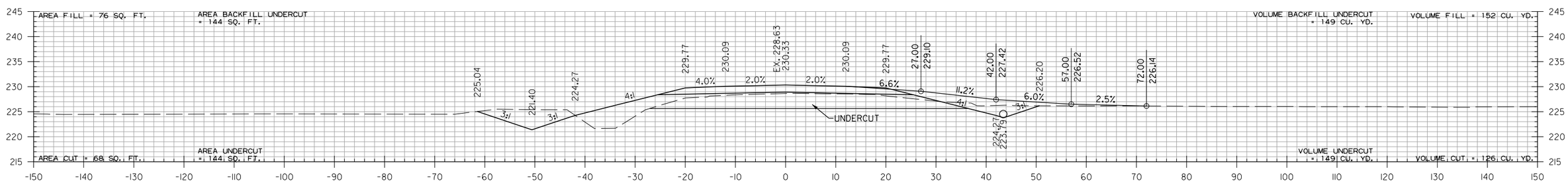

STA. 204+56 IN PLACE
18" X 25' CM PIPE CULVERT
RT. SIDE DRAIN
REMOVE AND INSTALL
18" X 38' PIPE CULVERT
RT. SIDE DRAIN
CONSTRUCT APPROACH = 15 CU. YDS.

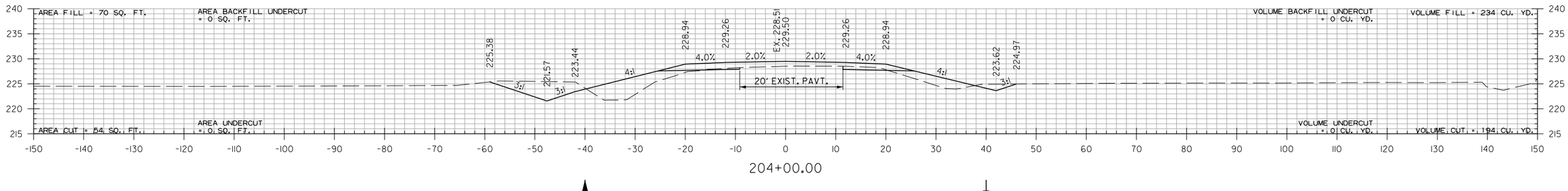

HWY. 140 - SITE 2
STA. 204+00 TO STA. 205+00

PJoseph 8/13/2021 5:27:54 PM
WORKSPACE: AHTD
L:\2017\17017642 - ARDOT Job 100955\Drawings\r100955-100996_CX_Hwy.140 Site 2.dgn
REVISED DATE:

DATE REVISED	DATE FILMED	DATE REVISED	DATE FILMED	FED.RD. DIST.NO.	STATE	FED.AID PROJ.NO.	SHEET NO.	TOTAL SHEETS
				6	ARK.			
				JOB NO.		100955	323	356
				(2)	CROSS SECTIONS			

STA. 207+20
END SP.DT.LT. -0.30%
ELEV. 220.61

STA. 207+40
END SP.DT.RT. 2.98%
ELEV. 228.00

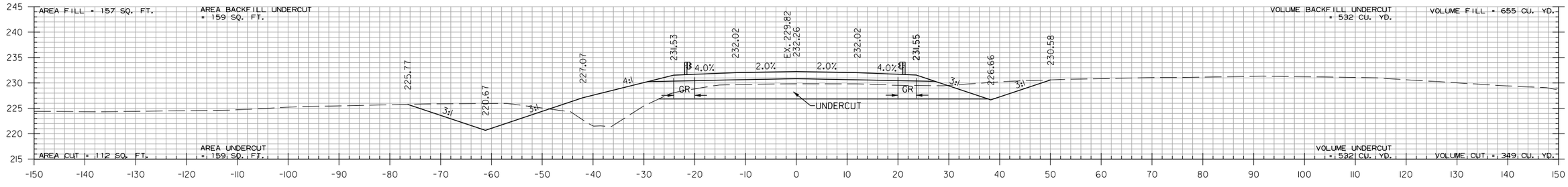

207+00.00

STA. 206+20
END SP.DT.RT. 0.30%
BEGIN SP.DT.RT. 2.98%
ELEV. 224.28

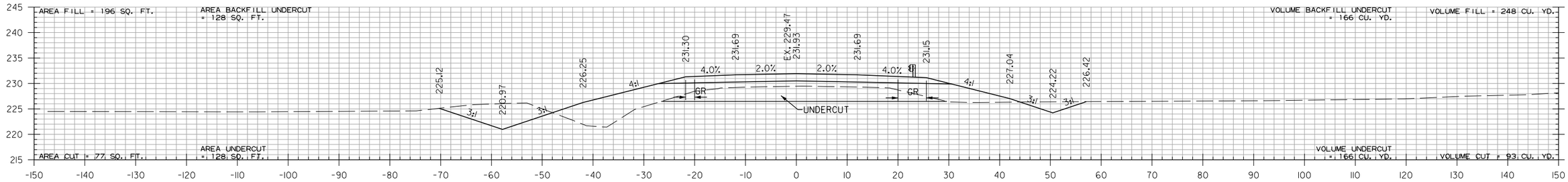

206+00.00

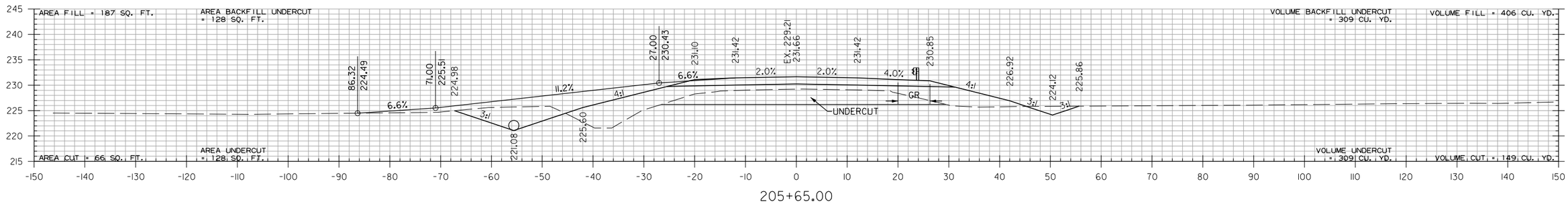

205+65.00

STA. 205+65 INSTALL
24" X 54' PIPE CULVERT
LT. SIDE DRAIN
CONSTRUCT APPROACH = 41 CU. YDS.

HWY. 140 - SITE 2
STA. 205+65 TO STA. 207+00

PJoseph 8/13/2021 5:27:54 PM
WORKSPACE: AHTD
L:\2017\17017642 - ARDOT Job 100955\Drawings\r100955-100996.CX.Hwy.140 Site 2.dgn
REVISED DATE:

DATE REVISED	DATE FILMED	DATE REVISED	DATE FILMED	FED.RD. DIST.NO.	STATE	FED.AID PROJ.NO.	SHEET NO.	TOTAL SHEETS
				6	ARK.			
				JOB NO.		100955	324	356
				(2)		CROSS SECTIONS		

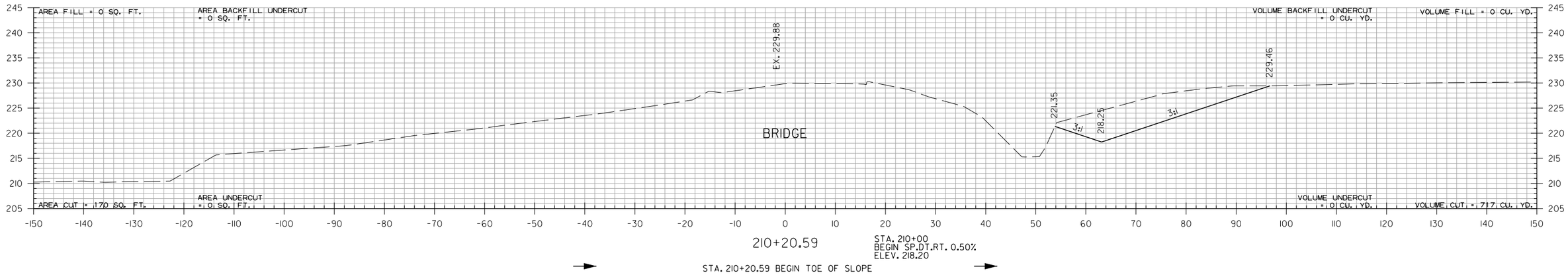

210+20.59

STA. 210+00
BEGIN SP.DT.RT. 0.50%
ELEV. 218.20

STA. 210+20.59 BEGIN TOE OF SLOPE

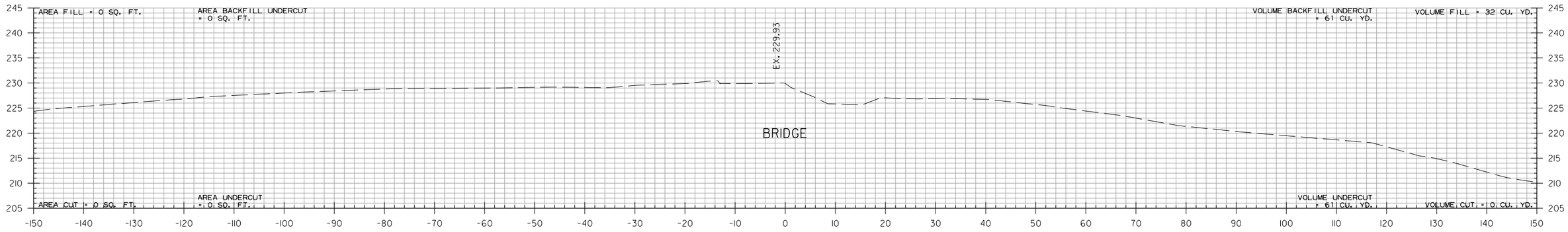

207+92.41

STA. 207+92.41 END TOE OF SLOPE

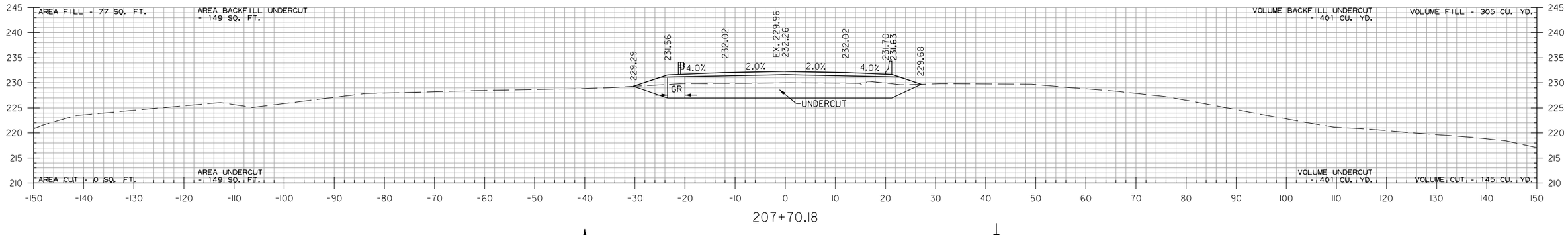

207+70.18

STA. 207+70.18 BEGIN BRIDGE

HWY. 140 - SITE 2
STA. 207+70 TO STA. 210+21

PJoseph
8/13/2021 5:27:55 PM
WORKSPACE: AHTD
L:\2017\17017642 - ARDOT Job 100955\Drawings\r100955-100996_CX_Hwy. 140 Site 2.dgn
REVISED DATE:

DATE REVISED	DATE FILMED	DATE REVISED	DATE FILMED	FED.RD. DIST.NO.	STATE	FED.AID PROJ.NO.	SHEET NO.	TOTAL SHEETS
				6	ARK.			
				JOB NO.		100955	325	356
				(2)		CROSS SECTIONS		

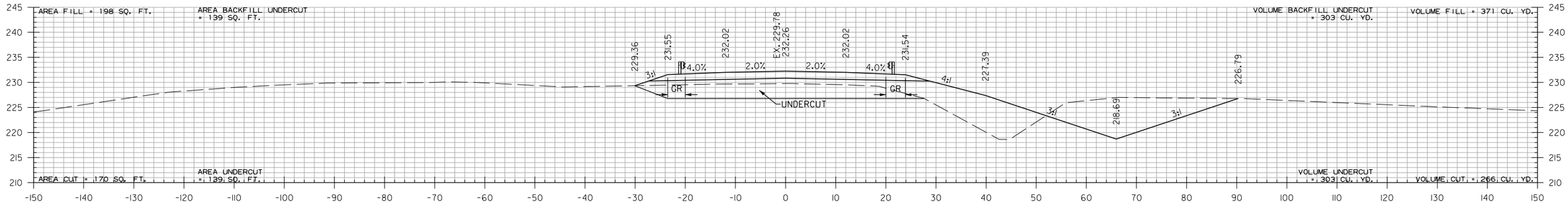

HWY. 140 - SITE 2
STA. 210+43 TO STA. 211+00

PJoseph 8/13/2021 5:27:55 PM
WORKSPACE: AHTD
L:\20\T\T01\7642 - ARDOT Job 100955\Drawings\r100955-100996_CX_Hwy.140 Site 2.dgn
REVISED DATE:

DATE REVISED	DATE FILMED	DATE REVISED	DATE FILMED	FED.RD. DIST.NO.	STATE	FED.AID PROJ.NO.	SHEET NO.	TOTAL SHEETS
				6	ARK.			
				JOB NO.		100955	326	356
				(2)	CROSS SECTIONS			

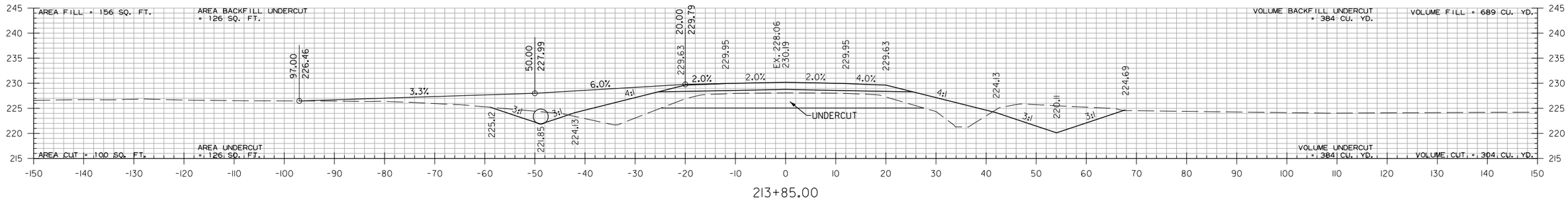

STA. 213+85 IN PLACE
36" X 24' CM PIPE CULVERT
LT. SIDE DRAIN
REMOVE AND INSTALL
36" X 56' PIPE CULVERT
LT. SIDE DRAIN
CONSTRUCT APPROACH = 87 CU. YDS.

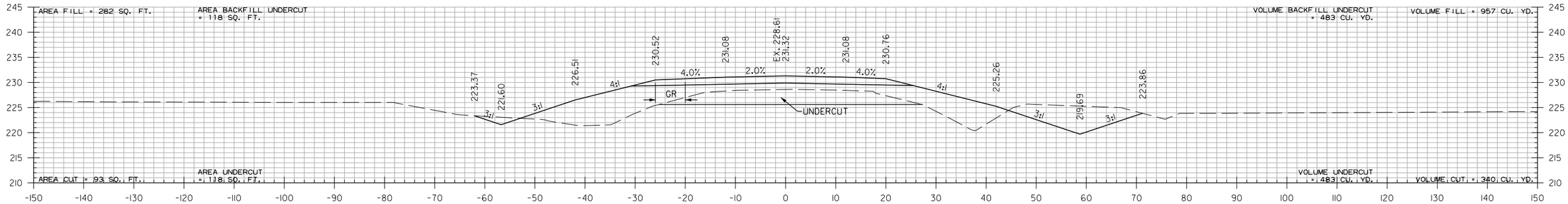

STA. 212+40
BEGIN SP.DT.LT. 0.30%
ELEV. 221.41

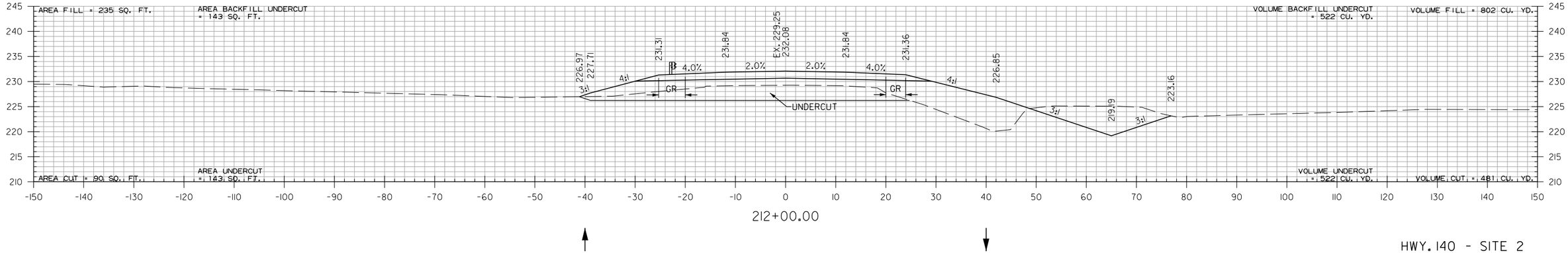

HWY. 140 - SITE 2
STA. 212+00 TO STA. 213+85

PJoseph 8/13/2021 5:27:56 PM
WORKSPACE: AHTD
L:\20\7\701\642 - ARDOT Job 100955\Drawings\r100955-100996.CX.Hwy.140 Site 2.dgn
REVISED DATE:

DATE REVISED	DATE FILMED	DATE REVISED	DATE FILMED	FED.RD. DIST.NO.	STATE	FED.AID PROJ.NO.	SHEET NO.	TOTAL SHEETS
				6	ARK.			
				JOB NO.		100955	327	356
				(2)		CROSS SECTIONS		

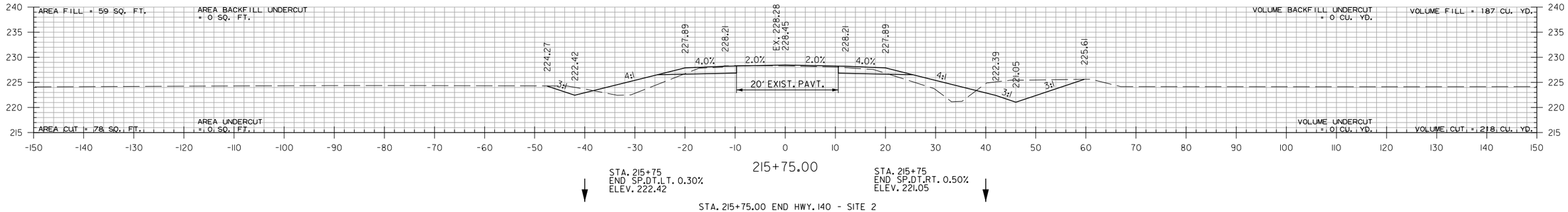

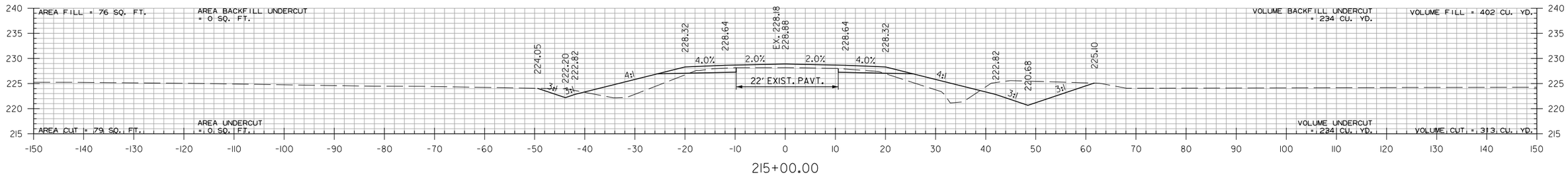

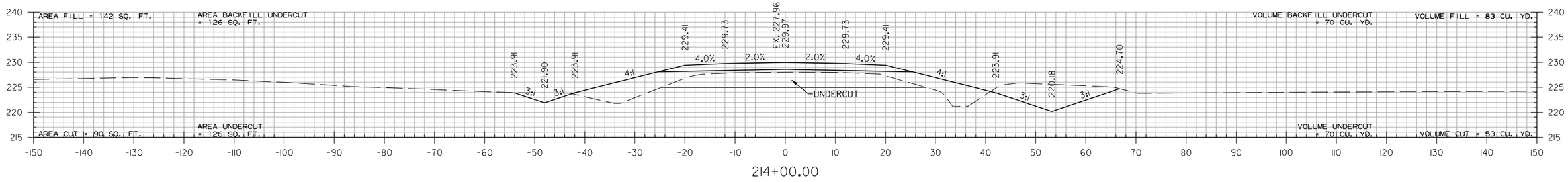

HWY. 140 - SITE 2
STA. 214+00 TO STA. 215+75

PJoseph 8/13/2021 5:27:56 PM
WORKSPACE: AHTD
L:\2017\17017642 - ARDOT Job 100955\Drawings\r100955-100996_CX_Hwy.140 Site 2.dgn
REVISED DATE:

DATE REVISED	DATE FILMED	DATE REVISED	DATE FILMED	FED.RD. DIST.NO.	STATE	FED.AID PROJ.NO.	SHEET NO.	TOTAL SHEETS
				6	ARK.			
				JOB NO.		100955	328	356
				(2)	CROSS SECTIONS			

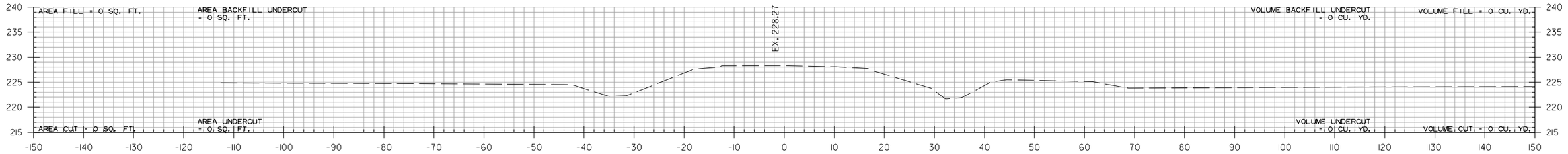

217+00.00

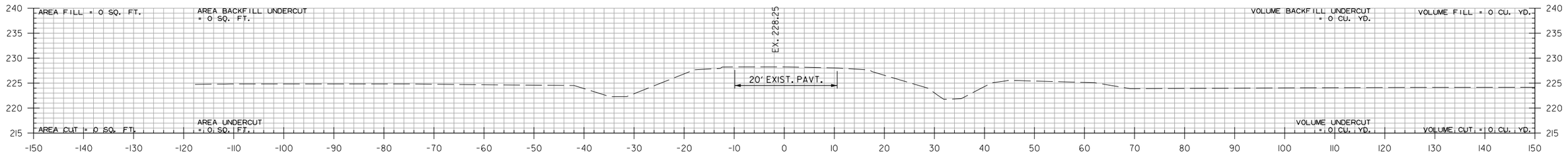

216+75.00

STA. 216+75.00 END 100' TRANSITION

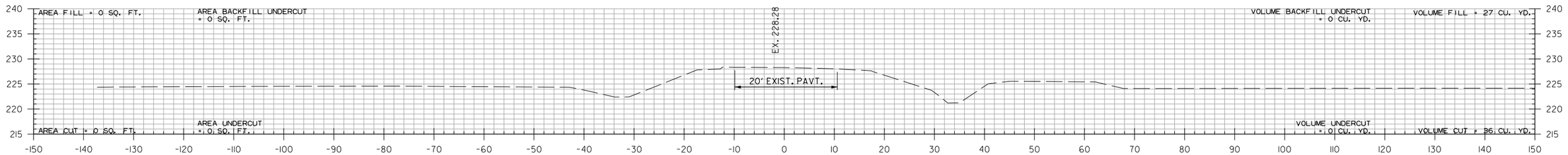

216+00.00

HWY. 140 - SITE 2
STA. 216+00 TO STA. 217+00

PJoseph 8/13/2021 5:27:56 PM
WORKSPACE: AHTD
L:\2017\17017642 - ARDOT Job 100955\Drawings\r100955-100996_CX_Hwy.140 Site 2.dgn
REVISED DATE:

DATE REVISED	DATE FILMED	DATE REVISED	DATE FILMED	FED.RD. DIST.NO.	STATE	FED.AID PROJ.NO.	SHEET NO.	TOTAL SHEETS
				6	ARK.			
				JOB NO.		100955	329	356
				(2)	CROSS SECTIONS			

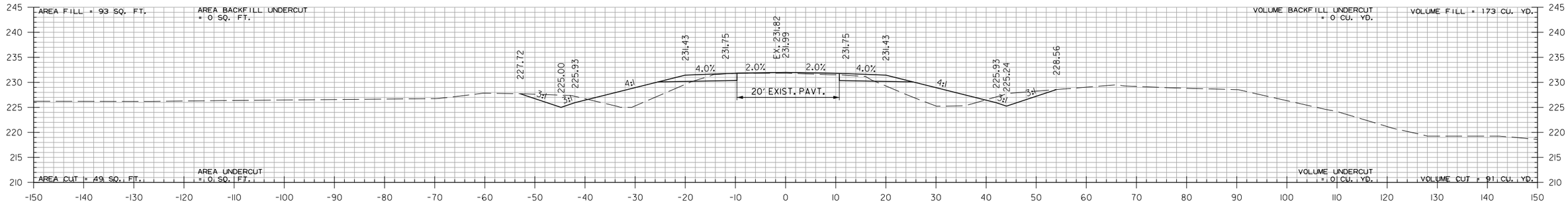

303+00.00

STA. 303+00.00 BEGIN HWY. 140 - SITE 3

STA. 303+00
BEGIN SP.DT.LT. -5.30%
ELEV. 225.00

STA. 303+00
BEGIN SP.DT.RT. -9.00%
ELEV. 225.24

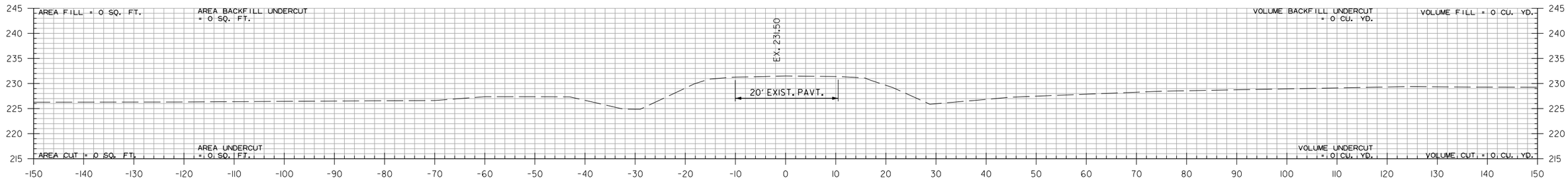

302+00.00

STA. 302+00.00 BEGIN 100' TRANSITION

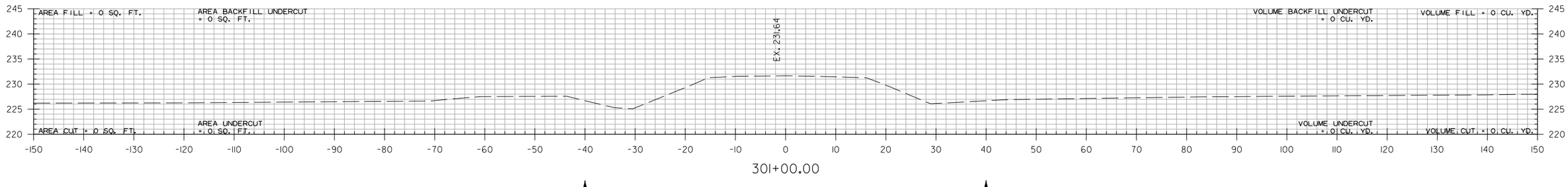

301+00.00

HWY. 140 - SITE 3
STA. 301+00 TO STA. 303+00

PJoseph 8/13/2021 5:27:57 PM
WORKSPACE: AHTD
L:\2017\17017642 - ARDOT Job 100955\Drawings\r100955-100996_CX_Hwy. 140 Site 3.dgn
REVISED DATE:

DATE REVISED	DATE FILMED	DATE REVISED	DATE FILMED	FED.RD. DIST.NO.	STATE	FED.AID PROJ.NO.	SHEET NO.	TOTAL SHEETS
				6	ARK.			
				JOB NO.		100955	330	356
				(2)	CROSS SECTIONS			

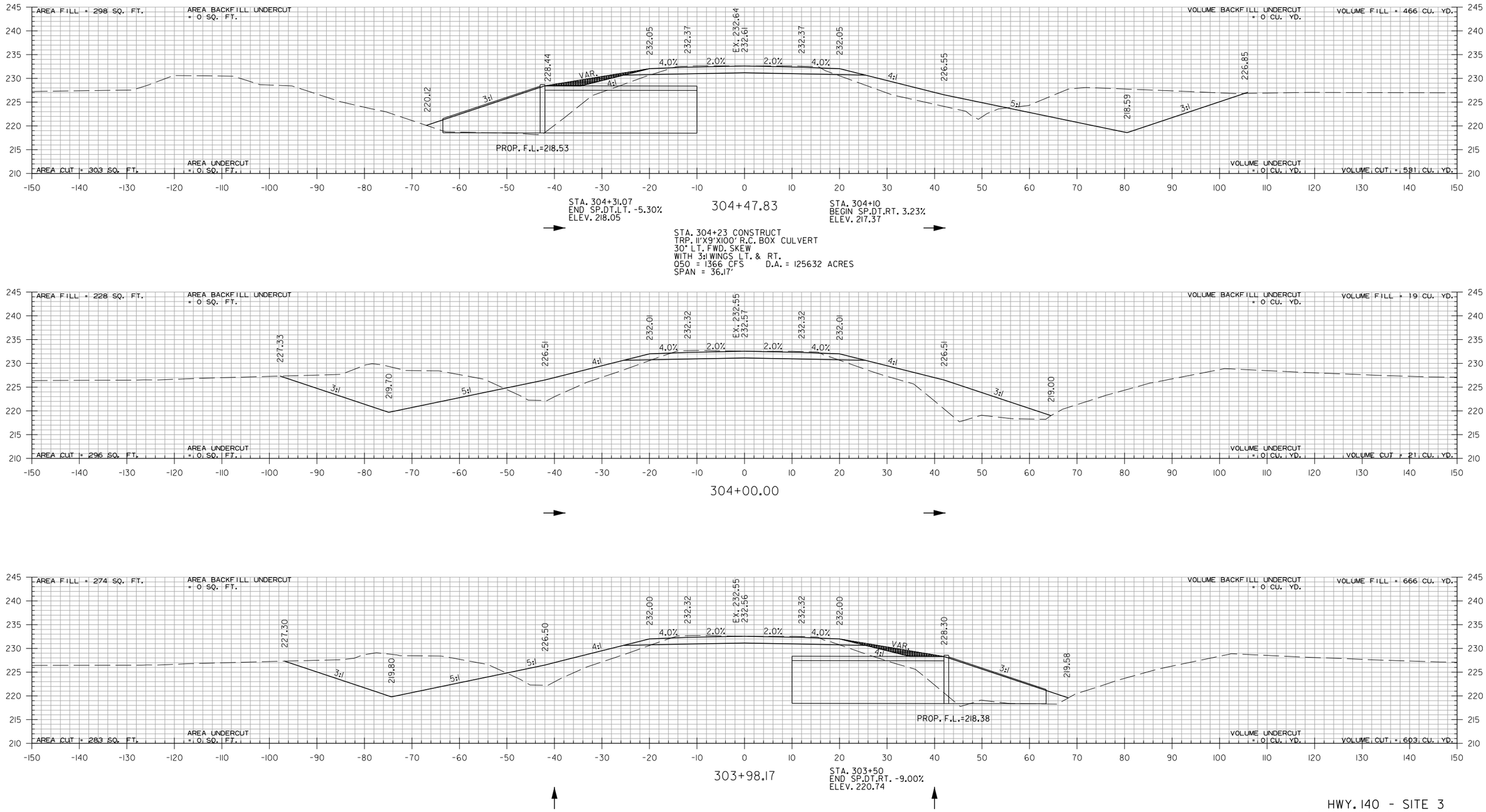

HWY. 140 - SITE 3
STA. 303+98 TO STA. 304+48

PJoseph 8/13/2021 5:27:57 PM
WORKSPACE: AHTD
L:\20IT\170I642 - ARDOT Job 100955\Drawings\r100955-100996.CX.Hwy.140 Site 3.dgn
REVISED DATE:

DATE REVISED	DATE FILMED	DATE REVISED	DATE FILMED	FED.RD. DIST.NO.	STATE	FED.AID PROJ.NO.	SHEET NO.	TOTAL SHEETS
				6	ARK.			
				JOB NO.		100955	331	356
				(2)		CROSS SECTIONS		

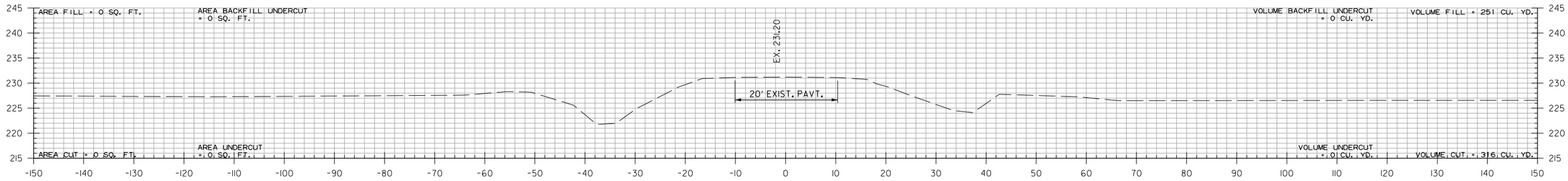

307+00.00

STA. 307+00.00 END 100' TRANSITION

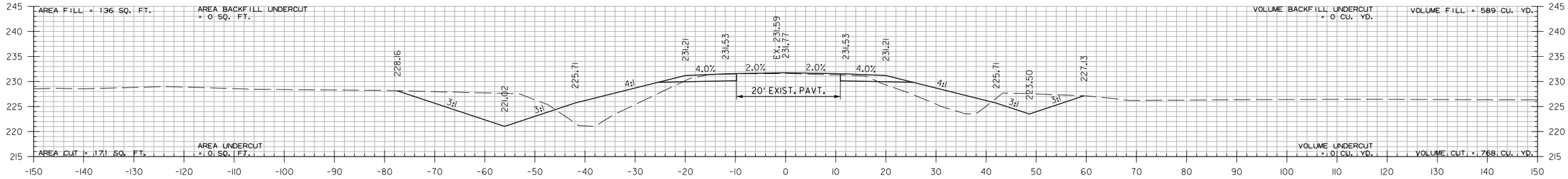

306+00.00

STA. 306+00.00 END HWY. 140 - SITE 3

STA. 306+00
END SP.DT.LT. 2.08%
ELEV. 221.02

STA. 306+00
END SP.DT.RT. 3.23%
ELEV. 223.50

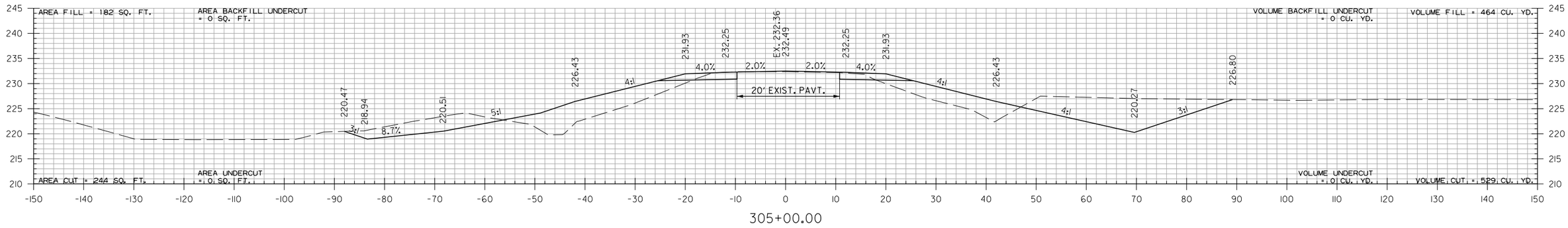

305+00.00

STA. 305+00
BEGIN SP.DT.LT. 2.08%
ELEV. 218.94

HWY. 140 - SITE 3
STA. 305+00 TO STA. 307+00

PJoseph 8/13/2021 5:28:08 PM
WORKSPACE: AHTD
L:\20\T\T01\7642 - ARDOT Job 100955\Drawings\r100955-100996_CX_Hwy.140 Site 3.dgn
REVISED DATE:

DATE REVISED	DATE FILMED	DATE REVISED	DATE FILMED

FED.RD. DIST.NO.	STATE	FED.AID PROJ.NO.	SHEET NO.	TOTAL SHEETS
6	ARK.			
JOB NO.		100955	332	356

(2) CROSS SECTIONS

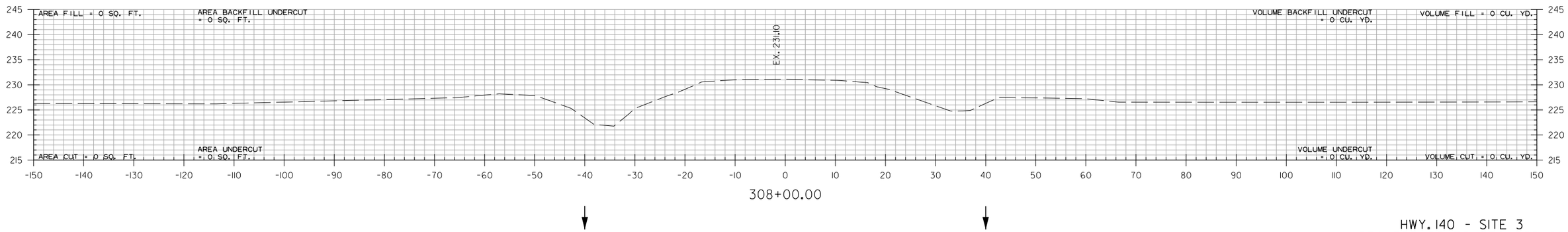

HWY. 140 - SITE 3
STA. 308+00 TO STA. 308+00

PJoseph 8/13/2021 5:28:08 PM
WORKSPACE: AHTD
L:\2017\17017642 - ARDOT Job 100955\Drawings\r100955-100996_CX_Hwy. 140 Site 3.dgn
REVISED DATE:

DATE REVISED	DATE FILMED	DATE REVISED	DATE FILMED	FED.RD. DIST.NO.	STATE	FED.AID PROJ.NO.	SHEET NO.	TOTAL SHEETS
				6	ARK.			
				JOB NO.		100955	333	356
				(2)	CROSS SECTIONS			

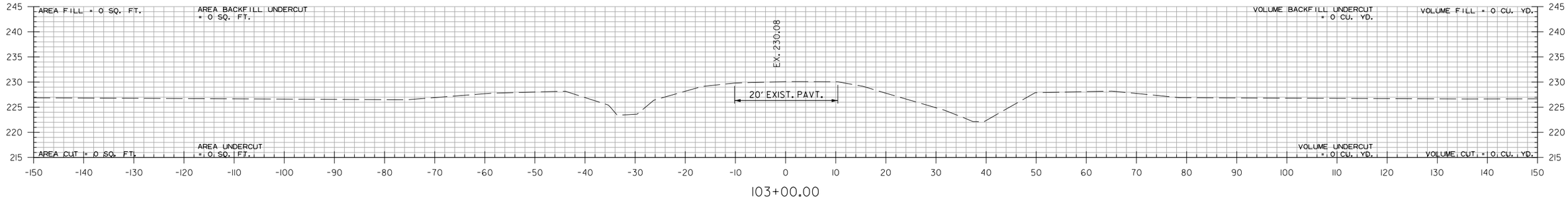

103+00.00

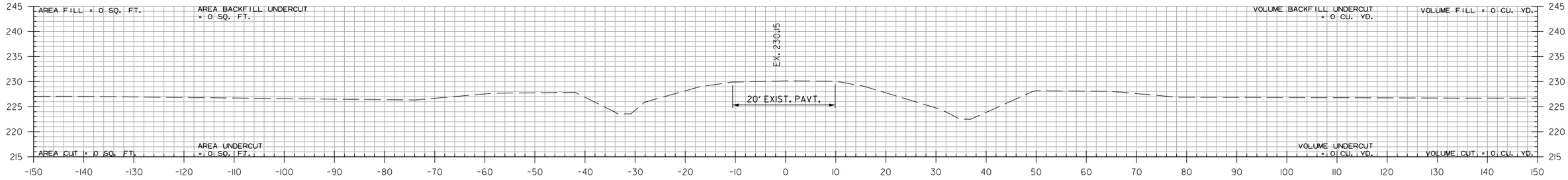

102+25.00

STA. 102+25.00 BEGIN 100' TRANSITION

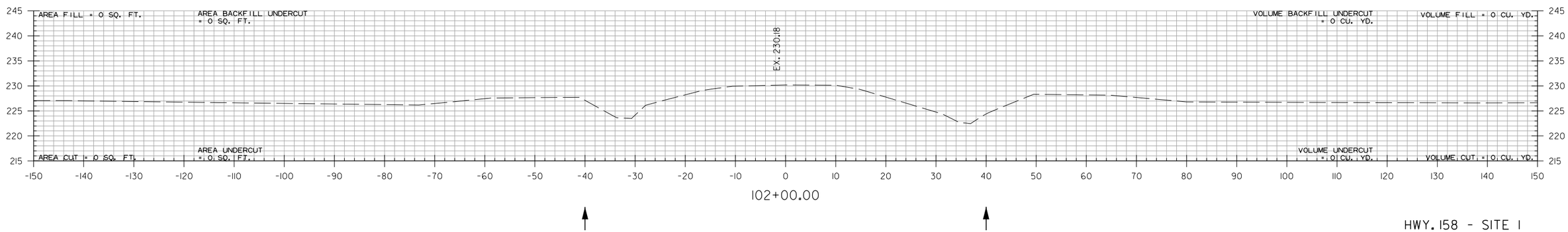

102+00.00

HWY. 158 - SITE 1
STA. 102+00 TO STA. 103+00

PJoseph 8/13/2021 5:28:09 PM
WORKSPACE: AHTD
L:\2017\17017642 - ARDOT Job 100955\Drawings\r100955-100763_CX_Hwy. 158 Site 1.dgn
REVISED DATE:

DATE REVISED	DATE FILMED	DATE REVISED	DATE FILMED	FED.RD. DIST.NO.	STATE	FED.AID PROJ.NO.	SHEET NO.	TOTAL SHEETS
				6	ARK.			
				JOB NO.		100955	334	356
				(2)	CROSS SECTIONS			

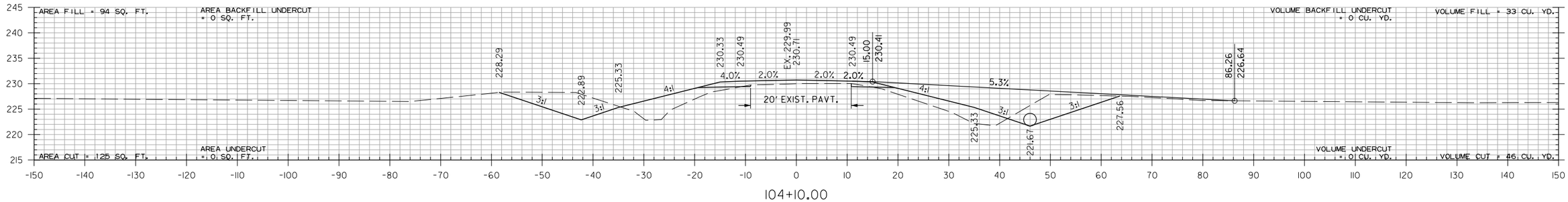

104+10.00

STA. 104+10 INSTALL
30" X 62' PIPE CULVERT
RT. SIDE DRAIN
CONSTRUCT APPROACH = 82 CU. YD.

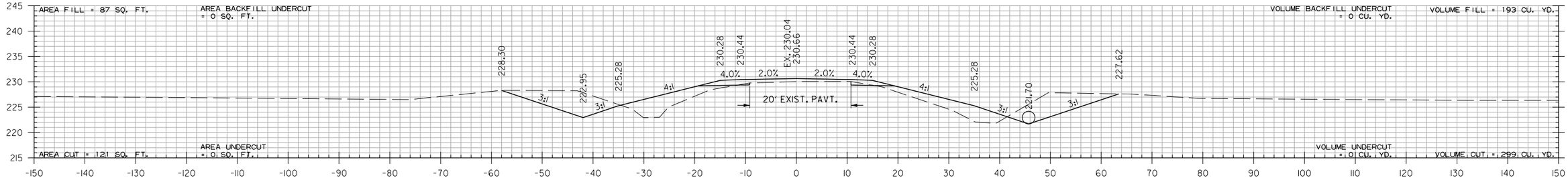

104+00.00

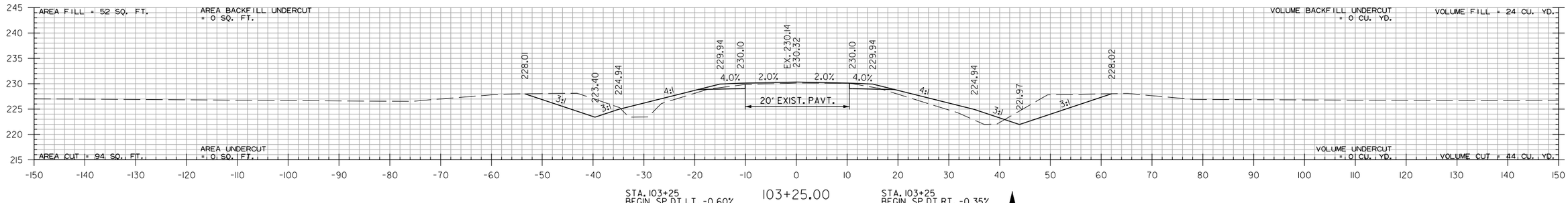

STA. 103+25
BEGIN SP.DT.LT. -0.60%
ELEV. 223.40

103+25.00

STA. 103+25
BEGIN SP.DT.RT. -0.35%
ELEV. 221.97

STA. 103+25.00 BEGIN HWY. 158 - SITE 1

HWY. 158 - SITE 1
STA. 103+25 TO STA. 104+10

PJoseph 8/13/2021 5:28:10 PM
WORKSPACE: AHTD
L:\2017\1701642 - ARDOT Job 100955\Drawings\r100955-100763.CX_Hwy.158 Site 1.dgn
REVISED DATE:

DATE REVISED	DATE FILMED	DATE REVISED	DATE FILMED	FED.RD. DIST.NO.	STATE	FED.AID PROJ.NO.	SHEET NO.	TOTAL SHEETS
01-05-2022				6	ARK.			
				JOB NO.		100955	335	356
				(2)	CROSS SECTIONS			

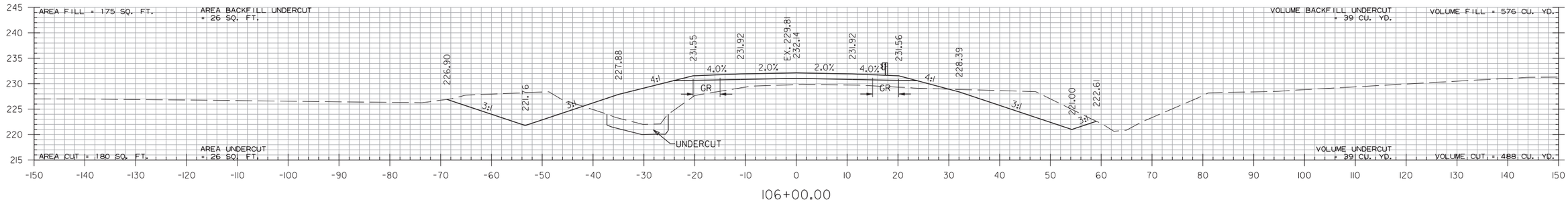

106+00.00

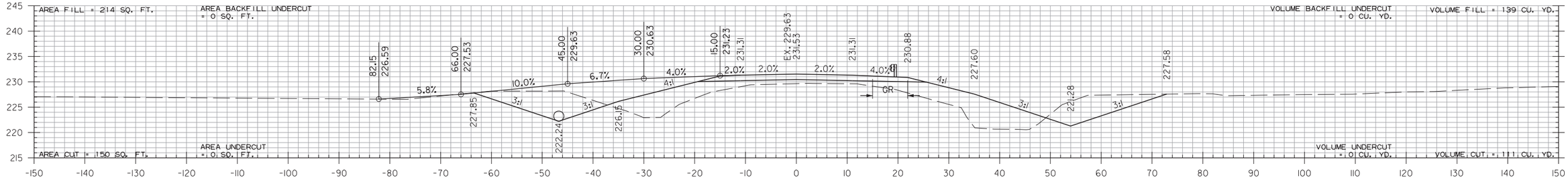

105+20.00

STA. 105+20 INSTALL
24" X 60' PIPE CULVERT
LT. SIDE DRAIN
CONSTRUCT APPROACH = 61 CU. YD.

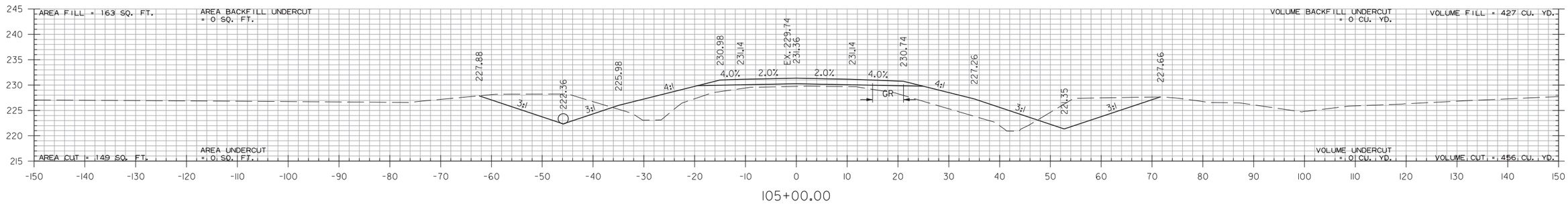

105+00.00

HWY. 158 - SITE 1
STA. 105+00 TO STA. 106+00

CGGervasini 1/5/2022 1:58:59 PM
WORKSPACE: AHTD
L:\2017\1701642 - ARDOT Job 100955\Drawings\r100955-100763.CX.Hwy.158 Site 1.dgn
REVISED DATE:

DATE REVISED	DATE FILMED	DATE REVISED	DATE FILMED	FED.RD. DIST.NO.	STATE	FED.AID PROJ.NO.	SHEET NO.	TOTAL SHEETS
				6	ARK.			
				JOB NO.		100955	336	356
				(2)		CROSS SECTIONS		

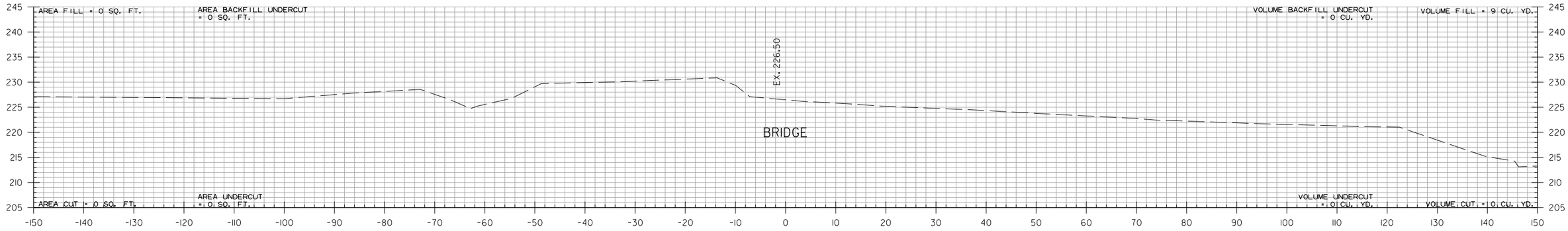

107+71.39

STA. 107+71.39 END TOE OF SLOPE

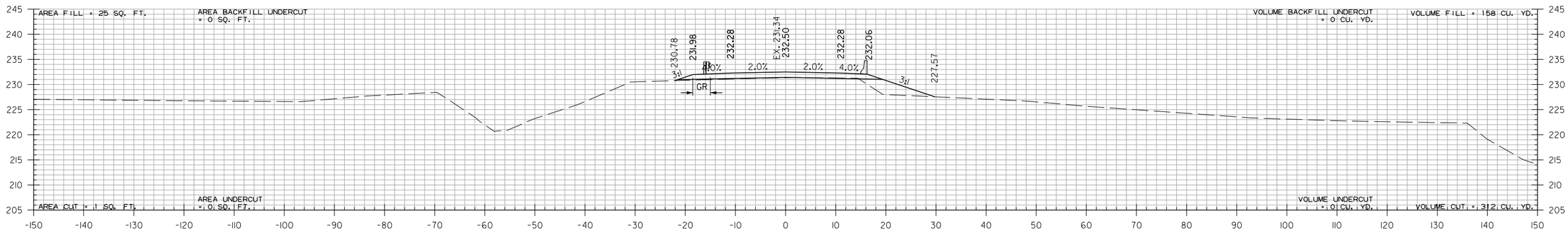

107+52.68

STA. 107+52.68 BEGIN BRIDGE

STA. 107+50
END SP.DT.LT. -0.60%
ELEV. 220.87

STA. 107+50
END SP.DT.RT. -0.35%
ELEV. 220.47

STA. 107+15.00 RT.
BERM LOCATION
SEE SPECIAL DETAILS

STA. 107+12 INSTALL
24" X 74' PIPE CULVERT
RT. SIDE DRAIN

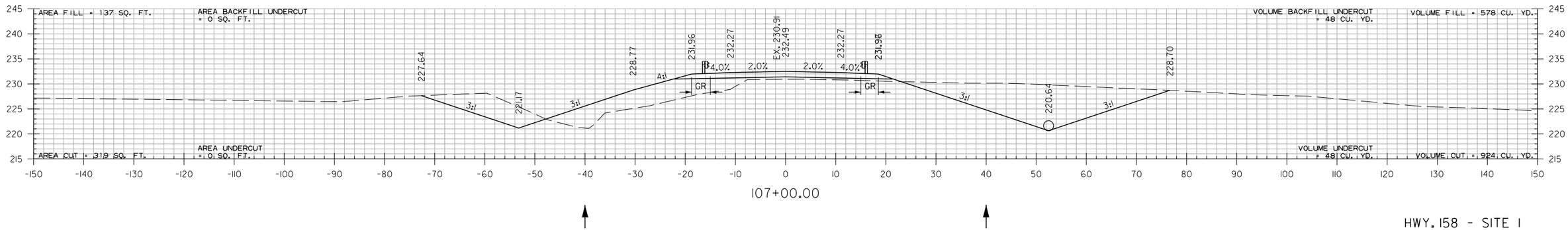

107+00.00

HWY. 158 - SITE 1
STA. 107+00 TO STA. 107+71

PJoseph 8/13/2021 5:28:10 PM
WORKSPACE: AHTD
L:\20\7\7017642 - ARDOT Job 100955\Drawings\r100955-100763_CX_Hwy.158 Site 1.dgn
REVISED DATE:

DATE REVISED	DATE FILMED	DATE REVISED	DATE FILMED	FED.RD. DIST.NO.	STATE	FED.AID PROJ.NO.	SHEET NO.	TOTAL SHEETS
01-05-2022				6	ARK.			
				JOB NO.		100955	337	356
				(2)		CROSS SECTIONS		

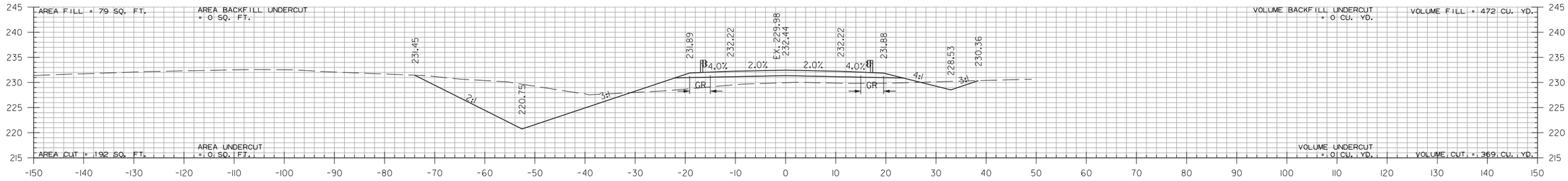

111+00.00

STA. 110+48 INSTALL
30" X 74' PIPE CULVERT
LT. SIDE DRAIN

STA. 110+45.00 LT.
BERM LOCATION
SEE SPECIAL DETAILS

STA. 110+11
BEGIN SP.DT.LT. 0.40%
ELEV. 220.39

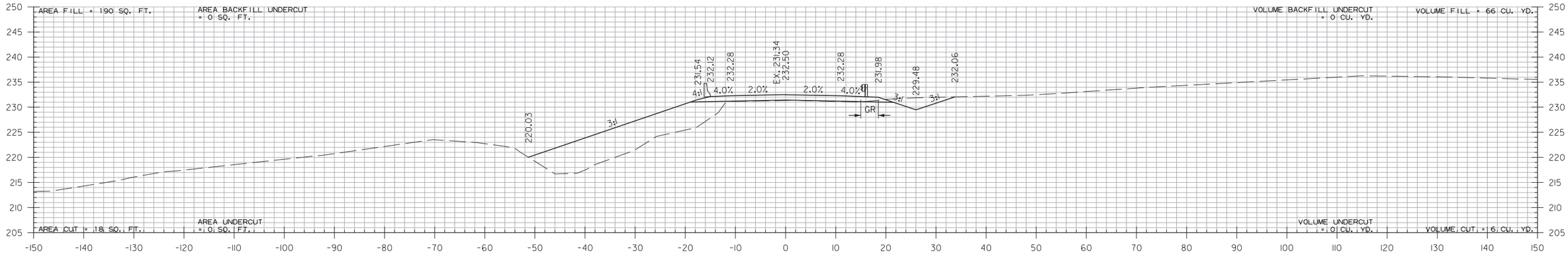

110+05.32

STA. 110+05.32 END BRIDGE

STA. 110+00
BEGIN SP.DT.RT. -1.00%
ELEV. 229.53

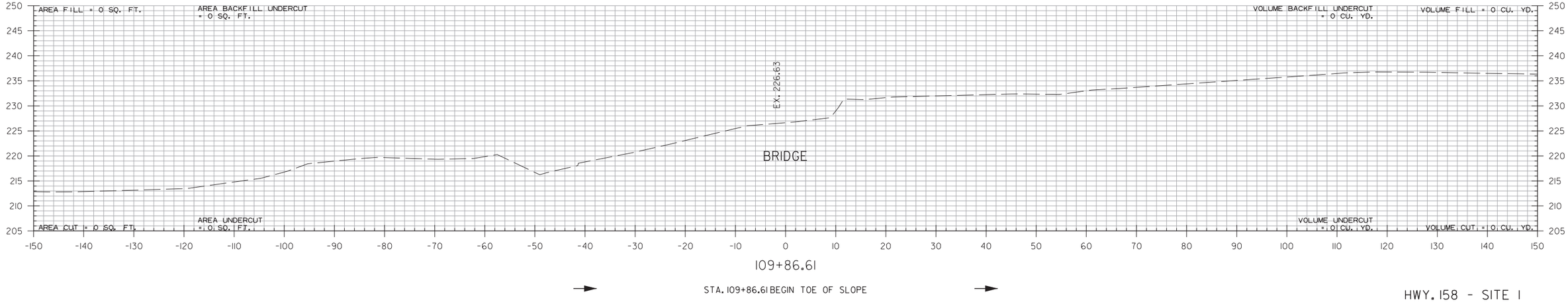

109+86.61

STA. 109+86.61 BEGIN TOE OF SLOPE

HWY. 158 - SITE 1
STA. 109+87 TO STA. 111+00

CGGervosini 1/5/2022 1:58:59 PM
WORKSPACE: AHTD
L:\2017\17017642 - ARDOT Job 100955\Drawings\r100955-100763_CX_Hwy.158 Site 1.dgn
REVISED DATE:

DATE REVISED	DATE FILMED	DATE REVISED	DATE FILMED	FED.RD. DIST.NO.	STATE	FED.AID PROJ.NO.	SHEET NO.	TOTAL SHEETS
01-05-2022				6	ARK.			
				JOB NO.		100955	338	356
				(2)	CROSS SECTIONS			

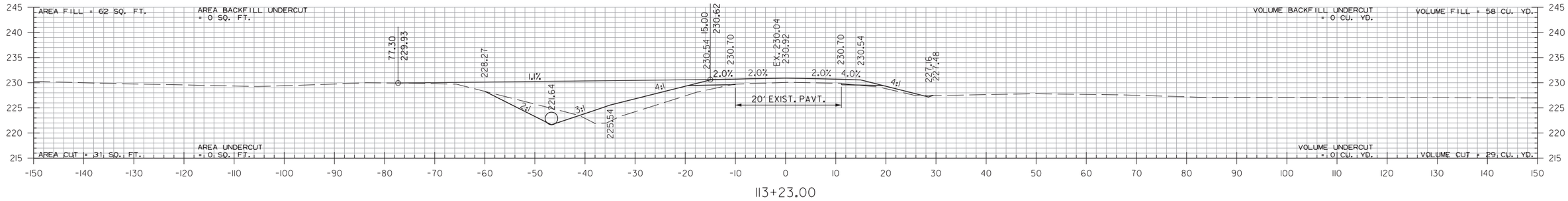

113+23.00

STA. 113+23 INSTALL
30" X 74' PIPE CULVERT
LT. SIDE DRAIN
CONSTRUCT APPROACH = 153 CU. YD.

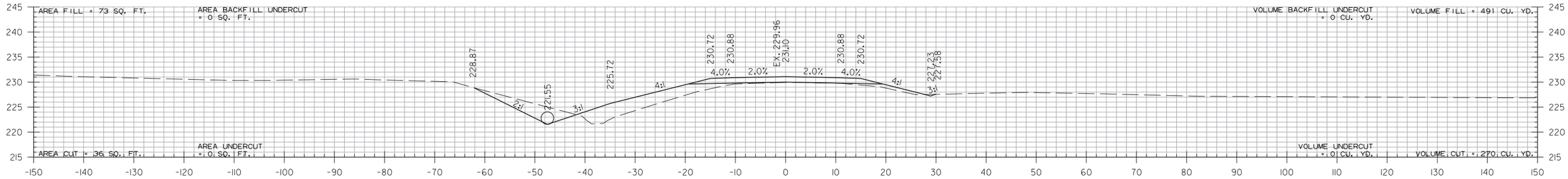

113+00.00

STA. 112+35 INSTALL
18" X 64' PIPE CULVERT
RT. SIDE DRAIN
CONSTRUCT APPROACH = 912 CU. YD.

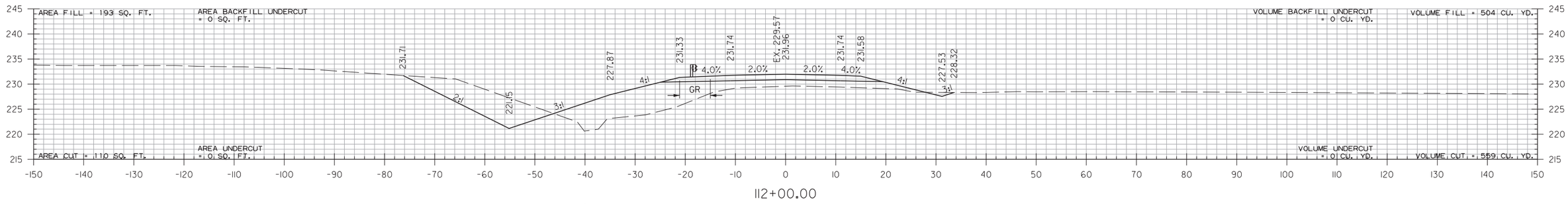

112+00.00

STA. 112+00
END SP.DT.RT. -1.00%
BEGIN SP.DT.RT. -0.30%
ELEV. 227.53

HWY. 158 - SITE 1
STA. 112+00 TO STA. 113+23

CGGervasIni 1/5/2022 11:59:00 PM
WORKSPACE: AHTD
L:\2017\17017642 - ARDOT Job 100955\Drawings\r100955-100763.CX.Hwy.158 Site 1.dgn
REVISED DATE:

DATE REVISED	DATE FILMED	DATE REVISED	DATE FILMED
01-05-2022			

FED.RD. DIST.NO.	STATE	FED.AID PROJ.NO.	SHEET NO.	TOTAL SHEETS
6	ARK.			
JOB NO.		100955	339	356

(2) CROSS SECTIONS

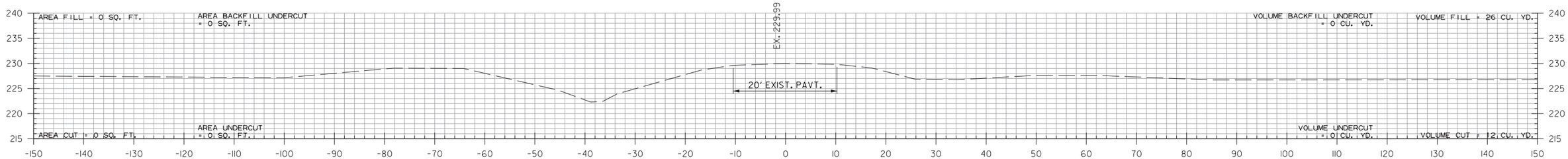

115+00.00

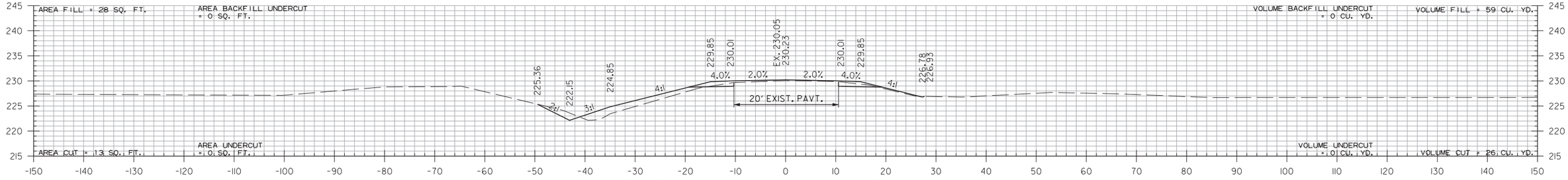

STA. 114+50
END SP.DT.LT. 0.40%
ELEV. 222.15

114+50.00

STA. 114+50
END SP.DT.RT. -0.30%
ELEV. 226.78

STA. 114+50.00 END HWY. 158 - SITE 1

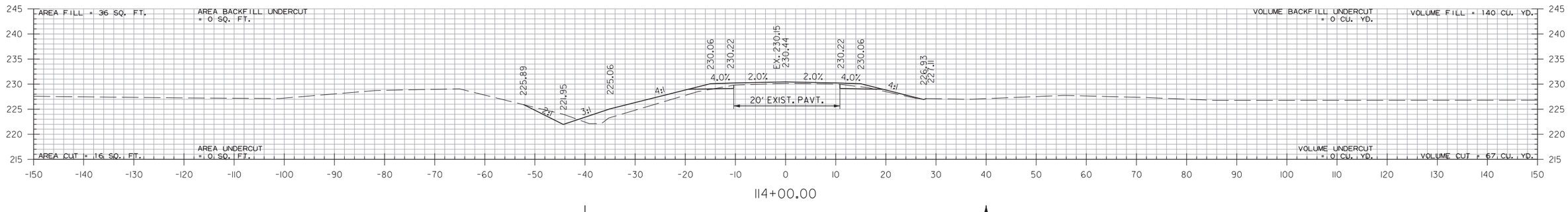

114+00.00

HWY. 158 - SITE 1
STA. 114+00 TO STA. 115+00

CGervasini 1/5/2022 11:59:00 PM
WORKSPACE: AHTD
L:\2017\1701642 - ARDOT Job 100955\Drawings\r100955-100763.CX_Hwy. 158 Site 1.dgn
REVISED DATE:

DATE REVISED	DATE FILMED	DATE REVISED	DATE FILMED

FED.RD. DIST.NO.	STATE	FED.AID PROJ.NO.	SHEET NO.	TOTAL SHEETS
6	ARK.			
JOB NO.		100955	340	356
(2)	CROSS SECTIONS			

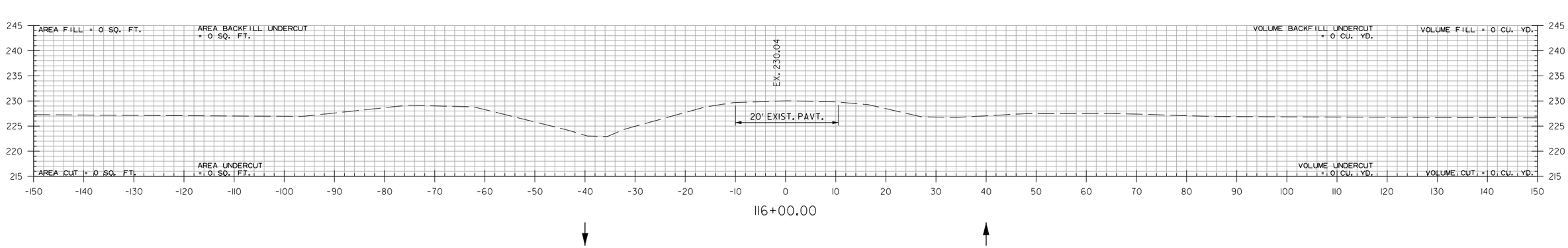

116+00.00

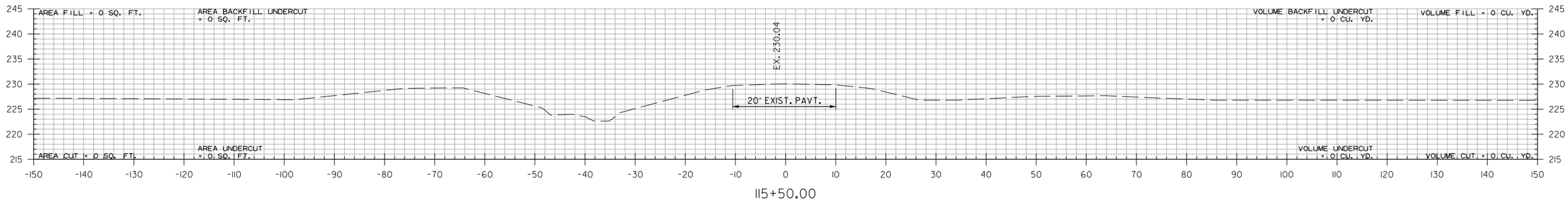

115+50.00

STA. 115+50.00 END 100' TRANSITION

HWY. 158 - SITE 1
STA. 115+50 TO STA. 116+00

PJoseph 8/13/2021 5:28:12 PM
WORKSPACE: AHTD
L:\2017\17017642 - ARDOT Job 100955\Drawings\r100955-100763.CX_Hwy. 158 Site 1.dgn
REVISED DATE:

DATE REVISED	DATE FILMED	DATE REVISED	DATE FILMED	FED.RD. DIST.NO.	STATE	FED.AID PROJ.NO.	SHEET NO.	TOTAL SHEETS
				6	ARK.			
				JOB NO.		100955	341	356
				(2)		CROSS SECTIONS		

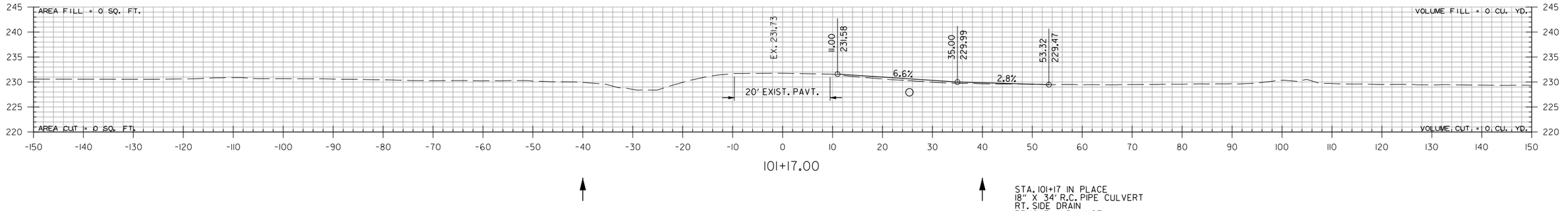

101+17.00

STA. 101+17 IN PLACE
18" X 34' R.C. PIPE CULVERT
RT. SIDE DRAIN
REMOVE AND INSTALL
18" X 42' PIPE CULVERT
RT. SIDE DRAIN
CONSTRUCT APPROACH = 14 CU. YD.

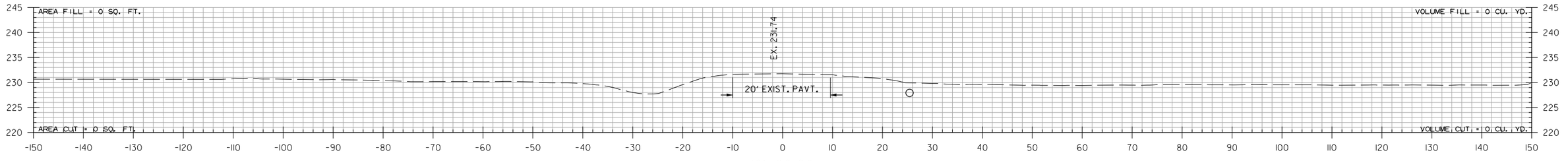

101+00.00

STA. 101+00.00 BEGIN 100' TRANSITION

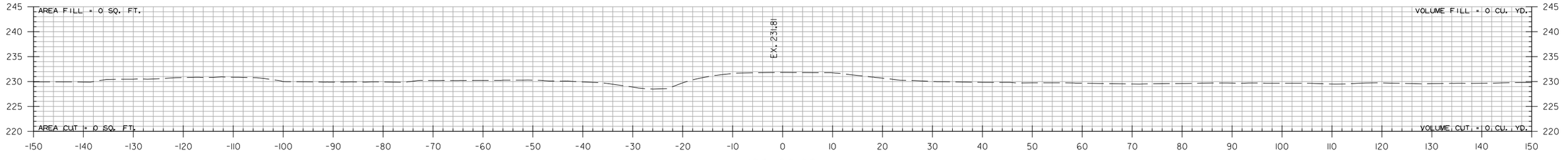

100+00.00

HWY. 181 - SITE 1
STA. 100+00 TO STA. 101+09

Pjoseph 8/13/2021 5:28:13 PM
WORKSPACE: AHTD
L:\2017\170176\42 - ARDOT Job 100955\Drawings\r100955_CX_Hwy.181Site 1.dgn
REVISED DATE:

DATE REVISED	DATE FILMED	DATE REVISED	DATE FILMED

FED.RD. DIST.NO.	STATE	FED.AID PROJ.NO.	SHEET NO.	TOTAL SHEETS
6	ARK.			
JOB NO.		100955	342	356

(2) CROSS SECTIONS

STA. 102+50 CONSTRUCT
TRP. 10'X9'X86' R.C. BOX CULVERT
10° LT FWD. SKEW
WITH 3:1 WINGS LT. & RT.
Q25 = 690 CFS D.A. = 2033 ACRES
SPAN = 32.67

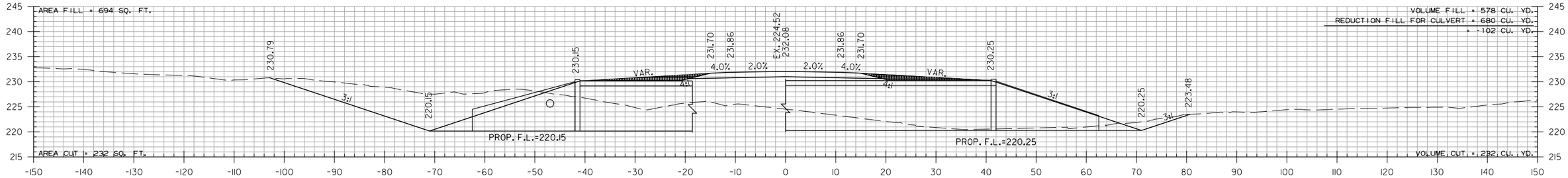

STA. 102+38
END SP.DT.LT. -14.72%
ELEV. 224.90

102+42.59

STA. 102+38
END SP.DT.RT. -0.50%
ELEV. 227.14

STA. 102+20
END SP.DT.LT. -1.00%
BEGIN SP.DT.LT. -14.72%
ELEV. 227.55

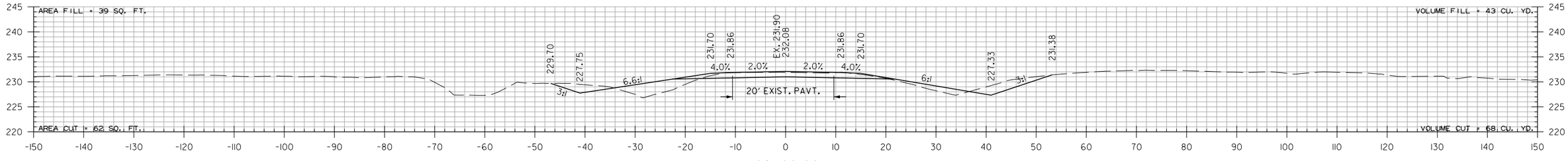

102+00.00

STA. 102+00
BEGIN SP.DT.RT. -0.50%
ELEV. 227.33

STA. 102+00.00 BEGIN HWY. 181 - SITE 1

STA. 101+63
BEGIN SP.DT.LT. -1.00%
ELEV. 228.12

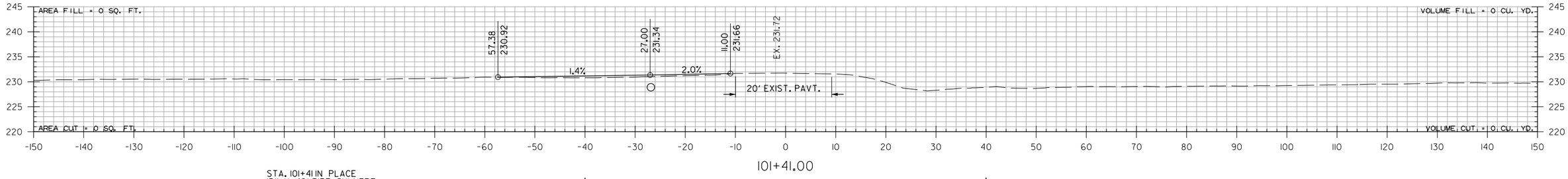

101+41.00

STA. 101+41 IN PLACE
15" X 48' PIPE CULVERT
LT. SIDE DRAIN
REMOVE AND INSTALL
18" X 44' PIPE CULVERT
RT. SIDE DRAIN
CONSTRUCT APPROACH = 15 CU. YD.

HWY. 181 - SITE 1
STA. 101+41 TO STA. 102+43

PJoseph 8/13/2021 5:28:14 PM
WORKSPACE: AHTD
L:\2017\170764Z - ARDOT Job 100955\Drawings\r100955_CX_Hwy.181Site 1.dgn
REVISED DATE:

DATE REVISED	DATE FILMED	DATE REVISED	DATE FILMED	FED.RD. DIST.NO.	STATE	FED.AID PROJ.NO.	SHEET NO.	TOTAL SHEETS
				6	ARK.			
				JOB NO.		100955	343	356
				(2)		CROSS SECTIONS		

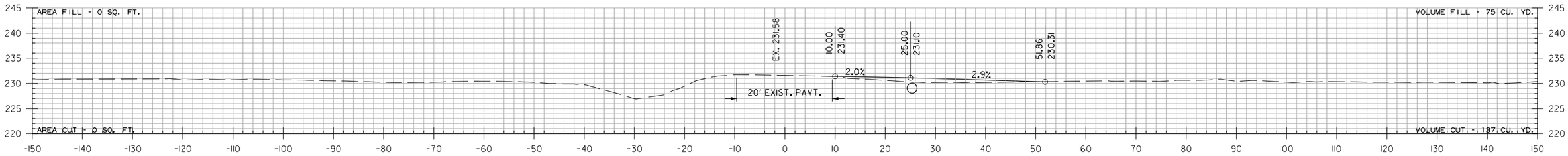

103+96.00

STA. 103+96 IN PLACE
18" X 22' CM PIPE CULVERT
RT. SIDE DRAIN
REMOVE AND INSTALL
24" X 50' PIPE CULVERT
RT. SIDE DRAIN
CONSTRUCT APPROACH = 8 CU. YD.

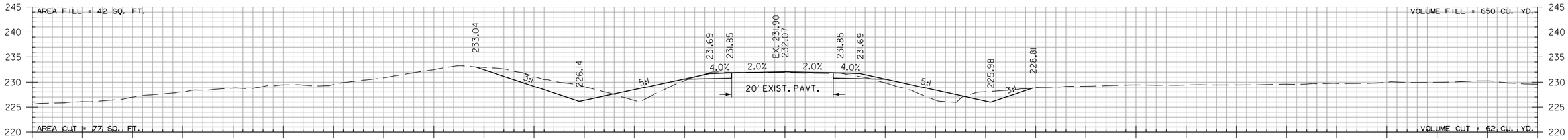

STA. 103+00
END SP.DT.LT. 0.50%
ELEV. 226.14

103+00.00

STA. 103+00
END SP.DT.RT. 0.50%
ELEV. 225.98

STA. 103+00.00 END HWY. 181 - SITE 1

STA. 102+65
BEGIN SP.DT.LT. 0.50%
ELEV. 225.97

STA. 102+65
BEGIN SP.DT.RT. 0.50%
ELEV. 225.80

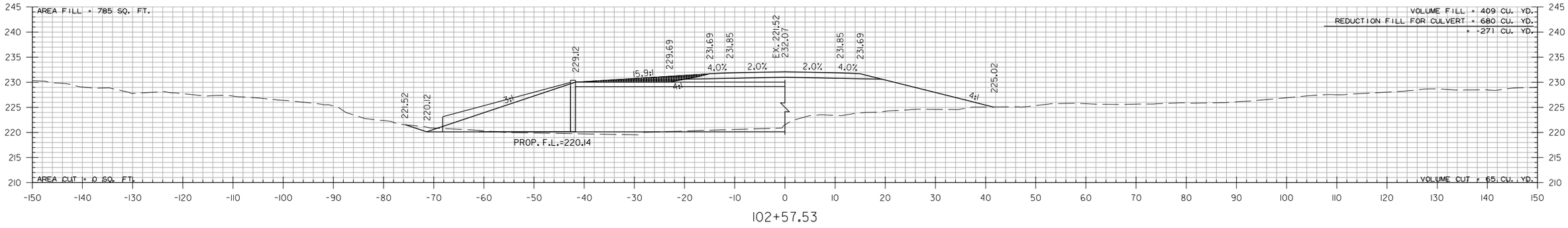

102+57.53

HWY. 181 - SITE 1
STA. 102+58 TO STA. 103+90

PJoseph 8/13/2021 5:28:14 PM
WORKSPACE: AHTD
L:\2017\17017642 - ARDOT Job 100955\Drawings\r100955_CX_Hwy.181Site 1.dgn
REVISED DATE:

DATE REVISED	DATE FILMED	DATE REVISED	DATE FILMED

FED.RD. DIST.NO.	STATE	FED.AID PROJ.NO.	SHEET NO.	TOTAL SHEETS
6	ARK.			
JOB NO.		100955	344	356

(2) CROSS SECTIONS

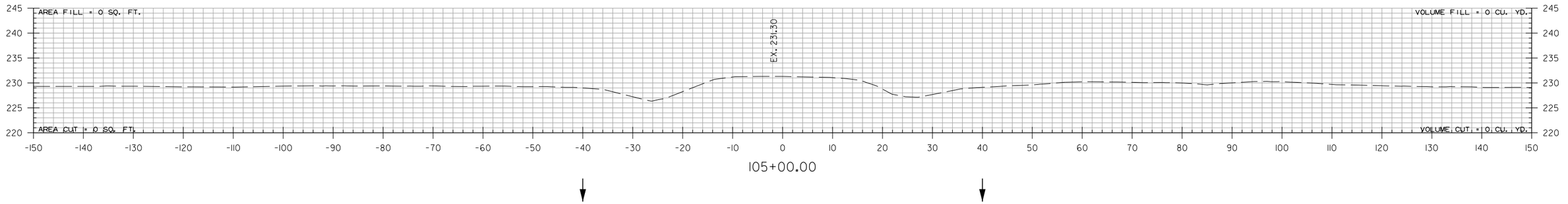

105+00.00

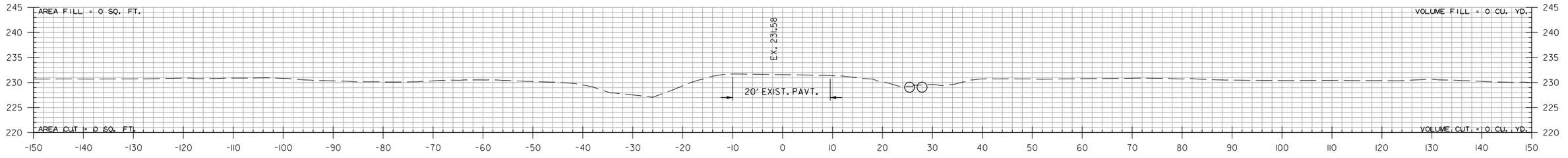

104+00.00

STA. 104+00.00 END 100' TRANSITION

HWY. 181 - SITE 1
STA. 104+00 TO STA. 105+00

PJoseph 8/13/2021 5:28:14 PM
WORKSPACE: AHTD
L:\2017\17017642 - ARDOT Job 100955\Drawings\r100955_CX_Hwy.181Site 1.dgn
REVISED DATE:

DATE REVISED	DATE FILMED	DATE REVISED	DATE FILMED	FED.RD. DIST.NO.	STATE	FED.AID PROJ.NO.	SHEET NO.	TOTAL SHEETS
				6	ARK.			
				JOB NO.		100955	345	356
				(2)	CROSS SECTIONS			

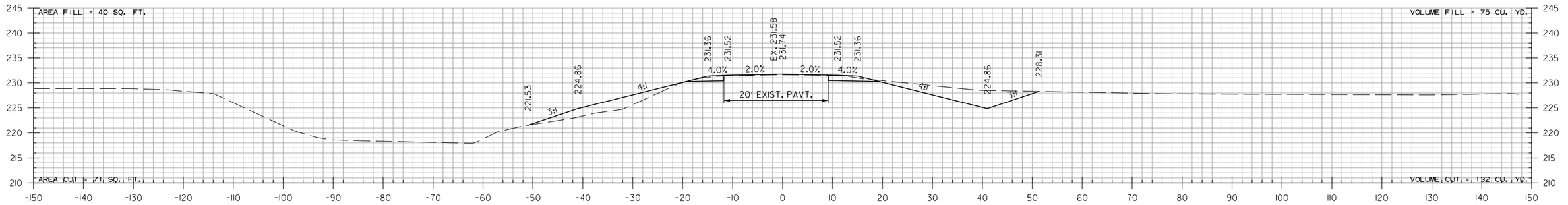

STA. 202+00.00 BEGIN HWY. 181 - SITE 2

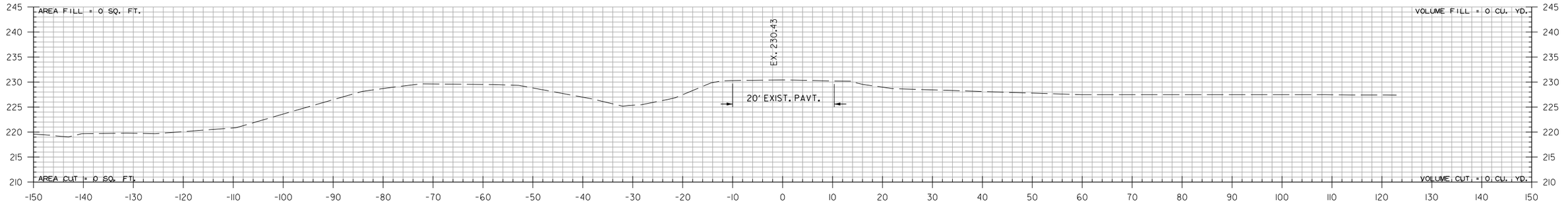

STA. 201+00.00 BEGIN 100' TRANSITION

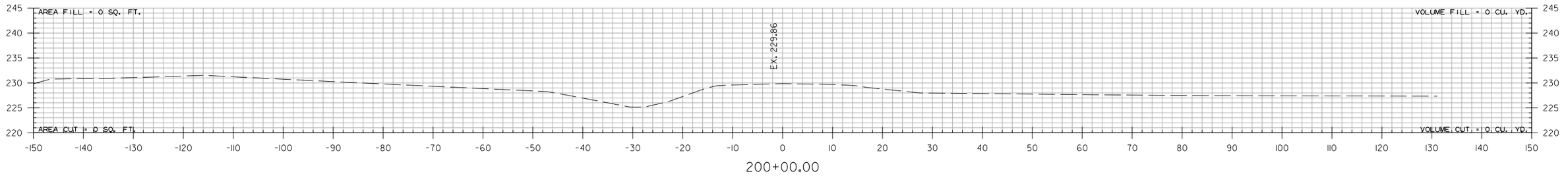

HWY. 181 - SITE 2
STA. 200+00 TO STA. 202+00

PJoseph 8/13/2021 5:28:15 PM
WORKSPACE: AHTD
L:\2017\17017642 - ARDOT Job 100955\Drawings\r100955-100996_CX_Hwy.181Site 2.dgn
REVISED DATE:

DATE REVISED	DATE FILMED	DATE REVISED	DATE FILMED

FED.RD. DIST.NO.	STATE	FED.AID PROJ.NO.	SHEET NO.	TOTAL SHEETS
6	ARK.			
JOB NO.		100955	346	356
(2)	CROSS SECTIONS			

STA. 202+90
BEGIN SP.DT.RT. -5.00%
ELEV. 224.25

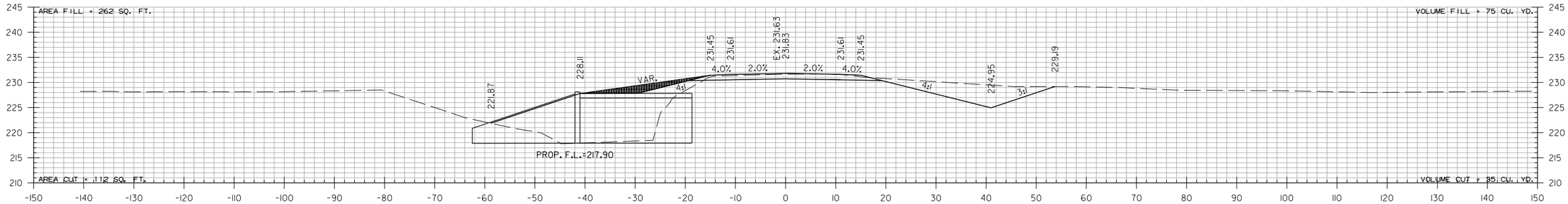

202+49.00

STA. 202+91 CONSTRUCT
TRP. 11'X9'X119' R.C. BOX CULVERT
45° RT. FWD. SKEW
WITH 3:1 WINGS LT. & RT.
Q25 = 1184 CFS D.A. = 125632 ACRES
SPAN = 36.17'

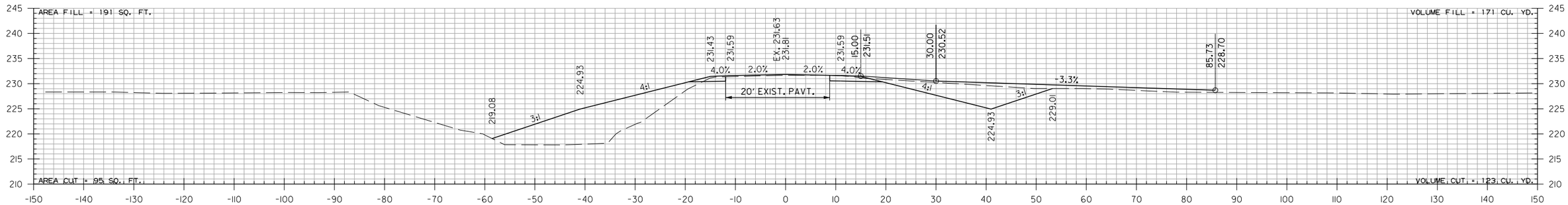

202+40.00

STA. 202+40 CONSTRUCT
APPROACH ON RT. = 12 CU. YD.

HWY. 181 - SITE 2
STA. 202+40 TO STA. 202+49

PJoseph 8/3/2021 5:28:16 PM
WORKSPACE: AHTD
L:\201\T\01\642 - ARDOT Job 100955\Drawings\r100955-100996.CX.Hwy.181 Site 2.dgn
REVISED DATE:

DATE REVISED	DATE FILMED	DATE REVISED	DATE FILMED

FED.RD. DIST.NO.	STATE	FED.AID PROJ.NO.	SHEET NO.	TOTAL SHEETS
6	ARK.			
JOB NO.		100955	347	356

(2) CROSS SECTIONS

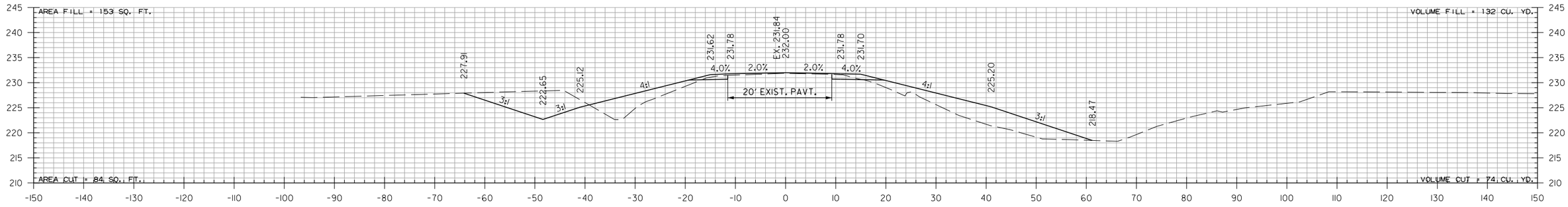

203+50.00

STA. 203+50.00 END HWY. 181 - SITE 2

STA. 203+50
END SP.DT.LT. 6.00%
ELEV. 222.65

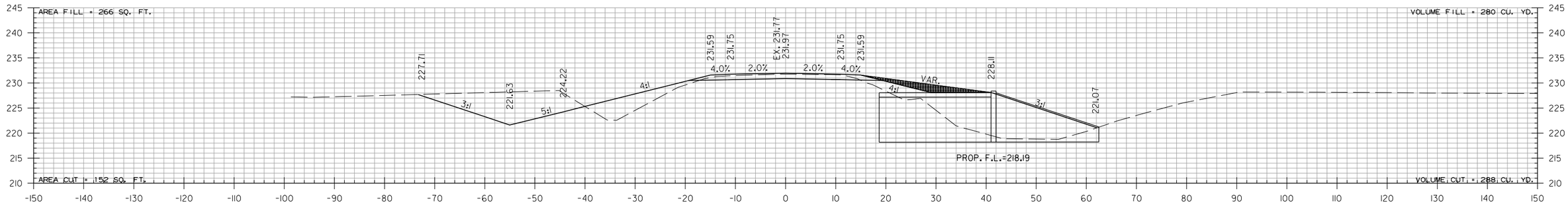

203+33.02

STA. 202+91 CONSTRUCT
TRP. 11'X9'X119' R.C. BOX CULVERT
45° RT. FWD. SKEW
WITH 3:1 WINGS LT. & RT.
Q25 = 1184 CFS D.A. = 125632 ACRES
SPAN = 36.17'

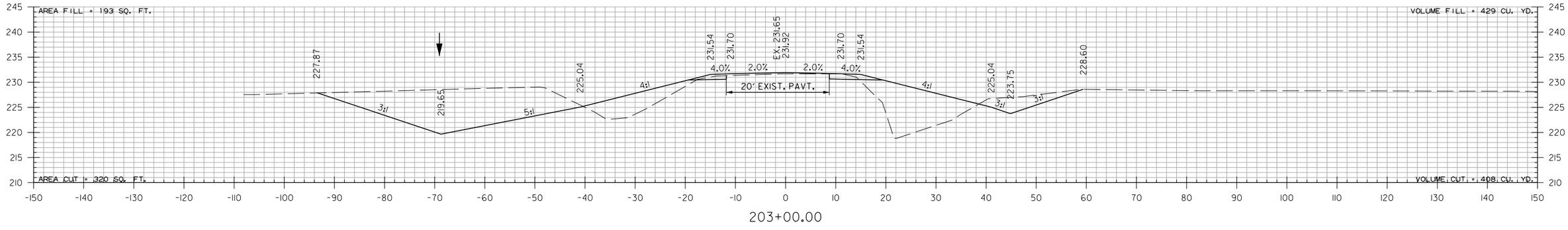

203+00.00

STA. 202+50
BEGIN SP.DT.LT. 6.00%
ELEV. 216.65

STA. 203+00
END SP.DT.RT. -5.00%
ELEV. 223.75

HWY. 181 - SITE 2
STA. 203+00 TO STA. 203+50

PJoseph 8/13/2021 5:28:16 PM
WORKSPACE: AHTD
L:\2017\1701642 - ARDOT Job 100955\Drawings\r100955-100996.CX.Hwy.181Site 2.dgn
REVISED DATE:

DATE REVISED	DATE FILMED	DATE REVISED	DATE FILMED

FED.RD. DIST.NO.	STATE	FED.AID PROJ.NO.	SHEET NO.	TOTAL SHEETS
6	ARK.			
JOB NO.		100955	348	356

(2) CROSS SECTIONS

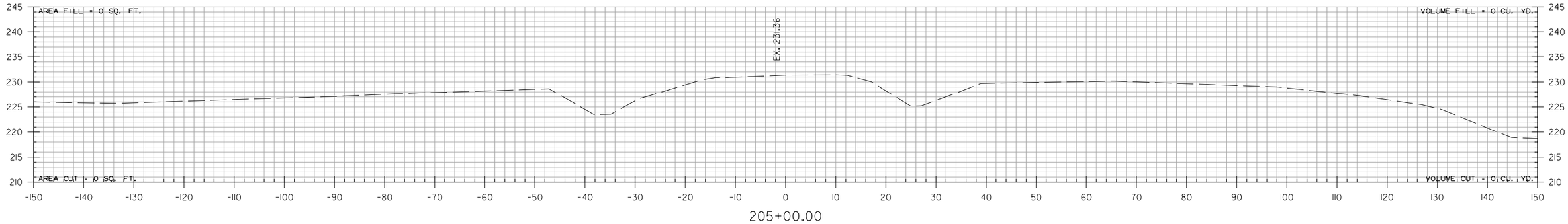

205+00.00

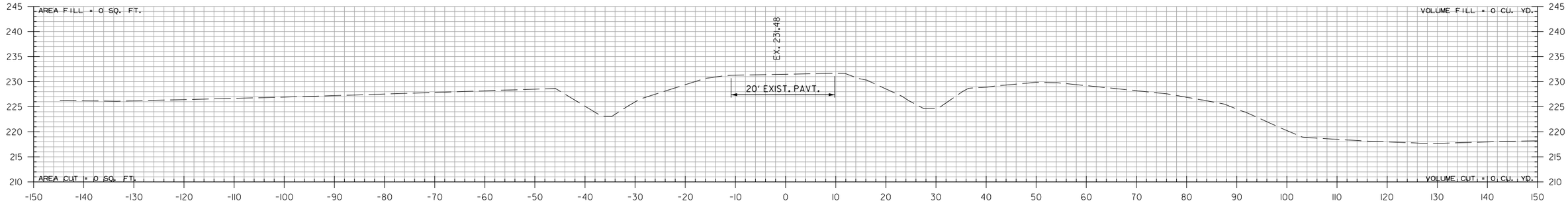

204+50.00

STA. 204+50.00 END 100' TRANSITION

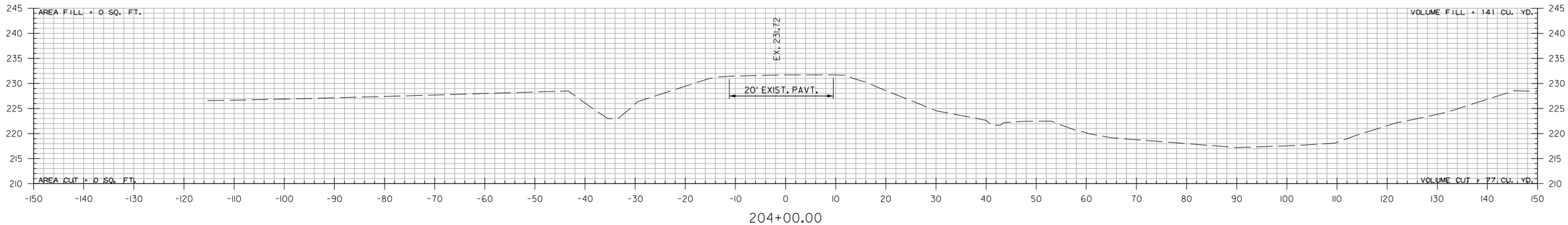

204+00.00

HWY. 181 - SITE 2
STA. 204+00 TO STA. 205+00

PJoseph 8/13/2021 5:28:17 PM
WORKSPACE: AHTD
L:\20\TV\70\f642 - ARDOT Job 100955\Drawings\r100955-100996_CX_Hwy.181Site 2.dgn
REVISED DATE:

DATE REVISED	DATE FILMED	DATE REVISED	DATE FILMED

FED.RD. DIST.NO.	STATE	FED.AID PROJ.NO.	SHEET NO.	TOTAL SHEETS
6	ARK.			
JOB NO.		100955	349	356

(2) CROSS SECTIONS

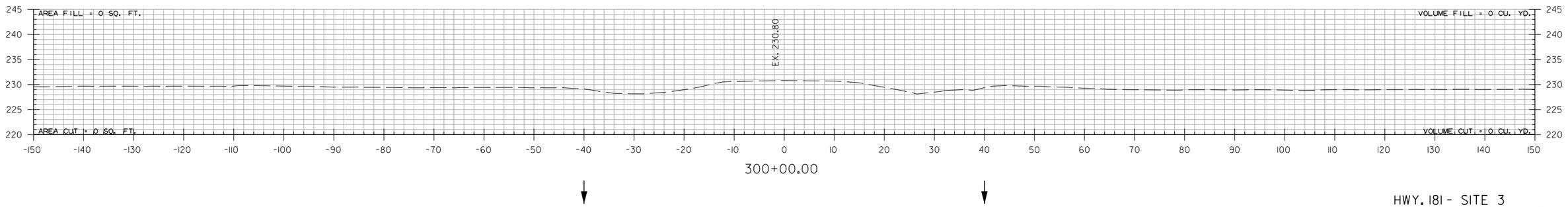

HWY. 181 - SITE 3
STA. 300+00 TO STA. 300+00

PJoseph 8/13/2021 5:28:18 PM
WORKSPACE: AHTD
L:\2017\17017642 - ARDOT Job 100955\Drawings\r100955_CX_Hwy.181Site 3.dgn
REVISED DATE:

DATE REVISED	DATE FILMED	DATE REVISED	DATE FILMED	FED.RD. DIST.NO.	STATE	FED.AID PROJ.NO.	SHEET NO.	TOTAL SHEETS
				6	ARK.			
				JOB NO.		100955	350	356
				(2)	CROSS SECTIONS			

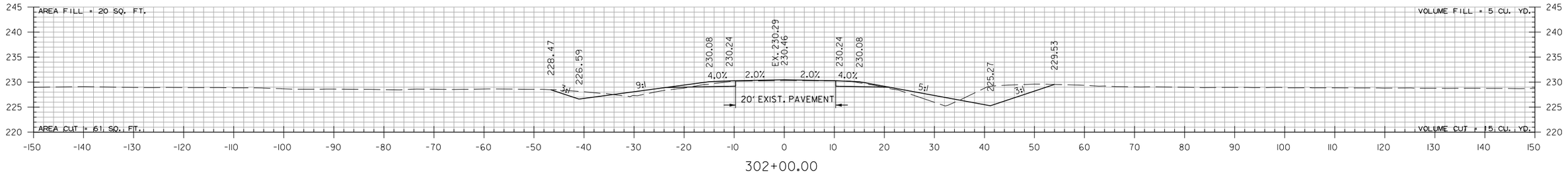

302+00.00

STA. 302+00.00 BEGIN HWY. 181 - SITE 3

STA. 302+00
BEGIN SP.DT.LT. -1.00%
ELEV. 226.59

STA. 302+00
BEGIN SP.DT.RT. -0.50%
ELEV. 225.27

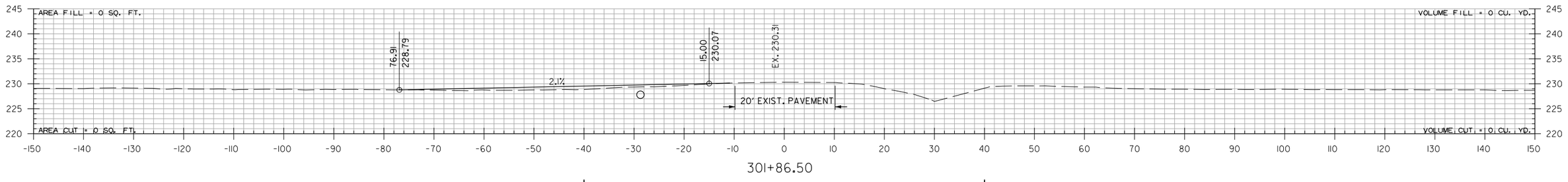

301+86.50

STA. 301+86 IN PLACE
15" X 25' CM PIPE CULVERT
LT. SIDE DRAIN
REMOVE AND INSTALL
30" X 36' CM PIPE CULVERT
LT. SIDE DRAIN
CONSTRUCT APPROACH = 15 CU. YDS.

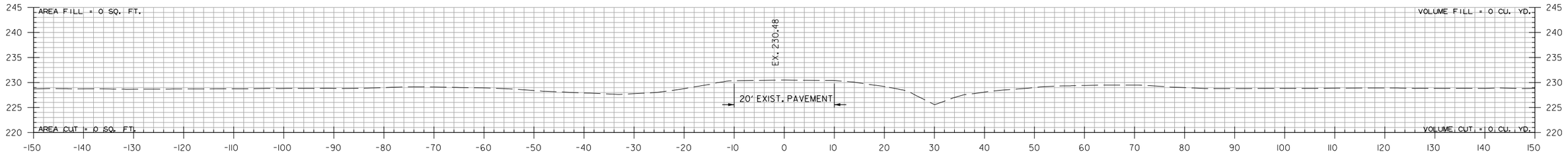

301+00.00

STA. 301+00.00 BEGIN 100' TRANSITION

HWY. 181 - SITE 3
STA. 301+00 TO STA. 302+00

PJoseph
WORKSPACE: AHTD
L:\2017\170176\42 - ARDOT Job 100955\Drawings\r100955.CX.Hwy.181Site 3.dgn
8/13/2021 5:28:18 PM
REVISED DATE:

DATE REVISED	DATE FILMED	DATE REVISED	DATE FILMED

FED.RD. DIST.NO.	STATE	FED.AID PROJ.NO.	SHEET NO.	TOTAL SHEETS
6	ARK.			
JOB NO.		100955	351	356
(2)	CROSS SECTIONS			

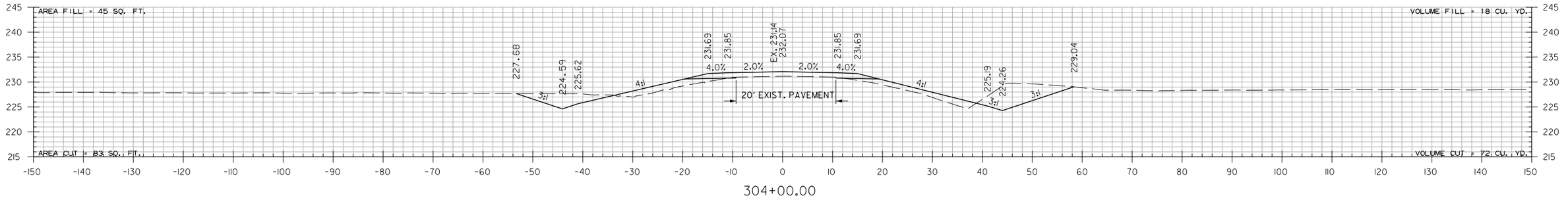

304+00.00



303+82.00

STA. 303+81 IN PLACE
16" X 25' CM PIPE CULVERT
LT. SIDE DRAIN
REMOVE AND INSTALL
30" X 48' PIPE CULVERT
LT. SIDE DRAIN
CONSTRUCT APPROACH = 17 CU. YDS.

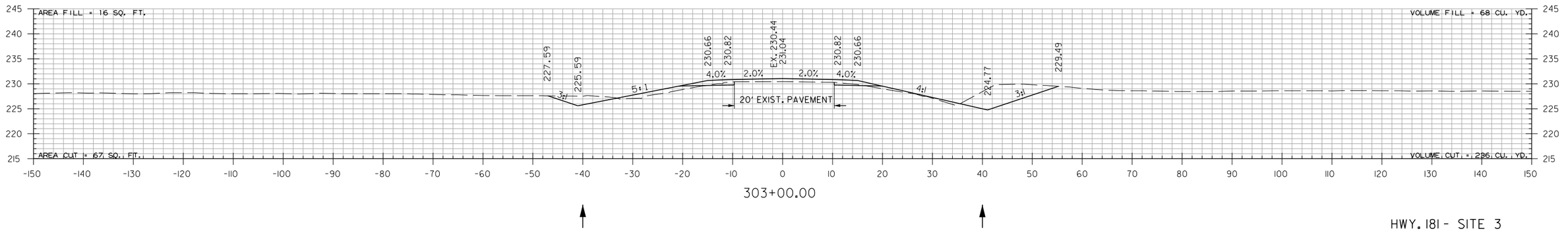

303+00.00

HWY. 181 - SITE 3
STA. 303+00 TO STA. 304+00

PJoseph 8/13/2021 5:28:19 PM
WORKSPACE: AHTD
L:\2017\17017642 - ARDOT Job 100955\Drawings\r100955_CX_Hwy.181Site 3.dgn
REVISED DATE:

DATE REVISED	DATE FILMED	DATE REVISED	DATE FILMED	FED.RD. DIST.NO.	STATE	FED.AID PROJ.NO.	SHEET NO.	TOTAL SHEETS
				6	ARK.			
				JOB NO.		100955	352	356
				(2)		CROSS SECTIONS		

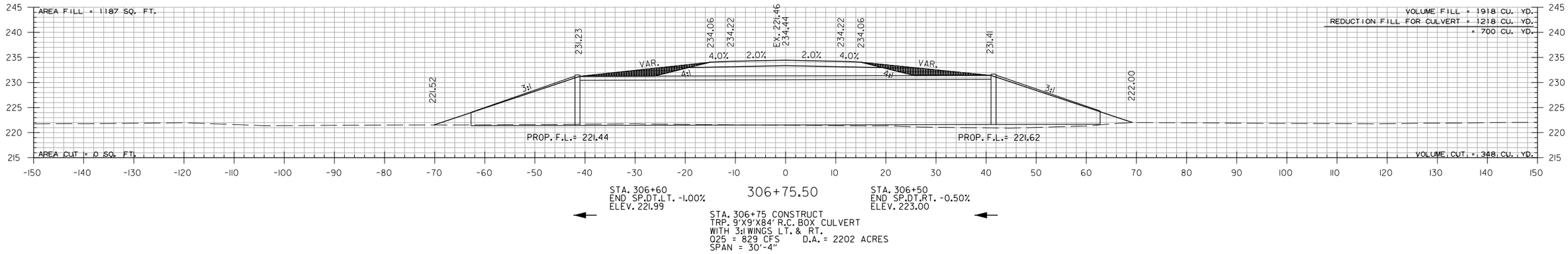

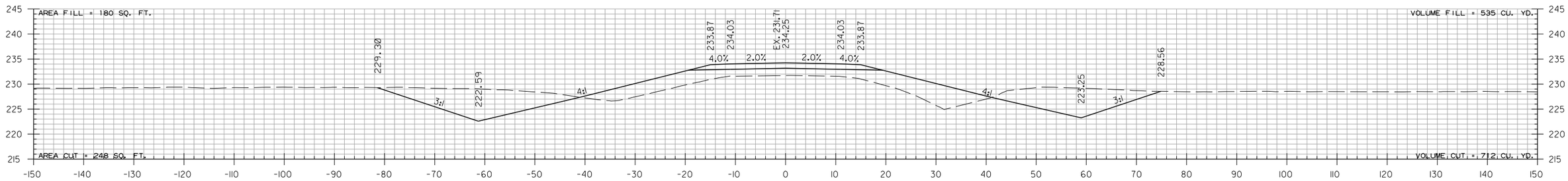

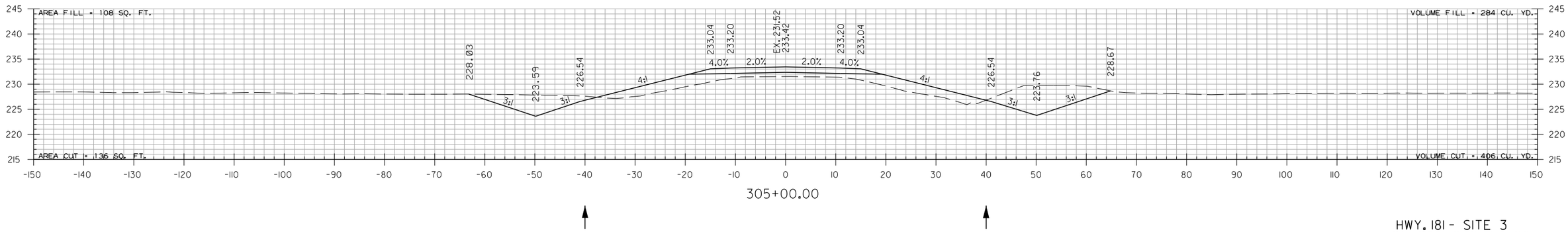

HWY. 181 - SITE 3
STA. 305+00 TO STA. 306+75

PJoseph 8/13/2021 5:28:19 PM
WORKSPACE: AHTD
L:\2017\17017642 - ARDOT Job 100955\Drawings\r100955_CX_Hwy.181Site 3.dgn
REVISED DATE:

DATE REVISED	DATE FILMED	DATE REVISED	DATE FILMED	FED.RD. DIST.NO.	STATE	FED.AID PROJ.NO.	SHEET NO.	TOTAL SHEETS
				6	ARK.			
				JOB NO.		100955	353	356
				(2)	CROSS SECTIONS			

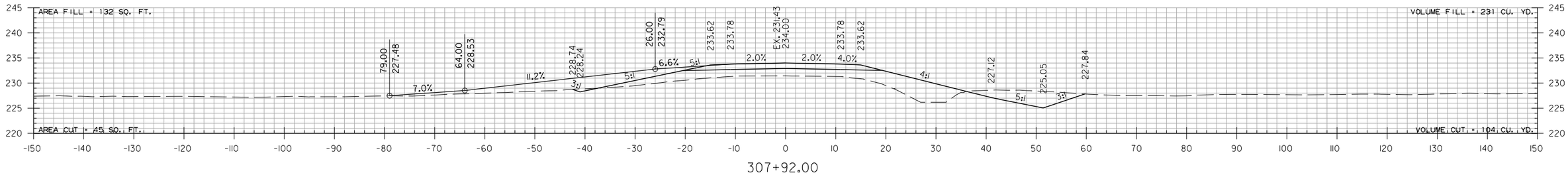

307+92.00

STA. 307+92.00 CONSTRUCT
APPROACH ON LT. = 33 CU. YD.

STA. 307+80
BEGIN SP.DT.LT. -0.50%
ELEV. 228.30

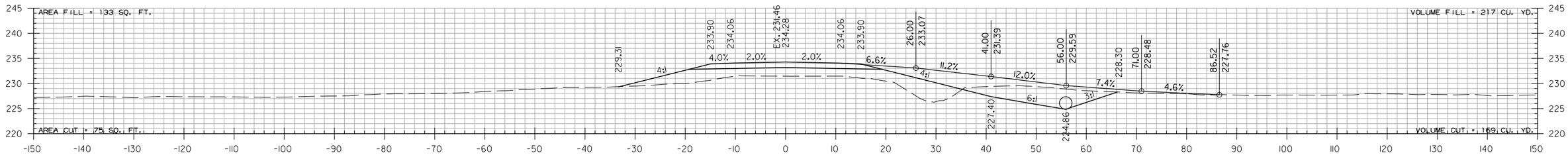

307+45.00

STA. 307+45 IN PLACE
30" X 60' PIPE CULVERT
RT. SIDE DRAIN
REMOVE AND INSTALL
30" X 42' PIPE CULVERT
RT. SIDE DRAIN
CONSTRUCT APPROACH = 34 CU. YDS.

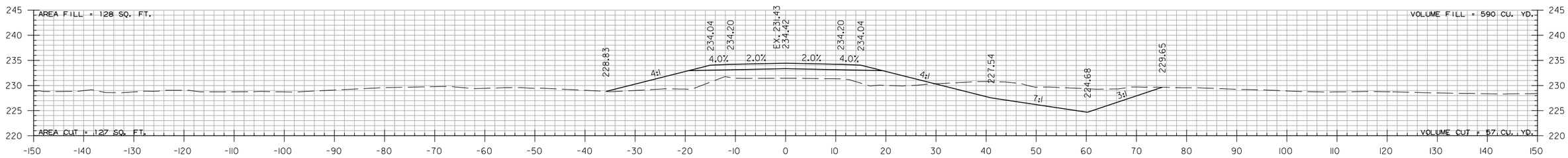

307+00.00

STA. 307+00
BEGIN SP.DT.RT. 0.40%
ELEV. 224.68

HWY. 181 - SITE 3
STA. 307+00 TO STA. 307+92

PJoseph
WORKSPACE: AHTD
L:\2017\17017642 - ARDOT Job 100955\Drawings\r100955_CX_Hwy.181Site 3.dgn
8/13/2021 5:28:20 PM
REVISED DATE:

DATE REVISED	DATE FILMED	DATE REVISED	DATE FILMED	FED.RD. DIST.NO.	STATE	FED.AID PROJ.NO.	SHEET NO.	TOTAL SHEETS
				6	ARK.			
				JOB NO.		100955	354	356
				(2)	CROSS SECTIONS			

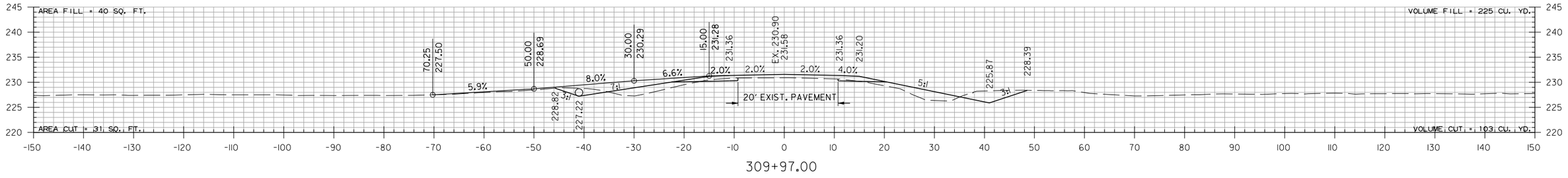

309+97.00

STA. 309+97 IN PLACE
18" X 24' CM PIPE CULVERT
LT. SIDE DRAIN
REMOVE AND INSTALL
18" X 46' PIPE CULVERT
LT. SIDE DRAIN
CONSTRUCT APPROACH = 17 CU. YDS.

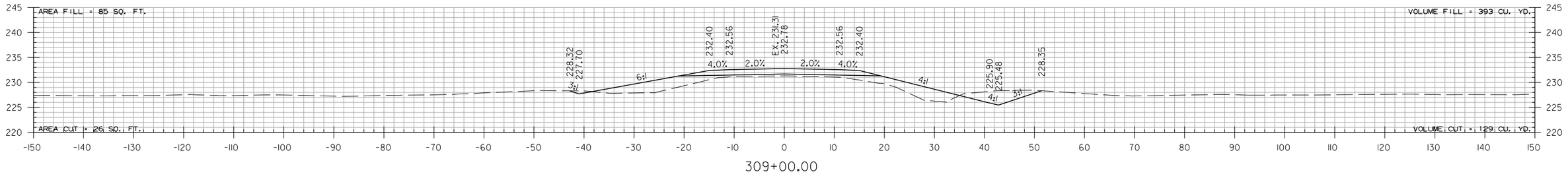

309+00.00

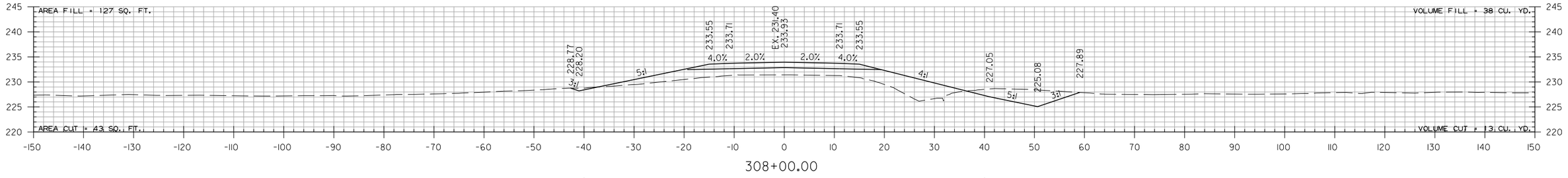

308+00.00

HWY. 181 - SITE 3
STA. 308+00 TO STA. 309+97

PJoseph 8/13/2021 5:28:20 PM
WORKSPACE: AHTD
L:\2017\170176\42 - ARDOT Job 100955\Drawings\r100955_CX_Hwy. 181Site 3.dgn
REVISED DATE:

DATE REVISED	DATE FILMED	DATE REVISED	DATE FILMED	FED.RD. DIST.NO.	STATE	FED.AID PROJ.NO.	SHEET NO.	TOTAL SHEETS
				6	ARK.			
				JOB NO.		100955	355	356
				(2)	CROSS SECTIONS			

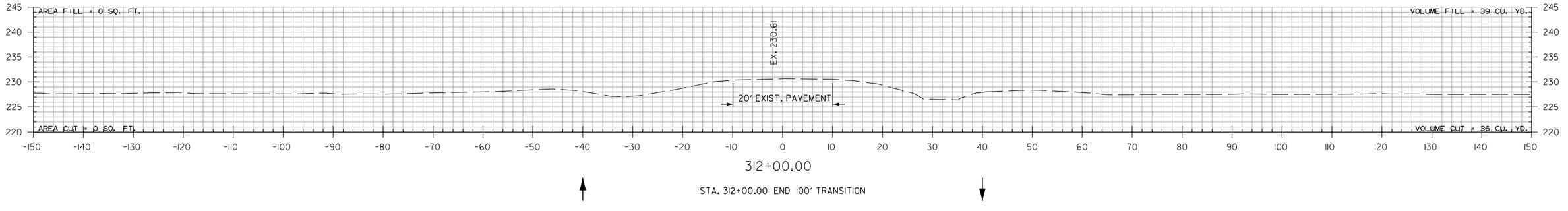

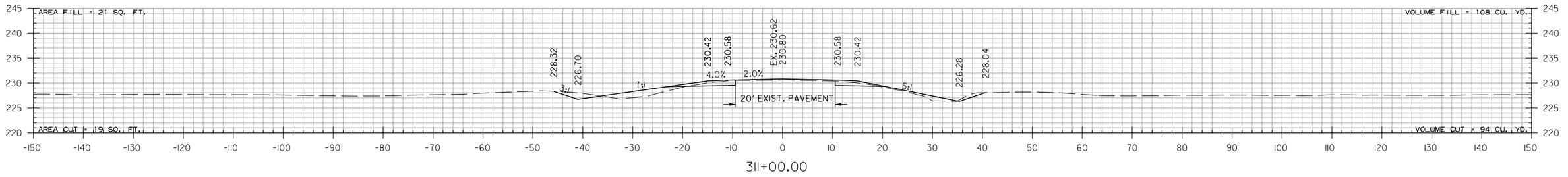

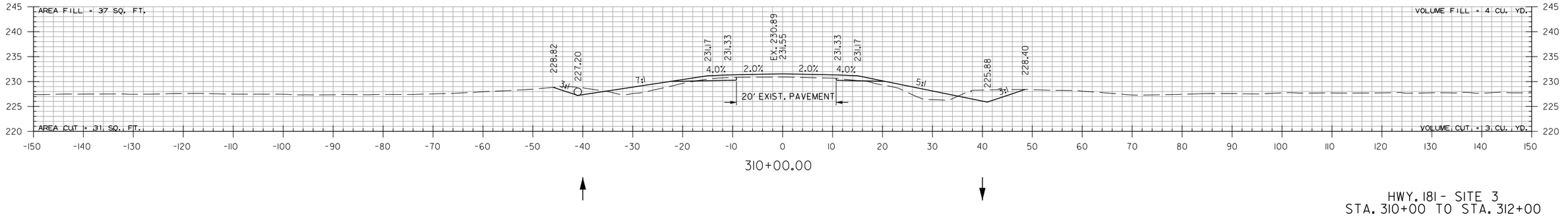

HWY. 181 - SITE 3
STA. 310+00 TO STA. 312+00

PJoseph 8/13/2021 5:28:20 PM
WORKSPACE: AHTD
L:\2017\170176\42 - ARDOT Job 100955\Drawings\r100955_CX_Hwy.181Site 3.dgn
REVISED DATE:

DATE REVISED	DATE FILMED	DATE REVISED	DATE FILMED

FED.RD. DIST.NO.	STATE	FED.AID PROJ.NO.	SHEET NO.	TOTAL SHEETS
6	ARK.			
JOB NO.		100955	356	356

(2) CROSS SECTIONS

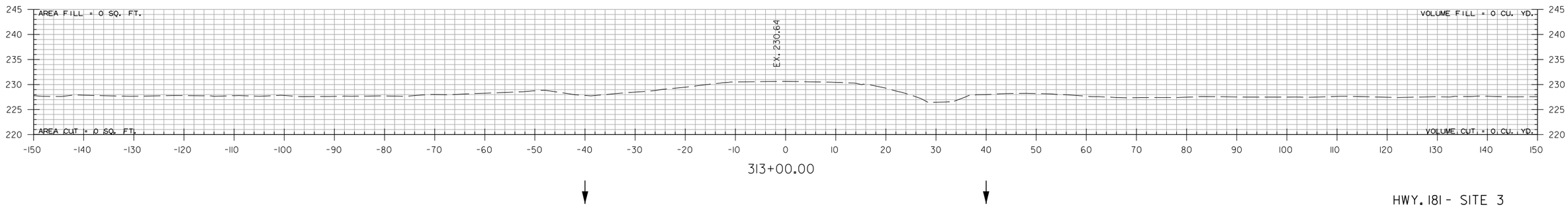

HWY. 181 - SITE 3
STA. 313+00 TO STA. 313+00

PJoseph 8/13/2021 5:28:21 PM
WORKSPACE: AHTD
L:\2017\17017642 - ARDOT Job 100955\Drawings\r100955_CX_Hwy.181Site 3.dgn
REVISED DATE:

DATE REVISED	DATE FILMED	DATE REVISED	DATE FILMED	FED. ROAD DIST. NO.	STATE	FED. AID PROJ. NO.	SHEET NO.	TOTAL SHEETS
				6	ARK.			
				JOB NO.				
				(1) EMBANKMENT & BACKFILL 55000				

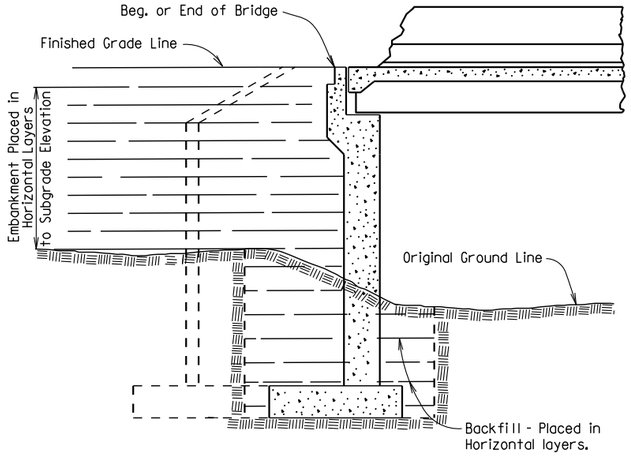

EMBANKMENT CONSTRUCTION AND FOOTING BACKFILL AT VERTICAL WALL ABUTMENTS

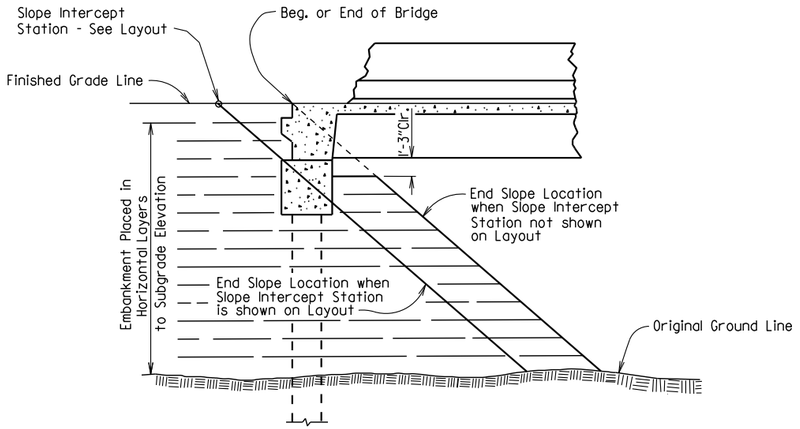

EMBANKMENT CONSTRUCTION AT SPILL-THROUGH PILE END BENTS

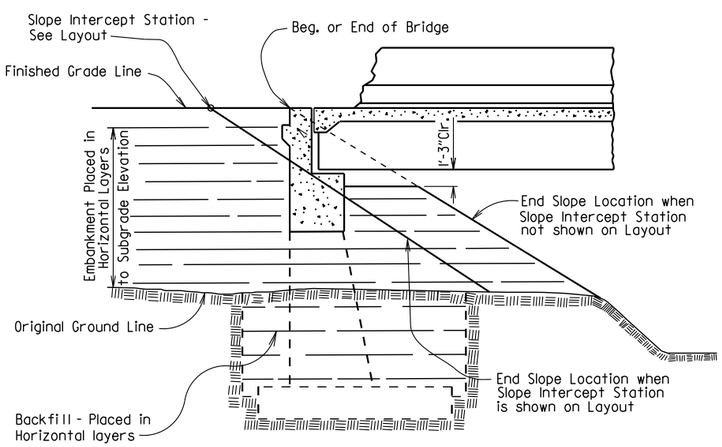

EMBANKMENT CONSTRUCTION AND FOOTING BACKFILL AT SPILL-THROUGH END BENTS

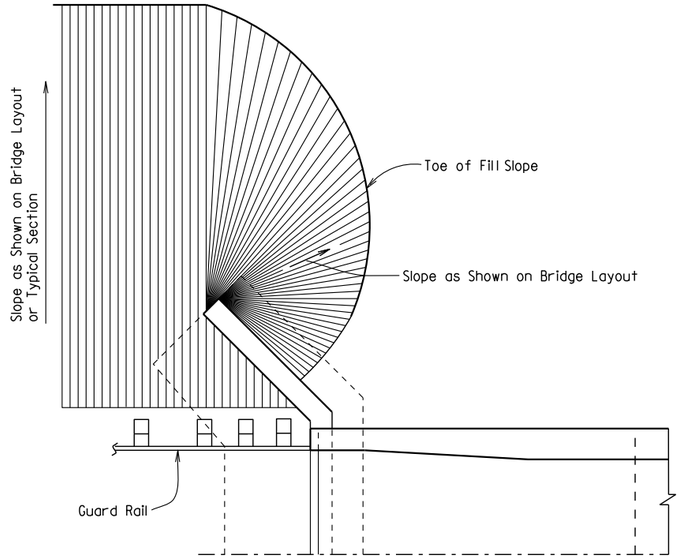

VERTICAL WALL ABUTMENTS

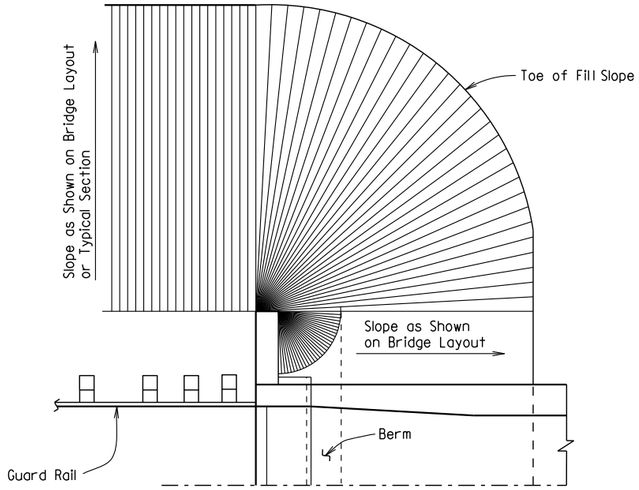

SPILL-THROUGH END BENTS WITH STUB WING

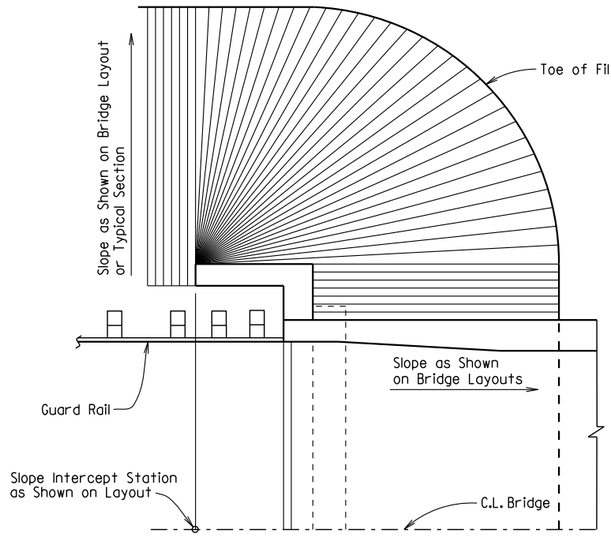

SPILL-THROUGH END BENTS WITH TURNBACK WING

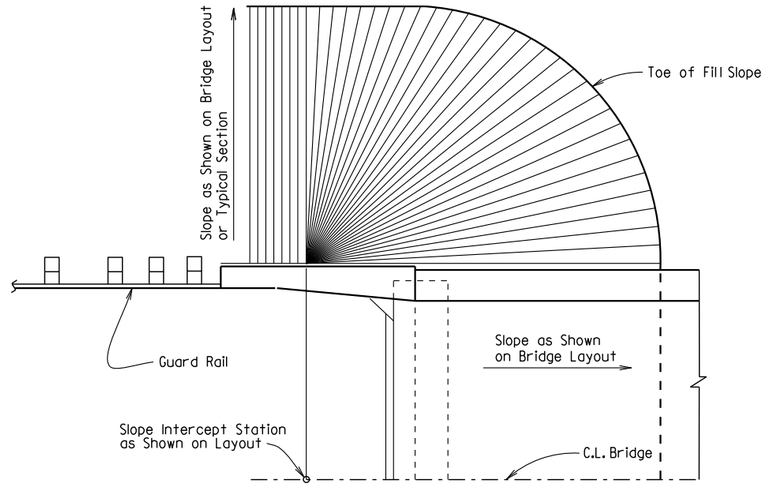

SPILL-THROUGH END BENTS WITH TRANSITION WING

METHOD OF DETERMINING FILL SLOPE LOCATION AT BRIDGE ENDS

GENERAL NOTES

The Bridge End Embankment shall be defined as a section of embankment, not less than 20 feet long adjacent to the bridge end, together with the side slopes and slopes under the bridge end including around the end of wingwalls. Embankment adjacent to structures shall be constructed in 6 inch horizontal layers (loose measure) and compacted by the use of mechanical equipment to the satisfaction of the Engineer. Refer to Subsections 210.09, 210.10 and 801.08 for construction requirements.

STANDARD DETAILS FOR EMBANKMENT CONSTRUCTION AND BACKFILL AT BRIDGE ENDS

ARKANSAS STATE HIGHWAY COMMISSION

LITTLE ROCK, ARK.

DRAWN BY: KDH DATE: 2-27-2014 FILENAME: b55000.dgn

CHECKED BY: BEF DATE: 2-27-2014 SCALE: NO SCALE

DESIGNED BY: STD. DATE: -

DRAWING NO. 55000

DATE REVISED	DATE FILMED	DATE REVISED	DATE FILMED	FED. ROAD DIST. NO.	STATE	FED. AID PROJ. NO.	SHEET NO.	TOTAL SHEETS
				6	ARK.			
				JOB NO.				

(1) RIPRAP & EXCAV. 55001

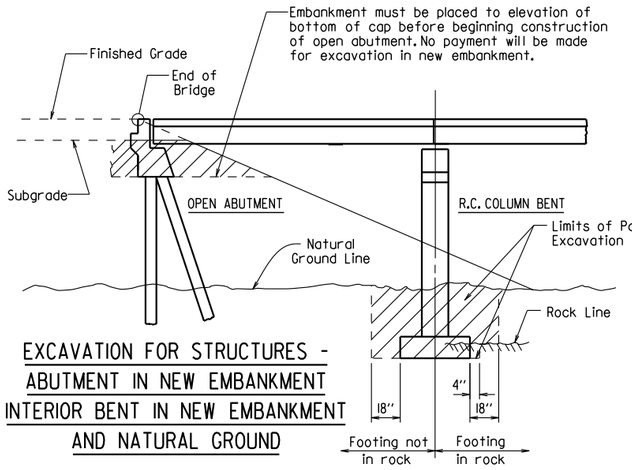

EXCAVATION FOR STRUCTURES - ABUTMENT IN NEW EMBANKMENT INTERIOR BENT IN NEW EMBANKMENT AND NATURAL GROUND

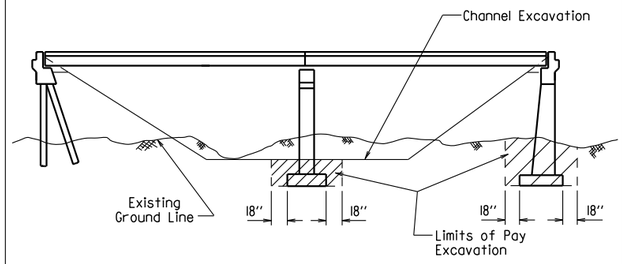

EXCAVATION FOR STRUCTURES - BRIDGE LOCATION WITH DESIGNATED CHANNEL CHANGE

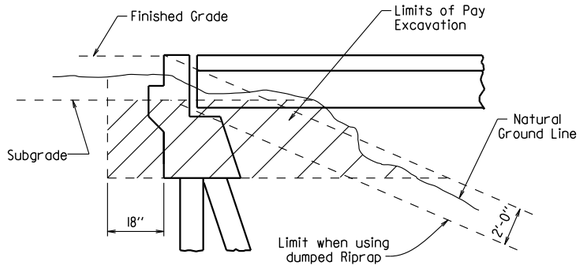

EXCAVATION FOR STRUCTURES - ABUTMENT IN NATURAL GROUND

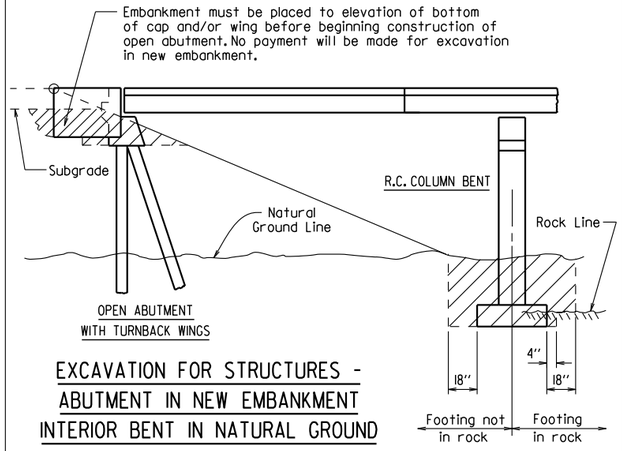

EXCAVATION FOR STRUCTURES - ABUTMENT IN NEW EMBANKMENT INTERIOR BENT IN NATURAL GROUND

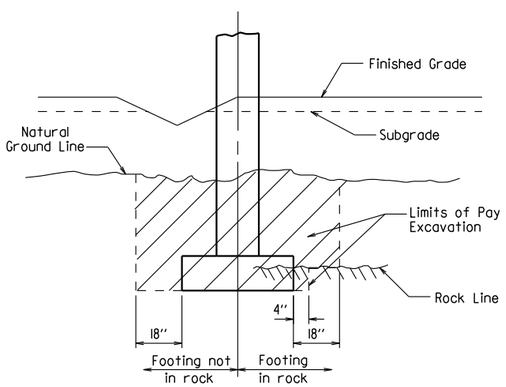

EXCAVATION FOR STRUCTURES - BENT IN ROADWAY FILL SECTION AND NATURAL GROUND

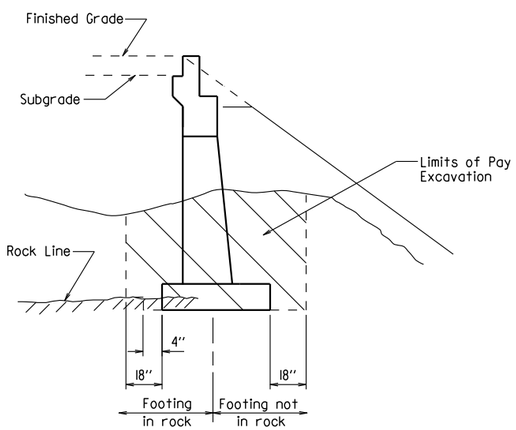

EXCAVATION FOR STRUCTURES - ABUTMENT IN NATURAL GROUND AND NEW EMBANKMENT

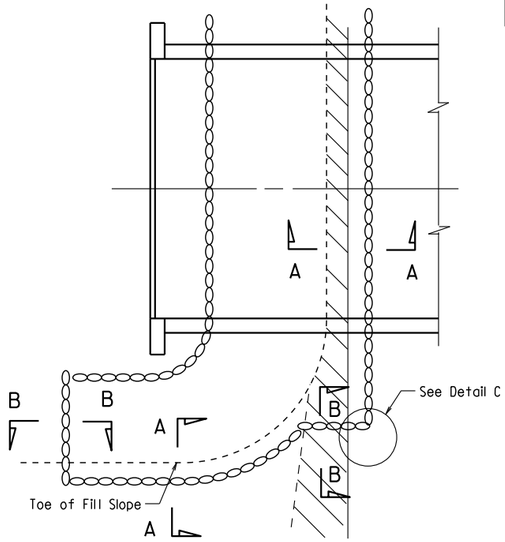

PLAN OF DUMPED RIPRAP

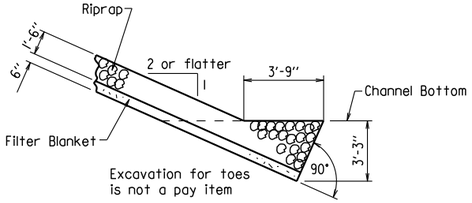

SECTION A-A

(Toe Excavation in Soil)

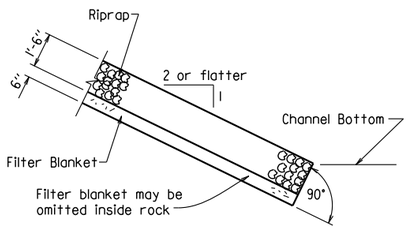

SECTION A-A

(Toe Excavation in Rock)

Note : Use this type of toe when rock is encountered which is in a stable condition.

Note : In lieu of an aggregate filter blanket, a synthetic fiber geotextile fabric complying with the requirements of Subsection 816.02(e) may be used.

Note : Details for computing excavation for structures are included for information as to how plan quantities were calculated and for use when adjusting quantities when changing footing elevation.

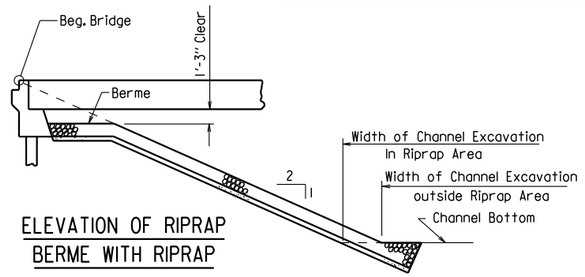

ELEVATION OF RIPRAP BERME WITH RIPRAP

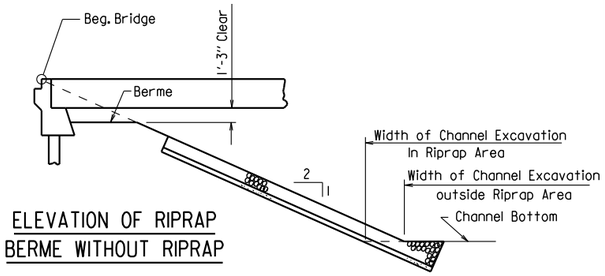

ELEVATION OF RIPRAP BERME WITHOUT RIPRAP

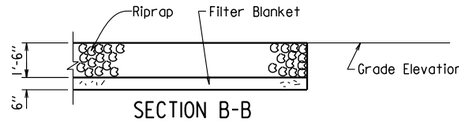

SECTION B-B

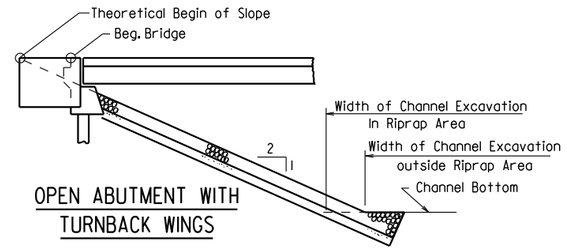

OPEN ABUTMENT WITH TURNBACK WINGS

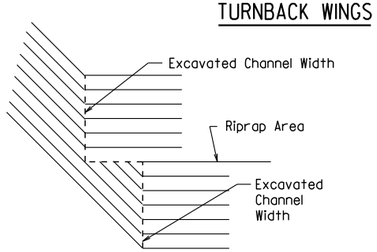

DETAIL C

STANDARD DETAILS FOR DUMPED RIPRAP AND FILTER BLANKET AND COMPUTING EXCAVATION FOR STRUCTURES

ARKANSAS STATE HIGHWAY COMMISSION

LITTLE ROCK, ARK.

DRAWN BY: KDH DATE: 2-27-2014 FILENAME: b55001.dgn

CHECKED BY: BEF DATE: 2-27-2014 SCALE: NO SCALE

DESIGNED BY: STD. DATE:

DRAWING NO. 55001

DATE REVISED	DATE FILMED	DATE REVISED	DATE FILMED	FED. ROAD DIST. NO.	STATE	FED. AID PROJ. NO.	SHEET NO.	TOTAL SHEETS
3/24/16				6	ARK.			
				JOB NO.				

(1) BRIDGE DECK FORMS 55005

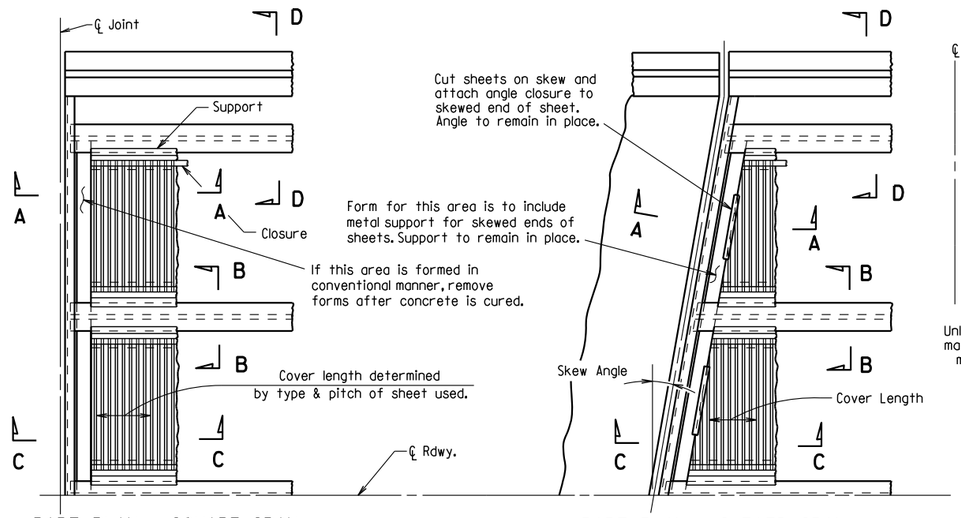

PART PLAN - SQUARE SPAN

3/8" = 1'-0"

PART PLAN - SKEWED SPAN

3/8" = 1'-0"

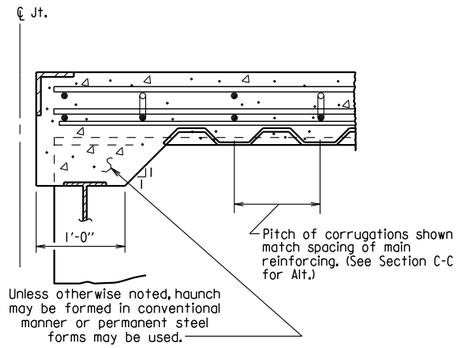

SECTION A-A

N.T.S.

(Angle at end of span)

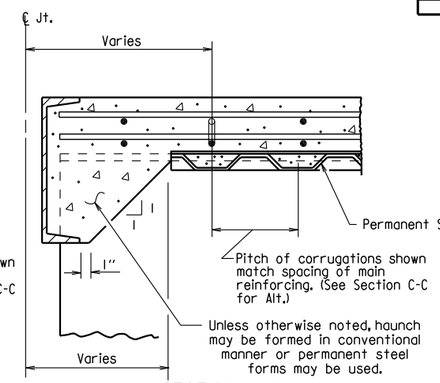

SECTION A-A

N.T.S.

(Channel at end of span)

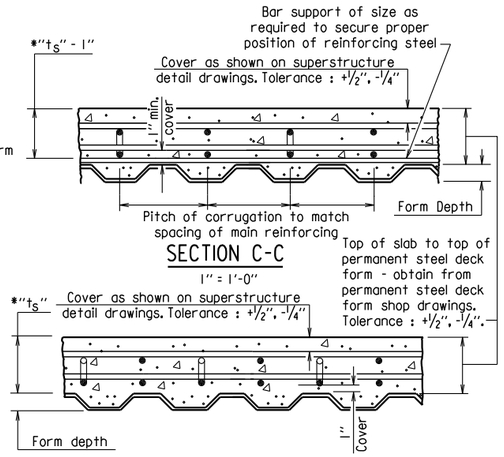

SECTION C-C

1" = 1'-0"

SECTION C-C - ALTERNATE

1" = 1'-0"

(Applicable when corrugations do not match spacing of main reinforcement)

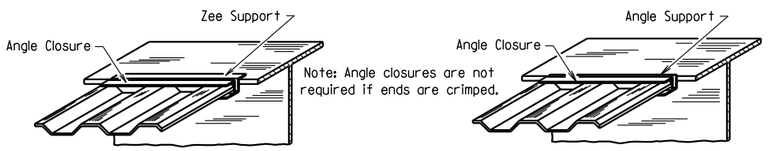

SKETCH OF PERMISSIBLE SUPPORTS

N.T.S.

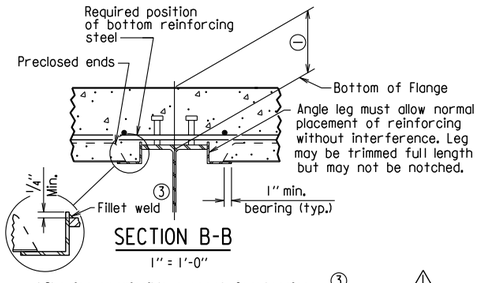

SECTION B-B

1" = 1'-0"

(Showing permissible support for tension flange where shear connectors are used, and for all compression flanges)

(3) Minimum weld: 1/8" x 1" @ 18". More weld may be required; maximum length per weld = 1 1/2" (typ.)

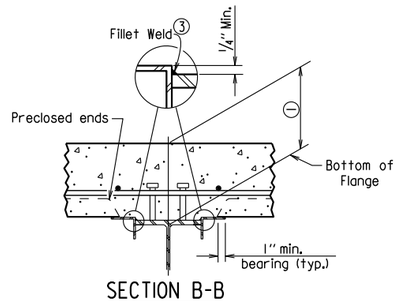

SECTION B-B

1" = 1'-0"

(Showing permissible support for tension flange where shear connectors are used and for all compression flanges)

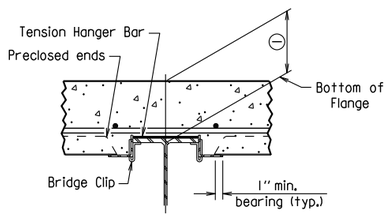

SECTION B-B

1" = 1'-0"

(Showing permissible support for tension flange where shear connectors are not used)

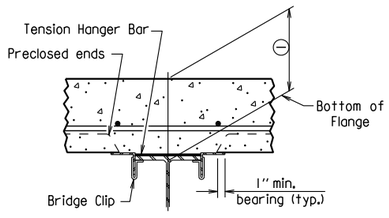

SECTION B-B

1" = 1'-0"

(Showing permissible support for tension flange where shear connectors are not used)

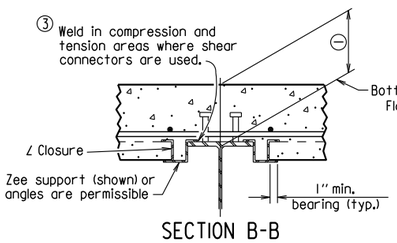

SECTION B-B

1" = 1'-0"

(Showing ∠ Closure)

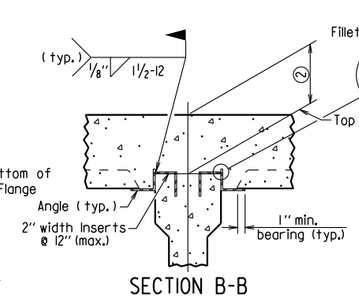

SECTION B-B

(FOR CONCRETE GIRDERS)

1" = 1'-0"

(Showing support by Insert cast in girder)

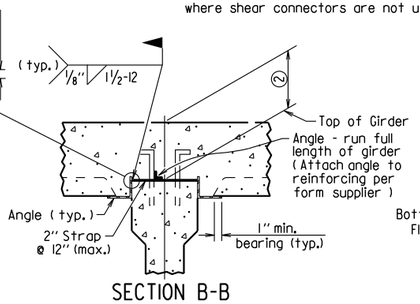

SECTION B-B

(FOR CONCRETE GIRDERS)

1" = 1'-0"

(Showing support by Strap)

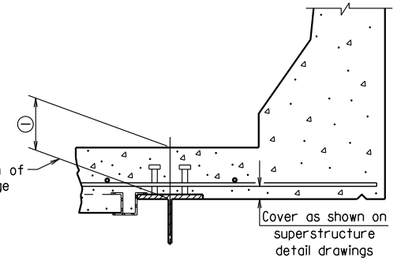

SECTION D-D

1" = 1'-0"

Note: Only Bottom Reinforcing is shown.

(1) Distance from top of slab to bottom of top flange as measured at centerline girder and as shown on superstructure detail drawings. This dimension may vary within the following limits to maintain the grade and slab thickness tolerances : Minimum - occurs when either the top flange or the support angle leg contacts the bottom reinforcing steel; Maximum = t_S + 1 3/4" + flange thickness. See Section C-C for slab thickness tolerance between adjacent girder flanges.

(2) Distance from top of slab to top of girder as measured at centerline girder and as shown on superstructure detail drawings. This dimension may vary within the following limits to maintain the grade and slab thickness tolerances : Minimum - occurs when either the top of girder or the support angle leg contacts the bottom reinforcing steel; Maximum - value shown on the superstructure detail drawings when removable forms are used. See Section C-C for slab thickness tolerance between adjacent girder flanges.

⚠ Revised weld dimension by KWY, Ck'd. by BEF, 3/24/16.

*t_S = slab thickness as shown on superstructure detail drawings.

GENERAL NOTES

Permanent steel deck forms may be used at the Contractor's option and shall be at no additional cost to the Department. Such use may result in changes to the dead load deflection of the girder. Any cost for adjustments due to a change in the dead load deflection will be borne by the Contractor. Payment for deck concrete and structural steel will not be increased due to use of permanent steel deck forms.

Permanent steel deck forms shall conform to Subsection 802.14(b). Detailed plans, including detailed calculations and manufacturer's technical brochure, shall be submitted to and approved by the Engineer before work of forming the bridge deck is started.

Welding of form supports to the tension flange of steel girders will be permitted only in areas where shear connectors are used. When welding is not allowed, the method of fastening Z or ∠ supports to the flange must be approved by the Engineer.

Form sheets shall be fastened to supporting members and to each other with galvanized metal screws sufficient in size and number to provide a secure attachment. Alternate methods of attachment must be approved by the Engineer.

When the pitch of form corrugations match the reinforcing spacing, transversely align form sheets across the bridge to maintain the correct orientation of continuous reinforcing bars in the corrugations.

Bar support rods, when used, shall be sized and spaced to adequately support the bottom reinforcing mat at the required position.

High chairs shall be sized to support the top mat of reinforcing at the proper position. High chairs shall be placed at locations shown on the detail drawings.

Specifications: Arkansas State Highway and Transportation Department Standard Specifications for Highway Construction (2014 Edition), with applicable Supplemental Specifications and Special Provisions.

STANDARD DETAILS FOR PERMANENT STEEL BRIDGE DECK FORMS FOR STEEL & CONCRETE GIRDER SPANS

ARKANSAS STATE HIGHWAY COMMISSION

LITTLE ROCK, ARK.

DRAWN BY: KDH DATE: 2-27-2014 FILENAME: b55005.dgn

CHECKED BY: BEF DATE: 2-27-2014 SCALE: NONE

DESIGNED BY: STD. DATE: —

DRAWING NO. 55005

DATE REVISED	DATE FILMED	DATE REVISED	DATE FILMED	FED. ROAD DIST. NO.	STATE	FED. AID PROJ. NO.	SHEET NO.	TOTAL SHEETS
				6	ARK.			
				JOB NO.				
				①		GENERAL NOTES		55006

GENERAL NOTES

These GENERAL NOTES are applicable unless otherwise shown in the Plan Details, Special Provisions, or Supplemental Specifications.

CONSTRUCTION SPECIFICATIONS: Arkansas State Highway and Transportation Department Standard Specifications for Highway Construction (2014 Edition) with applicable Supplemental Specifications and Special Provisions. Section and Subsection refer to the Standard Specifications.

DESIGN SPECIFICATIONS: See Bridge Layout(s).

SUPERSTRUCTURE NOTES:

MATERIALS AND STRENGTHS:

Class S(AE) Concrete	f'c =	4,000 psi
Reinforcing Steel (Gr. 60, AASHTO M 31 or M 322, Type A)	fy =	60,000 psi
Structural Steel (AASHTO M 270, Gr. 36)	Fy =	36,000 psi
Structural Steel (AASHTO M 270, Gr. 50)	Fy =	50,000 psi
Structural Steel (AASHTO M 270, Gr. 50W)	Fy =	50,000 psi
Structural Steel (AASHTO M 270, Gr. HPS70W)	Fy =	70,000 psi

See Plan Details for Grade(s) of Structural Steel required.

CONCRETE:

All concrete shall be Class S(AE) with a minimum 28 day compressive strength f'c = 4,000 psi. Concrete shall be poured in the dry and all exposed corners shall be chamfered ¾" unless otherwise noted.

The superstructure details shown are for use when removable deck forming is used and are the basis for measurement of Class S(AE) Concrete. See Standard Drawing No. 55005 for allowable modifications and for tolerances when Permanent Steel Bridge Deck Forms are used.

Use of a longitudinal screed is not permitted on any span of a bridge deck with horizontal curvature.

The concrete deck (roadway surface) shall be given a tine finish in accordance with Subsection 802.19 for Class 5 Tined Bridge Roadway Surface Finish. Sidewalks shall receive a broomed finish as specified for final finishing in Subsection 802.19 for Class 6 Broomed Finish. Movement of the finishing machine across new concrete shall be on planks placed on the surface and shall be prohibited for 72 hours after finishing the pour. Sufficient concrete must be placed ahead of the strike-off to fully load the beam or girder. When permitted, the use of a longitudinal strike-off will require that a vertical camber adjustment be made in the strike-off to account for the future dead load deflection due to any railings, median barrier, and sidewalks.

REINFORCING STEEL:

All reinforcing steel shall be Grade 60 conforming to AASHTO M 31 or M 322, Type A, with mill test reports and shall be epoxy coated. The reinforcing steel is to be accurately located in the forms and firmly held in place by steel wire supports, sufficient in number and size to prevent displacement during the course of construction. The wire supports will not be paid for directly, but will be considered subsidiary to the item "Epoxy Coated Reinforcing Steel (Grade 60)".

STRUCTURAL STEEL (COMMON TO W-BEAMS AND PLATE GIRDERS):

Structural steel shall be AASHTO M 270 with grade and payment as specified in the plans. Grade 50W steel shall not be painted and all exposed surfaces shall be cleaned in accordance with Subsection 807.84(e). Grade 36 and Grade 50 steel shall be painted unless otherwise noted and all exposed surfaces shall be cleaned in accordance with Subsection 807.84. Structural steel completely embedded in concrete may be AASHTO M 270, Gr. 36, Gr. 50 or Gr. 50W unless otherwise noted.

Drawings show general features of design only. Shop drawings shall be made in accordance with the specifications, submitted and approval secured before fabrication is begun.

Requests for substitution of structural steel shapes shown with shapes of greater size must be submitted by the Contractor to the Engineer for approval. Steels of equal or greater strengths will be accepted only when shown on the approved shop drawings. Payment will be based on the basis of shapes and materials shown in the plans, and no additional compensation will be made for any adjustments due to substitutions.

All welding that is to be done during fabrication of structural steel, including temporary welds, shall be detailed on the shop drawings and submitted for approval. If additional welds are required, whether permanent or temporary, a formal request with detailed drawings shall be submitted to the Engineer for approval; however, additional welds used for attaching falsework support devices or screed rail supports to the structural steel that do not exceed the limitations of Subsection 802.13 will not require approval prior to construction. All welding shall conform to Subsection 807.26.

Unless otherwise noted, field connections shall be bolted with ¾" ø high-strength bolts using 13/16 " ø open holes. Holes for ¾" ø high-strength bolts may be 15/16 " ø if a washer is supplied for use under both the nut and head of the bolt. The use of oversized holes will not be allowed on main members unless otherwise noted. Bolts shall be placed with heads on the outside face of the exterior beam or girder webs and on the bottom of the beam or girder flanges.

All stud shear connectors shall be granular flux filled, solid fluxed, or equal and shall be automatically end welded in accordance with recommendations of the Manufacturer.

When painting is required, all structural steel except galvanized steel and steel completely encased in concrete shall be painted in accordance with Subsection 807.75. The color of paint shall be as specified in the plans.

STRUCTURAL STEEL (W-BEAMS):

All beams and field splice plates, and all diaphragms and connection plates attached to horizontally curved beams are considered main load carrying members and shall meet the Longitudinal Charpy V-Notch Test specified in Subsection 807.05. This work and material will not be paid for directly, but shall be considered subsidiary to the item "Structural Steel in Beam Spans (M 270, Gr. ___)".

All beams in continuous units and simple spans with field splices shall be blocked in their true position in the shop in groups as specified in Subsection 807.54(b)(2) with the webs horizontal. The camber, length of sections, distance between bearings, and openings of joints shall be measured and this information shall become part of the permanent records. The component parts shall be match marked in this assembly and these marks shall be shown on the erection diagram.

All beams in simple spans without field splices shall be blocked in their true position with webs horizontal. The camber, distance between bearings, and openings of joints shall be measured and this information shall become part of the permanent records.

Flange field splice plates shall be cut and fabricated so that the primary direction of rolling is parallel to the direction of the main tensile and/or compressive stresses.

All beam dimensions are based on a temperature of 60 degrees F. A tolerance of ¼" +/- is allowed for camber.

Bent plate diaphragms for horizontally curved beams shall be cut and fabricated so that the primary direction of rolling is parallel to the direction of the main tensile and/or compressive stresses. Bent plate diaphragms for straight beams may be cut and fabricated in accordance with Subsection 807.35 or as required for horizontally curved beams.

Unless otherwise noted, diaphragms shall be installed as beams are erected. All bolts in diaphragms and field splices shall be installed and tightened in accordance with Subsection 807.71 prior to pouring the concrete deck.

STRUCTURAL STEEL (PLATE GIRDERS):

All references to cross-frames shall include "X" or "K" types.

All girder web and flange plates, all field splice plates, and all diaphragms, cross-frames and connection plates attached to horizontally curved girders are considered main load carrying members and shall meet the Longitudinal Charpy V-Notch Test specified in Subsection 807.05. This work and material will not be paid for directly, but shall be considered subsidiary to the item "Structural Steel in Plate Girder Spans (M 270, Gr. ___)".

All girders in continuous units and simple spans with field splices shall be assembled in the shop as specified in Subsection 807.54(b)(2) and blocked in their true position with webs horizontal. The camber, length of sections, distance between bearings, and openings of joints shall be measured and this information shall become part of the permanent records. The component parts shall be match marked in this assembly and these marks shall be shown on the erection diagram.

All girders in simple spans without field splices shall be blocked in their true position with webs horizontal. The camber, distance between bearings, and openings of joints shall be measured and this information shall become part of the permanent records.

Web and flange plates for main members and flange splice plates for main members shall be cut and fabricated so that the primary direction of rolling is parallel to the direction of the main tensile and/or compressive stresses.

Girder webs may be made by shop splicing with minimum lengths of 25 feet for sections. Flange plates longer than 50 feet may be made by shop splicing with minimum lengths of 25 feet for sections. No additional payment will be made for shop welded splices.

All girder dimensions are based on a temperature of 60 degrees F. A tolerance of ¼" +/- is allowed for camber.

Groove welds in web and flange plates shall be Quality Control (Q.C.) tested by nondestructive testing, as required in Subsection 807.23(b). Fillet welds at flange to web plate connections shall be Q.C. tested by the magnetic particle method. All Q.C. testing shall be considered subsidiary to the item "Structural Steel in Plate Girder Spans (M 270, Gr. ___)".

Bent plate diaphragms for horizontally curved girders shall be cut and fabricated so that the primary direction of rolling is parallel to the direction of the main tensile and/or compressive stresses. Bent plate diaphragms for straight girders may be cut and fabricated in accordance with Subsection 807.35 or as required for horizontally curved girders.

Unless otherwise noted, cross-frames and diaphragms shall be installed as girders are erected. All bolts in cross-frames, diaphragms, and field splices shall be installed and tightened in accordance with Subsection 807.71 prior to pouring the concrete deck.

SUBSTRUCTURE NOTES:

CONCRETE:

Unless otherwise noted, concrete in caps, columns and footings (except seal footings) shall be Class "S" with a minimum 28 day compressive strength f'c = 3,500 psi and shall be poured in the dry. Seal Concrete for footings shall have a minimum 28 day compressive strength f'c = 2,100 psi.

Concrete in drilled shafts shall be Class "S" as modified by Job SP "Drilled Shaft Foundations".

All exposed corners shall be chamfered ¾" unless otherwise noted.

REINFORCING STEEL:

All reinforcing steel shall be Grade 60 (yield strength = 60,000 psi) conforming to AASHTO M 31 or M 322, Type A, with mill test reports.

Top reinforcing bars in cap shall be properly placed to avoid interference with anchor bolts or sheet metal sleeves.

STRUCTURAL STEEL:

Structural steel in end bents shall be AASHTO M 270 with grade and payment as specified in the plans.

FOR ADDITIONAL INFORMATION AND NOTES, SEE LAYOUT(S) AND PLAN DETAILS.

FOR ADDITIONAL INFORMATION AND NOTES, SEE LAYOUT(S) AND PLAN DETAILS.

STANDARD GENERAL NOTES
FOR STEEL BRIDGE STRUCTURES

ARKANSAS STATE HIGHWAY COMMISSION
LITTLE ROCK, ARK.

DRAWN BY: A.M.S. DATE: 9-2-2015 FILENAME: b55006.dgn
CHECKED BY: B.E.F. DATE: 9-2-2015 SCALE: NO SCALE
DESIGNED BY: STD. DATE:

DRAWING NO. 55006

PRINT DATE: 11/7/2019

DATE REVISED	DATE FILMED	DATE REVISED	DATE FILMED	FED. ROAD DIST. NO.	STATE	FED. AID PROJ. NO.	SHEET NO.	TOTAL SHEETS
				6	ARK.			
				JOB NO.				
				①	STEEL BRIDGE STRUCTURES 55007			

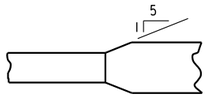

Plan-Unequal Width (Flg.)

FLANGE SPLICE

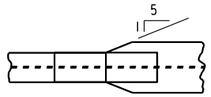

FLANGE SPLICE AT UNEQUAL BOTTOM FLANGE WIDTHS

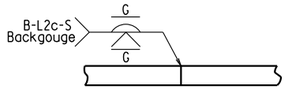

Equal Thickness

WEB & FLANGE SPLICE

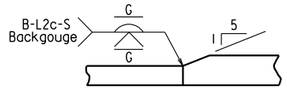

Unequal Thickness

FLANGE SPLICE

(Use when Base Metal Thickness is Equal to or Less than 2")

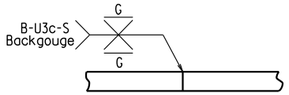

Equal Thickness

WEB & FLANGE SPLICE

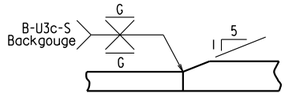

Unequal Thickness

FLANGE SPLICE

(Use when Base Metal Thickness is Greater than 2")

DETAILS OF WELDED SPLICES FOR PLATE GIRDERS

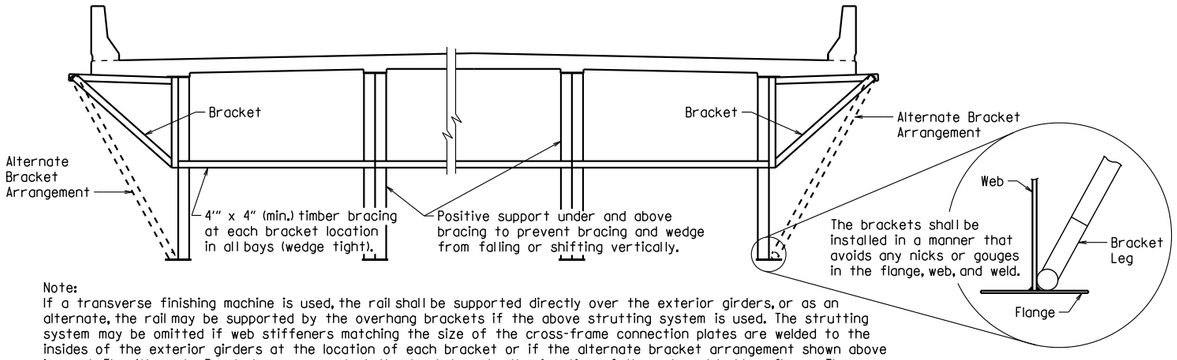

Note:
If a transverse finishing machine is used, the rail shall be supported directly over the exterior girders, or as an alternate, the rail may be supported by the overhang brackets if the above strutting system is used. The strutting system may be omitted if web stiffeners matching the size of the cross-frame connection plates are welded to the insides of the exterior girders at the location of each bracket or if the alternate bracket arrangement shown above is used. The Alternate Bracket arrangement shall extend down to the junction of the web and bottom flange. The stiffener shall conform to the details for cross frame connection plates shown on the plans. No direct payment will be made for brackets, timber bracing, supports, or welded stiffeners. Payment shall be subsidiary to "Structural Steel in Plate Girder Spans (___)".

SCREED RAIL SUPPORT FOR PLATE GIRDERS

(USE WHEN WEB DEPTHS ARE 48" OR GREATER)

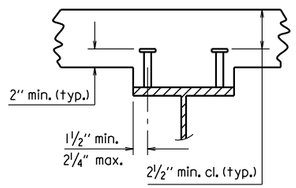

2 STUDS PER ROW

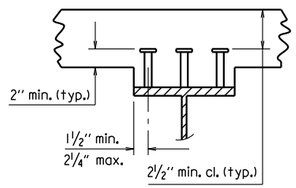

3 STUDS PER ROW

Stud Shear Connectors shall be automatically end welded to the beam or girder flange in accordance with the recommendations of the Manufacturer. See plan details for number and size.

SHEAR CONNECTOR DETAIL

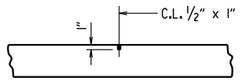

Use Type 3 or 4 Joint Sealer. See Subsections 501.02(h) and 501.05(j). Backer Rod filler will not be required. Joint Sealer shall be measured and paid for as Class S(AE) Concrete-Bridge. Slab Joints shall extend to the outside edge of the deck slab and shall align with open joints at the front face of the parapet. Slab joints shall be installed before the parapet railing is poured. If slab joints are to be sawed, they shall be sawed as soon as the concrete has sufficiently set to allow sawing of the joint without damage to the slab. Slab joints shall be placed at all pouring sequence construction joints and required slab joint locations. The joint sealer shall extend across the deck from gutterline to gutterline.

ADDITIONAL NOTES IF SIDEWALKS OR RAISED MEDIANS ARE REQUIRED:
Slab Joints shall be installed before the sidewalk or raised median is poured. After installation of the joint in the sidewalk or raised median and prior to pouring the parapet rail, the joint sealer shall be placed extending across the deck slab from gutterline to gutterline and acrosss the top of the sidwalk or raised median to the edge of the slab. No joint sealer shall be placed on the deck slab under the sidewalk or raised median.

TRANSVERSE SLAB JOINT DETAIL

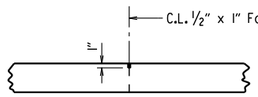

Use ½" x 1" Type 3 or 4 Joint Sealer. See Subsections 501.02(h) and 501.05(j). Backer Rod filler will not be required. Joint sealer shall be measured and paid for as Class S(AE) Concrete-Bridge. This joint shall be formed. Seal color shall be gray or other color similar to concrete.

LONGITUDINAL CONSTRUCTION JOINT

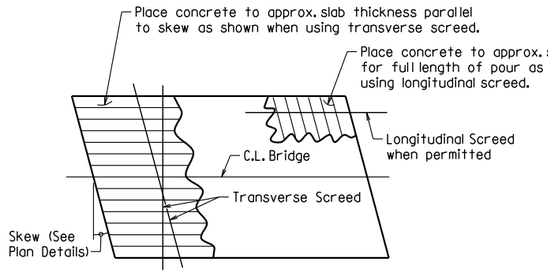

Note: At the Contractor's option, the transverse screed may be placed parallel to the skew or perpendicular to C.L. Bridge.

CONCRETE PLACEMENT PROCEDURE FOR BRIDGES WITH SKEW

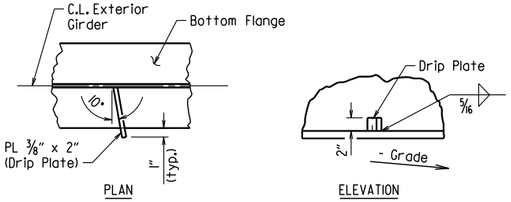

Drip Plate to be welded to the outer side of the bottom flange of the exterior girders.

Locate drip plate 5'-0" from C.L. Bearing on high side of each Bent, unless otherwise noted in the plans.

BOTTOM FLANGE DRIP PLATE

(USE WHEN WEB DEPTHS ARE 54" OR GREATER AND UNIT OR SPAN IS NOT IN LEVEL GRADE)

t_s = slab thickness. See "Typical Roadway Section" in the plans.

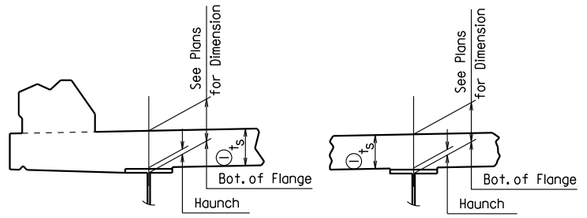

EXTERIOR BEAM OR GIRDER

INTERIOR BEAM OR GIRDER

① Tolerance when removable deck forming is used is + ½", - ¼". Haunch forming is required and shall be adjusted to maintain slab thickness tolerance.

NOTES:
Haunch dimension may vary within the following limits to maintain the grade and slab thickness tolerance: Minimum occurs when top flange contacts bottom reinforcing steel; Maximum = top flange thickness plus 1¾" unless otherwise noted in the plans. No increase in concrete and structural steel quantities will be made to maintain tolerances.

Tolerances shown are applicable only when removable deck forming is used. See Std. Dwg. No. 55005 for tolerances when permanent steel deck forms are used. Payment for concrete shall be based on removable deck forming.

ADJUSTMENT FOR SLAB THICKNESS TOLERANCE

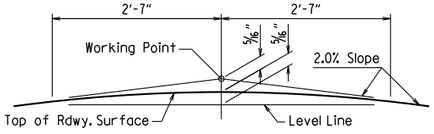

NOTE: Working Point matches Theoretical Roadway Grade.

ROUNDING DETAIL

BRIDGES IN NORMAL CROWN

WELD TABLE

Material Thickness of Thicker Part Joined (Inches)	Minimum Size of Fillet Weld (Inches)	Single Pass Weld Must Be Used
To ¾" Inclusive	¼"	
Over ¾"	5/16"	

NOTE: When a fillet weld size, as shown on the plans, is larger than the minimum, the first pass shall be that specified for minimum size of fillet weld.

SECTION AND SUBSECTION REFER TO THE ARKANSAS STATE HIGHWAY AND TRANSPORTATION DEPARTMENT STANDARD SPECIFICATIONS FOR HIGHWAY CONSTRUCTION (2014 EDITION).

THESE DETAILS ARE APPLICABLE UNLESS OTHERWISE SHOWN IN THE PLAN DETAILS, SPECIAL PROVISIONS, OR SUPPLEMENTAL SPECIFICATIONS.

STANDARD DETAILS FOR STEEL BRIDGE STRUCTURES

ARKANSAS STATE HIGHWAY COMMISSION

LITTLE ROCK, ARK.

DRAWN BY: JYP DATE: 2/11/2016 FILENAME: b55007.dgn

CHECKED BY: AMS DATE: 2/11/2016 SCALE: No Scale

DESIGNED BY: STD. DATE: —

DRAWING NO. 55007

DATE REVISED	DATE FILMED	DATE REVISED	DATE FILMED	FED. ROAD DIST. NO.	STATE	FED. AID PROJ. NO.	SHEET NO.	TOTAL SHEETS
				6	ARK.			
				JOB NO.				
				①		POURED SILICONE JOINT		55008

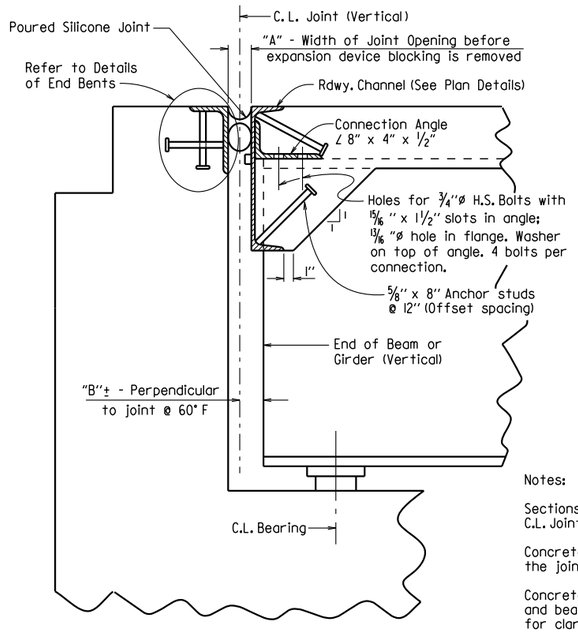

SECTION THRU JOINT AT END BENT

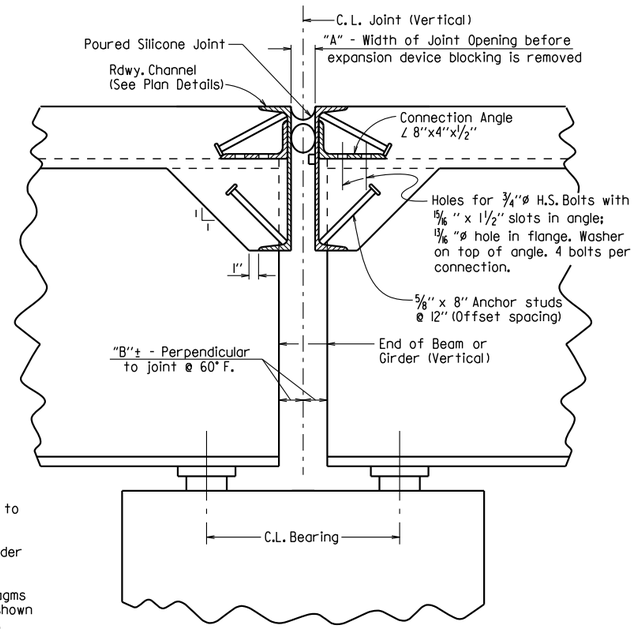

SECTION THRU JOINT AT INTERMEDIATE BENT

Notes:

Sections are taken perpendicular to C.L. Joint.

Concrete shall be hand packed under the joint armor.

Concrete diaphragms, steel diaphragms and bearing stiffeners are not shown for clarity. See plans for details.

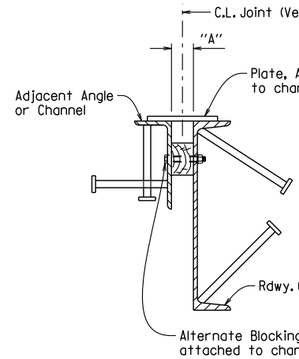

Note: Each expansion joint device shall be blocked in the Shop by the Fabricator to the dimension "A" shown for 60° F and the blocking details shall be shown on the shop drawings. Blocking shall be placed within 2 feet of each end of the device and with a maximum spacing of 8 feet.

DETAILS FOR BLOCKING EXPANSION JOINT DEVICE

EXPANSION DEVICE INSTALLATION AT END BENTS:

The Contractor may elect to install the expansion device using one of the following two alternatives:

1) The concrete span pour adjacent to joint shall be placed before the end bent backwall is placed. After the end bent backwall forms are in place and the beams or girders erected, the blocked expansion device shall be installed and adjusted for grade. All connection bolts shall be fully tightened prior to placing the deck concrete adjacent to the bent. Immediately prior to pouring the backwall concrete, the blocking shall be removed, and the opening adjusted for temperature and grade.

2) The backwall shall be poured to the optional construction joint after beams or girders are erected. The blocked expansion device shall be installed and adjusted for grade. All connection bolts shall be fully tightened prior to placing the deck concrete adjacent to the bent. Immediately prior to pouring the remainder of the backwall concrete, the blocking shall be removed and the opening adjusted for temperature and grade.

EXPANSION DEVICE INSTALLATION AT INTERMEDIATE BENTS:

After all beams or girders on each side of the joint are erected the blocked expansion device shall be installed and adjusted for grade. Deck concrete shall be placed for the entire unit or span on one side of the joint before deck concrete on the other side is placed. Connection bolts for the first side to have deck concrete placed shall be completely bolted. Bolts on the other side shall be loosely installed so that thermal and rotational movements will not be restricted during concrete placement on the first side.

Connection bolts on the second side shall remain loose until the concrete pour adjacent to the joint is to be placed. Immediately prior to pouring the span concrete on the second side, the blocking shall be removed, the joint adjusted for temperature and grade, and the connection bolts tightened.

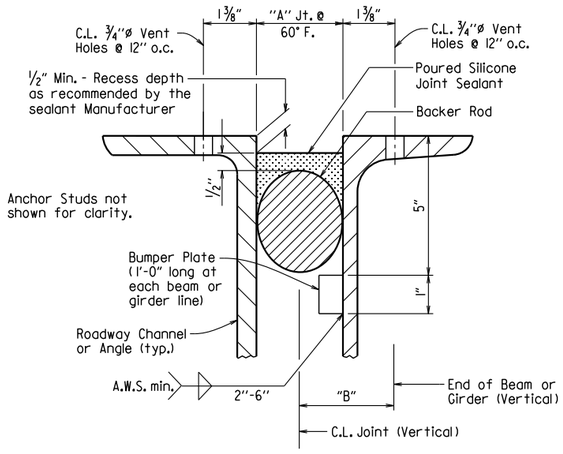

DETAIL OF POURED SILICONE JOINT

Silicone joint material and installation shall conform to Section 809. The temperature limitations recommended by the sealant Manufacturer shall be observed. The sealant shall be installed only when the average 24 hour air temperature is between 40° and 80° F.

Use an appropriately sized backer rod at the depth shown in the Manufacturer's literature based on the joint width at the time of sealing. Unless otherwise noted, do not install more backer rod than can be sealed in the same day.

The Contractor shall verify separation of the backer rod from the joint material after the joint material has set.

When bridge deck is constructed in stages, backer rods shall be extended beyond length of poured joint in initial construction stage so that the two pieces can be properly spliced together prior to installing sealant in subsequent stages. Manufacturer's recommendations shall be followed to prevent sealant from "running out of joint" during stage construction.

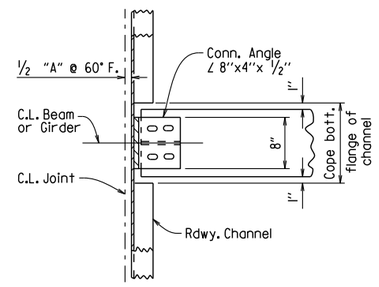

CHANNEL CONNECTION DETAIL

BENTS WITHOUT SKEW

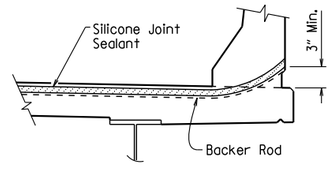

JOINT SEAL PLACEMENT AT RAIL

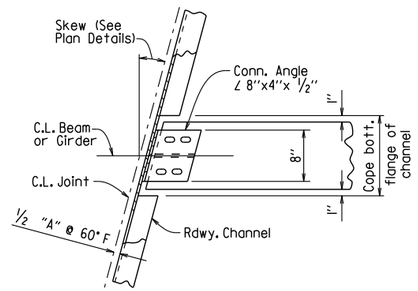

CHANNEL CONNECTION DETAIL

BENTS WITH SKEW

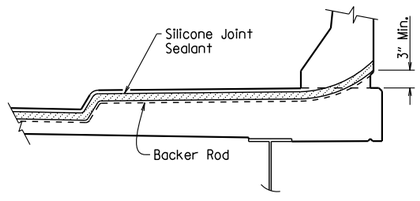

JOINT SEAL PLACEMENT AT SIDEWALK

SECTION AND SUBSECTION REFER TO THE ARKANSAS STATE HIGHWAY AND TRANSPORTATION DEPARTMENT STANDARD SPECIFICATIONS FOR HIGHWAY CONSTRUCTION (2014 EDITION).

THESE DETAILS ARE APPLICABLE UNLESS OTHERWISE SHOWN IN THE PLAN DETAILS, SPECIAL PROVISIONS, OR SUPPLEMENTAL SPECIFICATIONS. SEE "TABLE OF SILICONE JOINT DATA" IN PLAN DETAILS FOR VARIABLES "A" AND "B", AND BUMPER PLATE SIZE.

STANDARD DETAILS FOR POURED SILICONE JOINTS

ARKANSAS STATE HIGHWAY COMMISSION

LITTLE ROCK, ARK.

DRAWN BY: A.C.P. DATE: 2/11/2016 FILENAME: b55008.dgn

CHECKED BY: A.M.S. DATE: 2/11/2016 SCALE: No Scale

DESIGNED BY: STD. DATE: —

DRAWING NO. 55008

DATE REVISED	DATE FILMED	DATE REVISED	DATE FILMED
12-1-14		1-15-19	
1-14-15		3-24-2020	
1-17-17		5-11-2021	

FED. ROAD DIST. NO.	STATE	FED. AID PROJ. NO.	SHEET NO.	TOTAL SHEETS
6	ARK.			
JOB NO.				

1 TYPE D NAME PLATE - 55010

The name of the bridge as shown on the plans shall be placed on Lines 1-3 using ⅛" raised letters and numerals ⅜" high.

	Example 1	Example 2	Example 3	Example 4
Line 1	Red River	Southern	Saline	
Line 2	Relief	Railroad	River	Highway 5
Line 3		Overpass	Relief	

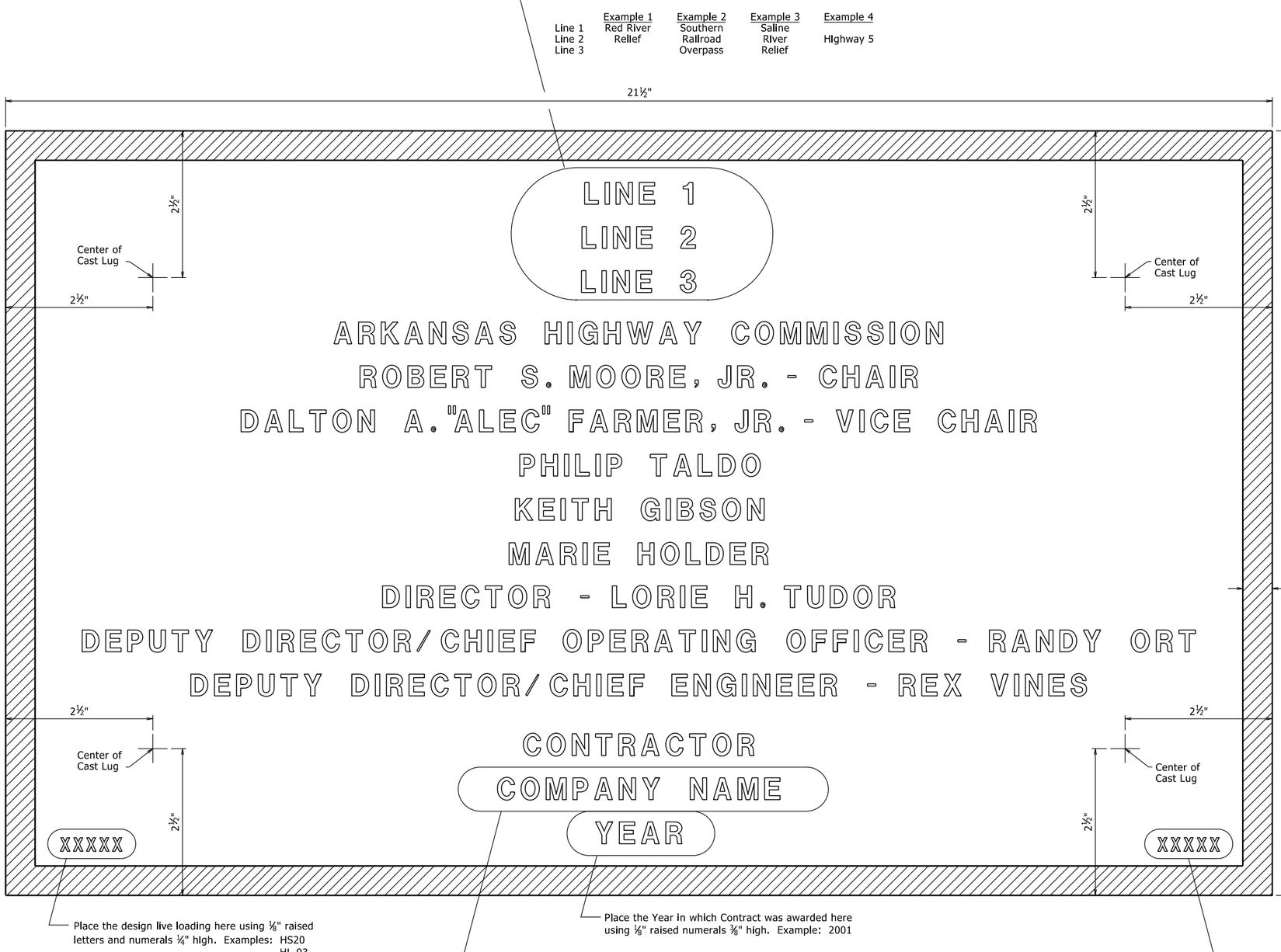

TYPICAL BRIDGE NAME PLATE

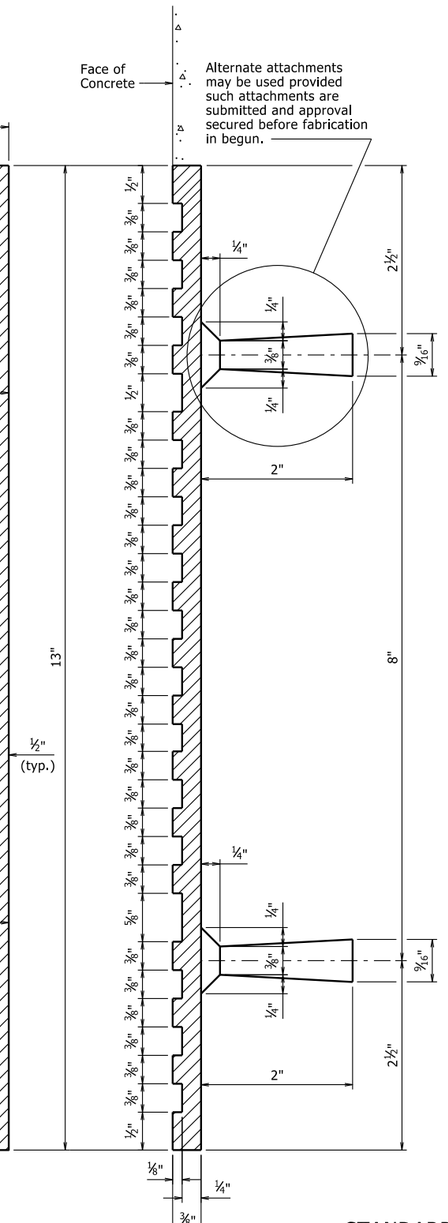

GENERAL NOTES

Specifications: Arkansas State Highway and Transportation Department Standard Specifications for Highway Construction, (2014 Edition) with applicable Supplemental Specifications and Special Provisions.

Name plates shall be cast bronze and shall meet the material requirements as specified in Section 812.

Body of plate shall be ¼" thick and shall include four tapering cone lugs ⅜" to 9/16" x 2" long. The border and all lettering shall be raised ⅛" above the face of plate and shall be polished.

All lettering shall be plain gothic, square cut and not tapered.

The number of plates required and the location and name on the plate for each bridge shall be as designated on the plans.

6 Revised Deputy Director/ Chief Engineer
5-11-2021 CGP Checked By: CRE

5 Revised Director, Deputy Director/Chief Operating Officer, Chair, Vice Chair and added New Commissioner
3-24-2020 CGP Checked By: CRE

4 Revised Chair and Vice Chair Added New Commissioner
1-15-19 CGP Checked By: CRE

3 Added New Commissioner
1-17-17 KDH Checked By: CRE

2 Revised Chair and Vice Chair Added New Commissioner
1-14-15 KDH Checked By: CRE

1 Revised Deputy Director/ Chief Engineer Added Deputy Director/ Chief Operating Officer
12-1-14 KDH Checked By: CRE

STANDARD DETAILS FOR
TYPE D BRIDGE NAME PLATE

ROUTE SEC.

ARKANSAS STATE HIGHWAY COMMISSION
LITTLE ROCK, ARK.

DRAWN BY: KDH DATE: 2-27-2014 FILENAME: b55010.dgn
CHECKED BY: BEF DATE: 2-27-2014 SCALE: NO SCALE
DESIGNED BY: STD. DATE:

DRAWING NO. 55010

PRINT DATE: 5/11/2021

DATE REVISED	DATE FILMED	DATE REVISED	DATE FILMED	FED. ROAD DIST. NO.	STATE	FED. AID PROJ. NO.	SHEET NO.	TOTAL SHEETS
3/24/16				6	ARK.			
				JOB NO.				
						STEEL SHELL PILES		55021

(1)

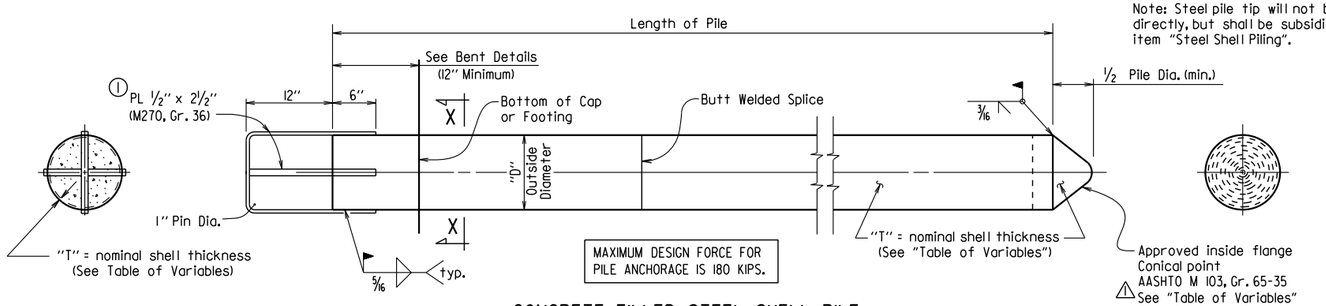

Note: Steel pile tip will not be paid for directly, but shall be subsidiary to the item "Steel Shell Piling".

CONCRETE FILLED STEEL SHELL PILE

(1) Pile anchorage shall be placed to minimize interference with anchor bolts and reinforcing in cap or footing.

(2) Welding shall comply with ANSI/AWS D1.4 Structural Welding Code-Reinforcing Steel and applicable portions of ANSI/AWS D1.5 Bridge Welding Code.

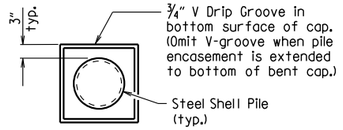

VIEW X-X

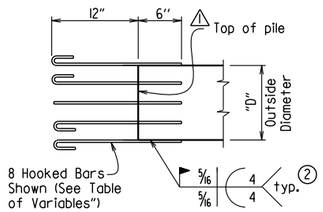

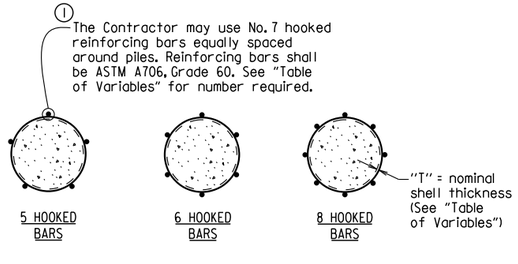

ALTERNATE PILE ANCHORAGE DETAIL

Note: Hooked bars shall be oriented to provide the required concrete clearances shown in the plans.

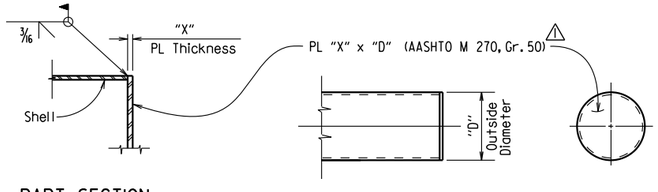

PART SECTION

ELEVATION

ALTERNATE FLAT TIP DETAIL

Note: The alternate flat tip detail shall not be used on steel shell piling to be driven through embankments constructed with internal geosynthetic reinforcement.

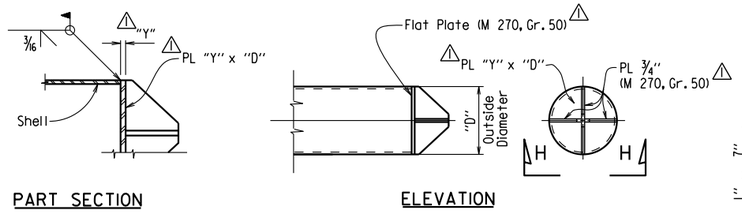

PART SECTION

ELEVATION

ALTERNATE VANED TIP DETAIL

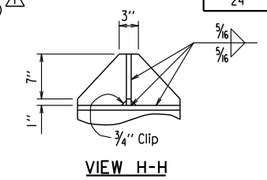

VIEW H-H

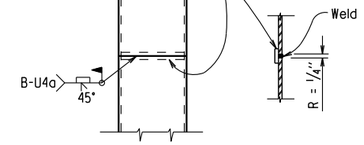

TYPICAL SPLICE DETAILS

TABLE OF VARIABLES

OUTSIDE DIAMETER "D"	NOMINAL SHELL THICKNESS "T"	⚠ PLATE THICKNESS "X"	⚠ PLATE THICKNESS "Y"	NO. OF HOOKED BARS FOR ALTERNATE PILE ANCHORAGE	⚠ MINIMUM CONICAL TIP DESIGN LOAD (KIPS)
14"	0.50"	2 1/4"	1 1/2"	5	859
16"	0.50"	2 1/4"	1 1/2"	5	986
18"	0.50"	2 1/2"	1 1/2"	6	1,114
20"	0.50"	2 1/2"	1 3/4"	6	1,241
24"	0.50"	2 3/4"	1 3/4"	8	1,495

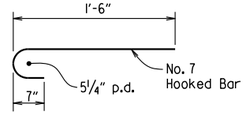

HOOKED BAR DETAIL

⚠ Revised and added various details by KWY, Ck'd. by BEF, 3/24/16.

GENERAL NOTES FOR CONCRETE FILLED STEEL SHEEL PILES:

Steel shells shall conform ASTM A252, Grade 3 (Fy = 45,000 psi.)

Concrete used for filling of steel shell shall be Class S with a minimum 28-day compressive strength, f'c = 3,500 psi. and shall be poured in the dry.

Steel shell piling that extends above the ground and is not protected by pile encasement shall be painted in accordance with Subsection 805.02.

See Bridge Layout for size and estimated length of steel shell piles and for driving information.

Concrete, structural steel, reinforcing steel (including welding), and painting shall not be paid for directly, but shall be considered subsidiary to the item "Steel Shell Piling".

GENERAL NOTES FOR PILE ENCASEMENTS:

⚠ See Bridge Layout for additional notes, any pile encasement restrictions and required location of pile encasements.

Concrete shall be Class S with a minimum 28-day compressive strength, f'c = 3,500 psi. If concrete cannot be placed in the dry, Seal Concrete may be used from top to bottom of encasement.

Reinforcing steel shall be Grade 60 conforming to AASHTO M 31 or M 322, Type A.

Welded wire fabric shall conform to AASHTO M 55 or M 221.

Concrete, welded wire fabric or reinforcing steel, and galvanized pipe shall not be paid for directly, but shall be considered subsidiary to the item "Pile Encasement".

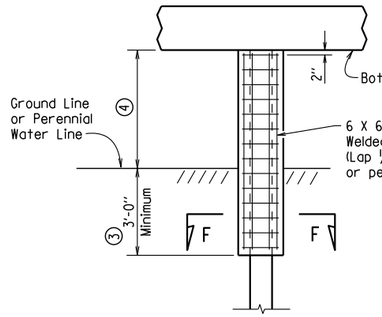

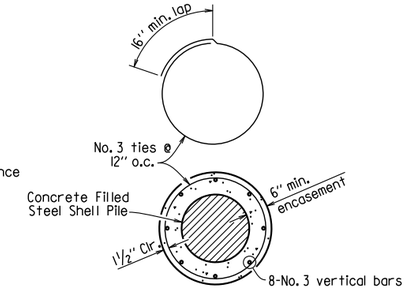

SECTION F-F (REINF. ALTERNATE)

PILE ENCASEMENT DETAIL FOR STEEL SHELL PILES

(5) (Shown with Encasement to Bottom of Cap)

(3) Unless otherwise noted on Bridge Layout.

(4) See Bridge Layout for height of pile encasement (3'-0" Minimum).

(5) Pile encasement, when not extended to bottom of cap, shall have 2" concrete taper for water runoff as shown in the detail for partial height encasement.

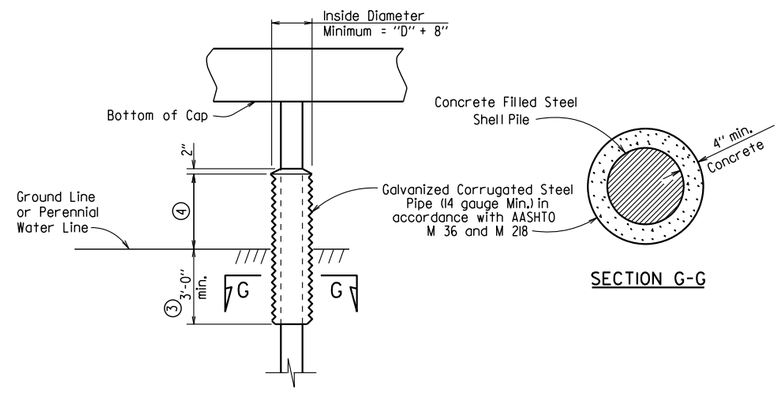

SECTION G-G

ALTERNATE PILE ENCASEMENT DETAIL FOR STEEL SHELL PILES

(Shown with Partial Height Encasement)

This document was originally issued and sealed by Charles R. Ellis, PE No. 9235, on March 24, 2016. This copy is not a signed and sealed document.

STATE OF ARKANSAS
REGISTERED PROFESSIONAL ENGINEER
No. 9235
CHARLES R. ELLIS

BRIDGE ENGINEER

STANDARD DETAILS FOR CONCRETE FILLED STEEL SHELL PILES AND PILE ENCASEMENTS

ARKANSAS STATE HIGHWAY COMMISSION

LITTLE ROCK, ARK.

DRAWN BY:	A.M.S.	DATE:	2/27/2014	FILENAME:	b55021.dgn
CHECKED BY:	B.E.F.	DATE:	2/27/2014	SCALE:	NO SCALE
DESIGNED BY:	STD.	DATE:	—		

DRAWING NO. 55021

DATE REVISED	DATE FILMED	DATE REVISED	DATE FILMED	FED. ROAD DIST. NO.	STATE	FED. AID PROJ. NO.	SHEET NO.	TOTAL SHEETS
				6	ARK.			
				JOB NO.				

TYPE C2 APPROACH SLAB 55040C2

Notes:
The surface finish for Approach Slabs shall match that used on the bridge deck.

All longitudinal lines within the limits of horizontal curves shall be on curves concentric to C.L. Bridge. Adjustment to longitudinal bar lengths may be required. Transverse reinforcing shall be placed on radial lines to C.L. Bridge.

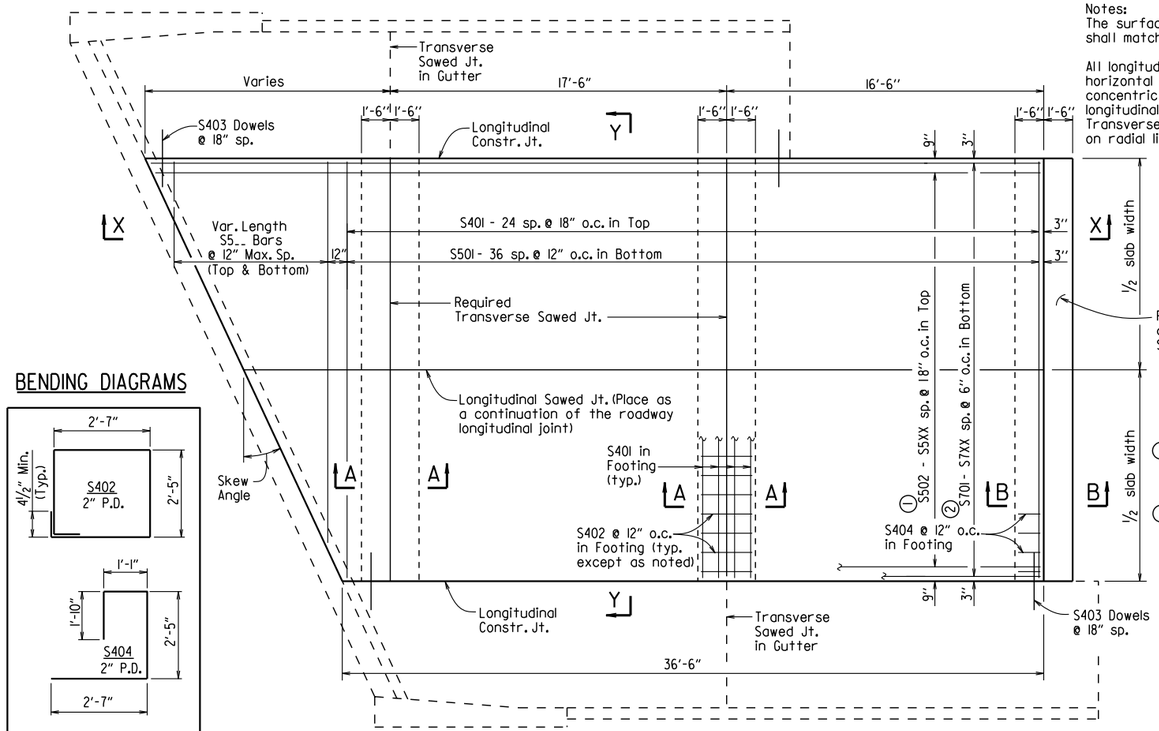

① S5XX = S511 for 15'-0" Width
= S517 for 24'-0" Width
= S525 for 36'-0" Width

② S7XX = S730 for 15'-0" Width
= S748 for 24'-0" Width
= S772 for 36'-0" Width

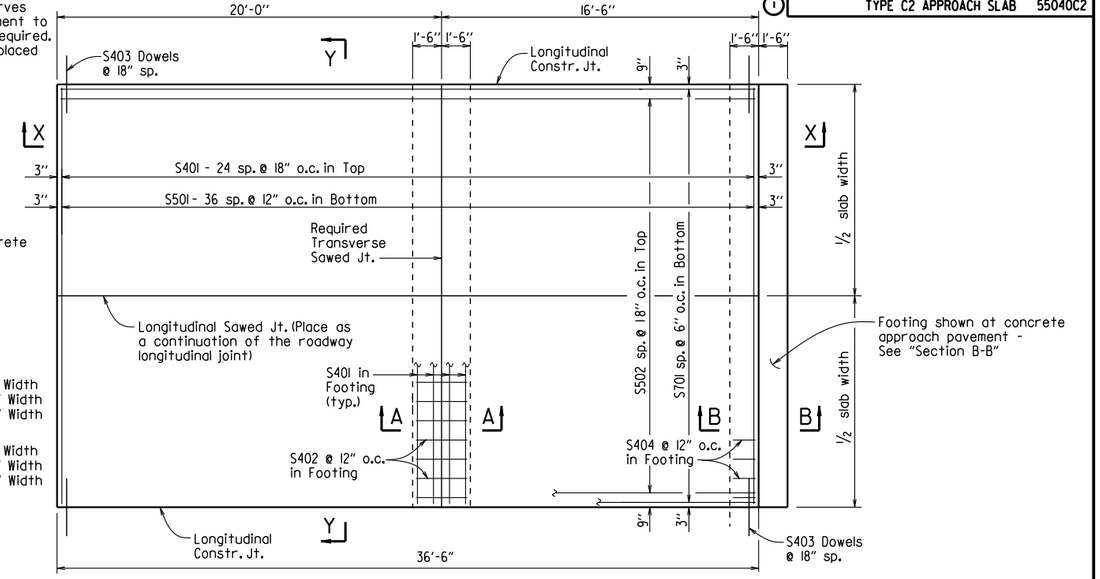

PLAN - SQUARE APPROACH SLAB

1/4" = 1'-0"

BENDING DIAGRAMS

Dimensions are out to out of bar.

BAR LIST

(Square & Skewed Approach Slabs)

	Mark	Square No. Req'd.	Square Length	Skewed No. Req'd.	Skewed Length
15'-0" Slab Width	S401	33	14'-8"	37	14'-8"
	S402	15	10'-4"	30	10'-4"
	S403	50	3'-0"	*	3'-0"
	S404	15	7'-8"	15	7'-8"
	S501	37	14'-8"	37	14'-8"
	S502	10	36'-2"	—	—
	S502 - S511	—	—	1 Ea.	36.1' + 0.75' (tan skew angle) to 36.1' + 14.25' (tan skew angle)
	S5__	—	—	2 Ea.	14.7' - 0.75'/(tan skew angle) to 2'-0" Min.
	S701	30	36'-2"	—	—
	S701 - S730	—	—	1 Ea.	36.1' + 0.25' (tan skew angle) to 36.1' + 14.75' (tan skew angle)
24'-0" Slab Width	S401	33	23'-8"	37	23'-8"
	S402	24	10'-4"	48	10'-4"
	S403	50	3'-0"	*	3'-0"
	S404	24	7'-8"	24	7'-8"
	S501	37	23'-8"	37	23'-8"
	S502	16	36'-2"	—	—
	S502 - S517	—	—	1 Ea.	36.1' + 0.75' (tan skew angle) to 36.1' + 23.25' (tan skew angle)
	S5__	—	—	2 Ea.	23.7' - 0.75'/(tan skew angle) to 2'-0" Min.
	S701	48	36'-2"	—	—
	S701 - S748	—	—	1 Ea.	36.1' + 0.25' (tan skew angle) to 36.1' + 23.75' (tan skew angle)
36'-0" Slab Width	S401	33	35'-8"	37	35'-8"
	S402	36	10'-4"	72	10'-4"
	S403	50	3'-0"	*	3'-0"
	S404	36	7'-8"	36	7'-8"
	S501	37	35'-8"	37	35'-8"
	S502	24	36'-2"	—	—
	S502 - S525	—	—	1 Ea.	36.1' + 0.75' (tan skew angle) to 36.1' + 35.25' (tan skew angle)
	S5__	—	—	2 Ea.	35.7' - 0.75'/(tan skew angle) to 2'-0" Min.
	S701	72	36'-2"	—	—
	S701 - S772	—	—	1 Ea.	36.1' + 0.25' (tan skew angle) to 36.1' + 35.75' (tan skew angle)

*Varies with skew angle

PLAN - SKEWED APPROACH SLAB WITH APPROACH GUTTERS

1/4" = 1'-0"

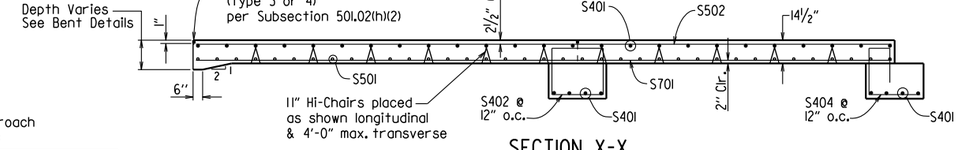

SECTION X-X

SQUARE APPROACH SLAB SHOWN

1/4" = 1'-0"

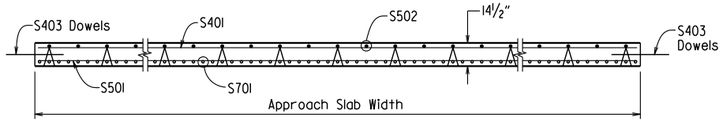

SECTION Y-Y

N.T.S.

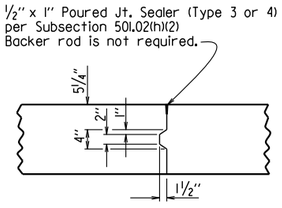

DETAILS OF LONGITUDINAL CONSTRUCTION JOINT

¾" = 1'-0"

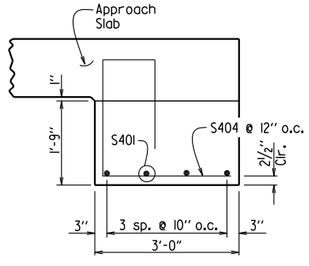

SECTION B-B

AT ASPHALT APPROACH PAVEMENT

N.T.S.

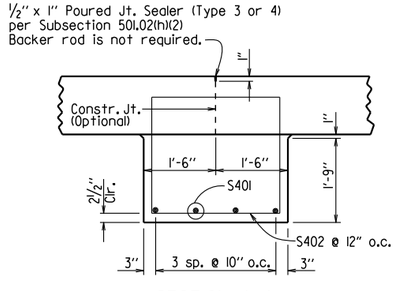

SECTION A-A

N.T.S.

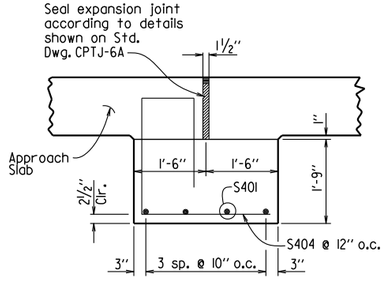

SECTION B-B

AT CONCRETE APPROACH PAVEMENT

N.T.S.

TABLE OF QUANTITIES FOR ONE SQUARE APPROACH SLAB

(FOR INFORMATION ONLY)

Slab Width	Reinforcing Steel (Lbs.)	Concrete (Cu. Yds.)
15'-0"	3765	30.75
24'-0"	5980	49.15
36'-0"	8925	73.75

GENERAL NOTES

This drawing shall be used for Approach Slabs in Seismic Performance Zones 2, 3 & 4 and for the maximum skew angles shown below:

15'-0" Slab Width: Maximum Skew Angle = 50°
24'-0" Slab Width: Maximum Skew Angle = 40°
36'-0" Slab Width: Maximum Skew Angle = 30°

All concrete shall be Class S (AE) with a minimum 28 day compressive strength f'c = 4,000 psi and shall be poured in the dry.

All reinforcing steel shall be Grade 60 (yield strength = 60,000 psi) conforming to AASHTO M 31 or M 322, Type A, with mill test reports.

Approach Slabs will be measured and paid for in accordance with Section 504.

STANDARD DETAILS FOR TYPE C2 APPROACH SLAB

ARKANSAS STATE HIGHWAY COMMISSION

LITTLE ROCK, ARK.

DRAWN BY: A.M.S. DATE: 2/27/2014 FILENAME: b55040c2.dgn
CHECKED BY: K.W.Y. DATE: 2/27/2014 SCALE: AS SHOWN
DESIGNED BY: STD. DATE:

DRAWING NO. 55040C2

DATE REVISED	DATE FILMED	DATE REVISED	DATE FILMED	FED. ROAD DIST. NO.	STATE	FED. AID PROJ. NO.	SHEET NO.	TOTAL SHEETS
				6	ARK.			
				JOB NO.				

(1) TYPE SSTR36 - 55070

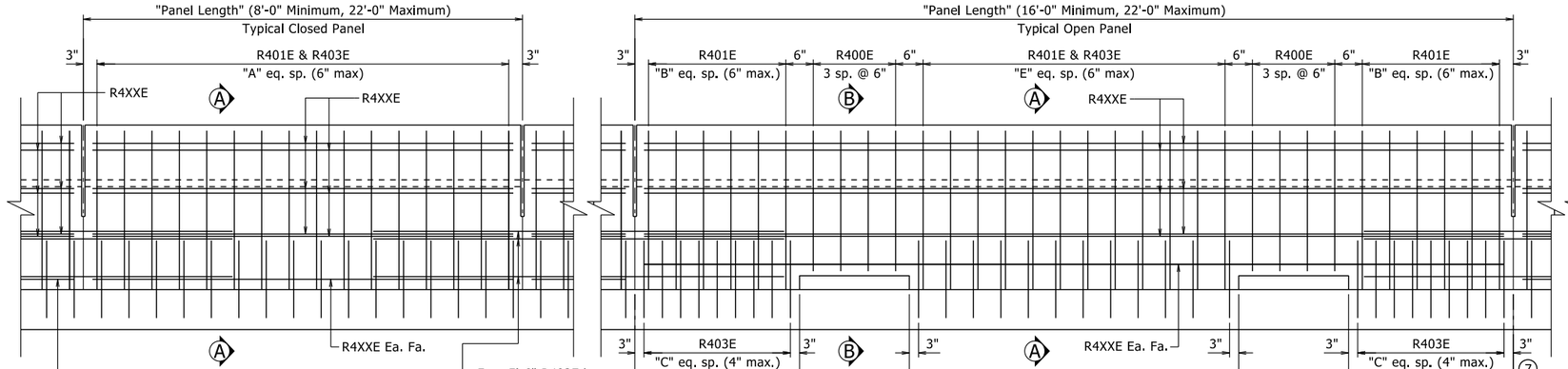

(1) ELEVATION - SINGLE SLOPE TRAFFIC RAIL

¾" = 1'-0"

(7) C.L. Full-Depth Rail Joint (formed width ¼" to 1" max). Stop 6" from top of deck/slab or sidewalk. Place at all intermediate bents locations where rail is continuous.

(1) All measurements shown are along gutterline at base of rail.

(2) Minimum embedment into deck/slab.

(3) Eliminate recess when formliner with architectural finish is used. See Plans for additional information.

(4) C.L. 1" ø formed holes for ⅞" ø bolts. See Standard Drawings GR-10 and GR-12 for additional information.

(5) Only applicable for bridges with rail cast directly on bridge deck/slab surface. Increase height as necessary for sidewalks, see Plans for additional information.

(6) Field bend front leg of R401E bar as required to maintain minimum 1½" front face clearance within limits of taper.

(7) When optional slip forming is used: to control cracking, all rail joints must be V-grooved around the perimeter of the rail prior to concrete set and sawing. Depth of V-groove shall be ½". Sawing of the joints shall be done as soon as practical to a width of ¼", and must be controlled so it will follow the V-Groove.

(8) End posts shall be the same length within a panel.

BENDING DIAGRAM

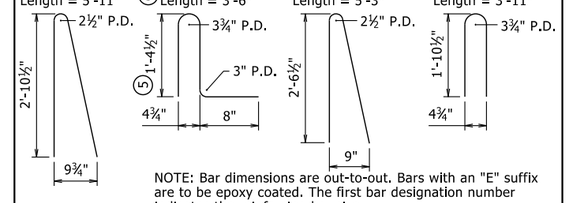

NOTE: Bar dimensions are out-to-out. Bars with an "E" suffix are to be epoxy coated. The first bar designation number indicates the reinforcing bar size.

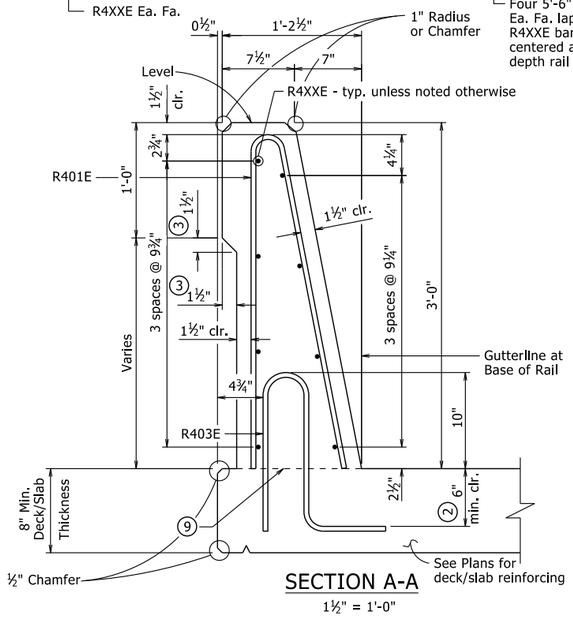

SECTION A-A

1½" = 1'-0"

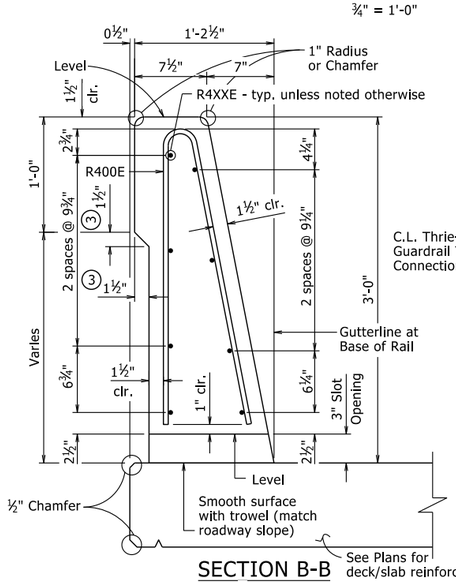

SECTION B-B

1½" = 1'-0"

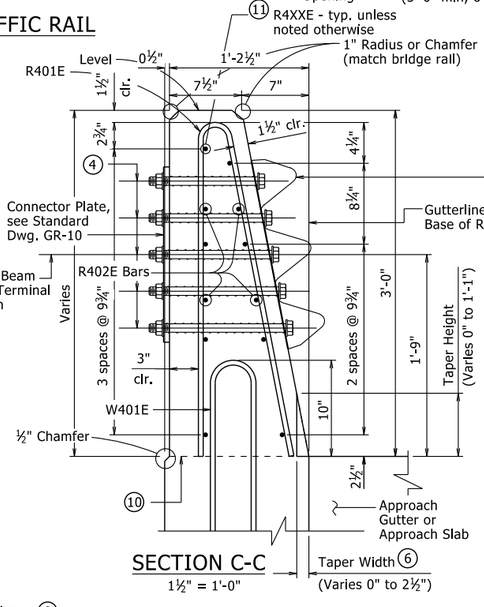

SECTION C-C

1½" = 1'-0"

Bolt Special End Shoe to face of rail as shown. Tapered washers are not required between the head of the bolts and the sloped face of the rail. Tighten the five terminal connection bolts in a well distributed pattern to prevent damage or distortion of the thrie-beam connection. Cut bolts off after installation so as to extend no more than ¾" beyond nut. Paint ends of cut-off bolts with zinc-rich paint. This work and material will not be paid for directly but shall be considered subsidiary to associated contract items.

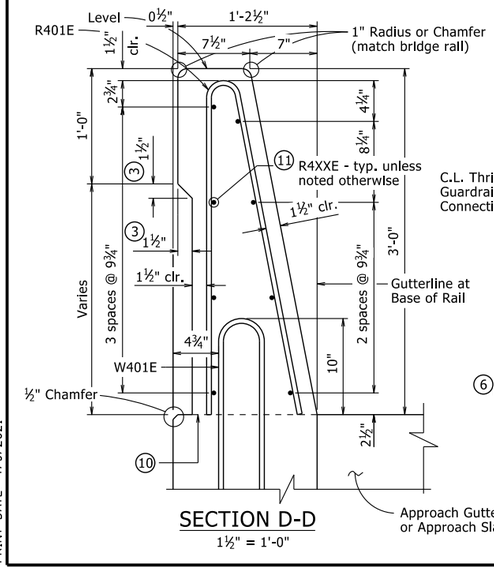

SECTION D-D

1½" = 1'-0"

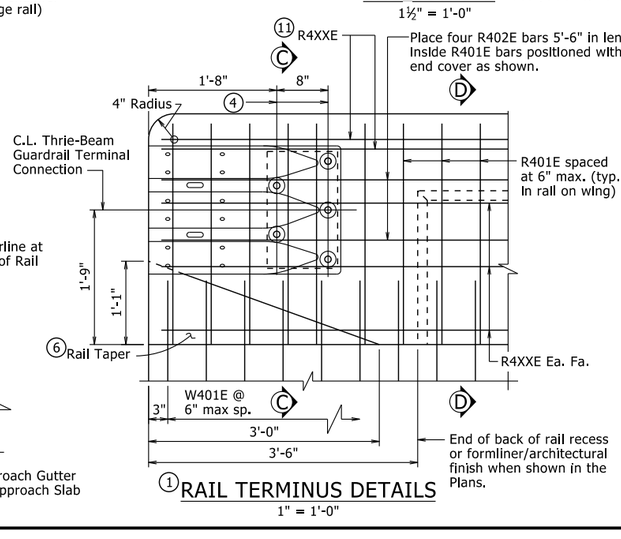

(1) RAIL TERMINUS DETAILS

1" = 1'-0"

(9) Required Construction Joint. Level where water flows away from rail, match roadway slope where water flows toward rail.

(10) Top of Abutment Wing & Required Construction Joint (match bridge deck/slab construction joint slope). See Plans for Wing reinforcing.

(11) These bars will not be included in the "Table of Variables". See Plans for details.

TABLE OF VARIABLES

Closed Rail Panels			Open Rail Panels						
Panel Length	A	R4XXE	Panel Length	B	C	D	E	F	R4XXE

See Plans for table with values.

GENERAL NOTES

This rail has been successfully evaluated by full-scale crash test to meet MASH TL-4 criteria.

Details shown are general for bridges without sidewalks. See Plans for additional details and requirements specific to bridges with sidewalks.

For Table of Variables, Rail Bar List, locations of Full and Partial Depth Rail Joints, and Wing & Rail Bar Lists, see Plans.

For location of drain openings, see Plans. Drain openings shown are not applicable for bridges with sidewalks. Drain openings will not be allowed over Railroad Right of Way, travelled roadways, and protected waterways.

Rail Terminus details, including Rail Taper, are not applicable for bridges with sidewalks or when bridge railing is continuous with roadway railing.

Scales shown are for 22"x34" drawings. When using 11"x17" drawings, reduce scale by one half.

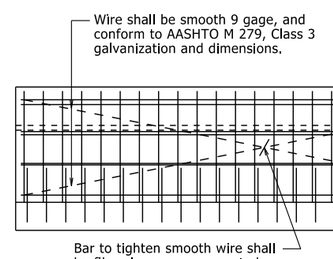

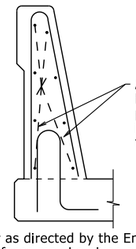

The extruded rail shall conform to the horizontal and vertical lines shown on the plans or as directed by the Engineer and shall present a smooth, uniform appearance and texture. Unless otherwise noted, exposed surfaces may be given a light brush finish or a Class 3, Textured Coating Finish in place of Class 2, Rubbed Finish.

All panels shall be braced as required to prevent racking.

Slip forming will not be allowed on bridges where formliner with architectural treatment is used unless approval from the Engineer is obtained.

DETAILS OF OPTIONAL SLIP FORMING OF BRIDGE TRAFFIC RAIL

No Scale

This document was originally issued and sealed by Charles R. Ellis, PE No. 9235, on November 5, 2020. This copy is not a signed and sealed document.

STATE OF ARKANSAS
LICENSED PROFESSIONAL ENGINEER
No. 9235
CHARLES R. ELLIS

BRIDGE ENGINEER

THESE DETAILS ARE APPLICABLE UNLESS OTHERWISE SHOWN IN THE PLAN DETAILS, SPECIAL PROVISIONS, OR SUPPLEMENTAL SPECIFICATIONS.

STANDARD DETAILS FOR BRIDGE TRAFFIC RAIL TYPE SSTR36

ARKANSAS STATE HIGHWAY COMMISSION

LITTLE ROCK, ARK.

DRAWN BY: KWY DATE: 11/5/2020
CHECKED BY: LJB DATE: 11/5/2020
DESIGNED BY: STD. DATE: -----
FILENAME: b55070.dgn
SCALE: As Noted

DRAWING NO. 55070

PRINT DATE: 4/9/2021

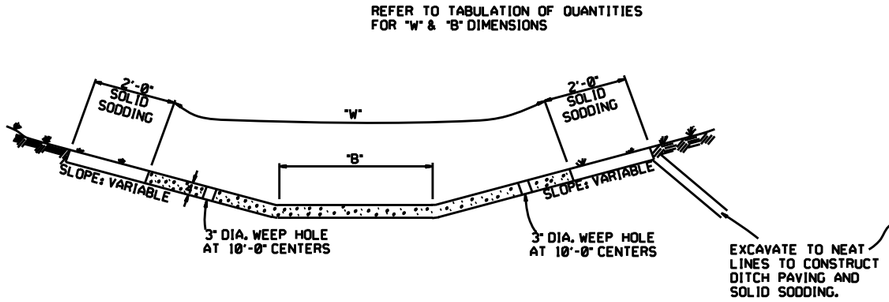

TYPE A

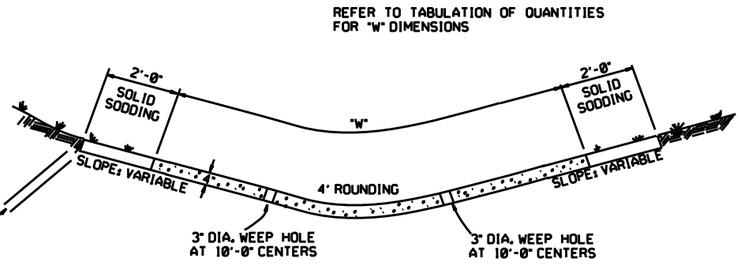

TYPE B

THE STEEL AND ADDITIONAL CONCRETE FOR THE WALLS SHALL NOT BE PAID FOR DIRECTLY, BUT SHALL BE CONSIDERED TO BE INCLUDED IN THE PRICE BID FOR "CONCRETE DITCH PAVING."

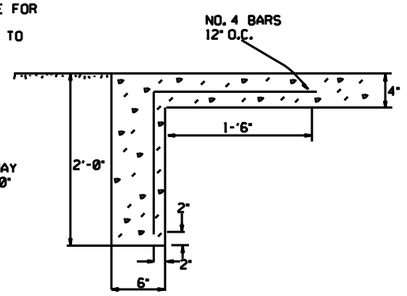

TOE WALL DETAIL FOR CONCRETE DITCH PAVING

TOE WALL DEPTH MAY BE ALTERED TO 1'-0" WHEN DIRECTED BY THE ENGINEER IN ROCK EXCAVATION

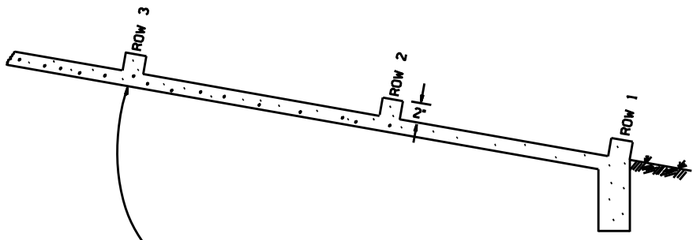

NUMBER OF ELEMENTS PER ROW VARIES WITH WIDTH OF PAVING SPECIFIED

ENERGY DISSIPATORS TO BE USED FOR THE ENTIRE LENGTH OF DITCH WHEN SLOPE OF DITCH PAVING EXCEEDS 7%. THE DISSIPATORS WILL NOT BE PAID FOR DIRECTLY, BUT SHALL BE CONSIDERED TO BE INCLUDED IN THE PRICE BID FOR CONCRETE DITCH PAVING.

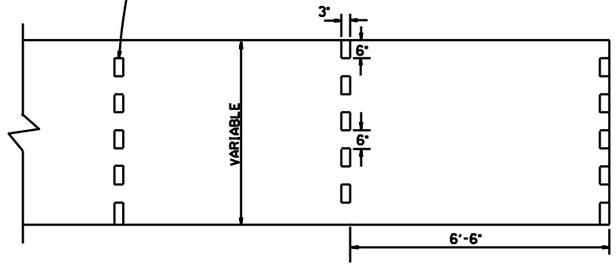

ENERGY DISSIPATORS
(NO SCALE)

GENERAL NOTES:

THE FULL WIDTH OF EACH SECTION SHALL BE POURED MONOLITHICALLY.

TOE WALLS TO BE CONSTRUCTED FULL WIDTH AT EACH END OF DITCH PAVING, AND POURED MONOLITHICALLY.

SOLID SOD ALONG DITCH PAVING TO BE PLACED WITHIN 14 DAYS OF DITCH PAVING CONSTRUCTION.

1" WIDE TRANSVERSE EXPANSION JOINTS SHALL BE PLACED IN CONCRETE DITCH PAVING AT 45° INTERVALS. THE SPACE SHALL BE FILLED WITH APPROVED JOINT FILLER COMPLYING WITH AASHTO M213.

DATE	REVISION	DATE FILM'D
12-8-16	CORRECTED ENERGY DISSIPATOR DRAWING AND NOTE	
11-17-10	ADDED GENERAL NOTE	
6-2-94	ADDED GENERAL NOTE ABOUT SOLID SODDING	
11-30-8	ELIMINATED MIN. ROWS OF ELEMENTS	111-30-89
7-15-88	REVISED DISSIPATOR NOTE	653-7-15-88
4-3-87	REVISED ENERGY DISSIPATOR	671-4-3-87
1-9-87	MODIFIED NOTE ON ENERGY DISS.	532-1-9-87
11-3-86	ADDED NOTE TO ENERGY DISS.	599-12-1-86
11-1-84	ENERGY DISSIPATOR DETAILS ADDED	508-11-1-84
11-1-84	EXCAVATION DETAILS ADDED TYPED A & B	
10-2-72	REVISED AND REDRAWN	508-10-2-72

ARKANSAS STATE HIGHWAY COMMISSION

CONCRETE DITCH PAVING

STANDARD DRAWING CDP-1

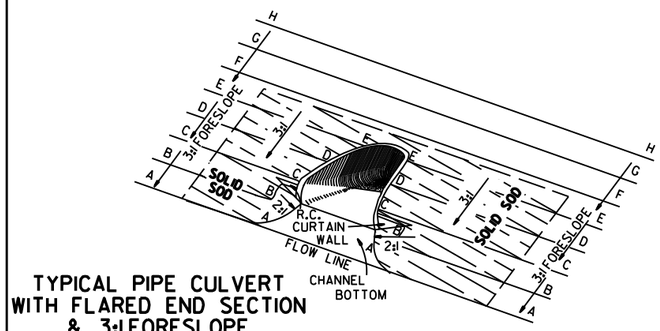

TYPICAL PIPE CULVERT
WITH FLARED END SECTION
& 3:1 FORESLOPE

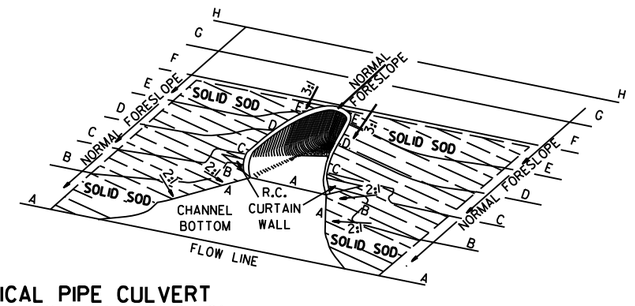

TYPICAL PIPE CULVERT
WITH FLARED END SECTION
& FLATTENED ADJACENT SLOPES

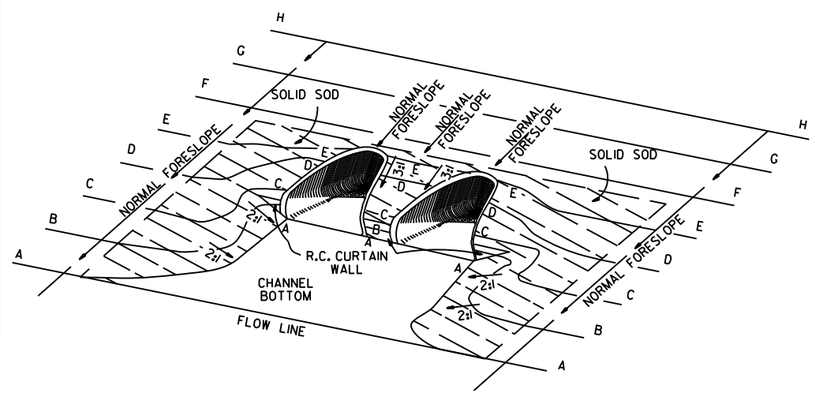

TYPICAL MULTIPLE PIPE CULVERT
WITH FLARED END SECTIONS
& FLATTENED ADJACENT SLOPES

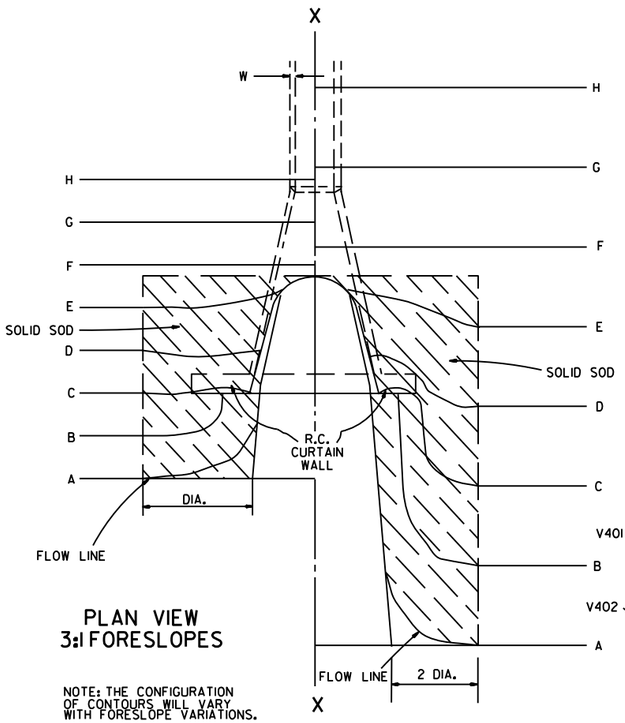

PLAN VIEW
3:1 FORESLOPES

NOTE: THE CONFIGURATION OF CONTOURS WILL VARY WITH FORESLOPE VARIATIONS.

PLAN VIEW
FLATTENED FORESLOPES

R.C. CURTAIN WALL
DIMENSIONS & QUANTITIES

PIPE DIA.	H_1	L_1	L	L (DBL.)/2	SINGLE R.C.P.C.		DOUBLE R.C.P.C.	
					CONC.	REINF. STEEL	CONC.	REINF. STEEL
					CU. YDS.	LBS.	CU. YDS.	LBS.
18"	11½"	3'-5"	8'-0"	6'-3"	0.31	27.7	0.45	39.5
24"	1'-0½"	4'-6"	9'-6"	7'-6"	0.37	33.4	0.53	48.0
30"	1'-3½"	5'-7"	11'-0"	9'-0"	0.45	39.0	0.67	59.0
36"	1'-7"	6'-8"	13'-0"	10'-6"	0.58	52.6	0.83	73.9
42"	2'-1½"	7'-3"	15'-6"	12'-0"	0.82	77.1	1.10	100.7
48"	2'-5"	7'-10"	17'-0"	13'-0"	0.98	94.9	1.27	120.4
54"	2'-9½"	8'-5"	18'-6"	14'-0"	1.16	115.8	1.47	143.7
60"	3'-4"	9'-0"	20'-6"	15'-6"	1.47	149.7	1.84	180.3
72"	4'-5"	10'-2"	25'-6"	18'-6"	2.31	232.6	2.73	271.0

NOTE: QUANTITIES SHOWN ARE FOR ONE (1) CURTAIN WALL.

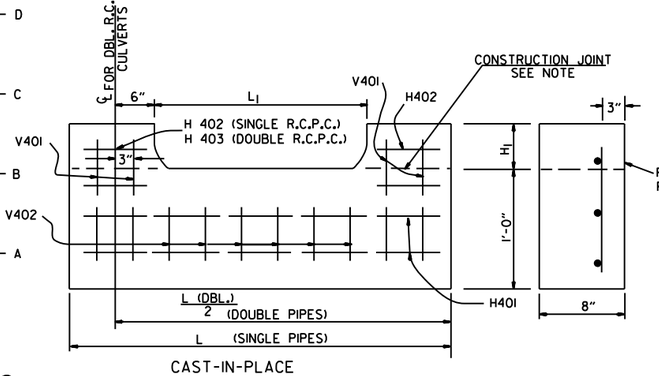

CAST-IN-PLACE

NOTE: THE PORTION OF THE R.C. CURTAIN WALL BENEATH THE FLARED END SECTION (LOWER 1'-0") SHALL BE PLACED MONOLITHICALLY. THE FLARED END SECTION SHALL THEN BE SET IN PLACE & THE REMAINING PORTIONS OF THE R.C. CURTAIN WALL PLACED.

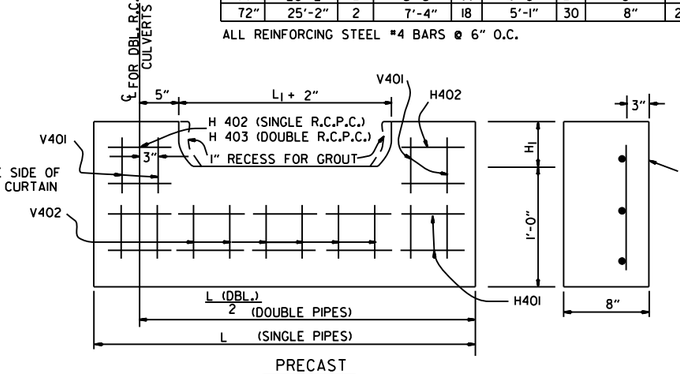

PRECAST

NOTE: THE PRECAST CURTAIN WALL WILL BE SET AND BACKFILLED WITH COMPACTED MATERIAL. THE FLARED END SECTION SHALL THEN BE SET IN PLACE AND THE 1" RECESS FILLED WITH GROUT. WHERE "L" EXCEEDS 11' THE CURTAIN WALL MAY BE CAST IN TWO (2) OR MORE SECTIONS. THE METHOD OF JOINING THE SECTIONS FOR INSTALLATION SHALL BE APPROVED BY THE ENGINEER.

R.C. CURTAIN WALL DETAILS

REINFORCING STEEL SCHEDULE

PIPE DIA.	SINGLE R.C. PIPE CULVERT								DOUBLE R.C. PIPE CULVERT											
	H401		H402		V401		V402		H401		H402		H403		V401		V402	
	L	NO.	L	NO.	L	NO.	L	NO.	L	NO.	L	NO.	L	NO.	L	NO.	L	NO.	L	NO.
18"	7'-8"	2	1'-11½"	4	1'-7½"	8	8"	8	12'-2"	2	1'-11½"	4	8"	2	1'-7½"	10	8"	14
24"	9'-2"	2	2'-2"	4	1'-8½"	10	8"	9	14'-8"	2	2'-2"	4	8"	2	1'-8½"	12	8"	18
30"	10'-8"	2	2'-4½"	4	1'-11½"	10	8"	12	17'-8"	2	2'-4½"	4	8"	2	1'-11½"	14	8"	22
36"	12'-8"	2	2'-10"	6	2'-3"	12	8"	14	20'-8"	2	2'-10"	6	8"	3	2'-3"	14	8"	28
42"	15'-2"	2	3'-9½"	8	2'-9½"	16	8"	15	23'-8"	2	3'-9½"	8	8"	4	2'-9½"	18	8"	30
48"	16'-8"	2	4'-3"	10	3'-1"	18	8"	16	25'-8"	2	4'-3"	10	8"	5	3'-1"	20	8"	32
54"	18'-2"	2	4'-8½"	12	3'-5½"	20	8"	17	27'-8"	2	4'-9"	12	8"	6	3'-5½"	22	8"	34
60"	20'-2"	2	5'-5"	14	4'-0"	24	8"	18	30'-8"	2	5'-5"	14	8"	7	4'-0"	26	8"	36
72"	25'-2"	2	7'-4"	18	5'-1"	30	8"	20	36'-8"	2	7'-4"	18	8"	9	5'-1"	33	8"	40

ALL REINFORCING STEEL #4 BARS @ 6" O.C.

SOLID SODDING

PIPE DIA.	SINGLE R.C.P.C.			DOUBLE R.C.P.C.		
	3:1	4:1	6:1	3:1	4:1	6:1
	SQ. YDS.			SQ. YDS.		
18"	5	7	12	6	8	13
24"	8	12	19	9	13	20
30"	13	18	29	14	19	30
36"	17	26	41	18	28	43
42"	23	35	55	25	37	57
48"	29	46	68	31	48	70
54"	35	57	85	37	59	87
60"	45	62	104	48	65	107
72"	64	92	156	67	95	159

NOTE: QUANTITIES SHOWN ABOVE ARE FOR ONE (1) END OF F.E.S.

GENERAL NOTES

1. A CAST-IN-PLACE OR PRECAST CURTAIN WALL MAY BE USED. PAYMENT FOR THE CURTAIN WALL SHALL BE CONSIDERED TO BE INCLUDED IN THE UNIT PRICE BID EACH FOR FLARED END SECTIONS OF THE SEVERAL SIZES, WHICH PRICE SHALL BE FULL COMPENSATION FOR FURNISHING ALL MATERIALS INCLUDING REINFORCING STEEL AND CONCRETE; FOR FORMS, MIXING AND PLACING; FOR EXCAVATION AND BACKFILL, AND FOR ALL LABOR, TOOLS, EQUIPMENT AND INCIDENTALS NECESSARY TO COMPLETE THE WORK.
2. ALL EXPOSED EDGES SHALL BE CHAMFERED ¾".
3. CONCRETE FOR CURTAIN WALL SHALL MEET THE REQUIREMENTS FOR CLASS A OR S CONCRETE AS PROVIDED IN SECTION 802 OF THE STANDARD SPECIFICATIONS OR FOR PAVING CONCRETE AS PROVIDED IN SECTION 501 OF THE STANDARD SPECIFICATIONS.
4. WELDED WIRE MESH 3 x 3 W/10 x W10 MAY BE USED IN LIEU OF REINFORCING BARS.

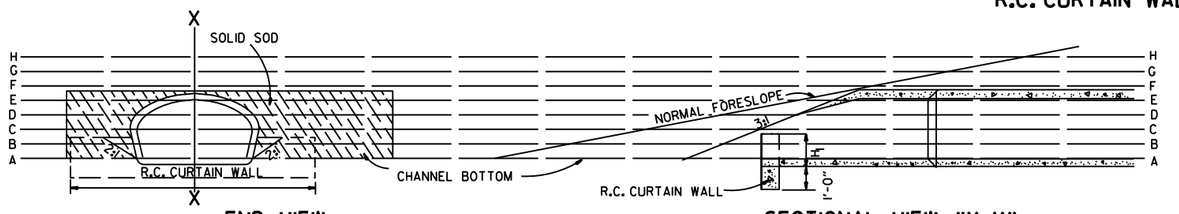

END VIEW

SECTIONAL VIEW "X-X"

DATE	REVISION	FILMED
10-18-96	ADDED NOTE TO SOLID SODDING	
10-12-95	CORRECTED SPELLING	
11- 3-94	ADDED GENERAL NOTE NO. 4	
8-15-91	REV. CURTAIN WALL QUANT. STEEL SCH. & SOLID SOD QUANT.	
3-2-81	ALLOW PRECAST IN 2 OR MORE PIECES CHAMFER EDGES	
5-15-80	ADDED PRECAST WALL & GENERAL NOTES	
10-2-72	REVISED AND REDRAWN	

ARKANSAS STATE HIGHWAY COMMISSION

FLARED END SECTION

STANDARD DRAWING FES-1

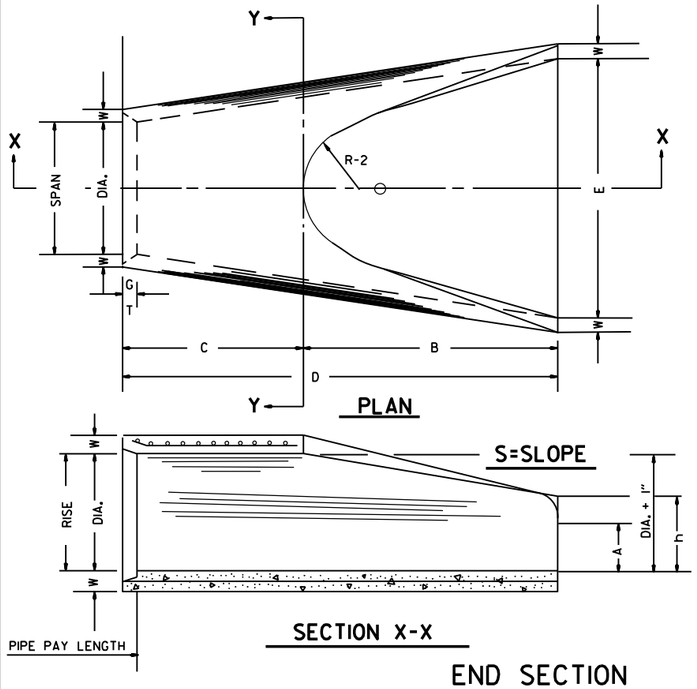

END SECTION FOR REINFORCED CONCRETE PIPE CULVERTS

TABLE OF DIMENSIONS

DIA.	WALL	A	B	C	D	E	S	DIA. + I"	P	R-1	R-2	G-T	WT.	h
18"	2½"	9"	2'-3"	3'-10"	6'-1"	3'-0"	3:1	19"	29"	15½"	12"	2"	1000	1'-0½"
24"	3"	9½"	3'-7½"	2'-6"	6'-1½"	4'-0"	3:1	25"	33⅜"	16⅛"	14"	2½"	1600	1'-1½"
30"	3½"	1'-0"	4'-6"	1'-7¾"	6'-1¾"	5'-0"	3:1	31"	37"	18½"	15"	3¼"	1940	1'-4⅝"
36"	4"	1'-3"	5'-3"	2'-10¾"	8'-1¾"	6'-0"	3:1	37"	47⅛"	24⅛"	20"	3½"	4100	1'-8"
42"	4½"	1'-9"	5'-3"	2'-11"	8'-2"	6'-6"	3:1	43"	53⅛"	27½"	22"	3½"	5380	2'-2½"
48"	5"	2'-0"	6'-0"	2'-2"	8'-2"	7'-0"	3:1	49"	56½"	28½"	22"	3½"	6550	2'-6"
54"	5½"	2'-4"	6'-6"	1'-10"	8'-4"	7'-6"	3:1	55"	65½"	33⅜"	24"	4"	8750	2'-10½"
60"	6"	2'-10"	6'-6"	1'-10"	8'-4"	8'-0"	3:1	61"	72½"	36⅛"	24"	4"	9270	3'-5"
72"	7"	3'-10"	6'-6"	1'-10"	8'-4"	9'-0"	3:1	73"	77⅛"	38⅝"	24"	5"	13250	4'-6"

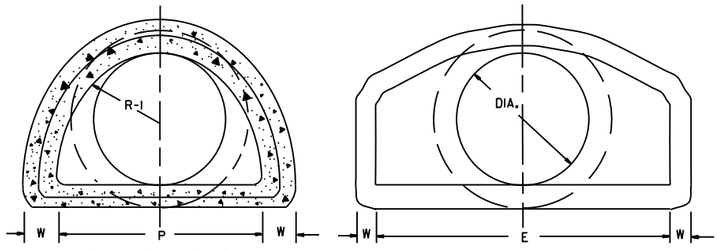

NOTE: TONGUE END ON UPSTREAM SECTION
GROOVE END ON DOWNSTREAM SECTION

ARCH PIPE

EQUIV. DIA.	• SPAN AASHTO M 206	• SPAN AHD NOMINAL	• RISE AASHTO M 206	• RISE AHD NOMINAL	W	A	B	C	D	E	P	R2	G-T	S
	INCHES													
15	18	18	11	11	2"	4"	2'-0"	4'-0"	6'-0"	3'-0"	29"	12"	1½"	2½:1
18	22	22	13½	14	2½"	5"	2'-0"	4'-1"	6'-1"	3'-6"	32⅛"	13"	2½"	2½:1
21	26	26	15½	16	2¾"	7"	2'-3"	3'-10"	6'-1"	4'-0"	34⅛"	14"	2½"	2½:1
24	28½	29	18	18	3"	9"	2'-3"	3'-10"	6'-1"	5'-0"	36⅛"	15"	2½"	2½:1
30	36¼	36	22½	23	3½"	10"	3'-1"	3'-0½"	6'-1½"	6'-0"	47⅛"	20"	3"	2½:1
36	43¾	44	26⅝	27	4"	10½"	4'-0"	2'-1½"	6'-1½"	6'-6"	54⅜"	22"	3½"	2½:1
42	51⅛	51	31⅜	31	4½"	11½"	4'-7"	1-10¼"	6'-5¼"	7'-2"	59½"	23"	3¾"	2½:1
48	58½	59	36	36	5"	1'-3"	5'-3"	2'-10¾"	8'-1¾"	7'-10"	70⅝"	24"	4¼"	2½:1
54	65	65	40	40	5½"	1'-7"	5'-3"	2'-11"	8'-2"	8'-6"	72⅛"	24"	4¾"	2¼:1
60	73	73	45	45	6"	1'-10"	5'-6"	2'-8"	8'-2"	9'-0"	77⅛"	24"	5"	2¼:1

• THE MEASURED SPAN AND RISE SHALL NOT VARY MORE THAN ± 2 PER CENT FROM THE VALUES SPECIFIED BY AASHTO M 206.

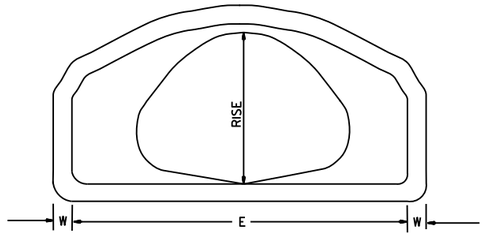

END VIEW
CONCRETE ARCH PIPE

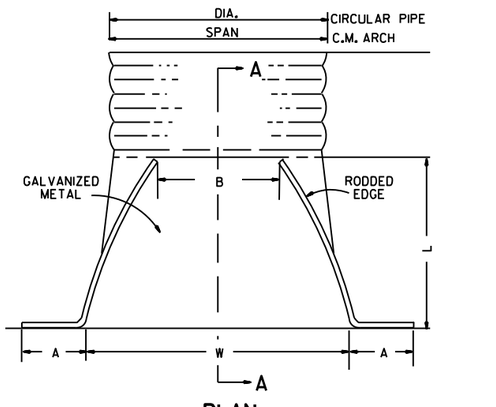

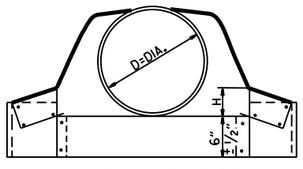

CIRCULAR PIPE

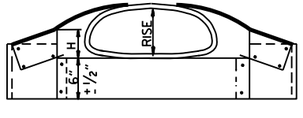

C.M. ARCH PIPE

CIRCULAR PIPE

D. DIA.	GAUGE	A I" ±	B. MAX.	H I" ±	L 1½" ±	W 2" ±	S
		INCHES					
12	16	6	6	6	21	24	2½:1
15	16	7	8	6	26	30	2½:1
18	16	8	10	6	31	36	2½:1
21	16	9	12	6	36	42	2½:1
24	16	10	13	6	41	48	2½:1
30	14	12	16	8	51	60	2½:1
36	14	14	19	9	60	72	2½:1
42	12	16	22	11	69	84	2½:1
48	12	18	27	12	78	90	2½:1
54	12	18	30	12	84	102	2:1
60	12	18	33	12	87	114	1¾:1
66	12	18	36	12	87	120	1½:1
72	12	18	39	12	87	126	1 1/3:1

C.M. ARCH PIPE

EQUIV. DIA.	SPAN	RISE	A I" ±	B MAX.	H I" ±	L 1½" ±	W 2" ±	S	GAUGE
	INCHES								
15"	17	13	7	9	6	19	30	2½:1	16
18"	21	15	7	10	6	23	36	2½:1	16
21"	24	18	8	12	6	28	42	2½:1	16
24"	28	20	9	14	6	32	48	2½:1	16
30"	35	24	10	16	6	39	60	2½:1	14
36"	42	29	12	18	8	46	75	2½:1	14
42"	49	33	13	21	9	53	85	2½:1	12
48"	57	38	18	26	12	63	90	2½:1	12
54"	64	43	18	30	12	70	102	2¼:1	12
60"	71	47	18	33	12	77	114	2¼:1	12

NOTE: ALTERNATE CONNECTIONS TO THE PIPE CULVERTS, IN ACCORDANCE WITH MANUFACTURER'S STANDARD PRACTICES, MAY BE MADE SUBJECT TO THE APPROVAL OF THE ENGINEER.

END SECTIONS FOR CORRUGATED METAL PIPE CULVERTS

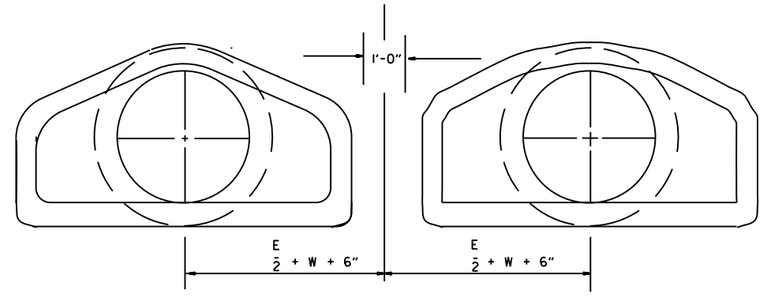

MULTIPLE R.C. PIPE CULVERTS

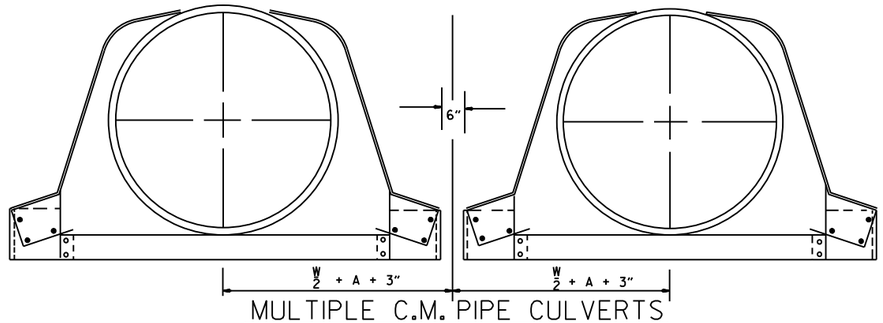

MULTIPLE C.M. PIPE CULVERTS

DATE	REVISION	FILMED
10-18-96	REVISED ASTM REF. TO AASHTO	
5-15-80	REVISED DISTANCE BETWEEN MULTIPLE R.C.P. F.E.S.	664-5-15-80
7-14-78	C.M. ARCH SIZES TO CONFORM WITH AASHTO SIZES	752-7-14-78
8-22-75	ADDED MULTIPLE PIPE CULVERTS	517-8-22-75
12-5-74	REMOVED NOTE RE REINF. FOR R.C. F.E.S.	500-12-5-74
5-24-73	CMP END SECTION, SHOW PIPE PAY LENGTH	627-5-24-73
10-2-72	REVISED AND REDRAWN	760-10-2-72

ARKANSAS STATE HIGHWAY COMMISSION

FLARED END SECTION

STANDARD DRAWING FES-2

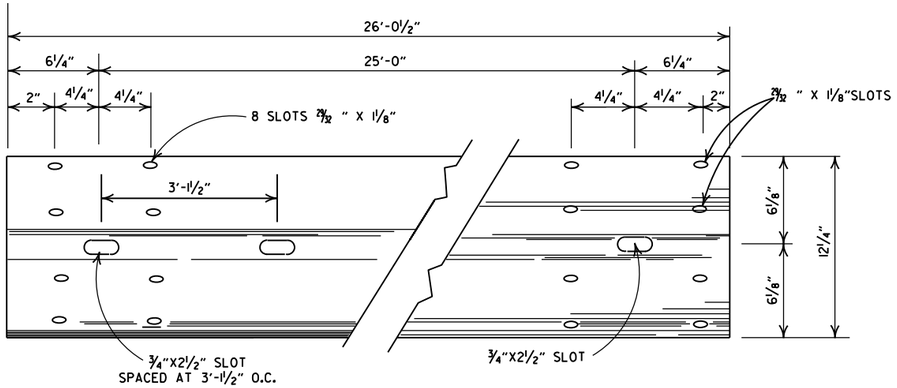

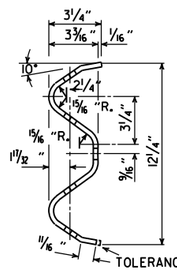

DETAILS OF W-BEAM GUARDRAIL

RAIL SECTION OF CLOSELY SIMILAR DIMENSIONS AND COMPARABLE STRENGTH MAY BE SUBSTITUTED IF APPROVED BY THE ENGINEER.

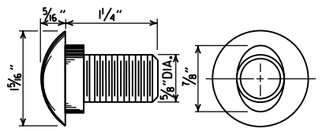

SPLICE BOLT
POST BOLT - SAME EXCEPT LENGTH

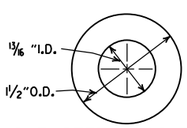

CUT STEEL WASHER

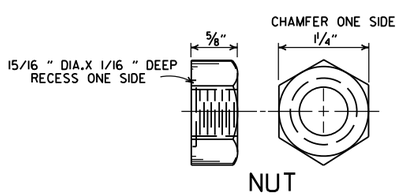

NUT

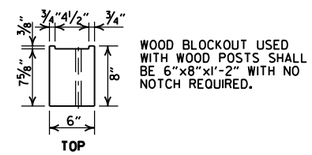

WOOD BLOCKOUT USED WITH WOOD POSTS SHALL BE 6"x8"x1'-2" WITH NO NOTCH REQUIRED.

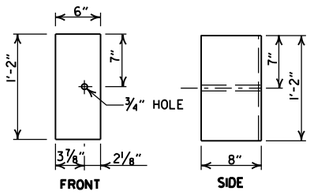

WOOD BLOCKOUT (W-BEAM)

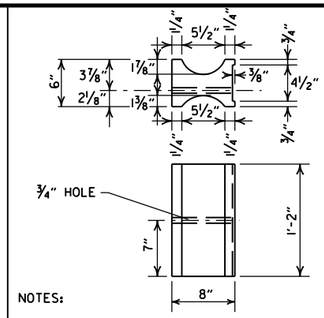

NOTES:

1. SIMILAR SHAPED PLASTIC BLOCKOUTS MAY BE USED AS LONG AS THEY MEET REQUIREMENTS FOR MANUAL FOR ASSESSING SAFETY HARDWARE (MASH).
2. DIMENSIONS ARE SUBJECT TO MANUFACTURERS TOLERANCES.

PLASTIC BLOCKOUT (W-BEAM)

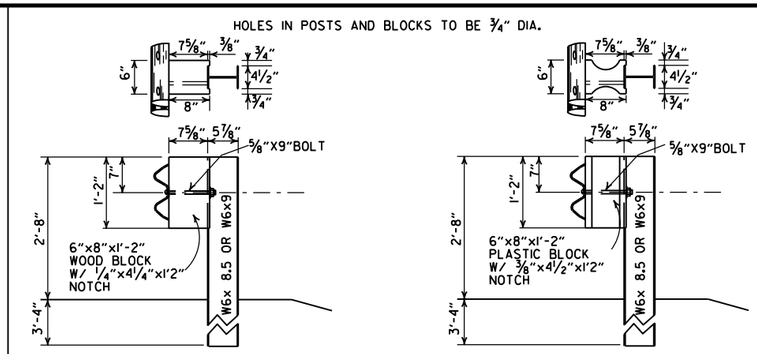

WOOD BLOCKOUT CONNECTIONS

PLASTIC BLOCKOUT CONNECTIONS

DETAILS OF STEEL LINE POST CONNECTIONS (W-BEAM)

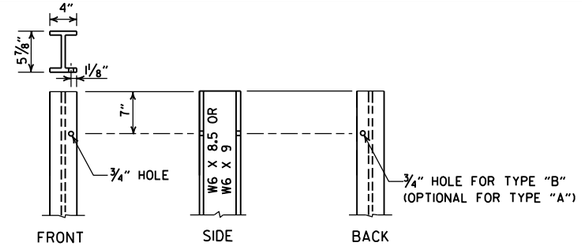

STEEL POST

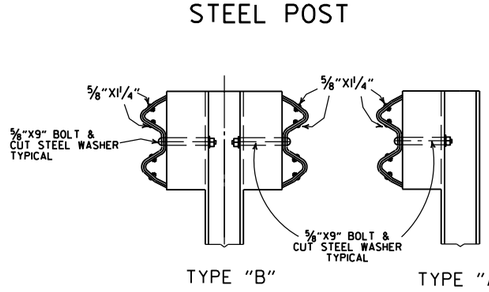

TYPE "B" TYPE "A"

DETAILS OF STEEL LINE POST CONNECTIONS (W-BEAM)

-GENERAL NOTES-

ALL BOLTS SHALL BE SUFFICIENT LENGTH TO EXTEND THROUGH THE FULL THICKNESS OF THE NUT AND NO MORE THAN ¾" BEYOND IT.

WHERE W-BEAM GUARDRAIL CONTINUES, THE INTERMEDIATE SECTIONS SHALL HAVE A POST SPACING OF 6'-3" UNLESS OTHERWISE NOTED.

W-BEAM GUARDRAIL REPRESENTING INTERMEDIATE SECTIONS WILL BE MEASURED ALONG THE ROADWAY FACE FROM CENTERLINE OF POST TO CENTERLINE OF POST.

USE W-BEAM GUARDRAIL COMPONENTS OF SAME MATERIAL FOR ENTIRE JOB. FOR EXTENSIONS OR MODIFICATION OF EXISTING GUARDRAIL, W-BEAM GUARDRAIL COMPONENTS OF THE SAME TYPE AS THOSE EXISTING SHALL BE USED.

ANY BACKFILLING UNDER OR AROUND POST SHALL BE DAMP SAND THOROUGHLY TAMPED IN PLACE.

WOOD POSTS & WOOD BLOCKS SHALL BE EITHER DENSE NO. 1 STRUCTURAL OR BETTER 9.7f (1400 f) OR NO. 1 1350 f SOUTHERN PINE.

CONTRACTOR SHALL HAVE THE OPTION OF USING WOOD BLOCKOUTS FOR W-BEAM GUARDRAIL OR PLASTIC BLOCKOUTS, AS LONG AS BLOCKOUT USED MEETS REQUIREMENTS FOR MANUAL FOR ASSESSING SAFETY HARDWARE (MASH) FOR W-BEAM GUARDRAIL.

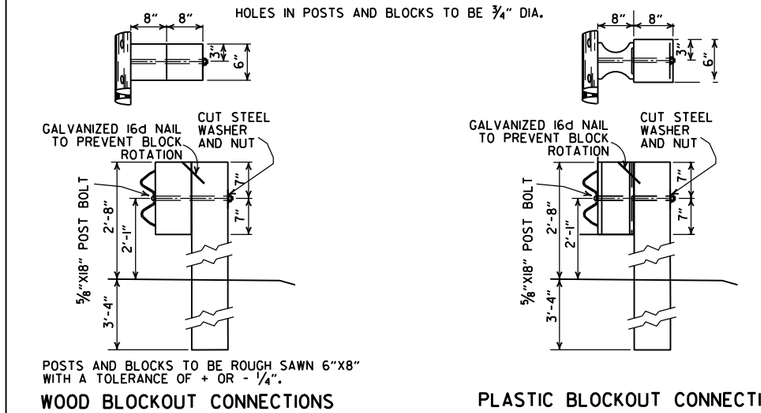

WOOD BLOCKOUT CONNECTIONS

PLASTIC BLOCKOUT CONNECTIONS

DETAILS OF WOOD LINE POST CONNECTIONS (W-BEAM)

DATE	REVISION	FILMED
11-07-19	RENUMBERED AND RENAMED	
11-16-17	REVISED GENERAL NOTES AND RAISED GUARDRAIL HEIGHT 3"	
07-14-10	RAISED HEIGHT OF GUARDRAIL 1"	
10-15-09	ADDED REFERENCE TO MASH	
04-10-03	REVISED GENERAL NOTES	
08-22-02	REVISED DIMENSION ON WOOD & PLASTIC BLOCKOUT CONNECTIONS & STEEL POST	
11-16-01	REVISED WOOD BLOCKOUT & DETAILS OF WOOD LINE POST CONNECTIONS	
03-30-00	REMOVED GUARDRAIL AT BRIDGE ENDS	
01-12-00	ADDED PLASTIC BLOCKOUT	
08-12-98	REV. BLOCKOUTS TO WOOD, DELETED CONC. POST & REV. GENERAL NOTE, DELETED DET. OF GUARDRAIL REPLACE. BEHIND CURB & DET. OF POST PLACE. IN SOLID ROCK, & ADDED DETAILS OF STEEL LINE POST CONN. REMOVED BACK-UP PLATE, REVISED HOLES IN STEEL POLES	
04-03-97	REMOVED "LAP IN DIRECTION OF TRAFFIC" NOTE & PLACED ARROWS ON WASHERS	
10-18-96	REVISED WOOD POST NOTE	
06-02-94	ADDED ALT. STEEL POST SIZE	
08-05-93	REVISED STEEL POST SIZE	8-5-93
10-01-92	REDRAWN & REVISED	10-1-92
08-15-91	REVISED WASHER NOTE	8-15-91
08-02-90	REV. GEN. NOTE & DEPTH OF ANC. POST IN ROCK	8-2-90
07-15-88	REVISED SECTION 3 & GENERAL NOTES	
03-04-88	REV. ANCHOR POST ,ELEV. NOTES & POST IN ROCK	780-3-4-88
10-30-87	REVISED WOOD LINE POST DETAIL	546-10-30-87
10-09-87	REDRAWN & REVISED	802-10-9-87

ARKANSAS STATE HIGHWAY COMMISSION

GUARDRAIL DETAILS

STANDARD DRAWING GR-6

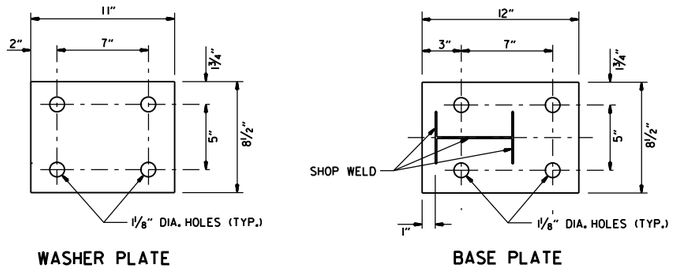

WASHER PLATE

BASE PLATE

Note: Bolts, nuts, washers and plates shall be galvanized in accordance with Section 807 of the Standard Specifications.

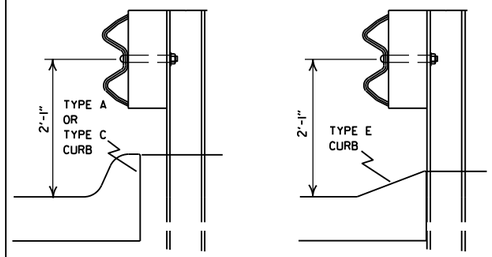

DETAIL OF GUARDRAIL PLACEMENT BEHIND CURB (W-BEAM)

FOR DESIGN SPEEDS OF 50 MPH OR LESS ALL CURB FACES, AS SHOWN ON STD. DRWG. CG-1, MAY BE USED. FOR DESIGN SPEEDS OF 55 MPH OR MORE TYPE "E" CURB FACE SHALL BE USED.

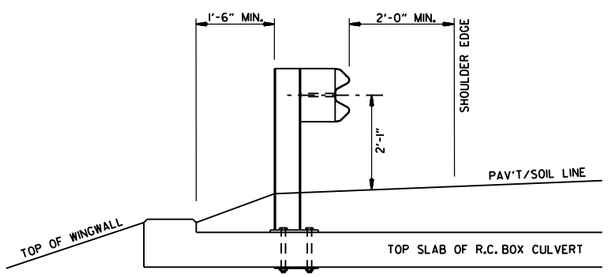

SECTION A-A

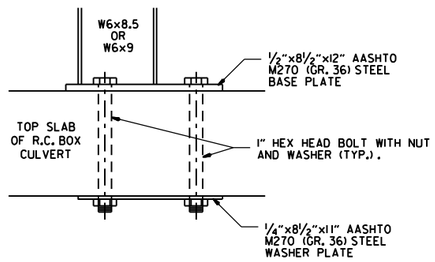

DETAIL OF CONNECTION

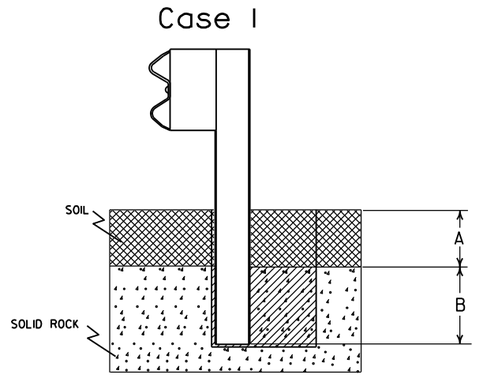

Plan View Steel Posts

Either hole configuration acceptable

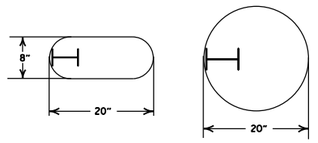

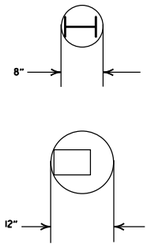

Plan View Wood Posts

Either hole configuration acceptable

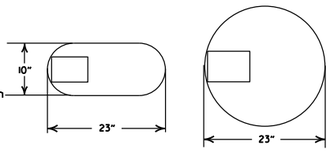

Notes: For overlying soil depths (A) ranging from 0 to 18", the depth of required drilling (B) is equal to 24".

Zone A:
Backfill according to Section 617.03(a).

Zone B:
Backfill hole in 6" lifts with material meeting the requirements of Section 802.02(c) - Alternate gradation. Compact to 95% maximum dry density per ASTM D-698.

Notes: For overlying soil depths (A) ranging from 18" to 44", the depth of required drilling (B) is equal to either 12" or 44" minus the depth of soil whichever is less.

Zone A & B:
Backfill according to Section 617.03(a).

DETAIL OF POST PLACEMENT IN SOLID ROCK (W-BEAM)

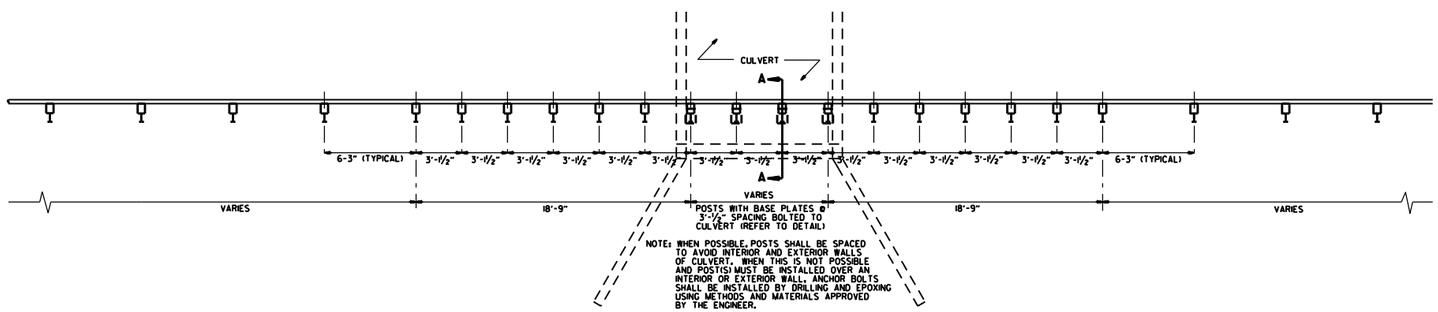

PLAN LAYOUT OF TYPE A GUARDRAIL AT LOW-FILL CULVERTS

NOTE: THIS DETAIL IS TO BE USED ONLY WHEN THE COVER OVER THE CULVERT DOES NOT PERMIT FULL EMBEDMENT OF GUARDRAIL POSTS AS SHOWN ON STD. DWG. GR-6.

DATE	REVISION	FILMED
11-07-19	RENUMBERED, RENAMED, REVISED REFERENCE	
11-16-17	REVISED GUARDRAIL HEIGHT	
07-14-10	RAISED HEIGHT OF GUARDRAIL 1"	
04-12-07	REVISED DETAIL OF GUARDRAIL PLACEMENT BEHIND CURB	
11-10-05	ADDED GUARDRAIL PLACEMENT BEHIND CURB; REVISED DETAIL OF CONNECTION	
11-18-04	REVISED POST PLACEMENT IN ROCK & CULVERT CONNECTION DETAILS. ADDED DETAIL FOR GUARDRAIL PLACEMENT AT LOW-FILL CULVERTS	
03-30-00	REMOVED CONCRETE INSERT ANCHOR	
08-12-98	CHANGED STEEL SPACER BLOCK TO WOOD BLOCKOUT. ADDED DET. OF GUARDRAIL CONNECTION TO R.C. BOX CULV'T., DELETED DET. OF STEEL LINE POST CONN. & ADDED DET. OF GUARDRAIL PLACE. BEHIND CURB & DET. OF POSTPLACE. IN SOLID ROCK	
04-03-96	PLACED ARROWS AT CUT STEEL WASHERS	4-3-96
10-18-96	REV. ASTM REF. TO AASHTO	
11-22-95	ADDED OPTIONAL HOLES	
06-02-94	REVISED ALTERNATE POST SIZE	
08-05-93	REVISED STEEL POST SIZE	
10-01-92	REDRAWN & REVISED	10-1-92
08-02-90	DEL. WASHER ON ANCHOR ASSEMBLY	8-2-90
07-15-88	CONFORMED TO 1988 SPECS	
03-04-88	REVISED ANCHOR NOTE	
10-30-87	REVISED ANCHOR ASSEMBLY	712-10-30-87
10-30-87	REVISED PLACEMENT BEHIND CURB	547-10-30-87
10-09-87	REDRAWN & REVISED	803-10-9-87

ARKANSAS STATE HIGHWAY COMMISSION

GUARDRAIL DETAILS

STANDARD DRAWING GR-7

NOTE: GUARDRAIL WITH GUARDRAIL TERMINAL (TYPE I) TO BE INSTALLED ONLY AT LOCATIONS SHOWN ON PLANS.

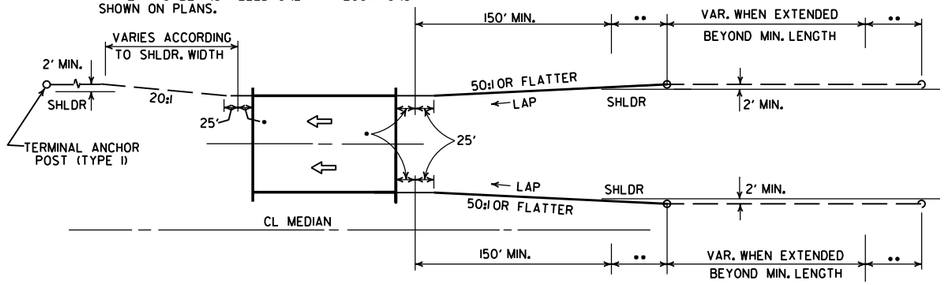

ONE-WAY TRAFFIC

••• LAP OF GUARDRAIL SHALL BE AS SHOWN FOR A DISTANCE OF UP TO 200', CHANGE TO LAP IN DIRECTION OF TRAVEL.

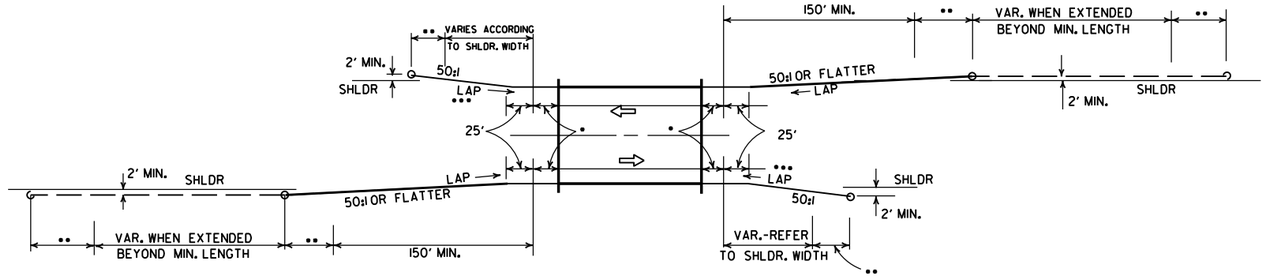

TWO-WAY TRAFFIC

METHODS OF INSTALLATION OF GUARDRAIL AT LESS THAN FULL SHOULDER WIDTH BRIDGES USING GUARDRAIL TERMINAL (TYPE 2)

••• LAP OF GUARDRAIL SHALL BE AS SHOWN FOR A DISTANCE OF UP TO 200', CHANGE TO LAP IN DIRECTION OF TRAVEL.

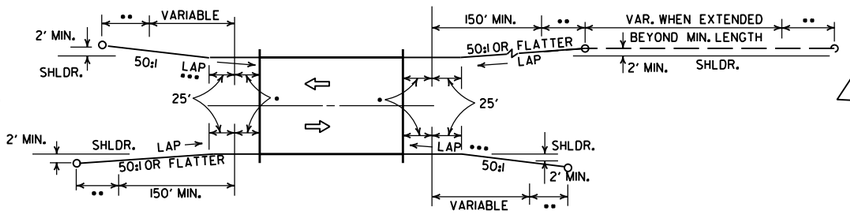

TWO-WAY TRAFFIC

NOTE: GUARDRAIL WITH GUARDRAIL TERMINAL (TYPE I) TO BE INSTALLED ONLY AT LOCATIONS SHOWN ON PLANS.

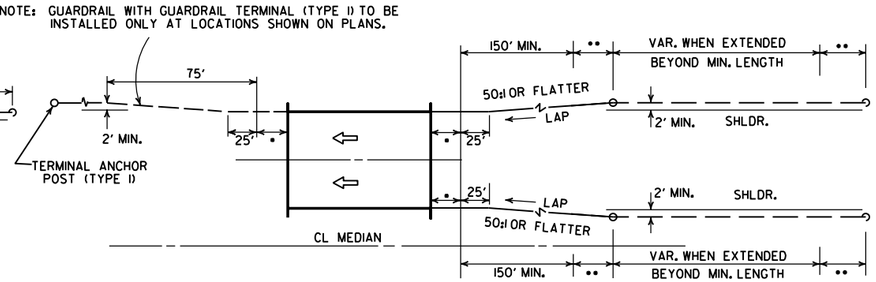

ONE-WAY TRAFFIC

METHOD OF INSTALLATION OF GUARDRAIL AT FULL SHOULDER WIDTH BRIDGES USING GUARDRAIL TERMINAL (TYPE 2)

••• LAP OF GUARDRAIL SHALL BE AS SHOWN FOR A DISTANCE OF UP TO 200', CHANGE TO LAP IN DIRECTION OF TRAVEL.

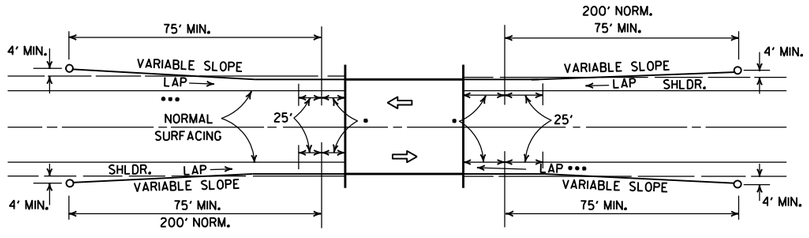

METHOD OF INSTALLATION OF GUARDRAIL USING GUARDRAIL TERMINAL (TYPE I) (FULL SHOULDER WIDTH OR LESS BRIDGES)

LEGEND

- • THRIE BEAM GUARDRAIL TERMINAL
- •• GUARDRAIL TERMINAL (TYPE 2)

DATE	REVISION	DATE FILM
11-07-19	RENUMBERED AND RENAMED	
4-17-08	REVISED LAYOUTS	
11-10-05	REMOVED GUARDRAIL NOTES AND DETAILS	
11-16-01	DELETED NOTE-METHOD OF INSTALLATION OF GUARDRAIL USING GUARDRAIL TERM. (TY. I)	
1-12-00	ADDED CONSTRUCTION NOTE	1-12-00
6-26-97	REVISED LAYOUT	
10-1-92	REDRAWN & REVISED	10-1-92
	ADDED NOTE	
10-9-87	REDRAWN & REVISED	

ARKANSAS STATE HIGHWAY COMMISSION

GUARDRAIL DETAILS

STANDARD DRAWING GR-8

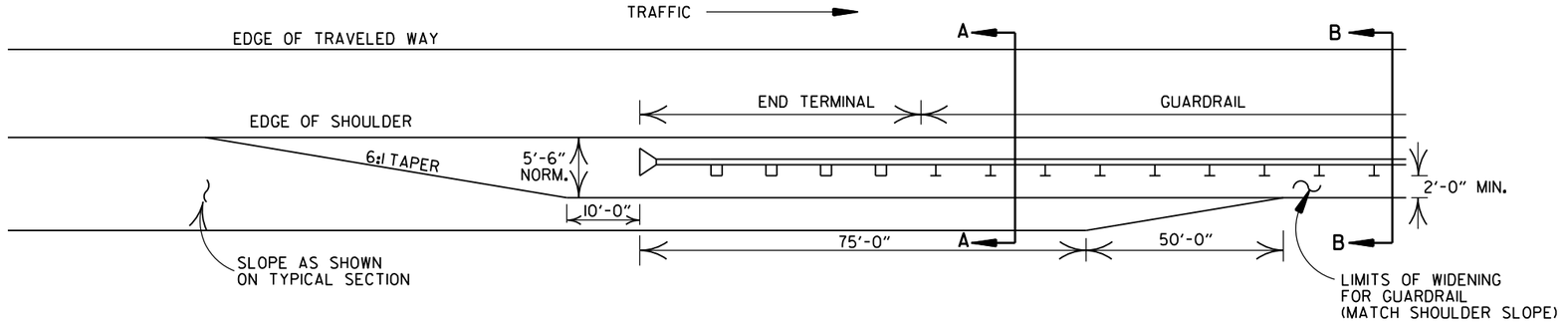

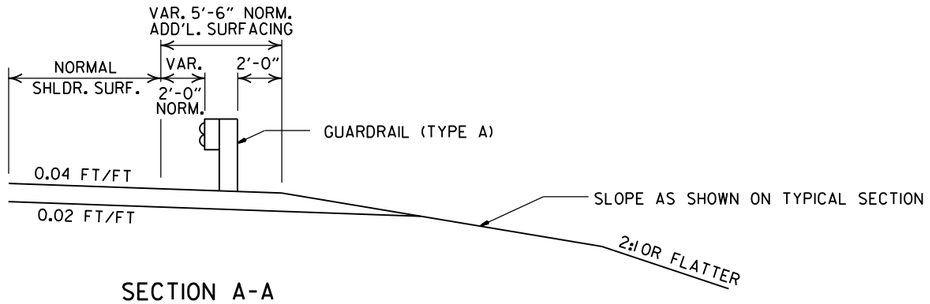

SECTION A-A

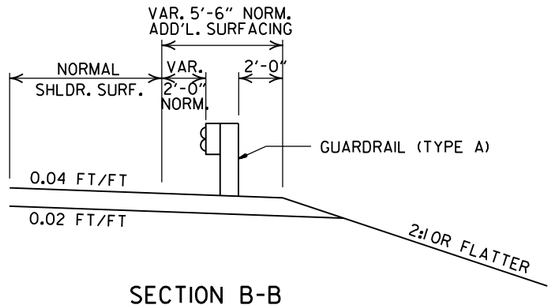

SECTION B-B

DETAILS OF WIDENING FOR GUARDRAIL

NOTE: NORMAL SECTION TO BE WIDENED APPROX. 5'-6" EACH SIDE TO SUPPORT GUARDRAIL.

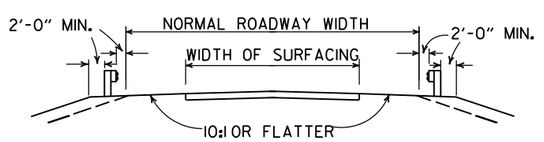

SECTION ON TANGENT

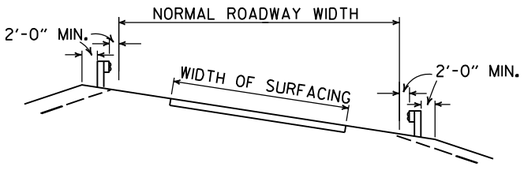

SECTION ON CURVE

DETAILS SHOWING POSITION OF GUARDRAIL ON HIGHWAY

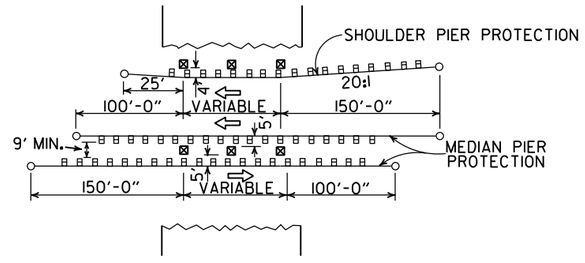

METHOD OF INSTALLATION OF GUARDRAIL AT FIXED OBSTACLE

DATE	REVISION	DATE FILM
11-07-19	RENUMBERED AND RENAMED	
4-17-08	MINOR REVISION	
11-10-05	DRAWN	

ARKANSAS STATE HIGHWAY COMMISSION

GUARDRAIL DETAILS

STANDARD DRAWING GR-9

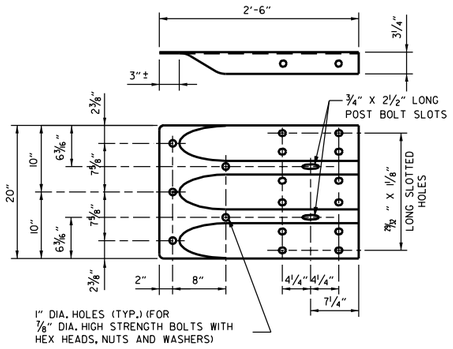

SPECIAL END SHOE

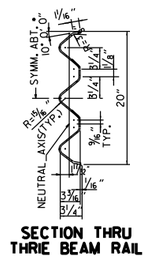

SECTION THRU THRIE BEAM RAIL

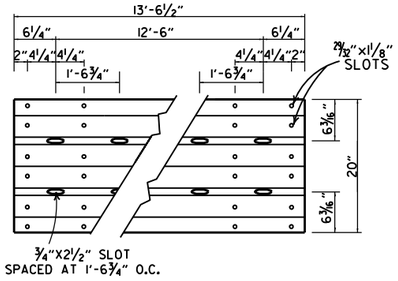

THRIE BEAM RAIL

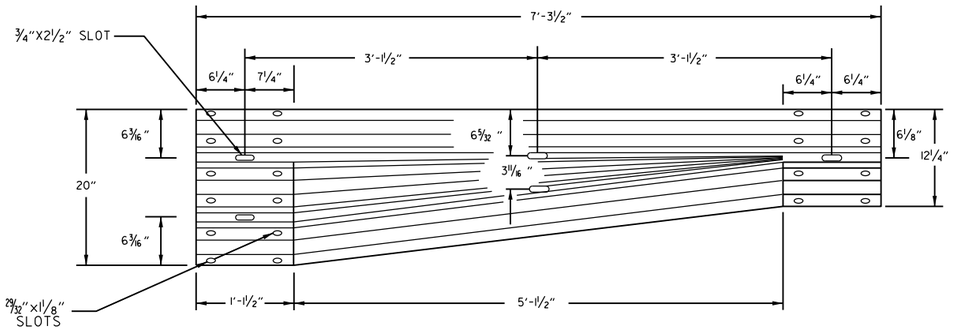

TRANSITION SECTION

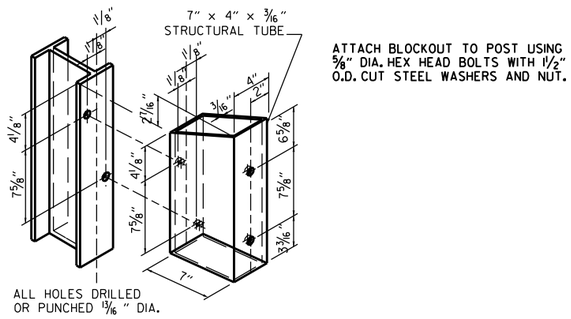

ATTACH BLOCKOUT TO POST USING 5/8" DIA. HEX HEAD BOLTS WITH 1 1/2" O.D. CUT STEEL WASHERS AND NUT.

STRUCTURAL STEEL TUBING BLOCKOUT DETAIL

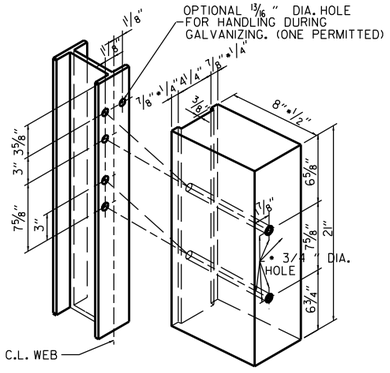

ALL HOLES 13/16" DIAMETER EXCEPT AS NOTED

HOLE PUNCHING DETAIL FOR STEEL POST & WOOD OR PLASTIC BLOCKOUTS

NOTE: BLOCKS SHALL BE THE SAME TYPE THROUGHOUT THE PROJECT LIMITS.

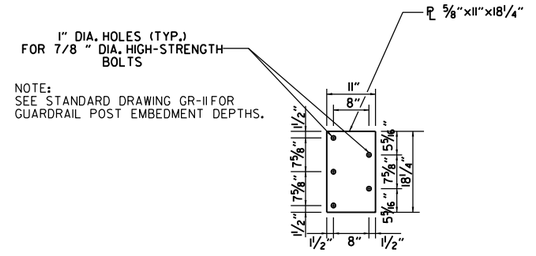

NOTE:
SEE STANDARD DRAWING GR-11 FOR GUARDRAIL POST EMBEDMENT DEPTHS.

CONNECTOR PLATE

CONNECTOR PLATE SHALL BE AASHTO M270, GR. 36 AND SHALL BE GALVANIZED AFTER FABRICATION. GALVANIZING SHALL CONFORM TO SUBSECTION 807.19 OF THE STANDARD SPECIFICATIONS. CONNECTOR PLATE TO BE BOLTED TO SPECIAL END SHOE USING 7/8" DIA. HIGH STRENGTH BOLTS, WITH THE HEADS PLACED ON THE TRAFFIC FACE. WASHERS SHALL BE USED UNDER THE HEAD AND NUT. BOLTS, NUTS AND WASHERS SHALL BE GALVANIZED AND SHALL CONFORM TO SUBSECTION 807.06.

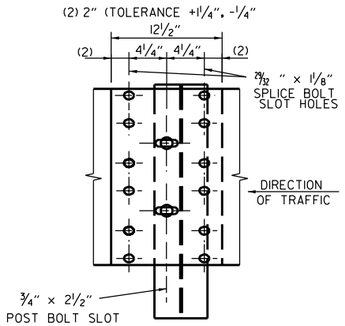

THRIE BEAM RAIL SPLICE AT POST

GENERAL NOTES:

THE THRIE BEAM RAIL, SPECIAL END SHOE, AND THE TRANSITION SECTION SHALL BE MADE OF STEEL AND SHALL BE 12 GAGE. ZINC COATING SHALL BE TYPE I.

RAIL POSTS SHALL BE SET PERPENDICULAR TO THE ROADWAY PROFILE GRADE AND VERTICALLY IN CROSS SECTION.

ALL BOLTS SHALL BE SUFFICIENT LENGTH TO EXTEND THROUGH THE FULL THICKNESS OF THE NUT AND NO MORE THAN 3"4" BEYOND IT.

ALL LAP SPLICES, INCLUDING SPECIAL END SHOES, SHALL BE MADE IN THE DIRECTION SHOWN ON STANDARD DRAWINGS GR-8 & GR-13.

REFER TO STD. DRWG. GR-11 FOR POST DETAILS.

USE THRIE BEAM GUARDRAIL COMPONENTS OF SAME MATERIAL FOR ENTIRE JOB.

THRIE BEAM POSTS SHALL BE SAME MATERIAL AS W-BEAM POSTS FOR ENTIRE JOB.

WOOD POSTS & WOOD BLOCKS SHALL BE EITHER DENSE NO. 1 STRUCTURAL OR BETTER 9.7 f (1400 f) OR NO. 1 1350 f SOUTHERN PINE.

DATE	REVISION	FILMED
11-07-19	RENAMED AND REVISED REFERENCES	
11-16-17	REVISED TRANSITION SECTION, GUARD RAIL HEIGHT, AND GENERAL NOTES; MOVED THRIE BEAM GUARD RAIL CONNECTIONS AT BRIDGES ENDS TO STD. DRWG. GR-12	
07-14-10	RAISED HEIGHT OF W-BEAM 1"	
11-29-07	ADDED PLASTIC BLOCKOUTS	
11-10-05	ADDED NOTE FOR ATTACHING STEEL BLOCKOUT	
11-18-04	REVISED GENERAL NOTES	
10-9-03	REVISED GENERAL NOTES	
04-10-03	REVISED GENERAL NOTES	
08-22-02	REVISED NOTE (2)	
06-29-00	MOVED DIMENSION LINES	
05-18-00	ADDED NOTE	
03-30-00	DRAWN & ISSUED	

ARKANSAS STATE HIGHWAY COMMISSION

GUARDRAIL DETAILS

STANDARD DRAWING GR-10

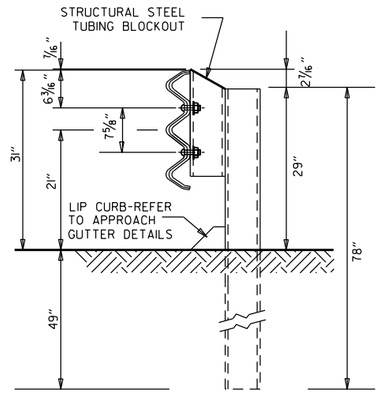

THRIE BEAM RAIL WITH STEEL TUBING BLOCKOUT
AND STEEL POST
POSTS 1-7

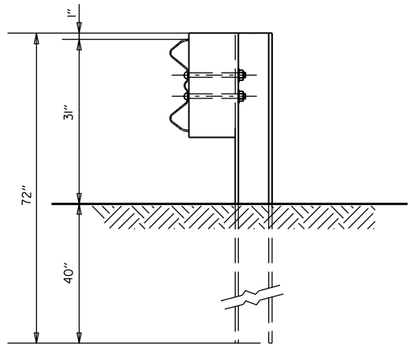

W-BEAM TO THRIE BEAM TRANSITION RAIL
WITH WOOD OR PLASTIC BLOCKOUT AND STEEL POST
POST 8

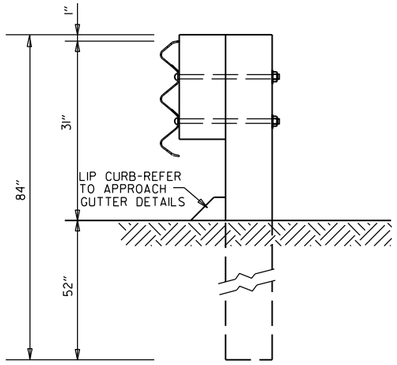

THRIE BEAM RAIL
WITH WOOD OR PLASTIC
BLOCKOUTS & WOOD POSTS
POSTS 1-6

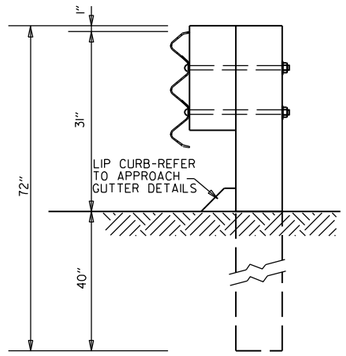

THRIE BEAM RAIL
WITH WOOD OR PLASTIC
BLOCKOUT & WOOD POST
POST 7

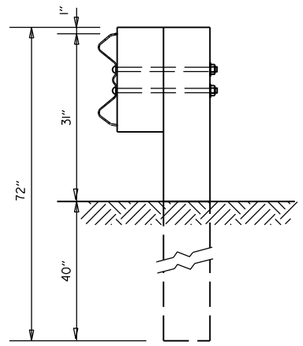

W-BEAM TO THRIE BEAM
TRANSITION RAIL WITH WOOD OR
PLASTIC BLOCKOUT & WOOD POST
POST 8

GENERAL NOTES:

RAIL POSTS SHALL BE SET PERPENDICULAR TO THE ROADWAY PROFILE GRADE AND VERTICALLY IN CROSS SECTION.

WOOD POSTS & WOOD BLOCKS SHALL BE EITHER DENSE NO. 1 STRUCTURAL OR BETTER 9.7f (1400 f) OR NO. 1 1350 f SOUTHERN PINE.

DATE	REVISION	FILMED
11-07-19	RENAMED	
11-16-17	REVISED GUARDRAIL HEIGHT, CHANGED STD. DWG. NUMBER FROM GR-10A TO GR-11	
07-14-10	REVISED POST 8 DIMENSIONS	
11-29-07	ADDED PLASTIC BLOCKOUTS	
08-22-02	REVISED LIP CURB NOTE	
03-30-00	DRAWN & ISSUED	

ARKANSAS STATE HIGHWAY COMMISSION

GUARDRAIL DETAILS

STANDARD DRAWING GR-11

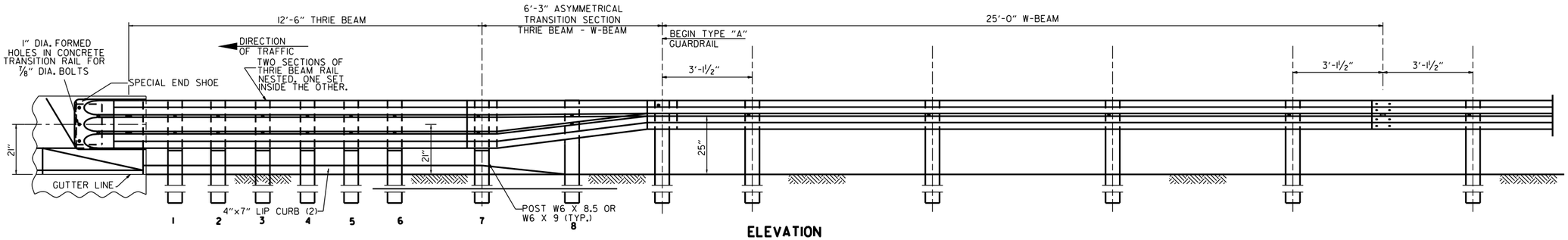

ELEVATION

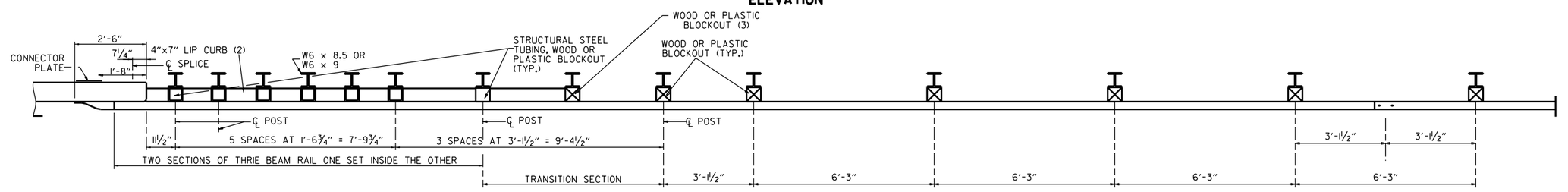

PLAN

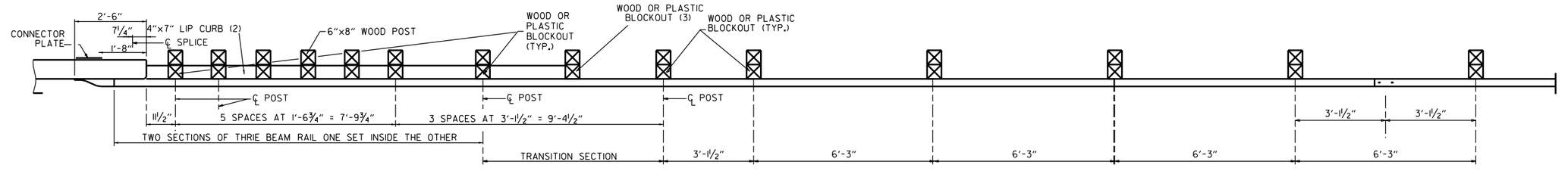

PLAN

(1) VERIFY BOLT SPACING FROM RAIL TRANSITION PRODUCER.
(2) REFER TO APPROACH GUTTER DETAILS.
(3) LENGTH OF BLOCKOUT ON POST 8 TO BE MODIFIED TO FIT RAIL WIDTH.

THRIE BEAM GUARDRAIL CONNECTION AT BRIDGE ENDS

GENERAL NOTES:

THE THRIE BEAM RAIL, SPECIAL END SHOE, AND THE TRANSITION SECTION SHALL BE MADE OF STEEL AND SHALL BE 12 GAGE. ZINC COATING SHALL BE TYPE I.

RAIL POSTS SHALL BE SET PERPENDICULAR TO THE ROADWAY PROFILE GRADE AND VERTICALLY IN CROSS SECTION.

ALL BOLTS SHALL BE SUFFICIENT LENGTH TO EXTEND THROUGH THE FULL THICKNESS OF THE NUT AND NO MORE THAN 3/4" BEYOND IT.

ALL LAP SPLICES, INCLUDING SPECIAL END SHOES, SHALL BE MADE IN THE DIRECTION SHOWN ON STANDARD DRAWINGS GR-8 & GR-13.

REFER TO STD. DRWG. GR-11 FOR POST DETAILS.

USE THRIE BEAM GUARDRAIL COMPONENTS OF SAME MATERIAL FOR ENTIRE JOB.

THRIE BEAM POSTS SHALL BE SAME MATERIAL AS W-BEAM POSTS FOR ENTIRE JOB.

POSTS SHALL NOT BE PLACED AT SPLICE LOCATIONS ALONG W-BEAM RAILS.

WOOD POSTS & WOOD BLOCKS SHALL BE EITHER DENSE NO. 1 STRUCTURAL OR BETTER 9.7f (1400 f) OR NO. 1 1350 f SOUTHERN PINE.

DATE	REVISION	FILMED
05-14-20	REVISED NOTES	
11-07-19	RENAMED & REVISED REFERENCES	
11-16-17	RE-DRAWN FROM STD. DWG. GR-10 & ISSUED	

ARKANSAS STATE HIGHWAY COMMISSION

GUARDRAIL DETAILS

STANDARD DRAWING GR-12

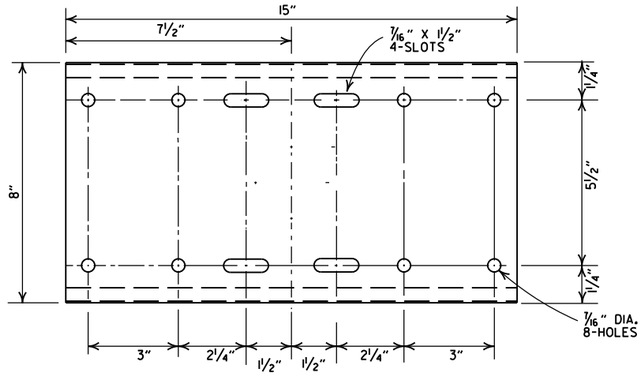

SHELF

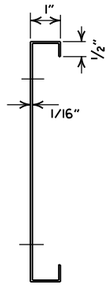

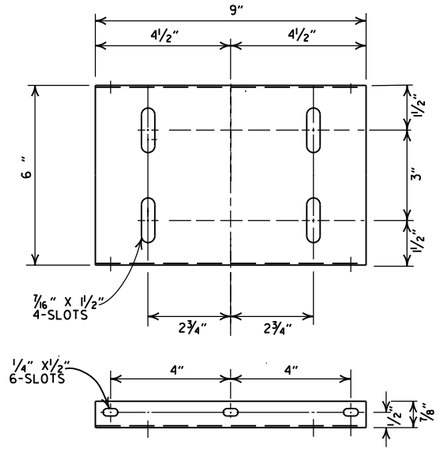

PLATFORM

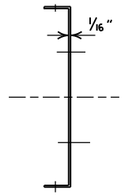

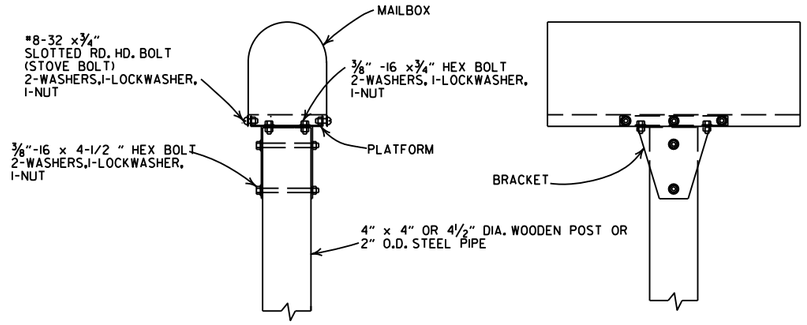

SINGLE INSTALLATION

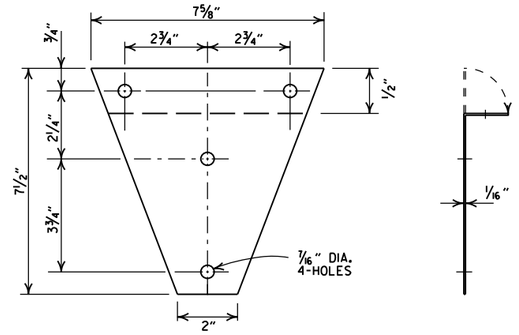

BRACKET

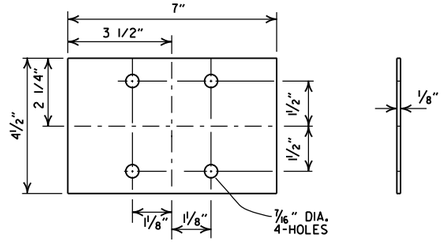

ANTI-TWIST PLATE

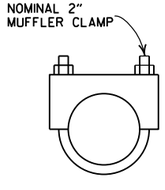

CLAMP

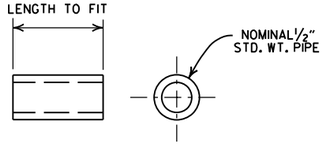

SPACER

GENERAL NOTES

1. MAILBOX POSTS MAY BE WOOD OR METAL. WOOD POSTS SHALL BE PRESSURE TREATED FOR GROUND CONTACT IN ACCORDANCE WITH SECTION 637.02 OF THE STANDARD SPECIFICATIONS.
2. ANTI-TWIST PLATES SHALL BE USED ONLY ON METAL POSTS.
3. MAILBOX SHELF, BRACKET & PLATFORM SHALL BE GALVANIZED OR PAINTED STEEL, HOWEVER TREATED WOOD MAY BE USED WITH WOODEN POSTS. THE WOODEN SHELF, BRACKET & PLATFORM SHALL BE A MINIMUM OF ¾" THICK AND SHALL BE ASSEMBLED WITH BOLTS OF THE APPROPRIATE LENGTH WITH SIX 8 X¾" FLATHEAD WOOD SCREWS USED TO ATTACH THE MAILBOX TO THE PLATFORM.
4. THE MAILBOX SHELF AND PLATFORM THAT IS SHOWN IS FOR STANDARD SIZE MAILBOXES. THE SHELF AND PLATFORM SIZE SHALL BE MODIFIED TO FIT MAILBOXES OF A DIFFERENT SIZE.
5. METAL PIPE FOR MAILBOX SUPPORT SHALL BE 2" OUTSIDE DIAMETER STEEL WITH A WALL THICKNESS OF 0.145" AND A WEIGHT OF 2.72 LBS PER FT. OUTSIDE DIAMETER AND WEIGHT SHALL HAVE A TOLERANCE OF +/- 5% ACCORDING TO AASHTO M 181.
6. MAILBOX SUPPORT SYSTEM DIFFERING FROM THOSE SHOWN MAY BE USED, PROVIDED THEY ARE ON THE ARDOT QUALIFIED PRODUCTS LIST FOR MAILBOX SUPPORTS.

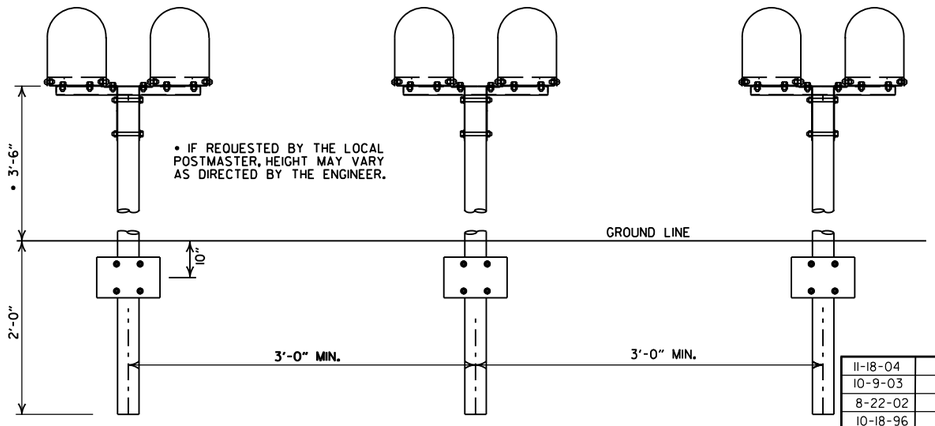

SPACING FOR MULTIPLE POST INSTALLATION

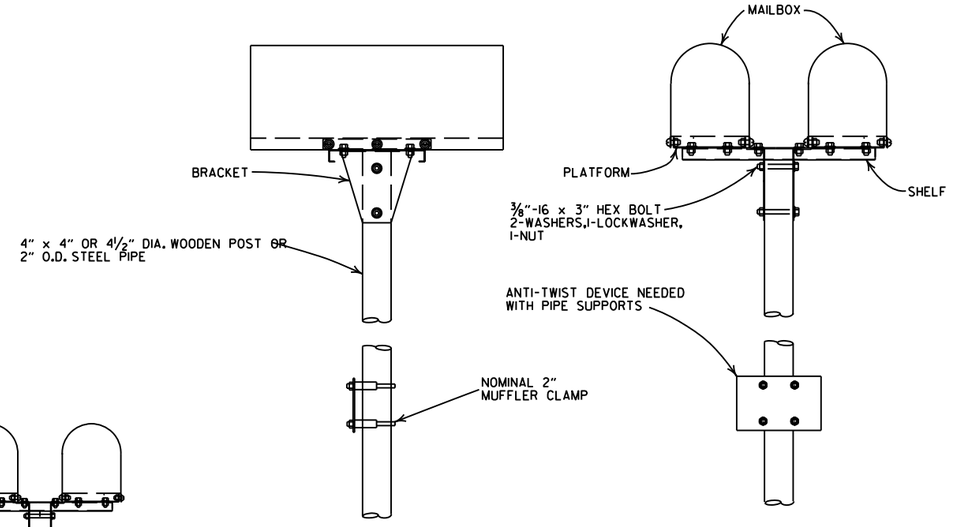

DOUBLE INSTALLATION

DATE	FILMED	REVISION
11-18-04		REVISED NOTES
10-9-03		REVISED NOTE 6
8-22-02		REVISED NOTE 6
10-18-96		CORRECTED AASHTO
10-1-92		CORRECTED SPELLING
9-26-91		NEW PHONE NUMBER
8-15-91		ADDED NOTE
11-30-89		ADJUSTED HEIGHT & ADDED NOTE
2-16-89		DELETED SLOTS FROM SHELF & PLTF
11-17-88	10-1-92	ADJUSTED DIMENSIONS OF STEEL POSTS
7-15-88	20-7-15-88	ISSUED

ARKANSAS STATE HIGHWAY COMMISSION

MAILBOX DETAILS

STANDARD DRAWING MB-1

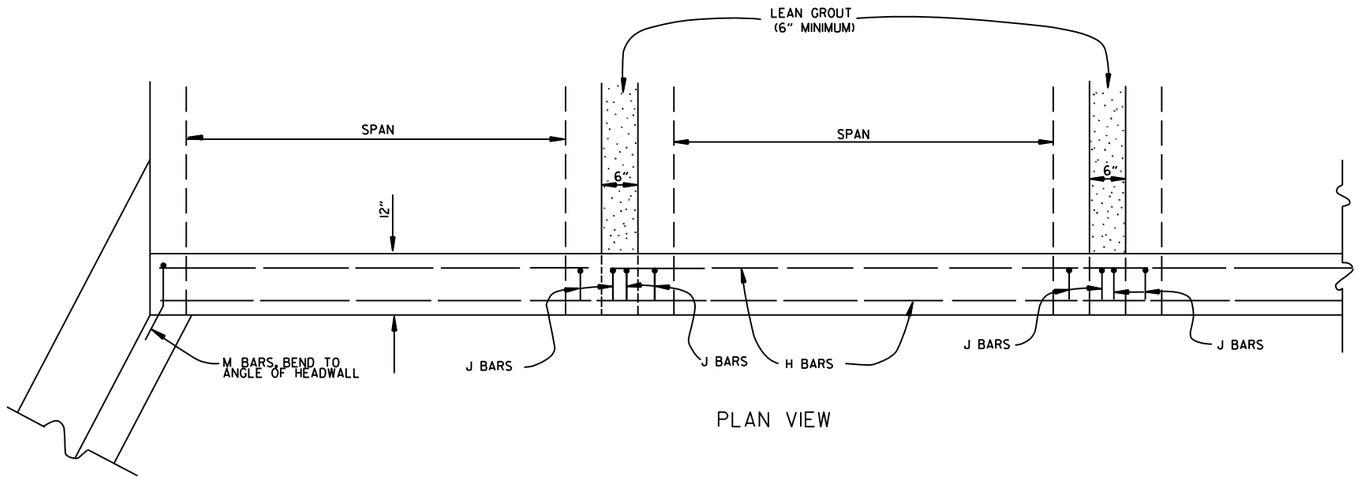

PLAN VIEW

BAR LIST

BAR	NO.	SIZE	LENGTH	BAR BENDING DIAGRAM
H	2	#4	•	
I	•	#4	•	
J	•	#4	1'-5"	
L	•	#4	3'-2"	
M	•	#4	1'-8"	

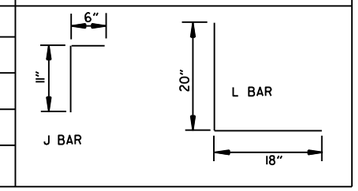

• NOTE: LENGTH AND NUMBER OF BARS VARIES WITH SIZE OF CULVERT

GENERAL NOTES

WINGS, CURTAIN WALLS AND APRONS SHALL BE TIED TO THE PRECAST CULVERT SECTION BY CASTING BARS IN CULVERT END SECTIONS AS SHOWN OR BY DOWELING AND GROUTING. J BARS AND M BARS SHALL BE EMBEDDED A MINIMUM OF 10" IN PRECAST BOX.

WINGS, FOOTINGS, APRONS AND CURTAIN WALLS SHALL BE CONSTRUCTED IN ACCORDANCE WITH THE APPLICABLE WING DRAWING. STEEL AND CONCRETE QUANTITIES WILL BE ADJUSTED TO FIT THE IN-PLACE WIDTH & HEIGHT OF THE PRECAST CONCRETE BOX CULVERTS.

ALL EXPOSED CORNERS TO HAVE ¾" CHAMFERS.

WINGWALLS AND FOOTINGS MAY BE ADJUSTED IN THE FIELD AS DIRECTED BY THE ENGINEER.

ALL CONCRETE, REINFORCING STEEL, LEAN GROUT, MEMBRANE WATERPROOFING, DRAINAGE FILL MATERIAL, GEOTEXTILE FILTER FABRIC, LABOR, MATERIALS AND EQUIPMENT REQUIRED FOR INSTALLING PRECAST BOX CULVERTS WILL NOT BE PAID FOR DIRECTLY BUT WILL BE CONSIDERED TO BE INCLUDED IN THE PRICE BID FOR THE ITEMS AS SPECIFIED IN SECTION 607 OF THE STANDARD SPECIFICATIONS.

LEAN GROUT SHALL CONSIST OF A SAND CEMENT MIXTURE MEETING THE FOLLOWING REQUIREMENTS:
PORTLAND CEMENT SHALL BE TYPE I AND SHALL MEET THE REQUIREMENTS OF AASHTO M 85.
SAND SHALL MEET THE REQUIREMENTS OF FINE AGGREGATE AS SPECIFIED IN SECTION 802.02 OF THE STANDARD SPECIFICATIONS.
THE SAND CEMENT MIXTURE SHALL CONSIST OF NOT LESS THAN 1.5 SACKS OF PORTLAND CEMENT PER TON OF MATERIAL MIXTURE.
THE MIXTURE SHALL CONTAIN SUFFICIENT WATER TO HYDRATE THE CEMENTS. THE SAND CEMENT MIXTURE SHALL BE PLACED IN MAXIMUM 8 INCH THICK LIFTS, LOOSE MEASURE, AND THOROUGHLY RODDED AND TAMPED AROUND BOX TO THOROUGHLY FILL ALL VOIDS.

MEMBRANE WATERPROOFING CONFORMING TO THE REQUIREMENTS OF SECTION 815 OF THE STANDARD SPECIFICATIONS SHALL BE APPLIED TO ALL BOX CULVERT JOINTS.

THE MEMBRANE WATERPROOFING WILL BE REQUIRED ON THE TOP EXTERNAL JOINT AND SHALL EXTEND 1 FOOT DOWN THE SIDES OF THE CULVERT.

IN OUTER BARRELS, ONE WEEP HOLE IS REQUIRED IN EXTERIOR WALLS OF EACH PRECAST CULVERT SECTION. WEEP HOLES SHALL HAVE A MAXIMUM HORIZONTAL SPACING OF 10'-0" IN THE ASSEMBLED CULVERT AND SHALL BE SPACED TO CLEAR ALL REINFORCING STEEL. THE DRAIN OPENING SHALL BE 4" DIAMETER AND SHALL BE PLACED 12" ABOVE THE TOP OF THE BOTTOM SLAB.

DRAINAGE FILL MATERIAL WITH GEOTEXTILE FABRIC IS REQUIRED AT THE EXTERIOR WALLS OF THE ASSEMBLED CULVERT, SEE DETAILS ON THIS DRAWING.

MINIMUM WIDTH SHALL BE 12" (6" ON EACH SIDE OF JOINT). ON MULTIPLE BARREL CULVERTS, MEMBRANE WATERPROOFING SHALL BE APPLIED TO EACH BARREL AS DESCRIBED ABOVE.

WITH THE APPROVAL OF THE ENGINEER, THE CONTRACTOR WILL BE ALLOWED TO SUBSTITUTE, AT NO ADDITIONAL COST TO THE DEPARTMENT, FLOWABLE SELECT MATERIAL CONFORMING TO SECTION 206 OF THE STANDARD SPECIFICATIONS IN LIEU OF LEAN GROUT.

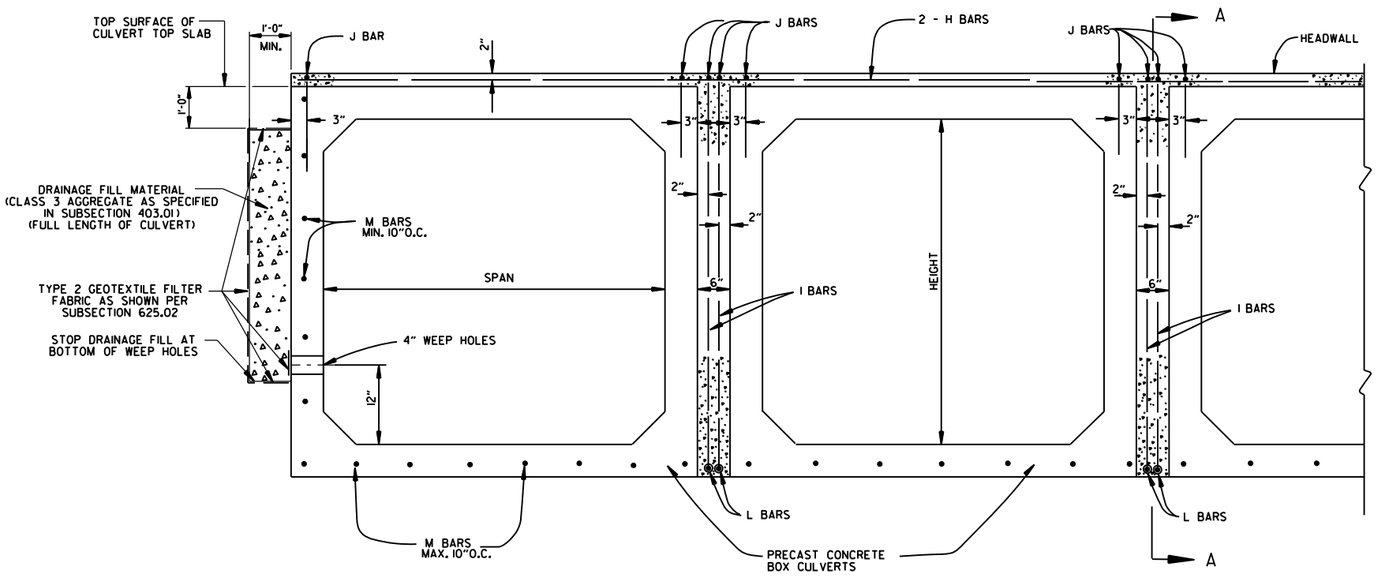

END VIEW

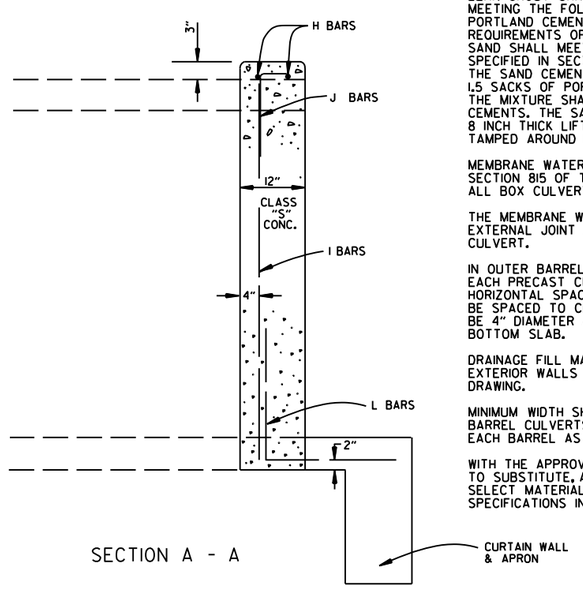

SECTION A - A

DATE	REVISION	DATE FILMED
1-28-15	REVISED GEOTEXTILE FABRIC PLACEMENT	
12-15-11	ADDED NOTE & DTLS FOR WEEP HOLE AND DRAINAGE FILL	
10-15-09	ADDED GENERAL NOTE	
11-10-05	REVISED SPACING OF "M" BARS	
4-10-03	REVISED GENERAL NOTES	
10-18-96	CORRECTED AASHTO REF.	
10-1-92	ADDED NOTE FOR MEMBRANE WATERPROOFING	
8-15-91	ADDED NOTE FOR LEAN GROUT	
11- 8-90	REVISED FOR 1991 SPECS	
11-30-89	ISSUED; JABE	

ARKANSAS STATE HIGHWAY COMMISSION

PRECAST CONCRETE BOX CULVERTS

STANDARD DRAWING PBC-1

REINFORCED CONCRETE ARCH PIPE DIMENSIONS

EQUIV. DIA.	SPAN		RISE	
	AASHTO M 206	ARDOT NOMINAL	AASHTO M 206	ARDOT NOMINAL
INCHES	INCHES			
15	18	18	11	11
18	22	22	13½	14
21	26	26	15½	16
24	28½	29	18	18
30	36¼	36	22½	23
36	43⅜	44	26⅝	27
42	51⅛	51	31⅝	31
48	58½	59	36	36
54	65	65	40	40
60	73	73	45	45
72	88	88	54	54
84	102	102	62	62
90	115	115	72	72
96	122	122	77½	77
108	138	138	87⅛	87
120	154	154	96⅞	97
132	168¾	169	106½	107

THE MEASURED SPAN AND RISE SHALL NOT VARY MORE THAN ± 2 PERCENT FROM THE VALUES SPECIFIED BY AASHTO M206.

REINFORCED CONCRETE HORIZONTAL ELLIPTICAL PIPE DIMENSIONS

EQUIV. DIA.	AASHTO M 207	
	SPAN	RISE
INCHES	INCHES	
18	23	14
24	30	19
27	34	22
30	38	24
33	42	27
36	45	29
39	49	32
42	53	34
48	60	38
54	68	43
60	76	48
66	83	53
72	91	58
78	98	63
84	106	68

THE MEASURED SPAN AND RISE SHALL NOT VARY MORE THAN ± 2 PERCENT FROM THE VALUES SPECIFIED BY AASHTO M207.

CONSTRUCTION SEQUENCE

1. PLACE STRUCTURAL BEDDING MATERIAL TO GRADE. DO NOT COMPACT.
2. INSTALL PIPE TO GRADE.
3. COMPACT STRUCTURAL BEDDING OUTSIDE THE MIDDLE THIRD OF THE PIPE.
4. PLACE AND COMPACT THE HAUNCH AREA UP TO THE MIDDLE OF THE PIPE.
5. COMPLETE BACKFILL ACCORDING TO SUBSECTION 606.03.(f)(1).

NOTE: HAUNCH AND STRUCTURAL BEDDING MATERIAL WILL NOT BE PAID FOR SEPARATELY, BUT COMPENSATION WILL BE CONSIDERED TO BE INCLUDED IN THE PRICE BID PER LINEAR FOOT OF CONCRETE PIPE.

- LEGEND -

D_1 = NORMAL INSIDE DIAMETER OF PIPE
D_o = OUTSIDE DIAMETER OF PIPE
H = FILL COVER HEIGHT OVER PIPE (FEET)
MIN. = MINIMUM
= UNDISTURBED SOIL

INSTALLATION TYPE	MATERIAL REQUIREMENTS FOR HAUNCH AND STRUCTURAL BEDDING
TYPE 1	AGGREGATE BASE COURSE (CLASS 5 OR CLASS 7)
TYPE 2	SELECTED MATERIALS (CLASS SM-1, SM-2, OR SM-4) OR TYPE 1 INSTALLATION MATERIAL*
TYPE 3**	AASHTO CLASSIFICATION A-1 THRU A-6 SOIL OR TYPE 1 OR 2 INSTALLATION MATERIAL

* SM-3 WILL NOT BE ALLOWED.

** MATERIALS SHALL NOT INCLUDE ORGANIC MATERIALS OR STONES LARGER THAN 3 INCHES.

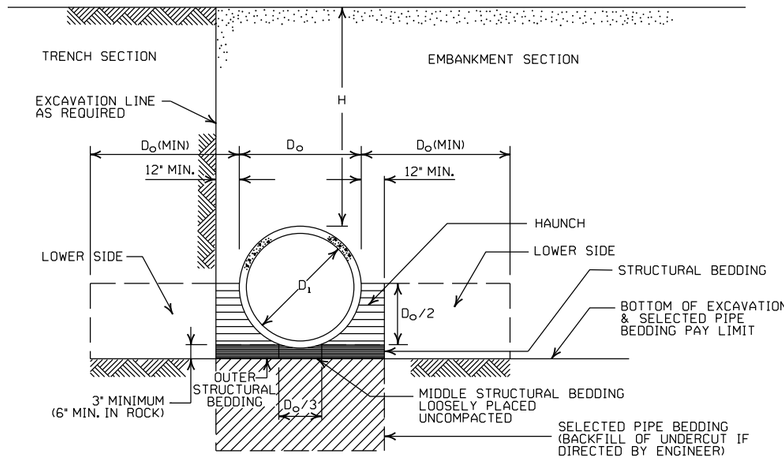

EMBANKMENT AND TRENCH INSTALLATIONS

1. MATERIAL IN THE HAUNCH AND OUTER STRUCTURAL BEDDING SHALL BE COMPACTED TO 95% OF THE MAXIMUM DENSITY ACCORDING TO THE TYPE OR CLASS OF MATERIAL USED.
2. FOR TRENCHES WITH WALLS OF NATURAL SOIL, THE DENSITY OF THE SOIL IN THE LOWER SIDE ZONE SHALL BE AS FIRM AS THE 95% DENSITY REQUIRED FOR THE HAUNCH. IF THE EXISTING SOIL DOES NOT MEET THIS CRITERIA, IT SHALL BE REMOVED AND RECOMPACTED TO 95% OF THE MAXIMUM DENSITY ACCORDING TO THE TYPE OF MATERIAL USED.
3. FOR EMBANKMENTS, THE MATERIAL IN THE LOWER SIDE ZONE SHALL BE COMPACTED TO 95% OF THE MAXIMUM DENSITY ACCORDING TO THE TYPE OR CLASS OF MATERIAL USED.

GENERAL NOTES

1. CONCRETE PIPE CULVERT CONSTRUCTION SHALL CONFORM TO ARKANSAS DEPARTMENT OF TRANSPORTATION STANDARD SPECIFICATIONS FOR HIGHWAY CONSTRUCTION (CURRENT EDITION), WITH APPLICABLE SUPPLEMENTAL SPECIFICATIONS AND SPECIAL PROVISIONS. UNLESS OTHERWISE NOTED IN THE PLANS, SECTION AND SUBSECTION REFER TO THE STANDARD CONSTRUCTION SPECIFICATIONS.
2. CONCRETE PIPE CULVERT DESIGN SHALL CONFORM TO AASHTO LRFD BRIDGE DESIGN SPECIFICATIONS, FIFTH EDITION (2010) WITH 2010 INTERIMS.
3. ALL PIPE SHALL CONFORM TO SECTION 606. CIRCULAR R.C. PIPE CULVERTS SHALL CONFORM TO AASHTO M170, R.C. ARCH PIPE CULVERTS SHALL CONFORM TO AASHTO M206 AND HORIZONTAL ELLIPTICAL PIPE CULVERTS SHALL CONFORM TO AASHTO M207.
4. ALL PIPE SHALL BE PROTECTED DURING CONSTRUCTION BY A COVER SUFFICIENT TO PREVENT DAMAGE FROM PASSAGE OF EQUIPMENT.
5. THE MINIMUM TRENCH WIDTH SHALL BE THE OUTSIDE DIAMETER OF THE PIPE PLUS 24 INCHES. THE MAXIMUM ALLOWABLE TRENCH WIDTH SHALL BE THE MINIMUM WIDTH PRACTICABLE FOR WORKING CONDITIONS.
6. MULTIPLE PIPE CULVERTS SHALL BE INSTALLED WITH A MINIMUM CLEARANCE OF 24 INCHES BETWEEN STRINGS OF PIPE. REFER TO STD. DWG. FES-2 FOR MINIMUM CLEARANCE WHERE FLARED END SECTIONS ARE USED.
7. IMPERVIOUS MATERIAL SHOULD BE PLACED AS DIRECTED BY THE ENGINEER AT THE ENDS OF THE CULVERT TO PREVENT LOSS OF STRUCTURAL BEDDING WHEN PERVIOUS MATERIAL IS USED FOR STRUCTURAL BEDDING AND/OR BACKFILL.
8. NOT MORE THAN ONE LIFTING HOLE MAY BE PROVIDED IN CONCRETE PIPE TO FACILITATE HANDLING. HOLE MAY BE CAST IN PLACE, CUT INTO THE FRESH CONCRETE AFTER FORMS ARE REMOVED, OR DRILLED. THE HOLE SHALL NOT BE MORE THAN TWO INCHES IN DIAMETER OR TWO INCHES SQUARE. CUTTING OR DISPLACEMENT OF REINFORCEMENT WILL NOT BE PERMITTED. SPALLED AREAS AROUND THE HOLE SHALL BE REPAIRED IN A WORKMANLIKE MANNER. LIFTING HOLE SHALL BE FILLED WITH MORTAR, CONCRETE, OR OTHER METHOD AS APPROVED BY THE ENGINEER.
9. WHEN DIRECTED BY THE ENGINEER, UNSUITABLE MATERIAL THAT IS ENCOUNTERED AT THE BOTTOM OF THE EXCAVATED TRENCH (BELOW THE AREA IDENTIFIED AS "STRUCTURAL BEDDING" ABOVE) WILL BE EXCAVATED AND REPLACED WITH SELECTED PIPE BEDDING. THE QUANTITY OF MATERIAL REQUIRED TO BACKFILL THE UNDERCUT AREA UP TO THE SELECTED PIPE BEDDING PAY LIMIT DESIGNATED ABOVE WILL BE MEASURED AND PAID FOR AS "SELECTED PIPE BEDDING."
10. WHEN THE EXISTING MATERIAL EXCAVATED FOR THE PIPE TRENCH IS DETERMINED BY THE ENGINEER TO BE UNSUITABLE FOR BACKFILLING THE PIPE (ABOVE THE AREA IDENTIFIED ABOVE AS THE HAUNCH), BORROW MATERIAL OR MATERIAL FROM THE ROADWAY EXCAVATION WILL BE USED TO BACKFILL THE PIPE. IF SUITABLE MATERIAL IS NOT AVAILABLE, THE ENGINEER MAY AUTHORIZE THE USE OF "SELECTED PIPE BACKFILL."

MINIMUM HEIGHT OF FILL "H" OVER CIRCULAR R.C. PIPE CULVERTS

	CLASS OF PIPE			
	CLASS III		CLASS IV	CLASS V
INSTALLATION TYPE	TYPE 1 OR 2	TYPE 3	ALL	ALL
PIPE ID (IN.)	FEET			
12-15	2	2.5	2	1
18-24	2.5	3	2	1
27-33	3	4	2	1
36-42	3.5	5	2	1
48	4.5	5.5	2	1
54-60	5	7	2	1
66-78	6	8	2	1
84-108	7.5	8	2	1

NOTE: FOR MINIMUM COVER VALUES, "H" SHALL INCLUDE A MINIMUM OF 12" OF PAVEMENT AND/OR BASE.

MAXIMUM HEIGHT OF FILL "H" OVER CIRCULAR R.C. PIPE CULVERTS

INSTALLATION TYPE	CLASS OF PIPE		
	CLASS III	CLASS IV	CLASS V
	FEET		
TYPE 1	21	32	50
TYPE 2	16	25	39
TYPE 3	12	20	30

NOTE: IF FILL HEIGHT EXCEEDS 50 FEET, A SPECIAL DESIGN CONCRETE PIPE WILL BE REQUIRED USING TYPE 1 INSTALLATION.

MINIMUM HEIGHT OF FILL "H" OVER R.C. ARCH & HORIZONTAL ELLIPTICAL PIPE CULVERTS

INSTALLATION TYPE	CLASS OF PIPE	
	CLASS III	CLASS IV
	FEET	
TYPE 2 OR TYPE 3	2.5	1.5

NOTE: TYPE 1 INSTALLATION WILL NOT BE ALLOWED FOR ARCH & HORIZONTAL ELLIPTICAL PIPE CULVERTS.

NOTE: FOR MINIMUM COVER VALUES, "H" SHALL INCLUDE A MINIMUM OF 12" OF PAVEMENT AND/OR BASE.

MAXIMUM HEIGHT OF FILL "H" OVER R.C. ARCH & HORIZONTAL ELLIPTICAL PIPE CULVERTS

INSTALLATION TYPE	CLASS OF PIPE	
	CLASS III	CLASS IV
	FEET	
TYPE 2	13	21
TYPE 3	10	16

NOTE: TYPE 1 INSTALLATION WILL NOT BE ALLOWED FOR ARCH & HORIZONTAL ELLIPTICAL PIPE CULVERTS.

DATE	REVISION	DATE FILMED
2-27-14	REVISED GENERAL NOTE 1.	
12-15-11	REVISED FOR LRFD DESIGN SPECIFICATIONS	
5-18-00	REVISED TYPE 3 BEDDING & ADDED NOTE	
3-30-00	REVISED INSTALLATIONS	
11-06-97	ISSUED	

ARKANSAS STATE HIGHWAY COMMISSION

CONCRETE PIPE CULVERT FILL HEIGHTS & BEDDING

STANDARD DRAWING PCC-1

CORRUGATED STEEL PIPE (ROUND)

PIPE DIAMETER (INCHES)	① MINUMUM COVER TOP OF PIPE TO TOP OF GROUND "H" (FEET)	MAX. FILL HEIGHT "H" ABOVE TOP OF PIPE (FEET)				
		METAL THICKNESS (INCHES)				
		0.064	0.079	0.109	0.138	0.168
2⅔ INCH BY ½ INCH CORRUGATION RIVETED, WELDED, OR HELICAL LOCK-SEAM						
12	1	84	91			
15	1	67	73			
18	1	56	61			
24	1	42	46	59		
30	2	34	36	47		
36	2		30	39	41	
42	2		43	67	70	73
48	2		37	58	61	64
② 3 INCH BY 1 INCH OR 5 INCH BY 1 INCH CORRUGATION RIVETED, WELDED, BOLTED, OR HELICAL LOCK-SEAM						
36	1	48	60	88	111	118
42	1	41	51	72	90	102
48	1	36	45	64	77	85
54	2	32	40	59	71	79
60	2	29	36	53	64	71
66	2	26	33	47	58	64
72	2	24	30	44	53	59
78	2		28	41	49	54
84	2		26	38	45	51
90	2		24	35	43	45
96	2		22	33	40	44
102	2			31	38	42
108	2			30	35	39
114	2			28	34	37
120	2			27	32	35

CORRUGATED ALUMINUM PIPE (ROUND)

PIPE DIAMETER (INCHES)	① MINUMUM COVER TOP OF PIPE TO TOP OF GROUND "H" (FEET)	MAX. FILL HEIGHT "H" ABOVE TOP OF PIPE (FEET)				
		METAL THICKNESS IN INCHES				
		0.060	0.075	0.105	0.135	0.164
		2 ⅔ INCH BY ½ INCH CORRUGATION RIVETED OR HELICAL LOCK-SEAM				
12	1	45	45			
18	2	30	30	52		
24	2	22	22	39	41	
30	2		18	31	32	34
36	2.5		15	26	27	28
42	2			43	43	44
48	2			40	41	43
54	2			35	37	38
60	2				33	34
66	2					31
72	2					29

CONSTRUCTION SEQUENCE

1. PLACE STRUCTURAL BEDDING MATERIAL TO GRADE. DO NOT COMPACT.
2. INSTALL PIPE TO GRADE.
3. COMPACT STRUCTURAL BEDDING OUTSIDE THE MIDDLE THIRD OF THE PIPE.
4. COMPLETE STRUCTURAL BACKFILL OPERATION BY WORKING FROM SIDE TO SIDE OF THE PIPE. THE SIDE TO SIDE STRUCTURAL BACKFILL DIFFERENTIAL SHALL NOT EXCEED 24 INCHES OR 1/3 THE SIZE OF THE PIPE, WHICHEVER IS LESS.

NOTE: STRUCTURAL BACKFILL AND STRUCTURAL BEDDING MATERIAL WILL NOT BE PAID FOR SEPARATELY, BUT COMPENSATION WILL BE CONSIDERED TO BE INCLUDED IN THE PRICE BID PER LINEAR FOOT OF METAL PIPE.

INSTALLATION TYPE	MATERIAL REQUIREMENTS FOR STRUCTURAL BACKFILL AND STRUCTURAL BEDDING
TYPE 1	AGGREGATE BASE COURSE (CLASS 4, 5, 6, OR 7)
TYPE 2	SELECTED MATERIALS (CLASS SM-1, SM-2, OR SM-4) OR TYPE 1 INSTALLATION MATERIAL ③

③ SM-3 WILL NOT BE ALLOWED.

EQUIVALENT METAL THICKNESSES AND GAUGES

METAL THICKNESS IN INCHES			GAUGE NUMBER
STEEL			
ZINC COATED	UNCOATED	ALUMINUM	
0.064	0.0598	0.060	16
0.079	0.0747	0.075	14
0.109	0.1046	0.105	12
0.138	0.1345	0.135	10
0.168	0.1644	0.164	8

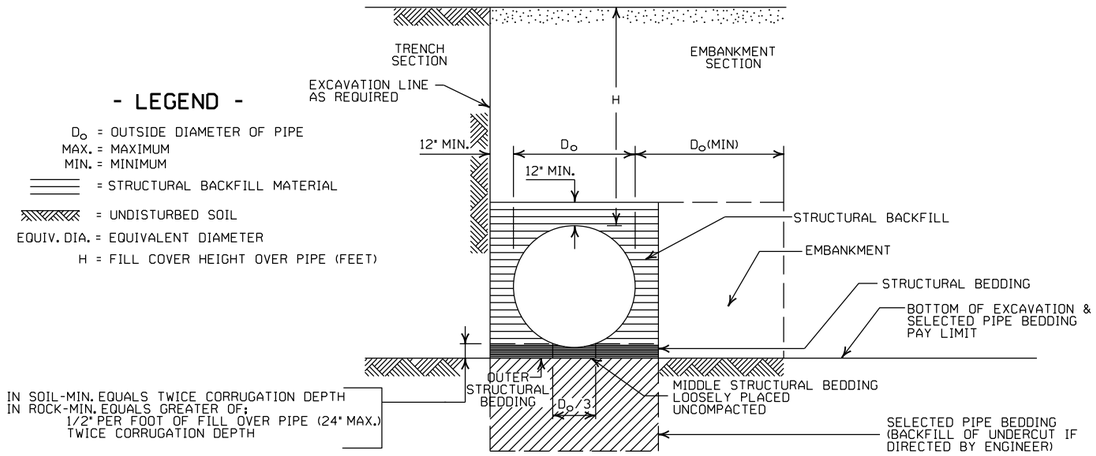

EMBANKMENT AND TRENCH INSTALLATIONS

1. STRUCTURAL BACKFILL, EMBANKMENT, AND OUTER STRUCTURAL BEDDING MATERIAL SHALL BE COMPACTED TO 95% OF THE MAXIMUM DENSITY ACCORDING TO THE TYPE OR CLASS OF MATERIAL USED.
2. INSTALLATION TYPE 1 OR 2 MAY BE USED FOR CORRUGATED STEEL OR ALUMINUM PIPE (ROUND).
3. INSTALALTION TYPE 1 SHALL BE USED FOR CORRUGATED STEEL OR ALUMINUM PIPE ARCHES WITH 2⅔" X ½" CORRUGATION.
4. INSTALLATION TYPE 1 OR 2 MAY BE USED FOR CORRUGATED STEEL OR ALUMINUM PIPE ARCHES WITH 3" X 1" OR 5" X 1" CORRUGATION.

GENERAL NOTES

1. METAL PIPE CULVERT CONSTRUCTION SHALL CONFORM TO ARKANSAS DEPARTMENT OF TRANSPORTATION STANDARD SPECIFICATIONS FOR HIGHWAY CONSTRUCTION (CURRENT EDITION), WITH APPLICABLE SUPPLEMENTAL SPECIFICATIONS AND SPECIAL PROVISIONS. UNLESS OTHERWISE NOTED IN THE PLANS, SECTION AND SUBSECTION REFER TO THE STANDARD CONSTRUCTION SPECIFICATIONS.
2. METAL PIPE CULVERT DESIGN SHALL CONFORM TO AASHTO LRFD BRIDGE DESIGN SPECIFICATIONS, FIFTH EDITION (2010) WITH 2010 INTERIMS.
3. METAL PIPE CULVERT MATERIALS AND INSTALLATIONS SHALL CONFORM TO SECTION 606 AND JOB SPECIAL PROVISION "METAL PIPE".
4. ALL PIPE SHALL BE PROTECTED DURING CONSTRUCTION BY A COVER SUFFICIENT TO PREVENT DAMAGE FROM PASSAGE OF EQUIPMENT.
5. THE MINIMUM TRENCH WIDTH SHALL BE THE OUTSIDE DIAMETER OF THE PIPE PLUS 24 INCHES. THE MAXIMUM ALLOWABLE TRENCH WIDTH SHALL BE THE MINIMUM WIDTH PRACTICABLE FOR WORKING CONDITIONS.
6. MULTIPLE PIPE CULVERTS SHALL BE INSTALLED WITH A MINIMUM CLEARANCE OF 24 INCHES BETWEEN STRINGS OF PIPE. REFER TO STD. DWG. FES-2 FOR MINIMUM CLEARANCE WHERE FLARED END SECTIONS ARE USED.
7. IMPERVIOUS MATERIAL SHOULD BE PLACED AS DIRECTED BY THE ENGINEER AT THE ENDS OF THE CULVERT TO PREVENT LOSS OF STRUCTURAL BEDDING WHEN PERVIOUS MATERIAL IS USED FOR STRUCTURAL BEDDING AND/OR BACKFILL.
8. WHEN DIRECTED BY THE ENGINEER, UNSUITABLE MATERIAL THAT IS ENCOUNTERED AT THE BOTTOM OF THE EXCAVATED TRENCH (BELOW THE AREA IDENTIFIED AS "STRUCTURAL BEDDING" ABOVE) WILL BE EXCAVATED AND REPLACED WITH SELECTED PIPE BEDDING. THE QUANTITY OF MATERIAL REQUIRED TO BACKFILL THE UNDERCUT AREA UP TO THE SELECTED PIPE BEDDING PAY LIMIT DESIGNATED ABOVE WILL BE MEASURED AND PAID FOR AS "SELECTED PIPE BEDDING."
9. WHEN THE EXISTING MATERIAL EXCAVATED FOR THE PIPE TRENCH IS DETERMINED BY THE ENGINEER TO BE UNSUITABLE FOR BACKFILLING THE PIPE (ABOVE THE AREA IDENTIFIED AS STRUCTURAL BACKFILL), BORROW MATERIAL OR MATERIAL FROM THE ROADWAY EXCAVATION WILL BE USED TO BACKFILL THE PIPE. IF SUITABLE MATERIAL IS NOT AVAILABLE, THE ENGINEER MAY AUTHORIZE THE USE OF "SELECTED PIPE BACKFILL."

CORRUGATED METAL PIPE ARCHES

EQUIV. DIA. (INCHES)	PIPE DIMENSION SPAN X RISE (INCHES)	MINUMUM CORNER RADIUS (INCHES)	STEEL				ALUMINUM			
			MIN. THICKNESS REQUIRED INCHES	① MIN. HEIGHT OF FILL, "H" (FT.)	MAX. HEIGHT OF FILL, "H" (FT.)		MIN. THICKNESS REQUIRED INCHES	① MIN. HEIGHT OF FILL, "H" (FT.)	MAX. HEIGHT OF FILL, "H" (FT.)	
				INSTALLATION	INSTALLATION			INSTALLATION	INSTALLATION	
				TYPE 1	TYPE 1			TYPE 1	TYPE 1	
			2 ⅔ INCH BY ½ INCH CORRUGATION RIVETED, WELDED, OR HELICAL LOCK-SEAM				2 ⅔ INCH BY ½ INCH CORRUGATION RIVETED OR HELICAL LOCK-SEAM			
15	17x13	3	0.064	2	15		0.060	2	15	
18	21x15	3	0.064	2	15		0.060	2	15	
21	24x18	3	0.064	2.25	15		0.060	2.25	15	
24	28x20	3	0.064	2.5	15		0.075	2.5	15	
30	35x24	3	0.079	3	12		0.075	3	12	
36	42x29	3½	0.079	3	12		0.105	3	12	
42	49x33	4	0.079	3	12		0.105	3	12	
48	57x38	5	0.109	3	13		0.135	3	13	
54	64x43	6	0.109	3	14		0.135	3	14	
60	71x47	7	0.138	3	15		0.164	3	15	
66	77x52	8	0.168	3	15					
72	83x57	9	0.168	3	15					
			② 3 INCH BY 1 INCH OR 5 INCH BY 1 INCH CORRUGATION RIVETED, WELDED, OR HELICAL LOCK-SEAM							
				INSTALLATION		INSTALLATION				
				TYPE 2	TYPE 1	TYPE 2	TYPE 1			
36	40x31	5	0.079	3	2	12	15			
42	46x36	6	0.079	3	2	13	15			
48	53x41	7	0.079	3	2	13	15			
54	60x46	8	0.079	3	2	13	15			
60	66x51	9	0.079	3	2	13	15			
66	73x55	12	0.079	3	2	15	15			
72	81x59	14	0.079	3	2	15	15			
78	87x63	14	0.079	3	2	15	15			
84	95x67	16	0.109	3	2	15	15			
90	103x71	16	0.109	3	2	15	15			
96	112x75	18	0.109	3	2	15	15			
102	117x79	18	0.109	3	2	15	15			
108	128x83	18	0.138	3	2	15	15			

① FOR MINIMUM COVER VALUES, "H" SHALL INCLUDE A MINIMUM 12" OF PAVEMENT AND/OR BASE.

② WHERE THE STANDARD 2 2/3"x ½" CORRUGATION AND GAUGE IS SPECIFIED FOR A GIVEN DIAMETER, A PIPE OF THE SAME DIAMETER WITH A 3" x 1" OR 5" x 1" CORRUGATION MAY BE SUBSTITUTED, PROVIDING IT IS GAUGED FOR A FILL HEIGHT CONDITION EQUAL TO OR GREATER THAN THE MAXIMUM FILL HEIGHT CONDITION FOR THE SPECIFIED GAUGE AND CORRUGATION.

DATE	REVISION	DATE FILMED
2-27-14	REVISED GENERAL NOTE 1.	
12-15-11	REVISED FOR LRFD DESIGN SPECS	
3-30-00	REVISED INSTALLATIONS	
11-06-97	ISSUED	

ARKANSAS STATE HIGHWAY COMMISSION

METAL PIPE CULVERT FILL HEIGHTS & BEDDING

STANDARD DRAWING PCM-1

INSTALLATION TYPE	•• MATERIAL REQUIREMENTS FOR STRUCTURAL BACKFILL AND STRUCTURAL BEDDING
TYPE 2	•SELECTED MATERIALS (CLASS SM-1, SM-2 OR SM-4)

• AGGREGATE BASE COURSE (CLASS 4, 5, 6, OR 7) MAY BE USED IN LIEU OF SELECTED MATERIAL.

SM3 WILL NOT BE ALLOWED.

•• STRUCTURAL BEDDING MATERIAL SHALL HAVE A MAXIMUM PARTICLE SIZE OF 1 INCH. STRUCTURAL BACKFILL MATERIAL SHALL BE FREE OF ORGANIC MATERIAL, STONES LARGER THAN 1.50 INCH IN GREATEST DIMENSION, OR FROZEN LUMPS.

STRUCTURAL BACKFILL AND STRUCTURAL BEDDING MATERIAL WILL NOT BE PAID FOR SEPARATELY, BUT COMPENSATION WILL BE CONSIDERED TO BE INCLUDED IN THE PRICE BID PER LINEAR FOOT OF HDPE PIPE.

MULTIPLE INSTALLATION OF HIGH DENSITY POLYETHYLENE PIPES

PIPE DIAMETER	CLEAR DISTANCE BETWEEN PIPES
18"	1'-6"
24"	2'-0"
30"	2'-6"
36"	3'-0"
42"	3'-6"
48"	4'-0"

MINIMUM TRENCH WIDTH BASED ON FILL HEIGHT "H"

PIPE DIAMETER	TRENCH WIDTH (FEET)	
	"H" < 10'-0"	"H" >OR= 10'-0"
18"	4'-6"	4'-6"
24"	5'-0"	6'-0"
30"	5'-6"	7'-6"
36"	6'-0"	9'-0"
42"	7'-0"	10'-6"
48"	8'-0"	12'-0"

①NOTE:
18" MIN. (18" - 30" DIAMETERS)
24" MIN. (36" - 48" DIAMETERS)

MINIMUM COVER VALUES, "H" SHALL INCLUDE A MINIMUM 12" OF PAVEMENT AND/OR BASE.

MINIMUM COVER FOR CONSTRUCTION LOADS

PIPE DIAMETER	② MIN. COVER (FEET) FOR INDICATED CONSTRUCTION LOADS			
	18.0-50.0 (KIPS)	50.0-75.0 (KIPS)	75.0-110.0 (KIPS)	110.0-175.0 (KIPS)
36" OR LESS	2'-0"	2'-6"	3'-0"	3'-0"
42" OR GREATER	3'-0"	3'-0"	3'-6"	4'-0"

②MINIMUM COVER SHALL BE MEASURED FROM TOP OF PIPE TO TOP OF THE MAINTAINED CONSTRUCTION ROADWAY SURFACE. THE SURFACE SHALL BE MAINTAINED.

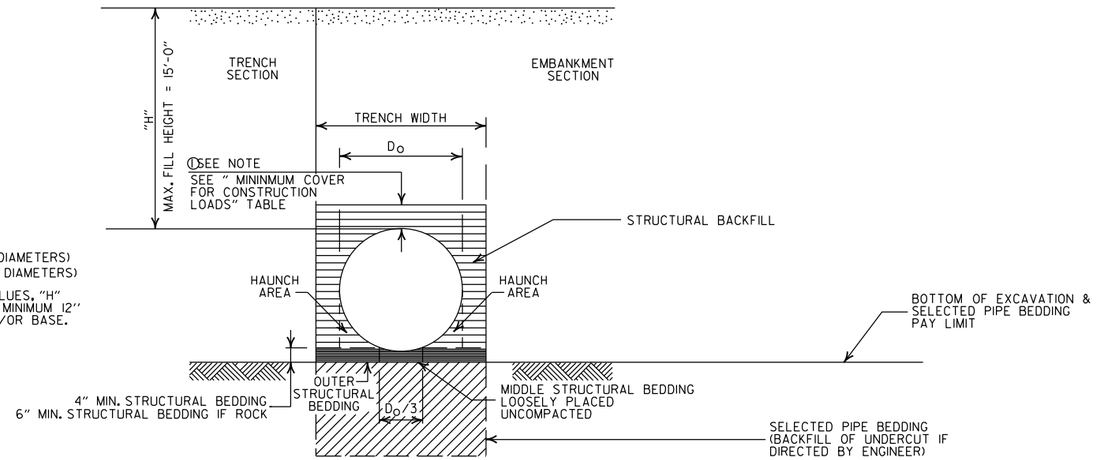

TYPE 2 EMBANKMENT AND TRENCH INSTALLATIONS

1. STRUCTURAL BACKFILL, EMBANKMENT, AND OUTER STRUCTURAL BEDDING MATERIAL SHALL BE COMPACTED TO 95% OF THE MAXIMUM DENSITY ACCORDING TO THE TYPE OR CLASS OF MATERIAL USED.

CONSTRUCTION SEQUENCE

1. PLACE STRUCTURAL BEDDING MATERIAL TO GRADE. DO NOT COMPACT.
2. INSTALL PIPE TO GRADE.
3. COMPACT STRUCTURAL BEDDING OUTSIDE THE MIDDLE THIRD OF THE PIPE.
4. THE STRUCTURAL BACKFILL SHALL BE PLACED AND COMPACTED IN LAYERS NOT EXCEEDING 8". THE LAYERS SHALL BE BROUGHT UP EVENLY AND SIMULTANEOUSLY TO THE ELEVATION OF THE MINIMUM COVER.
5. PIPE INSTALLATION MAY REQUIRE THE USE OF RESTRAINTS, WEIGHTING OR OTHER APPROVED METHODS IN ORDER TO HELP MAINTAIN GRADE AND ALIGNMENT.

GENERAL NOTES

1. PIPE SHALL CONFORM TO AASHTO M294, TYPE S. INSTALLATION SHALL CONFORM TO JOB SPECIAL PROVISION "PLASTIC PIPE" AND SECTION 606 OF THE STANDARD SPECIFICIATIONS FOR HIGHWAY CONSTRUCTION (CURRENT EDITION).
2. PLASTIC PIPE CULVERT DESIGN SHALL CONFORM TO AASHTO LRFD BRIDGE DESIGN SPECIFICATIONS, FIFTH EDITION (2010) WITH 2010 INTERIMS.
3. THE MAXIMUM ALLOWABLE TRENCH WIDTH SHALL BE THE MINIMUM WIDTH PLUS A SUFFICIENT WIDTH TO ENSURE WORKING ROOM TO PROPERLY AND SAFELY PLACE AND COMPACT HAUNCHING AND OTHER BACKFILL MATERIAL.
4. IMPERVIOUS MATERIAL SHOULD BE PLACED AS DIRECTED BY THE ENGINEER AT THE ENDS OF THE CULVERT TO PREVENT LOSS OF STRUCTURAL BEDDING WHEN PERVIOUS MATERIAL IS USED FOR STRUCTURAL BEDDING AND/OR BACKFILL.
5. WHEN DIRECTED BY THE ENGINEER, UNSUITABLE MATERIAL THAT IS ENCOUNTERED AT THE BOTTOM OF THE EXCAVATED TRENCH (BELOW THE AREA IDENTIFIED AS "STRUCTURAL BEDDING" ABOVE) WILL BE EXCAVATED AND REPLACED WITH SELECTED PIPE BEDDING. THE QUANTITY OF MATERIAL REQUIRED TO BACKFILL THE UNDERCUT AREA UP TO THE SELECTED PIPE BEDDING PAY LIMIT DESIGNATED ABOVE WILL BE MEASURED AND PAID FOR AS "SELECTED PIPE BEDDING."
6. WHEN THE EXISTING MATERIAL EXCAVATED FOR THE PIPE TRENCH IS DETERMINED BY THE ENGINEER TO BE UNSUITABLE FOR BACKFILLING THE PIPE (ABOVE THE AREA IDENTIFIED ABOVE AS STRUCTURAL BACKFILL), BORROW MATERIAL OR MATERIAL FROM THE ROADWAY EXCAVATION WILL BE USED TO BACKFILL THE PIPE. IF SUITABLE MATERIAL IS NOT AVAILABLE, THE ENGINEER MAY AUTHORIZE THE USE OF "SELECTED PIPE BACKFILL."
7. FOR PIPE TYPES THAT ARE NOT SMOOTH ON THE OUTSIDE (CORRUGATED OR PROFILE WALLS), BACKFILL GRADATIONS SHOULD BE SELECTED THAT WILL PERMIT THE FILLING OF THE CORRUGATION OR PROFILE VALLEY.
8. HIGH DENSITY POLYETHYLENE PIPES OF DIAMETERS OTHER THAN SHOWN WILL NOT BE ALLOWED.
9. JOINTS FOR HDPE PIPE SHALL MEET THE REQUIREMENTS FOR SOIL TIGHTNESS AS SPECIFIED IN AASHTO SECTION 26.4.2.4 AND 30.4.2 "AASHTO LRFD BRIDGE CONSTRUCTION SPECIFICATIONS." JOINTS SHALL BE INSTALLED PER MANUFACTURER'S RECOMMENDATIONS.

- LEGEND -

H = FILL HEIGHT (FT.)
D_O = OUTSIDE DIAMETER OF PIPE
MAX. = MAXIMUM
MIN. = MINIMUM

= STRUCTURAL BACKFILL MATERIAL

= UNDISTURBED SOIL

DATE	REVISION	DATE FILMED
2-27-14	REVISED GENERAL NOTE 1.	
12-15-11	REVISED GENERAL NOTES & MINIMUM COVER NOTE	
11-17-10	ISSUED	

ARKANSAS STATE HIGHWAY COMMISSION

PLASTIC PIPE CULVERT (HIGH DENSITY POLYETHYLENE)

STANDARD DRAWING PCP-1

INSTALLATION TYPE	•• MATERIAL REQUIREMENTS FOR STRUCTURAL BACKFILL AND STRUCTURAL BEDDING
TYPE 2	•SELECTED MATERIALS (CLASS SM-1, SM-2, OR SM-4)

• AGGREGATE BASE COURSE (CLASS 4, 5, 6, OR 7) MAY BE USED IN LIEU OF SELECTED MATERIAL.

SM3 WILL NOT BE ALLOWED.

•• STRUCTURAL BEDDING MATERIAL SHALL HAVE A MAXIMUM PARTICLE SIZE OF 1 INCH. STRUCTURAL BACKFILL MATERIAL SHALL BE FREE OF ORGANIC MATERIAL, STONES LARGER THAN 1.50 INCH IN GREATEST DIMENSION, OR FROZEN LUMPS.

STRUCTURAL BACKFILL AND STRUCTURAL BEDDING MATERIAL WILL NOT BE PAID FOR SEPARATELY, BUT COMPENSATION WILL BE CONSIDERED TO BE INCLUDED IN THE PRICE BID PER LINEAR FOOT OF PVC PIPE.

MINIMUM TRENCH WIDTH BASED ON FILL HEIGHT "H"

PIPE DIAMETER	TRENCH WIDTH (FEET)	
	"H" < 10'-0"	"H" >OR= 10'-0"
18"	4'-6"	4'-6"
24"	5'-0"	6'-0"
30"	5'-6"	7'-6"
36"	6'-0"	9'-0"

MULTIPLE INSTALLATION OF PVC PIPES

PIPE DIAMETER	CLEAR DISTANCE BETWEEN PIPES
18"	1'-6"
24"	2'-0"
30"	2'-6"
36"	3'-0"

MAXIMUM FILL HEIGHT BASED ON STRUCTURAL BACKFILL

PIPE DIAMETER	"H"
18"	45'-0"
24"	45'-0"
30"	40'-0"
36"	40'-0"

① NOTE:
12" MIN. (18" - 36" DIAMETERS)
MINIMUM COVER VALUE, "H" SHALL INCLUDE A MINIMUM 12" OF PAVEMENT AND/OR BASE.

MINIMUM COVER FOR CONSTRUCTION LOADS

PIPE DIAMETER	② MIN. COVER (FEET) FOR INDICATED CONSTRUCTION LOADS			
	18.0-50.0 (KIPS)	50.0-75.0 (KIPS)	75.0-110.0 (KIPS)	110.0-175.0 (KIPS)
18" THRU 36"	2'-0"	2'-6"	3'-0"	3'-0"

②MINIMUM COVER SHALL BE MEASURED FROM TOP OF PIPE TO TOP OF THE MAINTAINED CONSTRUCTION ROADWAY SURFACE. THE SURFACE SHALL BE MAINTAINED.

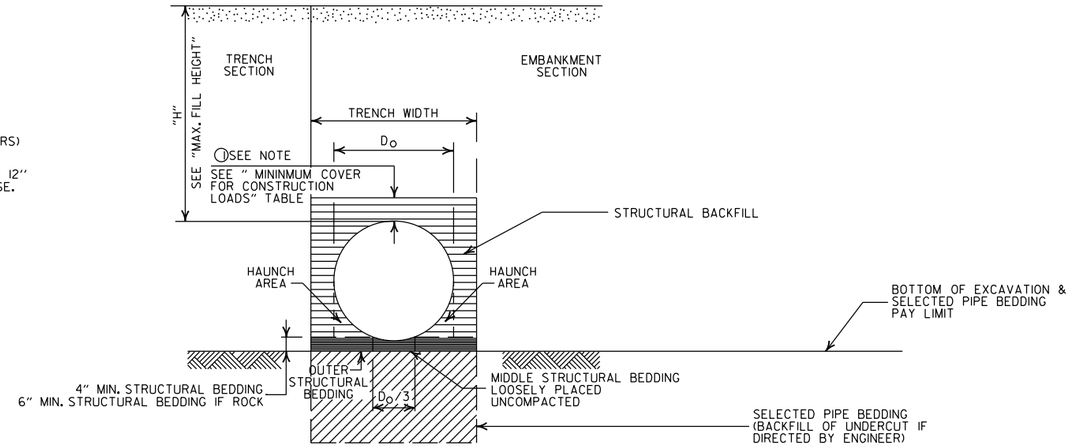

TYPE 2 EMBANKMENT AND TRENCH INSTALLATIONS

1. STRUCTURAL BACKFILL, EMBANKMENT, AND OUTER STRUCTURAL BEDDING MATERIAL SHALL BE COMPACTED TO 95% OF THE MAXIMUM DENSITY ACCORDING TO THE TYPE OR CLASS OF MATERIAL USED.

CONSTRUCTION SEQUENCE

1. PLACE STRUCTURAL BEDDING MATERIAL TO GRADE. DO NOT COMPACT.
2. INSTALL PIPE TO GRADE.
3. COMPACT STRUCTURAL BEDDING OUTSIDE THE MIDDLE THIRD OF THE PIPE.
4. THE STRUCTURAL BACKFILL SHALL BE PLACED AND COMPACTED IN LAYERS NOT EXCEEDING 8". THE LAYERS SHALL BE BROUGHT UP EVENLY AND SIMULTANEOUSLY TO THE ELEVATION OF THE MINIMUM COVER.
5. PIPE INSTALLATION MAY REQUIRE THE USE OF RESTRAINTS, WEIGHTING OR OTHER APPROVED METHODS IN ORDER TO HELP MAINTAIN GRADE AND ALIGNMENT.

GENERAL NOTES

1. PIPE SHALL CONFORM TO ASTM F949, CELL CLASS 12454. INSTALLATION SHALL CONFORM TO JOB SPECIAL PROVISION "PLASTIC PIPE" AND SECTION 606 OF THE STANDARD SPECIFICATIONS FOR HIGHWAY CONSTRUCTION (CURRENT EDITION).
2. PLASTIC PIPE CULVERT DESIGN SHALL CONFORM TO AASHTO LRFD BRIDGE DESIGN SPECIFICATIONS, FIFTH EDITION (2010) WITH 2010 INTERIMS.
3. THE MAXIMUM ALLOWABLE TRENCH WIDTH SHALL BE THE MINIMUM WIDTH PLUS A SUFFICIENT WIDTH TO ENSURE WORKING ROOM TO PROPERLY AND SAFELY PLACE AND COMPACT HAUNCHING AND OTHER BACKFILL MATERIAL.
4. IMPERVIOUS MATERIAL SHOULD BE PLACED AS DIRECTED BY THE ENGINEER AT THE ENDS OF THE CULVERT TO PREVENT LOSS OF STRUCTURAL BEDDING WHEN PERVIOUS MATERIAL IS USED FOR STRUCTURAL BEDDING AND/OR BACKFILL.
5. WHEN DIRECTED BY THE ENGINEER, UNSUITABLE MATERIAL THAT IS ENCOUNTERED AT THE BOTTOM OF THE EXCAVATED TRENCH (BELOW THE AREA IDENTIFIED AS "STRUCTURAL BEDDING" ABOVE) WILL BE EXCAVATED AND REPLACED WITH SELECTED PIPE BEDDING. THE QUANTITY OF MATERIAL REQUIRED TO BACKFILL THE UNDERCUT AREA UP TO THE SELECTED PIPE BEDDING PAY LIMIT DESIGNATED ABOVE WILL BE MEASURED AND PAID FOR AS "SELECTED PIPE BEDDING."
6. WHEN THE EXISTING MATERIAL EXCAVATED FOR THE PIPE TRENCH IS DETERMINED BY THE ENGINEER TO BE UNSUITABLE FOR BACKFILLING THE PIPE (ABOVE THE AREA IDENTIFIED ABOVE AS STRUCTURAL BACKFILL), BORROW MATERIAL OR MATERIAL FROM THE ROADWAY EXCAVATION WILL BE USED TO BACKFILL THE PIPE. IF SUITABLE MATERIAL IS NOT AVAILABLE, THE ENGINEER MAY AUTHORIZE THE USE OF "SELECTED PIPE BACKFILL."
7. FOR PIPE TYPES THAT ARE NOT SMOOTH ON THE OUTSIDE (CORRUGATED OR PROFILE WALLS), BACKFILL GRADATIONS SHOULD BE SELECTED THAT WILL PERMIT THE FILLING OF THE CORRUGATION OR PROFILE VALLEY.
8. PVC PIPES OF DIAMETERS OTHER THAN SHOWN WILL NOT BE ALLOWED.
9. JOINTS FOR PVC PIPE SHALL MEET THE REQUIREMENTS FOR SOIL TIGHTNESS AS SPECIFIED IN AASHTO SECTION 26.4.2.4 AND 30.4.2 "AASHTO LRFD BRIDGE CONSTRUCTION SPECIFICATIONS." JOINTS SHALL BE INSTALLED PER MANUFACTURER'S RECOMMENDATIONS.

- LEGEND -

H = FILL HEIGHT (FT.)
D_O = OUTSIDE DIAMETER OF PIPE
MAX. = MAXIMUM
MIN. = MINIMUM

= STRUCTURAL BACKFILL MATERIAL

= UNDISTURBED SOIL

DATE	REVISION	DATE FILMED
2-27-14	REVISED GENERAL NOTE 1.	
12-15-11	REV GENERAL NOTES & MINIMUM COVER NOTE; DELETED SM3 MATERIAL	
11-17-10	ISSUED	

ARKANSAS STATE HIGHWAY COMMISSION

PLASTIC PIPE CULVERT (PVC F949)

STANDARD DRAWING PCP-2

INSTALLATION TYPE	**MATERIAL REQUIREMENTS FOR STRUCTURAL BACKFILL AND STRUCTURAL BEDDING
TYPE 1	AGGREGATE BASE COURSE (CLASS 4, 5, 6, OR 7)
TYPE 2	*SELECTED MATERIALS (CLASS SM-1, SM-2 OR SM-4) OR TYPE 1 INSTALLATION MATERIAL

*SM3 WILL NOT BE ALLOWED.

** STRUCTURAL BEDDING MATERIAL SHALL HAVE A MAXIMUM PARTICLE SIZE OF 1INCH. STRUCTURAL BACKFILL MATERIAL SHALL BE FREE OF ORGANIC MATERIAL, STONES LARGER THAN 1.50 INCH IN GREATEST DIMENSION, OR FROZEN LUMPS.

STRUCTURAL BACKFILL AND STRUCTURAL BEDDING MATERIAL WILL NOT BE PAID FOR SEPARATELY, BUT COMPENSATION WILL BE CONSIDERED TO BE INCLUDED IN THE PRICE BID PER LINEAR FOOT OF POLYPROPYLENE PIPE.

MULTIPLE INSTALLATION OF POLYPROPYLENE PIPES

PIPE DIAMETER	CLEAR DISTANCE BETWEEN PIPES
18"	1'-6"
24"	2'-0"
30"	2'-6"
36"	3'-0"
42"	3'-6"
48"	4'-0"
60"	5'-0"

MINIMUM TRENCH WIDTH BASED ON FILL HEIGHT "H"

PIPE DIAMETER	TRENCH WIDTH (FEET)	
	"H" < 10'-0"	"H" >OR= 10'-0"
18"	4'-6"	4'-6"
24"	5'-0"	6'-0"
30"	5'-6"	7'-6"
36"	6'-0"	9'-0"
42"	7'-0"	10'-6"
48"	8'-0"	12'-0"
60"	10'-0"	15'-0"

MINIMUM COVER FOR CONSTRUCTION LOADS

PIPE DIAMETER	② MIN. COVER (FEET) FOR INDICATED CONSTRUCTION LOADS			
	18.0-50.0 (KIPS)	50.0-75.0 (KIPS)	75.0-110.0 (KIPS)	110.0-150.0 (KIPS)
36" OR LESS	2'-0"	2'-6"	3'-0"	3'-0"
42" OR GREATER	3'-0"	3'-0"	3'-6"	4'-0"

②MINIMUM COVER SHALL BE MEASURED FROM TOP OF PIPE TO TOP OF THE MAINTAINED CONSTRUCTION ROADWAY SURFACE. THE SURFACE SHALL BE MAINTAINED.

①NOTE:
12" MIN. (18" - 42" DIAMETERS)
24" MIN. (60" DIAMETER)

MINIMUM COVER VALUES, "H" SHALL INCLUDE A MINIMUM 12" OF PAVEMENT AND/OR BASE.

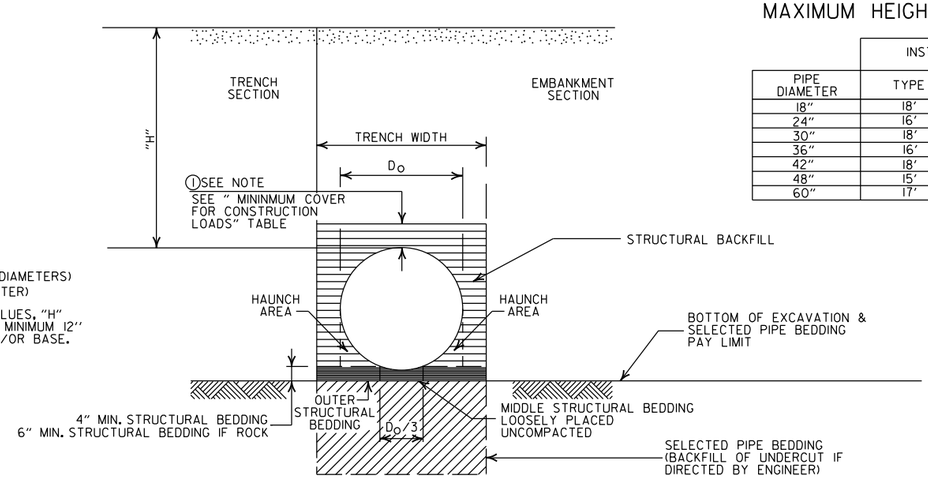

MAXIMUM HEIGHT OF FILL "H"

PIPE DIAMETER	INSTALLATION TYPE	
	TYPE 1	TYPE 2
18"	18'	14'
24"	16'	12'
30"	18'	14'
36"	16'	12'
42"	18'	13'
48"	15'	11'
60"	17'	12'

EMBANKMENT AND TRENCH INSTALLATIONS

1. STRUCTURAL BACKFILL, EMBANKMENT, AND OUTER STRUCTURAL BEDDING MATERIAL SHALL BE COMPACTED TO 95% OF THE MAXIMUM DENSITY ACCORDING TO THE TYPE OR CLASS OF MATERIAL USED.

CONSTRUCTION SEQUENCE

1. PLACE STRUCTURAL BEDDING MATERIAL TO GRADE. DO NOT COMPACT.
2. INSTALL PIPE TO GRADE.
3. COMPACT STRUCTURAL BEDDING OUTSIDE THE MIDDLE THIRD OF THE PIPE.
4. THE STRUCTURAL BACKFILL SHALL BE PLACED AND COMPACTED IN LAYERS NOT EXCEEDING 8". THE LAYERS SHALL BE BROUGHT UP EVENLY AND SIMULTANEOUSLY TO THE ELEVATION OF THE MINIMUM COVER.
5. PIPE INSTALLATION MAY REQUIRE THE USE OF RESTRAINTS, WEIGHTING OR OTHER APPROVED METHODS IN ORDER TO HELP MAINTAIN GRADE AND ALIGNMENT.

GENERAL NOTES

1. PIPE SHALL CONFORM TO AASHTO M330, TYPE S, INSTALLATION SHALL CONFORM TO JOB SPECIAL PROVISION "PLASTIC PIPE" AND SECTION 606 OF THE STANDARD SPECIFICIATIONS FOR HIGHWAY CONSTRUCTION (CURRENT EDITION).
2. PLASTIC PIPE CULVERT DESIGN SHALL CONFORM TO AASHTO LRFD BRIDGE DESIGN SPECIFICATIONS, SIXTH EDITION (2012) WITH 2013 INTERIMS.
3. THE MAXIMUM ALLOWABLE TRENCH WIDTH SHALL BE THE MINIMUM WIDTH PLUS A SUFFICIENT WIDTH TO ENSURE WORKING ROOM TO PROPERLY AND SAFELY PLACE AND COMPACT HAUNCHING AND OTHER BACKFILL MATERIAL.
4. IMPERVIOUS MATERIAL SHOULD BE PLACED AS DIRECTED BY THE ENGINEER AT THE ENDS OF THE CULVERT TO PREVENT LOSS OF STRUCTURAL BEDDING WHEN PERVIOUS MATERIAL IS USED FOR STRUCTURAL BEDDING AND/OR BACKFILL.
5. WHEN DIRECTED BY THE ENGINEER, UNSUITABLE MATERIAL THAT IS ENCOUNTERED AT THE BOTTOM OF THE EXCAVATED TRENCH (BELOW THE AREA IDENTIFIED AS "STRUCTURAL BEDDING" ABOVE) WILL BE EXCAVATED AND REPLACED WITH SELECTED PIPE BEDDING. THE QUANTITY OF MATERIAL REQUIRED TO BACKFILL THE UNDERCUT AREA UP TO THE SELECTED PIPE BEDDING PAY LIMIT DESIGNATED ABOVE WILL BE MEASURED AND PAID FOR AS "SELECTED PIPE BEDDING."
6. WHEN THE EXISTING MATERIAL EXCAVATED FOR THE PIPE TRENCH IS DETERMINED BY THE ENGINEER TO BE UNSUITABLE FOR BACKFILLING THE PIPE (ABOVE THE AREA IDENTIFIED ABOVE AS STRUCTURAL BACKFILL), BORROW MATERIAL OR MATERIAL FROM THE ROADWAY EXCAVATION WILL BE USED TO BACKFILL THE PIPE. IF SUITABLE MATERIAL IS NOT AVAILABLE, THE ENGINEER MAY AUTHORIZE THE USE OF "SELECTED PIPE BACKFILL."
7. FOR PIPE TYPES THAT ARE NOT SMOOTH ON THE OUTSIDE (CORRUGATED OR PROFILE WALLS), BACKFILL GRADATIONS SHOULD BE SELECTED THAT WILL PERMIT THE FILLING OF THE CORRUGATION OR PROFILE VALLEY.
8. POLYPROPYLENE PIPES OF DIAMETERS OTHER THAN SHOWN WILL NOT BE ALLOWED.
9. JOINTS FOR POLYPROPYLENE PIPE SHALL MEET THE REQUIREMENTS FOR SOIL TIGHTNESS AS SPECIFIED IN SECTION 26.4.2.4 AND 30.4.2 OF THE AASHTO LRFD BRIDGE CONSTRUCTION SPECIFICATIONS 3RD EDITION (2010) WITH 2012 INTERIMS. JOINTS SHALL BE INSTALLED PER MANUFACTURER'S RECOMMENDATIONS.

- LEGEND -

H = FILL HEIGHT (FT.)
D_o = OUTSIDE DIAMETER OF PIPE
MAX. = MAXIMUM
MIN. = MINIMUM

= STRUCTURAL BACKFILL MATERIAL

= UNDISTURBED SOIL

DATE	REVISION	DATE FILMED
02-27-20	REVISED	
11-07-19	ISSUED	

ARKANSAS STATE HIGHWAY COMMISSION

PLASTIC PIPE CULVERT (POLYPROPYLENE)

STANDARD DRAWING PCP-3

NOTES:
1. REFER TO THE STRIPING DETAILS FOR PAVEMENT MARKING LINE WIDTHS.
2. THIS DRAWING SHALL BE USED IN CONJUNCTION WITH THE LATEST REVISED ADDITION OF THE "MANUAL ON UNIFORM TRAFFIC CONTROL DEVICES."
3. RAISED PAVEMENT MARKERS SHALL BE PLACED ON AN 80 FEET SPACING UNLESS OTHERWISE SHOWN IN THE PLANS.

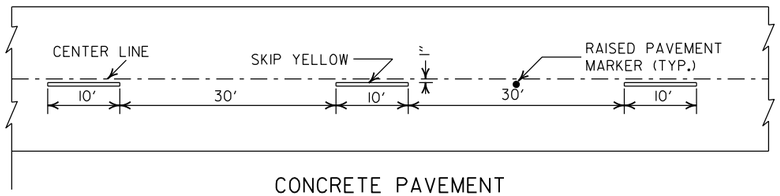

CONCRETE PAVEMENT

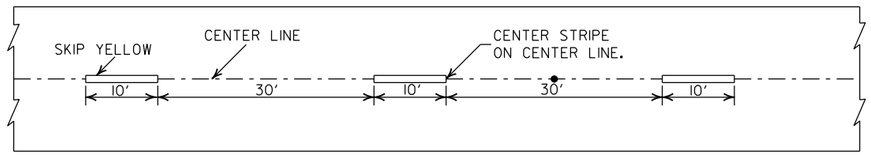

ASPHALT PAVEMENT

BROKEN LINE STRIPING

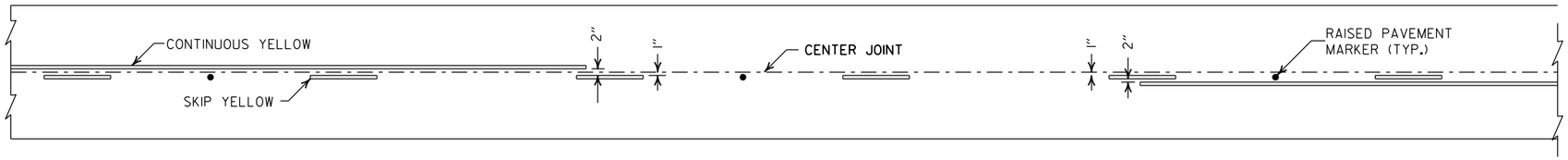

SOLID LINE STRIPING ON CONCRETE PAVEMENT

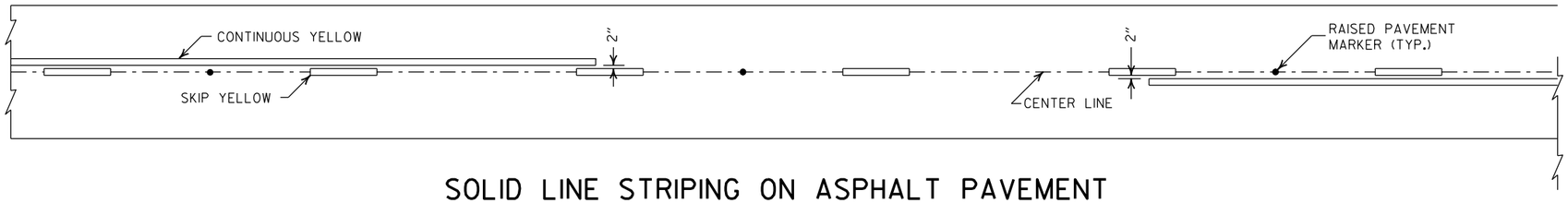

SOLID LINE STRIPING ON ASPHALT PAVEMENT

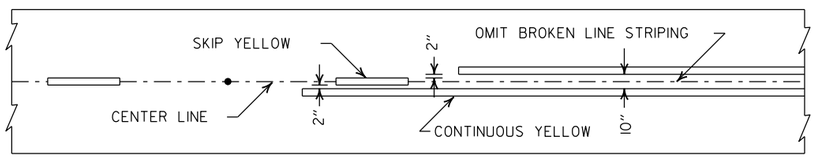

ASPHALT PAVEMENT

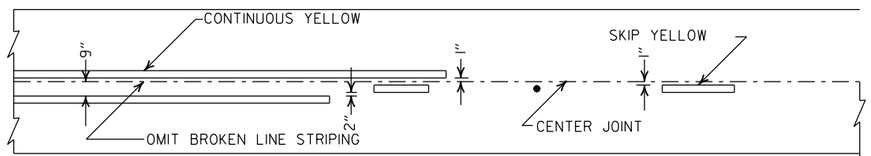

CONCRETE PAVEMENT

STRIPING AT ADJACENT NO PASSING LANES

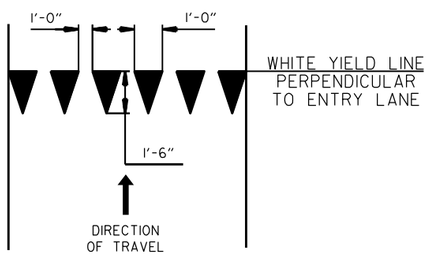

YIELD LINE DETAIL

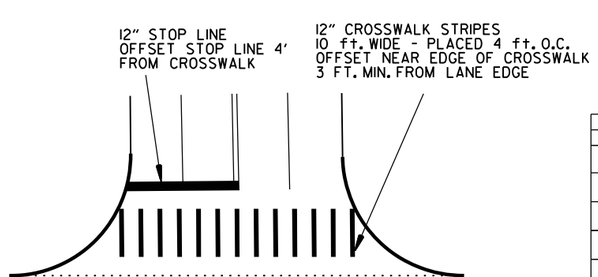

CROSSWALK AND STOP LINE DETAILS

2" FOR ASPHALT OR CONCRETE PAVEMENT
6" FOR BITUMINOUS SURFACE TREATMENT

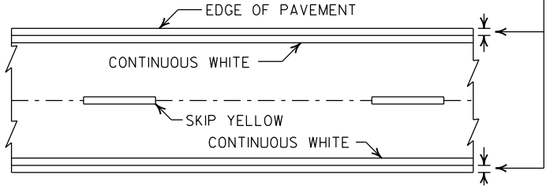

PAVEMENT EDGE LINE MARKING

NOTE:
THE RED LENS OF THE TYPE II R.P.M. SHALL FACE THE INCORRECT TRAFFIC MOVEMENT.

TYPE II
RED/CLEAR OR
YELLOW/YELLOW

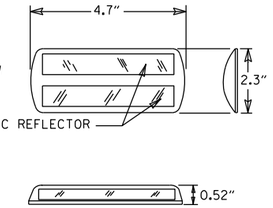

NOTE:
DIMENSIONS SHOWN FOR RAISED PAVEMENT MARKERS ARE TYPICAL. THE CONTRACTOR MAY SUBSTITUTE SIMILAR MARKERS WITH THE APPROVAL OF THE ENGINEER. REQUESTING APPROVAL FOR SIMILAR MARKERS MAY BE MADE BY REFERRING TO THE ARDOT QUALIFIED PRODUCTS LIST.

DETAIL OF STANDARD RAISED PAVEMENT MARKERS

DATE	REVISION	FILMED
2-27-20	REVISED STOP LINE DETAILS	
6-1-17	ADDED YIELD LINE DETAIL	
5-12-16	REVISED LINE WIDTHS, SPACING, & NOTES	
9-12-13	REVISED DETAIL OF STANDARD RAISED PAVEMENT MARKERS	
11-17-10	REVISED GENERAL NOTES & REMOVED PLOWABLE PVMT MRKRS	
11-18-04	REVISED NOTE 2 & GENERAL NOTES	
8-22-02	ADDED CROSSWALK & STOPBAR DTLS.	
7-02-98	ADDED DETAILS OF STD. RAISED PAV'T. MARKERS	
4-26-96	REV. NOTES 3&4; ADDED R.P.M.	
9-30-80	DRAWN	1-9-30-80

ARKANSAS STATE HIGHWAY COMMISSION

PAVEMENT MARKING DETAILS

STANDARD DRAWING PM-1

NOTE:

1. UNLESS OTHERWISE SPECIFIED ON THE PLANS, THE UNDERDRAIN COVER SHALL BE THOROUGHLY COMPACTED EARTH AND SHALL BE SUBSIDIARY TO PIPE UNDERDRAIN.

2. GRANULAR MATERIAL SHALL BE WRAPPED WITH GEOTEXTILE FABRIC. LAP FABRIC 12" OR THE WIDTH OF THE TRENCH AT THE TOP.

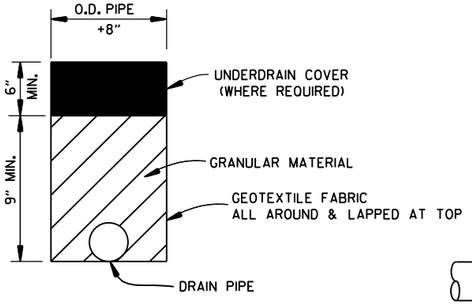

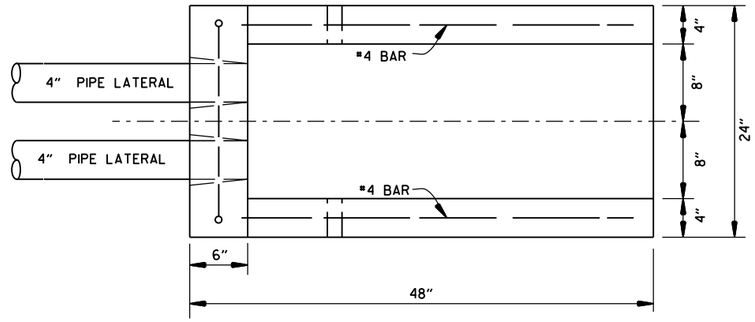

PLAN VIEW

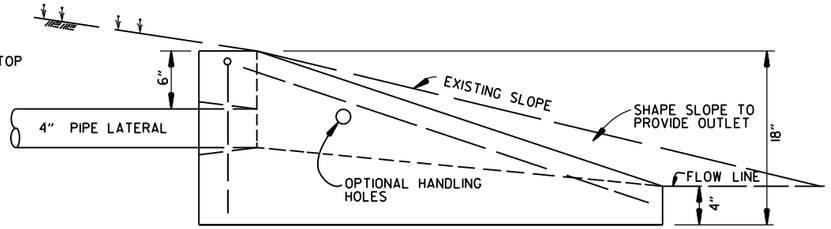

SIDE VIEW

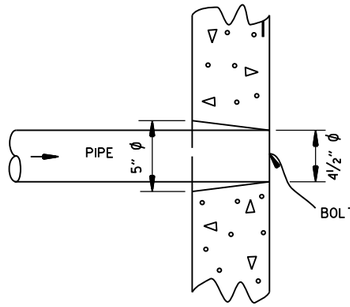

DETAIL OF HOLE FOR 4" PIPE

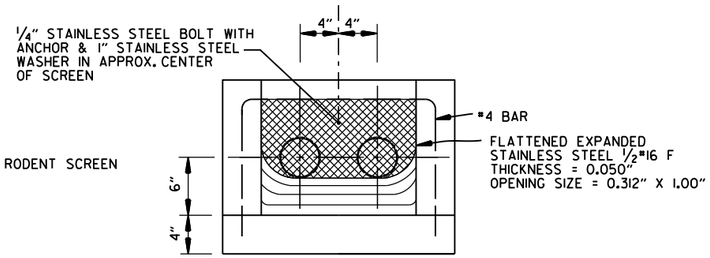

FRONT VIEW
(DETAIL OF RODENT SCREEN)

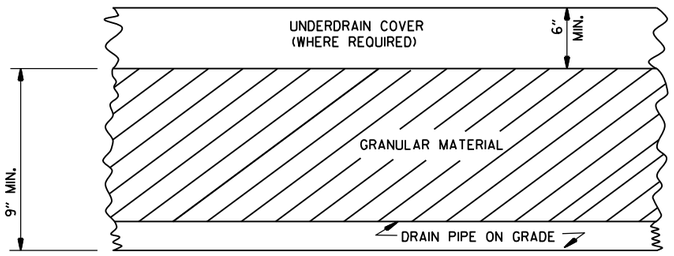

DETAILS OF PIPE UNDERDRAIN

UNDERDRAIN OUTLET PROTECTORS

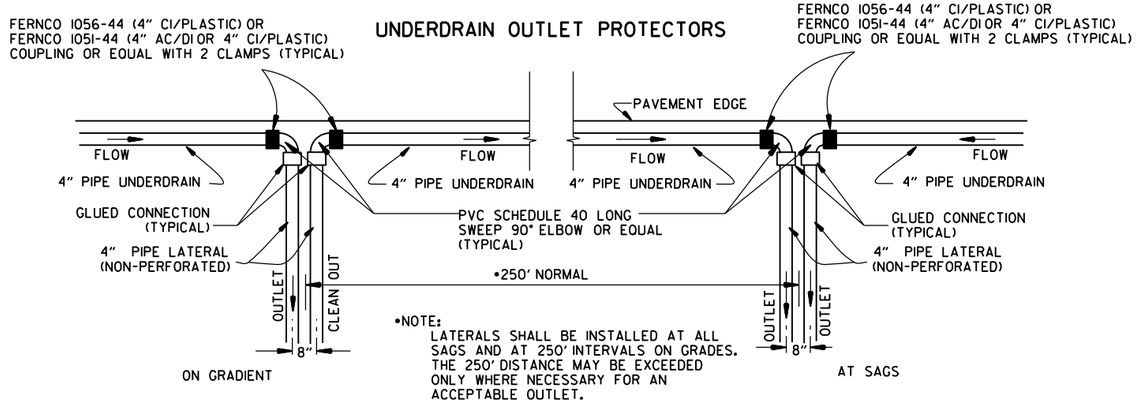

DETAIL OF PIPE UNDERDRAIN LATERALS WHEN PLACED ALONG PAVEMENT EDGE

NOTE: PVC PIPE FOR LATERALS SHALL MEET THE REQUIREMENTS OF ASTM D 1785 (LATEST REVISION) FOR SCHEDULE 40 PIPE.

NOTES FOR PIPE UNDERDRAINS

1. GEOTEXTILE FABRIC SHALL MEET THE REQUIREMENTS OF SECTION 625 FOR TYPE 1. PAYMENT FOR GEOTEXTILE FABRIC AND GRANULAR FILTER MATERIAL SHALL BE INCLUDED IN THE PRICE BID PER LIN. FT. FOR "4" PIPE UNDERDRAINS" IN ACCORDANCE WITH SECTION 611 OF THE STANDARD SPECIFICATIONS.

2. 4" NON-PERFORATED SCHEDULE 40 PVC PIPE LATERALS WITH OUTLET PROTECTORS SHALL BE INSTALLED AS SHOWN HEREON. LATERALS WILL BE MEASURED AND PAID FOR AS "4" PIPE UNDERDRAINS." UNDERDRAIN OUTLET PROTECTORS WILL BE MEASURED AND PAID FOR BY THE UNIT IN ACCORDANCE WITH SECTION 611 OF THE STANDARD SPECIFICATIONS.

3. EXISTING 4" PIPE UNDERDRAINS MAY BE CONNECTED TO PROPOSED DROP INLETS OR EXTENDED WHERE DIRECTED BY THE ENGINEER. PAYMENT FOR CONNECTING TO DROP INLETS SHALL BE CONSIDERED INCLUDED IN THE PRICE BID FOR "4" PIPE UNDERDRAINS."

4. THE LOCATION OF ALL LATERALS SHALL BE MARKED WITH 4" X 12" PERMANENT PAVEMENT MARKING TAPE (TYPE III WHITE) AT THE OUTSIDE EDGE OF THE SHOULDER, PLACED TRANSVERSE TO TRAFFIC. PAYMENT FOR THIS WORK SHALL BE INCLUDED IN THE PRICE BID FOR THE VARIOUS CONTRACT ITEMS.

5. PAYMENT FOR THE RODENT SCREEN SHALL BE INCLUDED IN THE PRICE BID PER EACH FOR "UNDERDRAIN OUTLET PROTECTORS."

6. ANY EXISTING UNDERDRAINS THAT INTERFERE WITH INSTALLATION OF THE NEW UNDERDRAIN SYSTEM SHALL BE REMOVED AND DISPOSED OF AS DIRECTED BY THE ENGINEER. PAYMENT WILL BE CONSIDERED INCLUDED IN THE PRICE BID FOR THE VARIOUS CONTRACT ITEMS. EXISTING UNDERDRAIN OUTLET PROTECTORS SHALL BE REMOVED UNDER THE ITEM "REMOVAL AND DISPOSAL OF UNDERDRAIN OUTLET PROTECTORS."

7. AT LOCATIONS WHERE A SINGLE LATERAL IS USED THE CONTRACTOR SHALL HAVE THE FOLLOWING OPTIONS: 1. INSTALL OUTLET PROTECTOR AS SHOWN ON STANDARD DRAWING PU-1 AND GROUT THE UNUSED HOLE OR 2. INSTALL AN OUTLET PROTECTOR WITH A SINGLE HOLE.

DATE	REVISION	DATE FILMED
12-8-16	ADDED NOTES FOR PIPE UNDERDRAINS, REVISED RODENT SCREEN DETAIL AND NOTES, REMOVED NOTE 1 FOR GRANULAR MATERIAL, ADDED NOTE FOR GEOTEXTILE FABRIC	
4-10-03	REVISED NOTE 3	
1-12-00	REVISED DETAIL OF UNDERDRAIN LATERALS	
11-18-98	REVISED NOTE	
10-18-96	REVISED MIN. DEPTH & GEOTEXTILE FABRIC	
4-26-96	ADDED LATERAL NOTE; 5½" TO 5"	
11-22-95	REVISED LATERALS	
7-20-95	REVISED LATERALS & ADDED NOTE	
11- 3-94	REVISED FOR DUAL LATERALS	11- 3-94
10- 1-92	SUBSTITUTED GEOTEXTILE	10- 1-92
8-15-91	ADDED POLYEDTHYLENE PIPE	8-15-91
11- 8-90	DELETED ALTERNATE NOTE	11- 8-90
1-25-90	ADDED 4" SNAP ADAPTER	1-25-90
11-30-89	DEL. (SUBGRADE); ADDED (WHERE REQUIRED)	11-30-89
7-15-88	ISSUED P.L.M.	647-7-15-88

ARKANSAS STATE HIGHWAY COMMISSION

DETAILS OF PIPE UNDERDRAIN

STANDARD DRAWING PU-1

STEEL FABRICATION: REINFORCING STEEL FABRICATION SHALL CONFORM TO THE DIMENSIONS LISTED IN THE TABLE BELOW:

BAR SIZE	PIN DIAMETER	HOOK EXTENSION "K"
3	2¼"	4"
4	3 "	4½"
5	3¾"	5"
6	4½"	6"
7	5¼"	7"
8	6"	8"

IF THE OVERALL HEIGHT OF THE HOOK (SEE DIAGRAM BELOW) FOR A "b", "b1", "b2" or "b3" BENT BAR IS GREATER THAN THE CORRESPONDING TOP OR BOTTOM SLAB THICKNESS, LESS 2¾ INCHES, EACH BENT BAR SHALL BE REPLACED WITH ONE HOOKED BAR AND ONE STRAIGHT BAR, USING LENGTHS AS SHOWN IN THE TABLE BELOW. THE TWO BARS SHALL BE THE SAME DIAMETER AS, AND PLACED AT THE SAME SPACING AS, THE "b", "b1", "b2" OR "b3" BENT BARS THEY REPLACE.

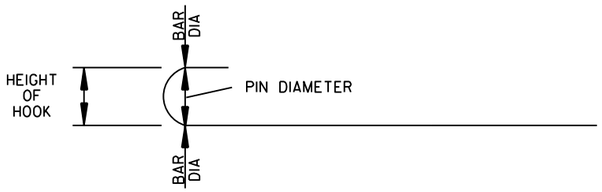

NOTE: DIMENSIONS OF BARS ARE MEASURED OUT TO OUT OF BARS.

OVERALL HEIGHT OF HOOKED BAR DIAGRAM

THE HOOKED BARS SHALL BE PLACED IN THE BOTTOM OF THE TOP SLAB AND THE TOP OF THE BOTTOM SLAB. THE STRAIGHT BARS SHALL BE PLACED IN THE TOP OF THE TOP SLAB AND THE BOTTOM OF THE BOTTOM SLAB. SEE TABLE BELOW FOR LENGTHS OF REPLACEMENT HOOKED AND STRAIGHT BARS.

FOR SKEWED CULVERTS, THE REPLACEMENT STRAIGHT BAR MAY HAVE TO BE CUT IN FIELD TO FIT.

REPLACEMENT BAR LENGTHS TABLE

BAR SIZE: "b", "b1", "b2" OR "b3"	LENGTH OF HOOKED BAR	LENGTH OF STRAIGHT BAR
#4	L + 1' - 0"	SEE "c" BAR LENGTH
#5	L + 1' - 2"	SEE "c" BAR LENGTH
#6	L + 1' - 4"	SEE "c" BAR LENGTH
#7	L + 1' - 8"	SEE "c" BAR LENGTH
#8	L + 1' - 10"	SEE "c" BAR LENGTH
#9	L + 2' - 6"	SEE "c" BAR LENGTH

L = "OW" - 3 INCHES

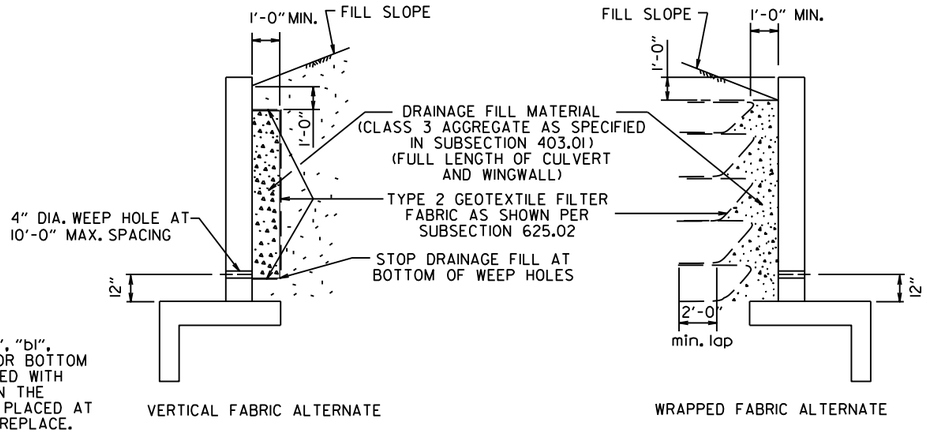

WINGWALL & CULVERT DRAINAGE DETAIL

REINFORCED CONCRETE BOX CULVERT GENERAL NOTES

CONCRETE SHALL BE CLASS S WITH A MINIMUM 28 DAY COMPRESSIVE STRENGTH OF 3500 PSI.

REINFORCING STEEL SHALL BE AASHTO M 31 OR M 53, GRADE 60.

CONSTRUCTION AND MATERIALS FOR WINGWALL & CULVERT DRAINAGE, INCLUDING WEEP HOLES AND GRANULAR MATERIAL, SHALL BE SUBSIDIARY TO THE BID ITEM, "CLASS S CONCRETE".

MEMBRANE WATERPROOFING SHALL CONFORM TO THE REQUIREMENTS OF SECTION 815 OF THE STANDARD SPECIFICATIONS.

MEMBRANE WATERPROOFING SHALL BE APPLIED TO ALL CONSTRUCTION JOINTS IN THE TOP SLAB AND THE SIDEWALLS OF R.C. BOX CULVERTS AS DIRECTED BY THE ENGINEER. NO PAYMENT SHALL BE MADE FOR THIS ITEM, BUT PAYMENT WILL BE CONSIDERED TO BE INCLUDED IN THE VARIOUS ITEMS BID FOR THE R.C. BOX CULVERT.

REINFORCING STEEL TOLERANCES: THE TOLERANCES FOR REINFORCING STEEL SHALL MEET THOSE LISTED IN "MANUAL OF STANDARD PRACTICE" PUBLISHED BY CONCRETE REINFORCING STEEL INSTITUTE (CRSI) EXCEPT THAT THE TOLERANCE FOR TRUSS BARS SUCH AS FIGURE 3 ON PAGE 7-4 OF THE CRSI MANUAL SHALL BE MINUS ZERO TO PLUS ½ INCH.

WEEP HOLES IN BOX CULVERT WALLS SHALL HAVE A MAXIMUM HORIZONTAL SPACING OF 10'-0" AND SHALL BE SPACED TO CLEAR ALL REINFORCING STEEL. THE DRAIN OPENING SHALL BE 4" DIAMETER AND SHALL BE PLACED 12" ABOVE THE TOP OF THE BOTTOM SLAB.

WEEP HOLES IN WINGWALLS SHALL HAVE A MAXIMUM HORIZONTAL SPACING OF 10'-0" AND SHALL BE SPACED TO CLEAR ALL REINFORCING STEEL. THERE SHALL BE A MINIMUM OF TWO (2) WEEP HOLES IN EACH WINGWALL. THE DRAIN OPENING SHALL BE 4" DIAMETER AND SHALL BE PLACED 12" ABOVE THE TOP OF THE WINGWALL FOOTING.

THE REQUIREMENTS SHOWN ON THIS DRAWING SHALL SUPERCEDE THE CORRESPONDING REQUIREMENTS ON ALL REINFORCED CONCRETE BOX CULVERT STANDARD DRAWINGS.

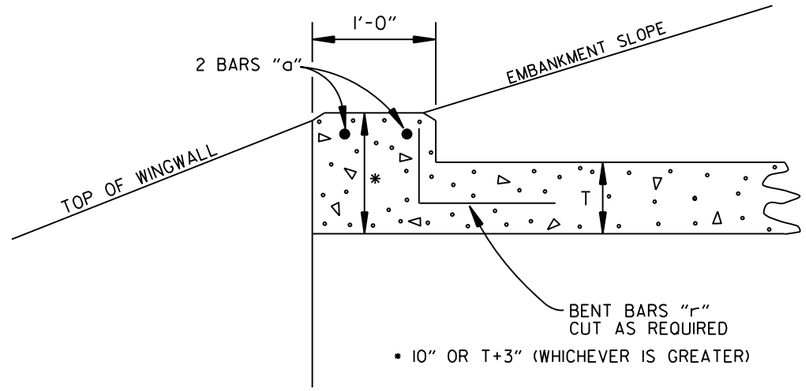

NOTE: FOR ALL SKEWED R.C. BOX CULVERTS THE LENGTH "K" OF THE MODIFIED HEADWALL SHALL BE EQUAL TO THE ROADWAY LENGTH "RL". THE ENDS OF THE HEADWALL SHALL BE CONSTRUCTED PARALLEL TO THE SKEW ANGLE OF THE BOX CULVERT.

R.C. BOX CULVERT HEADWALL MODIFICATIONS

DATE	REVISION	DATE FILMED
7/26/12	REV. DRAINAGE FILL MATERIAL & DETAIL	
12/15/11	REQUIRE WEEP HOLES IN BOX CULVERT WALLS	
5-25-06	REV. GEN. NOTES AND DETAILS FOR WEEP HOLES; BAR DIAGRAM	
11-16-01	ADDED WINGWALL DRAINAGE DETAIL/EDITED GEN. NOTES	
10-18-96	REV. ASTM REF. TO AASHTO & ADDED BAR DIAGRAM	
10-12-95	MOVED SOLID SODDING DETAIL TO RCB-2	
6-2-94	ADDED SOLID SODDING PLAN DETAIL	
8-5-93	REVISED PIN DIAMETER TO SPECS.	
8-15-91	DRAWN AND ISSUED	

ARKANSAS STATE HIGHWAY COMMISSION

REINFORCED CONCRETE BOX CULVERT DETAILS

STANDARD DRAWING RCB-1

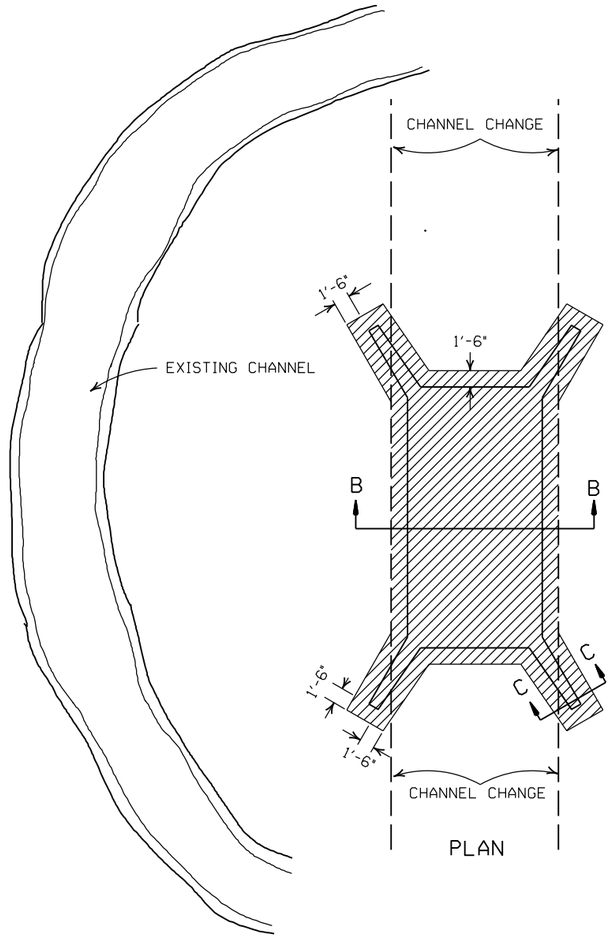

PLAN

SOLID SODDING

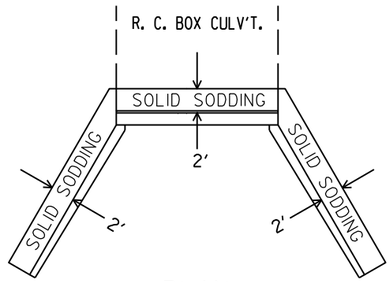

PLAN

PARTIAL SECTION SHOWING SOLID SODDING AT HEADWALLS AND WING WALLS

NOTE: LENGTH MEASURED ALONG THE CENTER OF 2' STRIP OF SOLID SODDING.

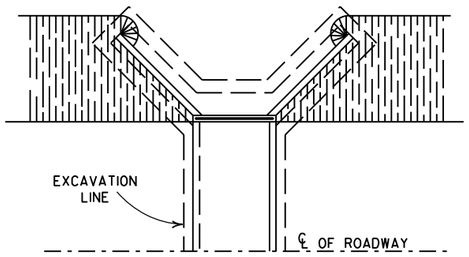

PLAN

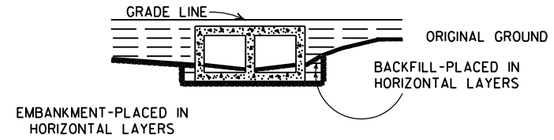

LONGITUDINAL SECTION

BACKFILL DETAILS FOR BOX CULVERT

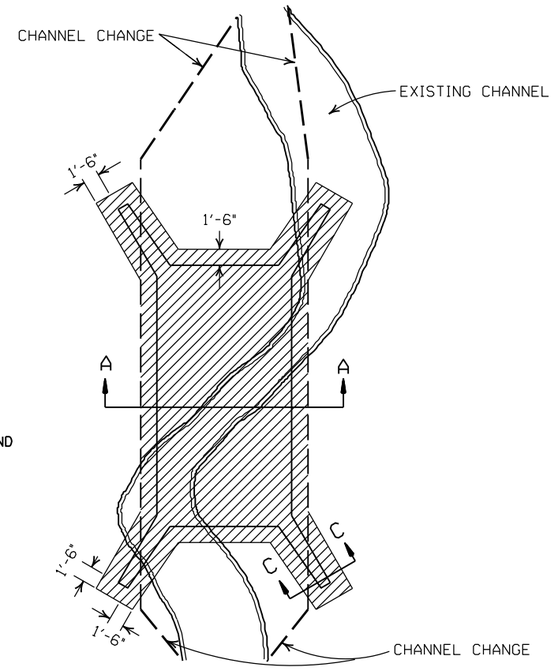

PLAN

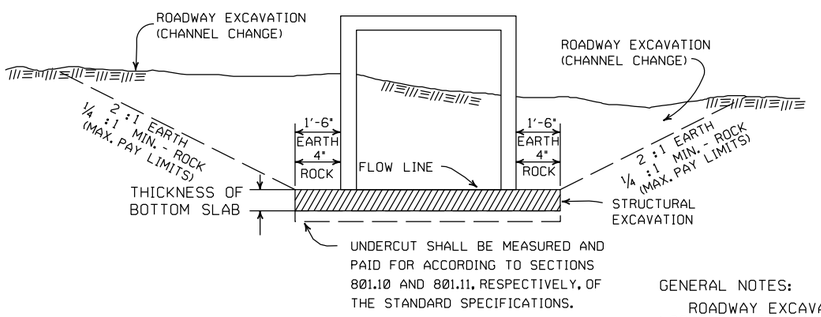

SECTION B-B

DETAILS FOR NEW CHANNELS

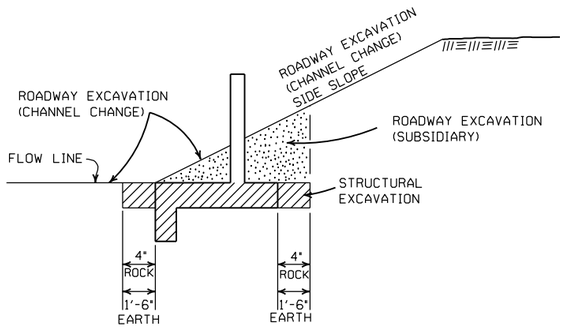

SECTION C-C

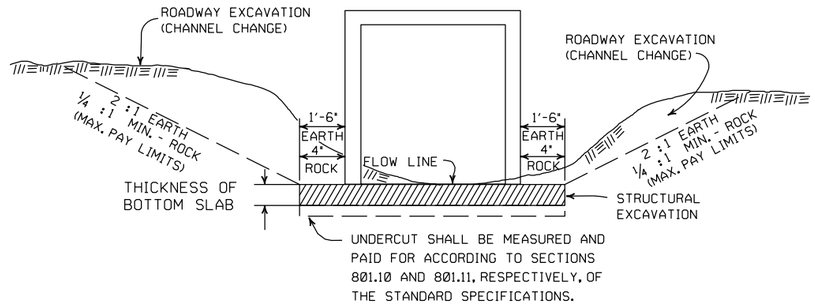

SECTION A-A

DETAILS THROUGH EXISTING CHANNELS

GENERAL NOTES:

ROADWAY EXCAVATION (CHANNEL CHANGE) WILL BE PAID FOR AT R.C. BOX CULVERT LOCATIONS. IT WILL BE PAID TO THE LIMITS ACTUALLY CUT AND WILL BE CONFINED TO THAT PORTION OF THE INDICATED AREA THAT IS ABOVE THE FLOW LINE. ROADWAY EXCAVATION (CHANNEL CHANGE) SHALL BE MEASURED BY CROSS SECTIONS AND VOLUMES COMPUTED BY AVERAGE END AREA METHOD. ALL CHANNEL CHANGES SHALL BE BROUGHT TO GRADE PRIOR TO MAKING ANY EXCAVATION FOR STRUCTURES.

EXCAVATION FOR STRUCTURES WILL BE PAID FOR AT ALL R.C. BOX CULVERT LOCATIONS. IT WILL BE PAID TO THE LIMITS SHOWN AND SHALL BE CONFINED TO THAT PORTION OF THE INDICATED AREA THAT IS BELOW THE CHANNEL FLOW LINE.

ROADWAY EXCAVATION SHOWN IN SECTION C-C ABOVE AS SUBSIDIARY WILL NOT BE MEASURED OR PAID FOR DIRECTLY, BUT PAYMENT WILL BE CONSIDERED TO BE INCLUDED IN THE VARIOUS ITEMS OF EXCAVATION.

DATE	REVISION	FILMED
11-20-03	REVISED SECTION A-A NOTE	
8-22-02	REVISED SECTION B-B NOTE	
10-12-95	COMBINED 1891B AND 1888A	
1-4-83	REVISED GENERAL NOTES	674-1-4-83
	AND ADDED MAXIMUM PAY	
	LIMIT NOTES.	
2-2-76	EXCAV. PAY LIMITS	917-2-2-76
10-2-72	REVISED AND REDRAWN	564-10-16-72

ARKANSAS STATE HIGHWAY COMMISSION

EXCAVATION PAY LIMITS, BACKFILL, & SOLID SODDING FOR BOX CULVERTS

STANDARD DRAWING RCB-2

SUPERELEVATION TABLE FOR TWO - WAY TRAFFIC

DEGREE OF CURVE	30 MPH			35 MPH			40 MPH			45 MPH			50 MPH			55 MPH			60 MPH			65 MPH			70 MPH			75 MPH		
	e	Ls (FT)		e	Ls (FT)		e	Ls (FT)		e	Ls (FT)		e	Ls (FT)		e	Ls (FT)		e	Ls (FT)		e	Ls (FT)		e	Ls (FT)		e	Ls (FT)	
		MINIMUM	DESIRABLE		MINIMUM	DESIRABLE		MINIMUM	DESIRABLE		MINIMUM	DESIRABLE		MINIMUM	DESIRABLE		MINIMUM	DESIRABLE		MINIMUM	DESIRABLE		MINIMUM	DESIRABLE		MINIMUM	DESIRABLE		MINIMUM	DESIRABLE
0° 15'	NC			NC			NC			NC			NC			NC			NC			NC			NC			NC		
0° 30'	NC			NC			NC			NC			NC			NC			RC	96		RC	96		RC	96		0.022	101	
0° 45'	NC			NC			NC			NC			RC	96		RC	96		0.024	106		0.026	110		0.030	120		0.032	125	
1° 00'	NC			NC			NC			RC	90		0.022	101		0.026	110		0.030	120		0.034	130		0.038	139		0.042	149	300
1° 15'	NC			NC			RC	84		0.022	95		0.028	115		0.032	125		0.038	139		0.042	149		0.046	158	300	0.052	173	
1° 30'	NC			RC	78		0.022	88		0.028	108		0.032	125		0.038	139		0.044	154		0.050	168		0.056	182		0.062	197	
1° 45'	RC	72		RC	78		0.026	97		0.030	113		0.036	134		0.044	154		0.050	168	300	0.056	182	300	0.064	202		0.070	216	
2° 00'	RC	72		0.024	86		0.028	101		0.034	122		0.042	149		0.048	163		0.056	182		0.064	202		0.070	216		0.080	240	
2° 15'	RC	72		0.026	90		0.032	109		0.038	131		0.046	158		0.054	178	300	0.062	197		0.070	216		0.078	235	350	0.088	259	350
2° 30'	0.022	75		0.028	94		0.034	113		0.042	140		0.050	168		0.058	187		0.068	211		0.076	230		0.086	254		0.096	278	
2° 45'	0.024	79		0.030	98		0.038	122		0.046	149	200	0.054	178	250	0.064	202		0.072	221		0.082	245		0.092	269		0.100	288	400
3° 00'	0.026	83		0.034	105		0.040	126		0.050	158		0.058	187		0.068	211		0.078	235		0.088	259		0.098	283	400	D MAX = 2° 45'		
3° 15'	0.028	86		0.036	109		0.044	134		0.052	162		0.062	197		0.072	221		0.082	245		0.092	269		0.100	288				
3° 30'	0.030	90		0.038	113		0.046	139		0.056	171		0.066	206		0.076	230		0.086	254		0.096	278	350	D MAX = 3° 30'					
3° 45'	0.032	93		0.040	117		0.050	147		0.058	176		0.070	216		0.080	240		0.090	264		0.098	283							
4° 00'	0.034	97		0.042	121	200	0.052	151		0.062	185		0.072	221		0.084	250		0.094	274	350	0.100	288							
4° 15'	0.036	100		0.044	125		0.054	155		0.064	189		0.076	230		0.086	254		0.096	278		D MAX = 4° 15'								
4° 30'	0.036	100		0.046	129		0.056	160		0.068	198		0.078	235		0.090	264		0.098	283										
4° 45'	0.038	104	200	0.048	133		0.060	168		0.070	203		0.082	245		0.092	269	350	0.100	288										
5° 00'	0.040	108		0.050	137		0.062	172		0.072	207		0.084	250		0.094	274		D MAX = 5° 15'										
5° 30'	0.044	115		0.054	144		0.066	181		0.078	221	250	0.088	259	300	0.098	283												
6° 00'	0.046	119		0.058	152		0.070	189		0.082	230		0.092	269		0.100	288												
6° 30'	0.050	126		0.062	160		0.074	198		0.086	239		0.096	278		D MAX = 6° 30'													
7° 00'	0.052	130		0.064	164		0.078	206		0.090	248		0.098	283															
7° 30'	0.054	133		0.068	172		0.080	210		0.092	252		0.100	288															
8° 00'	0.058	140		0.070	176		0.084	219		0.094	257		D MAX = 8° 25'																
8° 30'	0.060	144		0.072	179		0.086	223	250	0.096	261	300																		
9° 00'	0.062	148		0.076	187		0.088	227		0.098	266																			
9° 30'	0.064	151		0.078	191		0.092	235		0.100	270																			
10° 00'	0.066	155		0.080	195		0.094	240		D MAX = 10° 30'																				
11° 00'	0.070	162		0.084	203		0.096	244																						
12° 00'	0.074	169		0.088	211	250	0.098	248																						
13° 00'	0.076	173		0.090	215		0.100	252	300																					
14° 00'	0.080	180		0.094	222		D MAX = 13° 45'																							
15° 00'	0.082	184		0.096	226																									
16° 00'	0.086	191		0.098	230																									
17° 00'	0.088	194		0.100	234																									
18° 00'	0.090	198	250	D MAX = 19° 30'																										
19° 00'	0.092	202																												
20° 00'	0.094	205																												
21° 00'	0.096	209																												
22° 00'	0.096	209																												
23° 00'	0.098	212																												
24° 00'	0.098	212																												
25° 00'	0.100	216																												
D MAX = 28° 30'																														

ABBREVIATIONS

NC - NORMAL CROWN
RC - REVERSE CROWN, SUPERELEVATION AT NORMAL CROWN SLOPE
e - RATE OF SUPERELEVATION (FT. PER FT.)
Ls - LENGTH OF SUPERELEVATION TRANSITION (FT.)
L - DISTANCE FROM BEGINNING OF SUPERELEVATION TRANSITION TO ANY POINT (FT.)
d - WIDTH OF PAVEMENT (FT.) OR WIDTH OF SUBGRADE (FT.)
C - NORMAL CROWN (FT.)

GENERAL NOTES

1. ON PAVEMENT WITH TWO-WAY TRAFFIC, THE SUPERELEVATION SHALL BE REVOLVED ON THE INSIDE PAVEMENT EDGE UNLESS OTHERWISE NOTED ON THE PLANS
2. SUPERELEVATION VALUES SHOWN ON THE CROSS SECTIONS ARE VALUES (+) OR (-) TO BE ADDED TO OR SUBTRACTED FROM THE POINT OF CONTROL.
3. LENGTHS FOR L MAY BE ROUNDED IN MULTIPLES OF 25 FT. OR 50 FT. TO PERMIT SIMPLER CALCULATIONS.
4. PAVEMENTS WIDER THAN 2 LANES SHALL HAVE ADDITIONAL TRANSITION LENGTHS AS FOLLOWS:

3 LANE UNDIVIDED - - - - - +20%
4 LANE UNDIVIDED - - - - - +50%
5 LANE UNDIVIDED - - - - - +80%
6 LANE UNDIVIDED - - - - - +100%

NOTE: MAINTAIN NORMAL CROWN ON INSIDE UNTIL SUPERELEVATION EXCEEDS 2C.

RATE OF SUPERELEVATION SHALL BE COMPUTED ON STRAIGHT LINE METHOD USING APPLICABLE Ls.

SUPERELEVATION FORMULA = $\frac{Lde}{Ls}$

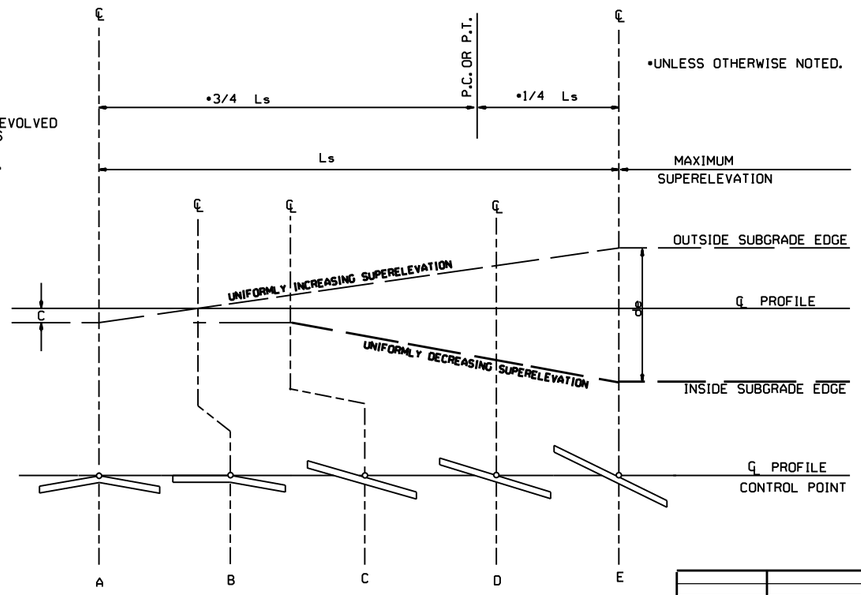

STANDARD METHOD WHEN SUPERELEVATION REVOLVES AROUND CENTER LINE

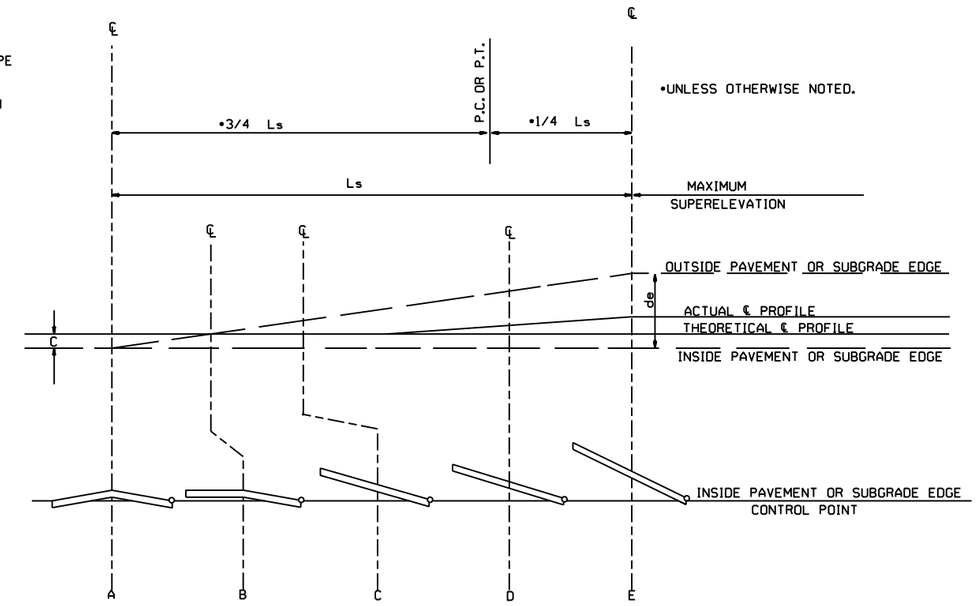

STANDARD METHOD WHEN SUPERELEVATION REVOLVES AROUND INNER SUBGRADE POINT OR INNER PAVEMENT EDGE

NOTE: MAINTAIN NORMAL CROWN ON INSIDE UNTIL SUPERELEVATION EXCEEDS 2C.

DATE	REVISION	DATE FILMED
11-07-19	REVISED SUPERELEVATION TABLE	
10-18-96	ADDED FORMULA	
01-09-87	ISSUED	534-1-9-87

ARKANSAS STATE HIGHWAY COMMISSION

TABLES AND METHOD OF SUPERELEVATION FOR TWO-WAY TRAFFIC

STANDARD DRAWING SE-2

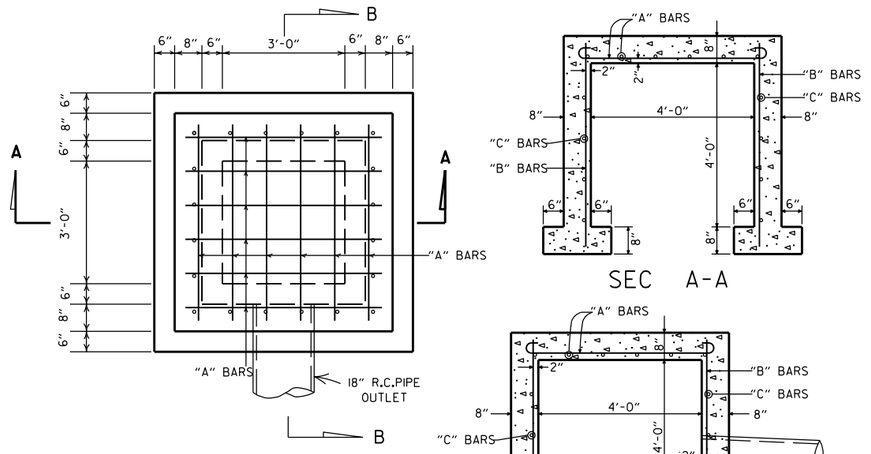

NOTE: MAX FILL HEIGHT ABOVE TOP OF BOX = 13'-0".

STEEL SCHEDULE

BARS	NUMBER	LENGTH	SPACING
"A"	12	6'-0"	10"
"B"	20	5'-0"	10 ½"
"C"	16	5'-0"	12"

ALL STEEL TO BE #4 BARS

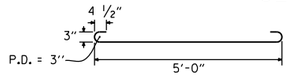

QUANTITIES

CONCRETE 3.31 CU. YDS.
REINFORCING STEEL 168 LB.

GENERAL NOTE:

THE PAY ITEMS FOR REINFORCED CONCRETE SPRING BOXES SHALL BE FOR THE QUANTITTIES OF CONCRETE OF THE CLASS SPECIFIED, REINFORCING STEEL, EXCAVATION FOR STRUCTURES AND 18" R.C. PIPE CULVERT.

REINFORCED CONCRETE SPRING BOX

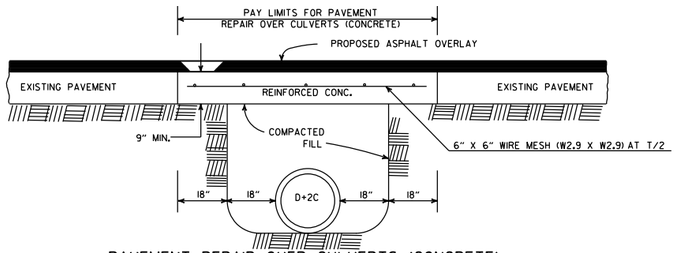

PAVEMENT REPAIR OVER CULVERTS (CONCRETE)

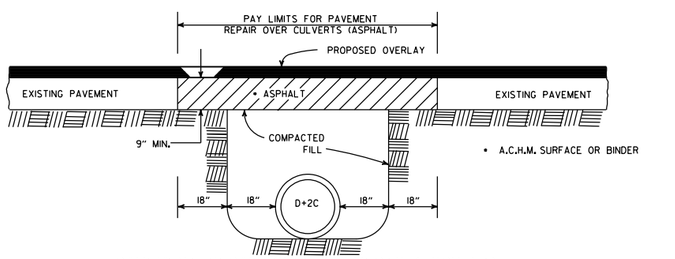

PAVEMENT REPAIR OVER CULVERTS (ASPHALT)

DETAIL SHOWING REPAIR OF EXISTING PAVEMENT AT CULVERT INSTALLATIONS

• A 2" MIN. HIGH CURB IS REQUIRED WHEN CONCRETE WALK IS ADJACENT TO THE HAND RAILING. PAYMENT FOR CURB SHALL BE CONSIDERED INCLUDED IN THE PRICE BID FOR CONCRETE WALKS.

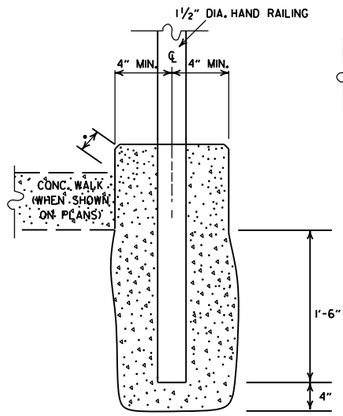

DETAIL OF HAND RAILING SET IN CONCRETE

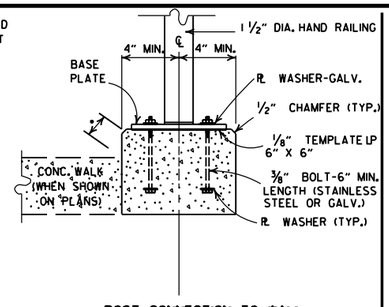

POST CONNECTION TO WALL

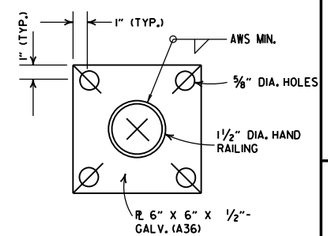

BASE PLATE

POST CONNECTION DETAILS

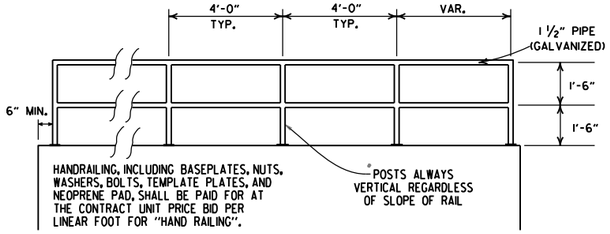

HAND RAILING SHALL CONFORM TO SECTION 633.

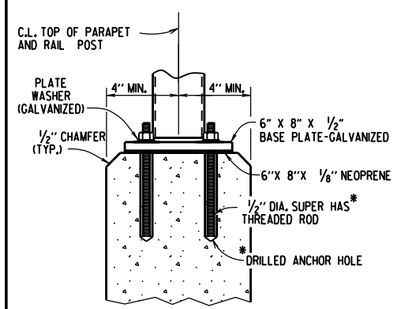

*HILTI HIT RE 500 EPOXY ADHESIVE ANCHOR SYSTEM WITH 4 ½" EMBEDMENT OR APPROVED EQUAL.

THE ADHESIVE ANCHOR SYSTEM SHALL BE INSTALLED IN ACCORDANCE WITH MANUFACTURER'S RECOMMENDATIONS.

POST CONNECTION TO WALL

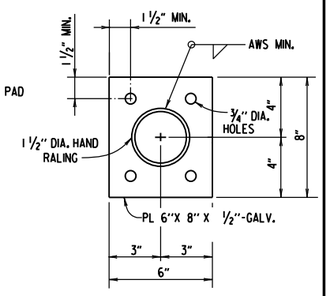

BASE PLATE

DETAILS OF ALTERNATE POST ANCHOR SYSTEM (EPOXY ADHESIVE ANCHORS)

HAND RAILING DETAILS

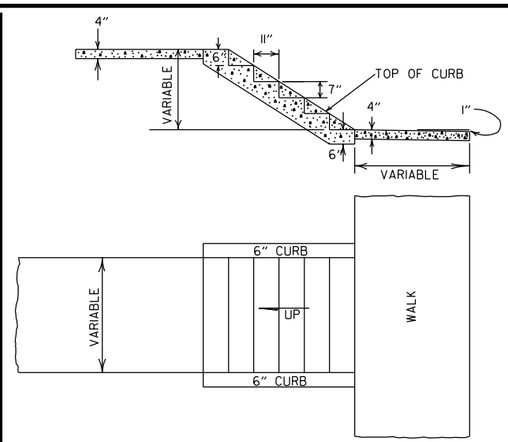

GENERAL NOTES

1. RISE AND TREAD DIMENSIONS OF STEPS MAY BE VARIED AS DIRECTED BY THE ENGINEER, HOWEVER, TREAD WIDTHS SHALL BE 11" MIN. ALL STEPS IN A FLIGHT SHALL HAVE CONSISTENT TREAD & RISER DIMENSIONS.
2. 1" TRANSVERSE EXPANSION JOINTS SHALL BE PLACED IN CONCRETE WALKS AT 45' INTERVALS.

DETAILS OF CONCRETE STEPS & WALKS

DATE	REVISION	DATE FILMED
10-25-18	REVISED DETAIL SHOWING REPAIR OF EXISTING PAVEMENT AT CULVERT INSTALLATIONS	
9-12-13	REVISED REINFORCED CONCRETE SPRING BOX	
7-26-12	REMOVED RETAINING WALL DETAILS & REVISED HAND RAILING DETAILS	
4-17-08	REV. JOINT & FOOTING STEP DETAILS	
11-29-07	REVISED RETAINING WALL DRAINAGE	
5-25-06	REVISED PVMT REPAIR OVER CULVERTS (CONC); REVISED REINFORCED CONC SPRING BOX	
10-9-03	REVISED PIPE RAILING DETAILS TO HAND RAILING DETAILS	
4-10-03	REVISED RETAINING WALL DRAWING	
8-22-02	ADDED HAND RAILING DETAIL	
11-16-01	REVISED PVMT REPAIR OVER CULVERTS (CONC); CORRECTED SPELLING IN GENERAL NOTES	
11-18-98	ADDED GENERAL NOTES TO CONCRETE STEPS & WALKS	
7-02-98	ENLARGED PIPE	
4-03-97	ADDED NOTE TO STEEL BAR SCHED.	
10-18-96	CORRECTED SPELLING	
4-26-96	ADD WEEP HOLE;REV. JOINT SPACING IN RET. WALL	
6-2-94	CHANGED CONST. TO CONTRACTION JOINT	
10-1-92	CHANGED MESH FABRIC TO WIRE MESH	10-1-92
8-15-91	DELETED HDWL MODIFICATION DETAIL	8-15-91
11-8-90	DELETED COLD MIX FROM CULV'T. REPAIR	11-8-90
11-30-89	REV. RETAINING WALL STEEL SCHEDULE	11-30-89
11-17-88	V BARS BEHIND ARROW	665-11-17-88
7-15-88	REV. PAVEMENT REPAIR ADDED HDWL. MODS, DEL. PIPE UNDERDRAINS	649-7-15-88
11-1-84	REV. TRENCH FOR PIPE UNDERDRAIN	510-11-1-84
1-4-83	ELIMINATED CONC. CLASS & ADDED CHAMFER NOTE	682-1-4-83
3-2-81	SPELLING OF "UNDERDRAIN"	721-3-2-81
4-20-79	REV. UNDERDRAIN DET& PAVEMENT REPAIR	674-4-20-79
2-2-76	12"MIN. GRAN. MAT'L. OVER PIPE	919-2-2-76
4-10-75	REM. SPECS. FOR GRAN. MAT'L.	568-4-10-75-853
5-22-74	GRANULAR MAT'L. TO BE SB-3	567-5-22-74-740
10-2-72	REVISED AND REDRAWN	564-10-16-72

ARKANSAS STATE HIGHWAY COMMISSION

DETAILS OF SPECIAL ITEMS

STANDARD DRAWING SI-1

R1-1



STANDARD 30"X30"
EXPRESSWAY 36"X36"
SPECIAL 48"X48"

R1-2

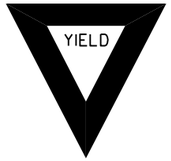

STD. 36"X36"X36"
EXPWY. 48"X48"X48"
FWY. 60"X60"X60"

R2-1



STD. 24"X30"
EXPWY. 36"X48"
FWY. 48"X60"

W3-5



STD. 36"X36"
EXPWY. 48"X48"
FWY. 48"X48"

W3-5a



STD. 36"X36"
EXPWY. 48"X48"
FWY. 48"X48"

R4-1



STD. 24"X30"
EXPWY. 36"X48"
FWY. 48"X60"

R4-2



STD. 24"X30"
EXPWY. 36"X48"
FWY. 48"X60"

R5-1



STD. 30"X30"
EXPWY. 36"X36"
SPECIAL 48"X48"

RII-2



48"X30"

RII-3A

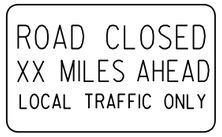

60"X30"

RII-4

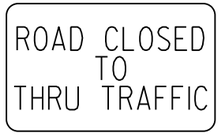

60"X30"

W2I-5a



STD. 36"X36"
FWY. 48"X48"

WI-1



STD. 36"X36"
FWY. 48"X48"

WI-2



STD. 36"X36"
FWY. 48"X48"

WI-3



STD. 48"X48"

WI-4



STD. 48"X48"

WI-6



STD. 48"X24"
SPECIAL 60"X30"

WI-8

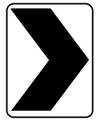

STD. 18"X24"
SPECIAL 24"X30"
EXPWY. 30"X36"
FWY. 36"X48"

W3-1

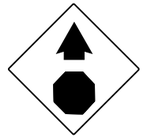

STD. 36"X36"
SPECIAL 48"X48"

W3-2



STD. 36"X36"
SPECIAL 48"X48"

W4-2

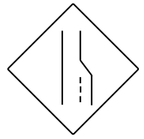

STD. 36"X36"
FWY. 48"X48"

W5-1



STD. 36"X36"
SPECIAL 48"X48"

W6-3



EXPWY. 36"X36"
SPECIAL 48"X48"

W8-7



EXPWY. 36"X36"
FWY. 48"X48"

W9-2



STD. 36"X36"
FWY. 48"X48"

WI3-1



STD. 24"X24"

W20-1



STD. 48"X48"

W20-2



STD. 48"X48"

W20-3



STD. 48"X48"

W20-4



STD. 48"X48"

W20-5



STD. 48"X48"

W20-7a



STD. 36"X36"
FWY. 48"X48"

W2I-2



STD. 30"X30"
SPECIAL 36"X36"

W2I-5



STD. 30"X30"
SPECIAL 36"X36"

W24-1



STD. 36"X36"

WI-4b



STD. 48"X48"

R56-1



STD. 18"X18"

W8-11



STD. 36"X36"
FWY. 48"X48"

W8-9



STD. 36"X36"
FWY. 48"X48"

G20-1



60"X24"

G20-2

48"X24"

OM-3L OM-3R

12"X36"

M4-9

STD. 30"X24"
SPECIAL 48"X36"
SPECIAL 60"X48"

M4-10

48"X18"

R55-1

36"X60"

• USE 6" C LETTERS
•• USE 4" D LETTERS

ADVANCE DISTANCES
(XXXX)

500 FT	½ MILE
1000 FT	¾ MILE
1500 FT	1 MILE AHEAD

GENERAL NOTES:

1. ALL TRAFFIC CONTROL DEVICES USED ON ROAD CONSTRUCTION SHALL CONFORM TO THE MANUAL ON UNIFORM TRAFFIC CONTROL DEVICES, LATEST EDITION, AND TO THE STANDARD HIGHWAY SIGNS, LATEST EDITION, OR AS APPROVED BY THE FEDERAL HIGHWAY ADMINISTRATION.
2. TRAFFIC CONTROL DEVICES SHALL BE SET UP JUST BEFORE THE START OF CONSTRUCTION OPERATIONS AND SHALL BE PROPERLY MAINTAINED DURING THE TIME SUCH CONDITIONS EXIST. THEY SHALL REMAIN IN PLACE ONLY AS LONG AS NEEDED AND REMOVED THEREAFTER.
3. EXISTING SIGNS AND CONSTRUCTION SIGNS SHALL BE KEPT IN PROPER POSITION, AND BE CLEAN AND LEGIBLE AT ALL TIMES. SIGNS THAT DO NOT APPLY TO EXISTING CONDITIONS SHALL BE REMOVED. SIGNS THAT ARE DAMAGED, DEFACED, OR THAT ACCUMULATE DIRT DURING CONSTRUCTION SHALL BE CLEANED, REPAIRED, OR REPLACED.
- 4. SIGNS ARE USUALLY MOUNTED ON A SINGLE POST, ALTHOUGH THOSE WIDER THAN 36" OR LARGER THAN 10 SQ. FT. SHALL BE MOUNTED ON TWO POSTS OR ABOVE A TYPE III BARRICADE.
- 5. SIGN POSTS DIRECT BURIED IN SOIL SHALL BE 2 LB. MINIMUM CHANNEL POST OR 4"x4" WOOD POSTS. CHANNEL POSTS SHALL BE PAINTED GREEN. WOOD POSTS SHALL BE PAINTED WHITE. ALL POSTS SHALL BE NEATLY CONSTRUCTED, AND SHALL BE REPLUMBED, CLEANED, OR REPAIRED AS NEEDED FOR THE DURATION OF THE JOB. THERE SHALL NOT BE MORE THAN 2 POSTS IN A 7' PATH FOR WOOD OR CHANNEL POSTS. ANY CHANNEL POST SPLICE SHALL BE IN ACCORDANCE WITH STANDARD DRAWING TC-3.
6. POST MOUNTED SIGNS IN RURAL AREAS SHALL BE CONSTRUCTED WITH THE NEAR EDGE OF THE SIGN FROM 6 TO 12 FEET FROM THE PAVEMENT EDGE. SIGNS IN URBAN AREAS AND BARRICADE MOUNTED SIGNS SHALL BE MOUNTED A MINIMUM OF 2 FEET FROM THE PAVEMENT EDGE.
7. ALL POST AND BARRICADE MOUNTED SIGNS MOUNTED IN URBAN AREAS SHALL BE MOUNTED A MINIMUM DISTANCE OF 7' FROM THE BOTTOM OF THE SIGN TO THE ROADWAY SURFACE. ALL POST AND BARRICADE MOUNTED SIGNS MOUNTED IN RURAL AREAS SHALL BE MOUNTED A MINIMUM DISTANCE OF 7' FROM THE BOTTOM OF THE SIGN TO THE ROADWAY SURFACE, EXCEPT A MINIMUM OF 6' SHALL BE USED WHEN MOUNTING AN ADVISORY SIGN BELOW A WARNING SIGN. TEMPORARY SIGNS MAY BE MOUNTED ON PORTABLE SUPPORTS FOR INTERMEDIATE TERM STATIONARY WORK CONDITIONS. THE SIGNS MINIMUM MOUNTING HEIGHT SHALL BE 5'. RETROREFLECTIVE DEVICES SHALL BE USED. TEMPORARY SIGNS MAY BE MOUNTED ON PORTABLE SUPPORTS FOR SHORT-TERM, SHORT DURATION, AND MOBILE CONDITIONS. THEY SHALL BE NO LESS THAN ONE (1) FOOT ABOVE THE TRAVELED WAY. LONG-TERM STATIONARY SIGNS SHALL BE DIRECT BURIED IN SOIL, UNLESS CONDITIONS NECESSITATE THE USE OF PORTABLE SIGNS, OR AS APPROVED BY THE ENGINEER. CONCRETE PADS, CONCRETE OR ROCK BALLAST, OR OTHER SOLID MATERIALS SHALL NOT BE UTILIZED WITH PORTABLE SIGN SUPPORTS.
8. FLAGGERS SHALL USE REFLECTORIZED STOP-SLOW PADDLES. FLAGS MAY BE USED ONLY FOR EMERGENCY SITUATIONS.
9. MOST OF THE SIGNS SHOWN ARE ORIENTED TO THE RIGHT. HOWEVER, THIS DOES NOT PRECLUDE THE USE OF MIRROR IMAGES OF THESE SIGNS WHERE THE REVERSE ORIENTATION MIGHT BETTER CONVEY TO MOTORISTS THE PROPER DIRECTION OF MOVEMENT.
10. R55-1 SIGNS SHALL BE PLACED AT LEAST 1500' BUT NOT MORE THAN 1 MILE IN ADVANCE OF THE WORK ZONE. IF A SPEED LIMIT REDUCTION IS IN EFFECT, THE SIGN SHALL BE PLACED A MINIMUM OF 500' IN ADVANCE OF THE "REDUCED SPEED AHEAD" SIGN.

- NOTE: SUPPORTS FOR SIGNS, BARRICADES, AND VERTICAL PANELS THAT ARE DIFFERENT FROM THE REQUIREMENTS SHOWN IN NOTES 4 & 5, BUT MEET THE REQUIREMENTS OF MANUAL FOR ASSESSING SAFETY HARDWARE (MASH), WILL BE ACCEPTED. COMPLIANCE WITH THE REQUIREMENTS OF MANUAL FOR ASSESSING SAFETY HARDWARE (MASH) IS REQUIRED FOR ALL PROJECTS.

DATE	REVISION	FILMED
11-07-19	REVISED FOR MASH	
4-13-17	DELETED RSP-1 & ADDED W21-5a	
9-2-15	REVISED REDUCED SPEED LIMIT AHEAD SIGNS REVISED ROAD WORK NEXT XX MILES	
12-15-11	REVISED W24-1	
11-17-10	DELETED W8-9a & ADDED W8-9	
10-15-09	ADDED REFERENCE TO MASH & ADDED SIGN W24-1	
4-17-08	REVISED SIGN DESIGNATIONS	
11-18-04	REVISED NOTES	
10-9-03	REVISED NOTE 1	
11-16-01	REVISED NOTE 7	
9-28-00	REVISED NOTE	
11-18-98	ADDED NOTE	
6-26-97	REVISED NOTE 5	
4-03-97	REVISED NOTE 5	
10-18-96	ADDED CONTROLLED ACCESS HWY. SIGN & TO NOTE 7	
10-12-95	ADDED R55-1	
6-8-95	REVISED TO CORRECT SIGN ILLUSTRATIONS	6-8-95
2-2-95	REVISED PER PART VI, MUTCD SEPT. 3, 1993	
8-15-91	DRAWN AND PLACED IN USE	

ARKANSAS STATE HIGHWAY COMMISSION

STANDARD TRAFFIC CONTROLS FOR HIGHWAY CONSTRUCTION

STANDARD DRAWING TC-1

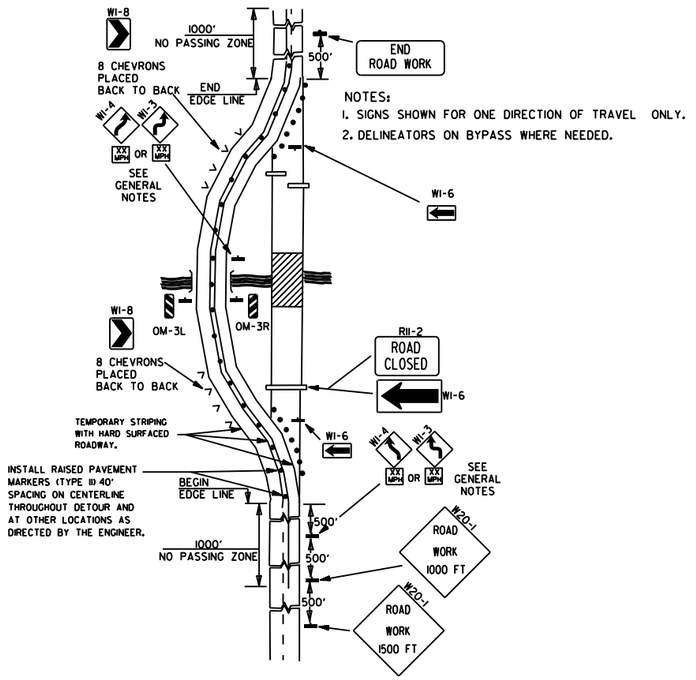

NOTES:
1. SIGNS SHOWN FOR ONE DIRECTION OF TRAVEL ONLY.
2. DELINEATORS ON BYPASS WHERE NEEDED.

(A) TYPICAL APPLICATION OF TRAFFIC CONTROL DEVICES ON A 2-LANE HIGHWAY WHERE THE ENTIRE ROADWAY IS CLOSED AND A BYPASS DETOUR IS PROVIDED.

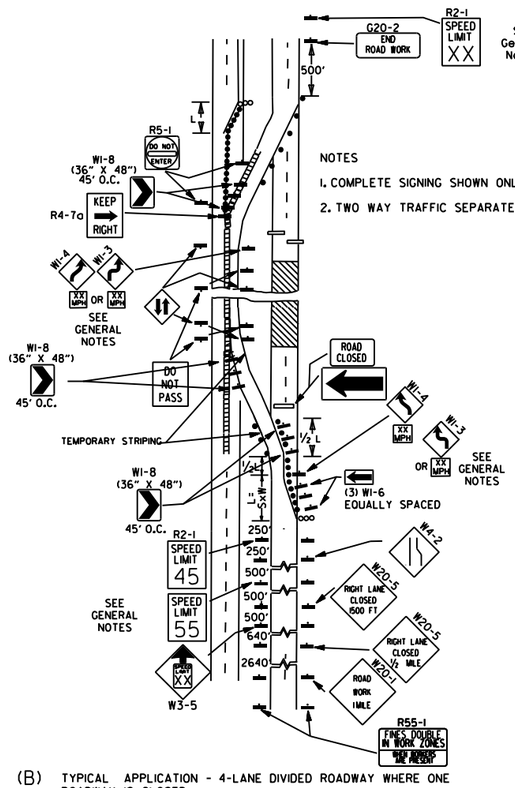

NOTES
1. COMPLETE SIGNING SHOWN ONLY IN CROSSOVER DIRECTION.
2. TWO WAY TRAFFIC SEPARATED WITH POSITIVE BARRIER.

(B) TYPICAL APPLICATION - 4-LANE DIVIDED ROADWAY WHERE ONE ROADWAY IS CLOSED.

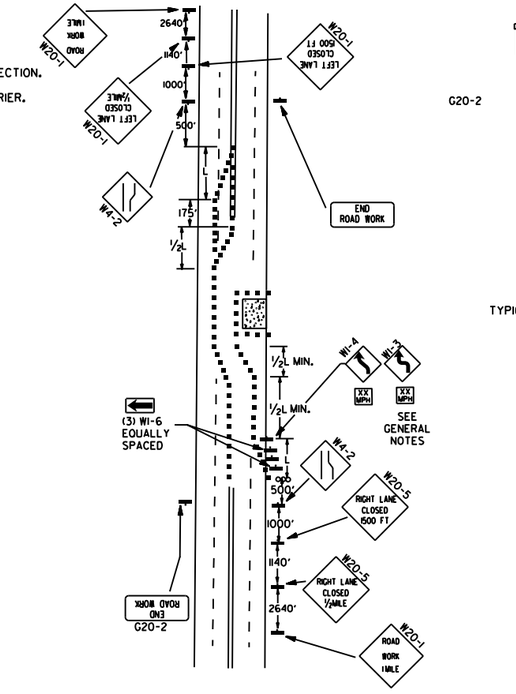

(C) TYPICAL APPLICATION - 4-LANE UNDIVIDED ROADWAY WHERE HALF OF THE ROADWAY IS CLOSED.

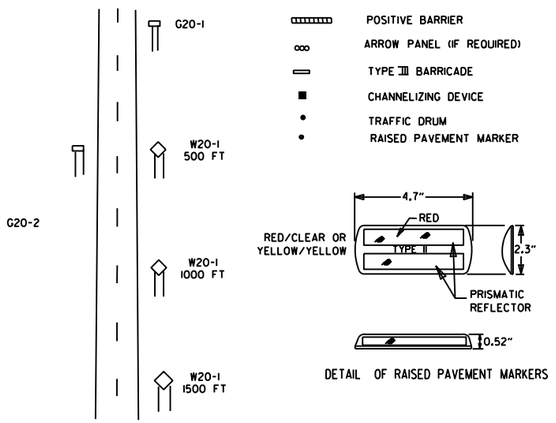

DETAIL OF RAISED PAVEMENT MARKERS

TYPICAL ADVANCE WARNING SIGN PLACEMENT

TAPER FORMULAE:

L=SXW FOR SPEEDS OF 45MPH OR MORE.

$L = \frac{WS^2}{60}$ FOR SPEEDS OF 40MPH OR LESS.

WHERE:

L= MINIMUM LENGTH OF TAPER.

S= NUMERICAL VALUE OF POSTED SPEED LIMIT PRIOR TO WORK OR 85TH PERCENTILE SPEED.

W= WIDTH OF OFFSET.

GENERAL NOTES:

1. THE MAINTENANCE DIVISION SHALL CONDUCT A BALL BANK STUDY TO DETERMINE THE ADVISORY SPEED LIMIT PRIOR TO OPENING TO TRAFFIC. THE ADVISORY SPEED WILL BE POSTED ON WI-3 OR WI-4 CURVE WARNING SIGNS. USE WI-4 WHEN SPEED IS GREATER THAN 30MPH AND WI-3 WHEN 30MPH OR LESS
2. WHEN THE EXISTING SPEED LIMIT IS 55MPH AND THE PLANS REQUIRE A SPEED LIMIT OF 45MPH, THE R2-1(55) SHALL BE OMITTED AND THE W3-5 SHALL BE INSTALLED AT THAT LOCATION. ADDITIONAL R2-1 45MPH SPEED LIMIT SIGNS SHALL BE INSTALLED AT A MAXIMUM OF 1MILE INTERVALS. AT THE END OF THE WORK AREA A R2-1(XX) SHALL BE INSTALLED TO MATCH ORIGINAL SPEED LIMIT.
3. WHEN THE EXISTING SPEED LIMIT IS 65MPH AND THE PLANS REQUIRE A SPEED LIMIT OF 55MPH, THE R2-1(45) SHALL BE OMITTED. ADDITIONAL R2-1 55MPH SPEED LIMIT SIGNS SHALL BE INSTALLED AT A MAXIMUM OF 1MILE INTERVALS. AT THE END OF THE WORK AREA A R2-1(XX) SHALL BE INSTALLED TO MATCH ORIGINAL SPEED LIMIT.
4. THE MAXIMUM SPACING BETWEEN CHANNELIZING DEVICES IN A TAPER SHOULD BE APPROXIMATELY EQUAL IN FEET TO THE SPEED LIMIT. BEYOND THE TAPER, MAXIMUM SPACING SHALL BE TWO TIMES THE SPEED LIMIT, OR AS DIRECTED BY THE ENGINEER.
5. WARNING LIGHTS AND/OR FLAGS MAY BE MOUNTED TO SIGNS OR CHANNELIZING DEVICES AT NIGHT AS NEEDED.
6. PAVEMENT MARKINGS NO LONGER APPLICABLE WHICH MIGHT CREATE CONFUSION IN THE MINDS OF VEHICLE OPERATORS SHALL BE REMOVED OR OBLITERATED AS SOON AS PRACTICABLE.
7. TRAILER MOUNTED DEVICES SUCH AS ARROW PANELS AND PORTABLE CHANGEABLE MESSAGE SIGNS SHALL BE DELINEATED BY AFFIXING CONSPICUITY MATERIAL IN A CONTINUOUS LINE ON THE FACE OF THE TRAILER. WHEN PLACED ON OR ADJACENT TO THE SHOULDER AND NOT BEHIND A POSITIVE BARRIER, THESE DEVICES SHALL BE DELINEATED BY PLACING FIVE (5) TRAFFIC DRUMS, EQUALLY SPACED ALONG THE TRAFFIC SIDE OF THE DEVICE. PAYMENT FOR TRAFFIC DRUMS SHALL BE CONSIDERED INCLUDED IN THE PRICE BID FOR VARIOUS TRAILER MOUNTED DEVICES.
8. DIMENSIONS SHOWN FOR RAISED PAVEMENT MARKERS ARE TYPICAL. THE CONTRACTOR MAY SUBSTITUTE SIMILAR MARKERS WITH THE APPROVAL OF THE ENGINEER. REQUESTING APPROVAL FOR SIMILAR MARKERS MAY BE MADE BY REFERRING TO THE ARDOT QUALIFIED PRODUCTS LIST.
9. ALL TRAILER MOUNTED DEVICES SUCH AS ARROW PANELS AND PORTABLE CHANGEABLE MESSAGE SIGNS SHALL MEET THE REQUIREMENTS OF THE MANUAL FOR ASSESSING SAFETY HARDWARE (MASH).

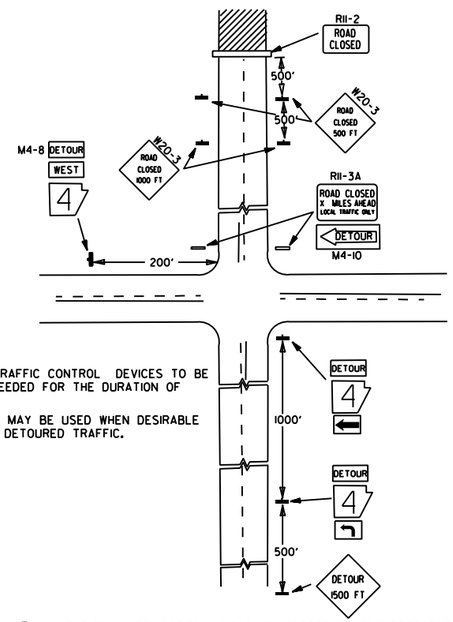

NOTES:
1. REGULATORY TRAFFIC CONTROL DEVICES TO BE MODIFIED AS NEEDED FOR THE DURATION OF THE DETOUR.
2. STREET NAMES MAY BE USED WHEN DESIRABLE FOR DIRECTING DETOURED TRAFFIC.

(D) TYPICAL APPLICATION - ROADWAY CLOSED BEYOND DETOUR POINT.

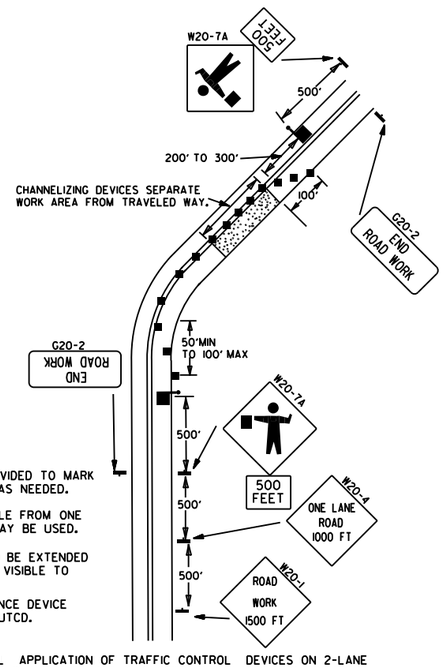

NOTES:
1. FLOOD LIGHTS SHOULD BE PROVIDED TO MARK FLAGGER STATIONS AT NIGHT AS NEEDED.
2. IF ENTIRE WORK AREA IS VISIBLE FROM ONE STATION, A SINGLE FLAGGER MAY BE USED.
3. CHANNELIZING DEVICES ARE TO BE EXTENDED TO A POINT WHERE THEY ARE VISIBLE TO APPROACHING TRAFFIC.
4. AUTOMATED FLAGGER ASSISTANCE DEVICE (AFAD) OPTIONAL. REFER TO MUTCD.

(E) TYPICAL APPLICATION OF TRAFFIC CONTROL DEVICES ON 2-LANE HIGHWAY WHERE ONE LANE IS CLOSED AND FLAGGING IS PROVIDED.

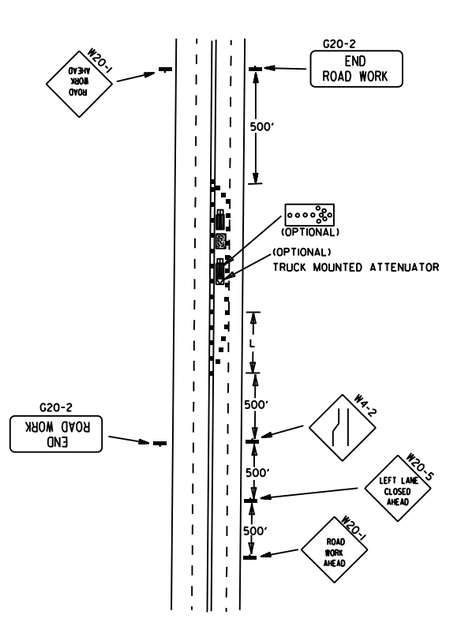

(F) TYPICAL APPLICATION - 4-LANE UNDIVIDED ROADWAY WITH INSIDE LANE CLOSED.

DATE	REVISION	FILMED
05-20-21	REVISED NOTE 7	
11-07-19	REVISED NOTE 1, ADDED NOTE 9	
9-2-15	REVISED NOTE 2, ADDED NOTE 8, REVISED DRAWING (A) & REPLACED R2-5A WITH W3-5	
9-12-13	REVISED DETAIL OF RAISED PAVEMENT MARKERS	
3-11-10	ADDED (AFAD)	
11-20-08	REVISED SIGN DESIGNATIONS	
11-18-04	ADDED GENERAL NOTE	
10-18-96	ADDED R55-1	
4-26-96	CORRECTED (G) BEHIND G20-2	
6-8-95	CORRECTED SIGN IDENT. ON W1-4A	6-8-95
2-2-95	REVISED PER PART VI, MUTCD, SEPT. 3, 1993	
8-15-91	DRAWN AND PLACED IN USE	

ARKANSAS STATE HIGHWAY COMMISSION

STANDARD TRAFFIC CONTROLS FOR HIGHWAY CONSTRUCTION

STANDARD DRAWING TC-2

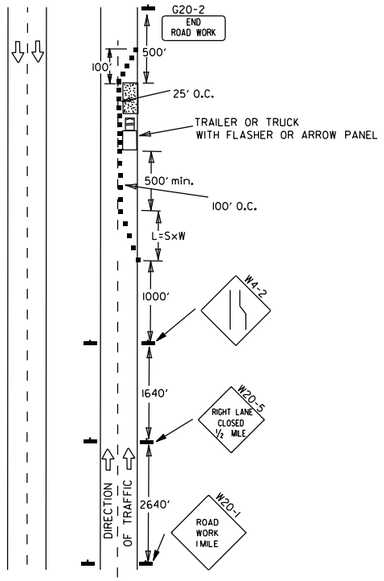

(A) TYPICAL APPLICATION - DAYTIME MAINTENANCE OPERATIONS OF SHORT DURATION ON A 4-LANE DIVIDED ROADWAY WHERE HALF OF THE ROADWAY IS CLOSED.

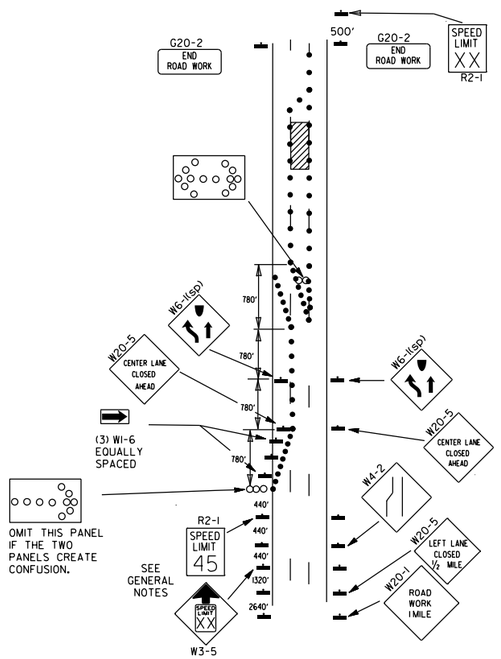

(B) TYPICAL APPLICATION - 3-LANE ONEWAY ROADWAY WHERE CENTER LANE IS CLOSED.

KEY:

ARROW PANEL (IF REQUIRED)

■ CHANNELIZING DEVICE

● TRAFFIC DRUM

GENERAL NOTES:

1. A SPEED LIMIT REDUCTION MAY BE IMPLEMENTED ONLY WHEN DESIGNATED IN THE PLAN OR WHEN RECOMMENDED BY THE ROADWAY DESIGN DIVISION.
2. WHEN THE EXISTING SPEED LIMIT IS 55MPH AND THE PLANS REQUIRE A SPEED LIMIT OF 45MPH, THE R2-1(55) SHALL BE OMITTED AND THE W3-5 SHALL BE INSTALLED AT THAT LOCATION. ADDITIONAL R2-1 45MPH SPEED LIMIT SIGNS SHALL BE INSTALLED AT A MAXIMUM OF 1MILE INTERVALS. AT THE END OF THE WORK AREA A R2-1(XX) SHALL BE INSTALLED TO MATCH ORIGINAL SPEED LIMIT.
3. WHEN THE EXISTING SPEED LIMIT IS 65MPH AND THE PLANS REQUIRE A SPEED LIMIT OF 55MPH, THE R2-1(45) SHALL BE OMITTED. ADDITIONAL R2-1 55MPH SPEED LIMIT SIGNS SHALL BE INSTALLED AT A MAXIMUM OF 1MILE INTERVALS, AT THE END OF THE WORK AREA A R2-1(XX) SHALL BE INSTALLED TO MATCH ORIGINAL SPEED LIMIT.
4. THE MAXIMUM SPACING BETWEEN CHANNELIZING DEVICES IN A TAPER SHOULD BE APPROXIMATELY EQUAL IN FEET TO THE SPEED LIMIT. BEYOND THE TAPER, MAXIMUM SPACING SHALL BE TWO TIMES THE SPEED LIMIT OR AS DIRECTED BY THE ENGINEER.
5. WARNING LIGHTS AND/OR FLAGS MAY BE MOUNTED TO SIGNS OR CHANNELIZING DEVICES AT NIGHT AS NEEDED.
6. PAVEMENT MARKINGS NO LONGER APPLICABLE WHICH MIGHT CREATE CONFUSION IN THE MINDS OF VEHICLE OPERATORS SHALL BE REMOVED OR OBLITERATED AS SOON AS PRACTICABLE.
7. THE G20-1 SIGN WILL BE REQUIRED ON JOBS OF OVER TWO MILES IN LENGTH. WHEN THE LANE CLOSURE IS NOT AT THE BEGINNING OF THE PROJECT, THE G20-1 SIGN SHALL BE ERECTED 125' IN ADVANCE OF THE JOB LIMIT. ADDITIONAL W20-1 (1 MILE) SIGNS ARE NOT REQUIRED IN ADVANCE OF LANE CLOSURES THAT BEGIN INSIDE THE PROJECT LIMITS.
8. FLAGGERS SHALL USE STOP/SLOW PADDLES FOR CONTROLLING TRAFFIC THROUGH WORK ZONES. FLAGS MAY BE USED ONLY FOR EMERGENCY SITUATIONS.
9. ALL PLASTIC DRUMS AND CONES SHALL MEET THE REQUIREMENTS OF MANUAL FOR ASSESSING SAFETY HARDWARE (MASH).
10. TRAILER MOUNTED DEVICES SUCH AS ARROW PANELS AND PORTABLE CHANGEABLE MESSAGE SIGNS SHALL BE DELINEATED BY AFFIXING CONSPICUITY MATERIAL IN A CONTINUOUS LINE ON THE FACE OF THE TRAILER. WHEN PLACED ON OR ADJACENT TO THE SHOULDER AND NOT BEHIND A POSITIVE BARRIER, THESE DEVICES SHALL BE DELINEATED BY PLACING FIVE (5) TRAFFIC DRUMS, EQUALLY SPACED ALONG THE TRAFFIC SIDE OF THE DEVICE. PAYMENT FOR TRAFFIC DRUMS SHALL BE CONSIDERED INCLUDED IN THE PRICE BID FOR VARIOUS TRAILER MOUNTED DEVICES.
11. ALL TRAILER MOUNTED DEVICES SUCH AS ARROW PANELS AND PORTABLE CHANGEABLE MESSAGE SIGNS SHALL MEET THE REQUIREMENTS OF THE MANUAL FOR ASSESSING SAFETY HARDWARE (MASH).

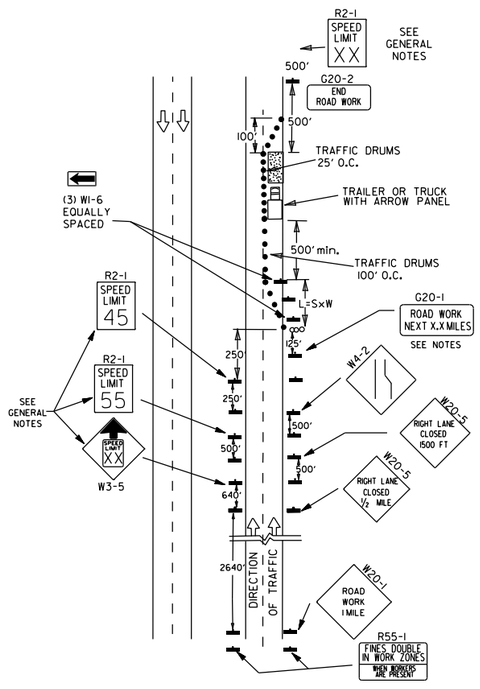

(C) TYPICAL APPLICATION - CONSTRUCTION OPERATIONS OF INTERMEDIATE TO LONG TERM DURATION ON A 4-LANE DIVIDED ROADWAY WHERE HALF OF THE ROADWAY IS CLOSED.

CHANNELIZING DEVICES

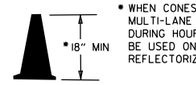

* WHEN CONES ARE USED ON FREEWAYS AND MULTI-LANE HIGHWAYS, THEY SHALL BE 28" MIN. DURING HOURS OF DARKNESS, 28" CONES SHALL BE USED ON ALL ROADWAYS, AND SHALL BE REFLECTORIZED IN ACCORDANCE WITH THE M.U.T.C.D.

CONES

PLASTIC DRUM

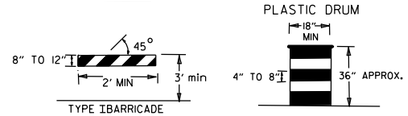

NOTE:
FOR ALL ROAD CLOSURES, THE TYPE III BARRICADES SHALL BE OF SUFFICIENT LENGTH TO EXTEND ACROSS ENTIRE ROADWAY.

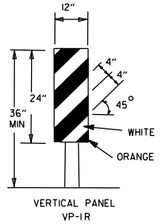

VERTICAL PANEL PLACEMENT

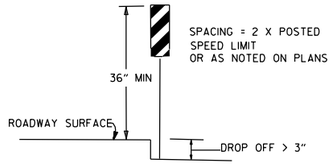

FLAG

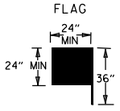

FLAG SHALL BE OF GOOD GRADE RED MATERIAL

TRAFFIC CONTROL DEVICES			
NON-INTERSTATE			
VERTICAL DIFFERENTIAL	LOCATION	TRAFFIC CONTROL	
		≤ 45 MPH	> 45 MPH
≤ 1"	CENTERLINE	W8-11	W8-11
> 1" ≤ 3"	CENTERLINE	W8-11 AND CENTERLINE LANE STRIPING	W8-11 AND CENTERLINE LANE STRIPING
> 3"	CENTERLINE	STANDARD LANE CLOSURE[6]	STANDARD LANE CLOSURE[6]
≤ 3"	EDGE OF TRAVELED LANE OR EDGE OF SHOULDER	W8-9 AND TRAFFIC DRUMS[1]	W8-9 AND TRAFFIC DRUMS[1]
> 3" ≤ 6"	EDGE OF TRAVELED LANE OR EDGE OF SHOULDER	W8-17, EDGE LINE STRIPING, AND TRAFFIC DRUMS[1]	W8-17, EDGE LINE STRIPING, AND TRAFFIC DRUMS[1]
> 6" ≤ 18"	EDGE OF TRAVELED LANE OR EDGE OF SHOULDER	W8-17, EDGE LINE STRIPING, AND TRAFFIC DRUMS[1]	W8-17, EDGE LINE STRIPING, AND TRAFFIC DRUMS[2]
> 18" ≤ 24"	EDGE OF TRAVELED LANE OR EDGE OF SHOULDER	W8-17, EDGE LINE STRIPING, AND TRAFFIC DRUMS[1]	A STABILIZED WEDGE, W8-17, EDGE LINE STRIPING AND TRAFFIC DRUMS[3]
> 24"	EDGE OF TRAVELED LANE OR EDGE OF SHOULDER	PRECAST CONCRETE BARRIER[4] & EDGE LINES	PRECAST CONCRETE BARRIER[4] & EDGE LINES

INTERSTATE		
VERTICAL DIFFERENTIAL	LOCATION	TRAFFIC CONTROL
≤ 3"	CENTERLINE	W8-11 AND LANE STRIPING
≤ 3"	EDGE OF TRAVELED LANE OR EDGE OF SHOULDER	W8-9, EDGE LINE STRIPING, AND TRAFFIC DRUMS[2]
> 3" ≤ 6"	EDGE OF TRAVELED LANE OR EDGE OF SHOULDER	W8-17, EDGE LINE STRIPING, AND TRAFFIC DRUMS[2]
> 6"	EDGE OF TRAVELED LANE OR EDGE OF SHOULDER	PRECAST CONCRETE BARRIER & EDGE LINES

INTERSTATE AND NON-INTERSTATE		
FORESLOPE	HEIGHT	TRAFFIC CONTROL
1:1	> 2 FT	PRECAST CONCRETE BARRIER
2:1	≤ 5 FT	TRAFFIC DRUMS
2:1	> 5 FT	PRECAST CONCRETE BARRIER
Flatter than 2:1	N/A	TRAFFIC DRUMS

GENERAL NOTES:

1. WHEN THE SHOULDER AREA IS USED AS PART OF THE TRAVELED LANE AND THERE IS INSUFFICIENT WIDTH TO PLACE TRAFFIC DRUMS ON THE REMAINING SHOULDER WIDTH, THEN VERTICAL PANELS SHALL BE USED.
2. WHEN THERE IS INSUFFICIENT WIDTH TO PLACE TRAFFIC DRUMS ON THE REMAINING SHOULDER WIDTH, A STABILIZED WEDGE SHALL BE USED.
3. PRECAST CONCRETE BARRIER WALL CAN BE USED IN LIEU OF A STABILIZED WEDGE, W8-17 SIGN, EDGE LINE STRIPING, AND TRAFFIC DRUMS, IF AND WHERE DIRECTED BY THE ENGINEER.
4. A STABILIZED WEDGE, W8-17 SIGN, EDGE LINE STRIPING, AND TRAFFIC DRUMS CAN BE USED IN LIEU OF PRECAST CONCRETE BARRIER WALL, IF AND WHERE DIRECTED BY THE ENGINEER.
5. W21-5, W21-5a, AND/OR W21-5b SIGNS SHALL BE USED WHERE THE ROADWAY IS UNOBSTRUCTED IF AND WHERE DIRECTED BY THE ENGINEER.
6. TIME LIMITATIONS MUST CONFORM TO SECTION 603 OF THE STANDARD SPECIFICATIONS FOR HIGHWAY CONSTRUCTION (CURRENT EDITION).

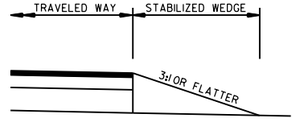

STABILIZED WEDGE

NOTE:
MATERIALS FOR THE STABILIZED WEDGE SHALL MEET THE REQUIREMENTS PROVIDED IN SECTION 603.02 OF THE STANDARD SPECIFICATIONS.

STOP SLOW PADDLE

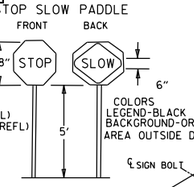

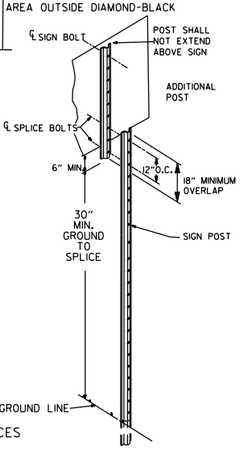

NOTES: USE SPLICES ONLY WHEN NECESSARY FOR INSTALLATION. TYPICAL INSTALLATION SHOULD HAVE NO SPLICES (SEE STD. DRAWING NO. SHS-21)

NORMAL INSTALLATIONS WILL REQUIRE 1/4" DIA. BOLTS TO MOUNT SIGNS TO POST AND 5/16" DIA. BOLTS TO ASSEMBLE THE VARIOUS POST SUPPORTS. EACH OF THESE BOLTS SHALL BE CARRIAGE BOLTS.

SIGN POSTS SHALL BE PAINTED GREEN; SIGNS SHALL NOT BE PAINTED, AND ALL SIGN POSTS SHALL BE PLUMB.

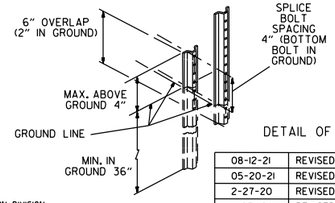

DETAIL OF SPLICES

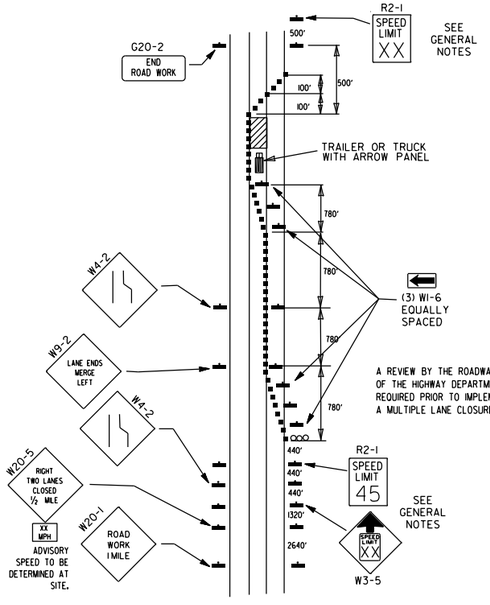

A REVIEW BY THE ROADWAY DESIGN DIVISION OF THE HIGHWAY DEPARTMENT WILL BE REQUIRED PRIOR TO IMPLEMENTING A MULTIPLE LANE CLOSURE.

(D) TYPICAL APPLICATION - CLOSING MULTIPLE LANES OF A MULTILANE HIGHWAY.

DATE	REVISION	FILMED
08-12-21	REVISED TRAFFIC CONTROL DEVICES AND NOTES	
05-20-21	REVISED NOTE 10	
2-27-20	REVISED TRAFFIC CONTROL DEVICES DETAILS	
11-07-19	REVISED NOTE 9, ADDED NOTE 11	
7-25-19	REVISED TRAFFIC CONTROL DEVICES DETAILS	
9-2-15	REVISED NOTE 2 & REPLACED R2-5A WITH W3-5	
10-15-09	ADDED REFERENCE TO MASH	
11-20-08	REVISED SIGN DESIGNATIONS	
11-18-04	ADDED NOTE	
10-1-98	ADDED NOTE	
4-03-97	ADDED (SP) TO W6-1& REVISED TRAFFIC CONTROL DEVICES NOTE	
10-18-96	ADDED R55-1	
10-12-95	MOVED UPPER SPLICE	
6-8-95	REVISED SPLICE DETAIL, TEXT	6-8-95
2-2-95	REVISED PER PART VI, MUTCD, SEPT. 3, 1993	
8-15-91	DRAWN AND PLACED IN USE	

ARKANSAS STATE HIGHWAY COMMISSION

STANDARD TRAFFIC CONTROLS FOR HIGHWAY CONSTRUCTION

STANDARD DRAWING TC-3

GENERAL NOTES

INSTALL A MINIMUM OF 2 UPSLOPE STAKES AND 4 DOWNSLOPE STAKES AT AN ANGLE TO WEDGE WATTLE TO BOTTOM OF DITCH.

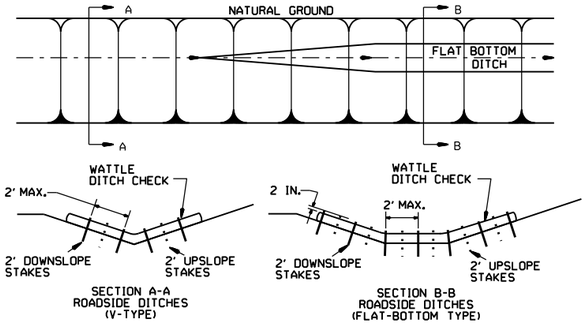

WATTLE DITCH CHECK (E-1)

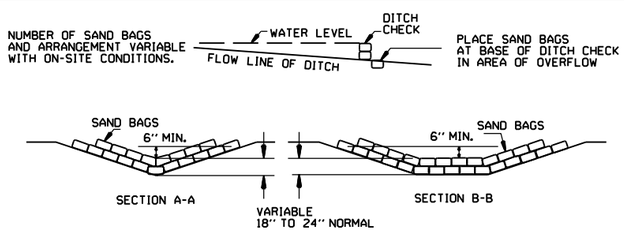

SAND BAG DITCH CHECK (E-5)

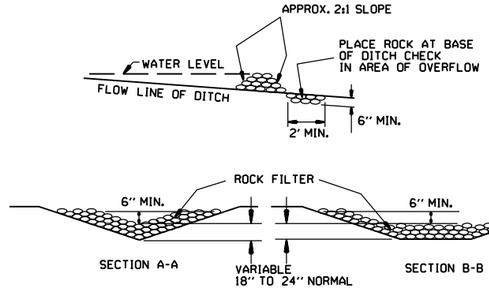

ROCK DITCH CHECK (E-6)

GENERAL NOTES

GEOTEXTILE FABRIC (TYPE 4) IN ACCORDANCE WITH SECTION 625

GEOTEXTILE FABRIC SHALL BE SPLICED TOGETHER WITH A SEWN SEAM ONLY AT A SUPPORT POST OR TWO SECTIONS OF FENCE MAY BE OVERLAPPED INSTEAD. PAYMENT OF ADDITIONAL MATERIAL FOR OVERLAP WILL NOT BE MADE.

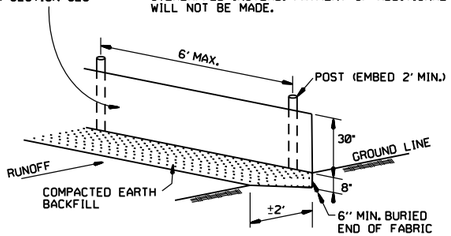

SILT FENCE (E-11)

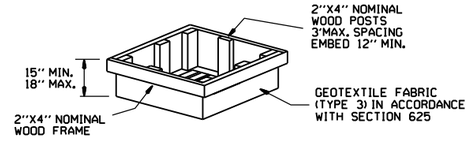

DROP INLET SILT FENCE (E-7)

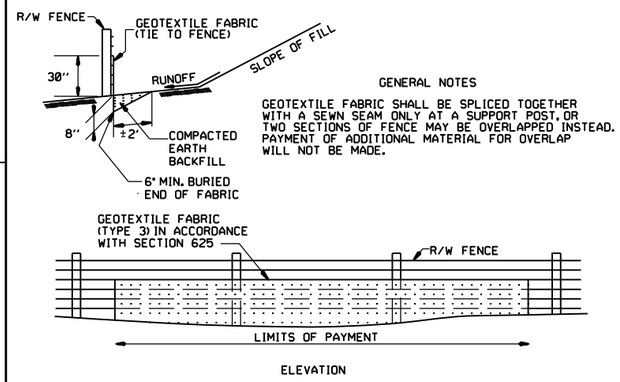

GENERAL NOTES

GEOTEXTILE FABRIC SHALL BE SPLICED TOGETHER WITH A SEWN SEAM ONLY AT A SUPPORT POST, OR TWO SECTIONS OF FENCE MAY BE OVERLAPPED INSTEAD. PAYMENT OF ADDITIONAL MATERIAL FOR OVERLAP WILL NOT BE MADE.

SILT FENCE ON R/W FENCE (E-4)

GENERAL NOTES

1. STRAW BALES SHALL BE INSTALLED SO THAT THE BINDINGS ARE ORIENTED AROUND THE SIDES RATHER THAN ALONG THE TOPS AND BOTTOMS OF THE BALES. THE BALES SHALL BE A MINIMUM OF 30 INCHES IN LENGTH.

2. NO GAPS SHALL BE LEFT BETWEEN BALES.

3. BALED STRAW FILTER BARRIERS COMPLETED AND ACCEPTED WILL BE MEASURED BY THE BALE IN PLACE AS AUTHORIZED BY THE ENGINEER AND WILL BE PAID FOR AT THE CONTRACT UNIT PRICE BID PER BALE FOR BALED STRAW DITCH CHECKS.

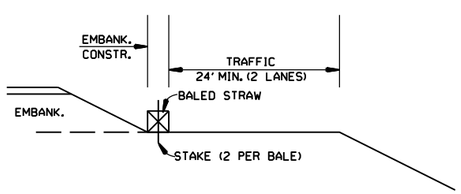

BALED STRAW FILTER BARRIER (E-2)

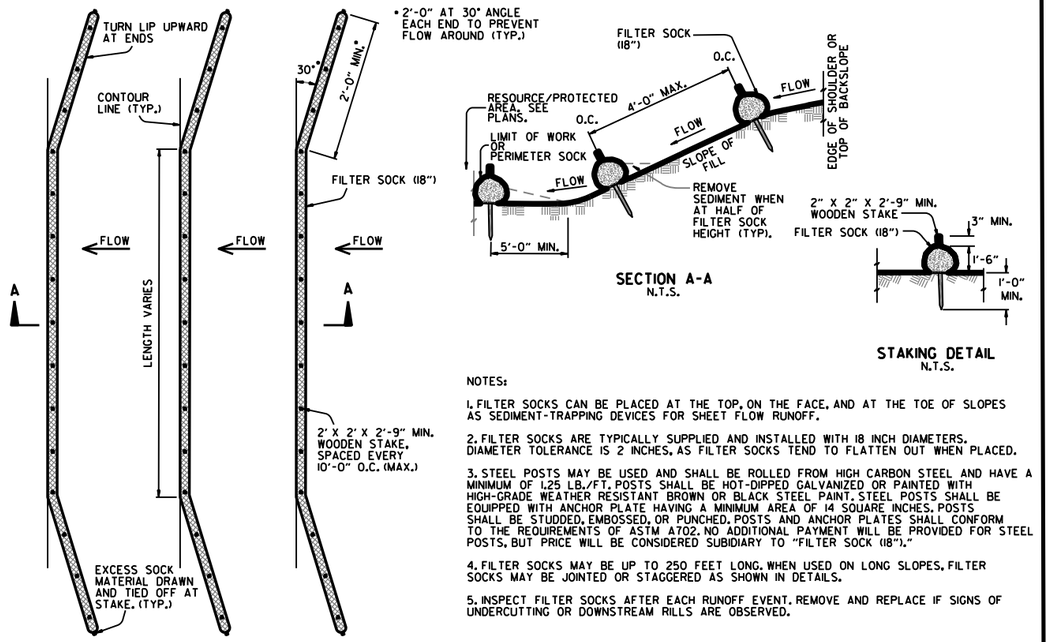

NOTES:

1. FILTER SOCKS CAN BE PLACED AT THE TOP, ON THE FACE, AND AT THE TOE OF SLOPES AS SEDIMENT-TRAPPING DEVICES FOR SHEET FLOW RUNOFF.

2. FILTER SOCKS ARE TYPICALLY SUPPLIED AND INSTALLED WITH 18 INCH DIAMETERS. DIAMETER TOLERANCE IS 2 INCHES, AS FILTER SOCKS TEND TO FLATTEN OUT WHEN PLACED.

3. STEEL POSTS MAY BE USED AND SHALL BE ROLLED FROM HIGH CARBON STEEL AND HAVE A MINIMUM OF 1.25 LB./FT. POSTS SHALL BE HOT-DIPPED GALVANIZED OR PAINTED WITH HIGH-GRADE WEATHER RESISTANT BROWN OR BLACK STEEL PAINT. STEEL POSTS SHALL BE EQUIPPED WITH ANCHOR PLATE HAVING A MINIMUM AREA OF 14 SQUARE INCHES. POSTS SHALL BE STUDDED, EMBOSSED, OR PUNCHED. POSTS AND ANCHOR PLATES SHALL CONFORM TO THE REQUIREMENTS OF ASTM A702. NO ADDITIONAL PAYMENT WILL BE PROVIDED FOR STEEL POSTS, BUT PRICE WILL BE CONSIDERED SUBIDIARY TO "FILTER SOCK (18")."

4. FILTER SOCKS MAY BE UP TO 250 FEET LONG. WHEN USED ON LONG SLOPES, FILTER SOCKS MAY BE JOINTED OR STAGGERED AS SHOWN IN DETAILS.

5. INSPECT FILTER SOCKS AFTER EACH RUNOFF EVENT. REMOVE AND REPLACE IF SIGNS OF UNDERCUTTING OR DOWNSTREAM RILLS ARE OBSERVED.

FILTER SOCK ALONG SLOPE (E-3)

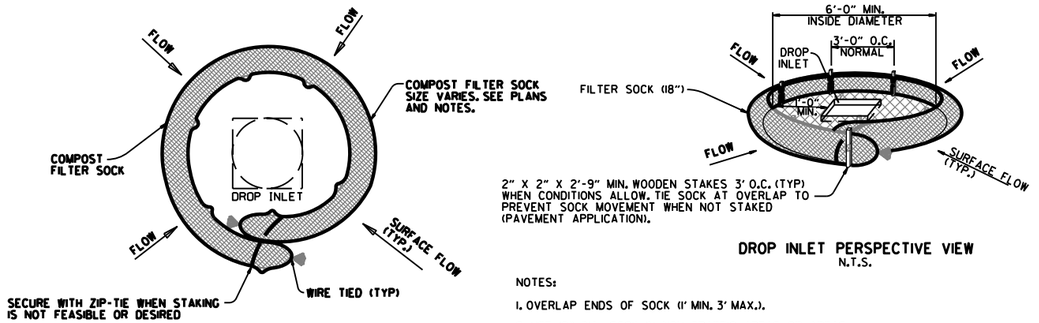

NOTES:

1. OVERLAP ENDS OF SOCK (1' MIN. 3' MAX.).

2. USE 18" DIA. SOCK IN NON-TRAFFIC AREAS OR AREAS WHERE SAFETY IS NOT A CONCERN.

COMPOST FILTER SOCK DROP INLET PROTECTION (E-13)

DATE	REVISION	FILMED
11-16-17	ADDED FILTER SOCK E-3 AND E-13	
12-15-11	DELETED BALED STRAW DITCH CHECK & ADDED WATTLE DITCH CHECK	
11-18-98	ADDED NOTES	
07-02-98	ADDED BALED STRAW FILTER BARRIER (E-2)	
07-20-95	REVISED SILT FENCE E-4 AND E-11	7-20-95
07-15-94	REV. E-4 & E-11 MIN. 13" BURIED END OF FABRIC	
06-02-94	REVISED E-1,4,7 & 11; DELETED E-2 & 3	6-2-94
04-01-93	REDRAWN	
10-01-92	REDRAWN	
08-02-76	ISSUED R.D.M.	298-7-28-76

ARKANSAS STATE HIGHWAY COMMISSION

TEMPORARY EROSION CONTROL DEVICES

STANDARD DRAWING TEC-1

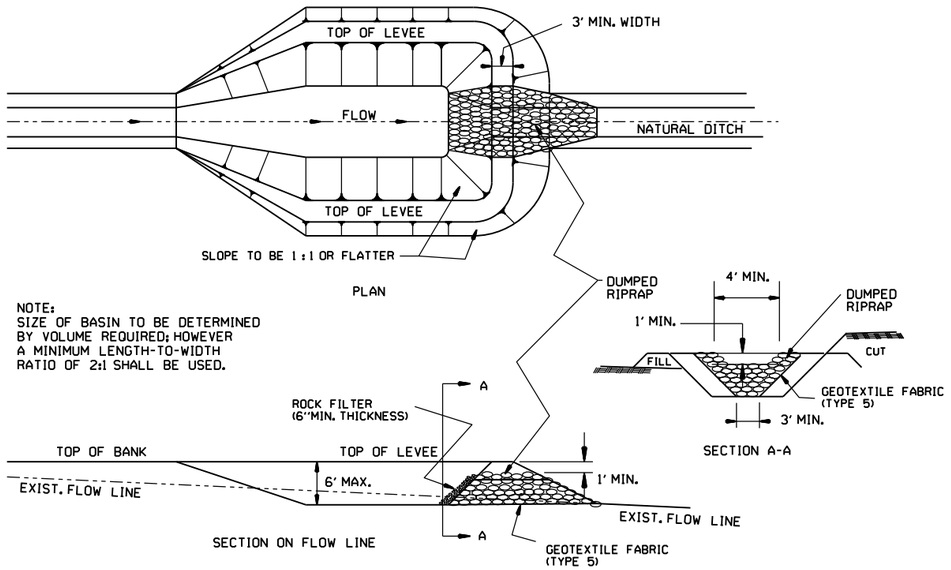

SEDIMENT BASIN WITH RIPRAP OUTLET (E-9)

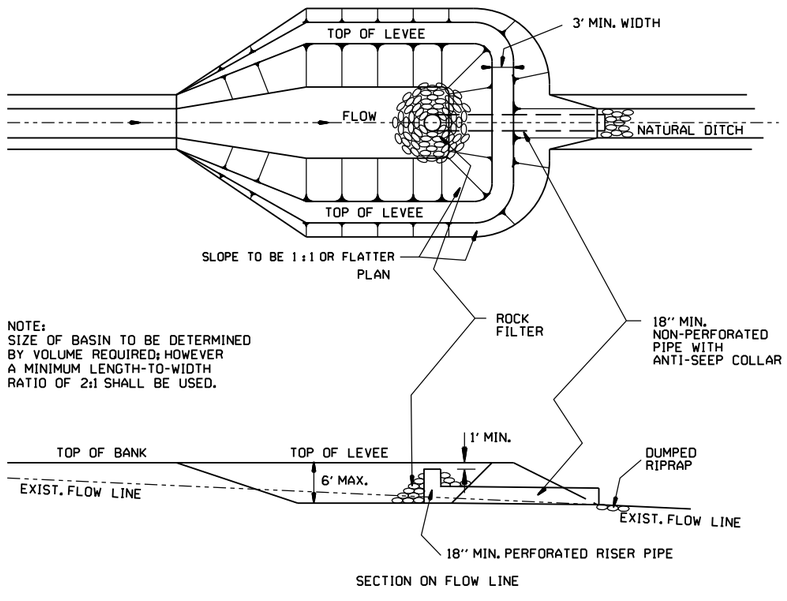

SEDIMENT BASIN WITH PIPE OUTLET (E-10)

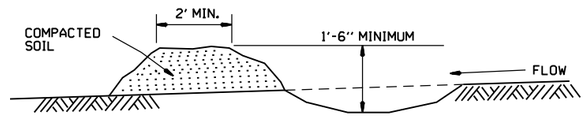

DIVERSION DITCH (E-8)

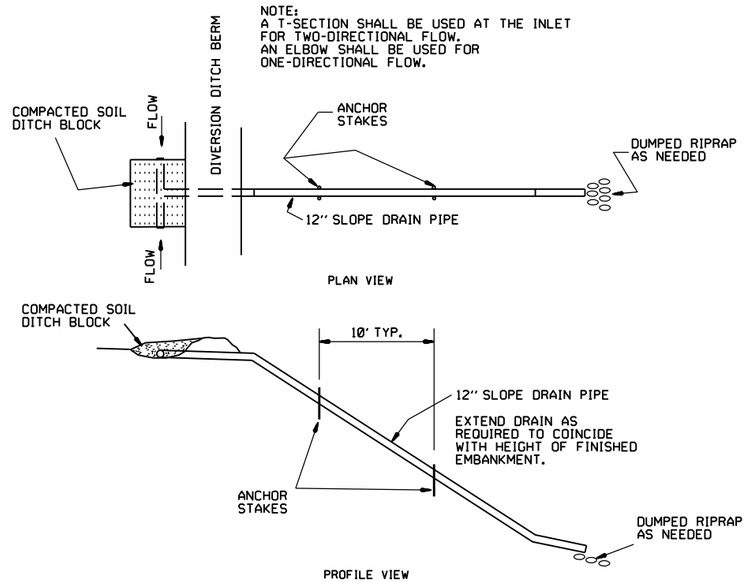

SLOPE DRAIN (E-12)

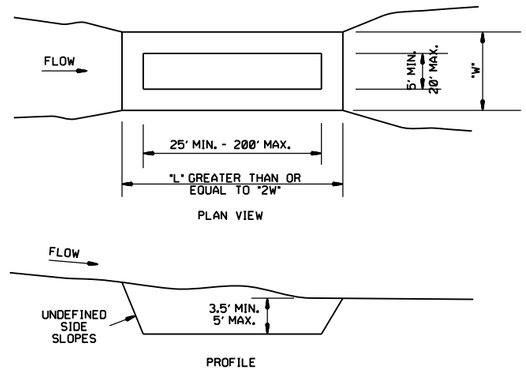

SEDIMENT BASIN (E-14)

DATE	REVISION	FILMED
6-2-94	Revised E-8 & E-12; Added E-14 & Deleted E-13	
4-1-93	ISSUED	

ARKANSAS STATE HIGHWAY COMMISSION

TEMPORARY EROSION CONTROL DEVICES

STANDARD DRAWING TEC-2

CLEARING AND GRUBBING

CONSTRUCTION SEQUENCE

1. PLACE PERIMETER CONTROLS (I.E. SILT FENCES , DIVERSION DITCHES, SEDIMENT BASINS, ETC.)

2. PERFORM CLEARING AND GRUBBING OPERATION.

EXCAVATION

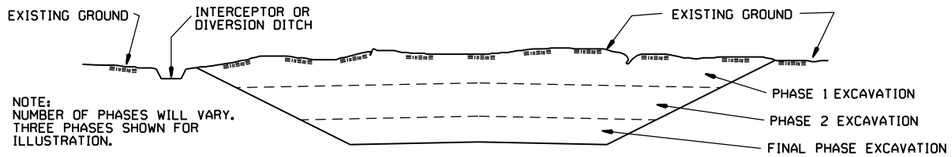

GENERAL NOTE

ALL CUT SLOPES SHALL BE DRESSED, PREPARED, SEEDED, AND MULCHED AS THE WORK PROGRESSES. SLOPES SHALL BE EXCAVATED AND STABILIZED IN EQUAL INCREMENTS NOT TO EXCEED 25 FEET, MEASURED VERTICALLY.

CONSTRUCTION SEQUENCE

1. EXCAVATE AND STABILIZE INTERCEPTOR AND/OR DIVERSION DITCHES.

2. PERFORM PHASE 1 EXCAVATION. PLACE PERMANENT OR TEMPORARY SEEDING.

3. PERFORM PHASE 2 EXCAVATION. PLACE PERMANENT OR TEMPORARY SEEDING.

4. PERFORM FINAL PHASE OF EXCAVATION. PLACE PERMANENT OR TEMPORARY SEEDING. STABILIZE DITCHES. CONSTRUCT DITCH CHECKS, DIVERSION DITCHES, SEDIMENT BASINS, OR OTHER EROSION CONTROL DEVICES AS REQUIRED.

EMBANKMENT

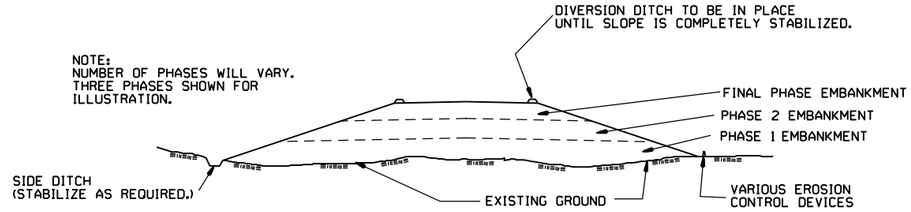

GENERAL NOTE

ALL EMBANKMENT SLOPES SHALL BE DRESSED, PREPARED, SEEDED, AND MULCHED AS THE WORK PROGRESSES. SLOPES SHALL BE CONSTRUCTED AND STABILIZED IN EQUAL INCREMENTS NOT TO EXCEED 25 FEET, MEASURED VERTICALLY.

CONSTRUCTION SEQUENCE

1. CONSTRUCT DIVERSION DITCHES, DITCH CHECKS, SEDIMENT BASINS, SILT FENCES, OR OTHER EROSION CONTROL DEVICES AS SPECIFIED.

2. PLACE PHASE 1 EMBANKMENT WITH PERMANENT OR TEMPORARY SEEDING. PROVIDE DIVERSION DITCHES AND SLOPE DRAINS IF EMBANKMENT CONSTRUCTION IS TO BE TEMPORARILY ABANDONED FOR A PERIOD OF GREATER THAN 21 DAYS.

3. PLACE PHASE 2 EMBANKMENT WITH PERMANENT OR TEMPORARY SEEDING. PROVIDE DIVERSION DITCHES AND SLOPE DRAINS IF EMBANKMENT CONSTRUCTION IS TO BE TEMPORARILY ABANDONED FOR A PERIOD OF GREATER THAN 21 DAYS.

4. PLACE FINAL PHASE OF EMBANKMENT WITH PERMANENT OR TEMPORARY SEEDING. PLACE DIVERSION DITCHES AND SLOPE DRAINS AND MAINTAIN UNTIL ENTIRE SLOPE IS STABILIZED.

DATE	REVISION	FILMED
11-03-94	CORRECTED SPELLING	
6-2-94	Drawn & Issued	6-2-94

ARKANSAS STATE HIGHWAY COMMISSION

TEMPORARY EROSION CONTROL DEVICES

STANDARD DRAWING TEC-3

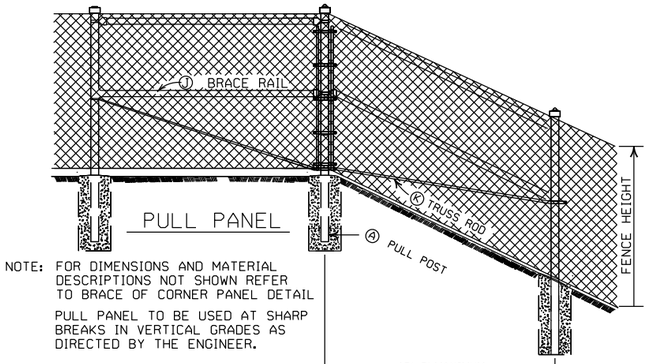

PULL PANEL

NOTE: FOR DIMENSIONS AND MATERIAL DESCRIPTIONS NOT SHOWN REFER TO BRACE OF CORNER PANEL DETAIL

PULL PANEL TO BE USED AT SHARP BREAKS IN VERTICAL GRADES AS DIRECTED BY THE ENGINEER.

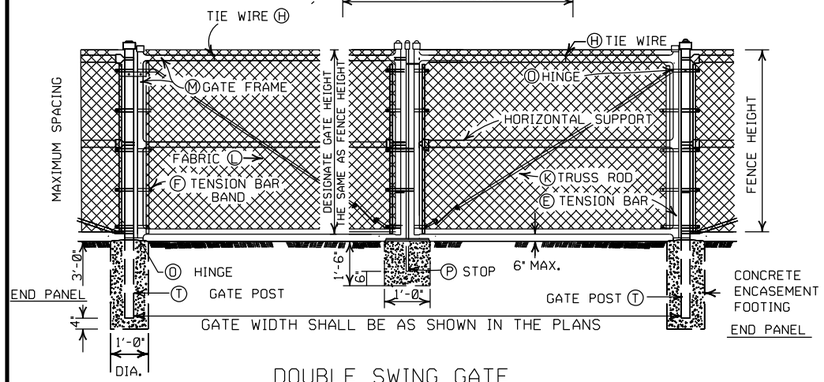

DOUBLE SWING GATE

POST SPACING DETAIL

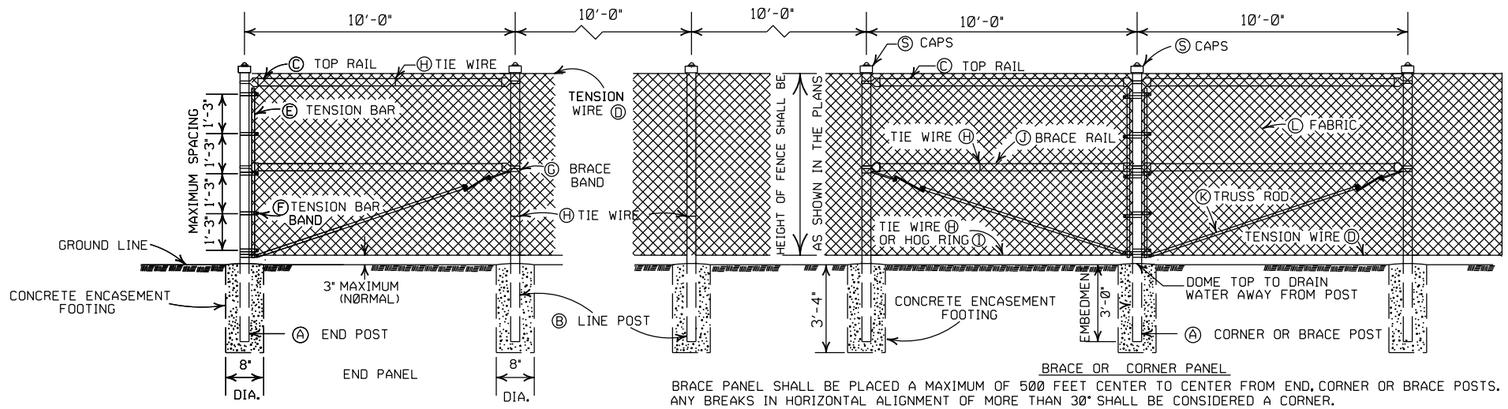

BRACE OR CORNER PANEL

BRACE PANEL SHALL BE PLACED A MAXIMUM OF 500 FEET CENTER TO CENTER FROM END, CORNER OR BRACE POSTS. ANY BREAKS IN HORIZONTAL ALIGNMENT OF MORE THAN 30° SHALL BE CONSIDERED A CORNER.

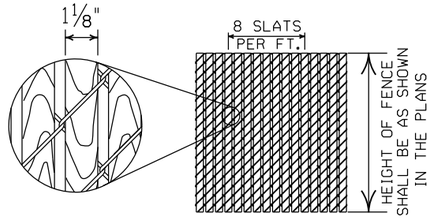

1⅛" X ¼" REDWOOD SLATS(LENGTH TO MATCH HEIGHT OF FENCE)

DETAIL OF REDWOOD SLAT INSTALLATION

GENERAL NOTES:

(C) CHAIN LINK FENCE BEING PLACED ON PRIVATE PROPERTY SHALL INCLUDE A TOP RAIL. ALL LABOR, MATERIALS, EQUIPMENT, TOOLS, AND INCIDENTALS NECESSARY TO COMPLETE THE WORK WILL BE PAID FOR AT THE CONTRACT UNIT PRICE BID PER LIN. FT. OF CHAIN LINK FENCE.

(D) TENSION WIRE: SHALL BE SECURED TO ALL TERMINAL, PULL, BRACE OR CORNER POSTS WITH TENSION BAR BANDS.

(J) BRACE RAIL: BRACE RAILS SHALL BE PROVIDED AT ALL TERMINAL, PULL, BRACE OR CORNER POSTS HALFWAY BETWEEN THE TOP RAIL AND GROUND LEVEL WHEN TOPRAIL IS SPECIFIED AND TWELVE INCHES (12") DOWN FROM TOP OF FABRIC WHEN TOP TENSION WIRE IS SPECIFIED. BRACE RAIL SHALL EXTEND FROM SUCH POST TO THE FIRST ADJACENT LINE POST.

(L) FABRIC: SHALL CONFORM TO THE SPECIFICATIONS.

(M) GATE FRAMES: SHALL BE CONSTRUCTED OF TUBULAR MEMBERS ASSEMBLED BY USE OF HEAVY PRESSED STEEL, MALLEABLE FITTINGS OR BY WELDING. ALL GATES SHALL HAVE ONE HORIZONTAL SUPPORT EXTENDING THE WIDTH OF THE GATE AT THE MIDPOINTS OF VERTICAL FRAME MEMBERS. THE COMPLETE FRAME SHALL BE RIGID AND HAVE AMPLE STRENGTH TO BE FREE FROM SAG AND TWIST.

(O) HINGES: SHALL BE OF HEAVY PATTERN, OF ADEQUATE STRENGTH FOR GATE, AND WITH LARGE BEARING SURFACES FOR CLAMPING IN POSITION. THE HINGE SHALL BE OF THE PROPER TYPE TO ALLOW FOR THE DESIGNATED DEGREE OF SWING. THE HINGE SHALL NOT TWIST OR TURN UNDER THE ACTION OF THE GATE. THE GATES SHALL BE CAPABLE OF BEING OPENED AND CLOSED EASILY BY ONE PERSON.

(P) LATCHES AND STOPS: SHALL BE PROVIDED FOR ALL GATES. GATES SHALL HAVE A DROP BAR LATCH. LATCHES SHALL BE ARRANGED FOR LOCKING. THE STOP FOR DROP BAR LATCHES SHALL BE SET IN CONCRETE AND ENGAGE THE PLUNGER OF THE BAR LATCH.

(S) CAPS: ALL POSTS, EXCEPT ROLL FORMED POSTS AND "T" POSTS SHALL BE CAPPED OVER THE EXTERIOR OF THE POST, AND SHALL CONFORM TO ASTM F626.

CONCRETE REQUIRED FOR THE EMBEDMENT OF ALL POSTS SHALL NOT BE PAID FOR DIRECTLY BUT SHALL BE INCLUDED IN THE CONTRACT UNIT PRICE BID FOR CHAIN LINK FENCE.

POSTS SHALL BE SPACED EQUIDISTANT ON A MAXIMUM OF 10' CENTERS.

EXCAVATION FOR POSTS: IN OTHER THAN ROCK SHALL BE OF THE DIMENSIONS INDICATED. IF ROCK IS ENCOUNTERED BEFORE REACHING THE REQUIRED DEPTH, THE EXCAVATION SHALL BE CONTINUED TO THE DEPTH INDICATED OR 1'-6" INTO THE ROCK, WHICHEVER IS LESS, AND SHALL BE A MINIMUM OF 8 INCHES IN DIAMETER.

HEIGHT OF FENCE FABRIC	(A) END, PULL, CORNER OR BRACE POST	(B) LINE POSTS		(C) TOP RAIL			(D) TENSION WIRE		(E) TENSION BAR		(F) TENSION BAR BAND			(G) BRACE BAND	
		SIZE	TIE SPACING	SIZE	TIE SPACING	MIN. LENGTH	SIZE	TIE SPACING	SIZE	LENGTH	SIZE	BOLT SIZE	SPACING	SIZE	BOLT SIZE
6' AND LESS	2½" O.D.	2" O.D.	1 TIE EVERY 1'-2" OF FABRIC HEIGHT	1⅝" O.D.	1 TIE EVERY 2'-0"	10'-0"	7 GAUGE COIL SPRING WIRE	1 TIE EVERY 1'-0"	MIN. OF 3/16" X ¾"	MIN. OF 2" LESS THAN FABRIC HEIGHT	MIN. OF ¾" X 0.074	5/16" X 1¼"	1 BAND AT TOP AND BOTTOM 15" MAX. INTERVAL BETWEEN BANDS	MIN. OF ¾" X 0.105	5/16" X 1¼"
OVER 6' TO 12' INCL.	3 " O.D.	2½" O.D.													

HEIGHT OF FENCE FABRIC	(H) TIE WIRE	(I) HOG RING	(J) BRACE RAIL		(K) TRUSS ROD	(L) FABRIC			(M) GATE FRAME		(N) HORIZONTAL SUPPORT		(O) HINGE TYPE	(T) GATE POST	
			SIZE	TIE SPACING		SIZE	MESH	SELVAGE	SIZE	TIE SPACING	SIZE	TIE SPACING	180° SWING	GATE WIDTH 12' AND LESS	GATE WIDTH OVER 12' TO 24' INCL.
6' AND LESS	MIN. OF 12 GA. STEEL OR 9 GA. ALUM.	SAME GAUGE AS FABRIC	1⅝" O.D.	1 TIE EVERY 2'-0"	MIN. OF 5/16" ROUND WITH TIGHTNERS AND FITTINGS	9 GA.	2"	KNUCK -ING AND/OR TWIST -ING	2" O.D.	1 TIE EVERY 1'-0"	2" O.D.	1 TIE EVERY 1'-0"	OFFSET	3" O.D.	4" O.D.
OVER 6' TO 12' INCL.														4" O.D.	

NOTE: POST SIZES SHOWN ARE FOR STEEL. WHERE ALUMINUM IS PROVIDED, LINE POSTS SHALL HAVE AN OUT SIDE DIAMETER OF 2½" FOR FENCE HEIGHT OF 6' AND LESS, AN OUTSIDE DIAMETER OF 3" FOR FENCE HEIGHT OF 6' TO 12'. END, PULL, CORNER OR BRACE POSTS SHALL HAVE AN OUTSIDE DIAMETER OF 3" FOR FENCE HEIGHT OF 6' AND LESS; AN OUTSIDE DIAMETER OF 3½" FOR FENCE HEIGHTS OF 6' TO 12'. GATE POSTS WHERE GATE WIDTH IS 12' AND LESS SHALL HAVE AN OUTSIDE DIAMETER OF 3½" FOR FENCE HEIGHT OF 6' AND LESS. ALUMINUM TENSION WIRE SHALL BE 0.192" IN DIAMETER. MINIMUM THICKNESS OF MATERIAL FROM WHICH EXPANSION SLEEVES SHALL BE MADE WILL BE 0.078". POSTS AND RAILS MAY HAVE ANY CROSS-SECTIONAL SHAPE THAT WILL MEET THE SPECIFICATIONS.

OTHER DETAILS APPLY TO BOTH STEEL AND ALUMINUM FENCE.

ALL MISCELLANEOUS FITTINGS AND HARDWARE SHALL MEET THE REQUIREMENTS AND PRODUCTION TOLERANCES AS SET FORTH IN THE SPECIFICATIONS. 9 GAUGE ALUMINUM WIRE SHALL BE ACCEPTABLE FOR TIEING FABRIC TO TUBULAR AND ROLL FORMED MEMBERS OF STEEL FENCE.

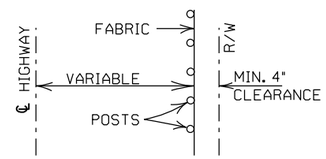

INSTALLATION MAY BE MODIFIED AS SHOWN IN THE PLANS

TYPICAL INSTALLATION DIAGRAM

POSTS AND RAILS

SIZE O.D.	GRADE 1 AND ALUMINUM ALLOY				GRADE 2		
	O.D. INCHES	WALL THICKNESS	LBS. PER LINEAR FT. STEEL	LBS. PER LINEAR FT. ALUMINUM	O.D. INCHES	WALL THICKNESS	LBS. PER LINEAR FT.
1⅝	1.660	0.140	2.27	0.786	1.660	0.111	1.84
2	1.900	0.145	2.72	0.940	1.900	0.120	2.28
2½	2.375	0.154	3.65	1.264	2.375	0.130	3.11
3	2.875	0.203	5.79	2.004	2.875	0.160	4.64
3½	3.500	0.216	7.58	2.621	3.500	0.160	5.71
4	4.000	0.226	9.11	3.151	4.000	0.160	6.56

TOLERANCES ON DIMENSIONS AND WEIGHTS ACCORDING TO AASHTO M 181

DATE	REVISION	FILMED
11-17-10	REVISED TRUSS ROD	
12-10-09	REVISED POSTS & RAILS TABLE	
5-21-09	ADDED TABLE & GEN. NOTE (C)	
8-22-02	REVISED NOTES, REMOVED TABLE, & REMOVED FENCE ALTERNATE	
4-3-97	REVISED BRACE RAIL NOTE	
10-18-96	REVISED AASHTO & ASTM REF.	
11-3-94	REVISED NOTE (L)	
10-1-92	DELETED ALTERNATE POST	10-1-92
8-15-91	DELETED ROLL FORMED POST DETAIL & ADDED NOTE	8-15-91 8-15-91
11-30-89	DELETED CLASS CONCRETE	11-30-89
11-17-88	REVISED O.D. SIZES	668-11-17-88
10-30-87	GENERAL REVISIONS	548-10-30-87
4-20-79	REVISED TOP RAIL & TENSION WIRE	695-4-20-79
10-2-72	REVISED AND REDRAWN	530-10-2-72

ARKANSAS STATE HIGHWAY COMMISSION

CHAIN LINK FENCE

STANDARD DRAWING WF-3