DATE REVISED	DATE REVISED	FED.RD. DIST.NO.	STATE	JOB NO.	SHEET NO.	TOTAL SHEETS
		6	ARK.	090646	1	66
		HWY. 102 IMPVTS. (BENTONVILLE) (S)				

ARKANSAS DEPARTMENT OF TRANSPORTATION
CONSTRUCTION PLANS

HWY. 102 IMPVTS. (BENTONVILLE) (S)
ROUTE 102 SECTION 3
BENTON COUNTY
JOB 090646
FED. AID PROJ. NHPP-9036(36)

NOT TO SCALE

PRELIMINARY
SUBJECT TO REVISION

PROJECT LOCATION

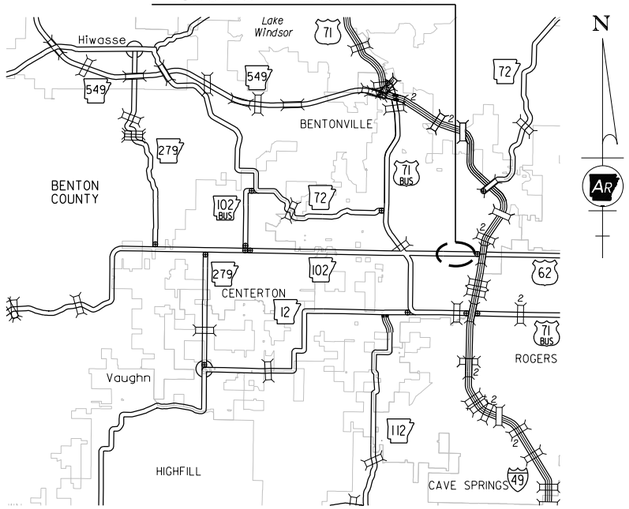

VICINITY MAP

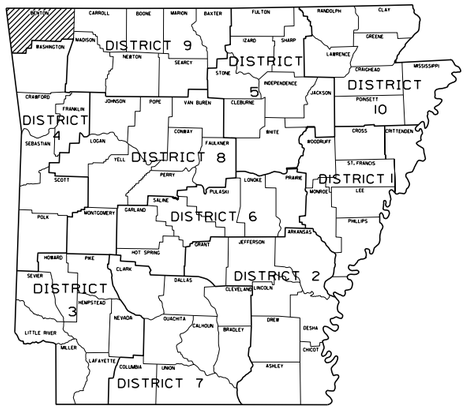

ARKANSAS HIGHWAY DISTRICT 9

R-31-W|R-30-W

R-30-W|R-29-W

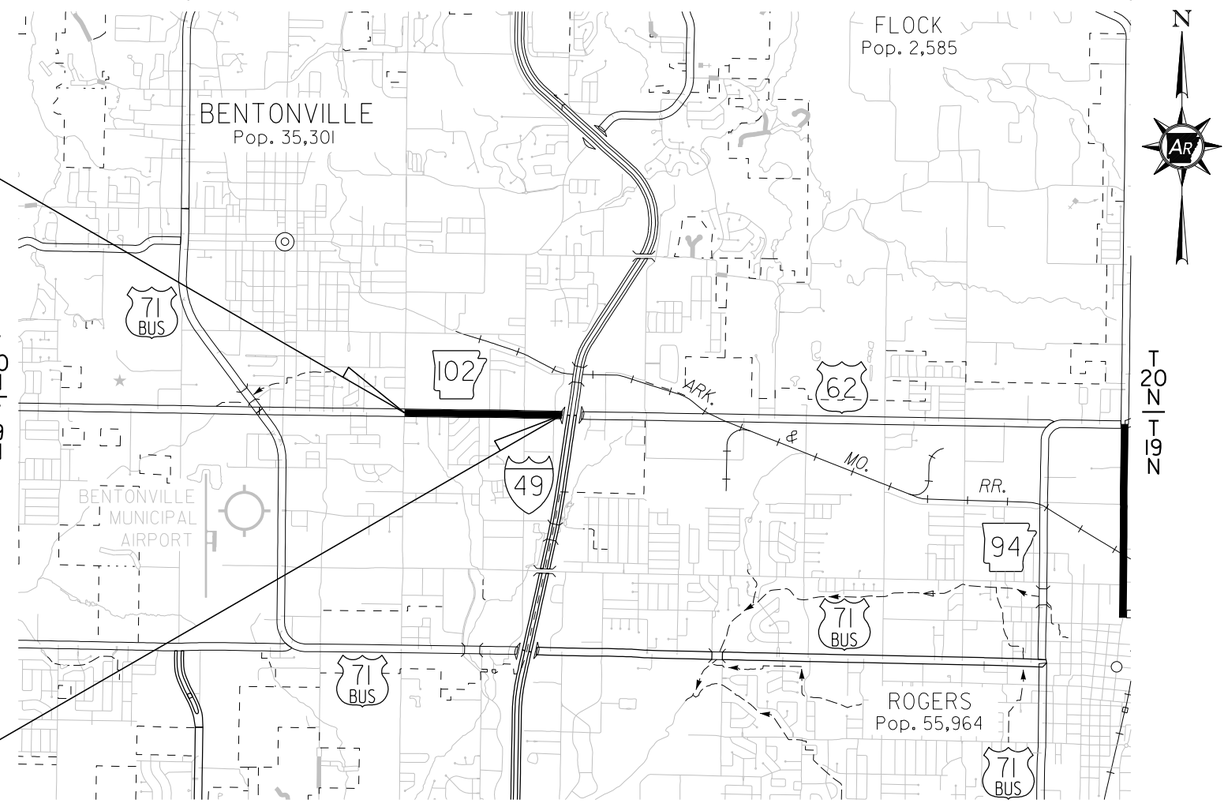

STA. 101+00.00
BEGIN JOB 090646
LOG MILE 4.725

STA. 160+35.00
END JOB 090646

R-31-W|R-30-W

R-30-W|R-29-W

• DESIGN TRAFFIC DATA •

DESIGN YEAR----------2046
2026 ADT----------35,000
2046 ADT----------39,000
2046 DHV----------4,290
DIRECTIONAL DISTRIBUTION------0.60
TRUCKS----------5%
DESIGN SPEED----------45 MPH

JOB 090646	BEGIN	MID POINT	END
LATITUDE	N 36°21'24"	N 36°21'24"	N 36°21'23"
LONGITUDE	W 94°12'01"	W 94°11'24"	W 94°10'47"

PROJECT LENGTH COMPUTED ALONG HWY 102 C.L. OF MEDIAN				
GROSS LENGTH OF PROJECT	5935.00	FEET	1.124	MILES
NET LENGTH OF ROADWAY	5935.00	FEET	1.124	MILES
NET LENGTH OF BRIDGES	0000.00	FEET	0.000	MILES
NET LENGTH OF PROJECT	5935.00	FEET	1.124	MILES

PRELIMINARY
SUBJECT TO REVISIONS
50% SUBMITTAL

London.Miller 10/4/2023 5:33:04 PM
WORKSPACE: London.Miller
C:\Users\public\mblpw\6\d0129163\R090646_01_C0_01.dgn
REVISED DATES $$REVDATE$$

DATE REVISED	DATE REVISED	FED.RD. DIST.NO.	STATE	JOB NO.	SHEET NO.	TOTAL SHEETS
		6	ARK.	090646	2	66
		TYPICAL SECTIONS OF IMPROVEMENT				

PRELIMINARY
SUBJECT TO REVISION

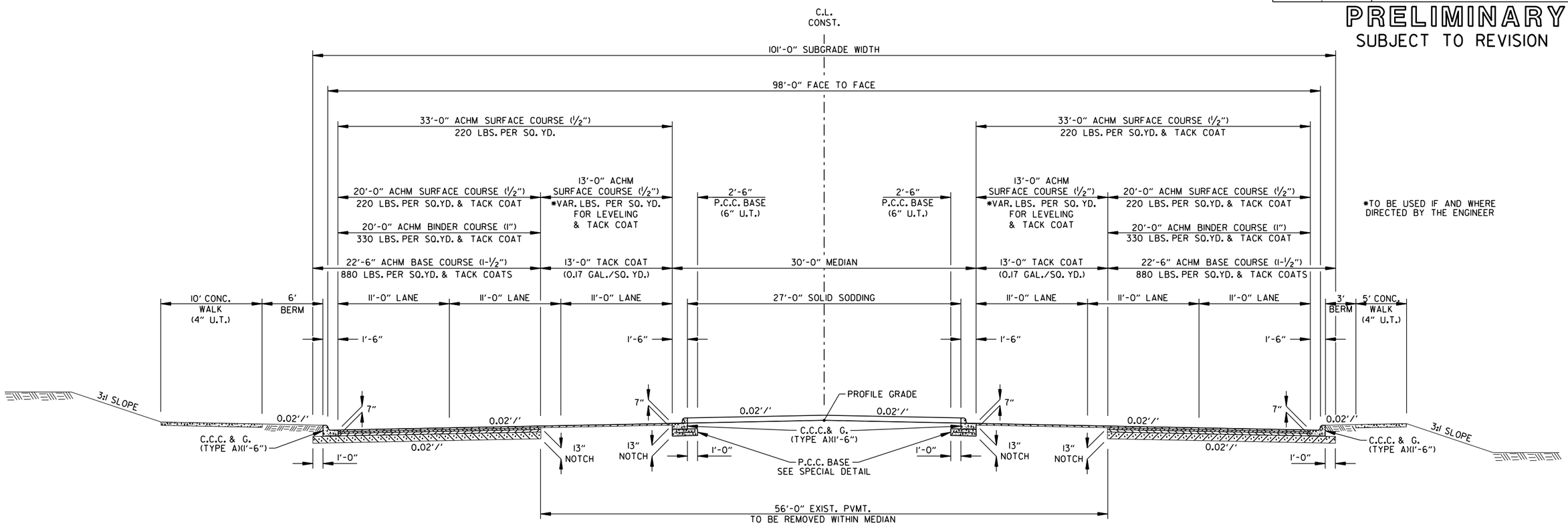

HWY. 102
TANGENT SECTION - NOTCH AND WIDEN

STA. 101+00.00 TO STA. 107+95.00
STA. 111+95.00 TO STA. 160+35.00

NOTES:

1. REFER TO CROSS SECTIONS FOR DEVIATION FROM THE NORMAL SLOPES. NO CHANGES SHALL BE MADE FROM THE PLANNED SLOPES WITHOUT THE APPROVAL OF THE ENGINEER.

2. ASPHALT FOR LEVELING OF EXISTING PAVEMENT SHALL BE PLACED ONLY IF AND WHERE DIRECTED BY THE ENGINEER. CALCULATIONS FOR THE AMOUNT OF LEVELING AND LEVELING OPERATIONS SHALL BE PERFORMED BEFORE CONSTRUCTING NOTCH AND WIDENING. CALCULATIONS WILL NOT BE PAID FOR DIRECTLY, BUT WILL BE CONSIDERED INCLUDED IN THE VARIOUS PAY ITEMS.

3. THE FINAL 2" OF SURFACE COURSE IS TO BE PLACED AFTER ALL OTHER COURSES HAVE BEEN LAID. LONGITUDINAL JOINTS SHALL BE AT LANE LINES.

4. BLEEDER DITCHES - PRIOR TO AND DURING PLACEMENT OF PAVEMENT AT THE NOTCH, THE CONTRACTOR SHALL PROVIDE POSITIVE DRAINAGE AT ALL TIMES. THE METHOD(S) AND SPACING USED SHALL BE APPROVED BY THE ENGINEER. PAYMENT FOR THIS WORK SHALL BE CONSIDERED INCLUDED IN THE PRICE BID FOR THE VARIOUS CONTRACT ITEMS.

5. PRIOR TO AND DURING PLACEMENT OF PAVEMENT IN FRONT OF CURBE AND GUTTER, THE CONTRACTOR SHALL PROVIDE POSITIVE DRAINAGE AT ALL TIMES. THE METHOD(S) USED SHALL BE APPROVED BY THE ENGINEER. PAYMENT FOR THIS WORK SHALL BE CONSIDERED INCLUDED IN THE PRICE BID FOR THE VARIOUS CONTRACT ITEMS.

6. REFER TO PLAN SHEETS FOR SIDEWALK LOCATIONS

7. TRANSVERSE EXPANSION JOINTS IN CONCRETE WALKS SHALL BE PLACED AT 45' INTERVALS

TYPICAL SECTIONS OF IMPROVEMENT

London.Miller 10/4/2023 5:33:18 PM
WORKSPACE: London.Miller
C:\users\public\mbjw\6\d0129163\R090646_04_TS_001.dgn
REVISED DATE: $$REVDATE$$

DATE REVISED	DATE REVISED	FED.RD. DIST.NO.	STATE	JOB NO.	SHEET NO.	TOTAL SHEETS
		6	ARK.	090646	3	66
		TYPICAL SECTIONS OF IMPROVEMENT				

PRELIMINARY
SUBJECT TO REVISION

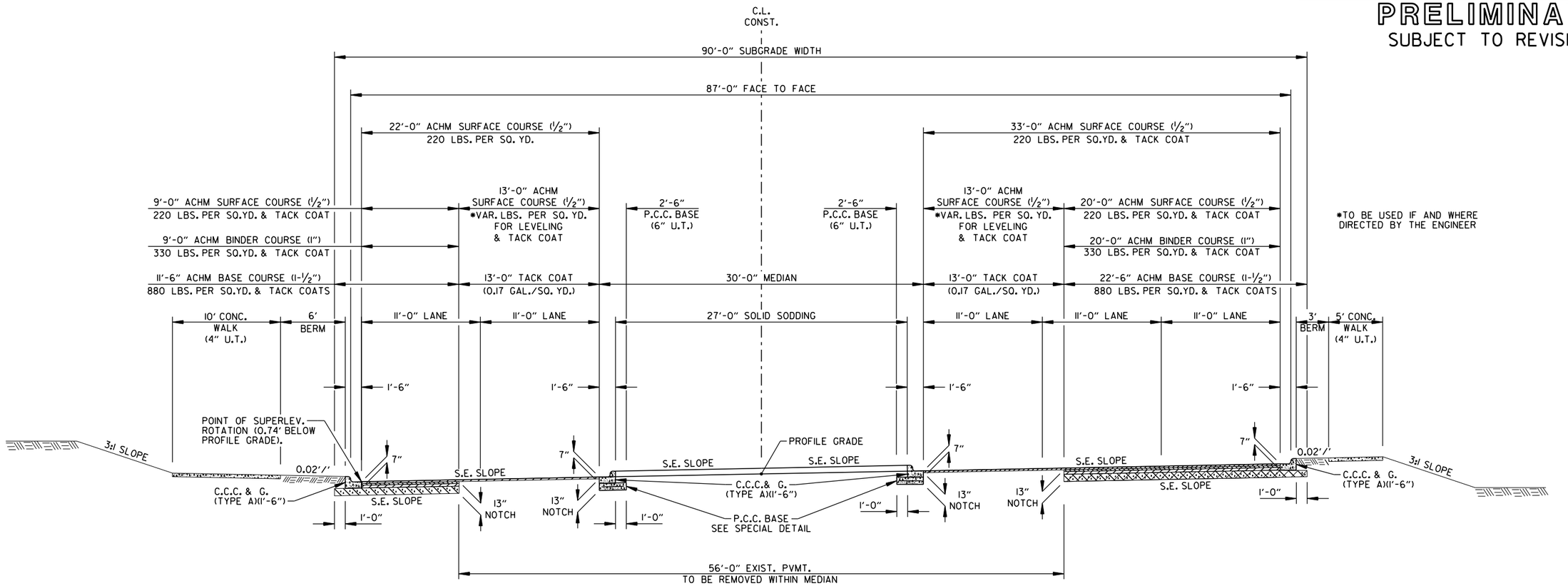

HWY. 102
SUPERELEVATION - NOTCH AND WIDEN

STA. 107+95.00 TO STA. 111+95.00

NOTES:

1. REFER TO CROSS SECTIONS FOR DEVIATION FROM THE NORMAL SLOPES. NO CHANGES SHALL BE MADE FROM THE PLANNED SLOPES WITHOUT THE APPROVAL OF THE ENGINEER.

2. ASPHALT FOR LEVELING OF EXISTING PAVEMENT SHALL BE PLACED ONLY IF AND WHERE DIRECTED BY THE ENGINEER. CALCULATIONS FOR THE AMOUNT OF LEVELING AND LEVELING OPERATIONS SHALL BE PERFORMED BEFORE CONSTRUCTING NOTCH AND WIDENING. CALCULATIONS WILL NOT BE PAID FOR DIRECTLY, BUT WILL BE CONSIDERED INCLUDED IN THE VARIOUS PAY ITEMS.

3. THE FINAL 2" OF SURFACE COURSE IS TO BE PLACED AFTER ALL OTHER COURSES HAVE BEEN LAID. LONGITUDINAL JOINTS SHALL BE AT LANE LINES.

4. BLEEDER DITCHES - PRIOR TO AND DURING PLACEMENT OF PAVEMENT AT THE NOTCH, THE CONTRACTOR SHALL PROVIDE POSITIVE DRAINAGE AT ALL TIMES. THE METHOD(S) AND SPACING USED SHALL BE APPROVED BY THE ENGINEER. PAYMENT FOR THIS WORK SHALL BE CONSIDERED INCLUDED IN THE PRICE BID FOR THE VARIOUS CONTRACT ITEMS.

5. PRIOR TO AND DURING PLACEMENT OF PAVEMENT IN FRONT OF CURBE AND GUTTER, THE CONTRACTOR SHALL PROVIDE POSITIVE DRAINAGE AT ALL TIMES. THE METHOD(S) USED SHALL BE APPROVED BY THE ENGINEER. PAYMENT FOR THIS WORK SHALL BE CONSIDERED INCLUDED IN THE PRICE BID FOR THE VARIOUS CONTRACT ITEMS.

6. REFER TO PLAN SHEETS FOR SIDEWALK LOCATIONS

7. TRANSVERSE EXPANSION JOINTS IN CONCRETE WALKS SHALL BE PLACED AT 45' INTERVALS

London.Miller 10/4/2023 5:33:19 PM
WORKSPACE: London.Miller
c:\users\public\mdbrw\6\d029163\R090646_04_TS_001.dgn
REVISED DATE: $$REVDATE$$

DATE REVISED	DATE REVISED	FED.RD. DIST.NO.	STATE	JOB NO.	SHEET NO.	TOTAL SHEETS
		6	ARK.	090646	4	66
		TYPICAL SECTIONS OF IMPROVEMENT				

PRELIMINARY
SUBJECT TO REVISION

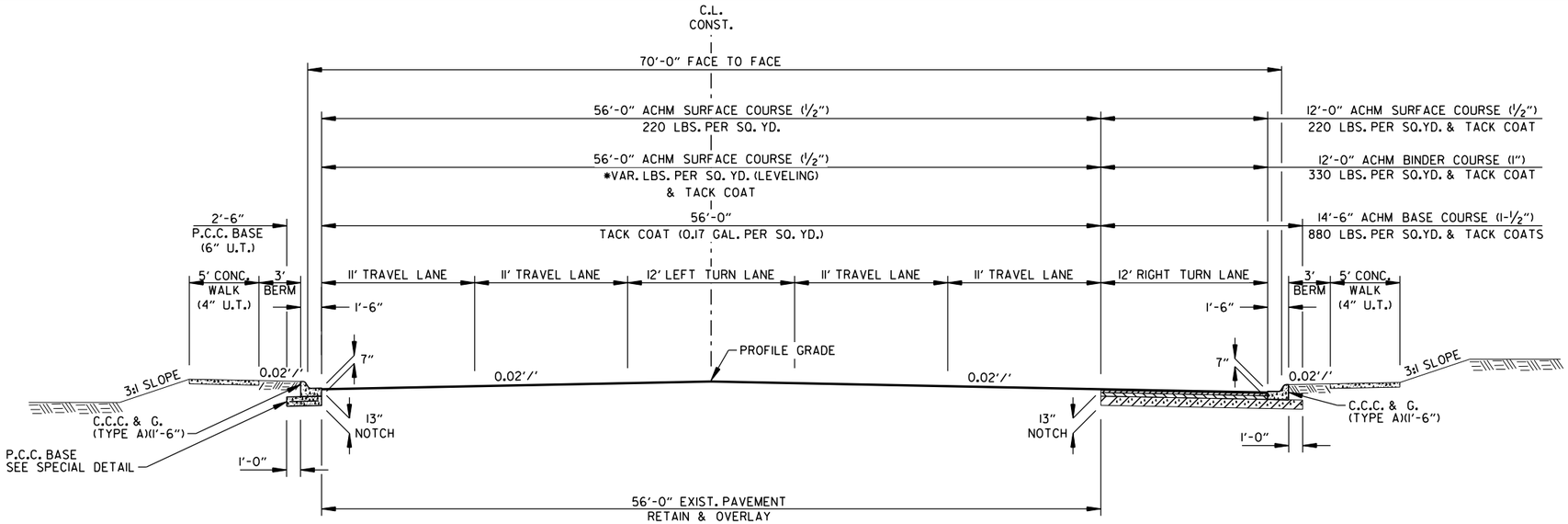

J ST. - TANGENT SECTION
NOTCH AND WIDEN

STA. 201+80.00 TO STA. 206+66.98

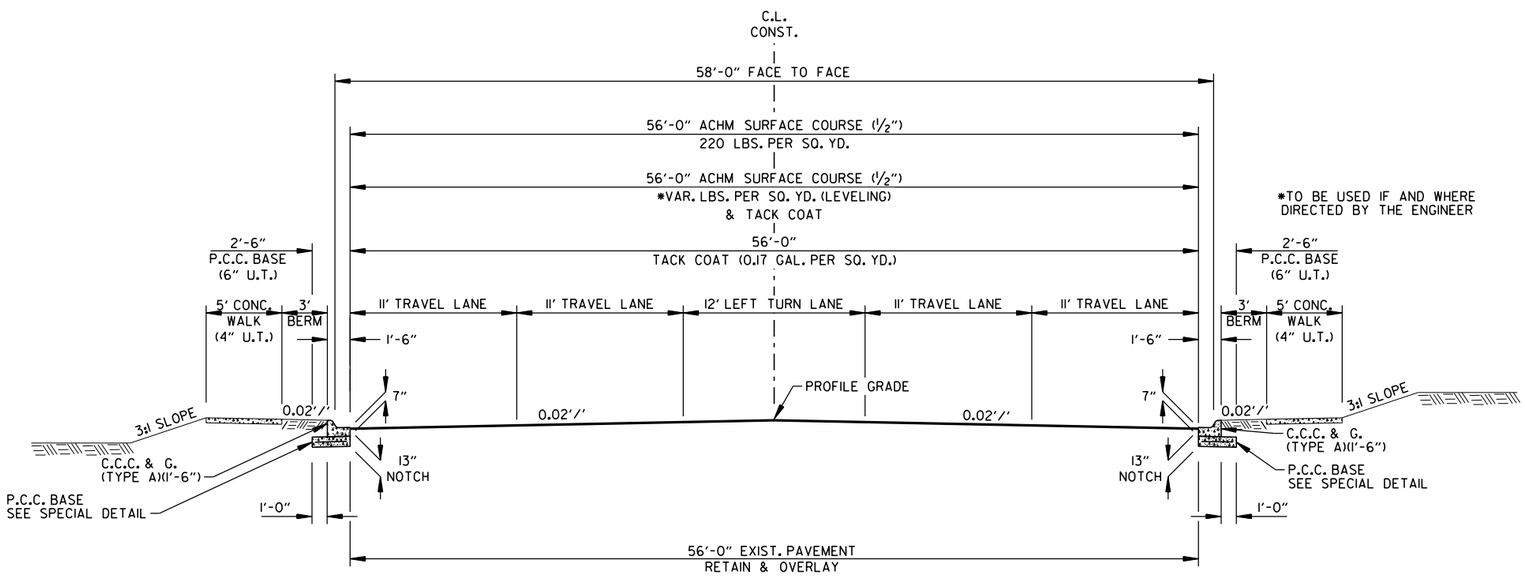

J ST. - TANGENT SECTION
NOTCH AND WIDEN

STA. 207+52.02 TO STA. 211+00.00

NOTES:

1. REFER TO CROSS SECTIONS FOR DEVIATION FROM THE NORMAL SLOPES. NO CHANGES SHALL BE MADE FROM THE PLANNED SLOPES WITHOUT THE APPROVAL OF THE ENGINEER.

2. ASPHALT FOR LEVELING OF EXISTING PAVEMENT SHALL BE PLACED ONLY IF AND WHERE DIRECTED BY THE ENGINEER. CALCULATIONS FOR THE AMOUNT OF LEVELING AND LEVELING OPERATIONS SHALL BE PERFORMED BEFORE CONSTRUCTING NOTCH AND WIDENING. CALCULATIONS WILL NOT BE PAID FOR DIRECTLY, BUT WILL BE CONSIDERED INCLUDED IN THE VARIOUS PAY ITEMS.

3. THE FINAL 2" OF SURFACE COURSE IS TO BE PLACED AFTER ALL OTHER COURSES HAVE BEEN LAID. LONGITUDINAL JOINTS SHALL BE AT LANE LINES.

4. BLEEDER DITCHES - PRIOR TO AND DURING PLACEMENT OF PAVEMENT AT THE NOTCH, THE CONTRACTOR SHALL PROVIDE POSITIVE DRAINAGE AT ALL TIMES. THE METHOD(S) AND SPACING USED SHALL BE APPROVED BY THE ENGINEER. PAYMENT FOR THIS WORK SHALL BE CONSIDERED INCLUDED IN THE PRICE BID FOR THE VARIOUS CONTRACT ITEMS.

5. PRIOR TO AND DURING PLACEMENT OF PAVEMENT IN FRONT OF CURBE AND GUTTER, THE CONTRACTOR SHALL PROVIDE POSITIVE DRAINAGE AT ALL TIMES. THE METHOD(S) USED SHALL BE APPROVED BY THE ENGINEER. PAYMENT FOR THIS WORK SHALL BE CONSIDERED INCLUDED IN THE PRICE BID FOR THE VARIOUS CONTRACT ITEMS.

6. REFER TO PLAN SHEETS FOR SIDEWALK LOCATIONS

7. TRANSVERSE EXPANSION JOINTS IN CONCRETE WALKS SHALL BE PLACED AT 45' INTERVALS

LandonMiller 10/4/2023 5:33:19 PM
WORKSPACE: LandonMiller
G:\users\public\mbldw\6\d02963\R090646_04_TS_001.dgn
REVISED DATE: $$REVDATE$$

DATE REVISED	DATE REVISED	FED.RD. DIST.NO.	STATE	JOB NO.	SHEET NO.	TOTAL SHEETS
		6	ARK.	090646	5	66
		TYPICAL SECTIONS OF IMPROVEMENT				

PRELIMINARY
SUBJECT TO REVISION

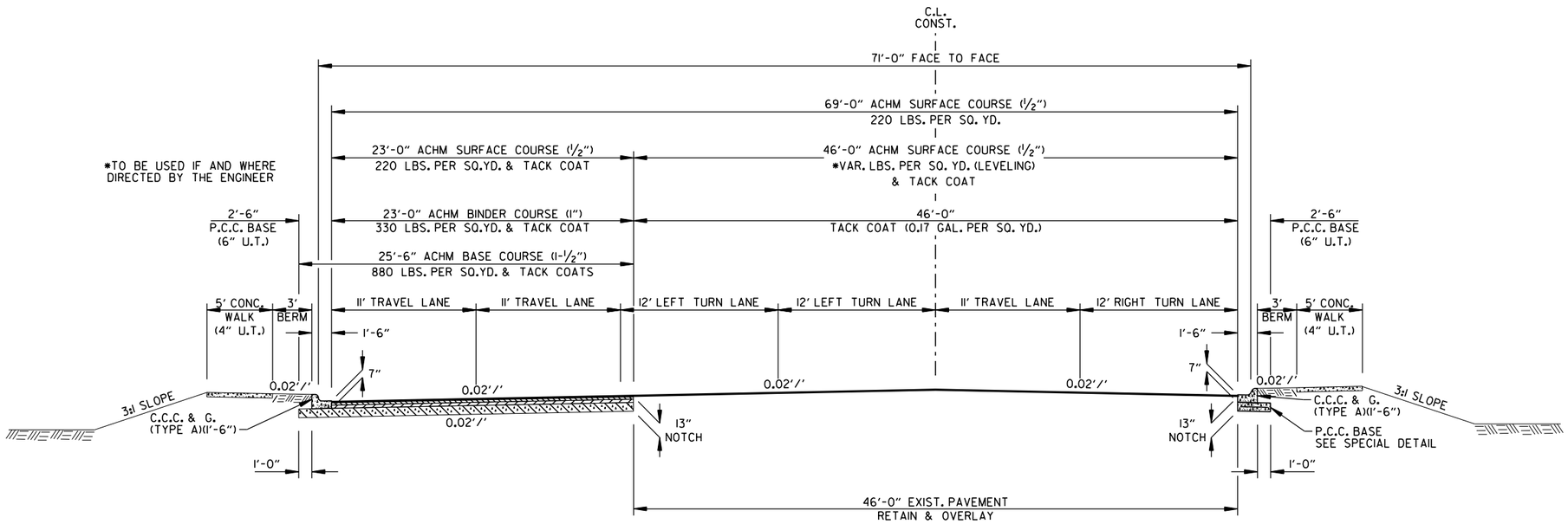

P ST. - TANGENT SECTION
NOTCH AND WIDEN

STA. 301+10.00 TO STA. 302+59.95

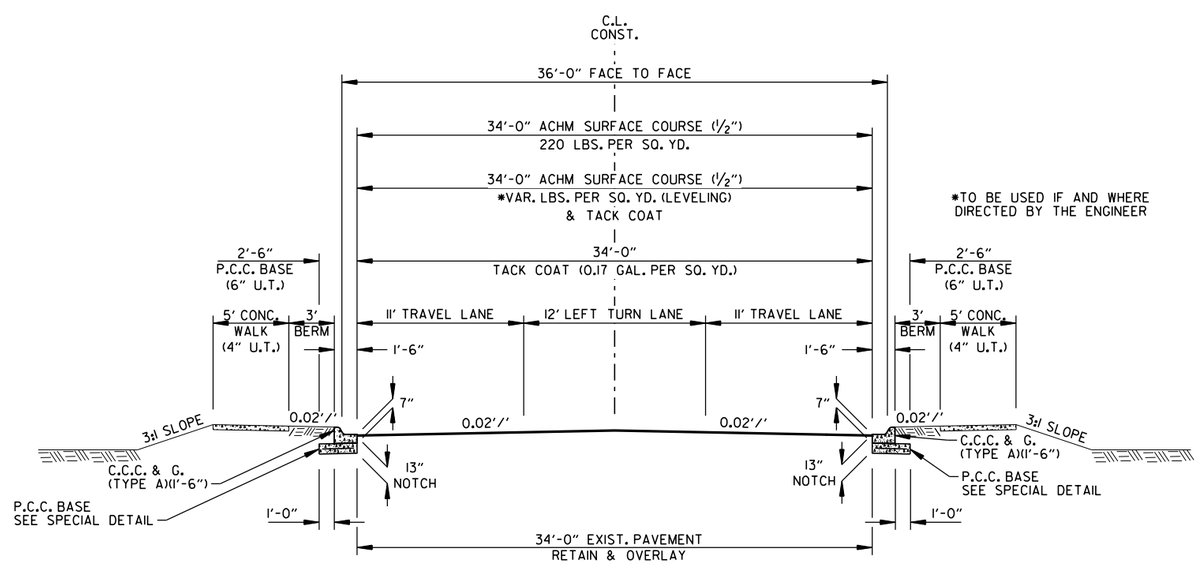

P ST. - TANGENT SECTION
NOTCH AND WIDEN

STA. 303+49.01 TO STA. 304+80.00

NOTES:

1. REFER TO CROSS SECTIONS FOR DEVIATION FROM THE NORMAL SLOPES. NO CHANGES SHALL BE MADE FROM THE PLANNED SLOPES WITHOUT THE APPROVAL OF THE ENGINEER.

2. ASPHALT FOR LEVELING OF EXISTING PAVEMENT SHALL BE PLACED ONLY IF AND WHERE DIRECTED BY THE ENGINEER. CALCULATIONS FOR THE AMOUNT OF LEVELING AND LEVELING OPERATIONS SHALL BE PERFORMED BEFORE CONSTRUCTING NOTCH AND WIDENING. CALCULATIONS WILL NOT BE PAID FOR DIRECTLY, BUT WILL BE CONSIDERED INCLUDED IN THE VARIOUS PAY ITEMS.

3. THE FINAL 2" OF SURFACE COURSE IS TO BE PLACED AFTER ALL OTHER COURSES HAVE BEEN LAID. LONGITUDINAL JOINTS SHALL BE AT LANE LINES.

4. BLEEDER DITCHES - PRIOR TO AND DURING PLACEMENT OF PAVEMENT AT THE NOTCH, THE CONTRACTOR SHALL PROVIDE POSITIVE DRAINAGE AT ALL TIMES. THE METHOD(S) AND SPACING USED SHALL BE APPROVED BY THE ENGINEER. PAYMENT FOR THIS WORK SHALL BE CONSIDERED INCLUDED IN THE PRICE BID FOR THE VARIOUS CONTRACT ITEMS.

5. PRIOR TO AND DURING PLACEMENT OF PAVEMENT IN FRONT OF CURBE AND GUTTER, THE CONTRACTOR SHALL PROVIDE POSITIVE DRAINAGE AT ALL TIMES. THE METHOD(S) USED SHALL BE APPROVED BY THE ENGINEER. PAYMENT FOR THIS WORK SHALL BE CONSIDERED INCLUDED IN THE PRICE BID FOR THE VARIOUS CONTRACT ITEMS.

6. REFER TO PLAN SHEETS FOR SIDEWALK LOCATIONS

7. TRANSVERSE EXPANSION JOINTS IN CONCRETE WALKS SHALL BE PLACED AT 45' INTERVALS

TYPICAL SECTIONS OF IMPROVEMENT

LandonMiller 10/4/2023 5:33:20 PM
WORKSPACE: LandonMiller
G:\users\public\mbjbw\5\d02963\R090646_04_TS_001.dgn
REVISED DATE: $$REVDATE$$

DATE REVISED	DATE REVISED	FED.RD. DIST.NO.	STATE	JOB NO.	SHEET NO.	TOTAL SHEETS
		6	ARK.	090646	6	66
		TYPICAL SECTIONS OF IMPROVEMENT				

PRELIMINARY
SUBJECT TO REVISION

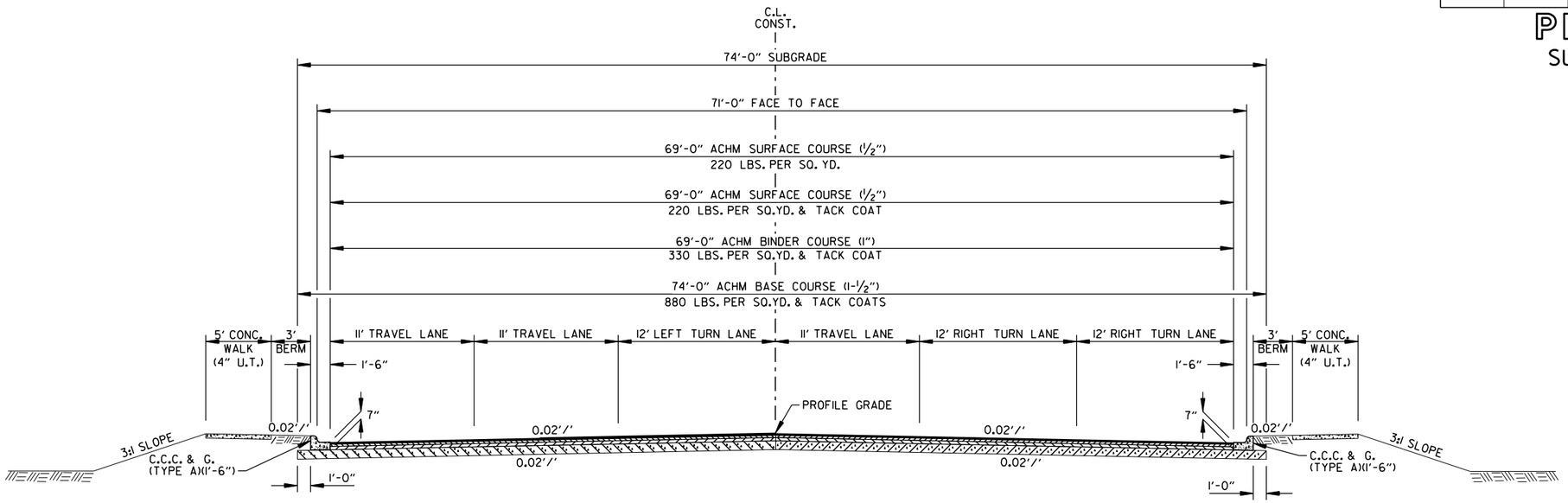

MLK JR. PKWY. - TANGENT SECTION
FULL DEPTH

STA. 401+14.00 TO STA. 403+14.99

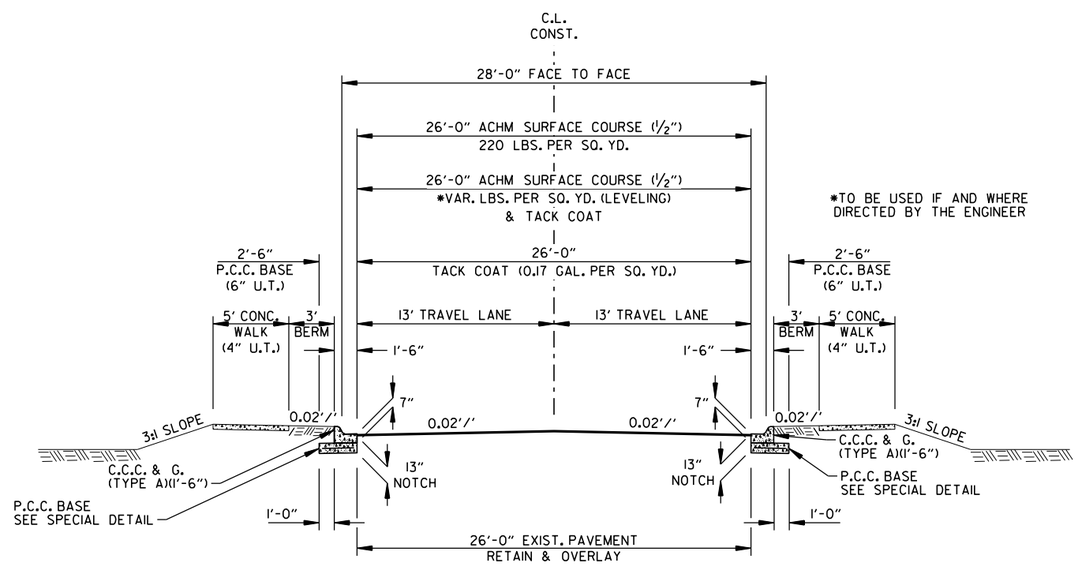

S ST. - TANGENT SECTION
NOTCH AND WIDEN

STA. 404+13.00 TO STA. 405+87.00

NOTES:

1. REFER TO CROSS SECTIONS FOR DEVIATION FROM THE NORMAL SLOPES. NO CHANGES SHALL BE MADE FROM THE PLANNED SLOPES WITHOUT THE APPROVAL OF THE ENGINEER.

2. ASPHALT FOR LEVELING OF EXISTING PAVEMENT SHALL BE PLACED ONLY IF AND WHERE DIRECTED BY THE ENGINEER. CALCULATIONS FOR THE AMOUNT OF LEVELING AND LEVELING OPERATIONS SHALL BE PERFORMED BEFORE CONSTRUCTING NOTCH AND WIDENING. CALCULATIONS WILL NOT BE PAID FOR DIRECTLY, BUT WILL BE CONSIDERED INCLUDED IN THE VARIOUS PAY ITEMS.

3. THE FINAL 2" OF SURFACE COURSE IS TO BE PLACED AFTER ALL OTHER COURSES HAVE BEEN LAID. LONGITUDINAL JOINTS SHALL BE AT LANE LINES.

4. BLEEDER DITCHES - PRIOR TO AND DURING PLACEMENT OF PAVEMENT AT THE NOTCH, THE CONTRACTOR SHALL PROVIDE POSITIVE DRAINAGE AT ALL TIMES. THE METHOD(S) AND SPACING USED SHALL BE APPROVED BY THE ENGINEER. PAYMENT FOR THIS WORK SHALL BE CONSIDERED INCLUDED IN THE PRICE BID FOR THE VARIOUS CONTRACT ITEMS.

5. PRIOR TO AND DURING PLACEMENT OF PAVEMENT IN FRONT OF CURBE AND GUTTER, THE CONTRACTOR SHALL PROVIDE POSITIVE DRAINAGE AT ALL TIMES. THE METHOD(S) USED SHALL BE APPROVED BY THE ENGINEER. PAYMENT FOR THIS WORK SHALL BE CONSIDERED INCLUDED IN THE PRICE BID FOR THE VARIOUS CONTRACT ITEMS.

6. REFER TO PLAN SHEETS FOR SIDEWALK LOCATIONS

7. TRANSVERSE EXPANSION JOINTS IN CONCRETE WALKS SHALL BE PLACED AT 45' INTERVALS

TYPICAL SECTIONS OF IMPROVEMENT

LandonMiller 10/4/2023 5:33:21 PM
WORKSPACE: LandonMiller
G:\users\public\mbidwk\60129163\R090646_04_TS_001.dgn
REVISED DATE: $$REVDATE$$

DATE REVISED	DATE REVISED	FED.RD. DIST.NO.	STATE	JOB NO.	SHEET NO.	TOTAL SHEETS
		6	ARK.	090646	7	66
		TYPICAL SECTIONS OF IMPROVEMENT				

PRELIMINARY
SUBJECT TO REVISION

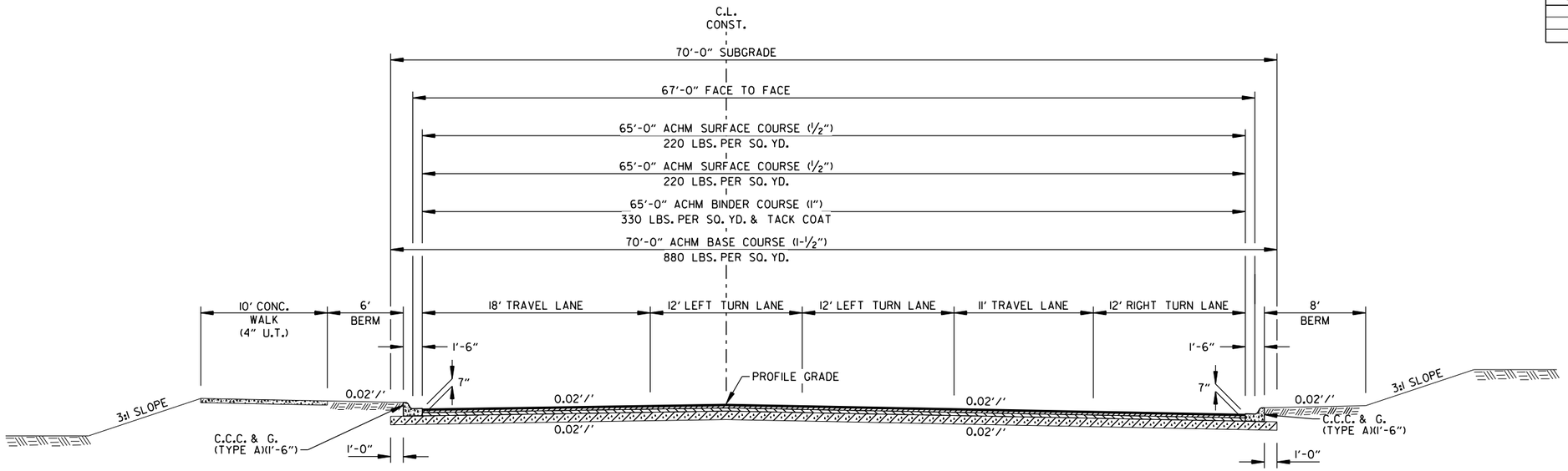

MOBERLY LN. - TANGENT SECTION
OVERLAY

STA. 501+00.00 TO STA. 504+98.00

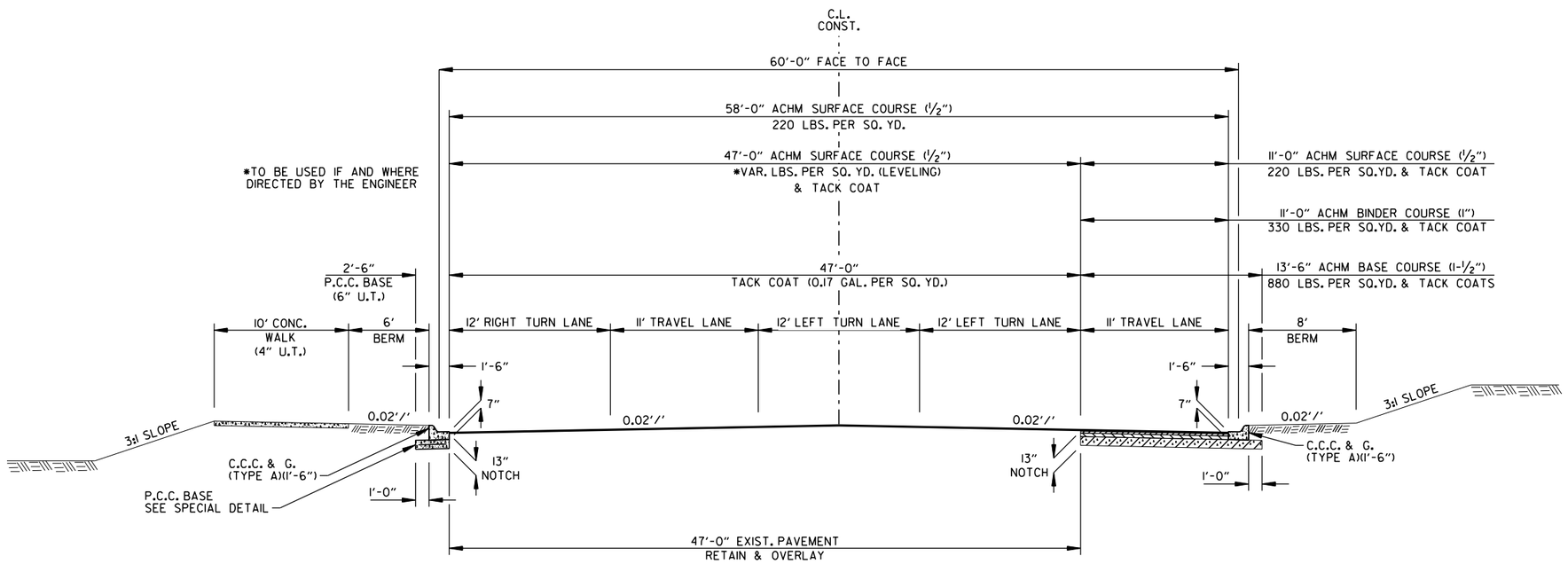

MOBERLY LN. - TANGENT SECTION
NOTCH AND WIDEN

STA. 505+82.00 TO STA. 508+00.00

NOTES:

1. REFER TO CROSS SECTIONS FOR DEVIATION FROM THE NORMAL SLOPES. NO CHANGES SHALL BE MADE FROM THE PLANNED SLOPES WITHOUT THE APPROVAL OF THE ENGINEER.

2. ASPHALT FOR LEVELING OF EXISTING PAVEMENT SHALL BE PLACED ONLY IF AND WHERE DIRECTED BY THE ENGINEER. CALCULATIONS FOR THE AMOUNT OF LEVELING AND LEVELING OPERATIONS SHALL BE PERFORMED BEFORE CONSTRUCTING NOTCH AND WIDENING. CALCULATIONS WILL NOT BE PAID FOR DIRECTLY, BUT WILL BE CONSIDERED INCLUDED IN THE VARIOUS PAY ITEMS.

3. THE FINAL 2" OF SURFACE COURSE IS TO BE PLACED AFTER ALL OTHER COURSES HAVE BEEN LAID. LONGITUDINAL JOINTS SHALL BE AT LANE LINES.

4. BLEEDER DITCHES - PRIOR TO AND DURING PLACEMENT OF PAVEMENT AT THE NOTCH, THE CONTRACTOR SHALL PROVIDE POSITIVE DRAINAGE AT ALL TIMES. THE METHOD(S) AND SPACING USED SHALL BE APPROVED BY THE ENGINEER. PAYMENT FOR THIS WORK SHALL BE CONSIDERED INCLUDED IN THE PRICE BID FOR THE VARIOUS CONTRACT ITEMS.

5. PRIOR TO AND DURING PLACEMENT OF PAVEMENT IN FRONT OF CURBE AND GUTTER, THE CONTRACTOR SHALL PROVIDE POSITIVE DRAINAGE AT ALL TIMES. THE METHOD(S) USED SHALL BE APPROVED BY THE ENGINEER. PAYMENT FOR THIS WORK SHALL BE CONSIDERED INCLUDED IN THE PRICE BID FOR THE VARIOUS CONTRACT ITEMS.

6. REFER TO PLAN SHEETS FOR SIDEWALK LOCATIONS

7. TRANSVERSE EXPANSION JOINTS IN CONCRETE WALKS SHALL BE PLACED AT 45' INTERVALS

TYPICAL SECTIONS OF IMPROVEMENT

LandonMiller 10/4/2023 5:33:22 PM
WORKSPACE: LandonMiller
G:\users\public\mbidw\6\d012963\R090646_04_TS_001.dgn
REVISED DATE: $$REVDATE$$

DATE REVISED	DATE REVISED	FED.RD. DIST.NO.	STATE	JOB NO.	SHEET NO.	TOTAL SHEETS
		6	ARK.	090646	8	66
		PLAN AND PROFILE SHEETS				

PRELIMINARY
SUBJECT TO REVISION

LEGEND

PAVEMENT TRANSITION

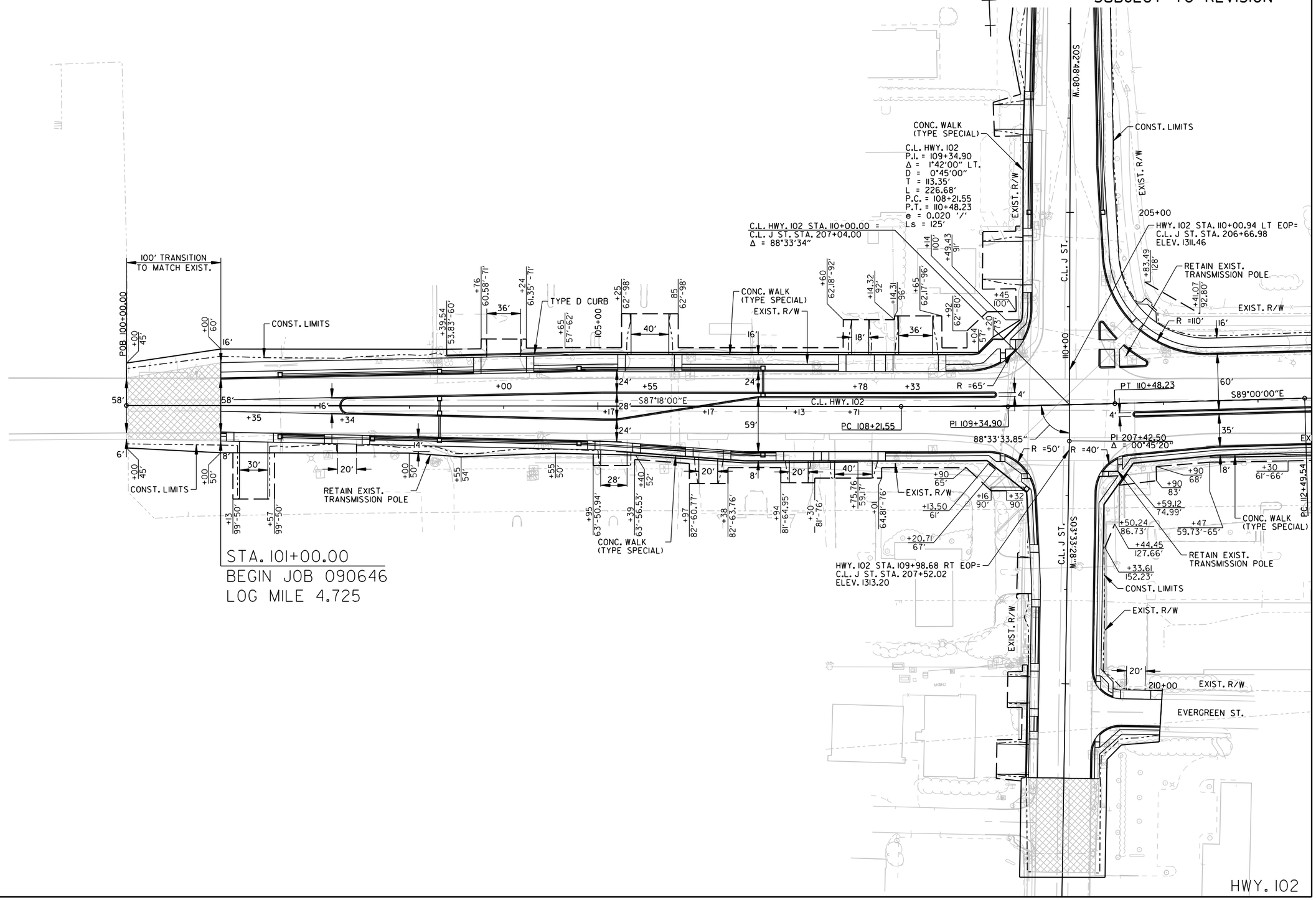

HWY. 102

LandonMiller 10/4/2023 5:33:32 PM
WORKSPACE: LandonMiller
G:\users\public\mbldw\6\d029163\R090646.J2_PP_001.dgn
REVISED DATE: $$REVDATE$$

DATE REVISED	DATE REVISED	FED.RD. DIST.NO.	STATE	JOB NO.	SHEET NO.	TOTAL SHEETS
		6	ARK.	090646	9	66
		PLAN AND PROFILE SHEETS				

HWY. 102 LT, STORM SEWER

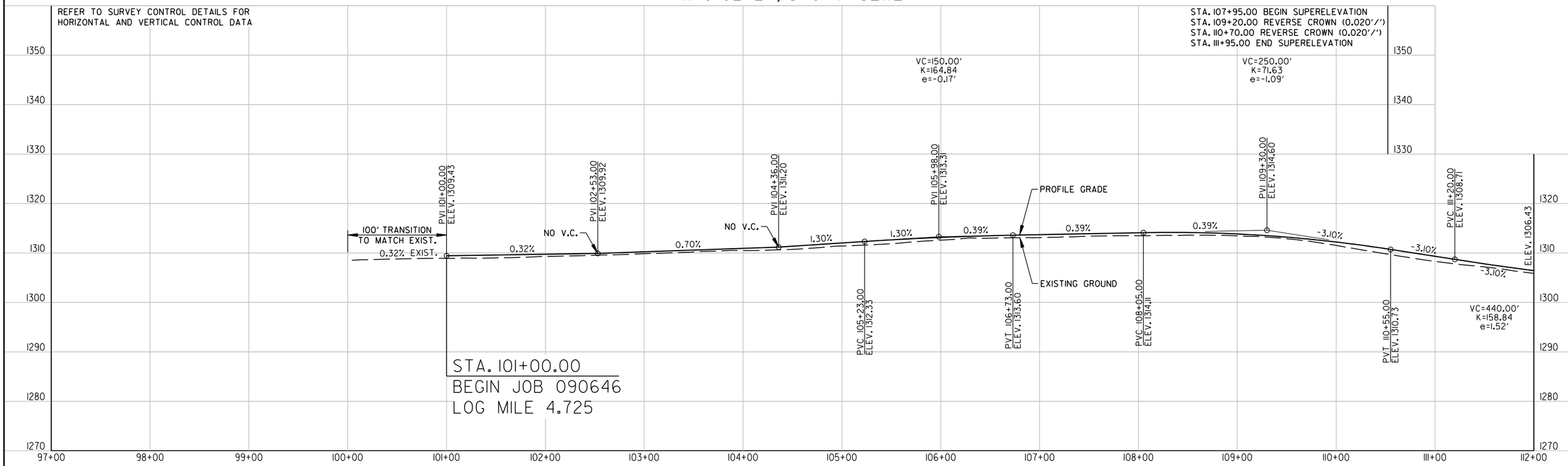

HWY. 102 RT, STORM SEWER

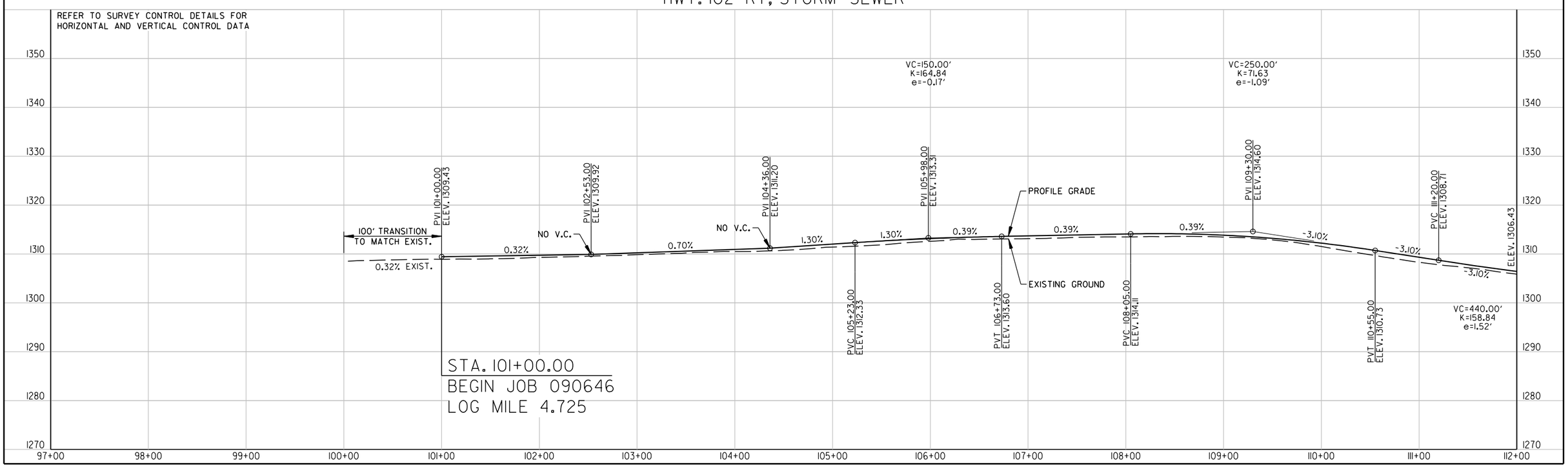

LandonMiller 10/4/2023 5:33:42 PM
WORKSPACE: LandonMiller
c:\users\public\mbs\pw\15\d0129163\R090646.L2_PP_002.dgn
REVISED DATE: $$$REVDATE$$

DATE REVISED	DATE REVISED	FED.RD. DIST.NO.	STATE	JOB NO.	SHEET NO.	TOTAL SHEETS
		6	ARK.	090646	10	66
		PLAN AND PROFILE SHEETS				

PRELIMINARY
SUBJECT TO REVISION

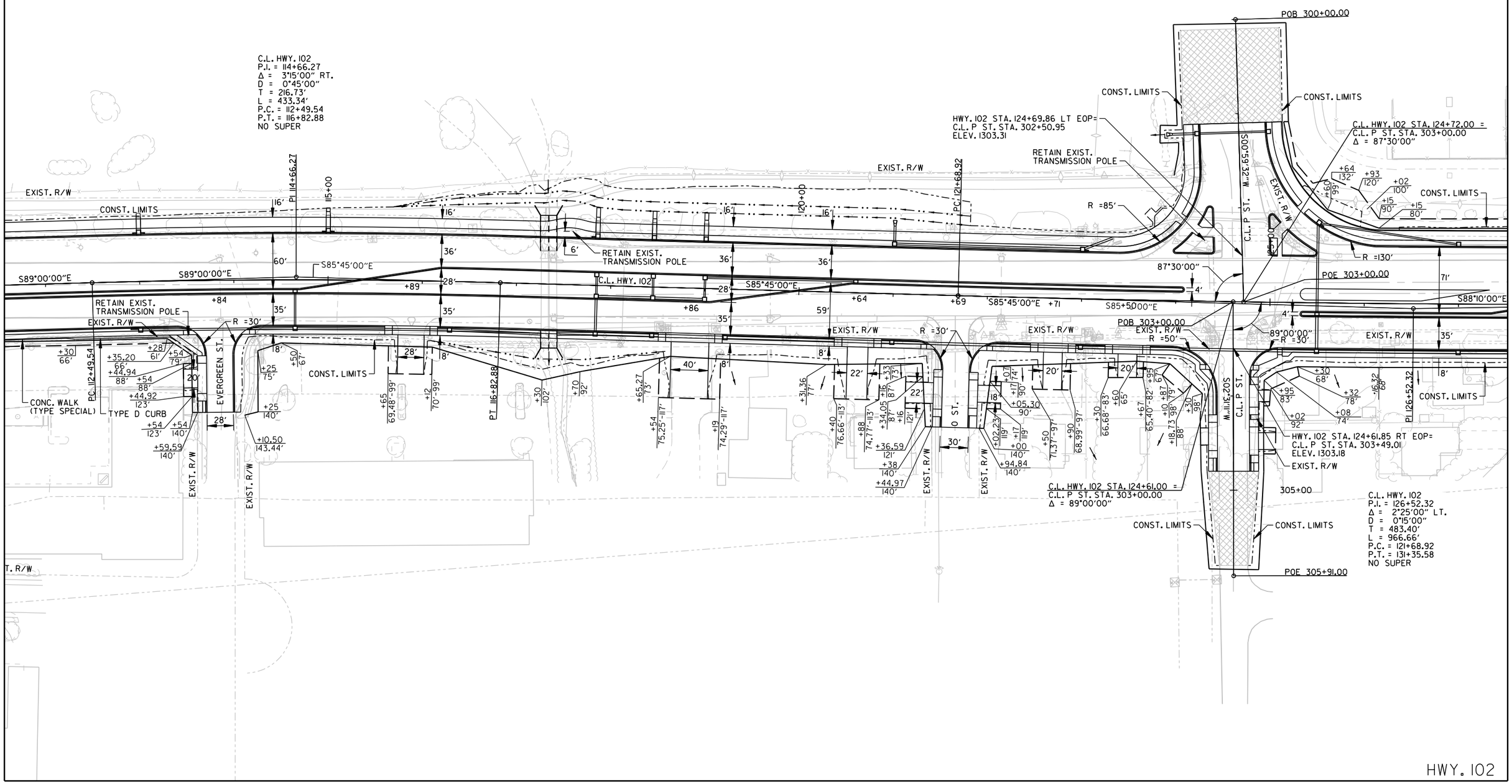

HWY. 102

LandonMiller 10/4/2023 5:33:52 PM
WORKSPACE: LandonMiller
G:\Users\public\mbldw\6\d029163\R090646.I2_PP_003.dgn
REVISED DATE: $$REVDATE$$

DATE REVISED	DATE REVISED	FED.RD. DIST.NO.	STATE	JOB NO.	SHEET NO.	TOTAL SHEETS
		6	ARK.	090646	11	66
		PLAN AND PROFILE SHEETS				

HWY. 102 LT. STORM SEWER

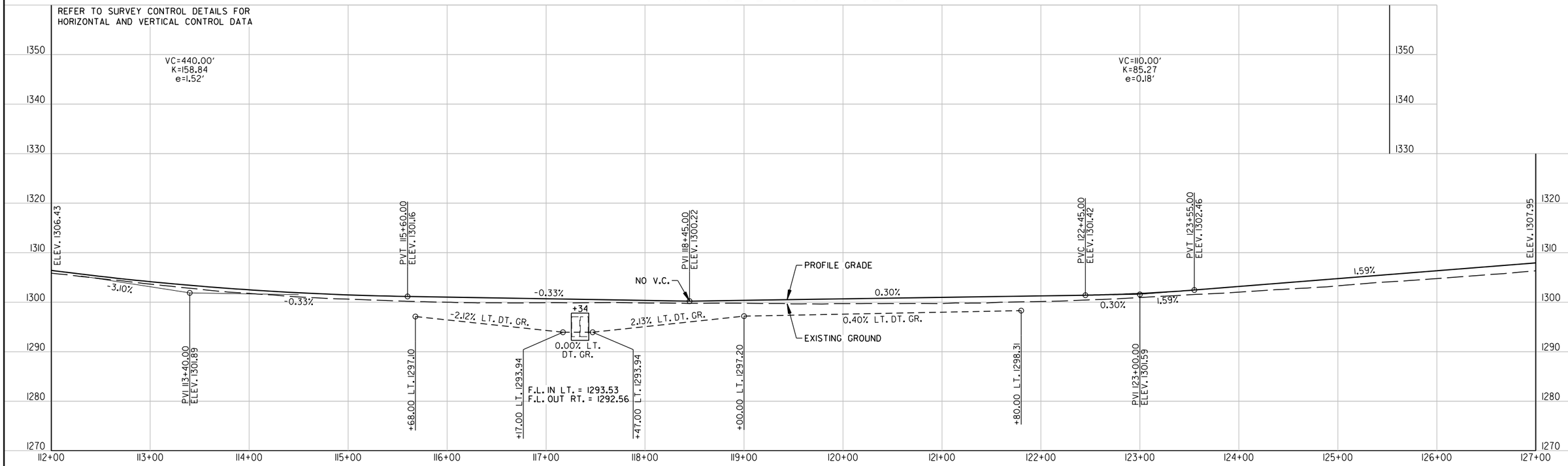

HWY. 102 RT. STORM SEWER

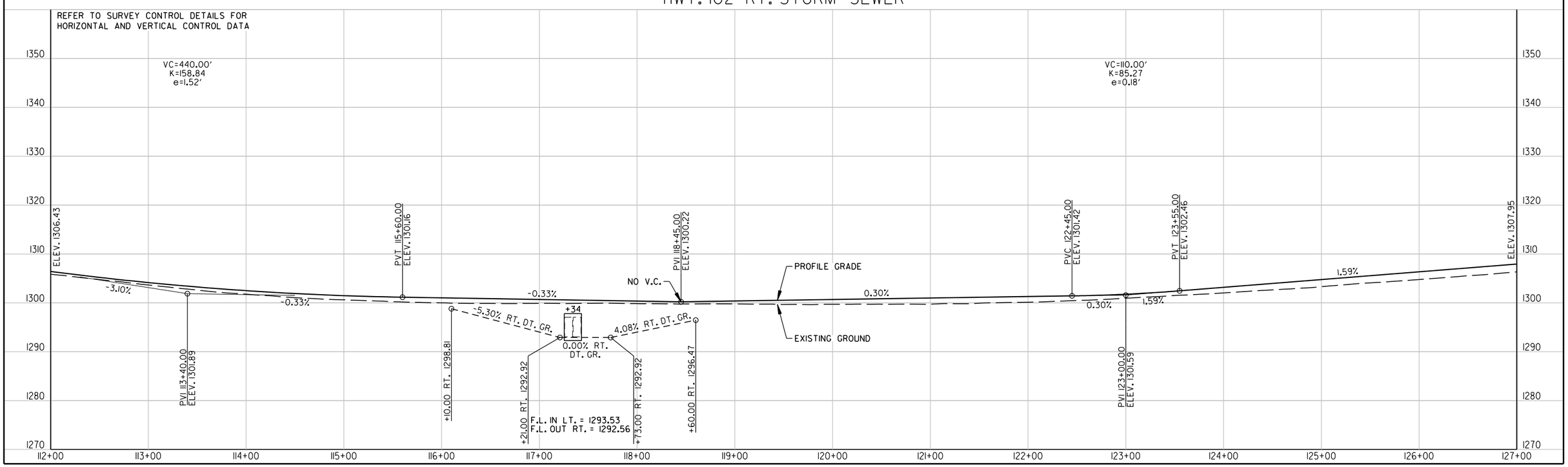

LandonMiller 10/4/2023 5:34:10 PM
WORKSPACE: LandonMiller
c:\users\public\mbslpw\16\d02963\R090646.12.PP.004.dgn
REVISED DATE: $$REVDATE$$

DATE REVISED	DATE REVISED	FED.RD. DIST.NO.	STATE	JOB NO.	SHEET NO.	TOTAL SHEETS
		6	ARK.	090646	12	66
		PLAN AND PROFILE SHEETS				

PRELIMINARY
SUBJECT TO REVISION

LEGEND

PAVEMENT REMOVAL

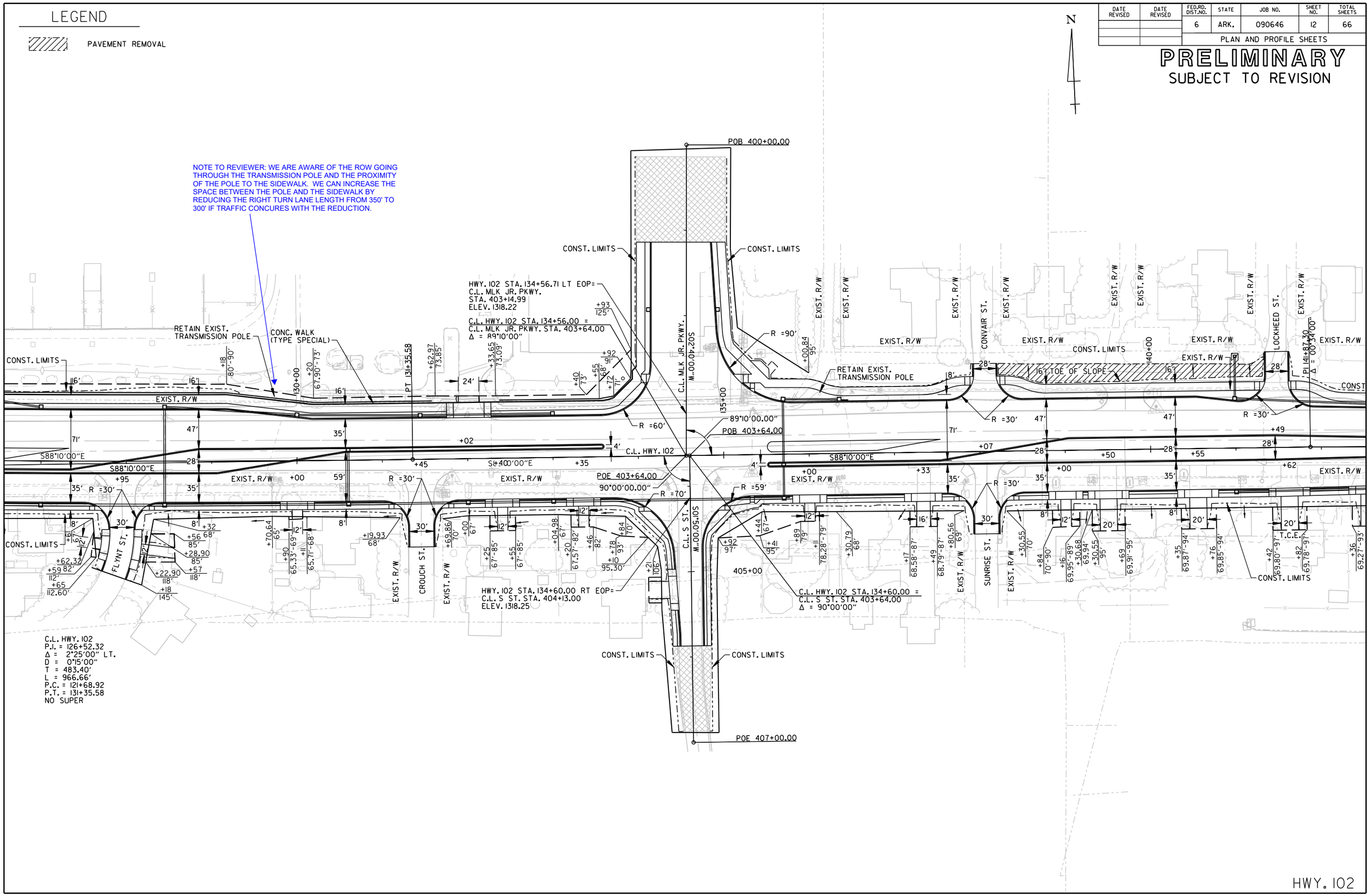

HWY. 102

London.Miller 10/4/2023 5:34:21 PM
WORKSPACE: London.Miller
C:\Users\public\mbjpw\6\d0129163\R090646_12_PP_005.dgn
REVISED DATE: $$REVDATE$$

DATE REVISED	DATE REVISED	FED.RD. DIST.NO.	STATE	JOB NO.	SHEET NO.	TOTAL SHEETS
		6	ARK.	090646	13	66
		PLAN AND PROFILE SHEETS				

HWY. 102 LT. STORM SEWER

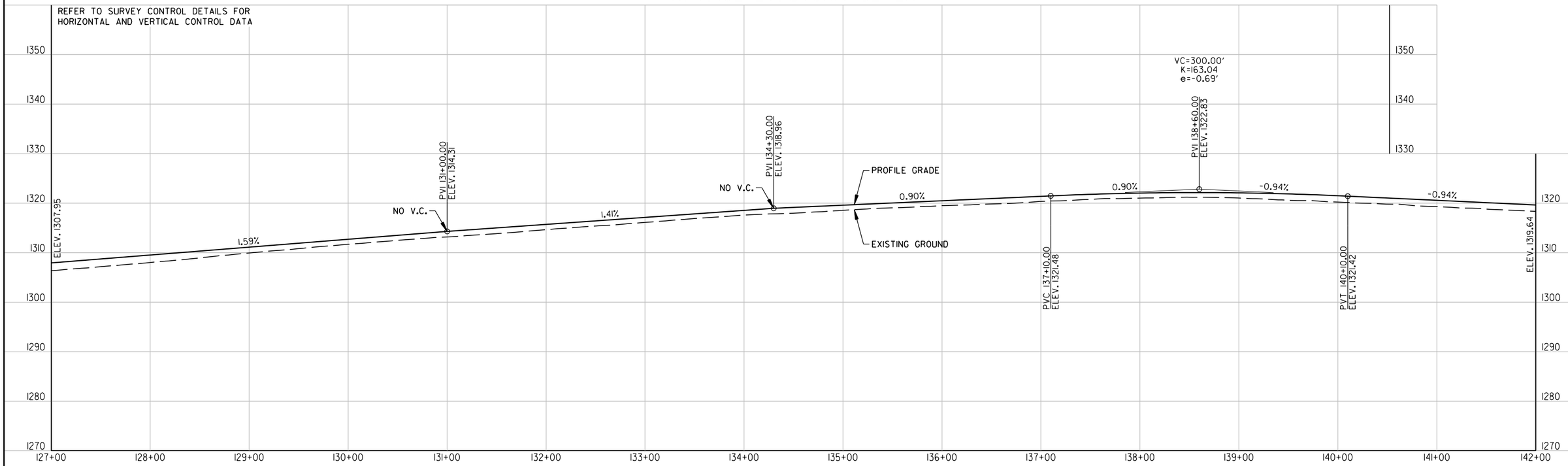

HWY. 102 RT. STORM SEWER

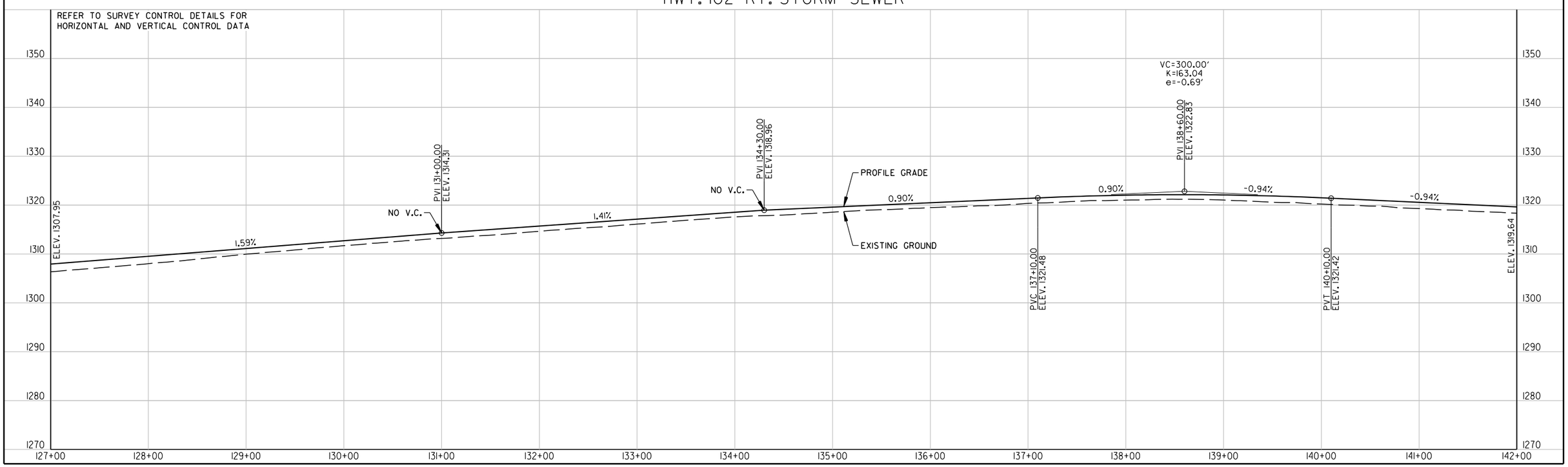

LandonMiller 10/4/2023 5:34:31PM
WORKSPACE: LandonMiller
c:\users\public\mbslpw\16\d02963\R090646.12.PP_006.dgn
REVISED DATE: $$REVDATE$$

DATE REVISED	DATE REVISED	FED.RD. DIST.NO.	STATE	JOB NO.	SHEET NO.	TOTAL SHEETS
		6	ARK.	090646	14	66
		PLAN AND PROFILE SHEETS				

PRELIMINARY
SUBJECT TO REVISION

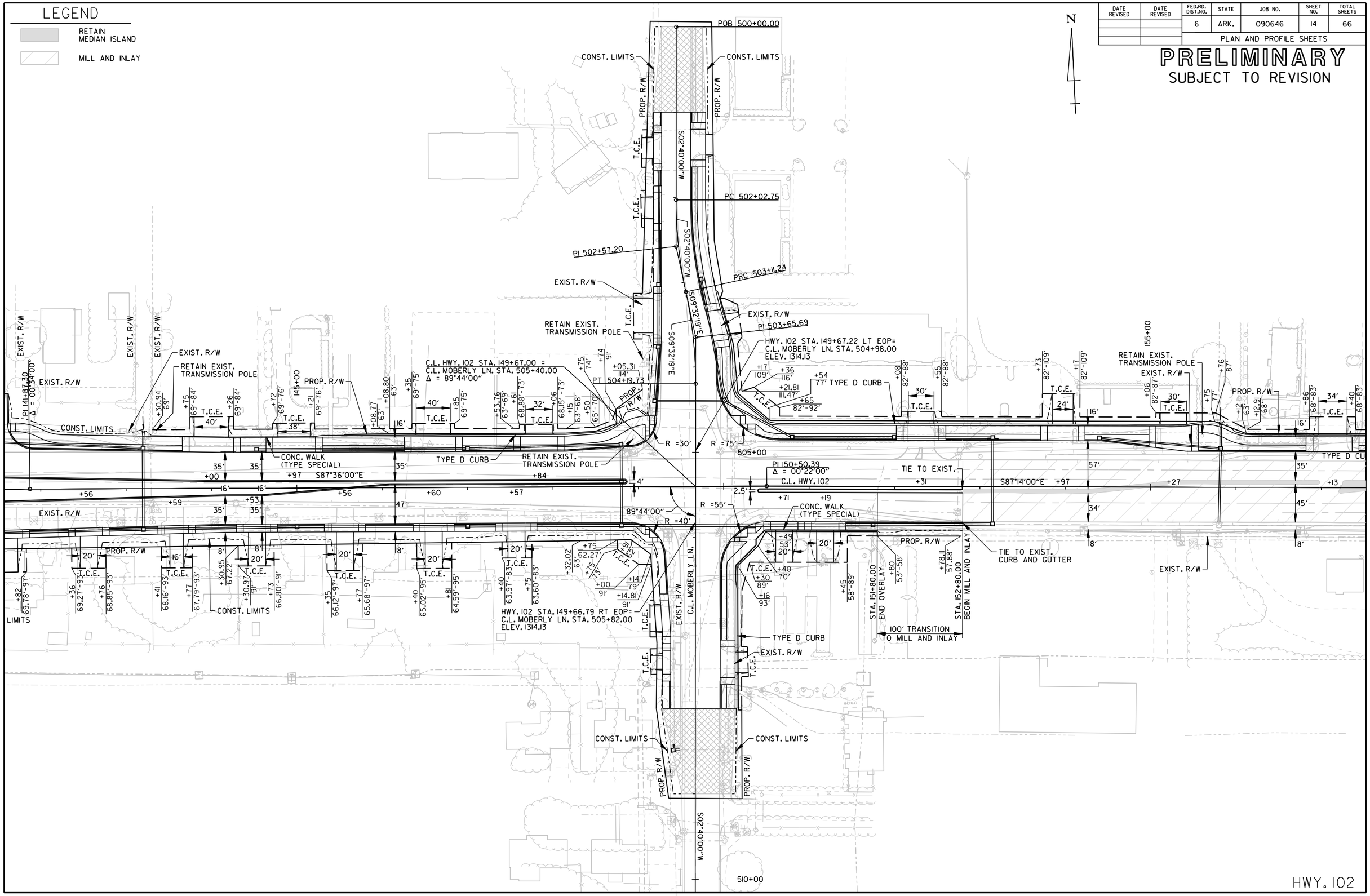

London.Miller 10/4/2023 5:34:42 PM
WORKSPACE: London.Miller
C:\users\public\mbjpw\6\d0129163\R090646_12_PP_007.dgn
REVISED DATE: $$REVDATE$$

DATE REVISED	DATE REVISED	FED.RD. DIST.NO.	STATE	JOB NO.	SHEET NO.	TOTAL SHEETS
		6	ARK.	090646	15	66
		PLAN AND PROFILE SHEETS				

HWY. 102 LT. STORM SEWER

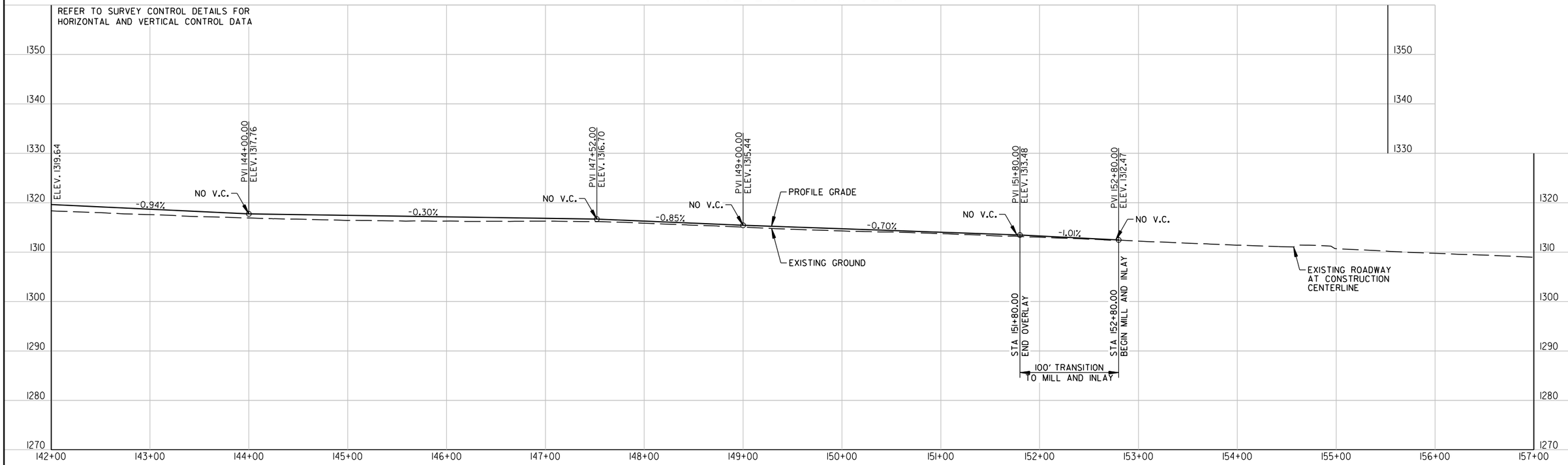

HWY. 102 RT. STORM SEWER

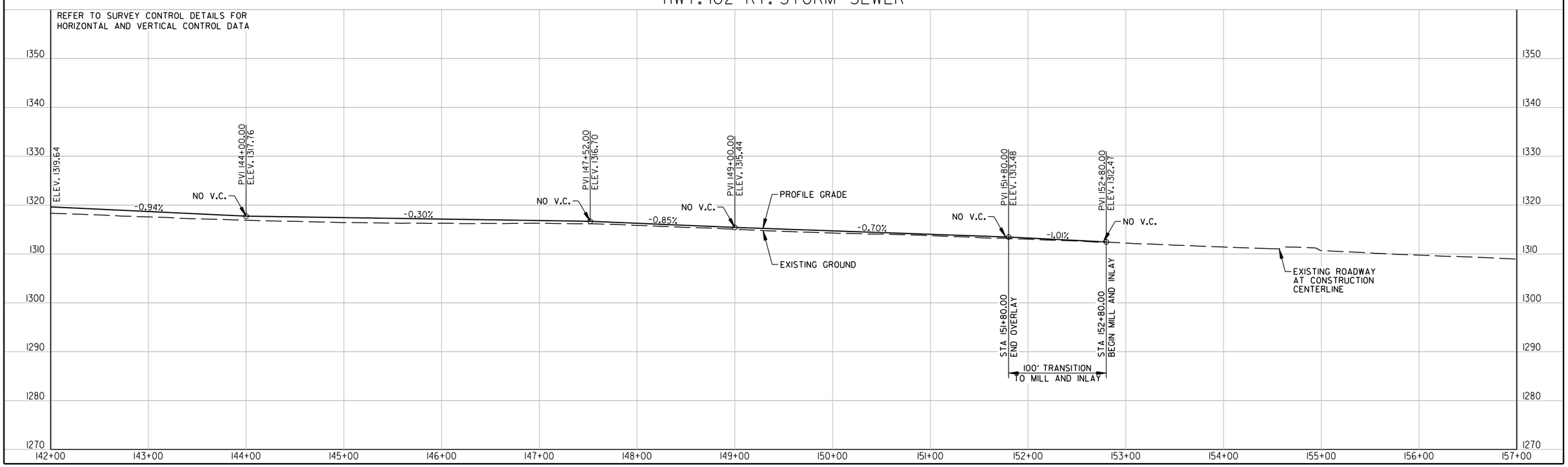

LandonMiller 10/4/2023 5:34:53 PM
WORKSPACE: Landon.Miller
c:\users\public\mbslpw\16\d02963\R090646.L2_PP_008.dgn
REVISED DATE: $$REVDATE$$

DATE REVISED	DATE REVISED	FED.RD. DIST.NO.	STATE	JOB NO.	SHEET NO.	TOTAL SHEETS
		6	ARK.	090646	16	66
		PLAN AND PROFILE SHEETS				

PRELIMINARY
SUBJECT TO REVISION

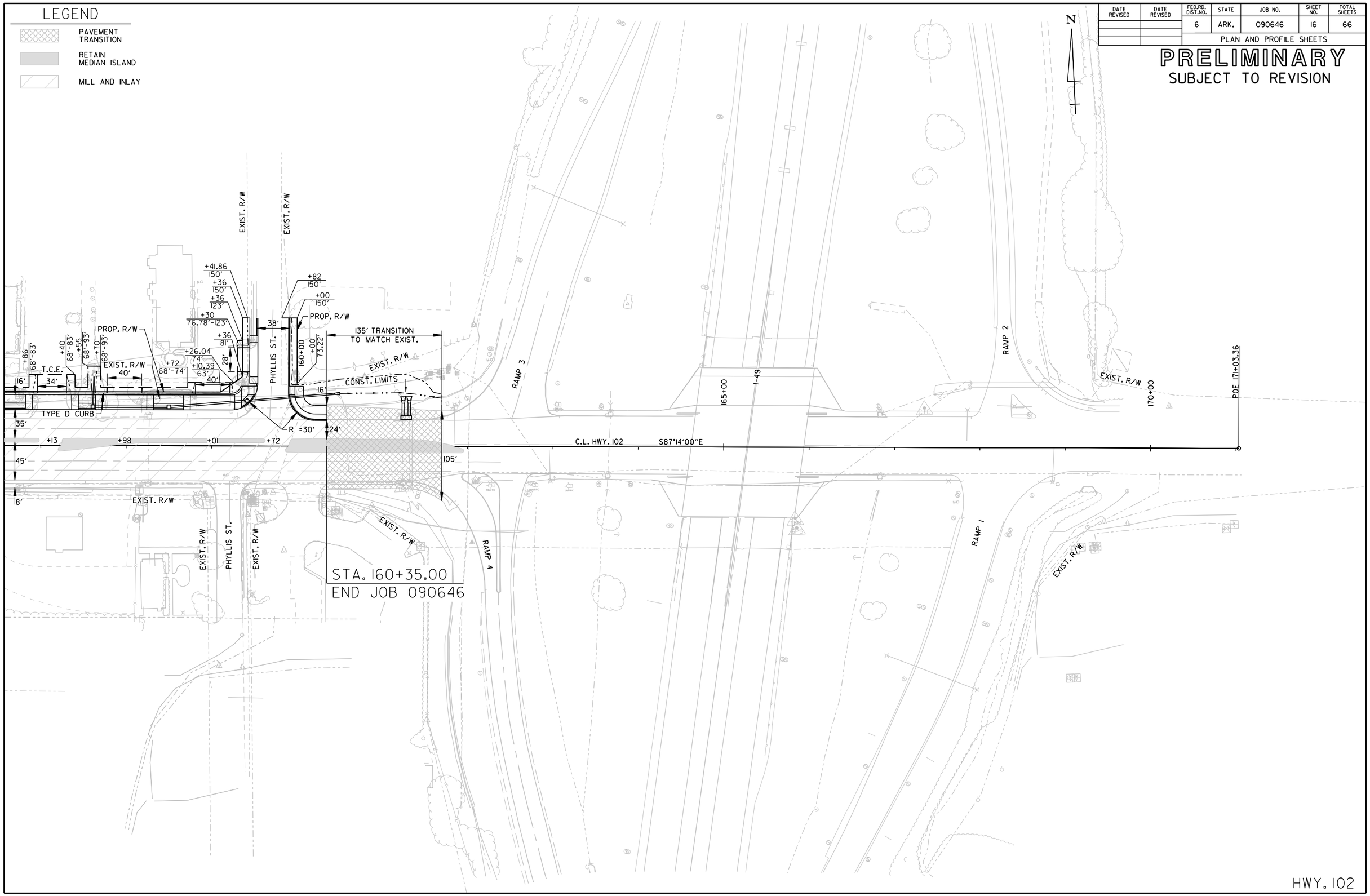

HWY. 102

London.Miller 10/4/2023 5:35:05 PM
WORKSPACE: London.Miller
C:\users\public\mbpw\6\d0129163\R090646_12_PP_009.dgn
REVISED DATE: $$REVDATE$$

DATE REVISED	DATE REVISED	FED.RD. DIST.NO.	STATE	JOB NO.	SHEET NO.	TOTAL SHEETS
		6	ARK.	090646	17	66
		PLAN AND PROFILE SHEETS				

HWY. 102 LT. STORM SEWER

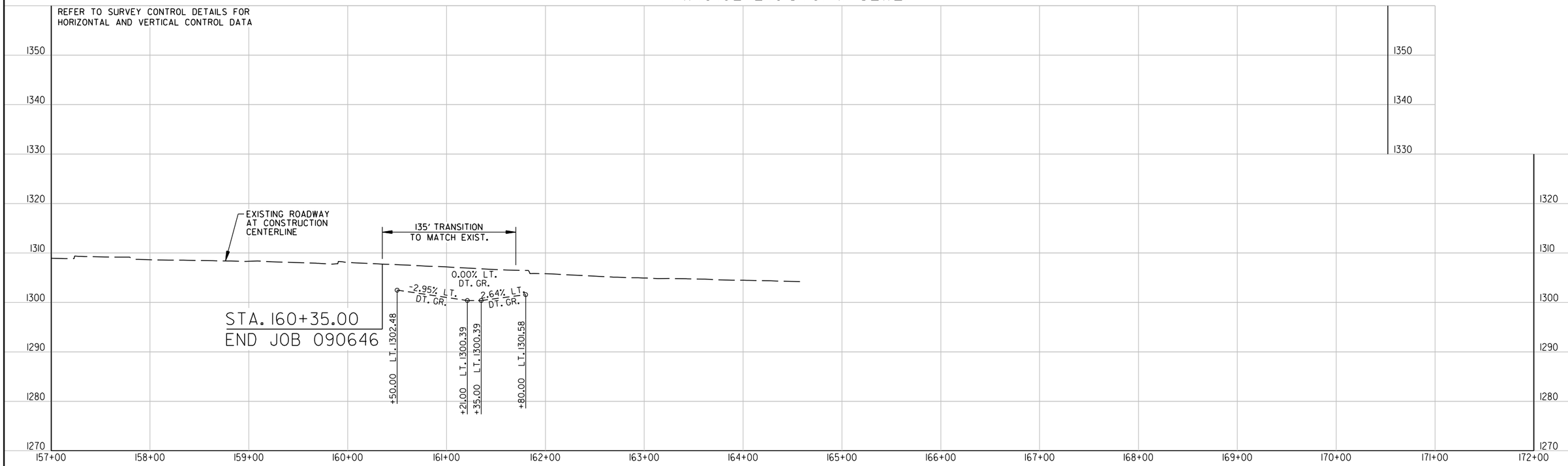

HWY. 102 RT. STORM SEWER

LandonMiller 10/4/2023 5:35:16 PM
WORKSPACE: LandonMiller
c:\users\public\mbslpw\16\d02963\R090646.L2_PP_010.dgn
REVISED DATE: $$REVDATE$$

DATE REVISED	DATE REVISED	FED.RD. DIST.NO.	STATE	JOB NO.	SHEET NO.	TOTAL SHEETS
		6	ARK.	090646	18	66
		PLAN AND PROFILE SHEETS				

PRELIMINARY
SUBJECT TO REVISION

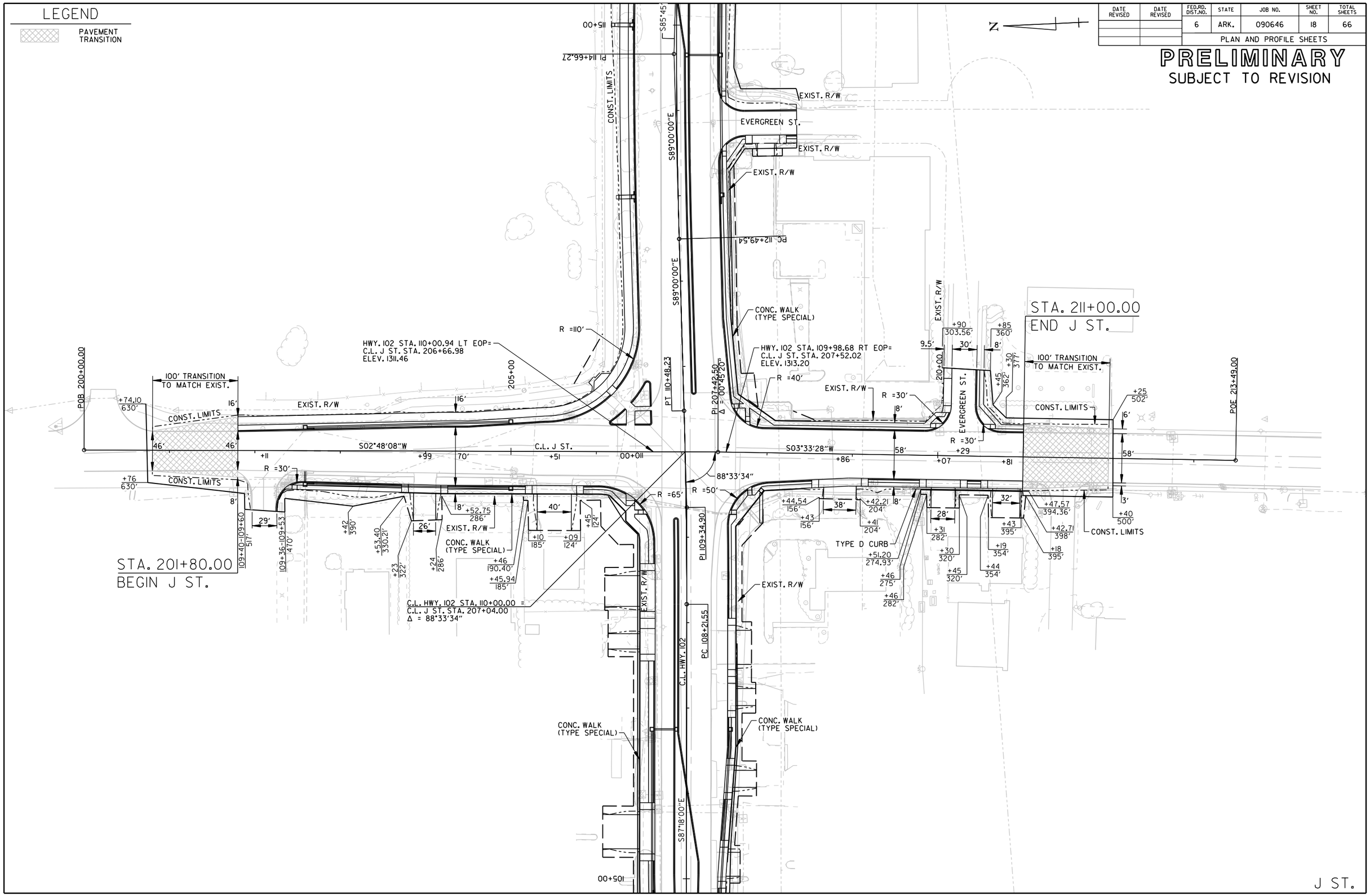

London.Miller 10/4/2023 5:35:26 PM
WORKSPACE: London.Miller
C:\users\public\mbjpw\6\d0129163\R090646_12_PP_011.dgn
REVISED DATE: $$REVDATE$$

DATE REVISED	DATE REVISED	FED.RD. DIST.NO.	STATE	JOB NO.	SHEET NO.	TOTAL SHEETS
		6	ARK.	090646	19	66
		PLAN AND PROFILE SHEETS				

J ST. LT. STORM SEWER

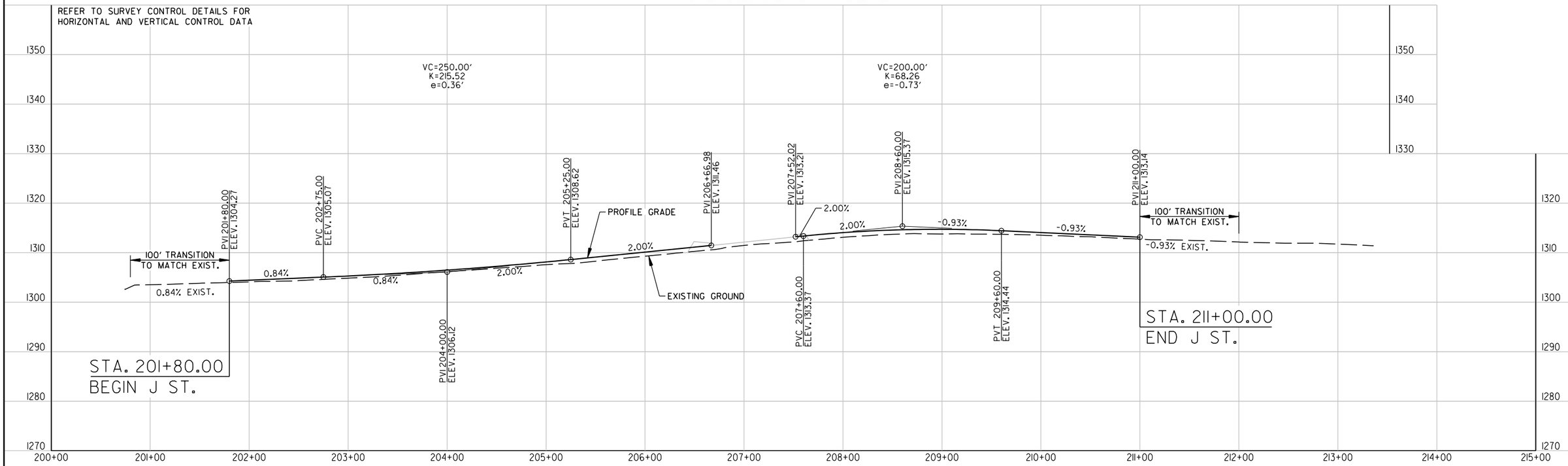

J ST. RT. STORM SEWER

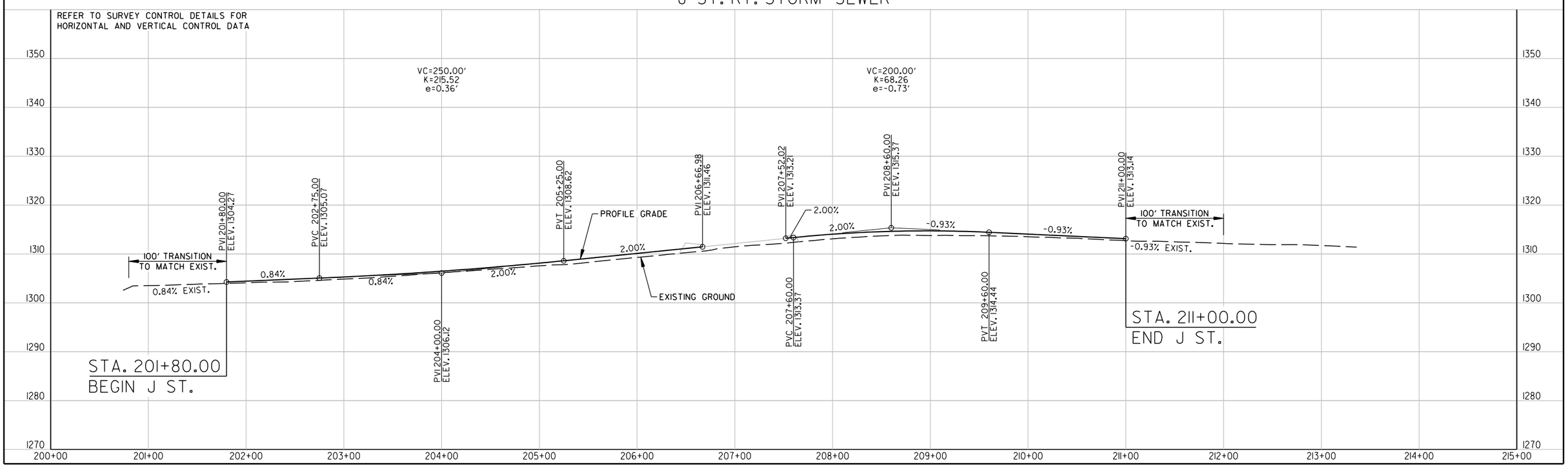

LandonMiller 10/4/2023 5:35:38 PM
WORKSPACE: LandonMiller
c:\users\public\mbslpw\16\d02963\R090646.L2.PP.012.dgn
REVISED DATE: $$REVDATE$$

DATE REVISED	DATE REVISED	FED.RD. DIST.NO.	STATE	JOB NO.	SHEET NO.	TOTAL SHEETS
		6	ARK.	090646	20	66
		PLAN AND PROFILE SHEETS				

PRELIMINARY
SUBJECT TO REVISION

LEGEND

PAVEMENT TRANSITION

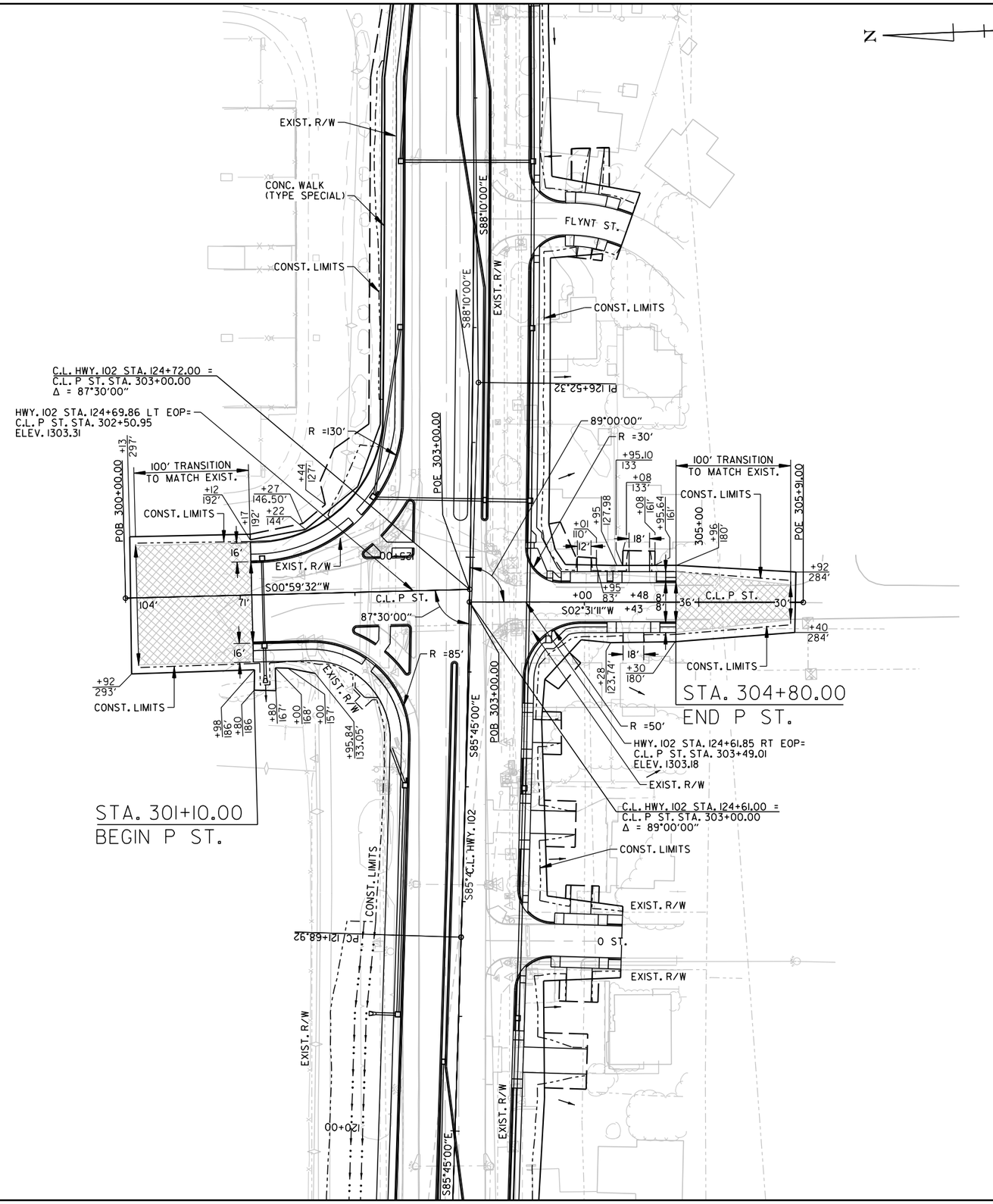

London.Miller 10/4/2023 5:35:51 PM
WORKSPACE: London.Miller
C:\Users\public\mbjpw\6\d0129163\R090646_I2_PP_013.dgn
REVISED DATE: $$REVDATE$$

DATE REVISED	DATE REVISED	FED.RD. DIST.NO.	STATE	JOB NO.	SHEET NO.	TOTAL SHEETS
		6	ARK.	090646	21	66
		PLAN AND PROFILE SHEETS				

REFER TO SURVEY CONTROL DETAILS FOR HORIZONTAL AND VERTICAL CONTROL DATA

P ST. (NORTH) LT. STORM SEWER

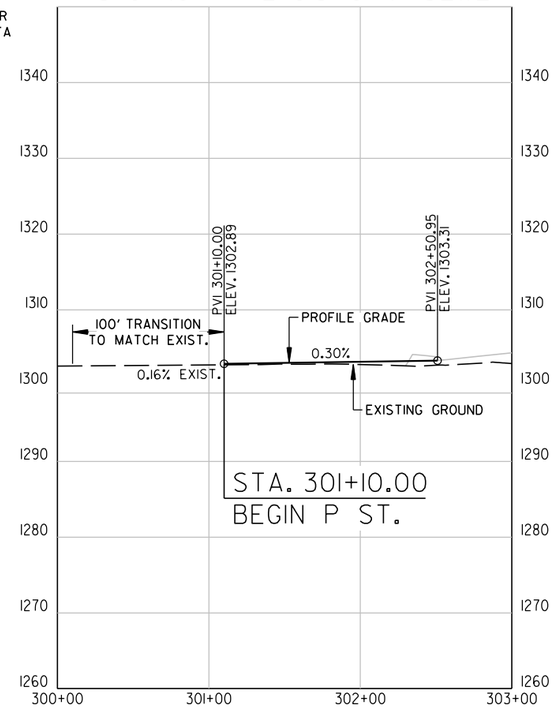

P ST. (SOUTH) LT. STORM SEWER

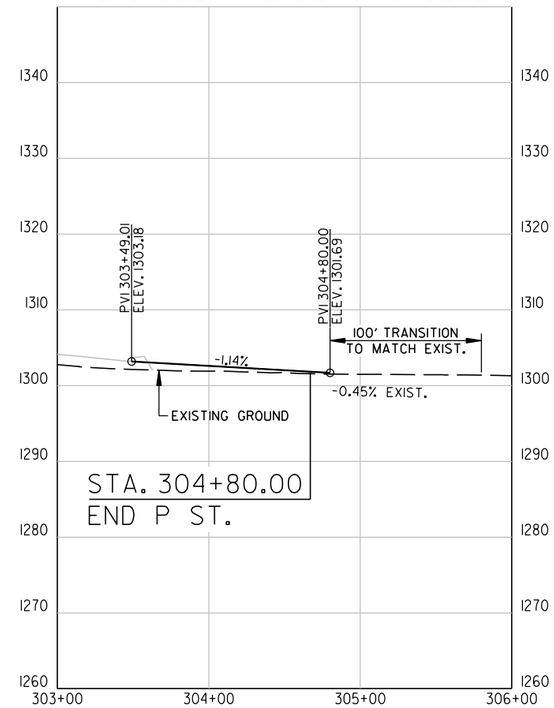

REFER TO SURVEY CONTROL DETAILS FOR HORIZONTAL AND VERTICAL CONTROL DATA

P ST. (NORTH) RT. STORM SEWER

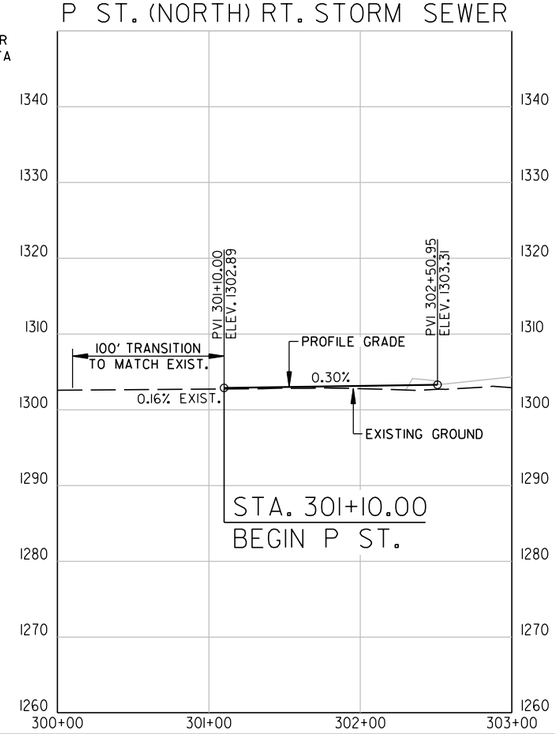

P ST. (SOUTH) RT. STORM SEWER

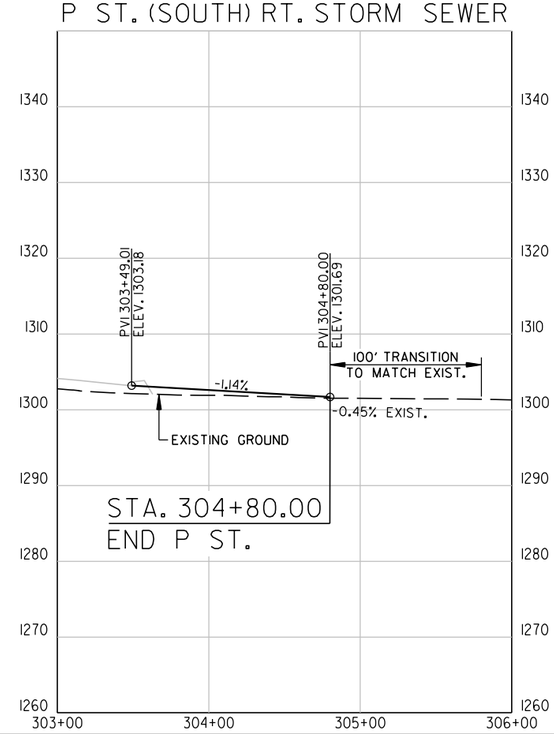

London.Miller 10/4/2023 5:36:01 PM
WORKSPACE: London.Miller
c:\users\public\mbl\dw\6\d029163\R090646_12_PP_014.dgn
REVISED DATE: $$REVDATE$$

DATE REVISED	DATE REVISED	FED.RD. DIST.NO.	STATE	JOB NO.	SHEET NO.	TOTAL SHEETS
		6	ARK.	090646	22	66
		PLAN AND PROFILE SHEETS				

PRELIMINARY
SUBJECT TO REVISION

LEGEND

PAVEMENT TRANSITION

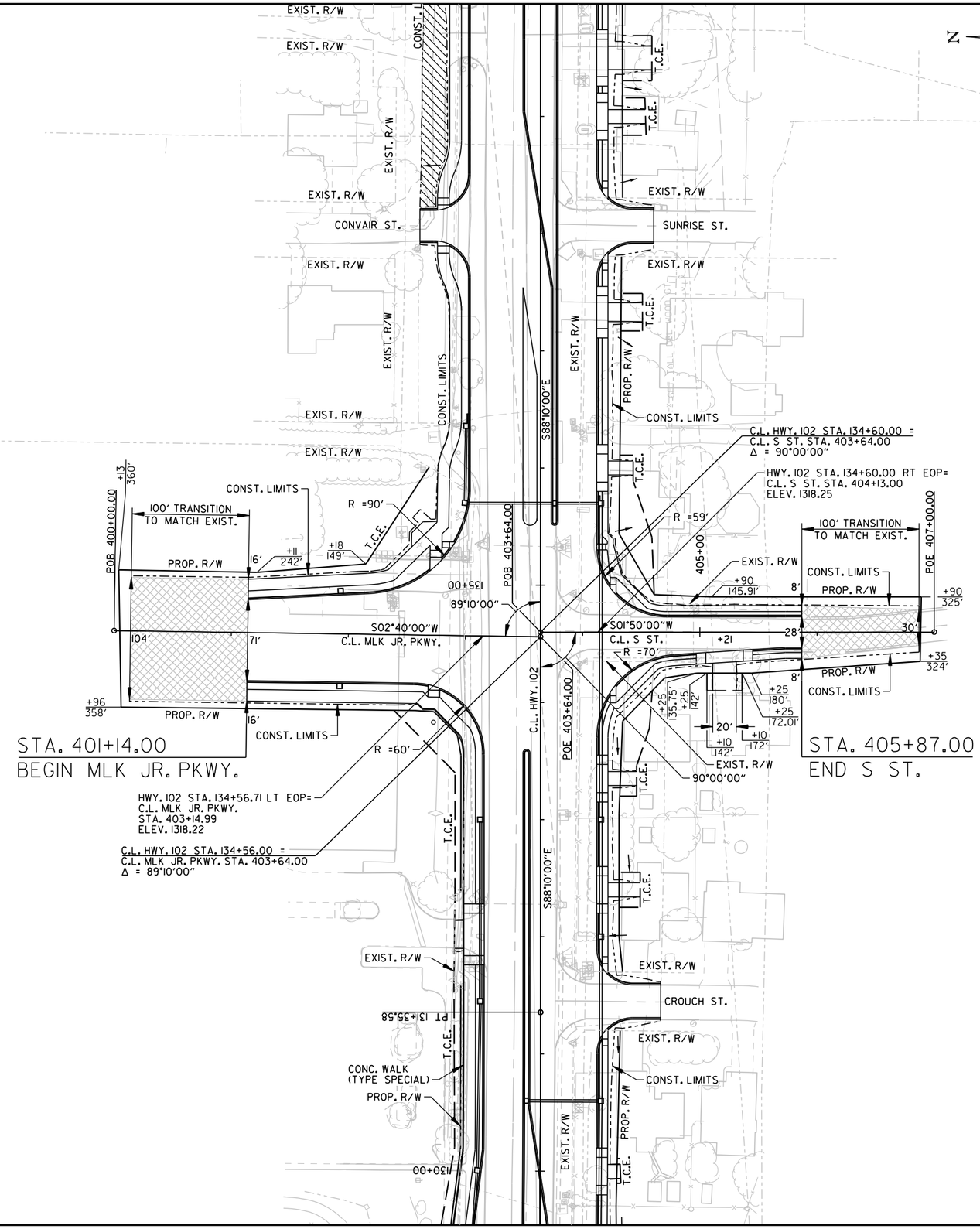

MLK JR. PKWY./S ST.

London.Miller 10/4/2023 5:36:12 PM
WORKSPACE: London.Miller
C:\users\public\mdbrw\6\d0129163\R090646_12_PP_015.dgn
REVISED DATE: $$REVDATE$$

DATE REVISED	DATE REVISED	FED.RD. DIST.NO.	STATE	JOB NO.	SHEET NO.	TOTAL SHEETS
		6	ARK.	090646	23	66
		PLAN AND PROFILE SHEETS				

REFER TO SURVEY CONTROL DETAILS FOR HORIZONTAL AND VERTICAL CONTROL DATA

MLK JR. PKWY. LT. STORM SEWER

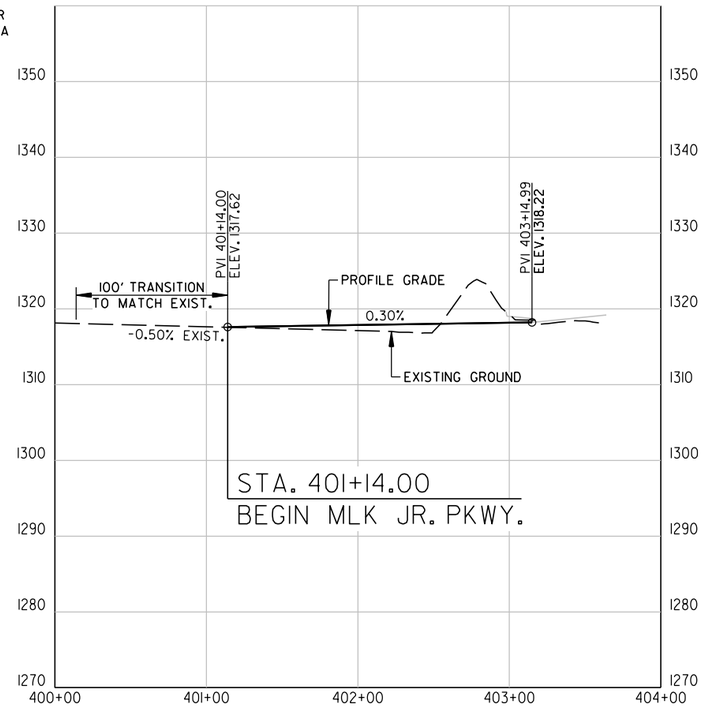

S ST. LT. STORM SEWER

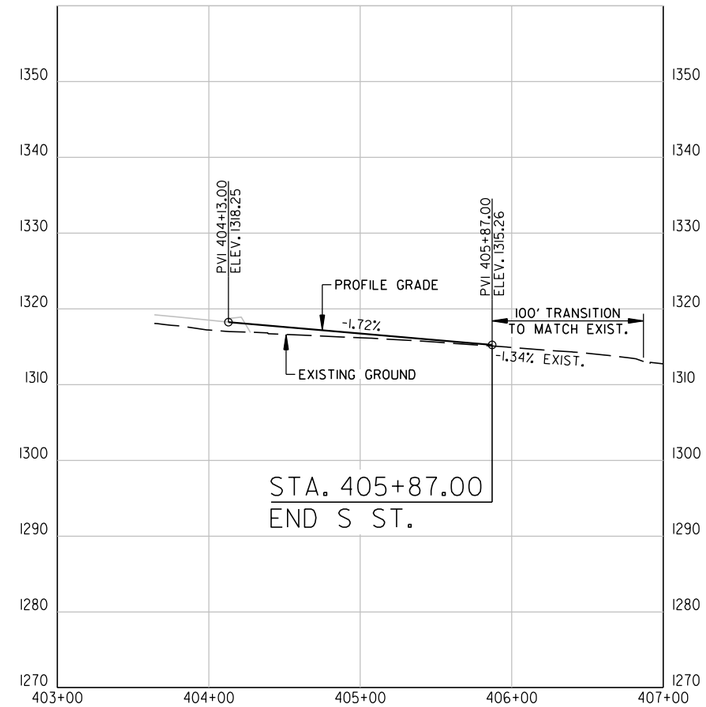

REFER TO SURVEY CONTROL DETAILS FOR HORIZONTAL AND VERTICAL CONTROL DATA

MLK JR. PKWY. RT. STORM SEWER

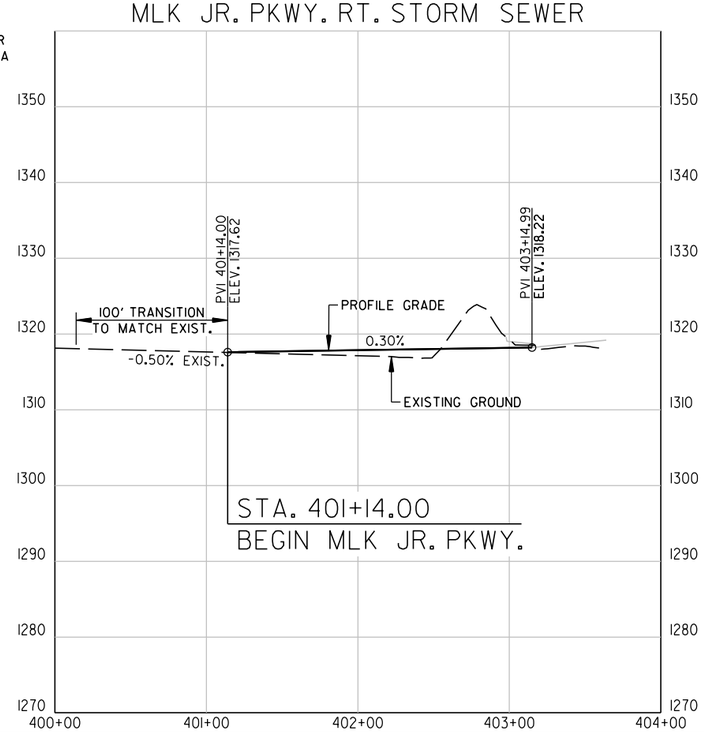

S ST. RT. STORM SEWER

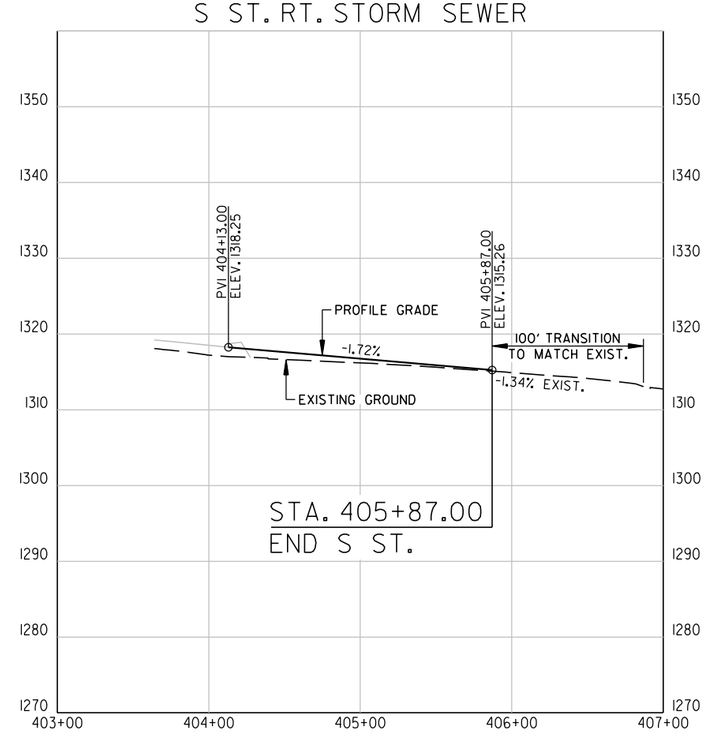

London.Miller 10/4/2023 5:36:22 PM
WORKSPACE: London.Miller
c:\users\public\mdbrw\6\d029163\R090646_12_PP_016.dgn
REVISED DATE: $$REVDATE$$

DATE REVISED	DATE REVISED	FED.RD. DIST.NO.	STATE	JOB NO.	SHEET NO.	TOTAL SHEETS
		6	ARK.	090646	24	66
		PLAN AND PROFILE SHEETS				

PRELIMINARY
SUBJECT TO REVISION

LEGEND

PAVEMENT TRANSITION

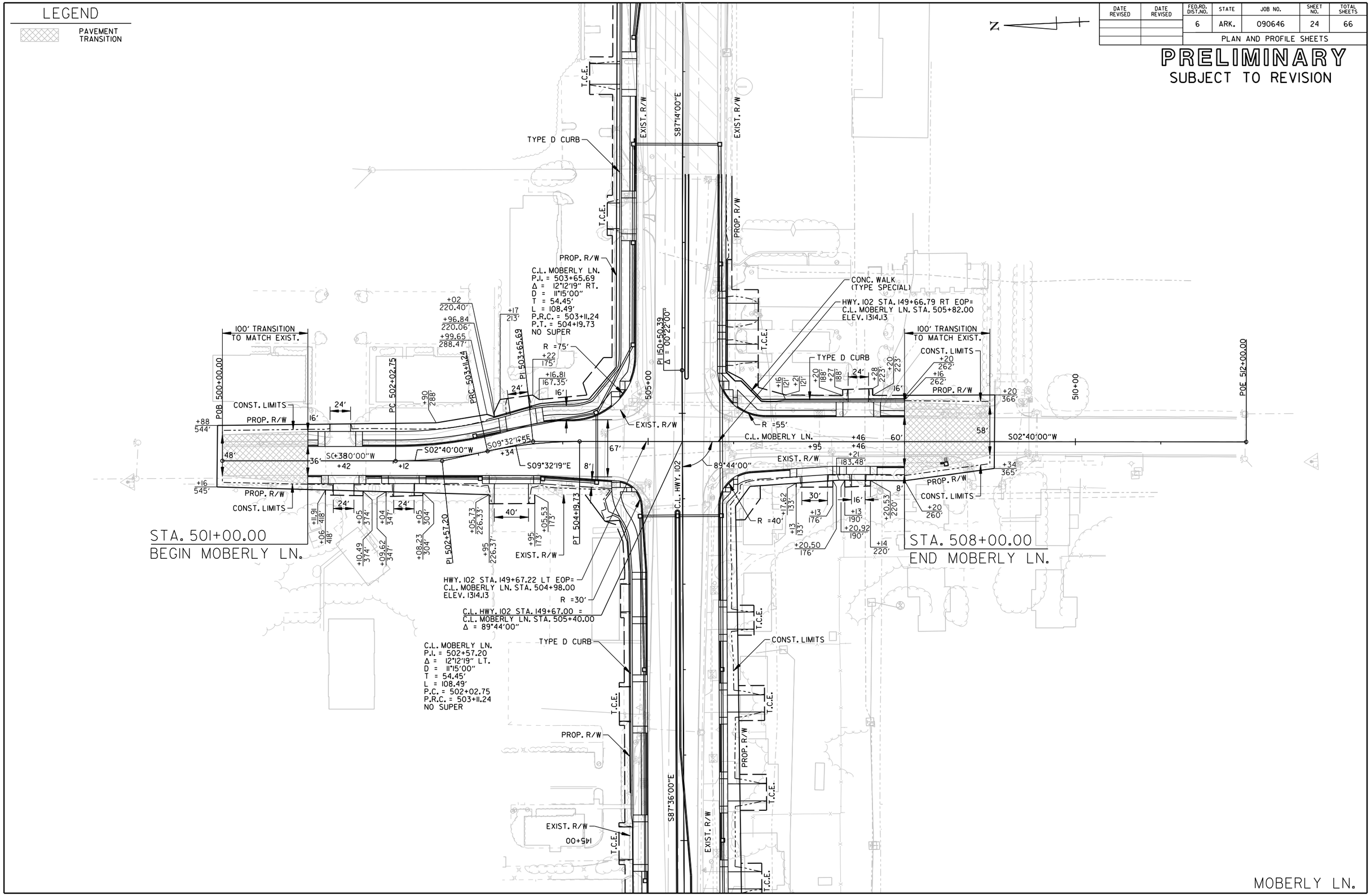

London.Miller 10/4/2023 5:36:53 PM
WORKSPACE: London.Miller
c:\users\public\mdlwk\6\d029163\R090646_12_PP_017.dgn
REVISED DATE: $$REVDATE$$

DATE REVISED	DATE REVISED	FED.RD. DIST.NO.	STATE	JOB NO.	SHEET NO.	TOTAL SHEETS
		6	ARK.	090646	25	66
		PLAN AND PROFILE SHEETS				

MOBERLY LN. LT. STORM SEWER

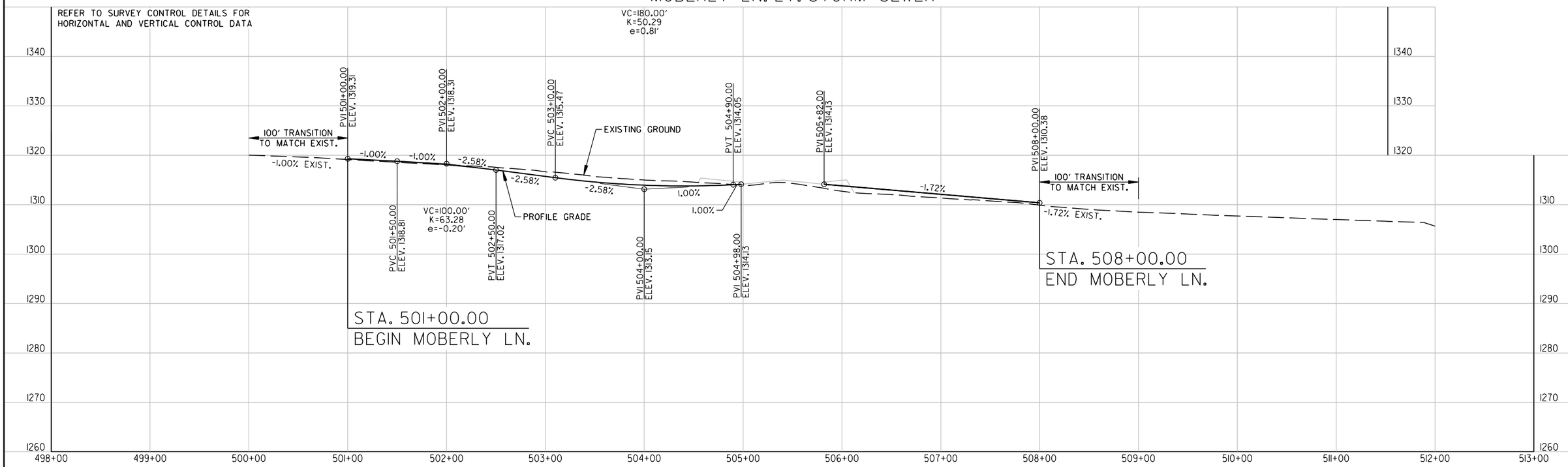

MOBERLY LN. RT. STORM SEWER

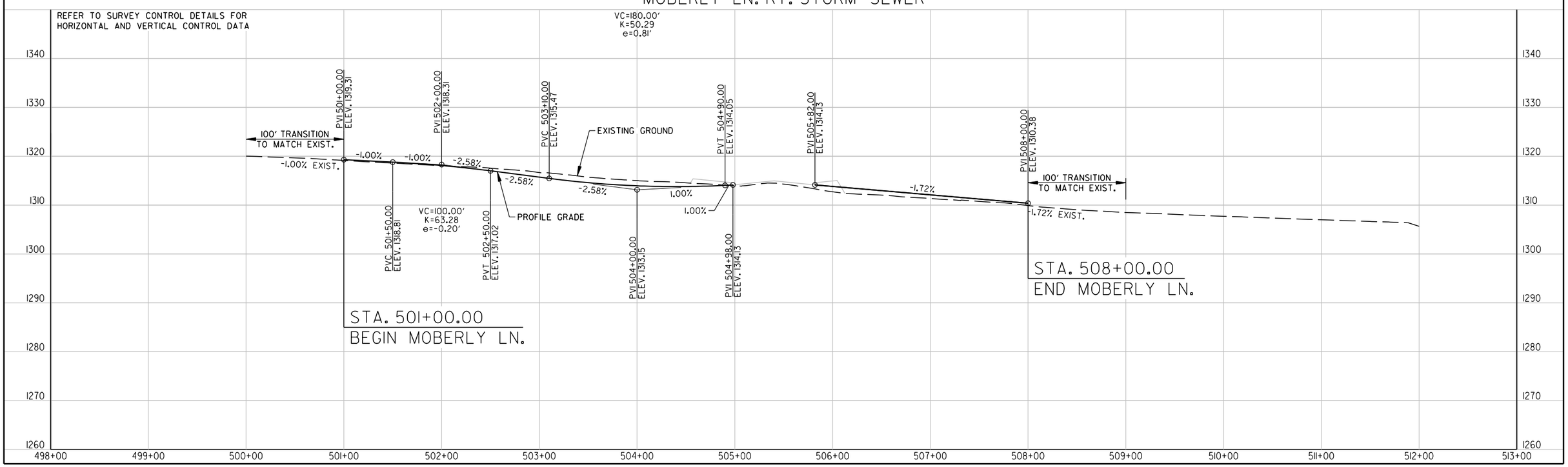

LandonMiller 10/4/2023 5:37:05 PM
WORKSPACE: LandonMiller
c:\users\public\mbslpw\16\d02963\R090646.L2_PP_018.dgn
REVISED DATE: $$REVDATE$$

DATE REVISED	DATE REVISED	FED.RD. DIST.NO.	STATE	JOB NO.	SHEET NO.	TOTAL SHEETS
		6	ARK.	090646	26	66
		TRAFFIC SIGNAL NOTES				

PRELIMINARY
SUBJECT TO REVISION

TRAFFIC SIGNAL NOTES:

1. THE TRAFFIC SIGNAL SHALL NOT BE PUT INTO OPERATION OR SWITCHED TO THE NEXT CONSTRUCTION STAGE PRIOR TO THE FOLLOWING:

   A. ALL TRAFFIC SIGNAL EQUIPMENT HAS BEEN INSTALLED ACCORDING TO THE PLANS, SPECIAL PROVISIONS, AND PROPERLY FUNCTIONAL. THIS INCLUDES BUT NOT LIMITED TO: CABINETS, PULL BOXES, JUNCTION BOXES, POLES, MAST ARMS, FOUNDATIONS, LUMINAIRES, SIGNAL HEADS, PEDESTRIAN SIGNAL HEADS, PUSH BUTTONS, DETECTION SYSTEM, CONDUITS, CONDUCTORS, CABLES, TRAFFIC CONTROLLER, CONFLICT MONITOR, COMMUNICATION SYSTEM, SERVICE POINT,

   B. THE DETECTION SYSTEM SHALL BE INSTALLED, SETUP, AND CONFIGURED BY THE CONTRACTOR OR THEIR SUPPLIER PER PLANS. A TRAFFIC OPERATIONS INSPECTOR SHALL INSPECT AND PROVIDE APPROVAL IN ORDER TO PUT THE TRAFFIC SIGNAL INTO OPERATION.

   C. THE TRAFFIC CONTROLLER AND CONFLICT MONITOR SHALL BE PROGRAMMED TO OPERATE AS REQUIRED PER THE PLANS (PHASING DIAGRAM, INTERVAL CHART, AND ANY ADDITIONAL NOTES), SPECIAL PROVISIONS AND ARDOT SPECIFICATIONS.

   D. TIMING SETTINGS HAVE BEEN PROGRAMMED AND APPROVED AS REQUIRED BY ITS MANAGEMENT SECTION-MAINTENANCE DIVISION.

   E. THE TRAFFIC SIGNAL HAS BEEN INSPECTED AND APPROVED BY A TRAFFIC OPERATIONS INSPECTOR.

   F. ALL REQUIRED DOCUMENTS RELATED TO THE TRAFFIC SIGNAL EQUIPMENT, THIS INCLUDES BUT NOT LIMITED TO: TEST RESULTS, CONFIGURATION/DATA REPORTS, WARRANTIES, AND ANY OTHER DOCUMENTATION REQUIRED PER PLANS AND SPECIAL PROVISIONS.

2. CONTRACTOR SHALL NOTIFY ALL EXISTING UTILITY OWNERS BEFORE BEGINNING WORK ON THIS PROJECT.

3. TRAFFIC SIGNAL CONTRACTOR SHALL NOTIFY THE RESIDENT ENGINEER OR ASSIGNED DEPARTMENT PROJECT INSPECTOR EACH DAY PRIOR TO SIGNAL RELATED WORK. NO WORK ON TRAFFIC SIGNALS WILL BE ALLOWED OR APPROVED WITHOUT

4. THE CONTRACTOR SHALL PERFORM ALL WORK POSSIBLE THAT WILL MINIMIZE THE TIME THAT THE TRAFFIC SIGNAL IS OUT OF OPERATION. IF, IN THE OPINION OF THE ENGINEER, TRAFFIC CONDITIONS WARRANT, THE CONTRACTOR SHALL PROVIDE FLAGMEN TO DIRECT TRAFFIC WHILE THE TRAFFIC SIGNAL IS OUT OF OPERATION.

5. ALL ELECTRICAL WORK SHALL BE PERFORMED IN ACCORDANCE WITH THE CURRENT EDITIONS OF THE NFPA 70 (CURRENT EDITION) NATIONAL ELECTRICAL CODE, NFPA 101 (CURRENT EDITION) LIFE SAFETY CODE, STATE ELECTRICAL CODE AND LOCAL ELECTRICAL CODE.

6. EXTEND GREEN EQUIPMENT GROUNDING CONDUCTOR (E.G.C.) FROM GROUND BAR AT MAIN BREAKER TO CONTROL PANEL AND TO FIRST POLE. SOLIDLY BOND E.G.C. TO GROUND LUG OF CONTROL CABINET AND TO POLE GROUND. ENSURE THAT ONLY ONE NEUTRAL-TO-GROUND BOND EXISTS IN THE SYSTEM AND THAT IT IS AT THE MAIN

7. ELECTRICAL SERVICE SHALL BE PROVIDED BY THE CITY/COUNTY TO A SERVICE POLE WITH EXTERNAL RAINTIGHT BREAKER (MAIN BREAKER), GALVANIZED STEEL SERVICE RISER, METER LOOP (IF REQUIRED), AND WEATHERHEAD AT A MUTUALLY ACCEPTABLE POINT WITHIN THE RIGHT-OF-WAY. IF THE SERVICE POINT IS OVER 10 FEET FROM THE CONTROLLER, THE CONTRACTOR SHALL PROVIDE AND INSTALL A SEPARATE TWO CIRCUIT EXTERNAL BREAKER (SECONDARY BREAKER) ON OR NEAR THE TRAFFIC SIGNAL CONTROLLER CABINET AND SHALL INSTALL CONDUIT, ELECTRICAL SERVICE WIRE (2c/#6 A.W.G. USE RATED, WITH GROUND TYPICAL), AND PERFORM WIRING TO TAP INTO THE CITY'S/ COUNTY'S MAIN BREAKER AS PART OF THIS CONTRACT. CONDUIT IS PAID FOR AS A SEPARATE ITEM OF THIS CONTRACT. TWO CIRCUIT BREAKERS, CONSIDERED SUBSIDIARY TO THE CONTROL EQUIPMENT, ARE NEEDED WHERE STREET LIGHTING IS INCLUDED. AS PART OF THE SIGNAL INSTALLATION, STREET LIGHTING CIRCUIT (2c/#12 A.W.G. UF RATED, TYPICAL) SHALL BE KEPT FROM THE CIRCUIT SERVING THE TRAFFIC SIGNAL CONTROL EQUIPMENT FROM THE POINT OF TIE-IN AT THE SECONDARY BREAKER PROVIDED BY THE

8. CONTRACTOR SHALL CONNECT A SEPARATE NEUTRAL FOR EACH LOAD SWITCH REPRESENTED ON EACH SIGNAL POLE.

9. TRAFFIC CONTROLLER CABINET AND LAYOUT SHALL BE SUCH THAT IT IS NOT NECESSARY TO SHUT DOWN POWER OR REMOVE LOAD SWITCHES IN ORDER TO EASILY TEST OR MODIFY DETECTOR INPUTS TO THE CONTROLLER.

10. CONTROLLER CABINET SHALL BE WIRED SUCH THAT DURING FLASH OPERATIONS POWER TO THE LOAD SWITCHES CANNOT BACKFEED TO LOAD SWITCH POWER BUSS.

11. ALL PARTS OF THIS INSTALLATION SHALL BE IN ACCORDANCE WITH THE STANDARD SPECIFICATIONS FOR HIGHWAY CONSTRUCTION, STANDARD DRAWINGS, AND WITH THE MANUAL ON UNIFORM TRAFFIC CONTROL DEVICES, CURRENT EDITION.

12. CONTROLLER CABINET LAYOUT AND ORIENTATION SHALL CONFORM TO IMSA

13. DOOR PANEL TEST PUSH BUTTONS SHALL ACTUATE INDICATED PHASES. DETECTOR ASSIGNMENTS AND/OR SIDE PANEL JUMPERS MAY REQUIRE MODIFICATION.

14. ALL SYSTEM DETECTOR RACKS AND ASSOCIATED EQUIPMENT SHALL BE PROTECTED BY THE MAIN CONTROLLER CABINET POWER SURGE PROTECTION.

15. ONE VIDEO PROGRAMMNG MODULE SHALL BE PROVIDED FOR AIMING AND SETUP OF DETECTORS IF THE VIDEO SYSTEM CANNOT BE ADJUSTED THROUGH HARDWARE AND SOFTWARE PROVIDED BY ITEMS WITHIN THE JOB.

16. HARDWARE INPUTS MAY BE DETERMINED BY SUPPLIER. EACH DETECTOR OUTPUT SHALL INPUT THE CONTROLLER THROUGH A SEPARATE INPUT UNLESS OTHERWISE NOTED AND BE PROGRAMMED TO ACTUATE THE ASSOCIATED PHASE. COMBINATION (COMB.) DETECTORS SHALL ALSO BE PROGRAMMED TO PROVIDE VEHICLE

17. THE LOCAL RADIO WITH ANTENNA AND TRAFFIC SIGNAL CONTROLLER SHALL BE COMPATIBLE WITH THE EXISTING COORDINATION SYSTEM IN THE CITY/COUNTY.

18. CONDUIT INSTALLED UNDER ROADWAY SURFACES SHALL BE INSTALLED BY PUSHING OR BORING METHOD OR AS DIRECTED BY THE ENGINEER. PVC OR HDPE CONDUIT SHALL BE USED AND SHALL BE UL LISTED. PVC CONDUIT SHALL BE MARKED "DIR. BORING" OR "DIRECTIONAL BORING" PER NEC. IF THE ENGINEER DETERMINES THIS IS NOT FEASIBLE, THEN A TRENCHING METHOD AS SHOWN IN THE STANDARD DRAWINGS MAY BE USED. THE ENGINEER SHALL GRANT A WRITTEN APPROVAL PRIOR TO USING

19. ALL CONDUIT SHALL BE THREE (3") INCH DIAMETER UNLESS SPECIFIED ON PLANS. ALL CONDUIT UNDER THE ROADWAY, SIDEWALKS, AND DRIVEWAYS SHALL HAVE A MINIMUM DEPTH OF 24" FROM THE TOP OF THE CONDUIT TO THE FINISHED GRADE. CONDUIT DEPTH MAY NEED TO INCREASE NEAR DRAINAGE STRUCTURES.

20. CONDUIT BELL END FITTINGS SHALL BE INSTALLED ON ALL TERMINATING ENDS OF NON-METALLIC CONDUIT RUNS. THIS INCLUDES PULL BOXES, POLE BASES, AND TRAFFIC SIGNAL CABINETS. THE COST OF THE FITTINGS SHALL BE CONSIDERED SUBSIDARY TO THE PAY ITEM. ALL NON-METALLIC CONDUIT SHALL USE LONG SWEEP 90 DEGREE ELBOWS ON ALL CONDUIT BENDS.

21. ALL CONCRETE PULL BOXES SHALL BE (TYPE 2 HD) UNLESS OTHERWISE INDICATED. PULL BOX LIDS SHALL CLOSE FLUSH WITHOUT PINCHING ANY CONDUCTORS. CONDUIT LENGTHS IN PULL BOXES SHALL BE SET ACCORDINGLY. ANY CONDUCTORS THAT HAVE BEEN DAMAGED BY PINCHING SHALL BE COMPLETELY REPLACED AT THE

22. ALL CONCRETE PULL BOXES SHALL BE SET ON A GRAVEL OR CRUSHED STONE BEDDING AS SPECIFIED IN SECTION 711, CONCRETE PULL BOX, OF THE STANDARD SPECIFICATIONS FOR HIGHWAY CONSTRUCTION, EDITION OF 2014.

23. CONTRACTOR SHALL ATTACH A PERMANENT TAG OF RIGID PLASTIC OR NON-FERROUS METAL TO EACH CONDUIT AT PULLBOXES, POLE BASES, JUNCTION BOXES AND CONTROLLER CABINETS. TAGS SHALL BE EMBOSSED, STAMPED OR ENGRAVED WITH LETTERS 1/4" OR GREATER IN HEIGHT AND SECURED TO THE CONDUIT WITH NYLON OR PLASTIC TIES. EACH TAG SHALL INDICATE THE END LOCATION OF CONDUIT RUN. THE COST OF THE TAGS SHALL BE SUBSIDIARY TO THE

    EXAMPLES FOR CONDUIT IN SIDE CABINET: "TO POLE A AND B" OR "TO POLE C"
    EXAMPLES FOR CONDUIT IN PULL BOX: "TO POLE A" OR "TO TRAFFIC CABINET"

24. ALL STEEL POLES SHALL BE DESIGNED TO MEET THE AASHTO STANDARD SPECIFICATIONS FOR STRUCTURAL SUPPORTS FOR HIGHWAY SIGNS, LUMINAIRES AND TRAFFIC SIGNALS, 4th EDITION (2001) WITH 2003 AND 2006 INTERIMS.

25. ALL TRAFFIC SIGNAL POLES SHALL BE GALVANIZED.

26. CONNECTION OF TRAFFIC SIGNAL DISPLAY TO FIELD WIRING SHALL UTILIZE AN APPROVED TERMINAL STRIP BEHIND HAND-HOLE COVER AT BASE OF POLE. TERMINAL STRIP SHALL PROVIDE PROTECTION TO PREVENT EXPOSURE TO THE PUBLIC IN THE EVENT THAT POLE COVER IS MISSING. PAYMENT FOR TERMINAL STRIPS SHALL BE INCLUDED IN ITEM 714 TRAFFIC SIGNAL MAST ARM AND POLE WITH FOUNDATION OF THE STANDARD SPECIFICATIONS FOR HIGHWAY CONSTRUCTION, CURRENT EDITION.

27. FOUNDATION FOR ALL POLES SHALL BE EXTENDED IF NECESSARY TO ACCOMMODATE THE REQUIREMENTS FOR SIGNAL HEAD CLEARANCE ABOVE ROADWAY ONLY AT LOCATIONS WHERE THE GROUND ELEVATION AT THE POLE IS BELOW THE ELEVATION OF THE ROADWAY (SEE NOTES ON STANDARD DRAWING). PAYMENT WILL BE INCLUDED IN SECTION 714 TRAFFIC SIGNAL MAST ARM AND POLE WITH FOUNDATION OF THE STANDARD SPECIFICATIONS FOR HIGHWAY CONSTRUCTION, CURRENT

28. TO DETERMINE UTILITY CLEARANCES ABOVE THE TRAFFIC SIGNAL POLE, REFER TO THE POLE SCHEDULE FOR VERTICAL SHAFT HEIGHT. WHERE THE POLE SCHEDULE INDICATES THAT A LUMINAIRE ARM WILL BE USED, THIRTY-EIGHT (38') FEET SHOULD BE USED TO DETERMINE UTILITY CLEARANCE ABOVE THE LUMINAIRE ARM. WHERE THE POLE SCHEDULE INDICATES A TRAFFIC SIGNAL POLE WITHOUT A LUMINAIRE ARM, A HEIGHT OF TWENTY-ONE (21') FEET SHOULD BE USED TO DETERMINE UTILITY CLEARANCE ABOVE THE TRAFFIC SIGNAL MAST ARM. AN ADDITIONAL SIX (6') FEET SHOULD BE USED DIRECTLY ABOVE "VIDEO DETECTOR" AT LOCATIONS SHOWN ON THE SIGNAL PLANS.

29. THE DESIRABLE MINIMUM DISTANCE FROM THE FACE OF ROADWAY CURB OR SHOULDER EDGE TO THE FACE OF NON-BREAKAWAY POLE OR OBSTRUCTION IS SIX (6') FEET. REFER TO TRAFFIC SIGNAL PLANS FOR SPECIFIC LOCATION OF POLES, CONTROLLER AND ANY OTHER NON-BREAKAWAY OBSTRUCTIONS. REFER TO " DESIGN PARAMETERS, MINIMUM CLEAR ZONE DISTANCE" FOR MINIMUM DISTANCE FROM THE EDGE OF TRAVELED WAY TO THE FACE OF A NON-BREAKAWAY POLE OR OBSTRUCTION. TRAFFIC SIGNAL POLES OR ANY OTHER NON-BREAKAWAY

30. AS DETERMINED BY THE ENGINEER, FOUNDATION EMBEDMENT MAY BE DECREASED BY A MAXIMUM OF TWO FEET IF COMPETENT ROCK IS ENCOUNTERED PRIOR TO ACHIEVING PLAN EMBEDMENT AND AT LEAST HALF OF THE REMAINING PLAN EMBEDMENT LENGTH IS KEYED INTO COMPETENT ROCK.

31. LED LUMINAIRE ASSEMBLIES SHALL HAVE A BUG RATING OF U0.

32. BACKPLATES SHALL BE SUPPLIED FOR ALL TRAFFIC SIGNAL HEADS, REFER TO THE RETROREFLECTIVE BACKPLATES SPECIAL PROVISION FOR REQUIREMENTS.

33. PAVEMENT MARKINGS SHOWN FOR REFERENCE ONLY. SEE PERMANENT PAVEMENT MARKING DETAILS.

34. BEFORE FINAL ACCEPTANCE OF THE TRAFFIC SIGNAL, THE CONTRACTOR SHALL PROVIDE TWO (2) SETS OF LEDGER SIZE (11" X 17") AS-BUILT TRAFFIC SIGNAL PLANS TO THE MAINTENANCE AUTHORITY AND ARDOT.

DATE: 10/4/2023 FILE NAME: R090646_SG_00-02.dgn

LOCATION:	HWY. 102 IMPVTS.			
CITY:	BENTONVILLE			
COUNTY:	BENTON			
DISTRICT: 9	SCALE: N/A	DRAWN BY: CML		

London.Miller 10/4/2023 5:54:24 PM
WORKSPACE: London.Miller
c:\users\public\mdlwx\d029163\R090646_I7_SG_00-02.dgn
REVISED DATE: $$REVDATE$$

DATE REVISED	DATE REVISED	FED.RD. DIST.NO.	STATE	JOB NO.	SHEET NO.	TOTAL SHEETS
		6	ARK.	090646	27	66
		TRAFFIC SIGNAL STREET NAME SIGNS				

PRELIMINARY
SUBJECT TO REVISION

OVERHEAD STREET NAME MARKER STANDARD MAST ARM MOUNTED

HIGHWAY 102 (14TH ST.) AND J STREET INTERSECTION

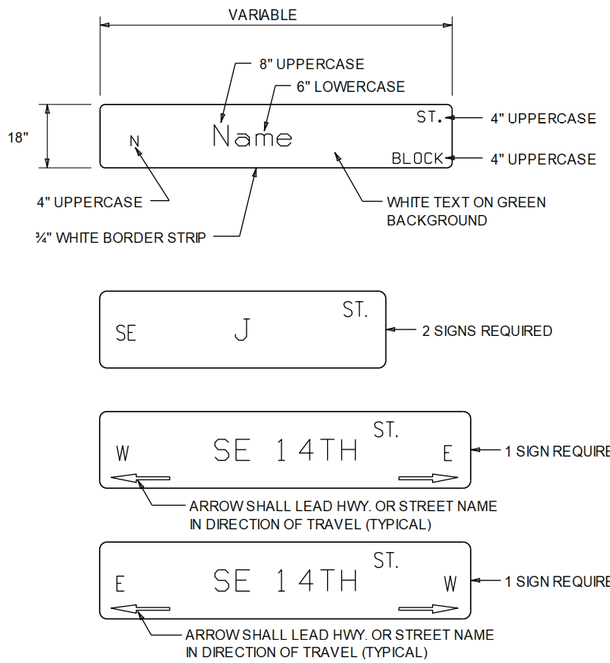

HIGHWAY 102 (14TH ST.) AND P STREET INTERSECTION

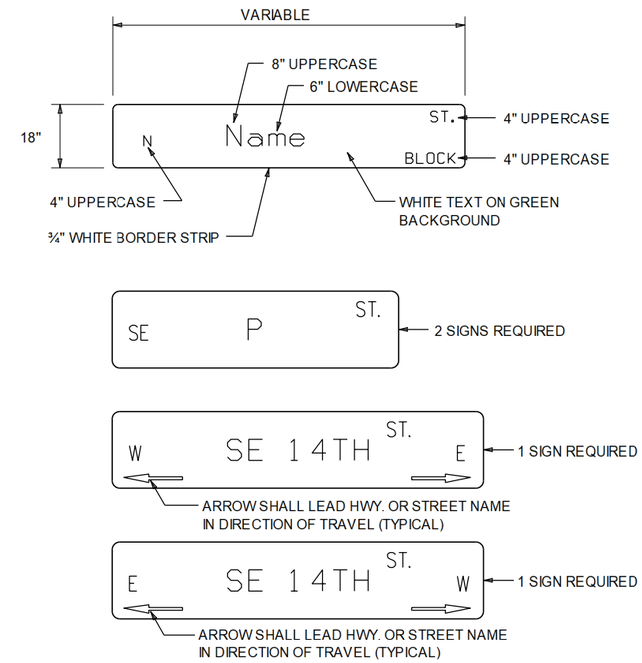

NOTES:

1. REFLECTIVE SHEETING SHALL COMPLY WITH ASTM 4956 TYPE 8 OR 9 REFLECTIVE SHEETING. SHEETING AND LEGEND SHALL BE APPLIED IN SUCH A MANNER TO PROVIDE WRINKLE AND BUBBLE FREE SURFACES. APPLICATION OF SHEETING IS CAUSE FOR REJECTION OF MATERIALS DUE TO WORKMANSHIP.
2. ALUMINUM SIGN BLANK SHALL BE ALLOY 6061-T6 OR 5052-H38. THE ALUMINUM SIGN SHALL BE ALSO ALODIZED. THE ALUMINUM SHEETING SHALL BE 0.100 INCH NOMINAL THICKNESS AND OF THE SIZE SHOWN WITH 1.5" CORNER RADII. PRIOR TO FABRICATION OF THE SIGNS, THE LAYOUT SHALL FIRST BE APPROVED BY AN AGENT OF THE CITY/ COUNTY.
3. WHEN CROSSROAD HAS TWO NAMES, THE SIGN FOR THE CROSSROAD TO THE LEFT MAY BE INSTALLED ON THE BACKSIDE OF THE MAST ARM ON THE NEARSIDE LEFT POLE. SEE STANDARD DRAWING SHEET FOR MORE INFORMATION FOR MOUNTING ON MAST ARM ASSEMBLY.
4. THE SERIES C 2000 STANDARD ALPHABET SHALL BE USED FOR ALL LETTERS.

DATE: 10/4/2023 FILE NAME: R090646_SG_00-03.dgn

LOCATION:	HWY. 102 IMPVTS.			
CITY:	BENTONVILLE			
COUNTY:	BENTON			
DISTRICT: 9	SCALE: N/A	DRAWN BY: CML		

LandonMiller 10/4/2023 5:54:34 PM
WORKSPACE: LandonMiller
G:\users\public\mbipw16\d029163\R090646_17_SG_00-03.dgn
REVISED DATE: $$REVDATE$$

DATE REVISED	DATE REVISED	FED.RD. DIST.NO.	STATE	JOB NO.	SHEET NO.	TOTAL SHEETS
		6	ARK.	090646	28	66
		TRAFFIC SIGNAL STREET NAME SIGNS				

PRELIMINARY
SUBJECT TO REVISION

OVERHEAD STREET NAME MARKER STANDARD MAST ARM MOUNTED

HIGHWAY 102 (14TH ST.) AND S ST./MLK JR. PKWY. INTERSECTION

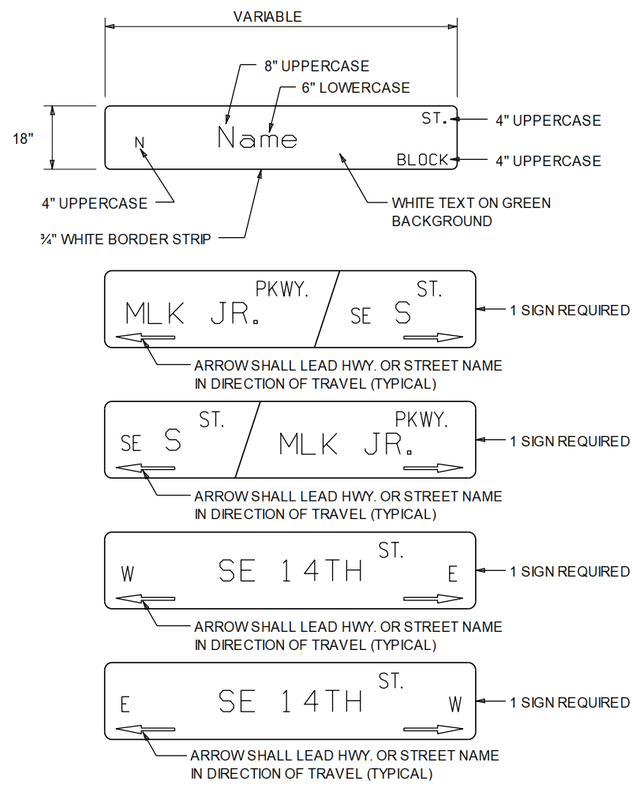

HIGHWAY 102 (14TH ST.) AND MOBERLY LANE INTERSECTION

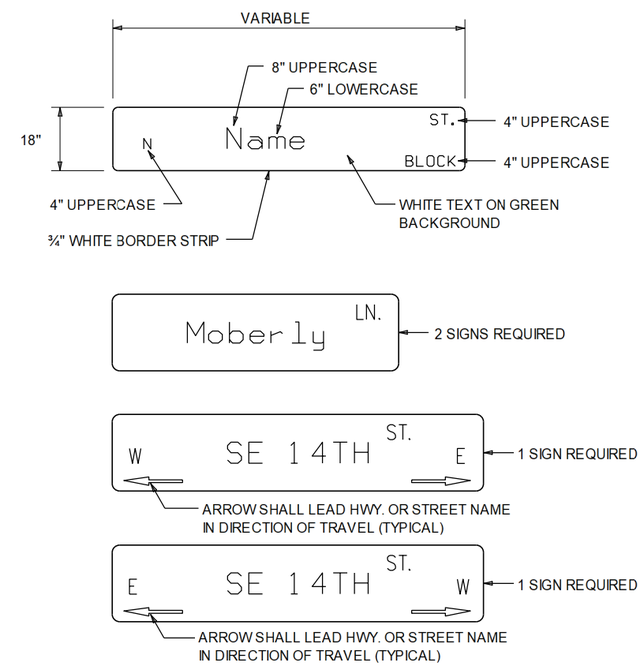

NOTES:

1. REFLECTIVE SHEETING SHALL COMPLY WITH ASTM 4956 TYPE 8 OR 9 REFLECTIVE SHEETING. SHEETING AND LEGEND SHALL BE APPLIED IN SUCH A MANNER TO PROVIDE WRINKLE AND BUBBLE FREE SURFACES. APPLICATION OF SHEETING IS CAUSE FOR REJECTION OF MATERIALS DUE TO WORKMANSHIP.
2. ALUMINUM SIGN BLANK SHALL BE ALLOY 6061-T6 OR 5052-H38. THE ALUMINUM SIGN SHALL BE ALSO ALODIZED. THE ALUMINUM SHEETING SHALL BE 0.100 INCH NOMINAL THICKNESS AND OF THE SIZE SHOWN WITH 1.5" CORNER RADII. PRIOR TO FABRICATION OF THE SIGNS, THE LAYOUT SHALL FIRST BE APPROVED BY AN AGENT OF THE CITY/ COUNTY.
3. WHEN CROSSROAD HAS TWO NAMES, THE SIGN FOR THE CROSSROAD TO THE LEFT MAY BE INSTALLED ON THE BACKSIDE OF THE MAST ARM ON THE NEARSIDE LEFT POLE. SEE STANDARD DRAWING SHEET FOR MORE INFORMATION FOR MOUNTING ON MAST ARM ASSEMBLY.
4. THE SERIES C 2000 STANDARD ALPHABET SHALL BE USED FOR ALL LETTERS.

DATE: 10/4/2023 FILE NAME: R090646_SG_00-03.dgn

LOCATION:	HWY. 102 IMPVTS.			
CITY:	BENTONVILLE			
COUNTY:	BENTON			
DISTRICT: 9	SCALE: N/A	DRAWN BY: CML		

LandonMiller 10/4/2023 5:54:36 PM
WORKSPACE: LandonMiller
c:\users\public\mbslpw\16\d02963\R090646.17_SG_00-03.dgn
REVISED DATE: $$REVDATE$$

DATE REVISED	DATE REVISED	FED.RD. DIST.NO.	STATE	JOB NO.	SHEET NO.	TOTAL SHEETS
		6	ARK.	090646	29	66
		GROUNDING ARRAY DETAIL				

GROUNDING ARRAY
SINGLE-PORT FUSION WELDS

PRELIMINARY
SUBJECT TO REVISION

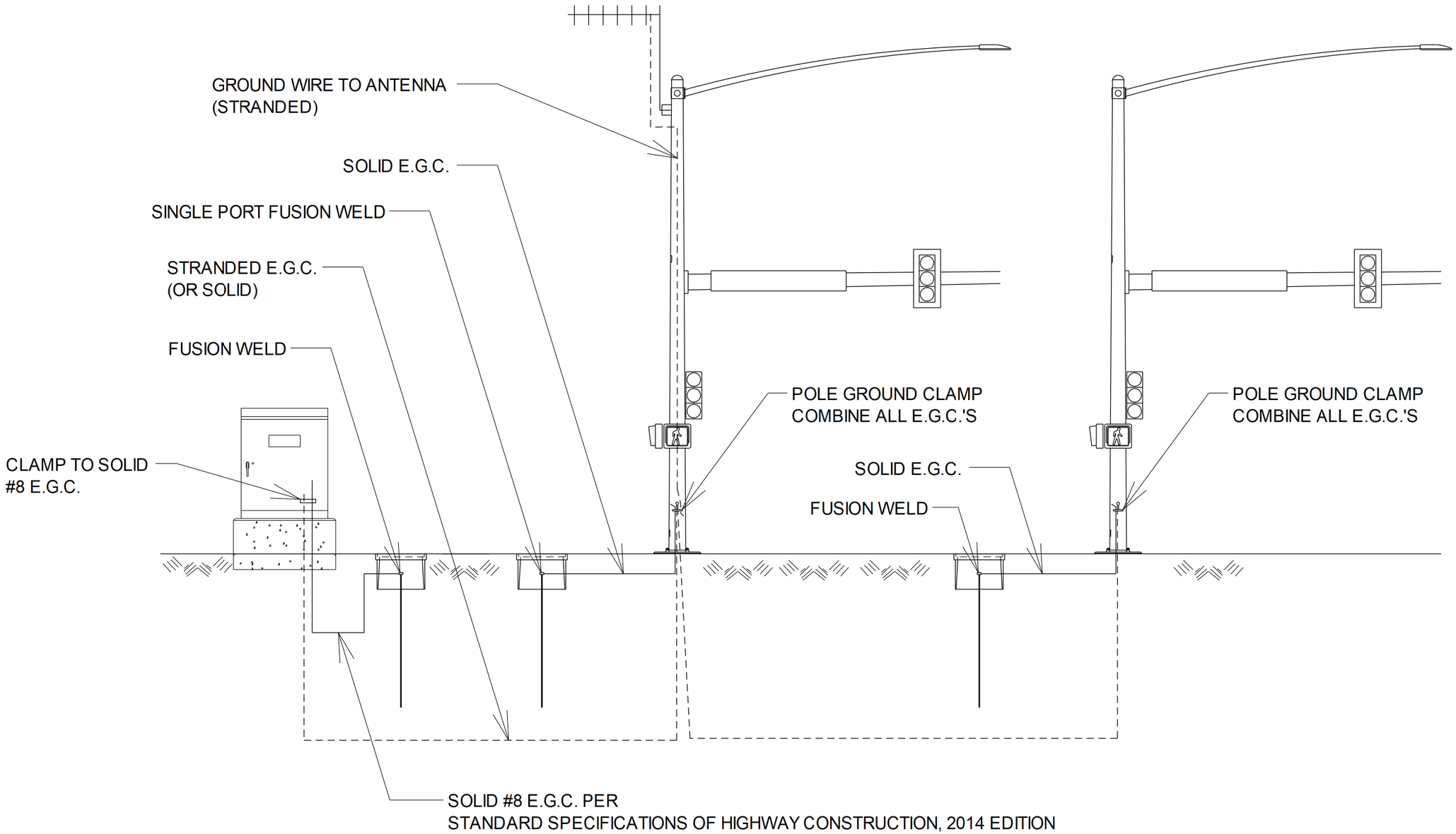

LandonMiller 10/4/2023 5:54:47 PM
WORKSPACE: LandonMiller
c:\users\public\mbslpw\16\d02963\R090646.17_SG_00-04.dgn
REVISED DATE: $$REVDATE$$

DATE: 10/4/2023 FILE NAME: R090646_SG_00-04.dgn

LOCATION:	HWY. 102 IMPVTS.			
CITY:	BENTONVILLE			
COUNTY:	BENTON			
DISTRICT: 9	SCALE: N/A	DRAWN BY: CML		

DATE REVISED	DATE REVISED	FED.RD. DIST.NO.	STATE	JOB NO.	SHEET NO.	TOTAL SHEETS
		6	ARK.	090646	30	66
		PEDESTRIAN PUSH BUTTON PEDESTAL DETAIL				

PRELIMINARY
SUBJECT TO REVISION

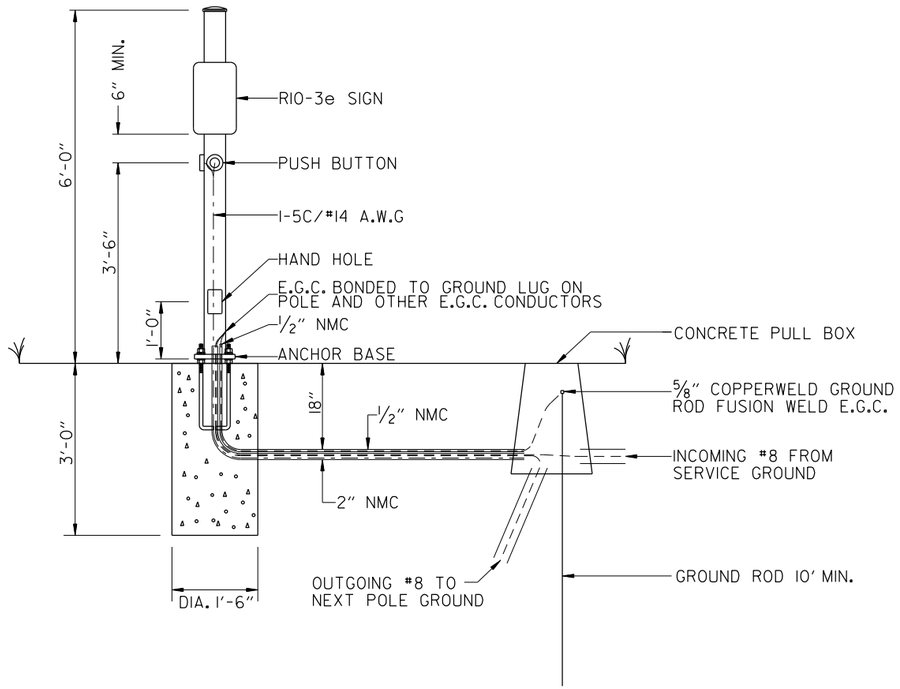

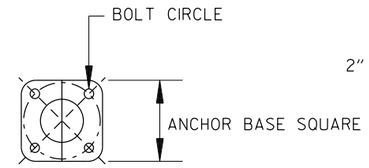

ANCHOR BASE
N.T.S.

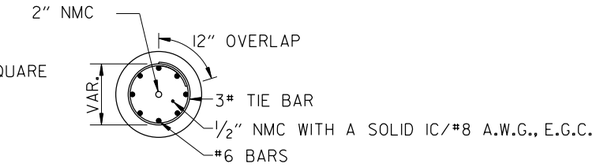

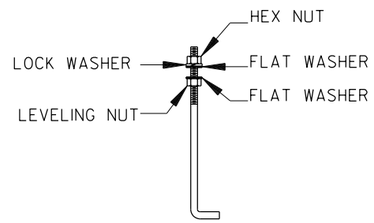

ANCHOR BOLT
N.T.S.

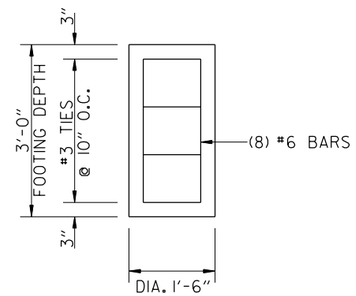

PEDESTRIAN PUSH BUTTON PEDESTAL DETAIL

NOTES:

EACH PEDESTRIAN PUSH BUTTON SHALL HAVE ONE R10-3E SIGN ATTACHED TO THE POLE ABOVE THE BUTTON. ALL SIGNS SHALL BE MANUFACTURED IN ACCORDANCE WITH SECTION 723 OF THE STANDARD SPECIFICATIONS FOR HIGHWAY CONSTRUCTION.

ALL SIGN BLANKS SHALL BE CONSTRUCTED OF ALUMINUM ALLOY (ASTM DESIGNATION B-209. ALLOY 5052-H38) WITH THICKNESS OF 0.100 INCH.

MINIMUM STRUCTURAL REQUIREMENTS:
DESIGN SPECIFICATIONS: AASHTO STANDARD SPECIFICATIONS FOR STRUCTURAL SUPPORTS FOR HIGHWAY SIGNS, LUMINAIRES AND TRAFFIC SIGNALS, 4TH EDITION (2001) WITH 2003 AND 2006 INTERIMS.

CONSTRUCTION SPECIFICATIONS:
STANDARD SPECIFICATIONS FOR HIGHWAY CONSTRUCTION (CURRENT EDITION) WITH APPLICABLE SUPPLEMENTAL SPECIFICATIONS AND SPECIAL PROVISIONS.

POLE CAP - POLE CAPS SHALL BE PROVIDED, FABRICATED OF EITHER STEEL OR CAST ALUMINUM.

HAND HOLE - HAND HOLES SHALL BE 3 IN. X 5 IN. FOR PED POLES. MINIMUM PLACED APPROXIMATELY 12 INCHES FROM BASE, AND SHALL BE FIXED WITH A BOLT DOWN COVER. A VACUUM FORMED ABS COVER IS AN ACCEPTABLE ALTERNATE TO STEEL.

NUT COVERS - EACH POLE SHALL INCLUDE A BOLT DOWN NUT COVER FOR EACH ANCHOR BOLT.

GROUND ROD - A 10' X 5/8" GROUND ROD SHALL BE INSTALLED IN THE CONCRETE PULL BOX FOR EACH POLE AND THE CONTROLLER. PAYMENT FOR THE GROUND ROD AND 1/2" NMC SHALL BE INCLUDED IN ITEM 714 FOR SIGNAL POLES AND ITEM 701 FOR THE CONTROLLER. THE CONCRETE PULL BOX AND CONDUCTOR BOX SHALL BE PAID SEPARATELY.

POLE BASE/FOUNDATION - ANCHOR BOLTS SHALL INCLUDE AS A MINIMUM, ONE LEVELING NUT, TWO FLAT WASHERS, ONE LOCK WASHER, AND ONE HEX NUT. PERIMETER OF ANCHOR BASE SHALL BE GROUTED WITH A 1/4" WEEP HOLE. ALL CONCRETE SHALL BE CLASS "S" OR GREATER.

CONCRETE - ALL CONCRETE POLE FOUNDATION SHALL BE CLASS "S" OR GREATER.

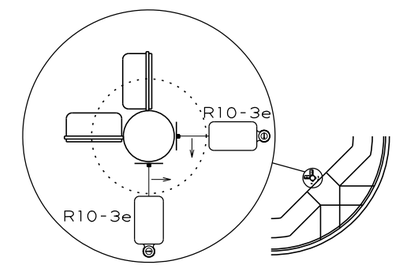

TYPICAL MOUNTING PUSH BUTTON ON SIGNAL POLE

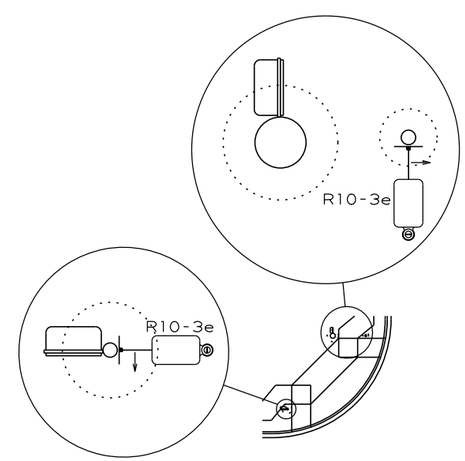

TYPICAL MOUNTING PUSH BUTTON ON PEDESTRIAN POLE AND PEDESTRIAN PUSH BUTTON POLE

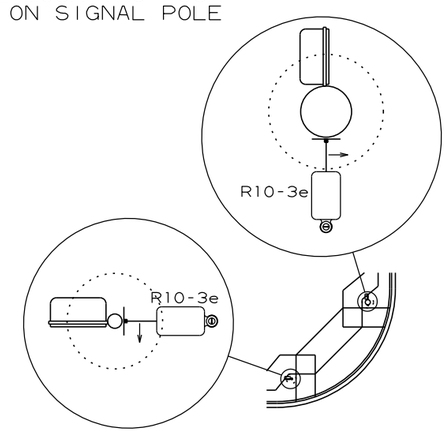

TYPICAL MOUNTING PUSH BUTTON ON PEDESTRIAN POLE AND SIGNAL POLE

DATE: 10/4/2023 FILE NAME: R090646_SG_00-05.dgn

LOCATION:	HWY. 102 IMPVTS.			
CITY:	BENTONVILLE			
COUNTY:	BENTON			
DISTRICT:	9	SCALE: N/A	DRAWN BY:	ADR

London.Miller 10/4/2023 5:54:57 PM
WORKSPACE: London.Miller
c:\users\public\mbidw\6\d0129163\R090646_17_SG_00-05.dgn
REVISED DATE: $$REVDATE$$

DATE REVISED	DATE REVISED	FED.RD. DIST.NO.	STATE	JOB NO.	SHEET NO.	TOTAL SHEETS
		6	ARK.	090646	31	66
		SIGNALIZATION PLAN SHEET				

PRELIMINARY
SUBJECT TO REVISION

STAGE I PHASING DIAGRAM

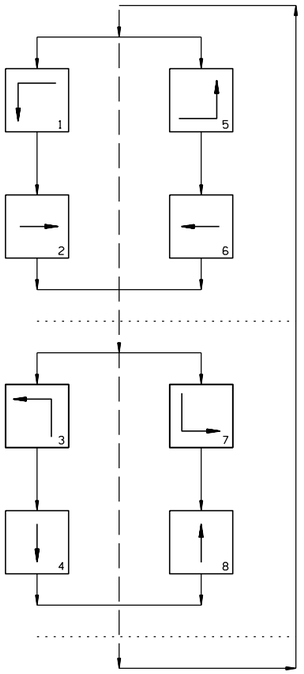

STAGE I SIGNAL FACES

12" LENSES

2, 3, & 14
5 & 6
8, 9, & 13
11 & 12

1 & 7
4 & 10

NOTES:

1. ALL SIGNAL HEADS SHALL HAVE BACKPLATES.
2. REFER TO SPECIAL PROVISION "RETROREFLECTIVE BACKPLATES" FOR DETAILS ON REQUIREMENTS FOR BACKPLATES.

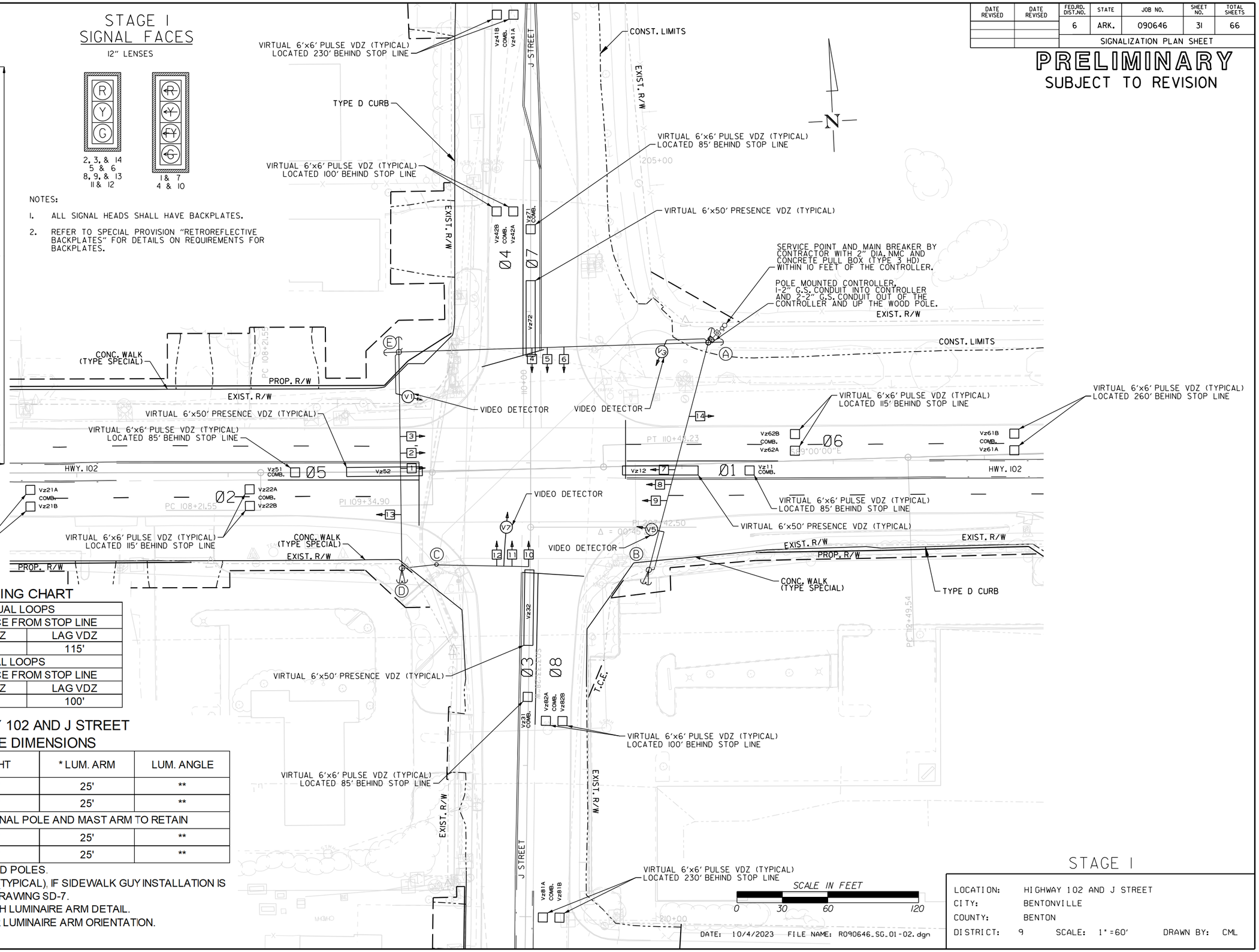

DETECTOR SPACING CHART

HIGHWAY 102 VIRTUAL LOOPS		
POSTED SPEED	DISTANCE FROM STOP LINE	
	LEAD VDZ	LAG VDZ
45 MPH	260'	115'
J STREET VIRTUAL LOOPS		
POSTED SPEED	DISTANCE FROM STOP LINE	
	LEAD VDZ	LAG VDZ
40 MPH	230'	100'

HIGHWAY 102 AND J STREET POLE DIMENSIONS

POLE	CLASS	HEIGHT	* LUM. ARM	LUM. ANGLE
A	2	45'	25'	**
B	2	45'	25'	**
C	EXISTING SIGNAL POLE AND MAST ARM TO RETAIN			
D	2	45'	25'	**
E	2	45'	25'	**

ALL POLES ARE TREATED WOOD POLES.
STANDARD GUY INSTALLATION (TYPICAL), IF SIDEWALK GUY INSTALLATION IS NECESSARY SEE STANDARD DRAWING SD-7.
* SEE TYPICAL WOOD POLE WITH LUMINAIRE ARM DETAIL.
** REFER TO PLAN SHEETS FOR LUMINAIRE ARM ORIENTATION.

STAGE I

DATE: 10/4/2023 FILE NAME: R090646_SG_01-02.dgn

LOCATION: HIGHWAY 102 AND J STREET
CITY: BENTONVILLE
COUNTY: BENTON
DISTRICT: 9 SCALE: 1"=60' DRAWN BY: CML

Landon.Miller 10/4/2023 5:55:08 PM
WORKSPACE: Landon.Miller
c:\user$\public\mbpw\6\d0129163\R090646_IT_SG_01-02.dgn
REVISED DATE: $$REVDATE$$

DATE REVISED	DATE REVISED	FED.RD. DIST.NO.	STATE	JOB NO.	SHEET NO.	TOTAL SHEETS
		6	ARK.	090646	32	66
		SIGNALIZATION PLAN SHEET				

PRELIMINARY
SUBJECT TO REVISION

DESIGN PARAMETERS

POSTED SPEED LIMIT:
45 MPH EAST AND WEST APPROACH
40 MPH NORTH AND SOUTH APPROACH

NO BUS STOPS
NO RAILROAD TRACKS
NO EXISTING INTERCONNECTIONS
NO FIRE STATION
NO PARKING
NO SIGHT DISTANCE RESTRICTIONS

LOCATION OF STOP LINES SHOWN ON MAINTENANCE OF TRAFFIC DETAILS (SEE SEPARATE SHEET).

MINIMUM CLEAR ZONE DISTANCE
4 FEET BEHIND CURB

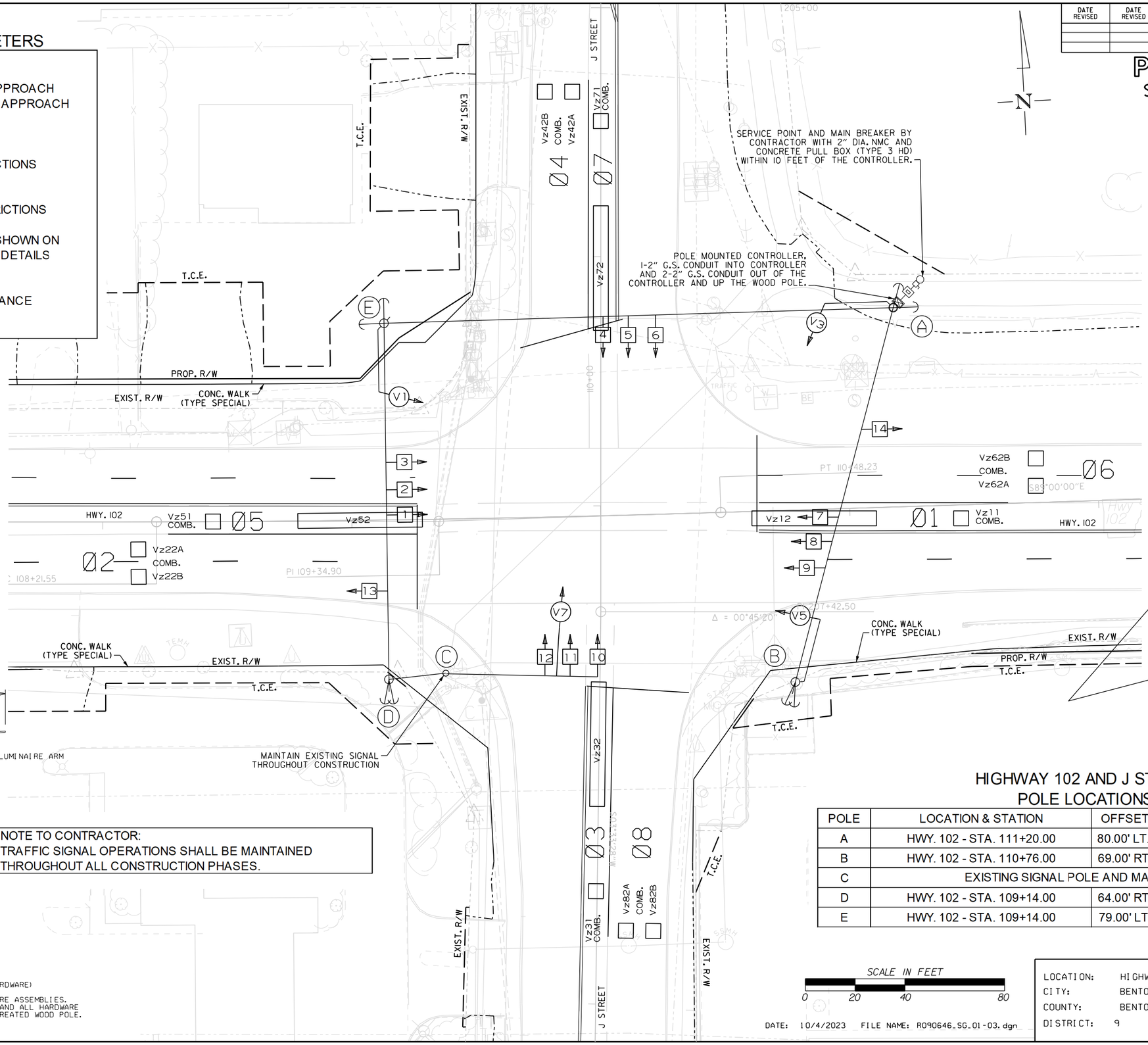

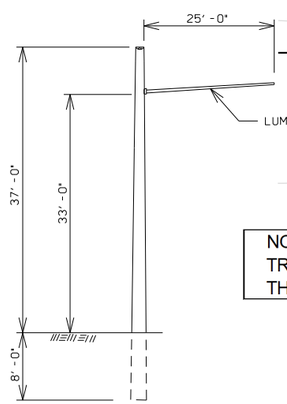

TYPICAL WOOD POLE WITH LUMINAIRE ARM

NOTE TO CONTRACTOR:
LUMINAIRE ARMS (OR APPROVED MOUNTING HARDWARE) SHALL BE USED TO MOUNT VIDEO DETECTORS. LUMINAIRE ARM SHALL NOT INCLUDE LUMINAIRE ASSEMBLIES. THE COST FOR LUMINAIRE ARMS, MOUNTING, AND ALL HARDWARE IS INCLUDED IN PRICE BID FOR ITEM 716 TREATED WOOD POLE.

NOTE TO CONTRACTOR:
TRAFFIC SIGNAL OPERATIONS SHALL BE MAINTAINED THROUGHOUT ALL CONSTRUCTION PHASES.

HIGHWAY 102 AND J STREET POLE LOCATIONS

POLE	LOCATION & STATION	OFFSET	X, Y COORDINATES
A	HWY. 102 - STA. 111+20.00	80.00' LT.	665562.27, 743820.45
B	HWY. 102 - STA. 110+76.00	69.00' RT.	665515.67, 743672.24
C	EXISTING SIGNAL POLE AND MAST ARM TO RETAIN		
D	HWY. 102 - STA. 109+14.00	64.00' RT.	665352.69, 743681.27
E	HWY. 102 - STA. 109+14.00	79.00' LT.	665357.69, 743824.19

SCALE IN FEET
0 20 40 80

DATE: 10/4/2023 FILE NAME: R090646_SG_01-03.dgn

STAGE I

LOCATION: HIGHWAY 102 AND J STREET
CITY: BENTONVILLE
COUNTY: BENTON
DISTRICT: 9 SCALE: 1"=40' DRAWN BY: CML

London.Miller 10/4/2023 5:55:19 PM
WORKSPACE: London.Miller
c:\users\public\mdlwk\6\d029163\R090646_17_SG_01-03.dgn
REVISED DATE: $$REVDATE$$

DATE REVISED	DATE REVISED	FED.RD. DIST.NO.	STATE	JOB NO.	SHEET NO.	TOTAL SHEETS
		6	ARK.	090646	33	66
		SIGNALIZATION PLAN SHEET				

PRELIMINARY
SUBJECT TO REVISION

WILL ADD WIRING WITH THE
50% UTILITY SUBMITTAL

STAGES 1 & 2
WIRING DIAGRAM

NOTES TO CONTRACTOR:

1 ALL DETECTOR RACK CHANNELS, INCLUDING UNUSED, SHALL BE BROUGHT TO TERMINAL STRIP IN DETECTOR AREA OF CABINET.

2 THE LOCAL GOVERNMENT SHALL BE RESPONSIBLE FOR PROVIDING POWER TO THE SERVICE POINT.

DATE: 10/4/2023 FILE NAME: R090646_SG_01-06.dgn

LOCATION: HIGHWAY 102 AND J STREET
CITY: BENTONVILLE
COUNTY: BENTON
DISTRICT: 9 SCALE: N/A DRAWN BY: CML

LandonMiller 10/4/2023 5:55:30 PM
WORKSPACE: LandonMiller
G:\users\public\mbjdwx\s\d02963\R090646_17_SG_01-06.dgn
REVISED DATE: $$REVDATE$$

DATE REVISED	DATE REVISED	FED.RD. DIST.NO.	STATE	JOB NO.	SHEET NO.	TOTAL SHEETS
		6	ARK.	090646	34	66
		SIGNALIZATION PLAN SHEET				

PRELIMINARY
SUBJECT TO REVISION

STAGE 1& 2 PHASING DIAGRAM

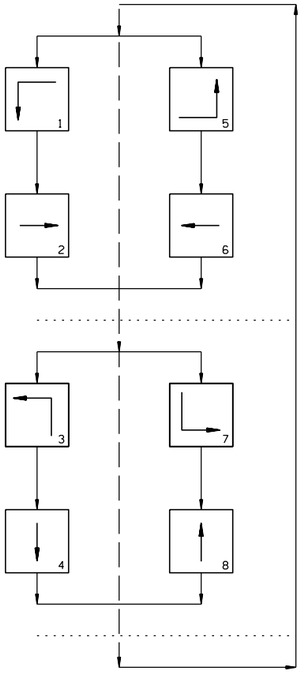

STAGE 1& 2 SIGNAL FACES

12" LENSES

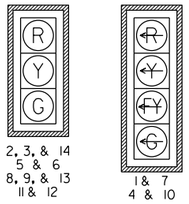

2, 3, & 14
5 & 6
8, 9, & 13
11 & 12

1 & 7
4 & 10

NOTES:

1. ALL SIGNAL HEADS SHALL HAVE BACKPLATES.
2. REFER TO SPECIAL PROVISION "RETROREFLECTIVE BACKPLATES" FOR DETAILS ON REQUIREMENTS FOR BACKPLATES.

STAGES 1 & 2 DETECTOR CHART

DETECTOR SYSTEM DESCRIPTION: JOB 090646

HIGHWAY 102 AND J STREET DETECTOR ASSIGNMENTS				HARDWARE INPUTS BY SUPPLIER			PROGRAM ASSIGNMENTS			COMMENTS	TUBE LENGTHS
							LOCAL		MASTER SYSTEM DETECTOR NUMBERS		
DET. ID #	LOCATION DIRECTION	TYPE	DET. #	CAB. TRM. #	AMP CHN. #	CON. IMP. #	PHS	SYSTEM DET. #			
Vz11	WB LEFT TURN FAR	COMB.				V9	1	1		CAMERA V1	23"
Vz12	WB LEFT TURN	LOCAL				V1	1			CAMERA V1	23"
Vz21 A&B	EB ADVANCE	LOCAL				V2	2			CAMERA V5	23"
Vz22 A&B	EB NEAR	COMB.				V10	2	2		CAMERA V5	23"
Vz31	NB LEFT TURN FAR	COMB.				V11	3	3		CAMERA V3	23"
Vz32	NB LEFT TURN	LOCAL				V3	3			CAMERA V3	23"
Vz41 A&B	SB ADVANCE	LOCAL				V4	4			CAMERA V7	23"
Vz42 A&B	SB NEAR	COMB.				V12	4	4		CAMERA V7	23"
Vz51	EB LEFT TURN FAR	COMB.				V13	5	5		CAMERA V5	23"
Vz52	EB LEFT TURN	LOCAL				V5	5			CAMERA V5	23"
Vz61 A&B	WB ADVANCE	LOCAL				V6	6			CAMERA V1	23"
Vz62 A&B	WB NEAR	COMB.				V14	6	6		CAMERA V1	23"
Vz71	SB LEFT TURN FAR	COMB.				V15	7	7		CAMERA V7	23"
Vz72	SB LEFT TURN	LOCAL				V7	7			CAMERA V7	23"
Vz81 A&B	NB ADVANCE	LOCAL				V8	8			CAMERA V3	23"
Vz82 A&B	NB NEAR	COMB.				V16	8	8		CAMERA V3	23"
					SPARE:						

CONTROLLER INPUT ABBREVIATIONS:
V = VEHICLE INPUT
D = SYSTEM OR AUXILIARY INPUT
P = PEDESTRIAN INPUT

NOTE: "AMP CHN =" REFERS TO THE RACK OUTPUT POSITION.
THIS IS WIRED TO CONTROLLER INPUT DETECTOR NUMBER WHICH IS PROGRAMMED TO ACTUATE THE DESIGNATED PHASE.
EXAMPLE: V9 = SYSTEM DETECTOR 1, V10 = SYSTEM DETECTOR 2

STAGES 1 AND 2 INTERVAL CHART

SIGNAL FACES	HIGHWAY 102 AND J ST.																FLASH SEQUENCE
	1+5	CLR.	1+6	CLR.	2+5	CLR.	2+6	CLR.	3+7	CLR.	3+8	CLR.	4+7	CLR.	4+8	CLR.	
1	←G	*	←G	*	←FY	***	←FY	***	←R	←R	←R	←R	←R	←R	←R	←R	←R
2, 3, & 14	R	R	G	**	R	R	G	**	R	R	R	R	R	R	R	R	R
4	←R	←R	←R	←R	←R	←R	←R	←R	←G	*	←G	*	←FY	***	←FY	***	←R
5 & 6	R	R	R	R	R	R	R	R	R	R	G	**	R	R	G	**	R
7	←G	*	←FY	***	←G	*	←FY	***	←R	←R	←R	←R	←R	←R	←R	←R	←R
8, 9, & 13	R	R	R	R	G	**	G	**	R	R	R	R	R	R	R	R	R
10	←R	←R	←R	←R	←R	←R	←R	←R	←G	*	←FY	***	←G	*	←FY	***	←R
11 & 12	R	R	R	R	R	R	R	R	R	R	R	R	G	**	G	**	R

* DENOTES GREEN OR YELLOW ARROW DEPENDING ON NEXT PHASE
** DENOTES GREEN OR YELLOW BALL DEPENDING ON NEXT PHASE
*** DENOTES FLASHING YELLOW ARROW OR YELLOW ARROW DEPENDING ON NEXT PHASE

DATE: 10/4/2023 FILE NAME: R090646_SG_01-07.dgn

LOCATION: HIGHWAY 102 AND J STREET
CITY: BENTONVILLE
COUNTY: BENTON
DISTRICT: 9 SCALE: N/A DRAWN BY: CML

LandonMiller 10/4/2023 5:55:41 PM
WORKSPACE: LandonMiller
c:\users\public\mbdxf\d02963\R090646_17_SG_01-07.dgn
REVISED DATE: $$REVDATE$$

DATE REVISED	DATE REVISED	FED.RD. DIST.NO.	STATE	JOB NO.	SHEET NO.	TOTAL SHEETS
		6	ARK.	090646	35	66

SIGNALIZATION PLAN SHEET

PRELIMINARY
SUBJECT TO REVISION

PHASING DIAGRAM

SIGNAL FACES

12" LENSES

ONE SECTION
(SOLID SYMBOL)

19 & 20
21 & 22
23 & 24
25 & 26

NOTES:

1. ALL SIGNAL HEADS SHALL HAVE BACKPLATES.
2. REFER TO SPECIAL PROVISION "RETROREFLECTIVE BACKPLATES" FOR DETAILS ON REQUIREMENTS FOR BACKPLATES.
3. REFER TO SPECIAL PROVISIONS FOR DETAILS ON REQUIREMENTS FOR PEDESTRIAN SIGNAL HEADS.
4. ALL PEDESTRIAN SIGNAL HEADS CAN BE PLACED INTO OPERATION IF THERE ARE BOTH WHEELCHAIR RAMPS AND A CROSSWALK THAT MEETS A.D.A.S. STANDARD.

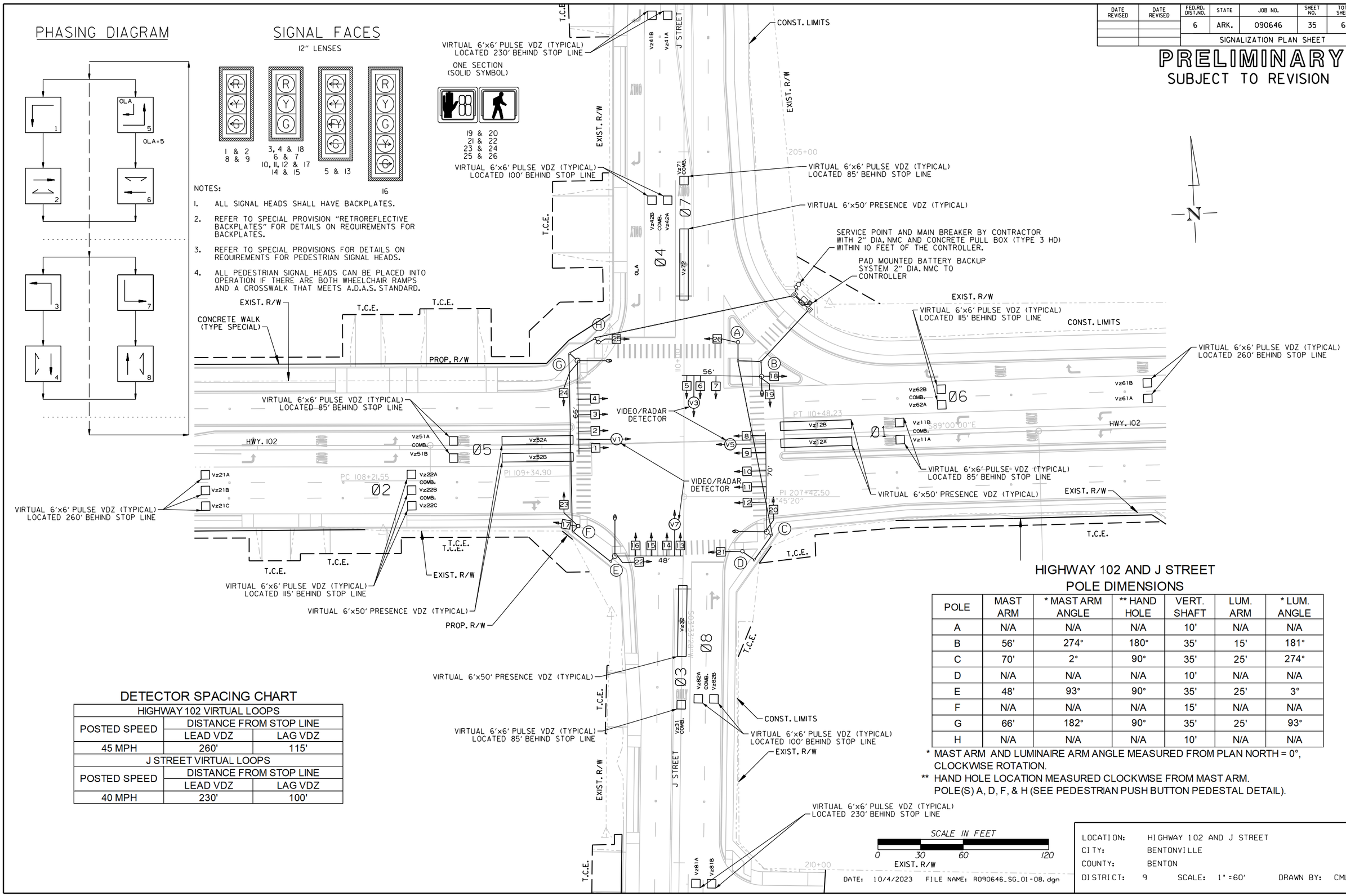

HIGHWAY 102 AND J STREET
POLE DIMENSIONS

POLE	MAST ARM	* MAST ARM ANGLE	** HAND HOLE	VERT. SHAFT	LUM. ARM	* LUM. ANGLE
A	N/A	N/A	N/A	10'	N/A	N/A
B	56'	274°	180°	35'	15'	181°
C	70'	2°	90°	35'	25'	274°
D	N/A	N/A	N/A	10'	N/A	N/A
E	48'	93°	90°	35'	25'	3°
F	N/A	N/A	N/A	15'	N/A	N/A
G	66'	182°	90°	35'	25'	93°
H	N/A	N/A	N/A	10'	N/A	N/A

* MAST ARM AND LUMINAIRE ARM ANGLE MEASURED FROM PLAN NORTH = 0°, CLOCKWISE ROTATION.

** HAND HOLE LOCATION MEASURED CLOCKWISE FROM MAST ARM. POLE(S) A, D, F, & H (SEE PEDESTRIAN PUSH BUTTON PEDESTAL DETAIL).

DETECTOR SPACING CHART

HIGHWAY 102 VIRTUAL LOOPS		
POSTED SPEED	DISTANCE FROM STOP LINE	
	LEAD VDZ	LAG VDZ
45 MPH	260'	115'
J STREET VIRTUAL LOOPS		
POSTED SPEED	DISTANCE FROM STOP LINE	
	LEAD VDZ	LAG VDZ
40 MPH	230'	100'

SCALE IN FEET
0 30 60 120

DATE: 10/4/2023 FILE NAME: R090646_SG_01-08.dgn

LOCATION: HIGHWAY 102 AND J STREET
CITY: BENTONVILLE
COUNTY: BENTON
DISTRICT: 9 SCALE: 1"=60' DRAWN BY: CML

Landon.Miller 10/4/2023 5:55:51 PM
WORKSPACE: Landon.Miller
c:\users\public\mbldpw\6\d0129163\R090646_17_SG_01-08.dgn
REVISED DATE: $$REVDATE$$

DATE REVISED	DATE REVISED	FED.RD. DIST.NO.	STATE	JOB NO.	SHEET NO.	TOTAL SHEETS
		6	ARK.	090646	36	66
		SIGNALIZATION PLAN SHEET				

PRELIMINARY
SUBJECT TO REVISION

HIGHWAY 102 AND J STREET
POLE LOCATIONS

POLE	LOCATION & STATION	OFFSET	X, Y COORDINATES
A	HWY. 102 - STA. 110+40.05	69.10' LT.	665482.21, 743810.94
B	HWY. 102 - STA. 110+55.95	44.50' LT.	665497.60, 743786.07
C	HWY. 102 - STA. 110+56.20	64.90' RT.	665495.95, 743676.69
D	HWY. 102 - STA. 110+38.74	77.99' RT.	665478.16, 743663.91
E	HWY. 102 - STA. 109+49.90	79.12' RT.	665388.41, 743664.98
F	HWY. 102 - STA. 109+24.65	57.63' RT.	665363.63, 743687.27
G	HWY. 102 - STA. 109+25.96	58.69' LT.	665368.85, 743803.48
H	HWY. 102 - STA. 109+41.07	71.44' LT.	665384.23, 743815.74

TOP OF POLE FOUNDATION ELEVATION SHALL BE THREE (3) INCHES ABOVE THE FINISHED SURFACE ELEVATION AT THE LOCATIONS SHOWN ABOVE.

TOP OF POLE FOUNDATION ELEVATION MAY BE INCREASED IN ACCORDANCE WITH STANDARD DRAWING SD-11.

POLE(S) A, D, F & H (SEE PEDESTRIAN PUSH BUTTON PEDESTAL DETAIL).

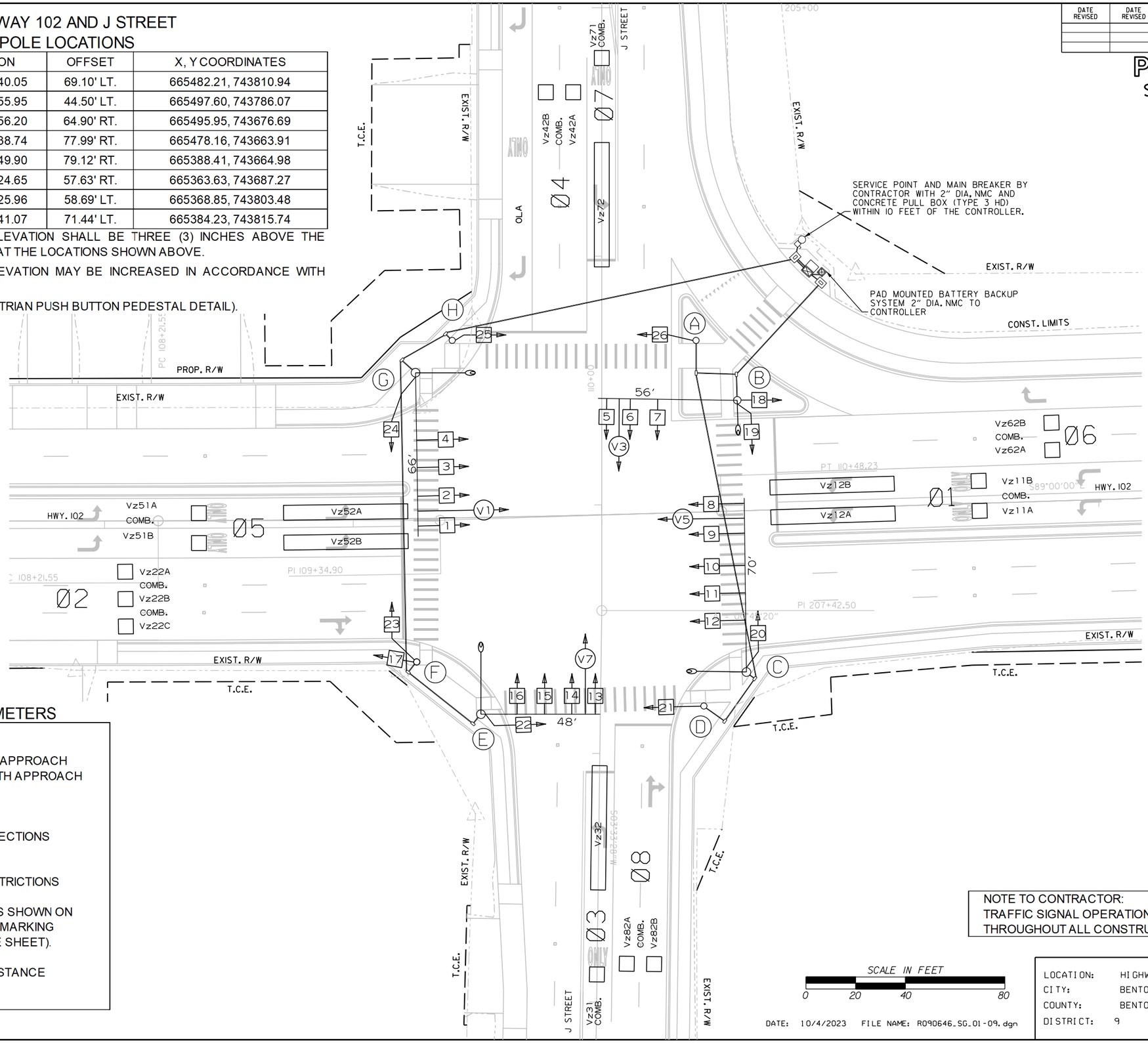

DESIGN PARAMETERS

POSTED SPEED LIMIT:
45 MPH EAST AND WEST APPROACH
40 MPH NORTH AND SOUTH APPROACH

NO BUS STOPS
NO RAILROAD TRACKS
NO EXISTING INTERCONNECTIONS
NO FIRE STATION
NO PARKING
NO SIGHT DISTANCE RESTRICTIONS

LOCATION OF STOP LINES SHOWN ON PERMANENT PAVEMENT MARKING DETAILS (SEE SEPARATE SHEET).

MINIMUM CLEAR ZONE DISTANCE
4 FEET BEHIND CURB

NOTE TO CONTRACTOR:
TRAFFIC SIGNAL OPERATIONS SHALL BE MAINTAINED THROUGHOUT ALL CONSTRUCTION PHASES.

SCALE IN FEET
0 20 40 80

DATE: 10/4/2023 FILE NAME: R090646_SG_01-09.dgn

LOCATION:	HIGHWAY 102 AND J STREET			
CITY:	BENTONVILLE			
COUNTY:	BENTON			
DISTRICT:	9	SCALE: 1"=40'	DRAWN BY:	CML

London.Miller 10/4/2023 5:56:06 PM
WORKSPACE: London.Miller
c:\users\public\mdlwx\6\d029163\R090646_I7_SG_01-09.dgn
REVISED DATE: $$REVDATE$$

DATE REVISED	DATE REVISED	FED.RD. DIST.NO.	STATE	JOB NO.	SHEET NO.	TOTAL SHEETS
		6	ARK.	090646	37	66
		SIGNALIZATION PLAN SHEET				

PRELIMINARY
SUBJECT TO REVISION

HIGHWAY 102 AND J STREET
BATTERY BACKUP SYSTEM LOCATION

LOCATION & STATION	* OFFSET	* X, Y COORDINATES
HWY. 102 - STA. 110+91.54	94.98' LT.	665534.07, 743835.92

* CENTER OF CABINET

HIGHWAY 102 AND J STREET
CONTROLLER CABINET LOCATION

LOCATION & STATION	* OFFSET	* X, Y COORDINATES
HWY. 102 - STA. 110+85.78	95.44' LT.	665528.32, 743836.48

* CENTER OF CABINET

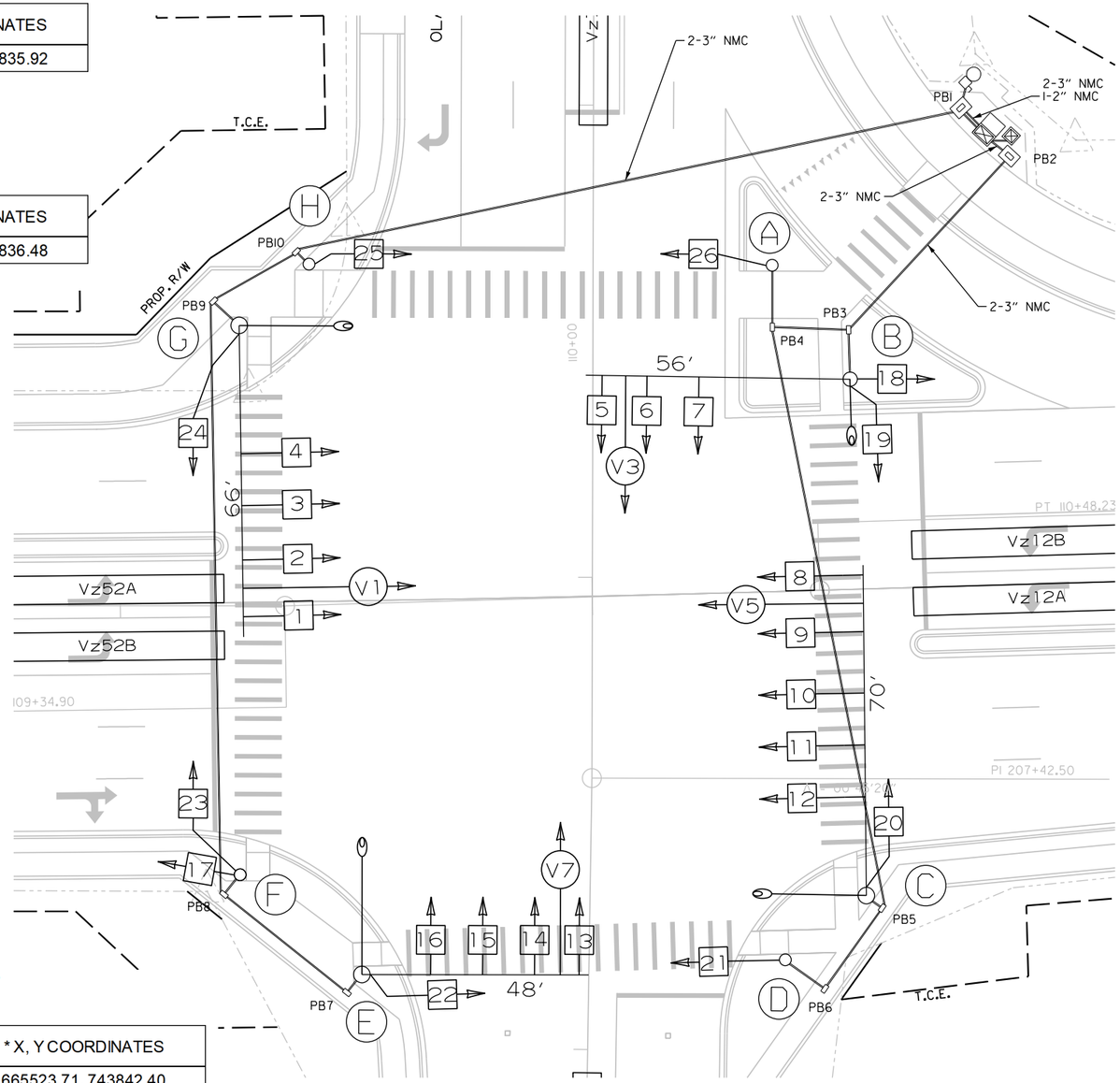

HIGHWAY 102 AND J STREET
PULL BOX LOCATIONS

PULL BOX	TYPE	LOCATION & STATION	* OFFSET	* X, Y COORDINATES
PB1	3 HD	HWY. 102 - STA. 110+81.07	101.27' LT.	665523.71, 743842.40
PB2	3 HD	HWY. 102 - STA. 110+91.03	90.72' LT.	665533.48, 743831.67
PB3	2	HWY. 102 - STA. 110+55.91	54.94' LT.	665497.74, 743796.51
PB4	2	HWY. 102 - STA. 110+39.71	55.98' LT.	665481.63, 743797.83
PB5	2	HWY. 102 - STA. 110+59.46	67.63' RT.	665499.16, 743673.90
PB6	2	HWY. 102 - STA. 110+46.84	84.35' RT.	665486.23, 743657.40
PB7	2	HWY. 102 - STA. 109+46.69	82.88' RT.	665385.05, 743661.32
PB8	2	HWY. 102 - STA. 109+21.20	61.75' RT.	665360.02, 743683.27
PB9	2	HWY. 102 - STA. 109+20.55	63.90' LT.	665363.66, 743808.87
PB10	3	HWY. 102 - STA. 109+38.39	74.10' LT.	665381.67, 743818.48

* CENTER OF PULL BOX
ALL PULL BOXES SHALL BE PLACED AT THE FINISHED SURFACE ELEVATION.

SCALE IN FEET
0 15 30 60

DATE: 10/4/2023 FILE NAME: R090646_SG_01-10.dgn

LOCATION: HIGHWAY 102 AND J STREET
CITY: BENTONVILLE
COUNTY: BENTON
DISTRICT: 9 SCALE: 1"=30' DRAWN BY: ADR

LandonMiller 10/4/2023 5:56:15 PM
WORKSPACE: LandonMiller
c:\users\public\mbslpw\16\d02963\R090646_17_SG_01-10.dgn
REVISED DATE: $$REVDATE$$

DATE REVISED	DATE REVISED	FED.RD. DIST.NO.	STATE	JOB NO.	SHEET NO.	TOTAL SHEETS
		6	ARK.	090646	38	66
		SIGNALIZATION PLAN SHEET				

PRELIMINARY
SUBJECT TO REVISION

WILL ADD WIRING WITH THE
50% UTILITY SUBMITTAL

WIRING DIAGRAM

NOTES TO CONTRACTOR:

1. ONE SEPARATE 1-5c/#12 IS RUN TO EACH POLE FOR THE ACCESSIBLE PEDESTRIAN PUSH BUTTON(S).
2. ALL DETECTOR RACK CHANNELS, INCLUDING UNUSED, SHALL BE BROUGHT TO TERMINAL STRIP IN DETECTOR AREA OF CABINET.
3. THE LOCAL GOVERNMENT SHALL BE RESPONSIBLE FOR PROVIDING POWER TO THE SERVICE POINT.
4. SEE GROUNDING ARRAY DETAIL ON SHEET 29.

DATE: 10/4/2023 FILE NAME: R090646_SG_01-11.dgn

LOCATION: HIGHWAY 102 AND J STREET
CITY: BENTONVILLE
COUNTY: BENTON
DISTRICT: 9 SCALE: N/A DRAWN BY: CML

LandonMiller 10/4/2023 5:56:24 PM
WORKSPACE: LandonMiller
c:\users\public\mbdw\5\d02963\R090646_17_SG_01-11.dgn
REVISED DATE: $$REVDATE$$

DATE REVISED	DATE REVISED	FED.RD. DIST.NO.	STATE	JOB NO.	SHEET NO.	TOTAL SHEETS
		6	ARK.	090646	39	66
		SIGNALIZATION PLAN SHEET				

PRELIMINARY
SUBJECT TO REVISION

PHASING DIAGRAM

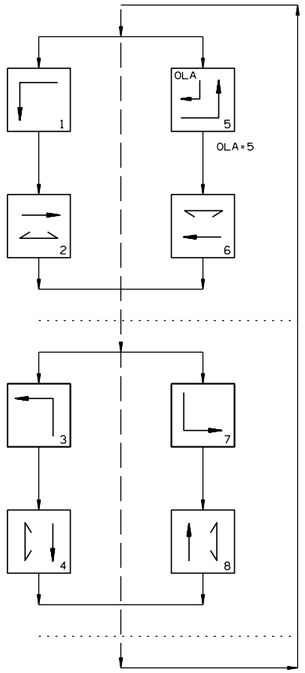

SIGNAL FACES

12" LENSES

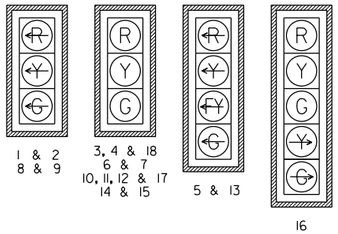

ONE SECTION
(SOLID SYMBOL)

19 & 20
21 & 22
23 & 24
25 & 26

NOTES:

1. ALL SIGNAL HEADS SHALL HAVE BACKPLATES.
2. REFER TO SPECIAL PROVISION "RETROREFLECTIVE BACKPLATES" FOR DETAILS ON REQUIREMENTS FOR BACKPLATES.
3. REFER TO SPECIAL PROVISIONS FOR DETAILS ON REQUIREMENTS FOR PEDESTRIAN SIGNAL HEADS.
4. ALL PEDESTRIAN SIGNAL HEADS CAN BE PLACED INTO OPERATION IF THERE ARE BOTH WHEELCHAIR RAMPS AND A CROSSWALK THAT MEETS A.D.A.S. STANDARD.

TRAFFIC FLOW DIAGRAM

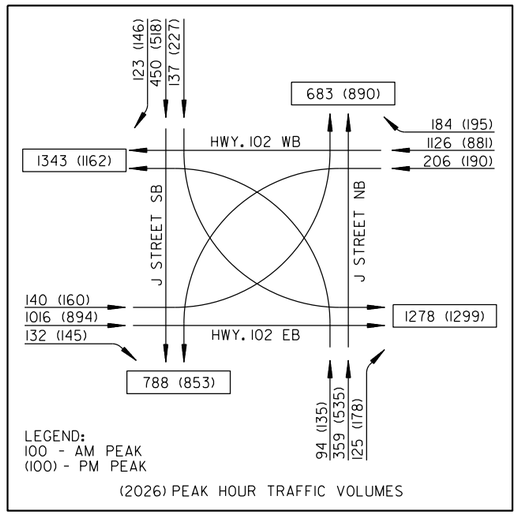

DETECTOR CHART

DETECTOR SYSTEM DESCRIPTION: JOB 090646

HIGHWAY 102 AND J STREET DETECTOR ASSIGNMENTS				HARDWARE INPUTS BY SUPPLIER			PROGRAM ASSIGNMENTS			COMMENTS	TUBE LENGTHS
							LOCAL		MASTER SYSTEM DETECTOR NUMBERS		
DET. ID #	LOCATION DIRECTION	TYPE	DET. #	CAB. TRM. #	AMP CHN. #	CON. IMP. #	PHS	SYSTEM DET. #			
Vz11 A&B	WB LEFT TURN FAR	COMB.				V9	1	1		CAMERA V1	23"
Vz12 A&B	WB LEFT TURN	LOCAL				V1	1			CAMERA V1	23"
Vz21 A,B&C	EB ADVANCE	LOCAL				V2	2			CAMERA V5	23"
Vz22 A,B&C	EB NEAR	COMB.				V10	2	2		CAMERA V5	23"
Vz31	NB LEFT TURN FAR	COMB.				V11	3	3		CAMERA V3	23"
Vz32	NB LEFT TURN	LOCAL				V3	3			CAMERA V3	23"
Vz41 A&B	SB ADVANCE	LOCAL				V4	4			CAMERA V7	23"
Vz42 A&B	SB NEAR	COMB.				V12	4	4		CAMERA V7	23"
Vz51 A&B	EB LEFT TURN FAR	COMB.				V13	5	5		CAMERA V5	23"
Vz52 A&B	EB LEFT TURN	LOCAL				V5	5			CAMERA V5	23"
Vz61 A&B	WB ADVANCE	LOCAL				V6	6			CAMERA V1	23"
Vz62 A&B	WB NEAR	COMB.				V14	6	6		CAMERA V1	23"
Vz71	SB LEFT TURN FAR	COMB.				V15	7	7		CAMERA V7	23"
Vz72	SB LEFT TURN	LOCAL				V7	7			CAMERA V7	23"
Vz81 A&B	NB ADVANCE	LOCAL				V8	8			CAMERA V3	23"
Vz82 A&B	NB NEAR	COMB.				V16	8	8		CAMERA V3	23"
PB 2 A&B	J STREET S. LEG	PED.				P2	2				
PB 4 A&B	HWY. 102 W. LEG	PED.				P4	4				
PB 6 A&B	J STREET N. LEG	PED.				P6	6				
PB 8 A&B	HWY. 102 E. LEG	PED.				P8	8				
					SPARE:						

CONTROLLER INPUT ABBREVIATIONS:
V = VEHICLE INPUT
D = SYSTEM OR AUXILIARY INPUT
P = PEDESTRIAN INPUT

NOTE: "AMP CHN =" REFERS TO THE RACK OUTPUT POSITION.
THIS IS WIRED TO CONTROLLER INPUT DETECTOR NUMBER WHICH IS PROGRAMMED TO ACTUATE THE DESIGNATED PHASE.
EXAMPLE: V9 = SYSTEM DETECTOR 1, V10 = SYSTEM DETECTOR 2

INTERVAL CHART

SIGNAL FACES	HIGHWAY 102 AND J STREET																FLASH SEQUENCE
	1+5	CLR.	1+6	CLR.	2+5	CLR.	2+6	CLR.	3+7	CLR.	3+8	CLR.	4+7	CLR.	4+8	CLR.	
1 & 2	~~G~~	*	~~G~~	*	~~R~~	~~R~~	~~R~~	~~R~~	~~R~~	~~R~~	~~R~~	~~R~~	~~R~~	~~R~~	~~R~~	~~R~~	~~R~~
3, 4 & 18	R	R	G	**	R	R	G	**	R	R	R	R	R	R	R	R	R
5	~~R~~	~~R~~	~~R~~	~~R~~	~~R~~	~~R~~	~~R~~	~~R~~	~~G~~	*	~~G~~	*	~~FY~~	***	~~FY~~	***	~~R~~
6 & 7	R	R	R	R	R	R	R	R	R	R	G	**	R	R	G	**	R
8 & 9	~~G~~	*	~~R~~	~~R~~	~~G~~	*	~~R~~	~~R~~	~~R~~	~~R~~	~~R~~	~~R~~	~~R~~	~~R~~	~~R~~	~~R~~	~~R~~
10, 11, 12 & 17	R	R	R	R	G	**	G	**	R	R	R	R	R	R	R	R	R
13	~~R~~	~~R~~	~~R~~	~~R~~	~~R~~	~~R~~	~~R~~	~~R~~	~~G~~	*	~~FY~~	***	~~G~~	*	~~FY~~	***	~~R~~
14 & 15	R	R	R	R	R	R	R	R	R	R	R	R	G	**	G	**	R
16	R/~~G~~	R/*	R	R	R/~~G~~	R/*	R	R	R	R	R	R	G	**	G	**	R
19 & 20	DW	DW	DW	DW	DW	DW	DW	DW	DW	DW	W	FDW	DW	DW	W	FDW	BLK
21 & 22	DW	DW	DW	DW	W	FDW	W	FDW	DW	DW	DW	DW	DW	DW	DW	DW	BLK
23 & 24	DW	DW	DW	DW	DW	DW	DW	DW	DW	DW	DW	DW	W	FDW	W	FDW	BLK
25 & 26	DW	DW	W	FDW	DW	DW	W	FDW	DW	DW	DW	DW	DW	DW	DW	DW	BLK

* DENOTES GREEN OR YELLOW ARROW DEPENDING ON NEXT PHASE
** DENOTES GREEN OR YELLOW BALL DEPENDING ON NEXT PHASE
*** DENOTES FLASHING YELLOW ARROW OR YELLOW ARROW DEPENDING ON NEXT PHASE

DATE: 10/4/2023 FILE NAME: R090646_SG_01-12.dgn

LOCATION: HIGHWAY 102 AND J STREET
CITY: BENTONVILLE
COUNTY: BENTON
DISTRICT: 9 SCALE: N/A DRAWN BY: CML

LandonMiller 10/4/2023 5:56:31 PM
WORKSPACE: LandonMiller
c:\users\public\mbdwx$\d02963\R090646_17_SG_01-12.dgn
REVISED DATE: $$REVDATE$$

DATE REVISED	DATE REVISED	FED.RD. DIST.NO.	STATE	JOB NO.	SHEET NO.	TOTAL SHEETS
		6	ARK.	090646	40	66
		SIGNALIZATION PLAN SHEET				

PRELIMINARY
SUBJECT TO REVISION

STAGE I PHASING DIAGRAM

STAGE I SIGNAL FACES

12" LENSES

NOTES:

1. ALL SIGNAL HEADS SHALL HAVE BACKPLATES.
2. REFER TO SPECIAL PROVISION "RETROREFLECTIVE BACKPLATES" FOR DETAILS ON REQUIREMENTS FOR BACKPLATES.

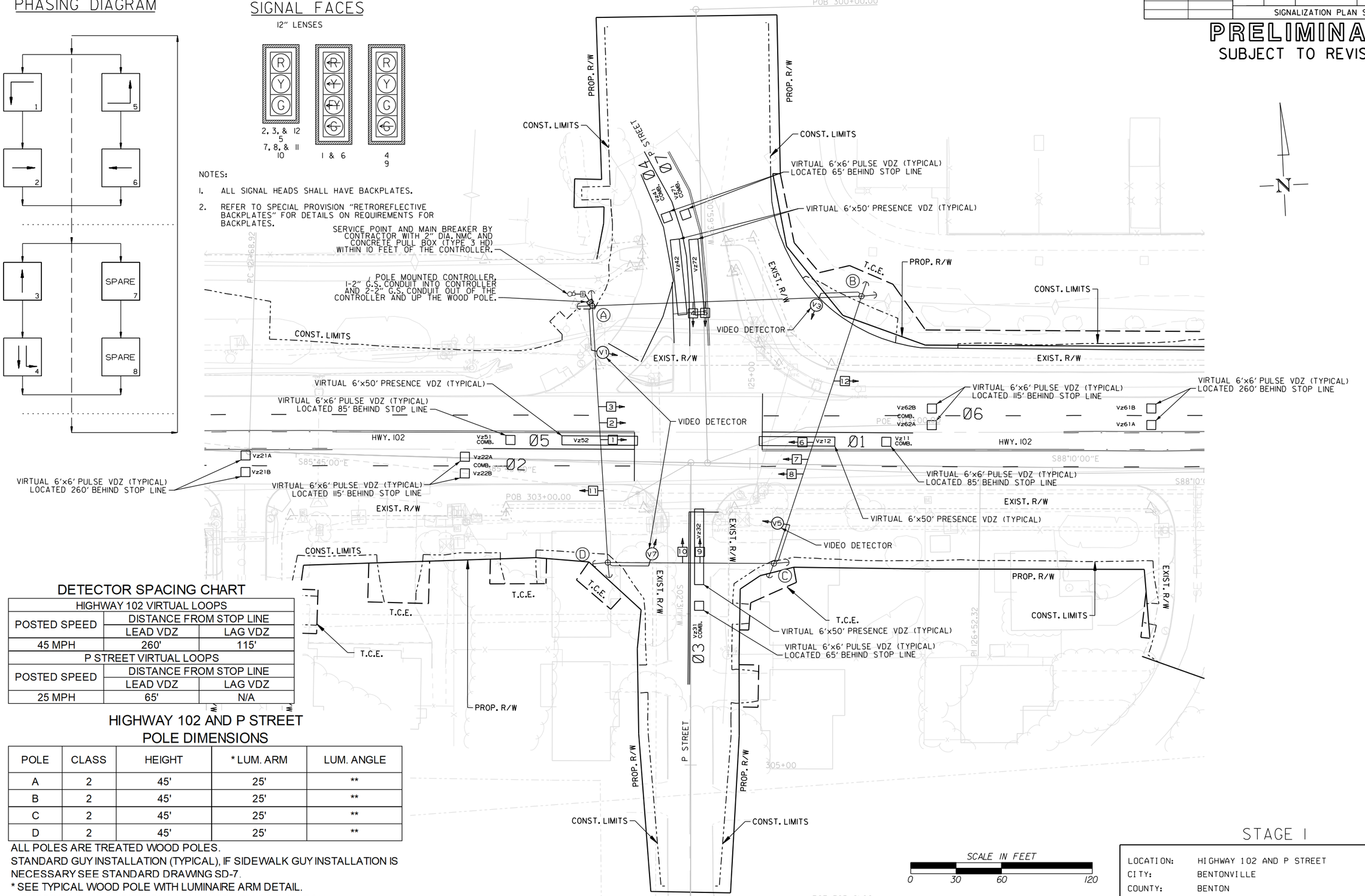

DETECTOR SPACING CHART

HIGHWAY 102 VIRTUAL LOOPS		
POSTED SPEED	DISTANCE FROM STOP LINE	
	LEAD VDZ	LAG VDZ
45 MPH	260'	115'
P STREET VIRTUAL LOOPS		
POSTED SPEED	DISTANCE FROM STOP LINE	
	LEAD VDZ	LAG VDZ
25 MPH	65'	N/A

HIGHWAY 102 AND P STREET POLE DIMENSIONS

POLE	CLASS	HEIGHT	* LUM. ARM	LUM. ANGLE
A	2	45'	25'	**
B	2	45'	25'	**
C	2	45'	25'	**
D	2	45'	25'	**

ALL POLES ARE TREATED WOOD POLES.
STANDARD GUY INSTALLATION (TYPICAL), IF SIDEWALK GUY INSTALLATION IS NECESSARY SEE STANDARD DRAWING SD-7.
* SEE TYPICAL WOOD POLE WITH LUMINAIRE ARM DETAIL.
** REFER TO PLAN SHEETS FOR LUMINAIRE ARM ORIENTATION.

SCALE IN FEET
0 30 60 120

DATE: 10/4/2023 FILE NAME: R090646_SG_02-02.dgn

STAGE I

LOCATION: HIGHWAY 102 AND P STREET
CITY: BENTONVILLE
COUNTY: BENTON
DISTRICT: 9 SCALE: 1"=60' DRAWN BY: CML

LandonMiller 10/4/2023 5:56:40 PM
WORKSPACE: LandonMiller
c:\users\public\mbdwx$\d02963\R090646_17_SG_02-02.dgn
REVISED DATE: $$REVDATE$$

DATE REVISED	DATE REVISED	FED.RD. DIST.NO.	STATE	JOB NO.	SHEET NO.	TOTAL SHEETS
		6	ARK.	090646	41	66
		SIGNALIZATION PLAN SHEET				

PRELIMINARY
SUBJECT TO REVISION

DESIGN PARAMETERS

POSTED SPEED LIMIT:
45 MPH EAST AND WEST APPROACH
25 MPH NORTH AND SOUTH APPROACH

NO BUS STOPS
NO RAILROAD TRACKS
NO EXISTING INTERCONNECTIONS
NO FIRE STATION
NO PARKING
NO SIGHT DISTANCE RESTRICTIONS

LOCATION OF STOP LINES SHOWN ON MAINTENANCE OF TRAFFIC DETAILS (SEE SEPARATE SHEET).

MINIMUM CLEAR ZONE DISTANCE
4 FEET BEHIND CURB

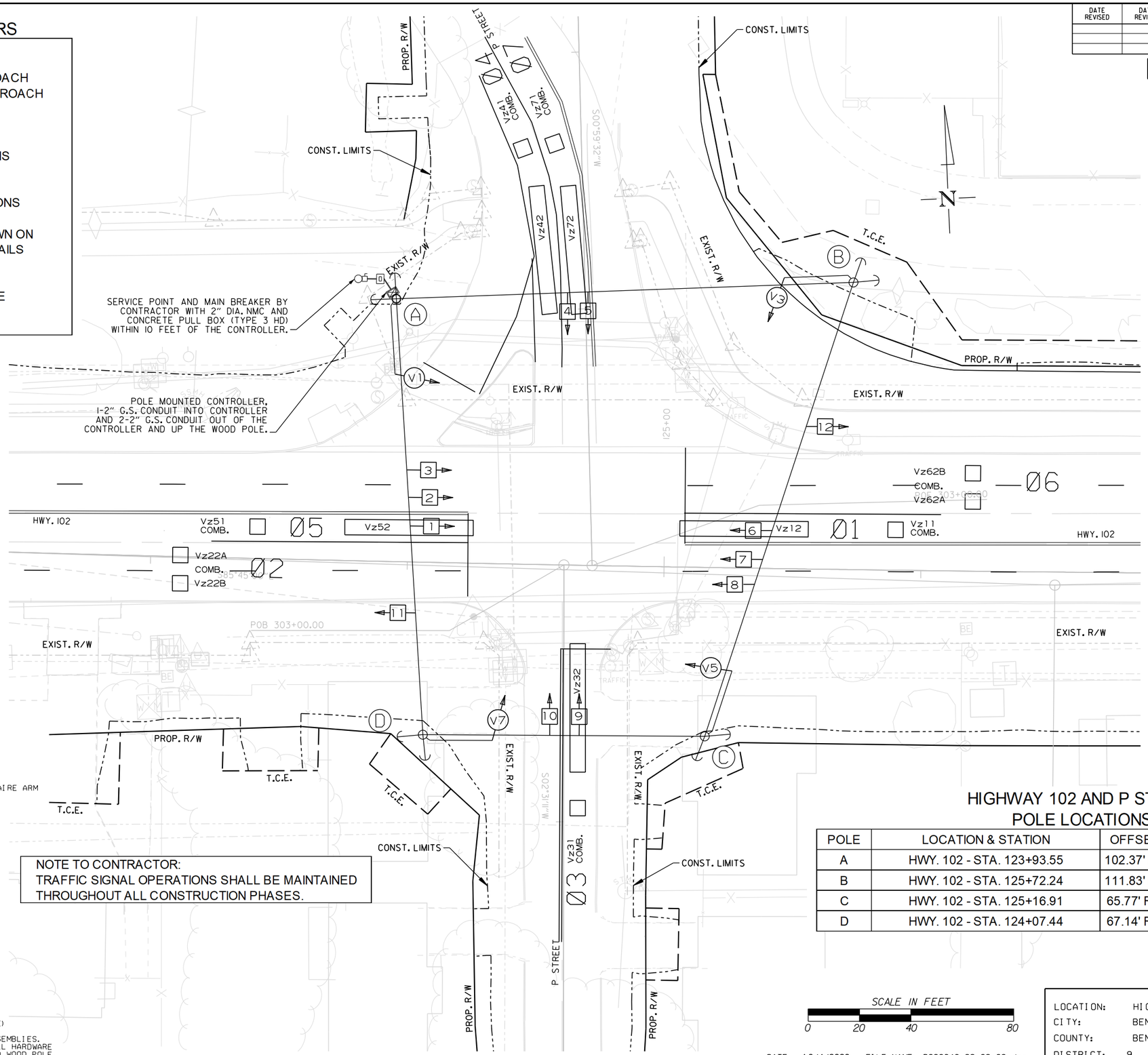

NOTE TO CONTRACTOR:
TRAFFIC SIGNAL OPERATIONS SHALL BE MAINTAINED THROUGHOUT ALL CONSTRUCTION PHASES.

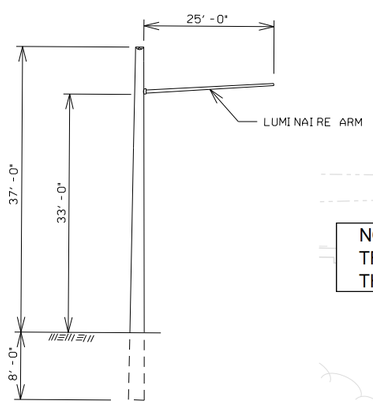

TYPICAL WOOD POLE WITH LUMINAIRE ARM

NOTE TO CONTRACTOR:
LUMINAIRE ARMS (OR APPROVED MOUNTING HARDWARE) SHALL BE USED TO MOUNT VIDEO DETECTORS.
LUMINAIRE ARM SHALL NOT INCLUDE LUMINAIRE ASSEMBLIES.
THE COST FOR LUMINAIRE ARMS, MOUNTING, AND ALL HARDWARE IS INCLUDED IN PRICE BID FOR ITEM 716 TREATED WOOD POLE.

HIGHWAY 102 AND P STREET POLE LOCATIONS

POLE	LOCATION & STATION	OFFSET	X, Y COORDINATES
A	HWY. 102 - STA. 123+93.55	102.37' LT.	666838.60, 743768.94
B	HWY. 102 - STA. 125+72.24	111.83' LT.	667016.69, 743767.64
C	HWY. 102 - STA. 125+16.91	65.77' RT.	666951.25, 743593.53
D	HWY. 102 - STA. 124+07.44	67.14' RT.	666841.60, 743598.90

SCALE IN FEET
0 20 40 80

DATE: 10/4/2023 FILE NAME: R090646_SG_02-03.dgn

STAGE I

LOCATION: HIGHWAY 102 AND P STREET
CITY: BENTONVILLE
COUNTY: BENTON
DISTRICT: 9 SCALE: 1"=40' DRAWN BY: CML

London.Miller 10/4/2023 5:56:49 PM
WORKSPACE: London.Miller
C:\users\public\mblw\6\d0129163\R090646_17_SG_02-03.dgn
REVISED DATE: $$REVDATE$$

DATE REVISED	DATE REVISED	FED.RD. DIST.NO.	STATE	JOB NO.	SHEET NO.	TOTAL SHEETS
		6	ARK.	090646	42	66
		SIGNALIZATION PLAN SHEET				

PRELIMINARY
SUBJECT TO REVISION

WILL ADD WIRING WITH THE
50% UTILITY SUBMITTAL

STAGES 1 & 2
WIRING DIAGRAM

NOTES TO CONTRACTOR:

1. ALL DETECTOR RACK CHANNELS, INCLUDING UNUSED, SHALL BE BROUGHT TO TERMINAL STRIP IN DETECTOR AREA OF CABINET.
2. THE LOCAL GOVERNMENT SHALL BE RESPONSIBLE FOR PROVIDING POWER TO THE SERVICE POINT.

DATE: 10/4/2023 FILE NAME: R090646_SG_02-06.dgn

LOCATION: HIGHWAY 102 AND P STREET
CITY: BENTONVILLE
COUNTY: BENTON
DISTRICT: 9 SCALE: N/A DRAWN BY: CML

LandonMiller 10/4/2023 5:56:58 PM
WORKSPACE: LandonMiller
c:\users\public\mbjdw\$\d02963\R090646_17_SG_02-06.dgn
REVISED DATE: $$REVDATE$$

DATE REVISED	DATE REVISED	FED.RD. DIST.NO.	STATE	JOB NO.	SHEET NO.	TOTAL SHEETS
		6	ARK.	090646	43	66
		SIGNALIZATION PLAN SHEET				

PRELIMINARY
SUBJECT TO REVISION

STAGE 1& 2 PHASING DIAGRAM

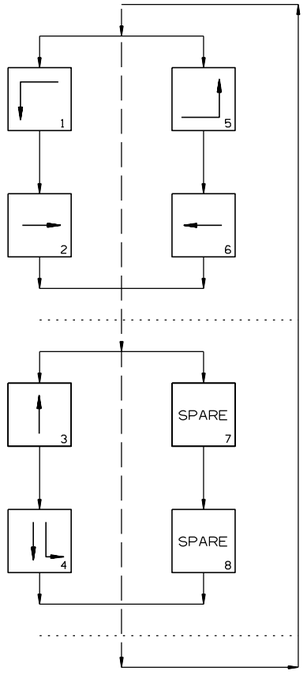

STAGE 1& 2 SIGNAL FACES

12" LENSES

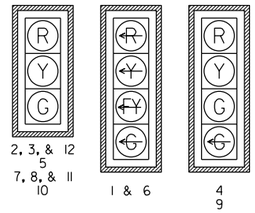

NOTES:

1. ALL SIGNAL HEADS SHALL HAVE BACKPLATES.
2. REFER TO SPECIAL PROVISION "RETROREFLECTIVE BACKPLATES" FOR DETAILS ON REQUIREMENTS FOR BACKPLATES.

STAGES 1 & 2 DETECTOR CHART

DETECTOR SYSTEM DESCRIPTION: JOB 090646											
HIGHWAY 102 AND P STREET DETECTOR ASSIGNMENTS				HARDWARE INPUTS BY SUPPLIER			PROGRAM ASSIGNMENTS			COMMENTS	TUBE LENGTHS
							LOCAL		MASTER SYSTEM DETECTOR NUMBERS		
DET. ID #	LOCATION DIRECTION	TYPE	DET. #	CAB. TRM. #	AMP CHN. #	CON. IMP. #	PHS	SYSTEM DET. #			
Vz11	WB LEFT TURN FAR	COMB.				V9	1	1		CAMERA V1	23"
Vz12	WB LEFT TURN	LOCAL				V1	1			CAMERA V1	23"
Vz21 A&B	EB ADVANCE	LOCAL				V2	2			CAMERA V5	23"
Vz22 A&B	EB NEAR	COMB.				V10	2	2		CAMERA V5	23"
Vz31	NB LEFT TURN FAR	COMB.				V11	3	3		CAMERA V3	23"
Vz32	NB LEFT TURN	LOCAL				V3	3			CAMERA V3	23"
Vz41	SB ADVANCE	LOCAL				V4	4			CAMERA V7	23"
Vz42	SB NEAR	COMB.				V12	4	4		CAMERA V7	23"
Vz51	EB LEFT TURN FAR	COMB.				V13	5	5		CAMERA V5	23"
Vz52	EB LEFT TURN	LOCAL				V5	5			CAMERA V5	23"
Vz61 A&B	WB ADVANCE	LOCAL				V6	6			CAMERA V1	23"
Vz62 A&B	WB NEAR	COMB.				V14	6	6		CAMERA V1	23"
Vz71	SB LEFT TURN FAR	COMB.				V15	7	7		CAMERA V7	23"
Vz72	SB LEFT TURN	LOCAL				V7	7			CAMERA V7	23"
					SPARE:						

CONTROLLER INPUT ABBREVIATIONS:
V = VEHICLE INPUT
D = SYSTEM OR AUXILIARY INPUT
P = PEDESTRIAN INPUT

NOTE: "AMP CHN =" REFERS TO THE RACK OUTPUT POSITION.
THIS IS WIRED TO CONTROLLER INPUT DETECTOR NUMBER WHICH IS PROGRAMMED TO ACTUATE THE DESIGNATED PHASE.
EXAMPLE: V9 – SYSTEM DETECTOR 1, V10 – SYSTEM DETECTOR 2

STAGES 1 & 2 INTERVAL CHART

SIGNAL FACES	HIGHWAY 102 AND P ST.												FLASH SEQUENCE
	1+5	CLR.	1+6	CLR.	2+5	CLR.	2+6	CLR.	3	CLR.	4	CLR.	
1	←G	*	←G	*	←FY	***	←FY	***	←R	←R	←R	←R	←R
2, 3, & 12	R	R	G	**	R	R	G	**	R	R	R	R	R
4	←R	←R	←R	←R	←R	←R	←R	←R	←G	*	←R	←R	←R
5	R	R	R	R	R	R	R	R	G	**	R	R	R
6	←G	*	←FY	***	←G	*	←FY	***	←R	←R	←R	←R	←R
7, 8, & 11	R	R	R	R	G	**	G	**	R	R	R	R	R
9	←R	←R	←R	←R	←R	←R	←R	←R	←R	←R	←G	*	←R
10	R	R	R	R	R	R	R	R	R	R	G	**	R

* DENOTES GREEN OR YELLOW ARROW DEPENDING ON NEXT PHASE
** DENOTES GREEN OR YELLOW BALL DEPENDING ON NEXT PHASE
*** DENOTES FLASHING YELLOW ARROW OR YELLOW ARROW DEPENDING ON NEXT PHASE

DATE: 10/4/2023 FILE NAME: R090646_SG_02-07.dgn

LOCATION: HIGHWAY 102 AND P STREET
CITY: BENTONVILLE
COUNTY: BENTON
DISTRICT: 9 SCALE: N/A DRAWN BY: CML

LandonMiller 10/4/2023 5:57:05 PM
WORKSPACE: LandonMiller
c:\users\public\mbjdwx$\d02963\R090646_17_SG_02-07.dgn
REVISED DATE: $$REVDATE$$

DATE REVISED	DATE REVISED	FED.RD. DIST.NO.	STATE	JOB NO.	SHEET NO.	TOTAL SHEETS
		6	ARK.	090646	44	66

SIGNALIZATION PLAN SHEET

PRELIMINARY
SUBJECT TO REVISION

PHASING DIAGRAM

SIGNAL FACES

12" LENSES

2, 3, 4, & 18
6 & 7
10, 11, 12, & 17
15 & 16

1
5
8 & 9
13 & 14

ONE SECTION
(SOLID SYMBOL)

19 & 20
21 & 22
23 & 24

NOTES:

1. ALL SIGNAL HEADS SHALL HAVE BACKPLATES.
2. REFER TO SPECIAL PROVISION "RETROREFLECTIVE BACKPLATES" FOR DETAILS ON REQUIREMENTS FOR BACKPLATES.
3. REFER TO SPECIAL PROVISIONS FOR DETAILS ON REQUIREMENTS FOR PEDESTRIAN SIGNAL HEADS.
4. ALL PEDESTRIAN SIGNAL HEADS CAN BE PLACED INTO OPERATION IF THERE ARE BOTH WHEELCHAIR RAMPS AND A CROSSWALK THAT MEETS A.D.A.S. STANDARD.

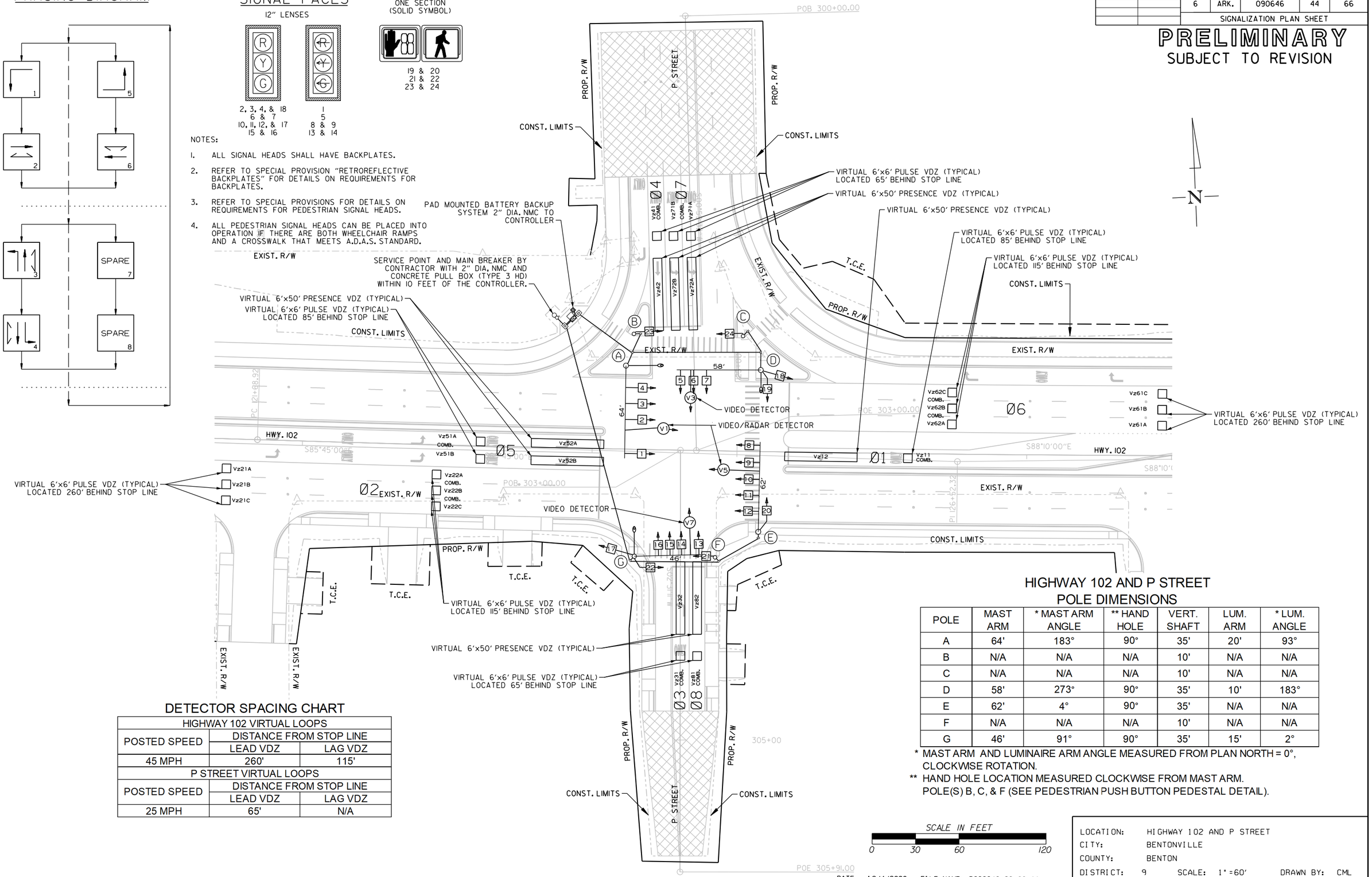

DETECTOR SPACING CHART

HIGHWAY 102 VIRTUAL LOOPS		
POSTED SPEED	DISTANCE FROM STOP LINE	
	LEAD VDZ	LAG VDZ
45 MPH	260'	115'
P STREET VIRTUAL LOOPS		
POSTED SPEED	DISTANCE FROM STOP LINE	
	LEAD VDZ	LAG VDZ
25 MPH	65'	N/A

HIGHWAY 102 AND P STREET POLE DIMENSIONS

POLE	MAST ARM	* MAST ARM ANGLE	** HAND HOLE	VERT. SHAFT	LUM. ARM	* LUM. ANGLE
A	64'	183°	90°	35'	20'	93°
B	N/A	N/A	N/A	10'	N/A	N/A
C	N/A	N/A	N/A	10'	N/A	N/A
D	58'	273°	90°	35'	10'	183°
E	62'	4°	90°	35'	N/A	N/A
F	N/A	N/A	N/A	10'	N/A	N/A
G	46'	91°	90°	35'	15'	2°

* MAST ARM AND LUMINAIRE ARM ANGLE MEASURED FROM PLAN NORTH = 0°, CLOCKWISE ROTATION.

** HAND HOLE LOCATION MEASURED CLOCKWISE FROM MAST ARM. POLE(S) B, C, & F (SEE PEDESTRIAN PUSH BUTTON PEDESTAL DETAIL).

SCALE IN FEET
0 30 60 120

DATE: 10/4/2023 FILE NAME: R090646_SG_02-08.dgn

LOCATION: HIGHWAY 102 AND P STREET
CITY: BENTONVILLE
COUNTY: BENTON
DISTRICT: 9 SCALE: 1"=60' DRAWN BY: CML

LandonMiller 10/4/2023 5:57:14 PM
WORKSPACE: LandonMiller
c:\users\public\mbplw\6\d02963\R090646_17_SG_02-08.dgn
REVISED DATE: $$PREVDATE$$

DATE REVISED	DATE REVISED	FED.RD. DIST.NO.	STATE	JOB NO.	SHEET NO.	TOTAL SHEETS
		6	ARK.	090646	45	66
		SIGNALIZATION PLAN SHEET				

PRELIMINARY
SUBJECT TO REVISION

HIGHWAY 102 AND P STREET
POLE LOCATIONS

POLE	LOCATION & STATION	OFFSET	X, Y COORDINATES
A	HWY. 102 - STA. 124+22.23	57.64' LT.	666864.27, 743722.49
B	HWY. 102 - STA. 124+27.25	79.62' LT.	666870.65, 743744.11
C	HWY. 102 - STA. 125+02.89	79.49' LT.	666945.88, 743739.36
D	HWY. 102 - STA. 125+15.54	56.30' LT.	666957.09, 743715.46
E	HWY. 102 - STA. 125+15.60	55.35' RT.	666950.56, 743604.00
F	HWY. 102 - STA. 124+86.13	73.48' RT.	666919.98, 743587.67
G	HWY. 102 - STA. 124+30.62	73.79' RT.	666864.38, 743590.78

TOP OF POLE FOUNDATION ELEVATION SHALL BE THREE (3) INCHES ABOVE THE FINISHED SURFACE ELEVATION AT THE LOCATIONS SHOWN ABOVE.

TOP OF POLE FOUNDATION ELEVATION MAY BE INCREASED IN ACCORDANCE WITH STANDARD DRAWING SD-11.

POLE(S) B, C, & F (SEE PEDESTRIAN PUSH BUTTON PEDESTAL DETAIL).

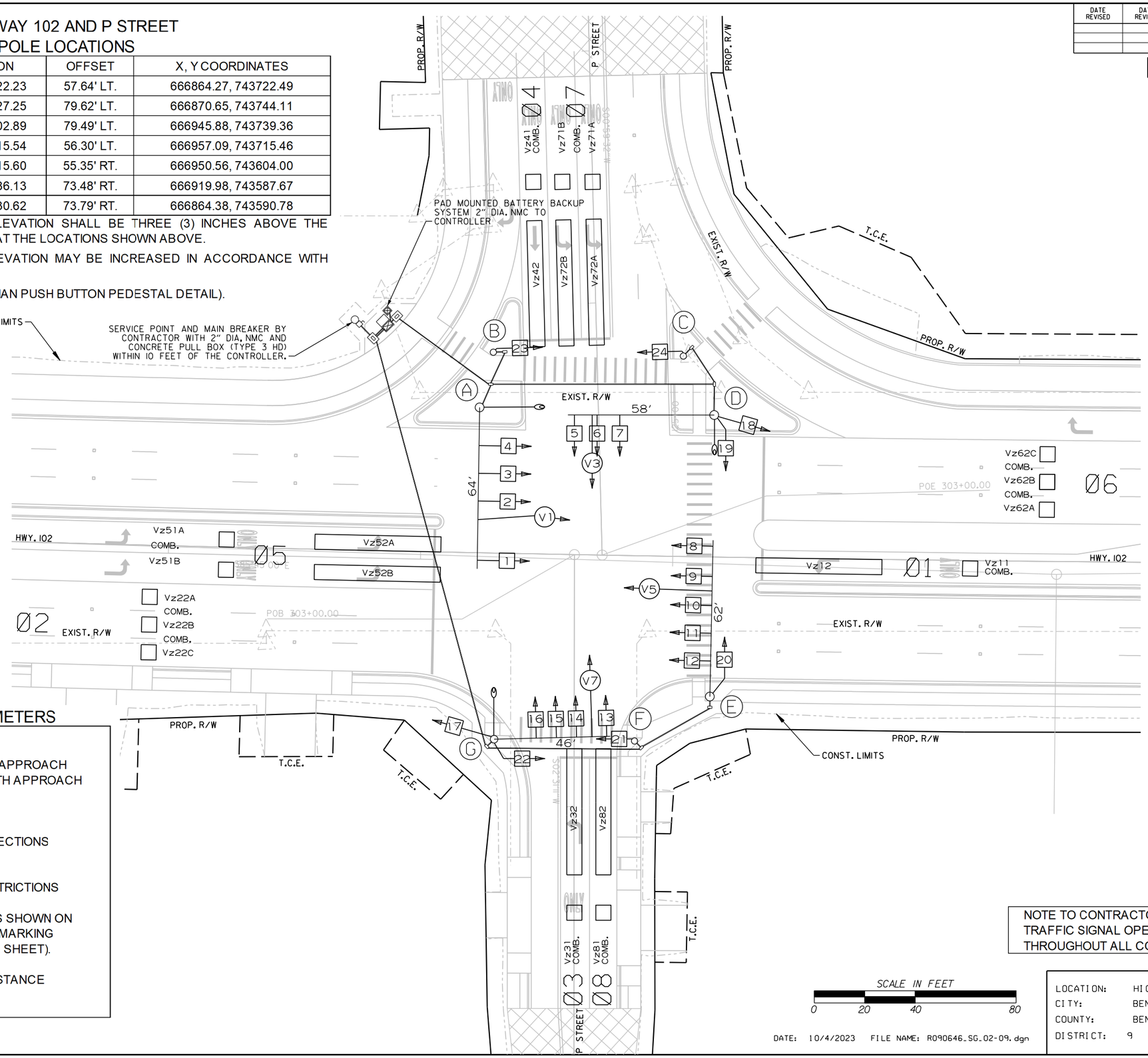

DESIGN PARAMETERS

POSTED SPEED LIMIT:
45 MPH EAST AND WEST APPROACH
25 MPH NORTH AND SOUTH APPROACH

NO BUS STOPS
NO RAILROAD TRACKS
NO EXISTING INTERCONNECTIONS
NO FIRE STATION
NO PARKING
NO SIGHT DISTANCE RESTRICTIONS

LOCATION OF STOP LINES SHOWN ON PERMANENT PAVEMENT MARKING DETAILS (SEE SEPARATE SHEET).

MINIMUM CLEAR ZONE DISTANCE
4 FEET BEHIND CURB

NOTE TO CONTRACTOR:
TRAFFIC SIGNAL OPERATIONS SHALL BE MAINTAINED THROUGHOUT ALL CONSTRUCTION PHASES.

SCALE IN FEET
0 20 40 80

DATE: 10/4/2023 FILE NAME: R090646_SG_02-09.dgn

LOCATION:	HIGHWAY 102 AND P STREET			
CITY:	BENTONVILLE			
COUNTY:	BENTON			
DISTRICT:	9	SCALE: 1"=40'	DRAWN BY:	CML

Landon.Miller 10/4/2023 5:57:22 PM
WORKSPACE: Landon.Miller
C:\Users\public\mblpw\6\d0129163\R090646_17_SG_02-09.dgn
REVISED DATE: $$REVDATE$$

DATE REVISED	DATE REVISED	FED.RD. DIST.NO.	STATE	JOB NO.	SHEET NO.	TOTAL SHEETS
		6	ARK.	090646	46	66
		SIGNALIZATION PLAN SHEET				

PRELIMINARY
SUBJECT TO REVISION

HIGHWAY 102 AND P STREET
BATTERY BACKUP SYSTEM LOCATION

LOCATION & STATION	* OFFSET	* X, Y COORDINATES
HWY. 102 - STA. 123+84.73	95.22' LT.	666829.37, 743762.38

* CENTER OF CABINET

HIGHWAY 102 AND P STREET
CONTROLLER CABINET LOCATION

LOCATION & STATION	* OFFSET	* X, Y COORDINATES
HWY. 102 - STA. 123+85.05	89.26' LT.	666829.30, 743756.41

* CENTER OF CABINET

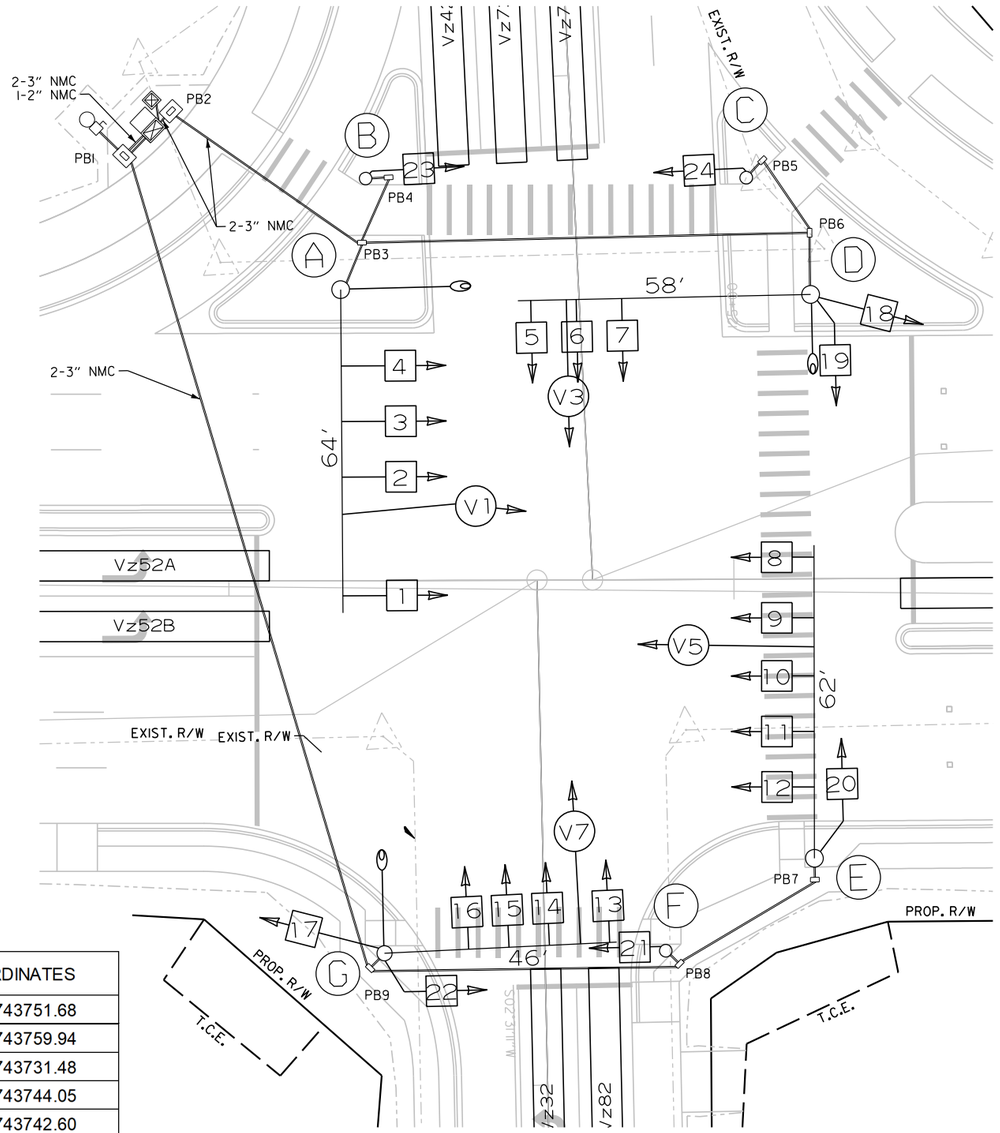

HIGHWAY 102 AND P STREET
PULL BOX LOCATIONS

PULL BOX	TYPE	LOCATION & STATION	* OFFSET	* X, Y COORDINATES
PB1	3 HD	HWY. 102 - STA. 123+79.34	84.15' LT.	666823.30, 743751.68
PB2	3 HD	HWY. 102 - STA. 123+88.58	93.03' LT.	666833.05, 743759.94
PB3	2	HWY. 102 - STA. 124+26.50	66.92' LT.	666869.10, 743731.48
PB4	2	HWY. 102 - STA. 124+31.82	79.85' LT.	666875.21, 743744.05
PB5	2	HWY. 102 - STA. 125+06.12	82.92' LT.	666949.29, 743742.60
PB6	2	HWY. 102 - STA. 125+15.40	68.52' LT.	666957.68, 743727.67
PB7	2	HWY. 102 - STA. 125+15.66	59.60' RT.	666950.37, 743599.76
PB8	2	HWY. 102 - STA. 124+88.85	76.11' RT.	666922.54, 743584.88
PB9	2	HWY. 102 - STA. 124+27.78	76.72' RT.	666861.35, 743588.04

* CENTER OF PULL BOX
ALL PULL BOXES SHALL BE PLACED AT THE FINISHED SURFACE ELEVATION.

SCALE IN FEET
0 15 30 60

DATE: 10/4/2023 FILE NAME: R090646_SG_02-10.dgn

LOCATION: HIGHWAY 102 AND P STREET
CITY: BENTONVILLE
COUNTY: BENTON
DISTRICT: 9 SCALE: 1"=30' DRAWN BY: ADR

LandonMiller 10/4/2023 5:57:31 PM
WORKSPACE: LandonMiller
c:\users\public\mbdw\6\d02963\R090646_17_SG_02-10.dgn
REVISED DATE: $$REVDATE$$

DATE REVISED	DATE REVISED	FED.RD. DIST.NO.	STATE	JOB NO.	SHEET NO.	TOTAL SHEETS
		6	ARK.	090646	47	66
		SIGNALIZATION PLAN SHEET				

PRELIMINARY
SUBJECT TO REVISION

WILL ADD WIRING WITH THE
50% UTILITY SUBMITTAL

WIRING DIAGRAM

NOTES TO CONTRACTOR:

1. ONE SEPARATE 1-5c/#12 IS RUN TO EACH POLE FOR THE ACCESSIBLE PEDESTRIAN PUSH BUTTON(S).
2. ALL DETECTOR RACK CHANNELS, INCLUDING UNUSED, SHALL BE BROUGHT TO TERMINAL STRIP IN DETECTOR AREA OF CABINET.
3. THE LOCAL GOVERNMENT SHALL BE RESPONSIBLE FOR PROVIDING POWER TO THE SERVICE POINT.
4. SEE GROUNDING ARRAY DETAIL ON SHEET 29.

DATE: 10/4/2023 FILE NAME: R090646_SG_02-11.dgn

LOCATION: HIGHWAY 102 AND P STREET
CITY: BENTONVILLE
COUNTY: BENTON
DISTRICT: 9 SCALE: N/A DRAWN BY: CML

LandonMiller 10/4/2023 5:57:39 PM
WORKSPACE: LandonMiller
G:\users\public\mbidw15\d012963\R090646_17_SG_02-11.dgn
REVISED DATE: $$REVDATE$$

DATE REVISED	DATE REVISED	FED.RD. DIST.NO.	STATE	JOB NO.	SHEET NO.	TOTAL SHEETS
		6	ARK.	090646	48	66
		SIGNALIZATION PLAN SHEET				

PRELIMINARY
SUBJECT TO REVISION

PHASING DIAGRAM

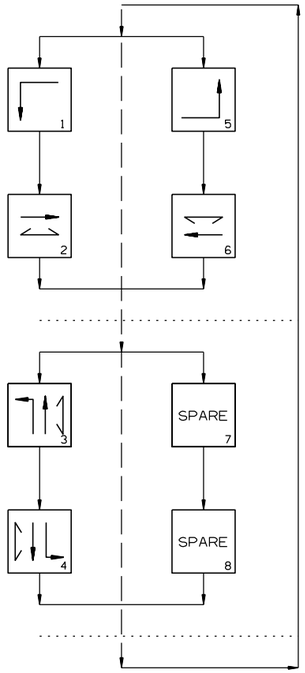

SIGNAL FACES

12" LENSES

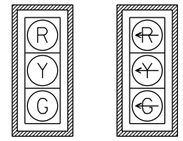

2, 3, 4, & 18
6 & 7
10, 11, 12, & 17
15 & 16

1
5
8 & 9
13 & 14

ONE SECTION
(SOLID SYMBOL)

19 & 20
21 & 22
23 & 24

NOTES:

1. ALL SIGNAL HEADS SHALL HAVE BACKPLATES.
2. REFER TO SPECIAL PROVISION "RETROREFLECTIVE BACKPLATES" FOR DETAILS ON REQUIREMENTS FOR BACKPLATES.
3. REFER TO SPECIAL PROVISIONS FOR DETAILS ON REQUIREMENTS FOR PEDESTRIAN SIGNAL HEADS.
4. ALL PEDESTRIAN SIGNAL HEADS CAN BE PLACED INTO OPERATION IF THERE ARE BOTH WHEELCHAIR RAMPS AND A CROSSWALK THAT MEETS A.D.A.S. STANDARD.

TRAFFIC FLOW DIAGRAM

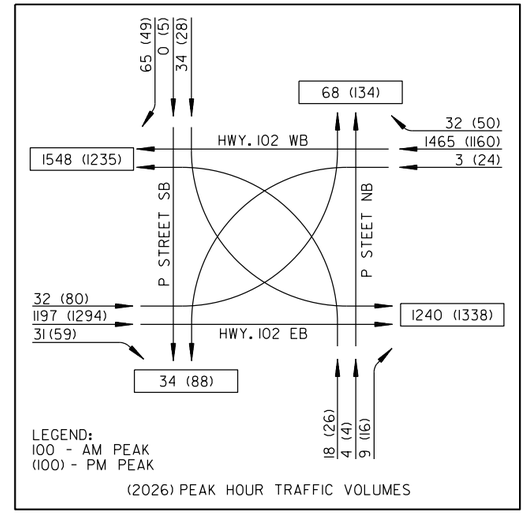

(2026) PEAK HOUR TRAFFIC VOLUMES

DETECTOR CHART

DETECTOR SYSTEM DESCRIPTION: JOB 090646

HIGHWAY 102 AND P STREET DETECTOR ASSIGNMENTS				HARDWARE INPUTS BY SUPPLIER			PROGRAM ASSIGNMENTS			COMMENTS	TUBE LENGTHS
							LOCAL		MASTER SYSTEM DETECTOR NUMBERS		
DET. ID #	LOCATION DIRECTION	TYPE	DET. #	CAB. TRM. #	AMP CHN. #	CON. IMP. #	PHS	SYSTEM DET. #			
Vz11	WB LEFT TURN FAR	COMB.				V9	1	1		CAMERA V1	23"
Vz12	WB LEFT TURN	LOCAL				V1	1			CAMERA V1	23"
Vz21 A,B&C	EB ADVANCE	LOCAL				V2	2			CAMERA V5	23"
Vz22 A,B&C	EB NEAR	COMB.				V10	2	2		CAMERA V5	23"
Vz31	NB LEFT TURN FAR	COMB.				V11	3	3		CAMERA V3	46"
Vz32	NB LEFT TURN	LOCAL				V3	3			CAMERA V3	46"
Vz41 A&B	SB ADVANCE	LOCAL				V4	4			CAMERA V7	46"
Vz42 A&B	SB NEAR	COMB.				V12	4	4		CAMERA V7	46"
Vz51 A&B	EB LEFT TURN FAR	COMB.				V13	5	5		CAMERA V5	23"
Vz52 A&B	EB LEFT TURN	LOCAL				V5	5			CAMERA V5	23"
Vz61 A,B&C	WB ADVANCE	LOCAL				V6	6			CAMERA V1	23"
Vz62 A,B&C	WB NEAR	COMB.				V14	6	6		CAMERA V1	23"
Vz71	SB LEFT TURN FAR	COMB.				V15	7	7		CAMERA V7	46"
Vz72	SB LEFT TURN	LOCAL				V7	7			CAMERA V7	46"
Vz81	NB ADVANCE	LOCAL				V8	8			CAMERA V8	46"
Vz82	NB NEAR	COMB.				V16	8	8		CAMERA V8	46"
PB2 A&B	P STREET S. LEG	PED.				P2	2				
PB4 A&B	P STREET N. LEG	PED.				P4	4				
PB6 A&B	HWY. 102 E. LEG	PED.				P6	6				
					SPARE:						

CONTROLLER INPUT ABBREVIATIONS:
V = VEHICLE INPUT
D = SYSTEM OR AUXILIARY INPUT
P = PEDESTRIAN INPUT

NOTE: "AMP CHN =" REFERS TO THE RACK OUTPUT POSITION.
THIS IS WIRED TO CONTROLLER INPUT DETECTOR NUMBER WHICH IS PROGRAMMED TO ACTUATE THE DESIGNATED PHASE.
EXAMPLE: V9 = SYSTEM DETECTOR 1, V10 = SYSTEM DETECTOR 2

INTERVAL CHART

SIGNAL FACES	HIGHWAY 102 AND P ST. 1+5	CLR.	1+6	CLR.	2+5	CLR.	2+6	CLR.	3	CLR.	4	CLR.	FLASH SEQUENCE
1	~~←G~~	*	~~←G~~	*	~~←R~~	~~←R~~	~~←R~~	~~←R~~	~~←R~~	~~←R~~	~~←R~~	~~←R~~	~~←R~~
2, 3, 4, & 18	R	R	G	**	R	R	G	**	R	R	R	R	R
5	~~←R~~	~~←R~~	~~←R~~	~~←R~~	~~←R~~	~~←R~~	~~←R~~	~~←R~~	~~←G~~	*	~~←R~~	~~←R~~	~~←R~~
6 & 7	R	R	R	R	R	R	R	R	G	**	R	R	R
8 & 9	~~←G~~	*	~~←R~~	~~←R~~	~~←G~~	*	~~←R~~	~~←R~~	~~←R~~	~~←R~~	~~←R~~	~~←R~~	~~←R~~
10, 11, 12, & 17	R	R	R	R	G	**	G	**	R	R	R	R	R
13 & 14	~~←R~~	~~←R~~	~~←R~~	~~←R~~	~~←R~~	~~←R~~	~~←R~~	~~←R~~	~~←R~~	~~←R~~	~~←G~~	*	~~←R~~
15 & 16	R	R	R	R	R	R	R	R	R	R	G	**	R
19 & 20	DW	DW	DW	DW	DW	DW	DW	DW	W	FDW	DW	DW	BLK
21 & 22	DW	DW	DW	DW	W	FDW	W	FDW	DW	DW	DW	DW	BLK
23 & 24	DW	DW	W	FDW	DW	DW	W	FDW	DW	DW	DW	DW	BLK

* DENOTES GREEN OR YELLOW ARROW DEPENDING ON NEXT PHASE
** DENOTES GREEN OR YELLOW BALL DEPENDING ON NEXT PHASE
*** DENOTES FLASHING YELLOW ARROW OR YELLOW ARROW DEPENDING ON NEXT PHASE

DATE: 10/4/2023 FILE NAME: R090646_SG_02-12.dgn

LOCATION: HIGHWAY 102 AND P STREET
CITY: BENTONVILLE
COUNTY: BENTON
DISTRICT: 9 SCALE: N/A DRAWN BY: CML

LandonMiller 10/4/2023 5:57:47 PM
WORKSPACE: LandonMiller
c:\users\public\mbdwx$\d02963\R090646_17_SG_02-12.dgn
REVISED DATE: $$REVDATE$$

DATE REVISED	DATE REVISED	FED.RD. DIST.NO.	STATE	JOB NO.	SHEET NO.	TOTAL SHEETS
		6	ARK.	090646	49	66
		SIGNALIZATION PLAN SHEET				

PRELIMINARY
SUBJECT TO REVISION

STAGE I PHASING DIAGRAM

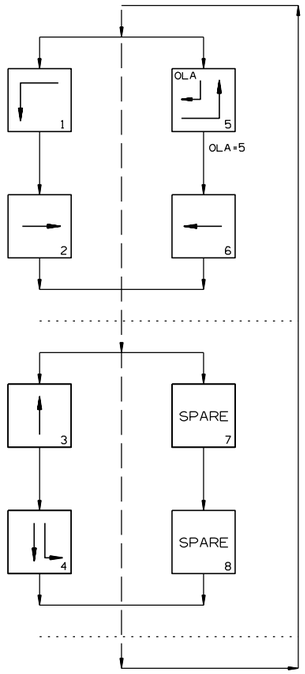

STAGE I SIGNAL FACES

12" LENSES

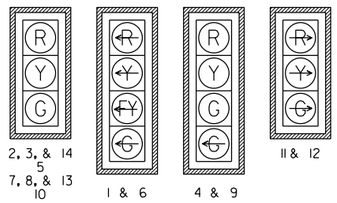

RIGHT ON GREEN ARROW ONLY

(2) R10-5a

NOTES:

1. ALL SIGNAL HEADS SHALL HAVE BACKPLATES.
2. REFER TO SPECIAL PROVISION "RETROREFLECTIVE BACKPLATES" FOR DETAILS ON REQUIREMENTS FOR BACKPLATES.

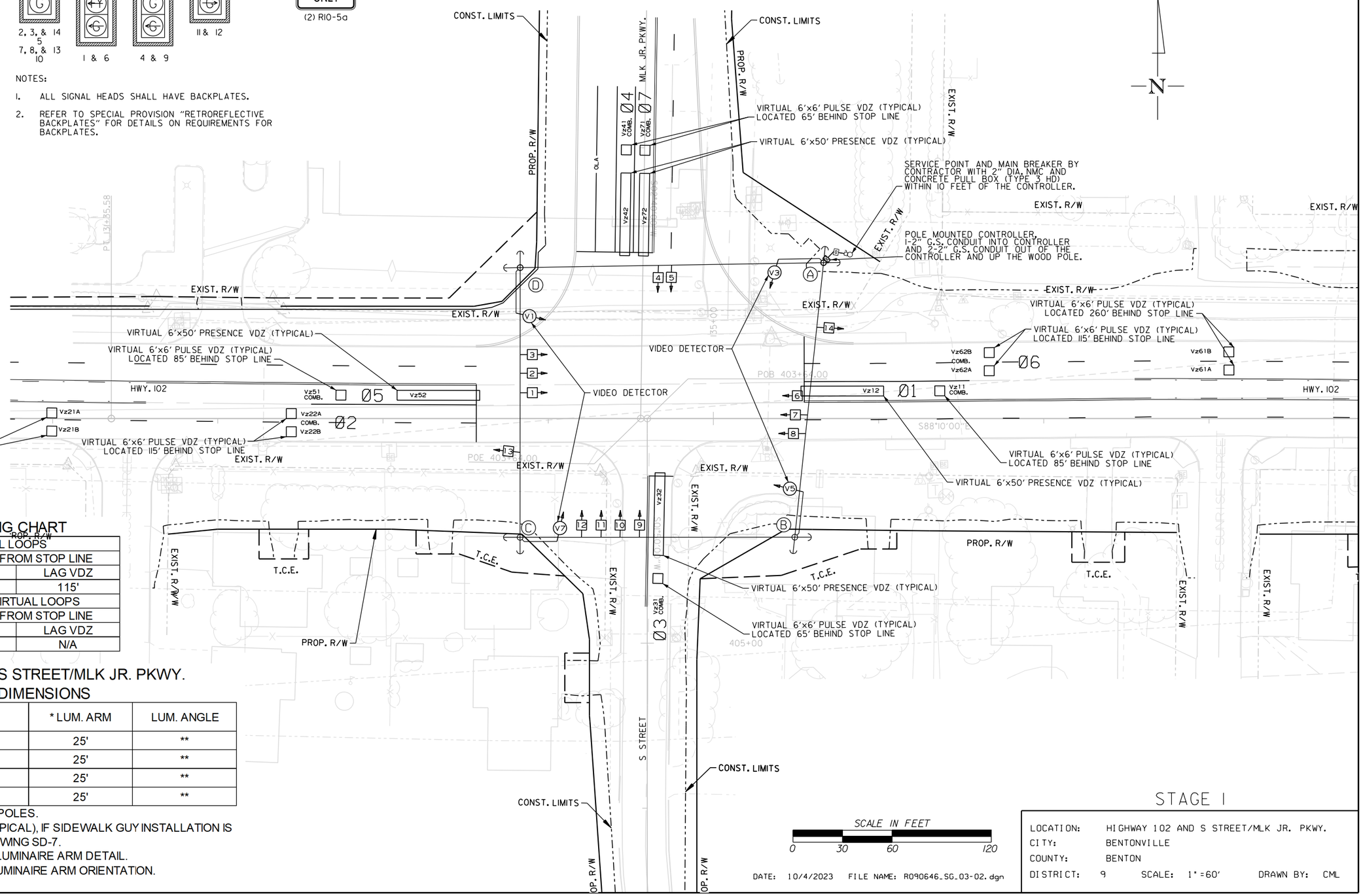

DETECTOR SPACING CHART

HIGHWAY 102 VIRTUAL LOOPS		
POSTED SPEED	DISTANCE FROM STOP LINE	
	LEAD VDZ	LAG VDZ
45 MPH	260'	115'
S STREET/MLK JR. PKWY. VIRTUAL LOOPS		
POSTED SPEED	DISTANCE FROM STOP LINE	
	LEAD VDZ	LAG VDZ
25 MPH	65'	N/A

HIGHWAY 102 AND S STREET/MLK JR. PKWY. POLE DIMENSIONS

POLE	CLASS	HEIGHT	* LUM. ARM	LUM. ANGLE
A	2	45'	25'	**
B	2	45'	25'	**
C	2	45'	25'	**
D	2	45'	25'	**

ALL POLES ARE TREATED WOOD POLES.
STANDARD GUY INSTALLATION (TYPICAL), IF SIDEWALK GUY INSTALLATION IS NECESSARY SEE STANDARD DRAWING SD-7.
* SEE TYPICAL WOOD POLE WITH LUMINAIRE ARM DETAIL.
** REFER TO PLAN SHEETS FOR LUMINAIRE ARM ORIENTATION.

DATE: 10/4/2023 FILE NAME: R090646_SG_03-02.dgn

STAGE I

LOCATION:	HIGHWAY 102 AND S STREET/MLK JR. PKWY.		
CITY:	BENTONVILLE		
COUNTY:	BENTON		
DISTRICT: 9	SCALE: 1"=60'	DRAWN BY: CML	

LandonMiller 10/4/2023 5:58:12 PM
WORKSPACE: LandonMiller
G:\Users\public\mbjdw\ES\d02963\R090646.17_SG_03-02.dgn
REVISED DATE: $$REVDATE$$

DATE REVISED	DATE REVISED	FED.RD. DIST.NO.	STATE	JOB NO.	SHEET NO.	TOTAL SHEETS
		6	ARK.	090646	50	66
		SIGNALIZATION PLAN SHEET				

PRELIMINARY
SUBJECT TO REVISION

DESIGN PARAMETERS

POSTED SPEED LIMIT:
45 MPH EAST AND WEST APPROACH
25 MPH NORTH AND SOUTH APPROACH

NO BUS STOPS
NO RAILROAD TRACKS
NO EXISTING INTERCONNECTIONS
NO FIRE STATION
NO PARKING
NO SIGHT DISTANCE RESTRICTIONS

LOCATION OF STOP LINES SHOWN ON MAINTENANCE OF TRAFFIC DETAILS (SEE SEPARATE SHEET).

MINIMUM CLEAR ZONE DISTANCE
4 FEET BEHIND CURB

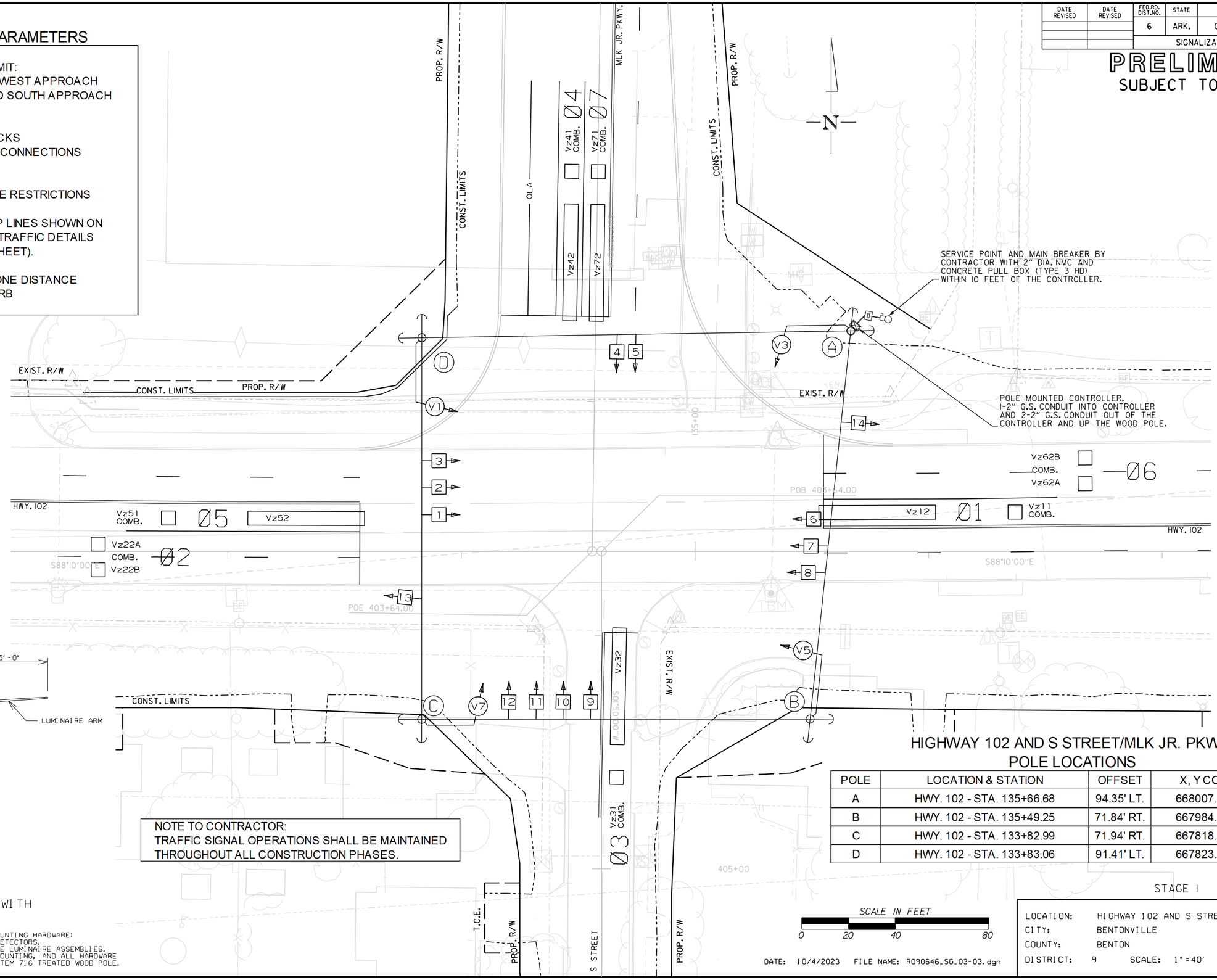

NOTE TO CONTRACTOR:
TRAFFIC SIGNAL OPERATIONS SHALL BE MAINTAINED THROUGHOUT ALL CONSTRUCTION PHASES.

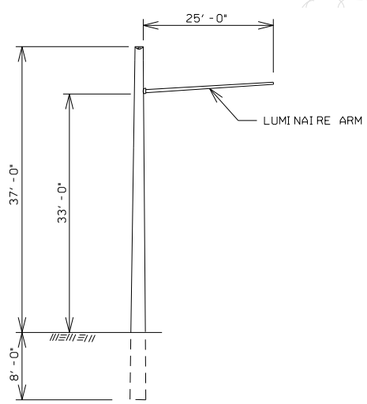

TYPICAL WOOD POLE WITH LUMINAIRE ARM

NOTE TO CONTRACTOR:
LUMINAIRE ARMS (OR APPROVED MOUNTING HARDWARE) SHALL BE USED TO MOUNT VIDEO DETECTORS. LUMINAIRE ARM SHALL NOT INCLUDE LUMINAIRE ASSEMBLIES. THE COST FOR LUMINAIRE ARMS, MOUNTING, AND ALL HARDWARE IS INCLUDED IN PRICE BID FOR ITEM 716 TREATED WOOD POLE.

HIGHWAY 102 AND S STREET/MLK JR. PKWY.
POLE LOCATIONS

POLE	LOCATION & STATION	OFFSET	X, Y COORDINATES
A	HWY. 102 - STA. 135+66.68	94.35' LT.	668007.04, 743711.56
B	HWY. 102 - STA. 135+49.25	71.84' RT.	667984.30, 743546.01
C	HWY. 102 - STA. 133+82.99	71.94' RT.	667818.13, 743551.23
D	HWY. 102 - STA. 133+83.06	91.41' LT.	667823.42, 743714.49

STAGE I

SCALE IN FEET
0 20 40 80

DATE: 10/4/2023 FILE NAME: R090646_SG_03-03.dgn

LOCATION: HIGHWAY 102 AND S STREET/MLK JR. PKWY.
CITY: BENTONVILLE
COUNTY: BENTON
DISTRICT: 9 SCALE: 1"=40' DRAWN BY: CML

London.Miller 10/4/2023 5:58:21PM
WORKSPACE: London.Miller
C:\users\public\mbdw\6\d0129163\R090646_17_SG_03-03.dgn
REVISED DATE: $$REVDATE$$

DATE REVISED	DATE REVISED	FED.RD. DIST.NO.	STATE	JOB NO.	SHEET NO.	TOTAL SHEETS
		6	ARK.	090646	51	66
		SIGNALIZATION PLAN SHEET				

PRELIMINARY
SUBJECT TO REVISION

WILL ADD WIRING WITH THE
50% UTILITY SUBMITTAL

STAGES 1 & 2
WIRING DIAGRAM

NOTES TO CONTRACTOR:

1. ALL DETECTOR RACK CHANNELS, INCLUDING UNUSED, SHALL BE BROUGHT TO TERMINAL STRIP IN DETECTOR AREA OF CABINET.
2. THE LOCAL GOVERNMENT SHALL BE RESPONSIBLE FOR PROVIDING POWER TO THE SERVICE POINT.

DATE: 10/4/2023 FILE NAME: R090646_SG_03-06.dgn

LOCATION: HIGHWAY 102 AND S STREET/MLK JR. PKWY.
CITY: BENTONVILLE
COUNTY: BENTON
DISTRICT: 9 SCALE: N/A DRAWN BY: CML

LandonMiller 10/4/2023 5:58:32 PM
WORKSPACE: LandonMiller
c:\users\public\mbidw15\d02963\R090646_17_SG_03-06.dgn
REVISED DATE: $$REVDATE$$

DATE REVISED	DATE REVISED	FED.RD. DIST.NO.	STATE	JOB NO.	SHEET NO.	TOTAL SHEETS
		6	ARK.	090646	52	66
		SIGNALIZATION PLAN SHEET				

PRELIMINARY
SUBJECT TO REVISION

STAGE 1& 2 PHASING DIAGRAM

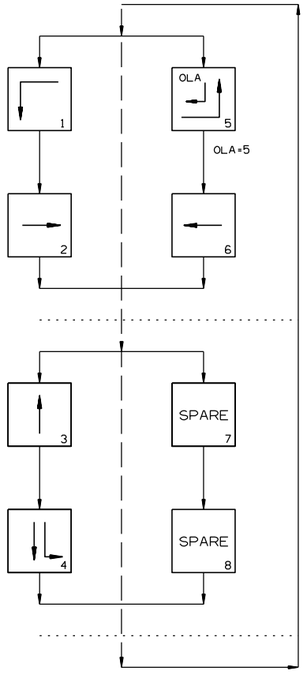

STAGE 1& 2 SIGNAL FACES

12" LENSES

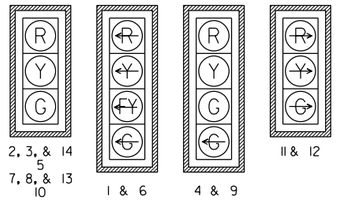

(2) R10-5a

NOTES:

1. ALL SIGNAL HEADS SHALL HAVE BACKPLATES.
2. REFER TO SPECIAL PROVISION "RETROREFLECTIVE BACKPLATES" FOR DETAILS ON REQUIREMENTS FOR BACKPLATES.

STAGES 1 & 2 DETECTOR CHART

DETECTOR SYSTEM DESCRIPTION: JOB 090646											
HIGHWAY 102 AND S STREET/MLK JR. PKWY. DETECTOR ASSIGNMENTS				HARDWARE INPUTS BY SUPPLIER			PROGRAM ASSIGNMENTS LOCAL		MASTER SYSTEM DETECTOR NUMBERS	COMMENTS	TUBE LENGTHS
DET. ID #	LOCATION DIRECTION	TYPE	DET. #	CAB. TRM. #	AMP CHN. #	CON. IMP. #	PHS	SYSTEM DET. #			
Vz11	WB LEFT TURN FAR	COMB.				V9	1	1		CAMERA V1	23"
Vz12	WB LEFT TURN	LOCAL				V1	1			CAMERA V1	23"
Vz21 A&B	EB ADVANCE	LOCAL				V2	2			CAMERA V5	23"
Vz22 A&B	EB NEAR	COMB.				V10	2	2		CAMERA V5	23"
Vz31	NB LEFT TURN FAR	COMB.				V11	3	3		CAMERA V3	23"
Vz32	NB LEFT TURN	LOCAL				V3	3			CAMERA V3	23"
Vz41	SB ADVANCE	LOCAL				V4	4			CAMERA V7	23"
Vz42	SB NEAR	COMB.				V12	4	4		CAMERA V7	23"
Vz51	EB LEFT TURN FAR	COMB.				V13	5	5		CAMERA V5	23"
Vz52	EB LEFT TURN	LOCAL				V5	5			CAMERA V5	23"
Vz61 A&B	WB ADVANCE	LOCAL				V6	6			CAMERA V1	23"
Vz62 A&B	WB NEAR	COMB.				V14	6	6		CAMERA V1	23"
Vz71	SB LEFT TURN FAR	COMB.				V15	7	7		CAMERA V7	23"
Vz72	SB LEFT TURN	LOCAL				V7	7			CAMERA V7	23"
					SPARE:						

CONTROLLER INPUT ABBREVIATIONS:
V = VEHICLE INPUT
D = SYSTEM OR AUXILIARY INPUT
P = PEDESTRIAN INPUT

NOTE: "AMP CHN =" REFERS TO THE RACK OUTPUT POSITION.
THIS IS WIRED TO CONTROLLER INPUT DETECTOR NUMBER WHICH IS PROGRAMMED TO ACTUATE THE DESIGNATED PHASE.
EXAMPLE: V9 = SYSTEM DETECTOR 1, V10 = SYSTEM DETECTOR 2

STAGES 1 & 2 INTERVAL CHART

SIGNAL FACES	HIGHWAY 102 AND S STREET/MLK JR. PKWY. 1+5	CLR.	1+6	CLR.	2+5	CLR.	2+6	CLR.	3	CLR.	4	CLR.	FLASH SEQUENCE
1	←G	*	←G	*	←FY	***	←FY	***	←R	←R	←R	←R	←R
2, 3, & 14	R	R	G	**	R	R	G	**	R	R	R	R	R
4	←R	←R	←R	←R	←R	←R	←R	←R	←G	*	←R	←R	←R
5	R	R	R	R	R	R	R	R	G	**	R	R	R
6	←G	*	←FY	***	←G	*	←FY	***	←R	←R	←R	←R	←R
7, 8, & 13	R	R	R	R	G	**	G	**	R	R	R	R	R
9	←R	←R	←R	←R	←R	←R	←R	←R	←R	←R	←G	*	←R
10	R	R	R	R	R	R	R	R	R	R	G	**	R
11 & 12	→G	*	→R	→R	→G	*	→R	→R	→R	→R	→G	*	→R

* DENOTES GREEN OR YELLOW ARROW DEPENDING ON NEXT PHASE
** DENOTES GREEN OR YELLOW BALL DEPENDING ON NEXT PHASE
*** DENOTES FLASHING YELLOW ARROW OR YELLOW ARROW DEPENDING ON NEXT PHASE

DATE: 10/4/2023 FILE NAME: R090646_SG_03-07.dgn

LOCATION: HIGHWAY 102 AND S STREET/MLK JR. PKWY.
CITY: BENTONVILLE
COUNTY: BENTON
DISTRICT: 9 SCALE: N/A DRAWN BY: CML

LandonMiller 10/4/2023 5:58:41 PM
WORKSPACE: LandonMiller
G:\users\public\mbjdw15\d02963\R090646_17_SG_03-07.dgn
REVISED DATE: $$REVDATE$$

DATE REVISED	DATE REVISED	FED.RD. DIST.NO.	STATE	JOB NO.	SHEET NO.	TOTAL SHEETS
		6	ARK.	090646	53	66

SIGNALIZATION PLAN SHEET

PRELIMINARY
SUBJECT TO REVISION

PHASING DIAGRAM

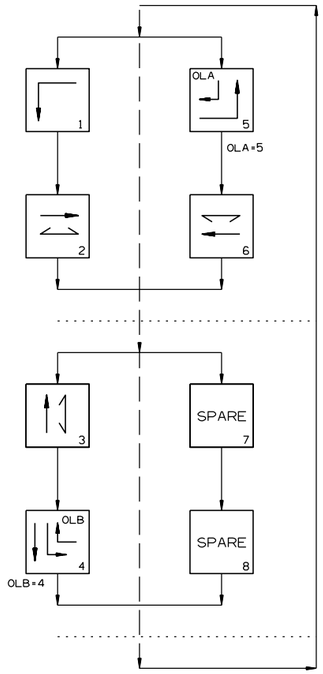

SIGNAL FACES

12" LENSES

ONE SECTION (SOLID SYMBOL)

19 & 20
21 & 22
23 & 24

RIGHT ON GREEN ARROW ONLY

(2) R10-5a

NOTES:

1. ALL SIGNAL HEADS SHALL HAVE BACKPLATES.
2. REFER TO SPECIAL PROVISION "RETROREFLECTIVE BACKPLATES" FOR DETAILS ON REQUIREMENTS FOR BACKPLATES.
3. REFER TO SPECIAL PROVISIONS FOR DETAILS ON REQUIREMENTS FOR PEDESTRIAN SIGNAL HEADS.
4. ALL PEDESTRIAN SIGNAL HEADS CAN BE PLACED INTO OPERATION IF THERE ARE BOTH WHEELCHAIR RAMPS AND A CROSSWALK THAT MEETS A.D.A.S. STANDARD.

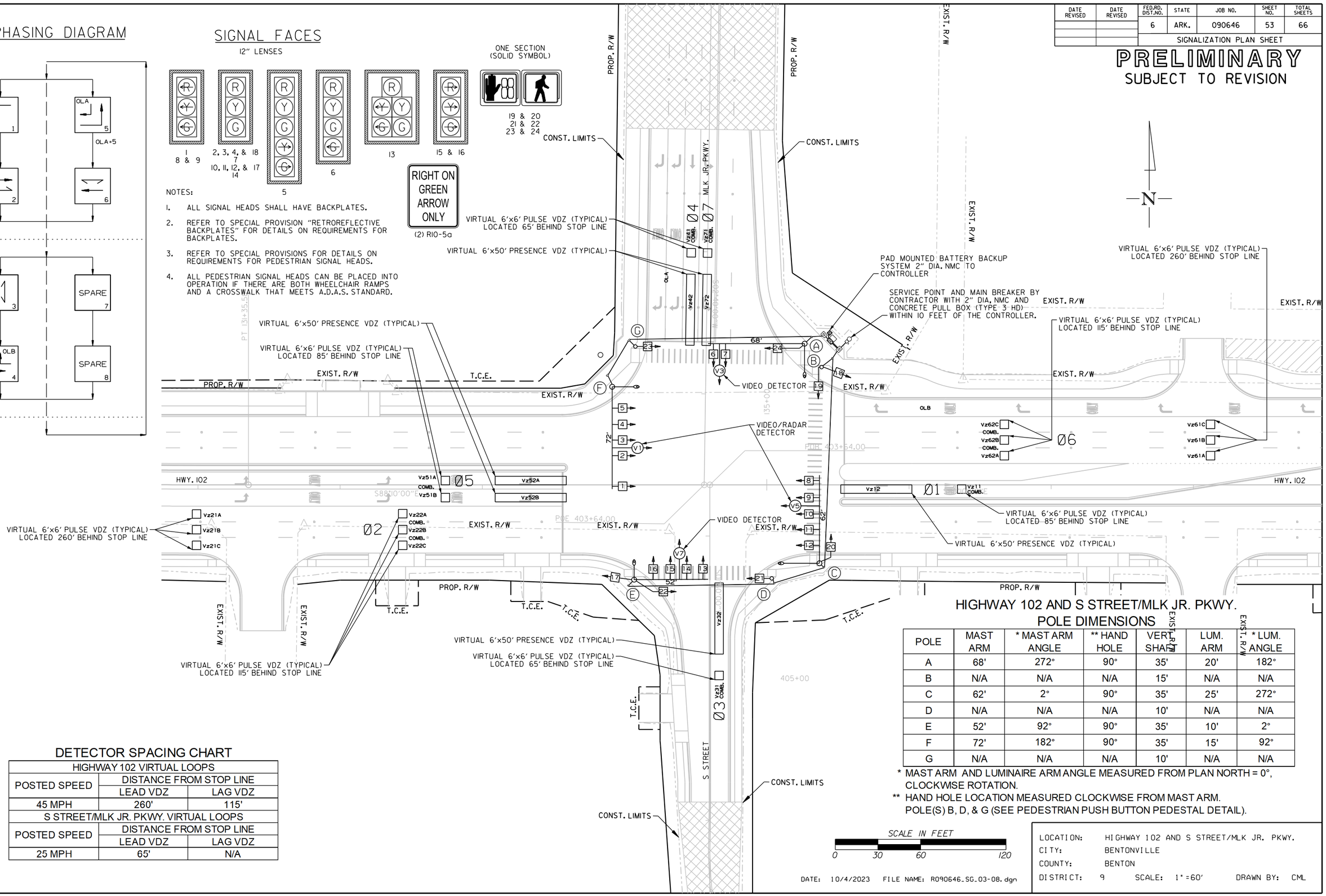

HIGHWAY 102 AND S STREET/MLK JR. PKWY. POLE DIMENSIONS

POLE	MAST ARM	* MAST ARM ANGLE	** HAND HOLE	VERT. SHAFT	LUM. ARM	* LUM. ANGLE
A	68'	272°	90°	35'	20'	182°
B	N/A	N/A	N/A	15'	N/A	N/A
C	62'	2°	90°	35'	25'	272°
D	N/A	N/A	N/A	10'	N/A	N/A
E	52'	92°	90°	35'	10'	2°
F	72'	182°	90°	35'	15'	92°
G	N/A	N/A	N/A	10'	N/A	N/A

* MAST ARM AND LUMINAIRE ARM ANGLE MEASURED FROM PLAN NORTH = 0°, CLOCKWISE ROTATION.

** HAND HOLE LOCATION MEASURED CLOCKWISE FROM MAST ARM. POLE(S) B, D, & G (SEE PEDESTRIAN PUSH BUTTON PEDESTAL DETAIL).

DETECTOR SPACING CHART

HIGHWAY 102 VIRTUAL LOOPS		
POSTED SPEED	DISTANCE FROM STOP LINE	
	LEAD VDZ	LAG VDZ
45 MPH	260'	115'
S STREET/MLK JR. PKWY. VIRTUAL LOOPS		
POSTED SPEED	DISTANCE FROM STOP LINE	
	LEAD VDZ	LAG VDZ
25 MPH	65'	N/A

SCALE IN FEET
0 30 60 120

DATE: 10/4/2023 FILE NAME: R090646_SG_03-08.dgn

LOCATION: HIGHWAY 102 AND S STREET/MLK JR. PKWY.
CITY: BENTONVILLE
COUNTY: BENTON
DISTRICT: 9 SCALE: 1"=60' DRAWN BY: CML

Landon.Miller 10/4/2023 5:58:51PM
WORKSPACE: Landon.Miller
C:\user$\public\mblpw\6\d0129163\R090646_17_SG_03-08.dgn
REVISED DATE: $$REVDATE$$

DATE REVISED	DATE REVISED	FED.RD. DIST.NO.	STATE	JOB NO.	SHEET NO.	TOTAL SHEETS
		6	ARK.	090646	54	66
		SIGNALIZATION PLAN SHEET				

PRELIMINARY
SUBJECT TO REVISION

HIGHWAY 102 AND S STREET/MLK JR. PKWY.
POLE LOCATIONS

POLE	LOCATION & STATION	OFFSET	X, Y COORDINATES
A	HWY. 102 - STA. 135+26.61	99.27' LT.	667967.16, 743717.75
B	HWY. 102 - STA. 135+38.54	82.83' LT.	667978.55, 743700.95
C	HWY. 102 - STA. 135+37.00	55.11' RT.	667972.60, 743563.12
D	HWY. 102 - STA. 135+03.48	65.75' RT.	667938.75, 743553.56
E	HWY. 102 - STA. 134+06.74	66.64' RT.	667842.04, 743555.76
F	HWY. 102 - STA. 133+91.29	69.00' LT.	667830.93, 743691.83
G	HWY. 102 - STA. 134+07.59	97.29' LT.	667848.13, 743719.58

TOP OF POLE FOUNDATION ELEVATION SHALL BE THREE (3) INCHES ABOVE THE FINISHED SURFACE ELEVATION AT THE LOCATIONS SHOWN ABOVE.

TOP OF POLE FOUNDATION ELEVATION MAY BE INCREASED IN ACCORDANCE WITH STANDARD DRAWING SD-11.

POLE(S) B, D, & G (SEE PEDESTRIAN PUSH BUTTON PEDESTAL DETAIL).

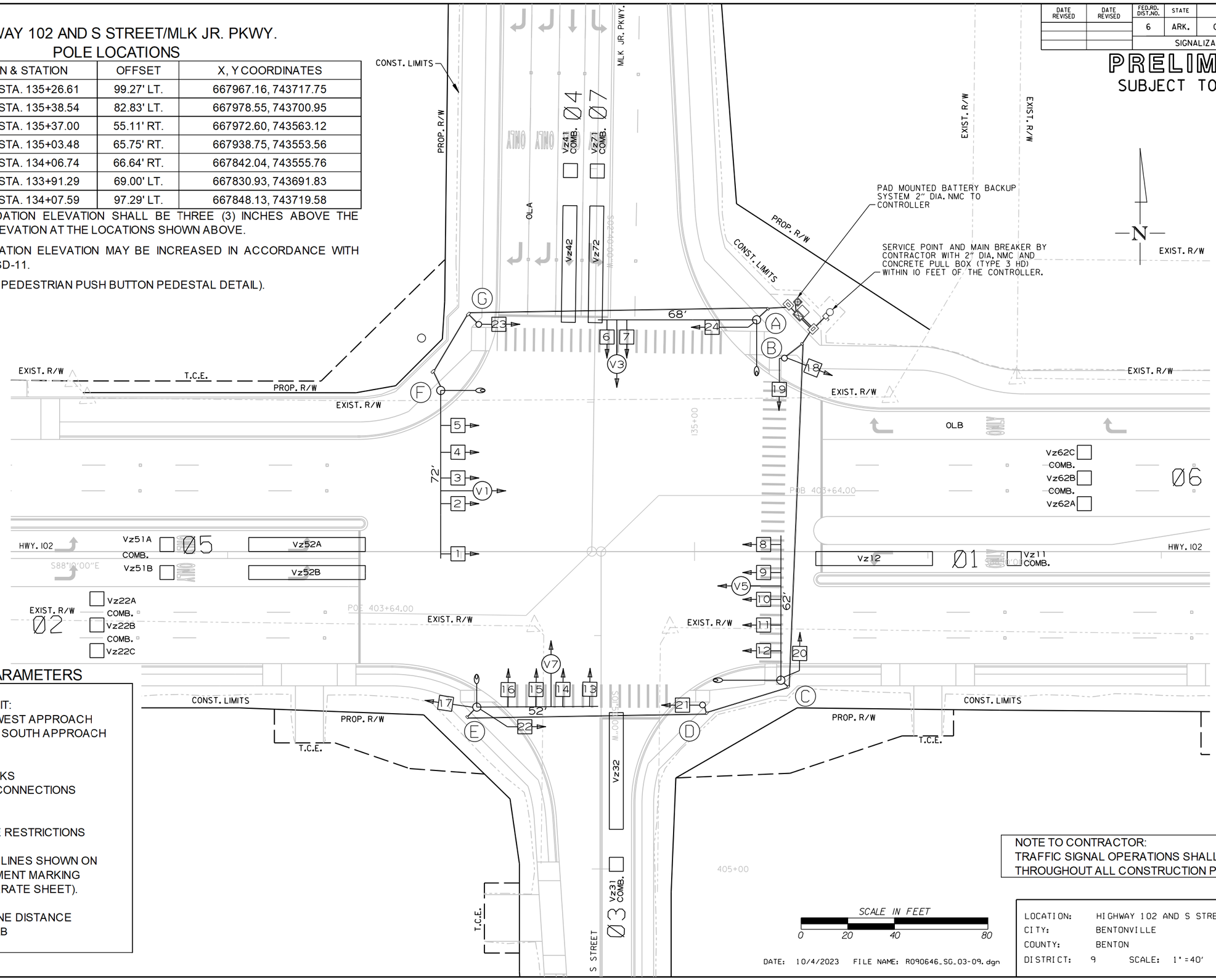

DESIGN PARAMETERS

POSTED SPEED LIMIT:
45 MPH EAST AND WEST APPROACH
25 MPH NORTH AND SOUTH APPROACH

NO BUS STOPS
NO RAILROAD TRACKS
NO EXISTING INTERCONNECTIONS
NO FIRE STATION
NO PARKING
NO SIGHT DISTANCE RESTRICTIONS

LOCATION OF STOP LINES SHOWN ON PERMANENT PAVEMENT MARKING DETAILS (SEE SEPARATE SHEET).

MINIMUM CLEAR ZONE DISTANCE
4 FEET BEHIND CURB

NOTE TO CONTRACTOR:
TRAFFIC SIGNAL OPERATIONS SHALL BE MAINTAINED THROUGHOUT ALL CONSTRUCTION PHASES.

DATE: 10/4/2023 FILE NAME: R090646_SG_03-09.dgn

LOCATION: HIGHWAY 102 AND S STREET/MLK JR. PKWY.
CITY: BENTONVILLE
COUNTY: BENTON
DISTRICT: 9 SCALE: 1"=40' DRAWN BY: CML

LandonMiller 10/4/2023 5:59:00 PM
WORKSPACE: LandonMiller
c:\users\public\mbjdwl$\d02963\R090646_17_SG_03-09.dgn
REVISED DATE: $$REVDATE$$

DATE REVISED	DATE REVISED	FED.RD. DIST.NO.	STATE	JOB NO.	SHEET NO.	TOTAL SHEETS
		6	ARK.	090646	55	66
		SIGNALIZATION PLAN SHEET				

PRELIMINARY
SUBJECT TO REVISION

HIGHWAY 102 AND S STREET/MLK JR. PKWY.
BATTERY BACKUP SYSTEM LOCATION

LOCATION & STATION	* OFFSET	* X, Y COORDINATES
HWY. 102 - STA. 135+44.26	106.90' LT.	667985.03, 743724.82

* CENTER OF CABINET

HIGHWAY 102 AND S STREET/MLK JR. PKWY.
CONTROLLER CABINET LOCATION

LOCATION & STATION	* OFFSET	* X, Y COORDINATES
HWY. 102 - STA. 135+44.58	101.06' LT.	667985.17, 743718.97

* CENTER OF CABINET

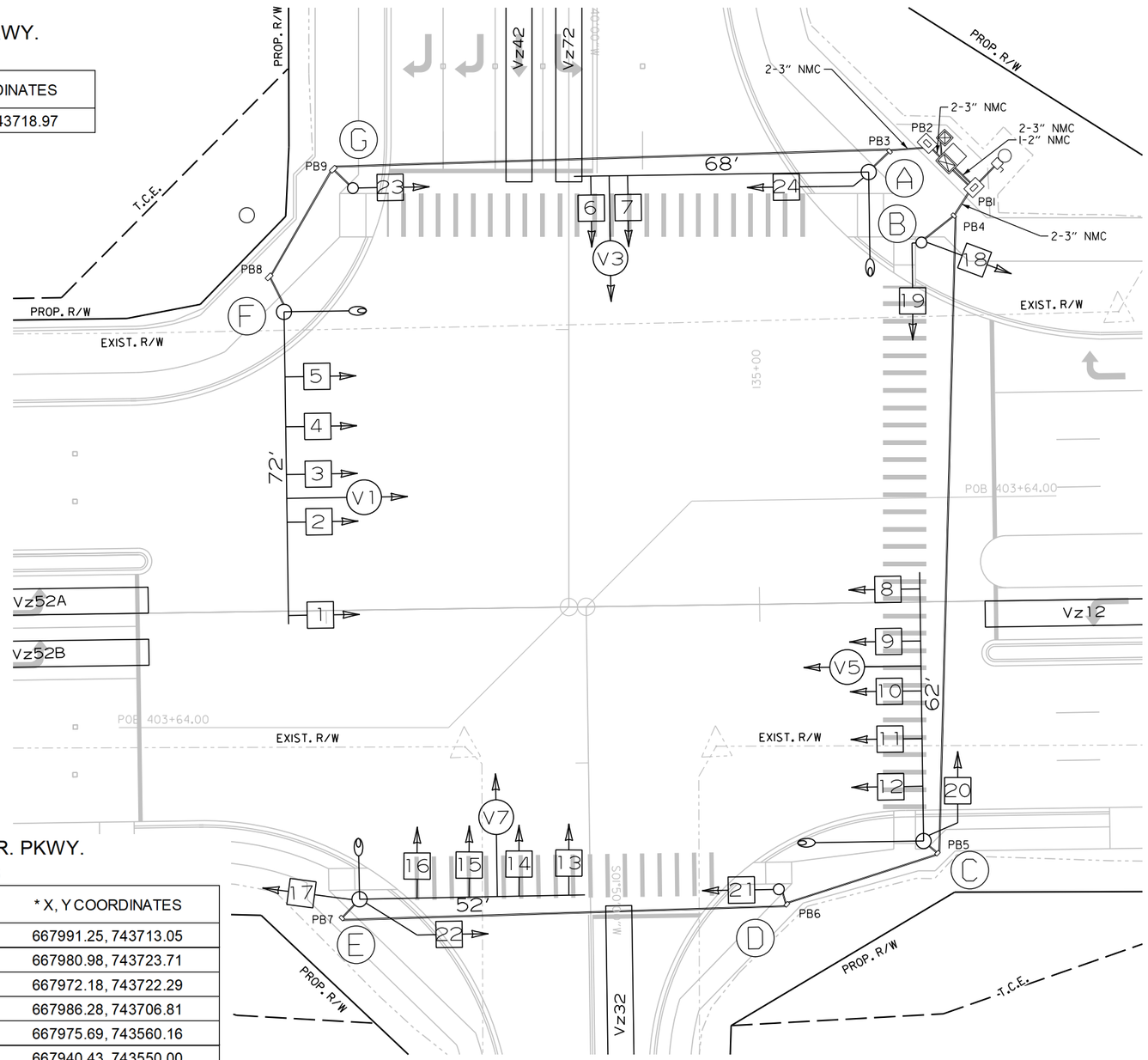

HIGHWAY 102 AND S ST./MLK JR. PKWY.
PULL BOX LOCATIONS

PULL BOX	TYPE	LOCATION & STATION	* OFFSET	* X, Y COORDINATES
PB1	3 HD	HWY. 102 - STA. 135+50.84	95.34' LT.	667991.25, 743713.05
PB2	3 HD	HWY. 102 - STA. 135+40.24	105.66' LT.	667980.98, 743723.71
PB3	2	HWY. 102 - STA. 135+31.49	103.96' LT.	667972.18, 743722.29
PB4	2	HWY. 102 - STA. 135+46.07	88.95' LT.	667986.28, 743706.81
PB5	2	HWY. 102 - STA. 135+40.19	57.98' RT.	667975.69, 743560.16
PB6	2	HWY. 102 - STA. 135+05.27	69.25' RT.	667940.43, 743550.00
PB7	2	HWY. 102 - STA. 134+02.61	70.94' RT.	667837.77, 743551.60
PB8	2	HWY. 102 - STA. 133+87.98	77.11' LT.	667827.88, 743700.05
PB9	2	HWY. 102 - STA. 134+03.14	101.70' LT.	667843.82, 743724.13

* CENTER OF PULL BOX
ALL PULL BOXES SHALL BE PLACED AT THE FINISHED SURFACE ELEVATION.

SCALE IN FEET
0 15 30 60

DATE: 10/4/2023 FILE NAME: R090646_SG_03-10.dgn

LOCATION: HIGHWAY 102 AND S STREET/MLK JR. PKWY.
CITY: BENTONVILLE
COUNTY: BENTON
DISTRICT: 9 SCALE: 1"=30' DRAWN BY: AAW

LandonMiller 10/4/2023 5:59:09 PM
WORKSPACE: LandonMiller
G:\users\public\mbldgw\16\d02963\R090646_17_SG_03-10.dgn
REVISED DATE: $$$REVDATE$$$

DATE REVISED	DATE REVISED	FED.RD. DIST.NO.	STATE	JOB NO.	SHEET NO.	TOTAL SHEETS
		6	ARK.	090646	56	66
		SIGNALIZATION PLAN SHEET				

PRELIMINARY
SUBJECT TO REVISION

WILL ADD WIRING WITH THE
50% UTILITY SUBMITTAL

WIRING DIAGRAM

NOTES TO CONTRACTOR:

1. ONE SEPARATE 1-5c/#12 IS RUN TO EACH POLE FOR THE ACCESSIBLE PEDESTRIAN PUSH BUTTON(S).
2. ALL DETECTOR RACK CHANNELS, INCLUDING UNUSED, SHALL BE BROUGHT TO TERMINAL STRIP IN DETECTOR AREA OF CABINET.
3. THE LOCAL GOVERNMENT SHALL BE RESPONSIBLE FOR PROVIDING POWER TO THE SERVICE POINT.
4. SEE GROUNDING ARRAY DETAIL ON SHEET 29.

LandonMiller 10/4/2023 5:59:18 PM
WORKSPACE: LandonMiller
c:\users\public\mbdwx$\d02963\R090646_17_SG_03-11.dgn
REVISED DATE: $$REVDATE$$

DATE: 10/4/2023 FILE NAME: R090646_SG_03-11.dgn

LOCATION:	HIGHWAY 102 AND S STREET/MLK JR. PKWY.
CITY:	BENTONVILLE
COUNTY:	BENTON
DISTRICT: 9	SCALE: N/A DRAWN BY: CML

DATE REVISED	DATE REVISED	FED.RD. DIST.NO.	STATE	JOB NO.	SHEET NO.	TOTAL SHEETS
		6	ARK.	090646	57	66
		SIGNALIZATION PLAN SHEET				

PRELIMINARY
SUBJECT TO REVISION

PHASING DIAGRAM

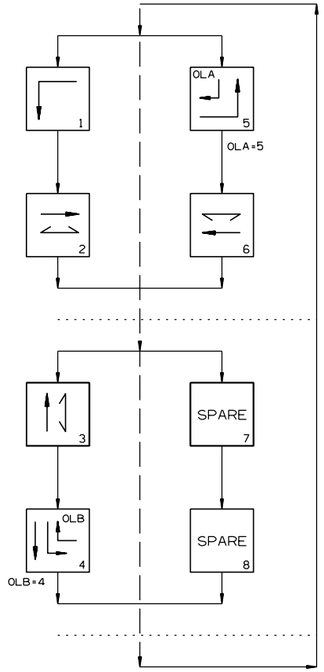

SIGNAL FACES

12" LENSES

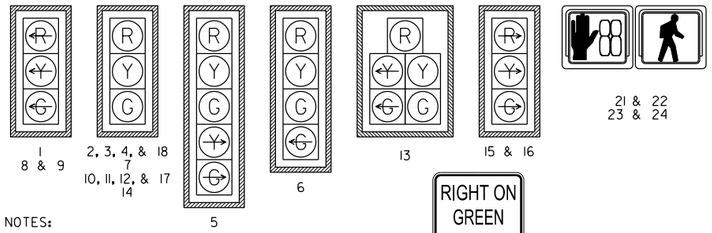

RIGHT ON GREEN ARROW ONLY
(2) R10-5a

NOTES:

1. ALL SIGNAL HEADS SHALL HAVE BACKPLATES.
2. REFER TO SPECIAL PROVISION "RETROREFLECTIVE BACKPLATES" FOR DETAILS ON REQUIREMENTS FOR BACKPLATES.
3. REFER TO SPECIAL PROVISIONS FOR DETAILS ON REQUIREMENTS FOR PEDESTRIAN SIGNAL HEADS.
4. ALL PEDESTRIAN SIGNAL HEADS CAN BE PLACED INTO OPERATION IF THERE ARE BOTH WHEELCHAIR RAMPS AND A CROSSWALK THAT MEETS A.D.A.S. STANDARD.

TRAFFIC FLOW DIAGRAM

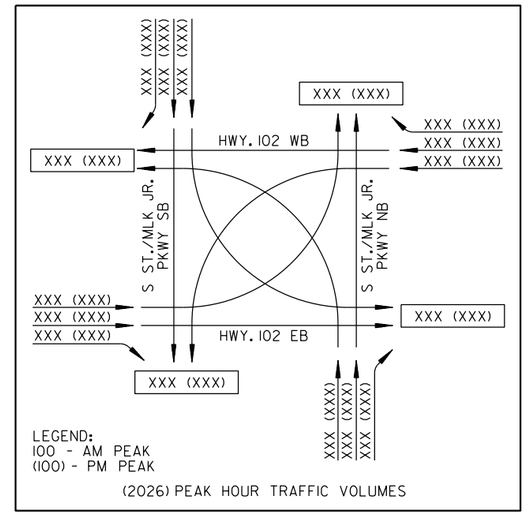

NOTE TO REVIEWER:
DESIGN HOURLY VOLUMES FOR S STREET/MLK JR. BLVD. WERE NOT PROVIDED.

DETECTOR CHART

DETECTOR SYSTEM DESCRIPTION: JOB 090646											
HIGHWAY 102 AND S STREET/MLK JR. PKWY. DETECTOR ASSIGNMENTS				HARDWARE INPUTS BY SUPPLIER			PROGRAM ASSIGNMENTS			COMMENTS	TUBE LENGTHS
							LOCAL		MASTER SYSTEM DETECTOR NUMBERS		
DET. ID #	LOCATION DIRECTION	TYPE	DET. #	CAB. TRM. #	AMP CHN. #	CON. IMP. #	PHS	SYSTEM DET. #			
Vz11	WB LEFT TURN FAR	COMB.			1	V9	1	1		CAMERA V1	23"
Vz12	WB LEFT TURN	LOCAL			2	V1	1			CAMERA V1	23"
Vz21 A,B&C	EB ADVANCE	LOCAL			5	V2	2			CAMERA V5	23"
Vz22 A,B&C	EB NEAR	COMB.			6	V10	2	2		CAMERA V5	23"
Vz31	NB ADVANCE	COMB.			9	V11	3	3		CAMERA V3	46"
Vz32	NB NEAR	LOCAL			10	V3	3			CAMERA V3	46"
Vz41	SB ADVANCE	COMB.			13	V4	4	4		CAMERA V7	46"
Vz42	SB NEAR	LOCAL			14	V12	4			CAMERA V7	46"
Vz51 A&B	EB LEFT TURN FAR	COMB.			7	V13	5	5		CAMERA V5	23"
Vz52 A&B	EB LEFT TURN	LOCAL			8	V5	5			CAMERA V5	23"
Vz61 A,B&C	WB ADVANCE	LOCAL			3	V6	6			CAMERA V1	23"
Vz62 A,B&C	WB NEAR	COMB.			4	V14	6	6		CAMERA V1	23"
Vz71	SB LEFT TURN FAR	COMB.			15	V15	7	7		CAMERA V7	46"
Vz72	SB LEFT TURN	LOCAL			16	V7	7			CAMERA V7	46"
PB2 A&B	MLK JR. PKWY S. LEG	PED.				P2	2				
PB4 A&B	HWY. 102 W. LEG	PED.				P4	4				
PB6 A&B	MLK JR. PKWY N. LEG	PED.				P6	6				
					SPARE:						

CONTROLLER INPUT ABBREVIATIONS:
V = VEHICLE INPUT
D = SYSTEM OR AUXILIARY INPUT
P = PEDESTRIAN INPUT

NOTE: "AMP CHN =" REFERS TO THE RACK OUTPUT POSITION.
THIS IS WIRED TO CONTROLLER INPUT DETECTOR NUMBER WHICH IS PROGRAMMED TO ACTUATE THE DESIGNATED PHASE.
EXAMPLE: V9 = SYSTEM DETECTOR 1, V10 = SYSTEM DETECTOR 2

INTERVAL CHART

SIGNAL FACES	HIGHWAY 102 AND S STREET/MLK JR. PKWY. 1+5	CLR.	1+6	CLR.	2+5	CLR.	2+6	CLR.	3	CLR.	4	CLR.	FLASH SEQUENCE
1	←G	*	←G	*	←R	←R	←R	←R	←R	←R	←R	←R	←R
2, 3, 4, & 18	R	R	G	**	R	R	G	**	R	R	R	R	R
5	R	R	G	**	R	R	G	**	R	R	R / →G	R / *	R
6	R	R	R	R	R	R	R	R	G / ←G	**	R	R	R
7	R	R	R	R	R	R	R	R	G	**	R	R	R
8 & 9	←G	*	←R	←R	←G	*	←R	←R	←R	←R	←R	←R	←R
10, 11, 12, & 17	R	R	R	R	G	**	G	**	R	R	R	R	R
13	R	R	R	R	R	R	R	R	R	R	G / ←G	** / *	R
14	R	R	R	R	R	R	R	R	R	R	G	**	R
15 & 16	→G	*	→R	→R	→G	*	→R	→R	→R	→R	→G	*	→R
19 & 20	DW	DW	DW	DW	DW	DW	DW	DW	W	FDW	DW	DW	BLK
21 & 22	DW	DW	DW	DW	W	FDW	W	FDW	DW	DW	DW	DW	BLK
23 & 24	DW	DW	W	FDW	DW	DW	W	FDW	DW	DW	DW	DW	BLK

* DENOTES GREEN OR YELLOW ARROW DEPENDING ON NEXT PHASE
** DENOTES GREEN OR YELLOW BALL DEPENDING ON NEXT PHASE
*** DENOTES FLASHING YELLOW ARROW OR YELLOW ARROW DEPENDING ON NEXT PHASE

LOCATION: HIGHWAY 102 AND S STREET/MLK JR. PKWY.
CITY: BENTONVILLE
COUNTY: BENTON
DISTRICT: 9 SCALE: N/A DRAWN BY: CML

DATE: 10/4/2023 FILE NAME: R090646_SG_03-12.dgn

LandonMiller 10/4/2023 5:59:25 PM
WORKSPACE: LandonMiller
c:\users\public\mbdwx$\d02963\R090646_17_SG_03-12.dgn
REVISED DATE: $$REVDATE$$

DATE REVISED	DATE REVISED	FED.RD. DIST.NO.	STATE	JOB NO.	SHEET NO.	TOTAL SHEETS
		6	ARK.	090646	58	66
		SIGNALIZATION PLAN SHEET				

PRELIMINARY
SUBJECT TO REVISION

STAGE I PHASING DIAGRAM

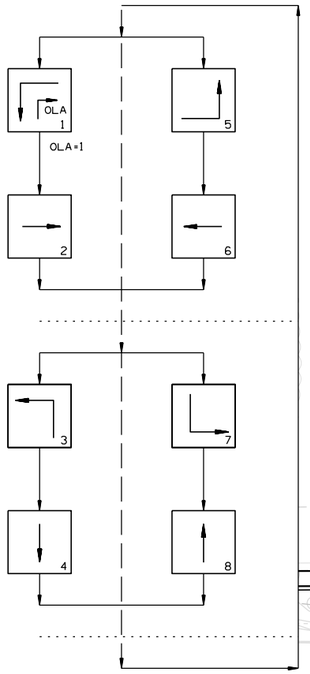

STAGE I SIGNAL FACES

12" LENSES

NOTES:

1. ALL SIGNAL HEADS SHALL HAVE BACKPLATES.
2. REFER TO SPECIAL PROVISION "RETROREFLECTIVE BACKPLATES" FOR DETAILS ON REQUIREMENTS FOR BACKPLATES.

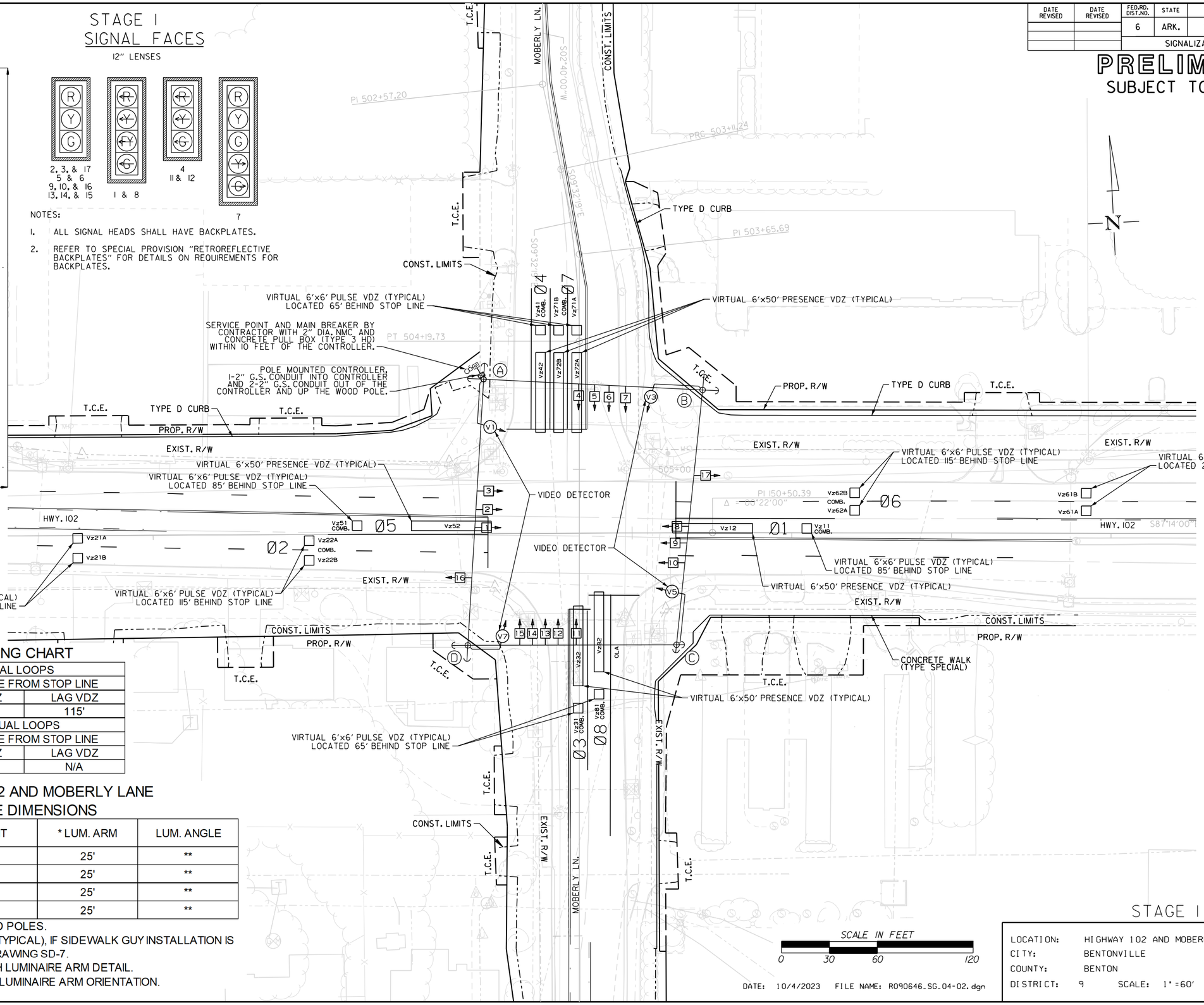

DETECTOR SPACING CHART

HIGHWAY 102 VIRTUAL LOOPS		
POSTED SPEED	DISTANCE FROM STOP LINE	
	LEAD VDZ	LAG VDZ
45 MPH	260'	115'
MOBERLY LANE VIRTUAL LOOPS		
POSTED SPEED	DISTANCE FROM STOP LINE	
	LEAD VDZ	LAG VDZ
35 MPH	65'	N/A

HIGHWAY 102 AND MOBERLY LANE POLE DIMENSIONS

POLE	CLASS	HEIGHT	* LUM. ARM	LUM. ANGLE
A	2	45'	25'	**
B	2	45'	25'	**
C	2	45'	25'	**
D	2	45'	25'	**

ALL POLES ARE TREATED WOOD POLES.
STANDARD GUY INSTALLATION (TYPICAL), IF SIDEWALK GUY INSTALLATION IS NECESSARY SEE STANDARD DRAWING SD-7.
* SEE TYPICAL WOOD POLE WITH LUMINAIRE ARM DETAIL.
** REFER TO PLAN SHEETS FOR LUMINAIRE ARM ORIENTATION.

STAGE I

DATE: 10/4/2023 FILE NAME: R090646_SG_04-02.dgn

LOCATION:	HIGHWAY 102 AND MOBERLY LANE
CITY:	BENTONVILLE
COUNTY:	BENTON
DISTRICT: 9	SCALE: 1"=60' DRAWN BY: CML

London.Miller 10/4/2023 5:59:35 PM
WORKSPACE: London.Miller
c:\users\public\mbjw\6\d0129163\R090646_17_SG_04-02.dgn
REVISED DATE: $$REVDATE$$

DATE REVISED	DATE REVISED	FED.RD. DIST.NO.	STATE	JOB NO.	SHEET NO.	TOTAL SHEETS
		6	ARK.	090646	59	66
		SIGNALIZATION PLAN SHEET				

PRELIMINARY
SUBJECT TO REVISION

DESIGN PARAMETERS

POSTED SPEED LIMIT:
45 MPH EAST AND WEST APPROACH
35 MPH NORTH AND SOUTH APPROACH

NO BUS STOPS
NO RAILROAD TRACKS
NO EXISTING INTERCONNECTIONS
NO FIRE STATION
NO PARKING
NO SIGHT DISTANCE RESTRICTIONS

LOCATION OF STOP LINES SHOWN ON MAINTENANCE OF TRAFFIC DETAILS (SEE SEPARATE SHEET).

MINIMUM CLEAR ZONE DISTANCE
4 FEET BEHIND CURB

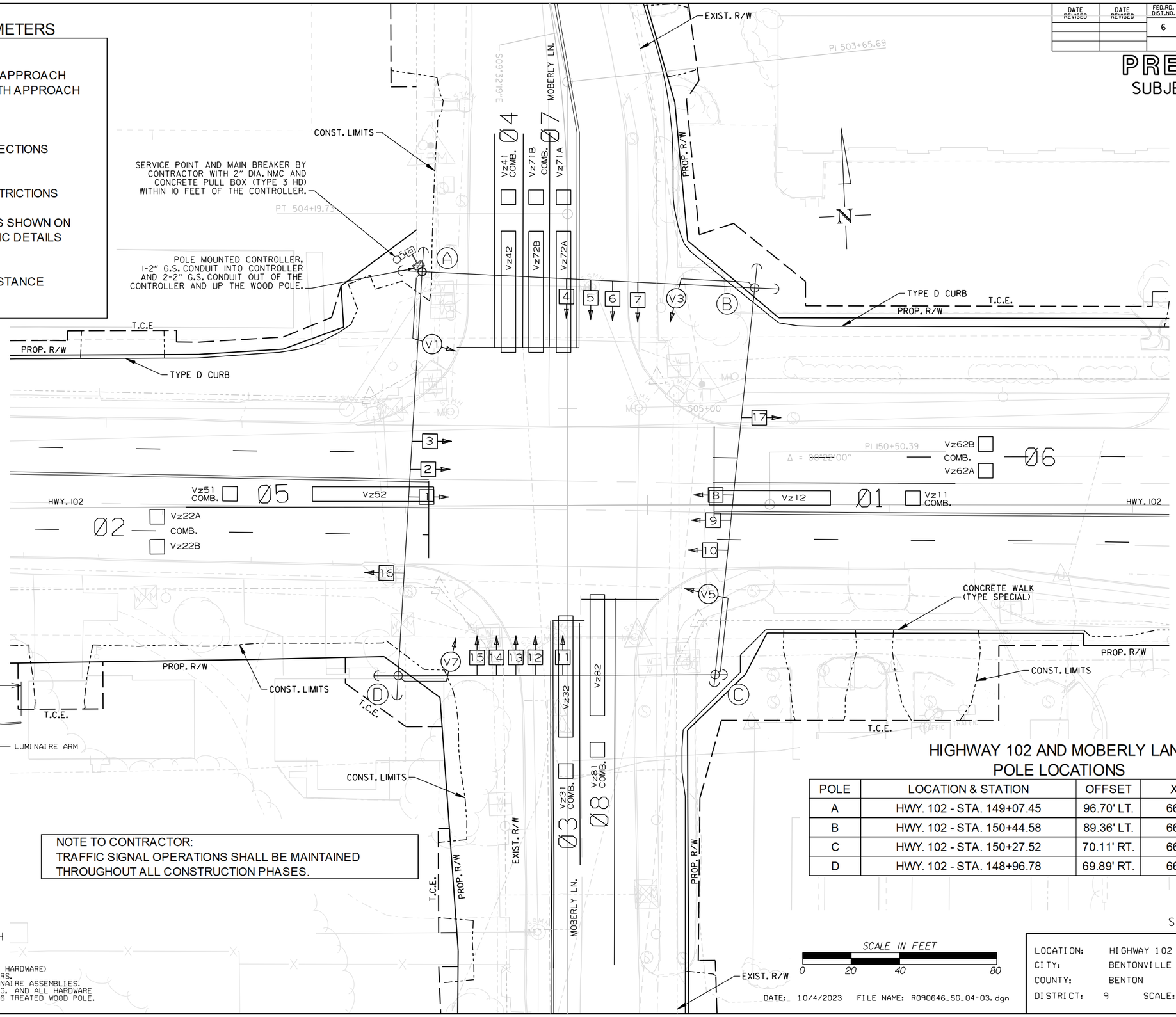

NOTE TO CONTRACTOR:
TRAFFIC SIGNAL OPERATIONS SHALL BE MAINTAINED THROUGHOUT ALL CONSTRUCTION PHASES.

HIGHWAY 102 AND MOBERLY LANE POLE LOCATIONS

POLE	LOCATION & STATION	OFFSET	X, Y COORDINATES
A	HWY. 102 - STA. 149+07.45	96.70' LT.	669347.90, 743663.85
B	HWY. 102 - STA. 150+44.58	89.36' LT.	669484.60, 743650.78
C	HWY. 102 - STA. 150+27.52	70.11' RT.	669460.87, 743492.16
D	HWY. 102 - STA. 148+96.78	69.89' RT.	669330.26, 743497.86

TYPICAL WOOD POLE WITH LUMINAIRE ARM

NOTE TO CONTRACTOR:
LUMINAIRE ARMS (OR APPROVED MOUNTING HARDWARE) SHALL BE USED TO MOUNT VIDEO DETECTORS.
LUMINAIRE ARM SHALL NOT INCLUDE LUMINAIRE ASSEMBLIES.
THE COST FOR LUMINAIRE ARMS, MOUNTING, AND ALL HARDWARE IS INCLUDED IN PRICE BID FOR ITEM 716 TREATED WOOD POLE.

SCALE IN FEET
0 20 40 80

DATE: 10/4/2023 FILE NAME: R090646_SG_04-03.dgn

STAGE I

LOCATION: HIGHWAY 102 AND MOBERLY LANE
CITY: BENTONVILLE
COUNTY: BENTON
DISTRICT: 9 SCALE: 1"=40' DRAWN BY: CML

London.Miller 10/4/2023 5:59:44 PM
WORKSPACE: London.Miller
c:\users\public\mdlwks\d02963\R090646_17_SG_04-03.dgn
REVISED DATE: $$REVDATE$$

DATE REVISED	DATE REVISED	FED.RD. DIST.NO.	STATE	JOB NO.	SHEET NO.	TOTAL SHEETS
		6	ARK.	090646	60	66
		SIGNALIZATION PLAN SHEET				

PRELIMINARY
SUBJECT TO REVISION

WILL ADD WIRING WITH THE
50% UTILITY SUBMITTAL

STAGES 1 & 2
WIRING DIAGRAM

NOTES TO CONTRACTOR:

1 ALL DETECTOR RACK CHANNELS, INCLUDING UNUSED, SHALL BE BROUGHT TO TERMINAL STRIP IN DETECTOR AREA OF CABINET.

2 THE LOCAL GOVERNMENT SHALL BE RESPONSIBLE FOR PROVIDING POWER TO THE SERVICE POINT.

DATE: 10/4/2023 FILE NAME: R090646_SG_04-06.dgn

LOCATION:	HIGHWAY 102 AND MOBERLY LANE
CITY:	BENTONVILLE
COUNTY:	BENTON
DISTRICT: 9	SCALE: N/A DRAWN BY: CML

LandonMiller 10/4/2023 6:00:14 PM
WORKSPACE: LandonMiller
c:\users\public\mbdwx$\d02963\R090646_17_SG_04-06.dgn
REVISED DATE: $$REVDATE$$

DATE REVISED	DATE REVISED	FED.RD. DIST.NO.	STATE	JOB NO.	SHEET NO.	TOTAL SHEETS
		6	ARK.	090646	61	66
		SIGNALIZATION PLAN SHEET				

PRELIMINARY
SUBJECT TO REVISION

STAGE 1& 2 PHASING DIAGRAM

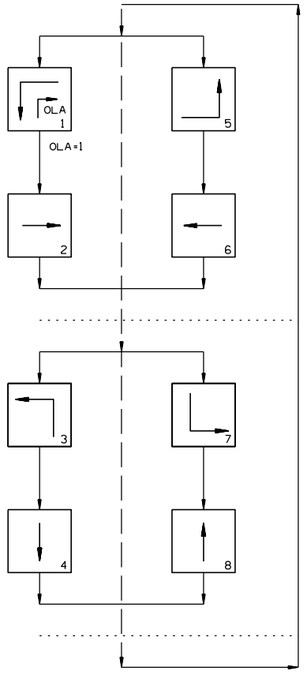

STAGE 1& 2 SIGNAL FACES

12" LENSES

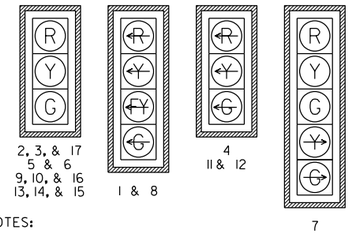

NOTES:

1. ALL SIGNAL HEADS SHALL HAVE BACKPLATES.
2. REFER TO SPECIAL PROVISION "RETROREFLECTIVE BACKPLATES" FOR DETAILS ON REQUIREMENTS FOR BACKPLATES.

STAGES 1 & 2 DETECTOR CHART

DETECTOR SYSTEM DESCRIPTION: JOB 090646											
HIGHWAY 102 AND MOBERLY LANE DETECTOR ASSIGNMENTS				HARDWARE INPUTS BY SUPPLIER			PROGRAM ASSIGNMENTS			COMMENTS	TUBE LENGTHS
							LOCAL		MASTER SYSTEM DETECTOR NUMBERS		
DET. ID #	LOCATION DIRECTION	TYPE	DET. #	CAB. TRM. #	AMP CHN. #	CON. IMP. #	PHS	SYSTEM DET. #			
Vz11	WB LEFT TURN FAR	COMB.				V9	1	1		CAMERA V1	23"
Vz12	WB LEFT TURN	LOCAL				V1	1			CAMERA V1	23"
Vz21 A&B	EB ADVANCE	LOCAL				V2	2			CAMERA V5	23"
Vz22 A&B	EB NEAR	COMB.				V10	2	2		CAMERA V5	23"
Vz31	NB LEFT TURN FAR	COMB.				V11	3	3		CAMERA V3	23"
Vz32	NB LEFT TURN	LOCAL				V3	3			CAMERA V3	23"
Vz41	SB ADVANCE	LOCAL				V4	4			CAMERA V7	23"
Vz42	SB NEAR	COMB.				V12	4	4		CAMERA V7	23"
Vz51	EB LEFT TURN FAR	COMB.				V13	5	5		CAMERA V5	23"
Vz52	EB LEFT TURN	LOCAL				V5	5			CAMERA V5	23"
Vz61 A&B	WB ADVANCE	LOCAL				V6	6			CAMERA V1	23"
Vz62 A&B	WB NEAR	COMB.				V14	6	6		CAMERA V1	23"
Vz71 A&B	SB LEFT TURN FAR	COMB.				V15	7	7		CAMERA V7	23"
Vz72 A&B	SB LEFT TURN	LOCAL				V7	7			CAMERA V7	23"
Vz81	NB ADVANCE	LOCAL				V8	8			CAMERA V3	23"
Vz82	NB NEAR	COMB.				V16	8	8		CAMERA V3	23"
					SPARE:						

CONTROLLER INPUT ABBREVIATIONS:
V = VEHICLE INPUT
D = SYSTEM OR AUXILIARY INPUT
P = PEDESTRIAN INPUT

NOTE: "AMP CHN =" REFERS TO THE RACK OUTPUT POSITION.
THIS IS WIRED TO CONTROLLER INPUT DETECTOR NUMBER WHICH IS PROGRAMMED TO ACTUATE THE DESIGNATED PHASE.
EXAMPLE: V9 = SYSTEM DETECTOR 1, V10 = SYSTEM DETECTOR 2

STAGES 1 & 2 INTERVAL CHART

SIGNAL FACES	HIGHWAY 102 AND MOBERLY LANE 1+5	CLR.	1+6	CLR.	2+5	CLR.	2+6	CLR.	3+7	CLR.	3+8	CLR.	4+7	CLR.	4+8	CLR.	FLASH SEQUENCE
1	~~G~~	*	~~G~~	*	~~FY~~	***	~~FY~~	***	~~R~~	~~R~~	~~R~~	~~R~~	~~R~~	~~R~~	~~R~~	~~R~~	~~R~~
2, 3, & 17	R	R	G	**	R	R	G	**	R	R	R	R	R	R	R	R	R
4	~~R~~	~~R~~	~~R~~	~~R~~	~~R~~	~~R~~	~~R~~	~~R~~	~~G~~	*	~~G~~	*	~~R~~	~~R~~	~~R~~	~~R~~	~~R~~
5 & 6	R	R	R	R	R	R	R	R	R	R	G	**	R	R	G	**	R
7	R / ~~G~~	R / *	R / ~~G~~	R / *	R	R	R	R	R	R	G	**	R	R	G	**	R
8	~~G~~	*	~~FY~~	***	~~G~~	*	~~FY~~	***	~~R~~	~~R~~	~~R~~	~~R~~	~~R~~	~~R~~	~~R~~	~~R~~	~~R~~
9, 10, &16	R	R	R	R	G	**	G	**	R	R	R	R	R	R	R	R	R
11 & 12	~~R~~	~~R~~	~~R~~	~~R~~	~~R~~	~~R~~	~~R~~	~~R~~	~~G~~	*	~~R~~	~~R~~	~~G~~	*	~~R~~	~~R~~	~~R~~
13, 14, & 15	R	R	R	R	R	R	R	R	R	R	R	R	G	**	G	**	R

* DENOTES GREEN OR YELLOW ARROW DEPENDING ON NEXT PHASE
** DENOTES GREEN OR YELLOW BALL DEPENDING ON NEXT PHASE
*** DENOTES FLASHING YELLOW ARROW OR YELLOW ARROW DEPENDING ON NEXT PHASE

DATE: 10/4/2023 FILE NAME: R090646_SG_04-07.dgn

LOCATION: HIGHWAY 102 AND MOBERLY LANE
CITY: BENTONVILLE
COUNTY: BENTON
DISTRICT: 9 SCALE: N/A DRAWN BY: CML

LandonMiller 10/4/2023 6:00:23 PM
WORKSPACE: LandonMiller
c:\users\public\mbdw\6\d02963\R090646_17_SG_04-07.dgn
REVISED DATE: $$REVDATE$$

DATE REVISED	DATE REVISED	FED.RD. DIST.NO.	STATE	JOB NO.	SHEET NO.	TOTAL SHEETS
		6	ARK.	090646	62	66
		SIGNALIZATION PLAN SHEET				

PRELIMINARY
SUBJECT TO REVISION

PHASING DIAGRAM

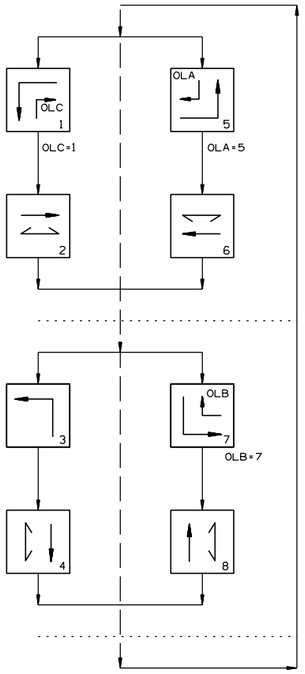

SIGNAL FACES

12" LENSES

1
6 & 7
11
15 & 16

2, 3, 4 & 21
8 & 9
12, 13, 14, & 20
17 & 18

5
10
19

ONE SECTION
(SOLID SYMBOL)

22 & 23
24 & 25
26 & 27
28 & 29

NOTES:

1. ALL SIGNAL HEADS SHALL HAVE BACKPLATES.
2. REFER TO SPECIAL PROVISION "RETROREFLECTIVE BACKPLATES" FOR DETAILS ON REQUIREMENTS FOR BACKPLATES.
3. REFER TO SPECIAL PROVISIONS FOR DETAILS ON REQUIREMENTS FOR PEDESTRIAN SIGNAL HEADS.
4. ALL PEDESTRIAN SIGNAL HEADS CAN BE PLACED INTO OPERATION IF THERE ARE BOTH WHEELCHAIR RAMPS AND A CROSSWALK THAT MEETS A.D.A.S. STANDARD.

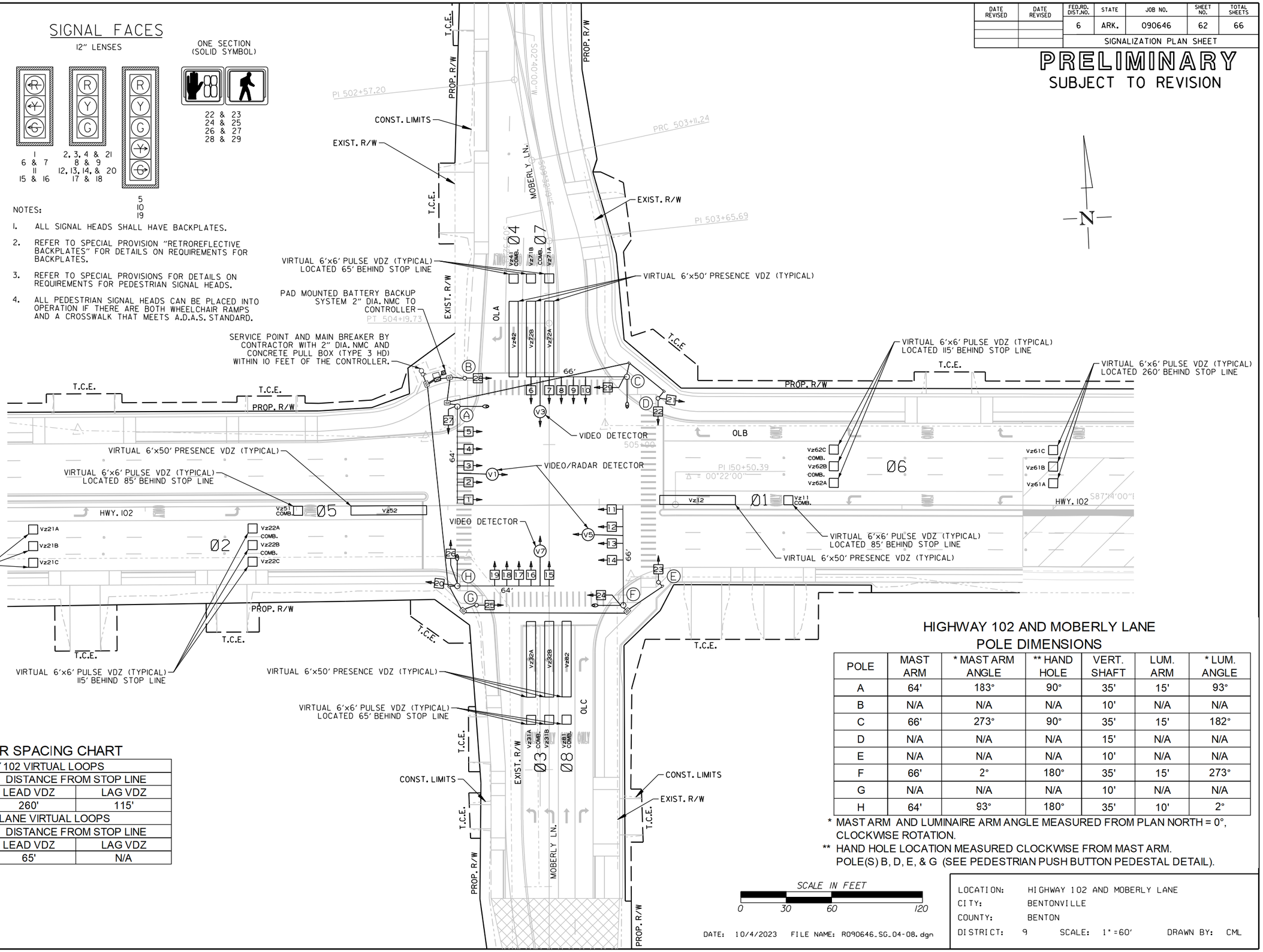

DETECTOR SPACING CHART

HIGHWAY 102 VIRTUAL LOOPS		
POSTED SPEED	DISTANCE FROM STOP LINE	
	LEAD VDZ	LAG VDZ
45 MPH	260'	115'
MOBERLY LANE VIRTUAL LOOPS		
POSTED SPEED	DISTANCE FROM STOP LINE	
	LEAD VDZ	LAG VDZ
35 MPH	65'	N/A

HIGHWAY 102 AND MOBERLY LANE POLE DIMENSIONS

POLE	MAST ARM	* MAST ARM ANGLE	** HAND HOLE	VERT. SHAFT	LUM. ARM	* LUM. ANGLE
A	64'	183°	90°	35'	15'	93°
B	N/A	N/A	N/A	10'	N/A	N/A
C	66'	273°	90°	35'	15'	182°
D	N/A	N/A	N/A	15'	N/A	N/A
E	N/A	N/A	N/A	10'	N/A	N/A
F	66'	2°	180°	35'	15'	273°
G	N/A	N/A	N/A	10'	N/A	N/A
H	64'	93°	180°	35'	10'	2°

* MAST ARM AND LUMINAIRE ARM ANGLE MEASURED FROM PLAN NORTH = 0°, CLOCKWISE ROTATION.

** HAND HOLE LOCATION MEASURED CLOCKWISE FROM MAST ARM. POLE(S) B, D, E, & G (SEE PEDESTRIAN PUSH BUTTON PEDESTAL DETAIL).

SCALE IN FEET
0 30 60 120

DATE: 10/4/2023 FILE NAME: R090646_SG_04-08.dgn

LOCATION: HIGHWAY 102 AND MOBERLY LANE
CITY: BENTONVILLE
COUNTY: BENTON
DISTRICT: 9 SCALE: 1"=60' DRAWN BY: CML

London.Miller 10/4/2023 6:00:33 PM
WORKSPACE: London.Miller
C:\Users\Public\mbjw\6\d0129163\R090646_17_SG_04-08.dgn
REVISED DATE: $$REVDATE$$

DATE REVISED	DATE REVISED	FED.RD. DIST.NO.	STATE	JOB NO.	SHEET NO.	TOTAL SHEETS
		6	ARK.	090646	63	66
		SIGNALIZATION PLAN SHEET				

PRELIMINARY
SUBJECT TO REVISION

HIGHWAY 102 AND MOBERLY LANE
POLE LOCATIONS

POLE	LOCATION & STATION	OFFSET	X, Y COORDINATES
A	HWY. 102 - STA. 149+06.62	65.46' LT.	669345.75, 743632.68
B	HWY. 102 - STA. 149+11.61	84.11' LT.	669351.53, 743651.11
C	HWY. 102 - STA. 150+18.72	84.58' LT.	669458.56, 743647.09
D	HWY. 102 - STA. 150+39.18	70.19' LT.	669478.40, 743631.86
E	HWY. 102 - STA. 150+38.94	51.34' RT.	669473.07, 743510.44
F	HWY. 102 - STA. 150+15.66	66.41' RT.	669449.18, 743496.36
G	HWY. 102 - STA. 149+18.68	65.93' RT.	669352.31, 743500.90
H	HWY. 102 - STA. 149+06.06	53.16' RT.	669340.24, 743514.19

TOP OF POLE FOUNDATION ELEVATION SHALL BE THREE (3) INCHES ABOVE THE FINISHED SURFACE ELEVATION AT THE LOCATIONS SHOWN ABOVE.

TOP OF POLE FOUNDATION ELEVATION MAY BE INCREASED IN ACCORDANCE WITH STANDARD DRAWING SD-11.

POLE(S) B, D, E, & G (SEE PEDESTRIAN PUSH BUTTON PEDESTAL DETAIL).

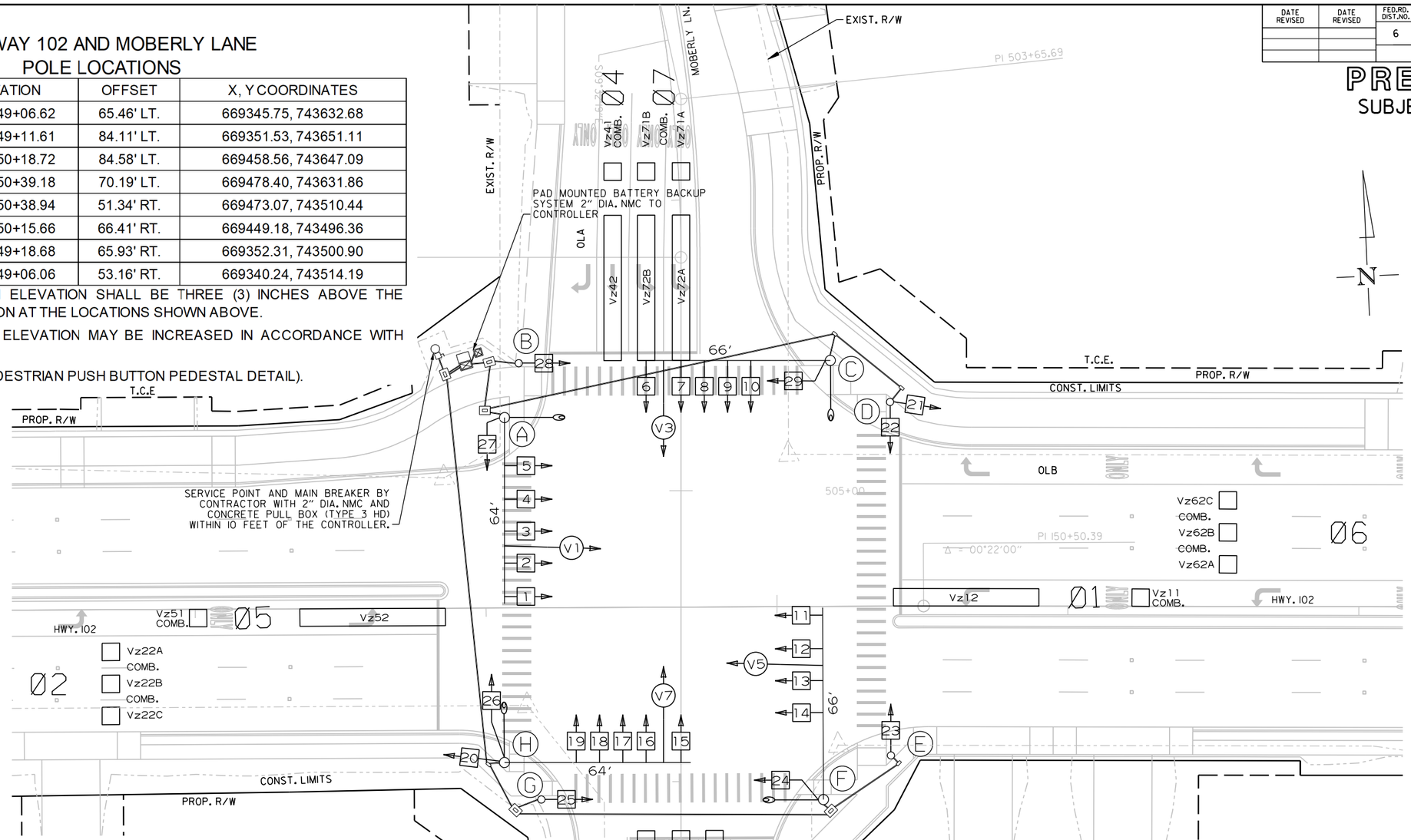

DESIGN PARAMETERS

POSTED SPEED LIMIT:
45 MPH EAST AND WEST APPROACH
35 MPH NORTH AND SOUTH APPROACH

NO BUS STOPS
NO RAILROAD TRACKS
NO EXISTING INTERCONNECTIONS
NO FIRE STATION
NO PARKING
NO SIGHT DISTANCE RESTRICTIONS

LOCATION OF STOP LINES SHOWN ON PERMANENT PAVEMENT MARKING DETAILS (SEE SEPARATE SHEET).

MINIMUM CLEAR ZONE DISTANCE
4 FEET BEHIND CURB

NOTE TO CONTRACTOR:
TRAFFIC SIGNAL OPERATIONS SHALL BE MAINTAINED THROUGHOUT ALL CONSTRUCTION PHASES.

SCALE IN FEET
0 20 40 80

DATE: 10/4/2023 FILE NAME: R090646_SG_04-09.dgn

LOCATION: HIGHWAY 102 AND MOBERLY LANE
CITY: BENTONVILLE
COUNTY: BENTON
DISTRICT: 9 SCALE: 1"=40' DRAWN BY: CML

London.Miller 10/4/2023 6:00:42 PM
WORKSPACE: London.Miller
c:\users\public\mbjw\6\d029163\R090646_17_SG_04-09.dgn
REVISED DATE: $$REVDATE$$

DATE REVISED	DATE REVISED	FED.RD. DIST.NO.	STATE	JOB NO.	SHEET NO.	TOTAL SHEETS
		6	ARK.	090646	64	66
		SIGNALIZATION PLAN SHEET				

PRELIMINARY
SUBJECT TO REVISION

N

HIGHWAY 102 AND MOBERLY LANE
BATTERY BACKUP SYSTEM LOCATION

LOCATION & STATION	* OFFSET	* X, Y COORDINATES
HWY. 102 - STA. 148+97.67	87.82' LT.	669337.75, 743655.39

* CENTER OF CABINET

HIGHWAY 102 AND MOBERLY LANE
CONTROLLER CABINET LOCATION

LOCATION & STATION	* OFFSET	* X, Y COORDINATES
HWY. 102 - STA. 148+93.44	83.46' LT.	669333.35, 743651.22

* CENTER OF CABINET

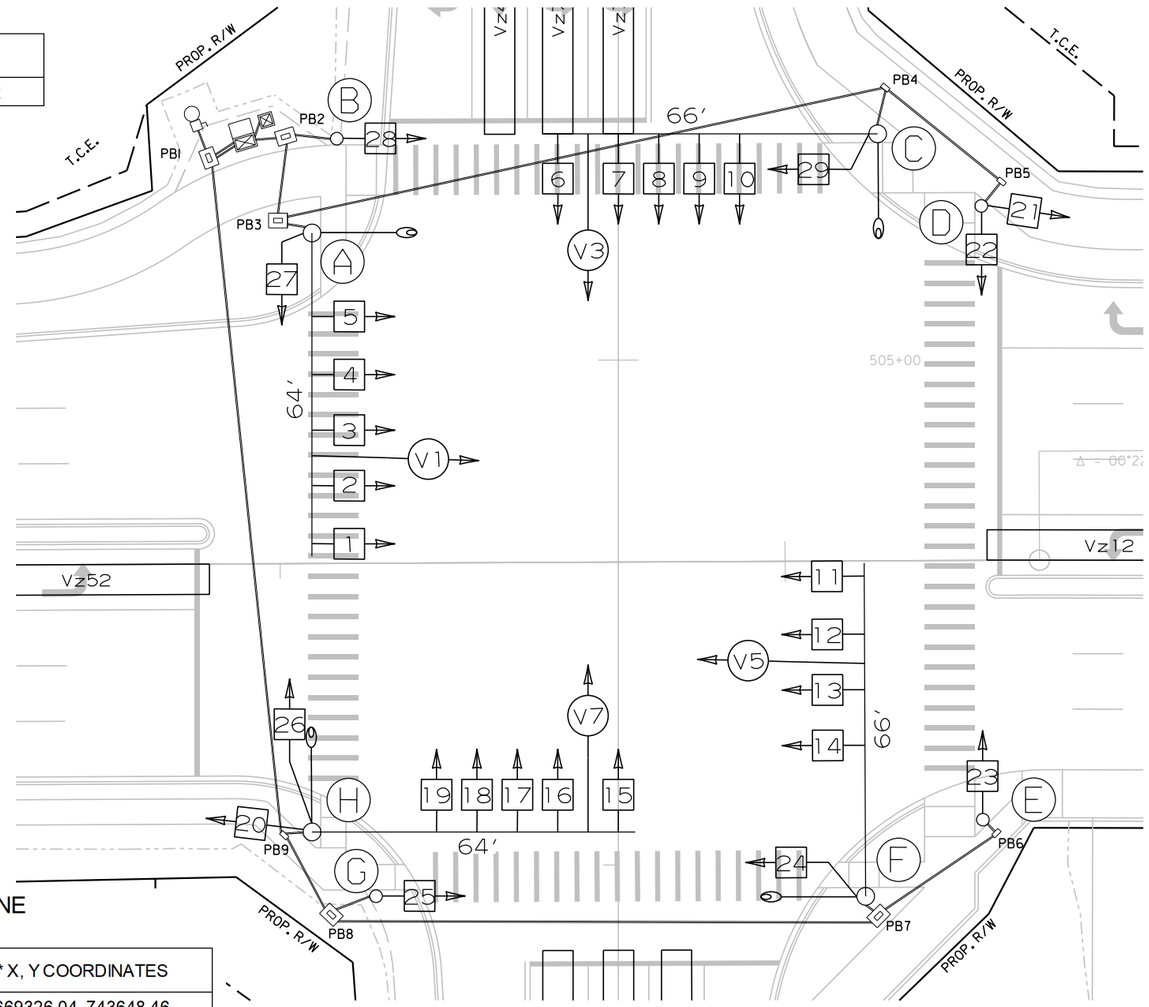

HIGHWAY 102 AND MOBERLY LANE
PULL BOX LOCATIONS

PULL BOX	TYPE	LOCATION & STATION	* OFFSET	* X, Y COORDINATES
PB1	3 HD	HWY. 102 - STA. 148+86.26	80.40' LT.	669326.04, 743648.46
PB2	3 HD	HWY. 102 - STA. 149+01.50	84.58' LT.	669341.44, 743652.00
PB3	2 HD	HWY. 102 - STA. 148+99.89	67.96' LT.	669339.14, 743635.46
PB4	2	HWY. 102 - STA. 150+20.26	93.72' LT.	669460.48, 743656.15
PB5	2	HWY. 102 - STA. 150+43.20	75.00' LT.	669482.62, 743636.49
PB6	2	HWY. 102 - STA. 150+41.60	54.01' RT.	669475.61, 743507.66
PB7	2 HD	HWY. 102 - STA. 150+18.20	70.30' RT.	669451.56, 743492.37
PB8	2 HD	HWY. 102 - STA. 149+09.82	69.56' RT.	669343.30, 743497.64
PB9	2	HWY. 102 - STA. 149+00.57	53.79' RT.	669334.72, 743513.79

* CENTER OF PULL BOX
ALL PULL BOXES SHALL BE PLACED AT THE FINISHED SURFACE ELEVATION.

SCALE IN FEET
0 15 30 60

DATE: 10/4/2023 FILE NAME: R090646_SG_04-10.dgn

LOCATION: HIGHWAY 102 AND MOBERLY LANE
CITY: BENTONVILLE
COUNTY: BENTON
DISTRICT: 9 SCALE: 1"=30' DRAWN BY: AAW

LandonMiller 10/4/2023 6:00:51 PM
WORKSPACE: LandonMiller
c:\users\public\mbldpw\6\d0129163\R090646_IT_SG_04-10.dgn
REVISED DATE: $$REVDATE$$

DATE REVISED	DATE REVISED	FED.RD. DIST.NO.	STATE	JOB NO.	SHEET NO.	TOTAL SHEETS
		6	ARK.	090646	65	66
		SIGNALIZATION PLAN SHEET				

PRELIMINARY
SUBJECT TO REVISION

WILL ADD WIRING WITH THE
50% UTILITY SUBMITTAL

WIRING DIAGRAM

NOTES TO CONTRACTOR:

1. ONE SEPARATE 1-5c/#12 IS RUN TO EACH POLE FOR THE ACCESSIBLE PEDESTRIAN PUSH BUTTON(S).
2. ALL DETECTOR RACK CHANNELS, INCLUDING UNUSED, SHALL BE BROUGHT TO TERMINAL STRIP IN DETECTOR AREA OF CABINET.
3. THE LOCAL GOVERNMENT SHALL BE RESPONSIBLE FOR PROVIDING POWER TO THE SERVICE POINT.
4. SEE GROUNDING ARRAY DETAIL ON SHEET 29.

DATE: 10/4/2023 FILE NAME: R090646_SG_04-11.dgn

LOCATION: HIGHWAY 102 AND MOBERLY LANE
CITY: BENTONVILLE
COUNTY: BENTON
DISTRICT: 9 SCALE: N/A DRAWN BY: CML

LandonMiller 10/4/2023 6:00:59 PM
WORKSPACE: LandonMiller
G:\users\public\mbjdx\5\d02963\R090646_17_SG_04-11.dgn
REVISED DATE: $$REVDATE$$

DATE REVISED	DATE REVISED	FED.RD. DIST.NO.	STATE	JOB NO.	SHEET NO.	TOTAL SHEETS
		6	ARK.	090646	66	66
		SIGNALIZATION PLAN SHEET				

PRELIMINARY
SUBJECT TO REVISION

PHASING DIAGRAM

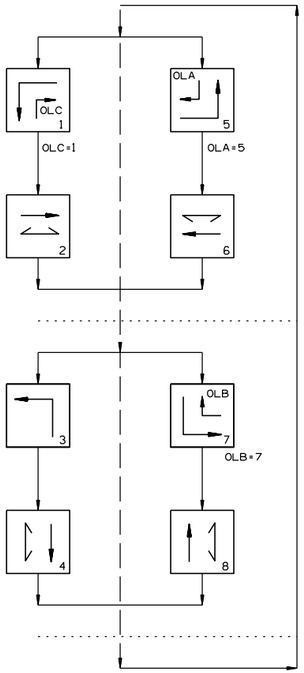

SIGNAL FACES

12" LENSES

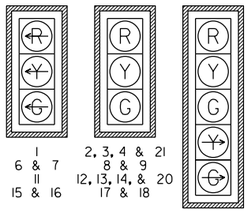

ONE SECTION (SOLID SYMBOL)

22 & 23
24 & 25
26 & 27
28 & 29

NOTES:

1. ALL SIGNAL HEADS SHALL HAVE BACKPLATES.
2. REFER TO SPECIAL PROVISION "RETROREFLECTIVE BACKPLATES" FOR DETAILS ON REQUIREMENTS FOR BACKPLATES.
3. REFER TO SPECIAL PROVISIONS FOR DETAILS ON REQUIREMENTS FOR PEDESTRIAN SIGNAL HEADS.
4. ALL PEDESTRIAN SIGNAL HEADS CAN BE PLACED INTO OPERATION IF THERE ARE BOTH WHEELCHAIR RAMPS AND A CROSSWALK THAT MEETS A.D.A.S. STANDARD.

TRAFFIC FLOW DIAGRAM

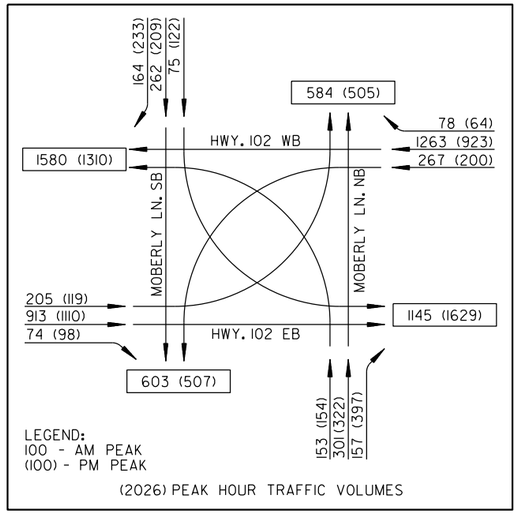

DETECTOR CHART

DETECTOR SYSTEM DESCRIPTION: JOB 090646

HIGHWAY 102 AND MOBERLY LANE DETECTOR ASSIGNMENTS				HARDWARE INPUTS BY SUPPLIER			PROGRAM ASSIGNMENTS			COMMENTS	TUBE LENGTHS
							LOCAL		MASTER SYSTEM DETECTOR NUMBERS		
DET. ID #	LOCATION DIRECTION	TYPE	DET. #	CAB. TRM. #	AMP CHN. #	CON. IMP. #	PHS	SYSTEM DET. #			
Vz11	WB LEFT TURN FAR	COMB.				V9	1	1		CAMERA V1	23"
Vz12	WB LEFT TURN	LOCAL				V1	1			CAMERA V1	23"
Vz21 A,B&C	EB ADVANCE	LOCAL				V2	2			CAMERA V5	23"
Vz22 A,B&C	EB NEAR	COMB.				V10	2	2		CAMERA V5	23"
Vz31 A&B	NB LEFT TURN FAR	COMB.				V11	3	3		CAMERA V3	46"
Vz32 A&B	NB LEFT TURN	LOCAL				V3	3			CAMERA V3	46"
Vz41	SB ADVANCE	LOCAL				V4	4			CAMERA V7	46"
Vz42	SB NEAR	COMB.				V12	4	4		CAMERA V7	46"
Vz51	EB LEFT TURN FAR	COMB.				V13	5	5		CAMERA V5	23"
Vz52	EB LEFT TURN	LOCAL				V5	5			CAMERA V5	23"
Vz61 A,B,C	WB ADVANCE	LOCAL				V6	6			CAMERA V1	23"
Vz62 A,B,C	WB NEAR	COMB.				V14	6	6		CAMERA V1	23"
Vz71 A&B	SB LEFT TURN FAR	COMB.				V15	7	7		CAMERA V7	46"
Vz72 A&B	SB LEFT TURN	LOCAL				V7	7			CAMERA V7	46"
Vz81	NB ADVANCE	LOCAL				V8	8			CAMERA V3	46"
Vz82	NB NEAR	COMB.				V16	8	8		CAMERA V3	46"
PB2 A&B	MOBERLY LN. S. LEG	PED.				P2	2				
PB4 A&B	HWY. 102 W. LEG	PED.				P4	4				
PB6 A&B	MOBERLY LN. N. LEG	PED.				P6	6				
PB8 A&B	HWY. 102 E. LEG	PED.				P8	8				
					SPARE:						

CONTROLLER INPUT ABBREVIATIONS:
V = VEHICLE INPUT
D = SYSTEM OR AUXILIARY INPUT
P = PEDESTRIAN INPUT

NOTE: "AMP CHN =" REFERS TO THE RACK OUTPUT POSITION.
THIS IS WIRED TO CONTROLLER INPUT DETECTOR NUMBER WHICH IS PROGRAMMED TO ACTUATE THE DESIGNATED PHASE.
EXAMPLE: V9 = SYSTEM DETECTOR 1, V10 = SYSTEM DETECTOR 2

INTERVAL CHART

SIGNAL FACES	HIGHWAY 102 AND MOBERLY LANE 1+5	CLR.	1+6	CLR.	2+5	CLR.	2+6	CLR.	3+7	CLR.	3+8	CLR.	4+7	CLR.	4+8	CLR.	FLASH SEQUENCE
1	←G	*	←G	*	←R	←R	←R	←R	←R	←R	←R	←R	←R	←R	←R	←R	←R
2, 3, 4, & 21	R	R	G	**	R	R	G	**	R	R	R	R	R	R	R	R	R
5	R	R	G	**	R	R	G	**	R / G	R / *	R	R	R / G	R / *	R	R	R
6 & 7	←R	←R	←R	←R	←R	←R	←R	←R	←G	*	←G	*	←R	←R	←R	←R	←R
8 & 9	R	R	R	R	R	R	R	R	R	R	G	**	R	R	G	**	R
10	R / G	R / *	R / G	R / *	R	R	R	R	R	R	G	**	R	R	G	**	R
11	←G	*	←R	←R	←G	*	←R	←R	←R	←R	←R	←R	←R	←R	←R	←R	←R
12, 13, 14, & 20	R	R	R	R	G	**	G	**	R	R	R	R	R	R	R	R	R
15 & 16	←R	←R	←R	←R	←R	←R	←R	←R	←G	*	←R	←R	←G	*	←R	←R	←R
17 & 18	R	R	R	R	R	R	R	R	R	R	R	R	G	**	G	**	R
19	R / G	R / *	R	R	R / G	R / *	R	R	R	R	R	R	G	**	G	**	R
22 & 23	DW	DW	DW	DW	DW	DW	DW	DW	DW	DW	W	FDW	DW	DW	W	FDW	BLK
24 & 25	DW	DW	DW	DW	W	FDW	W	FDW	DW	DW	DW	DW	DW	DW	DW	DW	BLK
26 & 27	DW	DW	DW	DW	DW	DW	DW	DW	DW	DW	DW	DW	W	FDW	W	FDW	BLK
28 & 29	DW	DW	W	FDW	DW	DW	W	FDW	DW	DW	DW	DW	DW	DW	DW	DW	BLK

* DENOTES GREEN OR YELLOW ARROW DEPENDING ON NEXT PHASE
** DENOTES GREEN OR YELLOW BALL DEPENDING ON NEXT PHASE
*** DENOTES FLASHING YELLOW ARROW OR YELLOW ARROW DEPENDING ON NEXT PHASE

DATE: 10/4/2023 FILE NAME: R090646_SG_04-12.dgn

LOCATION: HIGHWAY 102 AND MOBERLY LANE
CITY: BENTONVILLE
COUNTY: BENTON
DISTRICT: 9 SCALE: N/A DRAWN BY: CML

London.Miller 10/4/2023 6:01:07 PM
WORKSPACE: London.Miller
C:\users\public\mdlwk\6\d0129163\R090646_17_SG_04-12.dgn
REVISED DATE: $$REVDATE$$