DATE REVISED	DATE FILMED	DATE REVISED	DATE FILMED	FED.RD. DIST.NO.	STATE	FED.AID PROJ.NO.	SHEET NO.	TOTAL SHEETS
				6	ARK.			
				JOB NO.		080504	1	57
				(2) DEER CREEK STR. & APPRS. (S)				

ARKANSAS DEPARTMENT OF TRANSPORTATION
CONSTRUCTION PLANS FOR STATE HIGHWAY

DEER CREEK
STR. & APPRS. (S)

MONTGOMERY COUNTY

ROUTE 27 SECTION 7

JOB 080504

FED. AID PROJ. NHPP-0049(16)

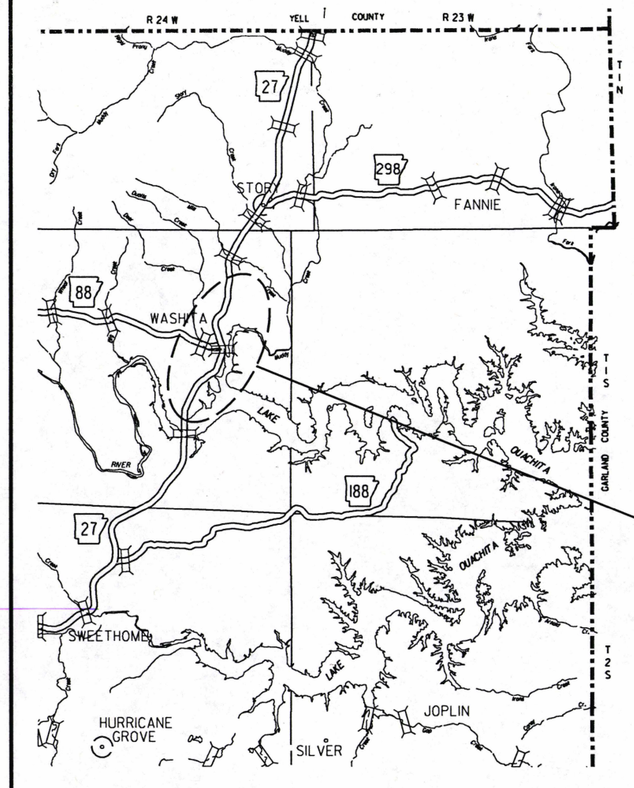

VICINITY MAP

BRIDGE CONSTRUCTION DATA

STA. 110+16.92 BRIDGE END
BRIDGE NO. 07432
280'-0" CONTINUOUS
COMPOSITE W-BEAM UNIT (70'-70'-70'-70')
34' CLEAR ROADWAY
282.16' BRIDGE LENGTH
STA. 112+99.08 BRIDGE END

N

PROJECT AREA

NOT TO SCALE

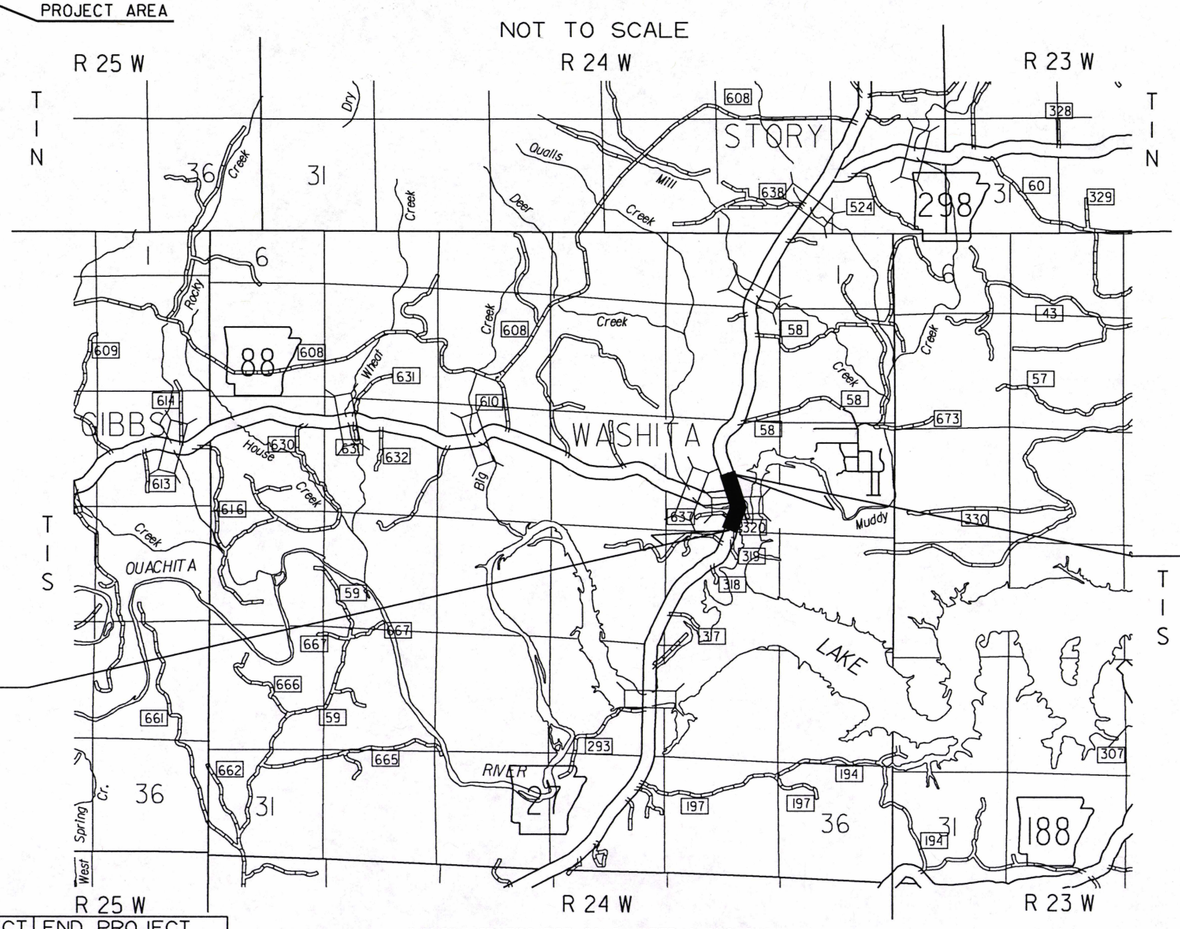

STA. 101+99.44
BEGIN JOB 080504
LOG MILE 9.81

STA. 123+00.00
END JOB 080504

N

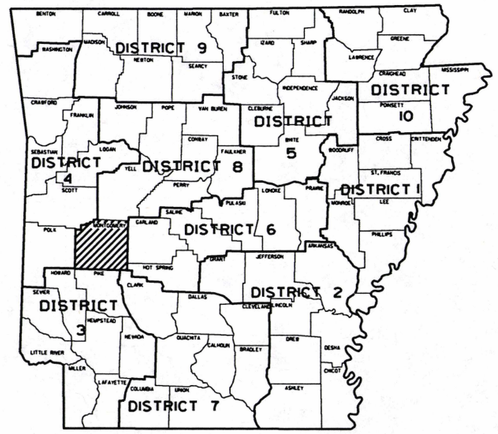

ARK. HWY. DIST. NO. 8

DESIGN TRAFFIC DATA

DESIGN YEAR	2019
2019 ADT	900
2039 ADT	1100
2039 DHV	121
DIRECTIONAL DISTRIBUTION	0.60
TRUCKS	16%
DESIGN SPEED	40 MPH

	BEGIN PROJECT	MID-POINT OF PROJECT	END PROJECT
LATITUDE	N 34°38'55"	N 34°39'04"	N 34°39'16"
LONGITUDE	W 93°32'01"	W 93°31'59"	W 93°32'03"

LENGTH OF PROJECT CALCULATED ALONG C.L.

GROSS LENGTH OF	PROJECT	2100.56	FEET	OR	0.398	MILES
NET	ROADWAY	1818.40	:	:	0.345	MILES
NET	BRIDGES	282.16	:	:	0.053	MILES
NET	PROJECT	2100.56	:	:	0.398	MILES

APPROVED

STATE OF ARKANSAS
LICENSED PROFESSIONAL ENGINEER
N.7836
M.E. BANKS

5-28-19

DEPUTY DIRECTOR
AND CHIEF ENGINEER

6/26/2017

R080504.DGN

DATE REVISED	DATE FILMED	DATE REVISED	DATE FILMED	FED.RD. DIST.NO.	STATE	FED.AID PROJ.NO.	SHEET NO.	TOTAL SHEETS
12-19-19				6	ARK.			
				JOB NO.		080504	2	57

(2) INDEX OF SHEETS & STANDARD DRAWINGS

STATE OF ARKANSAS
LICENSED PROFESSIONAL ENGINEER
No. 11425
TRINITY D. SMITH
12-20-19

INDEX OF SHEETS

SHEET NO.	TITLE	BRIDGE NO.	DRWG.NO.
1	TITLE SHEET		
2	INDEX OF SHEETS AND STANDARD DRAWINGS		
3	GOVERNING SPECIFICATIONS AND GENERAL NOTES		
4 - 5	TYPICAL SECTIONS OF IMPROVEMENT		
6 - 9	SPECIAL DETAILS		
10 - 12	TEMPORARY EROSION CONTROL DETAILS		
13 - 15	MAINTENANCE OF TRAFFIC DETAILS		
16	PERMANENT PAVEMENT MARKING DETAILS		
17 - 20	QUANTITIES		
21	SCHEDULE OF BRIDGE QUANTITIES	07432	60415
22	SUMMARY OF QUANTITIES AND REVISIONS		
23 - 24	SURVEY CONTROL DETAILS		
25 - 26	PLAN AND PROFILE SHEETS		
27	LAYOUT OF BRIDGE HWY. 27 OVER DEER CREEK (SHEET 1 OF 2)	07432	60416
28	LAYOUT OF BRIDGE HWY. 27 OVER DEER CREEK (SHEET 2 OF 2)	07432	60417
29	HYDROGRAPH - OUACHITA RIVER	07432	60418
30	DETAILS OF END BENTS (SHEET 1 OF 4)	07432	60419
31	DETAILS OF END BENTS (SHEET 2 OF 4)	07432	60420
32	DETAILS OF END BENTS (SHEET 3 OF 4)	07432	60421
33	DETAILS OF END BENTS (SHEET 4 OF 4)	07432	60422
34	DETAILS OF INTERMEDIATE BENTS (SHEET 1 OF 3)	07432	60423
35	DETAILS OF INTERMEDIATE BENTS (SHEET 2 OF 3)	07432	60424
36	DETAILS OF INTERMEDIATE BENTS (SHEET 3 OF 3)	07432	60425
37	DETAILS OF ELASTOMERIC BEARINGS	07432	60426
38	DETAILS OF 280'-0" CONTINUOUS COMPOSITE W-BEAM UNIT (SHEET 1 OF 5)	07432	60427
39	DETAILS OF 280'-0" CONTINUOUS COMPOSITE W-BEAM UNIT (SHEET 2 OF 5)	07432	60428
40	DETAILS OF 280'-0" CONTINUOUS COMPOSITE W-BEAM UNIT (SHEET 3 OF 5)	07432	60429
41	DETAILS OF 280'-0" CONTINUOUS COMPOSITE W-BEAM UNIT (SHEET 4 OF 5)	07432	60430
42	DETAILS OF 280'-0" CONTINUOUS COMPOSITE W-BEAM UNIT (SHEET 5 OF 5)	07432	60431
43	DETAILS OF TYPE SPECIAL APRROACH SLAB	07432	60432
44 - 57	CROSS SECTIONS		

BRIDGE STANDARD DRAWINGS

DRWG.NO.	TITLE	DATE
55000	STANDARD DETAILS FOR EMBANKMENT CONSTRUCTION AND BACKFILL AT BRIDGE ENDS	02-27-14
55001	STANDARD DETAILS FOR DUMPED RIPRAP AND FILTER BLANKET AND COMPUTING EXCAVATION FOR STRUCTURES	02-27-14
55002	STANDARD DETAILS FOR CONCRETE RIPRAP	02-27-14
55005	STANDARD DETAILS FOR PERMANENT STEEL BRIDGE DECK FORMS FOR STEEL & CONCRETE GIRDER SPANS	03-24-16
55006	STANDARD GENERAL NOTES FOR STEEL BRIDGE STRUCTURES	09-02-15
55007	STANDARD DETAILS FOR STEEL BRIDGE STRUCTURES	02-11-16
55008	STANDARD DETAILS FOR POURED SILICONE JOINTS	02-11-16
55010	STANDARD DETAILS FOR TYPE D BRIDGE NAME PLATE	01-15-19
55020	STANDARD DETAILS FOR STEEL H-PILES AND PILE ENCASEMENTS	03-24-16
55030C	STANDARD DETAILS FOR TYPE C APPROACH GUTTERS	02-27-14

ROADWAY STANDARD DRAWINGS

DRWG.NO.	TITLE	DATE
CDP-1	CONCRETE DITCH PAVING	12-08-16
CG-1	CURBING DETAILS	11-29-07
FES-1	FLARED END SECTION	10-18-96
FES-2	FLARED END SECTION	10-18-96
FPC-9	DETAILS OF DROP INLETS & JUNCTION BOXES	11-16-01
FPC-9D	DETAILS OF DROP INLETS	08-22-02
FPC-9S	DETAILS OF DROP INLET & JUNCTION BOX (TYPE ST)	07-26-12
GR-6	GUARDRAIL DETAILS	11-07-19
GR-7	GUARDRAIL DETAILS	11-07-19
GR-8	GUARDRAIL DETAILS	11-07-19
GR-9	GUARDRAIL DETAILS	11-07-19
GR-10	GUARDRAIL DETAILS	11-07-19
GR-11	GUARDRAIL DETAILS	11-07-19
GR-12	GUARDRAIL DETAILS	11-07-19
MB-1	MAILBOX DETAILS	11-18-04
PCC-1	CONCRETE PIPE CULVERT FILL HEIGHTS & BEDDING	02-27-14
PCM-1	METAL PIPE CULVERT FILL HEIGHTS & BEDDING	02-27-14
PCP-1	PLASTIC PIPE CULVERT (HIGH DENSITY POLYETHYLENE)	02-27-14
PCP-2	PLASTIC PIPE CULVERT (PVC F949)	02-27-14
PCP-3	PLASTIC PIPE CULVERT (POLYPROPYLENE)	11-07-19
PM-1	PAVEMENT MARKING DETAILS	06-01-17
PU-1	DETAILS OF PIPE UNDERDRAIN	12-08-16
SE-2	TABLES AND METHOD OF SUPERELEVATION FOR TWO-WAY TRAFFIC	11-07-19
TC-1	STANDARD TRAFFIC CONTROLS FOR HIGHWAY CONSTRUCTION	11-07-19
TC-2	STANDARD TRAFFIC CONTROLS FOR HIGHWAY CONSTRUCTION	11-07-19
TC-3	STANDARD TRAFFIC CONTROLS FOR HIGHWAY CONSTRUCTION	11-07-19
TEC-1	TEMPORARY EROSION CONTROL DEVICES	11-16-17
TEC-2	TEMPORARY EROSION CONTROL DEVICES	06-02-94
TEC-3	TEMPORARY EROSION CONTROL DEVICES	11-03-94
TEC-4	TEMPORARY EROSION CONTROL DEVICES	07-26-12
WF-2	WIRE FENCE WATER GAPS	04-20-79
WF-4	WIRE FENCE TYPE C AND D	08-22-02

1/25/2019

R080504.DGN

INDEX OF SHEETS & STANDARD DRAWINGS

DATE REVISED	DATE FILMED	DATE REVISED	DATE FILMED	FED.RD. DIST.NO.	STATE	FED.AID PROJ.NO.	SHEET NO.	TOTAL SHEETS
12-05-19				6	ARK.			
12-19-19				JOB NO.		080504	3	57
02-13-20								

(2) GOVERNING SPECIFICATIONS & GENERAL NOTES

GOVERNING SPECIFICATIONS

ARKANSAS STATE HIGHWAY COMMISSION STANDARD SPECIFICATIONS FOR HIGHWAY CONSTRUCTION, EDITION OF 2014, AND THE FOLLOWING SPECIAL PROVISIONS AND SUPPLEMENTAL SPECIFICATIONS:

NUMBER	TITLE
ERRATA____	ERRATA FOR THE BOOK OF STANDARD SPECIFICATIONS
FHWA-1273__	REQUIRED CONTRACT PROVISIONS FEDERAL-AID CONSTRUCTION CONTRACTS
FHWA-1273__	SUPPLEMENT - EQUAL EMPLOYMENT OPPORTUNITY - NOTICE TO CONTRACTORS
FHWA-1273__	SUPPLEMENT - SPECIFIC EQUAL EMPLOYMENT OPPORTUNITY RESPONSIBILITIES (23 U.S.C. 140)
FHWA-1273__	SUPPLEMENT - EQUAL EMPLOYMENT OPPORTUNITY - GOALS AND TIMETABLES
FHWA-1273__	SUPPLEMENT - EQUAL EMPLOYMENT OPPORTUNITY - FEDERAL STANDARDS
FHWA-1273__	SUPPLEMENT - POSTERS AND NOTICES REQUIRED FOR FEDERAL-AID PROJECTS
FHWA-1273__	SUPPLEMENT - WAGE RATE DETERMINATION
100-3_____	CONTRACTOR'S LICENSE
100-4_____	DEPARTMENT NAME CHANGE
102-2_____	ISSUANCE OF PROPOSALS
108-1_____	LIQUIDATED DAMAGES
108-2_____	WORK ALLOWED PRIOR TO ISSUANCE OF WORK ORDER
110-1_____	PROTECTION OF WATER QUALITY AND WETLANDS
303-1_____	AGGREGATE BASE COURSE
306-1_____	QUALITY CONTROL AND ACCEPTANCE
400-1_____	TACK COATS
400-4_____	DESIGN AND QUALITY CONTROL OF ASPHALT MIXTURES
400-5_____	PERCENT AIR VOIDS FOR ACHM MIX DESIGNS
400-6_____	LIQUID ANTI-STRIP ADDITIVE
410-1_____	CONSTRUCTION REQUIREMENTS AND ACCEPTANCE OF ASPHALT CONCRETE PLANT MIX COURSES
410-2_____	DEVICES FOR MEASURING DENSITY FOR ROLLING PATTERNS
600-2_____	INCIDENTAL CONSTRUCTION
603-1_____	LANE CLOSURE NOTIFICATION
604-1_____	RETROREFLECTIVE SHEETING FOR TRAFFIC CONTROL DEVICES IN CONSTRUCTION ZONES
605-1_____	CONCRETE DITCH PAVING
606-1_____	PIPE CULVERTS FOR SIDE DRAINS
617-1_____	GUARDRAIL TERMINAL (TYPE 2)
620-1_____	MULCH COVER
621-1_____	FILTER SOCKS
800-1_____	STRUCTURES
802-3_____	CONCRETE FOR STRUCTURES
804-2_____	REINFORCING STEEL FOR STRUCTURES
808-1_____	INSTALLATION OF ELASTOMERIC BEARINGS
808-2_____	ELASTOMERIC BEARINGS
JOB 080504__	BIDDING REQUIREMENTS AND CONDITIONS
JOB 080504__	BROADBAND INTERNET SERVICE FOR ASPHALT CONCRETE PLANT
JOB 080504__	BROADBAND INTERNET SERVICE FOR FIELD OFFICE
JOB 080504__	CARGO PREFERENCE ACT REQUIREMENTS
JOB 080504__	CLASS C FLY ASH IN PORTLAND CEMENT CONCRETE PAVEMENT AND CLASS S(AE) CONCRETE
JOB 080504__	DELAY IN RIGHT OF WAY OCCUPANCY
JOB 080504__	DIRECT TENSION INDICATORS FOR HIGH STRENGTH BOLT ASSEMBLIES
JOB 080504__	DISADVANTAGED BUSINESS ENTERPRISE BIDDER'S RESPONSIBILITIES
JOB 080504__	DRILLED SHAFT FOUNDATIONS
JOB 080504__	ESTABLISHING CONTRACT TIME - WORKING DAY CONTRACT
JOB 080504__	GOALS FOR DISADVANTAGED BUSINESS ENTERPRISE PARTICIPATION
JOB 080504__	MANDATORY ELECTRONIC CONTRACT
JOB 080504__	MANDATORY ELECTRONIC DOCUMENT SUBMITTAL
JOB 080504__	NESTING SITES OF MIGRATORY BIRDS
JOB 080504__	NONDESTRUCTIVE TESTING OF DRILLED SHAFTS
JOB 080504__	OFF-SITE RESTRAINING CONDITIONS FOR NORTHERN LONG-EARED BATS
JOB 080504__	PARTNERING REQUIREMENTS
JOB 080504__	PLASTIC PIPE
JOB 080504__	PRE-BID ON SITE INVESTIGATION OF SOIL CONDITIONS
JOB 080504__	PRICE ADJUSTMENT FOR ASPHALT BINDER
JOB 080504__	ROCK FILL
JOB 080504__	SECTION 404 NATIONWIDE 23 PERMIT REQUIREMENTS
JOB 080504__	SHORING FOR CULVERTS
JOB 080504__	SOIL STABILIZATION
JOB 080504__	SPECIAL SEEDING REQUIREMENTS
JOB 080504__	STORM WATER POLLUTION PREVENTION PLAN
JOB 080504__	SUBMISSION OF ASPHALT CONCRETE HOT MIX ACCEPTANCE TEST RESULTS
JOB 080504__	TRAFFIC CONTROL DEVICES IN CONSTRUCTION ZONES (MASH)
JOB 080504__	UTILITY ADJUSTMENTS
JOB 080504__	VALUE ENGINEERING
JOB 080504__	VEGETATED BUFFER ZONE
JOB 080504__	WARM MIX ASPHALT
JOB 080504__	WELLHEAD PROTECTION

STATE OF ARKANSAS
LICENSED PROFESSIONAL ENGINEER
No. 11425
TRINITY D. SMITH
2-18-2020

GENERAL NOTES

1. GRADE LINE DENOTES FINISHED GRADE WHERE SHOWN ON PLANS.
2. ALL PIPE LINES, POWER, TELEPHONE, AND TELEGRAPH LINES TO BE MOVED OR LOWERED BY THE RESPECTIVE OWNERS AS PER AGREEMENT WITH SUCH OWNERS.
3. ANY EQUIPMENT OR APPURTENANCE THAT INTERFERES WITH THE PROPOSED CONSTRUCTION AND WHICH MAY BE THE PROPERTY OF UTILITY SERVICE ORGANIZATIONS SHALL BE MOVED BY THE OWNERS UNLESS OTHERWISE PROVIDED.
4. THE CONTRACTOR SHALL BE RESPONSIBLE FOR MAINTAINING U. S. MAILBOXES WITHIN THE PROJECT LIMITS IN SUCH A MANNER THAT THE PUBLIC MAY RECEIVE CONTINUED MAIL SERVICE. PAYMENT WILL BE CONSIDERED INCLUDED IN THE PRICE BID FOR THE VARIOUS BID ITEMS.
5. ALL LAND MONUMENTS LOCATED WITHIN THE CONSTRUCTION AREA SHALL BE PROTECTED IN ACCORDANCE WITH SECTION 107.12 OF THE STANDARD SPECIFICATIONS.
6. ALL TREES THAT DO NOT DIRECTLY INTERFERE WITH THE PROPOSED CONSTRUCTION SHALL BE SPARED AS DIRECTED BY THE ENGINEER. CARE AND DISCRETION SHALL BE USED TO INSURE THAT ALL TREES NOT TO BE REMOVED SHALL BE HARMED AS LITTLE AS POSSIBLE DURING THE CONSTRUCTION OPERATIONS.
7. THE CONTRACTOR SHALL BE RESPONSIBLE FOR PROVIDING A FENCE TO CONTROL LIVESTOCK IN AREAS WHERE PASTURES ARE SEVERED. WIRE FENCE MAY BE CONSTRUCTED INITIALLY, OR IN LIEU THEREOF, THE CONTRACTOR AT HIS OWN EXPENSE, MAY ELECT TO PROVIDE TEMPORARY FENCING SUITABLE TO CONTAIN LIVESTOCK.
8. THE SEQUENCE AS SHOWN ON THE MAINTENANCE OF TRAFFIC PLANS IS A GENERAL OUTLINE FOR THE CONSTRUCTION OF THIS PROJECT, AND IN NO WAY IS IT INTENDED TO COVER EVERY ITEM IN THE PROJECT. ITEMS NOT CRITICAL TO THE CONSTRUCTION SEQUENCE MAY BE CONSTRUCTED IN ANY STAGE AS APPROVED BY THE RESIDENT ENGINEER.
9. ALL FLEXIBLE BASE AND ASPHALTIC PAVEMENTS REMOVED SHALL BE PAID FOR UNDER THE ITEM NO. 210 - UNCLASSIFIED EXCAVATION.
10. THE EXISTING ASPHALT PAVEMENT TO BE REMOVED FROM THE REMAINING PAVEMENT SHALL BE SEPARATED BY SAWING ALONG A NEAT LINE. AFTER SAWING, THE PAVEMENT TO BE REMOVED SHALL BE CAREFULLY REMOVED IN A MANNER THAT WILL NOT DAMAGE THE PAVEMENT THAT IS TO REMAIN. ANY DAMAGE OF THE ASPHALT PAVEMENT THAT IS TO REMAIN IN PLACE SHALL BE REPAIRED AT THE CONTRACTOR'S EXPENSE.

1/25/2019

R080504.DGN

DATE REVISED	DATE FILMED	DATE REVISED	DATE FILMED	FED.RD. DIST.NO.	STATE	FED.AID PROJ.NO.	SHEET NO.	TOTAL SHEETS
				6	ARK.			
				JOB NO.		080504	4	57

(2) TYPICAL SECTIONS OF IMPROVEMENT

STATE OF ARKANSAS
LICENSED PROFESSIONAL ENGINEER
No. 11425
TRINITY D. SMITH
5-21-19

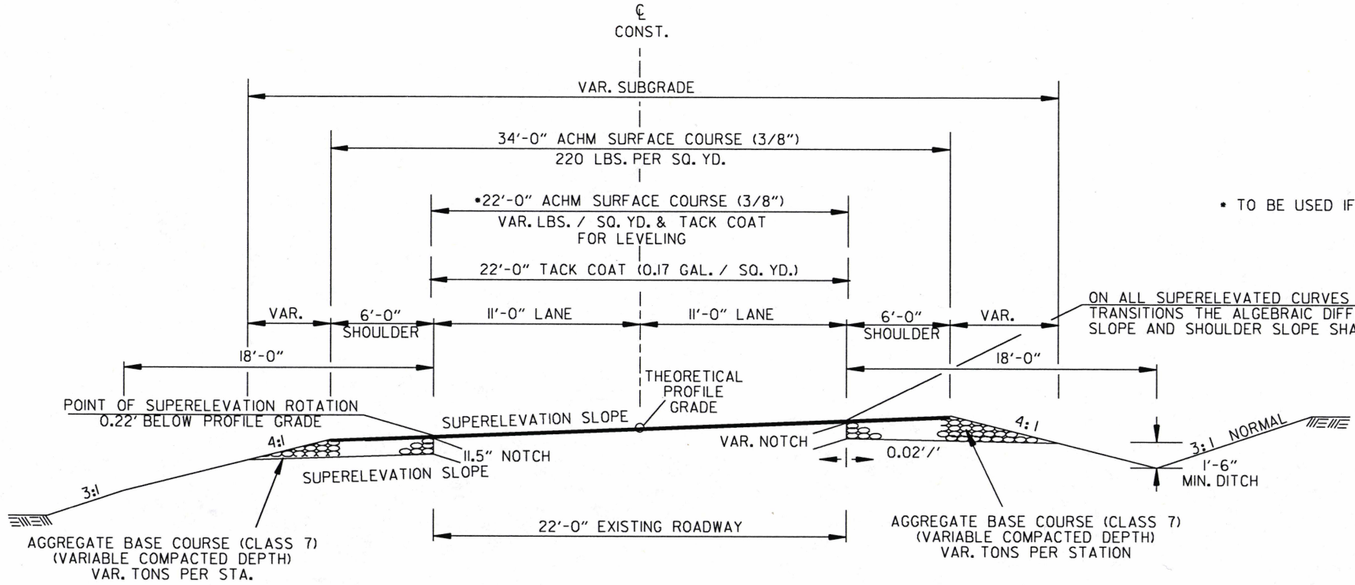

• TO BE USED IF AND WHERE DIRECTED BY THE ENGINEER

ON ALL SUPERELEVATED CURVES AND THRU SUPERELEVATION TRANSITIONS THE ALGEBRAIC DIFFERENCE BETWEEN PAVEMENT SLOPE AND SHOULDER SLOPE SHALL NOT EXCEED 0.08 '/'

HWY. 27 - NOTCH AND WIDEN SUPERELEVATION

STA. 101+99.44 TO STA. 105+28.00
STA. 115+36.00 TO STA. 118+00.00

NOTES:

THE THICKNESS OF AGGREGATE BASE COURSE SHALL BE WITHIN PLUS OR MINUS ONE INCH OF THE PLAN THICKNESS SHOWN. THE CONTRACTOR WILL CORRECT ANY DEFICIENT THICKNESS THAT DOES NOT MEET TOLERANCE INDICATED. PAYMENT WILL NOT BE MADE FOR MATERIAL PLACED IN EXCESS OF THE TOLERANCE INDICATED.

REFER TO CROSS SECTIONS FOR DEVIATION FROM THE NORMAL SLOPES. NO CHANGES SHALL BE MADE FROM THE PLANNED SLOPES WITHOUT THE APPROVAL OF THE ENGINEER.

THE FINAL 2" OF SURFACE COURSE IS TO BE PLACED AFTER ALL OTHER COURSES HAVE BEEN LAID. LONGITUDINAL JOINTS SHALL BE AT LANE LINES.

ASPHALT FOR LEVELING OF EXISTING PAVEMENT SHALL BE PLACED ONLY IF AND WHERE DIRECTED BY THE ENGINEER. CALCULATIONS FOR THE AMOUNT OF LEVELING AND/OR LEVELING OPERATIONS SHALL BE PERFORMED BEFORE CONSTRUCTING NOTCH AND WIDENING. CALCULATIONS WILL NOT BE PAID FOR DIRECTLY, BUT PAYMENT WILL BE CONSIDERED INCLUDED IN THE VARIOUS PAY ITEMS.

WITH THE APPROVAL OF THE ENGINEER, THE CONTRACTOR WILL BE ALLOWED TO SUBSTITUTE, AT NO ADDITIONAL COST TO THE DEPARTMENT, THE FIRST LIFT OF ACHM SURFACE COURSE (1/2") IN LIEU OF AGGREGATE BASE COURSE ON THE SHOULDERS.

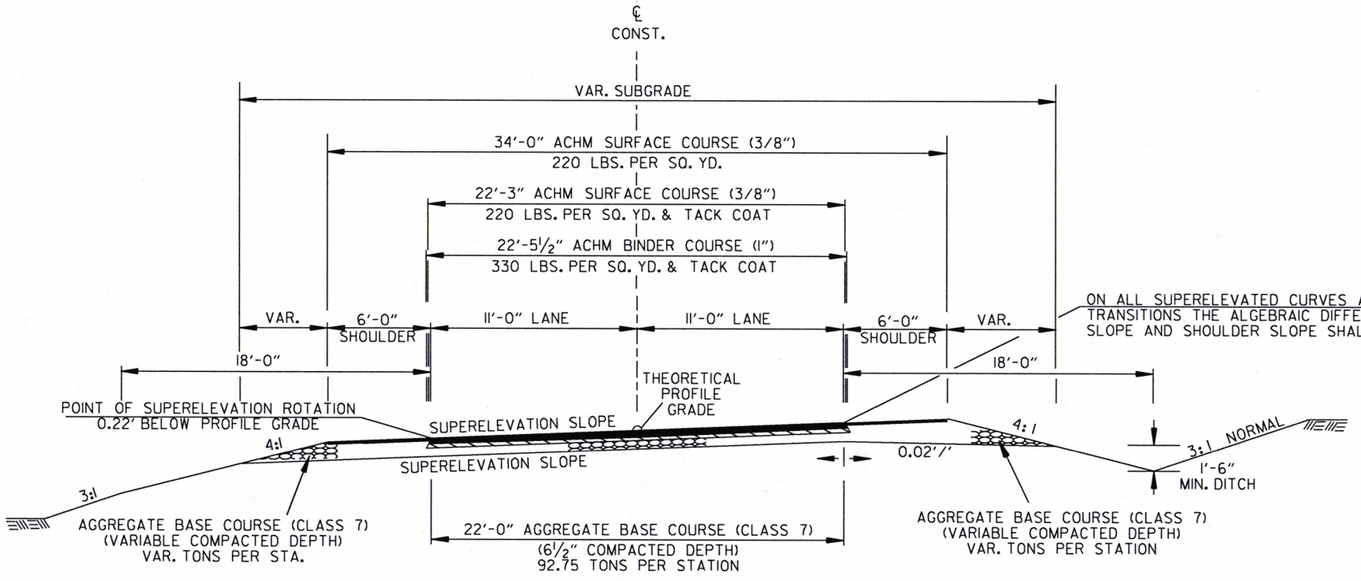

ON ALL SUPERELEVATED CURVES AND THRU SUPERELEVATION TRANSITIONS THE ALGEBRAIC DIFFERENCE BETWEEN PAVEMENT SLOPE AND SHOULDER SLOPE SHALL NOT EXCEED 0.08 '/'

HWY. 27 - FULL DEPTH SUPERELEVATION

STA. 105+28.00 TO STA. 110+16.92
STA. 112+99.08 TO STA. 115+36.00

TYPICAL SECTIONS OF IMPROVEMENT

1/25/2019

R080504.DGN

DATE REVISED	DATE FILMED	DATE REVISED	DATE FILMED	FED.RD. DIST.NO.	STATE	FED.AID PROJ.NO.	SHEET NO.	TOTAL SHEETS
				6	ARK.			
				JOB NO.		080504	5	57

(2) TYPICAL SECTIONS OF IMPROVEMENT

STATE OF ARKANSAS
LICENSED PROFESSIONAL ENGINEER
No. 11425
TRINITY D. SMITH
5-21-19

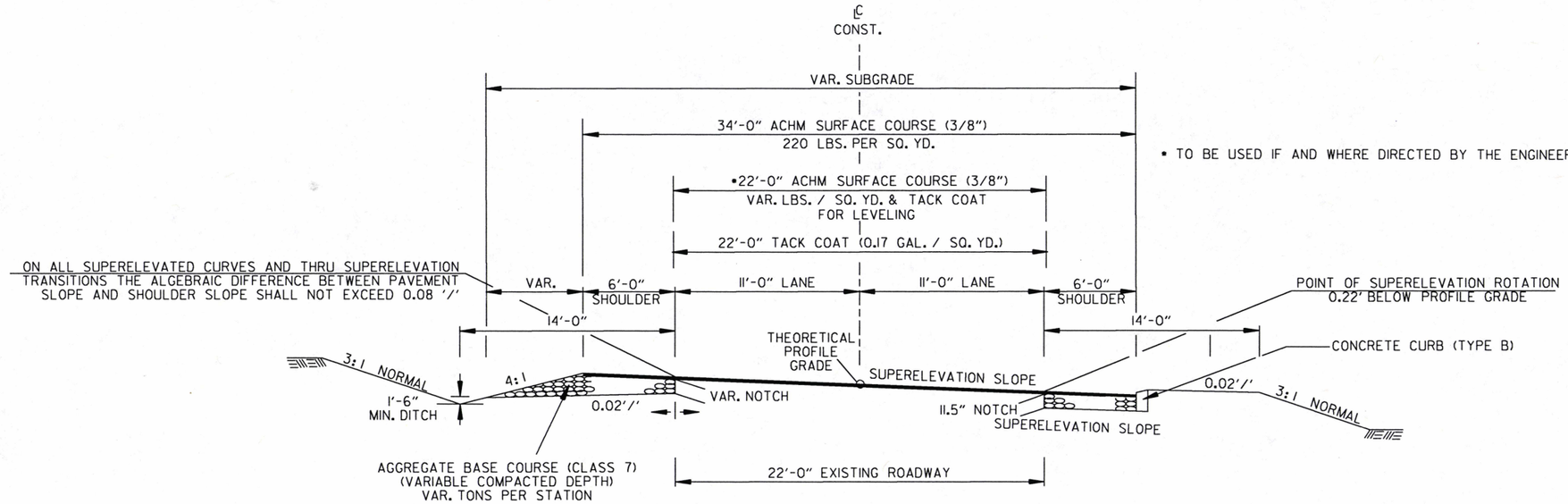

• TO BE USED IF AND WHERE DIRECTED BY THE ENGINEER

HWY. 27 - NOTCH AND WIDEN SUPERELEVATION

STA. 118+00.00 TO STA. 123+00.00

NOTES:

THE THICKNESS OF AGGREGATE BASE COURSE SHALL BE WITHIN PLUS OR MINUS ONE INCH OF THE PLAN THICKNESS SHOWN. THE CONTRACTOR WILL CORRECT ANY DEFICIENT THICKNESS THAT DOES NOT MEET TOLERANCE INDICATED. PAYMENT WILL NOT BE MADE FOR MATERIAL PLACED IN EXCESS OF THE TOLERANCE INDICATED.

REFER TO CROSS SECTIONS FOR DEVIATION FROM THE NORMAL SLOPES. NO CHANGES SHALL BE MADE FROM THE PLANNED SLOPES WITHOUT THE APPROVAL OF THE ENGINEER.

THE FINAL 2" OF SURFACE COURSE IS TO BE PLACED AFTER ALL OTHER COURSES HAVE BEEN LAID. LONGITUDINAL JOINTS SHALL BE AT LANE LINES.

ASPHALT FOR LEVELING OF EXISTING PAVEMENT SHALL BE PLACED ONLY IF AND WHERE DIRECTED BY THE ENGINEER. CALCULATIONS FOR THE AMOUNT OF LEVELING AND/OR LEVELING OPERATIONS SHALL BE PERFORMED BEFORE CONSTRUCTING NOTCH AND WIDENING. CALCULATIONS WILL NOT BE PAID FOR DIRECTLY, BUT PAYMENT WILL BE CONSIDERED INCLUDED IN THE VARIOUS PAY ITEMS.

WITH THE APPROVAL OF THE ENGINEER, THE CONTRACTOR WILL BE ALLOWED TO SUBSTITUTE, AT NO ADDITIONAL COST TO THE DEPARTMENT, THE FIRST LIFT OF ACHM SURFACE COURSE (1/2") IN LIEU OF AGGREGATE BASE COURSE ON THE SHOULDERS.

PRIOR TO AND DURING PLACEMENT OF PAVEMENT IN FRONT OF THE CURB AND GUTTER, THE CONTRACTOR SHALL PROVIDE POSITIVE DRAINAGE AT ALL TIMES. THE METHOD(S) USED SHALL BE APPROVED BY THE ENGINEER. PAYMENT FOR THIS WORK SHALL BE CONSIDERED INCLUDED IN THE PRICE BID FOR THE VARIOUS CONTRACT ITEMS.

R080504.DGN 1/25/2019

TYPICAL SECTIONS OF IMPROVEMENT

DATE REVISED	DATE FILMED	DATE REVISED	DATE FILMED	FED.RD. DIST.NO.	STATE	FED.AID PROJ.NO.	SHEET NO.	TOTAL SHEETS
				6	ARK.			
				JOB NO.		080504	6	57

(2) SPECIAL DETAILS

STATE OF ARKANSAS
LICENSED PROFESSIONAL ENGINEER
No. 11425
TRINITY D. SMITH
5-21-19

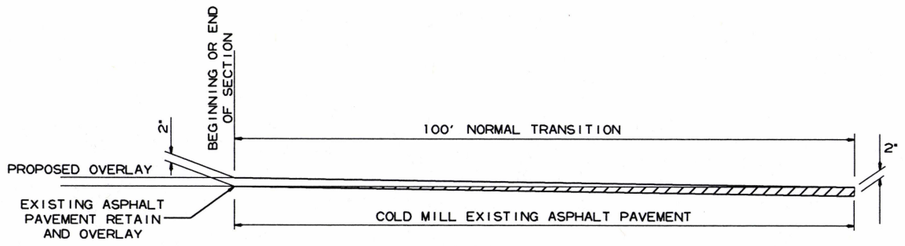

DETAIL FOR TRANSITIONS

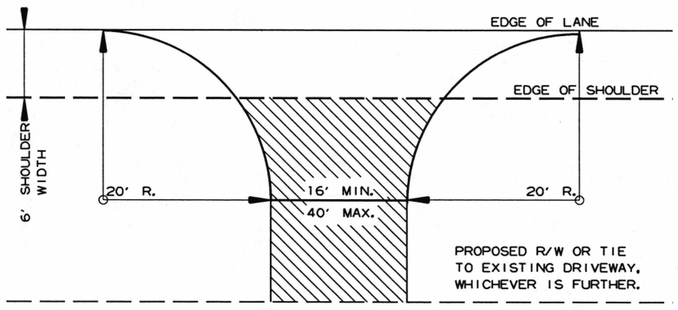

NOTE: TURNOUTS AND PRIVATE DRIVES SHALL BE MODIFIED WHERE NECESSARY TO MEET LOCAL CONDITIONS AS DIRECTED BY THE ENGINEER.

ACHM SURFACE COURSE (1/2") (220 LBS. PER SQ. YD.) AND AGGREGATE BASE COURSE (CLASS 7) 7" COMP. DEPTH IF ASPHALT OR GRAVEL DRIVE EXISTING; OR 6" CONCRETE IF CONCRETE DRIVE EXISTING.

DETAIL FOR DRIVEWAY TURNOUTS OPEN SHOULDER SECTION (ARTERIALS)

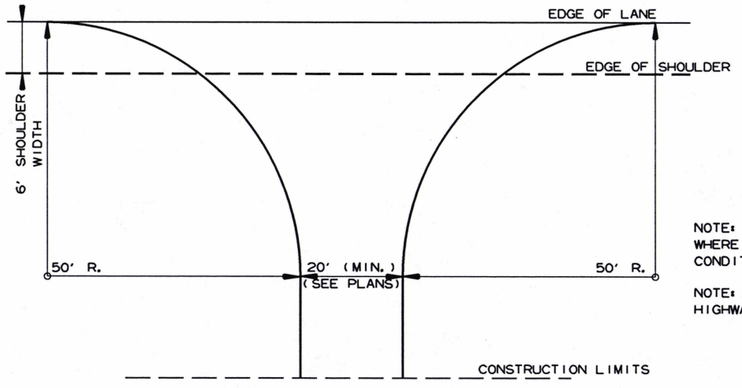

NOTE: TURNOUTS SHALL BE MODIFIED WHERE NECESSARY TO MEET LOCAL CONDITIONS AS DIRECTED BY THE ENGINEER.

NOTE: PAVEMENT STRUCTURE FOR STATE HIGHWAYS TO BE SAME AS MAIN LANES.

DETAIL FOR HWY. 88 OPEN SHOULDER SECTION

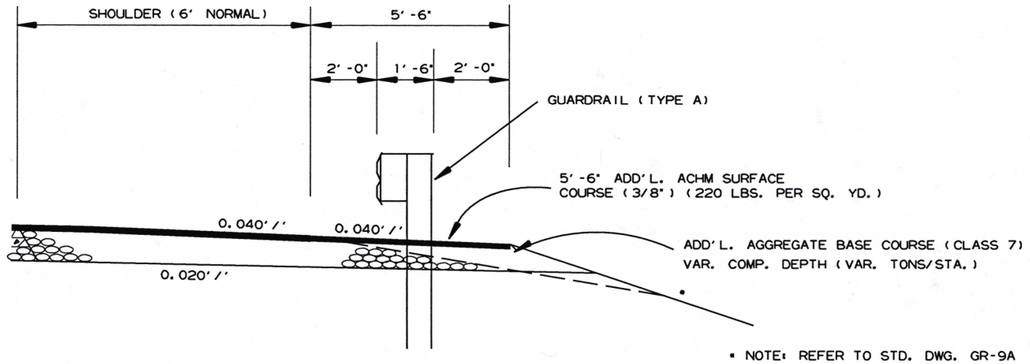

* NOTE: REFER TO STD. DWG. GR-9A AND CROSS SECTIONS FOR SLOPE REQUIREMENTS BEHIND GUARDRAIL.

WIDENING FOR GUARDRAIL

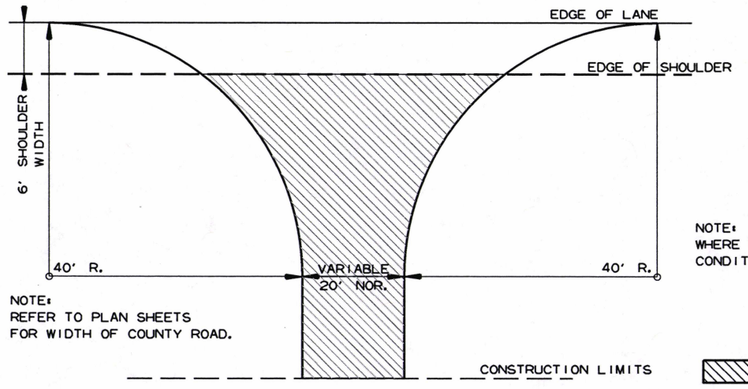

NOTE:
REFER TO PLAN SHEETS FOR WIDTH OF COUNTY ROAD.

NOTE: TURNOUTS SHALL BE MODIFIED WHERE NECESSARY TO MEET LOCAL CONDITIONS AS DIRECTED BY THE ENGINEER.

ACHM SURFACE COURSE (1/2") (220 LBS. PER SQ. YD.) AND AGGREGATE BASE COURSE (CLASS 7) 7" COMP. DEPTH

DETAIL FOR COUNTY ROAD TURNOUTS OPEN SHOULDER SECTION

3/25/2019

R080504.DGN

DATE REVISED	DATE FILMED	DATE REVISED	DATE FILMED	FED.RD. DIST.NO.	STATE	FED.AID PROJ.NO.	SHEET NO.	TOTAL SHEETS
				6	ARK.			
				JOB NO.		080504	7	57

(2) SPECIAL DETAILS

STATE OF ARKANSAS
LICENSED PROFESSIONAL ENGINEER
No. 11425
TRINITY D. SMITH
5-21-19

NOTES:

(1) THIS DETAIL TO BE USED ONLY WHERE DIRECTED BY THE ENGINEER.

(2) QUANTITIES FOR METHOD OF GRADE RAISE USING ASPHALT WERE CALCULATED ON THIS PROJECT AT LOCATIONS WHERE THE DISTANCE BETWEEN THE EXISTING ASPHALT ROADWAY AND THE PROPOSED SUBGRADE WAS ONE FOOT OR LESS.

(3) IN LOCATIONS WHERE THE DISTANCE BETWEEN THE PROPOSED SUBGRADE AND THE EXISTING ASPHALT ROADWAY IS MORE THAN ONE FOOT, SCARIFICATION OF THE EXISTING ASPHALT ROADWAY WILL BE REQUIRED AS STATED IN SECTION 210, SUBSECTION 210.09, OF THE STANDARD SPECIFICATIONS.

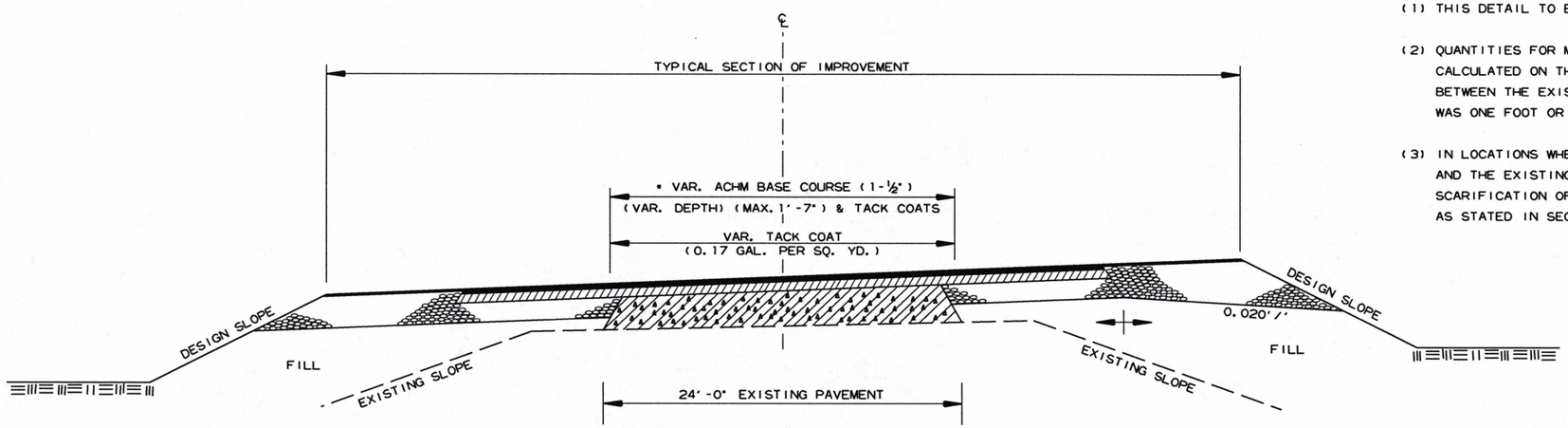

* 7" AGGREGATE BASE COURSE (CLASS 7) TO BE REPLACED WITH ACHM BASE COURSE (1-½")

METHOD OF RAISING GRADE

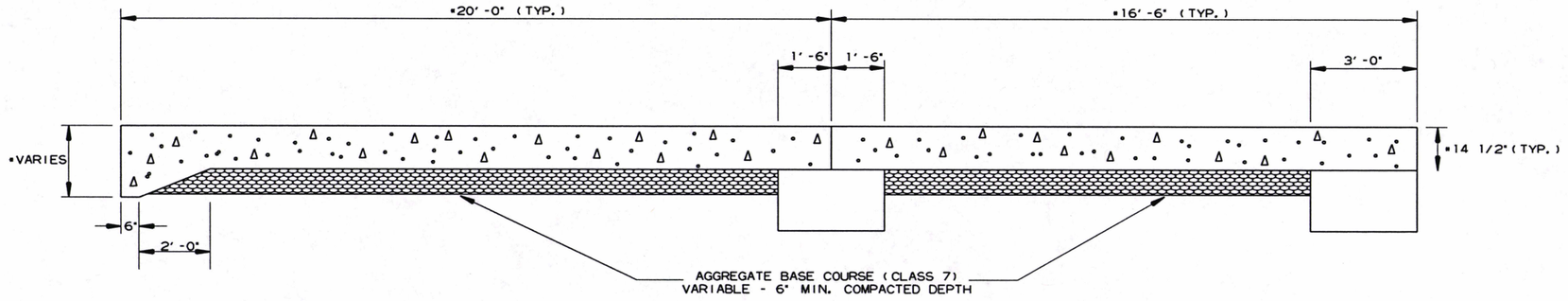

* SEE APPROACH SLAB DETAILS IN BRIDGE DRAWINGS

SECTION OF APPROACH SLAB

3/25/2019

R080504.DGN

SPECIAL DETAILS

DATE REVISED	DATE FILMED	DATE REVISED	DATE FILMED	FED.RD. DIST.NO.	STATE	FED.AID PROJ.NO.	SHEET NO.	TOTAL SHEETS
				6	ARK.			
				JOB NO.		080504	8	57

(2) SPECIAL DETAILS

STATE OF ARKANSAS
REGISTERED PROFESSIONAL ENGINEER
No. 11425
TRINITY D. SMITH
5-21-19

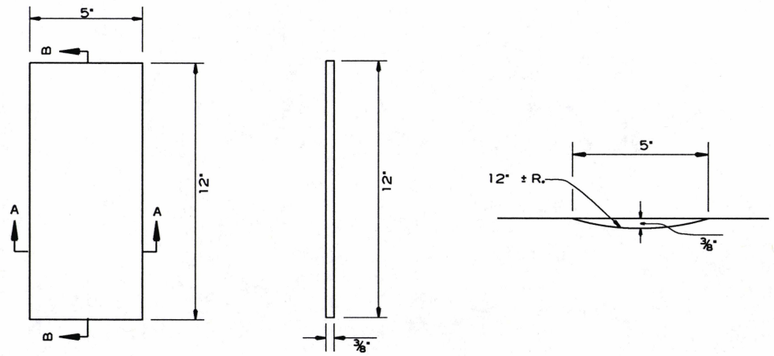

DETAILS OF RUMBLE STRIPS

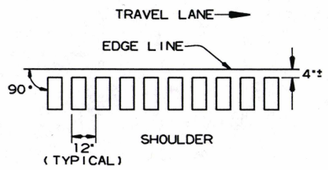

LOCATION PLAN OF RUMBLE STRIPS
LEFT OR RIGHT SHOULDER

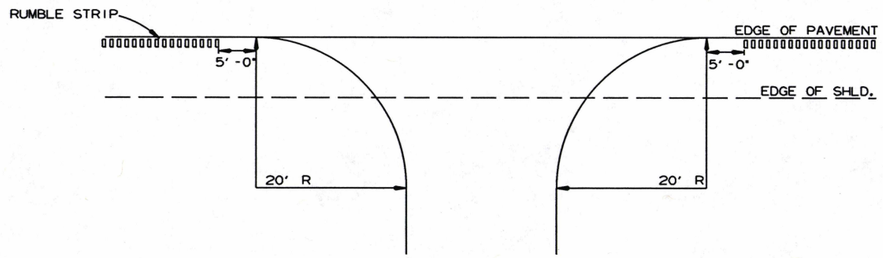

DETAIL FOR RUMBLE STRIP GAP
AT DRIVEWAY TURNOUTS

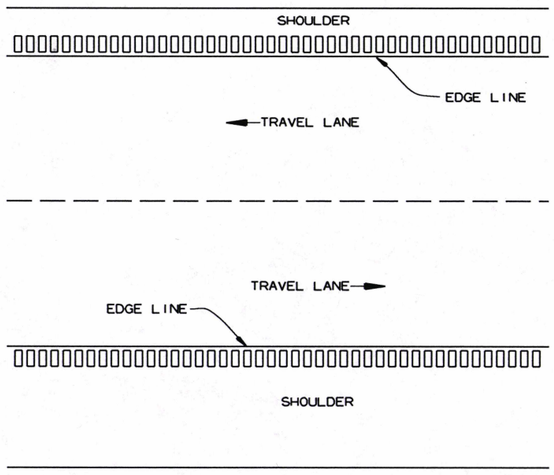

PLAN VIEW

GENERAL NOTES

1. RUMBLE STRIPS SHALL NOT BE INSTALLED ON CURB SECTIONS, BRIDGE DECKS, APPROACH SLABS, INTERSECTING STREETS OR ROADWAYS, RESIDENTIAL OR COMMERCIAL DRIVEWAYS OR ACROSS TRANSVERSE JOINTS OF CONCRETE SHOULDERS.
2. RUMBLE STRIPS SHALL NOT BE INSTALLED ON A PAVED SHOULDER THAT IS USED AS A DECELERATION LANE FOR THE LENGTH DEEMED APPROPRIATE BY THE ENGINEER.
3. THE 4" OFFSET FROM THE EDGE LINE MAY BE INCREASED TO AVOID LONGITUDINAL JOINTS. IN ALL CASES, THE LATERAL DEVIATION FROM THE PLANNED OFFSET SHOULD BE KEPT TO A MINIMUM.
4. RUMBLE STRIPS SHALL BE MEASURED BY THE LINEAR FOOT LONGITUDINALLY ALONG THE SHOULDER. PAYMENT SHALL ONLY INCLUDE THAT PORTION OF THE SHOULDER ON WHICH RUMBLE STRIPS HAVE BEEN CONSTRUCTED. NO MEASUREMENT OR PAYMENT WILL BE MADE FOR GAPS, DRIVEWAYS, TURNOUTS, OR OTHER PUBLIC ROAD INTERSECTIONS WHERE RUMBLE STRIPS HAVE NOT BEEN CONSTRUCTED.
5. THE 3/8" DEPTH SHALL GENERALLY APPLY FOR THE ENTIRE 12" LENGTH. SOME VARIATION TO SUIT SHOULDER SLOPE BREAKS MAY BE NECESSARY.

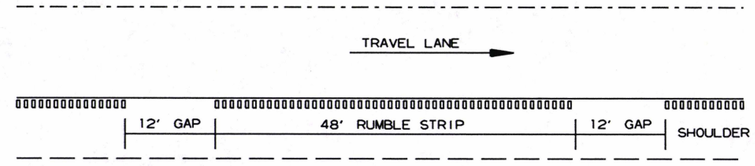

NOTE: GAP PATTERN SHALL BE ADJUSTED BY THE ENGINEER IN THE FIELD ALLOWING FOR DRIVEWAYS TO SERVE AS THE GAP.

DETAIL FOR GAP PATTERN RUMBLE STRIP

3/25/2019

R080504.DGN

SPECIAL DETAILS

DATE REVISED	DATE FILMED	DATE REVISED	DATE FILMED	FED.RD. DST.NO.	STATE	FED.AID PROJ.NO.	SHEET NO.	TOTAL SHEETS
				6	ARK.			
				JOB NO.		080504	9	57

(2) SPECIAL DETAILS

STATE OF ARKANSAS
LICENSED PROFESSIONAL ENGINEER
No. 11425
TRINITY D. SMITH
5-21-19

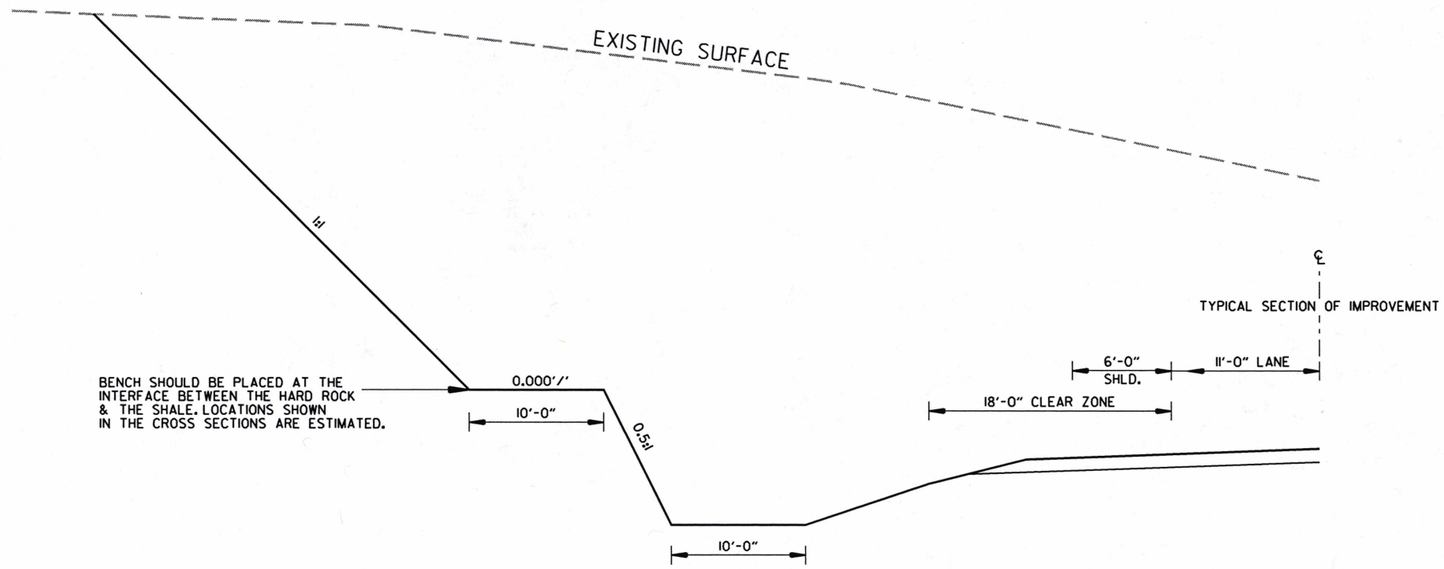

DETAIL FOR BENCH CUT - HWY. 27
STA. 106+00.00 - STA. 110+00.00

3/25/2019

R080504.DGN

SPECIAL DETAILS

DATE REVISED	DATE FILMED	DATE REVISED	DATE FILMED	FED.RD. DIST.NO.	STATE	FED.AID PROJ.NO.	SHEET NO.	TOTAL SHEETS
				6	ARK.			
				JOB NO.		080504	10	57

(2) TEMPORARY EROSION CONTROL DETAILS

STATE OF ARKANSAS
LICENSED PROFESSIONAL ENGINEER
No. 11425
TRINITY D. SMITH
5-21-19

STA. 101+99.44
BEGIN JOB 080504
LOG MILE 9.81

POB 100+00.00
101+00.00 46.94
P.I. 101+99.44
102+00.00 15.00
PROPOSED R/W & FENCE
N 22°51'59" E 199.44'
103+38.18 46.23
103+50.14 50.00
103+99.54 48.41
104+01.14 41.74
105+00.00 45.00
106+00.00 60.00
PROPOSED R/W
108+00.00 120.00
109+50.00 90.00
50 FT. BUFFER
DEER CREEK
PROPOSED R/W
EXISTING R/W
50 FT. BUFFER
EXISTING R/W
P.I. 111+38.44

105
110

CLEARING & GRUBBING

FILTER SOCKS (E-3)
2 LOCATIONS = 510 LIN. FT.

SAND BAG DITCH CHECKS (E-5)
11 LOCATIONS = 242 BAGS

ROCK DITCH CHECKS (E-6)
9 LOCATIONS = 27 CU. YDS.

SILT FENCE (E-11)
5 LOCATIONS = 1110 LIN. FT.

REVISIONS

DATE OF REVISION	REVISION

LEGEND

- (E-3) = FILTER SOCK
- (E-5) = SAND BAG DITCH CHECKS
- (E-6) = ROCK DITCH CHECKS
- (E-11) = SILT FENCE

NOTE: PERIMETER CONTROLS SHALL BE PLACED AS CLEARING AND GRUBBING OPERATIONS ARE STARTED.

115
120

115+00.00 10.00
115+63.92 69.54
116+93.16 63.30
PROPOSED R/W
EXISTING R/W
119+00.00 38.29
P.T. 119+81.81
P.I. 121+48.33
EXISTING R/W
POE 124+28.95
N 21°41'35" W 13.56'
N 15°34'50" W 27.96'
EXISTING R/W
EXISTING R/W
P.C. 119+95.37
P.T. 123+00.99

STA. 119+00.00
END JOB 080504

STA. 123+00.00
END JOB 080504

1/25/2019

R080504.DGN

CLEARING AND GRUBBING
TEMPORARY EROSION CONTROL DETAILS

DATE REVISED	DATE FILMED	DATE REVISED	DATE FILMED	FED.RD. DIST.NO.	STATE	FED.AID PROJ.NO.	SHEET NO.	TOTAL SHEETS
				6	ARK.			
				JOB NO.		080504	11	57

(2) TEMPORARY EROSION CONTROL DETAILS

STATE OF ARKANSAS
LICENSED PROFESSIONAL ENGINEER
No. 11425
TRINITY D. SMITH
5-21-19

STA. 101+99.44
BEGIN JOB 080504
LOG MILE 9.81

POB 100+00.00
101+00.00 46.94
101+99.44
102+00.00 15.00
103+38.18 46.23
103+50.14 50.00
103+99.54 49.41
104+01.14 41.74
105+00.00 45.00
106+00.00 60.00
108+00.00 120.00
109+50.00 90.00
POE 124+28.95

N 22°51'59" E 199.44'

PROPOSED R/W
EXISTING R/W
CONST. LIMITS
PROPOSED FENCE
50 FT. BUFFER
DEER CREEK
105
110
115
120

STAGE I

SAND BAG DITCH CHECKS (E-5)
3 LOCATIONS = 66 BAGS

DROP INLET SILT FENCE (E-7)
2 LOCATIONS = 50 LIN. FT.

SLOPE DRAIN (E-12)
2 LOCATIONS = 110 LIN. FT.

REVISIONS

DATE OF REVISION	REVISION

P.I. 111+38.44
P.C. 119+95.37
P.T. 119+81.81
P.I. 121+48.33
P.T. 123+00.99
N 21°41'35" W 13.56'
N 15°34'50" W 127.96'

STA. 123+00.00
END JOB 080504

LEGEND

- (E-3) = FILTER SOCK
- (E-5) = SAND BAG DITCH CHECKS
- (E-6) = ROCK DITCH CHECKS
- (E-7) = DROP INLET SILT FENCE
- (E-11) = SILT FENCE
- (E-12) = SLOPE DRAIN
- △△△△△ = TRIANGULAR SILT DIKE

NOTE: PERIMETER CONTROLS SHALL BE PLACED AS CLEARING AND GRUBBING OPERATIONS ARE STARTED.

1/15/2019

R080504.DGN

STAGE I
TEMPORARY EROSION CONTROL DETAILS

DATE REVISED	DATE FILMED	DATE REVISED	DATE FILMED	FED.RD. DST.NO.	STATE	FED.AID PROJ.NO.	SHEET NO.	TOTAL SHEETS
				6	ARK.			
				JOB NO.		080504	12	57

(2) TEMPORARY EROSION CONTROL DETAILS

STATE OF ARKANSAS
LICENSED PROFESSIONAL ENGINEER
No. 11425
TRINITY D. SMITH
5-21-19

STA. 101+99.44
BEGIN JOB 080504
LOG MILE 9.81

POB 100+00.00

100+00.00
49.94

101+99.44

102+00.00
15.00

103+38.18
46.23

103+50.14
50.00

103+99.54
49.41

104+01.88
41.74

105+00.00
45.00

106+00.00
60.00

108+00.00
120.00

109+50.00
90.00

N 22°51'59" E
199.44'

PROPOSED R/W & FENCE

EXISTING R/W

PROPOSED R/W

CONST. LIMITS

50 FT. BUFFER

DEER CREEK

105

110

OBLITERATION OF EXISTING PAVEMENT

P.I. 111+38.44

REVISIONS

DATE OF REVISION	REVISION

LEGEND

- (E-3) = FILTER SOCK
- (E-5) = SAND BAG DITCH CHECKS
- (E-6) = ROCK DITCH CHECKS
- (E-7) = DROP INLET SILT FENCE
- (E-11) = SILT FENCE
- (E-12) = SLOPE DRAIN
- △△△△△△ = TRIANGULAR SILT DIKE

NOTE: PERIMETER CONTROLS SHALL BE PLACED AS CLEARING AND GRUBBING OPERATIONS ARE STARTED.

115

120

115+00.00
70.00

115+63.92
69.54

116+33.16
69.30

119+00.00
38.29

P.T. 119+81.81

P.I. 121+48.33

POE 124+28.95

N 21°41'35" W
13.56'

N 15°34'50" W
127.96'

P.C. 119+95.37

P.I. 123+00.99

STA. 123+00.00
END JOB 080504

STAGE 2
TEMPORARY EROSION CONTROL DETAILS

1/15/2019

R080504.DGN

DATE REVISED	DATE FILMED	DATE REVISED	DATE FILMED	FED.RD. DIST.NO.	STATE	FED.AID PROJ.NO.	SHEET NO.	TOTAL SHEETS
				6	ARK.			
				JOB NO.		080504	13	57

(2) MAINTENANCE OF TRAFFIC DETAILS

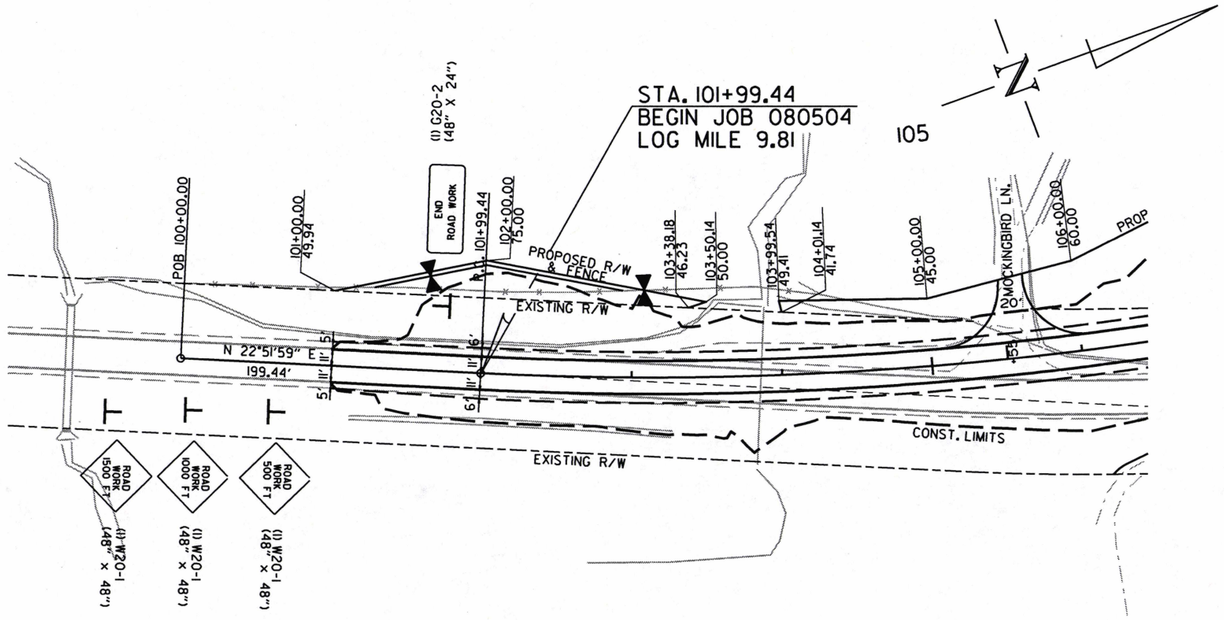

SEQUENCE OF CONSTRUCTION

STAGE 1:
MAINTAIN TRAFFIC ON EXISTING ROADWAY.
CONSTRUCT PROPOSED HWY. 27 & BRIDGE.
CONSTRUCT TURNOUT FOR HWY. 88
CONSTRUCT STORM SEWER AND DROP INLETS ON RT.

STAGE 2:
PLACE FINAL SURFACE COURSE.
PLACE PERMANENT PAVEMENT MARKINGS.
SHIFT TRAFFIC TO PROPOSED ROADWAY.
REMOVAL OF EXISTING BRIDGE.
CONSTRUCT RT. SHOULDER & DRIVES.
OBLITERATION OF EXISTING ROADWAY.

DO NOT PASS (2) R4-1 (24" X 30")

RIGHT SHOULDER CLOSED (2) W21-5a (48" X 48")

STATE OF ARKANSAS
LICENSED PROFESSIONAL ENGINEER
No. 11425
TRINITY D. SMITH
5-21-19

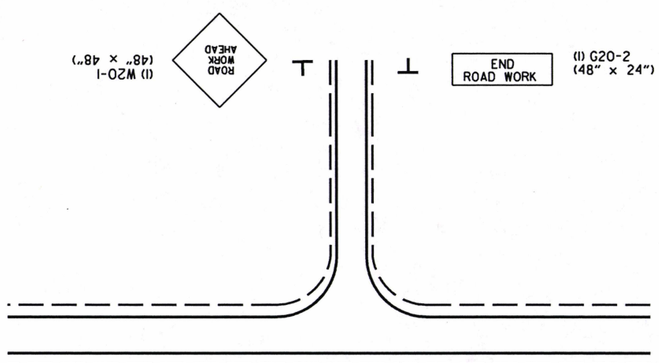

ADVANCE WARNING
HWY. 88
MATHEW HILL RD.
MOCKINGBIRD LN.

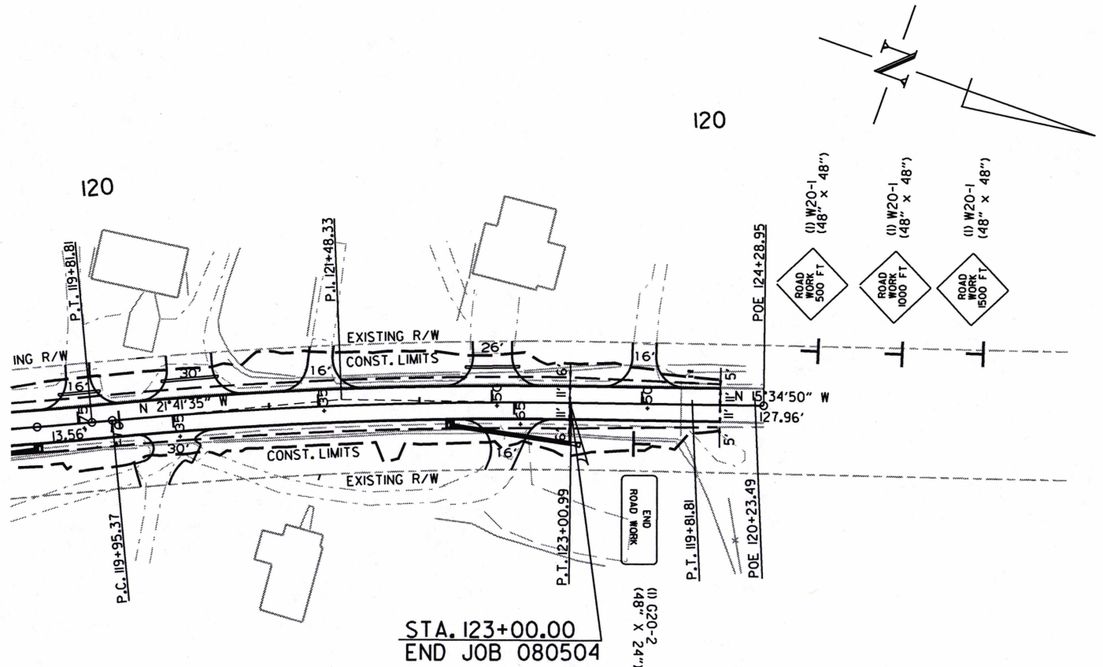

1/25/2019

R080504.DGN

ALL STAGES
MAINTENANCE OF TRAFFIC DETAILS

DATE REVISED	DATE FILMED	DATE REVISED	DATE FILMED	FED.RD. DIST.NO.	STATE	FED.AID PROJ.NO.	SHEET NO.	TOTAL SHEETS
				6	ARK.			
				JOB NO.		080504	14	57

(2) MAINTENANCE OF TRAFFIC DETAILS

SEQUENCE OF CONSTRUCTION

STAGE 1:
MAINTAIN TRAFFIC ON EXISTING ROADWAY.
CONSTRUCT PROPOSED HWY. 27 & BRIDGE.
CONSTRUCT TURNOUT FOR HWY. 88
CONSTRUCT STORM SEWER AND DROP INLETS ON RT.

STAGE 2:
PLACE FINAL SURFACE COURSE.
PLACE PERMANENT PAVEMENT MARKINGS.
SHIFT TRAFFIC TO PROPOSED ROADWAY.
REMOVAL OF EXISTING BRIDGE.
CONSTRUCT RT. SHOULDER & DRIVES.
OBLITERATION OF EXISTING ROADWAY.

STATE OF ARKANSAS LICENSED PROFESSIONAL ENGINEER No. 11425 TRINITY D. SMITH
5-21-19

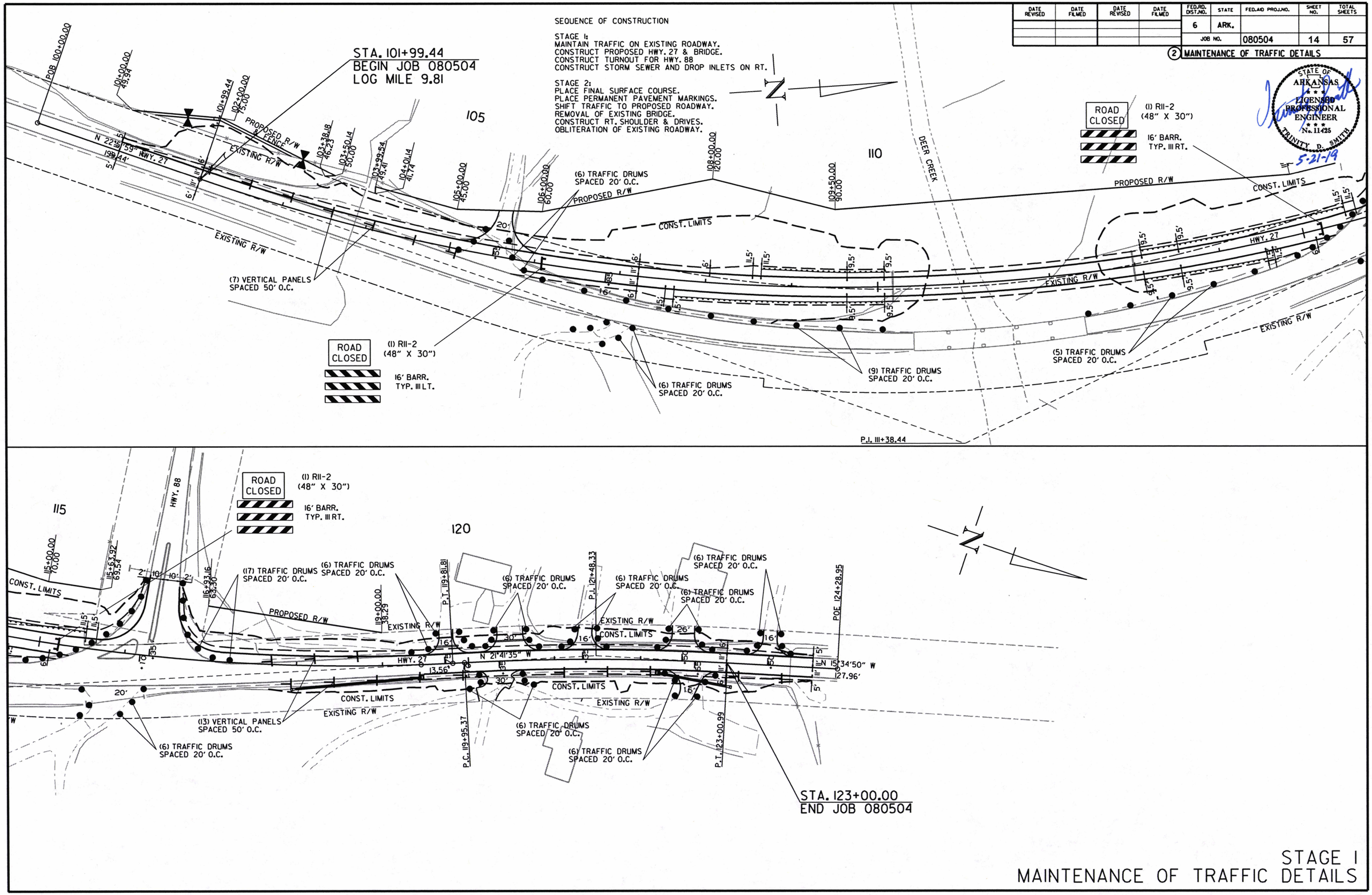

STAGE 1
MAINTENANCE OF TRAFFIC DETAILS

1/25/2019

R080504.DGN

DATE REVISED	DATE FILMED	DATE REVISED	DATE FILMED	FED.RD. DIST.NO.	STATE	FED.AID PROJ.NO.	SHEET NO.	TOTAL SHEETS
				6	ARK.			
				JOB NO.		080504	15	57

(2) MAINTENANCE OF TRAFFIC DETAILS

SEQUENCE OF CONSTRUCTION

STAGE 1:
MAINTAIN TRAFFIC ON EXISTING ROADWAY.
CONSTRUCT PROPOSED HWY. 27 & BRIDGE.
CONSTRUCT TURNOUT FOR HWY. 88
CONSTRUCT STORM SEWER AND DROP INLETS ON RT.

STAGE 2:
PLACE FINAL SURFACE COURSE.
PLACE PERMANENT PAVEMENT MARKINGS.
SHIFT TRAFFIC TO PROPOSED ROADWAY.
REMOVAL OF EXISTING BRIDGE.
CONSTRUCT RT. SHOULDER & DRIVES.
OBLITERATION OF EXISTING ROADWAY.

STATE OF ARKANSAS
LICENSED PROFESSIONAL ENGINEER
No. 11425
TRINITY D. SMITH
5-21-19

STA. 101+99.44
BEGIN JOB 080504
LOG MILE 9.81

POB 100+00.00
101+00.00 45.94
101+99.44
102+00.00 15.00
103+38.18 46.23
103+50.14 50.00
103+99.54 48.41
104+01.14 41.74
105+00.00 45.00
106+00.00 60.00
108+00.00 120.00
109+50.00 90.00
105
110
PROPOSED R/W
PROPOSED FENCE
EXISTING R/W
CONST. LIMITS
N 22°55'59" W 199.44'
HWY. 27
DEER CREEK
(6) TRAFFIC DRUMS SPACED 20' O.C.
(9) VERTICAL PANELS SPACED 50' O.C.
(6) TRAFFIC DRUMS SPACED 20' O.C.
P.I. 111+38.44
OBLITERATION OF EXISTING PAVEMENT
ROAD CLOSED
(1) RII-2 (48" X 30")
(1) WI-6 (48" X 24")
16' BARR. TYP. III RT.
16' BARR. TYP. III LT.

115
120
HWY. 88
115+00.00 10.00
115+63.82 69.54
116+93.16 63.30
119+00.00 38.29
P.T. 119+81.81
P.C. 119+95.37
P.I. 121+48.33
P.T. 123+00.99
POE 124+28.95
(13) TRAFFIC DRUMS SPACED 20' O.C.
(6) TRAFFIC DRUMS SPACED 20' O.C.
(8) VERTICAL PANELS SPACED 50' O.C.
N 21°41'35" W 13.56'
N 15°34'50" W 27.96'
STA. 123+00.00
END JOB 080504

1/25/2019
R080504.DGN

STAGE 2
MAINTENANCE OF TRAFFIC DETAILS

DATE REVISED	DATE FILMED	DATE REVISED	DATE FILMED	FED.RD. DIST.NO.	STATE	FED.AID PROJ.NO.	SHEET NO.	TOTAL SHEETS
				6	ARK.			
				JOB NO.		080504	16	57

(2) PERMANENT PAVEMENT MARKING DETAILS

STATE OF ARKANSAS
LICENSED PROFESSIONAL ENGINEER
No. 11425
TRINITY D. SMITH

5-21-19

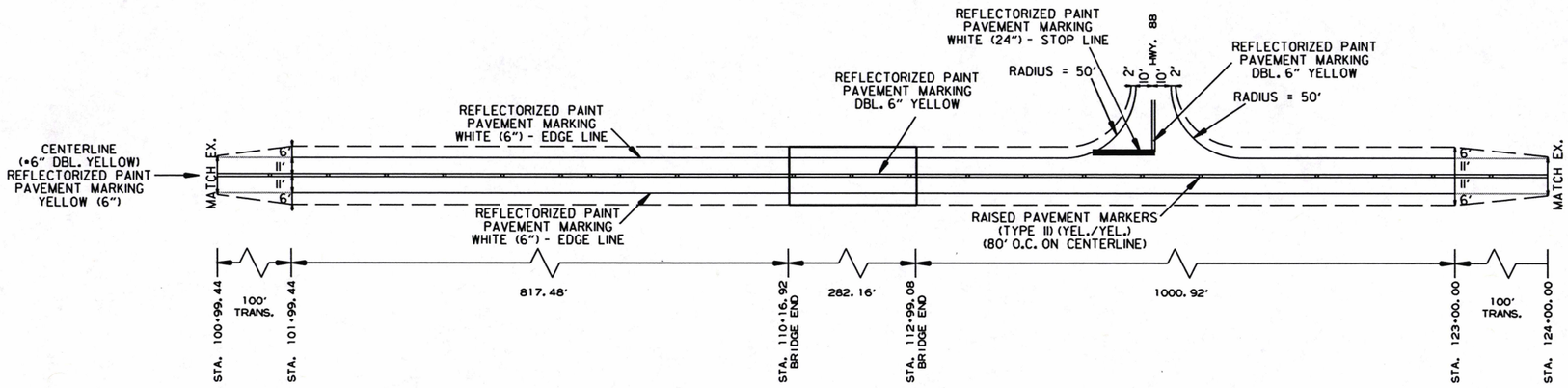

HWY. 27 & HWY. 88 TURNOUT - PERMANENT PAVEMENT MARKING LAYOUT

PERMANENT PAVEMENT MARKINGS:

REFLECTORIZED PAINT PAVEMENT MARKING:
RT. AND LT. EDGE LINES = 4726 LIN. FT. WHITE
DBL. CENTERLINE = 4671 LIN. FT. YELLOW
24" STOP LINE = 28 LIN. FT. WHITE

RAISED PAVEMENT MARKERS:
TYPE II (YEL./YEL.) 80' O.C. ON CENTERLINE = 30 EACH

•THE 6" YELLOW STRIPING QUANTITY HAS BEEN ESTIMATED BASED ON A DOUBLE YELLOW CENTERLINE STRIPE FOR THE ENTIRE PROJECT. THE PROJECT MUST BE MARKED FOR PASSING/NO PASSING ZONES PRIOR TO THE PLACEMENT OF ANY FINAL STRIPING. CONTACT THE MAINTENANCE DIVISION AFTER THE FINAL LIFT OF SURFACE COURSE HAS BEEN PLACED TO SCHEDULE THE ZONING OF THE PROJECT.

R080504.DGN 1/18/2019

HWY. 27
PERMANENT PAVEMENT MARKING DETAILS

DATE REVISED	DATE FILMED	DATE REVISED	DATE FILMED	FED.RD. DIST.NO.	STATE	FED.AID PROJ.NO.	SHEET NO.	TOTAL SHEETS
				6	ARK.			
				JOB NO.		080504	17	57

(2) QUANTITIES

STATE OF ARKANSAS
LICENSED PROFESSIONAL ENGINEER
No. 11425
TRINITY D. SMITH
5-21-19

ADVANCE WARNING SIGNS AND DEVICES

SIGN NUMBER	DESCRIPTION	SIGN SIZE	STAGE 1	STAGE 2	MAXIMUM NUMBER REQUIRED	TOTAL SIGNS REQUIRED		VERTICAL PANELS	TRAFFIC DRUMS	BARRICADES (TYPE III)	
										RIGHT	LEFT
			LIN. FT. - EACH			NO.	SQ. FT.	EACH		LIN. FT.	
W20-1	ROAD WORK 1500 FT.	48"x48"	2	2	2	2	32.0				
W20-1	ROAD WORK 1000 FT.	48"x48"	2	2	2	2	32.0				
W20-1	ROAD WORK 500 FT.	48"x48"	2	2	2	2	32.0				
W20-1	ROAD WORK AHEAD	48"x48"	3	3	3	3	48.0				
G20-2	END ROAD WORK	48"x24"	5	5	5	5	40.0				
R11-2	ROAD CLOSED	48"x30"	2	2	2	2	20.0				
W1-6	LARGE ARROW	48"x24"		3	3	3	24.0				
R4-1	DO NOT PASS	24"x30"	2	2	2	2	10.0				
W21-5a	RIGHT SHOULDER CLOSED	36"x36"	2	2	2	2	18.0				
	VERTICAL PANELS		20	17	20			20			
	TRAFFIC DRUMS		91	73	91				91		
	TYPE III BARRICADE-RT. (16')		1	1	1					16	
	TYPE III BARRICADE-LT. (16')		1	1	1						16
TOTALS:							**256.0**	**20**	**91**	**16**	**16**

NOTE: THIS IS A LOW TRAFFIC VOLUME ROAD AS DEFINED IN SECTION 604.03, STANDARD SPECIFICATIONS FOR HIGHWAY CONSTRUCTION.

CONSTRUCTION PAVEMENT MARKINGS AND PERMANENT PAVEMENT MARKINGS

DESCRIPTION	STAGE 1	END OF JOB	CONSTRUCTION PAVEMENT MARKINGS	RAISED PAVEMENT MARKERS	REFLECTORIZED PAINT PAVEMENT MARKING		
				TYPE II	6"		24"
				(YELLOW/YELLOW)	WHITE	YELLOW	WHITE
	LIN. FT. - EACH		LIN. FT.	EACH	LIN. FT.		
CONSTRUCTION PAVEMENT MARKINGS	9397		9397				
RAISED PAVEMENT MARKERS TYPE II (YELLOW/YELLOW)		30		30			
REFLECTORIZED PAINT PAVEMENT MARKING WHITE (6")		4726			4726		
REFLECTORIZED PAINT PAVEMENT MARKING YELLOW (6")		4671				4671	
REFLECTORIZED PAINT PAVEMENT MARKING WHITE (24")		28					28
TOTALS:			**9397**	**30**	**4726**	**4671**	**28**

NOTE: THIS IS A LOW TRAFFIC VOLUME ROAD AS DEFINED IN SECTION 604.03, STANDARD SPECIFICATIONS FOR HIGHWAY CONSTRUCTION.

NOTE: THE 6" YELLOW STRIPING QUANTITY HAS BEEN ESTIMATED BASED ON A DOUBLE YELLOW CENTERLINE STRIPE FOR THE ENTIRE PROJECT.
THE PROJECT MUST BE MARKED FOR PASSING/NO PASSING ZONES PRIOR TO THE PLACEMENT OF ANY FINAL STRIPING.
CONTACT THE MAINTENANCE DIVISION AFTER THE FINAL LIFT OF SURFACE COURSE HAS BEEN PLACED TO SCHEDULE THE ZONING OF THE PROJECT.

1/24/2019

R080504.DGN

QUANTITIES

DATE REVISED	DATE FILMED	DATE REVISED	DATE FILMED	FED.RD. DIST.NO.	STATE	FED.AID PROJ.NO.	SHEET NO.	TOTAL SHEETS
				6	ARK.			
				JOB NO.		080504	18	57

(2) QUANTITIES

CLEARING AND GRUBBING

STATION	STATION	LOCATION	CLEARING	GRUBBING
			STATION	
102+00	123+00	HWY. 27 - LT. & RT.	21	21
TOTALS:			21	21

REMOVAL AND DISPOSAL OF ITEMS

STATION	STATION	LOCATION	CONCRETE ISLANDS	GUARDRAIL
			SQ. YD.	LIN. FT.
115+70	116+15	HWY. 27 - LT.	60	
116+27	116+31	HWY. 27 - LT.	65	
110+12	110+27	HWY. 27 - LT.		15
110+12	110+27	HWY. 27 - RT.		15
112+35	112+64	HWY. 27 - RT.		29
112+35	112+86	HWY. 27 - LT.		51
TOTALS:			125	110

NOTE: THE QUANTITY SHOWN ABOVE FOR THE REMOVAL AND DISPOSAL OF GUARDRAIL SHALL INCLUDE THE REMOVAL AND DISPOSAL OF ALL GUARDRAIL TERMINALS AND TERMINAL ANCHOR POSTS.

REMOVAL AND DISPOSAL OF FENCE

STATION	STATION	LOCATION	FENCE
			LIN. FT.
101+00	104+60	HWY. 27 - LT.	360
108+50	108+72	HWY. 27 - LT.	50
TOTAL:			410

MAILBOXES

LOCATION	MAILBOXES	MAILBOX SUPPORTS (SINGLE)
	EACH	
ENTIRE PROJECT	2	2
TOTALS:	2	2

RUMBLE STRIPS IN ASPHALT SHOULDERS

STATION	STATION	LOCATION	* RUMBLE STRIPS IN ASPHALT SHOULDERS
			LIN.FT.
102+00	110+17	HWY. 27 - LT. & RT.	1640
113+36	123+00	HWY. 27 - LT. & RT.	1930
TOTAL:			3570

* QUANTITY ESTIMATED.
SEE SECTION 104.03 OF THE STD. SPECS.
TO BE USED IF AND WHERE DIRECTED BY THE ENGINEER.

EROSION CONTROL MATTING

STATION	STATION	LOCATION	LENGTH	CLASS 3
			LIN. FT.	SQ. YD.
109+00.00	110+00.00	HWY. 27 - LT.	100.00	88.89
123+00.00	123+50.00	HWY. 27 - RT.	50.00	44.44
TOTAL:				133.33

NOTE: AVERAGE WIDTH = 8'-0"

STATE OF ARKANSAS
LICENSED PROFESSIONAL ENGINEER
No. 11425
TRINITY D. SMITH
5-21-19

SELECTED PIPE BEDDING

LOCATION	SELECTED PIPE BEDDING
	CU.YD.
ENTIRE PROJECT TO BE USED IF	
AND WHERE DIRECTED BY THE	10
ENGINEER	
TOTAL:	10

NOTE: QUANTITY ESTIMATED.
SEE SECTION 104.03 OF THE STD. SPECS.

EARTHWORK

STATION	STATION	LOCATION / DESCRIPTION	UNCLASSIFIED EXCAVATION	COMPACTED EMBANKMENT	ROCK FILL	* SOIL STABILIZATION
			CU. YD.			TON
ENTIRE	PROJECT	STAGE 1-MAIN LANES	22534	6375		
ENTIRE	PROJECT	STAGE 2-MAIN LANES	821	91		
ENTIRE	PROJECT	APPROACHES	215	250		
110+28	110+32	STAGE 1-MAIN LANES			27	
112+60	113+00	STAGE 1-MAIN LANES			310	
ENTIRE	PROJECT	OBLITERATION OF EXISTING ROADWAY	940			
ENTIRE	PROJECT	BRIDGE EXCAVATION	1900			
* ENTIRE	PROJECT	TO BE USED IF AND WHERE				100
		DIRECTED BY THE ENGINEER				
TOTALS:			26410	6716	337	100

* QUANTITY ESTIMATED.
SEE SECTION 104.03 OF THE STD. SPECS.

STRUCTURES

STATION	DESCRIPTION	REINFORCED CONCRETE PIPE (CLASS III)	FLARED END SECTIONS FOR R.C. PIPE CULVERTS	DROP INLETS TYPE	SOLID SODDING	WATER	STD. DWG. NOS.
		18"	18"	ST			
		LIN. FT.	EACH		SQ.YD.	M.GAL.	
119+45	CONST. DI ON RT. & 18" X 145' R.C. PIPE OUTLET	145	1	1	5	0.06	PCC-1, FPC-9S
122+20	CONST. DI ON RT. & 18" X 80' R.C. PIPE OUTLET	80	1	1	5	0.06	PCC-1, FPC-9S
TOTALS:		225	2	2	10	0.12	

BASIS OF ESTIMATE:
WATER.....12.6 GAL. / SQ. YD. OF SOLID SODDING
NOTE: FOR R.C. PIPE CULVERT INSTALLATIONS USE TYPE 3 BEDDING UNLESS OTHERWISE SPECIFIED.

EROSION CONTROL

STATION	STATION	LOCATION	PERMANENT EROSION CONTROL: SPECIAL SEEDING	LIME	SPECIAL MULCH COVER	WATER	SPECIAL SECOND SEEDING APPLICATION	TEMPORARY EROSION CONTROL: TEMPORARY SEEDING	SPECIAL MULCH COVER	WATER	FILTER SOCK (12") (E-3)	SAND BAG DITCH CHECKS (E-5)	ROCK DITCH CHECKS (E-6)	DROP INLET SILT FENCE (E-7)	SILT FENCE (E-11)	TRIANGULAR SILT DIKE	PIPE FOR SLOPE DRAINS	DUMPED RIPRAP SLOPE DRAIN (E-12)	SEDIMENT BASIN (E-14)	OBLITERATION OF SEDIMENT BASIN	*SEDIMENT REMOVAL & DISPOSAL
			ACRE	TON	ACRE	M.GAL.	ACRE	ACRE	ACRE	M.GAL.	LIN. FT.	BAG	CU.YD.	LIN. FT.	LIN. FT.	LIN. FT.	LIN. FT.	CU.YD.	CU.YD.	CU.YD.	CU. YD.
ENTIRE	PROJECT	CLEARING AND GRUBBING						5.83	5.83	118.9	510	242	27		1110						61
ENTIRE	PROJECT	STAGE 1	1.58	3.16	1.58	161.2	1.58	1.04	1.04	21.2		66		50		275	110	6			5
ENTIRE	PROJECT	STAGE 2	0.58	1.16	0.58	59.2	0.58	1.96	1.96	40.0											
ENTIRE	PROJECT	OBLITERATION OF EXISTING ROADWAY	0.40	0.80	0.40	40.8	0.40														
* ENTIRE PROJECT TO BE USED IF AND WHERE DIRECTED BY THE ENGINEER.			1.00	2.00	1.00	102.0	1.00	1.00	1.00	20.4		25			100				7500	7500	7504
TOTALS:			3.56	7.12	3.56	363.2	3.56	9.83	9.83	200.5	510	333	27	50	1210	275	110	6	7500	7500	7570

BASIS OF ESTIMATE:
LIME .....2 TONS / ACRE OF SEEDING
WATER.....102.0 M.G. / ACRE OF SEEDING
WATER.....20.4 M.G. / ACRE OF TEMPORARY SEEDING
SAND BAG DITCH CHECKS.....22 BAGS / LOCATION
ROCK DITCH CHECKS.....3 CU.YD./LOCATION

NOTE: THE TEMPORARY EROSION CONTROL DEVICES SHOWN ABOVE AND ON THE PLANS SHALL BE INSTALLED IN SUCH A SEQUENCE AS TO DETER EROSION AND SEDIMENTATION ON U.S. WATERWAYS AS EXPLAINED BY THE NATIONAL POLLUTANT DISCHARGE ELIMINATION SYSTEM PERMIT.

*QUANTITIES ESTIMATED.
SEE SECTION 104.03 OF THE STD. SPECS.

1/24/2019

R080504.DGN

QUANTITIES

DATE REVISED	DATE FILMED	DATE REVISED	DATE FILMED	FED.RD. DIST.NO.	STATE	FED.AID PROJ.NO.	SHEET NO.	TOTAL SHEETS
12-19-19				6	ARK.			
				JOB NO.		080504	19	57

(2) QUANTITIES

STATE OF ARKANSAS
LICENSED PROFESSIONAL ENGINEER
No. 11425
TRINITY D. SMITH
12-20-19

ACHM PATCHING OF EXISTING ROADWAY

DESCRIPTION	TON
ENTIRE PROJECT - TO BE USED IF AND WHERE	10
DIRECTED BY THE ENGINEER	
TOTAL:	**10**

NOTE: QUANTITY ESTIMATED.
SEE SECTION 104.03 OF THE STD. SPECS.

FENCING

STATION	STATION	LOCATION	WIRE FENCE (TYPE C) LIN. FT.
101+00	104+60	HWY. 27 - LT.	360
TOTAL:			**360**

BENCH MARKS

STATION	LOCATION	BENCH MARKS EACH
110+25	RT. BRIDGE END HWY. 27	1
TOTAL:		**1**

NOTE: SHOWN FOR INFORMATION ONLY. BENCH MARKS SHALL BE FURNISHED AND PLACED BY STATE FORCES.

4" PIPE UNDERDRAIN

	STATION	STATION	LOCATIONS	4" PIPE UNDERDRAINS LIN. FT.	UNDERDRAIN OUTLET PROTECTORS EACH
*	ENTIRE PROJECT TO BE USED IF AND WHERE DIRECTED BY THE ENGINEER			1400	6
	TOTALS:			**1400**	**6**

* NOTE: QUANTITIES ESTIMATED.
SEE SECTION 104.03 OF THE STD. SPECS.

SOIL LOG

STATION	LOCATION	DEPTH FEET	LIQUID LIMIT	PLASTICITY INDEX	AASHTO CLASSIFICATION	COLOR
102+00	21' - RT.	0-5	33	14	A-6(2)	RD/BR
102+00	30' - RT.	0-5	38	16	A-6(2)	RD/BR
102+00	6' - RT.	0-3Z	32	10	A-4(0)	RD/BR
119+00	19' - RT.	0-5	31	12	A-6(2)	BROWN
119+00	6' - RT.	0-5	30	10	A-4(3)	BR/GR

SOIL CHARACTERISTICS TABULATED ABOVE ARE REPRESENTATIVE AT THE LOCATION OF THE SAMPLE, AND FROM SURFACE INDICATIONS ARE TYPICAL FOR THE LIMITS SHOWN. THESE DATA ARE SHOWN FOR INFORMATION ONLY. THE STATE WILL NOT BE RESPONSIBLE FOR VARIATIONS IN THE SOIL CHARACTERISTICS AND/OR EXTENT OF SAME DIFFERING FROM THE ABOVE TABULATIONS.
Z- AUGER REFUSAL

APPROACH GUTTERS AND SLABS

STATION	STATION	LOCATION	APPROACH GUTTER (TYPE C) CU.YD.	APPROACH SLABS CU.YD.	REINFORCING STEEL-RDWY. (GR. 60) POUND	AGGREGATE BASE CRS. (CLASS 7) TON
109+80.42	110+16.92	LT. SIDE	11.55		630	
109+80.42	110+16.92	APPROACH SLAB		44.90	5311	28.30
109+80.42	110+16.92	RT. SIDE	11.55		630	
112+99.08	113+35.58	LT. SIDE	11.55		630	
112+99.08	113+35.58	APPROACH SLAB		44.90	5311	28.30
112+99.08	113+35.58	RT. SIDE	11.55		630	
TOTALS:			**46.20**	**89.80**	**13142**	**56.60**

NOTE: USE T =13.5" FOR 6' SHOULDER.

COLD MILLING ASPHALT PAVEMENT

STATION	STATION	LOCATION	AVG. WIDTH FEET	COLD MILLING ASPHALT PAVEMENT SQ. YD.
100+99.44	101+99.44	HWY. 27	22.00	244.44
123+00.00	124+00.00	HWY. 27	22.00	244.44
TOTAL:				**488.88**

NOTE: AVERAGE MILLING DEPTH 1".

GUARDRAIL

STATION	STATION	LOCATION	GUARDRAIL (TYPE A) LIN. FT.	THRIE BEAM GUARDRAIL TERMINAL EACH	GUARDRAIL TERMINAL (TYPE 2) EACH
107+63.77	110+07.52	RT. SIDE	150	1	1
108+63.77	110+07.52	LT. SIDE	75	1	1
113+08.48	114+52.23	RT. SIDE	75	1	1
113+08.48	115+52.23	LT. SIDE	150	1	1
TOTALS:			**450**	**4**	**4**

CONCRETE DITCH PAVING

	STATION	STATION	LOCATION	LENGTH LIN. FT.	"W" FEET	"B" FEET	CONC. DITCH PAVING (TYPE A) SQ. YD.	CONC. DITCH PAVING (TYPE B) SQ. YD.	SOLID SODDING SQ. YD.	WATER M. GAL.
	109+00.00	110+00.00	HWY. 27 - LT.	100.00	16.00	10.00	177.78		44.44	0.56
	123+00.00	123+50.00	HWY. 27 - RT.	50.00	6.00			33.33	22.22	0.28
*	ENTIRE PROJECT TO BE USED IF AND WHERE DIRECTED BY ENGINEER.						30.00	15.00		
	TOTALS:						**207.78**	**48.33**	**66.66**	**0.84**

BASIS OF ESTIMATE:
WATER.....12.6 GAL. / SQ. YD. OF SOLID SODDING.

* QUANTITY ESTIMATED
SEE SECTION 104.03 OF THE STD. SPECS.
TO BE USED IF AND WHERE DIRECTED BY THE ENGINEER.

DRIVEWAYS & TURNOUTS

STATION	SIDE	LOCATION	WIDTH FEET	ACHM SURFACE COURSE (3/8") 220 LBS. PER SQ. YD. (PG 64-22) SQ. YD.	ACHM SURFACE COURSE (3/8") 220 LBS. PER SQ. YD. (PG 64-22) TON	AGGREGATE BASE COURSE (CLASS 7) TON	SIDE DRAINS 18" LIN. FT.	SIDE DRAINS 30" LIN. FT.	STANDARD DRAWINGS
105+55	LT.	MOCKINGBIRD LN. - CO. RD. ON LT.	20	128.67	14.15	52.54			
106+85	RT.	HWY. 27 - DRIVE ON RT.	16	193.99	21.34	79.21	30		PCC-1, PCM-1, PCP-1, PCP-2, PCP -3
116+10	RT.	MATHEW HILL RD. - CO. RD. ON RT.	20	222.00	24.42	90.65		34	PCC-1, PCM-1, PCP-1, PCP-2, PCP -3
119+75	LT.	HWY. 27 - DRIVE ON LT.	16	46.43	5.11	18.96	28		PCC-1, PCM-1, PCP-1, PCP-2, PCP -3
120+35	LT.	HWY. 27 - DRIVE ON LT.	30	82.21	9.04	33.57	38		PCC-1, PCM-1, PCP-1, PCP-2, PCP -3
120+35	RT.	HWY. 27 - DRIVE ON RT.	28	93.33	10.27	38.11			
121+35	LT.	HWY. 27 - DRIVE ON LT.	16	53.54	5.89	21.86			
122+50	LT.	HWY. 27 - DRIVE ON LT.	26	83.55	9.19	34.12	36		PCC-1, PCM-1, PCP-1, PCP-2, PCP -3
122+65	RT.	HWY. 27 - DRIVE ON RT.	16	81.78	9.00	33.39			
123+50	LT.	HWY. 27 - DRIVE ON LT.	16	48.81	5.37	19.93			
*	ENTIRE PROJECT TEMPORARY DRIVES					100.00			
TOTALS:				**1034.31**	**113.78**	**522.34**	**132**	**34**	

BASIS OF ESTIMATE:
ACHM SURFACE COURSE (3/8").....94.6% MIN. AGGR.....5.4% ASPHALT BINDER
MAXIMUM NUMBER OF GYRATIONS = 115 FOR PG 64-22

THE CONTRACTER, WITH THE APPROVAL OF THE ENGINEER, WILL BE ALLOWED TO SUBSTITUTE A HIGHER PERFORMANCE GRADE ASPHALT SURFACE COURSE FOR DRIVEWAYS AND MINOR SIDE STREET CONSTRUCTION AT NO ADDITIONAL COST TO THE DEPARTMENT.

* QUANTITY ESTIMATED
SEE SECTION 104.03 OF THE STD. SPECS.
TO BE USED IF AND WHERE DIRECTED BY THE ENGINEER.

NOTE: FOR R.C. PIPE CULVERT INSTALLATIONS USE TYPE 3 BEDDING UNLESS OTHERWISE SPECIFIED.
NOTE: FOR C.M. PIPE CULVERT INSTALLATIONS USE TYPE 2 BEDDING UNLESS OTHERWISE SPECIFIED.

1/24/2019

R080504.DGN

QUANTITIES

DATE REVISED	DATE FILMED	DATE REVISED	DATE FILMED	FED.RD. DIST.NO.	STATE	FED.AID PROJ.NO.	SHEET NO.	TOTAL SHEETS
				6	ARK.			
				JOB NO.		080504	20	57

(2) QUANTITIES

STATE OF ARKANSAS
LICENSED PROFESSIONAL ENGINEER
No. 11425
TRINITY D. SMITH
5-21-19

BASE AND SURFACING

STATION	STATION	LOCATION	LENGTH	AGGREGATE BASE COURSE (CLASS 7)		TACK COAT						ACHM BASE COURSE (1 1/2")				ACHM BINDER COURSE (1")				ACHM SURFACE COURSE (3/8")							
						(0.05 GAL. PER SQ. YD.)			(0.17 GAL. PER SQ. YD.)																		
				TON / STATION	TON	TOTAL WID.	SQ.YD.	GALLON	TOTAL WID.	SQ.YD.	GALLON	TOTAL GALLONS	AVG. WID.	SQ.YD.	POUND / SQ.YD.	PG 64-22	AVG. WID.	SQ.YD.	POUND / SQ.YD.	PG 64-22	AVG. WID.	SQ.YD.	POUND / SQ.YD.	PG 76-22	AVG. WID.	SQ.YD.	POUND / SQ.YD.	PG 76-22	TOTAL PG 76-22
			FEET			FEET			FEET				FEET			TON	FEET			TON	FEET			TON	FEET			TON	TON
MAIN LANES																												
100+99.44	101+99.44	HWY. 27 - TRANSITION	100.00	113.26	113.26				22.00	244.44	41.55	41.55													33.00	366.67	220.00	40.33	40.33
101+99.44	105+28.00	HWY. 27 - NOTCH AND WIDEN	328.56	119.50	392.63	VAR.	674.87	33.74	VAR.	136.89	23.27	57.01					VAR.	339.01	330.00	55.94	VAR.	335.86	220.00	36.94	34.00	1241.23	220.00	136.54	173.48
105+28.00	109+80.42	HWY. 27 - FULL DEPTH	452.42	212.25	960.26	44.71	2247.52	112.38				112.38					22.46	1129.04	330.00	186.29	22.25	1118.48	220.00	123.03	34.00	1709.14	220.00	188.01	311.04
113+35.58	116+30.00	HWY. 27 - FULL DEPTH	294.42	212.25	624.91	44.71	1462.61	73.13				73.13					22.46	734.74	330.00	121.23	22.25	727.87	220.00	80.07	34.00	1112.25	220.00	122.35	202.42
116+30.00	118+00.00	HWY. 27 - NOTCH AND WIDEN	170.00	VAR.	211.80	VAR.	211.79	10.59	VAR.	166.86	28.37	38.96					VAR.	104.72	330.00	17.28	VAR.	104.92	220.00	11.54	34.00	642.22	220.00	70.64	82.18
118+00.00	119+00.00	HWY. 27 - NOTCH AND WIDEN W/ RT. CURB	100.00	VAR.	115.59	VAR.	121.17	6.06	VAR.	98.17	16.69	22.75					VAR.	61.61	330.00	10.17	VAR.	61.72	220.00	6.79	34.00	377.78	220.00	41.56	48.35
119+00.00	123+00.00	HWY. 27 - NOTCH AND WIDEN W/ RT. CURB	400.00	119.50	478.00				22.00	977.78	166.22	166.22													34.00	1511.11	220.00	166.22	166.22
123+00.00	124+00.00	HWY. 27 - TRANSITION	100.00	113.26	113.26				22.00	244.44	41.55	41.55													33.00	366.67	220.00	40.33	40.33
115+38.00	117+38.00	HWY. 88 - TURN OUT	175.00	126.00	220.50	VAR.	336.70	16.84	VAR.	319.44	54.30	71.14					VAR.	130.48	330.00	21.53	VAR.	129.27	220.00	14.22	VAR.	376.67	220.00	41.43	55.65
ADDITIONAL FOR LEVELING																												
101+99.44	105+28.00	HWY. 27 - NOTCH AND WIDEN	328.56			VAR.	407.58	69.29				69.29									VAR.	407.58	VAR.	64.19					64.19
116+30.00	119+00.00	HWY. 27 - NOTCH AND WIDEN	270.00			VAR.	373.45	63.49				63.49									VAR.	373.45	VAR.	96.16					96.16
ADDITIONAL FOR METHOD OF RAISING GRADE																												
115+36.00	116+30.00	HWY. 27 - MAIN LANES	94.00						22.00	229.78	39.06	39.06	22.00	229.78	VAR.	88.47													
ADDITIONAL FOR SUPERELEVATION																												
100+99.44	103+81.25	HWY. 27 - SUPERELEVATION	281.81	33.20	93.56																							
103+81.25	109+80.42	HWY. 27 - SUPERELEVATION	599.17	62.22	372.80																							
113+35.58	117+88.59	HWY. 27 - SUPERELEVATION	453.01	62.22	281.86																							
117+88.59	119+88.59	HWY. 27 - SUPERELEVATION	200.00	33.20	66.40																							
119+88.59	121+48.18	HWY. 27 - SUPERELEVATION	159.59	15.58	24.86																							
121+48.18	122+61.09	HWY. 27 - SUPERELEVATION	112.91	31.40	35.45																							
122+61.09	124+20.68	HWY. 27 - SUPERELEVATION	159.59	15.58	24.86																							
ADDITIONAL FOR GUARDRAIL																												
107+21.50	107+54.50	HWY. 27 - MAIN LANES RT.	33.00	15.00	4.95																2.75	10.08	220.00	1.11				1.11
107+54.50	107+64.50	HWY. 27 - MAIN LANES RT.	10.00	30.00	3.00																5.50	6.11	220.00	0.67				0.67
107+64.50	109+64.50	HWY. 27 - MAIN LANES RT.	200.00	17.50	35.00																4.50	100.00	220.00	11.00				11.00
109+64.50	110+08.25	HWY. 27 - MAIN LANES RT.	43.75	11.75	5.14																3.50	17.01	220.00	1.87				1.87
108+21.50	108+54.50	HWY. 27 - MAIN LANES LT.	33.00	7.50	2.48																2.75	10.08	220.00	1.11				1.11
108+54.50	108+64.50	HWY. 27 - MAIN LANES LT.	10.00	30.00	3.00																5.50	6.11	220.00	0.67				0.67
108+64.50	109+64.50	HWY. 27 - MAIN LANES LT.	100.00	17.50	17.50																4.50	50.00	220.00	5.50				5.50
109+64.50	110+08.25	HWY. 27 - MAIN LANES LT.	43.75	11.75	5.14																3.50	17.01	220.00	1.87				1.87
113+09.08	113+52.83	HWY. 27 - MAIN LANES RT.	43.75	11.75	5.14																3.50	17.01	220.00	1.87				1.87
113+52.83	114+52.83	HWY. 27 - MAIN LANES RT.	100.00	17.50	17.50																4.50	50.00	220.00	5.50				5.50
114+52.83	114+62.83	HWY. 27 - MAIN LANES RT.	10.00	30.00	3.00																5.50	6.11	220.00	0.67				0.67
114+62.83	114+95.83	HWY. 27 - MAIN LANES RT.	33.00	7.50	2.48																2.75	10.08	220.00	1.11				1.11
113+09.08	113+52.83	HWY. 27 - MAIN LANES LT.	43.75	11.75	5.14																3.50	17.01	220.00	1.87				1.87
113+52.83	115+52.83	HWY. 27 - MAIN LANES LT.	200.00	17.50	35.00																4.50	100.00	220.00	11.00				11.00
115+52.83	115+62.83	HWY. 27 - MAIN LANES LT.	10.00	30.00	3.00																5.50	6.11	220.00	0.67				0.67
115+62.83	115+95.83	HWY. 27 - MAIN LANES LT.	33.00	15.00	4.95																2.75	10.08	220.00	1.11				1.11
TOTALS:					**4282.42**		**5835.69**	**385.52**		**2417.80**	**411.01**	**796.53**		**229.78**		**88.47**		**2499.60**		**412.44**		**3691.95**		**480.54**		**7703.74**		**847.41**	**1327.95**

BASIS OF ESTIMATE:
ACHM SURFACE COURSE (3/8").....94.6% MIN. AGGR.....5.4% ASPHALT BINDER
ACHM BINDER COURSE (1").....95.7% MIN. AGGR.....4.3% ASPHALT BINDER
ACHM BASE COURSE (1 1/2").....96.2% MIN. AGGR.....3.8% ASPHALT BINDER
MAXIMUM NUMBER OF GYRATIONS = 115 FOR PG 64-22
MAXIMUM NUMBER OF GYRATIONS = 205 FOR PG 76-22
TACK COAT QUANTITIES WERE CALCULATED USING THE EMULSIFIED ASPHALT RATES. REFER TO SS-400-1 FOR THE RESIDUAL ASPHALT APPLICATION RATES.

1/24/2019

R080504.DGN

QUANTITIES

DATE REVISED	DATE FILMED	DATE REVISED	DATE FILMED	FED. ROAD DIST. NO.	STATE	FED. AID PROJ. NO.	SHEET NO.	TOTAL SHEETS
				6	ARK.			
				JOB NO.		080504	21	57
				①		07432 - QUANTITIES - 60415		

SCHEDULE OF BRIDGE QUANTITIES - JOB NO. 080504

BRIDGE NO. / NAME PLATE / TITLE	ITEM NO.	205	SS & 802	SP, SS, & 802	803	SS & 804	SS & 804	SS & 805	SP, SS, & 807	SS & 807	SS & 808	SS & 809	812	816	816	SP JOB 080504	SP JOB 080504	SP JOB 080504	SP JOB 080504
	ITEM / UNIT	REMOVAL OF EXISTING BRIDGE STRUCTURE (SITE NO.)	CLASS S CONCRETE-BRIDGE	CLASS S(AE) CONCRETE-BRIDGE	CLASS 1 PROTECTIVE SURFACE TREATMENT	EPOXY COATED REINFORCING STEEL (GRADE 60)	REINFORCING STEEL-BRIDGE (GRADE 60)	①STEEL PILING (HP 14x73)	STRUCTURAL STEEL IN BEAM SPANS (M 270, GRADE 50W)	②PAINTING STRUCTURAL STEEL	ELASTOMERIC BEARINGS	SILICONE JOINT SEALANT	BRIDGE NAME PLATE (TYPE D)	FILTER BLANKET	DUMPED RIPRAP	CROSSHOLE SONIC LOGGING (96" DIA.)	DRILLED SHAFT (96" DIA.)	PERMANENT STEEL CASING (108" DIA.)	CORING DRILLED SHAFT
	UNIT OF STRUCTURE	LUMP SUM	CU. YD.	CU. YD.	GAL.	LB.	LB.	LIN. FT.	LB.	TON	CU. IN.	LIN. FT.	EACH	SQ. YD.	CU. YD.	EACH	LIN. FT.	LIN. FT.	LIN. FT.
07432 HIGHWAY 27 OVER DEER CREEK	BENT 1		27.90		0.3		3,370	125	710		1,530.0	37		257	128				
	BENT 2		48.40				9,410				1,667.5					1	22	12	
	BENT 3		48.40				9,410				1,475.0					1	22	12	
	BENT 4		48.40				9,410				1,667.5					1	22	12	22
	BENT 5		27.90		0.3		3,370	125	710		1,530.0	37		269	134				
	280'-0" CONT. COMP. W-BM. UNIT			317.50	25.6	71,920			269,190	4.0			1						
SITE NO. 1 (BRIDGE NO. 02767)		1																	
TOTALS FOR JOB NO. 080504			201.00	317.50	26.2	71,920	34,970	250	270,610	4.0	7,870.0	74	1	526	262	3	66	36	22

① All steel piling are required to have approved driving points which will not be paid for directly, but will be considered subsidiary to the item "Steel Piling (HP 14x73)."

② The color of paint shall be Brown equal or close to Federal Std. 595B Color Chip No. 30070 and as approved by the Engineer.

THOMAS GERARD
DESIGN SECTION SUPERVISOR

STATE OF ARKANSAS
LICENSED PROFESSIONAL ENGINEER
No. 9235
CHARLES R. ELLIS
4-22-19
BRIDGE ENGINEER

SCHEDULE OF BRIDGE QUANTITIES
DEER CREEK STR. & APPRS. (S)
MONTGOMERY COUNTY
ROUTE 27 SEC. 7
ARKANSAS STATE HIGHWAY COMMISSION
LITTLE ROCK, ARK.

DRAWN BY: JJ DATE: 01/30/19 FILENAME: b080504_q1.dgn
CHECKED BY: DHP DATE: 4-16-19 SCALE: No Scale
DESIGNED BY: DATE:
BRIDGE NO. 07432 DRAWING NO. 60415

PRINT DATE: 4/16/2019

SUMMARY OF QUANTITIES

ITEM NUMBER	ITEM	QUANTITY	UNIT
201	CLEARING	21	STATION
201	GRUBBING	21	STATION
202	REMOVAL AND DISPOSAL OF FENCE	410	LIN. FT.
202	REMOVAL AND DISPOSAL OF CONCRETE ISLANDS	125	SQ. YD.
202	REMOVAL AND DISPOSAL OF GUARDRAIL	110	LIN. FT.
210	UNCLASSIFIED EXCAVATION	26410	CU. YD.
210	COMPACTED EMBANKMENT	6716	CU. YD.
SP & 210	ROCK FILL	337	CU. YD.
SP & 210	SOIL STABILIZATION	100	TON
SS & 303	AGGREGATE BASE COURSE (CLASS 7)	4861	TON
SS & 401	TACK COAT	797	GAL.
SP, SS, & 405	MINERAL AGGREGATE IN ACHM BASE COURSE (1 1/2")	85	TON
SP, SS, & 405	ASPHALT BINDER (PG 64-22) IN ACHM BASE COURSE (1 1/2")	3	TON
SP, SS, & 406	MINERAL AGGREGATE IN ACHM BINDER COURSE (1")	394	TON
SP, SS, & 406	ASPHALT BINDER (PG 64-22) IN ACHM BINDER COURSE (1")	18	TON
SP, SS, & 407	MINERAL AGGREGATE IN ACHM SURFACE COURSE (3/8")	1364	TON
SP, SS, & 407	ASPHALT BINDER (PG 64-22) IN ACHM SURFACE COURSE (3/8")	6	TON
SP, SS, & 407	ASPHALT BINDER (PG 76-22) IN ACHM SURFACE COURSE (3/8")	72	TON
412	COLD MILLING ASPHALT PAVEMENT	489	SQ. YD.
SP, SS, & 415	ACHM PATCHING OF EXISTING ROADWAY	10	TON
504	APPROACH SLABS	89.80	CU. YD.
504	APPROACH GUTTERS	46.20	CU. YD.
601	MOBILIZATION	1.00	LUMP SUM
SP & 602	FURNISHING FIELD OFFICE	1	EACH
SS & 603	MAINTENANCE OF TRAFFIC	1.00	LUMP SUM
SP, SS, & 604	SIGNS	256	SQ. FT.
SP, SS, & 604	BARRICADES	32	LIN. FT.
SP, SS, & 604	TRAFFIC DRUMS	91	EACH
604	CONSTRUCTION PAVEMENT MARKINGS	9397	LIN. FT.
SP, SS, & 604	VERTICAL PANELS	20	EACH
SS & 605	CONCRETE DITCH PAVING (TYPE A)	208	SQ. YD.
SS & 605	CONCRETE DITCH PAVING (TYPE B)	48	SQ. YD.
606	18" REINFORCED CONCRETE PIPE CULVERTS (CLASS III)	225	LIN. FT.
SP, SS, & 606	18" SIDE DRAIN	132	LIN. FT.
SP, SS, & 606	30" SIDE DRAIN	34	LIN. FT.
606	18" FLARED END SECTIONS FOR REINFORCED CONCRETE PIPE CULVERTS	2	EACH
606	SELECTED PIPE BEDDING	10	CU. YD.
609	DROP INLETS (TYPE ST)	2	EACH
SS & 611	4" PIPE UNDERDRAINS	1400	LIN. FT.
SS & 611	UNDERDRAIN OUTLET PROTECTORS	6	EACH
SS & 617	GUARDRAIL (TYPE A)	450	LIN. FT.
SS & 617	GUARDRAIL TERMINAL (TYPE 2)	4	EACH
SS & 617	THRIE BEAM GUARDRAIL TERMINAL	4	EACH
619	WIRE FENCE (TYPE C)	360	LIN. FT.
620	LIME	7	TON
SP & 620	SPECIAL SEEDING	3.56	ACRE
SP, SS, & 620	SPECIAL MULCH COVER	13.39	ACRE
620	WATER	584.7	M. GAL.
621	TEMPORARY SEEDING	9.83	ACRE
621	SILT FENCE	1210	LIN. FT.
621	SAND BAG DITCH CHECKS	333	BAG
621	DROP INLET SILT FENCE	50	LIN. FT.
621	SEDIMENT BASIN	7500	CU. YD.
621	OBLITERATION OF SEDIMENT BASIN	7500	CU. YD.
621	SEDIMENT REMOVAL AND DISPOSAL	7570	CU. YD.
621	PIPE FOR SLOPE DRAINS	110	LIN. FT.
621	ROCK DITCH CHECKS	27	CU. YD.
SS & 621	FILTER SOCK (12")	510	LIN. FT.
621	TRIANGULAR SILT DIKE	275	LIN. FT.
SP & 623	SPECIAL SECOND SEEDING APPLICATION	3.56	ACRE
624	SOLID SODDING	77	SQ. YD.
626	EROSION CONTROL MATTING (CLASS 3)	133	SQ. YD.
635	ROADWAY CONSTRUCTION CONTROL	1.00	LUMP SUM
637	MAILBOXES	2	EACH
637	MAILBOX SUPPORTS (SINGLE)	2	EACH
642	RUMBLE STRIPS IN ASPHALT SHOULDERS	3570	LIN. FT.
718	REFLECTORIZED PAINT PAVEMENT MARKING WHITE (6")	4726	LIN. FT.
718	REFLECTORIZED PAINT PAVEMENT MARKING WHITE (24")	28	LIN. FT.
718	REFLECTORIZED PAINT PAVEMENT MARKING YELLOW (6")	4671	LIN. FT.
721	RAISED PAVEMENT MARKERS (TYPE II)	30	EACH
SS & 804	REINFORCING STEEL-ROADWAY (GRADE 60)	13142	POUND
816	DUMPED RIPRAP	6	CU. YD.
	STRUCTURES OVER 20' SPAN		
205	REMOVAL OF EXISTING BRIDGE STRUCTURE (SITE NO. 1)	1.00	LUMP SUM
636	BRIDGE CONSTRUCTION CONTROL	1.00	LUMP SUM
SS & 802	CLASS S CONCRETE-BRIDGE	201.00	CU. YD.
SP, SS, & 802	CLASS S(AE) CONCRETE-BRIDGE	317.50	CU. YD.
803	CLASS 1 PROTECTIVE SURFACE TREATMENT	26.2	GAL.
SS & 804	REINFORCING STEEL-BRIDGE (GRADE 60)	34970	POUND
SS & 804	EPOXY COATED REINFORCING STEEL (GRADE 60)	71920	POUND
SS & 805	STEEL PILING (HP 14X73)	250	LIN. FT.
SP	CORING DRILLED SHAFT	22	LIN. FT.
SP	DRILLED SHAFT (96" DIAMETER)	66	LIN. FT.
SP	PERMANENT STEEL CASING (108" DIAMETER)	36	LIN. FT.
SP	CROSSHOLE SONIC LOGGING (96" DIAMETER)	3	EACH
SP, SS, & 807	STRUCTURAL STEEL IN BEAM SPANS (M270-GR50W)	270610	POUND
SS & 807	PAINTING STRUCTURAL STEEL	4.0	TON
SS & 808	ELASTOMERIC BEARINGS	7870.0	CU. IN.
SS & 809	SILICONE JOINT SEALANT	74	LIN. FT.
812	BRIDGE NAME PLATE (TYPE D)	1	EACH
816	FILTER BLANKET	526	SQ. YD.
816	DUMPED RIPRAP	262	CU. YD.

REVISIONS

DATE	REVISION	SHEET NUMBER
11/20/2019	REVISED "DELAY IN RIGHT OF WAY OCCUPANCY" SP.	22
12/5/2019	ADDED "LANE CLOSURE NOTIFICATION" SS TO GOVERNING SPECIFICATIONS. ADDED "SS &" TO MAINTENANCE OF TRAFFIC PAY ITEM.	3 & 22
12/19/2019	REVISED ROADWAY STANDARD DRAWINGS. REVISED "PLASTIC PIPE" SPECIAL PROVISION AND ADDED "TRAFFIC CONTROL DEVICES IN CONSTRUCTION ZONES (MASH)" SPECIAL PROVISION.	2, 3, 19, & 22
2/13/2020	REVISED "GOALS FOR DISADVANTAGED BUSINESS ENTERPRISE PARTICIPATION" SPECIAL PROVISION. ADDED "ESTABLISHING CONTRACT TIME - WORKING DAY CONTRACT" SPECIAL PROVISION.	3 & 22

DATE REVISED	DATE FILMED	DATE REVISED	DATE FILMED	FED.RD. DIST.NO.	STATE	FED.AID PROJ.NO.	SHEET NO.	TOTAL SHEETS
11-20-19		02-13-20		6	ARK.			
12-05-19				JOB NO.		080504	22	57
12-19-19								

(2) SUMMARY OF QUANTITIES & REVISIONS

STATE OF ARKANSAS
LICENSED PROFESSIONAL ENGINEER
No. 11425
TRINITY D. SMITH

2-18-2020

1/24/2019

R080504.DGN

SUMMARY OF QUANTITIES & REVISIONS

DATE REVISED	DATE FILMED	DATE REVISED	DATE FILMED	FED.RD. DIST.NO.	STATE	FED.AID PROJ.NO.	SHEET NO.	TOTAL SHEETS
				6	ARK.			
				JOB NO.		080504	23	57

(2) SURVEY CONTROL DETAILS

STATE OF ARKANSAS
LICENSED PROFESSIONAL ENGINEER
No. 11425
TRINITY D. SMITH
5-27-19

SURVEY CONTROL COORDINATES

Project Name: s080504
Date: 2/6/2017
Coordinate System: ARKANSAS STATE PLANE - SOUTH ZONE BASED ON GPS CONTROL, 490011 - 490011A
PROJECTED TO GROUND.
Units: U.S. SURVEY FOOT

Point Name	Northing	Easting	Elev	Feature	Description
1	2035884.5078	850593.9457	617.324	CTL	STD AHTD MON STAMPED PN 1
2	2036887.7684	851011.3716	597.559	CTL	STD AHTD MON STAMPED PN 2
3	2037412.9685	851174.2685	596.735	CTL	STD AHTD MON STAMPED PN 3
4	2038178.9565	851355.2269	597.260	CTL	STD AHTD MON STAMPED PN 4
5	2038521.9081	851230.6271	601.210	CTL	STD AHTD MON STAMPED PN 5
6	2038959.1512	851060.8777	622.087	CTL	STD AHTD MON STAMPED PN 6
7	2039588.7624	850872.2374	607.047	CTL	STD AHTD MON STAMPED PN 7
8	2039970.7173	850782.6760	598.956	CTL	STD AHTD MON STAMPED PN 8
9	2038462.5457	850526.8811	597.685	CTL	STD AHTD MON STAMPED PN 9
100	2037843.0192	851364.7505	602.349	GPS	AHTD GPS MON 490011
101	2036382.5484	850824.3991	618.135	GPS	AHTD GPS MON 490011A
990	2037923.9278	851650.5560	582.361	BM	NGS BM J 163

*Note - Rebar and Cap - Standard - 5/8" Rebar with 2" Aluminum Cap stamped
*(standard markings common to all caps), or as indicated
(other markings indicated in the point description of the individual point).
ALL DISTANCES ARE GROUND.
USE CAF = 1.0 FOR STAKEOUT FOR THIS PROJECT.
A PROJECT CAF OF 0.9999426314 HAS BEEN USED TO COMPUTE THE ABOVE GROUND COORDINATES.
THIS CAF IS INTENDED FOR USE WITHIN THE PROJECT LIMITS.
GRID DISTANCE = GROUND DISTANCE X CAF.
GRID COORDINATES ARE STORED UNDER FILE NAME s080504gi.CTL
HORIZONTAL DATUM: NAD 83 (1997)
VERTICAL DATUM: NAVD 88 POSITIONAL ACCURACY THIRD ORDER, UNLESS SPECIFIED OTHERWISE AT A SPECIFIC POINT.

REFERENCE POINTS (1500 SERIES) ARE TO BE USED TO ESTABLISH CONTROL IF THE PRIMARY CONTROL POINTS LISTED ABOVE HAVE BEEN DESTROYED.
REFERENCE POINTS ARE NOT TO BE USED FOR VERTICAL CONTROL

BASIS OF BEARING:
ARKANSAS STATE PLANE GRID BEARINGS - 0302-SOUTH ZONE
DETERMINED FROM GPS CONTROL POINTS: 490011 - 490011A
CONVERGENCE ANGLE: 00 51 30 LEFT AT PN: 3 LT: N 34-38-57 LG: W093-32-00
GRID AZIMUTH = ASTRONOMICAL AZIMUTH - CONVERGENCE ANGLE.

HWY. 27

POINT NAME	TYPE	STATION	NORTHING	EASTING
8000	POB	100+00.00	2036964.9648	851024.7325
8001	P.C.	101+99.44	2037148.7292	851102.2302
8003	P.T.	119+81.81	2038886.4314	851120.0220
8004	P.C.	119+95.37	2038899.0351	851115.0082
8006	P.T.	123+00.99	2039188.4908	851017.3882
8007	POE	124+28.95	2039311.7455	850983.0197

1/18/2019

R080504.DGN

DATE REVISED	DATE FILMED	DATE REVISED	DATE FILMED	FED.RD. DIST.NO.	STATE	FED.AID PROJ.NO.	SHEET NO.	TOTAL SHEETS
				6	ARK.			
				JOB NO.		080504	24	57

(2) SURVEY CONTROL DETAILS

STATE OF ARKANSAS
LICENSED PROFESSIONAL ENGINEER
No. 11425
TRINITY D. SMITH
5-21-19

POB 100+00.00
8000
N 22°51'59" E
199.44'
P.C. 101+99.44
8001
STA. 101+99.44
BEGIN JOB 080504
LOG MILE 9.81
105
SURVEY BASELINE N 17°13'55" E
549.88'
PN:3
PD:STD AHTD MON STAMPED PN 3
P.I. = 111+38.44
Δ = 44°33' 34" LT.
D = 2°30'00"
T = 939.00'
L = 1782.37'
P.C. = 101+99.44
P.T. = 119+81.81
e = 0.034'/'
Ls = 200'
110
SURVEY BASELINE N 23°53'24" E
470.35'
HWY. 27
SURVEY BASELINE N 71°06'04" W
875.55'
PN:4
PD:STD AHTD MON STAMPED PN 4
SURVEY BASELINE N 01°37'26" W
336.07'
PN:100
PD:AHTD GPS MON 490011
P.I. 111+38.44

115
SURVEY BASELINE N 85°10'42" E
706.25'
120
P.T. 119+81.81
P.I. 121+48.33
PN:6
PD:STD AHTD MON STAMPED PN 6
POE 124+28.95
HWY. 27
PN:5
PD:STD AHTD MON STAMPED PN 5
SURVEY BASELINE N 21°13'03" W
469.04'
N 21°41'35" W
13.56'
8003
8004
8006
N 15°34'50" W
127.96'
8007
SURVEY BASELINE N 16°40'44" W
657.26'
PN:7
PD:STD AHTD MON STAMPED PN 7
SURVEY BASELINE N 13°11'47" W
392.31'
P.C. 119+95.37
P.I. = 121+48.33
Δ = 6°6' 45" RT.
D = 2°00'00"
T = 152.95'
L = 305.62'
P.C. = 119+95.37
P.T. = 12300.99
e = 0.028'/'
Ls = 200'
P.T. 123+00.99
STA. 123+00.00
END JOB 080504

1/18/2019
R080504.DGN

SURVEY CONTROL DETAILS

DATE REVISED	DATE FILMED	DATE REVISED	DATE FILMED	FED.RD. DIST.NO.	STATE	FED.AID PROJ.NO.	SHEET NO.	TOTAL SHEETS
				6	ARK.			
				JOB NO.		080504	25	57

(2) PLAN AND PROFILE SHEETS

STATE OF ARKANSAS
LICENSED PROFESSIONAL ENGINEER
No. 11425
TRINITY D. SMITH
5-21-19

POB 100+00.00

99.44

100' TRANSITION

99.44

101+00.00
46.94

101+99.44

102+00.00
45.00

N 22°51'59" E
199.44'

PROPOSED R/W & FENCE

EXISTING R/W

HWY. 27

EXISTING R/W

STA. 103+90 IN PLACE
24" X 105' R.C. CROSS DRAIN
D.A. = 6 AC. 025= 35 CFS
RETAIN

103+38.18
46.23

103+50.14
50.00

103+99.54
48.41

104+01.14
41.74

105

WIRE FENCE (TYPE C)

STA.	STA.	SIDE	LIN. FT.
101+00	104+60	LT.	360

STA. 105+55 IN PLACE
15" X 22" X 48' C.M. PIPE CULVERT
REMOVE
CONST. APPROACH= 85 CU. YD.

105+00.00
45.00

MOCKINGBIRD LN.

106+00.00
60.00

CONST. LIMITS

20'

+5%

16'

11'

6'

11.5'

9.5'

STA. 106+85 CONST.
APPROACH ON RT. = 15 CU. YDS.

P.I. = 111+38.44
Δ = 44°33' 34" LT.
D = 2°30'00"
T = 939.00'
L = 1782.37'
P.C. = 101+99.44
P.T. = 119+81.81
e = 0.034'/'
Ls = 200'

108+00.00
120.00

109+50.00
90.00

110

DEER CREEK

50 FT. BUFFER

PROPOSED R/W

CONST. LIMITS

STA. 110+16.92
BR. END

STA. 112+99.08
BR. END

HWY. 27

EXISTING R/W

CONST. LIMITS

EXISTING R/W

MATHEW HILL RD.

50 FT. BUFFER

P.I. 111+38.44

STA. 101+99.44
BEGIN JOB 080504
LOG MILE 9.81

OBLITERATION OF EXISTING PAVEMENT

REFER TO SURVEY CONTROL DETAIL SHEETS FOR HORIZONTAL AND VERTICAL CONTROL DATA.

GUARDRAIL

STA.	STA.	SIDE	GUARDRAIL (TYPE A) LIN. FT.	GUARDRAIL TERMINAL (TYPE 2) EACH	THRIE BEAM GUARDRAIL TERMINAL EACH
107+63.77	110+07.52	RT.	150	1	1
108+63.77	110+07.52	LT.	75	1	1
113+08.48	115+52.23	RT.	75	1	1
113+08.48	115+52.23	LT.	150	1	1

STA. 110+40.05 - STA. 112+34.62 IN PLACE
194.57' x 21.74' BRIDGE 02767
CONSISTING OF REINFORCED CONCRETE DECKS SUPPORTED BY REINFORCED CONCRETE MULTI-COLUMN ABUTMENTS & INTERMEDIATE BENTS ON SPREAD FOOTING
REMOVAL OF EXISTING BRIDGE STRUCTURE (SITE NO. 1) = 1.00 LUMP SUM

STA. 100+99.44 BEGIN SUPERELEVATION
STA. 102+99.44 MAX SUPERELEVATION (0.034'/')
STA. 118+00.00 MAX SUPERELEVATION (0.034'/')
STA. 120+00.00 END SUPERELEVATION

P.V.I. 101+99.44
598.08'

P.V.C. 104+50.00
597.82'

P.V.I. 105+50.00
597.72'

VC= 200'
e= 0.12'
K= 431.55

P.V.T. 106+50.00
598.08'

P.V.C. 107+50.00
598.44'

P.V.I. 108+50.00
598.80'

P.V.T. 109+50.00
598.80'

-0.10%

0.36%

0.00%

106+00.00 LT.
594.47

107+05.00 RT.
595.38

VC= 200'
e= -0.09'
K= 554.93

109+50.00 RT.
594.63

RT. D.G. -0.3%

LT. D.G. -0.40%

109+00.00 LT.
593.27

LT. D.G. -2.68%

110+00.00 LT.
590.59

STA. 103+90
INLET = 585.62 LT.
OUTLET = 584.04 RT.

P.V.C. 113+75.45
598.80'

VC= 369'
e= 2.66'
K= 64.00

0.00%

STA. 110+16.92
BR. END

STA. 112+99.08
BR. END

DEER CREEK
AT STA. 110+80 - STA. 112+20 IS CLASSIFIED AS PERENNIAL. THE TOP OF CHANNEL ELEVATION IS 585 FT. MSL. REFER TO SECTION 110.05(c) TEMPORARY FILL OF THE 2014 STANDARD SPECIFICATIONS.

050 DESIGN H.W. ELEVATION 581.6'

630 625 620 615 610 605 600 595 590 585

605 600 595 590 585 580 575 570 565 560

100+00 101+00 102+00 103+00 104+00 105+00 106+00 107+00 108+00 109+00 110+00 111+00 112+00 113+00 114+00 115+00

1/22/2019

R080504.DGN

DATE REVISED	DATE FILMED	DATE REVISED	DATE FILMED	FED.RD. DIST.NO.	STATE	FED.AID PROJ.NO.	SHEET NO.	TOTAL SHEETS
				6	ARK.			
				JOB NO.		080504	26	57

(2) PLAN AND PROFILE SHEETS

STATE OF ARKANSAS
LICENSED PROFESSIONAL ENGINEER
No. 11425
TRINITY D. SMITH
5-21-19

P.I. = 111+38.44
Δ = 44°33' 34" LT.
D = 2°30'00"
T = 939.00'
L = 1782.37'
P.C. = 101+99.44
P.T. = 119+81.81
e = 0.034'/'
Ls = 200'

STA. 116+35 IN PLACE
24" X 75' C.M. PIPE CULVERT
RETAIN & CONSTRUCT
HWY. 88 TURNOUT = 15 CU. YDS.

STA. 119+75 INSTALL
18" X 28' LT. SIDE DRAIN
CONST. APPROACH = 5 CU. YDS.

STA. 120+35 INSTALL
18" X 38' LT. SIDE DRAIN
CONST. APPROACH = 15 CU. YDS.

STA. 122+50 IN PLACE
18" X 40' C.M. PIPE CULVERT
REMOVE AND INSTALL
18" X 36' RT. SIDE DRAIN
CONST. APPROACH = 25 CU. YDS.

STA. 121+35 IN PLACE
18" X 26' C.M. PIPE CULVERT
REMOVE
CONST. APPROACH = 20 CU. YDS.

STA. 123+50 IN PLACE
18" X 24' C.M. PIPE CULVERT
RETAIN
APPROACH ON LT. = 5 CU. YDS

STA. 117+60 IN PLACE
12" X 48' C.M. PIPE CULVERT
LT. SIDE DRAIN
REMOVE TO RIGHT OF WAY

STA. 120+33.18 HWY. 27
STA. 10+00.00 PRIVATE DRIVE
Δ = 75° 03' 20"
R = 50'

100' TRANSITION

STA. 123+90 IN PLACE
24" X 36' R.C. CROSS DRAIN
D.A. = 1 AC. Q25= 10 CFS
RETAIN

115
120
HWY. 88
HWY. 27
MATHEW HILL RD.
CONST. LIMITS R = 50'
PROPOSED R/W
EXISTING R/W
CONST. LIMITS
115+00.00 0.00
115+63.92 63.54
116+93.16 63.30
119+00.00 38.29
P.T. 119+81.81
P.I. 121+48.33
POE 124+28.95
POB 10+00.00
N 21°41'35" W 13.56'
N 15°34'50" W 27.96'
S 31°52'41" E 63.55'
P.C. 119+95.37
P.C. 10+20.44
P.I. 10+36.12
P.T. 10+48.45
POE 10+91.62
P.I. = 121+48.33
Δ = 6°6' 45" RT.
D = 2°00'00"
T = 152.95'
L = 305.62'
P.C. = 119+95.37
P.T. = 12300.99
e = 0.028'/'
Ls = 200'
P.T. 123+00.99
500' RT. TYPE B CURB

STA. 115+92 REMOVE
CONCRETE ISLAND W/TYPE
B CURB FACE = 60 SQ. YDS.

STA. 116+30 REMOVE
CONCRETE ISLAND W/TYPE
B CURB FACE = 65 SQ. YDS.

STA. 115+95 IN PLACE
30" X 69' C.M. PIPE CULVERT
REMOVE AND INSTALL
30" X 30' RT. SIDE DRAIN AT STA. 116+10
CONST. APPROACH = 55 CU. YDS.

STA. 119+45 CONSTRUCT
DI ON RT. H = 3'-4"
18" X 145' R.C PIPE CULVERT W/FES
TYPE ST = 1'-6" X 3'-0" (USE I VANE GRATE)
18" X 145' R.C. PIPE (CLASS III)
(TYPE 3 BEDDING)

STA. 120+35 IN PLACE
18" X 48' C.M. PIPE CULVERT
REMOVE
CONST. APPROACH = 25 CU. YDS.

STA. 122+20 CONSTRUCT
DI ON RT. H = 3'-4"
18" X 80' R.C PIPE CULVERT W/FES
TYPE ST = 1'-6" X 3'-0" (USE I VANE GRATE)
18" X 80' R.C. PIPE (CLASS III)
(TYPE 3 BEDDING)

STA. 122+65 IN PLACE
18" X 40' C.M. PIPE CULVERT
REMOVE
CONST. APPROACH = 5 CU. YDS.

STA. 123+00.00
END JOB 080504

REFER TO SURVEY CONTROL DETAIL SHEETS FOR HORIZONTAL AND VERTICAL CONTROL DATA.

STA. 100+99.44 BEGIN SUPERELEVATION
STA. 102+99.44 MAX SUPERELEVATION (0.034'/')
STA. 117+88.59 MAX SUPERELEVATION (0.034'/')
STA. 119+88.59 END SUPERELEVATION

STA. 119+88.59 BEGIN SUPERELEVATION
STA. 121+48.18 MAX SUPERELEVATION (0.022'/')
STA. 122+21.43 MAX SUPERELEVATION (0.022'/')
STA. 123+00.00 MATCH EXISTING SUPERELEVATION (0.011'/')

HWY. 27 - MAIN LANES

P.V.I. 121+57.03
625.23'
P.V.T. 123+07.03
619.22'
P.V.I. 124+00.00
615.50'
-4.01%
2.70%
5.77%
18" X 145' @ 3.42%
18" X 80' @ 2.20%
RT. D.G. -6.42%
VC= 369'
e= 2.66'
K= 64.01
P.V.I. 117+44.55
609.44'
P.V.C. 118+28.95
614.31'
P.V.I. 118+96.45
618.20'
VC= 135'
e= -0.52'
K= 44.01
P.V.T. 119+63.95
620.02'
P.V.C. 120+07.03
621.18'
VC= 300'
e= -2.51'
K= 44.75
STA. 118+00
OUTLET = 611.06 RT.
STA. 119+45
TOP = 619.38 RT.
OUTLET = 616.02 RT.
STA. 122+20
TOP = 621.45 RT.
OUTLET = 618.08 RT.
123+00.00 RT.
616.32
123+50.00 RT.
613.11
STA. 123+00
OUTLET = 616.32 RT.
STA. 123+90
INLET = 612.65 LT.
OUTLET = 612.09 RT.
115+36.00 RT.
598.52
P.V.I. 115+60.00
598.80'
116+36.00 RT.
599.08
RT. D.G. 0.56%

DRIVEWAY 120+35

VC= 5'
e= 0.06'
K= 0.52
P.V.I. 10+17.59
621.26'
P.V.I. 10+18.37
621.26'
P.V.C. 10+18.37
621.26'
P.V.T. 10+23.37
621.53'
P.V.I. 10+67.60
626.05'
P.V.I. 10+84.61
626.29'
P.V.I. 10+20.81
621.28'
P.V.C. 10+55.10
624.78'
P.V.T. 10+80.10
626.23'
0.60%
10.22%
1.40%
VC= 25'
e= -0.28'
K= 2.83

625 620 615 610 605 600 595 590 585 580
645 640 635 630 625 620 615 610 605 600 615
115+00 116+00 117+00 118+00 119+00 120+00 121+00 122+00 123+00 124+00 125+00 8+00 9+00 10+00 11+00 12+00

1/22/2019
R080504.DGN

DATE REVISED	DATE FILMED	DATE REVISED	DATE FILMED	FED. ROAD DIST. NO.	STATE	FED. AID PROJ. NO.	SHEET NO.	TOTAL SHEETS
				6	ARK.			
				JOB NO.		080504	27	57
				①		07432 - LAYOUT - 60416		

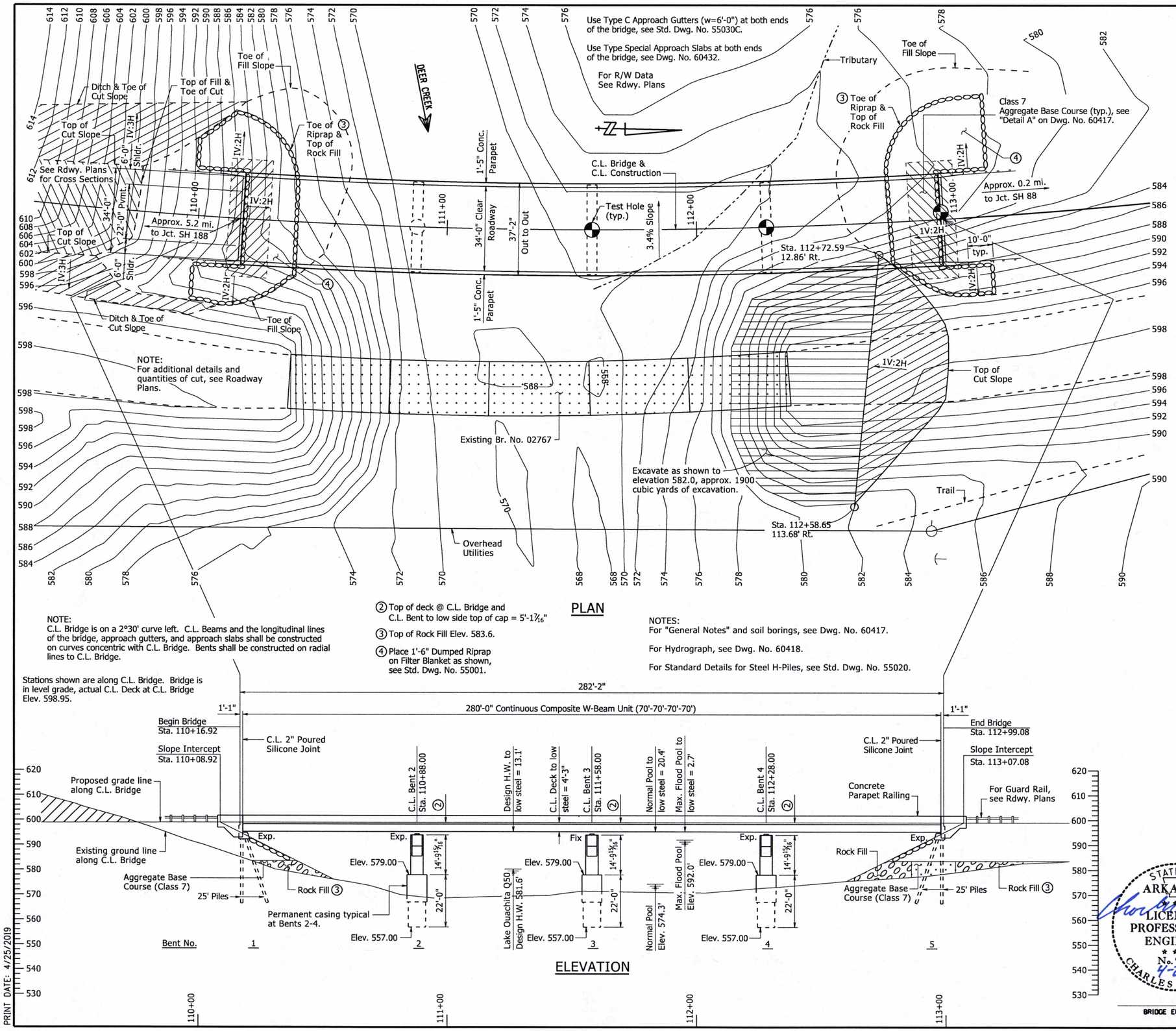

PLAN

NOTE:
C.L. Bridge is on a 2°30' curve left. C.L. Beams and the longitudinal lines of the bridge, approach gutters, and approach slabs shall be constructed on curves concentric with C.L. Bridge. Bents shall be constructed on radial lines to C.L. Bridge.

② Top of deck @ C.L. Bridge and C.L. Bent to low side top of cap = 5'-1 1/16"

③ Top of Rock Fill Elev. 583.6.

④ Place 1'-6" Dumped Riprap on Filter Blanket as shown, see Std. Dwg. No. 55001.

NOTES:
For "General Notes" and soil borings, see Dwg. No. 60417.

For Hydrograph, see Dwg. No. 60418.

For Standard Details for Steel H-Piles, see Std. Dwg. No. 55020.

ELEVATION

PRINT DATE: 4/25/2019

PI = Sta. 111+38.44
Δ = 44°33'34" Left
D = 2°30'00"
T = 939.00'
L = 1,782.37'

HORIZONTAL ALIGNMENT DATA

ALONG C.L. CONSTRUCTION

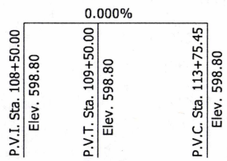

VERTICAL ALIGNMENT DATA

THEORETICAL ELEVATION ALONG C.L. CONSTRUCTION

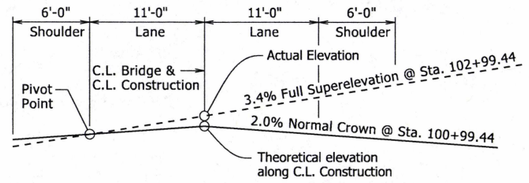

CROSS SLOPE TRANSITION SKETCH

LOOKING AHEAD

HYDRAULIC DATA

FLOOD DESCRIPTION	FREQUENCY	DISCHARGE	①NATURAL WATER SURFACE ELEVATION	WATER SURFACE ELEV. WITH BACKWATER	FLOOD ELEV. ON LAKE OUACHITA
	YEARS	CFS	FEET	FEET	FEET
Design	50	5,080	578.2	578.3	581.6
Base	100	6,030	578.9	579.0	583.7
Extreme	500	8,520	580.5	580.6	587.1
Overtopping	>500	-	-	-	-

① Unconstricted water surface without structure or roadway approaches.

Q100 Backwater Elev. for existing structure = 579.0 ft.
Proposed Low Bridge Chord Elev. = 594.70 ft.

Drainage area = 6.1 square miles.
Historical H.W. Elev. = 590.1 ft. (Record high stage on Lake Ouachita, spillway crest Elev. 592.0 ft.)

STATE OF ARKANSAS
CHARLES R. ELLIS
LICENSED PROFESSIONAL ENGINEER
No. 9235
4-25-19

BRIDGE ENGINEER

SHEET 1 OF 2
LAYOUT OF BRIDGE
HWY. 27 OVER DEER CREEK
DEER CREEK STR. & APPRS. (S)
MONTGOMERY COUNTY

ROUTE 27 SEC. 7

ARKANSAS STATE HIGHWAY COMMISSION
LITTLE ROCK, ARK.

DRAWN BY: KWY DATE: 10/31/17
CHECKED BY: CST DATE: 2/8/18
DESIGNED BY: KWY DATE: 10/17
FILENAME: b080504x1_l1.dgn
SCALE: 1" = 20'

BRIDGE NO. 07432 DRAWING NO. 60416

DATE REVISED	DATE FILMED	DATE REVISED	DATE FILMED	FED. ROAD DIST. NO.	STATE	FED. AID PROJ. NO.	SHEET NO.	TOTAL SHEETS
				6	ARK.			
				JOB NO.		080504	28	57
				①		07432 - LAYOUT - 60417		

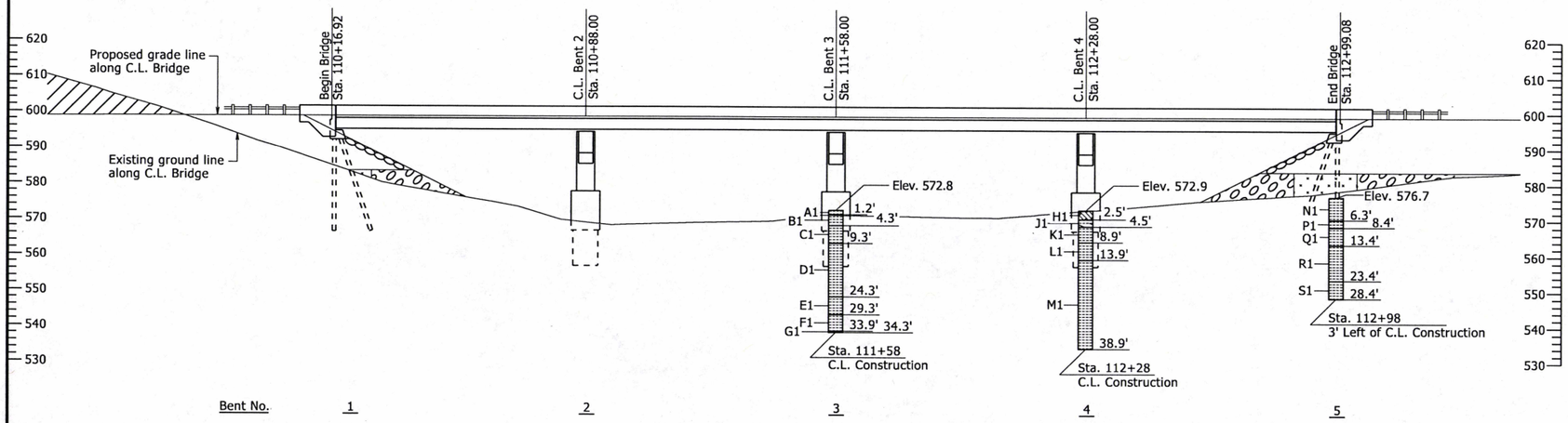

ELEVATION OF SOIL BORINGS

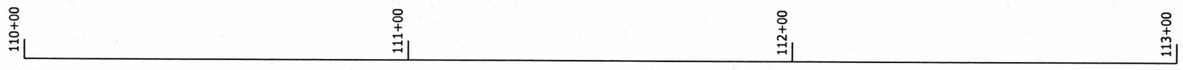

"N" VALUES

Sta. 111+58 - C.L. Construction

Sta. 112+28 - C.L. Construction
5.0- 6.0,N=55

Sta. 112+98 - 3' Left of C.L. Construction
4.8- 5.1,N=60(3")

BORING LEGEND

A1-SHALE - Weathered, Soft, Brown and Gray (No Recovery)
B1-SHALE - Slightly Weathered, Hard, Steeply Dipping, Dark Gray
C1-SHALE - Unweathered, Hard, Steeply Dipping, Frequent Fractures, Frequent Quartz Seams, Dark Gray
D1-SHALE - Unweathered, Hard with Very Hard Layers, Steeply Dipping, Frequent Fractures, Frequent Slickensides, Frequent Calcite and Quar
E1-SHALE - Unweathered, Hard with Very Hard Layers, Steeply Dipping, Frequent Slickensides, Frequent Calcite and Quartz Seams and Layers
F1-SHALE - Unweathered, Very Hard, Steeply Dipping, Frequent Slickensides, Dark Gray
G1-CHERT - Unweathered, Hard, Steeply Dipping, Gray
H1-Clay with Gravel (Shale Fragments)
J1-SHALE - Highly Weathered, Soft, Dark Gray
K1-SHALE - Weathered, Medium Hard, Dark Gray
L1-SHALE - Slightly Weathered, Hard, Steeply Dipping, Occasional Fractures, Frequent Calcite and Quartz Seams, Dark Gray
M1-SHALE - Unweathered, Hard, Steeply Dipping, Frequent Fractures, Frequent Quartz Seams, Dark Gray
N1-SHALE - Weathered, Medium Hard, Dark Gray
P1-SHALE - Weathered, Medium Hard, Steeply Dipping, Dark Gray
Q1-SHALE - Unweathered, Hard, Frequent Fractures, Steeply Dipping, Dark Gray
R1-SHALE - Unweathered, Hard, Frequent Fractures, Steeply Dipping, Occasional Quartz Seams, Dark Gray
S1-SHALE - Unweathered, Hard, Steeply Dipping, Occasional Fractures, Frequent Calcite and Quartz Seams and Layers, Dark Gray

① 5'-0" clear from rock fill to pile for both longitudinal and transverse direction.

② Top of Rock Fill Elev. 583.6.

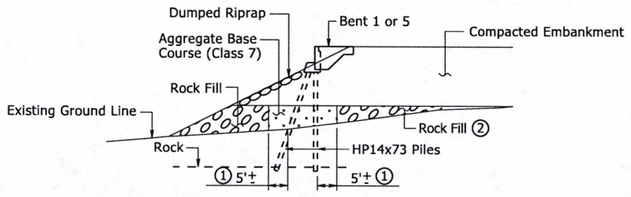

Where rock fill is used for embankment construction, aggregate base course (Class 7), in accordance with Subsection 303.02, shall be placed as shown in areas where piling will be located. Aggregate base course (Class 7) shall be paid for as "Rock Fill".

At the Contractor's option preboring or other methods as approved by the Engineer may be used to facilitate pile installation thru the aggregate base course (Class 7) material at these locations. Preboring or other methods used for installation of piles where rock fill is used for embankment construction will not be paid for separately but shall be included in item "Steel Piling (HP 14x73)".

DETAIL A

NO SCALE

GENERAL NOTES

BENCH MARK: Vertical Control Data are shown on the Survey Control Data Sheets.

CONSTRUCTION SPECIFICATIONS: Arkansas State Highway and Transportation Department Standard Specifications for Highway Construction (2014 edition) with applicable Supplemental Specifications and Special Provisions. Unless otherwise noted on the plans, Section and Subsection refer to the Standard Construction Specifications.

DESIGN SPECIFICATIONS: AASHTO LRFD Bridge Design Specifications, 7th Edition (2014), with 2015 interim revisions.

LIVE LOADING: HL-93
SEISMIC ZONE: 1 S_{DI}=0.061 SITE CLASS=B

MATERIALS AND STRENGTHS:

Class S(AE) Concrete (Superstructure)	f'c = 4,000 psi
Class S Concrete (Substructure)	f'c = 3,500 psi
Reinforcing Steel (AASHTO M 31 or M 322, Type A)	fy = 60,000 psi
Structural Steel (AASHTO M 270, Gr. 36)	Fy = 36,000 psi
Structural Steel (AASHTO M 270, Gr. 50W)	Fy = 50,000 psi

BORING LOGS: Boring logs may be obtained from the Construction Contract Procurement Section of the Program Management Division.

STEEL PILING: All piling shall be HP 14x73 (Grade 50) and shall be driven with an approved air, steam or diesel hammer to a minimum safe bearing capacity of 130 tons and into the material designated as slightly weathered to unweathered shale on the boring legend. Piling in end bents shall be driven after embankment to bottom of cap is in place. Lengths of piling shown are for estimating quantities and for use in determining payment for cut-off and build-up in accordance with Section 805. Actual pile lengths are to be determined in the field. The Contractor shall use approved steel H-Pile driving points on all piles.

DRILLED SHAFTS: Drilled Shafts in Bents 2 thru 4 shall be constructed in accordance with Special Provision Job No. 080504 "Drilled Shaft Foundations". Drilled shafts shall be socketed a minimum of 10' into material designated as slightly weathered to unweathered shale on the boring legend. No adjustment to plan tip elevations shall be made without prior approval from the Engineer.

CROSSHOLE SONIC LOGGING: Nondestructive testing shall be performed in accordance with Special Provision Job No. 080504 "Nondestructive Testing of Drilled Shafts".

PAINTING: All Grade 50W structural steel, except galvanized members and surfaces in contact with concrete, within five feet of bridge deck expansion joints shall be painted as specified in Subsection 807.75. The color of paint shall be Brown equal or close to Federal Std. 595B, Color Chip No. 30070 and as approved by the Engineer. The finish system may be applied in the shop. Any damage to the paint system occurring during transport or installation shall be corrected according to the manufacturer's recommendations at no cost to the Department.

BRIDGE DECK: The concrete bridge deck shall be given a tine finish as specified for final finishing in Subsection 802.19 for Class 5 Tined Bridge Roadway Surface Finish.

PROTECTIVE SURFACE TREATMENT: Class 1 Protective Surface Treatment shall be applied to the roadway surface and the roadway face and top of concrete parapet rail in accordance with Section 803.

DETAIL DRAWINGS:	DRAWING NO.
End Bents	60419-60422
Intermediate Bents	60423-60425
Elastomeric Bearings	60426
280'-0" Continuous W-Beam Unit	60427-60431
Type Special Approach Slab	60432
General Notes for Steel Bridge Structures	55006
Details for Steel Bridge Structures	55007
Poured Silicone Joints	55008
Steel H Piling	55020
Type C Approach Gutters	55030C

EXISTING BRIDGE: Existing Bridge No. 02767 (Log Mile 9.96) is 26.6' wide (22.0' Roadway), 202.0' long and consists of five 40'-0" simple spans consisting of reinforced concrete decks supported by reinforced concrete multi-column abutments and intermediate bents on spread footings.

REMOVAL AND SALVAGE: After the new bridge is open to traffic, the Contractor shall remove existing Bridge No. 02767 in accordance with Section 205. Debris from bridge removal shall not enter the waterway. All material from the existing bridge shall become the property of the Contractor except the following which shall remain the property of the Department. All bolted diaphragms and eight (8) of the beams selected by the Engineer shall become property of District 8 and shall be delivered undamaged to the Area Maintenance Headquarters in Montgomery County. The address is 3751 Hwy. 270 West, Pencil Bluff, AR 71965. The contractor should coordinate the delivery with Neil Ford, Area Maintenance Supervisor at 870-326-4432. The bridge name plate shall be delivered undamaged to Arkansas Department of Transportation Headquarters Bridge Division. The address is 10324 Interstate 30, Little Rock, AR 72209.

MAINTENANCE OF TRAFFIC: See Roadway Plans.

STATE OF ARKANSAS
LICENSED PROFESSIONAL ENGINEER
No. 9235
CHARLES R. ELLIS
4-22-19

BRIDGE ENGINEER

SHEET 2 OF 2
LAYOUT OF BRIDGE
HWY. 27 OVER DEER CREEK
DEER CREEK STR. & APPRS. (S)
MONTGOMERY COUNTY

ROUTE 27 SEC. 7

ARKANSAS STATE HIGHWAY COMMISSION
LITTLE ROCK, ARK.

DRAWN BY: KWY DATE: 10/31/17
CHECKED BY: KJT DATE: 4/19/19
DESIGNED BY: KWY DATE: 10/17
FILENAME: b080504x1_l1.dgn
SCALE: 1" = 20'

BRIDGE NO. 07432 DRAWING NO. 60417

PRINT DATE: 4/19/2019

DATE REVISED	DATE FILMED	DATE REVISED	DATE FILMED	FED. ROAD DIST. NO.	STATE	FED. AID PROJ. NO.	SHEET NO.	TOTAL SHEETS
				6	ARK.			
				JOB NO.		080504	29	57
				①		07432 - HYDROGRAPH - 60418		

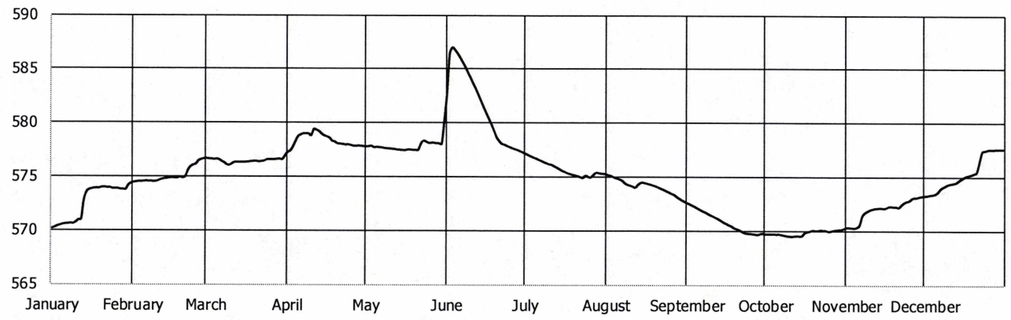

DAILY STAGES FOR JANUARY THRU DECEMBER 2013

This Stage Hydrograph was obtained from the U.S. Army Corps of Engineers river gage data and was plotted by the Arkansas Department of Transportation.

Gage No. BMDA4
Location: Latitude 34°34'23"N, Longitude 93°11'50"W, Ouachita River at Blakely Mountain Dam.

Datum: NGVD29

This hydrograph is for information only.

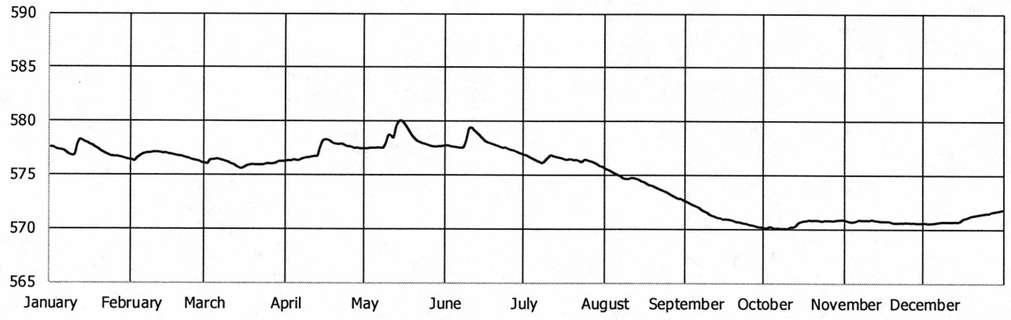

DAILY STAGES FOR JANUARY THRU DECEMBER 2014

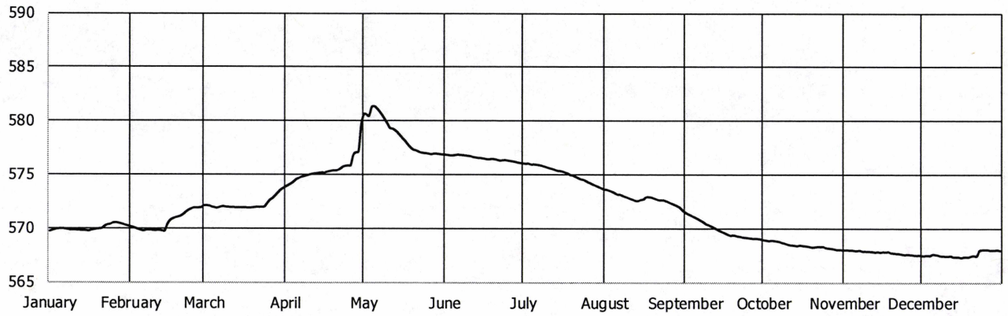

DAILY STAGES FOR JANUARY THRU DECEMBER 2017

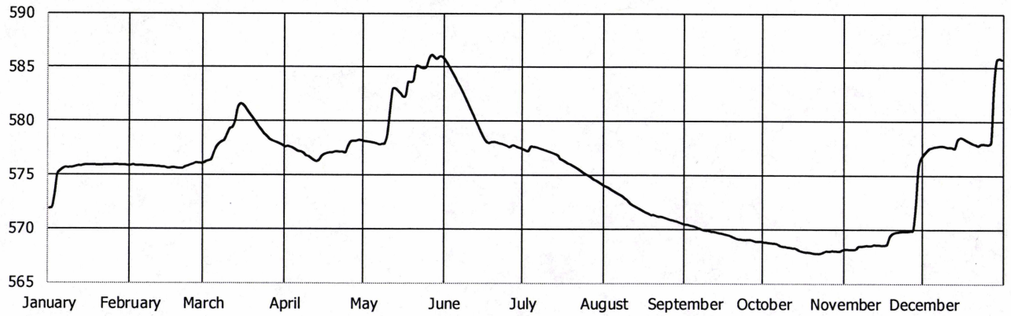

DAILY STAGES FOR JANUARY THRU DECEMBER 2015

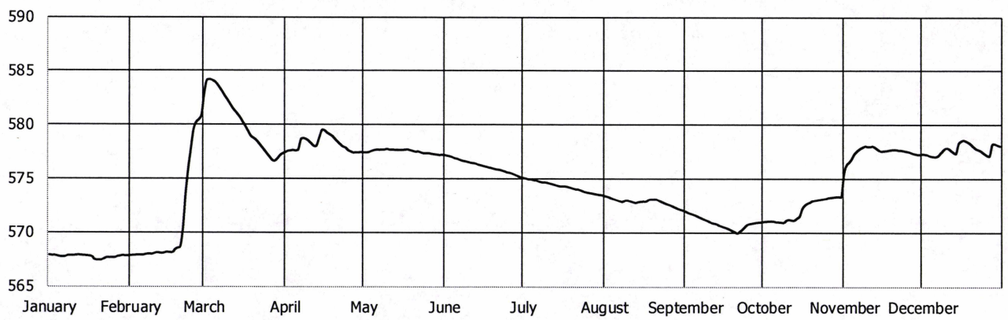

DAILY STAGES FOR JANUARY THRU DECEMBER 2018

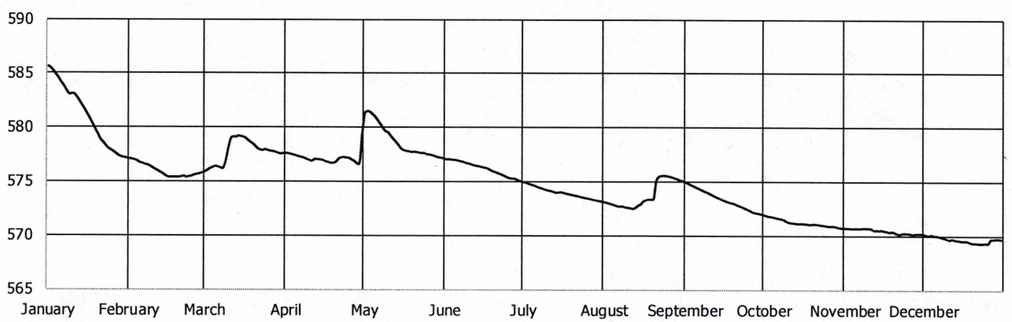

DAILY STAGES FOR JANUARY THRU DECEMBER 2016

STATE OF ARKANSAS
LICENSED PROFESSIONAL ENGINEER
No. 9235
2-4-19
CHARLES R. ELLIS
BRIDGE ENGINEER

HYDROGRAPH - OUACHITA RIVER
DEER CREEK STR. & APPRS. (S)
MONTGOMERY COUNTY

ROUTE 27 SEC. 7

ARKANSAS STATE HIGHWAY COMMISSION
LITTLE ROCK, ARK.

DRAWN BY: TMG DATE: 01/16/19 FILENAME: b080504_hyg.dgn
CHECKED BY: DHP DATE: 2/8/19 SCALE: No Scale
DESIGNED BY: DATE:

BRIDGE NO. 07432 DRAWING NO. 60418

PRINT DATE: 2/14/2019

DATE REVISED	DATE FILMED	DATE REVISED	DATE FILMED	FED. ROAD DIST. NO.	STATE	FED. AID PROJ. NO.	SHEET NO.	TOTAL SHEETS
				6	ARK.			
				JOB NO.		080504	30	57
				①	07432 - END BENTS - 60419			

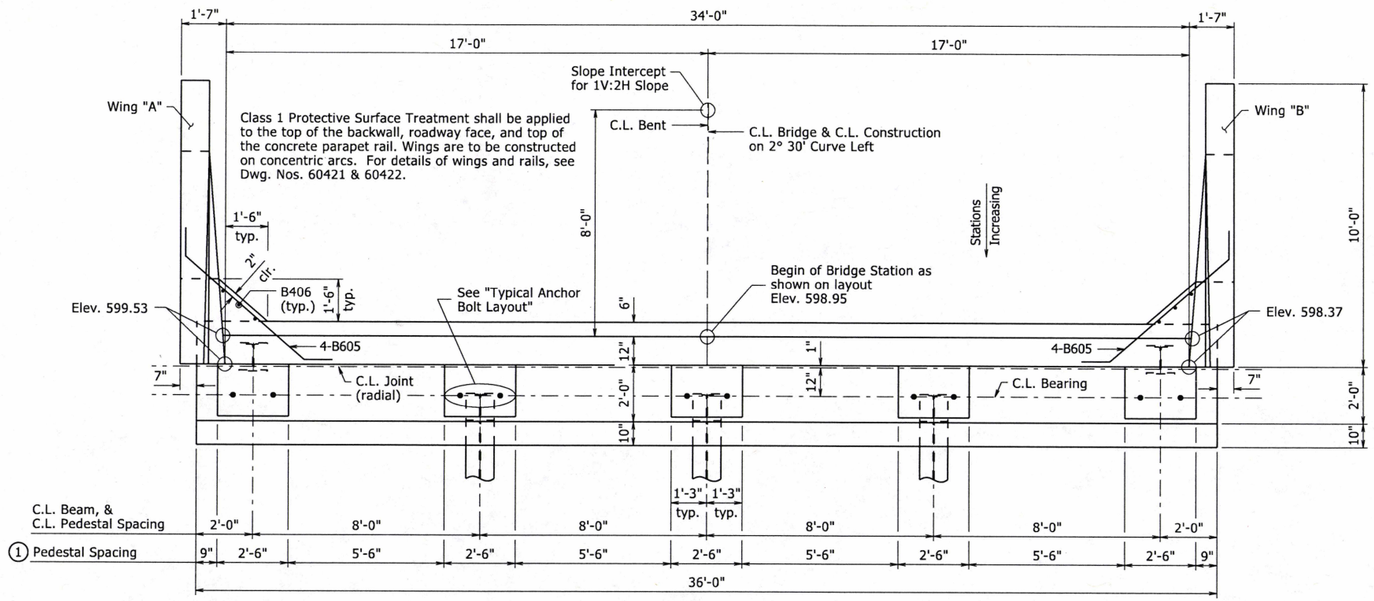

① Pedestals shall be cast level at the elevations shown.

PLAN - BENT 1

⅜"=1'-0"

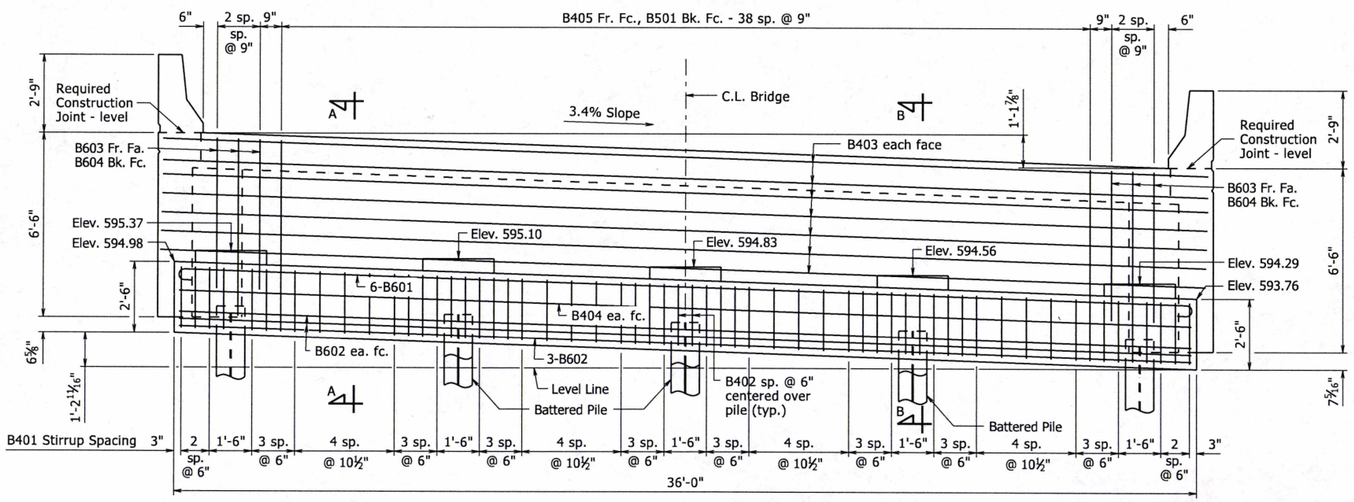

ELEVATION - BENT 1

LOOKING BACK

⅜"=1'-0"

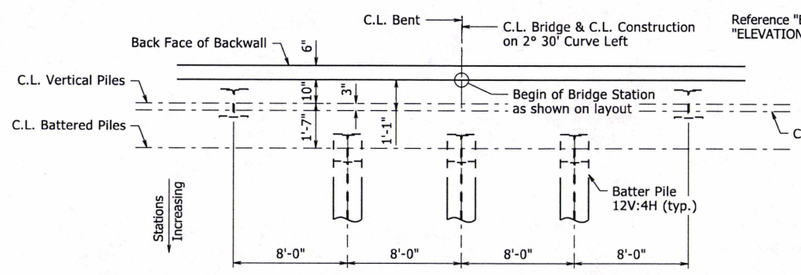

LAYOUT OF PILES - BENT 1

⅜"=1'-0"

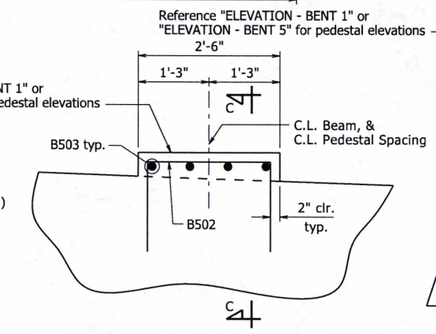

TYPICAL PEDESTAL DETAILS

LOOKING BACK

¾"=1'-0"

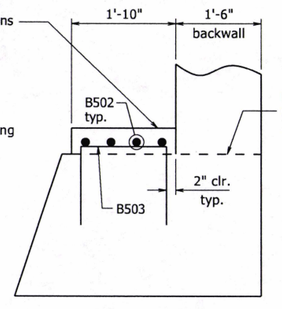

SECTION C-C

NO SCALE

GENERAL NOTES:

For "SUBSTRUCTURE NOTES", see Std. Dwg. No. 55006.

For details of Steel H-Piling, see Std. Dwg. No. 55020.

Structural steel, unless noted otherwise, in end bents shall be AASHTO M 270, Grade 50W and shall be paid for as "Structural Steel in Beam Spans (M 270, Grade 50W)".

No portion of the backwall shall be poured before beams are in place. The portion of the backwall above the optional construction joint at the paving bracket shall not be placed until the deck pour has been made. Refer to the "EXPANSION DEVICE INSTALLATION AT END BENTS" note, see Std. Dwg. No. 55008. No heavy construction equipment or backfill shall be allowed directly behind the backwall before the concrete for the adjacent span has been completed.

For additional information, see Layout.

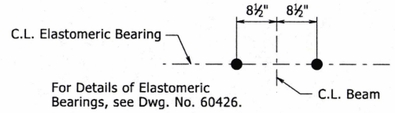

TYPICAL ANCHOR BOLT LAYOUT

NO SCALE

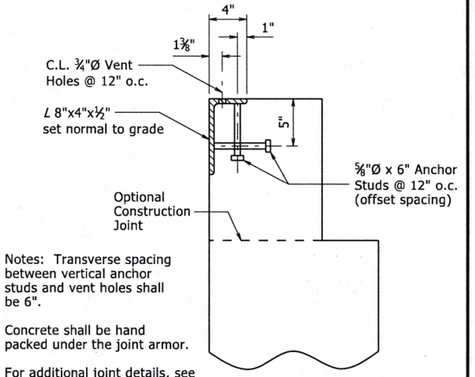

Notes: Transverse spacing between vertical anchor studs and vent holes shall be 6".

Concrete shall be hand packed under the joint armor.

For additional joint details, see Std. Dwg. No. 55008.

DETAIL D

NO SCALE

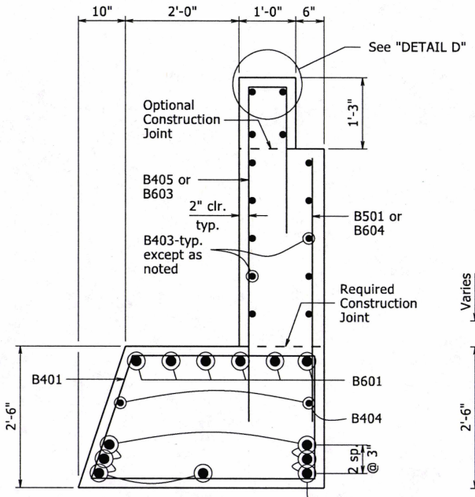

SECTION A-A

NO SCALE

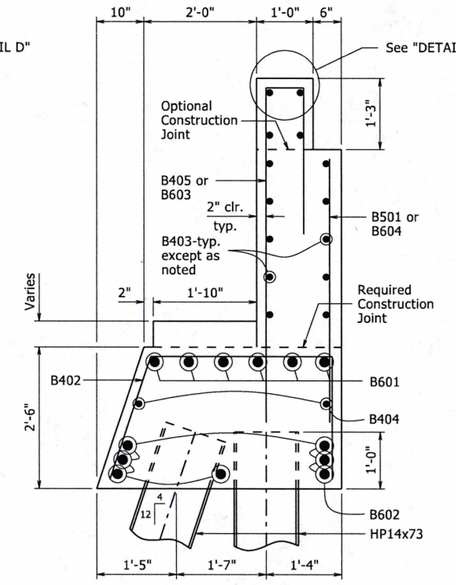

SECTION B-B

NO SCALE

STATE OF ARKANSAS
CHARLES R. ELLIS
LICENSED PROFESSIONAL ENGINEER
No. 9235
2-19-19

BRIDGE ENGINEER

SHEET 1 OF 4
DETAILS OF END BENTS
DEER CREEK

ROUTE SEC.

ARKANSAS STATE HIGHWAY COMMISSION

LITTLE ROCK, ARK.

DRAWN BY: CGP DATE: 08/16/18 FILENAME: b061509x1_b1.dgn
CHECKED BY: DHP DATE: 2/8/19 SCALE: As Noted
DESIGNED BY: JJ DATE: 8/2018
BRIDGE NO. 07432 DRAWING NO. 60419

PRINT DATE: 2/11/2019

DATE REVISED	DATE FILMED	DATE REVISED	DATE FILMED	FED. ROAD DIST. NO.	STATE	FED. AID PROJ. NO.	SHEET NO.	TOTAL SHEETS
				6	ARK.			
				JOB NO.		080504	31	57
				①		07432 - END BENTS - 60420		

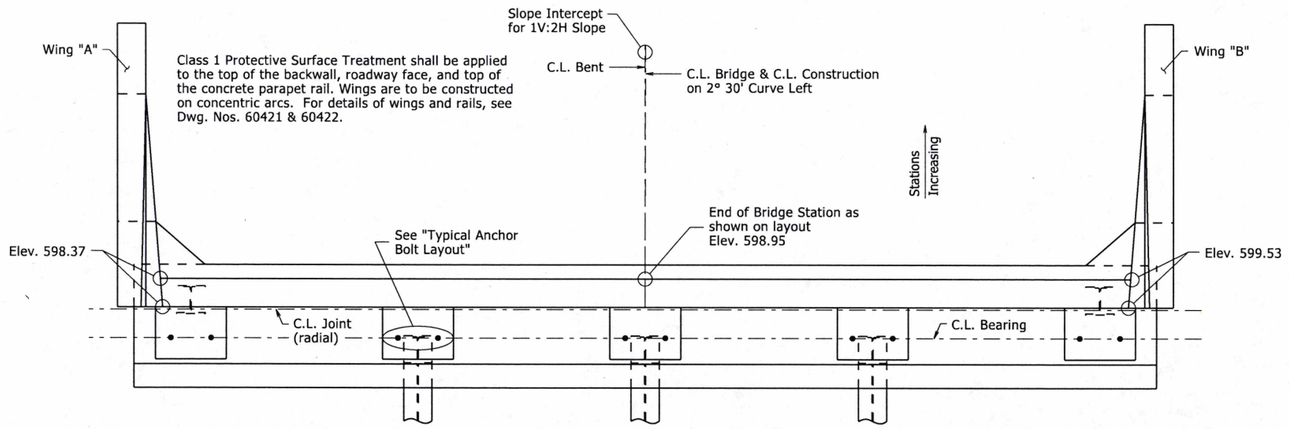

PLAN - BENT 5

Note:

Reinforcing steel, details and dimensions shown for Bent 1, Dwg. No. 60419, are similiar for Bent 5 shown on this sheet except as noted.

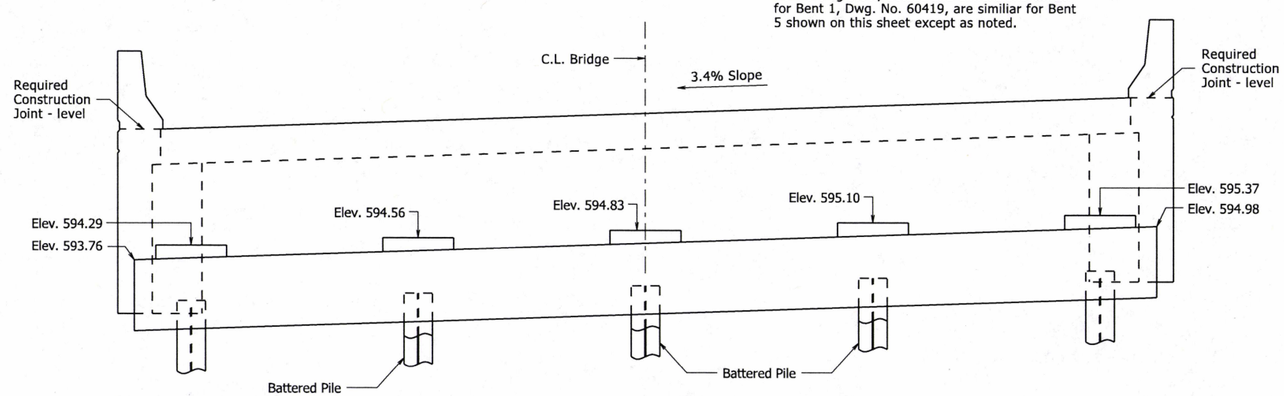

ELEVATION - BENT 5

LOOKING AHEAD

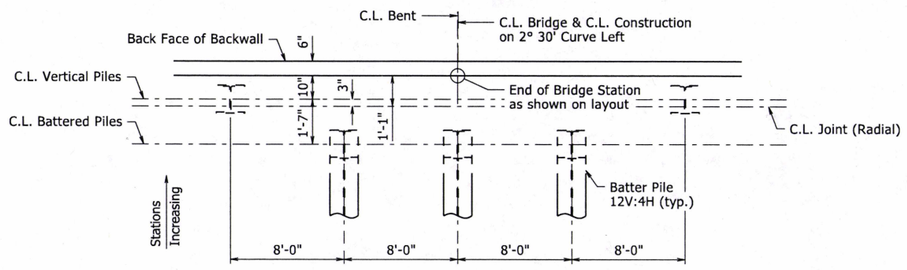

LAYOUT OF PILES - BENT 5

STATE OF ARKANSAS
LICENSED PROFESSIONAL ENGINEER
No. 9235
2-14-19
CHARLES R. ELLIS

BRIDGE ENGINEER

SHEET 2 OF 4
DETAILS OF END BENTS
DEER CREEK

ROUTE SEC.

ARKANSAS STATE HIGHWAY COMMISSION
LITTLE ROCK, ARK.

DRAWN BY: CGP DATE: 08/16/18 FILENAME: b080504_b1.dgn
CHECKED BY: DHP DATE: 2/8/19 SCALE: 3/8"=1'-0"
DESIGNED BY: JJ DATE: 8/2018
BRIDGE NO. 07432 DRAWING NO. 60420

PRINT DATE: 2/7/2019

DATE REVISED	DATE FILMED	DATE REVISED	DATE FILMED	FED. ROAD DIST. NO.	STATE	FED. AID PROJ. NO.	SHEET NO.	TOTAL SHEETS
				6	ARK.			
				JOB NO.		080504	32	57
				07432 - END BENTS - 60421				

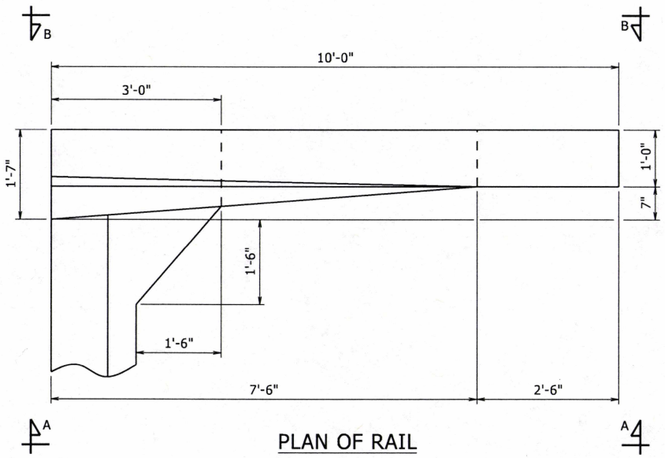

PLAN OF RAIL

NO SCALE

TABLE OF VARIABLES

BENT	WING	ELEV. "R"
1	A	599.53
	B	598.37
5	A	598.37
	B	599.53

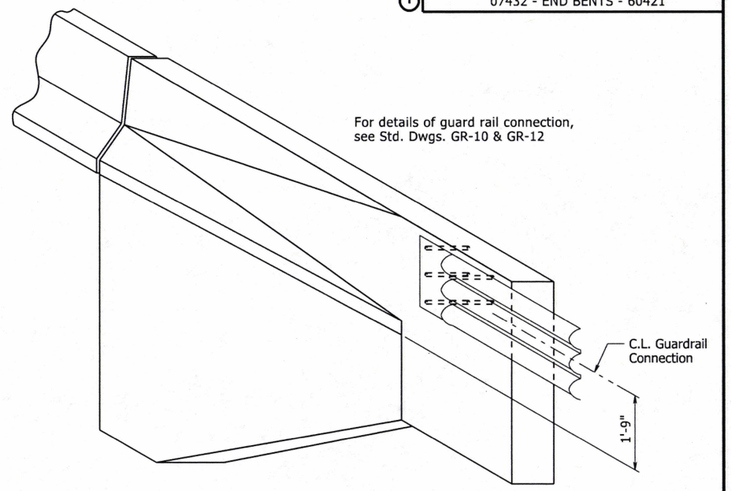

THREE DIMENSIONAL VIEW OF RAIL

NO SCALE

Note:

See Dwg. No. 60422 for "SECTION D-D", "SECTION E-E", and "VIEW C-C"

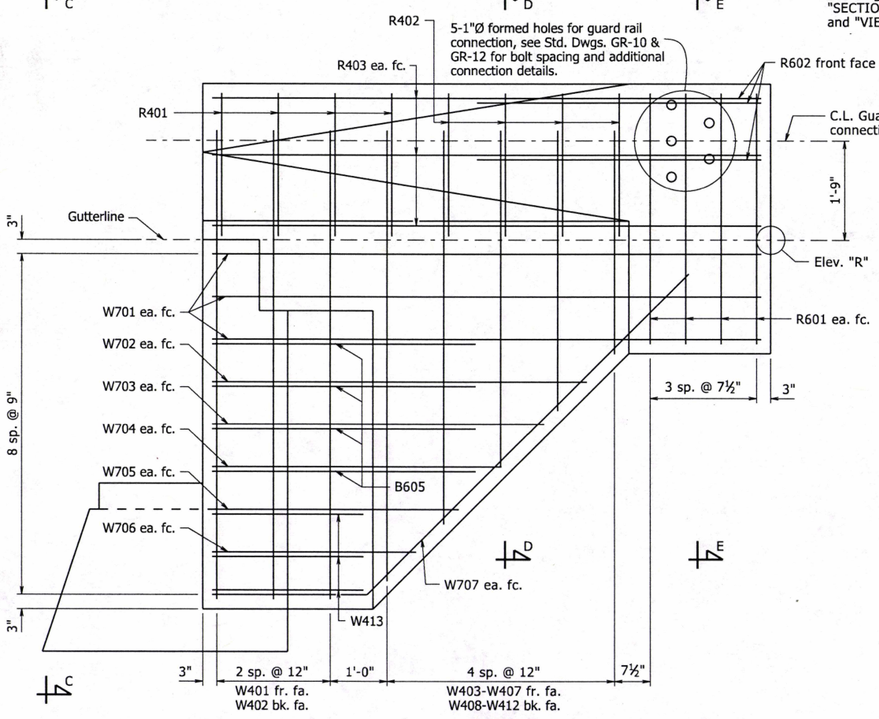

VIEW A-A

NO SCALE

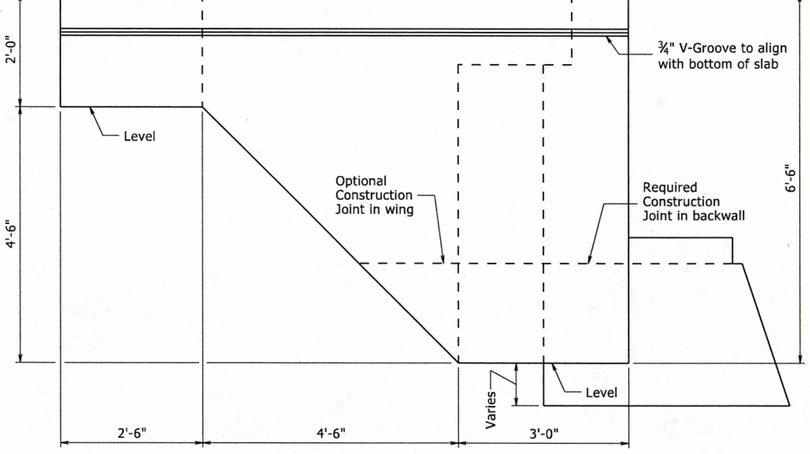

VIEW B-B

NO SCALE

STATE OF ARKANSAS
LICENSED PROFESSIONAL ENGINEER
No. 9235
2-14-19
CHARLES R. ELLIS
BRIDGE ENGINEER

SHEET 3 OF 4
DETAILS OF END BENTS
DEER CREEK

ROUTE SEC.

ARKANSAS STATE HIGHWAY COMMISSION
LITTLE ROCK, ARK.

DRAWN BY: CGP DATE: 08/16/18 FILENAME: b080504_b1.dgn
CHECKED BY: DHP DATE: 2/8/19 SCALE: No Scale
DESIGNED BY: JJ DATE: 8/20/18
BRIDGE NO. 07432 DRAWING NO. 60421

PRINT DATE: 2/14/2019

DATE REVISED	DATE FILMED	DATE REVISED	DATE FILMED	FED. ROAD DIST. NO.	STATE	FED. AID PROJ. NO.	SHEET NO.	TOTAL SHEETS
				6	ARK.			
				JOB NO.		080504	33	57
				①		07432 - END BENTS - 60422		

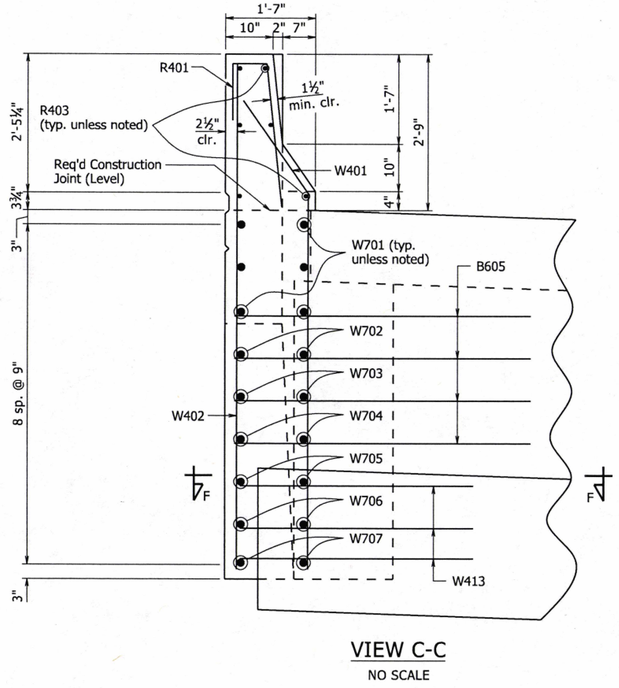

VIEW C-C

NO SCALE

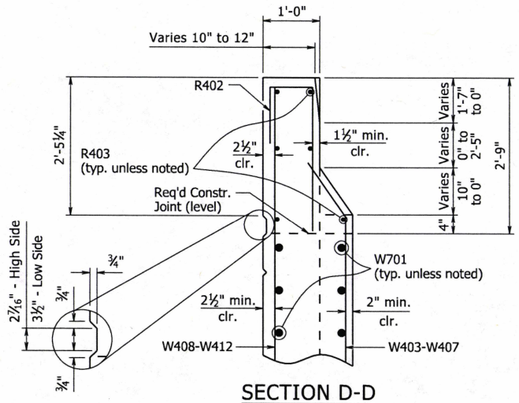

SECTION D-D

NO SCALE

BAR LIST-PER BENT

MARK	NO. REQ'D	LENGTH	P.D.
B401	50	11'-11"	2"
B402	10	7'-6"	2"
B403	14	36'-10"	Str.
B404	2	35'-8"	Str.
B405	39	8'-0"	2"
B406	6	4'-11"	Str.
R401	8	3'-11"	2"
R402	8	4'-0"	2"
R403	12	9'-8"	Str.
W401	6	8'-7"	2"
W402	6	8'-11"	Str.
W403-W407	2 ea.	7'-6 to 3'-6"	2"
W408-W412	2 ea.	8'-7" to 4'-7"	Str.
W413	6	7'-8"	2"
B501	39	5'-8"	Str.
B502	20	5'-2"	2½"
B503	20	4'-6"	2½"
B601	6	37'-0"	4½"
B602	7	35'-8"	Str.
B603	6	9'-0"	4½"
B604	6	5'-11"	Str.
B605	8	7'-7"	4½"
R601	16	4'-5"	Str.
R602	6	5'-0"	Str.
W701	12	9'-8"	Str.
W702	4	6'-7"	Str.
W703	4	5'-10"	Str.
W704	4	5'-1"	Str.
W705	4	4'-4"	Str.
W706	4	3'-7"	Str.
W707	4	10'-8"	5¼"

BENDING DIAGRAMS

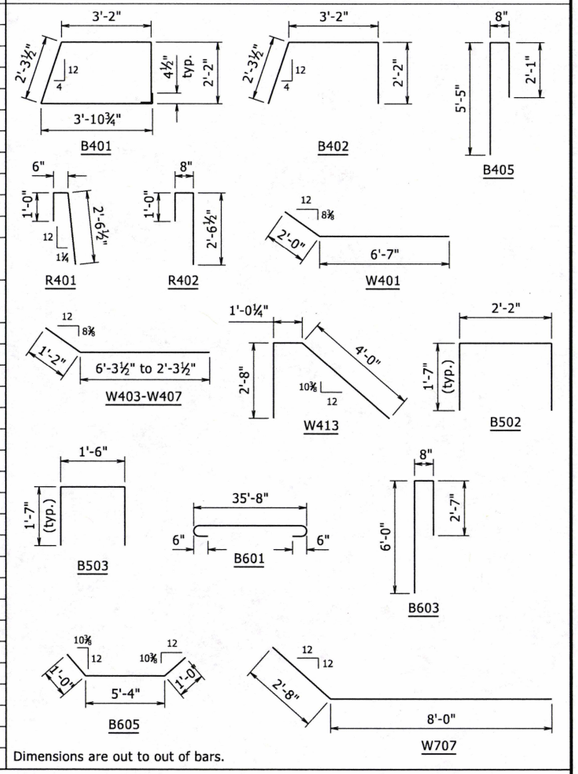

Dimensions are out to out of bars.

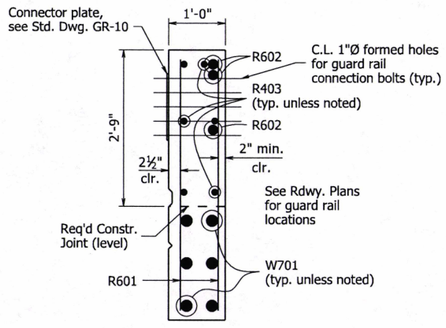

SECTION E-E

NO SCALE

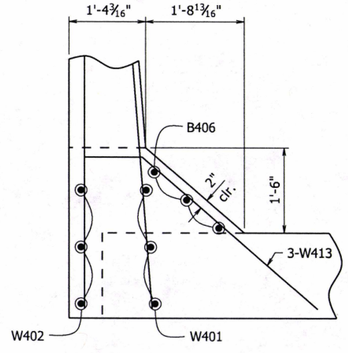

SECTION F-F

NO SCALE

STATE OF ARKANSAS
LICENSED PROFESSIONAL ENGINEER
No. 9235
CHARLES R. ELLIS
2-1919

BRIDGE ENGINEER

SHEET 4 OF 4
DETAILS OF END BENTS
DEER CREEK

ROUTE SEC.

ARKANSAS STATE HIGHWAY COMMISSION
LITTLE ROCK, ARK.

DRAWN BY: CGP DATE: 08/16/18 FILENAME: b061509x1_b1.dgn
CHECKED BY: DHP DATE: 2/8/19 SCALE: No Scale
DESIGNED BY: JJ DATE: 8/2018

BRIDGE NO. 07432 DRAWING NO. 60422

PRINT DATE: 2/11/2019

DATE REVISED	DATE FILMED	DATE REVISED	DATE FILMED	FED. ROAD DIST. NO.	STATE	FED. AID PROJ. NO.	SHEET NO.	TOTAL SHEETS
				6	ARK.			
				JOB NO.		080504	34	57
				①		07432 - INT. BENTS - 60423		

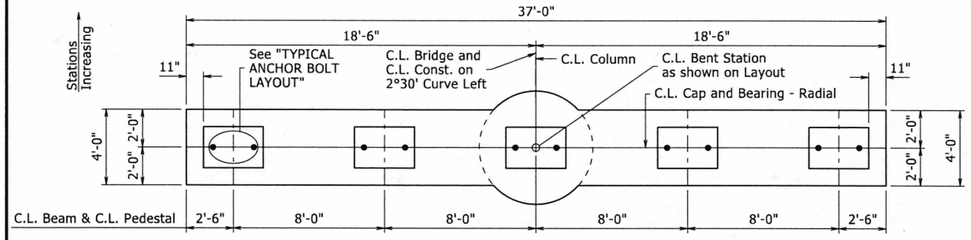

For Pedestal Details, see "TYP. PEDESTAL DETAILS," Dwg. No. 60425.

PLAN

¼" = 1'-0"

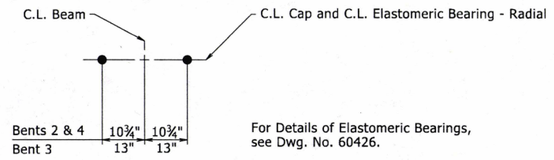

For Details of Elastomeric Bearings, see Dwg. No. 60426.

TYPICAL ANCHOR BOLT LAYOUT

No Scale

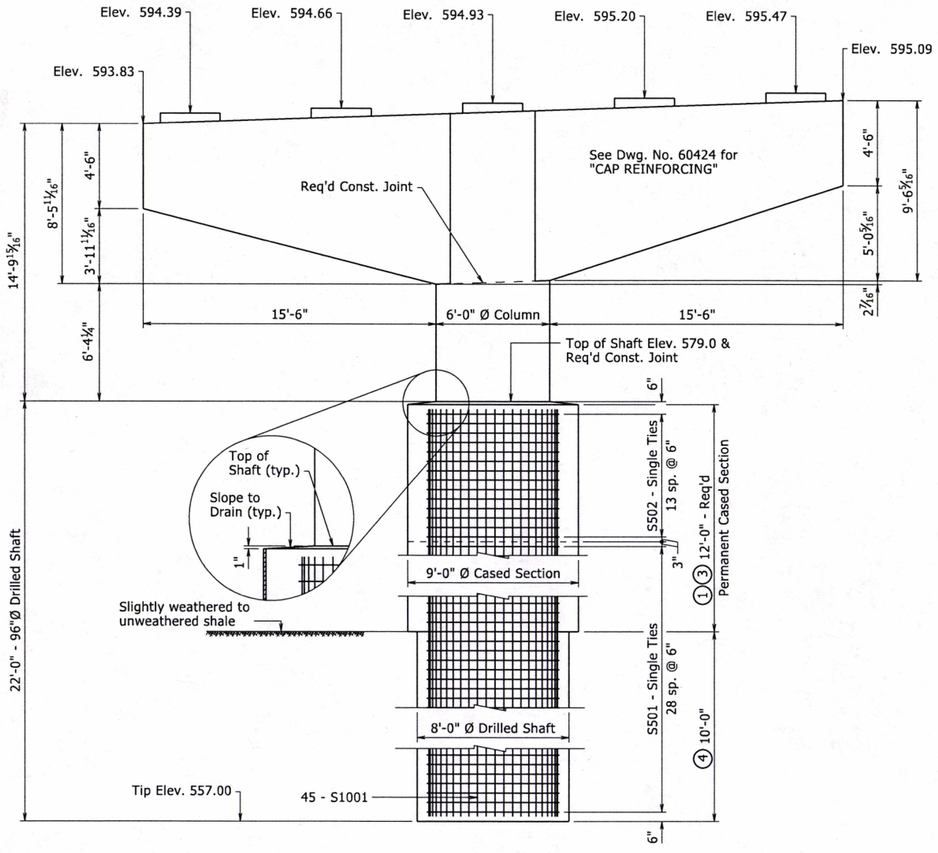

ELEVATION

LOOKING AHEAD
¼" = 1'-0"

Note:
See Dwg. No. 60425 for "SECTION D-D," "SECTION E-E," "SECTION F-F," "SECTION G-G," and Bar List.

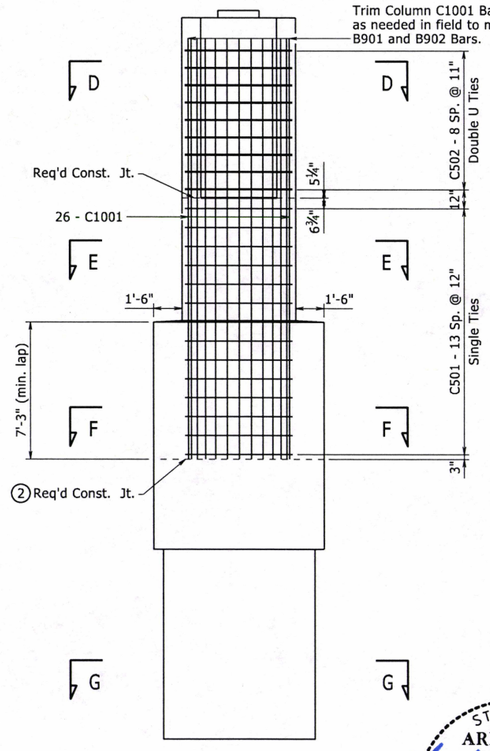

END VIEW

¼" = 1'-0"

GENERAL NOTES

Concrete and Reinforcing Steel placed in the Drilled Shaft will not be paid for directly but shall be considered subsidiary to the unit price bid for "Drilled Shaft (96" Dia.)". No additional payment shall be made for spacers, additional splices, or bracing needed for assembly, shipping, handling, or erecting. Drilled shafts shall conform to Special Provision Job No. 080504 "Drilled Shaft Foundations" and shall be paid for at the unit price bid for "Drilled Shaft (96" Dia.)".

For "SUBSTRUCTURE NOTES," see Std. Dwg. No. 55006.

For additional information, see Layout.

① Length of Permanent Casing shown is for estimating quantities only. Actual lengths are to be determined in the field. See Special Provision Job No. 080504 "Drilled Shaft Foundations."
Permanent casings shall extend to material designated as Shale or Chert on the Boring Legend. Provisions shall be made to rigidly support the casings at locations where the soil that overlies rock is thin, absent or the casing extends above the groundline. The extension of permanent casing into competent rock beyond the depth required to maintain seal is not an acceptable method of rigid support.

② Remove sediment, laitance and weak concrete to sound concrete prior to setting column reinforcement. For additional information, see Special Provision Job No. 080504 "Drilled Shaft Foundations."

③ The upper 9'-0" of the permanent casing shall be painted in accordance with Special Provision Job No. 080504 "Drilled Shaft Foundations."

④ Minimum penetration into competent rock below permanent casing shall not be less than 10 feet.

STATE OF ARKANSAS
LICENSED PROFESSIONAL ENGINEER
No. 9235
CHARLES R. ELLIS
2-14-19
BRIDGE ENGINEER

SHEET 1 OF 3
DETAILS OF INTERMEDIATE BENTS

ROUTE SEC.
ARKANSAS STATE HIGHWAY COMMISSION
LITTLE ROCK, ARK.

DRAWN BY: JJ DATE: 01/30/19 FILENAME: b080504_b2.dgn
CHECKED BY: DHP DATE: 2/8/19 SCALE: As Noted
DESIGNED BY: JJ DATE: 8/2018
BRIDGE NO. 07432 DRAWING NO. 60423

PRINT DATE: 2/14/2019

DATE REVISED	DATE FILMED	DATE REVISED	DATE FILMED	FED. ROAD DIST. NO.	STATE	FED. AID PROJ. NO.	SHEET NO.	TOTAL SHEETS
				6	ARK.			
				JOB NO.		080504	35	57
				07432 - INT. BENTS - 60424				

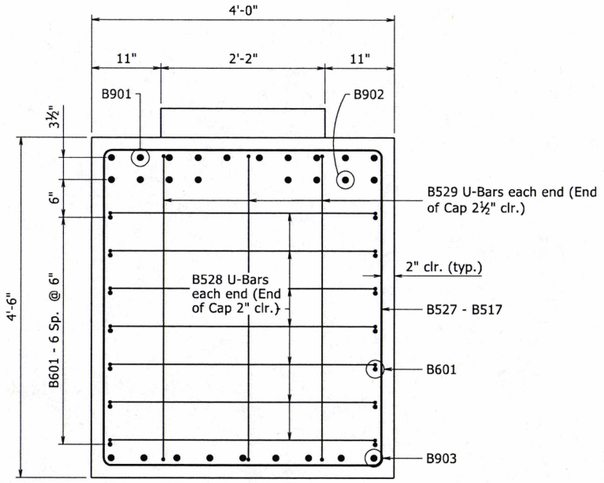

VIEW A-A

1" = 1'-0"

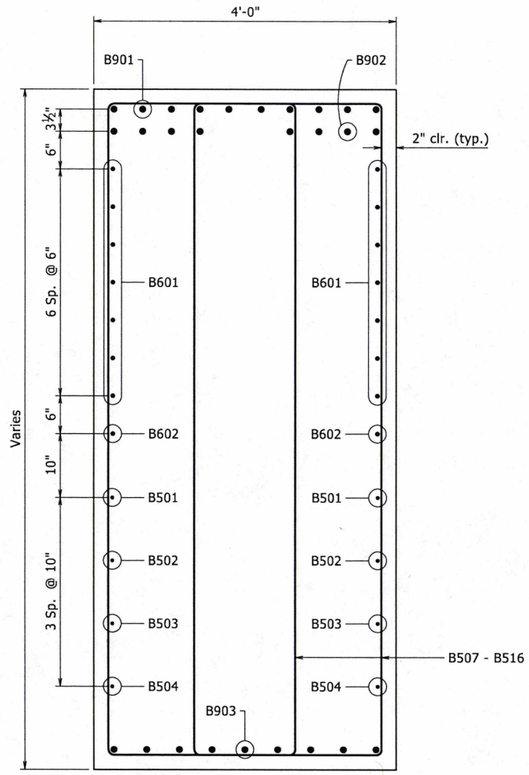

SECTION B-B

1" = 1'-0"

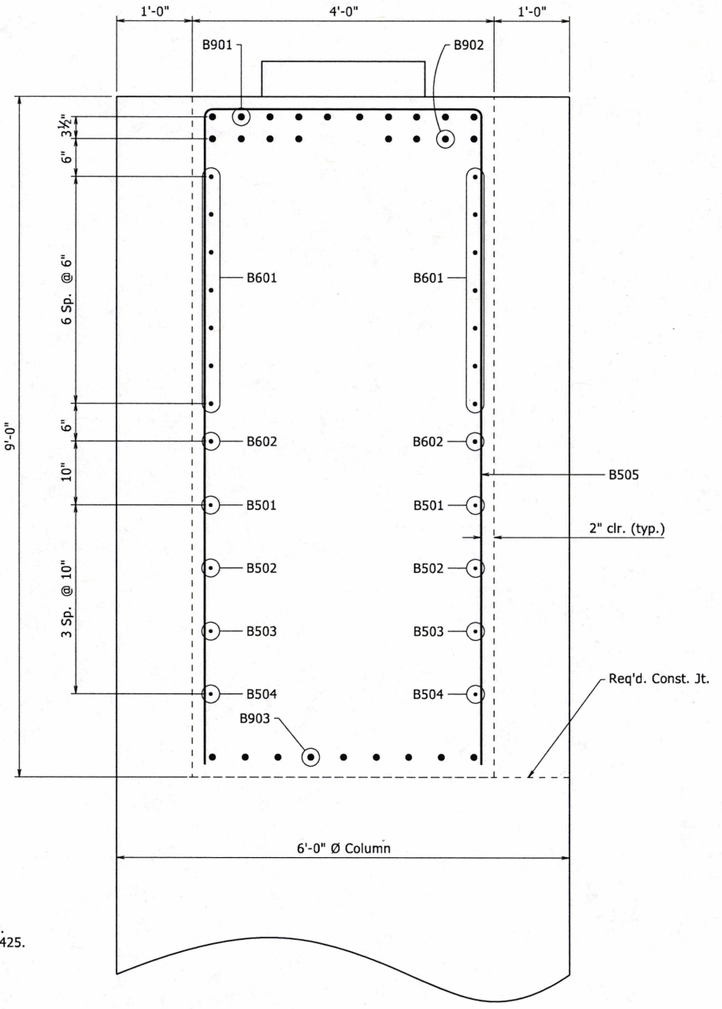

SECTION C-C

1" = 1'-0"

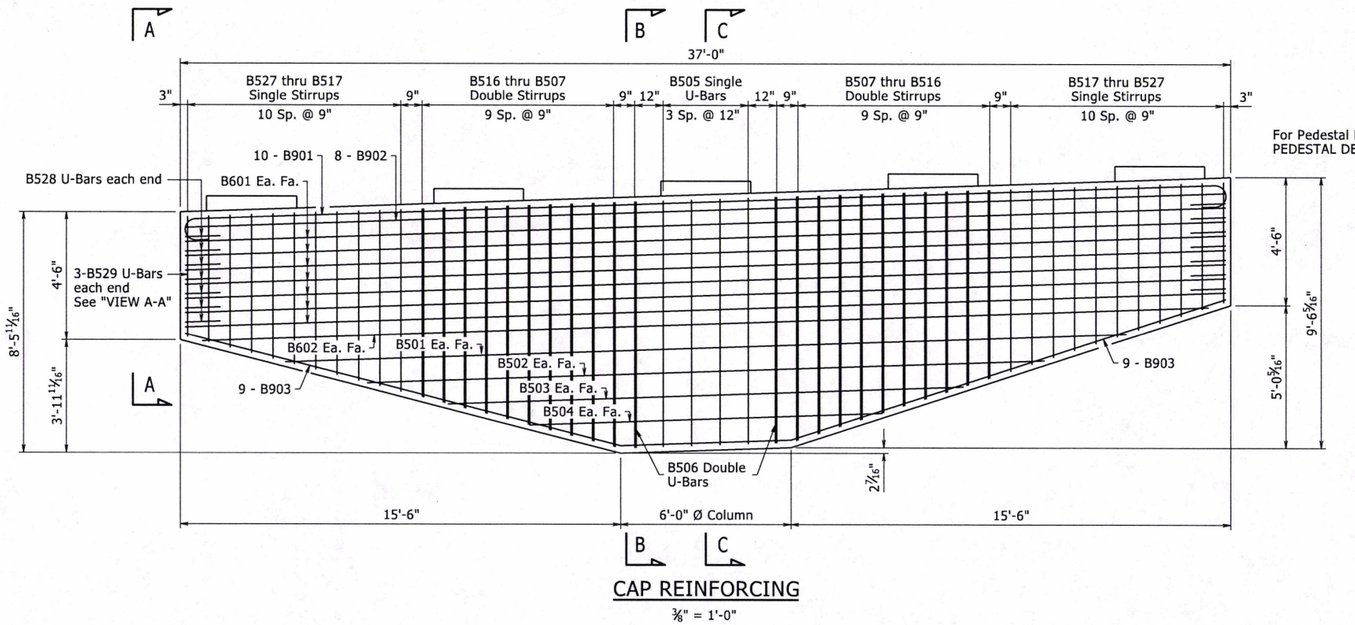

CAP REINFORCING

3/8" = 1'-0"

For Pedestal Reinforcing, see "TYP. PEDESTAL DETAILS," Dwg. No. 60425.

STATE OF ARKANSAS
LICENSED PROFESSIONAL ENGINEER
No. 9235
CHARLES R. ELLIS
2-19-19

BRIDGE ENGINEER

SHEET 2 OF 3
DETAILS OF INTERMEDIATE BENTS

ROUTE SEC.

ARKANSAS STATE HIGHWAY COMMISSION

LITTLE ROCK, ARK.

DRAWN BY: JJ DATE: 01/30/19 FILENAME: b080504_b2.dgn
CHECKED BY: DHP DATE: 2/8/19 SCALE: As Noted
DESIGNED BY: JJ DATE: 8/2018

BRIDGE NO. 07432 DRAWING NO. 60424

PRINT DATE: 2/8/2019

DATE REVISED	DATE FILMED	DATE REVISED	DATE FILMED	FED. ROAD DIST. NO.	STATE	FED. AID PROJ. NO.	SHEET NO.	TOTAL SHEETS
				6	ARK.			
				JOB NO.		080504	36	57
				①		07432 - INT. BENTS - 60425		

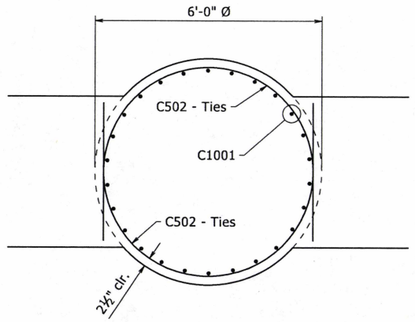

SECTION D-D
½" = 1'-0"

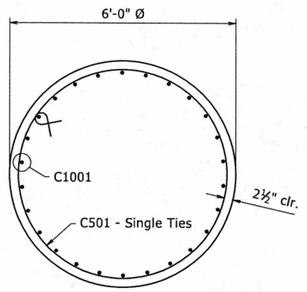

SECTION E-E
½" = 1'-0"

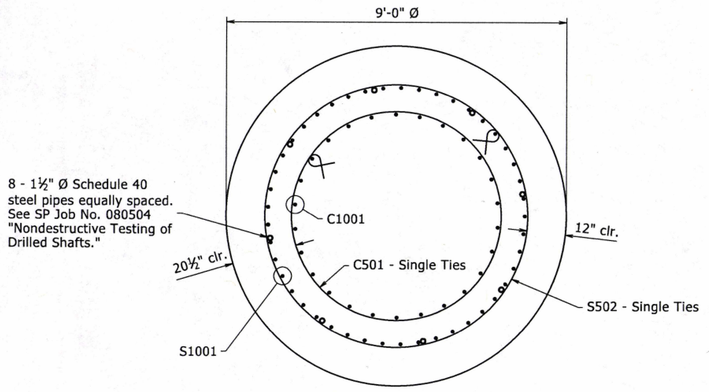

SECTION F-F
½" = 1'-0"

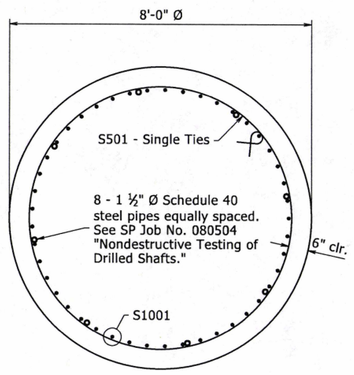

SECTION G-G
½" = 1'-0"

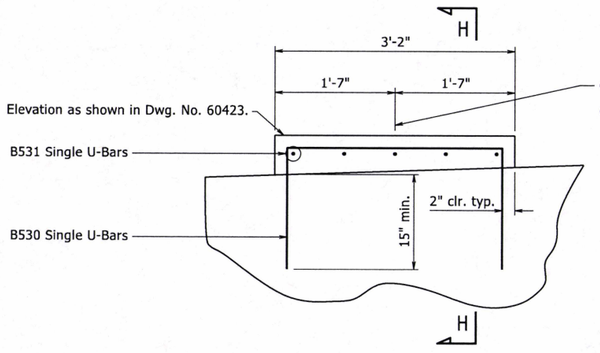

TYP. PEDESTAL DETAILS
1" = 1'-0"

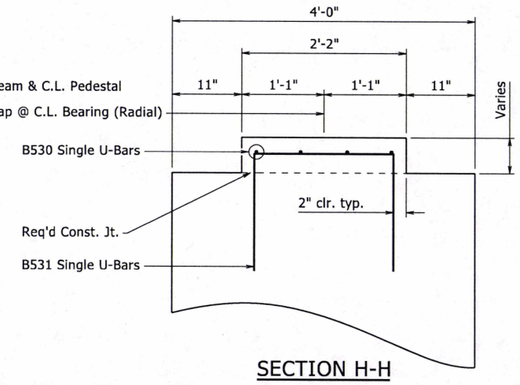

SECTION H-H
1" = 1'-0"

BAR LIST - PER BENT

	MARK	NO. REQ'D.	LENGTH	P. D.
	B501	2	29'-8"	Str.
	B502	2	23'-11"	Str.
	B503	2	18'-2"	Str.
	B504	2	12'-5"	Str.
	B505	4	20'-10"	2½"
	B506	4	19'-9"	2½"
	B507 - B516	4 each	19'-0" to 22'-11"	2½"
	B517 - B527	2 each	16'-4" to 20'-8"	2½"
	B528	14	5'-10"	2½"
	B529	6	6'-4"	2½"
	B530	20	6'-0"	2½"
	B531	25	4'-10"	2½"
	C501	14	18'-11"	3¾"
	C502	18	12'-5"	-
①	S501	29	23'-4"	3¾"
①	S502	14	23'-4"	3¾"
	B601	14	36'-8"	Str.
	B602	2	35'-5"	Str.
	B901	10	39'-2"	9"
	B902	8	36'-8"	Str.
	B903	9	37'-11"	9"
	C1001	26	22'-6"	Str.
①	S1001	45	21'-6"	Str.

BENDING DIAGRAMS

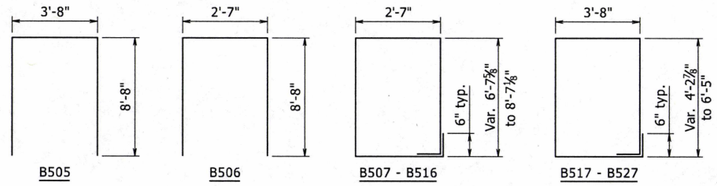

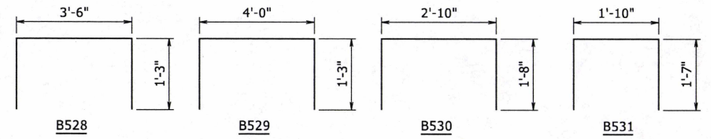

Dimensions are out to out of bars.

① Non-pay item - Subsidiary to the SP Job No. 080504 "Drilled Shaft Foundations."

STATE OF ARKANSAS
LICENSED PROFESSIONAL ENGINEER
No. 9235
CHARLES R. ELLIS
Charles R. Ellis
7-19-19
BRIDGE ENGINEER

SHEET 3 OF 3
DETAILS OF INTERMEDIATE BENTS

ROUTE SEC.
ARKANSAS STATE HIGHWAY COMMISSION
LITTLE ROCK, ARK.

DRAWN BY: JJ DATE: 01/30/19 FILENAME: b080504_b2.dgn
CHECKED BY: DHP DATE: 2/8/19 SCALE: As Noted
DESIGNED BY: JJ DATE: 8/2018
BRIDGE NO. 07432 DRAWING NO. 60425

PRINT DATE: 2/14/2019

DATE REVISED	DATE FILMED	DATE REVISED	DATE FILMED	FED. ROAD DIST. NO.	STATE	FED. AID PROJ. NO.	SHEET NO.	TOTAL SHEETS
				6	ARK.			
				JOB NO.		080504	37	57
				①	07432 - ELASTOMERIC BEARINGS - 60426			

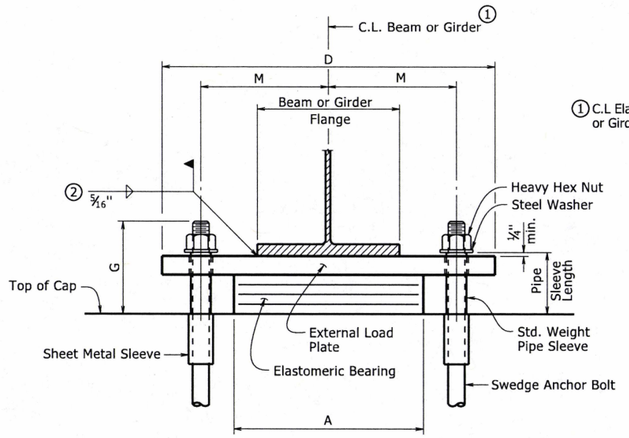

FRONT VIEW - AT BENT NOS. 1,2,4, & 5

① C.L Elastomeric Pad shall be aligned with C.L. Beam or Girder.

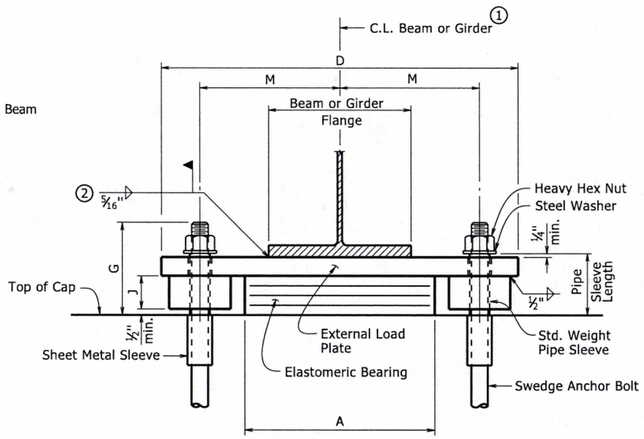

FRONT VIEW - AT BENT NO. 3

Prior to erection of the beams or girders, the Contractor shall verify the orientation of the bearing with respect to Ta and Tb.

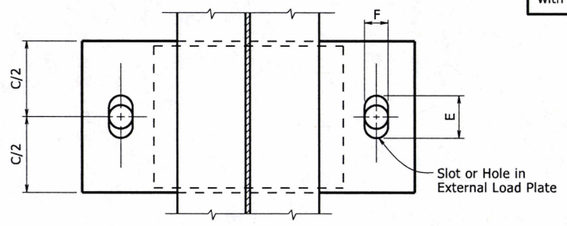

PLAN VIEW - AT BENT NOS. 1,2,4, & 5

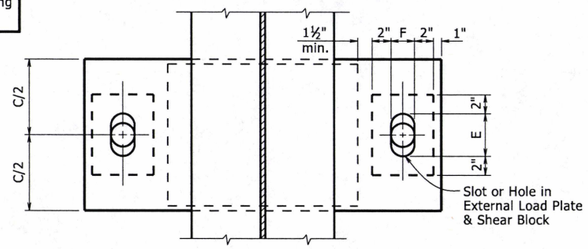

PLAN VIEW - AT BENT NO. 3

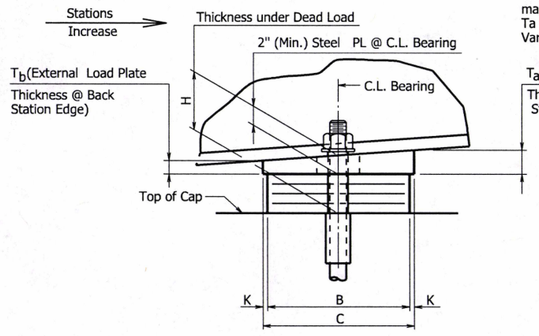

SIDE VIEW - AT BENT NOS. 1,2,4, & 5

The direction of bevel of the external load plate may not be accurately depicted with respect to Ta and Tb values shown in the "Table of Fabricator Variables".

② Unless otherwise approved by the Engineer, welding of the external load plate at expansion bearings to the beam or girder will be allowed only when: 1) the approximate average air temperature during the 24 hour period immediately preceding welding is between 40°F and 80°F; and 2) the slots in the external load plate are positioned to center on the anchor bolts; and 3) no horizontal deformation of the elastomeric pad is evident. If welding at other temperatures is required, the Engineer will provide adjustment data.

Care shall be taken to ensure that the external load plate is in full and complete contact with the beam or girder flange before welding begins.

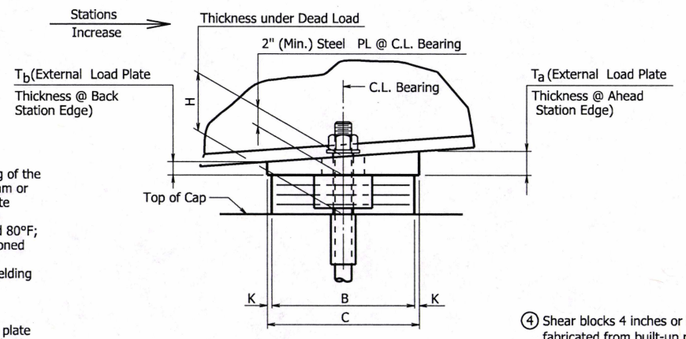

SIDE VIEW - AT BENT NO. 3

④ Shear blocks 4 inches or thicker may be fabricated from built-up plates with a 5/16" groove weld on all sides. No plate shall be less than 2" nominal thickness.

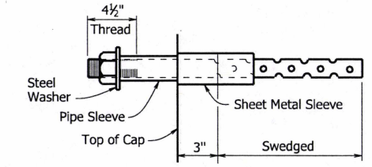

ANCHOR BOLT DETAIL

Anchor Bolts may be cast in place or drilled and grouted into place. If Anchor Bolts are to be cast in place, the Galvanized Sheet Metal Sleeves will not be required.

If Anchor Bolts are to be drilled and grouted in place, the Galvanized Sheet Metal Sleeves shall be cast in place as shown. Sleeves shall be dry packed with styrofoam, urethane foam or approved equal prior to pouring of concrete. After pouring of the cap and prior to erection of Structural Steel, the dry pack shall be removed and holes for the anchor bolts shall be accurately drilled into the concrete. Bolts placed in drilled holes shall be accurately set and fixed using a QPL approved epoxy or non-shrink grout that completely fills the holes. Galvanized Sheet Metal Sleeves will not be paid for directly, but will be considered subsidiary to the item "Structural Steel in Beam Spans (M 270, Gr. 50W)"

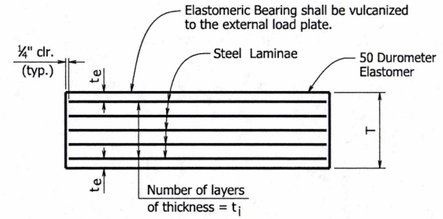

t_e = Thickness of elastomer cover on top and bottom of pad

t_i = Thickness of elastomer between steel laminae

N = Number of elastomer layers of thickness t_i

ELASTOMERIC BEARING

GENERAL NOTES

Elastomeric Bearings shall conform to Section 808 and shall be paid for at the unit price bid for "Elastomeric Bearings".

External load plates and shear blocks shall conform to AASHTO M 270, Grade 50W. Pipe sleeves shall be ASTM A500, Grade B, and shall be galvanized to conform to AASHTO M 232, Class C or ASTM B695, Class 50.

External load plates and shear blocks shall be completely fabricated (including bevel, bolt holes and all shop welding) and shall be cleaned before vulcanizing to the elastomeric bearing. The surface in contact with the elastomeric bearing shall be cleaned in accordance with Subsection 808.03. Other surfaces shall be blast cleaned in accordance with Subsection 807.84(b) for painted steel and 807.84(e) for unpainted Grade 50W steel.

Anchor Bolts, Washers and Nuts shall conform to Subsection 807.07. The anchor bolt grade of steel shall be as specified in the "Table of Fabricator Variables". Indentations shall be circular with rounded bottoms and staggered as shown in the details.

Pipe Sleeves, Anchor Bolts, Washers and Nuts shall be paid for at the unit price bid for "Structural Steel in Beam Spans (M270, Gr. 50W)". External load plates and shear blocks will not be measured or paid for separately, but will be considered incidental to the unit price bid for "Elastomeric Bearings".

Bearings shall be seated in accordance with Subsection 808.08. This work and materials are considered subsidiary to the item "Elastomeric Bearings" and will not be paid for directly.

TABLE OF FABRICATOR VARIABLES

③ Maximum Design Load = Service 1 Limit State

BRIDGE NO.	LOCATION: BENT NO(S).	LOCATION: BEAM OR GIRDER NO.	BEARING TYPE	NO. of BEARINGS EACH BENT	③MAXIMUM DESIGN LOAD (KIPS)	G	H	ELASTOMERIC PAD: A	B	N	t_i	t_e	NO. & THICKESS OF STEEL LAMINAE	T	EXTERNAL LOAD PLATE: C	D	E	F	④ J	K	M	T_a	T_b	ANCHOR BOLT: ANCHOR BOLT (Ø x L)	GRADE	PIPE SLEEVE SIZE (Ø x L)	SHEET METAL SLEEVE SIZE (Ø x L)	STEEL WASHER SIZE (O.D.)
07432	1 & 5	All	Exp.	5	98	7¾"	4 15/16"	12"	8½"	4	½"	¼"	5 @ 12 ga.	3"	9½"	22½"	4½"	2¼"	NA	½"	8½"	2.00"	2.00"	1½"Ø x 31"	55	1½"Ø x 5¼"	3"Ø x 6"	3"
	2 & 4	All	Exp.	5	207	7¼"	3¾"	16"	11½"	2	½"	¼"	3 @ 12 ga.	1 13/16"	12½"	28"	4⅜"	3⅛"	NA	½"	10¾"	2.00"	2.00"	2"Ø x 35"	55	2½"Ø x 4⅛"	4"Ø x 6"	3¾"
	3	All	Fix	5	183	7¼"	3¾"	15½"	10½"	2	½"	¼"	3 @ 12 ga.	1 13/16"	11½"	35¼"	3⅛"	3⅛"	1¼"	½"	13"	2.00"	2.00"	2"Ø x 35"	55	2½"Ø x 4⅛"	4"Ø x 6"	3¾"

PRINT DATE: 2/14/2019

STATE OF ARKANSAS
LICENSED PROFESSIONAL ENGINEER
No. 9235
2/14/19
CHARLES R. ELLIS
BRIDGE ENGINEER

DETAILS OF ELASTOMERIC BEARINGS

ROUTE SEC.

ARKANSAS STATE HIGHWAY COMMISSION

LITTLE ROCK, ARK.

DRAWN BY: CGP DATE: 08/16/18 FILENAME: b080504_e1.dgn

CHECKED BY: DHP DATE: 2/18/19 SCALE: No Scale

DESIGNED BY: JJ DATE: 8/2018

BRIDGE NO. 07432 DRAWING NO. 60426

DATE REVISED	DATE FILMED	DATE REVISED	DATE FILMED	FED. ROAD DIST. NO.	STATE	FED. AID PROJ. NO.	SHEET NO.	TOTAL SHEETS
				6	ARK.			
				JOB NO.		080504	38	57
				①		07432 - SPAN DETAILS - 60427		

Class 1 Protective Surface Treatment shall be applied to the roadway surface and the roadway face and top of concrete parapet rail.

At the Contractor's option, two straight epoxy coated #5 bars may be substituted for bar S502E. Payment for reinforcing will be based on the weight of bar S502E.

Bar positions or clearances from the forms shall be maintained by means of stays, ties, hangers, or other approved devices per Subsection 804.06.

Slab Reinforcing

Longitudinal: S401E in top and bottom (place as shown)
S601E over intermediate supports,
see "REINFORCING PLAN & DECK POURING SEQUENCE" Dwg. No. 60429.

Transverse: S501E @ 12" o.c. in top, S402E @ 12" o.c. in bottom — Alternate
S502E @ 12" o.c. bent up over beams —
S503E @ 6" in top of overhangs (bundled with #5 bars) both sides

① See "ADJUSTMENT FOR SLAB THICKNESS TOLERANCE" on Std. Dwg. No. 55007.

② Tolerance Minus = ¼":
Plus = to the amount of slab thickness used to meet slab thickness tolerance.
See "ADJUSTMENT FOR SLAB THICKNESS TOLERANCE" on Std. Dwg. No. 55007.

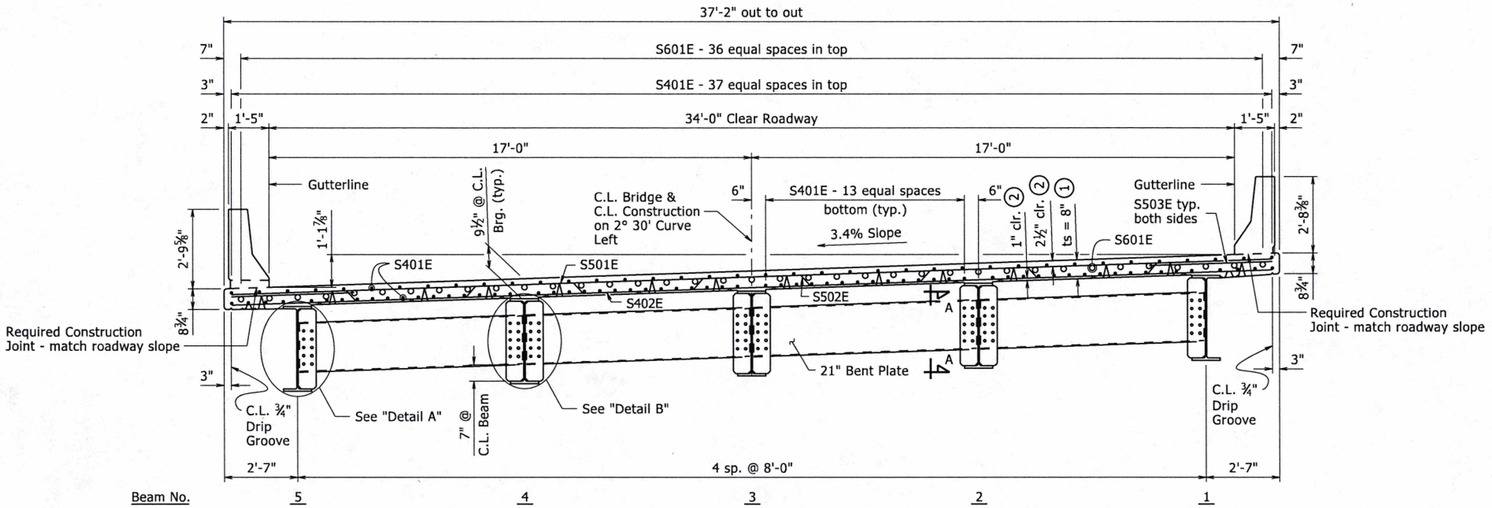

TYPICAL ROADWAY SECTION

LOOKING AHEAD
⅜" = 1'-0"

Expansion Device:

Roadway Channel - MC18x42.7
Connection L's 8"x4"x½"
Detail Device ⅛" high & provide ¼" shims using 2 - 1/16" & 1 - ⅛" Plates

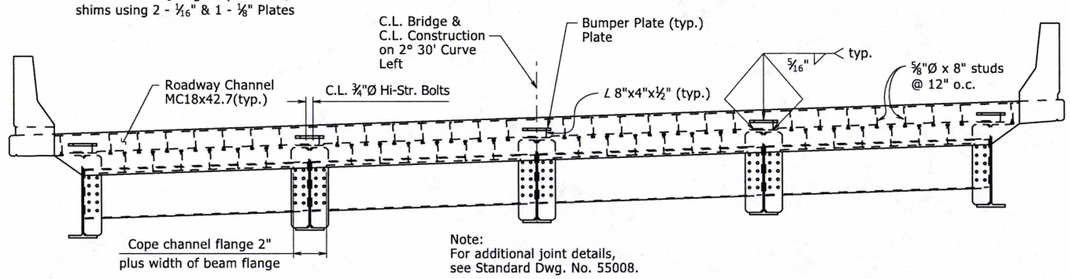

Note:
For additional joint details, see Standard Dwg. No. 55008.

TYPICAL ROADWAY SECTION THRU JOINT

LOOKING AHEAD
⅜" = 1'-0"

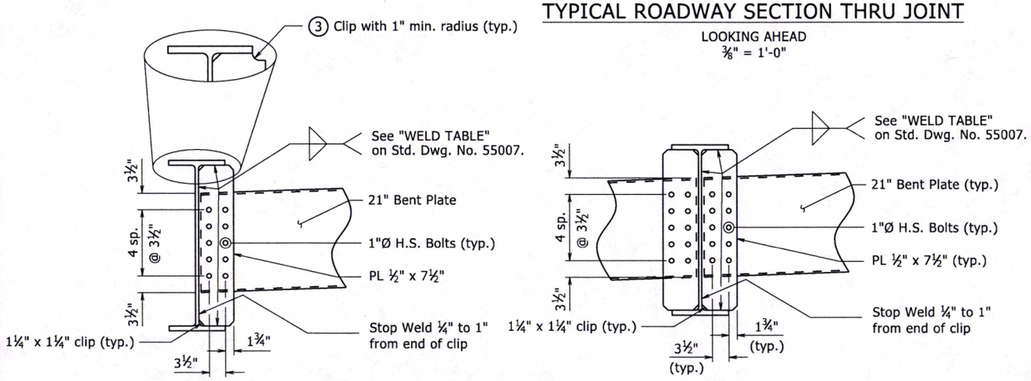

DETAIL A
¾" = 1'-0"

③ If permanent steel bridge deck forms are used, the Fabricator shall clip plates as necessary to accomodate the deck form supports.

DETAIL B
¾" = 1'-0"

SILICONE JOINT DATA

For details of poured silicone joint, see Standard Dwg. No. 55008.

Bent Number	"A" Width Perpendicular to Joint at 24 Hour Average Temperature ④ of:			"B" Perpendicular to Joint at 60°F	Bumper Plate Size
	40°F	60°F	80°F		
1 & 5	2¼"	2"	1¾"	3¼"	1" x 1"

④ The temperature used to set the joint opening shall be the approximate average air temperature during the 24 hour period immediately before the bolts are tightened. The engineer shall establish the temperature. Interpolation of the table may be necessary.

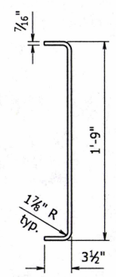

Typical cross-section for all 21" bent plate diaphragms.

SECTION A-A

NO SCALE

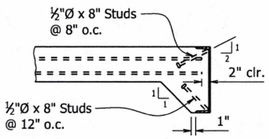

As an alternate to ⅝"Ø studs, ½"Ø x 8" studs spaced as shown may be used. Use weight of ⅝"Ø stud as basis of measurement of structural steel in anchors.

DETAILS OF ALTERNATE ANCHORS AND PLACEMENT OF LONGITUDINAL REINFORCEMENT

NO SCALE

STATE OF ARKANSAS
LICENSED PROFESSIONAL ENGINEER
No. 9235
CHARLES R. ELLIS
2-14-19

BRIDGE ENGINEER

SHEET 1 OF 5
DETAILS OF 280'-0" CONTINUOUS COMPOSITE W-BEAM UNIT
DEER CREEK

ROUTE SEC.

ARKANSAS STATE HIGHWAY COMMISSION
LITTLE ROCK, ARK.

DRAWN BY: CGP DATE: 08/16/18 FILENAME: b080504_s1.dgn
CHECKED BY: DHP DATE: 2/18/19 SCALE: As Noted
DESIGNED BY: JJ DATE: 8/2018

BRIDGE NO. 07432 DRAWING NO. 60427

PRINT DATE: 2/14/2019

DATE REVISED	DATE FILMED	DATE REVISED	DATE FILMED	FED. ROAD DIST. NO.	STATE	FED. AID PROJ. NO.	SHEET NO.	TOTAL SHEETS
				6	ARK.			
				JOB NO.		080504	39	57
				(1)		07432 - SPAN DETAILS - 60428		

NOTES:

For "SUPERSTRUCTURE NOTES", see Std. Dwg. No. 55006.

Structural steel, unless noted otherwise, shall be AASHTO M 270, Grade 50W and shall be paid for as "Structural Steel in Beam Spans (M 270, Grade 50W)".

Bolted field splices may either be eliminated or shop welded splices may be substituted with the approval of the engineer. Payment will be made on the basis of plan quantities.

For additional information, see Layout.

NOTE:

Beams are curved and concentric to C.L. Bridge. Diaphragms and field splice lines are radial.

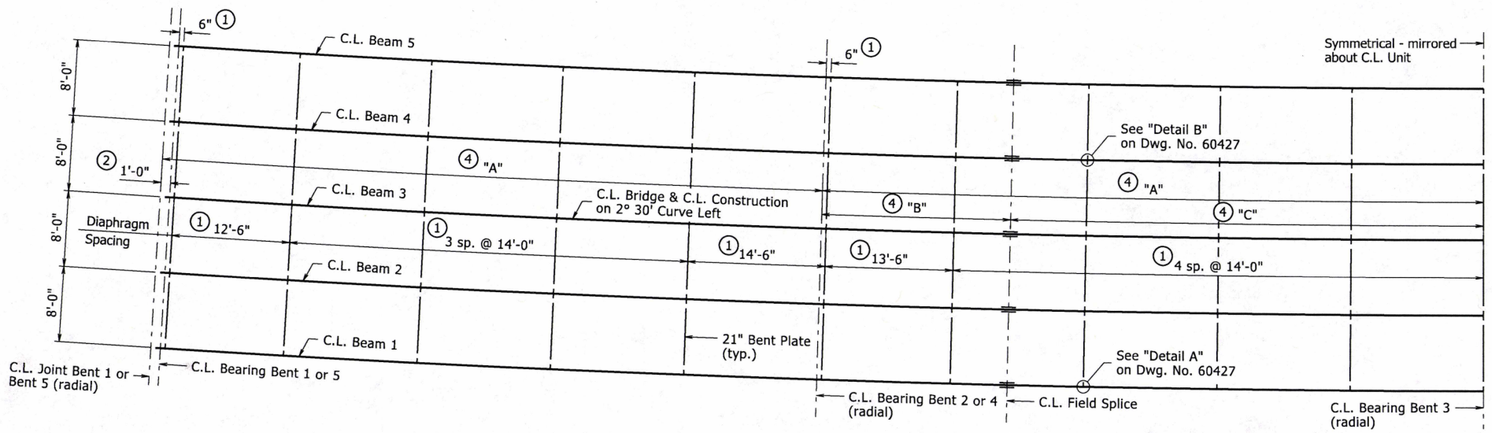

(1) Measured along C.L. Bridge
(2) Measured along C.L. Beam
(3) For Painting of Beam Ends, see General Notes on Layout Dwg. No. 60417.
(4) See "TABLE OF VARIABLES".

FRAMING PLAN

⅛" = 1'-0"

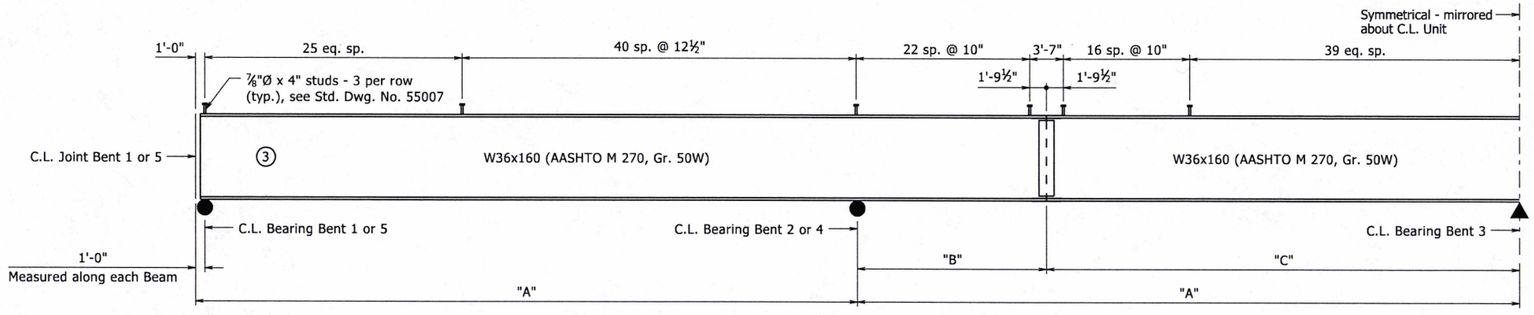

TYPICAL BEAM ELEVATION

NO SCALE

TABLE OF VARIABLES

Beam No.	"A"	"B"	"C"
1	70'-5⅞"	20'-1 11/16"	50'-4 3/16"
2	70'-2 15/16"	20'-0 13/16"	50'-2⅛"
3	70'-0"	20'-0"	50'-0"
4	69'-9 1/16"	19'-11 3/16"	49'-9⅞"
5	69'-6⅛"	19'-10 5/16"	49'-7 3/16"

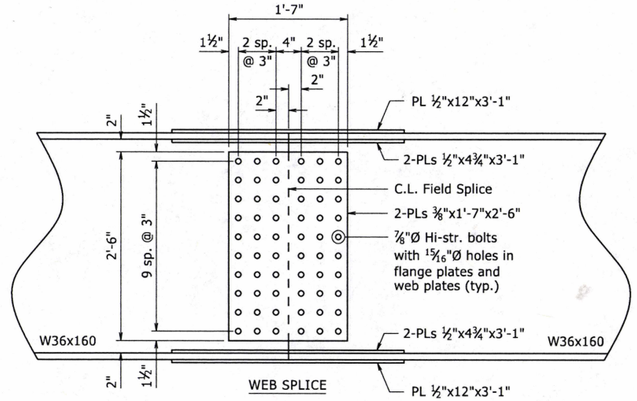

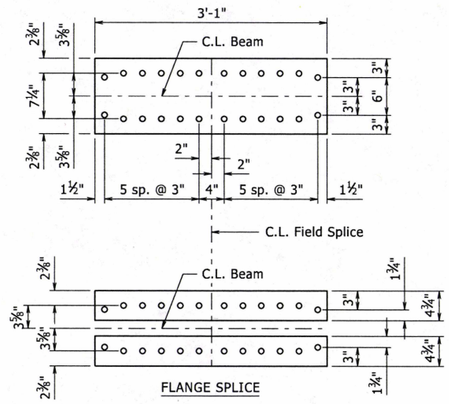

DETAILS OF FIELD SPLICE

NO SCALE

STATE OF ARKANSAS
LICENSED PROFESSIONAL ENGINEER
No. 9235
2-14-19
CHARLES R. ELLIS
BRIDGE ENGINEER

SHEET 2 OF 5
DETAILS OF 280'-0" CONTINUOUS COMPOSITE W-BEAM UNIT
DEER CREEK

ROUTE SEC.

ARKANSAS STATE HIGHWAY COMMISSION
LITTLE ROCK, ARK.

DRAWN BY: CGP DATE: 08/16/18 FILENAME: b080504_s1.dgn
CHECKED BY: DHP DATE: 2/8/19 SCALE: As Noted
DESIGNED BY: SJ DATE: 8/2018
BRIDGE NO. 07432 DRAWING NO. 60428

PRINT DATE: 2/8/2019

DATE REVISED	DATE FILMED	DATE REVISED	DATE FILMED	FED. ROAD DIST. NO.	STATE	FED. AID PROJ. NO.	SHEET NO.	TOTAL SHEETS
				6	ARK.			
				JOB NO.		080504	40	57
				(1)		07432 - SPAN DETAILS - 60429		

NOTES:

Pours with the same number may be placed simultaneously or separately. All Pours (1) must be placed before Pours (2). 48 hours shall elapse between the end of a pour and the start of the next pour. 72 hours shall elapse between adjacent pours. A minimum of 72 hours shall elapse between completion of slab and pouring of the parapet rail. The Contractor must obtain approval from the Engineer for any deviations from the pouring sequence shown.

Concrete in bridge superstructure shall be placed, consolidated and screeded off for the entire pour before any concrete has taken its initial set. This may require the use of a retarding agent.

Any railing pours made before the entire slab unit has been placed must be approved by the Engineer.

Unless otherwise noted, required slab joints and pouring sequence construction joints shall align with parapet joints at the gutterline.

NOTE:

C.L. Bridge is in a 2°30' horizontal curve to the left.
All longitudinal lines and longitudinal reinforcing steel shall be placed on curves concentric with C.L. Bridge. All transverse reinforcing steel shall be placed on radial lines and shall be measured along C.L. Bridge.

(1) Radial Line

(2) Measured along C.L. Bridge

(3) Measured along Gutterline

(F) C.L. Full Depth Parapet Joint (¼"-1" max.) Stop 4" from top of slab.

(P) C.L. Partial Depth Parapet Joint (¼"-1" max.) Stop 1'-2" from top of slab.

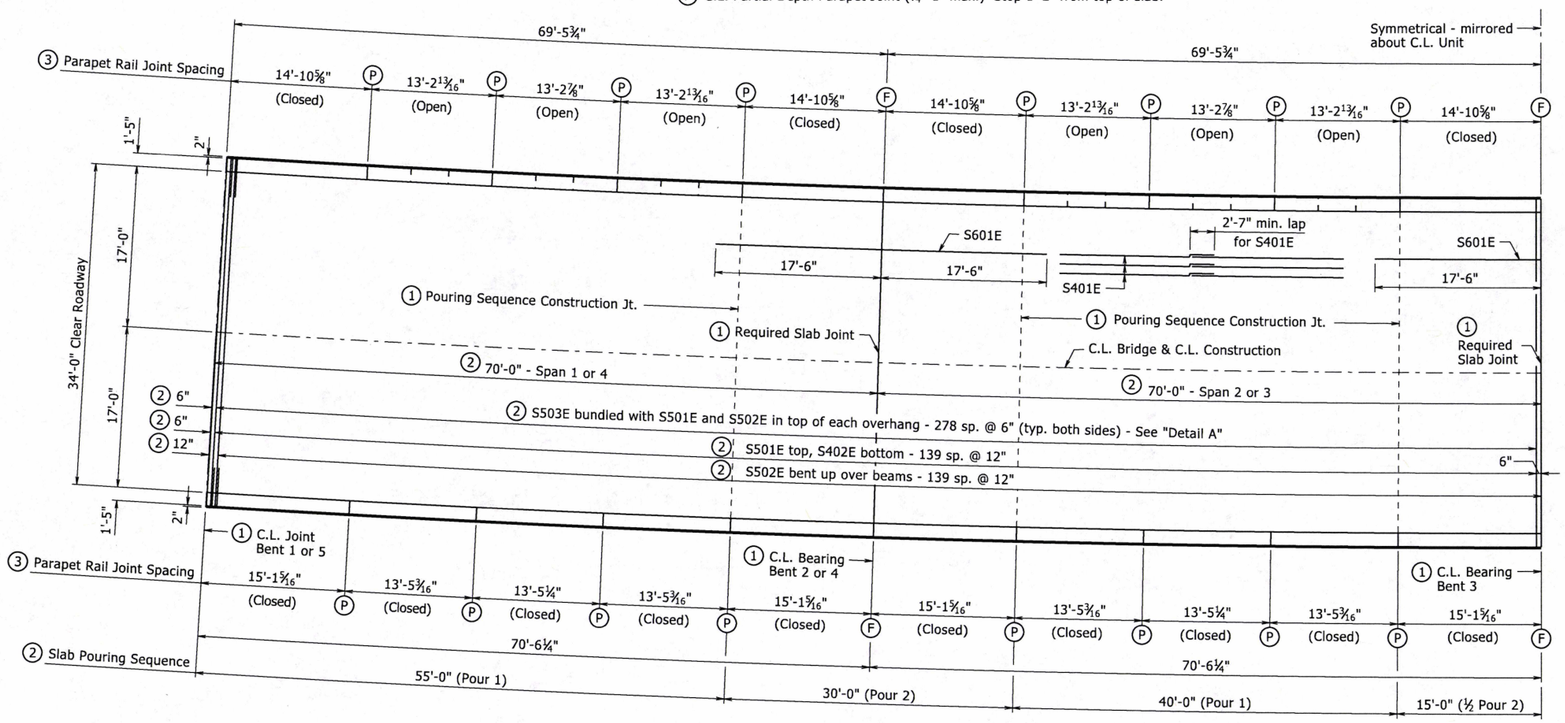

REINFORCING PLAN & DECK POURING SEQUENCE

⅛" = 1'-0"

BAR LIST

MARK	NO. REQ'D	LENGTH	P.D.
P401E	1028	5'-6"	3"
P402E	108	4'-10"	3"
P403E	56	14'-7"	Str.
P404E	84	12'-11"	Str.
P405E	56	14'-9"	Str.
P406E	84	13'-1"	Str.
P407E	128	5'-6"	Str.
S401E	714	42'-6"	Str.
S402E	280	36'-10"	Str.
P501E	1028	4'-8"	3¾"
S501E	280	36'-10"	Str.
S502E	279	37'-8"	3¾"
S503E	1118	4'-4"	Str.
S601E	111	35'-0"	Str.

BENDING DIAGRAMS

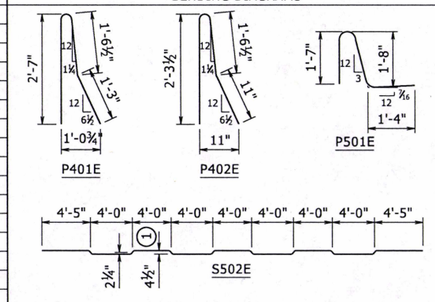

(1) ½" Overtolerance - No Undertolerance

Note: Dimensions are out to out of bars.
Note: Bars designated with an "E" suffix to be Epoxy Coated.

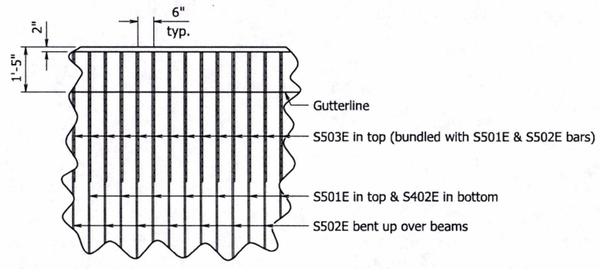

DETAIL A

NO SCALE

STATE OF ARKANSAS
LICENSED PROFESSIONAL ENGINEER
No. 9235
CHARLES R. ELLIS
2-14-19

BRIDGE ENGINEER

SHEET 3 OF 5
DETAILS OF 280'-0" CONTINUOUS COMPOSITE W-BEAM UNIT
DEER CREEK

ROUTE SEC.

ARKANSAS STATE HIGHWAY COMMISSION
LITTLE ROCK, ARK.

DRAWN BY: CGP DATE: 08/16/18 FILENAME: b080504_s1.dgn
CHECKED BY: DHP DATE: 2/18/19 SCALE: As Noted
DESIGNED BY: JJ DATE: 8/2018
BRIDGE NO. 07432 DRAWING NO. 60429

PRINT DATE: 2/14/2019

DATE REVISED	DATE FILMED	DATE REVISED	DATE FILMED	FED. ROAD DIST. NO.	STATE	FED. AID PROJ. NO.	SHEET NO.	TOTAL SHEETS
				6	ARK.			
				JOB NO.		080504	41	57
				①		07432 - SPAN DETAILS - 60430		

TABLE OF DEAD LOAD DEFLECTIONS (INCHES)

Span	Point of Deflection	Structural Steel					Structural Steel + Slab					Structural Steel + Slab + Parapet				
		Beam 1	Beam 2	Beam 3	Beam 4	Beam 5	Beam 1	Beam 2	Beam 3	Beam 4	Beam 5	Beam 1	Beam 2	Beam 3	Beam 4	Beam 5
1	0	0	0	0	0	0	0	0	0	0	0	0	0	0	0	0
	0.1	0.063	0.064	0.064	0.062	0.058	0.338	0.371	0.381	0.360	0.309	0.373	0.399	0.407	0.387	0.341
	0.2	0.117	0.119	0.119	0.115	0.107	0.627	0.688	0.706	0.667	0.573	0.691	0.741	0.754	0.717	0.632
	0.3	0.156	0.158	0.158	0.153	0.142	0.833	0.914	0.937	0.885	0.761	0.918	0.984	1.000	0.952	0.839
	0.4	0.175	0.177	0.177	0.171	0.159	0.934	1.023	1.049	0.990	0.853	1.030	1.101	1.120	1.065	0.941
	0.5	0.173	0.175	0.175	0.169	0.158	0.924	1.011	1.036	0.978	0.845	1.019	1.089	1.106	1.052	0.932
	0.6	0.151	0.154	0.153	0.148	0.138	0.810	0.886	0.906	0.856	0.740	0.894	0.954	0.968	0.922	0.817
	0.7	0.115	0.117	0.116	0.112	0.105	0.617	0.674	0.688	0.649	0.563	0.681	0.726	0.736	0.699	0.622
	0.8	0.071	0.072	0.071	0.069	0.065	0.381	0.414	0.421	0.399	0.347	0.421	0.447	0.451	0.043	0.384
	0.9	0.028	0.029	0.028	0.027	0.026	0.152	0.165	0.167	0.158	0.139	0.168	0.179	0.179	0.171	0.154
2	0	0	0	0	0	0	0	0	0	0	0	0	0	0	0	0
	0.1	-0.004	-0.004	-0.004	-0.004	-0.004	-0.026	-0.022	-0.021	-0.020	-0.022	-0.026	-0.023	-0.022	-0.020	-0.021
	0.2	0.007	0.009	0.009	0.009	0.008	0.033	0.052	0.057	0.053	0.037	0.042	0.057	0.061	0.058	0.046
	0.3	0.025	0.027	0.027	0.027	0.024	0.124	0.158	0.167	0.157	0.122	0.144	0.171	0.178	0.170	0.141
	0.4	0.040	0.043	0.044	0.042	0.039	0.206	0.252	0.265	0.248	0.199	0.235	0.272	0.283	0.268	0.227
	0.5	0.049	0.052	0.053	0.051	0.047	0.252	0.303	0.318	0.298	0.241	0.286	0.327	0.339	0.322	0.273
	0.6	0.048	0.051	0.052	0.050	0.046	0.250	0.297	0.311	0.291	0.238	0.283	0.321	0.332	0.314	0.269
	0.7	0.039	0.041	0.041	0.040	0.037	0.201	0.238	0.248	0.233	0.191	0.227	0.257	0.265	0.252	0.216
	0.8	0.023	0.024	0.025	0.024	0.022	0.120	0.142	0.148	0.139	0.114	0.136	0.154	0.159	0.151	0.130
	0.9	0.007	0.008	0.008	0.008	0.007	0.038	0.046	0.048	0.045	0.037	0.044	0.050	0.052	0.049	0.043
	0	0	0	0	0	0	0	0	0	0	0	0	0	0	0	0

Symmetrical - mirrored about C.L. Unit

Note:
Camber for dead load deflection plus vertical curve +/- ¼" tolerance. Deflections shown are along C.L. Beam from the plane perpendicular to the web extending from C.L. Bearing to C.L. Bearing. Negative sign (-) indicates point above plane.

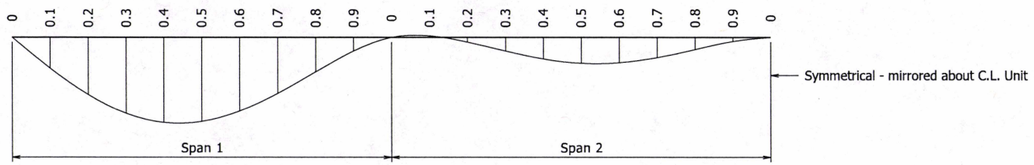

DEAD LOAD DEFLECTION DIAGRAM
NO SCALE

STATE OF ARKANSAS
LICENSED PROFESSIONAL ENGINEER
No. 9235
CHARLES R. ELLIS
2-14-19
BRIDGE ENGINEER

SHEET 4 OF 5
DETAILS OF 280'-0" CONTINUOUS COMPOSITE W-BEAM UNIT
DEER CREEK

ROUTE SEC.

ARKANSAS STATE HIGHWAY COMMISSION
LITTLE ROCK, ARK.

DRAWN BY: CGP DATE: 08/16/18 FILENAME: b080504_s1.dgn
CHECKED BY: DHP DATE: 2/8/19 SCALE: No Scale
DESIGNED BY: JJ DATE: 8/2018
BRIDGE NO. 07432 DRAWING NO. 60430

PRINT DATE: 2/8/2019

DATE REVISED	DATE FILMED	DATE REVISED	DATE FILMED	FED. ROAD DIST. NO.	STATE	FED. AID PROJ. NO.	SHEET NO.	TOTAL SHEETS
				6	ARK.			
				JOB NO.		080504	42	57

(1) 07432 - SPAN DETAILS - 60431

(F) C.L. Full-Depth Parapet Joint (¼" to 1" max.) as shown in "REINFORCING PLAN & DECK POURING SEQUENCE", Dwg. No. 60429. Stop 4" from top of slab.

(P) C.L. Partial-Depth Parapet Joint (¼" to 1" max.) as shown in "REINFORCING PLAN & DECK POURING SEQUENCE", Dwg. No. 60429. Stop 1'-2" from top of slab.

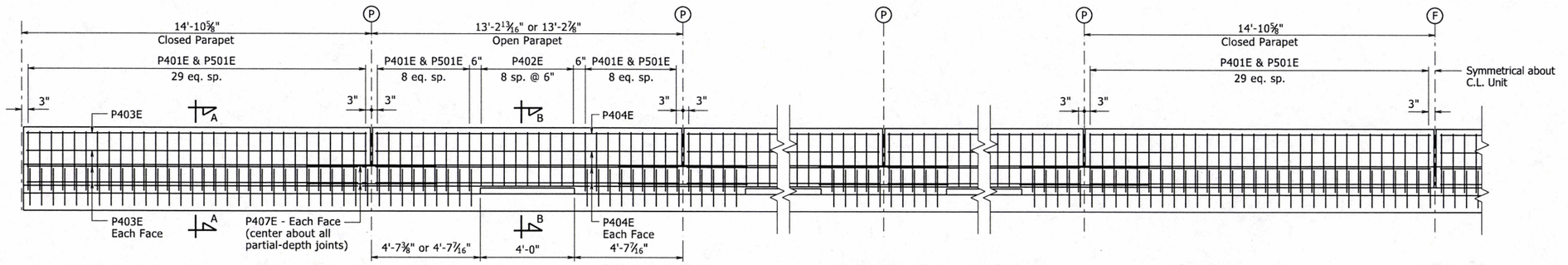

PARAPET RAIL REINFORCING LOW SIDE

⅜" = 1'-0"

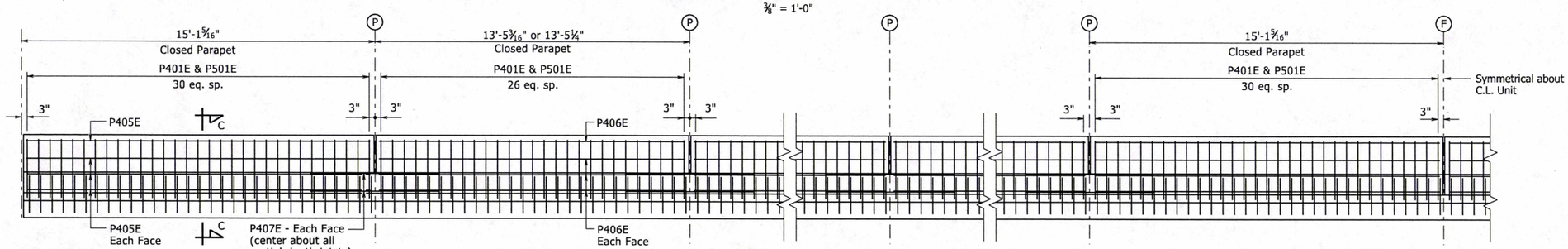

PARAPET RAIL REINFORCING HIGH SIDE

⅜" = 1'-0"

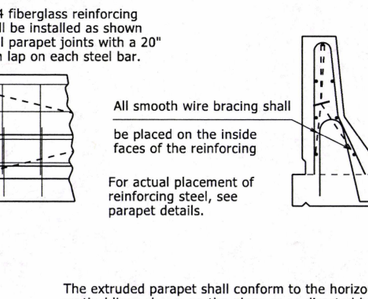

DETAIL A

NO SCALE

NOTES:

Parapet Studs shall be 5" long, granular flux, solid fluxed, or equal, and automatically end welded to the plate. Studs and plate shall meet the requirements of Section 807. Studs and plate shall be measured and paid for as "Structural Steel in Beam Spans (M 270, Gr. 50W)".

The surfaces of the ⅜" plates which will not be in contact with concrete shall be painted in accordance with Section 638, or as approved by the engineer. Only one coat is required and shall be applied in the Fabricator's shop. Painting will not be paid for directly, but will be considered subsidiary to "Structural Steel in Beam Spans (M 270, Gr. 50W)".

Place Type D Bridge Name Plate on front face of span rail approximately 1'-0" from end of rail on right side Begin of Bridge. See Std. Dwg. No. 55010.

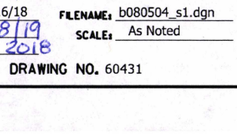

NAME PLATE DETAIL

NO SCALE

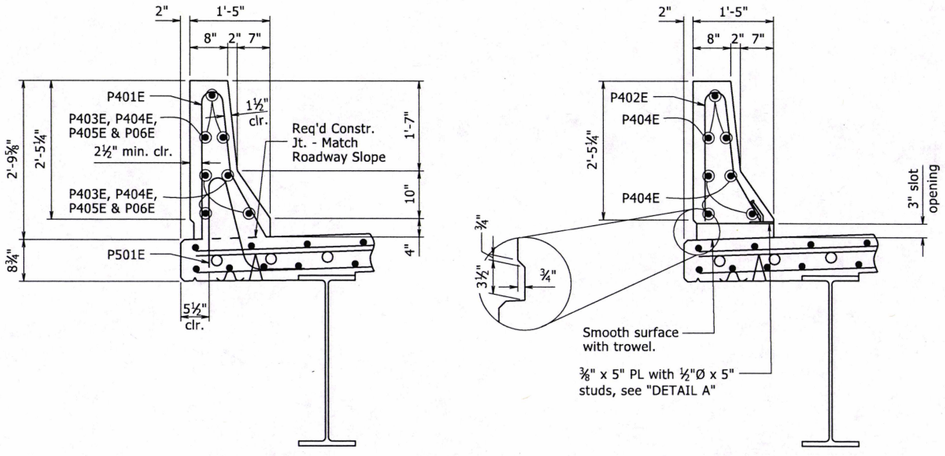

SECTION A-A

NO SCALE

SECTION B-B

NO SCALE

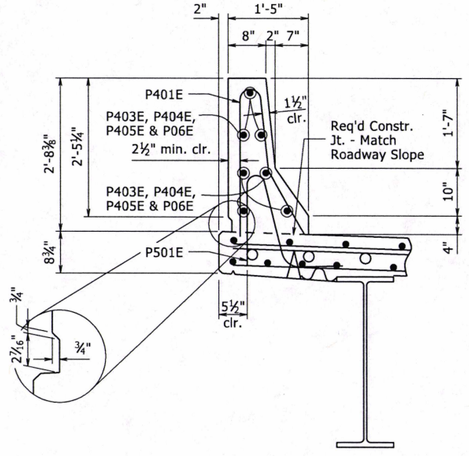

SECTION C-C

NO SCALE

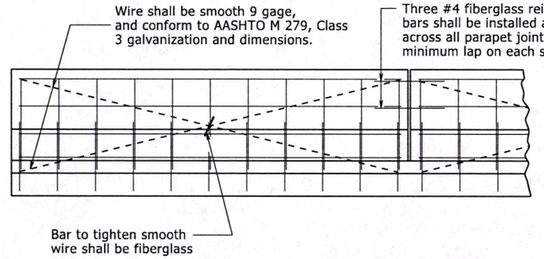

All panels shall be braced as required to prevent racking. All parapet joints shall be sawed as soon as practical to a minimum width of ¼". To control cracking before sawing, all joints must be grooved before the concrete is set. Sawing of the joints must be controlled so it will follow the grooved joint.

The extruded parapet shall conform to the horizontal and vertical lines shown on the plans or as directed by the Engineer and shall present a smooth, uniform apperance and texture. Exposed surface may be given a light brush finish or a Class 3, Textured Coating Finish, in place of the Class 2, Rubbed Finish.

DETAILS OF OPTIONAL SLIPFORMING OF CONCRETE PARAPET RAIL

NO SCALE

STATE OF ARKANSAS LICENSED PROFESSIONAL ENGINEER No. 9235 CHARLES R. ELLIS 2-4-19

BRIDGE ENGINEER

SHEET 5 OF 5
DETAILS OF 280'-0" CONTINUOUS COMPOSITE W-BEAM UNIT
DEER CREEK

ROUTE SEC.

ARKANSAS STATE HIGHWAY COMMISSION

LITTLE ROCK, ARK.

DRAWN BY: CGP DATE: 08/16/18 FILENAME: b080504_s1.dgn
CHECKED BY: DHP DATE: 2/8/19 SCALE: As Noted
DESIGNED BY: JJ DATE: 8/2018
BRIDGE NO. 07432 DRAWING NO. 60431

PRINT DATE: 2/8/2019

All longitudinal lines within the limits of horizontal curves shall be on curves concentric to C.L. Bridge. Adjustments to longitudinal bar lengths may be required. Transverse reinforcing shall be placed on radial lines to C.L Bridge.

DATE REVISED	DATE FILMED	DATE REVISED	DATE FILMED	FED. ROAD DIST. NO.	STATE	FED. AID PROJ. NO.	SHEET NO.	TOTAL SHEETS
				6	ARK.			
				JOB NO.		080504	43	57

① 07432 - TYPE SPECIAL APPROACH SLAB - 60432

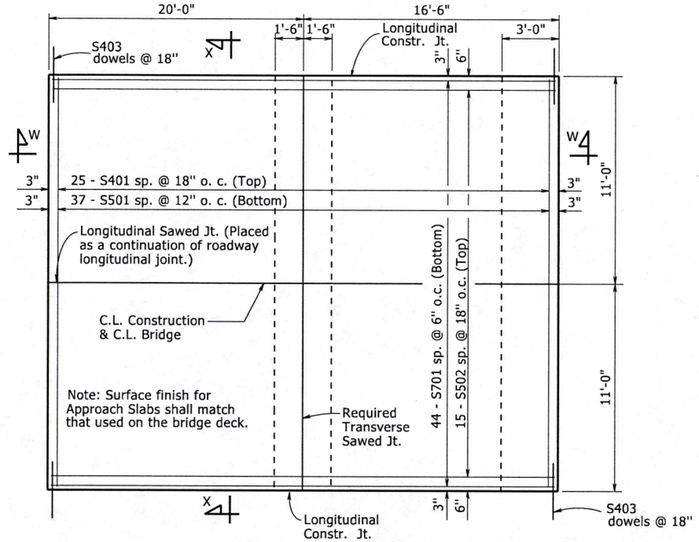

PLAN - APPROACH SLAB

N.T.S

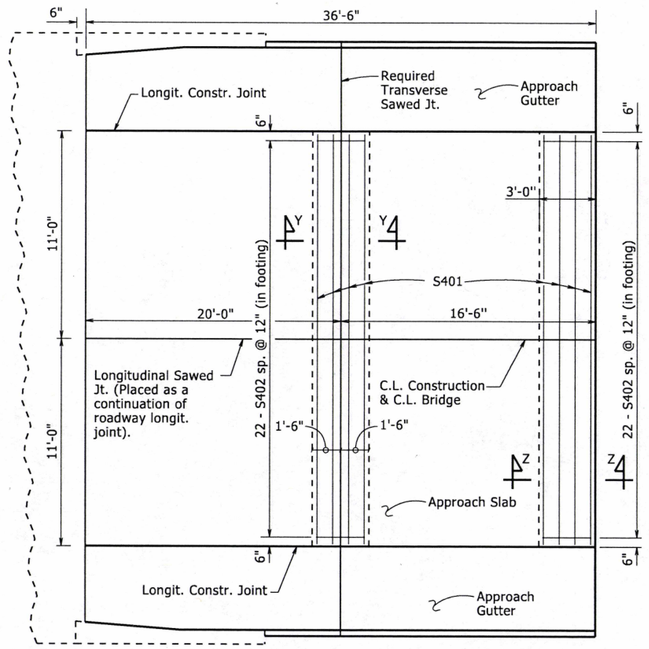

PLAN VIEW SHOWING GUTTERS

N.T.S

BAR LIST

MARK	NUMBER REQUIRED	LENGTH	P.D.
S401	33	21'-8"	Str.
S402	44	2'-8"	Str.
S403	50	3'-0"	Str.
S501	37	21'-8"	Str.
S502	15	36'-2"	Str.
S701	44	36'-2"	Str.

TABLE OF QUANTITIES FOR ONE TYPE SPECIAL APPROACH SLAB

Reinforcing Steel (Lbs.)	Concrete (Cu. Yds.)
5311	44.9

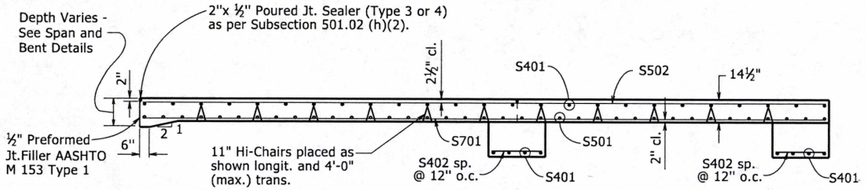

SECTION W - W

¼" = 1'-0"

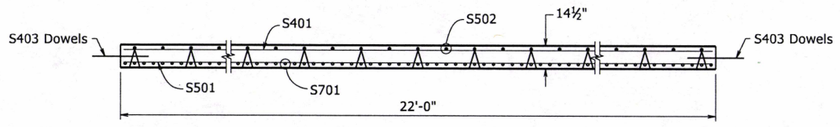

SECTION X - X

N.T.S.

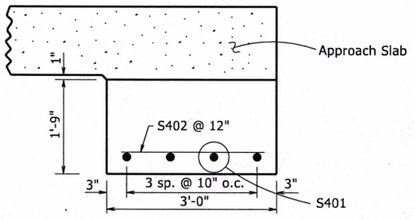

SECTION Z - Z

¾" = 1'-0"

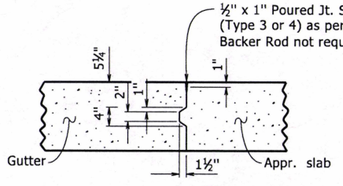

DETAILS OF LONGITUDINAL CONSTRUCTION JOINT

¾" = 1'-0"

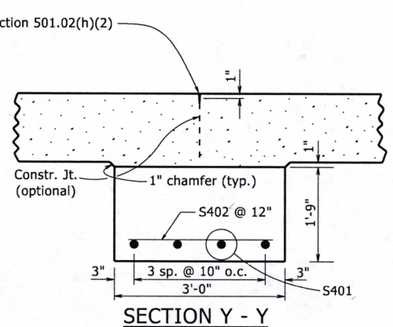

SECTION Y - Y

¾" = 1'-0"

GENERAL NOTES

Concrete shall be Class S(AE) with a minimum 28 day compressive strength f'c = 4,000 psi and shall be poured in the dry.

All reinforcing steel shall be Grade 60 (yield strength = 60,000 psi) conforming to AASHTO M 31 or M 322, Type A, with mill test reports.

Approach Slabs will be measured and paid for in accordance with Section 504.

STATE OF ARKANSAS
LICENSED PROFESSIONAL ENGINEER
No. 9235
CHARLES R. ELLIS
2-19-19

BRIDGE ENGINEER

DETAILS OF TYPE SPECIAL APPROACH SLAB

ROUTE SEC.

ARKANSAS STATE HIGHWAY COMMISSION

LITTLE ROCK, ARK.

DRAWN BY: KJT DATE: 1/19 FILENAME: b080504_as.dgn

CHECKED BY: DHP DATE: 2/8/19 SCALE: AS SHOWN

DESIGNED BY: — DATE: —

BRIDGE NO. 07432 DRAWING NO. 60432

PRINT DATE: 2/14/2019

DATE REVISED	DATE FILMED	DATE REVISED	DATE FILMED	FED.RD. DIST.NO.	STATE	FED.AID PROJ.NO.	SHEET NO.	TOTAL SHEETS
				6	ARK.			
				JOB NO.		080504	44	57

(2) CROSS SECTIONS

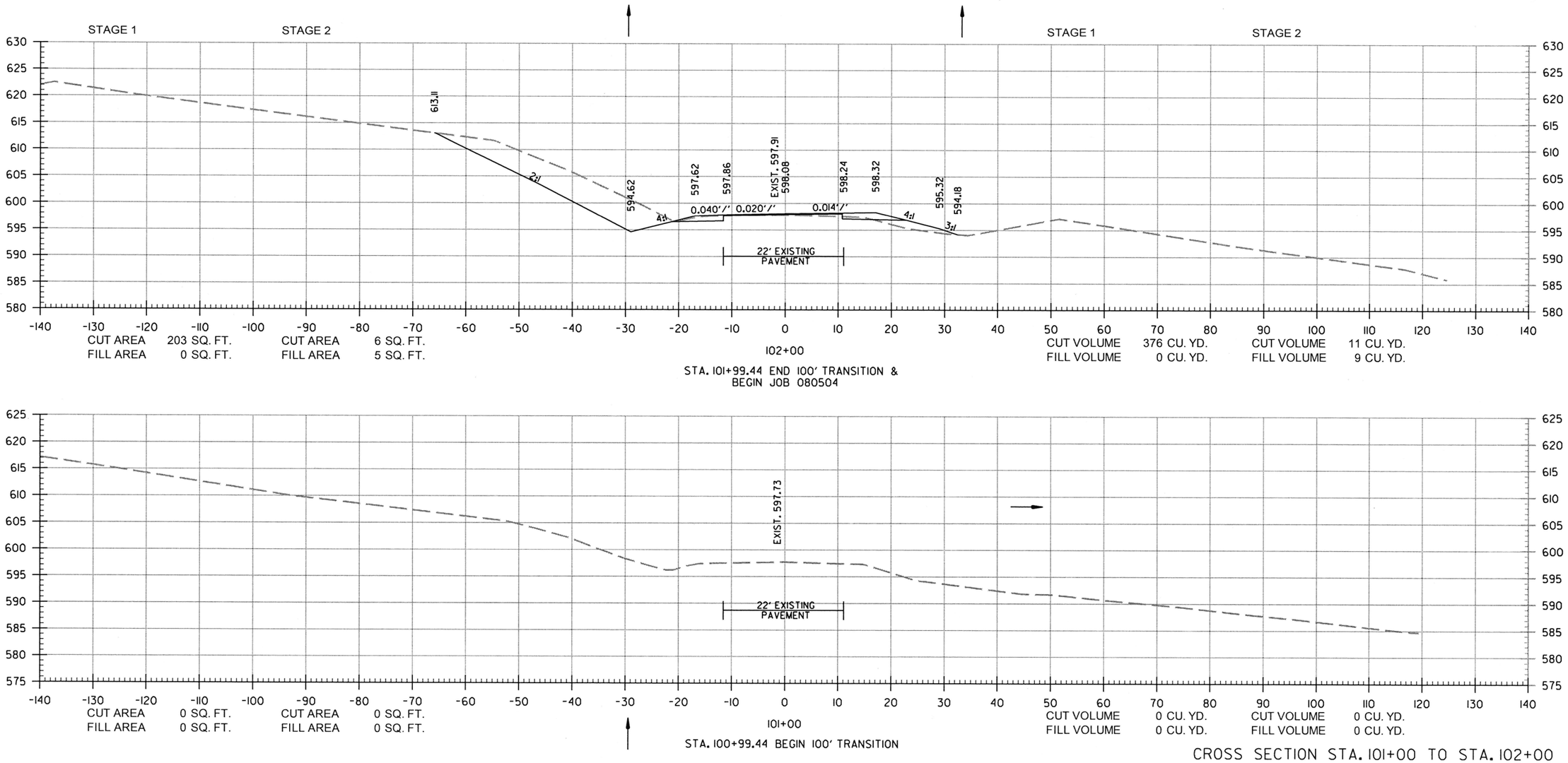

CROSS SECTION STA. 101+00 TO STA. 102+00

4/10/2019

R080504.DGN

DATE REVISED	DATE FILMED	DATE REVISED	DATE FILMED	FED.RD. DIST.NO.	STATE	FED.AID PROJ.NO.	SHEET NO.	TOTAL SHEETS
				6	ARK.			
				JOB NO.		080504	45	57

(2) CROSS SECTIONS

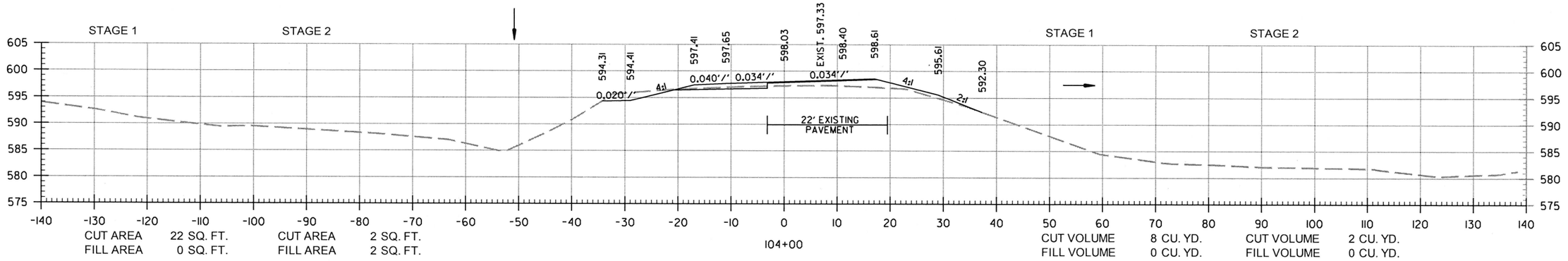

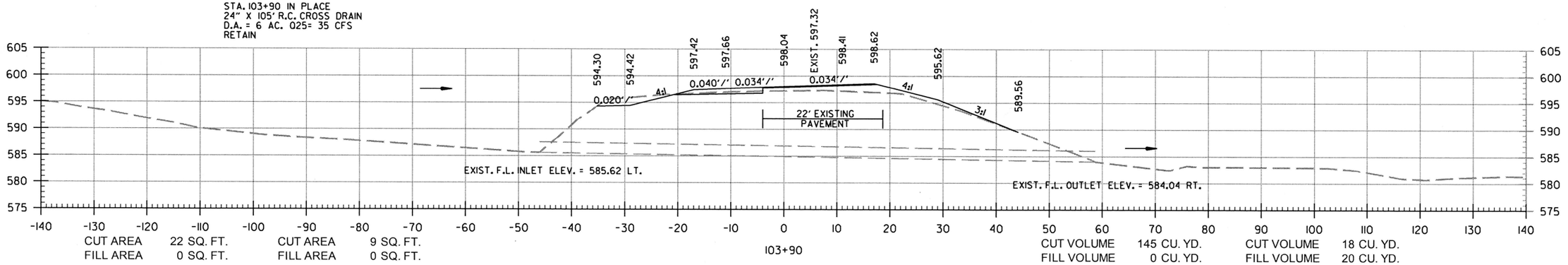

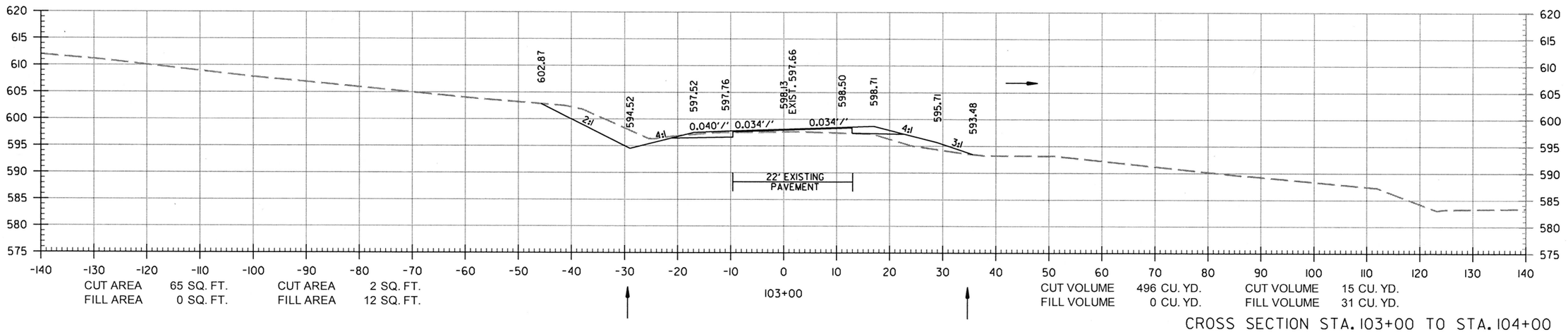

CROSS SECTION STA. 103+00 TO STA. 104+00

4/10/2019

R080504.DGN

DATE REVISED	DATE FILMED	DATE REVISED	DATE FILMED	FED.RD. DIST.NO.	STATE	FED.AID PROJ.NO.	SHEET NO.	TOTAL SHEETS
				6	ARK.			
				JOB NO.		080504	46	57

(2) CROSS SECTIONS

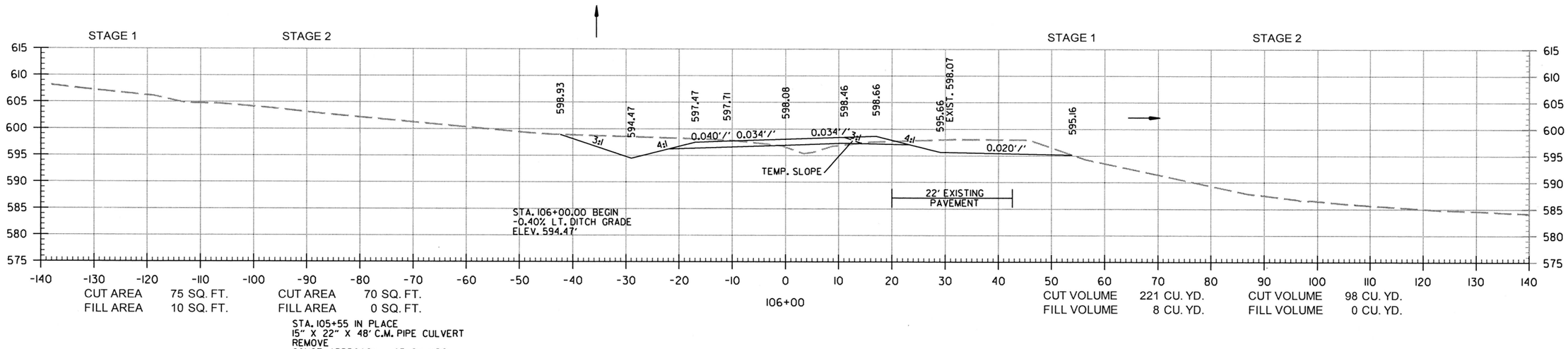

CROSS SECTION STA. 105+00 TO STA. 106+00

4/10/2019

R080504.DGN

DATE REVISED	DATE FILMED	DATE REVISED	DATE FILMED	FED.RD. DIST.NO.	STATE	FED.AID PROJ.NO.	SHEET NO.	TOTAL SHEETS
				6	ARK.			
				JOB NO.		080504	47	57

(2) CROSS SECTIONS

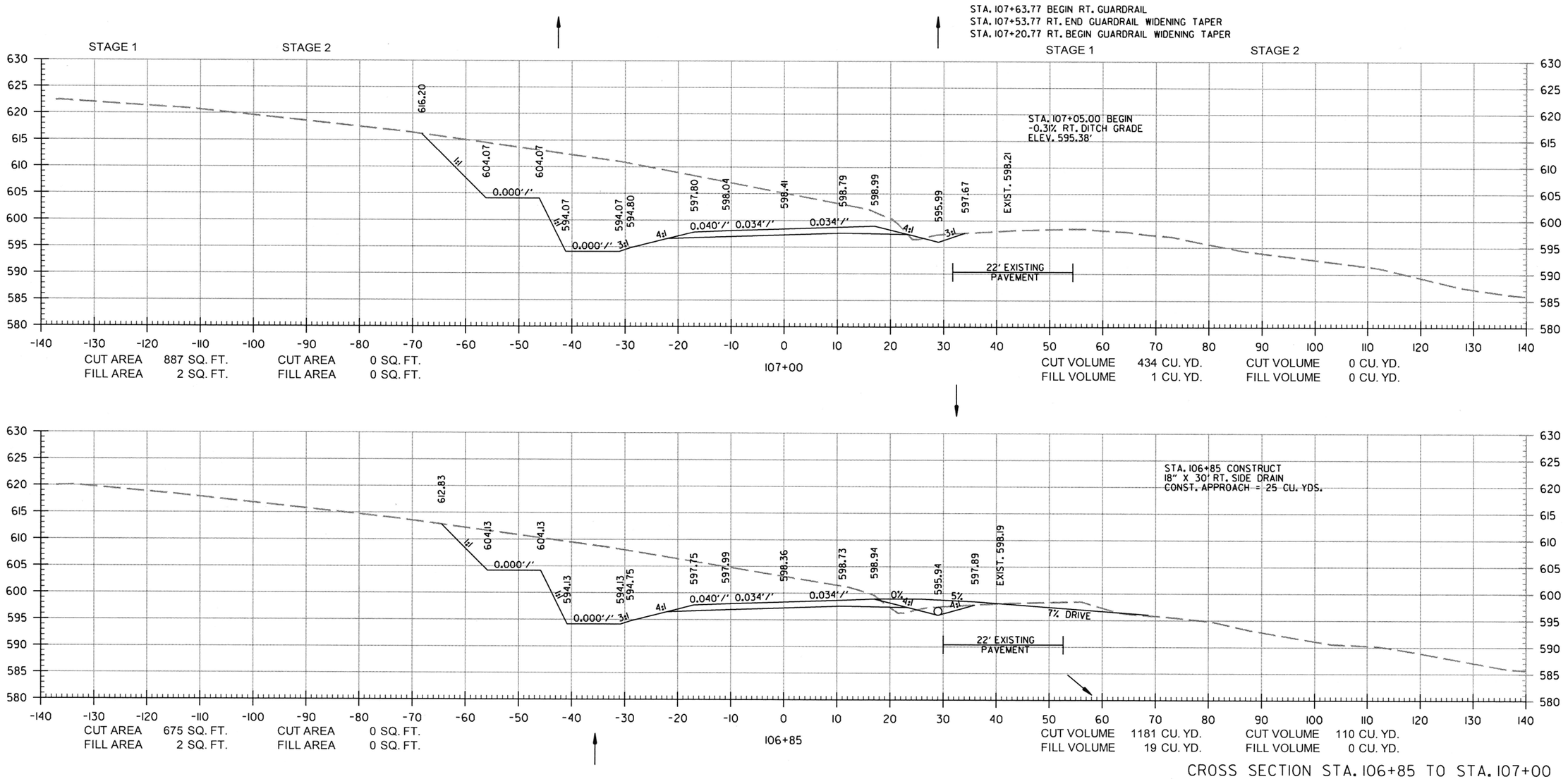

CROSS SECTION STA. 106+85 TO STA. 107+00

4/10/2019

R080504.DGN

DATE REVISED	DATE FILMED	DATE REVISED	DATE FILMED	FED.RD. DIST.NO.	STATE	FED.AID PROJ.NO.	SHEET NO.	TOTAL SHEETS
				6	ARK.			
				JOB NO.		080504	48	57

(2) CROSS SECTIONS

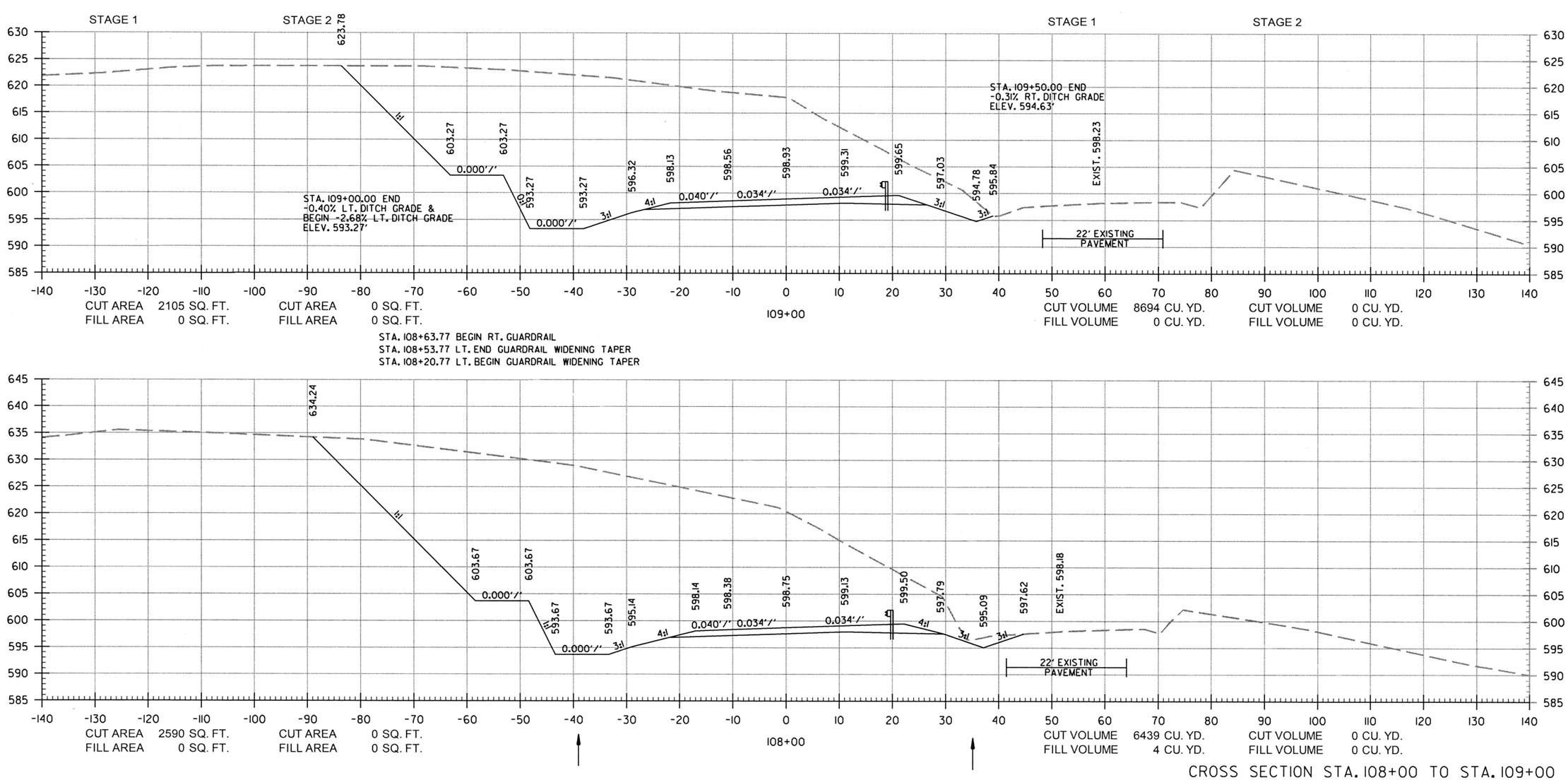

CROSS SECTION STA. 108+00 TO STA. 109+00

4/10/2019

R080504.DGN

DATE REVISED	DATE FILMED	DATE REVISED	DATE FILMED	FED.RD. DIST.NO.	STATE	FED.AID PROJ.NO.	SHEET NO.	TOTAL SHEETS
				6	ARK.			
				JOB NO.		080504	49	57

(2) CROSS SECTIONS

STAGE 1		STAGE 2	
CUT AREA	0 SQ. FT.	CUT AREA	0 SQ. FT.
FILL AREA	0 SQ. FT.	FILL AREA	0 SQ. FT.

STA. 112+60.14 TOE OF SLOPE

STAGE 1		STAGE 2	
CUT VOLUME	0 CU. YD.	CUT VOLUME	0 CU. YD.
FILL VOLUME	572 CU. YD.	FILL VOLUME	0 CU. YD.

CUT AREA	0 SQ. FT.	CUT AREA	0 SQ. FT.
FILL AREA	0 SQ. FT.	FILL AREA	0 SQ. FT.

STA. 110+55.08 TOE OF SLOPE

CUT VOLUME	0 CU. YD.	CUT VOLUME	0 CU. YD.
FILL VOLUME	533 CU. YD.	FILL VOLUME	0 CU. YD.

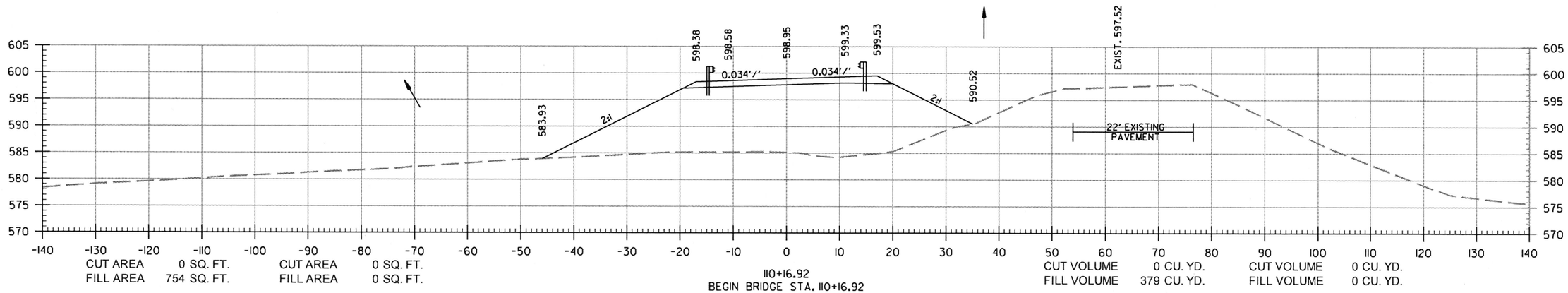

CUT AREA	0 SQ. FT.	CUT AREA	0 SQ. FT.
FILL AREA	754 SQ. FT.	FILL AREA	0 SQ. FT.

110+16.92
BEGIN BRIDGE STA. 110+16.92

CUT VOLUME	0 CU. YD.	CUT VOLUME	0 CU. YD.
FILL VOLUME	379 CU. YD.	FILL VOLUME	0 CU. YD.

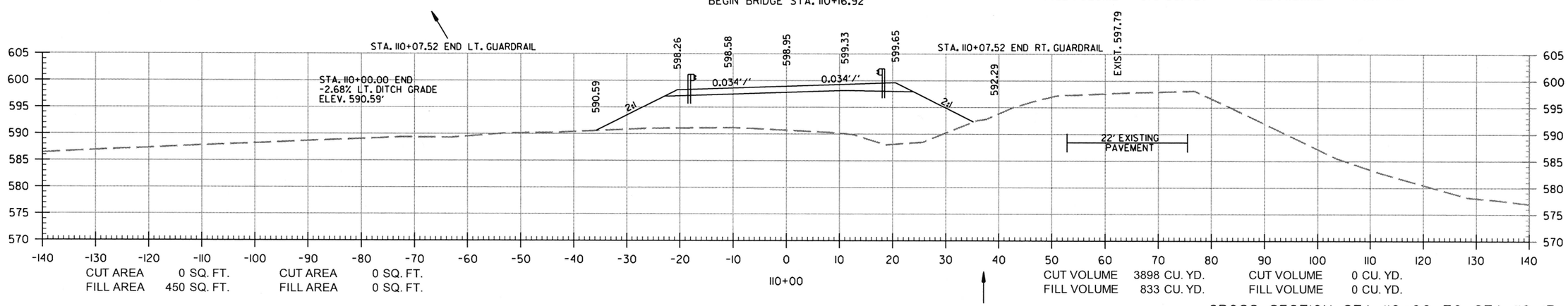

CUT AREA	0 SQ. FT.	CUT AREA	0 SQ. FT.
FILL AREA	450 SQ. FT.	FILL AREA	0 SQ. FT.

110+00

CUT VOLUME	3898 CU. YD.	CUT VOLUME	0 CU. YD.
FILL VOLUME	833 CU. YD.	FILL VOLUME	0 CU. YD.

CROSS SECTION STA. 110+00 TO STA. 110+17

4/10/2019

R080504.DGN

DATE REVISED	DATE FILMED	DATE REVISED	DATE FILMED	FED.RD. DIST.NO.	STATE	FED.AID PROJ.NO.	SHEET NO.	TOTAL SHEETS
				6	ARK.			
				JOB NO.		080504	50	57

(2) CROSS SECTIONS

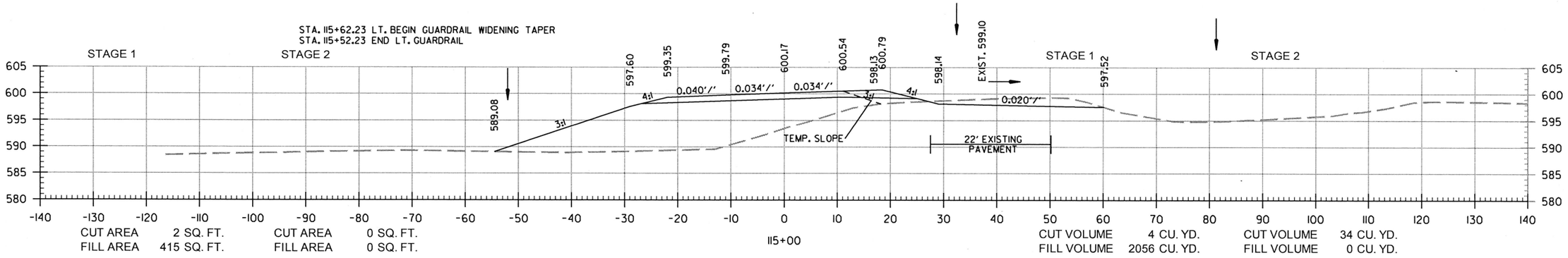

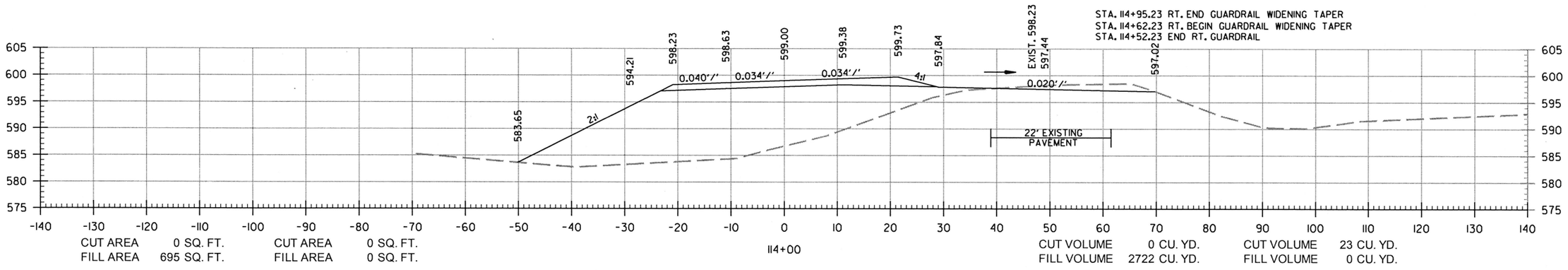

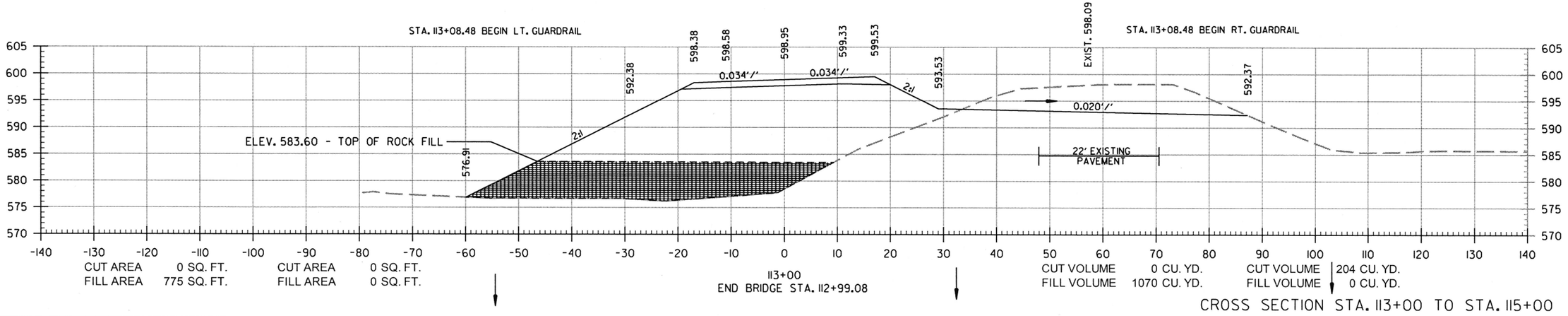

CROSS SECTION STA. 113+00 TO STA. 115+00

4/10/2019

R080504.DGN

DATE REVISED	DATE FILMED	DATE REVISED	DATE FILMED	FED.RD. DIST.NO.	STATE	FED.AID PROJ.NO.	SHEET NO.	TOTAL SHEETS
				6	ARK.			
				JOB NO.		080504	51	57

(2) CROSS SECTIONS

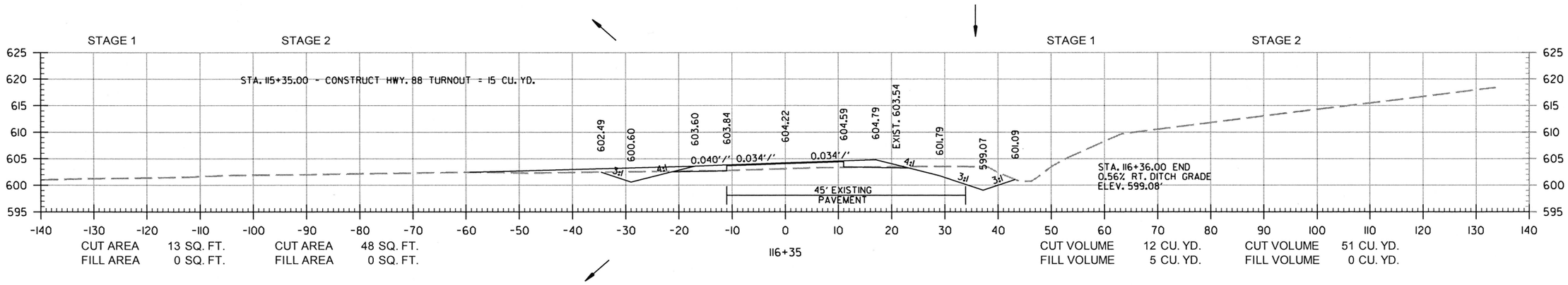

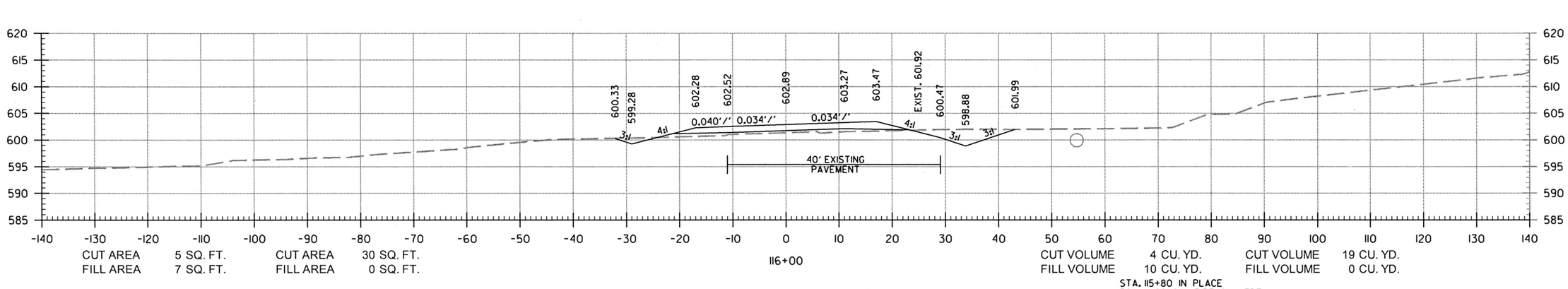

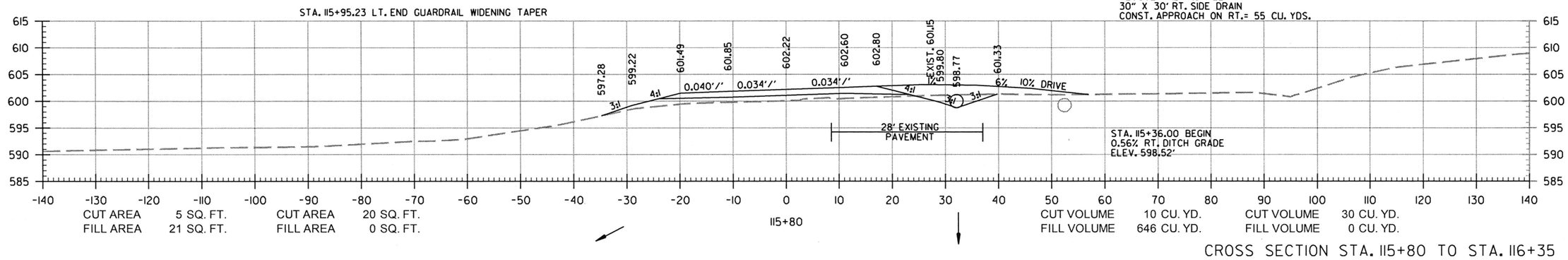

CROSS SECTION STA. 115+80 TO STA. 116+35

4/10/2019

R080504.DGN

DATE REVISED	DATE FILMED	DATE REVISED	DATE FILMED	FED.RD. DIST.NO.	STATE	FED.AID PROJ.NO.	SHEET NO.	TOTAL SHEETS
				6	ARK.			
				JOB NO.		080504	52	57

(2) CROSS SECTIONS

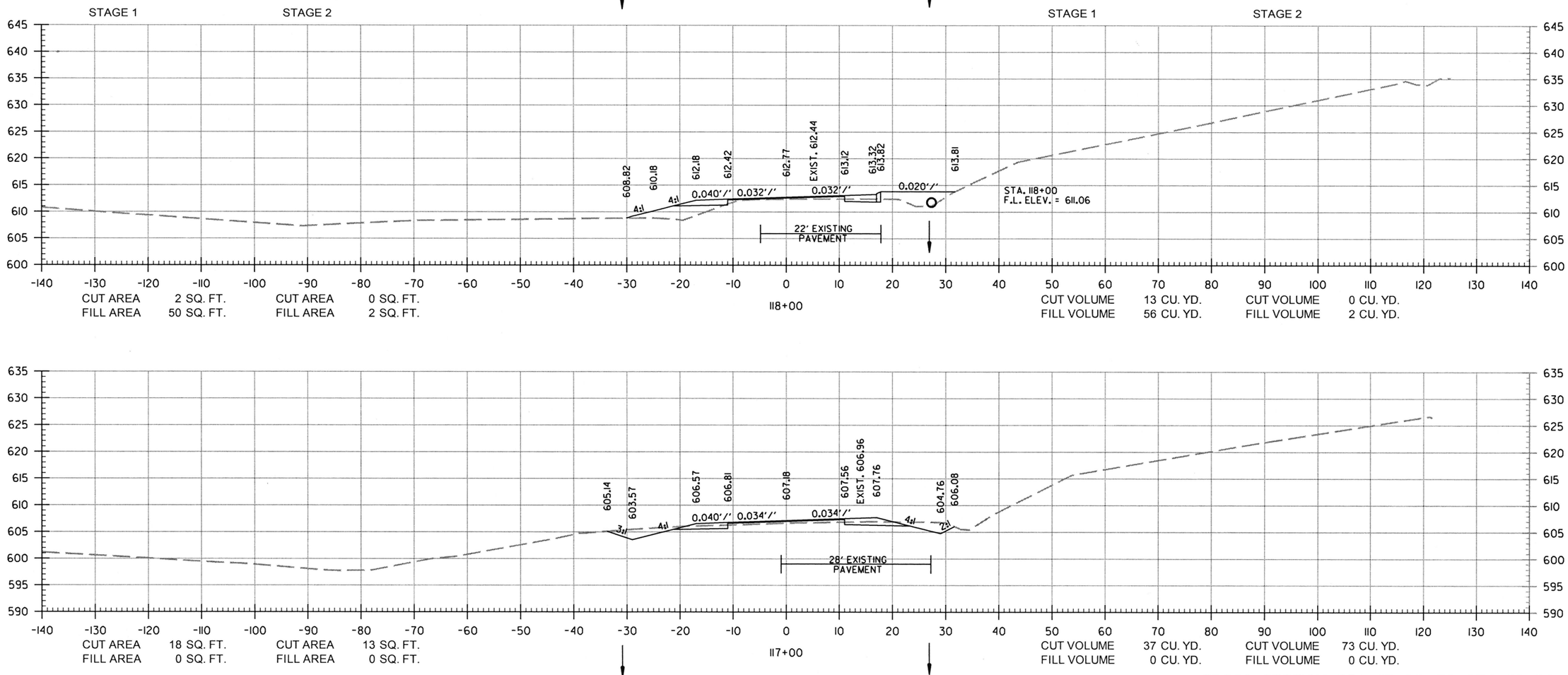

CROSS SECTION STA. 117+00 TO STA. 118+00

4/10/2019

R080504.DGN

DATE REVISED	DATE FILMED	DATE REVISED	DATE FILMED	FED.RD. DIST.NO.	STATE	FED.AID PROJ.NO.	SHEET NO.	TOTAL SHEETS
				6	ARK.			
				JOB NO.		080504	53	57

(2) CROSS SECTIONS

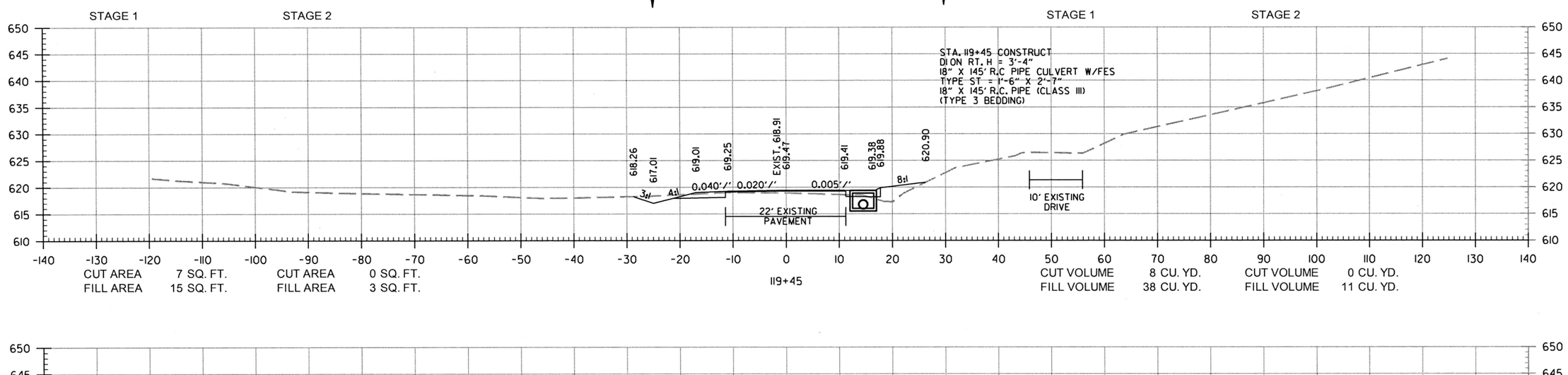

CROSS SECTION STA. 119+00 TO STA. 119+45

4/10/2019

R080504.DGN

DATE REVISED	DATE FILMED	DATE REVISED	DATE FILMED	FED.RD. DIST.NO.	STATE	FED.AID PROJ.NO.	SHEET NO.	TOTAL SHEETS
				6	ARK.			
				JOB NO.		080504	54	57

(2) CROSS SECTIONS

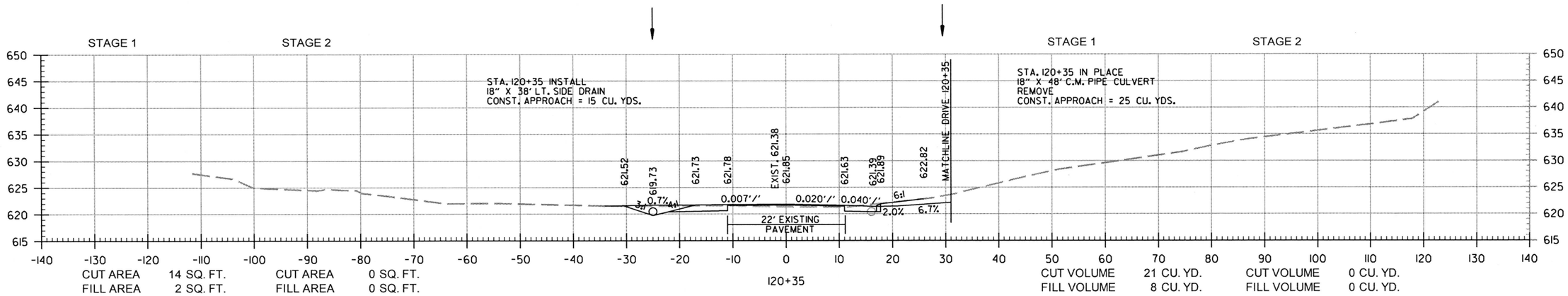

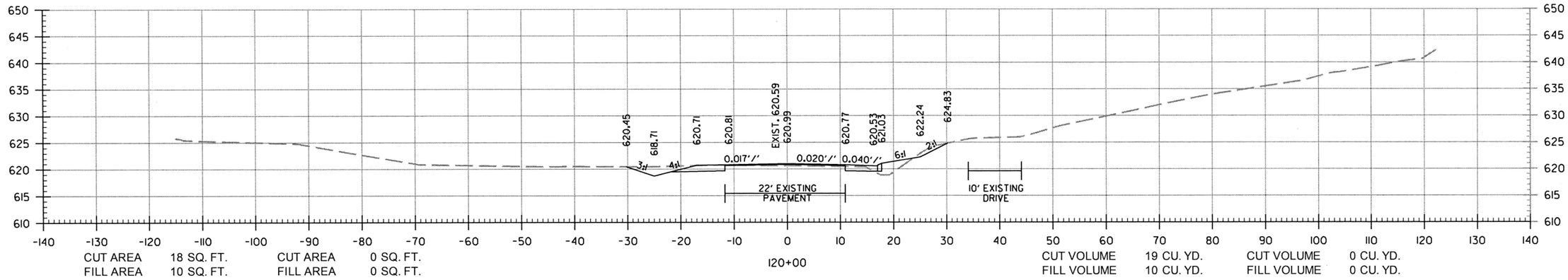

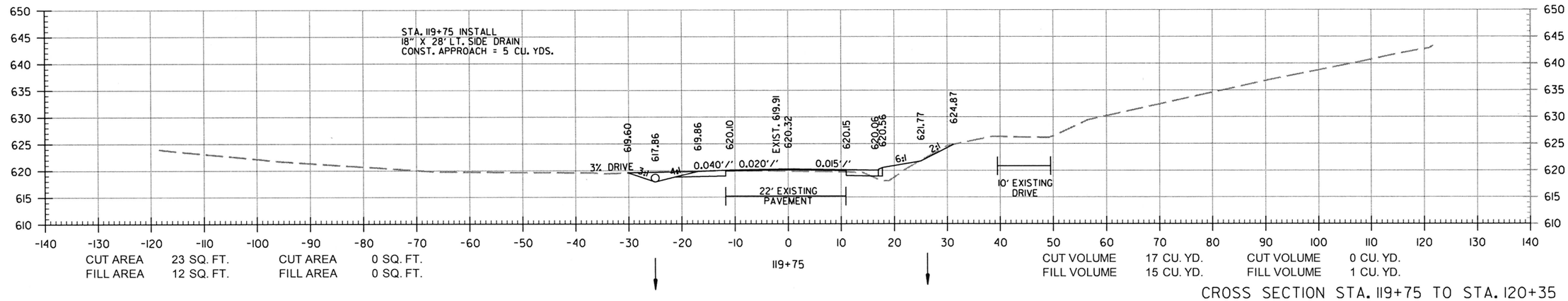

CROSS SECTION STA. 119+75 TO STA. 120+35

4/10/2019

R080504.DGN

DATE REVISED	DATE FILMED	DATE REVISED	DATE FILMED	FED.RD. DIST.NO.	STATE	FED.AID PROJ.NO.	SHEET NO.	TOTAL SHEETS
				6	ARK.			
				JOB NO.		080504	55	57

(2) CROSS SECTIONS

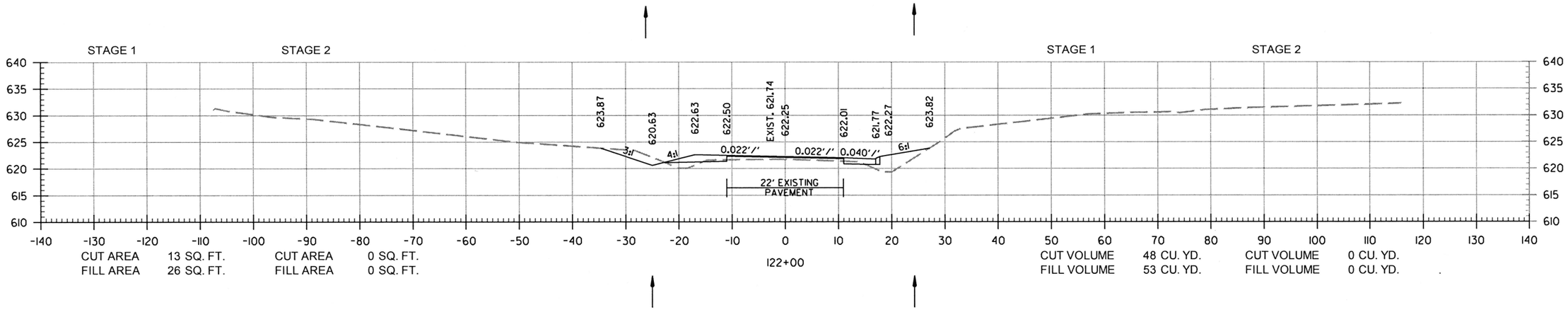

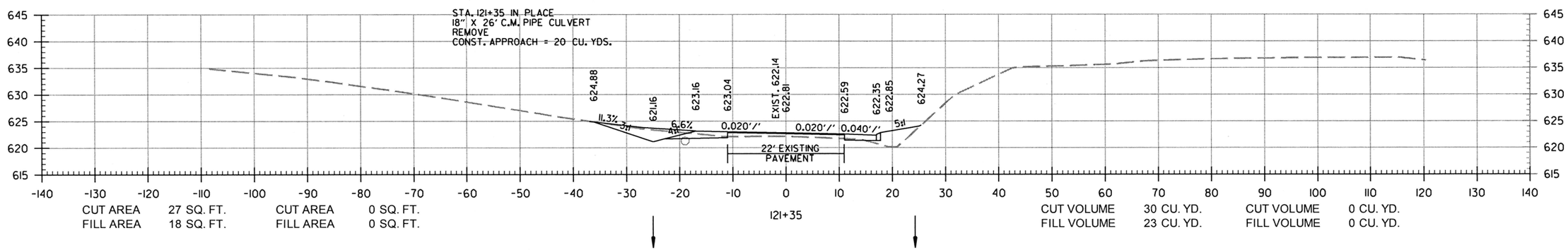

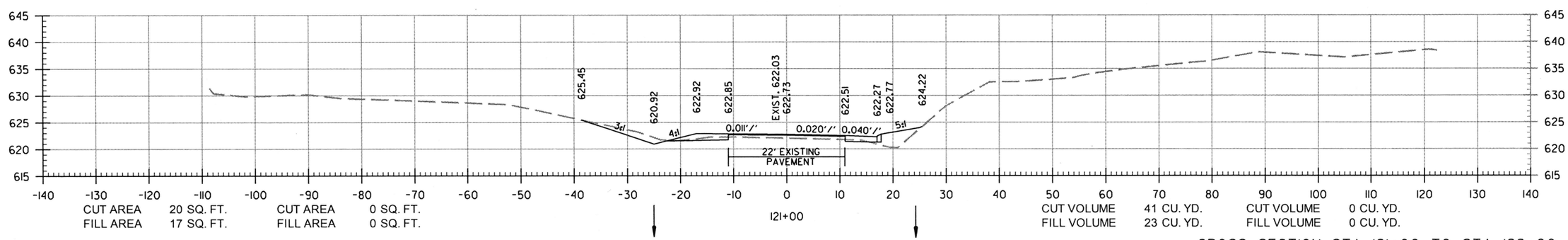

CROSS SECTION STA. 121+00 TO STA. 122+00

4/10/2019

R080504.DGN

DATE REVISED	DATE FILMED	DATE REVISED	DATE FILMED	FED.RD. DIST.NO.	STATE	FED.AID PROJ.NO.	SHEET NO.	TOTAL SHEETS
				6	ARK.			
				JOB NO.		080504	56	57

(2) CROSS SECTIONS

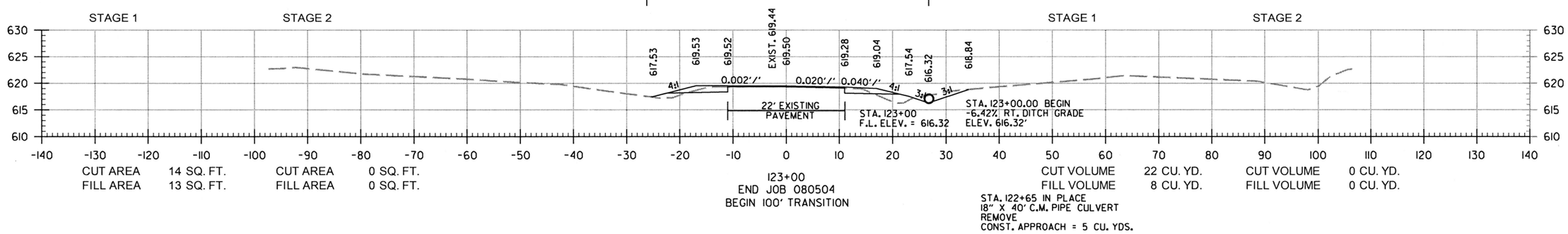

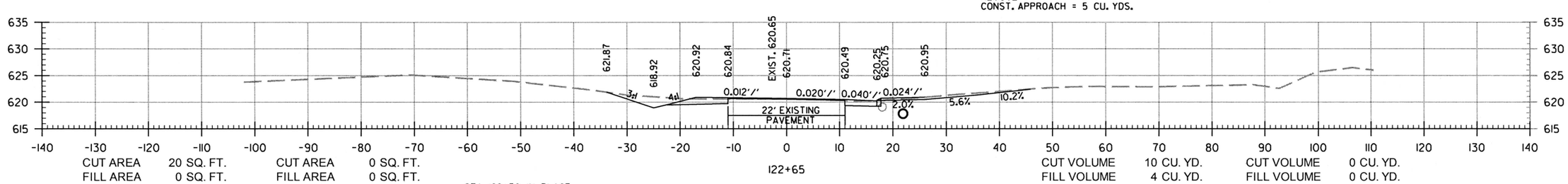

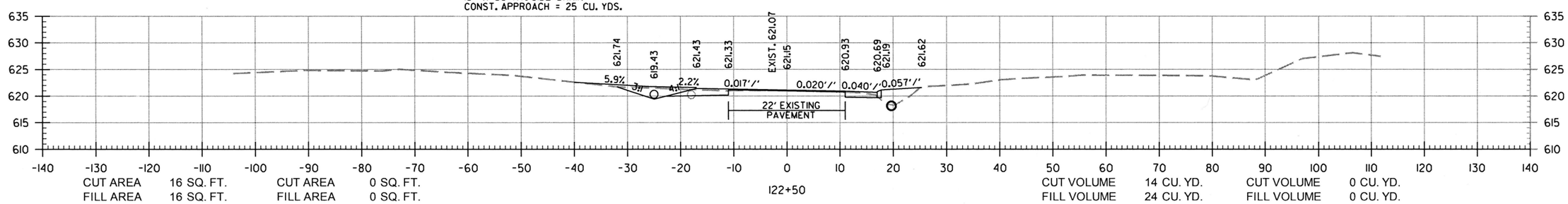

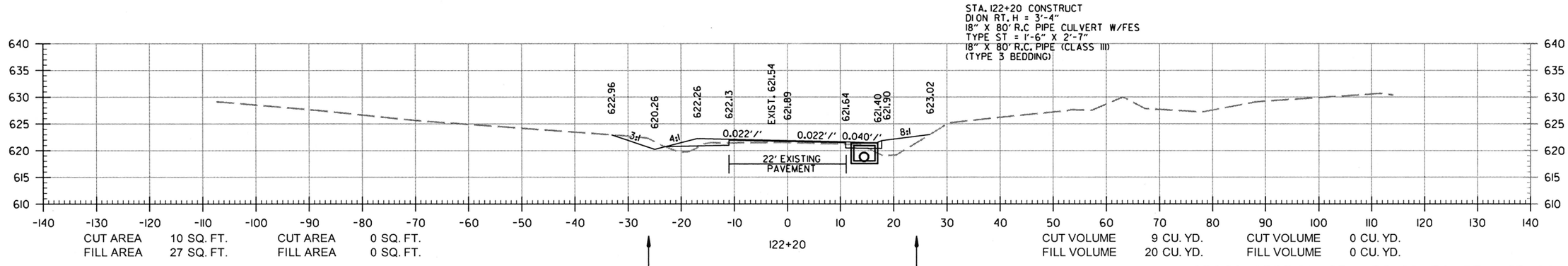

CROSS SECTION STA. 122+20 TO STA. 123+00

4/10/2019

R080504.DGN

DATE REVISED	DATE FILMED	DATE REVISED	DATE FILMED	FED.RD. DIST.NO.	STATE	FED.AID PROJ.NO.	SHEET NO.	TOTAL SHEETS
				6	ARK.			
				JOB NO.		080504	57	57

(2) CROSS SECTIONS

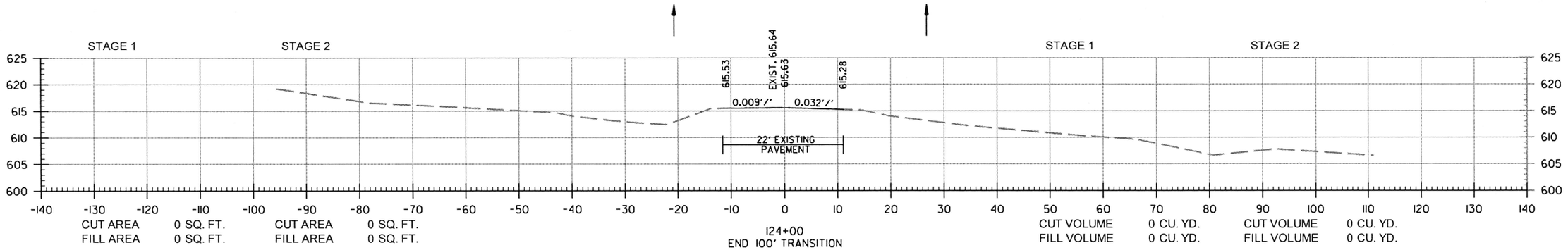

CUT AREA 0 SQ. FT. CUT AREA 0 SQ. FT.
FILL AREA 0 SQ. FT. FILL AREA 0 SQ. FT.

124+00
END 100' TRANSITION

CUT VOLUME 0 CU. YD. CUT VOLUME 0 CU. YD.
FILL VOLUME 0 CU. YD. FILL VOLUME 0 CU. YD.

STA. 123+90 IN PLACE
24" X 36' R.C. CROSS DRAIN
D.A. = 1 AC. @25= 10 CFS
RETAIN

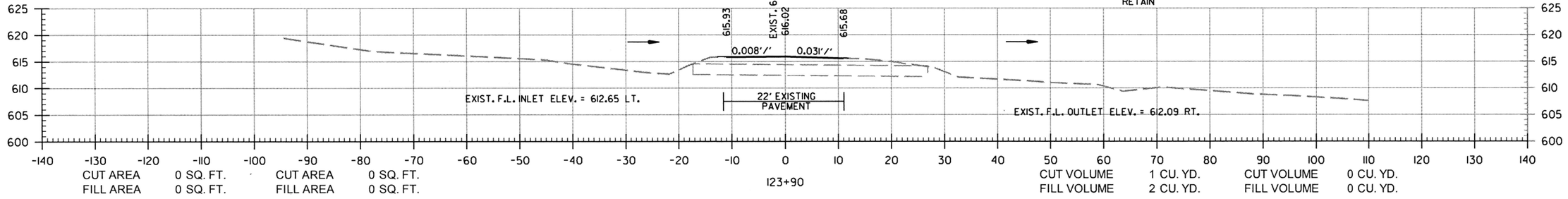

CUT AREA 0 SQ. FT. CUT AREA 0 SQ. FT.
FILL AREA 0 SQ. FT. FILL AREA 0 SQ. FT.

123+90

CUT VOLUME 1 CU. YD. CUT VOLUME 0 CU. YD.
FILL VOLUME 2 CU. YD. FILL VOLUME 0 CU. YD.

STA. 123+50 CONST.
APPROACH ON LT. = 5 CU. YDS

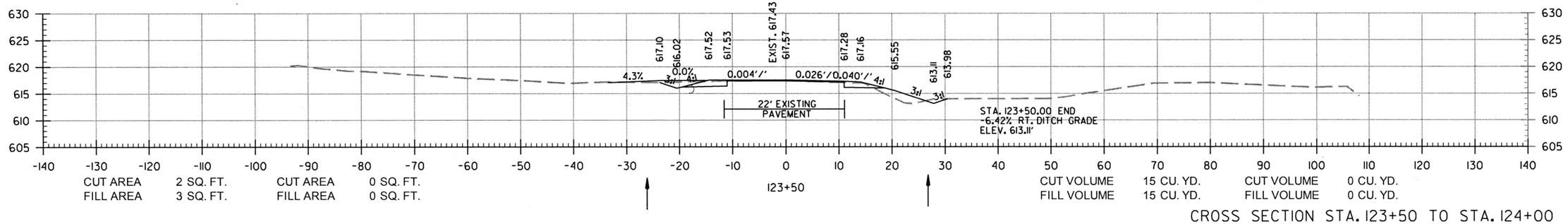

CUT AREA 2 SQ. FT. CUT AREA 0 SQ. FT.
FILL AREA 3 SQ. FT. FILL AREA 0 SQ. FT.

123+50

CUT VOLUME 15 CU. YD. CUT VOLUME 0 CU. YD.
FILL VOLUME 15 CU. YD. FILL VOLUME 0 CU. YD.

CROSS SECTION STA. 123+50 TO STA. 124+00

4/10/2019

R080504.DGN

DATE REVISED	DATE FILMED	DATE REVISED	DATE FILMED	FED. ROAD DIST. NO.	STATE	FED. AID PROJ. NO.	SHEET NO.	TOTAL SHEETS
				6	ARK.			
				JOB NO.				
				(1) EMBANKMENT & BACKFILL 55000				

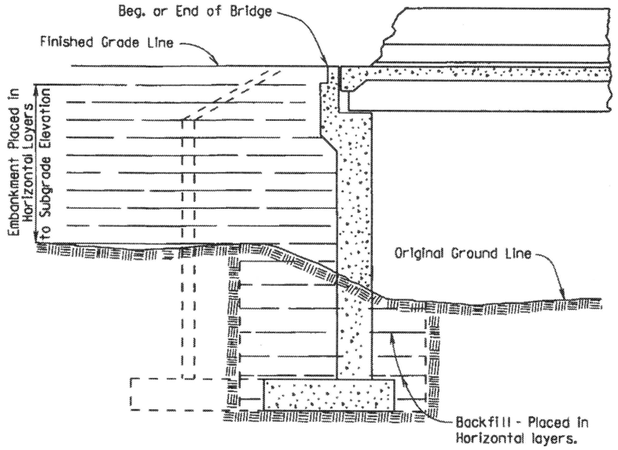

EMBANKMENT CONSTRUCTION AND FOOTING BACKFILL AT VERTICAL WALL ABUTMENTS

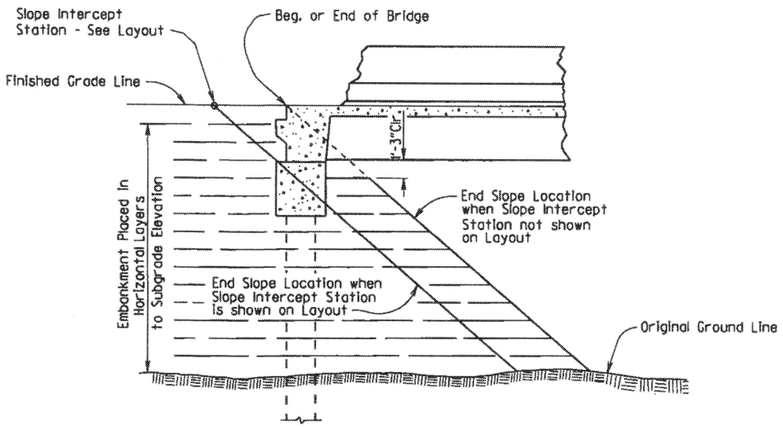

EMBANKMENT CONSTRUCTION AT SPILL-THROUGH PILE END BENTS

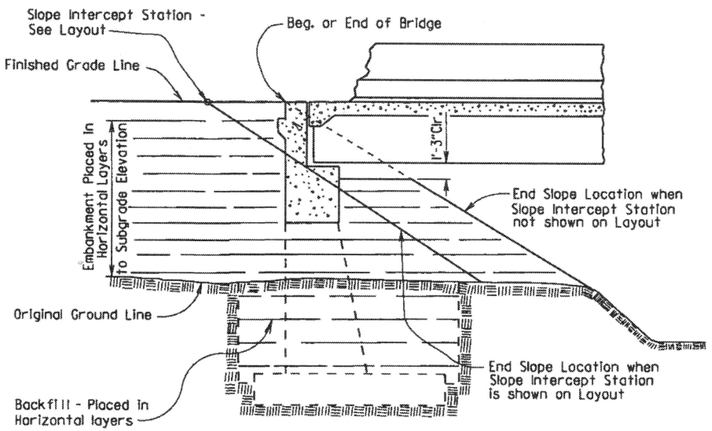

EMBANKMENT CONSTRUCTION AND FOOTING BACKFILL AT SPILL-THROUGH END BENTS

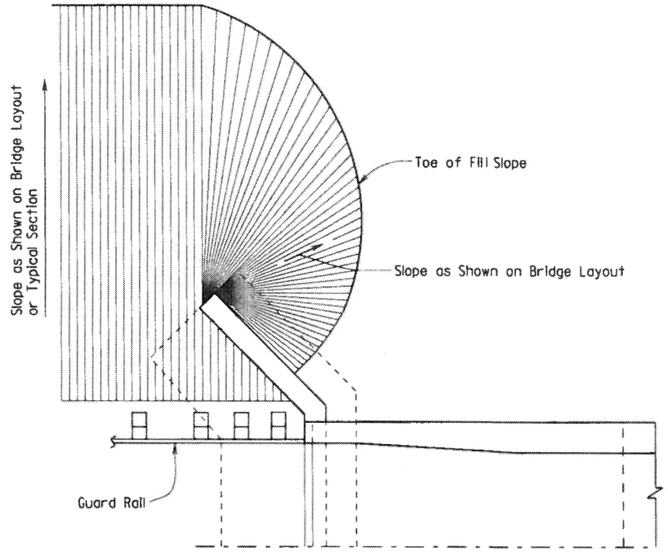

VERTICAL WALL ABUTMENTS

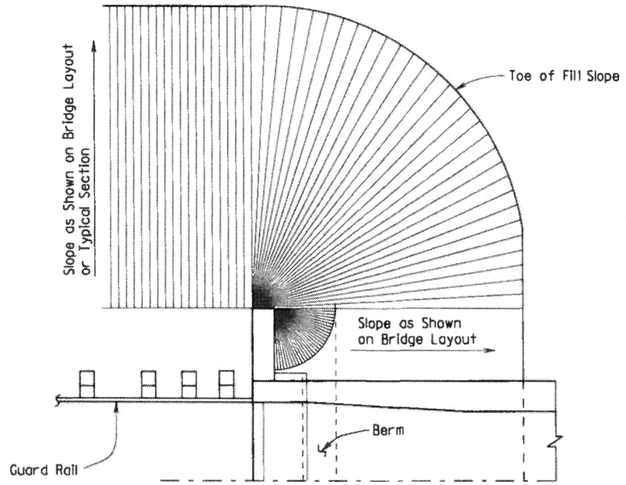

SPILL-THROUGH END BENTS WITH STUB WING

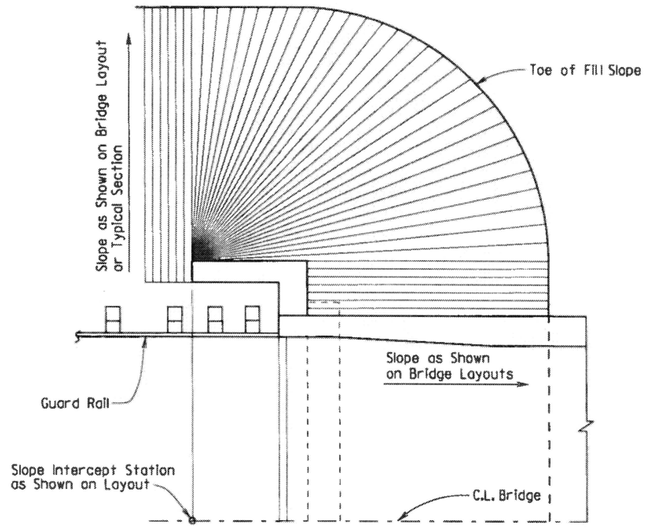

SPILL-THROUGH END BENTS WITH TURNBACK WING

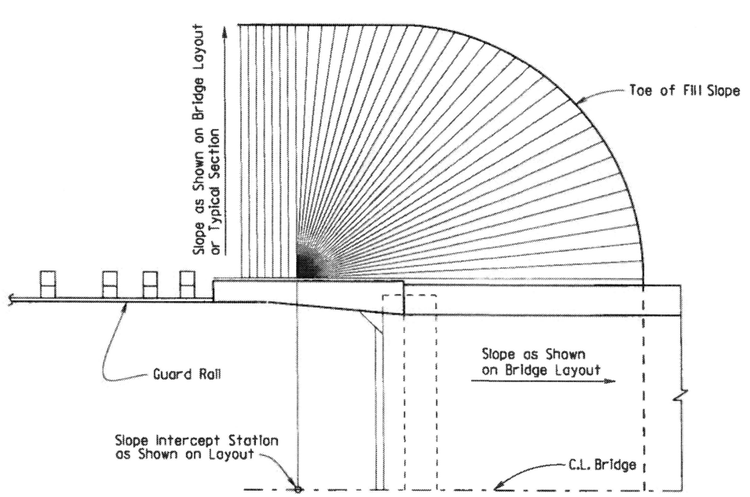

SPILL-THROUGH END BENTS WITH TRANSITION WING

METHOD OF DETERMINING FILL SLOPE LOCATION AT BRIDGE ENDS

GENERAL NOTES

The Bridge End Embankment shall be defined as a section of embankment, not less than 20 feet long adjacent to the bridge end, together with the side slopes and slopes under the bridge end including around the end of wingwalls. Embankment adjacent to structures shall be constructed in 6 inch horizontal layers (loose measure) and compacted by the use of mechanical equipment to the satisfaction of the Engineer. Refer to Subsections 210.09, 210.10 and 801.08 for construction requirements.

STANDARD DETAILS FOR EMBANKMENT CONSTRUCTION AND BACKFILL AT BRIDGE ENDS

ARKANSAS STATE HIGHWAY COMMISSION
LITTLE ROCK, ARK.

DRAWN BY: KDH DATE: 2-27-2014 FILENAME: b55000.dgn
CHECKED BY: BEF DATE: 2-27-2014 SCALE: NO SCALE
DESIGNED BY: STD. DATE: -

DRAWING NO. 55000

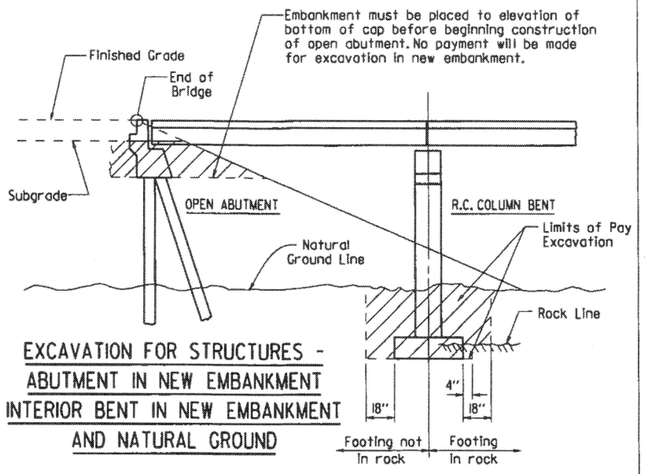

EXCAVATION FOR STRUCTURES - ABUTMENT IN NEW EMBANKMENT INTERIOR BENT IN NEW EMBANKMENT AND NATURAL GROUND

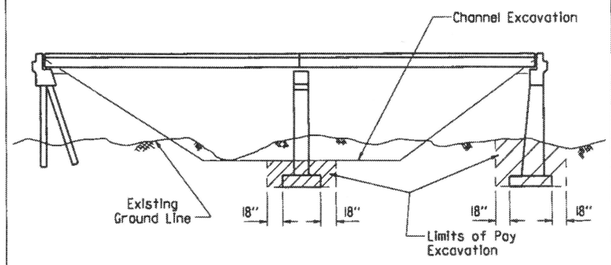

EXCAVATION FOR STRUCTURES - BRIDGE LOCATION WITH DESIGNATED CHANNEL CHANGE

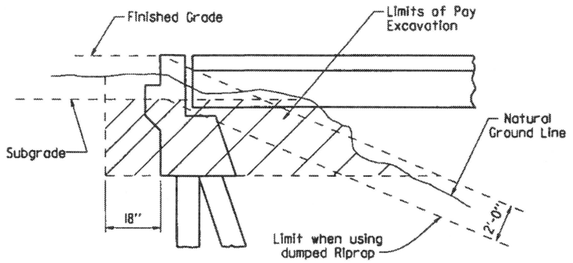

EXCAVATION FOR STRUCTURES - ABUTMENT IN NATURAL GROUND

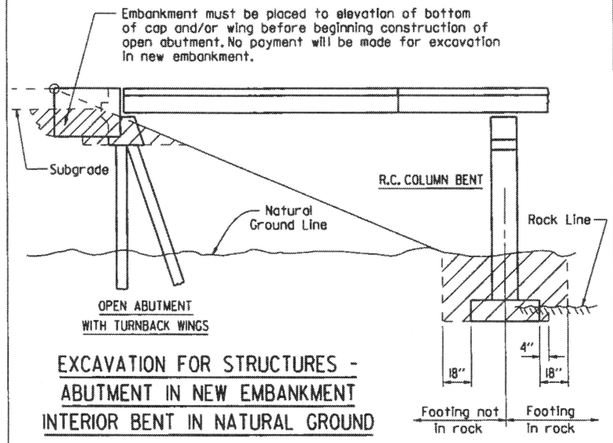

EXCAVATION FOR STRUCTURES - ABUTMENT IN NEW EMBANKMENT INTERIOR BENT IN NATURAL GROUND

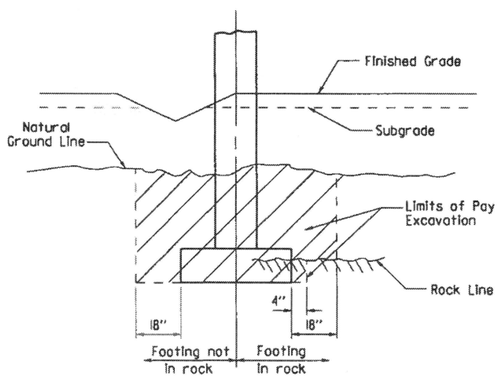

EXCAVATION FOR STRUCTURES - BENT IN ROADWAY FILL SECTION AND NATURAL GROUND

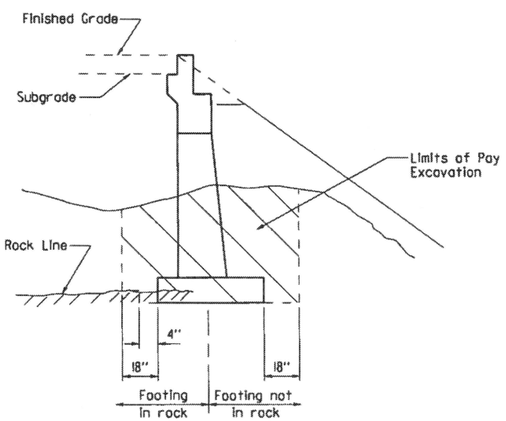

EXCAVATION FOR STRUCTURES - ABUTMENT IN NATURAL GROUND AND NEW EMBANKMENT

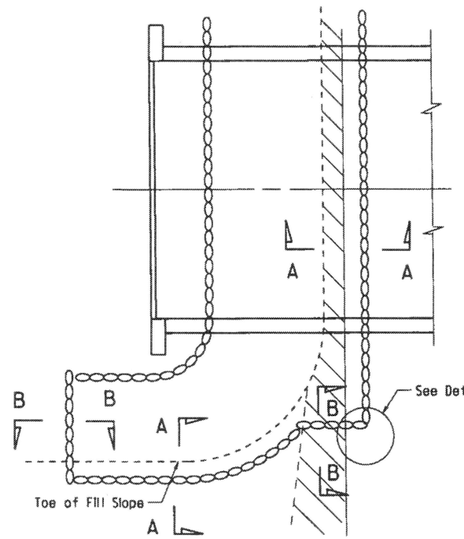

PLAN OF DUMPED RIPRAP

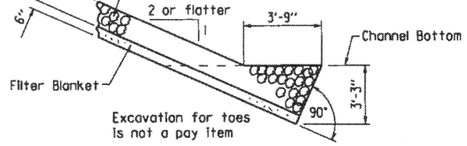

SECTION A-A

(Toe Excavation in Soil)

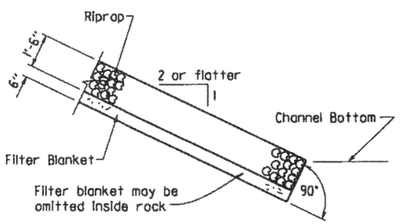

SECTION A-A

(Toe Excavation in Rock)

Note : Use this type of toe when rock is encountered which is in a stable condition.

Note : In lieu of an aggregate filter blanket, a synthetic fiber geotextile fabric complying with the requirements of Subsection 816.02(e) may be used.

Note : Details for computing excavation for structures are included for information as to how plan quantities were calculated and for use when adjusting quantities when changing footing elevation.

DATE REVISED	DATE FILMED	DATE REVISED	DATE FILMED	FED. ROAD DIST. NO.	STATE	FED. AID PROJ. NO.	SHEET NO.	TOTAL SHEETS
				6	ARK.			
				JOB NO.				

(1) RIPRAP & EXCAV. 55001

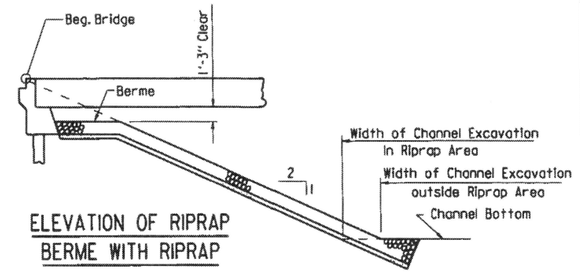

ELEVATION OF RIPRAP BERME WITH RIPRAP

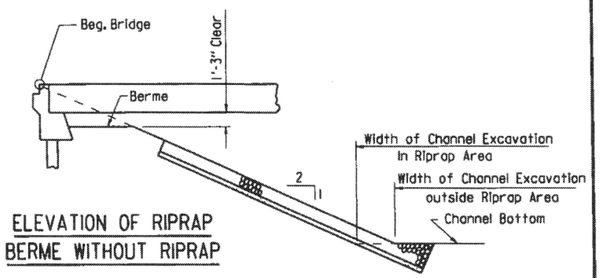

ELEVATION OF RIPRAP BERME WITHOUT RIPRAP

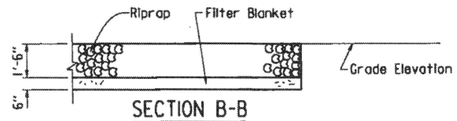

SECTION B-B

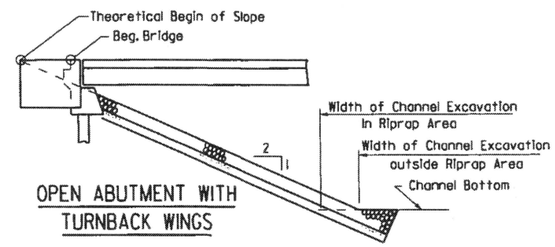

OPEN ABUTMENT WITH TURNBACK WINGS

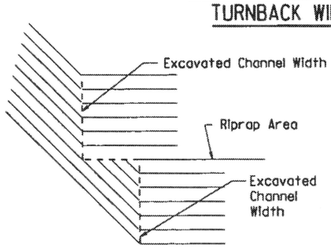

DETAIL C

STANDARD DETAILS FOR DUMPED RIPRAP AND FILTER BLANKET AND COMPUTING EXCAVATION FOR STRUCTURES

ARKANSAS STATE HIGHWAY COMMISSION

LITTLE ROCK, ARK.

DRAWN BY: KDH DATE: 2-27-2014 FILENAME: b5500l.dgn

CHECKED BY: BEF DATE: 2-27-2014 SCALE: NO SCALE

DESIGNED BY: STD. DATE:

DRAWING NO. 55001

DATE REVISED	DATE FILMED	DATE REVISED	DATE FILMED	FED. ROAD DIST. NO.	STATE	FED. AID PROJ. NO.	SHEET NO.	TOTAL SHEETS
				6	ARK.			
				JOB NO.				

① CONCRETE RIPRAP 55002

Note:
Sloped surfaces of concrete riprap to be marked off into blocks (construction joints optional) with an approved grooving tool, spacing the grooved lines about 5' apart.

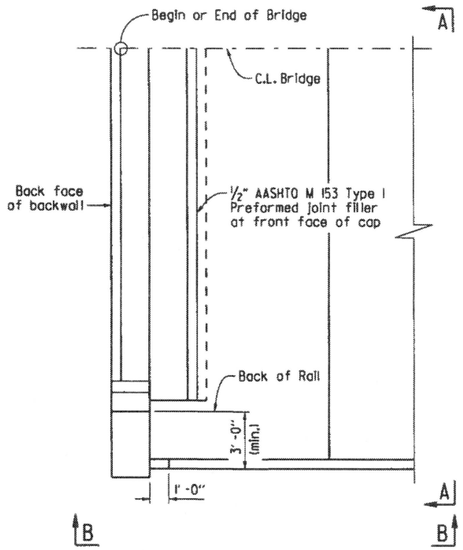

PLAN OF CONCRETE RIPRAP
PERPENDICULAR TO WING
¼" = 1'-0"

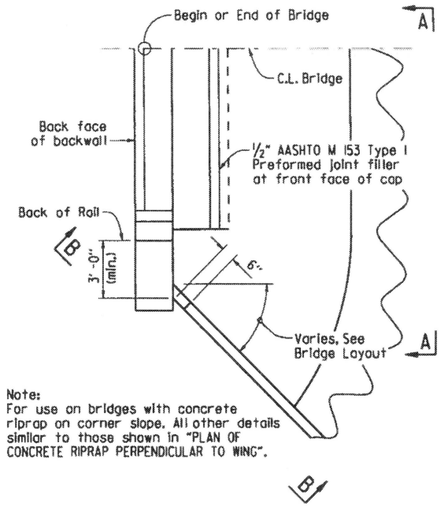

Note:
For use on bridges with concrete riprap on corner slope. All other details similar to those shown in "PLAN OF CONCRETE RIPRAP PERPENDICULAR TO WING".

PLAN OF CONCRETE RIPRAP
AT ANGLE TO WING
¼" = 1'-0"

Note:
For use on bridges with turned back wings. All other details similar to those shown in "PLAN OF CONCRETE RIPRAP PERPENDICULAR TO WING".

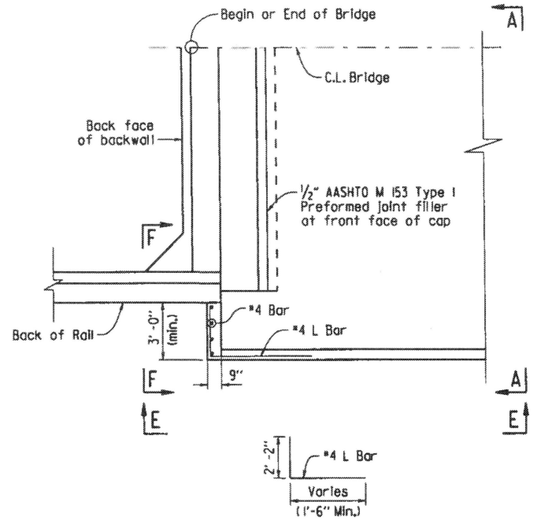

PLAN OF CONCRETE RIPRAP
PERPENDICULAR TO TURNED BACK WING
¼" = 1'-0"

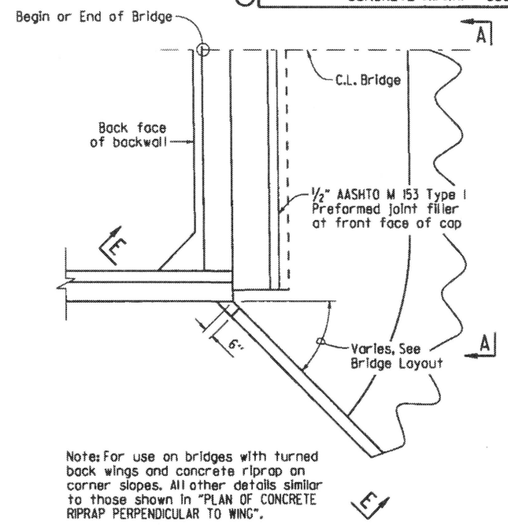

Note: For use on bridges with turned back wings and concrete riprap on corner slopes. All other details similar to those shown in "PLAN OF CONCRETE RIPRAP PERPENDICULAR TO WING".

PLAN OF CONCRETE RIPRAP
AT ANGLE FROM TURNED BACK WING
¼" = 1'-0"

Note:
Wing is shown perpendicular to concrete riprap. Details are similar when wing is at an angle to riprap.

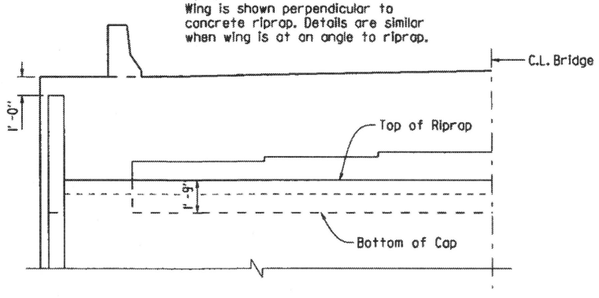

VIEW A-A
¼" = 1'-0"

① Match slope of Riprap Apron.

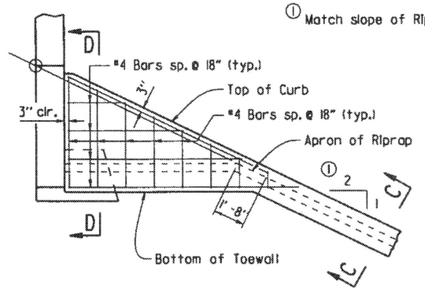

VIEW B-B
¼" = 1'-0"

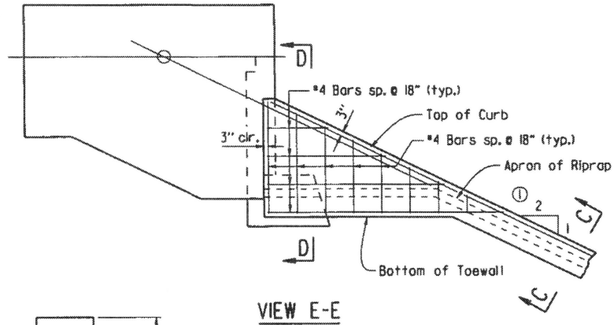

VIEW E-E
¼" = 1'-0"

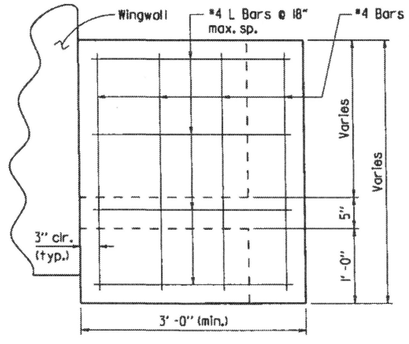

VIEW F-F
1" = 1'-0"

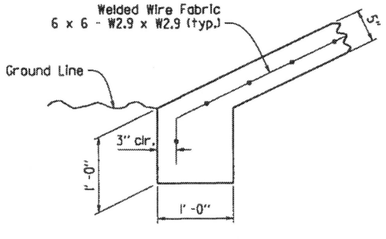

TOE OF CONCRETE RIPRAP
1" = 1'-0"

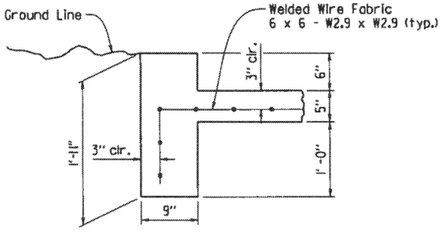

SECTION C-C
1" = 1'-0"

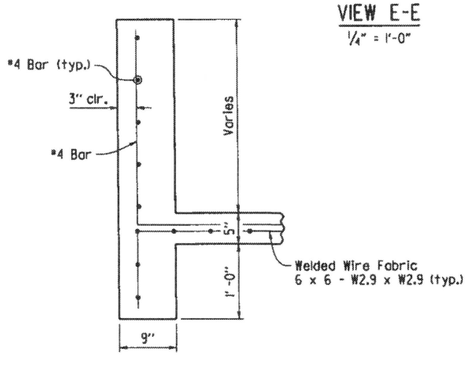

SECTION D-D
1" = 1'-0"

GENERAL NOTES

All concrete shall be Class A with a minimum compressive strength, f'c = 2,100 psi.

Welded wire fabric shall conform to AASHTO M55 or M221.

STANDARD DETAILS FOR CONCRETE RIPRAP

ARKANSAS STATE HIGHWAY COMMISSION

LITTLE ROCK, ARK.

DRAWN BY: ACP DATE: 2/27/2014 FILENAME: b55002.dgn
CHECKED BY: BEF DATE: 2/27/2014 SCALE: AS SHOWN
DESIGNED BY: Std. DATE: ---

DRAWING NO. 55002

DATE REVISED	DATE FILMED	DATE REVISED	DATE FILMED	FED. ROAD DIST. NO.	STATE	FED. AID PROJ. NO.	SHEET NO.	TOTAL SHEETS
3/24/16				6	ARK.			
				JOB NO.				
				① BRIDGE DECK FORMS		55005		

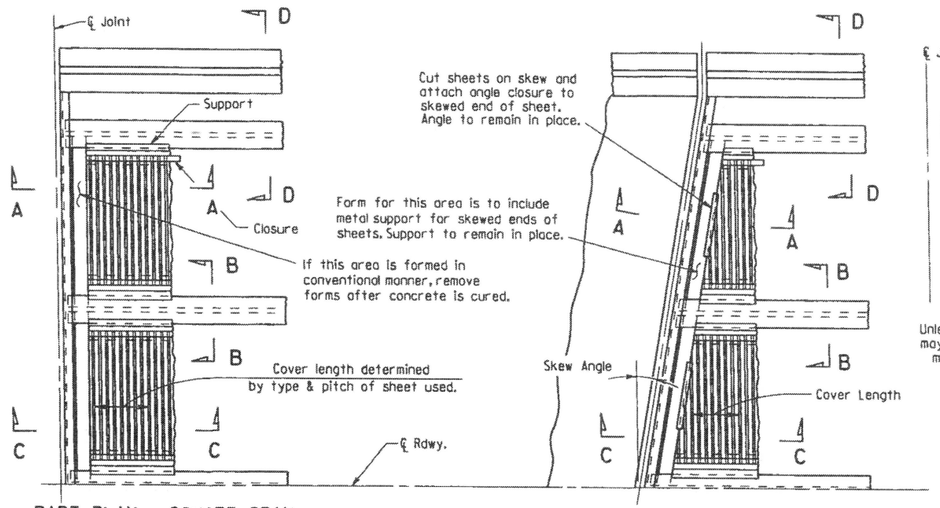

PART PLAN - SQUARE SPAN

3/8" = 1'-0"

PART PLAN - SKEWED SPAN

3/8" = 1'-0"

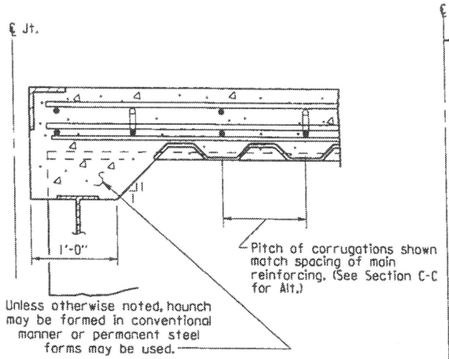

SECTION A-A

N.T.S.

(Angle at end of span)

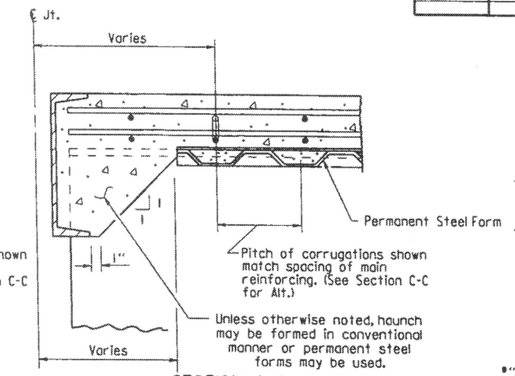

SECTION A-A

N.T.S.

(Channel at end of span)

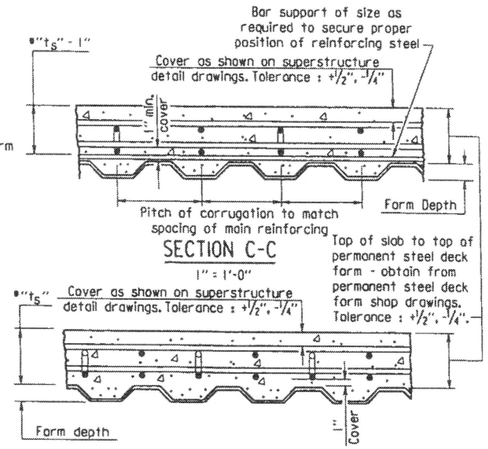

SECTION C-C

1" = 1'-0"

SECTION C-C - ALTERNATE

1" = 1'-0"

(Applicable when corrugations do not match spacing of main reinforcement)

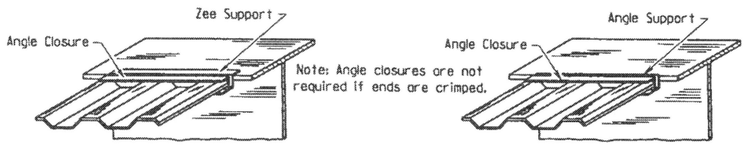

SKETCH OF PERMISSIBLE SUPPORTS

N.T.S.

*t_s = slab thickness as shown on superstructure detail drawings.

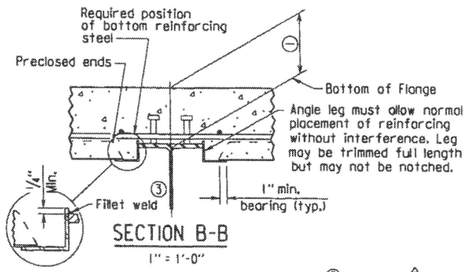

SECTION B-B

1" = 1'-0"

(Showing permissible support for tension flange where shear connectors are used, and for all compression flanges)

③ ⚠ Minimum weld: 1/8" x 1" @ 18". More weld may be required; maximum length per weld = 1 1/2" (typ.)

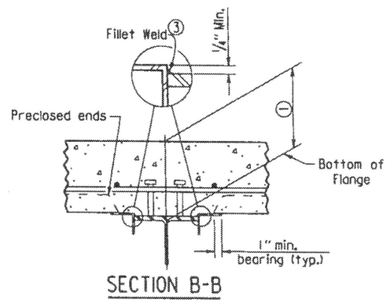

SECTION B-B

1" = 1'-0"

(Showing permissible support for tension flange where shear connectors are used and for all compression flanges)

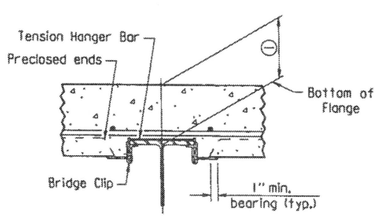

SECTION B-B

1" = 1'-0"

(Showing permissible support for tension flange where shear connectors are not used)

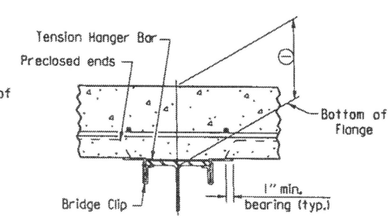

SECTION B-B

1" = 1'-0"

(Showing permissible support for tension flange where shear connectors are not used)

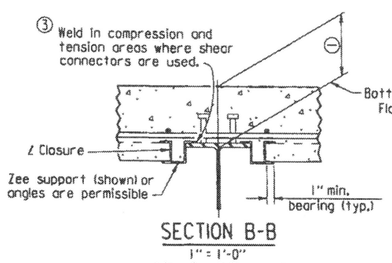

SECTION B-B

1" = 1'-0"

(Showing ∠ Closure)

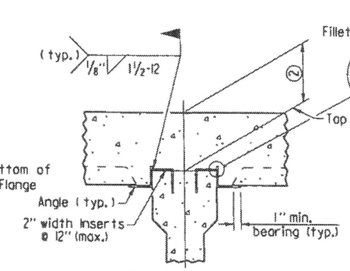

SECTION B-B

(FOR CONCRETE GIRDERS)

1" = 1'-0"

(Showing support by insert cast in girder)

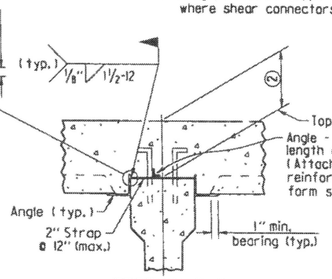

SECTION B-B

(FOR CONCRETE GIRDERS)

1" = 1'-0"

(Showing support by Strap)

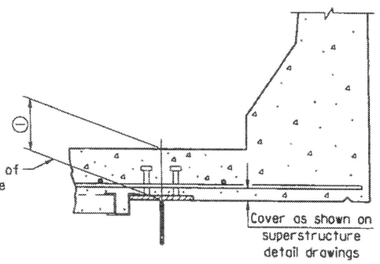

SECTION D-D

1" = 1'-0"

Note: Only Bottom Reinforcing is shown.

① Distance from top of slab to bottom of top flange as measured at centerline girder and as shown on superstructure detail drawings. This dimension may vary within the following limits to maintain the grade and slab thickness tolerances : Minimum - occurs when either the top flange or the support angle leg contacts the bottom reinforcing steel; Maximum = t_s + 1 3/4" + flange thickness. See Section C-C for slab thickness tolerance between adjacent girder flanges.

② Distance from top of slab to top of girder as measured at centerline girder and as shown on superstructure detail drawings. This dimension may vary within the following limits to maintain the grade and slab thickness tolerances : Minimum - occurs when either the top of girder or the support angle leg contacts the bottom reinforcing steel; Maximum - value shown on the superstructure detail drawings when removable forms are used. See Section C-C for slab thickness tolerance between adjacent girder flanges.

⚠ Revised weld dimension by KWY, Ck'd. by BEF, 3/24/16.

GENERAL NOTES

Permanent steel deck forms may be used at the Contractor's option and shall be at no additional cost to the Department. Such use may result in changes to the dead load deflection of the girder. Any cost for adjustments due to a change in the dead load deflection will be borne by the Contractor. Payment for deck concrete and structural steel will not be increased due to use of permanent steel deck forms.

Permanent steel deck forms shall conform to Subsection 802.14(b). Detailed plans, including detailed calculations and manufacturer's technical brochure, shall be submitted to and approved by the Engineer before work of forming the bridge deck is started.

Welding of form supports to the tension flange of steel girders will be permitted only in areas where shear connectors are used. When welding is not allowed, the method of fastening Z or ∠ supports to the flange must be approved by the Engineer.

Form sheets shall be fastened to supporting members and to each other with galvanized metal screws sufficient in size and number to provide a secure attachment. Alternate methods of attachment must be approved by the Engineer.

When the pitch of form corrugations match the reinforcing spacing, transversely align form sheets across the bridge to maintain the correct orientation of continuous reinforcing bars in the corrugations.

Bar support rods, when used, shall be sized and spaced to adequately support the bottom reinforcing mat at the required position.

High chairs shall be sized to support the top mat of reinforcing at the proper position. High chairs shall be placed at locations shown on the detail drawings.

Specifications: Arkansas State Highway and Transportation Department Standard Specifications for Highway Construction (2014 Edition), with applicable Supplemental Specifications and Special Provisions.

STANDARD DETAILS FOR PERMANENT STEEL BRIDGE DECK FORMS FOR STEEL & CONCRETE GIRDER SPANS

ARKANSAS STATE HIGHWAY COMMISSION

LITTLE ROCK, ARK.

DRAWN BY:	KDH	DATE:	2-27-2014	FILENAME:	b55005.dgn
CHECKED BY:	BEF	DATE:	2-27-2014	SCALE:	NONE
DESIGNED BY:	STD.	DATE:	—		

DRAWING NO. 55005

DATE REVISED	DATE FILMED	DATE REVISED	DATE FILMED	FED. ROAD DIST. NO.	STATE	FED. AID PROJ. NO.	SHEET NO.	TOTAL SHEETS
				6	ARK.			
				JOB NO.				
				①	GENERAL NOTES		55006	

GENERAL NOTES

These GENERAL NOTES are applicable unless otherwise shown in the Plan Details, Special Provisions, or Supplemental Specifications.

CONSTRUCTION SPECIFICATIONS: Arkansas State Highway and Transportation Department Standard Specifications for Highway Construction (2014 Edition) with applicable Supplemental Specifications and Special Provisions. Section and Subsection refer to the Standard Specifications.

DESIGN SPECIFICATIONS: See Bridge Layout(s).

SUPERSTRUCTURE NOTES:

MATERIALS AND STRENGTHS:

Class S(AE) Concrete	f'c =	4,000 psi
Reinforcing Steel (Gr. 60, AASHTO M 31 or M 322, Type A)	fy =	60,000 psi
Structural Steel (AASHTO M 270, Gr. 36)	Fy =	36,000 psi
Structural Steel (AASHTO M 270, Gr. 50)	Fy =	50,000 psi
Structural Steel (AASHTO M 270, Gr. 50W)	Fy =	50,000 psi
Structural Steel (AASHTO M 270, Gr. HPS70W)	Fy =	70,000 psi

See Plan Details for Grade(s) of Structural Steel required.

CONCRETE:

All concrete shall be Class S(AE) with a minimum 28 day compressive strength f'c = 4,000 psi. Concrete shall be poured in the dry and all exposed corners shall be chamfered ¾" unless otherwise noted.

The superstructure details shown are for use when removable deck forming is used and are the basis for measurement of Class S(AE) Concrete. See Standard Drawing No. 55005 for allowable modifications and for tolerances when Permanent Steel Bridge Deck Forms are used.

Use of a longitudinal screed is not permitted on any span of a bridge deck with horizontal curvature.

The concrete deck (roadway surface) shall be given a tine finish in accordance with Subsection 802.19 for Class 5 Tined Bridge Roadway Surface Finish. Sidewalks shall receive a broomed finish as specified for final finishing in Subsection 802.19 for Class 6 Broomed Finish. Movement of the finishing machine across new concrete shall be on planks placed on the surface and shall be prohibited for 72 hours after finishing the pour. Sufficient concrete must be placed ahead of the strike-off to fully load the beam or girder. When permitted, the use of a longitudinal strike-off will require that a vertical camber adjustment be made in the strike-off to account for the future dead load deflection due to any railings, median barrier, and sidewalks.

REINFORCING STEEL:

All reinforcing steel shall be Grade 60 conforming to AASHTO M 31 or M 322, Type A, with mill test reports and shall be epoxy coated. The reinforcing steel is to be accurately located in the forms and firmly held in place by steel wire supports, sufficient in number and size to prevent displacement during the course of construction. The wire supports will not be paid for directly, but will be considered subsidiary to the item "Epoxy Coated Reinforcing Steel (Grade 60)".

STRUCTURAL STEEL (COMMON TO W-BEAMS AND PLATE GIRDERS):

Structural steel shall be AASHTO M 270 with grade and payment as specified in the plans. Grade 50W steel shall not be painted and all exposed surfaces shall be cleaned in accordance with Subsection 807.84(e). Grade 36 and Grade 50 steel shall be painted unless otherwise noted and all exposed surfaces shall be cleaned in accordance with Subsection 807.84. Structural steel completely embedded in concrete may be AASHTO M 270, Gr. 36, Gr. 50 or Gr. 50W unless otherwise noted.

Drawings show general features of design only. Shop drawings shall be made in accordance with the specifications, submitted and approval secured before fabrication is begun.

Requests for substitution of structural steel shapes shown with shapes of greater size must be submitted by the Contractor to the Engineer for approval. Steels of equal or greater strengths will be accepted only when shown on the approved shop drawings. Payment will be based on the basis of shapes and materials shown in the plans, and no additional compensation will be made for any adjustments due to substitutions.

All welding that is to be done during fabrication of structural steel, including temporary welds, shall be detailed on the shop drawings and submitted for approval. If additional welds are required, whether permanent or temporary, a formal request with detailed drawings shall be submitted to the Engineer for approval; however, additional welds used for attaching falsework support devices or screed rail supports to the structural steel that do not exceed the limitations of Subsection 802.13 will not require approval prior to construction. All welding shall conform to Subsection 807.26.

Unless otherwise noted, field connections shall be bolted with ¾" ø high-strength bolts using 15/16" ø open holes. Holes for ¾" ø high-strength bolts may be 15/16" ø if a washer is supplied for use under both the nut and head of the bolt. The use of oversized holes will not be allowed on main members unless otherwise noted. Bolts shall be placed with heads on the outside face of the exterior beam or girder webs and on the bottom of the beam or girder flanges.

All stud shear connectors shall be granular flux filled, solid fluxed, or equal and shall be automatically end welded in accordance with recommendations of the Manufacturer.

When painting is required, all structural steel except galvanized steel and steel completely encased in concrete shall be painted in accordance with Subsection 807.75. The color of paint shall be as specified in the plans.

STRUCTURAL STEEL (W-BEAMS):

All beams and field splice plates, and all diaphragms and connection plates attached to horizontally curved beams are considered main load carrying members and shall meet the Longitudinal Charpy V-Notch Test specified in Subsection 807.05. This work and material will not be paid for directly, but shall be considered subsidiary to the item "Structural Steel in Beam Spans (M 270, Gr. ___)".

All beams in continuous units and simple spans with field splices shall be blocked in their true position in the shop in groups as specified in Subsection 807.54(b)(2) with the webs horizontal. The camber, length of sections, distance between bearings, and openings of joints shall be measured and this information shall become part of the permanent records. The component parts shall be match marked in this assembly and these marks shall be shown on the erection diagram.

All beams in simple spans without field splices shall be blocked in their true position with webs horizontal. The camber, distance between bearings, and openings of joints shall be measured and this information shall become part of the permanent records.

Flange field splice plates shall be cut and fabricated so that the primary direction of rolling is parallel to the direction of the main tensile and/or compressive stresses.

All beam dimensions are based on a temperature of 60 degrees F. A tolerance of ¼" +/- is allowed for camber.

Bent plate diaphragms for horizontally curved beams shall be cut and fabricated so that the primary direction of rolling is parallel to the direction of the main tensile and/or compressive stresses. Bent plate diaphragms for straight beams may be cut and fabricated in accordance with Subsection 807.35 or as required for horizontally curved beams.

Unless otherwise noted, diaphragms shall be installed as beams are erected. All bolts in diaphragms and field splices shall be installed and tightened in accordance with Subsection 807.71 prior to pouring the concrete deck.

STRUCTURAL STEEL (PLATE GIRDERS):

All references to cross-frames shall include "X" or "K" types.

All girder web and flange plates, all field splice plates, and all diaphragms, cross-frames and connection plates attached to horizontally curved girders are considered main load carrying members and shall meet the Longitudinal Charpy V-Notch Test specified in Subsection 807.05. This work and material will not be paid for directly, but shall be considered subsidiary to the item "Structural Steel in Plate Girder Spans (M 270, Gr. ___)".

All girders in continuous units and simple spans with field splices shall be assembled in the shop as specified in Subsection 807.54(b)(2) and blocked in their true position with webs horizontal. The camber, length of sections, distance between bearings, and openings of joints shall be measured and this information shall become part of the permanent records. The component parts shall be match marked in this assembly and these marks shall be shown on the erection diagram.

All girders in simple spans without field splices shall be blocked in their true position with webs horizontal. The camber, distance between bearings, and openings of joints shall be measured and this information shall become part of the permanent records.

Web and flange plates for main members and flange splice plates for main members shall be cut and fabricated so that the primary direction of rolling is parallel to the direction of the main tensile and/or compressive stresses.

Girder webs may be made by shop splicing with minimum lengths of 25 feet for sections. Flange plates longer than 50 feet may be made by shop splicing with minimum lengths of 25 feet for sections. No additional payment will be made for shop welded splices.

All girder dimensions are based on a temperature of 60 degrees F. A tolerance of ¼" +/- is allowed for camber.

Groove welds in web and flange plates shall be Quality Control (Q.C.) tested by nondestructive testing, as required in Subsection 807.23(b). Fillet welds at flange to web plate connections shall be Q.C. tested by the magnetic particle method. All Q.C. testing shall be considered subsidiary to the item "Structural Steel in Plate Girder Spans (M 270, Gr. ___)".

Bent plate diaphragms for horizontally curved girders shall be cut and fabricated so that the primary direction of rolling is parallel to the direction of the main tensile and/or compressive stresses. Bent plate diaphragms for straight girders may be cut and fabricated in accordance with Subsection 807.35 or as required for horizontally curved girders.

Unless otherwise noted, cross-frames and diaphragms shall be installed as girders are erected. All bolts in cross-frames, diaphragms, and field splices shall be installed and tightened in accordance with Subsection 807.71 prior to pouring the concrete deck.

SUBSTRUCTURE NOTES:

CONCRETE:

Unless otherwise noted, concrete in caps, columns and footings (except seal footings) shall be Class "S" with a minimum 28 day compressive strength f'c = 3,500 psi and shall be poured in the dry. Seal Concrete for footings shall have a minimum 28 day compressive strength f'c = 2,100 psi.

Concrete in drilled shafts shall be Class "S" as modified by Job SP "Drilled Shaft Foundations".

All exposed corners shall be chamfered ¾" unless otherwise noted.

REINFORCING STEEL:

All reinforcing steel shall be Grade 60 (yield strength = 60,000 psi) conforming to AASHTO M 31 or M 322, Type A, with mill test reports.

Top reinforcing bars in cap shall be properly placed to avoid interference with anchor bolts or sheet metal sleeves.

STRUCTURAL STEEL:

Structural steel in end bents shall be AASHTO M 270 with grade and payment as specified in the plans.

FOR ADDITIONAL INFORMATION AND NOTES, SEE LAYOUT(S) AND PLAN DETAILS.

STANDARD GENERAL NOTES
FOR STEEL BRIDGE STRUCTURES

ARKANSAS STATE HIGHWAY COMMISSION
LITTLE ROCK, ARK.

DRAWN BY: A.M.S. DATE: 9-2-2015 FILENAME: b55006.dgn
CHECKED BY: B.E.F. DATE: 9-2-2015 SCALE: NO SCALE
DESIGNED BY: STD. DATE:

DRAWING NO. 55006

PRINT DATE: 9/21/2015

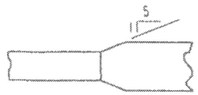

Plan-Unequal Width (Fig.)

FLANGE SPLICE

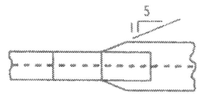

FLANGE SPLICE AT UNEQUAL BOTTOM FLANGE WIDTHS

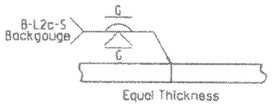

Equal Thickness

WEB & FLANGE SPLICE

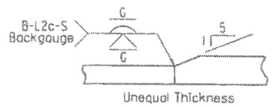

Unequal Thickness

FLANGE SPLICE

(Use when Base Metal Thickness is Equal to or Less than 2")

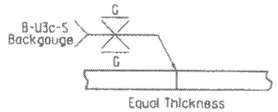

Equal Thickness

WEB & FLANGE SPLICE

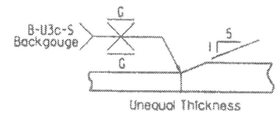

Unequal Thickness

FLANGE SPLICE

(Use when Base Metal Thickness is Greater than 2")

DETAILS OF WELDED SPLICES FOR PLATE GIRDERS

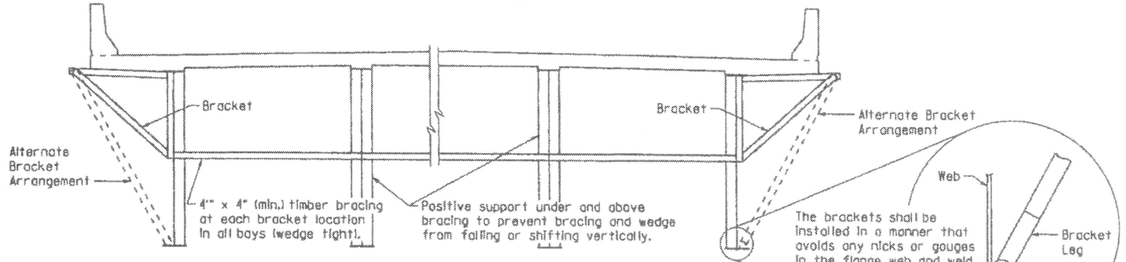

Note:
If a transverse finishing machine is used, the rail shall be supported directly over the exterior girders, or as an alternate, the rail may be supported by the overhang brackets if the above strutting system is used. The strutting system may be omitted if web stiffeners matching the size of the cross-frame connection plates are welded to the insides of the exterior girders at the location of each bracket or if the alternate bracket arrangement shown above is used. The Alternate Bracket arrangement shall extend down to the junction of the web and bottom flange. The stiffener shall conform to the details for cross frame connection plates shown on the plans. No direct payment will be made for brackets, timber bracing, supports, or welded stiffeners. Payment shall be subsidiary to "Structural Steel in Plate Girder Spans (___)".

SCREED RAIL SUPPORT FOR PLATE GIRDERS

(USE WHEN WEB DEPTHS ARE 48" OR GREATER)

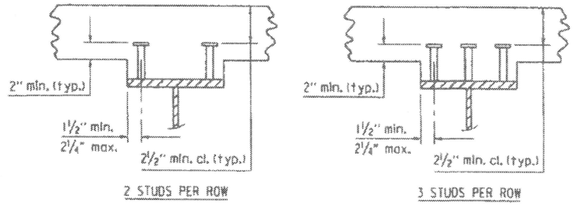

2 STUDS PER ROW

3 STUDS PER ROW

Stud Shear Connectors shall be automatically end welded to the beam or girder flange in accordance with the recommendations of the Manufacturer. See plan details for number and size.

SHEAR CONNECTOR DETAIL

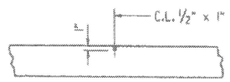

Use Type 3 or 4 Joint Sealer. See Subsections 501.02(h) and 501.05(j). Backer Rod filler will not be required. Joint Sealer shall be measured and paid for as Class S(AE) Concrete-Bridge. Slab Joints shall extend to the outside edge of the deck slab and shall align with open joints at the front face of the parapet. Slab joints shall be installed before the parapet railing is poured. If slab joints are to be sawed, they shall be sawed as soon as the concrete has sufficiently set to allow sawing of the joint without damage to the slab. Slab joints shall be placed at all pouring sequence construction joints and required slab joint locations. The joint sealer shall extend across the deck from gutterline to gutterline.

ADDITIONAL NOTES IF SIDEWALKS OR RAISED MEDIANS ARE REQUIRED:
Slab Joints shall be installed before the sidewalk or raised median is poured. After installation of the joint in the sidewalk or raised median and prior to pouring the parapet rail, the joint sealer shall be placed extending across the deck slab from gutterline to gutterline and ocrosss the top of the sidwalk or raised median to the edge of the slab. No joint sealer shall be placed on the deck slab under the sidewalk or raised median.

TRANSVERSE SLAB JOINT DETAIL

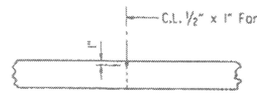

Use ½" x 1" Type 3 or 4 Joint Sealer. See Subsections 501.02(h) and 501.05(j). Backer Rod filler will not be required. Joint sealer shall be measured and paid for as Class S(AE) Concrete-Bridge. This joint shall be formed. Seal color shall be gray or other color similar to concrete.

LONGITUDINAL CONSTRUCTION JOINT

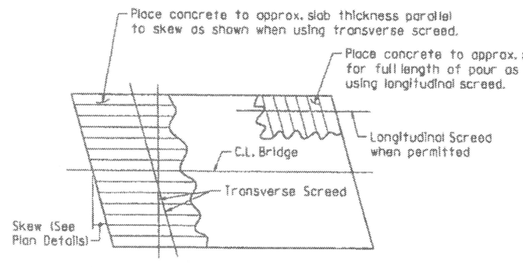

Note: At the Contractor's option, the transverse screed may be placed parallel to the skew or perpendicular to C.L. Bridge.

CONCRETE PLACEMENT PROCEDURE FOR BRIDGES WITH SKEW

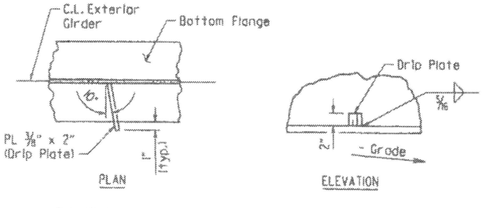

Drip Plate to be welded to the outer side of the bottom flange of the exterior girders.

Locate drip plate 5'-0" from C.L. Bearing on high side of each Bent, unless otherwise noted in the plans.

BOTTOM FLANGE DRIP PLATE

(USE WHEN WEB DEPTHS ARE 54" OR GREATER AND UNIT OR SPAN IS NOT IN LEVEL GRADE)

DATE REVISED	DATE FILMED	DATE REVISED	DATE FILMED	FED. ROAD DIST. NO.	STATE	FED. AID PROJ. NO.	SHEET NO.	TOTAL SHEETS
				6	ARK.			
				JOB NO.				
				① STEEL BRIDGE STRUCTURES 55007				

t_S = slab thickness. See "Typical Roadway Section" in the plans.

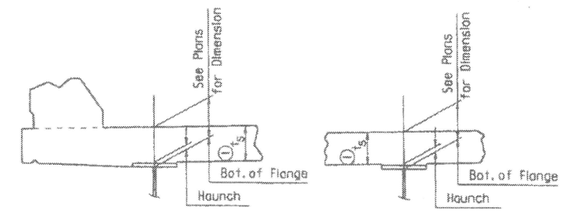

EXTERIOR BEAM OR GIRDER

INTERIOR BEAM OR GIRDER

① Tolerance when removable deck forming is used is + ½", - ¼". Haunch forming is required and shall be adjusted to maintain slab thickness tolerance.

NOTES:
Haunch dimension may vary within the following limits to maintain the grade and slab thickness tolerance: Minimum occurs when top flange contacts bottom reinforcing steel; Maximum = top flange thickness plus 1¾" unless otherwise noted in the plans. No increase in concrete and structural steel quantities will be made to maintain tolerances.

Tolerances shown are applicable only when removable deck forming is used. See Std. Dwg. No. 55005 for tolerances when permanent steel deck forms are used. Payment for concrete shall be based on removable deck forming.

ADJUSTMENT FOR SLAB THICKNESS TOLERANCE

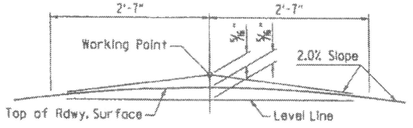

NOTE: Working Point matches Theoretical Roadway Grade.

ROUNDING DETAIL

BRIDGES IN NORMAL CROWN

WELD TABLE

Material Thickness of Thicker Part Joined (Inches)	Minimum Size of Fillet Weld (Inches)	Single Pass Weld Must Be Used
To ¾" Inclusive	¼"	
Over ¾"	5/16"	

NOTE: When a fillet weld size, as shown on the plans, is larger than the minimum, the first pass shall be that specified for minimum size of fillet weld.

SECTION AND SUBSECTION REFER TO THE ARKANSAS STATE HIGHWAY AND TRANSPORTATION DEPARTMENT STANDARD SPECIFICATIONS FOR HIGHWAY CONSTRUCTION (2014 EDITION).

THESE DETAILS ARE APPLICABLE UNLESS OTHERWISE SHOWN IN THE PLAN DETAILS, SPECIAL PROVISIONS, OR SUPPLEMENTAL SPECIFICATIONS.

STANDARD DETAILS FOR STEEL BRIDGE STRUCTURES

ARKANSAS STATE HIGHWAY COMMISSION

LITTLE ROCK, ARK.

DRAWN BY: JYP DATE: 2/11/2016 FILENAME: b55007.dgn
CHECKED BY: AMS DATE: 2/11/2016 SCALE: No Scale
DESIGNED BY: STD. DATE: —

DRAWING NO. 55007

DATE REVISED	DATE FILMED	DATE REVISED	DATE FILMED	FED. ROAD DIST. NO.	STATE	FED. AID PROJ. NO.	SHEET NO.	TOTAL SHEETS
				6	ARK.			
				JOB NO.				

1 POURED SILICONE JOINT 55008

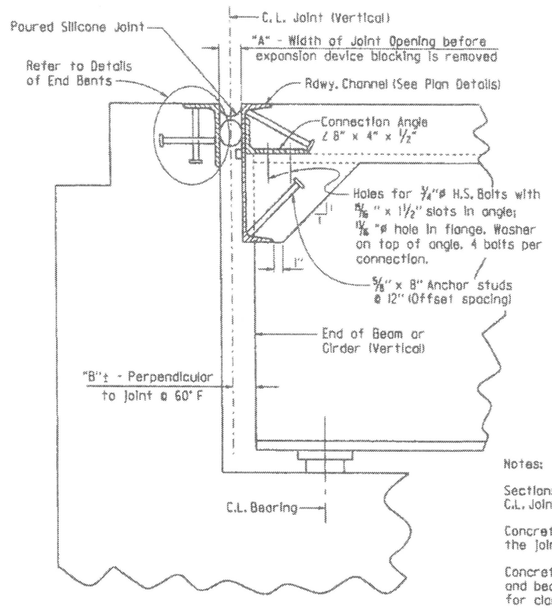

SECTION THRU JOINT AT END BENT

Notes:

Sections are taken perpendicular to C.L. Joint.

Concrete shall be hand packed under the joint armor.

Concrete diaphragms, steel diaphragms and bearing stiffeners are not shown for clarity. See plans for details.

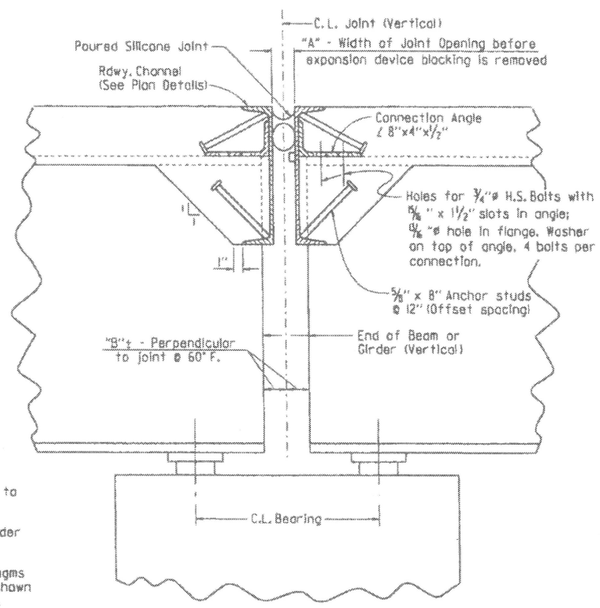

SECTION THRU JOINT AT INTERMEDIATE BENT

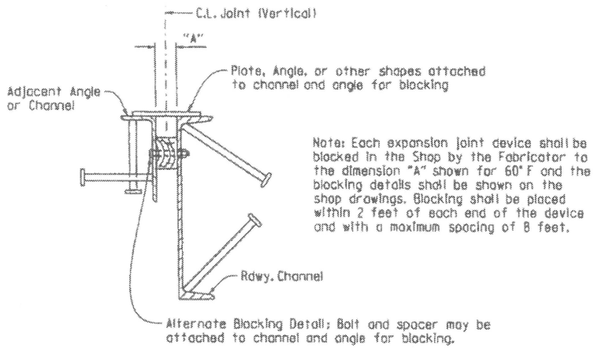

Note: Each expansion joint device shall be blocked in the Shop by the Fabricator to the dimension "A" shown for 60° F and the blocking details shall be shown on the shop drawings. Blocking shall be placed within 2 feet of each end of the device and with a maximum spacing of 8 feet.

DETAILS FOR BLOCKING EXPANSION JOINT DEVICE

EXPANSION DEVICE INSTALLATION AT END BENTS:

The Contractor may elect to install the expansion device using one of the following two alternatives:

1) The concrete span pour adjacent to joint shall be placed before the end bent backwall is placed. After the end bent backwall forms are in place and the beams or girders erected, the blocked expansion device shall be installed and adjusted for grade. All connection bolts shall be fully tightened prior to placing the deck concrete adjacent to the bent. Immediately prior to pouring the backwall concrete, the blocking shall be removed, and the opening adjusted for temperature and grade.

2) The backwall shall be poured to the optional construction joint after beams or girders are erected. The blocked expansion device shall be installed and adjusted for grade. All connection bolts shall be fully tightened prior to placing the deck concrete adjacent to the bent. Immediately prior to pouring the remainder of the backwall concrete, the blocking shall be removed and the opening adjusted for temperature and grade.

EXPANSION DEVICE INSTALLATION AT INTERMEDIATE BENTS:

After all beams or girders on each side of the joint are erected the blocked expansion device shall be installed and adjusted for grade. Deck concrete shall be placed for the entire unit or span on one side of the joint before deck concrete on the other side is placed. Connection bolts for the first side to have deck concrete placed shall be completely bolted. Bolts on the other side shall be loosely installed so that thermal and rotational movements will not be restricted during concrete placement on the first side.

Connection bolts on the second side shall remain loose until the concrete pour adjacent to the joint is to be placed. Immediately prior to pouring the span concrete on the second side, the blocking shall be removed, the joint adjusted for temperature and grade, and the connection bolts tightened.

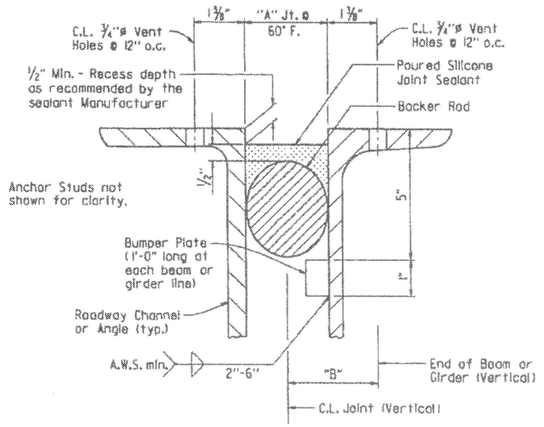

DETAIL OF POURED SILICONE JOINT

Silicone joint material and installation shall conform to Section 809. The temperature limitations recommended by the sealant Manufacturer shall be observed. The sealant shall be installed only when the average 24 hour air temperature is between 40° and 80° F.

Use an appropriately sized backer rod at the depth shown in the Manufacturer's literature based on the joint width at the time of sealing. Unless otherwise noted, do not install more backer rod than can be sealed in the same day.

The Contractor shall verify separation of the backer rod from the joint material after the joint material has set.

When bridge deck is constructed in stages, backer rods shall be extended beyond length of poured joint in initial construction stage so that the two pieces can be properly spliced together prior to installing sealant in subsequent stages. Manufacturer's recommendations shall be followed to prevent sealant from "running out of joint" during stage construction.

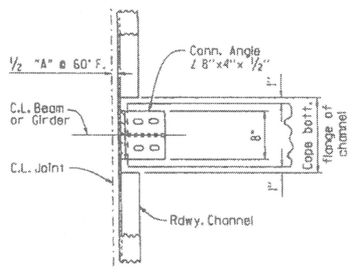

CHANNEL CONNECTION DETAIL

BENTS WITHOUT SKEW

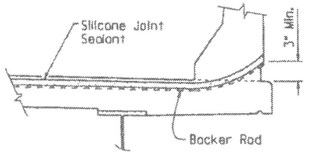

JOINT SEAL PLACEMENT AT RAIL

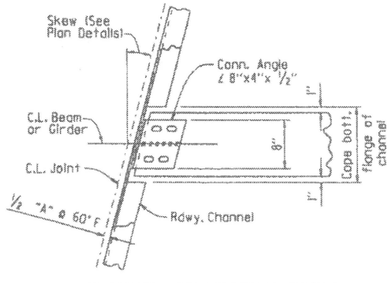

CHANNEL CONNECTION DETAIL

BENTS WITH SKEW

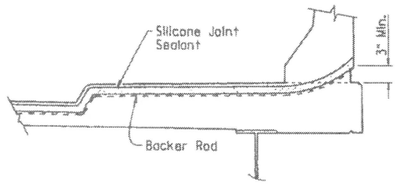

JOINT SEAL PLACEMENT AT SIDEWALK

SECTION AND SUBSECTION REFER TO THE ARKANSAS STATE HIGHWAY AND TRANSPORTATION DEPARTMENT STANDARD SPECIFICATIONS FOR HIGHWAY CONSTRUCTION (2014 EDITION).

THESE DETAILS ARE APPLICABLE UNLESS OTHERWISE SHOWN IN THE PLAN DETAILS, SPECIAL PROVISIONS, OR SUPPLEMENTAL SPECIFICATIONS. SEE "TABLE OF SILICONE JOINT DATA" IN PLAN DETAILS FOR VARIABLES "A" AND "B", AND BUMPER PLATE SIZE.

STANDARD DETAILS FOR POURED SILICONE JOINTS

ARKANSAS STATE HIGHWAY COMMISSION

LITTLE ROCK, ARK.

DRAWN BY: A.C.P. DATE: 2/11/2016 FILENAME: b55008.dgn

CHECKED BY: A.W.S. DATE: 2/11/2016 SCALE: No Scale

DESIGNED BY: STD. DATE: —

DRAWING NO. 55008

DATE REVISED	DATE FILMED	DATE REVISED	DATE FILMED	FED. ROAD DIST. NO.	STATE	FED. AID PROJ. NO.	SHEET NO.	TOTAL SHEETS
12-1-14		1-15-19		6	ARK.			
1-14-15				JOB NO.				
1-17-17								

(1) TYPE D NAME PLATE 55010

The name of the bridge as shown on the plans shall be placed on Lines 1 - 3 using 1/8" raised letters and numerals 3/8" high.

	Example 1	Example 2	Example 3	Example 4
Line 1	Red River	Southern	Saline	
Line 2	Relief	Railroad	River	Highway 5
Line 3		Overpass	Relief	

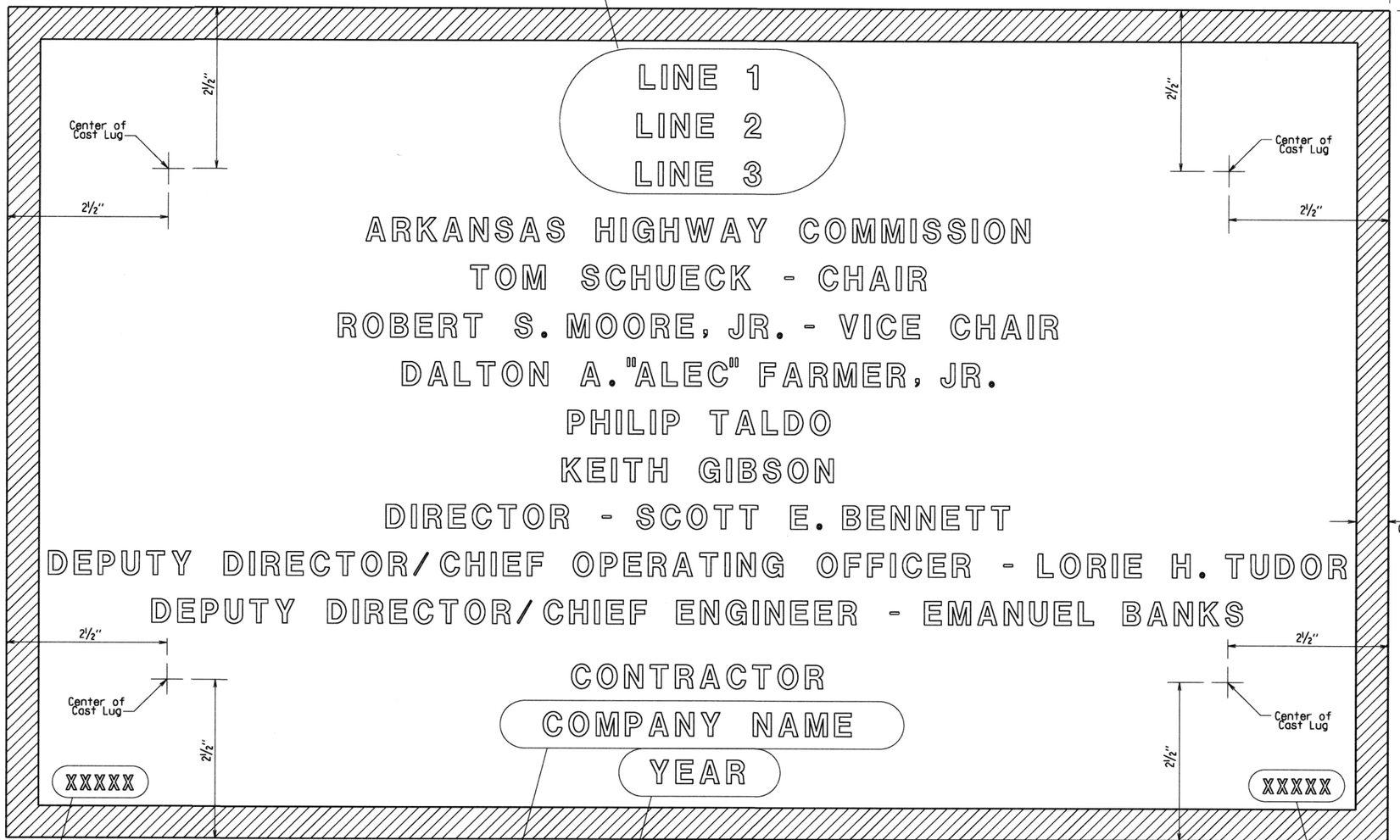

Place the design live loading here using 1/8" raised letters and numerals 1/4" high. Examples : HS 20
HL-93

Place the name of the company awarded the construction contract here using 1/8" raised letters and numerals 3/8" high. Example : ABCD CONSTRUCTION, INC.

Place the Year in which Contract was awarded here using 1/8" raised numerals 3/8" high. Example : 2001

Place the Bridge number here using 1/8" raised letters and numerals 1/4" high. Examples : A1234
05432

TYPICAL BRIDGE NAME PLATE

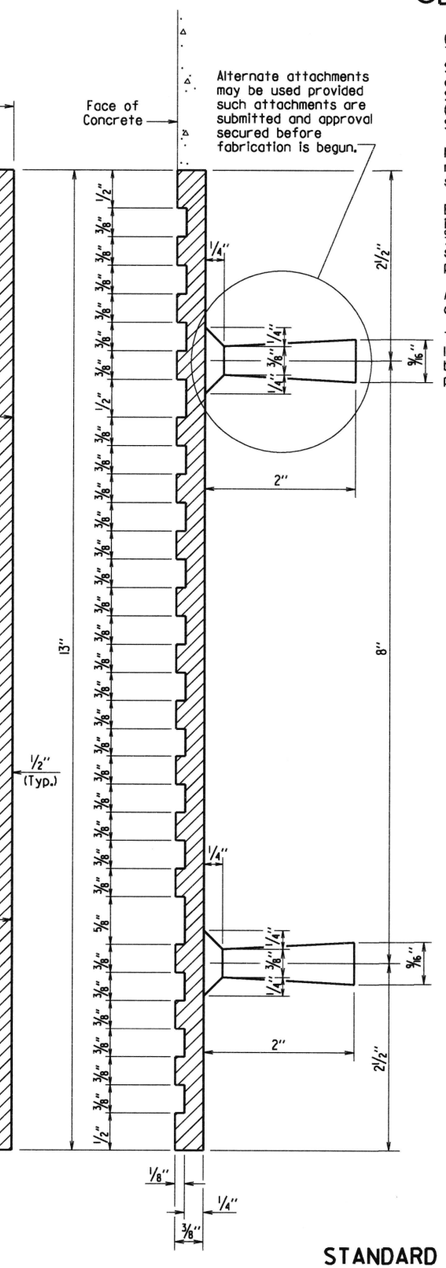

GENERAL NOTES

Specifications: Arkansas State Highway and Transportation Department Standard Specifications for Highway Construction, (2014 Edition) with applicable Supplemental Specifications and Special Provisions.

Name plates shall be cast bronze and shall meet the material requirements as specified in Section 812.

Body of plate shall be 1/4" thick and shall include four tapering cone lugs 3/8" to 3/16"x 2" long. The border and all lettering shall be raised 1/8" above the face of plate and shall be polished.

All lettering shall be plain gothic, square cut and not tapered.

The number of plates required and the location and name on the plate for each bridge shall be as designated on the plans.

(4) Revised Chair and Vice Chair Added New Commissioner
1-15-19 CGP Checked By: CRE

(3) Added New Commissioner
1-17-17 KDH Checked By: CRE

(2) Revised Chair and Vice Chair Added New Commissioner
1-14-15 KDH Checked By: CRE

(1) Revised Deputy Director/ Chief Engineer Added Deputy Director/ Chief Operating Officer
12-1-14 KDH Checked By: CRE

STANDARD DETAILS FOR TYPE D BRIDGE NAME PLATE

ARKANSAS STATE HIGHWAY COMMISSION
LITTLE ROCK, ARK.

DRAWN BY: KDH DATE: 2-27-2014 FILENAME: b55010.dgn
CHECKED BY: BEF DATE: 2-27-2014 SCALE: NO SCALE
DESIGNED BY: STD. DATE: —

DRAWING NO. 55010

DATE REVISED	DATE FILMED	DATE REVISED	DATE FILMED	FED. ROAD DIST. NO.	STATE	FED. AID PROJ. NO.	SHEET NO.	TOTAL SHEETS
3/24/16				6	ARK.			
				JOB NO.				
				①	STEEL H-PILES			55020

GENERAL NOTES FOR STEEL H-PILES:

Steel H-Piles shall conform to AASHTO M 270, Grade 36 or greater.

See Bridge Layout and Bent Details for pile size, estimated length, spacing, pile anchorage (if required) and for driving information.

Steel H-Piles that extend above the ground and are not protected by pile encasement shall be painted in accordance with Subsection 805.02.

Brackets, lugs, cap plates, pile tips, driving points, pile painting, splicing and welding shall not be paid for directly, but shall be considered subsidiary to the item "Steel Piling".

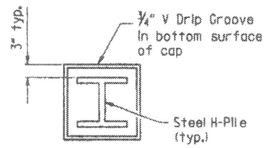

VIEW X-X

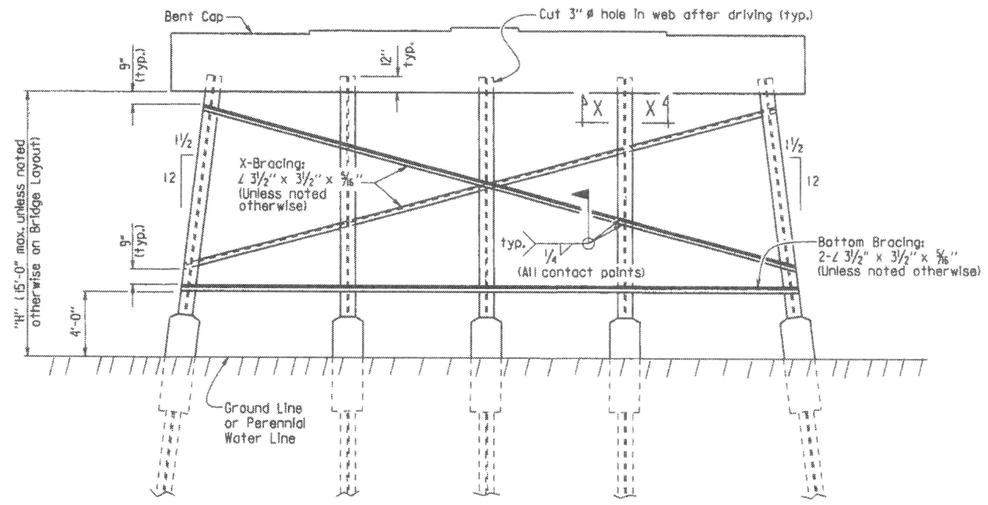

Notes:
All bracing shall be cut and welded in the field. Each brace shall be furnished in one piece. Payment shall be made under Item 807.

Unless noted otherwise, omit X-Bracing when "H" is less than 8 feet.

Omit X-Bracing and Bottom Bracing when "H" is 5 feet or less.

When required on the Bridge Layout sheet, pile encasements shall be constructed. See Notes and Details for H-Pile Encasements.

Omit all bracing (and V-groove in cap) when pile encasement is extended to bottom of bent cap.

TYPICAL DETAILS OF H-PILE TRESTLE INTERMEDIATE BENT

(Shown with Partial Height Encasement)

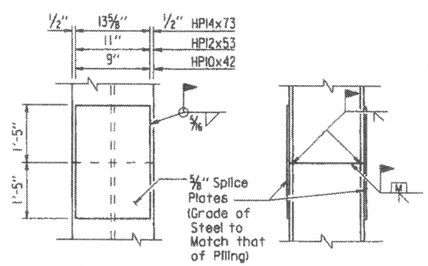

The Contractor may for his own convenience and at his own expense provide as many as three splices per pile. Minimum spacing between splices shall be 5 feet.

TYPICAL SPLICE DETAILS

⚠ H-pile splicers manufactured by Associated Pile and Fitting Corporation, LB Foster Piling, Skyline Steel or equivalent may be used in lieu of the "Typical Splice Details" shown. H-pile splicers shall match the same grade of steel specified for the piling and shall be welded to the pile with a 5/16" fillet weld around the entire perimeter of the splice. Flanges shall be welded with a complete penetration groove weld complying with AASHTO/AWS Joint Designation B-U4a or B-U4b. All welding shall conform to Subsection 807.26 of the AHTD Standard Specifcations for Highway Construction (2014 Edition).

Notes:
Steel pile tip reinforcing not required when approved H-Pile driving points are used.

Steel pile tip reinforcing shall not be paid for directly, but shall be considered subsidiary to the item "Steel Piling".

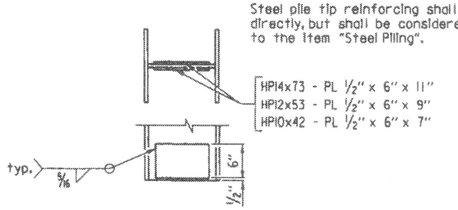

REINFORCING DETAIL FOR STEEL H-PILE TIP

GENERAL NOTES FOR H-PILE ENCASEMENTS:

⚠ See Bridge Layout for additional notes, any pile encasement restrictions and required location of pile encasements.

All concrete shall be Class S with a minimum 28-day compressive strength, f'c = 3,500 psi. If concrete cannot be placed in the dry, Seal Concrete may be used from top to bottom of encasement.

Reinforcing steel shall be Grade 60 conforming to AASHTO M 31 or M 322, Type A.

Welded Wire Fabric shall conform to AASHTO M 55 or M 221. Galvanized Corrugated Steel Pipe shall conform to AASHTO M 36 and M 218.

Concrete, welded wire fabric or reinforcing steel and galvanized pipe shall not be paid for directly, but shall be considered subsidiary to the item "Pile Encasement".

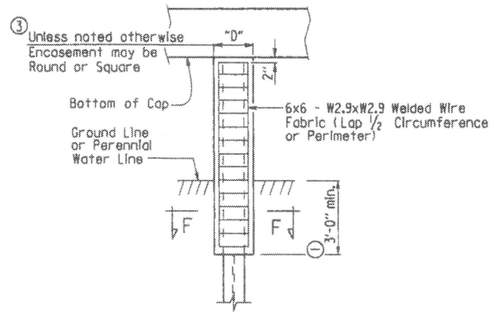

PILE ENCASEMENT DETAIL FOR STEEL H-PILES

④ (Shown with Encasement to Bottom of Cap)

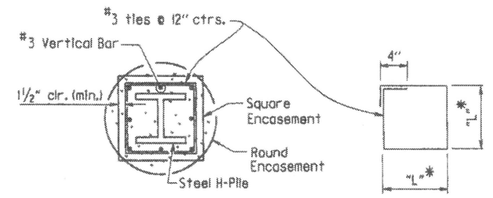

SECTION F-F

*Measured out-to-out of bar.

TABLE OF VARIABLES FOR PILE ENCASEMENT

Pile Size	"D" Square Encsmt.	"D" Round Encsmt.	"L"*
HP10x42	1'-7"	2'-0"	1'-4"
HP12x53	1'-8"	2'-2"	1'-5"
HP14x73	1'-11"	2'-6"	1'-8"

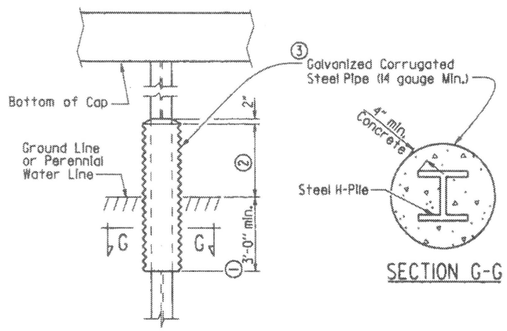

SECTION G-G

① Unless otherwise noted on Bridge Layout.

② 3'-0" minimum or as shown on Bridge Layout.

③ Encasement dimensions shall be sized to maintain a minimum concrete cover of 4" from the H-Pile. Reinforcement shall be sized to provide a minimum concrete cover of 1½" and a minimum clearance of 1¼" from the pile.

④ Alternate pile encasement, when not extended to bottom of cap, shall have 2" concrete taper for water runoff as shown in the Partial Height Encasement detail.

ALTERNATE PILE ENCASEMENT DETAIL FOR STEEL H-PILES

(Shown with Partial Height Encasement)

⚠ Added alternate method of splicing H-piles and revised pile encasement note.
3/24/2016 AMS

This document was originally issued and sealed by Charles R. Ellis, PE No. 9235, on March 24, 2016. This copy is not a signed and sealed document.

STATE OF ARKANSAS
REGISTERED PROFESSIONAL ENGINEER
No. 9235
CHARLES R. ELLIS

BRIDGE ENGINEER

STANDARD DETAILS FOR STEEL H-PILES AND PILE ENCASEMENTS

ARKANSAS STATE HIGHWAY COMMISSION

LITTLE ROCK, ARK.

DRAWN BY: A.M.S. DATE: 2/27/2014 FILENAME: b55020.dgn
CHECKED BY: B.E.F. DATE: 2/27/2014 SCALE: NO SCALE
DESIGNED BY: STD. DATE: —

DRAWING NO. 55020

DATE REVISED	DATE FILMED	DATE REVISED	DATE FILMED	FED. ROAD DIST. NO.	STATE	FED. AID PROJ. NO.	SHEET NO.	TOTAL SHEETS
				6	ARK.			
				JOB NO.				
				①	TYPE C GUTTERS		55030C	

① Construct gutter curb with height-transition as shown if drop inlet is not placed at end of gutter.

Construct gutter curb full height (no height-transition) if drop inlet is placed at end of gutter. Curb height transition placed on drop inlet. See drop inlet details.

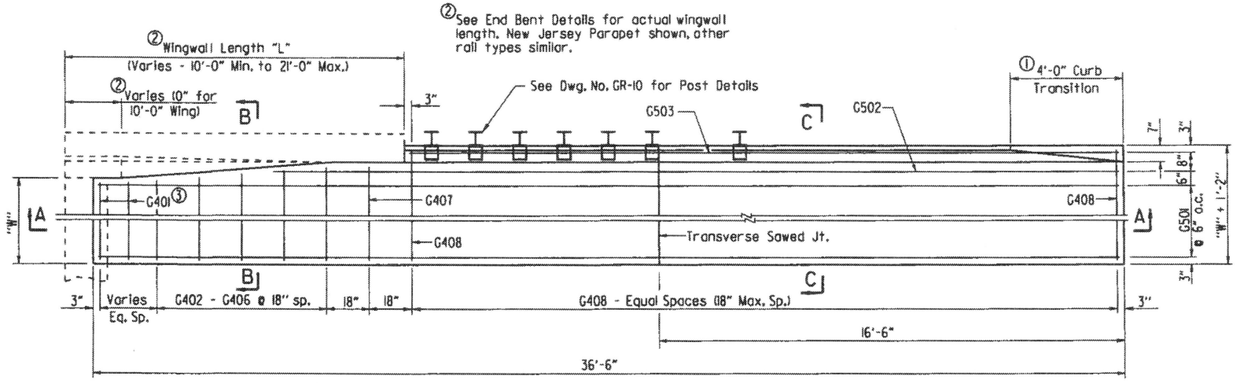

③ Provide G401 bars @ 18" max. spacing. Number of G401 bars vary with wingwall length. No G401 bars required for 10'-0" wingwalls.

HALF PLAN OF APPROACH GUTTERS FOR SQUARE BRIDGE

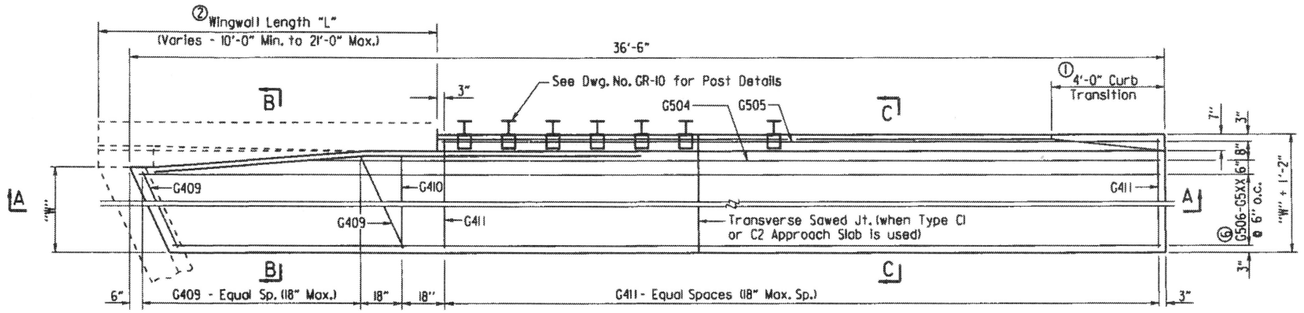

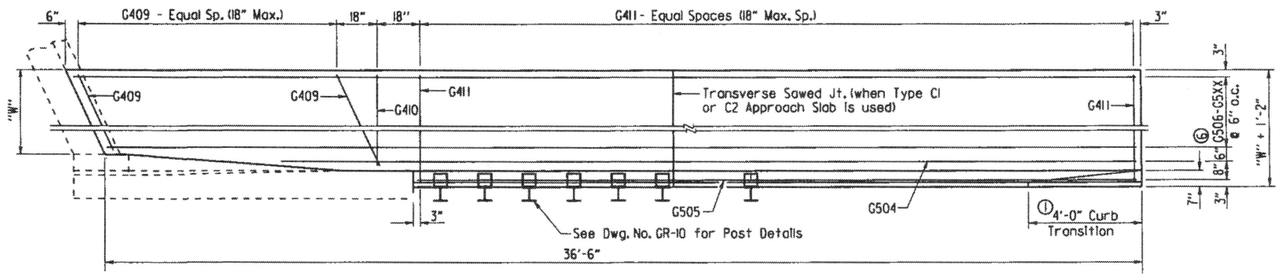

PLAN OF APPROACH GUTTERS FOR SKEWED BRIDGE

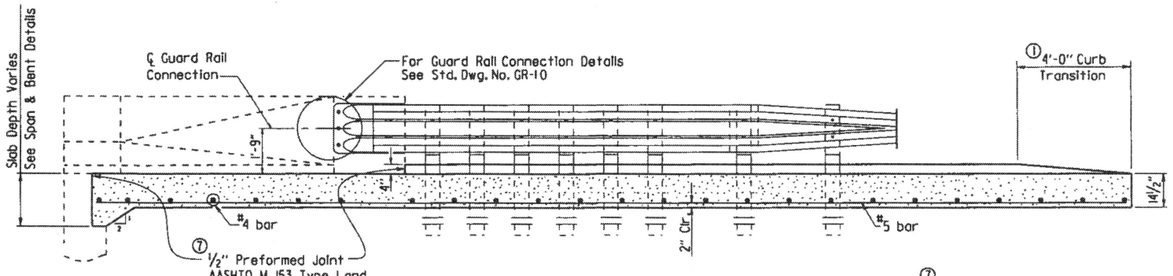

SECTION A-A

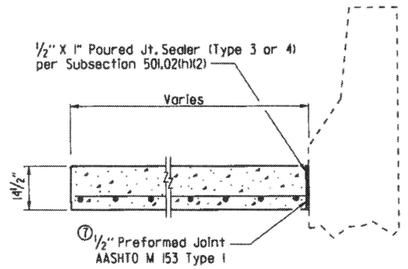

SECTION B-B
N.T.S.

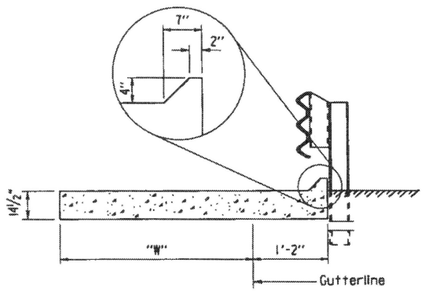

SECTION C-C
N.T.S.

Note:
All longitudinal lines within the limits of horizontal curves shall be on curves concentric to C.L. Bridge. Adjustment to longitudinal bar lengths may be required. Transverse reinforcing shall be placed on radial lines to C.L. Bridge.

⑦ Eliminate Type 1 Preformed Joint at end bent backwall and at face of wingwalls when gutters used with Type C2 Approach Slabs. Poured joint sealer is required, however backer rod shall be eliminated.

BAR LIST FOR ONE TYPE C GUTTER

	Mark	No. Req'd. for Width "W" 4'-0"	6'-0"	8'-0"	10'-0"	Length
Square Bridge	G401	④	④	④	④	"W"- 4"
	G402-G406	1 each	1 each	1 each	1 each	"W"-3" to "W"+2"
	G407	1	1	1	1	"W"+3"
	G408	④	④	④	④	"W"+ 10"
	G501	8	12	16	20	36'-2"
	G502	1	1	1	1	(41'-11") - "L"
	G503	1	1	1	1	(37'-2") - "L"
Skewed Bridge	G409	④	④	④	④	⑤
	G410	1	1	1	1	"W"+3"
	G411	④	④	④	④	"W"+ 10"
	G504	1	1	1	1	⑤
	G505	1	1	1	1	⑤
	G506 - G5XX ⑥	1 each	1 each	1 each	1 each	⑤

④ No. Req'd. varies with Skew and Wingwall Length.

⑤ Bar Lengths vary with Skew and Wingwall Length.

⑥ G513 for "W" = 4'
G517 for "W" = 6'
G521 for "W" = 8'
G525 for "W" = 10'

QUANTITIES FOR ONE SQUARE APPROACH GUTTER

(FOR INFORMATION ONLY)

"W" Width (ft.)	Reinforcing Steel (Lbs.)	Concrete (Cu. Yds.)
4	445	8.30
6	630	11.55
8	810	14.80
10	995	18.10

Quantities are based on "L" = 10'-0".

GENERAL NOTES

All concrete shall be Class S or Class S(AE) or mixture used for Portland Cement Concrete Pavement and shall be poured in the dry.

All reinforcing steel shall be Grade 60 (yield strength = 60,000 psi) conforming to AASHTO M 31 or M 322, Type A, with mill test reports.

Approach Gutters will be measured and paid for in accordance with Section 504.

STANDARD DETAILS FOR TYPE C APPROACH GUTTERS

ARKANSAS STATE HIGHWAY COMMISSION

LITTLE ROCK, ARK.

DRAWN BY: A.M.S. DATE: 2/27/2014 FILENAME: b55030c.dgn
CHECKED BY: K.W.Y. DATE: 2/27/2014 SCALE: ⅛" = 1'-0" or As Shown
DESIGNED BY: STD. DATE:

DRAWING NO. 55030C

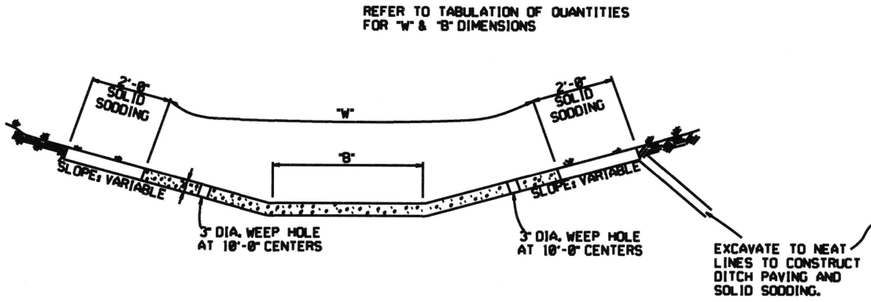

TYPE A

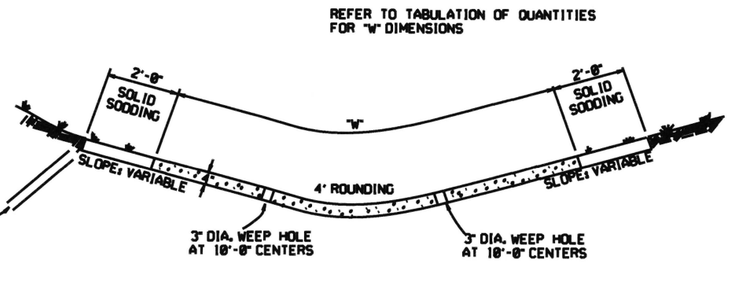

TYPE B

THE STEEL AND ADDITIONAL CONCRETE FOR THE WALLS SHALL NOT BE PAID FOR DIRECTLY, BUT SHALL BE CONSIDERED TO BE INCLUDED IN THE PRICE BID FOR "CONCRETE DITCH PAVING."

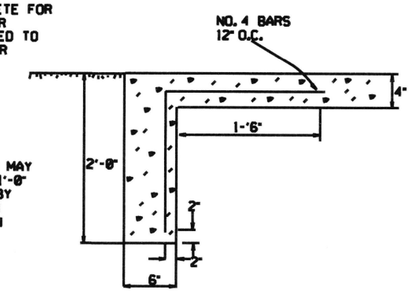

TOE WALL DETAIL FOR CONCRETE DITCH PAVING

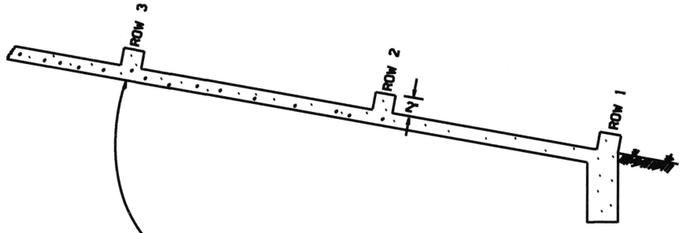

ENERGY DISSIPATORS TO BE USED FOR THE ENTIRE LENGTH OF DITCH WHEN SLOPE OF DITCH PAVING EXCEEDS 7%. THE DISSIPATORS WILL NOT BE PAID FOR DIRECTLY, BUT SHALL BE CONSIDERED TO BE INCLUDED IN THE PRICE BID FOR CONCRETE DITCH PAVING.

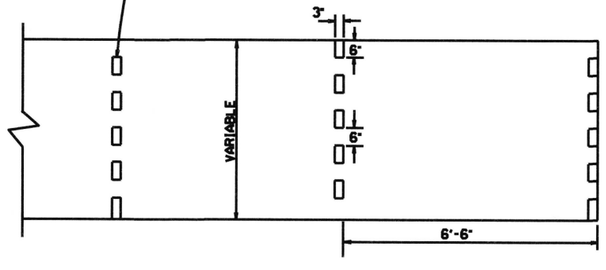

ENERGY DISSIPATORS
(NO SCALE)

GENERAL NOTES:

THE FULL WIDTH OF EACH SECTION SHALL BE POURED MONOLITHICALLY.

TOE WALLS TO BE CONSTRUCTED FULL WIDTH AT EACH END OF DITCH PAVING, AND POURED MONOLITHICALLY.

SOLID SOD ALONG DITCH PAVING TO BE PLACED WITHIN 14 DAYS OF DITCH PAVING CONSTRUCTION.

1" WIDE TRANSVERSE EXPANSION JOINTS SHALL BE PLACED IN CONCRETE DITCH PAVING AT 45' INTERVALS. THE SPACE SHALL BE FILLED WITH APPROVED JOINT FILLER COMPLYING WITH AASHTO M213.

DATE	REVISION	DATE FILM'D
12-8-16	CORRECTED ENERGY DISSIPATOR DRAWING AND NOTE	
11-17-10	ADDED GENERAL NOTE	
6-2-94	ADDED GENERAL NOTE ABOUT SOLID SODDING	
11-30-8	ELIMINATED MIN. ROWS OF ELEMENTS	111-30-89
7-15-88	REVISED DISSIPATOR NOTE	651-7-15-88
4-4-87	REVISED ENERGY DISSIPATOR	671-4-4-87
1-9-87	MODIFIED NOTE ON ENERGY DISS.	612-1-9-87
11-3-86	ADDED NOTE TO ENERGY DISS.	599-12-1-86
11-1-84	ENERGY DISSIPATOR DETAILS ADDED	508-11-1-84
11-1-84	EXCAVATION DETAILS ADDED TYPES A & B	
10-2-72	REVISED AND REDRAWN	508-10-2-72

ARKANSAS STATE HIGHWAY COMMISSION

CONCRETE DITCH PAVING

STANDARD DRAWING CDP-1

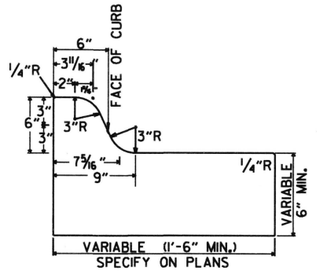

TYPE A

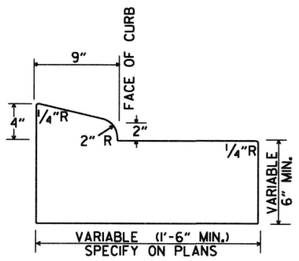

TYPE B-1

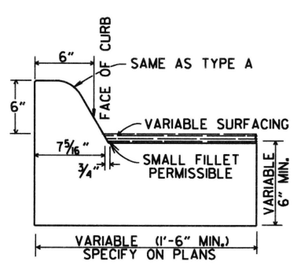

TYPE C

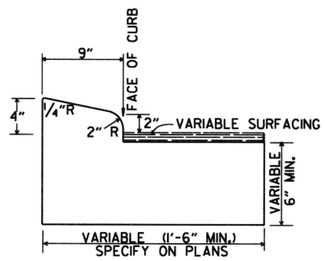

TYPE B-2

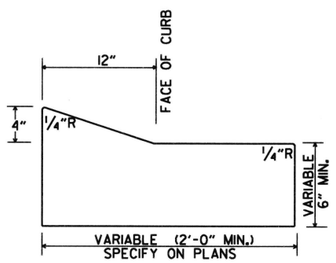

TYPE E-1

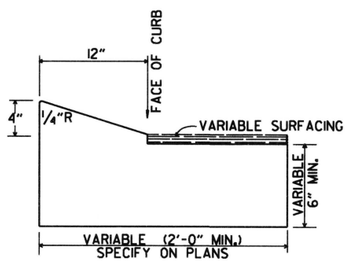

TYPE E-2

CONCRETE COMBINATION CURB AND GUTTER

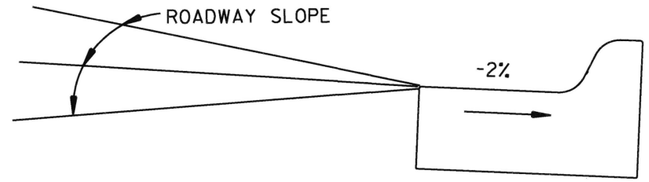

DETAIL OF GUTTER SLOPE

GUTTER SHALL BE CONSTRUCTED ON 2% SLOPE AWAY FROM ROADWAY, REGARDLESS OF ROADWAY SLOPE.

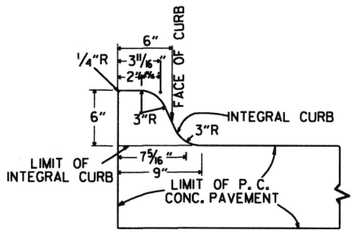

TYPE A

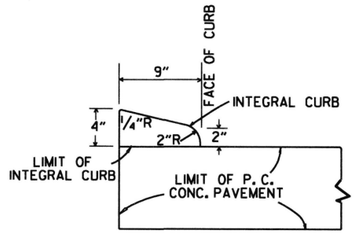

TYPE B

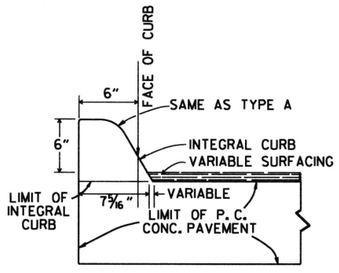

TYPE C

INTEGRAL CURB

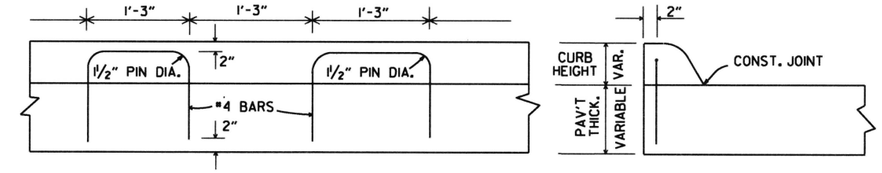

LONGITUDINAL SECTION

ELEVATION

ALTERNATE CONSTRUCTION METHOD FOR INTEGRAL CURB

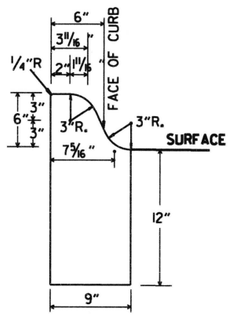

TYPE A

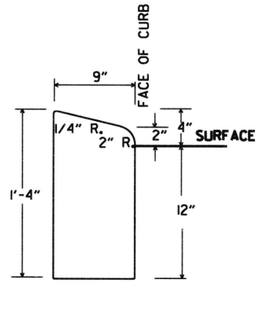

TYPE B

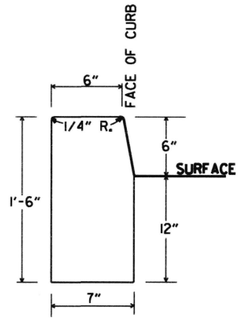

TYPE D

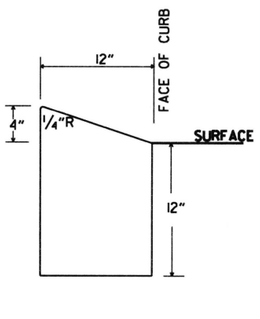

TYPE E

CONCRETE CURB

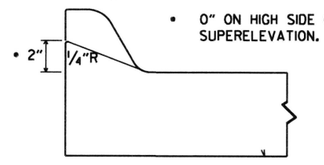

NOTE: USE MODIFIED CURB AS SPECIFIED ON STD. DR-1. COMPENSATION FOR MODIFIED CURB WILL BE CONSIDERED INCLUDED IN THE PRICE BID FOR THE TYPE OF CURB OR CURB AND GUTTER SPECIFIED.

DETAILS OF MODIFIED CURB

DATE	REVISION	DATE FILMED
11-29-07	REVISED GUTTER SLOPE & MODIFIED CURB DETAILS	
11-10-05	ADDED DETAILS OF TYPE E CURBS	
11-16-01	REVISED CONCRETE CURB TYPE B	
11-18-98	REVISED MODIFIED CURB	
6-2-94	ADDED NOTE TO SPECIAL MODIFIED CURB	
8-5-93	CORRECTED GUTTER SLOPE	8-5-93
10-1-92	ADDED DETAILS OF GUTTER SLOPE	10-1-92
5-24-90	ADDED DETAILS OF MODIFIED CURB	5-24-90
11-30-89	VARIBLE DEPTH TYPE A & B I	11-30-89
7-15-88	REVISED MODIFIED CURB	630-7-15-88
11-1-73	REVISED MODIFIED CURB	500-11-1-73
10-2-72	REVISED AND REDRAWN	512-10-2-72

ARKANSAS STATE HIGHWAY COMMISSION

CURBING DETAILS

STANDARD DRAWING CG-1

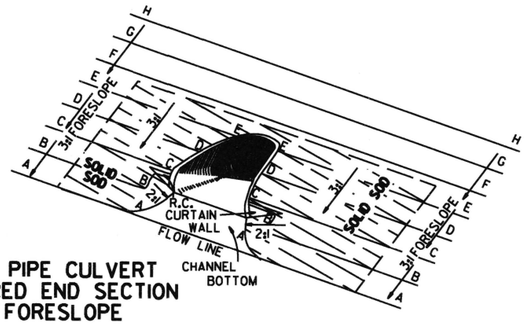

TYPICAL PIPE CULVERT
WITH FLARED END SECTION
& 3:1 FORESLOPE

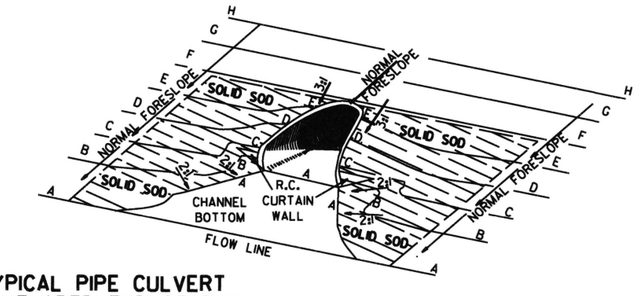

TYPICAL PIPE CULVERT
WITH FLARED END SECTION
& FLATTENED ADJACENT SLOPES

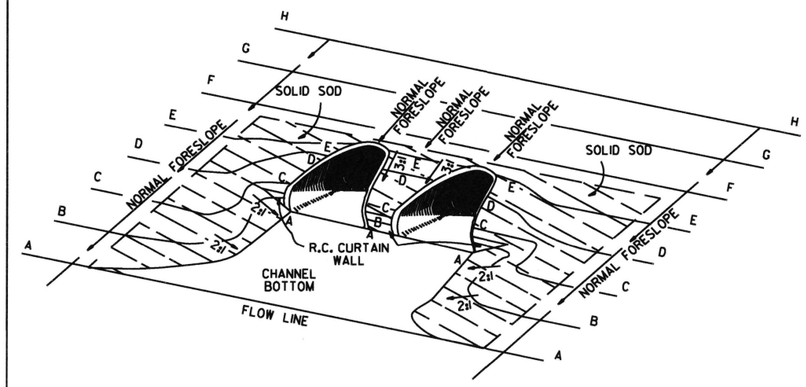

TYPICAL MULTIPLE PIPE CULVERT
WITH FLARED END SECTIONS
& FLATTENED ADJACENT SLOPES

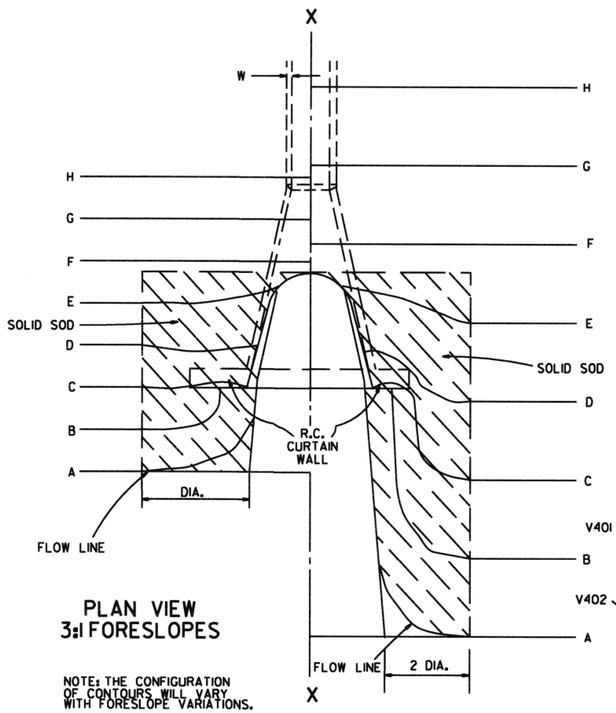

PLAN VIEW
3:1 FORESLOPES

NOTE: THE CONFIGURATION OF CONTOURS WILL VARY WITH FORESLOPE VARIATIONS.

PLAN VIEW
FLATTENED FORESLOPES

R.C. CURTAIN WALL
DIMENSIONS & QUANTITIES

PIPE DIA.	H_1	L_1	L	L (DBL.)/2	SINGLE R.C.P.C. CONC.	SINGLE R.C.P.C. REINF. STEEL	DOUBLE R.C.P.C. CONC.	DOUBLE R.C.P.C. REINF. STEEL
					CU. YDS.	LBS.	CU. YDS.	LBS.
18"	11½"	3'-5"	8'-0"	6'-3"	0.31	27.7	0.45	39.5
24"	1'-0½"	4'-6"	9'-6"	7'-6"	0.37	33.4	0.53	48.0
30"	1'-3½"	5'-7"	11'-0"	9'-0"	0.45	39.0	0.67	59.0
36"	1'-7"	6'-8"	13'-0"	10'-6"	0.58	52.6	0.83	73.9
42"	2'-1½"	7'-3"	15'-6"	12'-0"	0.82	77.1	1.10	100.7
48"	2'-5"	7'-10"	17'-0"	13'-0"	0.98	94.9	1.27	120.4
54"	2'-9½"	8'-5"	18'-6"	14'-0"	1.16	115.8	1.47	143.7
60"	3'-4"	9'-0"	20'-6"	15'-6"	1.47	149.7	1.84	180.3
72"	4'-5"	10'-2"	25'-6"	18'-6"	2.31	232.6	2.73	271.0

NOTE: QUANTITIES SHOWN ARE FOR ONE (1) CURTAIN WALL.

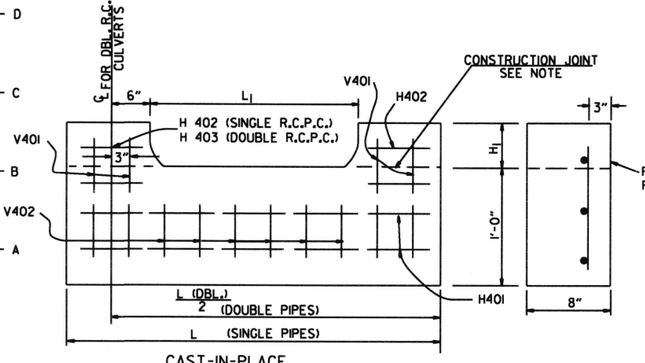

CAST-IN-PLACE

NOTE: THE PORTION OF THE R.C. CURTAIN WALL BENEATH THE FLARED END SECTION (LOWER 1'-0") SHALL BE PLACED MONOLITHICALLY. THE FLARED END SECTION SHALL THEN BE SET IN PLACE & THE REMAINING PORTIONS OF THE R.C. CURTAIN WALL PLACED.

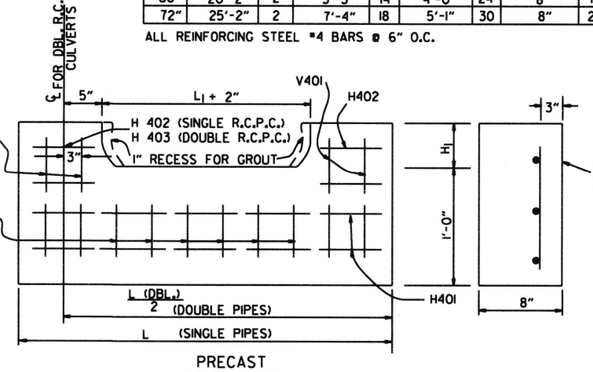

PRECAST

NOTE: THE PRECAST CURTAIN WALL WILL BE SET AND BACKFILLED WITH COMPACTED MATERIAL. THE FLARED END SECTION SHALL THEN BE SET IN PLACE AND THE 1" RECESS FILLED WITH GROUT. WHERE "L" EXCEEDS 11' THE CURTAIN WALL MAY BE CAST IN TWO (2) OR MORE SECTIONS. THE METHOD OF JOINING THE SECTIONS FOR INSTALLATION SHALL BE APPROVED BY THE ENGINEER.

R.C. CURTAIN WALL DETAILS

REINFORCING STEEL SCHEDULE

PIPE DIA.	SINGLE R.C. PIPE CULVERT H401 L	NO.	H402 L	NO.	V401 L	NO.	V402 L	NO.	DOUBLE R.C. PIPE CULVERT H401 L	NO.	H402 L	NO.	H403 L	NO.	V401 L	NO.	V402 L	NO.
18"	7'-8"	2	1'-11½"	4	1'-7½"	8	8"	8	12'-2"	2	1'-11½"	4	8"	2	1'-7½"	10	8"	14
24"	9'-2"	2	2'-2"	4	1'-8½"	10	8"	9	14'-8"	2	2'-2"	4	8"	2	1'-8½"	12	8"	18
30"	10'-8"	2	2'-4½"	4	1'-11½"	10	8"	12	17'-8"	2	2'-4½"	4	8"	2	1'-11½"	14	8"	22
36"	12'-8"	2	2'-10"	6	2'-3"	12	8"	14	20'-8"	2	2'-10"	6	8"	3	2'-3"	14	8"	28
42"	15'-2"	2	3'-9½"	8	2'-9½"	16	8"	15	23'-8"	2	3'-9½"	8	8"	4	2'-9½"	18	8"	30
48"	16'-8"	2	4'-3"	10	3'-1"	18	8"	16	25'-8"	2	4'-3"	10	8"	5	3'-1"	20	8"	32
54"	18'-2"	2	4'-8½"	12	3'-5½"	20	8"	17	27'-8"	2	4'-9"	12	8"	6	3'-5½"	22	8"	34
60"	20'-2"	2	5'-5"	14	4'-0"	24	8"	18	30'-8"	2	5'-5"	14	8"	7	4'-0"	26	8"	36
72"	25'-2"	2	7'-4"	18	5'-1"	30	8"	20	36'-8"	2	7'-4"	18	8"	9	5'-1"	33	8"	40

ALL REINFORCING STEEL #4 BARS @ 6" O.C.

SOLID SODDING

PIPE DIA.	SINGLE R.C.P.C. 3:1	4:1	6:1	DOUBLE R.C.P.C. 3:1	4:1	6:1
	SQ. YDS.			SQ. YDS.		
18"	5	7	12	6	8	13
24"	8	12	19	9	13	20
30"	13	18	29	14	19	30
36"	17	26	41	18	28	43
42"	23	35	55	25	37	57
48"	29	46	68	31	48	70
54"	35	57	85	37	59	87
60"	45	62	104	48	65	107
72"	64	92	156	67	95	159

NOTE: QUANTITIES SHOWN ABOVE ARE FOR ONE (1) END OF F.E.S.

GENERAL NOTES

1. A CAST-IN-PLACE OR PRECAST CURTAIN WALL MAY BE USED. PAYMENT FOR THE CURTAIN WALL SHALL BE CONSIDERED TO BE INCLUDED IN THE UNIT PRICE BID EACH FOR FLARED END SECTIONS OF THE SEVERAL SIZES, WHICH PRICE SHALL BE FULL COMPENSATION FOR FURNISHING ALL MATERIALS INCLUDING REINFORCING STEEL AND CONCRETE; FOR FORMS, MIXING AND PLACING; FOR EXCAVATION AND BACKFILL, AND FOR ALL LABOR, TOOLS, EQUIPMENT AND INCIDENTALS NECESSARY TO COMPLETE THE WORK.
2. ALL EXPOSED EDGES SHALL BE CHAMFERED ¾".
3. CONCRETE FOR CURTAIN WALL SHALL MEET THE REQUIREMENTS FOR CLASS A OR S CONCRETE AS PROVIDED IN SECTION 802 OF THE STANDARD SPECIFICATIONS OR FOR PAVING CONCRETE AS PROVIDED IN SECTION 501 OF THE STANDARD SPECIFICATIONS.
4. WELDED WIRE MESH 3 x 3 W10 x W10 MAY BE USED IN LIEU OF REINFORCING BARS.

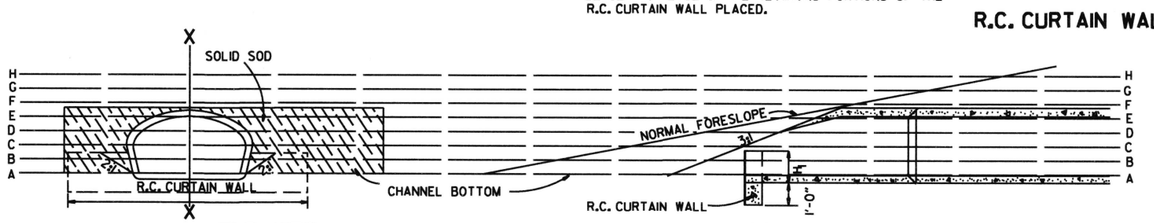

END VIEW

SECTIONAL VIEW "X-X"

DATE	REVISION	FILMED
10-18-96	ADDED NOTE TO SOLID SODDING	
10-12-95	CORRECTED SPELLING	
11- 3-94	ADDED GENERAL NOTE NO. 4	
8-15-91	REV. CURTAIN WALL QUANT. STEEL SCH. & SOLID SOD QUANT.	
3-2-81	ALLOW PRECAST IN 2 OR MORE PIECES CHAMFER EDGES	
5-15-80	ADDED PRECAST WALL & GENERAL NOTES	
10-2-72	REVISED AND REDRAWN	

ARKANSAS STATE HIGHWAY COMMISSION

FLARED END SECTION

STANDARD DRAWING FES-1

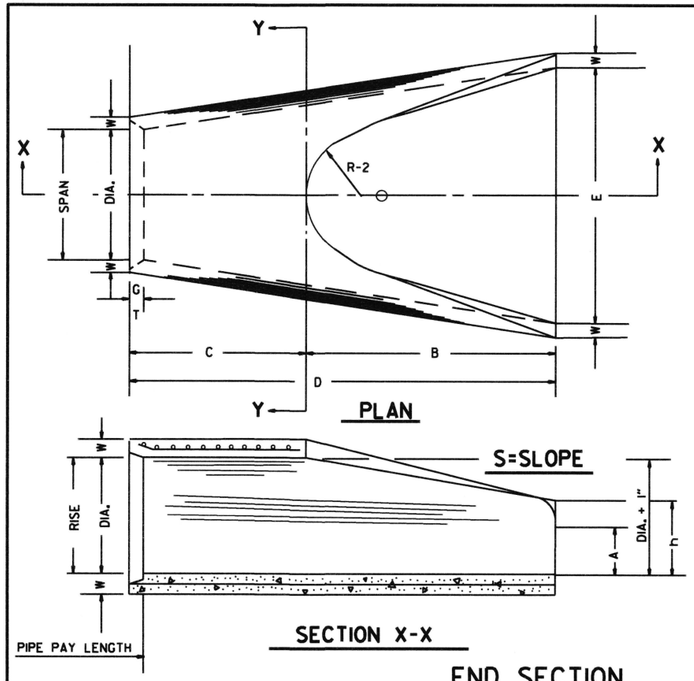

TABLE OF DIMENSIONS

DIA.	WALL	A	B	C	D	E	S	DIA. + 1"	P	R-1	R-2	G-T	WT.	h
18"	2½"	9"	2'-3"	3'-10"	6'-1"	3'-0"	3:1	19"	29"	15½"	12"	2"	1000	1'-0½"
24"	3"	9½"	3'-7½"	2'-6"	6'-1½"	4'-0"	3:1	25"	33⅜"	16¾"	14"	2½"	1600	1'-1½"
30"	3½"	1'-0"	4'-6"	1'-7¾"	6'-1¾"	5'-0"	3:1	31"	37"	18½"	15"	3¼"	1940	1'-4⅝"
36"	4"	1'-3"	5'-3"	2'-10¾"	8'-1¾"	6'-0"	3:1	37"	47⅛"	24⅝"	20"	3½"	4100	1'-8"
42"	4½"	1'-9"	5'-3"	2'-11"	8'-2"	6'-6"	3:1	43"	53⅛"	27½"	22"	3½"	5380	2'-2½"
48"	5"	2'-0"	6'-0"	2'-2"	8'-2"	7'-0"	3:1	49"	56½"	28½"	22"	3½"	6550	2'-6"
54"	5½"	2'-4"	6'-6"	1'-10"	8'-4"	7'-6"	3:1	55"	65½"	33⅛"	24"	4"	8750	2'-10½"
60"	6"	2'-10"	6'-6"	1'-10"	8'-4"	8'-0"	3:1	61"	72½"	36⅛"	24"	4"	9270	3'-5"
72"	7"	3'-10"	6'-6"	1'-10"	8'-4"	9'-0"	3:1	73"	77⅛"	38⅝"	24"	5"	13250	4'-6"

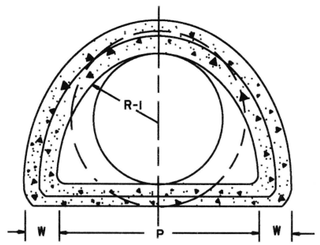

SECTION Y-Y

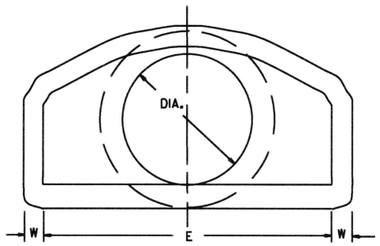

END VIEW

NOTE: TONGUE END ON UPSTREAM SECTION
GROOVE END ON DOWNSTREAM SECTION

ARCH PIPE

EQUIV. DIA.	• SPAN AASHTO M 206	• SPAN AHD NOMINAL	• RISE AASHTO M 206	• RISE AHD NOMINAL	W	A	B	C	D	E	P	R2	G-T	S
	INCHES													
15	18	18	11	11	2"	4"	2'-0"	4'-0"	6'-0"	3'-0"	29"	12"	1½"	2½:1
18	22	22	13½	14	2½"	5"	2'-0"	4'-1"	6'-1"	3'-6"	32⅛"	13"	2½"	2½:1
21	26	26	15½	16	2¾"	7"	2'-3"	3'-10"	6'-1"	4'-0"	34⅛"	14"	2½"	2½:1
24	28½	29	18	18	3"	9"	2'-3"	3'-10"	6'-1"	5'-0"	36⅛"	15"	2½"	2½:1
30	36¼	36	22½	23	3½"	10"	3'-1"	3'-0½"	6'-1½"	6'-0"	47⅛"	20"	3"	2½:1
36	43¾	44	26⅝	27	4"	10½"	4'-0"	2'-1½"	6'-1½"	6'-6"	54⅝"	22"	3½"	2½:1
42	51⅛	51	31⅝	31	4½"	11½"	4'-7"	1-10¼"	6'-5¼"	7'-2"	59½"	23"	3¾"	2½:1
48	58½	59	36	36	5"	1'-3"	5'-3"	2'-10¾"	8'-1¾"	7'-10"	70⅝"	24"	4¼"	2½:1
54	65	65	40	40	5½"	1'-7"	5'-3"	2'-11"	8'-2"	8'-6"	72⅛"	24"	4¾"	2¼:1
60	73	73	45	45	6"	1'-10"	5'-6"	2'-8"	8'-2"	9'-0"	77⅛"	24"	5"	2¼:1

• THE MEASURED SPAN AND RISE SHALL NOT VARY MORE THAN ± 2 PER CENT FROM THE VALUES SPECIFIED BY AASHTO M 206.

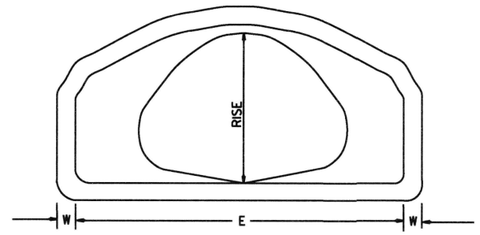

END VIEW
CONCRETE ARCH PIPE

END SECTION FOR REINFORCED CONCRETE PIPE CULVERTS

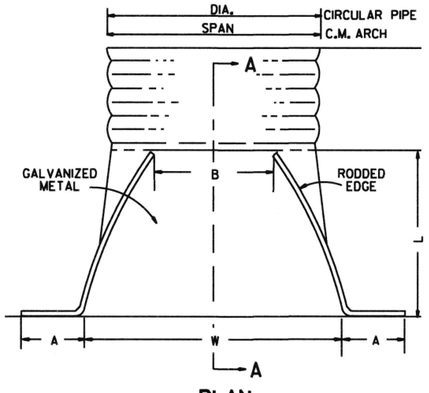

PLAN

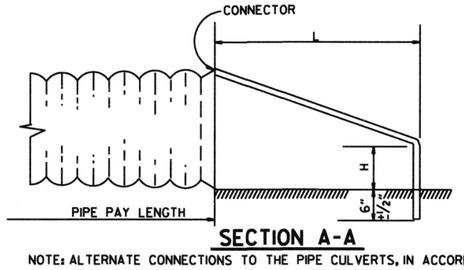

SECTION A-A

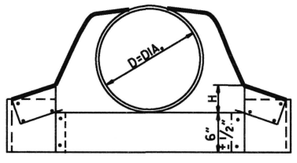

CIRCULAR PIPE

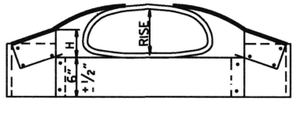

C.M. ARCH PIPE

CIRCULAR PIPE

D. DIA.	GAUGE	A 1" ±	B. MAX.	H 1" ±	L 1½" ±	W 2" ±	S
		INCHES					
12	16	6	6	6	21	24	2½:1
15	16	7	8	6	26	30	2½:1
18	16	8	10	6	31	36	2½:1
21	16	9	12	6	36	42	2½:1
24	16	10	13	6	41	48	2½:1
30	14	12	16	8	51	60	2½:1
36	14	14	19	9	60	72	2½:1
42	12	16	22	11	69	84	2½:1
48	12	18	27	12	78	90	2½:1
54	12	18	30	12	84	102	2:1
60	12	18	33	12	87	114	1¾:1
66	12	18	36	12	87	120	1½:1
72	12	18	39	12	87	126	1 1/3:1

C.M. ARCH PIPE

EQUIV. DIA.	SPAN	RISE	A 1" ±	B MAX.	H 1" ±	L 1½" ±	W 2" ±	S	GAUGE
	INCHES								
15"	17	13	7	9	6	19	30	2½:1	16
18"	21	15	7	10	6	23	36	2½:1	16
21"	24	18	8	12	6	28	42	2½:1	16
24"	28	20	9	14	6	32	48	2½:1	16
30"	35	24	10	16	6	39	60	2½:1	14
36"	42	29	12	18	8	46	75	2½:1	14
42"	49	33	13	21	9	53	85	2½:1	12
48"	57	38	18	26	12	63	90	2½:1	12
54"	64	43	18	30	12	70	102	2¼:1	12
60"	71	47	18	33	12	77	114	2¼:1	12

NOTE: ALTERNATE CONNECTIONS TO THE PIPE CULVERTS, IN ACCORDANCE WITH MANUFACTURER'S STANDARD PRACTICES, MAY BE MADE SUBJECT TO THE APPROVAL OF THE ENGINEER.

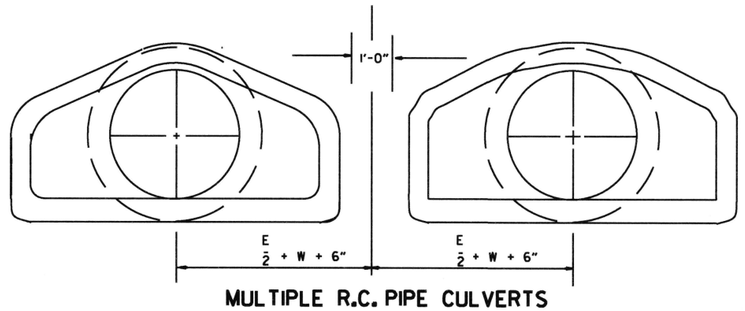

MULTIPLE R.C. PIPE CULVERTS

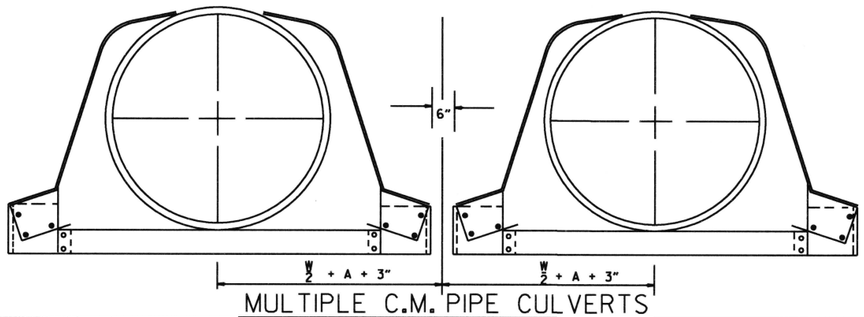

MULTIPLE C.M. PIPE CULVERTS

END SECTIONS FOR CORRUGATED METAL PIPE CULVERTS

DATE	REVISION	FILMED
10-18-96	REVISED ASTM REF. TO AASHTO	
5-15-80	REVISED DISTANCE BETWEEN MULTIPLE R.C.P. F.E.S.	664-5-15-80
7-14-78	C.M. ARCH SIZES TO CONFORM WITH AASHTO SIZES	752-7-14-78
8-22-75	ADDED MULTIPLE PIPE CULVERTS	517-8-22-75
12-5-74	REMOVED NOTE RE REINF. FOR R.C. F.E.S.	500-12-5-74
5-24-73	CMP END SECTION, SHOW PIPE PAY LENGTH	627-5-24-73
10-2-72	REVISED AND REDRAWN	760-10-2-72

ARKANSAS STATE HIGHWAY COMMISSION

FLARED END SECTION

STANDARD DRAWING FES-2

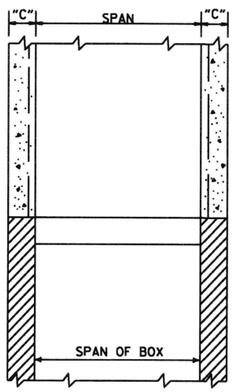

SECTION B-B

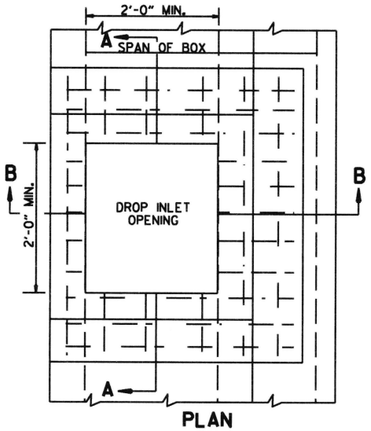

PLAN

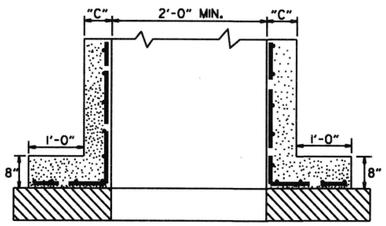

SECTION A-A

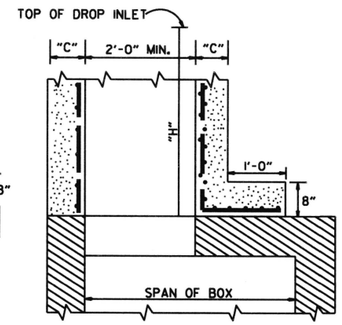

SECTION B-B

METHOD OF CONSTRUCTING DROP INLET ON EXISTING R.C. BOX CULVERT

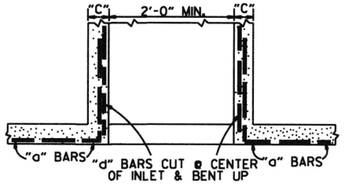

SECTION A-A

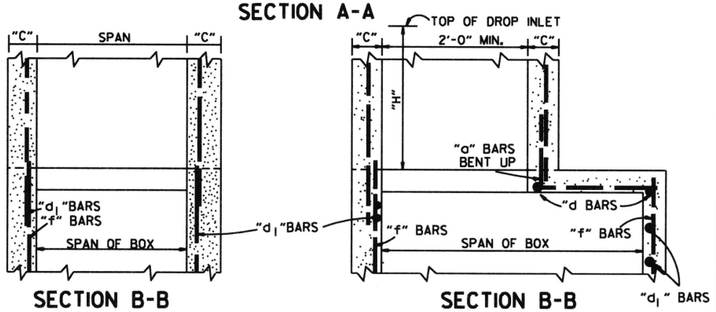

SECTION B-B SECTION B-B

METHOD OF CONSTRUCTING DROP INLET ON NEW R.C. BOX CULVERT

NOTE: "C" DIMENSIONS AND REINFORCING BAR SIZES, SHALL CONFORM TO THOSE SHOWN ON STANDARD DRAWING FOR DROP INLET.

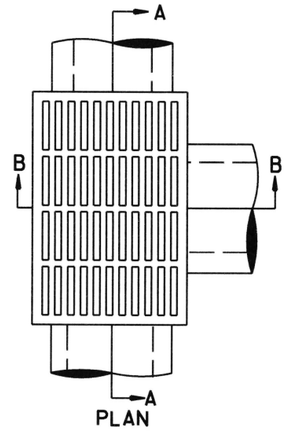

PLAN

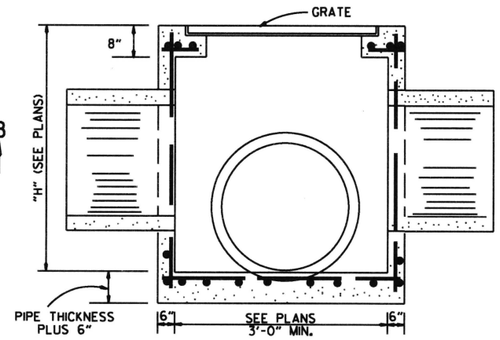

SECTION A-A

NOTE: REINF. BARS TO BE #4 BARS ON 6" CTRS. WITH 1½" MIN. COVER. THIS TYPE DROP INLET TO BE USED WHERE NOT SUBJECTED TO TRAFFIC.

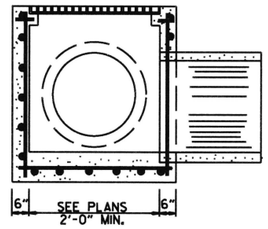

SECTION B-B

DROP INLET (TYPE E)

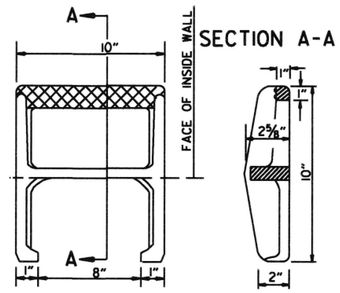

APPROX. WEIGHT = 11 LBS. (CAST IRON)

PLAN

NOTE: THIS DETAIL IS TYPICAL, OTHERS MAY BE USED WITH PRIOR APPROVAL OF THE ENGINEER.

DETAIL OF STEP FOR DROP INLET

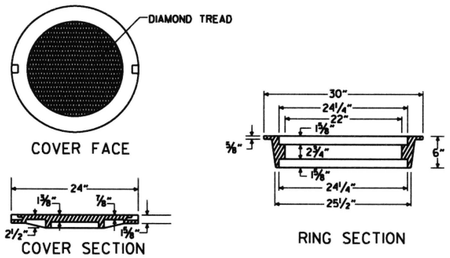

APPROXIMATE TOTAL WEIGHT = 333 LBS.

HEAVY DUTY RING & COVER

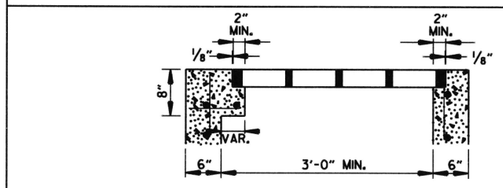

SECTION A-A

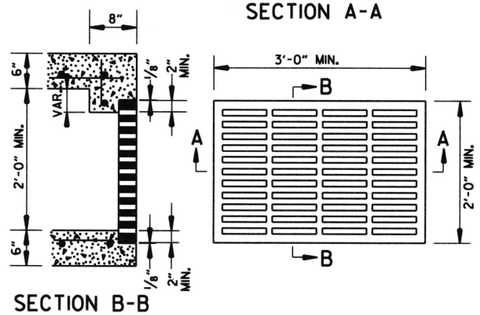

SECTION B-B

APPROXIMATE MINIMUM WATERWAY OPENING = 260 SQ. IN.

GRATE FOR TYPE E DROP INLET

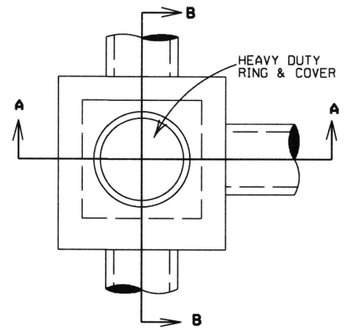

PLAN

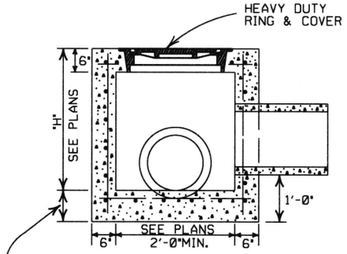

SECTION A-A

NOTE: REINF. BARS TO BE #4 BARS ON 6" CTRS. WITH 1½" MIN. COVER. THIS TYPE JUNCTION BOX TO BE USED WHERE NOT SUBJECTED TO TRAFFIC.

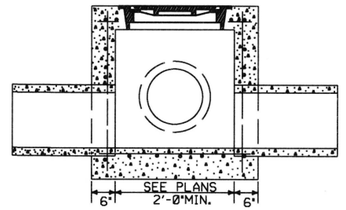

SECTION B-B

JUNCTION BOX (TYPE E)

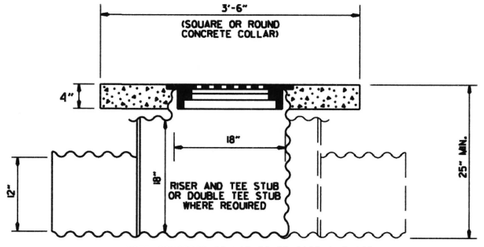

NOTE: CONCRETE COLLAR TO BE CAST IN PLACE. 12" PIPE CULVERTS TO BE MEASURED AND PAID FOR AS " 12" SIDE DRAIN ".

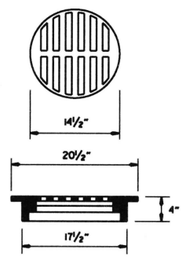

USE NEENAH R-5901-C OR EQUIVALENT BICYCLE SAFE FRAME AND GRATE

DETAIL OF YARD DRAIN

GENERAL NOTES:

1. ALL EXPOSED CORNERS SHALL BE ¾" CHAMFERED.
2. STEPS SHALL BE INSTALLED ON 16" CENTERS ON ALL INLETS 4'-0" HIGH OR OVER, OR AS APPROVED BY THE ENGINEER.
3. EXPANSION JOINT MATERIAL SHALL BE ¾" PREFORMED FIBER.
4. GRATE OR GRATE AND FRAME SHALL BE CONSTRUCTED OF CAST IRON AND SHALL CONFORM TO THE REQUIREMENTS OF THE STANDARD SPECIFICATIONS FOR GRAY IRON CASTINGS AASHTO M 105 CLASS 35B. GRATE MAY BE USED WITHOUT FRAME.
5. GRATE AND FRAME SHALL NOT BE PAINTED.
6. GRATE SHALL BE BICYCLE SAFE.
7. HEAVY DUTY RING SHALL ALWAYS BE INSTALLED WITH FLANGE ON TOP.
8. HEAVY DUTY RING AND COVER SHALL BE CONSTRUCTED OF CAST IRON AND SHALL CONFORM TO THE REQUIREMENTS OF THE STANDARD SPECIFICATIONS FOR GRAY IRON CASTINGS AASHTO M105 CLASS 35B & AASHTO M306.
9. HEAVY DUTY RING AND COVER SHALL NOT BE PAINTED.
10. DIMENSIONS SHOWN FOR RING AND COVER ARE TYPICAL. THE CONTRACTOR MAY SUBSTITUTE SIMILAR CASTINGS WITH THE APPROVAL OF THE ENGINEER. REQUESTING APPROVAL FOR CASTING DESIGNS MAY BE MADE BY REFERRING TO PREVIOUSLY APPROVED DRAWINGS.

DATE REV.	REVISION	DATE FILMED
11-16-01	ADDED NOTE 10	
1-12-00	REVISED HEAVY DUTY RING & COVER	
7-02-98	CHANGED GRATE DETAIL, DELETED DI(TYPE D), REPLACED RING & COVER W/HEAVY DUTY RING & COVER, ADDED JUNCTION BOX (TYPE E)	
6-26-97	ADDED DIMENSION TO TYPE IV-A	
10-18-96	ADDED DETAIL OF YARD DRAIN	
8-15-91	DELETE TYPE IV GRATE	
7-15-88	REVISED STEP DETAIL	
5-20-83	REVISED DETAILS OF GRATES (TYPE IV & IV-A)	
2-4-83	ADDED GENERAL NOTE NO. 4	
3-2-81	ADDED TYPE IV-A GRATE	
5-22-74	DELETED INLET (TYPE F) & GRATE (TYPE III)	
10-2-72	REVISED AND REDRAWN	

ARKANSAS STATE HIGHWAY COMMISSION

DETAILS OF DROP INLETS & JUNCTION BOXES

STANDARD DRAWING FPC-9

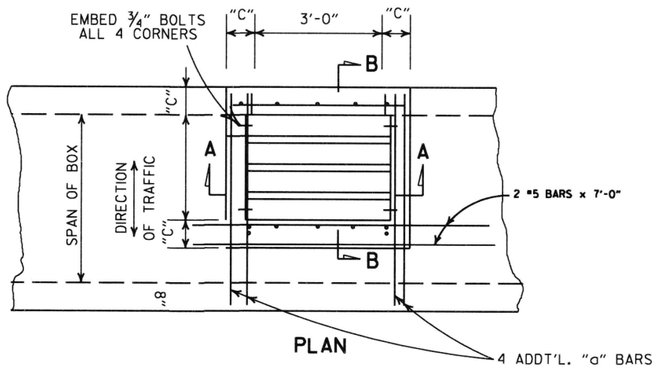

PLAN

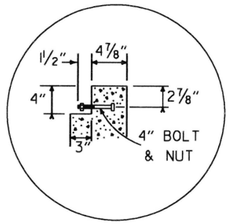

DETAIL A

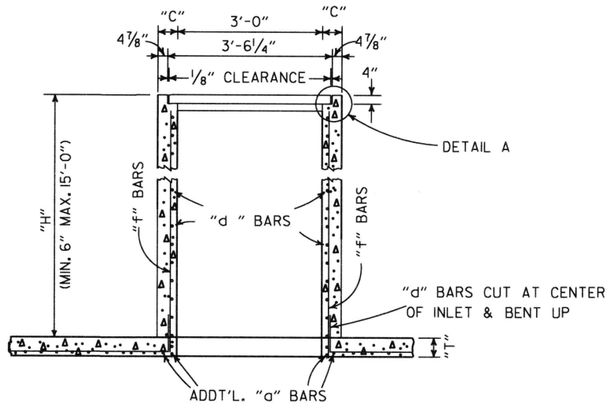

SECTION A-A

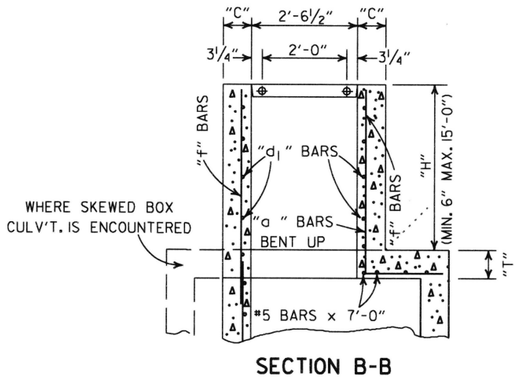

SECTION B-B

NOTE: ADDT'L.REINF. STEEL TO BE INCLUDED IN UNIT PRICE BID PER TYPE "TM" D.I.

DIMENSIONS & REINF. BARS FOR D.I. TO BE THE SAME AS THOSE SHOWN ON APPLICABLE STD. BARREL DRAWING FOR R.C. BOX CULVERTS.

DROP INLET TYPE "TM"
FOR REINFORCED CONC. BOX CULVERTS

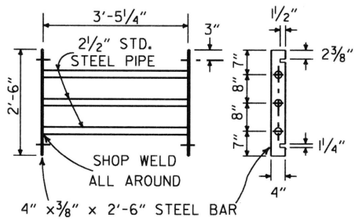

GRATE DETAIL

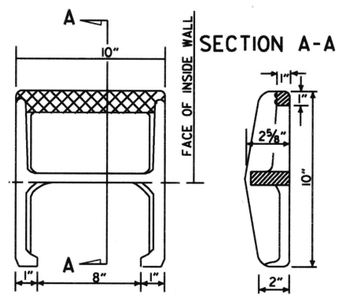

APPROX. WEIGHT = 11 LBS. (CAST IRON)

PLAN

NOTE: THIS DETAIL IS TYPICAL. OTHERS MAY BE USED WITH PRIOR APPROVAL OF THE ENGINEER.

DETAIL OF STEP FOR DROP INLET

GENERAL NOTES:

1. STEEL PIPE FOR GRATES AND BOLTS SHALL CONFORM TO THE REQUIREMENTS OF SECTION 807. BOLTS SHALL CONFORM TO ONE OF THE FOLLOWING: ASTM A193, GRADE B8 CLASS 1 OR 2, ASTM A307 OR AASHTO M 164.
2. STEEL PIPE FOR GRATES SHALL BE "STANDARD WEIGHT" PIPE CONFORMING TO ASTM A53 NATIONAL STANDARD PIPE.
3. BOLTS, NUTS, WASHERS SHALL BE GALVANIZED IN ACCORDANCE WITH AASHTO M 232 OR AASHTO M 298, CLASS 40 OR 50.
4. ALL EXPOSED CORNERS TO HAVE ¾" CHAMFER.
5. ALL #4 AND #5 REINFORCING BARS TO HAVE 1½" COVER. LARGER SIZES TO HAVE 2" COVER.
6. THE COMPLETE PIPE GRATE SHALL BE PAINTED IN ACCORDANCE WITH THE STANDARD SPECIFICATIONS.

TABLE OF "W" DIMENSIONS

I.D. PIPE	SKEW OF CROSS DRAIN		
	STRAIGHT	30°	45°
	"W"	"W"	"W"
24"	4'-0"	4'-0"	4'-0"
30"	4'-0"	4'-0"	4'-5"
36"	4'-0"	4'-3"	5'-3"
42"	4'-3"	4'-11"	6'-1"
48"	4'-10"	5'-7"	6'-11"

NOTE: DIMENSIONS SHOWN ABOVE ARE FOR PIPES INTERSECTING DROP INLET ON ONE SIDE ONLY. FOR SKEWED PIPES INTERSECTING BOTH SIDES OF DROP INLET, "W" WILL NEED TO BE INCREASED OR AXIS OF INTERSECTING PIPES WILL NEED TO BE SHIFTED.

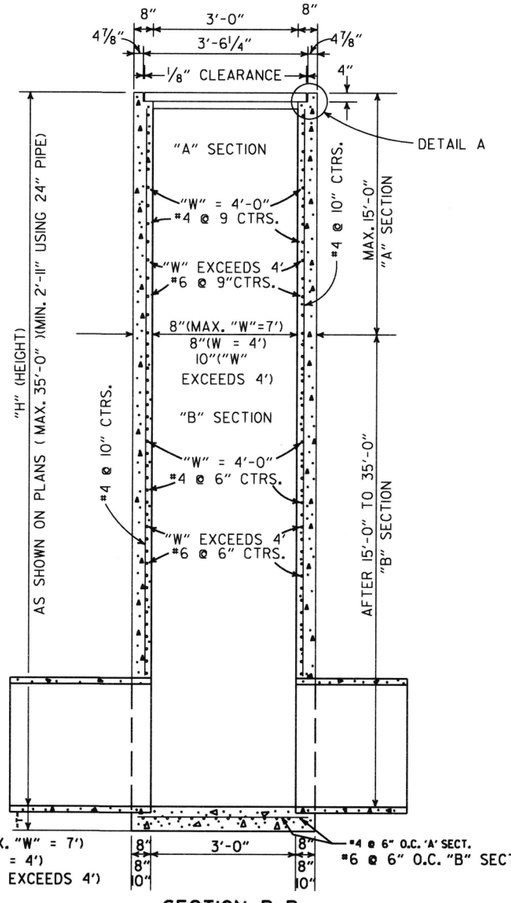

SECTION B-B

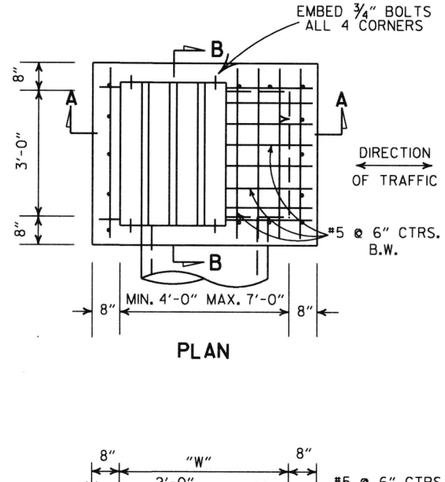

PLAN

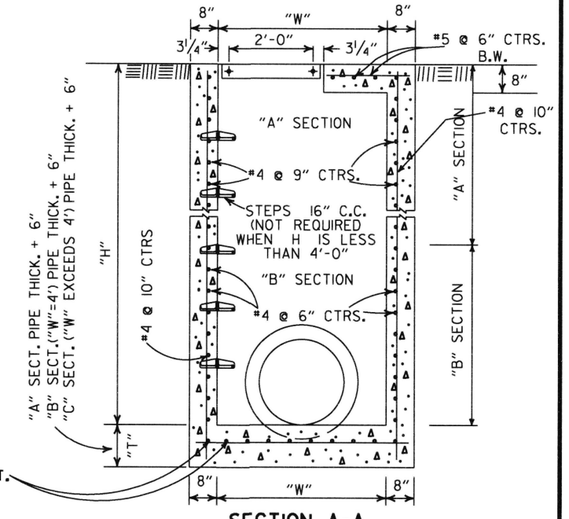

SECTION A-A

DROP INLET(TYPE RM)

8-22-02	ADDED & REVISED DIMENSION TO SECTION A-A	
1-12-00	CORRECTED DIMENSION ON SECTION B-B	
11-06-97	ADDED DIMENSION TO SECTION A-A	
10-18-96	REVISED ASTM REF. TO AASHTO AND ADDED NOTE TO TABLE OF "W" DIMENSIONS	
10-1-92	ADDED DIRECTION OF TRAFFIC	10-1-92
8-15-91	ADDED NOTE ABOUT PAINTING OF GRATE	8-15-91
11-30-89	ALTERED DETAIL A	11-30-89
7-15-88	REVISED STEP DETAIL,TM & RM D.I. & GRATE DETAIL	719-7-15-88
10-2-72	REVISED AND REDRAWN	542-10-2-72
REVISED		DATE FILMED

ARKANSAS STATE HIGHWAY COMMISSION

DETAILS OF DROP INLETS

STANDARD DRAWING FPC-9D

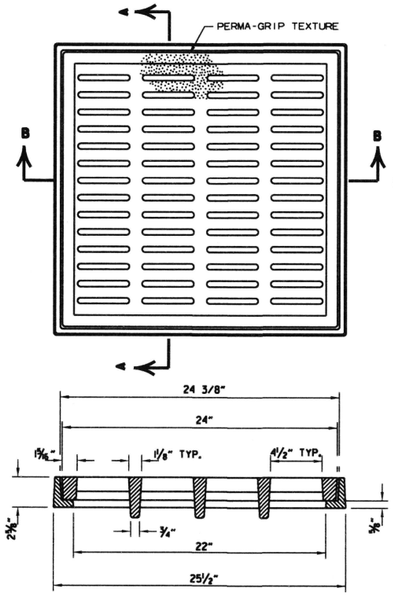

SECTION B-B

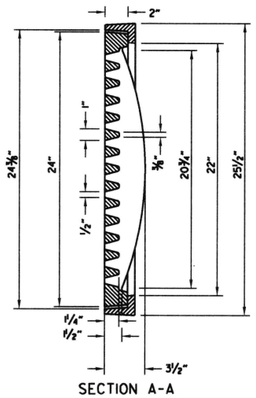

SECTION A-A

GENERAL NOTES (PEDESTRIAN GRATE & FRAME)

1. THE PEDESTRIAN GRATE SHALL BE ORIENTED IN THE TOP OF THE DROP INLET SO THAT THE 1/2" OPENINGS ARE PERPENDICULAR TO THE PATH OF PEDESTRIAN TRAVEL.
2. THE PEDESTRIAN GRATE AND FRAME SHALL BE CONSTRUCTED OF CAST IRON AND SHALL CONFORM TO THE REQUIREMENTS OF THE STANDARD SPECIFICATIONS FOR GRAY IRON CASTINGS AASHTO M 105, CLASS 35B, & AASHTO M 306.
3. THE GRATE AND FRAME SHALL NOT BE PAINTED.
4. THE GRATE AND FRAME SHALL BE INSTALLED IN THE DROP INLET IN THE ASSEMBLED POSITION.
5. THE APPROXIMATE WEIGHT OF THE GRATE AND FRAME SHALL BE 211 LBS.
6. THE MINIMUM WATERWAY OPENING SHALL BE 122 SQ. IN.

DETAILS OF PEDESTRIAN GRATE AND FRAME

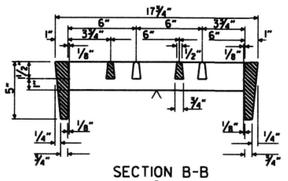

SECTION B-B

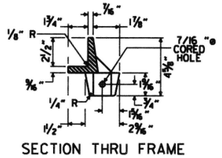

SECTION THRU FRAME

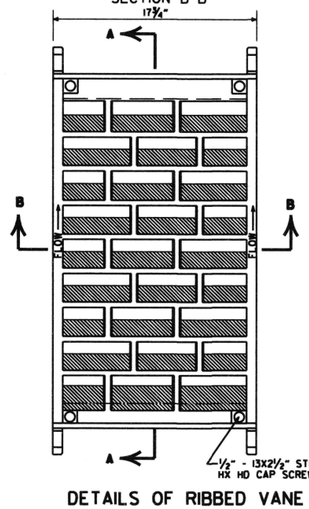

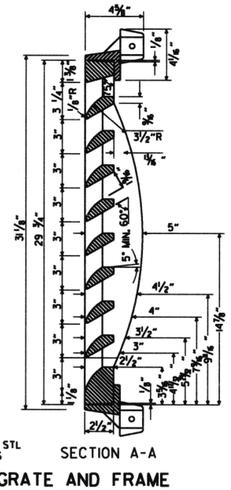

SECTION A-A

DETAILS OF RIBBED VANE GRATE AND FRAME

GENERAL NOTES (RIBBED VANE GRATE & FRAME)

1. RIBBED VANE GRATE AND FRAME SHALL BE CONSTRUCTED OF CAST IRON AND SHALL CONFORM TO THE REQUIREMENTS OF THE STANDARD SPECIFICATIONS FOR GRAY IRON CASTINGS AASHTO M 105, CLASS 35B, & AASHTO M 306.
2. GRATE AND FRAME SHALL NOT BE PAINTED.
3. GRATE AND FRAME SHALL BE INSTALLED IN DROP INLET IN ASSEMBLED POSITION.
4. APPROXIMATE WEIGHT OF GRATE SHALL BE 170 LBS.

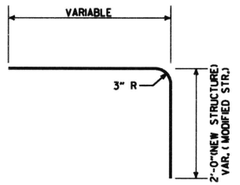

DETAIL OF BENT "b" BAR

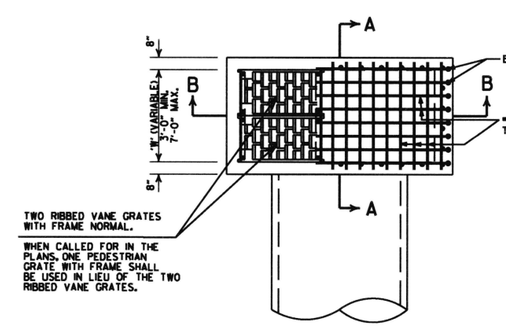

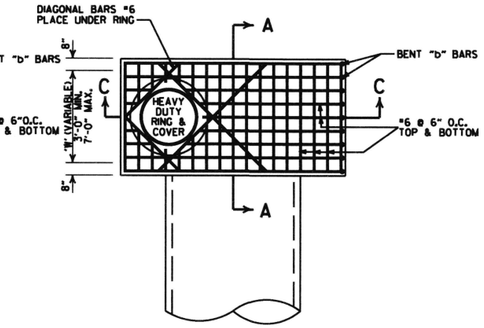

SECTION 'A'
'V' = 8"

SECTION 'B' (W≤4'-0")
'V' = 8"

SECTION 'B' (W>4'-0")
'V' = 10"

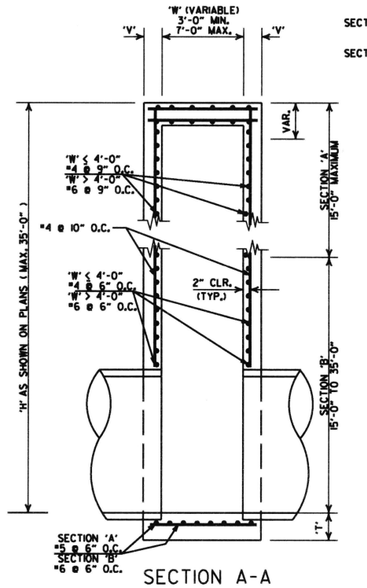

SECTION A-A

DETAILS OF DROP INLET (TYPE ST)

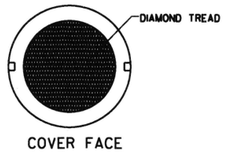

COVER FACE

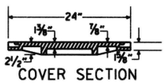

COVER SECTION

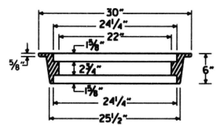

RING SECTION

HEAVY DUTY RING & COVER

APPROXIMATE TOTAL WEIGHT = 333 LBS.

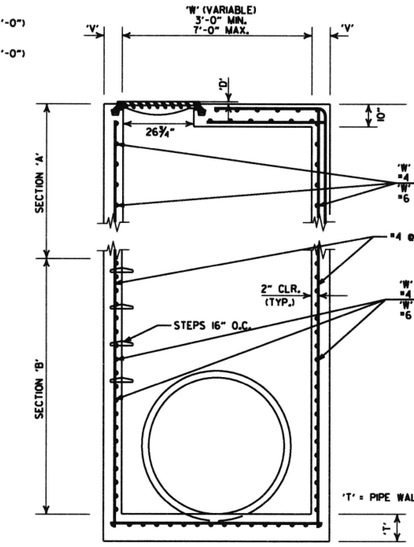

SECTION B-B

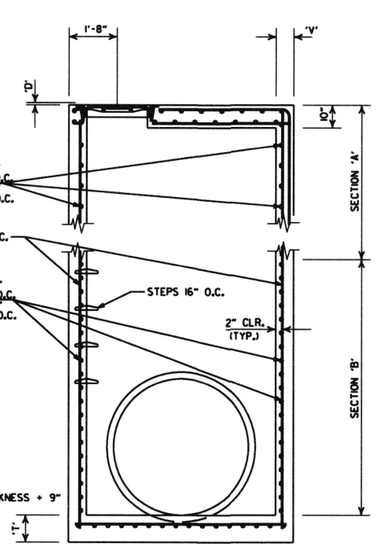

SECTION C-C

DETAILS OF JUNCTION BOX (TYPE ST)

GENERAL NOTES (TYPE ST DROP INLET & JUNCTION BOX)

1. THE 'D' DIMENSION SHALL MATCH THE FINAL LIFT OF ACHM SURFACE COURSE SHOWN IN THE PLANS WHEN ASPHALT PAVING SURROUNDS THE GRATE OR RING COVER, AND SHALL BE 0" AT OTHER INSTALLATIONS.
2. THE STEPS SHALL BE OMITTED WHERE 'H' IS LESS THAN 4'-0".
3. ALL EXPOSED CORNERS ARE TO HAVE A 3/4" CHAMFER.

GENERAL NOTES (HEAVY DUTY RING & COVER):

1. HEAVY DUTY RING AND COVER SHALL BE CONSTRUCTED OF CAST IRON AND SHALL CONFORM TO THE REQUIREMENTS OF THE STANDARD SPECIFICATIONS FOR GRAY IRON CASTINGS AASHTO M 105, CLASS 35B, & AASHTO M 306.
2. HEAVY DUTY RING AND COVER SHALL NOT BE PAINTED.
3. HEAVY DUTY RING SHALL ALWAYS BE INSTALLED WITH FLANGE ON TOP.
4. DIMENSIONS SHOWN FOR RING AND COVER ARE TYPICAL. THE CONTRACTOR MAY SUBSTITUTE SIMILAR CASTINGS WITH THE APPROVAL OF THE ENGINEER, REQUESTING APPROVAL FOR CASTING DESIGNS MAY BE MADE BY REFERRING TO PREVIOUSLY APPROVED DRAWINGS.

DATE REVISED	DATE FILMED	DESCRIPTION
7-26-12		REMOVED NOTE 4, REVISED 'T', REVISED BOTTOM SLAB REBAR FOR SECTION 'A', SHOWED REBAR CLEARANCE IN SECTIONS
11-16-01		ADDED NOTE 4
1-12-00		REVISED HEAVY DUTY RING & COVER
5-13-99		ADDED PEDESTRIAN FRAME & GRATE
7-02-98		REMOVED NOTE 5, REV. DIMENSIONS, ADDED HEAVY DUTY RING & COVER ADDED AASHTO REF. REVISED GRATE
10-18-96		REVISED ASTM REF. TO AASHTO
10-1-92		REVISED & REISSUED
8-15-91	8-15-91	REVISED & REISSUED

ARKANSAS STATE HIGHWAY COMMISSION

DETAILS OF DROP INLET & JUNCTION BOX (TYPE ST)

STANDARD DRAWING FPC-9S

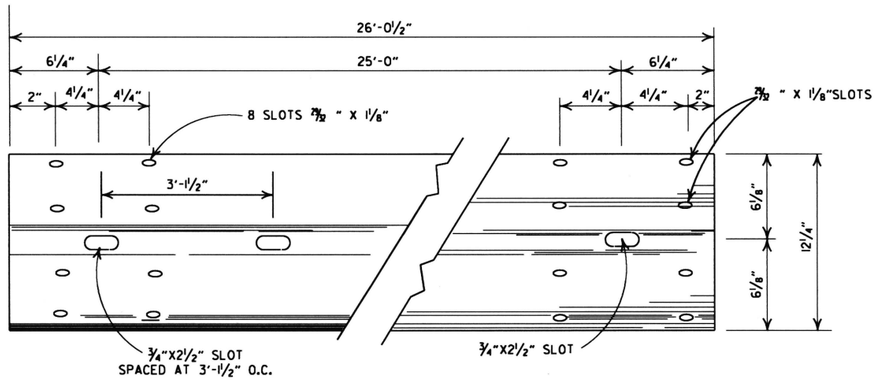

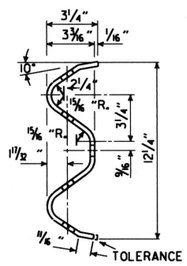

DETAILS OF W-BEAM GUARDRAIL

RAIL SECTION OF CLOSELY SIMILAR DIMENSIONS AND COMPARABLE STRENGTH MAY BE SUBSTITUTED IF APPROVED BY THE ENGINEER.

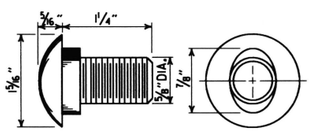

SPLICE BOLT
POST BOLT - SAME EXCEPT LENGTH

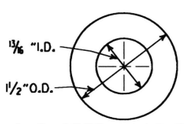

CUT STEEL WASHER

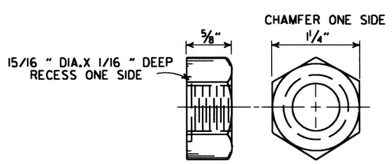

NUT

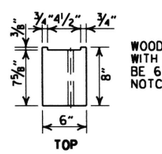

WOOD BLOCKOUT USED WITH WOOD POSTS SHALL BE 6"x8"x1'-2" WITH NO NOTCH REQUIRED.

TOP

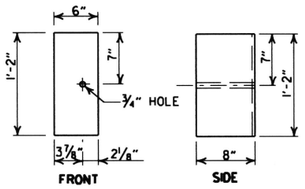

WOOD BLOCKOUT (W-BEAM)

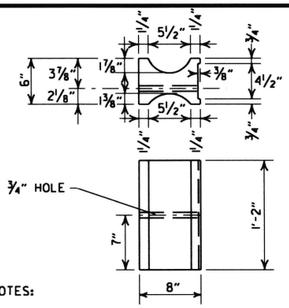

NOTES:

1. SIMILAR SHAPED PLASTIC BLOCKOUTS MAY BE USED AS LONG AS THEY MEET REQUIREMENTS FOR MANUAL FOR ASSESSING SAFETY HARDWARE (MASH).
2. DIMENSIONS ARE SUBJECT TO MANUFACTURERS TOLERANCES.

PLASTIC BLOCKOUT (W-BEAM)

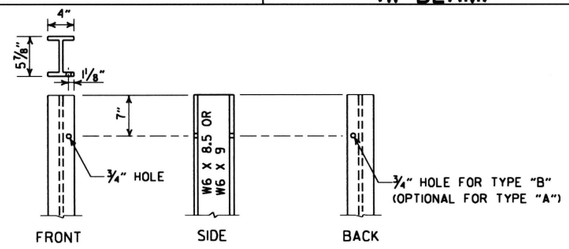

STEEL POST

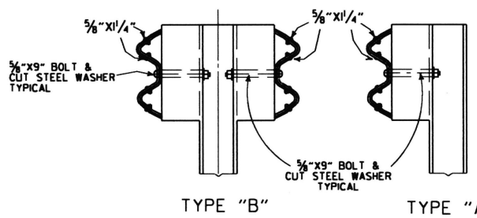

TYPE "B" TYPE "A"

DETAILS OF STEEL LINE POST CONNECTIONS (W-BEAM)

-GENERAL NOTES-

ALL BOLTS SHALL BE SUFFICIENT LENGTH TO EXTEND THROUGH THE FULL THICKNESS OF THE NUT AND NO MORE THAN 3/4" BEYOND IT.

WHERE W-BEAM GUARDRAIL CONTINUES, THE INTERMEDIATE SECTIONS SHALL HAVE A POST SPACING OF 6'-3" UNLESS OTHERWISE NOTED.

W-BEAM GUARDRAIL REPRESENTING INTERMEDIATE SECTIONS WILL BE MEASURED ALONG THE ROADWAY FACE FROM CENTERLINE OF POST TO CENTERLINE OF POST.

USE W-BEAM GUARDRAIL COMPONENTS OF SAME MATERIAL FOR ENTIRE JOB. FOR EXTENSIONS OR MODIFICATION OF EXISTING GUARDRAIL, W-BEAM GUARDRAIL COMPONENTS OF THE SAME TYPE AS THOSE EXISTING SHALL BE USED.

ANY BACKFILLING UNDER OR AROUND POST SHALL BE DAMP SAND THOROUGHLY TAMPED IN PLACE.

WOOD POSTS & WOOD BLOCKS SHALL BE EITHER DENSE NO. 1 STRUCTURAL OR BETTER 9.7f (1400 f) OR NO. 1 1350 f SOUTHERN PINE.

CONTRACTOR SHALL HAVE THE OPTION OF USING WOOD BLOCKOUTS FOR W-BEAM GUARDRAIL OR PLASTIC BLOCKOUTS, AS LONG AS BLOCKOUT USED MEETS REQUIREMENTS FOR MANUAL FOR ASSESSING SAFETY HARDWARE (MASH) FOR W-BEAM GUARDRAIL.

HOLES IN POSTS AND BLOCKS TO BE 3/4" DIA.

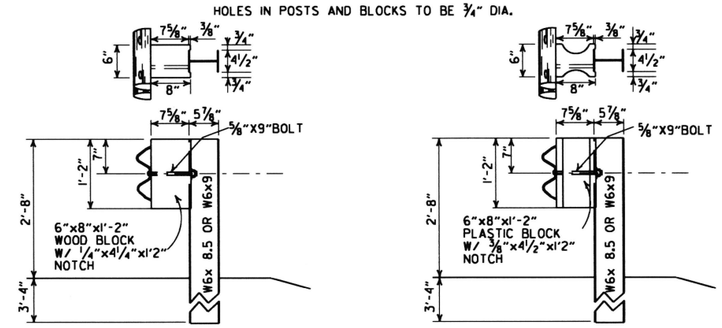

WOOD BLOCKOUT CONNECTIONS

PLASTIC BLOCKOUT CONNECTIONS

DETAILS OF STEEL LINE POST CONNECTIONS (W-BEAM)

HOLES IN POSTS AND BLOCKS TO BE 3/4" DIA.

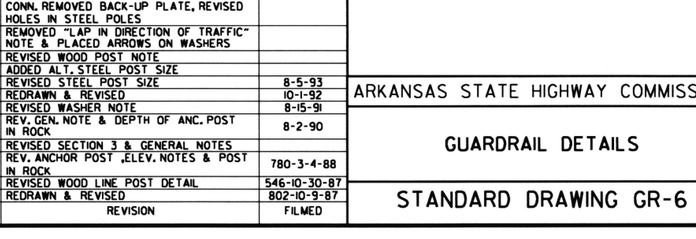

POSTS AND BLOCKS TO BE ROUGH SAWN 6"X8" WITH A TOLERANCE OF + OR - 1/4".

WOOD BLOCKOUT CONNECTIONS

PLASTIC BLOCKOUT CONNECTIONS

DETAILS OF WOOD LINE POST CONNECTIONS (W-BEAM)

DATE	REVISION	FILMED
11-07-19	RENUMBERED AND RENAMED	
11-16-17	REVISED GENERAL NOTES AND RAISED GUARDRAIL HEIGHT 3"	
07-14-10	RAISED HEIGHT OF GUARDRAIL 1"	
10-15-09	ADDED REFERENCE TO MASH	
04-10-03	REVISED GENERAL NOTES	
08-22-02	REVISED DIMENSION ON WOOD & PLASTIC BLOCKOUT CONNECTIONS & STEEL POST	
11-16-01	REVISED WOOD BLOCKOUT & DETAILS OF WOOD LINE POST CONNECTIONS	
03-30-00	REMOVED GUARDRAIL AT BRIDGE ENDS	
01-12-00	ADDED PLASTIC BLOCKOUT	
08-12-98	REV. BLOCKOUTS TO WOOD, DELETED CONC. POST & REV. GENERAL NOTE, DELETED DET. OF GUARDRAIL REPLACE. BEHIND CURB & DET. OF POST PLACE. IN SOLID ROCK, & ADDED DETAILS OF STEEL LINE POST CONN. REMOVED BACK-UP PLATE, REVISED HOLES IN STEEL POLES	
04-03-97	REMOVED "LAP IN DIRECTION OF TRAFFIC" NOTE & PLACED ARROWS ON WASHERS	
10-18-96	REVISED WOOD POST NOTE	
06-02-94	ADDED ALT. STEEL POST SIZE	
08-05-93	REVISED STEEL POST SIZE	8-5-93
10-01-92	REDRAWN & REVISED	10-1-92
08-15-91	REVISED WASHER NOTE	8-15-91
08-02-90	REV. GEN. NOTE & DEPTH OF ANC. POST IN ROCK	8-2-90
07-15-88	REVISED SECTION 3 & GENERAL NOTES	
03-04-88	REV. ANCHOR POST, ELEV. NOTES & POST IN ROCK	780-3-4-88
10-30-87	REVISED WOOD LINE POST DETAIL	546-10-30-87
10-09-87	REDRAWN & REVISED	802-10-9-87

ARKANSAS STATE HIGHWAY COMMISSION

GUARDRAIL DETAILS

STANDARD DRAWING GR-6

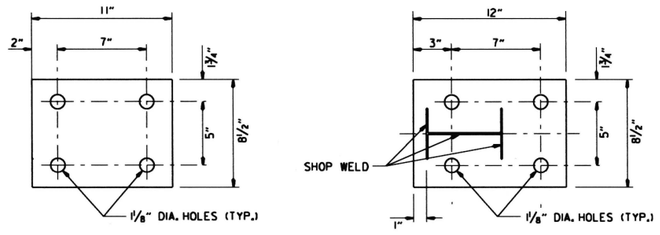

WASHER PLATE BASE PLATE

Note: Bolts, nuts, washers and plates shall be galvanized in accordance with Section 807 of the Standard Specifications.

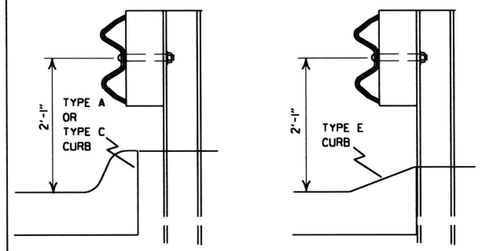

DETAIL OF GUARDRAIL PLACEMENT BEHIND CURB (W-BEAM)

FOR DESIGN SPEEDS OF 50 MPH OR LESS ALL CURB FACES, AS SHOWN ON STD. DRWG. CG-1, MAY BE USED. FOR DESIGN SPEEDS OF 55 MPH OR MORE TYPE "E" CURB FACE SHALL BE USED.

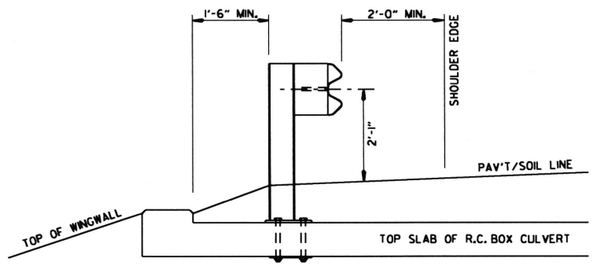

SECTION A-A

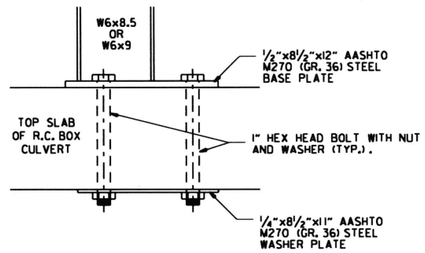

DETAIL OF CONNECTION

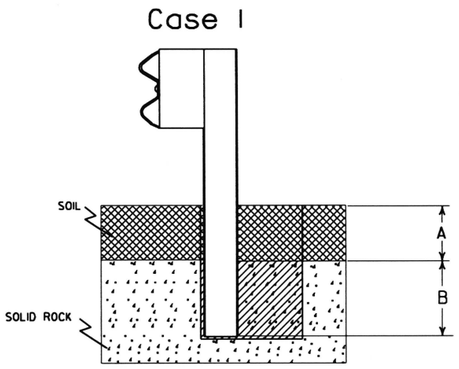

Plan View Steel Posts

Either hole configuration acceptable

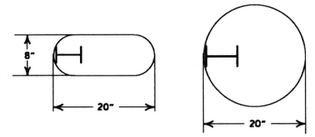

Plan View Wood Posts

Either hole configuration acceptable

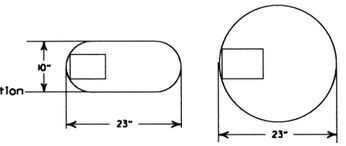

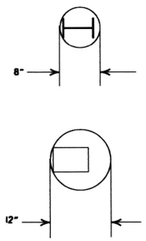

Notes: For overlying soil depths (A) ranging from 0 to 18", the depth of required drilling (B) is equal to 24".

Zone A:
Backfill according to Section 617.03(a).

Zone B:
Backfill hole in 6" lifts with material meeting the requirements of Section 802.02(c) - Alternate gradation. Compact to 95% maximum dry density per ASTM D-698.

Notes: For overlying soil depths (A) ranging from 18" to 44", the depth of required drilling (B) is equal to either 12" or 44" minus the depth of soil whichever is less.

Zone A & B:
Backfill according to Section 617.03(a).

DETAIL OF POST PLACEMENT IN SOLID ROCK (W-BEAM)

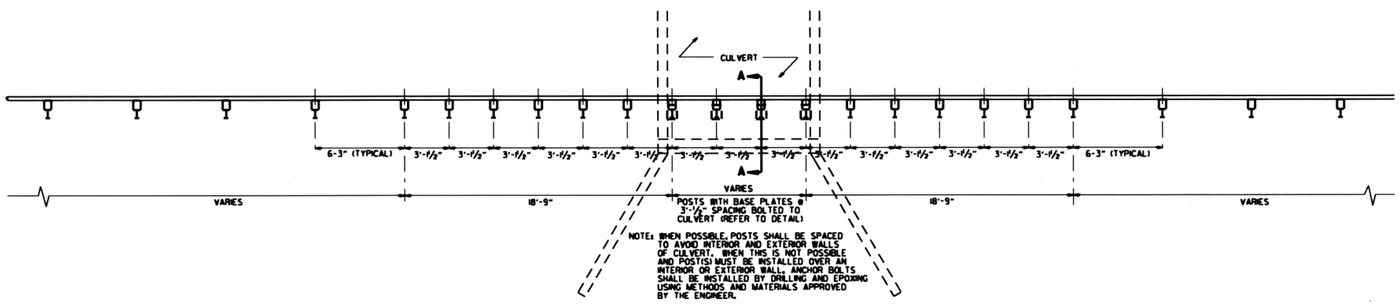

PLAN LAYOUT OF TYPE A GUARDRAIL AT LOW-FILL CULVERTS

NOTE: THIS DETAIL IS TO BE USED ONLY WHEN THE COVER OVER THE CULVERT DOES NOT PERMIT FULL EMBEDMENT OF GUARDRAIL POSTS AS SHOWN ON STD. DRG. GR-6.

DATE	REVISION	FILMED
11-07-19	RENUMBERED, RENAMED, REVISED REFERENCE	
11-16-17	REVISED GUARDRAIL HEIGHT	
07-14-10	RAISED HEIGHT OF GUARDRAIL 1"	
04-12-07	REVISED DETAIL OF GUARDRAIL PLACEMENT BEHIND CURB	
11-10-05	ADDED GUARDRAIL PLACEMENT BEHIND CURB; REVISED DETAIL OF CONNECTION	
11-18-04	REVISED POST PLACEMENT IN ROCK & CULVERT CONNECTION DETAILS. ADDED DETAIL FOR GUARDRAIL PLACEMENT AT LOW-FILL CULVERTS	
03-30-00	REMOVED CONCRETE INSERT ANCHOR	
08-12-98	CHANGED STEEL SPACER BLOCK TO WOOD BLOCKOUT, ADDED DET. OF GUARDRAIL CONNECTION TO R.C. BOX CULV'T., DELETED DET. OF STEEL LINE POST CONN. & ADDED DET. OF GUARDRAIL PLACE. BEHIND CURB & DET. OF POSTPLACE. IN SOLID ROCK	
04-03-96	PLACED ARROWS AT CUT STEEL WASHERS	4-3-96
10-18-96	REV. ASTM REF. TO AASHTO	
11-22-95	ADDED OPTIONAL HOLES	
06-02-94	REVISED ALTERNATE POST SIZE	
08-05-93	REVISED STEEL POST SIZE	
10-01-92	REDRAWN & REVISED	10-1-92
08-02-90	DEL. WASHER ON ANCHOR ASSEMBLY	8-2-90
07-15-88	CONFORMED TO 1988 SPECS	
03-04-88	REVISED ANCHOR NOTE	
10-30-87	REVISED ANCHOR ASSEMBLY	712-10-30-87
10-30-87	REVISED PLACEMENT BEHIND CURB	547-10-30-87
10-09-87	REDRAWN & REVISED	803-10-9-87

ARKANSAS STATE HIGHWAY COMMISSION

GUARDRAIL DETAILS

STANDARD DRAWING GR-7

NOTE: GUARDRAIL WITH GUARDRAIL TERMINAL (TYPE I) TO BE INSTALLED ONLY AT LOCATIONS SHOWN ON PLANS.

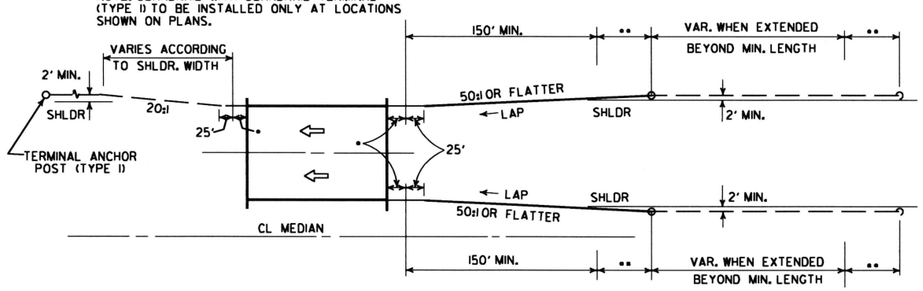

ONE-WAY TRAFFIC

••• LAP OF GUARDRAIL SHALL BE AS SHOWN FOR A DISTANCE OF UP TO 200', CHANGE TO LAP IN DIRECTION OF TRAVEL.

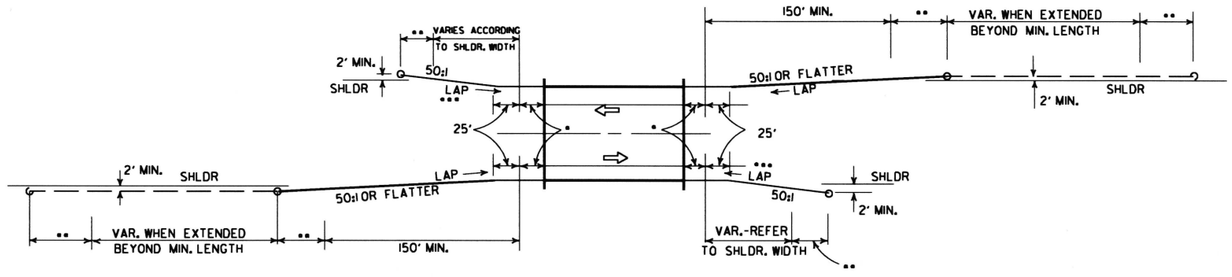

TWO-WAY TRAFFIC

METHODS OF INSTALLATION OF GUARDRAIL AT LESS THAN FULL SHOULDER WIDTH BRIDGES USING GUARDRAIL TERMINAL (TYPE 2)

••• LAP OF GUARDRAIL SHALL BE AS SHOWN FOR A DISTANCE OF UP TO 200', CHANGE TO LAP IN DIRECTION OF TRAVEL.

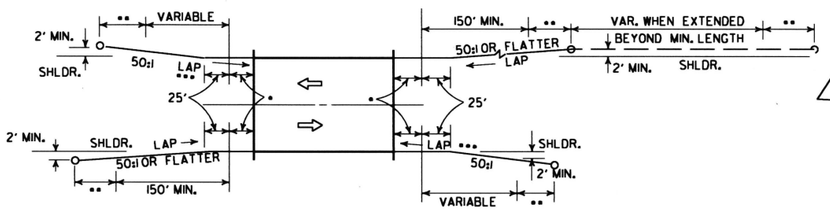

TWO-WAY TRAFFIC

NOTE: GUARDRAIL WITH GUARDRAIL TERMINAL (TYPE I) TO BE INSTALLED ONLY AT LOCATIONS SHOWN ON PLANS.

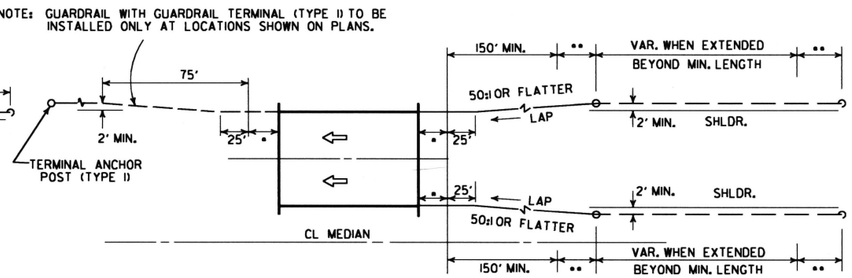

ONE-WAY TRAFFIC

METHOD OF INSTALLATION OF GUARDRAIL AT FULL SHOULDER WIDTH BRIDGES USING GUARDRAIL TERMINAL (TYPE 2)

••• LAP OF GUARDRAIL SHALL BE AS SHOWN FOR A DISTANCE OF UP TO 200', CHANGE TO LAP IN DIRECTION OF TRAVEL.

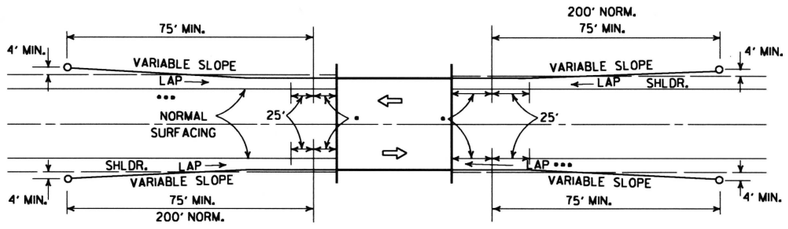

LEGEND

- THRIE BEAM GUARDRAIL TERMINAL
- •• GUARDRAIL TERMINAL (TYPE 2)

METHOD OF INSTALLATION OF GUARDRAIL USING GUARDRAIL TERMINAL (TYPE I) (FULL SHOULDER WIDTH OR LESS BRIDGES)

DATE	REVISION	DATE FILM
11-07-19	RENUMBERED AND RENAMED	
4-17-08	REVISED LAYOUTS	
11-10-05	REMOVED GUARDRAIL NOTES AND DETAILS	
11-16-01	DELETED NOTE-METHOD OF INSTALLATION OF GUARDRAIL USING GUARDRAIL TERM. (TY. I)	
1-12-00	ADDED CONSTRUCTION NOTE	1-12-00
6-26-97	REVISED LAYOUT	
10-1-92	REDRAWN & REVISED	10-1-92
	ADDED NOTE	
10-9-87	REDRAWN & REVISED	

ARKANSAS STATE HIGHWAY COMMISSION

GUARDRAIL DETAILS

STANDARD DRAWING GR-8

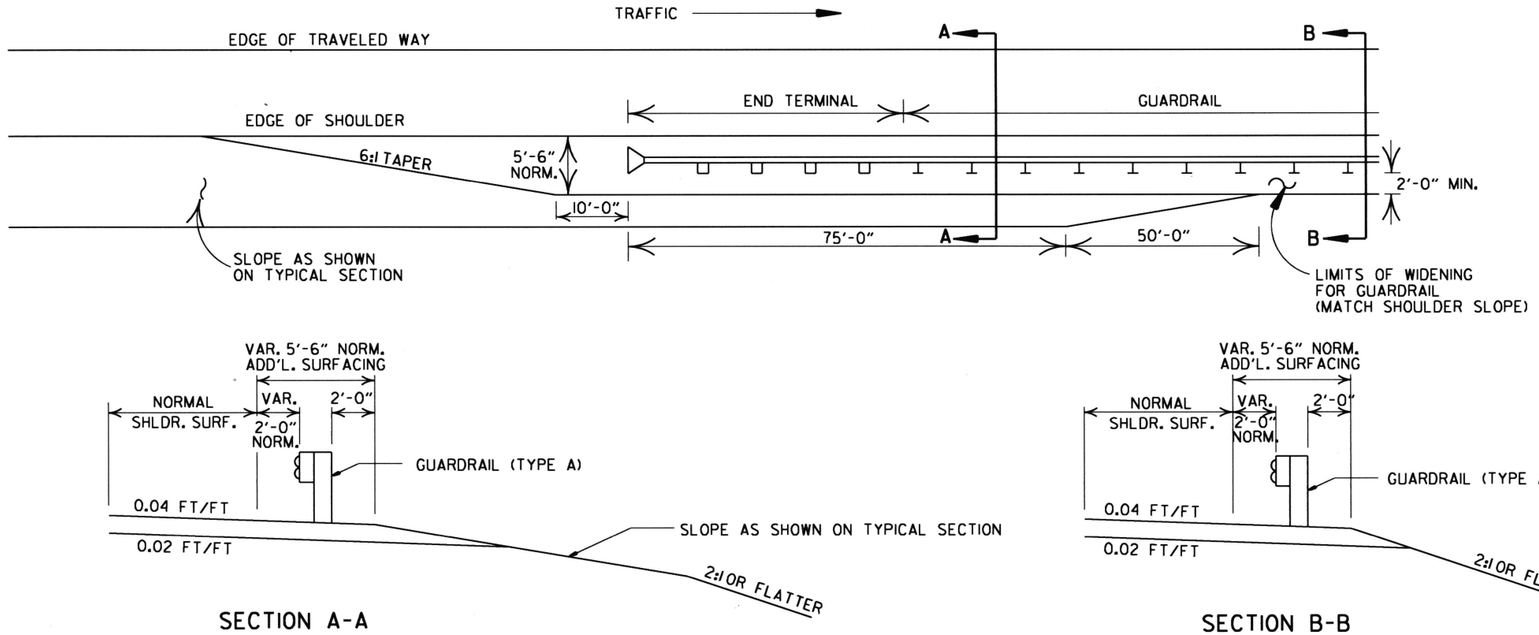

DETAILS OF WIDENING FOR GUARDRAIL

NOTE: NORMAL SECTION TO BE WIDENED APPROX. 5'-6" EACH SIDE TO SUPPORT GUARDRAIL.

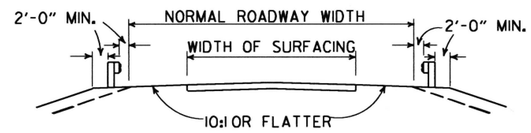

SECTION ON TANGENT

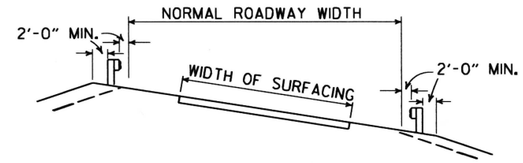

SECTION ON CURVE

DETAILS SHOWING POSITION OF GUARDRAIL ON HIGHWAY

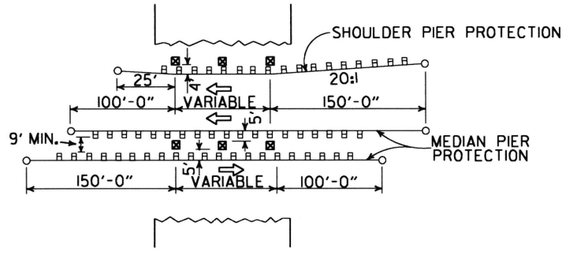

METHOD OF INSTALLATION OF GUARDRAIL AT FIXED OBSTACLE

DATE	REVISION	DATE FILM
11-07-19	RENUMBERED AND RENAMED	
4-17-08	MINOR REVISION	
11-10-05	DRAWN	

ARKANSAS STATE HIGHWAY COMMISSION

GUARDRAIL DETAILS

STANDARD DRAWING GR-9

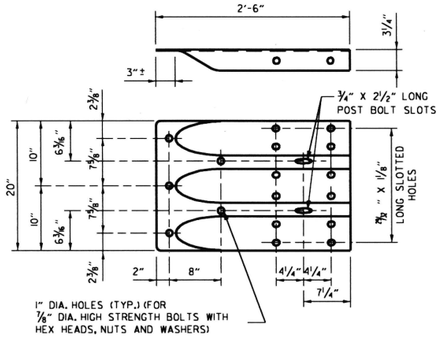

SPECIAL END SHOE

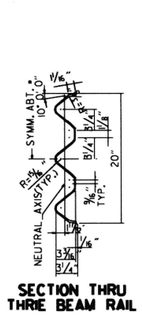

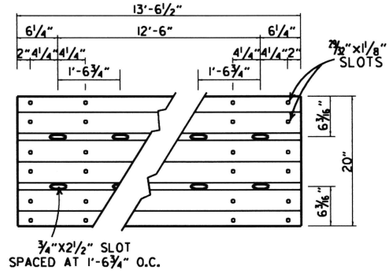

THRIE BEAM RAIL

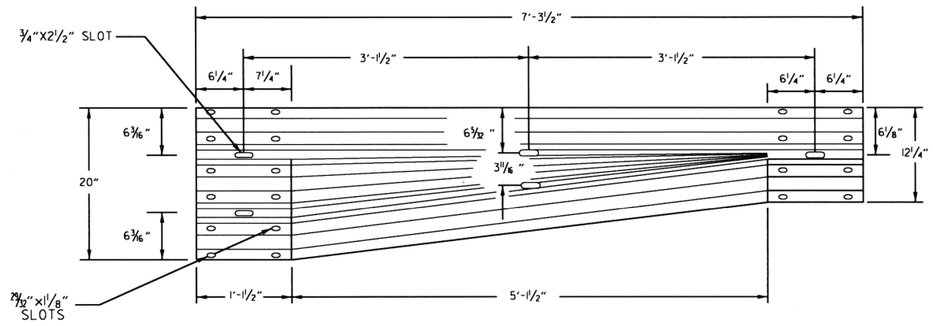

TRANSITION SECTION

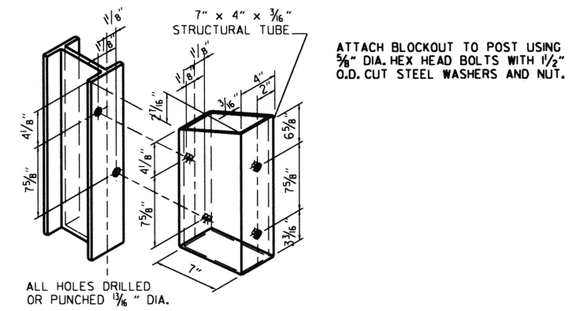

ATTACH BLOCKOUT TO POST USING ⅝" DIA. HEX HEAD BOLTS WITH 1½" O.D. CUT STEEL WASHERS AND NUT.

STRUCTURAL STEEL TUBING BLOCKOUT DETAIL

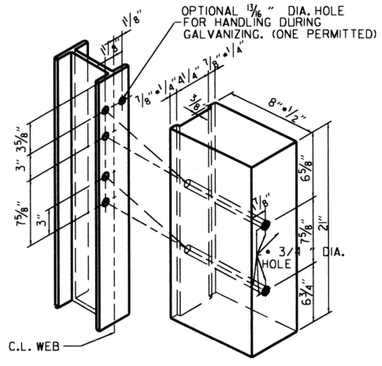

ALL HOLES 13/16" DIAMETER EXCEPT AS NOTED

HOLE PUNCHING DETAIL FOR STEEL POST & WOOD OR PLASTIC BLOCKOUTS

NOTE: BLOCKS SHALL BE THE SAME TYPE THROUGHOUT THE PROJECT LIMITS.

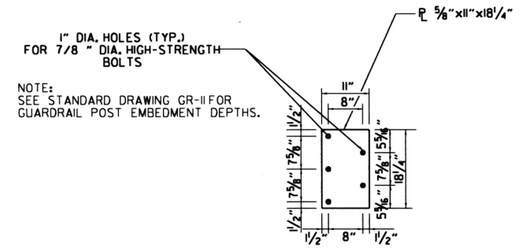

CONNECTOR PLATE

CONNECTOR PLATE SHALL BE AASHTO M270, GR. 36 AND SHALL BE GALVANIZED AFTER FABRICATION. GALVANIZING SHALL CONFORM TO SUBSECTION 807.19 OF THE STANDARD SPECIFICATIONS. CONNECTOR PLATE TO BE BOLTED TO SPECIAL END SHOE USING ⅞" DIA. HIGH STRENGTH BOLTS, WITH THE HEADS PLACED ON THE TRAFFIC FACE. WASHERS SHALL BE USED UNDER THE HEAD AND NUT. BOLTS, NUTS AND WASHERS SHALL BE GALVANIZED AND SHALL CONFORM TO SUBSECTION 807.06.

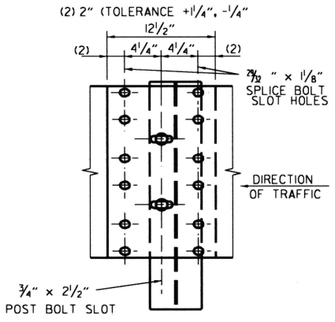

THRIE BEAM RAIL SPLICE AT POST

GENERAL NOTES:

THE THRIE BEAM RAIL, SPECIAL END SHOE, AND THE TRANSITION SECTION SHALL BE MADE OF STEEL AND SHALL BE 12 GAGE. ZINC COATING SHALL BE TYPE I.

RAIL POSTS SHALL BE SET PERPENDICULAR TO THE ROADWAY PROFILE GRADE AND VERTICALLY IN CROSS SECTION.

ALL BOLTS SHALL BE SUFFICIENT LENGTH TO EXTEND THROUGH THE FULL THICKNESS OF THE NUT AND NO MORE THAN 3*4" BEYOND IT.

ALL LAP SPLICES, INCLUDING SPECIAL END SHOES, SHALL BE MADE IN THE DIRECTION SHOWN ON STANDARD DRAWINGS GR-8 & GR-13.

REFER TO STD. DRWG. GR-11 FOR POST DETAILS.

USE THRIE BEAM GUARDRAIL COMPONENTS OF SAME MATERIAL FOR ENTIRE JOB.

THRIE BEAM POSTS SHALL BE SAME MATERIAL AS W-BEAM POSTS FOR ENTIRE JOB.

WOOD POSTS & WOOD BLOCKS SHALL BE EITHER DENSE NO. 1 STRUCTURAL OR BETTER 9.7f (1400 f) OR NO. 1 1350 f SOUTHERN PINE.

DATE	REVISION	FILMED
11-07-19	RENAMED AND REVISED REFERENCES	
11-16-17	REVISED TRANSITION SECTION, GUARD RAIL HEIGHT, AND GENERAL NOTES; MOVED THRIE BEAM GUARD RAIL CONNECTIONS AT BRIDGES ENDS TO STD. DRWG. GR-12	
07-14-10	RAISED HEIGHT OF W-BEAM 1"	
11-29-07	ADDED PLASTIC BLOCKOUTS	
11-10-05	ADDED NOTE FOR ATTACHING STEEL BLOCKOUT	
11-18-04	REVISED GENERAL NOTES	
10-9-03	REVISED GENERAL NOTES	
04-10-03	REVISED GENERAL NOTES	
08-22-02	REVISED NOTE (2)	
06-29-00	MOVED DIMENSION LINES	
05-18-00	ADDED NOTE	
03-30-00	DRAWN & ISSUED	

ARKANSAS STATE HIGHWAY COMMISSION

GUARDRAIL DETAILS

STANDARD DRAWING GR-10

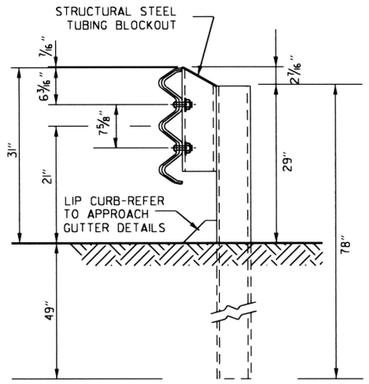

THRIE BEAM RAIL WITH STEEL TUBING BLOCKOUT
AND STEEL POST
POSTS 1-7

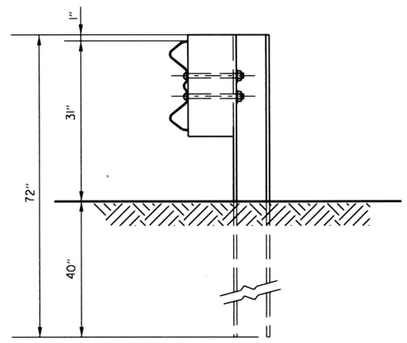

W-BEAM TO THRIE BEAM TRANSITION RAIL
WITH WOOD OR PLASTIC BLOCKOUT AND STEEL POST
POST 8

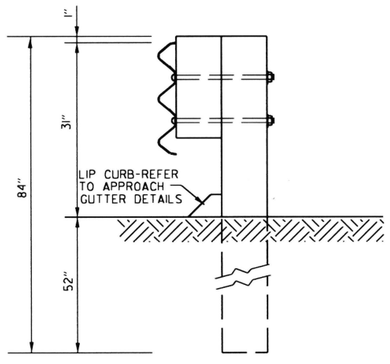

THRIE BEAM RAIL
WITH WOOD OR PLASTIC
BLOCKOUTS & WOOD POSTS
POSTS 1-6

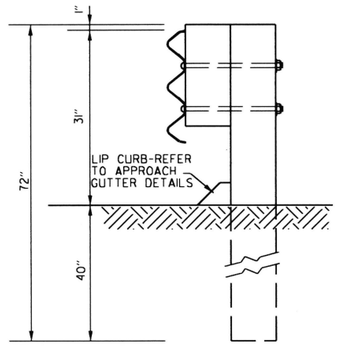

THRIE BEAM RAIL
WITH WOOD OR PLASTIC
BLOCKOUT & WOOD POST
POST 7

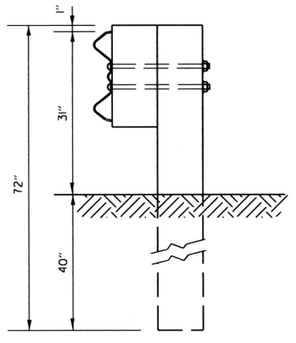

W-BEAM TO THRIE BEAM
TRANSITION RAIL WITH WOOD OR
PLASTIC BLOCKOUT & WOOD POST
POST 8

GENERAL NOTES:

RAIL POSTS SHALL BE SET PERPENDICULAR TO THE ROADWAY PROFILE GRADE AND VERTICALLY IN CROSS SECTION.

WOOD POSTS & WOOD BLOCKS SHALL BE EITHER DENSE NO. 1 STRUCTURAL OR BETTER 9.7f (1400 f) OR NO. 1 1350 f SOUTHERN PINE.

DATE	REVISION	FILMED
11-16-17	REVISED GUARDRAIL HEIGHT, CHANGED STD. DWG. NUMBER FROM GR-10A TO GR-11	
07-14-10	REVISED POST 8 DIMENSIONS	
11-29-07	ADDED PLASTIC BLOCKOUTS	
08-22-02	REVISED LIP CURB NOTE	
03-30-00	DRAWN & ISSUED	

ARKANSAS STATE HIGHWAY COMMISSION

GUARDRAIL DETAILS

STANDARD DRAWING GR-11

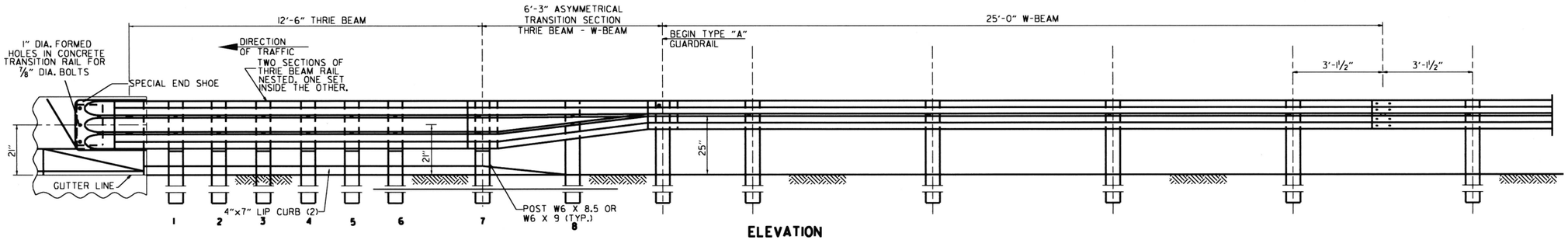

ELEVATION

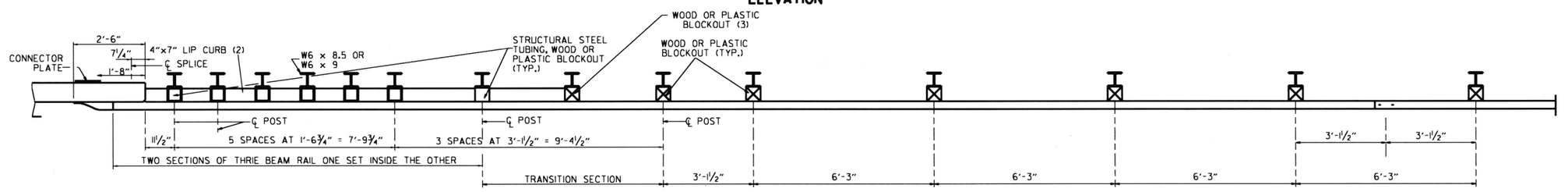

PLAN

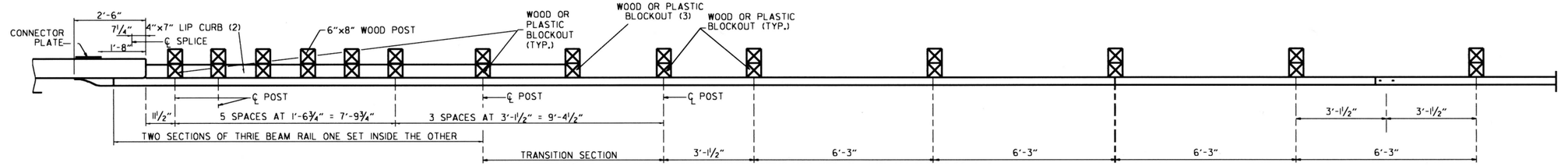

PLAN

(1) VERIFY BOLT SPACING FROM RAIL TRANSITION PRODUCER.
(2) REFER TO APPROACH GUTTER DETAILS.
(3) LENGTH OF BLOCKOUT ON POST 8 TO BE MODIFIED TO FIT RAIL WIDTH.

THRIE BEAM GUARDRAIL CONNECTION AT BRIDGE ENDS

GENERAL NOTES:

THE THRIE BEAM RAIL, SPECIAL END SHOE, AND THE TRANSITION SECTION SHALL BE MADE OF STEEL AND SHALL BE 12 GAGE. ZINC COATING SHALL BE TYPE I.

RAIL POSTS SHALL BE SET PERPENDICULAR TO THE ROADWAY PROFILE GRADE AND VERTICALLY IN CROSS SECTION.

ALL BOLTS SHALL BE SUFFICIENT LENGTH TO EXTEND THROUGH THE FULL THICKNESS OF THE NUT AND NO MORE THAN 3/4" BEYOND IT.

ALL LAP SPLICES, INCLUDING SPECIAL END SHOES, SHALL BE MADE IN THE DIRECTION SHOWN ON STANDARD DRAWINGS GR-8 & GR-13.

REFER TO STD. DRWG. GR-11 FOR POST DETAILS.

USE THRIE BEAM GUARDRAIL COMPONENTS OF SAME MATERIAL FOR ENTIRE JOB.

THRIE BEAM POSTS SHALL BE SAME MATERIAL AS W-BEAM POSTS FOR ENTIRE JOB.

POSTS SHALL BE PLACED AT THE MID-SPAN OF THE W-BEAM.

WOOD POSTS & WOOD BLOCKS SHALL BE EITHER DENSE NO. 1 STRUCTURAL OR BETTER 9.7 f (1400 f) OR NO. 1 1350 f SOUTHERN PINE.

DATE	REVISION	FILMED
11-07-19	RENAMED & REVISED REFERENCES	
11-16-17	RE-DRAWN FROM STD. DWG. GR-10 & ISSUED	

ARKANSAS STATE HIGHWAY COMMISSION

GUARDRAIL DETAILS

STANDARD DRAWING GR-12

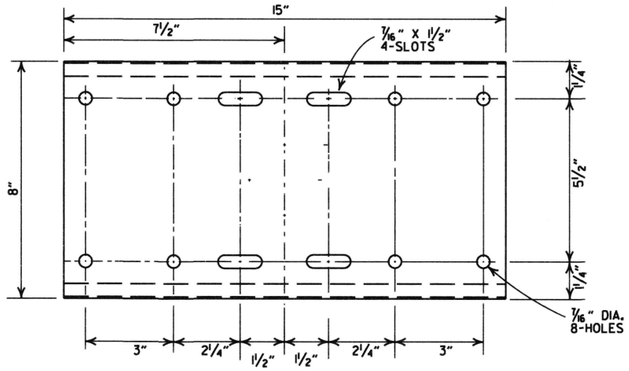

SHELF

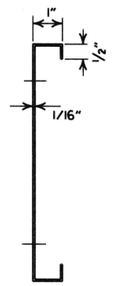

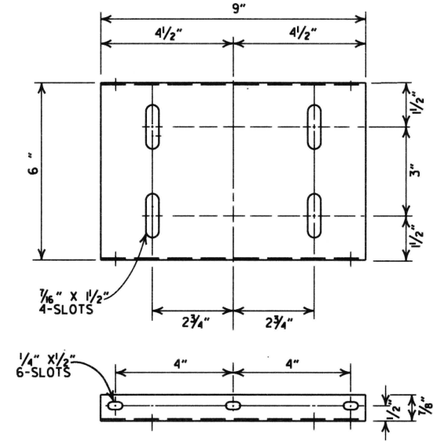

PLATFORM

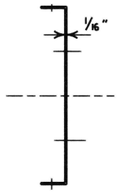

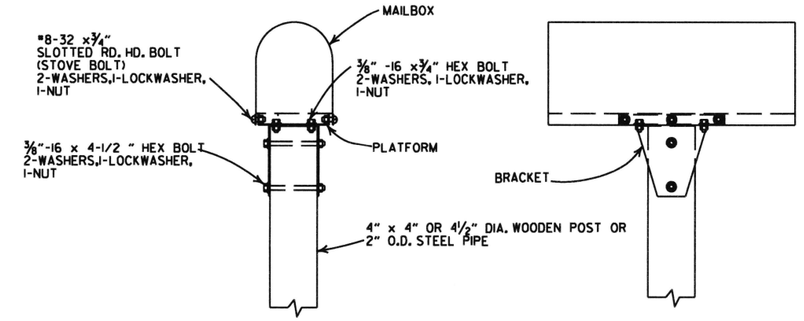

SINGLE INSTALLATION

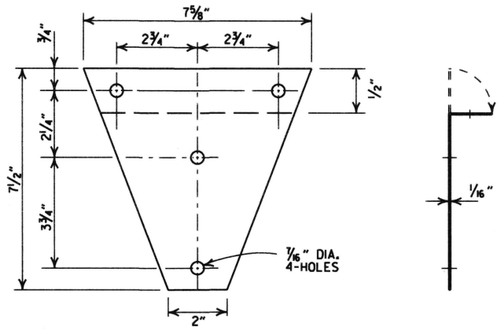

BRACKET

GENERAL NOTES

1. MAILBOX POSTS MAY BE WOOD OR METAL. WOOD POSTS SHALL BE PRESSURE TREATED FOR GROUND CONTACT IN ACCORDANCE WITH SECTION 637.02 OF THE STANDARD SPECIFICATIONS.
2. ANTI-TWIST PLATES SHALL BE USED ONLY ON METAL POSTS.
3. MAILBOX SHELF, BRACKET & PLATFORM SHALL BE GALVANIZED OR PAINTED STEEL, HOWEVER TREATED WOOD MAY BE USED WITH WOODEN POSTS. THE WOODEN SHELF, BRACKET & PLATFORM SHALL BE A MINIMUM OF ¾" THICK AND SHALL BE ASSEMBLED WITH BOLTS OF THE APPROPRIATE LENGTH WITH SIX 8 X¾" FLATHEAD WOOD SCREWS USED TO ATTACH THE MAILBOX TO THE PLATFORM.
4. THE MAILBOX SHELF AND PLATFORM THAT IS SHOWN IS FOR STANDARD SIZE MAILBOXES. THE SHELF AND PLATFORM SIZE SHALL BE MODIFIED TO FIT MAILBOXES OF A DIFFERENT SIZE.
5. METAL PIPE FOR MAILBOX SUPPORT SHALL BE 2" OUTSIDE DIAMETER STEEL WITH A WALL THICKNESS OF 0.145" AND A WEIGHT OF 2.72 LBS PER FT. OUTSIDE DIAMETER AND WEIGHT SHALL HAVE A TOLERANCE OF +/- 5% ACCORDING TO AASHTO M 181.
6. MAILBOX SUPPORT SYSTEM DIFFERING FROM THOSE SHOWN MAY BE USED, PROVIDED THEY ARE ON THE AHTD QUALIFIED PRODUCTS LIST FOR MAILBOX SUPPORTS.

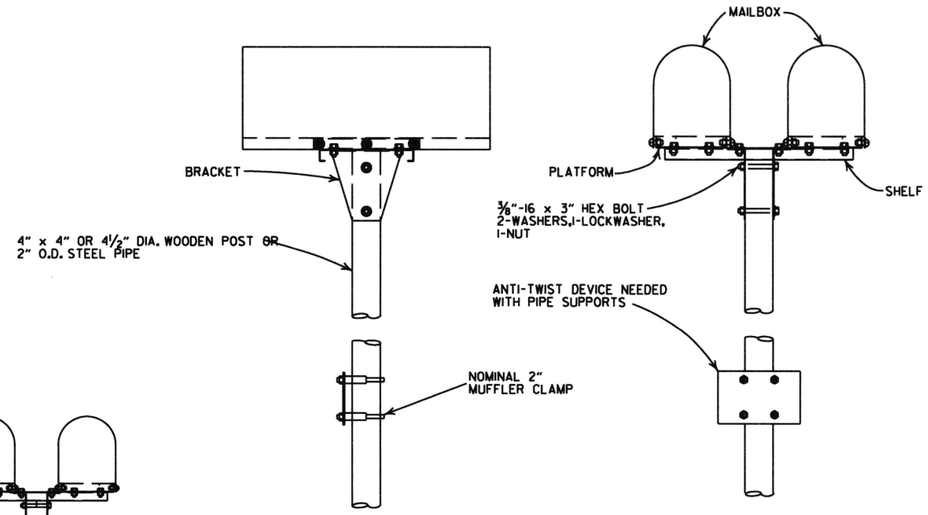

DOUBLE INSTALLATION

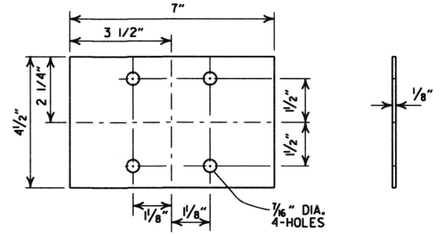

ANTI-TWIST PLATE

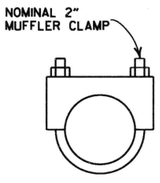

CLAMP

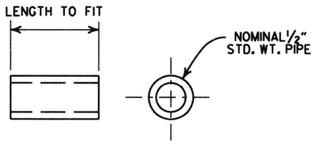

SPACER

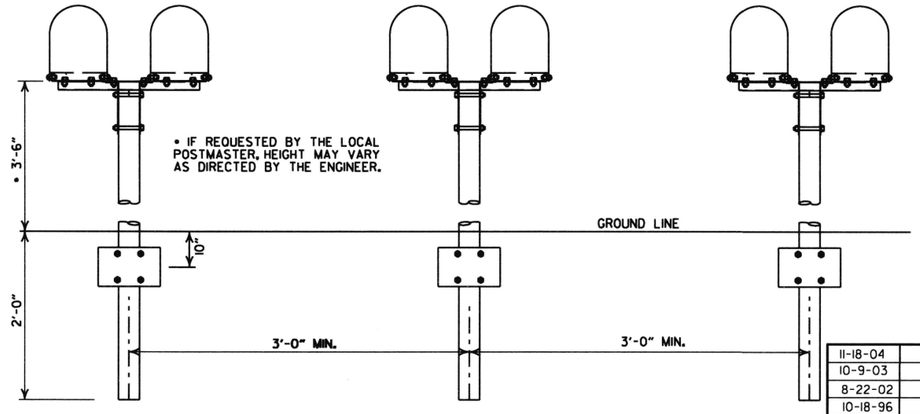

SPACING FOR MULTIPLE POST INSTALLATION

DATE	FILMED	REVISION
11-18-04		REVISED NOTES
10-9-03		REVISED NOTE 6
8-22-02		REVISED NOTE 6
10-18-96		CORRECTED AASHTO
10-1-92		CORRECTED SPELLING
9-26-91		NEW PHONE NUMBER
8-15-91		ADDED NOTE
11-30-89		ADJUSTED HEIGHT & ADDED NOTE
2-16-89		DELETED SLOTS FROM SHELF & PLTF
11-17-88	10-1-92	ADJUSTED DIMENSIONS OF STEEL POSTS
7-15-88	20-7-15-88	ISSUED

ARKANSAS STATE HIGHWAY COMMISSION

MAILBOX DETAILS

STANDARD DRAWING MB-1

REINFORCED CONCRETE ARCH PIPE DIMENSIONS

EQUIV. DIA.	SPAN		RISE	
	AASHTO M 206	AHTD NOMINAL	AASHTO M 206	AHTD NOMINAL
INCHES	INCHES			
15	18	18	11	11
18	22	22	13½	14
21	26	26	15½	16
24	28½	29	18	18
30	36¼	36	22½	23
36	43⅜	44	26⅞	27
42	51⅛	51	31 5/16	31
48	58½	59	36	36
54	65	65	40	40
60	73	73	45	45
72	88	88	54	54
84	102	102	62	62
90	115	115	72	72
96	122	122	77½	77
108	138	138	87⅛	87
120	154	154	96⅞	97
132	168¾	169	106½	107

THE MEASURED SPAN AND RISE SHALL NOT VARY MORE THAN ± 2 PERCENT FROM THE VALUES SPECIFIED BY AASHTO M206.

REINFORCED CONCRETE HORIZONTAL ELLIPTICAL PIPE DIMENSIONS

EQUIV. DIA.	AASHTO M 207	
	SPAN	RISE
INCHES	INCHES	
18	23	14
24	30	19
27	34	22
30	38	24
33	42	27
36	45	29
39	49	32
42	53	34
48	60	38
54	68	43
60	76	48
66	83	53
72	91	58
78	98	63
84	106	68

THE MEASURED SPAN AND RISE SHALL NOT VARY MORE THAN ± 2 PERCENT FROM THE VALUES SPECIFIED BY AASHTO M207.

CONSTRUCTION SEQUENCE

1. PLACE STRUCTURAL BEDDING MATERIAL TO GRADE. DO NOT COMPACT.
2. INSTALL PIPE TO GRADE.
3. COMPACT STRUCTURAL BEDDING OUTSIDE THE MIDDLE THIRD OF THE PIPE.
4. PLACE AND COMPACT THE HAUNCH AREA UP TO THE MIDDLE OF THE PIPE.
5. COMPLETE BACKFILL ACCORDING TO SUBSECTION 606.03.(f)(1).

NOTE: HAUNCH AND STRUCTURAL BEDDING MATERIAL WILL NOT BE PAID FOR SEPARATELY, BUT COMPENSATION WILL BE CONSIDERED TO BE INCLUDED IN THE PRICE BID PER LINEAR FOOT OF CONCRETE PIPE.

- LEGEND -

D_1 = NORMAL INSIDE DIAMETER OF PIPE
D_o = OUTSIDE DIAMETER OF PIPE
H = FILL COVER HEIGHT OVER PIPE (FEET)
MIN. = MINIMUM
= UNDISTURBED SOIL

INSTALLATION TYPE	MATERIAL REQUIREMENTS FOR HAUNCH AND STRUCTURAL BEDDING
TYPE 1	AGGREGATE BASE COURSE (CLASS 5 OR CLASS 7)
TYPE 2	SELECTED MATERIALS (CLASS SM-1, SM-2, OR SM-4) OR TYPE 1 INSTALLATION MATERIAL*
TYPE 3**	AASHTO CLASSIFICATION A-1 THRU A-6 SOIL OR TYPE 1 OR 2 INSTALLATION MATERIAL

* SM-3 WILL NOT BE ALLOWED.

** MATERIALS SHALL NOT INCLUDE ORGANIC MATERIALS OR STONES LARGER THAN 3 INCHES.

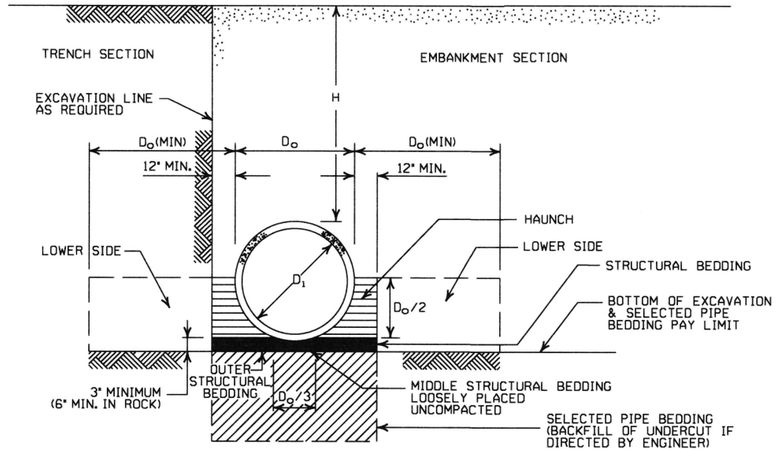

EMBANKMENT AND TRENCH INSTALLATIONS

1. MATERIAL IN THE HAUNCH AND OUTER STRUCTURAL BEDDING SHALL BE COMPACTED TO 95% OF THE MAXIMUM DENSITY ACCORDING TO THE TYPE OR CLASS OF MATERIAL USED.
2. FOR TRENCHES WITH WALLS OF NATURAL SOIL, THE DENSITY OF THE SOIL IN THE LOWER SIDE ZONE SHALL BE AS FIRM AS THE 95% DENSITY REQUIRED FOR THE HAUNCH. IF THE EXISTING SOIL DOES NOT MEET THIS CRITERIA, IT SHALL BE REMOVED AND RECOMPACTED TO 95% OF THE MAXIMUM DENSITY ACCORDING TO THE TYPE OF MATERIAL USED.
3. FOR EMBANKMENTS, THE MATERIAL IN THE LOWER SIDE ZONE SHALL BE COMPACTED TO 95% OF THE MAXIMUM DENSITY ACCORDING TO THE TYPE OR CLASS OF MATERIAL USED.

GENERAL NOTES

1. CONCRETE PIPE CULVERT CONSTRUCTION SHALL CONFORM TO ARKANSAS STATE HIGHWAY AND TRANSPORTATION DEPARTMENT STANDARD SPECIFICATIONS FOR HIGHWAY CONSTRUCTION (CURRENT EDITION), WITH APPLICABLE SUPPLEMENTAL SPECIFICATIONS AND SPECIAL PROVISIONS. UNLESS OTHERWISE NOTED IN THE PLANS, SECTION AND SUBSECTION REFER TO THE STANDARD CONSTRUCTION SPECIFICATIONS.
2. CONCRETE PIPE CULVERT DESIGN SHALL CONFORM TO AASHTO LRFD BRIDGE DESIGN SPECIFICATIONS, FIFTH EDITION (2010) WITH 2010 INTERIMS.
3. ALL PIPE SHALL CONFORM TO SECTION 606. CIRCULAR R.C. PIPE CULVERTS SHALL CONFORM TO AASHTO M170. R.C. ARCH PIPE CULVERTS SHALL CONFORM TO AASHTO M206 AND HORIZONTAL ELLIPTICAL PIPE CULVERTS SHALL CONFORM TO AASHTO M207.
4. ALL PIPE SHALL BE PROTECTED DURING CONSTRUCTION BY A COVER SUFFICIENT TO PREVENT DAMAGE FROM PASSAGE OF EQUIPMENT.
5. THE MINIMUM TRENCH WIDTH SHALL BE THE OUTSIDE DIAMETER OF THE PIPE PLUS 24 INCHES. THE MAXIMUM ALLOWABLE TRENCH WIDTH SHALL BE THE MINIMUM WIDTH PRACTICABLE FOR WORKING CONDITIONS.
6. MULTIPLE PIPE CULVERTS SHALL BE INSTALLED WITH A MINIMUM CLEARANCE OF 24 INCHES BETWEEN STRINGS OF PIPE. REFER TO STD. DWG. FES-2 FOR MINIMUM CLEARANCE WHERE FLARED END SECTIONS ARE USED.
7. IMPERVIOUS MATERIAL SHOULD BE PLACED AS DIRECTED BY THE ENGINEER AT THE ENDS OF THE CULVERT TO PREVENT LOSS OF STRUCTURAL BEDDING WHEN PERVIOUS MATERIAL IS USED FOR STRUCTURAL BEDDING AND/OR BACKFILL.
8. NOT MORE THAN ONE LIFTING HOLE MAY BE PROVIDED IN CONCRETE PIPE TO FACILITATE HANDLING. HOLE MAY BE CAST IN PLACE, CUT INTO THE FRESH CONCRETE AFTER FORMS ARE REMOVED, OR DRILLED. THE HOLE SHALL NOT BE MORE THAN TWO INCHES IN DIAMETER OR TWO INCHES SQUARE. CUTTING OR DISPLACEMENT OF REINFORCEMENT WILL NOT BE PERMITTED. SPALLED AREAS AROUND THE HOLE SHALL BE REPAIRED IN A WORKMANLIKE MANNER. LIFTING HOLE SHALL BE FILLED WITH MORTAR, CONCRETE, OR OTHER METHOD AS APPROVED BY THE ENGINEER.
9. WHEN DIRECTED BY THE ENGINEER, UNSUITABLE MATERIAL THAT IS ENCOUNTERED AT THE BOTTOM OF THE EXCAVATED TRENCH (BELOW THE AREA IDENTIFIED AS "STRUCTURAL BEDDING" ABOVE) WILL BE EXCAVATED AND REPLACED WITH SELECTED PIPE BEDDING. THE QUANTITY OF MATERIAL REQUIRED TO BACKFILL THE UNDERCUT AREA UP TO THE SELECTED PIPE BEDDING PAY LIMIT DESIGNATED ABOVE WILL BE MEASURED AND PAID FOR AS "SELECTED PIPE BEDDING."
10. WHEN THE EXISTING MATERIAL EXCAVATED FOR THE PIPE TRENCH IS DETERMINED BY THE ENGINEER TO BE UNSUITABLE FOR BACKFILLING THE PIPE (ABOVE THE AREA IDENTIFIED ABOVE AS THE HAUNCH), BORROW MATERIAL OR MATERIAL FROM THE ROADWAY EXCAVATION WILL BE USED TO BACKFILL THE PIPE. IF SUITABLE MATERIAL IS NOT AVAILABLE, THE ENGINEER MAY AUTHORIZE THE USE OF "SELECTED PIPE BACKFILL."

MINIMUM HEIGHT OF FILL "H" OVER CIRCULAR R.C. PIPE CULVERTS

	CLASS OF PIPE			
	CLASS III		CLASS IV	CLASS V
INSTALLATION TYPE	TYPE 1 OR 2	TYPE 3	ALL	ALL
PIPE ID (IN.)	FEET			
12-15	2	2.5	2	1
18-24	2.5	3	2	1
27-33	3	4	2	1
36-42	3.5	5	2	1
48	4.5	5.5	2	1
54-60	5	7	2	1
66-78	6	8	2	1
84-108	7.5	8	2	1

NOTE: FOR MINIMUM COVER VALUES, "H" SHALL INCLUDE A MINIMUM OF 12" OF PAVEMENT AND/OR BASE.

MAXIMUM HEIGHT OF FILL "H" OVER CIRCULAR R.C. PIPE CULVERTS

INSTALLATION TYPE	CLASS OF PIPE		
	CLASS III	CLASS IV	CLASS V
	FEET		
TYPE 1	21	32	50
TYPE 2	16	25	39
TYPE 3	12	20	30

NOTE: IF FILL HEIGHT EXCEEDS 50 FEET, A SPECIAL DESIGN CONCRETE PIPE WILL BE REQUIRED USING TYPE 1 INSTALLATION.

MINIMUM HEIGHT OF FILL "H" OVER R.C. ARCH & HORIZONTAL ELLIPTICAL PIPE CULVERTS

INSTALLATION TYPE	CLASS OF PIPE	
	CLASS III	CLASS IV
	FEET	
TYPE 2 OR TYPE 3	2.5	1.5

NOTE: TYPE 1 INSTALLATION WILL NOT BE ALLOWED FOR ARCH & HORIZONTAL ELLIPTICAL PIPE CULVERTS.

NOTE: FOR MINIMUM COVER VALUES, "H" SHALL INCLUDE A MINIMUM OF 12" OF PAVEMENT AND/OR BASE.

MAXIMUM HEIGHT OF FILL "H" OVER R.C. ARCH & HORIZONTAL ELLIPTICAL PIPE CULVERTS

INSTALLATION TYPE	CLASS OF PIPE	
	CLASS III	CLASS IV
	FEET	
TYPE 2	13	21
TYPE 3	10	16

NOTE: TYPE 1 INSTALLATION WILL NOT BE ALLOWED FOR ARCH & HORIZONTAL ELLIPTICAL PIPE CULVERTS.

DATE	REVISION	DATE FILMED
2-27-14	REVISED GENERAL NOTE 1.	
12-15-11	REVISED FOR LRFD DESIGN SPECIFICATIONS	
5-18-00	REVISED TYPE 3 BEDDING & ADDED NOTE	
3-30-00	REVISED INSTALLATIONS	
11-06-97	ISSUED	

ARKANSAS STATE HIGHWAY COMMISSION

CONCRETE PIPE CULVERT FILL HEIGHTS & BEDDING

STANDARD DRAWING PCC-1

CORRUGATED STEEL PIPE (ROUND)

PIPE DIAMETER (INCHES)	① MINUMUM COVER TOP OF PIPE TO TOP OF GROUND "H" (FEET)	MAX. FILL HEIGHT "H" ABOVE TOP OF PIPE (FEET)				
		METAL THICKNESS (INCHES)				
		0.064	0.079	0.109	0.138	0.168
2⅔ INCH BY ½ INCH CORRUGATION RIVETED, WELDED, OR HELICAL LOCK-SEAM						
12	1	84	91			
15	1	67	73			
18	1	56	61			
24	1	42	46	59		
30	2	34	36	47		
36	2		30	39	41	
42	2		43	67	70	73
48	2		37	58	61	64
② 3 INCH BY 1 INCH OR 5 INCH BY 1 INCH CORRUGATION RIVETED, WELDED, BOLTED, OR HELICAL LOCK-SEAM						
36	1	48	60	88	111	118
42	1	41	51	72	90	102
48	1	36	45	64	77	85
54	2	32	40	59	71	79
60	2	29	36	53	64	71
66	2	26	33	47	58	64
72	2	24	30	44	53	59
78	2		28	41	49	54
84	2		26	38	45	51
90	2		24	35	43	45
96	2		22	33	40	44
102	2			31	38	42
108	2			30	35	39
114	2			28	34	37
120	2			27	32	35

CORRUGATED ALUMINUM PIPE (ROUND)

PIPE DIAMETER (INCHES)	① MINUMUM COVER TOP OF PIPE TO TOP OF GROUND "H" (FEET)	MAX. FILL HEIGHT "H" ABOVE TOP OF PIPE (FEET)				
		METAL THICKNESS IN INCHES				
		0.060	0.075	0.105	0.135	0.164
		2⅔ INCH BY ½ INCH CORRUGATION RIVETED OR HELICAL LOCK-SEAM				
12	1	45	45			
18	2	30	30	52		
24	2	22	22	39	41	
30	2		18	31	32	34
36	2.5		15	26	27	28
42	2			43	43	44
48	2			40	41	43
54	2			35	37	38
60	2				33	34
66	2					31
72	2					29

CONSTRUCTION SEQUENCE

1. PLACE STRUCTURAL BEDDING MATERIAL TO GRADE. DO NOT COMPACT.
2. INSTALL PIPE TO GRADE.
3. COMPACT STRUCTURAL BEDDING OUTSIDE THE MIDDLE THIRD OF THE PIPE.
4. COMPLETE STRUCTURAL BACKFILL OPERATION BY WORKING FROM SIDE TO SIDE OF THE PIPE. THE SIDE TO SIDE STRUCTURAL BACKFILL DIFFERENTIAL SHALL NOT EXCEED 24 INCHES OR 1/3 THE SIZE OF THE PIPE, WHICHEVER IS LESS.

NOTE: STRUCTURAL BACKFILL AND STRUCTURAL BEDDING MATERIAL WILL NOT BE PAID FOR SEPARATELY, BUT COMPENSATION WILL BE CONSIDERED TO BE INCLUDED IN THE PRICE BID PER LINEAR FOOT OF METAL PIPE.

INSTALLATION TYPE	MATERIAL REQUIREMENTS FOR STRUCTURAL BACKFILL AND STRUCTURAL BEDDING
TYPE 1	AGGREGATE BASE COURSE (CLASS 4, 5, 6, OR 7)
TYPE 2	SELECTED MATERIALS (CLASS SM-1, SM-2, OR SM-4) OR TYPE 1 INSTALLATION MATERIAL ③

③ SM-3 WILL NOT BE ALLOWED.

EQUIVALENT METAL THICKNESSES AND GAUGES

METAL THICKNESS IN INCHES			GAUGE NUMBER
STEEL			
ZINC COATED	UNCOATED	ALUMINUM	
0.064	0.0598	0.060	16
0.079	0.0747	0.075	14
0.109	0.1046	0.105	12
0.138	0.1345	0.135	10
0.168	0.1644	0.164	8

CORRUGATED METAL PIPE ARCHES

EQUIV. DIA. (INCHES)	PIPE DIMENSION SPAN X RISE (INCHES)	MINUMUM CORNER RADIUS (INCHES)	STEEL				ALUMINUM			
			MIN. THICKNESS REQUIRED INCHES	① MIN. HEIGHT OF FILL, "H" (FT.) INSTALLATION TYPE 1		MAX. HEIGHT OF FILL, "H" (FT.) INSTALLATION TYPE 1	MIN. THICKNESS REQUIRED INCHES	① MIN. HEIGHT OF FILL, "H" (FT.) INSTALLATION TYPE 1		MAX. HEIGHT OF FILL, "H" (FT.) INSTALLATION TYPE 1
			2 ⅔ INCH BY ½ INCH CORRUGATION RIVETED, WELDED, OR HELICAL LOCK-SEAM				2 ⅔ INCH BY ½ INCH CORRUGATION RIVETED OR HELICAL LOCK-SEAM			
15	17x13	3	0.064	2		15	0.060	2		15
18	21x15	3	0.064	2		15	0.060	2		15
21	24x18	3	0.064	2.25		15	0.060	2.25		15
24	28x20	3	0.064	2.5		15	0.075	2.5		15
30	35x24	3	0.079	3		12	0.075	3		12
36	42x29	3½	0.079	3		12	0.105	3		12
42	49x33	4	0.079	3		12	0.105	3		12
48	57x38	5	0.109	3		13	0.135	3		13
54	64x43	6	0.109	3		14	0.135	3		14
60	71x47	7	0.138	3		15	0.164	3		15
66	77x52	8	0.168	3		15				
72	83x57	9	0.168	3		15				
			② 3 INCH BY 1 INCH OR 5 INCH BY 1 INCH CORRUGATION RIVETED, WELDED, OR HELICAL LOCK-SEAM							
				INSTALLATION TYPE 2	INSTALLATION TYPE 1	INSTALLATION TYPE 2	INSTALLATION TYPE 1			
36	40x31	5	0.079	3	2	12	15			
42	46x36	6	0.079	3	2	13	15			
48	53x41	7	0.079	3	2	13	15			
54	60x46	8	0.079	3	2	13	15			
60	66x51	9	0.079	3	2	13	15			
66	73x55	12	0.079	3	2	15	15			
72	81x59	14	0.079	3	2	15	15			
78	87x63	14	0.079	3	2	15	15			
84	95x67	16	0.109	3	2	15	15			
90	103x71	16	0.109	3	2	15	15			
96	112x75	18	0.109	3	2	15	15			
102	117x79	18	0.109	3	2	15	15			
108	128x83	18	0.138	3	2	15	15			

① FOR MINIMUM COVER VALUES, "H" SHALL INCLUDE A MINIMUM 12" OF PAVEMENT AND/OR BASE.

② WHERE THE STANDARD 2 2/3"x ½" CORRUGATION AND GAUGE IS SPECIFIED FOR A GIVEN DIAMETER, A PIPE OF THE SAME DIAMETER WITH A 3" x 1" OR 5" x 1" CORRUGATION MAY BE SUBSTITUTED, PROVIDING IT IS GAUGED FOR A FILL HEIGHT CONDITION EQUAL TO OR GREATER THAN THE MAXIMUM FILL HEIGHT CONDITION FOR THE SPECIFIED GAUGE AND CORRUGATION.

- LEGEND -

D_o = OUTSIDE DIAMETER OF PIPE
MAX. = MAXIMUM
MIN. = MINIMUM
= STRUCTURAL BACKFILL MATERIAL
= UNDISTURBED SOIL
EQUIV. DIA. = EQUIVALENT DIAMETER
H = FILL COVER HEIGHT OVER PIPE (FEET)

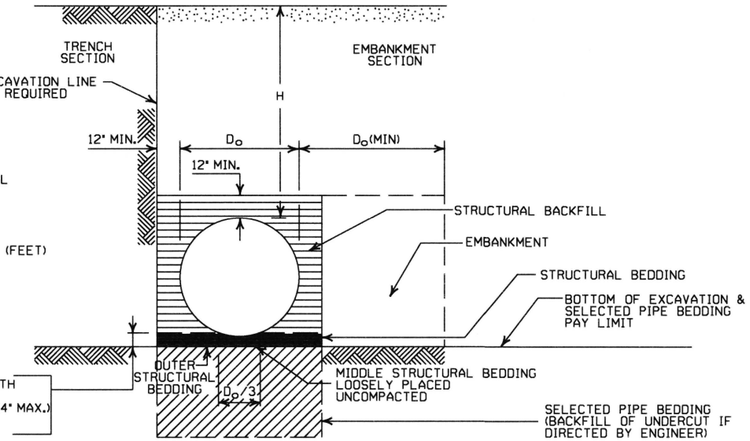

EMBANKMENT AND TRENCH INSTALLATIONS

1. STRUCTURAL BACKFILL, EMBANKMENT, AND OUTER STRUCTURAL BEDDING MATERIAL SHALL BE COMPACTED TO 95% OF THE MAXIMUM DENSITY ACCORDING TO THE TYPE OR CLASS OF MATERIAL USED.
2. INSTALLATION TYPE 1 OR 2 MAY BE USED FOR CORRUGATED STEEL OR ALUMINUM PIPE (ROUND).
3. INSTALALTION TYPE 1 SHALL BE USED FOR CORRUGATED STEEL OR ALUMINUM PIPE ARCHES WITH 2⅔" X ½" CORRUGATION.
4. INSTALLATION TYPE 1 OR 2 MAY BE USED FOR CORRUGATED STEEL OR ALUMINUM PIPE ARCHES WITH 3" X 1" OR 5" X 1" CORRUGATION.

GENERAL NOTES

1. METAL PIPE CULVERT CONSTRUCTION SHALL CONFORM TO ARKANSAS STATE HIGHWAY AND TRANSPORTATION DEPARTMENT STANDARD SPECIFICATIONS FOR HIGHWAY CONSTRUCTION (CURRENT EDITION), WITH APPLICABLE SUPPLEMENTAL SPECIFICATIONS AND SPECIAL PROVISIONS. UNLESS OTHERWISE NOTED IN THE PLANS, SECTION AND SUBSECTION REFER TO THE STANDARD CONSTRUCTION SPECIFICATIONS.
2. METAL PIPE CULVERT DESIGN SHALL CONFORM TO AASHTO LRFD BRIDGE DESIGN SPECIFICATIONS, FIFTH EDITION (2010) WITH 2010 INTERIMS.
3. METAL PIPE CULVERT MATERIALS AND INSTALLATIONS SHALL CONFORM TO SECTION 606 AND JOB SPECIAL PROVISION "METAL PIPE".
4. ALL PIPE SHALL BE PROTECTED DURING CONSTRUCTION BY A COVER SUFFICIENT TO PREVENT DAMAGE FROM PASSAGE OF EQUIPMENT.
5. THE MINIMUM TRENCH WIDTH SHALL BE THE OUTSIDE DIAMETER OF THE PIPE PLUS 24 INCHES. THE MAXIMUM ALLOWABLE TRENCH WIDTH SHALL BE THE MINIMUM WIDTH PRACTICABLE FOR WORKING CONDITIONS.
6. MULTIPLE PIPE CULVERTS SHALL BE INSTALLED WITH A MINIMUM CLEARANCE OF 24 INCHES BETWEEN STRINGS OF PIPE. REFER TO STD. DWG. FES-2 FOR MINIMUM CLEARANCE WHERE FLARED END SECTIONS ARE USED.
7. IMPERVIOUS MATERIAL SHOULD BE PLACED AS DIRECTED BY THE ENGINEER AT THE ENDS OF THE CULVERT TO PREVENT LOSS OF STRUCTURAL BEDDING WHEN PERVIOUS MATERIAL IS USED FOR STRUCTURAL BEDDING AND/OR BACKFILL.
8. WHEN DIRECTED BY THE ENGINEER, UNSUITABLE MATERIAL THAT IS ENCOUNTERED AT THE BOTTOM OF THE EXCAVATED TRENCH (BELOW THE AREA IDENTIFIED AS "STRUCTURAL BEDDING" ABOVE) WILL BE EXCAVATED AND REPLACED WITH SELECTED PIPE BEDDING. THE QUANTITY OF MATERIAL REQUIRED TO BACKFILL THE UNDERCUT AREA UP TO THE SELECTED PIPE BEDDING PAY LIMIT DESIGNATED ABOVE WILL BE MEASURED AND PAID FOR AS "SELECTED PIPE BEDDING."
9. WHEN THE EXISTING MATERIAL EXCAVATED FOR THE PIPE TRENCH IS DETERMINED BY THE ENGINEER TO BE UNSUITABLE FOR BACKFILLING THE PIPE (ABOVE THE AREA IDENTIFIED AS STRUCTURAL BACKFILL), BORROW MATERIAL OR MATERIAL FROM THE ROADWAY EXCAVATION WILL BE USED TO BACKFILL THE PIPE. IF SUITABLE MATERIAL IS NOT AVAILABLE, THE ENGINEER MAY AUTHORIZE THE USE OF "SELECTED PIPE BACKFILL."

DATE	REVISION	DATE FILMED
2-27-14	REVISED GENERAL NOTE 1.	
12-15-11	REVISED FOR LRFD DESIGN SPECS	
3-30-00	REVISED INSTALLATIONS	
11-06-97	ISSUED	

ARKANSAS STATE HIGHWAY COMMISSION

METAL PIPE CULVERT FILL HEIGHTS & BEDDING

STANDARD DRAWING PCM-1

INSTALLATION TYPE	•• MATERIAL REQUIREMENTS FOR STRUCTURAL BACKFILL AND STRUCTURAL BEDDING
TYPE 2	•SELECTED MATERIALS (CLASS SM-1, SM-2 OR SM-4)

• AGGREGATE BASE COURSE (CLASS 4, 5, 6, OR 7) MAY BE USED IN LIEU OF SELECTED MATERIAL.

SM3 WILL NOT BE ALLOWED.

•• STRUCTURAL BEDDING MATERIAL SHALL HAVE A MAXIMUM PARTICLE SIZE OF 1 INCH. STRUCTURAL BACKFILL MATERIAL SHALL BE FREE OF ORGANIC MATERIAL, STONES LARGER THAN 1.50 INCH IN GREATEST DIMENSION, OR FROZEN LUMPS.

STRUCTURAL BACKFILL AND STRUCTURAL BEDDING MATERIAL WILL NOT BE PAID FOR SEPARATELY, BUT COMPENSATION WILL BE CONSIDERED TO BE INCLUDED IN THE PRICE BID PER LINEAR FOOT OF HDPE PIPE.

MULTIPLE INSTALLATION OF HIGH DENSITY POLYETHYLENE PIPES

PIPE DIAMETER	CLEAR DISTANCE BETWEEN PIPES
18"	1'-6"
24"	2'-0"
30"	2'-6"
36"	3'-0"
42"	3'-6"
48"	4'-0"

MINIMUM TRENCH WIDTH BASED ON FILL HEIGHT "H"

PIPE DIAMETER	TRENCH WIDTH (FEET) "H" < 10'-0"	TRENCH WIDTH (FEET) "H" >OR= 10'-0"
18"	4'-6"	4'-6"
24"	5'-0"	6'-0"
30"	5'-6"	7'-6"
36"	6'-0"	9'-0"
42"	7'-0"	10'-6"
48"	8'-0"	12'-0"

①NOTE:
18" MIN. (18" - 30" DIAMETERS)
24" MIN. (36" - 48" DIAMETERS)

MINIMUM COVER VALUES, "H" SHALL INCLUDE A MINIMUM 12" OF PAVEMENT AND/OR BASE.

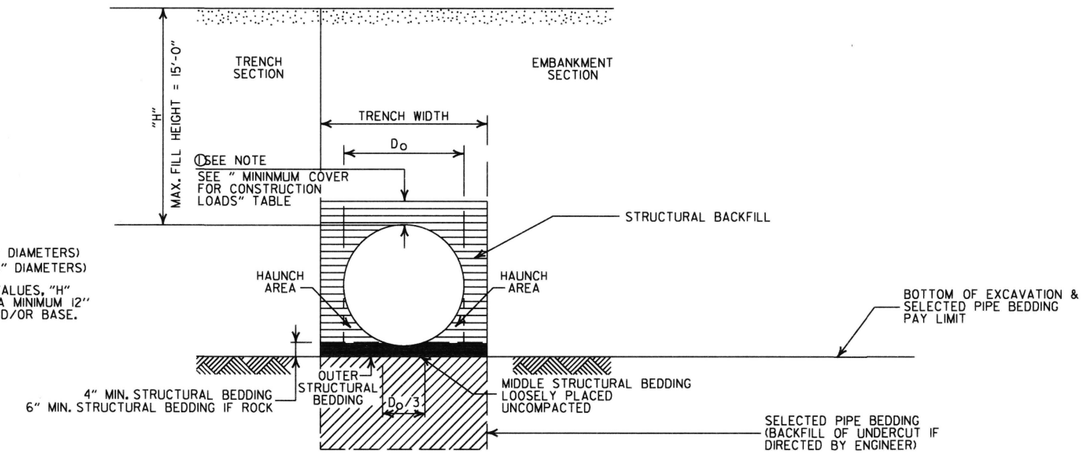

TYPE 2 EMBANKMENT AND TRENCH INSTALLATIONS

1. STRUCTURAL BACKFILL, EMBANKMENT, AND OUTER STRUCTURAL BEDDING MATERIAL SHALL BE COMPACTED TO 95% OF THE MAXIMUM DENSITY ACCORDING TO THE TYPE OR CLASS OF MATERIAL USED.

MINIMUM COVER FOR CONSTRUCTION LOADS

PIPE DIAMETER	② MIN. COVER (FEET) FOR INDICATED CONSTRUCTION LOADS 18.0-50.0 (KIPS)	50.0-75.0 (KIPS)	75.0-110.0 (KIPS)	110.0-175.0 (KIPS)
36" OR LESS	2'-0"	2'-6"	3'-0"	3'-0"
42" OR GREATER	3'-0"	3'-0"	3'-6"	4'-0"

②MINIMUM COVER SHALL BE MEASURED FROM TOP OF PIPE TO TOP OF THE MAINTAINED CONSTRUCTION ROADWAY SURFACE. THE SURFACE SHALL BE MAINTAINED.

CONSTRUCTION SEQUENCE

1. PLACE STRUCTURAL BEDDING MATERIAL TO GRADE. DO NOT COMPACT.
2. INSTALL PIPE TO GRADE.
3. COMPACT STRUCTURAL BEDDING OUTSIDE THE MIDDLE THIRD OF THE PIPE.
4. THE STRUCTURAL BACKFILL SHALL BE PLACED AND COMPACTED IN LAYERS NOT EXCEEDING 8". THE LAYERS SHALL BE BROUGHT UP EVENLY AND SIMULTANEOUSLY TO THE ELEVATION OF THE MINIMUM COVER.
5. PIPE INSTALLATION MAY REQUIRE THE USE OF RESTRAINTS, WEIGHTING OR OTHER APPROVED METHODS IN ORDER TO HELP MAINTAIN GRADE AND ALIGNMENT.

GENERAL NOTES

1. PIPE SHALL CONFORM TO AASHTO M294, TYPE S. INSTALLATION SHALL CONFROM TO JOB SPECIAL PROVISION "PLASTIC PIPE" AND SECTION 606 OF THE STANDARD SPECIFICIATIONS FOR HIGHWAY CONSTRUCTION (CURRENT EDITION).
2. PLASTIC PIPE CULVERT DESIGN SHALL CONFORM TO AASHTO LRFD BRIDGE DESIGN SPECIFICATIONS, FIFTH EDITION (2010) WITH 2010 INTERIMS.
3. THE MAXIMUM ALLOWABLE TRENCH WIDTH SHALL BE THE MINIMUM WIDTH PLUS A SUFFICIENT WIDTH TO ENSURE WORKING ROOM TO PROPERLY AND SAFELY PLACE AND COMPACT HAUNCHING AND OTHER BACKFILL MATERIAL.
4. IMPERVIOUS MATERIAL SHOULD BE PLACED AS DIRECTED BY THE ENGINEER AT THE ENDS OF THE CULVERT TO PREVENT LOSS OF STRUCTURAL BEDDING WHEN PERVIOUS MATERIAL IS USED FOR STRUCTURAL BEDDING AND/OR BACKFILL.
5. WHEN DIRECTED BY THE ENGINEER, UNSUITABLE MATERIAL THAT IS ENCOUNTERED AT THE BOTTOM OF THE EXCAVATED TRENCH (BELOW THE AREA IDENTIFIED AS "STRUCTURAL BEDDING" ABOVE) WILL BE EXCAVATED AND REPLACED WITH SELECTED PIPE BEDDING. THE QUANTITY OF MATERIAL REQUIRED TO BACKFILL THE UNDERCUT AREA UP TO THE SELECTED PIPE BEDDING PAY LIMIT DESIGNATED ABOVE WILL BE MEASURED AND PAID FOR AS "SELECTED PIPE BEDDING."
6. WHEN THE EXISTING MATERIAL EXCAVATED FOR THE PIPE TRENCH IS DETERMINED BY THE ENGINEER TO BE UNSUITABLE FOR BACKFILLING THE PIPE (ABOVE THE AREA IDENTIFIED ABOVE AS STRUCTURAL BACKFILL), BORROW MATERIAL OR MATERIAL FROM THE ROADWAY EXCAVATION WILL BE USED TO BACKFILL THE PIPE. IF SUITABLE MATERIAL IS NOT AVAILABLE, THE ENGINEER MAY AUTHORIZE THE USE OF "SELECTED PIPE BACKFILL."
7. FOR PIPE TYPES THAT ARE NOT SMOOTH ON THE OUTSIDE (CORRUGATED OR PROFILE WALLS), BACKFILL GRADATIONS SHOULD BE SELECTED THAT WILL PERMIT THE FILLING OF THE CORRUGATION OR PROFILE VALLEY.
8. HIGH DENSITY POLYETHYLENE PIPES OF DIAMETERS OTHER THAN SHOWN WILL NOT BE ALLOWED.
9. JOINTS FOR HDPE PIPE SHALL MEET THE REQUIREMENTS FOR SOIL TIGHTNESS AS SPECIFIED IN AASHTO SECTION 26.4.2.4 AND 30.4.2 "AASHTO LRFD BRIDGE CONSTRUCTION SPECIFICATIONS." JOINTS SHALL BE INSTALLED PER MANUFACTURER'S RECOMMENDATIONS.

- LEGEND -

H = FILL HEIGHT (FT.)
Ø = OUTSIDE DIAMETER OF PIPE
MAX. = MAXIMUM
MIN. = MINIMUM

= STRUCTURAL BACKFILL MATERIAL

= UNDISTURBED SOIL

DATE	REVISION	DATE FILMED
2-27-14	REVISED GENERAL NOTE 1.	
12-15-11	REVISED GENERAL NOTES & MINIMUM COVER NOTE	
11-17-10	ISSUED	

ARKANSAS STATE HIGHWAY COMMISSION

PLASTIC PIPE CULVERT (HIGH DENSITY POLYETHYLENE)

STANDARD DRAWING PCP-1

INSTALLATION TYPE	•• MATERIAL REQUIREMENTS FOR STRUCTURAL BACKFILL AND STRUCTURAL BEDDING
TYPE 2	•SELECTED MATERIALS (CLASS SM-1, SM-2, OR SM-4)

• AGGREGATE BASE COURSE (CLASS 4, 5, 6, OR 7) MAY BE USED IN LIEU OF SELECTED MATERIAL.

SM3 WILL NOT BE ALLOWED.

•• STRUCTURAL BEDDING MATERIAL SHALL HAVE A MAXIMUM PARTICLE SIZE OF 1 INCH. STRUCTURAL BACKFILL MATERIAL SHALL BE FREE OF ORGANIC MATERIAL, STONES LARGER THAN 1.50 INCH IN GREATEST DIMENSION, OR FROZEN LUMPS.

STRUCTURAL BACKFILL AND STRUCTURAL BEDDING MATERIAL WILL NOT BE PAID FOR SEPARATELY, BUT COMPENSATION WILL BE CONSIDERED TO BE INCLUDED IN THE PRICE BID PER LINEAR FOOT OF PVC PIPE.

MINIMUM TRENCH WIDTH BASED ON FILL HEIGHT "H"

PIPE DIAMETER	TRENCH WIDTH (FEET)	
	"H" < 10'-0"	"H" >OR= 10'-0"
18"	4'-6"	4'-6"
24"	5'-0"	6'-0"
30"	5'-6"	7'-6"
36"	6'-0"	9'-0"

MULTIPLE INSTALLATION OF PVC PIPES

PIPE DIAMETER	CLEAR DISTANCE BETWEEN PIPES
18"	1'-6"
24"	2'-0"
30"	2'-6"
36"	3'-0"

MAXIMUM FILL HEIGHT BASED ON STRUCTURAL BACKFILL

PIPE DIAMETER	"H"
18"	45'-0"
24"	45'-0"
30"	40'-0"
36"	40'-0"

① NOTE:
12" MIN. (18" - 36" DIAMETERS)
MINIMUM COVER VALUE, "H" SHALL INCLUDE A MINIMUM 12" OF PAVEMENT AND/OR BASE.

MINIMUM COVER FOR CONSTRUCTION LOADS

PIPE DIAMETER	② MIN. COVER (FEET) FOR INDICATED CONSTRUCTION LOADS			
	18.0-50.0 (KIPS)	50.0-75.0 (KIPS)	75.0-110.0 (KIPS)	110.0-175.0 (KIPS)
18" THRU 36"	2'-0"	2'-6"	3'-0"	3'-0"

②MINIMUM COVER SHALL BE MEASURED FROM TOP OF PIPE TO TOP OF THE MAINTAINED CONSTRUCTION ROADWAY SURFACE. THE SURFACE SHALL BE MAINTAINED.

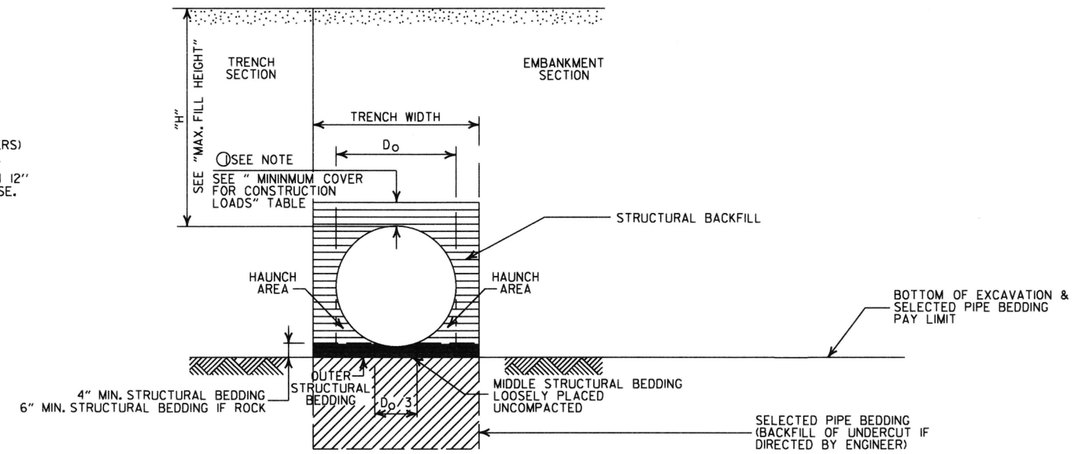

TYPE 2 EMBANKMENT AND TRENCH INSTALLATIONS

1. STRUCTURAL BACKFILL, EMBANKMENT, AND OUTER STRUCTURAL BEDDING MATERIAL SHALL BE COMPACTED TO 95% OF THE MAXIMUM DENSITY ACCORDING TO THE TYPE OR CLASS OF MATERIAL USED.

CONSTRUCTION SEQUENCE

1. PLACE STRUCTURAL BEDDING MATERIAL TO GRADE. DO NOT COMPACT.
2. INSTALL PIPE TO GRADE.
3. COMPACT STRUCTURAL BEDDING OUTSIDE THE MIDDLE THIRD OF THE PIPE.
4. THE STRUCTURAL BACKFILL SHALL BE PLACED AND COMPACTED IN LAYERS NOT EXCEEDING 8". THE LAYERS SHALL BE BROUGHT UP EVENLY AND SIMULTANEOUSLY TO THE ELEVATION OF THE MINIMUM COVER.
5. PIPE INSTALLATION MAY REQUIRE THE USE OF RESTRAINTS, WEIGHTING OR OTHER APPROVED METHODS IN ORDER TO HELP MAINTAIN GRADE AND ALIGNMENT.

GENERAL NOTES

1. PIPE SHALL CONFORM TO ASTM F949, CELL CLASS 12454. INSTALLATION SHALL CONFROM TO JOB SPECIAL PROVISION "PLASTIC PIPE" AND SECTION 606 OF THE STANDARD SPECIFICIATIONS FOR HIGHWAY CONSTRUCTION (CURRENT EDITION).
2. PLASTIC PIPE CULVERT DESIGN SHALL CONFORM TO AASHTO LRFD BRIDGE DESIGN SPECIFICATIONS, FIFTH EDITION (2010) WITH 2010 INTERIMS.
3. THE MAXIMUM ALLOWABLE TRENCH WIDTH SHALL BE THE MINIMUM WIDTH PLUS A SUFFICIENT WIDTH TO ENSURE WORKING ROOM TO PROPERLY AND SAFELY PLACE AND COMPACT HAUNCHING AND OTHER BACKFILL MATERIAL.
4. IMPERVIOUS MATERIAL SHOULD BE PLACED AS DIRECTED BY THE ENGINEER AT THE ENDS OF THE CULVERT TO PREVENT LOSS OF STRUCTURAL BEDDING WHEN PERVIOUS MATERIAL IS USED FOR STRUCTURAL BEDDING AND/OR BACKFILL.
5. WHEN DIRECTED BY THE ENGINEER, UNSUITABLE MATERIAL THAT IS ENCOUNTERED AT THE BOTTOM OF THE EXCAVATED TRENCH (BELOW THE AREA IDENTIFIED AS "STRUCTURAL BEDDING" ABOVE) WILL BE EXCAVATED AND REPLACED WITH SELECTED PIPE BEDDING. THE QUANTITY OF MATERIAL REQUIRED TO BACKFILL THE UNDERCUT AREA UP TO THE SELECTED PIPE BEDDING PAY LIMIT DESIGNATED ABOVE WILL BE MEASURED AND PAID FOR AS "SELECTED PIPE BEDDING."
6. WHEN THE EXISTING MATERIAL EXCAVATED FOR THE PIPE TRENCH IS DETERMINED BY THE ENGINEER TO BE UNSUITABLE FOR BACKFILLING THE PIPE (ABOVE THE AREA IDENTIFIED ABOVE AS STRUCTURAL BACKFILL), BORROW MATERIAL OR MATERIAL FROM THE ROADWAY EXCAVATION WILL BE USED TO BACKFILL THE PIPE. IF SUITABLE MATERIAL IS NOT AVAILABLE, THE ENGINEER MAY AUTHORIZE THE USE OF "SELECTED PIPE BACKFILL."
7. FOR PIPE TYPES THAT ARE NOT SMOOTH ON THE OUTSIDE (CORRUGATED OR PROFILE WALLS), BACKFILL GRADATIONS SHOULD BE SELECTED THAT WILL PERMIT THE FILLING OF THE CORRUGATION OR PROFILE VALLEY.
8. PVC PIPES OF DIAMETERS OTHER THAN SHOWN WILL NOT BE ALLOWED.
9. JOINTS FOR PVC PIPE SHALL MEET THE REQUIREMENTS FOR SOIL TIGHTNESS AS SPECIFIED IN AASHTO SECTION 26.4.2.4 AND 30.4.2 "AASHTO LRFD BRIDGE CONSTRUCTION SPECIFICATIONS." JOINTS SHALL BE INSTALLED PER MANUFACTURER'S RECOMMENDATIONS.

- LEGEND -

H = FILL HEIGHT (FT.)
D_O = OUTSIDE DIAMETER OF PIPE
MAX. = MAXIMUM
MIN. = MINIMUM

= STRUCTURAL BACKFILL MATERIAL

= UNDISTURBED SOIL

DATE	REVISION	DATE FILMED
2-27-14	REVISED GENERAL NOTE 1.	
12-15-11	REV GENERAL NOTES & MINIMUM COVER NOTE; DELETED SM3 MATERIAL	
11-17-10	ISSUED	

ARKANSAS STATE HIGHWAY COMMISSION

PLASTIC PIPE CULVERT (PVC F949)

STANDARD DRAWING PCP-2

INSTALLATION TYPE	•• MATERIAL REQUIREMENTS FOR STRUCTURAL BACKFILL AND STRUCTURAL BEDDING
TYPE 1	AGGREGATE BASE COURSE (CLASS 4, 5, 6, OR 7)
TYPE 2	•SELECTED MATERIALS (CLASS SM-1, SM-2, OR SM-4)

• SM3 WILL NOT BE ALLOWED.

•• STRUCTURAL BEDDING MATERIAL SHALL HAVE A MAXIMUM PARTICLE SIZE OF 1INCH. STRUCTURAL BACKFILL MATERIAL SHALL BE FREE OF ORGANIC MATERIAL, STONES LARGER THAN 1.50 INCH IN GREATEST DIMENSION, OR FROZEN LUMPS.

STRUCTURAL BACKFILL AND STRUCTURAL BEDDING MATERIAL WILL NOT BE PAID FOR SEPARATELY, BUT COMPENSATION WILL BE CONSIDERED TO BE INCLUDED IN THE PRICE BID PER LINEAR FOOT OF PVC PIPE.

MAXIMUM HEIGHT OF FILL "H"

PIPE DIAMETER	INSTALLATION TYPE	
	TYPE 1	TYPE 2
18"	18'	14'
24"	16'	12'
30"	18'	14'
36"	16'	12'
42"	18'	13'
48"	15'	11'
60"	17'	12'

MULTIPLE INSTALLATION OF PVC PIPES

PIPE DIAMETER	CLEAR DISTANCE BETWEEN PIPES
18"	1'-6"
24"	2'-0"
30"	2'-6"
36"	3'-0"
42"	3'-6"
48"	4'-0"
60"	5'-0"

MINIMUM TRENCH WIDTH BASED ON FILL HEIGHT "H"

PIPE DIAMETER	TRENCH WIDTH (FEET)	
	"H" < 10'-0"	"H" >OR= 10'-0"
18"	4'-6"	4'-6"
24"	5'-0"	6'-0"
30"	5'-6"	7'-6"
36"	6'-0"	9'-0"
42"	7'-0"	10'-6"
48"	8'-0"	12'-0"
60"	10'-0"	15'-0"

MINIMUM COVER FOR CONSTRUCTION LOADS

PIPE DIAMETER	② MIN. COVER (FEET) FOR INDICATED CONSTRUCTION LOADS			
	18.0-50.0 (KIPS)	50.0-75.0 (KIPS)	75.0-110.0 (KIPS)	110.0-175.0 (KIPS)
36" OR LESS	2'-0"	2'-6"	3'-0"	3'-0"
42" OR GREATER	3'-0"	3'-0"	3'-6"	4'-0"

②MINIMUM COVER SHALL BE MEASURED FROM TOP OF PIPE TO TOP OF THE MAINTAINED CONSTRUCTION ROADWAY SURFACE. THE SURFACE SHALL BE MAINTAINED.

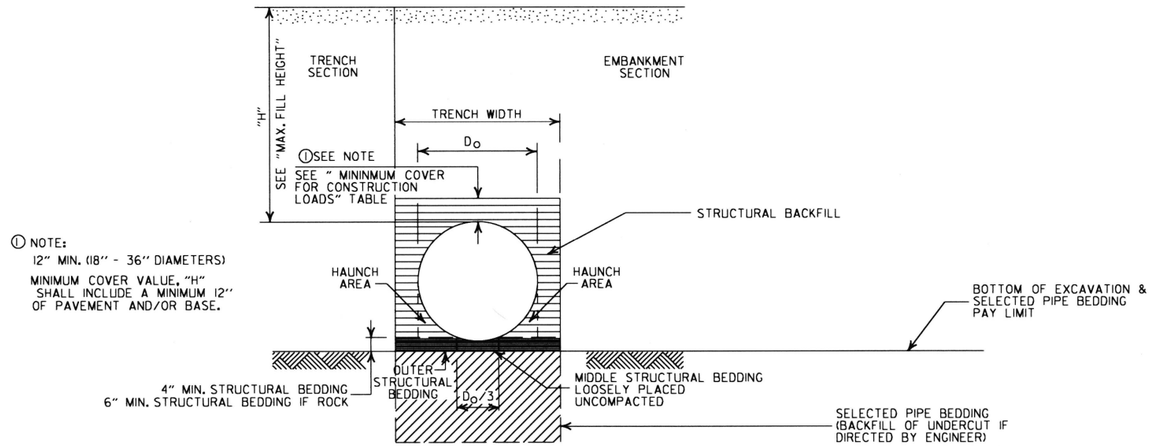

TYPE 2 EMBANKMENT AND TRENCH INSTALLATIONS

1. STRUCTURAL BACKFILL, EMBANKMENT, AND OUTER STRUCTURAL BEDDING MATERIAL SHALL BE COMPACTED TO 95% OF THE MAXIMUM DENSITY ACCORDING TO THE TYPE OR CLASS OF MATERIAL USED.

CONSTRUCTION SEQUENCE

1. PLACE STRUCTURAL BEDDING MATERIAL TO GRADE. DO NOT COMPACT.
2. INSTALL PIPE TO GRADE.
3. COMPACT STRUCTURAL BEDDING OUTSIDE THE MIDDLE THIRD OF THE PIPE.
4. THE STRUCTURAL BACKFILL SHALL BE PLACED AND COMPACTED IN LAYERS NOT EXCEEDING 8". THE LAYERS SHALL BE BROUGHT UP EVENLY AND SIMULTANEOUSLY TO THE ELEVATION OF THE MINIMUM COVER.
5. PIPE INSTALLATION MAY REQUIRE THE USE OF RESTRAINTS, WEIGHTING OR OTHER APPROVED METHODS IN ORDER TO HELP MAINTAIN GRADE AND ALIGNMENT.

GENERAL NOTES

1. PIPE SHALL CONFORM TO ASTM F949, CELL CLASS 12454. INSTALLATION SHALL CONFORM TO JOB SPECIAL PROVISION "PLASTIC PIPE" AND SECTION 606 OF THE STANDARD SPECIFICIATIONS FOR HIGHWAY CONSTRUCTION (CURRENT EDITION).
2. PLASTIC PIPE CULVERT DESIGN SHALL CONFORM TO AASHTO LRFD BRIDGE DESIGN SPECIFICATIONS, FIFTH EDITION (2010) WITH 2010 INTERIMS.
3. THE MAXIMUM ALLOWABLE TRENCH WIDTH SHALL BE THE MINIMUM WIDTH PLUS A SUFFICIENT WIDTH TO ENSURE WORKING ROOM TO PROPERLY AND SAFELY PLACE AND COMPACT HAUNCHING AND OTHER BACKFILL MATERIAL.
4. IMPERVIOUS MATERIAL SHOULD BE PLACED AS DIRECTED BY THE ENGINEER AT THE ENDS OF THE CULVERT TO PREVENT LOSS OF STRUCTURAL BEDDING WHEN PERVIOUS MATERIAL IS USED FOR STRUCTURAL BEDDING AND/OR BACKFILL.
5. WHEN DIRECTED BY THE ENGINEER, UNSUITABLE MATERIAL THAT IS ENCOUNTERED AT THE BOTTOM OF THE EXCAVATED TRENCH (BELOW THE AREA IDENTIFIED AS "STRUCTURAL BEDDING" ABOVE) WILL BE EXCAVATED AND REPLACED WITH SELECTED PIPE BEDDING. THE QUANTITY OF MATERIAL REQUIRED TO BACKFILL THE UNDERCUT AREA UP TO THE SELECTED PIPE BEDDING PAY LIMIT DESIGNATED ABOVE WILL BE MEASURED AND PAID FOR AS "SELECTED PIPE BEDDING."
6. WHEN THE EXISTING MATERIAL EXCAVATED FOR THE PIPE TRENCH IS DETERMINED BY THE ENGINEER TO BE UNSUITABLE FOR BACKFILLING THE PIPE (ABOVE THE AREA IDENTIFIED ABOVE AS STRUCTURAL BACKFILL), BORROW MATERIAL OR MATERIAL FROM THE ROADWAY EXCAVATION WILL BE USED TO BACKFILL THE PIPE. IF SUITABLE MATERIAL IS NOT AVAILABLE, THE ENGINEER MAY AUTHORIZE THE USE OF "SELECTED PIPE BACKFILL."
7. FOR PIPE TYPES THAT ARE NOT SMOOTH ON THE OUTSIDE (CORRUGATED OR PROFILE WALLS), BACKFILL GRADATIONS SHOULD BE SELECTED THAT WILL PERMIT THE FILLING OF THE CORRUGATION OR PROFILE VALLEY.
8. PVC PIPES OF DIAMETERS OTHER THAN SHOWN WILL NOT BE ALLOWED.
9. JOINTS FOR PVC PIPE SHALL MEET THE REQUIREMENTS FOR SOIL TIGHTNESS AS SPECIFIED IN AASHTO SECTION 26.4.2.4 AND 30.4.2 "AASHTO LRFD BRIDGE CONSTRUCTION SPECIFICATIONS." JOINTS SHALL BE INSTALLED PER MANUFACTURER'S RECOMMENDATIONS.

- LEGEND -

H = FILL HEIGHT (FT.)
D_o = OUTSIDE DIAMETER OF PIPE
MAX. = MAXIMUM
MIN. = MINIMUM

= STRUCTURAL BACKFILL MATERIAL

= UNDISTURBED SOIL

DATE	REVISION	DATE FILMED
11-07-19	ISSUED	

ARKANSAS STATE HIGHWAY COMMISSION

PLASTIC PIPE CULVERT (POLYPROPYLENE)

STANDARD DRAWING PCP-3

NOTES:
1. REFER TO THE STRIPING DETAILS FOR PAVEMENT MARKING LINE WIDTHS.
2. THIS DRAWING SHALL BE USED IN CONJUNCTION WITH THE LATEST REVISED ADDITION OF THE "MANUAL ON UNIFORM TRAFFIC CONTROL DEVICES."
3. RAISED PAVEMENT MARKERS SHALL BE PLACED ON AN 80 FEET SPACING UNLESS OTHERWISE SHOWN IN THE PLANS.

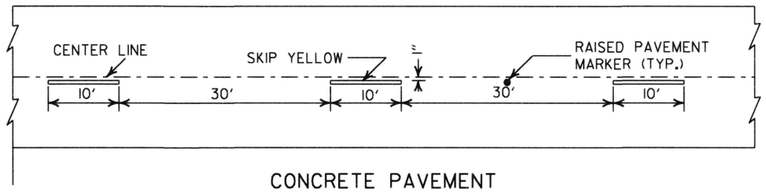

CONCRETE PAVEMENT

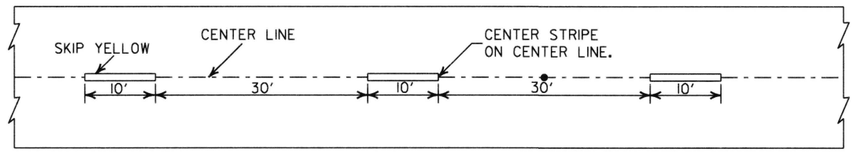

ASPHALT PAVEMENT

BROKEN LINE STRIPING

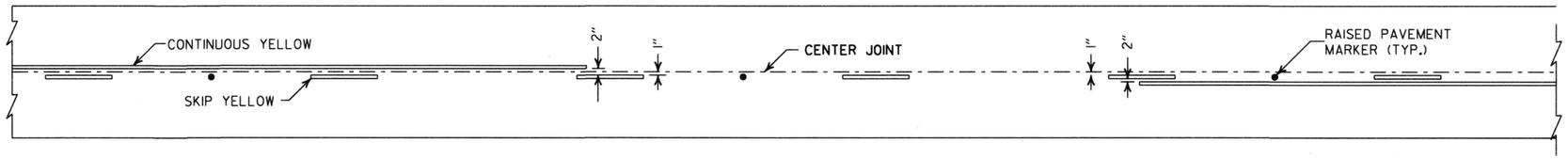

SOLID LINE STRIPING ON CONCRETE PAVEMENT

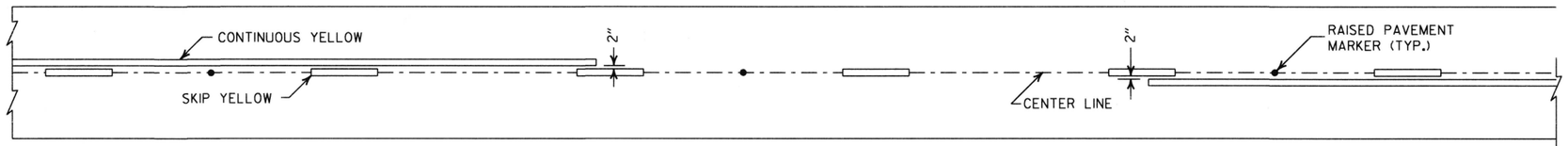

SOLID LINE STRIPING ON ASPHALT PAVEMENT

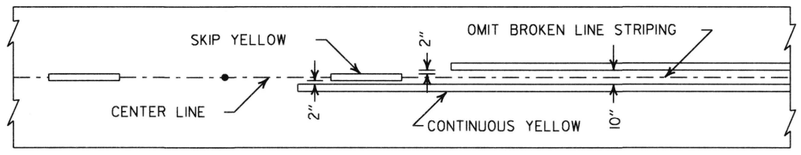

ASPHALT PAVEMENT

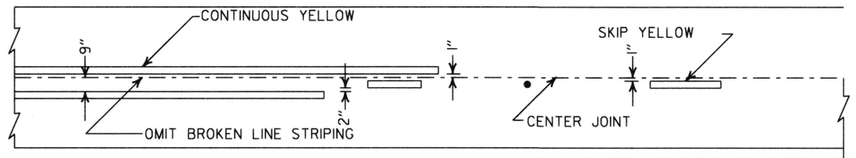

CONCRETE PAVEMENT

STRIPING AT ADJACENT NO PASSING LANES

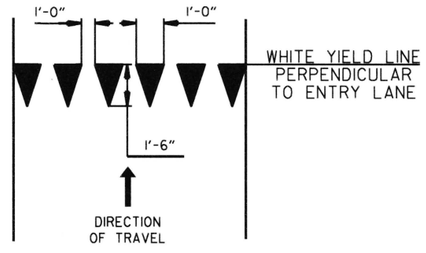

YIELD LINE DETAIL

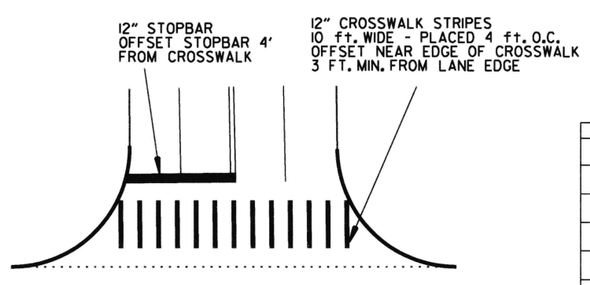

CROSSWALK AND STOPBAR DETAILS

2" FOR ASPHALT OR CONCRETE PAVEMENT
6" FOR BITUMINOUS SURFACE TREATMENT

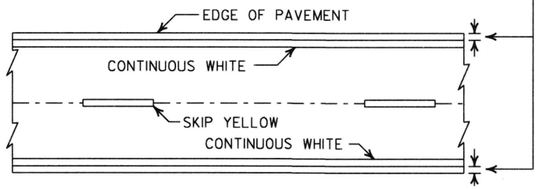

PAVEMENT EDGE LINE MARKING

NOTE:
THE RED LENS OF THE TYPE II R.P.M. SHALL FACE THE INCORRECT TRAFFIC MOVEMENT.

TYPE II
RED/CLEAR OR
YELLOW/YELLOW

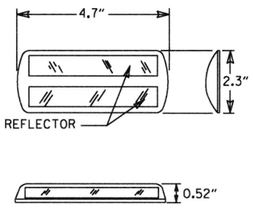

NOTE:
DIMENSIONS SHOWN FOR RAISED PAVEMENT MARKERS ARE TYPICAL. THE CONTRACTOR MAY SUBSTITUTE SIMILAR MARKERS WITH THE APPROVAL OF THE ENGINEER. REQUESTING APPROVAL FOR SIMILAR MARKERS MAY BE MADE BY REFERRING TO THE AHTD QUALIFIED PRODUCTS LIST.

DETAIL OF STANDARD RAISED PAVEMENT MARKERS

DATE	REVISION	FILMED
6-1-17	ADDED YIELD LINE DETAIL	
5-12-16	REVISED LINE WIDTHS, SPACING, & NOTES	
9-12-13	REVISED DETAIL OF STANDARD RAISED PAVEMENT MARKERS	
11-17-10	REVISED GENERAL NOTES & REMOVED PLOWABLE PVMT MRKRS	
11-18-04	REVISED NOTE 2 & GENERAL NOTES	
8-22-02	ADDED CROSSWALK & STOPBAR DTLS.	
7-02-98	ADDED DETAILS OF STD. RAISED PAV'T. MARKERS	
4-26-96	REV. NOTES 3&4; ADDED R.P.M.	
9-30-80	DRAWN	1-9-30-80

ARKANSAS STATE HIGHWAY COMMISSION

PAVEMENT MARKING DETAILS

STANDARD DRAWING PM-1

NOTE:

1. UNLESS OTHERWISE SPECIFIED ON THE PLANS, THE UNDERDRAIN COVER SHALL BE THOROUGHLY COMPACTED EARTH AND SHALL BE SUBSIDIARY TO PIPE UNDERDRAIN.

2. GRANULAR MATERIAL SHALL BE WRAPPED WITH GEOTEXTILE FABRIC. LAP FABRIC 12" OR THE WIDTH OF THE TRENCH AT THE TOP.

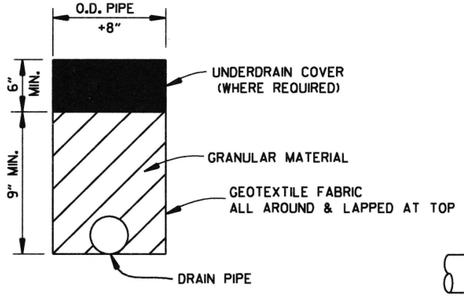

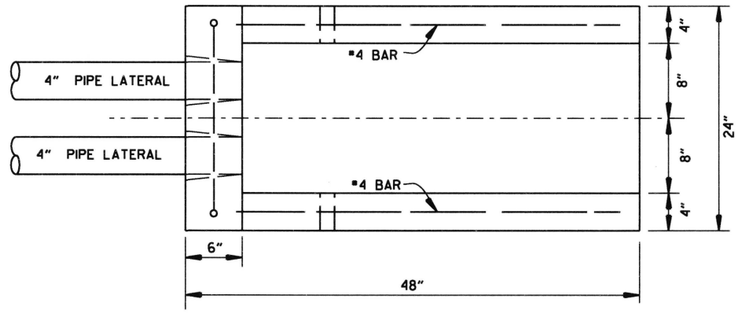

PLAN VIEW

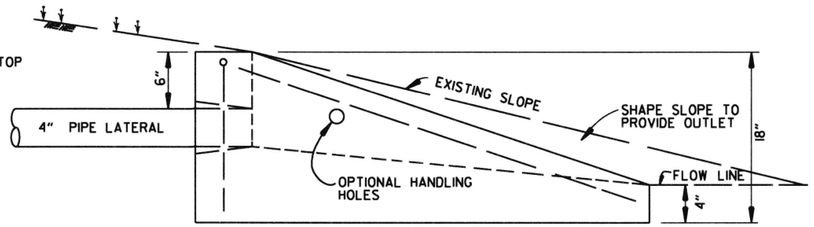

SIDE VIEW

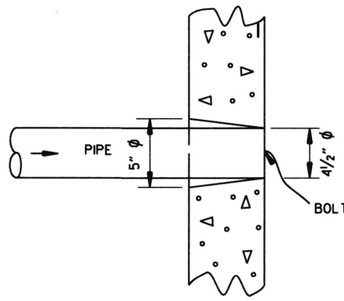

DETAIL OF HOLE FOR 4" PIPE

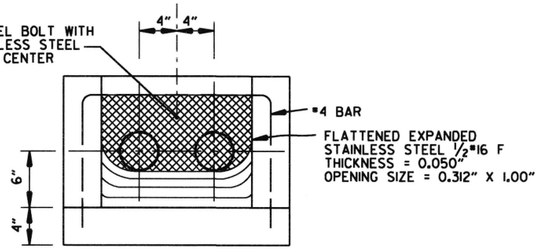

FRONT VIEW
(DETAIL OF RODENT SCREEN)

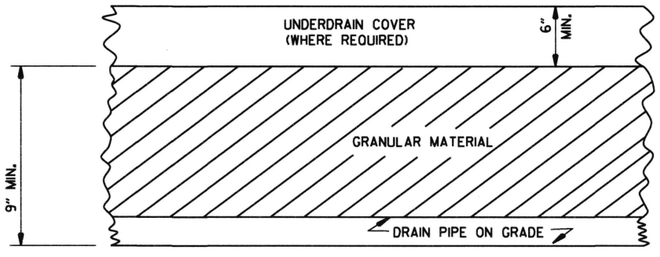

DETAILS OF PIPE UNDERDRAIN

UNDERDRAIN OUTLET PROTECTORS

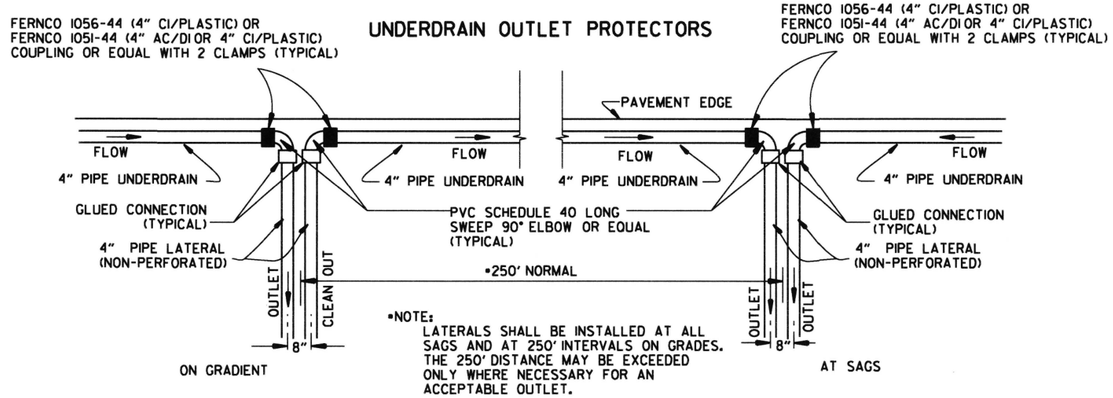

•NOTE:
LATERALS SHALL BE INSTALLED AT ALL SAGS AND AT 250' INTERVALS ON GRADES. THE 250' DISTANCE MAY BE EXCEEDED ONLY WHERE NECESSARY FOR AN ACCEPTABLE OUTLET.

DETAIL OF PIPE UNDERDRAIN LATERALS WHEN PLACED ALONG PAVEMENT EDGE

NOTE: PVC PIPE FOR LATERALS SHALL MEET THE REQUIREMENTS OF ASTM D 1785 (LATEST REVISION) FOR SCHEDULE 40 PIPE.

NOTES FOR PIPE UNDERDRAINS

1. GEOTEXTILE FABRIC SHALL MEET THE REQUIREMENTS OF SECTION 625 FOR TYPE I. PAYMENT FOR GEOTEXTILE FABRIC AND GRANULAR FILTER MATERIAL SHALL BE INCLUDED IN THE PRICE BID PER LIN. FT. FOR "4" PIPE UNDERDRAINS" IN ACCORDANCE WITH SECTION 611 OF THE STANDARD SPECIFICATIONS.

2. 4" NON-PERFORATED SCHEDULE 40 PVC PIPE LATERALS WITH OUTLET PROTECTORS SHALL BE INSTALLED AS SHOWN HEREON. LATERALS WILL BE MEASURED AND PAID FOR AS "4" PIPE UNDERDRAINS." UNDERDRAIN OUTLET PROTECTORS WILL BE MEASURED AND PAID FOR BY THE UNIT IN ACCORDANCE WITH SECTION 611 OF THE STANDARD SPECIFICATIONS.

3. EXISTING 4" PIPE UNDERDRAINS MAY BE CONNECTED TO PROPOSED DROP INLETS OR EXTENDED WHERE DIRECTED BY THE ENGINEER. PAYMENT FOR CONNECTING TO DROP INLETS SHALL BE CONSIDERED INCLUDED IN THE PRICE BID FOR "4" PIPE UNDERDRAINS."

4. THE LOCATION OF ALL LATERALS SHALL BE MARKED WITH 4" X 12" PERMANENT PAVEMENT MARKING TAPE (TYPE III WHITE) AT THE OUTSIDE EDGE OF THE SHOULDER, PLACED TRANSVERSE TO TRAFFIC. PAYMENT FOR THIS WORK SHALL BE INCLUDED IN THE PRICE BID FOR THE VARIOUS CONTRACT ITEMS.

5. PAYMENT FOR THE RODENT SCREEN SHALL BE INCLUDED IN THE PRICE BID PER EACH FOR "UNDERDRAIN OUTLET PROTECTORS."

6. ANY EXISTING UNDERDRAINS THAT INTERFERE WITH INSTALLATION OF THE NEW UNDERDRAIN SYSTEM SHALL BE REMOVED AND DISPOSED OF AS DIRECTED BY THE ENGINEER. PAYMENT WILL BE CONSIDERED INCLUDED IN THE PRICE BID FOR THE VARIOUS CONTRACT ITEMS. EXISTING UNDERDRAIN OUTLET PROTECTORS SHALL BE REMOVED UNDER THE ITEM "REMOVAL AND DISPOSAL OF UNDERDRAIN OUTLET PROTECTORS."

7. AT LOCATIONS WHERE A SINGLE LATERAL IS USED THE CONTRACTOR SHALL HAVE THE FOLLOWING OPTIONS: 1. INSTALL OUTLET PROTECTOR AS SHOWN ON STANDARD DRAWING PU-1 AND GROUT THE UNUSED HOLE OR 2. INSTALL AN OUTLET PROTECTOR WITH A SINGLE HOLE.

DATE	REVISION	DATE FILMED
12-8-16	ADDED NOTES FOR PIPE UNDERDRAINS, REVISED RODENT SCREEN DETAIL AND NOTES, REMOVED NOTE 1 FOR GRANULAR MATERIAL, ADDED NOTE FOR GEOTEXTILE FABRIC	
4-10-03	REVISED NOTE 3	
1-12-00	REVISED DETAIL OF UNDERDRAIN LATERALS	
11-18-98	REVISED NOTE	
10-18-96	REVISED MIN. DEPTH & GEOTEXTILE FABRIC	
4-26-96	ADDED LATERAL NOTE; 5½" TO 5"	
11-22-95	REVISED LATERALS	
7-20-95	REVISED LATERALS & ADDED NOTE	
11- 3-94	REVISED FOR DUAL LATERALS	11- 3-94
10- 1-92	SUBSTITUTED GEOTEXTILE	10- 1-92
8-15-91	ADDED POLYEDTHYLENE PIPE	8-15-91
11- 8-90	DELETED ALTERNATE NOTE	11- 8-90
1-25-90	ADDED 4" SNAP ADAPTER	1-25-90
11-30-89	DEL. (SUBGRADE); ADDED (WHERE REQUIRED)	11-30-89
7-15-88	ISSUED P.L.M.	647-7-15-88

ARKANSAS STATE HIGHWAY COMMISSION

DETAILS OF PIPE UNDERDRAIN

STANDARD DRAWING PU-1

SUPERELEVATION TABLE FOR TWO - WAY TRAFFIC

DEGREE OF CURVE	30 MPH			35 MPH			40 MPH			45 MPH			50 MPH			55 MPH			60 MPH			65 MPH			70 MPH			75 MPH		
	e	Ls (FT)		e	Ls (FT)		e	Ls (FT)		e	Ls (FT)		e	Ls (FT)		e	Ls (FT)		e	Ls (FT)		e	Ls (FT)		e	Ls (FT)		e	Ls (FT)	
		MINIMUM	DESIRABLE		MINIMUM	DESIRABLE		MINIMUM	DESIRABLE		MINIMUM	DESIRABLE		MINIMUM	DESIRABLE		MINIMUM	DESIRABLE		MINIMUM	DESIRABLE		MINIMUM	DESIRABLE		MINIMUM	DESIRABLE		MINIMUM	DESIRABLE
0° 15'	NC			NC			NC			NC			NC			NC			NC			NC			NC			NC		
0° 30'	NC			NC			NC			NC			NC			NC			RC	96		RC	96		RC	96		0.022	101	
0° 45'	NC			NC			NC			NC			RC	96		RC	96		0.024	106		0.026	110		0.030	120		0.032	125	
1° 00'	NC			NC			NC			RC	90		0.022	101		0.026	110		0.030	120		0.034	130		0.038	139		0.042	149	300
1° 15'	NC			NC			RC	84		0.022	95		0.028	115		0.032	125		0.038	139		0.042	149		0.046	158	300	0.052	173	
1° 30'	NC			RC	78		0.022	88		0.028	108		0.032	125		0.038	139		0.044	154		0.050	168		0.056	182		0.062	197	
1° 45'	RC	72		RC	78		0.026	97		0.030	113		0.036	134		0.044	154		0.050	168	300	0.056	182		0.064	202		0.070	216	
2° 00'	RC	72		0.024	86		0.028	101		0.034	122		0.042	149		0.048	163		0.056	182		0.064	202		0.070	216		0.080	240	
2° 15'	RC	72		0.026	90		0.032	109		0.038	131		0.046	158		0.054	178	300	0.062	197		0.070	216		0.078	235		0.088	259	350
2° 30'	0.022	75		0.028	94		0.034	113		0.042	140		0.050	168		0.058	187		0.068	211		0.076	230		0.086	254	350	0.096	278	
2° 45'	0.024	79		0.030	98		0.038	122		0.046	149	200	0.054	178		0.064	202		0.072	221		0.082	245		0.092	269		0.100	288	400
3° 00'	0.026	83		0.034	105		0.040	126		0.050	158		0.058	187	250	0.068	211		0.078	235		0.088	259		0.098	283	400	D MAX = 2° 45'		
3° 15'	0.028	86		0.036	109		0.044	134		0.052	162		0.062	197		0.072	221		0.082	245		0.092	269		0.100	288				
3° 30'	0.030	90		0.038	113		0.046	139	200	0.056	171		0.066	206		0.076	230		0.086	254		0.096	278	350	D MAX = 3° 30'					
3° 45'	0.032	93		0.040	117		0.050	147		0.058	176		0.070	216		0.080	240		0.090	264		0.098	283							
4° 00'	0.034	97		0.042	121	200	0.052	151		0.062	185		0.072	221		0.084	250		0.094	274	350	0.100	288							
4° 15'	0.036	100		0.044	125		0.054	155		0.064	189		0.076	230		0.086	254		0.096	278		D MAX = 4° 15'								
4° 30'	0.036	100	200	0.046	129		0.056	160		0.068	198		0.078	235		0.090	264		0.098	283										
4° 45'	0.038	104		0.048	133		0.060	168		0.070	203		0.082	245		0.092	269	350	0.100	288										
5° 00'	0.040	108		0.050	137		0.062	172		0.072	207		0.084	250		0.094	274		D MAX = 5° 15'										
5° 30'	0.044	115		0.054	144		0.066	181		0.078	221	250	0.088	259		0.098	283												
6° 00'	0.046	119		0.058	152		0.070	189		0.082	230		0.092	269		0.100	288												
6° 30'	0.050	126		0.062	160		0.074	198		0.086	239		0.096	278	300	D MAX = 6° 30'													
7° 00'	0.052	130		0.064	164		0.078	206		0.090	248		0.098	283															
7° 30'	0.054	133		0.068	172		0.080	210		0.092	252		0.100	288															
8° 00'	0.058	140		0.070	176		0.084	219	250	0.094	257		D MAX = 8° 25'																	
8° 30'	0.060	144		0.072	179		0.086	223		0.096	261	300																	
9° 00'	0.062	148		0.076	187		0.088	227		0.098	266																		
9° 30'	0.064	151		0.078	191		0.092	235		0.100	270																		
10° 00'	0.066	155		0.080	195		0.094	240		D MAX = 10° 30'																			
11° 00'	0.070	162		0.084	203		0.096	244																					
12° 00'	0.074	169		0.088	211	250	0.098	248																					
13° 00'	0.076	173		0.090	215		0.100	252	300																				
14° 00'	0.080	180		0.094	222		D MAX = 13° 45'																						
15° 00'	0.082	184		0.096	226																								
16° 00'	0.086	191		0.098	230																								
17° 00'	0.088	194		0.100	234																								
18° 00'	0.090	198	250	D MAX = 19° 30'																									
19° 00'	0.092	202																											
20° 00'	0.094	205																											
21° 00'	0.096	209																											
22° 00'	0.096	209																											
23° 00'	0.098	212																											
24° 00'	0.098	212																											
25° 00'	0.100	216																											
D MAX = 28° 30'																													

ABBREVIATIONS

NC - NORMAL CROWN
RC - REVERSE CROWN, SUPERELEVATION AT NORMAL CROWN SLOPE
e - RATE OF SUPERELEVATION (FT. PER FT.)
Ls - LENGTH OF SUPERELEVATION TRANSITION (FT.)
L - DISTANCE FROM BEGINNING OF SUPERELEVATION TRANSITION TO ANY POINT (FT.)
d - WIDTH OF PAVEMENT (FT.) OR WIDTH OF SUBGRADE (FT.)
C - NORMAL CROWN (FT.)

GENERAL NOTES

1. ON PAVEMENT WITH TWO-WAY TRAFFIC, THE SUPERELEVATION SHALL BE REVOLVED ON THE INSIDE PAVEMENT EDGE UNLESS OTHERWISE NOTED ON THE PLANS
2. SUPERELEVATION VALUES SHOWN ON THE CROSS SECTIONS ARE VALUES (+) OR (-) TO BE ADDED TO OR SUBTRACTED FROM THE POINT OF CONTROL.
3. LENGTHS FOR L MAY BE ROUNDED IN MULTIPLES OF 25 FT. OR 50 FT. TO PERMIT SIMPLER CALCULATIONS.
4. PAVEMENTS WIDER THAN 2 LANES SHALL HAVE ADDITIONAL TRANSITION LENGTHS AS FOLLOWS:

3 LANE UNDIVIDED - - - - - - +20%
4 LANE UNDIVIDED - - - - - - +50%
5 LANE UNDIVIDED - - - - - - +80%
6 LANE UNDIVIDED - - - - - - +100%

NOTE: MAINTAIN NORMAL CROWN ON INSIDE UNTIL SUPERELEVATION EXCEEDS 2C.

RATE OF SUPERELEVATION SHALL BE COMPUTED ON STRAIGHT LINE METHOD USING APPLICABLE Ls.

SUPERELEVATION FORMULA = $\frac{Lde}{Ls}$

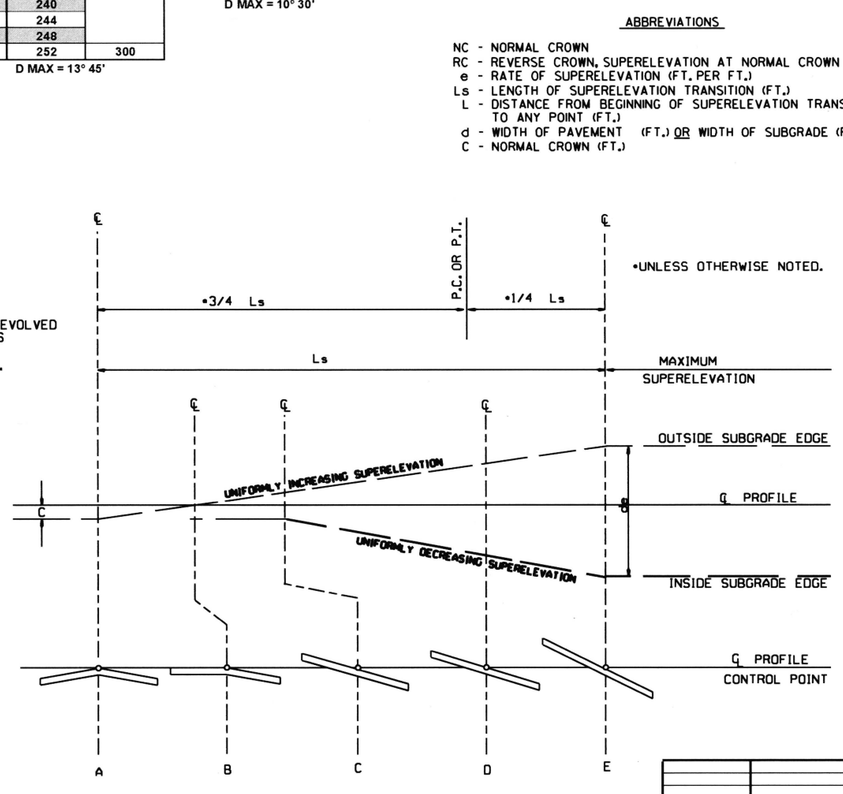

STANDARD METHOD WHEN SUPERELEVATION REVOLVES AROUND CENTER LINE

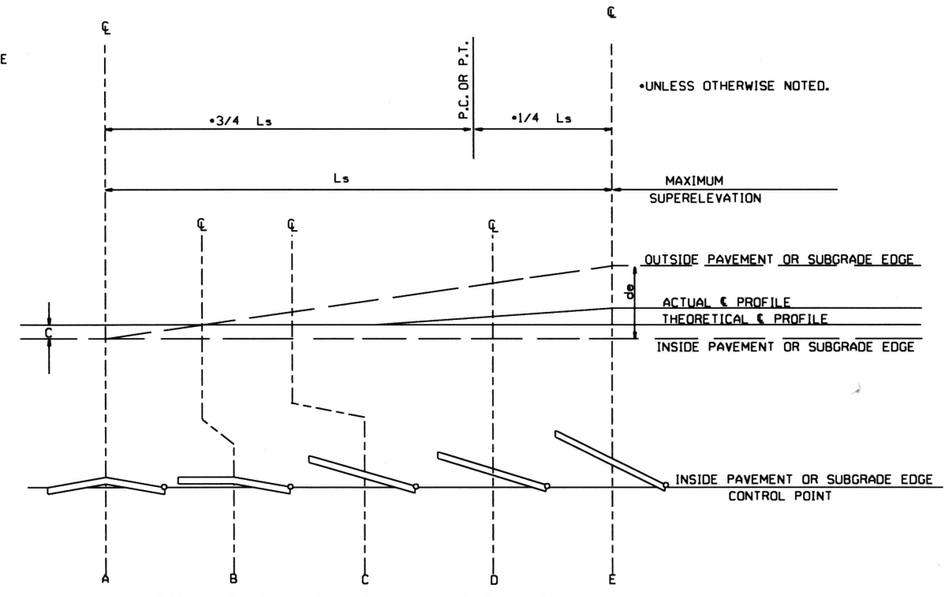

STANDARD METHOD WHEN SUPERELEVATION REVOLVES AROUND INNER SUBGRADE POINT OR INNER PAVEMENT EDGE

NOTE: MAINTAIN NORMAL CROWN ON INSIDE UNTIL SUPERELEVATION EXCEEDS 2C.

DATE	REVISION	DATE FILMED
11-07-19	REVISED SUPERELEVATION TABLE	
10-18-96	ADDED FORMULA	
01-09-87	ISSUED	534-1-9-87

ARKANSAS STATE HIGHWAY COMMISSION

TABLES AND METHOD OF SUPERELEVATION FOR TWO-WAY TRAFFIC

STANDARD DRAWING SE-2

R1-1



STANDARD 30"X30"
EXPRESSWAY 36"X36"
SPECIAL 48"X48"

R1-2

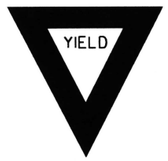

STD. 36"X36"X36"
EXPWY. 48"X48"X48"
FWY. 60"X60"X60"

R2-1



STD. 24"X30"
EXPWY. 36"X48"
FWY. 48"X60"

W3-5



STD. 36"X36"
EXPWY. 48"X48"
FWY. 48"X48"

W3-5a



STD. 36"X36"
EXPWY. 48"X48"
FWY. 48"X48"

R4-1



STD. 24"X30"
EXPWY. 36"X48"
FWY. 48"X60"

R4-2



STD. 24"X30"
EXPWY. 36"X48"
FWY. 48"X60"

R5-1



STD. 30"X30"
EXPWY. 36"X36"
SPECIAL 48"X48"

R11-2



48"X30"

R11-3A

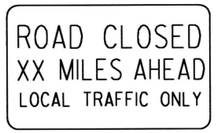

60"X30"

R11-4



60"X30"

W21-5a



STD. 36"X36"
FWY. 48"X48"

W1-1



STD. 36"X36"
FWY. 48"X48"

W1-2



STD. 36"X36"
FWY. 48"X48"

W1-3



STD. 48"X48"

W1-4



STD. 48"X48"

W1-6



STD. 48"X24"
SPECIAL 60"X30"

W1-8



STD. 18"X24"
SPECIAL 24"X30"
EXPWY. 30"X36"
FWY. 36"X48"

W3-1



STD. 36"X36"
SPECIAL 48"X48"

W3-2



STD. 36"X36"
SPECIAL 48"X48"

W4-2

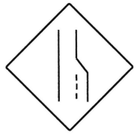

STD. 36"X36"
FWY. 48"X48"

W5-1



STD. 36"X36"
SPECIAL 48"X48"

W6-3



EXPWY. 36"X36"
SPECIAL 48"X48"

W8-7



EXPWY. 36"X36"
FWY. 48"X48"

W9-2



STD. 36"X36"
FWY. 48"X48"

W13-1



STD. 24"X24"

W20-1



STD. 48"X48"

W20-2



STD. 48"X48"

W20-3



STD. 48"X48"

W20-4



STD. 48"X48"

W20-5



STD. 48"X48"

W20-7a



STD. 36"X36"
FWY. 48"X48"

W21-2



STD. 30"X30"
SPECIAL 36"X36"

W21-5



STD. 30"X30"
SPECIAL 36"X36"

W24-1



STD. 36"X36"

W1-4b



STD. 48"X48"

R56-1



STD. 18"X18"

W8-11



STD. 36"X36"
FWY. 48"X48"

W8-9



STD. 36"X36"
FWY. 48"X48"

G20-1

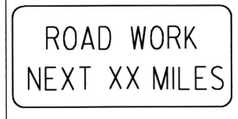

60"X24"

G20-2

48"X24"

OM-3L OM-3R

12"X36"

M4-9

STD. 30"X24"
SPECIAL 48"X36"
SPECIAL 60"X48"

M4-10

48"X18"

R55-1

36"X60"

• USE 6" C LETTERS
•• USE 4" D LETTERS

ADVANCE DISTANCES
(XXXX)

500 FT	½ MILE
1000 FT	¾ MILE
1500 FT	1 MILE
	AHEAD

GENERAL NOTES:

1. ALL TRAFFIC CONTROL DEVICES USED ON ROAD CONSTRUCTION SHALL CONFORM TO THE MANUAL ON UNIFORM TRAFFIC CONTROL DEVICES, LATEST EDITION, AND TO THE STANDARD HIGHWAY SIGNS, LATEST EDITION, OR AS APPROVED BY THE FEDERAL HIGHWAY ADMINISTRATION.
2. TRAFFIC CONTROL DEVICES SHALL BE SET UP JUST BEFORE THE START OF CONSTRUCTION OPERATIONS AND SHALL BE PROPERLY MAINTAINED DURING THE TIME SUCH CONDITIONS EXIST. THEY SHALL REMAIN IN PLACE ONLY AS LONG AS NEEDED AND REMOVED THEREAFTER.
3. EXISTING SIGNS AND CONSTRUCTION SIGNS SHALL BE KEPT IN PROPER POSITION, AND BE CLEAN AND LEGIBLE AT ALL TIMES. SIGNS THAT DO NOT APPLY TO EXISTING CONDITIONS SHALL BE REMOVED. SIGNS THAT ARE DAMAGED, DEFACED, OR THAT ACCUMULATE DIRT DURING CONSTRUCTION SHALL BE CLEANED, REPAIRED, OR REPLACED.
- 4. SIGNS ARE USUALLY MOUNTED ON A SINGLE POST, ALTHOUGH THOSE WIDER THAN 36" OR LARGER THAN 10 SQ. FT. SHALL BE MOUNTED ON TWO POSTS OR ABOVE A TYPE III BARRICADE.
- 5. SIGN POSTS DIRECT BURIED IN SOIL SHALL BE 2 LB. MINIMUM CHANNEL POST OR 4"x4" WOOD POSTS. CHANNEL POSTS SHALL BE PAINTED GREEN. WOOD POSTS SHALL BE PAINTED WHITE. ALL POSTS SHALL BE NEATLY CONSTRUCTED, AND SHALL BE REPLUMBED, CLEANED, OR REPAIRED AS NEEDED FOR THE DURATION OF THE JOB. THERE SHALL NOT BE MORE THAN 2 POSTS IN A 7' PATH FOR WOOD OR CHANNEL POSTS. ANY CHANNEL POST SPLICE SHALL BE IN ACCORDANCE WITH STANDARD DRAWING TC-3.
6. POST MOUNTED SIGNS IN RURAL AREAS SHALL BE CONSTRUCTED WITH THE NEAR EDGE OF THE SIGN FROM 6 TO 12 FEET FROM THE PAVEMENT EDGE. SIGNS IN URBAN AREAS AND BARRICADE MOUNTED SIGNS SHALL BE MOUNTED A MINIMUM OF 2 FEET FROM THE PAVEMENT EDGE.
7. ALL POST AND BARRICADE MOUNTED SIGNS MOUNTED IN URBAN AREAS SHALL BE MOUNTED A MINIMUM DISTANCE OF 7' FROM THE BOTTOM OF THE SIGN TO THE ROADWAY SURFACE. ALL POST AND BARRICADE MOUNTED SIGNS MOUNTED IN RURAL AREAS SHALL BE MOUNTED A MINIMUM DISTANCE OF 7' FROM THE BOTTOM OF THE SIGN TO THE ROADWAY SURFACE, EXCEPT A MINIMUM OF 6' SHALL BE USED WHEN MOUNTING AN ADVISORY SIGN BELOW A WARNING SIGN. TEMPORARY SIGNS MAY BE MOUNTED ON PORTABLE SUPPORTS FOR INTERMEDIATE TERM STATIONARY WORK CONDITIONS. THE SIGNS MINIMUM MOUNTING HEIGHT SHALL BE 5'. RETROREFLECTIVE DEVICES SHALL BE USED. TEMPORARY SIGNS MAY BE MOUNTED ON PORTABLE SUPPORTS FOR SHORT-TERM, SHORT DURATION, AND MOBILE CONDITIONS. THEY SHALL BE NO LESS THAN ONE (1) FOOT ABOVE THE TRAVELED WAY. LONG-TERM STATIONARY SIGNS SHALL BE DIRECT BURIED IN SOIL, UNLESS CONDITIONS NECESSITATE THE USE OF PORTABLE SIGNS, OR AS APPROVED BY THE ENGINEER. CONCRETE PADS, CONCRETE OR ROCK BALLAST, OR OTHER SOLID MATERIALS SHALL NOT BE UTILIZED WITH PORTABLE SIGN SUPPORTS.
8. FLAGGERS SHALL USE REFLECTORIZED STOP-SLOW PADDLES. FLAGS MAY BE USED ONLY FOR EMERGENCY SITUATIONS.
9. MOST OF THE SIGNS SHOWN ARE ORIENTED TO THE RIGHT. HOWEVER, THIS DOES NOT PRECLUDE THE USE OF MIRROR IMAGES OF THESE SIGNS WHERE THE REVERSE ORIENTATION MIGHT BETTER CONVEY TO MOTORISTS THE PROPER DIRECTION OF MOVEMENT.
10. R55-1 SIGNS SHALL BE PLACED AT LEAST 1500' BUT NOT MORE THAN 1 MILE IN ADVANCE OF THE WORK ZONE. IF A SPEED LIMIT REDUCTION IS IN EFFECT, THE SIGN SHALL BE PLACED A MINIMUM OF 500' IN ADVANCE OF THE "REDUCED SPEED AHEAD" SIGN.

• NOTE: SUPPORTS FOR SIGNS, BARRICADES, AND VERTICAL PANELS THAT ARE DIFFERENT FROM THE REQUIREMENTS SHOWN IN NOTES 4 & 5, BUT MEET THE REQUIREMENTS OF MANUAL FOR ASSESSING SAFETY HARDWARE (MASH), WILL BE ACCEPTED. COMPLIANCE WITH THE REQUIREMENTS OF MANUAL FOR ASSESSING SAFETY HARDWARE (MASH) IS REQUIRED FOR ALL PROJECTS.

DATE	REVISION	FILMED
11-07-19	REVISED FOR MASH	
4-13-17	DELETED R5P-1 & ADDED W21-5a	
9-2-15	REVISED REDUCED SPEED LIMIT AHEAD SIGNS REVISED ROAD WORK NEXT XX MILES	
12-15-11	REVISED W24-1	
11-17-10	DELETED W8-9a & ADDED W8-9	
10-15-09	ADDED REFERENCE TO MASH & ADDED SIGN W24-1	
4-17-08	REVISED SIGN DESIGNATIONS	
11-18-04	REVISED NOTES	
10-9-03	REVISED NOTE 1	
11-16-01	REVISED NOTE 7	
9-28-00	REVISED NOTE	
1-18-98	ADDED NOTE	
6-26-97	REVISED NOTE 5	
4-03-97	REVISED NOTE 5	
10-18-96	ADDED CONTROLLED ACCESS HWY. SIGN & TO NOTE 7	
10-12-95	ADDED R55-1	
6-8-95	REVISED TO CORRECT SIGN ILLUSTRATIONS	6-8-95
2-2-95	REVISED PER PART VI, MUTCD SEPT. 3, 1993	
8-15-91	DRAWN AND PLACED IN USE	

ARKANSAS STATE HIGHWAY COMMISSION

STANDARD TRAFFIC CONTROLS FOR HIGHWAY CONSTRUCTION

STANDARD DRAWING TC-1

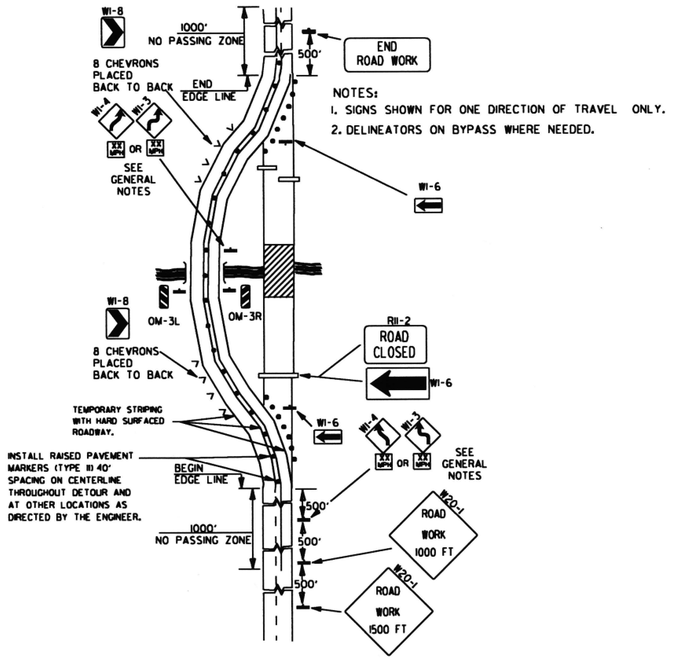

NOTES:
1. SIGNS SHOWN FOR ONE DIRECTION OF TRAVEL ONLY.
2. DELINEATORS ON BYPASS WHERE NEEDED.

(A) TYPICAL APPLICATION OF TRAFFIC CONTROL DEVICES ON A 2-LANE HIGHWAY WHERE THE ENTIRE ROADWAY IS CLOSED AND A BYPASS DETOUR IS PROVIDED.

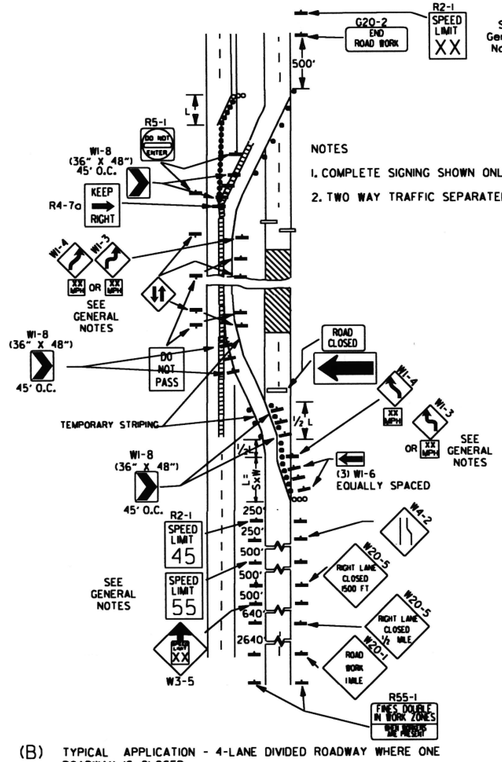

NOTES
1. COMPLETE SIGNING SHOWN ONLY IN CROSSOVER DIRECTION.
2. TWO WAY TRAFFIC SEPARATED WITH POSITIVE BARRIER.

(B) TYPICAL APPLICATION - 4-LANE DIVIDED ROADWAY WHERE ONE ROADWAY IS CLOSED.

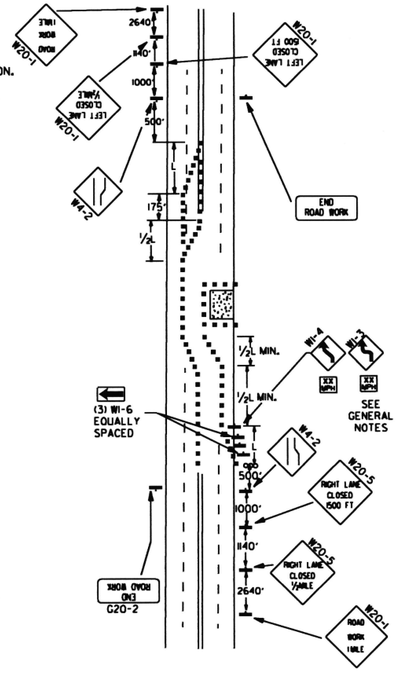

(C) TYPICAL APPLICATION - 4-LANE UNDIVIDED ROADWAY WHERE HALF OF THE ROADWAY IS CLOSED.

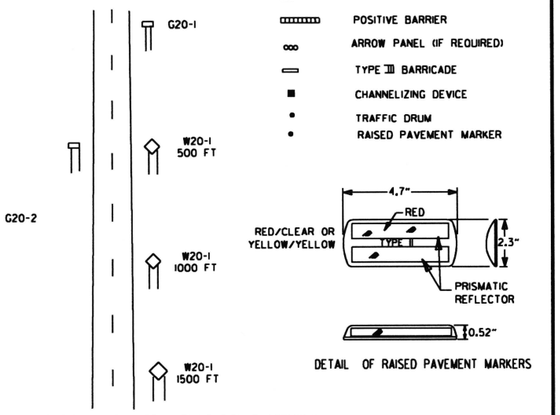

DETAIL OF RAISED PAVEMENT MARKERS

TYPICAL ADVANCE WARNING SIGN PLACEMENT

TAPER FORMULAE:

L=SXW FOR SPEEDS OF 45MPH OR MORE.

$L = \frac{WS^2}{60}$ FOR SPEEDS OF 40MPH OR LESS.

WHERE:
L= MINIMUM LENGTH OF TAPER.
S= NUMERICAL VALUE OF POSTED SPEED LIMIT PRIOR TO WORK OR 85TH PERCENTILE SPEED.
W= WIDTH OF OFFSET.

GENERAL NOTES:
1. THE MAINTENANCE DIVISION SHALL CONDUCT A BALL BANK STUDY TO DETERMINE THE ADVISORY SPEED LIMIT PRIOR TO OPENING TO TRAFFIC. THE ADVISORY SPEED WILL BE POSTED ON W1-3 OR W1-4 CURVE WARNING SIGNS. USE W1-4 WHEN SPEED IS GREATER THAN 30MPH AND W1-3 WHEN 30MPH OR LESS
2. WHEN THE EXISTING SPEED LIMIT IS 55MPH AND THE PLANS REQUIRE A SPEED LIMIT OF 45MPH, THE R2-1(55) SHALL BE OMITTED AND THE W3-5 SHALL BE INSTALLED AT THAT LOCATION. ADDITIONAL R2-1 45MPH SPEED LIMIT SIGNS SHALL BE INSTALLED AT A MAXIMUM OF 1MILE INTERVALS. AT THE END OF THE WORK AREA A R2-(XX) SHALL BE INSTALLED TO MATCH ORIGINAL SPEED LIMIT.
3. WHEN THE EXISTING SPEED LIMIT IS 65MPH AND THE PLANS REQUIRE A SPEED LIMIT OF 55MPH, THE R2-1(45) SHALL BE OMITTED. ADDITIONAL R2-1 55MPH SPEED LIMIT SIGNS SHALL BE INSTALLED AT A MAXIMUM OF 1MILE INTERVALS. AT THE END OF THE WORK AREA A R2-1(XX) SHALL BE INSTALLED TO MATCH ORIGINAL SPEED LIMIT.
4. THE MAXIMUM SPACING BETWEEN CHANNELIZING DEVICES IN A TAPER SHOULD BE APPROXIMATELY EQUAL IN FEET TO THE SPEED LIMIT. BEYOND THE TAPER, MAXIMUM SPACING SHALL BE TWO TIMES THE SPEED LIMIT, OR AS DIRECTED BY THE ENGINEER.
5. WARNING LIGHTS AND/OR FLAGS MAY BE MOUNTED TO SIGNS OR CHANNELIZING DEVICES AT NIGHT AS NEEDED.
6. PAVEMENT MARKINGS NO LONGER APPLICABLE WHICH MIGHT CREATE CONFUSION IN THE MINDS OF VEHICLE OPERATORS SHALL BE REMOVED OR OBLITERATED AS SOON AS PRACTICABLE.
7. TRAILER MOUNTED DEVICES SUCH AS ARROW PANELS AND PORTABLE CHANGEABLE MESSAGE SIGNS SHALL BE DELINEATED BY AFFIXING CONSPICUITY MATERIAL IN A CONTINUOUS LINE ON THE FACE OF THE TRAILER, WHEN PLACED ON OR ADJACENT TO THE SHOULDER AND NOT BEHIND A POSITIVE BARRIER, THESE DEVICES SHALL BE DELINEATED BY PLACING FIVE (5) TRAFFIC DRUMS, EQUALLY SPACED ALONG THE TRAFFIC SIDE OF THE DEVICE.
8. DIMENSIONS SHOWN FOR RAISED PAVEMENT MARKERS ARE TYPICAL. THE CONTRACTOR MAY SUBSTITUTE SIMILAR MARKERS WITH THE APPROVAL OF THE ENGINEER. REQUESTING APPROVAL FOR SIMILAR MARKERS MAY BE MADE BY REFERRING TO THE ARDOT QUALIFIED PRODUCTS LIST.
9. ALL TRAILER MOUNTED DEVICES SUCH AS ARROW PANELS AND PORTABLE CHANGEABLE MESSAGE SIGNS SHALL MEET THE REQUIREMENTS OF THE MANUAL FOR ASSESSING SAFETY HARDWARE (MASH).

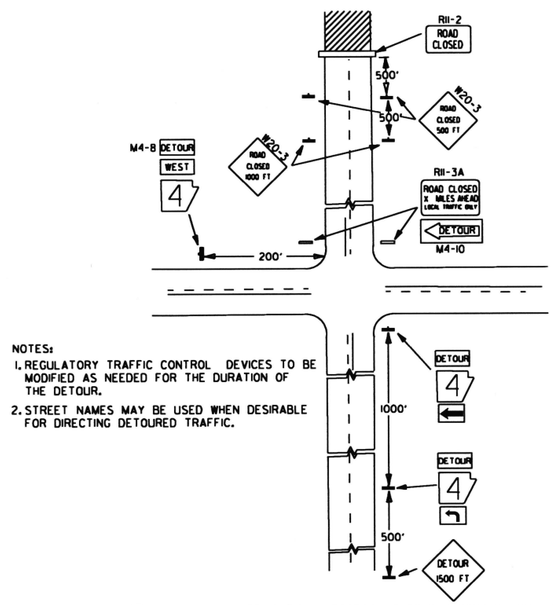

NOTES:
1. REGULATORY TRAFFIC CONTROL DEVICES TO BE MODIFIED AS NEEDED FOR THE DURATION OF THE DETOUR.
2. STREET NAMES MAY BE USED WHEN DESIRABLE FOR DIRECTING DETOURED TRAFFIC.

(D) TYPICAL APPLICATION - ROADWAY CLOSED BEYOND DETOUR POINT.

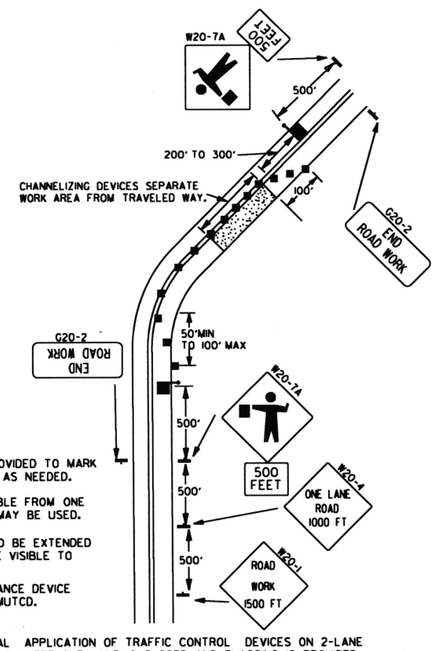

NOTES:
1. FLOOD LIGHTS SHOULD BE PROVIDED TO MARK FLAGGER STATIONS AT NIGHT AS NEEDED.
2. IF ENTIRE WORK AREA IS VISIBLE FROM ONE STATION, A SINGLE FLAGGER MAY BE USED.
3. CHANNELIZING DEVICES ARE TO BE EXTENDED TO A POINT WHERE THEY ARE VISIBLE TO APPROACHING TRAFFIC.
4. AUTOMATED FLAGGER ASSISTANCE DEVICE (AFAD) OPTIONAL. REFER TO MUTCD.

(E) TYPICAL APPLICATION OF TRAFFIC CONTROL DEVICES ON 2-LANE HIGHWAY WHERE ONE LANE IS CLOSED AND FLAGGING IS PROVIDED.

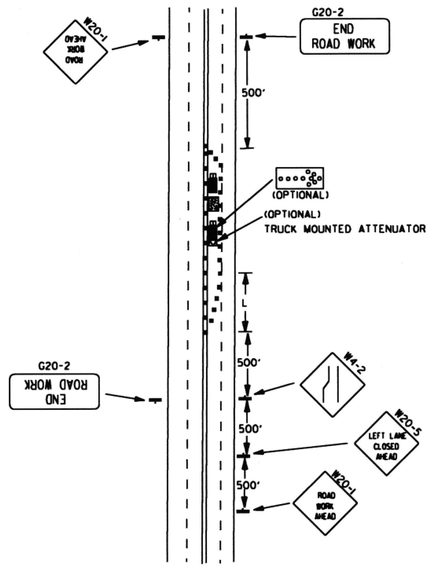

(F) TYPICAL APPLICATION - 4-LANE UNDIVIDED ROADWAY WITH INSIDE LANE CLOSED.

11-07-19	REVISED NOTE 1, ADDED NOTE 9	
9-2-15	REVISED NOTE 2, ADDED NOTE 8, REVISED DRAWING (A) & REPLACED R2-5A WITH W3-5	
9-12-13	REVISED DETAIL OF RAISED PAVEMENT MARKERS	
3-8-10	ADDED (AFAD)	
11-20-08	REVISED SIGN DESIGNATIONS	
11-18-04	ADDED GENERAL NOTE	
10-18-96	ADDED R55-1	
4-26-96	CORRECTED (a) BEHIND G20-2	
6-8-95	CORRECTED SIGN IDENT. ON W1-4A	6-8-95
2-2-95	REVISED PER PART VI, MUTCD, SEPT. 3, 1993	
8-15-91	DRAWN AND PLACED IN USE	
DATE	REVISION	FILMED

ARKANSAS STATE HIGHWAY COMMISSION

STANDARD TRAFFIC CONTROLS FOR HIGHWAY CONSTRUCTION

STANDARD DRAWING TC-2

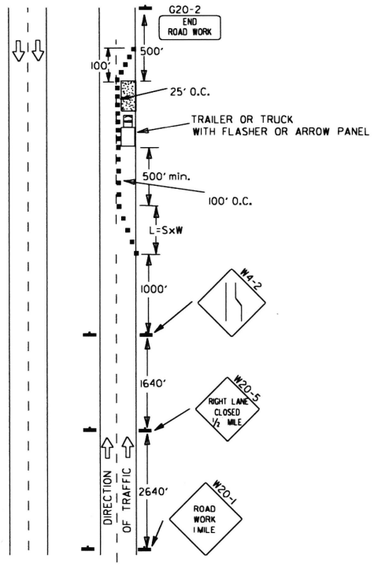

(A) TYPICAL APPLICATION - DAYTIME MAINTENANCE OPERATIONS OF SHORT DURATION ON A 4-LANE DIVIDED ROADWAY WHERE HALF OF THE ROADWAY IS CLOSED.

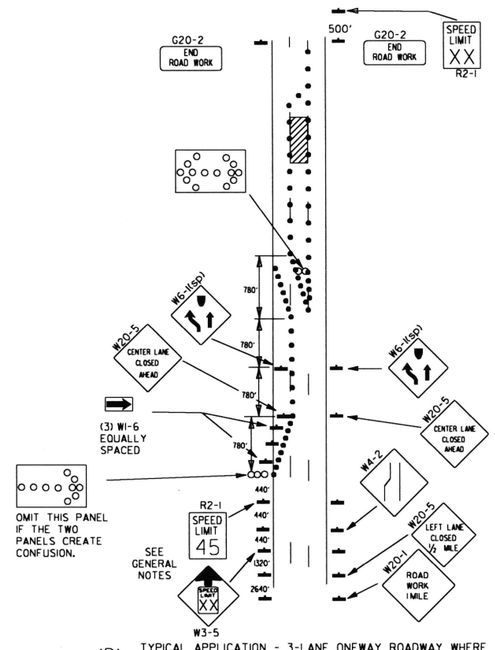

(B) TYPICAL APPLICATION - 3-LANE ONEWAY ROADWAY WHERE CENTER LANE IS CLOSED.

KEY:

- ooo ARROW PANEL (IF REQUIRED)
- ■ CHANNELIZING DEVICE
- ● TRAFFIC DRUM

GENERAL NOTES:

1. A SPEED LIMIT REDUCTION MAY BE IMPLEMENTED ONLY WHEN DESIGNATED IN THE PLAN OR WHEN RECOMMENDED BY THE ROADWAY DESIGN DIVISION.
2. WHEN THE EXISTING SPEED LIMIT IS 55MPH AND THE PLANS REQUIRE A SPEED LIMIT OF 45MPH, THE R2-1(55) SHALL BE OMITTED AND THE W3-5 SHALL BE INSTALLED AT THAT LOCATION. ADDITIONAL R2-1 45MPH SPEED LIMIT SIGNS SHALL BE INSTALLED AT A MAXIMUM OF 1MILE INTERVALS. AT THE END OF THE WORK AREA A R2-1(XX) SHALL BE INSTALLED TO MATCH ORIGINAL SPEED LIMIT.
3. WHEN THE EXISTING SPEED LIMIT IS 65MPH AND THE PLANS REQUIRE A SPEED LIMIT OF 55MPH, THE R2-1(45) SHALL BE OMITTED. ADDITIONAL R2-1 55MPH SPEED LIMIT SIGNS SHALL BE INSTALLED AT A MAXIMUM OF 1MILE INTERVALS. AT THE END OF THE WORK AREA A R2-1(XX) SHALL BE INSTALLED TO MATCH ORIGINAL SPEED LIMIT.
4. THE MAXIMUM SPACING BETWEEN CHANNELIZING DEVICES IN A TAPER SHOULD BE APPROXIMATELY EQUAL IN FEET TO THE SPEED LIMIT. BEYOND THE TAPER, MAXIMUM SPACING SHALL BE TWO TIMES THE SPEED LIMIT OR AS DIRECTED BY THE ENGINEER.
5. WARNING LIGHTS AND/OR FLAGS MAY BE MOUNTED TO SIGNS OR CHANNELIZING DEVICES AT NIGHT AS NEEDED.
6. PAVEMENT MARKINGS NO LONGER APPLICABLE WHICH MIGHT CREATE CONFUSION IN THE MINDS OF VEHICLE OPERATORS SHALL BE REMOVED OR OBLITERATED AS SOON AS PRACTICABLE.
7. THE G20-1 SIGN WILL BE REQUIRED ON JOBS OF OVER TWO MILES IN LENGTH. WHEN THE LANE CLOSURE IS NOT AT THE BEGINNING OF THE PROJECT, THE G20-1 SIGN SHALL BE ERECTED 125' IN ADVANCE OF THE JOB LIMIT. ADDITIONAL W20-1 (1MILE) SIGNS ARE NOT REQUIRED IN ADVANCE OF LANE CLOSURES THAT BEGIN INSIDE THE PROJECT LIMITS.
8. FLAGGERS SHALL USE STOP/SLOW PADDLES FOR CONTROLLING TRAFFIC THROUGH WORK ZONES. FLAGS MAY BE USED ONLY FOR EMERGENCY SITUATIONS.
9. ALL PLASTIC DRUMS AND CONES SHALL MEET THE REQUIREMENTS OF MANUAL FOR ASSESSING SAFETY HARDWARE (MASH).
10. TRAILER MOUNTED DEVICES SUCH AS ARROW PANELS AND PORTABLE CHANGEABLE MESSAGE SIGNS SHALL BE DELINEATED BY AFFIXING CONSPICUITY MATERIAL IN A CONTINUOUS LINE ON THE FACE OF THE TRAILER. WHEN PLACED ON OR ADJACENT TO THE SHOULDER AND NOT BEHIND A POSITIVE BARRIER, THESE DEVICES SHALL BE DELINEATED BY PLACING FIVE (5) TRAFFIC DRUMS, EQUALLY SPACED ALONG THE TRAFFIC SIDE OF THE DEVICE.
11. ALL TRAILER MOUNTED DEVICES SUCH AS ARROW PANELS AND PORTABLE CHANGEABLE MESSAGE SIGNS SHALL MEET THE REQUIREMENTS OF THE MANUAL FOR ASSESSING SAFETY HARDWARE (MASH).

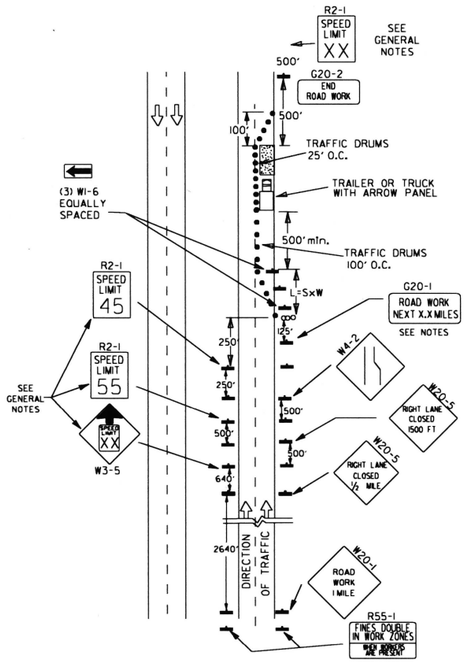

(C) TYPICAL APPLICATION - CONSTRUCTION OPERATIONS OF INTERMEDIATE TO LONG TERM DURATION ON A 4-LANE DIVIDED ROADWAY WHERE HALF OF THE ROADWAY IS CLOSED.

CHANNELIZING DEVICES

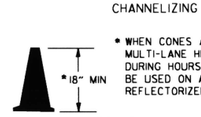

* WHEN CONES ARE USED ON FREEWAYS AND MULTI-LANE HIGHWAYS, THEY SHALL BE 28" MIN. DURING HOURS OF DARKNESS, 28" CONES SHALL BE USED ON ALL ROADWAYS, AND SHALL BE REFLECTORIZED IN ACCORDANCE WITH THE M.U.T.C.D.

CONES

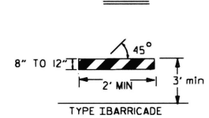

PLASTIC DRUM

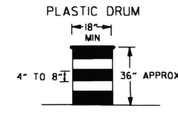

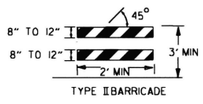

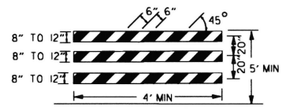

NOTE:
FOR ALL ROAD CLOSURES, THE TYPE III BARRICADES SHALL BE OF SUFFICIENT LENGTH TO EXTEND ACROSS ENTIRE ROADWAY.

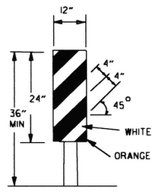

VERTICAL PANEL PLACEMENT

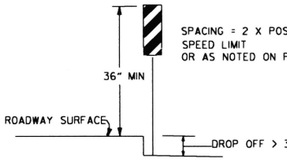

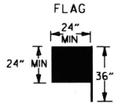

FLAG SHALL BE OF GOOD GRADE RED MATERIAL

TRAFFIC CONTROL DEVICES

NON-INTERSTATE			
VERTICAL DIFFERENTIAL	LOCATION	TRAFFIC CONTROL	
		≤ 45 MPH	> 45 MPH
≤ 2"	CENTERLINE	W8-11 AND LANE STRIPING	W8-11 AND LANE STRIPING
> 2"	CENTERLINE	STANDARD LANE CLOSURE	STANDARD LANE CLOSURE
≤ 3"	EDGE OF TRAVELED LANE OR EDGE OF SHOULDER	W8-9, EDGE LINE STRIPING, AND VERTICAL PANELS	W8-9, EDGE LINE STRIPING, AND VERTICAL PANELS
> 3" ≤ 6"	EDGE OF TRAVELED LANE OR EDGE OF SHOULDER	W8-17, EDGE LINE STRIPING, AND VERTICAL PANELS	W8-17, EDGE LINE STRIPING, AND VERTICAL PANELS
> 6" ≤ 12"	EDGE OF TRAVELED LANE OR EDGE OF SHOULDER	W8-17, EDGE LINE STRIPING, AND TRAFFIC DRUMS(1)	W8-17, EDGE LINE STRIPING, AND TRAFFIC DRUMS(1)
> 12" ≤ 24"	EDGE OF TRAVELED LANE OR EDGE OF SHOULDER	W8-17, EDGE LINE STRIPING, AND TRAFFIC DRUMS(1)	PRECAST CONCRETE BARRIER(3) & EDGE LINES
> 24"	EDGE OF TRAVELED LANE OR EDGE OF SHOULDER	PRECAST CONCRETE BARRIER(3) & EDGE LINES	PRECAST CONCRETE BARRIER(3) & EDGE LINES

INTERSTATE		
VERTICAL DIFFERENTIAL	LOCATION	TRAFFIC CONTROL
≤ 2"	CENTERLINE	W8-11 AND LANE STRIPING
≤ 2"	EDGE OF TRAVELED LANE OR EDGE OF SHOULDER	W8-9, EDGE LINE STRIPING, AND TRAFFIC DRUMS(2)
> 2" ≤ 6"	EDGE OF TRAVELED LANE OR EDGE OF SHOULDER	W8-17, EDGE LINE STRIPING, AND TRAFFIC DRUMS(2)
> 6"	EDGE OF TRAVELED LANE OR EDGE OF SHOULDER	PRECAST CONCRETE BARRIER & EDGE LINES

INTERSTATE AND NON-INTERSTATE		
FORESLOPE	HEIGHT	TRAFFIC CONTROL
1:1	> 2 FT	PRECAST CONCRETE BARRIER
2:1	≤ 5 FT	TRAFFIC DRUMS
2:1	> 5 FT	PRECAST CONCRETE BARRIER
Flatter than 2:1	N/A	TRAFFIC DRUMS

GENERAL NOTES:

1. WHEN THE SHOULDER AREA IS USED AS PART OF THE TRAVELED LANE AND THERE IS INSUFFICIENT WIDTH TO PLACE TRAFFIC DRUMS ON THE REMAINING SHOULDER WIDTH, THEN VERTICAL PANELS SHALL BE USED.
2. WHEN THERE IS INSUFFICIENT WIDTH TO PLACE TRAFFIC DRUMS ON THE REMAINING SHOULDER WIDTH, A STABILIZED WEDGE SHALL BE USED.
3. A STABILIZED WEDGE, W8-17 SIGN, EDGE LINE STRIPING, AND TRAFFIC DRUMS CAN BE USED IN LIEU OF PRECAST CONCRETE BARRIER WALL, IF AND WHERE DIRECTED BY THE ENGINEER.
4. W21-5, W21-5a, AND/OR W21-5b SIGNS SHALL BE USED WHERE THE ROADWAY IS UNOBSTRUCTED IF AND WHERE DIRECTED BY THE ENGINEER.

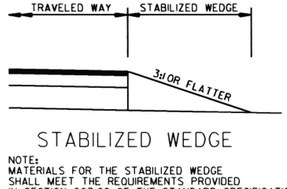

STABILIZED WEDGE

NOTE:
MATERIALS FOR THE STABILIZED WEDGE SHALL MEET THE REQUIREMENTS PROVIDED IN SECTION 603.02 OF THE STANDARD SPECIFICATIONS.

STOP SLOW PADDLE

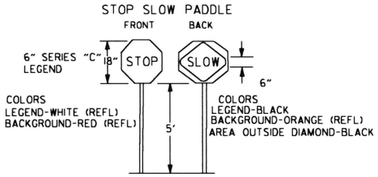

DETAIL OF SPLICES

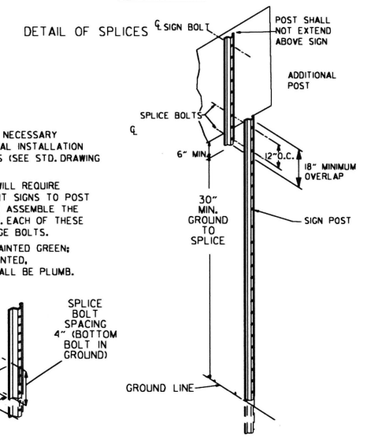

NOTES: USE SPLICES ONLY WHEN NECESSARY FOR INSTALLATION. TYPICAL INSTALLATION SHOULD HAVE NO SPLICES (SEE STD. DRAWING NO. SHS-2)

NORMAL INSTALLATIONS WILL REQUIRE 1/4" DIA. BOLTS TO MOUNT SIGNS TO POST AND 5/16" DIA. BOLTS TO ASSEMBLE THE VARIOUS POST SUPPORTS. EACH OF THESE BOLTS SHALL BE CARRIAGE BOLTS.

SIGN POSTS SHALL BE PAINTED GREEN; SIGNS SHALL NOT BE PAINTED, AND ALL SIGN POSTS SHALL BE PLUMB.

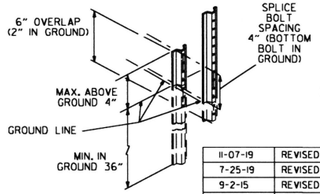

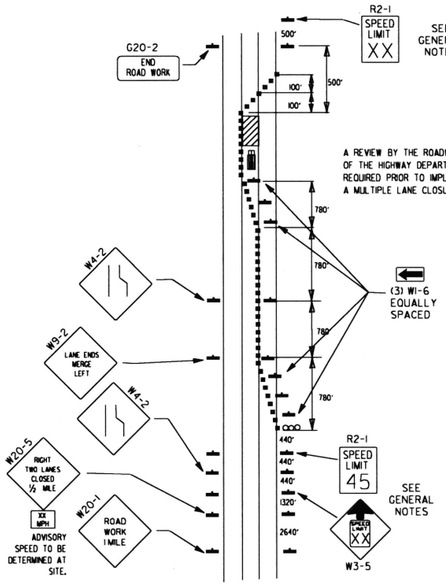

(D) TYPICAL APPLICATION - CLOSING MULTIPLE LANES OF A MULTILANE HIGHWAY.

DATE	REVISION	FILMED
11-07-19	REVISED NOTE 9, ADDED NOTE 11	
7-25-19	REVISED TRAFFIC CONTROL DEVICES DETAILS	
9-2-15	REVISED NOTE 2 & REPLACED R2-5A WITH W3-5	
10-15-09	ADDED REFERENCE TO MASH	
11-20-08	REVISED SIGN DESIGNATIONS	
11-18-04	ADDED NOTE	
10-1-98	ADDED NOTE	
4-03-97	ADDED (SP) TO W6-1& REVISED TRAFFIC CONTROL DEVICES NOTE	
10-18-96	ADDED R55-1	
10-12-95	MOVED UPPER SPLICE	
6-8-95	REVISED SPLICE DETAIL, TEXT	6-8-95
2-2-95	REVISED PER PART VI, MUTCD, SEPT. 3, 1993	
8-15-91	DRAWN AND PLACED IN USE	

ARKANSAS STATE HIGHWAY COMMISSION

STANDARD TRAFFIC CONTROLS FOR HIGHWAY CONSTRUCTION

STANDARD DRAWING TC-3

GENERAL NOTES

INSTALL A MINIMUM OF 2 UPSLOPE STAKES AND 4 DOWNSLOPE STAKES AT AN ANGLE TO WEDGE WATTLE TO BOTTOM OF DITCH.

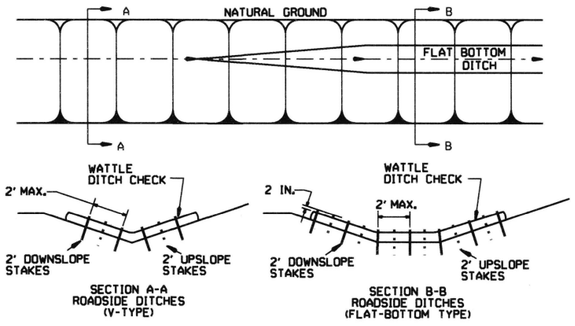

WATTLE DITCH CHECK (E-1)

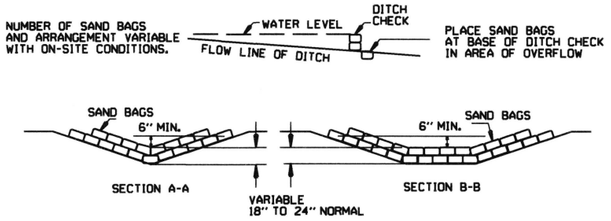

SAND BAG DITCH CHECK (E-5)

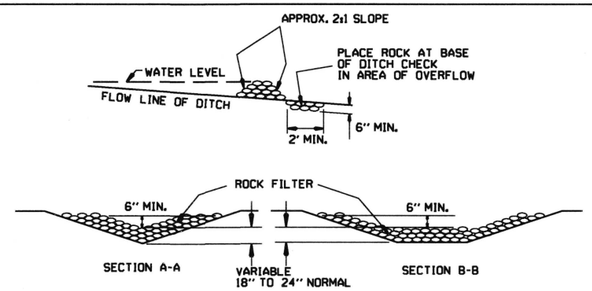

ROCK DITCH CHECK (E-6)

GENERAL NOTES

GEOTEXTILE FABRIC (TYPE 4) IN ACCORDANCE WITH SECTION 625

GEOTEXTILE FABRIC SHALL BE SPLICED TOGETHER WITH A SEWN SEAM ONLY AT A SUPPORT POST OR TWO SECTIONS OF FENCE MAY BE OVERLAPPED INSTEAD. PAYMENT OF ADDITIONAL MATERIAL FOR OVERLAP WILL NOT BE MADE.

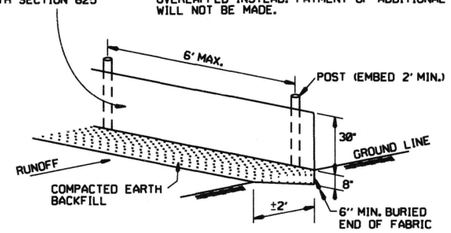

SILT FENCE (E-11)

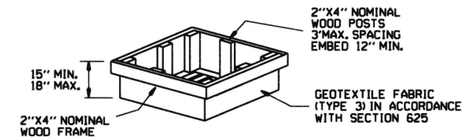

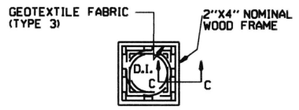

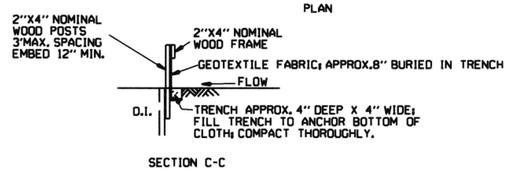

DROP INLET SILT FENCE (E-7)

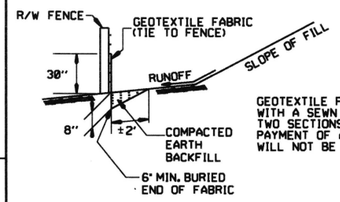

GENERAL NOTES

GEOTEXTILE FABRIC SHALL BE SPLICED TOGETHER WITH A SEWN SEAM ONLY AT A SUPPORT POST, OR TWO SECTIONS OF FENCE MAY BE OVERLAPPED INSTEAD. PAYMENT OF ADDITIONAL MATERIAL FOR OVERLAP WILL NOT BE MADE.

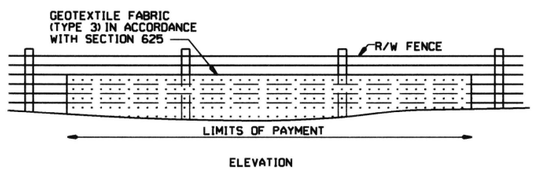

SILT FENCE ON R/W FENCE (E-4)

GENERAL NOTES

1. STRAW BALES SHALL BE INSTALLED SO THAT THE BINDINGS ARE ORIENTED AROUND THE SIDES RATHER THAN ALONG THE TOPS AND BOTTOMS OF THE BALES. THE BALES SHALL BE A MINIMUM OF 30 INCHES IN LENGTH.

2. NO GAPS SHALL BE LEFT BETWEEN BALES.

3. BALED STRAW FILTER BARRIERS COMPLETED AND ACCEPTED WILL BE MEASURED BY THE BALE IN PLACE AS AUTHORIZED BY THE ENGINEER AND WILL BE PAID FOR AT THE CONTRACT UNIT PRICE BID PER BALE FOR BALED STRAW DITCH CHECKS.

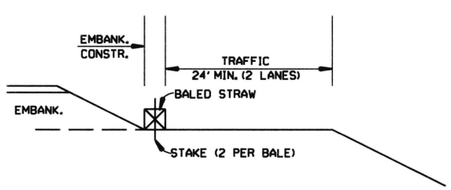

BALED STRAW FILTER BARRIER (E-2)

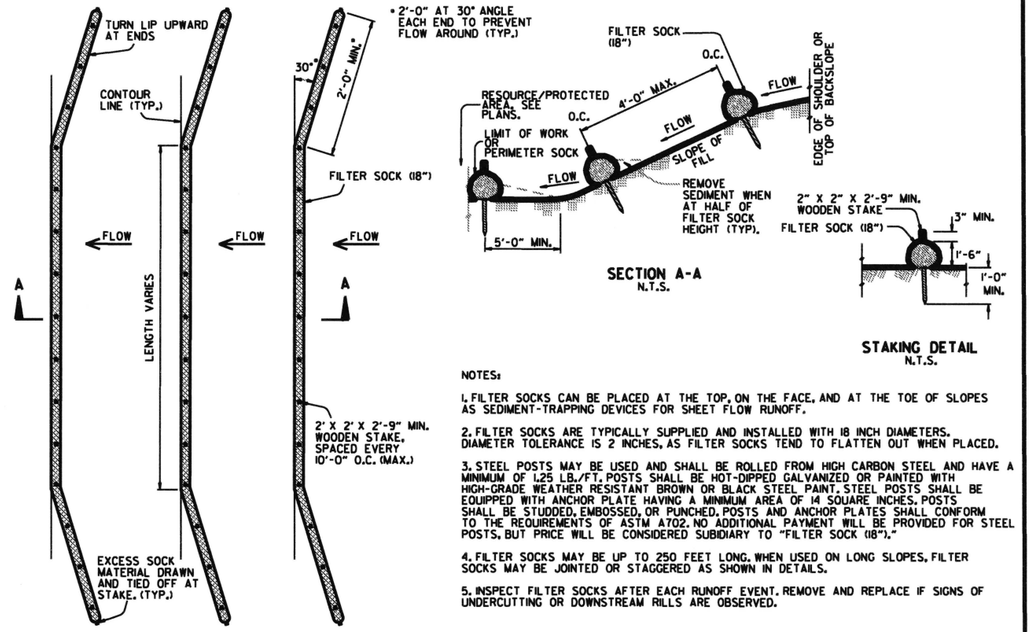

NOTES:

1. FILTER SOCKS CAN BE PLACED AT THE TOP, ON THE FACE, AND AT THE TOE OF SLOPES AS SEDIMENT-TRAPPING DEVICES FOR SHEET FLOW RUNOFF.

2. FILTER SOCKS ARE TYPICALLY SUPPLIED AND INSTALLED WITH 18 INCH DIAMETERS. DIAMETER TOLERANCE IS 2 INCHES, AS FILTER SOCKS TEND TO FLATTEN OUT WHEN PLACED.

3. STEEL POSTS MAY BE USED AND SHALL BE ROLLED FROM HIGH CARBON STEEL AND HAVE A MINIMUM OF 1.25 LB./FT. POSTS SHALL BE HOT-DIPPED GALVANIZED OR PAINTED WITH HIGH-GRADE WEATHER RESISTANT BROWN OR BLACK STEEL PAINT. STEEL POSTS SHALL BE EQUIPPED WITH ANCHOR PLATE HAVING A MINIMUM AREA OF 14 SQUARE INCHES. POSTS SHALL BE STUDDED, EMBOSSED, OR PUNCHED. POSTS AND ANCHOR PLATES SHALL CONFORM TO THE REQUIREMENTS OF ASTM A702. NO ADDITIONAL PAYMENT WILL BE PROVIDED FOR STEEL POSTS, BUT PRICE WILL BE CONSIDERED SUBSIDIARY TO "FILTER SOCK (18")."

4. FILTER SOCKS MAY BE UP TO 250 FEET LONG. WHEN USED ON LONG SLOPES, FILTER SOCKS MAY BE JOINTED OR STAGGERED AS SHOWN IN DETAILS.

5. INSPECT FILTER SOCKS AFTER EACH RUNOFF EVENT. REMOVE AND REPLACE IF SIGNS OF UNDERCUTTING OR DOWNSTREAM RILLS ARE OBSERVED.

FILTER SOCK ALONG SLOPE (E-3)

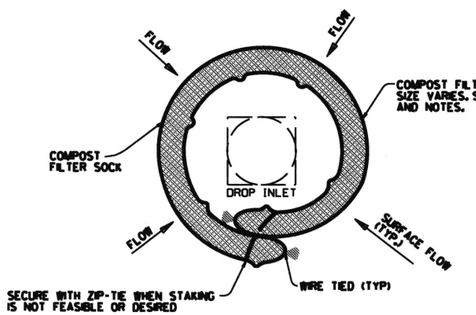

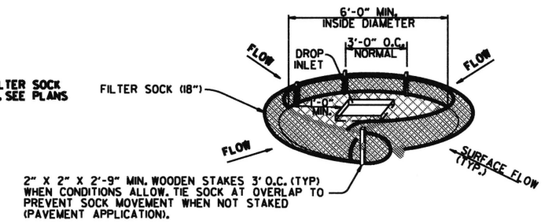

NOTES:

1. OVERLAP ENDS OF SOCK (1' MIN. 3' MAX.).

2. USE 18" DIA. SOCK IN NON-TRAFFIC AREAS OR AREAS WHERE SAFETY IS NOT A CONCERN.

COMPOST FILTER SOCK DROP INLET PROTECTION (E-13)

DATE	REVISION	FILMED
11-16-17	ADDED FILTER SOCK E-3 AND E-13	
12-15-11	DELETED BALED STRAW DITCH CHECK & ADDED WATTLE DITCH CHECK	
11-18-98	ADDED NOTES	
07-02-98	ADDED BALED STRAW FILTER BARRIER (E-2)	
07-20-95	REVISED SILT FENCE E-4 AND E-11	7-20-95
07-15-94	REV. E-4 & E-11 MIN. 13" BURIED END OF FABRIC	
06-02-94	REVISED E-1,4,7 & 11; DELETED E-2 & 3	6-2-94
04-01-93	REDRAWN	
10-01-92	REDRAWN	
08-02-76	ISSUED R.D.M.	298-7-28-76

ARKANSAS STATE HIGHWAY COMMISSION

TEMPORARY EROSION CONTROL DEVICES

STANDARD DRAWING TEC-1

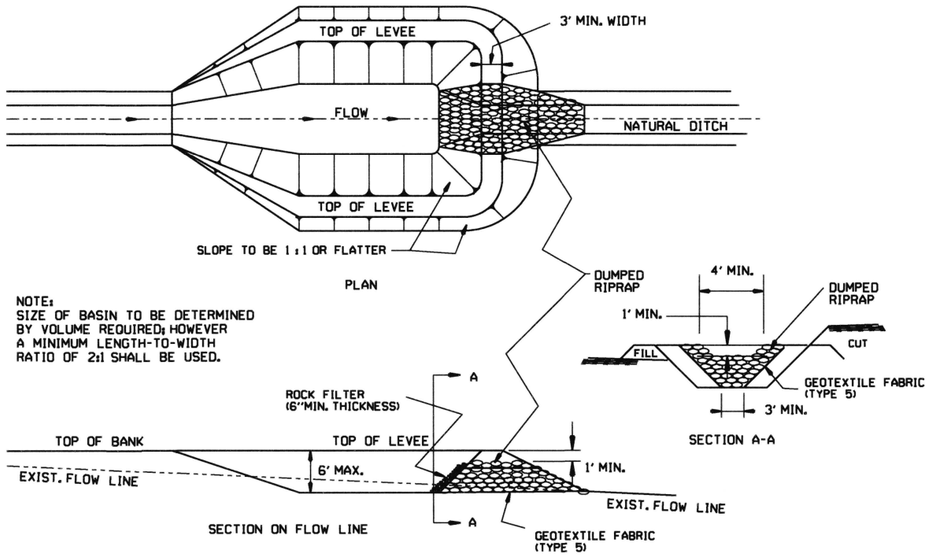

SEDIMENT BASIN WITH RIPRAP OUTLET (E-9)

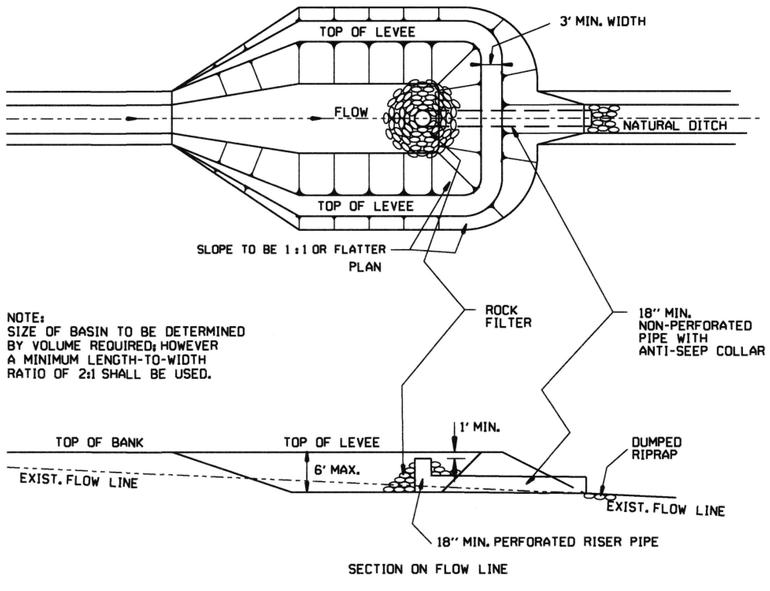

SEDIMENT BASIN WITH PIPE OUTLET (E-10)

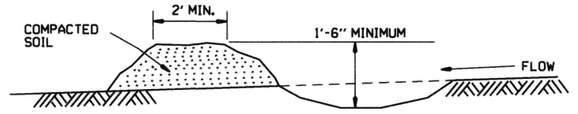

DIVERSION DITCH (E-8)

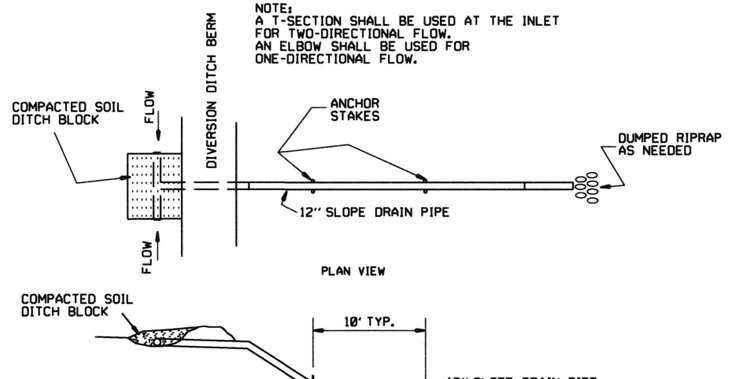

SLOPE DRAIN (E-12)

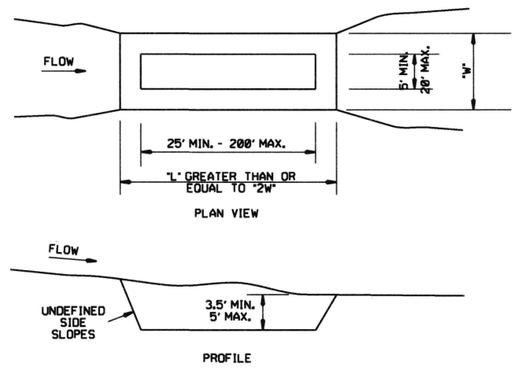

SEDIMENT BASIN (E-14)

DATE	REVISION	FILMED
6-2-94	Revised E-8 & E-12; Added E-14 & Deleted E-13	
4-1-93	ISSUED	

ARKANSAS STATE HIGHWAY COMMISSION

TEMPORARY EROSION CONTROL DEVICES

STANDARD DRAWING TEC-2

CLEARING AND GRUBBING

CONSTRUCTION SEQUENCE

1. PLACE PERIMETER CONTROLS (I.E. SILT FENCES , DIVERSION DITCHES, SEDIMENT BASINS, ETC.)
2. PERFORM CLEARING AND GRUBBING OPERATION.

EXCAVATION

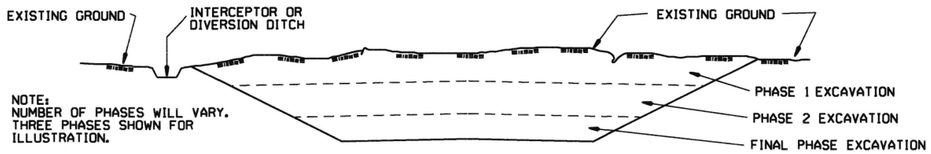

GENERAL NOTE

ALL CUT SLOPES SHALL BE DRESSED, PREPARED, SEEDED, AND MULCHED AS THE WORK PROGRESSES. SLOPES SHALL BE EXCAVATED AND STABILIZED IN EQUAL INCREMENTS NOT TO EXCEED 25 FEET, MEASURED VERTICALLY.

CONSTRUCTION SEQUENCE

1. EXCAVATE AND STABILIZE INTERCEPTOR AND/OR DIVERSION DITCHES.
2. PERFORM PHASE 1 EXCAVATION. PLACE PERMANENT OR TEMPORARY SEEDING.
3. PERFORM PHASE 2 EXCAVATION. PLACE PERMANENT OR TEMPORARY SEEDING.
4. PERFORM FINAL PHASE OF EXCAVATION. PLACE PERMANENT OR TEMPORARY SEEDING. STABILIZE DITCHES, CONSTRUCT DITCH CHECKS, DIVERSION DITCHES, SEDIMENT BASINS, OR OTHER EROSION CONTROL DEVICES AS REQUIRED.

EMBANKMENT

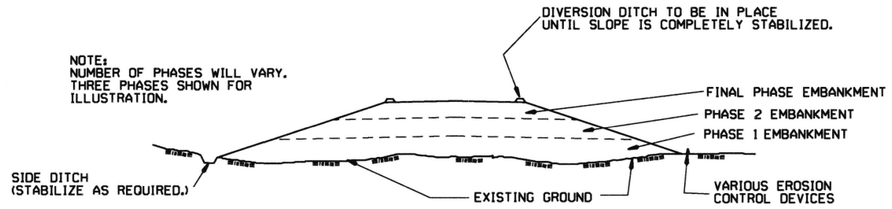

GENERAL NOTE

ALL EMBANKMENT SLOPES SHALL BE DRESSED, PREPARED, SEEDED, AND MULCHED AS THE WORK PROGRESSES. SLOPES SHALL BE CONSTRUCTED AND STABILIZED IN EQUAL INCREMENTS NOT TO EXCEED 25 FEET, MEASURED VERTICALLY.

CONSTRUCTION SEQUENCE

1. CONSTRUCT DIVERSION DITCHES, DITCH CHECKS, SEDIMENT BASINS, SILT FENCES, OR OTHER EROSION CONTROL DEVICES AS SPECIFIED.
2. PLACE PHASE 1 EMBANKMENT WITH PERMANENT OR TEMPORARY SEEDING. PROVIDE DIVERSION DITCHES AND SLOPE DRAINS IF EMBANKMENT CONSTRUCTION IS TO BE TEMPORARILY ABANDONED FOR A PERIOD OF GREATER THAN 21 DAYS.
3. PLACE PHASE 2 EMBANKMENT WITH PERMANENT OR TEMPORARY SEEDING. PROVIDE DIVERSION DITCHES AND SLOPE DRAINS IF EMBANKMENT CONSTRUCTION IS TO BE TEMPORARILY ABANDONED FOR A PERIOD OF GREATER THAN 21 DAYS.
4. PLACE FINAL PHASE OF EMBANKMENT WITH PERMANENT OR TEMPORARY SEEDING. PLACE DIVERSION DITCHES AND SLOPE DRAINS AND MAINTAIN UNTIL ENTIRE SLOPE IS STABILIZED.

DATE	REVISION	FILMED
11-03-94	CORRECTED SPELLING	
6-2-94	Drawn & Issued	6-2-94

ARKANSAS STATE HIGHWAY COMMISSION

TEMPORARY EROSION CONTROL DEVICES

STANDARD DRAWING TEC-3

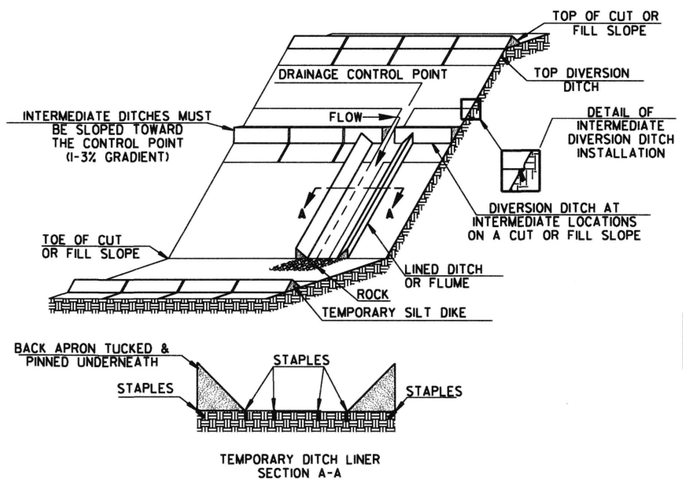

TRIANGULAR SILT DIKE INSTALLATION FOR DIVERSION DITCH AND/OR DITCH LINER

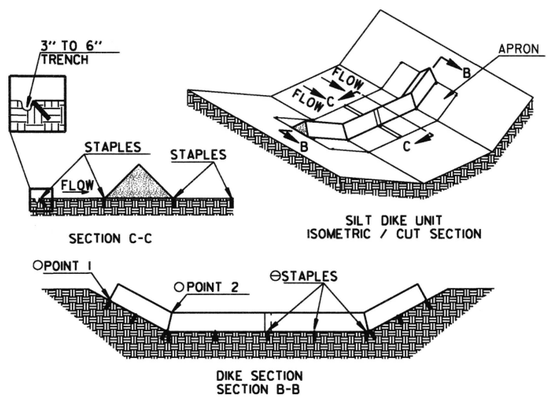

TRIANGULAR SILT DIKE INSTALLATION FOR ROADWAY DITCH OR DRAINAGE DITCH

○ POINT "1" MUST BE HIGHER THAN POINT "2" TO ENSURE THAT WATER FLOWS OVER THE DIKE AND NOT AROUND THE ENDS.

⊖ STAPLES SHALL BE PLACED WHERE THE UNITS OVERLAP AND IN THE CENTER OF THE UNIT AS SHOWN ON THE DIAGRAM.

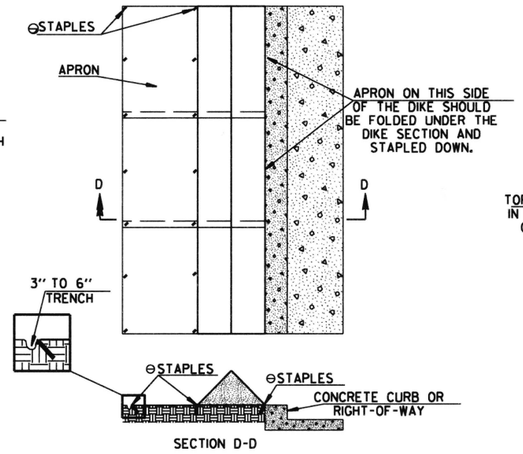

TRIANGULAR SILT DIKE INSTALLATION FOR CONTINUOUS BARRIER

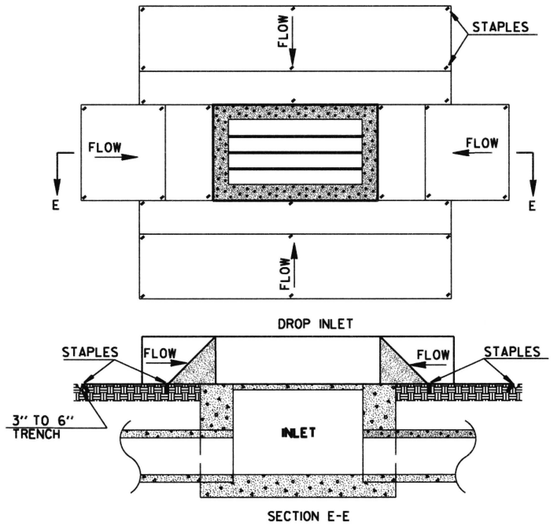

TRIANGULAR SILT DIKE INSTALLATION FOR DROP INLETS

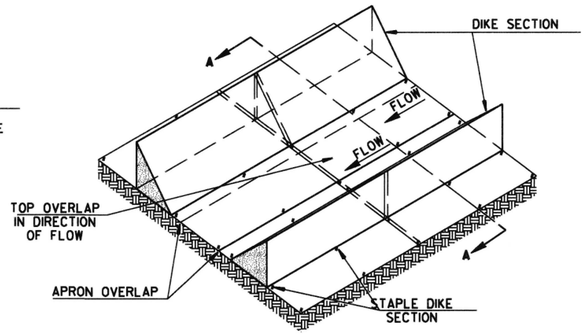

TRIANGULAR SILT DIKE INSTALLATION FOR TEMPORARY DITCH LINER

GENERAL NOTES

1. THIS WORK SHALL CONSIST OF FURNISHING, INSTALLING, AND MAINTAINING THE TRIANGULAR SILT DIKE. THE DIKES SHALL BE USED AS A CONTINUOUS LINE BARRIER AT THE TOE OF SLOPE OR ACROSS THE ROADWAY DITCH TO CONTAIN SEDIMENT AND MINIMIZE EROSION, OR AS DIRECTED BY THE ENGINEER. THESE DIKES SHALL BE INSTALLED AND LOCATED AS SOON AS CONSTRUCTION WILL ALLOW OR AS DIRECTED BY THE ENGINEER.

2. TRIANGULAR SILT DIKE SHALL BE TRIANGULAR SHAPED HAVING A HEIGHT OF AT LEAST 8" TO 10" IN THE CENTER WITH EQUAL SIDES AND A 16" TO 20" BASE. THE TRIANGULAR SHAPED INNER MATERIAL SHALL BE URETHANE FOAM. THE OUTER COVER SHALL BE A WOVEN GEOTEXTILE FABRIC PLACED AROUND THE INNER MATERIAL & ALLOWED TO EXTEND BEYOND BOTH SIDES OF THE TRIANGLE 24" TO 36". THIS FABRIC SHOULD BE MILDEW RESISTANT, ROT-PROOF AND RESISTANT TO HEAT AND ULTRAVIOLET RADIATION MEETING REQUIREMENTS FOR SEDIMENT CONTROL IN AASHTO M288. THE DIKES SHALL BE ATTACHED TO THE GROUND WITH WIRE STAPLES. THE STAPLES SHALL BE NO. 11 GAUGE WIRE AND BE AT LEAST 6" TO 8" LONG. STAPLES SHALL BE PLACED AS SHOWN ON THESE DETAILS.

   THE CONTRACTOR SHALL INSPECT ALL DIKES AFTER EACH RAINFALL EVENT OF AT LEAST 0.5" OR GREATER. ANY DEFICIENCIES OR DAMAGE SHALL BE REPAIRED BY THE CONTRACTOR. ACCUMULATED SILT OR DEBRIS SHALL BE REMOVED AND RELOCATED AS DIRECTED BY THE ENGINEER. IF THE DIKES ARE DAMAGED OR INADVERTENTLY MOVED DURING THE SILT REMOVAL PROCESS, THE CONTRACTOR SHALL IMMEDIATELY REPLACE AFTER DAMAGE OCCURS.

3. ACCEPTED TRIANGULAR SILT DIKE, MEASURED AS PROVIDED ABOVE, WILL BE PAID FOR AT THE CONTRACT UNIT PRICE BID FOR TRIANGULAR SILT DIKE. PRICE BID WILL INCLUDE THE COST OF FURNISHING THE DIKES, INSTALLING, MAINTAINING AND REMOVAL WHEN DIRECTED BY THE ENGINEER.

SYMBOLOGY

SYMBOL TO BE USED TO DENOTE DEVICE ON PLANS



NOTE: SILT DIKE SHOULD ONLY BE USED FOR DROP INLETS IN SUMP LOCATIONS.

DATE	REVISION	FILMED
7-26-12	REVISED GENERAL NOTE 2.	
12-15-11	ISSUED	

ARKANSAS STATE HIGHWAY COMMISSION

TEMPORARY EROSION CONTROL DEVICES

STANDARD DRAWING TEC-4

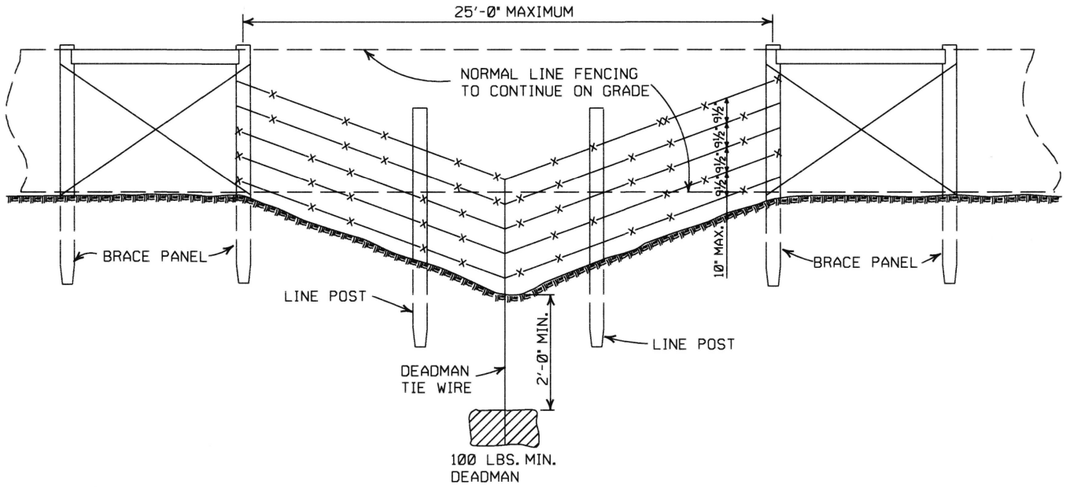

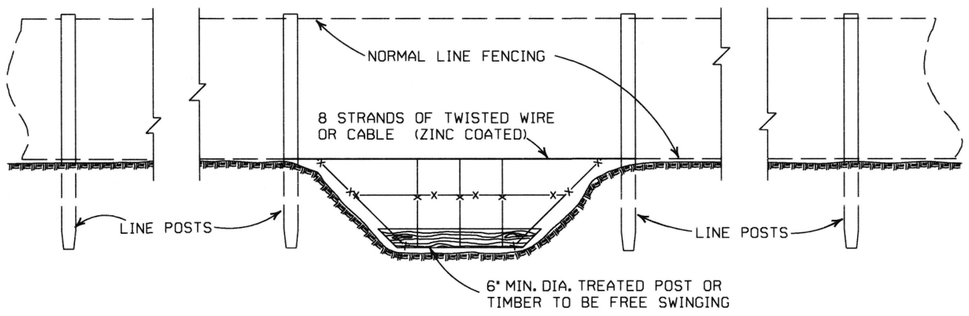

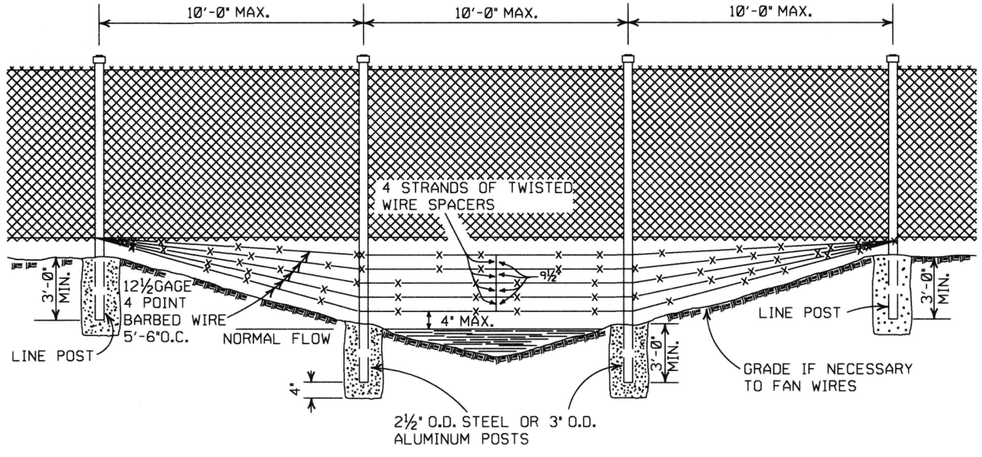

GENERAL NOTES:

THESE INSTALLATIONS TO BE USED WHERE NORMAL FENCING INSTALLATION WOULD CAUSE THE COLLECTING OF DRIFT IN THE CHANNEL OR THE DEPRESSION WILL NOT PERMIT NORMAL INSTALLATION. INSTALLATIONS WILL BE MADE ONLY WHERE DIRECTED BY THE ENGINEER.

WHEN A FENCE LINE APPROACHES A DITCH, GULLY OR DEPRESSION, THE LAST POST ON LEVEL GROUND SHALL BE PLACED CLOSE ENOUGH TO THE EDGE OF THE DROP OFF THAT THE FENCE MAY BE STRUNG TO THE POST IN THE DEPRESSION WITHOUT TOUCHING THE GROUND.

IN TERRAIN OF SUCH EXTREME IRREGULARITY THAT MINOR GRADING WILL NOT BE FEASIBLE, THE NORMAL FENCE SHALL CONTINUE ON GRADE AND THE GULLIES OR DEPRESSIONS TREATED BY AUXILIARY FENCES AS SHOWN.

PAYMENT FOR THE TYPE INSTALLATION USED WILL NOT BE MADE DIRECTLY BUT WILL BE INCLUDED IN THE CONTRACT UNIT PRICE BID FOR WIRE FENCE OR CHAIN LINK FENCE.

DATE	REVISION	FILMED
4-20-79	REVISED TOP RAIL & TENSION WIRE	696-4-20-79
10-2-72	REVISED AND REDRAWN	529-10-2-72

ARKANSAS STATE HIGHWAY COMMISSION

WIRE FENCE WATER GAPS

STANDARD DRAWING WF-2

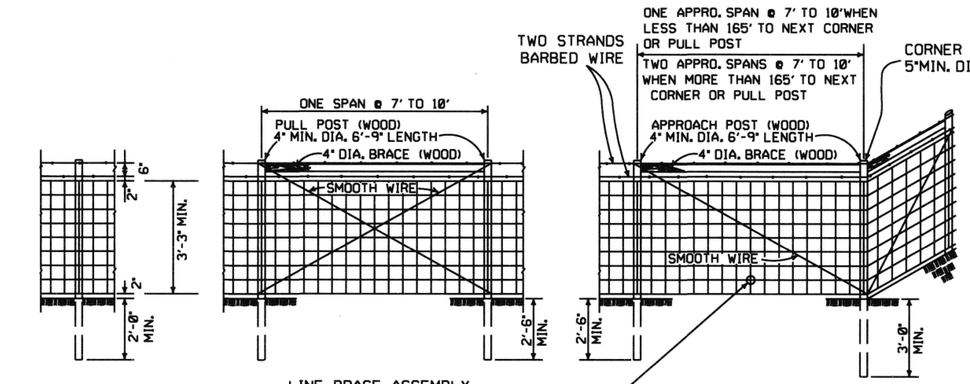

LINE POST
3" MIN. DIA. 6'-3" LENGTH
MAX. SPACING TO BE 10'-0"

LINE BRACE ASSEMBLY
MAX. SPACING TO BE 330'

TYPE C FENCE (WOOD POSTS)

OTHER APPROVED TIES WILL BE PERMITTED

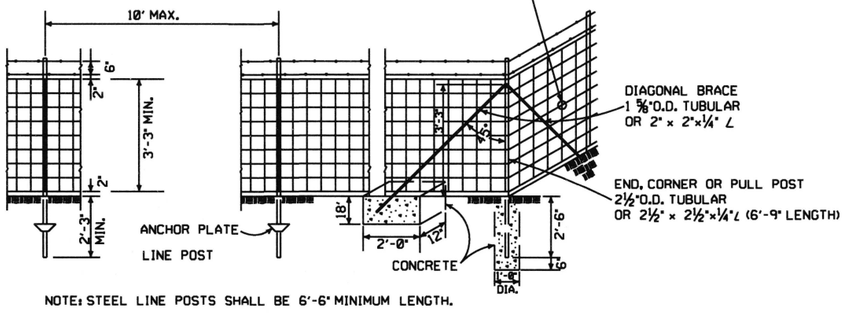

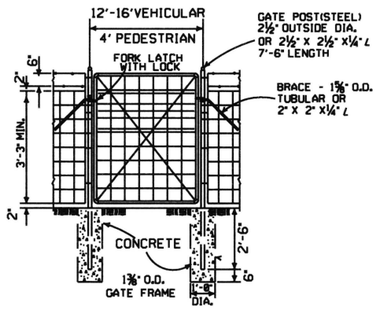

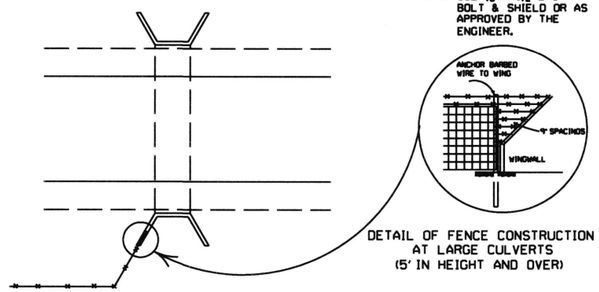

DETAIL OF FENCE CONSTRUCTION AT LARGE CULVERTS (5' IN HEIGHT AND OVER)

NOTE: STEEL LINE POSTS SHALL BE 6'-6" MINIMUM LENGTH.

TYPE C FENCE (STEEL POSTS)

4 STRANDS BARBED WIRE (D)
5 STRANDS BARBED WIRE (D-1)
6 STRANDS BARBED WIRE (D-2)

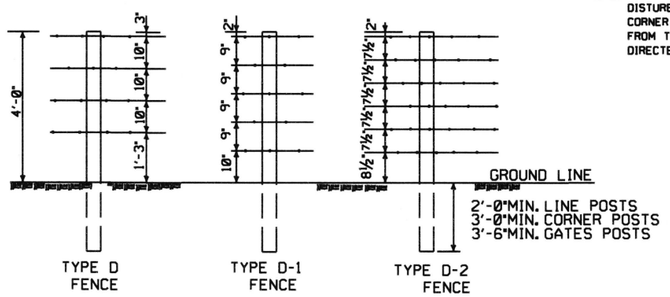

NOTE: SPACING AND SIZE (EXCEPT LENGTH) OF POSTS, APPROACH SPANS, PULL POST ASSEMBLIES, AND CORNER BRACING FOR TYPE D FENCE SHALL CONFORM TO TYPE C FENCE. USE GALVANIZED STAPLES ON WOOD POSTS AND APPROVED FASTENERS ON STEEL POSTS.

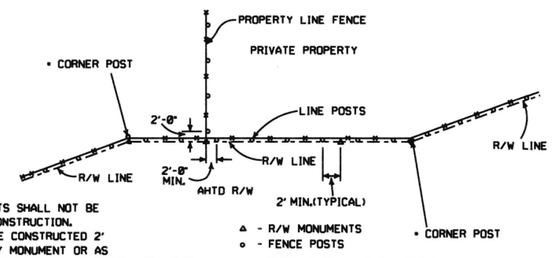

• NOTE: RIGHT-OF-WAY MONUMENTS SHALL NOT BE DISTURBED BY FENCE CONSTRUCTION. CORNER POSTS SHALL BE CONSTRUCTED 2' FROM THE RIGHT-OF-WAY MONUMENT OR AS DIRECTED BY THE ENGINEER.

RIGHT-OF-WAY FENCE LOCATION

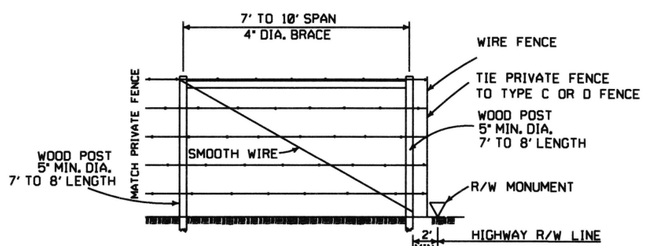

PRIVATE FENCE TERMINAL INSTALLATION
WHERE EXISTING FENCE CONSISTS OF STEEL POSTS, USE END POST ASSEMBLY AS SHOWN IN TYPE C FENCE OR OTHER END POST ASSEMBLY AS APPROVED BY THE ENGINEER.

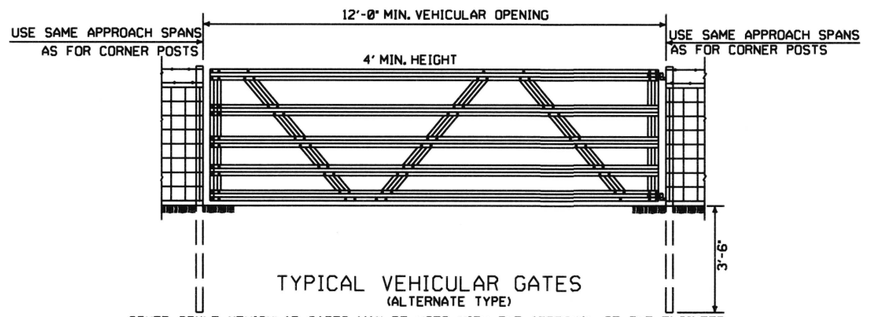

TYPICAL VEHICULAR GATES
(ALTERNATE TYPE)
OTHER STYLE VEHICULAR GATES MAY BE USED WITH THE APPROVAL OF THE ENGINEER. THE METHOD OF SECURING GATE (LATCH AND/OR LOCK)SHALL MEET THE APPROVAL OF THE ENGINEER.

GENERAL NOTES:

STEEL LINE POSTS SHALL BE PAINTED OR GALVANIZED. TUBULAR END, CORNER, PULL, OR DIAGONAL BRACES MUST CONFORM TO THE DIMENSIONS AND WEIGHTS SPECIFIED ON STANDARD DRAWING WF-3 (CHAIN LINK). APPROVED ALTERNATES ARE ACCEPTABLE.
AN ACCEPTABLE TOLERANCE IN LENGTH OF TUBULAR OR WOODEN POSTS SHALL BE - 1" TO +2".
TUBULAR POSTS MUST BE PAINTED OR GALVANIZED.

THE CONTRACTOR SHALL FURNISH AT LEAST 25% OF TIMBER LINE POSTS OF 7 FOOT LENGTHS IN ORDER TO PROVIDE SUFFICIENT SET IN SOFT GROUND OR SMALL DEPRESSIONS.

DRIVEWAY GATES, EITHER SINGLE 12' TO 16' OR DOUBLE 6' TO 8' OPENING OF THE SAME TYPE AS THE PEDESTRIAN GATE, SHALL BE INSTALLED ON THE RIGHT SIDE OF EACH THROUGH LANE ROAD AT LARGE CULVERTS OR BRIDGE CROSS FENCE, FOR USE OF MAINTENANCE EQUIPMENT. LOCATION OF GATES TO BE SHOWN ON PLANS OR AS DESIGNATED BY THE ENGINEER.

AT STREAM CROSSINGS, THE FENCE SHALL NOT BE CONSTRUCTED ACROSS LARGE STREAMS. WHERE CLEARANCE IS SUFFICIENT FROM THE TOP OF THE BANK TO THE BRIDGE STRUCTURE A CROSS CONNECTION SHALL BE CONSTRUCTED BETWEEN THE FENCE ON EACH SIDE OF THE ROAD. WHERE THE CLEARANCE IS NOT SUFFICIENT, THE FENCE SHALL BE TERMINATED WITH CROSS CONNECTIONS AND END POSTS ADJACENT TO BRIDGE ABUTMENTS OR CULVERT WINGWALLS.

SPLICE FOR BARBED WIRE BETWEEN PULL POST ASSEMBLY SHALL BE BY THE "EYE METHOD" AS DESCRIBED AS FOLLOWS: THE ENDS OF THE BARBED WIRE SHALL BE BENT TO FORM A LOOP. THE LOOPS SHALL BE CONNECTED. AFTER THE LOOPS ARE CONNECTED THE ENDS OF THE WIRE SHALL BE WRAPPED AROUND THE PROJECTING WIRES A MINIMUM OF 4 TIMES FOR EACH WIRE LOOP.

SPLICE FOR WOVEN WIRE BETWEEN PULL POST SHALL BE BY THE "WESTERN UNION METHOD" AS DESCRIBED AS FOLLOWS: THE VERTICAL WIRES FOR EACH END OF THE FENCE FABRIC SHALL BE PLACED SIDE BY SIDE AND THE PROJECTING HORIZONTAL WIRES SHALL BE WRAPPED A MINIMUM OF 4 TIMES AROUND THE HORIZONTAL WIRES OF THE FIRST WEB.

STAPLE AT LEAST TOP, BOTTOM AND ALTERNATE WIRES OF WOVEN FABRIC FOR WOOD LINE POSTS.

DATE	REVISION	FILMED
8-22-02	REVISED GENERAL NOTES	
10-18-96	REVISED AASHTO	
11-22-95	REVISED R-O-W LOCATION DETAIL	
6-2-94	REVISED BARB WIRE AND ADDED CORNER POST NOTES	6-2-94
8-5-93	REVISED R/W INSTALLATION FENCE	8-5-93
10-1-92	ADDED STAPLE NOTE	10-1-92
8-15-91	ADDED TYPE D-2 FENCE	8-15-91
11-30-89	DELETED CLASS CONCRETE	11-30-89
7-15-88	ADDED SPLICE NOTE	700-7-15-88
10-30-87	GENERAL REVISIONS	549-10-30-87
11-1-84	MAX. POST SPACING MIN. WIRE GAUGE	507-11-1-84
1-4-83	MIN. DIA. LINE POST	648-1-4-83
3-2-81	TOLERANCE FOR POST LENGTH	722-3-2-81
12-1-72	ADDED D-1 & FENCE INSTALLATION	564-12-1-72
10-2-72	REVISED AND REDRAWN	540-10-2-72

ARKANSAS STATE HIGHWAY COMMISSION

WIRE FENCE TYPE C AND D

STANDARD DRAWING WF-4