DATE REVISED	DATE FILMED	DATE REVISED	DATE FILMED	FED.RD. DIST.NO.	STATE	FED.AID PROJ.NO.	SHEET NO.	TOTAL SHEETS
				6	ARK.			
				JOB NO.		070458	1	125
				(2)	UPRR GRADE SEPARATION (EAST OF LAFAYETTE CO. LINE) (S)			

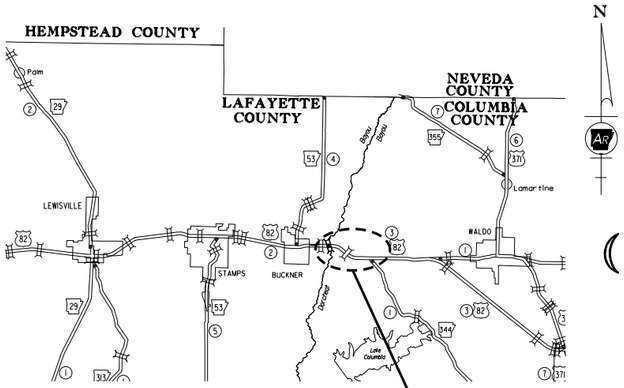

VICINITY MAP

PROJECT LOCATION

ARKANSAS DEPARTMENT OF TRANSPORTATION
CONSTRUCTION PLANS

UPRR GRADE SEPARATION
(EAST OF LAFAYETTE CO. LINE) (S)

COLUMBIA COUNTY
ROUTE 82 SECTION 3
JOB 070458

FAP NO. CPFCDS-NHPP-NHPE-0014(36)

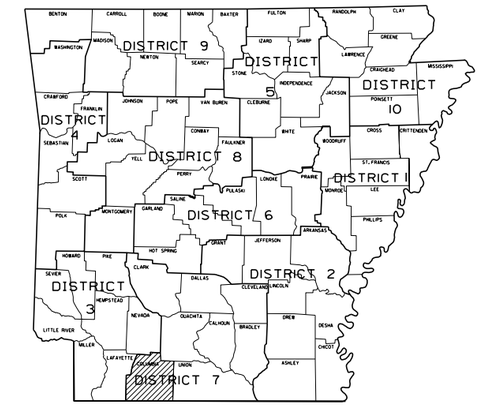

ARKANSAS HIGHWAY DISTRICT 7

NOT TO SCALE

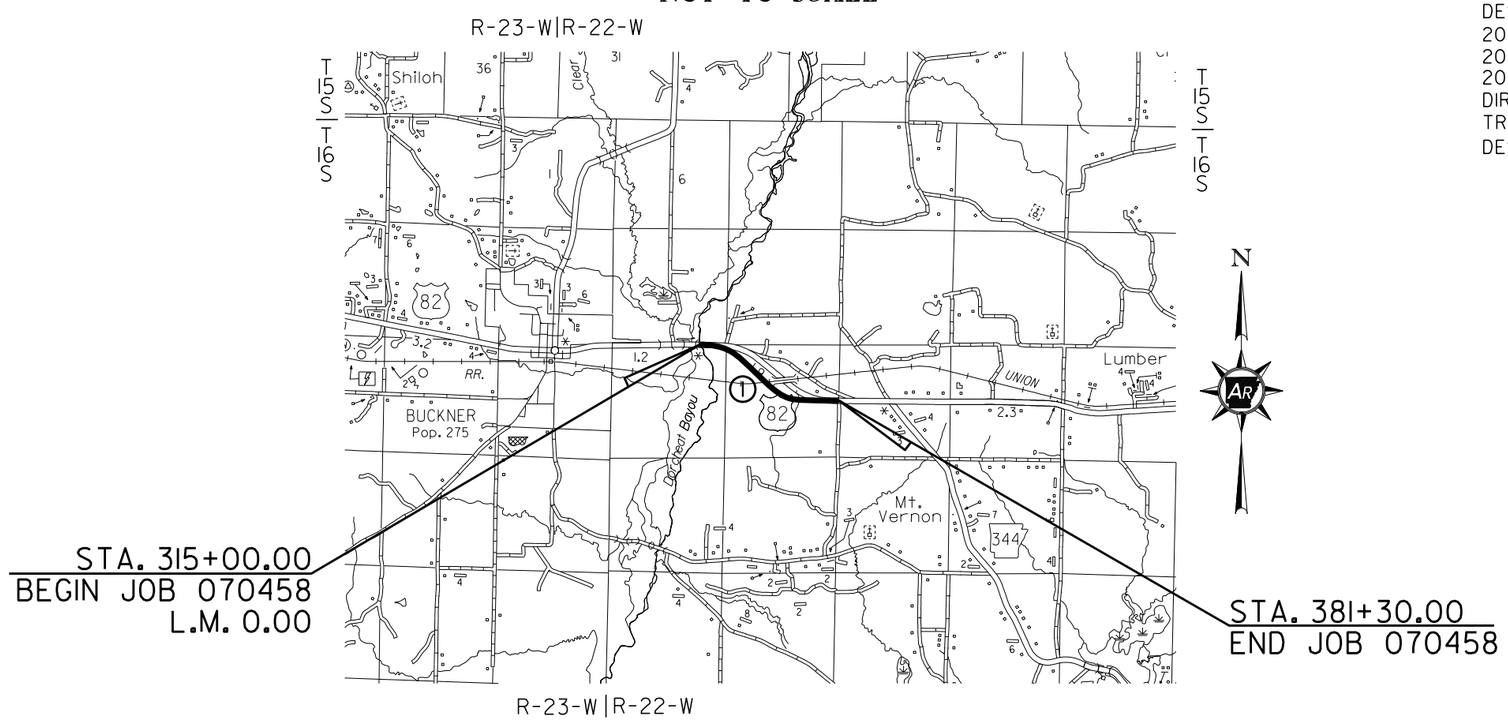

BRIDGE CONSTRUCTION DATA

(1) STA. 342+37.32 BRIDGE END
BRIDGE NO. 07537 OVER UPRR
375'-0" CONTINUOUS PLATE GIRDER UNIT
(125' - 125' - 125')
479'-0" CONTINUOUS PLATE GIRDER UNIT
(112' - 149' - 126' - 92')
75'-0" CLEAR ROADWAY
856'-1 7/8" BRIDGE LENGTH
STA. 350+93.48 BRIDGE END

. DESIGN TRAFFIC DATA .

DESIGN YEAR----------2026
2026 ADT----------5,200
2046 ADT----------5,700
2046 DHV----------627
DIRECTIONAL DISTRIBUTION----------0.60
TRUCKS----------17%
DESIGN SPEED----------60 MPH

CERTIFICATE OF AUTHORIZATION
MICHAEL BAKER INTERNATIONAL INC
No. 1126
ARKANSAS - ENGINEER

STATE OF ARKANSAS
LICENSED PROFESSIONAL ENGINEER
No. 10887
SCOTT P. THORNSBERRY
7-29-2026

	BEGIN OF PROJECT	MID-POINT OF PROJECT	END PROJECT
LATITUDE	N 33°21'32"	N 33°21'14"	N 33°21'05"
LONGITUDE	W 93°24'39"	W 93°24'08"	W 93°23'33"

LENGTH CALCULATED ALONG C.L. HWY. 82				
GROSS LENGTH OF PROJECT	6630.00	FEET	1.256	MILES
NET LENGTH OF ROADWAY	5773.84	FEET	1.094	MILES
NET LENGTH OF BRIDGES	856.16	FEET	0.162	MILES
NET LENGTH OF PROJECT	6630.00	FEET	1.256	MILES

Brendan.Barns 7/29/2026 7:27:22 AM
WORKSPACE: Brendan.Barns
Y:\Projects\ARDOT_16387_070458 UPRR Grade Separation\Design\CIVIL\Drawings\R070458_01_C0_001.dgn
REVISED DATE: $$REVDATE$$

DATE REVISED	DATE FILMED	DATE REVISED	DATE FILMED	FED.RD. DIST.NO.	STATE	FED.AID PROJ.NO.	SHEET NO.	TOTAL SHEETS
9-16-2026				6	ARK.			
				JOB NO.		070458	2	125

(2) INDEX OF SHEETS AND STANDARD DRAWINGS

STATE OF ARKANSAS LICENSED PROFESSIONAL ENGINEER No.10887 SCOTT P. THORNSBERRY

INDEX OF SHEETS

SHEET NO.	TITLE	BRIDGE NO.	DRWG.NO.
1	TITLE SHEET		
2	INDEX OF SHEETS AND STANDARD DRAWINGS		
3	GOVERNING SPECIFICATIONS AND GENERAL NOTES		
4 - 7	TYPICAL SECTIONS OF IMPROVEMENT		
8 - 11	SPECIAL DETAILS		
12 - 21	TEMPORARY EROSION CONTROL DETAILS		
22 - 30	MAINTENANCE OF TRAFFIC DETAILS		
31 - 35	PERMANENT PAVEMENT MARKING DETAILS		
36 - 40	QUANTITIES		
41	SCHEDULE OF BRIDGE QUANTITIES	07537	64251
42	SUMMARY OF QUANTITIES AND REVISIONS		
43 - 51	SURVEY CONTROL DETAILS		
52 - 59	PLAN AND PROFILE SHEETS		
60	LAYOUT OF BRIDGE - HWY. 82 OVER UNION PACIFIC RAILROAD (SHEET 1 OF 3)	07537	64252
61	LAYOUT OF BRIDGE - HWY. 82 OVER UNION PACIFIC RAILROAD (SHEET 2 OF 3)	07537	64253
62	LAYOUT OF BRIDGE - HWY. 82 OVER UNION PACIFIC RAILROAD (SHEET 3 OF 3)	07537	64254
63	EXHIBIT A - LAYOUT OF BRIDGE - HWY. 82 OVER UNION PACIFIC RAILROAD	07537	64255
64	DETAILS OF END BENT 1 (SHEET 1 OF 3)	07537	64256
65	DETAILS OF END BENT 1 (SHEET 2 OF 3)	07537	64257
66	DETAILS OF END BENT 1 (SHEET 3 OF 3)	07537	64258
67	DETAILS OF INTERMEDIATE BENTS 2 & 3 (SHEET 1 OF 2)	07537	64259
68	DETAILS OF INTERMEDIATE BENTS 2 & 3 (SHEET 2 OF 2)	07537	64260
69	DETAILS OF INTERMEDIATE BENT 4 (SHEET 1 OF 2)	07537	64261
70	DETAILS OF INTERMEDIATE BENT 4 (SHEET 2 OF 2)	07537	64262
71	DETAILS OF INTERMEDIATE BENT 5 (SHEET 1 OF 2)	07537	64263
72	DETAILS OF INTERMEDIATE BENT 5 (SHEET 2 OF 2)	07537	64264
73	DETAILS OF INTERMEDIATE BENT 6 (SHEET 1 OF 2)	07537	64265
74	DETAILS OF INTERMEDIATE BENT 6 (SHEET 2 OF 2)	07537	64266
75	DETAILS OF INTERMEDIATE BENT 7 (SHEET 1 OF 2)	07537	64267
76	DETAILS OF INTERMEDIATE BENT 7 (SHEET 2 OF 2)	07537	64268
77	DETAILS OF END BENT 8 (SHEET 1 OF 3)	07537	64269
78	DETAILS OF END BENT 8 (SHEET 2 OF 3)	07537	64270
79	DETAILS OF END BENT 8 (SHEET 3 OF 3)	07537	64271
80	DETAILS OF ELASTOMERIC BEARINGS (SHEET 1 OF 2)	07537	64272
81	DETAILS OF ELASTOMERIC BEARINGS (SHEET 2 OF 2)	07537	64273
82	DETAILS FOR NEOPRENE STRIP SEAL JOINTS	07537	64274
83	DETAILS FOR FINGER JOINT	07537	64275
84	DETAILS OF 375'-0" CONTINUOUS COMPOSITE PLATE GIRDER UNIT (SHEET 1 OF 6)	07537	64276
85	DETAILS OF 375'-0" CONTINUOUS COMPOSITE PLATE GIRDER UNIT (SHEET 2 OF 6)	07537	64277
86	DETAILS OF 375'-0" CONTINUOUS COMPOSITE PLATE GIRDER UNIT (SHEET 3 OF 6)	07537	64278
87	DETAILS OF 375'-0" CONTINUOUS COMPOSITE PLATE GIRDER UNIT (SHEET 4 OF 6)	07537	64279
88	DETAILS OF 375'-0" CONTINUOUS COMPOSITE PLATE GIRDER UNIT (SHEET 5 OF 6)	07537	64280
89	DETAILS OF 375'-0" CONTINUOUS COMPOSITE PLATE GIRDER UNIT (SHEET 6 OF 6)	07537	64281
90	DETAILS OF 479'-0" CONTINUOUS COMPOSITE PLATE GIRDER UNIT (SHEET 1 OF 15)	07537	64282
91	DETAILS OF 479'-0" CONTINUOUS COMPOSITE PLATE GIRDER UNIT (SHEET 2 OF 15)	07537	64283
92	DETAILS OF 479'-0" CONTINUOUS COMPOSITE PLATE GIRDER UNIT (SHEET 3 OF 15)	07537	64284
93	DETAILS OF 479'-0" CONTINUOUS COMPOSITE PLATE GIRDER UNIT (SHEET 4 OF 15)	07537	64285
94	DETAILS OF 479'-0" CONTINUOUS COMPOSITE PLATE GIRDER UNIT (SHEET 5 OF 15)	07537	64286
95	DETAILS OF 479'-0" CONTINUOUS COMPOSITE PLATE GIRDER UNIT (SHEET 6 OF 15)	07537	64287
96	DETAILS OF 479'-0" CONTINUOUS COMPOSITE PLATE GIRDER UNIT (SHEET 7 OF 15)	07537	64288
97	DETAILS OF 479'-0" CONTINUOUS COMPOSITE PLATE GIRDER UNIT (SHEET 8 OF 15)	07537	64289
98	DETAILS OF 479'-0" CONTINUOUS COMPOSITE PLATE GIRDER UNIT (SHEET 9 OF 15)	07537	64290
99	DETAILS OF 479'-0" CONTINUOUS COMPOSITE PLATE GIRDER UNIT (SHEET 10 OF 15)	07537	64291
100	DETAILS OF 479'-0" CONTINUOUS COMPOSITE PLATE GIRDER UNIT (SHEET 11 OF 15)	07537	64292
101	DETAILS OF 479'-0" CONTINUOUS COMPOSITE PLATE GIRDER UNIT (SHEET 12 OF 15)	07537	64293
102	DETAILS OF 479'-0" CONTINUOUS COMPOSITE PLATE GIRDER UNIT (SHEET 13 OF 15)	07537	64294
103	DETAILS OF 479'-0" CONTINUOUS COMPOSITE PLATE GIRDER UNIT (SHEET 14 OF 15)	07537	64295
104	DETAILS OF 479'-0" CONTINUOUS COMPOSITE PLATE GIRDER UNIT (SHEET 15 OF 15)	07537	64296
105 - 125	CROSS SECTIONS		

NOTE: CROSS SECTIONS NOT NORMALLY INCLUDED IN PLANS SOLD TO PROSPECTIVE BIDDERS, BUT MAY BE HAD UPON REQUEST.

BRIDGE STANDARD DRAWINGS

DRWG.NO.	TITLE	DATE
55000	STANDARD DETAILS FOR EMBANKMENT CONSTRUCTION AND BACKFILL AT BRIDGE ENDS	02/27/14
55002	STANDARD DETAILS FOR CONCRETE RIPRAP	02/27/14
55005	STANDARD DETAILS FOR PERMANENT STEEL BRIDGE DECK FORMS FOR STEEL & CONCRETE GIRDER SPANS	03/24/16
55006	STANDARD GENERAL NOTES FOR STEEL BRIDGE STRUCTURES	09/02/15
55007	STANDARD DETAILS FOR STEEL BRIDGE STRUCTURES	02/11/16
55010	STANDARD DETAILS FOR TYPE D BRIDGE NAME PLATE	01/28/25
55018	STANDARD DETAILS FOR CHAIN LINK FENCE	02/11/16
55022	STANDARD DETAILS FOR CONCRETE PILES	03/24/16
55030F	STANDARD DETAILS FOR TYPE F APPROACH GUTTERS	09/07/23
55040F1	STANDARD DETAILS FOR TYPE F APPROACH SLAB	09/07/23
55070	STANDARD DETAILS FOR BRIDGE TRAFFIC RAIL TYPE SSTR36	09/27/22

ROADWAY STANDARD DRAWINGS

DRWG.NO.	TITLE	DATE
CDP-1	CONCRETE DITCH PAVING	12/08/16
DR-2	DETAILS OF DRIVEWAYS & STREET TURNOUTS	05/19/22
FES-1	FLARED END SECTION	10/18/96
FES-2	FLARED END SECTION	10/18/96
FPC-9D	DETAILS OF DROP INLETS	08/22/02
FPC-9M	DETAILS OF DROP INLET (TYPE MO)	08/22/02
GR-6	GUARD RAIL DETAILS	05/19/22
GR-7	GUARD RAIL DETAILS	11/07/19
GR-8	GUARD RAIL DETAILS	11/07/19
GR-9	GUARD RAIL DETAILS	11/07/19
GR-10	GUARD RAIL DETAILS	11/07/19
GR-11	GUARD RAIL DETAILS	11/07/19
GR-12	GUARD RAIL DETAILS	05/14/20
PCC-1	CONCRETE PIPE CULVERT FILL HEIGHTS & BEDDING	02/27/14
PCM-1	METAL PIPE CULVERT FILL HEIGHTS & BEDDING	02/27/14
PCP-1	PLASTIC PIPE CULVERT (HIGH DENSITY POLYETHYLENE)	02/27/14
PCP-2	PLASTIC PIPE CULVERT (PVC F949)	02/27/14
PCP-3	PLASTIC PIPE CULVERT (POLYPROPYLENE)	02/27/20
PM-1	PAVEMENT MARKING DETAILS	04/09/26
RCB-1	REINFORCED CONCRETE BOX CULVERT DETAILS	07/26/12
RCB-2	EXCAVATION PAY LIMITS, BACKFILL, & SOLID SODDING FOR BOX CULVERTS	11/20/03
RCB-3	METHOD OF EXTENDING EXISTING R.C. BOX CULVERTS	10/12/95
SE-2	TABLES AND METHOD OF SUPERELEVATION FOR TWO-WAY TRAFFIC	11/07/19
TC-1	STANDARD TRAFFIC CONTROLS FOR HIGHWAY CONSTRUCTION	08/14/25
TC-1A	STANDARD TRAFFIC CONTROLS FOR HIGHWAY CONSTRUCTION	04/09/26
TC-2	STANDARD TRAFFIC CONTROLS FOR HIGHWAY CONSTRUCTION	08/14/25
TC-3	STANDARD TRAFFIC CONTROLS FOR HIGHWAY CONSTRUCTION	08/14/25
TC-4	STANDARD TRAFFIC CONTROLS FOR HIGHWAY CONSTRUCTION-TEMPORARY PRECAST BARRIER	11/07/19
TC-5	STANDARD TRAFFIC CONTROLS FOR HIGHWAY CONSTRUCTION-TEMPORARY PRECAST BARRIER	11/07/19
TC-6	STANDARD TRAFFIC CONTROLS FOR HIGHWAY CONSTRUCTION	04/09/26
TEC-1	TEMPORARY EROSION CONTROL DEVICES	11/16/17
TEC-2	TEMPORARY EROSION CONTROL DEVICES	06/02/94
TEC-3	TEMPORARY EROSION CONTROL DEVICES	11/03/94
WF-4	WIRE FENCE TYPE C AND D	08/22/02
W-X003-1	DETAILS OF STANDARD WINGS FOR REINFORCED CONCRETE BOX CULVERTS	05/10/66
R-100X-0	DETAILS OF STANDARD BARREL SECTIONS FOR REINFORCED CONCRETE BOX CULVERTS	02/08/63

Scott.Thornsberry 9/16/2026 1:07:33 PM
WORKSPACE: scott.thornsberry
Y:\Projects\ARDOT_16387_070458 UPRR Grade Separation\Design\CIVIL\Drawings\R070458_02_IND_001.dgn
REVISED DATE: $$REVDATE$$

DATE REVISED	DATE FILMED	DATE REVISED	DATE FILMED	FED.RD. DIST.NO.	STATE	FED.AID PROJ.NO.	SHEET NO.	TOTAL SHEETS
				6	ARK.			
				JOB NO.		070458	3	125

(2) GOVERNING SPECIFICATIONS AND GENERAL NOTES

GOVERNING SPECIFICATIONS

ARKANSAS STATE HIGHWAY COMMISSION STANDARD SPECIFICATIONS FOR HIGHWAY CONSTRUCTION, EDITION OF 2014, AND THE FOLLOWING SPECIAL PROVISIONS AND SUPPLEMENTAL SPECIFICATIONS:

NUMBER	TITLE
ERRATA	ERRATA FOR THE BOOK OF STANDARD SPECIFICATIONS
FHWA-1273	REQUIRED CONTRACT PROVISIONS FEDERAL-AID CONSTRUCTION CONTRACTS
FHWA-1273	SUPPLEMENT - EQUAL EMPLOYMENT OPPORTUNITY - NOTICE TO CONTRACTORS
FHWA-1273	SUPPLEMENT - SPECIFIC EQUAL EMPLOYMENT OPPORTUNITY RESPONSIBILITIES (23 U.S.C. 140)
FHWA-1273	SUPPLEMENT - EQUAL EMPLOYMENT OPPORTUNITY - GOALS AND TIMETABLES
FHWA-1273	SUPPLEMENT - EQUAL EMPLOYMENT OPPORTUNITY - FEDERAL STANDARDS
FHWA-1273	SUPPLEMENT - POSTERS AND NOTICES REQUIRED FOR FEDERAL-AID PROJECTS
FHWA-1273	SUPPLEMENT - WAGE RATE DETERMINATION
FHWA-1273	SUPPLEMENT - TRAINING PROGRAM - JOB 070458
100-3	CONTRACTOR'S LICENSE
100-4	DEPARTMENT NAME CHANGE
102-2	ISSUANCE OF PROPOSALS
102-3	PREQUALIFICATION OF BIDDERS
103-2	CONTACT INFROMATION FOR MOTORIST DAMAGE CLAIMS
105-4	MAINTENANCE DURING CONSTRUCTION
107-2	RESTRAINING CONDITIONS
108-1	LIQUIDATED DAMAGES
108-2	WORK ALLOWED PRIOR TO ISSUANCE OF WORK ORDER
110-1	PROTECTION OF WATER QUALITY AND WETLANDS
210-1	UNCLASSIFIED EXCAVATION
303-1	AGGREGATE BASE COURSE
306-1	QUALITY CONTROL AND ACCEPTANCE
307-2	CEMENT TREATED BASE COURSE
308-2	CEMENT STABILIZED CRUSHED STONE BASE COURSE
400-1	TACK COATS
400-4	DESIGN AND QUALITY CONTROL OF ASPHALT MIXTURES
400-5	PERCENT AIR VOIDS FOR ACHM MIX DESIGNS
400-6	LIQUID ANTI-STRIP ADDITIVE
400-7	TRACKLESS TACK
404-3	DESIGN OF ASPHALT MIXTURES
409-2	ASPHALT LABORATORY FACILITY
410-1	CONSTRUCTION REQUIREMENTS AND ACCEPTANCE OF ASPHALT CONCRETE PLANT MIX COURSES
410-2	DEVICES FOR MEASURING DENSITY FOR ROLLING PATTERNS
410-4	EVALUATION OF ACHM SUBLOT REPLACEMENT MATERIAL
416-1	RECYCLED ASPHALT PAVEMENT
501-3	PORTLAND CEMENT CONCRETE PAVEMENT
600-2	INCIDENTAL CONSTRUCTION
603-1	LANE CLOSURE NOTIFICATION
604-1	RETROREFLECTIVE SHEETING FOR TRAFFIC CONTROL DEVICES IN CONSTRUCTION ZONES
604-3	TRAFFIC CONTROL DEVICES IN CONSTRUCTION ZONES (MASH)
605-1	CONCRETE DITCH PAVING
606-1	PIPE CULVERTS FOR SIDE DRAINS
617-1	GUARDRAIL TERMINAL (TYPE 2)
617-2	GUARDRAIL DELINEATORS
619-1	FENCES
620-1	MULCH COVER
621-1	FILTER SOCKS
800-1	STRUCTURES
802-3	CONCRETE FOR STRUCTURES
802-5	CONCRETE FOR STRUCTURES
804-2	REINFORCING STEEL FOR STRUCTURES
807-2	STEEL STRUCTURES
808-1	INSTALLATION OF ELASTOMERIC BEARINGS
808-2	ELASTOMERIC BEARINGS
JOB 070458	BIDDING REQUIREMENTS AND CONDITIONS
JOB 070458	BROADBAND INTERNET SERVICE FOR FIELD OFFICE
JOB 070458	BUY AMERICA - CONSTRUCTION MATERIALS
JOB 070458	CARGO PREFERENCE ACT REQUIREMENTS
JOB 070458	CLASS C FLY ASH IN PORTLAND CEMENT CONCRETE PAVEMENT AND CLASS S(AE) CONCRETE
JOB 070458	COLD MILLING – COUNTY PROPERTY
JOB 070458	COMPACTED EMBANKMENT
JOB 070458	CONCRETE BRIDGE DECK CURING AND SURFACE TREATMENT RESTRICTIONS
JOB 070458	CONSTRUCTION IN SPECIAL FLOOD HAZARD AREAS
JOB 070458	CONSTRUCTION PROJECT INFORMATION SIGN
JOB 070458	DELAY IN RIGHT OF WAY OCCUPANCY
JOB 070458	DESIGN AND QUALITY CONTROL OF ASPHALT MIXTURES
JOB 070458	DIRECT TENSION INDICATORS FOR HIGH STRENGTH BOLT ASSEMBLIES
JOB 070458	DOCUMENTATION OF PAYMENTS MADE - PROMPT PAYMENT (SIGNET)
JOB 070458	INSURANCE, CONSTRUCTION, AND FLAGGING REQUIREMENTS ON RAILROAD PROPERTY (UPRR)
JOB 070458	LIQUIDATED DAMAGES PROCEDURE FOR BID LETTINGS
JOB 070458	LONGITUDINAL JOINT DENSITIES FOR ACHM SURFACE COURSES
JOB 070458	MANDATORY ELECTRONIC CONTRACT
JOB 070458	MANDATORY ELECTRONIC DOCUMENT SUBMITTAL
JOB 070458	NESTING SITES OF MIGRATORY BIRDS
JOB 070458	PARTNERING REQUIREMENTS
JOB 070458	PLASTIC PIPE
JOB 070458	PRICE ADJUSTMENT FOR ASPHALT BINDER
JOB 070458	PRICE ADJUSTMENT FOR FUEL
JOB 070458	PRIME CONTRACTOR PERFORMANCE EVALUATION
JOB 070458	PROHIBITION OF CERTAIN TELECOMMUNICATIONS AND VIDEO SURVEILLANCE SERVICES OR EQUIPMENT
JOB 070458	SHORING FOR CULVERTS
JOB 070458	SOIL STABILIZATION
JOB 070458	STORM WATER POLLUTION PREVENTION PLAN
JOB 070458	SUBMISSION OF ASPHALT CONCRETE HOT MIX ACCEPTANCE TEST RESULTS
JOB 070458	UTILITY ADJUSTMENTS
JOB 070458	VALUE ENGINEERING
JOB 070458	VENDOR REGISTRATION REQUIREMENT
JOB 070458	WARM MIX ASPHALT
JOB 070458	WATER POLLUTION CONTROL
JOB 070458	WELLHEAD PROTECTION

STATE OF ARKANSAS
LICENSED PROFESSIONAL ENGINEER
No.10887
SCOTT P. THORNSBERRY
7-31-2026

GENERAL NOTES

1. GRADE LINE DENOTES FINISHED GRADE WHERE SHOWN ON PLANS.
2. ALL PIPE LINES, POWER, TELEPHONE, AND TELEGRAPH LINES TO BE MOVED OR LOWERED BY THE RESPECTIVE OWNERS AS PER AGREEMENT WITH SUCH OWNERS.
3. ANY EQUIPMENT OR APPURTENANCE THAT INTERFERES WITH THE PROPOSED CONSTRUCTION AND WHICH MAY BE THE PROPERTY OF UTILITY SERVICE ORGANIZATIONS SHALL BE MOVED BY THE OWNERS UNLESS OTHERWISE PROVIDED.
4. THE CONTRACTOR SHALL BE RESPONSIBLE FOR MAINTAINING U. S. MAILBOXES WITHIN THE PROJECT LIMITS IN SUCH A MANNER THAT THE PUBLIC MAY RECEIVE CONTINUED MAIL SERVICE. PAYMENT WILL BE CONSIDERED INCLUDED IN THE PRICE BID FOR THE VARIOUS BID ITEMS.
5. ALL LAND MONUMENTS LOCATED WITHIN THE CONSTRUCTION AREA SHALL BE PROTECTED IN ACCORDANCE WITH SECTION 107.12 OF THE STANDARD SPECIFICATIONS.
6. ALL TREES THAT DO NOT DIRECTLY INTERFERE WITH THE PROPOSED CONSTRUCTION SHALL BE SPARED AS DIRECTED BY THE ENGINEER. CARE AND DISCRETION SHALL BE USED TO INSURE THAT ALL TREES NOT TO BE REMOVED SHALL BE HARMED AS LITTLE AS POSSIBLE DURING THE CONSTRUCTION OPERATIONS.
7. THE CONTRACTOR SHALL BE RESPONSIBLE FOR PROVIDING A FENCE TO CONTROL LIVESTOCK IN AREAS WHERE PASTURES ARE SEVERED. WIRE FENCE MAY BE CONSTRUCTED INITIALLY, OR IN LIEU THEREOF, THE CONTRACTOR, AT HIS OWN EXPENSE, MAY ELECT TO PROVIDE TEMPORARY FENCING SUITABLE TO CONTAIN LIVESTOCK.
8. THE SEQUENCE AS SHOWN ON THE MAINTENANCE OF TRAFFIC PLANS IS A GENERAL OUTLINE FOR THE CONSTRUCTION OF THIS PROJECT, AND IN NO WAY IS IT INTENDED TO COVER EVERY ITEM IN THE PROJECT. ITEMS NOT CRITICAL TO THE CONSTRUCTION SEQUENCE MAY BE CONSTRUCTED IN ANY STAGE AS APPROVED BY THE RESIDENT ENGINEER.
9. ALL FLEXIBLE BASE AND ASPHALTIC PAVEMENTS REMOVED SHALL BE PAID FOR UNDER THE ITEM NO. 210 - UNCLASSIFIED EXCAVATION.
10. THE EXISTING ASPHALT PAVEMENT TO BE REMOVED FROM THE REMAINING PAVEMENT SHALL BE SEPARATED BY SAWING ALONG A NEAT LINE. AFTER SAWING, THE PAVEMENT TO BE REMOVED SHALL BE CAREFULLY REMOVED IN A MANNER THAT WILL NOT DAMAGE THE PAVEMENT THAT IS TO REMAIN. ANY DAMAGE OF THE ASPHALT PAVEMENT THAT IS TO REMAIN IN PLACE SHALL BE REPAIRED AT THE CONTRACTOR'S EXPENSE.
11. THIS PROJECT IS COVERED UNDER A SECTION 404 NATIONWIDE 14 PERMIT. REFER TO SECTION 110 OF THE STANDARD SPECIFICATIONS, EDITION OF 2014, FOR PERMIT REQUIREMENTS.

Brendan.Barns 7/31/2026 1:33:34 PM
WORKSPACE: Brendan.Barns
Y:\Projects\ARDOT_16387_070458 UPRR Grade Separation\Design\CIVIL\Drawings\R070458_03_GN_001.dgn
REVISED DATE: $$REVDATE$$

DATE REVISED	DATE FILMED	DATE REVISED	DATE FILMED	FED.RD. DIST.NO.	STATE	FED.AID PROJ.NO.	SHEET NO.	TOTAL SHEETS
				6	ARK.			
				JOB NO.		070458	4	125

(2) TYPICAL SECTIONS OF IMPROVEMENT

STATE OF ARKANSAS
LICENSED PROFESSIONAL ENGINEER
No.10887
SCOTT P. THORNSBERRY
7-29-2026

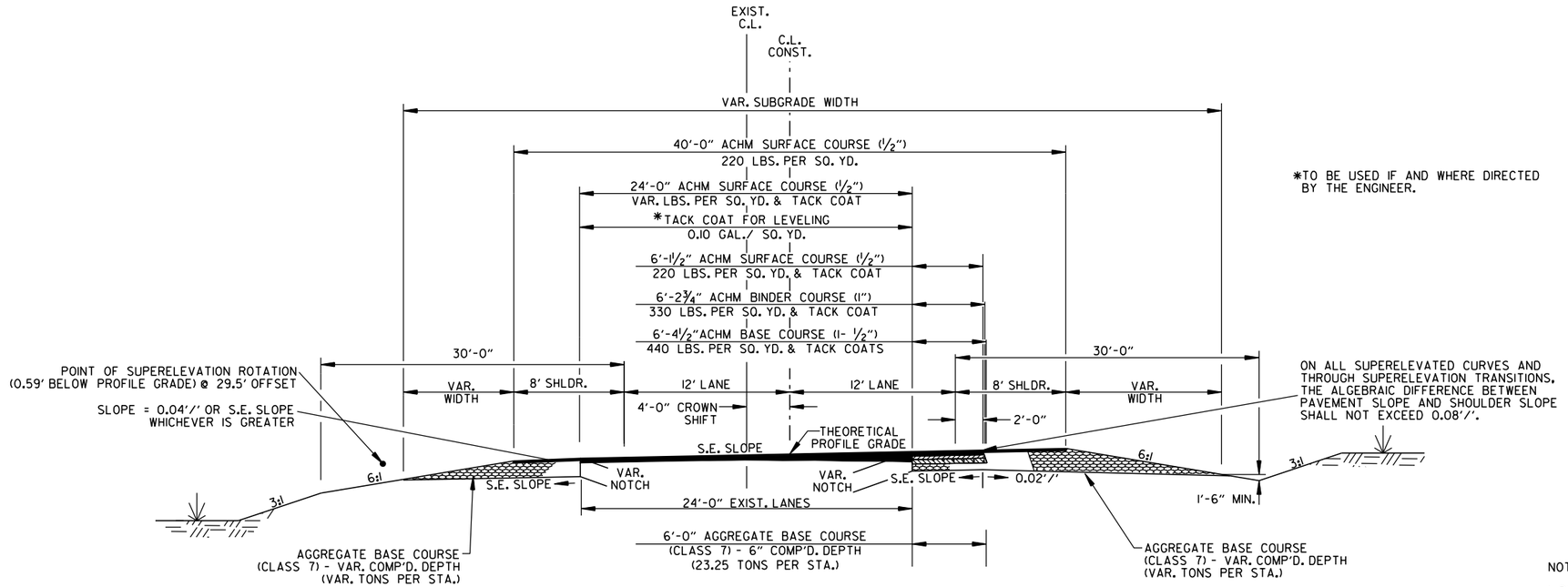

*TO BE USED IF AND WHERE DIRECTED BY THE ENGINEER.

ON ALL SUPERELEVATED CURVES AND THROUGH SUPERELEVATION TRANSITIONS, THE ALGEBRAIC DIFFERENCE BETWEEN PAVEMENT SLOPE AND SHOULDER SLOPE SHALL NOT EXCEED 0.08'/'.

SUPERELEVATION NOTCH AND WIDENING

STA. 315+18.60 TO STA. 326+00.00
TRANSITION FROM TANGENT NOTCH AND WIDENING TO SUPERELEVATION FULL DEPTH SECTION.

NOTES:

1. REFER TO CROSS SECTIONS FOR DEVIATION FROM THE NORMAL SLOPES. NO CHANGES SHALL BE MADE FROM THE PLANNED SLOPES WITHOUT THE APPROVAL OF THE ENGINEER.

2. THE THICKNESS OF AGGREGATE BASE COURSE SHALL BE WITHIN PLUS OR MINUS ONE INCH OF THE PLAN THICKNESS SHOWN. THE CONTRACTOR WILL CORRECT ANY DEFICIENT THICKNESS THAT DOES NOT MEET TOLERANCE INDICATED. PAYMENT WILL NOT BE MADE FOR MATERIAL PLACED IN EXCESS OF THE TOLERANCE INDICATED.

3. THE FINAL 2" OF SURFACE COURSE IS TO BE PLACED AFTER ALL OTHER COURSES HAVE BEEN LAID. LONGITUDINAL JOINTS SHALL BE AT LANE LINES.

4. ASPHALT FOR LEVELING OF EXISTING PAVEMENT SHALL BE PLACED ONLY IF AND WHERE DIRECTED BY THE ENGINEER. CALCULATIONS FOR THE AMOUNT OF LEVELING AND LEVELING OPERATIONS SHALL BE PERFORMED BEFORE CONSTRUCTING NOTCH AND WIDENING. CALCULATIONS WILL NOT BE PAID FOR DIRECTLY, BUT WILL BE CONSIDERED INCLUDED IN THE VARIOUS PAY ITEMS.

5. BLEEDER DITCHES - PRIOR TO AND DURING PLACEMENT OF PAVEMENT AT THE NOTCH, THE CONTRACTOR SHALL PROVIDE POSITIVE DRAINAGE AT ALL TIMES. THE METHOD(S) AND SPACING USED SHALL BE APPROVED BY THE ENGINEER. PAYMENT FOR THIS WORK SHALL BE CONSIDERED INCLUDED IN THE PRICE BID FOR THE VARIOUS CONTRACT ITEMS.

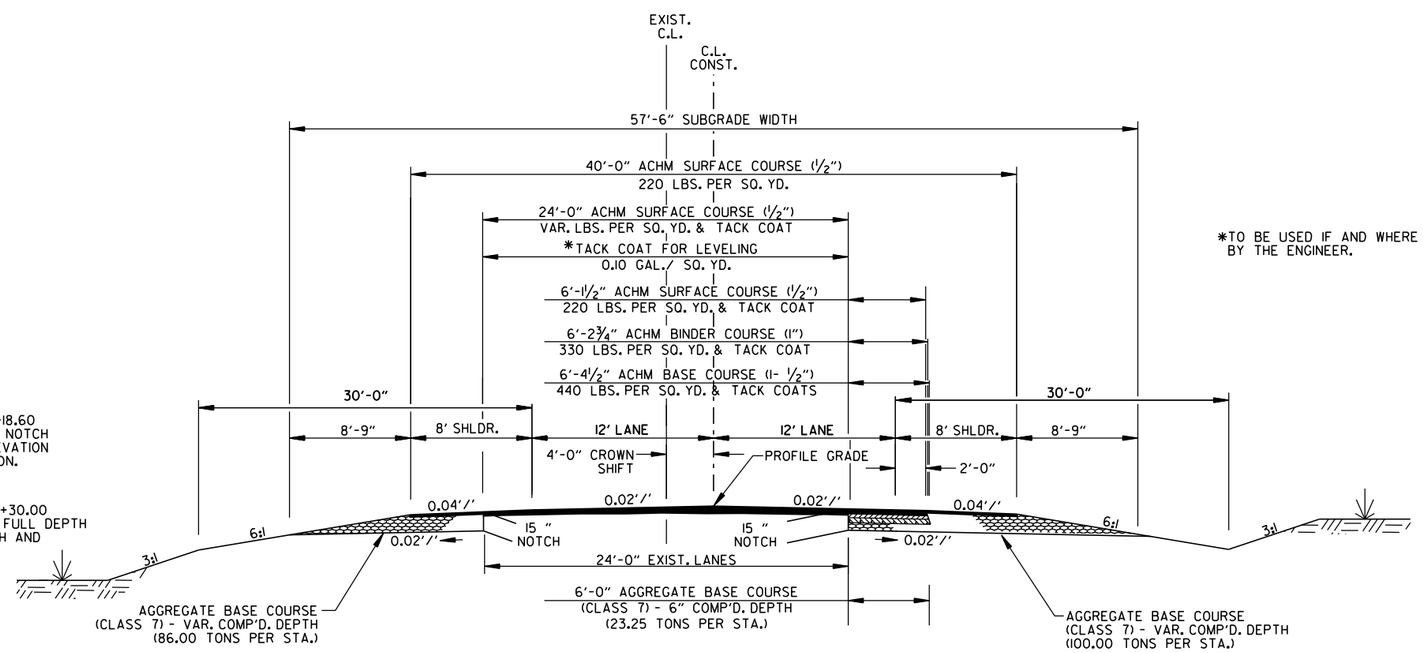

*TO BE USED IF AND WHERE DIRECTED BY THE ENGINEER.

STA. 315+15.00 TO STA. 315+18.60
TRANSITION FROM TANGENT NOTCH AND WIDENING TO SUPERELEVATION NOTCH AND WIDENING SECTION.

STA. 375+58.22 TO STA. 381+30.00
TRANSITION FROM TANGENT FULL DEPTH SECTION TO TANGENT NOTCH AND WIDENING SECTION.

TANGENT NOTCH AND WIDENING

STA. 315+00.00 TO STA. 326+00.00
STA. 375+58.22 TO STA. 381+30.00

TYPICAL SECTIONS OF IMPROVEMENT

BrendanBarns 7/29/2026 7:50:53 AM
WORKSPACE: BrendanBarns
Y:\Projects\ARDOT_I6938T_070458 UPRR Grade Separation\Design\CIVIL\Drawings\R070458_04_TS_001.dgn
REVISED DATE: $$REVDATE$$

DATE REVISED	DATE FILMED	DATE REVISED	DATE FILMED	FED.RD. DIST.NO.	STATE	FED.AID PROJ.NO.	SHEET NO.	TOTAL SHEETS
				6	ARK.			
				JOB NO.		070458	5	125

(2) TYPICAL SECTIONS OF IMPROVEMENT

STATE OF ARKANSAS
LICENSED PROFESSIONAL ENGINEER
No.10887
SCOTT P. THORNSBERRY
2-2-2024

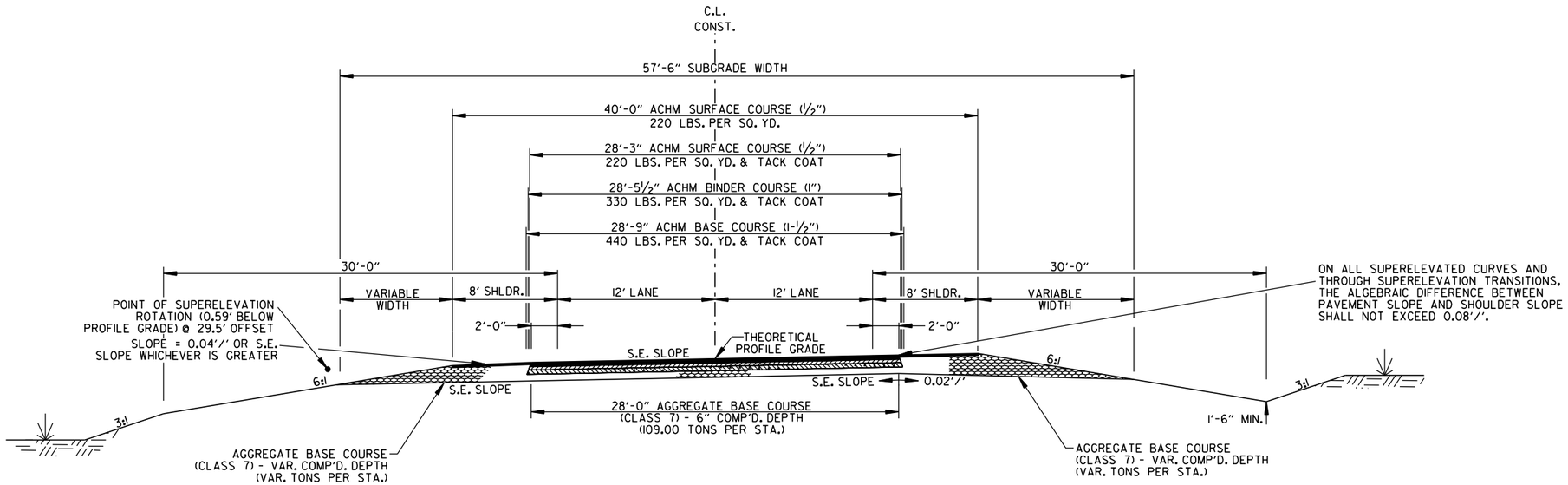

SUPERELEVATION SECTION

STA. 353+71.65 TO STA. 370+52.33
TRANSITION FROM 5 LANE SUPERELEVATION SECTION TO 2 LANE SUPERELEVATION SECTION

NOTES:

1. REFER TO CROSS SECTIONS FOR DEVIATION FROM THE NORMAL SLOPES. NO CHANGES SHALL BE MADE FROM THE PLANNED SLOPES WITHOUT THE APPROVAL OF THE ENGINEER.

2. THE THICKNESS OF AGGREGATE BASE COURSE SHALL BE WITHIN PLUS OR MINUS ONE INCH OF THE PLAN THICKNESS SHOWN. THE CONTRACTOR WILL CORRECT ANY DEFICIENT THICKNESS THAT DOES NOT MEET TOLERANCE INDICATED. PAYMENT WILL NOT BE MADE FOR MATERIAL PLACED IN EXCESS OF THE TOLERANCE INDICATED.

3. THE FINAL 2" OF SURFACE COURSE IS TO BE PLACED AFTER ALL OTHER COURSES HAVE BEEN LAID. LONGITUDINAL JOINTS SHALL BE AT LANE LINES.

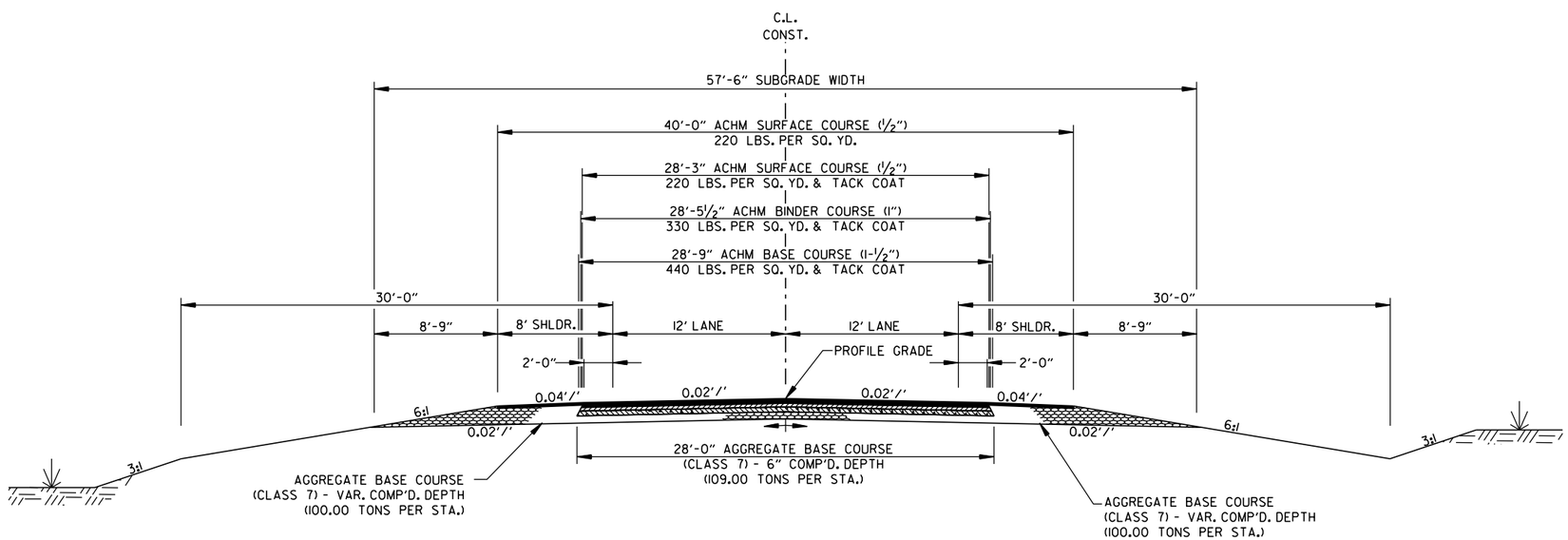

TANGENT SECTION

STA. 370+52.33 TO STA. 375+58.22
TRANSITION FROM SUPERELEVATION SECTION TO TANGENT SECTION

STA. 326+00.00 TO STA. 339+61.15
STA. 353+71.65 TO STA. 375+58.22

Scott.Thornsberry@2/2/2024 4:45:56 PM
WORKSPACE: ARDOT
Y:\Projects\ARDOT_16387_070458 UPRR Grade Separation\Design\CIVIL\Drawings\R070458.04_TS_001.dgn
REVISED DATE: $$REVDATE$$

TYPICAL SECTIONS OF IMPROVEMENT

DATE REVISED	DATE FILMED	DATE REVISED	DATE FILMED	FED.RD. DIST.NO.	STATE	FED.AID PROJ.NO.	SHEET NO.	TOTAL SHEETS
				6	ARK.			
				JOB NO.		070458	6	125

(2) TYPICAL SECTIONS OF IMPROVEMENT

STATE OF ARKANSAS
LICENSED PROFESSIONAL ENGINEER
No.10887
SCOTT P. THORNSBERRY
2-2-2024

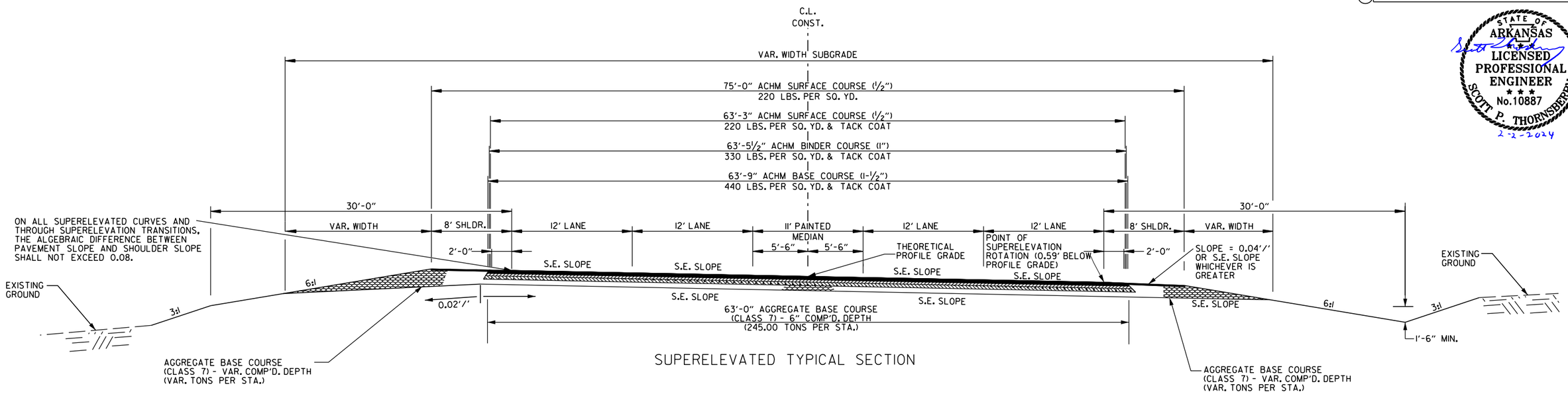

SUPERELEVATED TYPICAL SECTION

STA. 326+00.00 TO STA. 339+60.55
TRANSITION FROM 2 LANE SUPERELEVATION SECTION TO 5 LANE SUPERELEVATION SECTION

NOTES:

1. REFER TO CROSS SECTIONS FOR DEVIATION FROM THE NORMAL SLOPES. NO CHANGES SHALL BE MADE FROM THE PLANNED SLOPES WITHOUT THE APPROVAL OF THE ENGINEER.

2. THE THICKNESS OF AGGREGATE BASE COURSE SHALL BE WITHIN PLUS OR MINUS ONE INCH OF THE PLAN THICKNESS SHOWN. THE CONTRACTOR WILL CORRECT ANY DEFICIENT THICKNESS THAT DOES NOT MEET TOLERANCE INDICATED. PAYMENT WILL NOT BE MADE FOR MATERIAL PLACED IN EXCESS OF THE TOLERANCE INDICATED.

3. THE FINAL 2" OF SURFACE COURSE IS TO BE PLACED AFTER ALL OTHER COURSES HAVE BEEN LAID. LONGITUDINAL JOINTS SHALL BE AT LANE LINES.

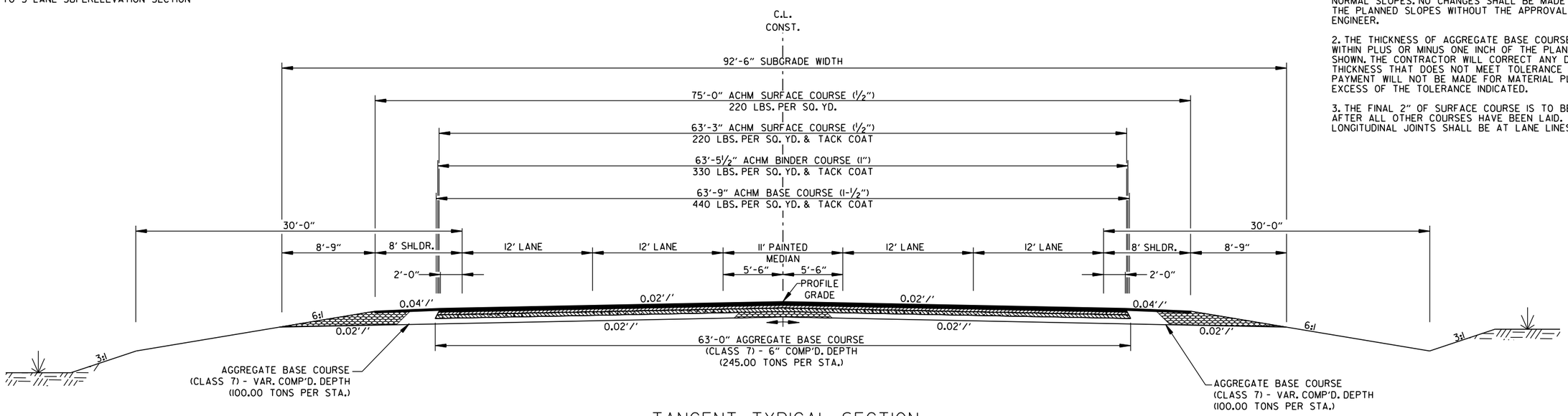

TANGENT TYPICAL SECTION

STA. 339+60.55 TO STA. 339+61.15
TRANSITION FROM SUPERELEVATION SECTION TO TANGENT SECTION

STA. 339+61.15 TO STA. 342+00.82
STA. 351+29.98 TO STA. 353+71.65

Scott.Thornsberry@2/2/2024 4:45:57 PM
WORKSPACE: ARDOT
Y:\Projects\ARDOT_169387_070458 UPRR Grade Separation\Design\CIVIL\Drawings\R070458_04_TS_001.dgn
REVISED DATE: $$REVDATE$$

TYPICAL SECTIONS OF IMPROVEMENT

DATE REVISED	DATE FILMED	DATE REVISED	DATE FILMED

FED.RD. DIST.NO.	STATE	FED.AID PROJ.NO.	SHEET NO.	TOTAL SHEETS
6	ARK.			
JOB NO.		070458	7	125

(2) TYPICAL SECTIONS OF IMPROVEMENT

STATE OF ARKANSAS
LICENSED PROFESSIONAL ENGINEER
No.10887
SCOTT P. THORNSBERRY
2-2-2024

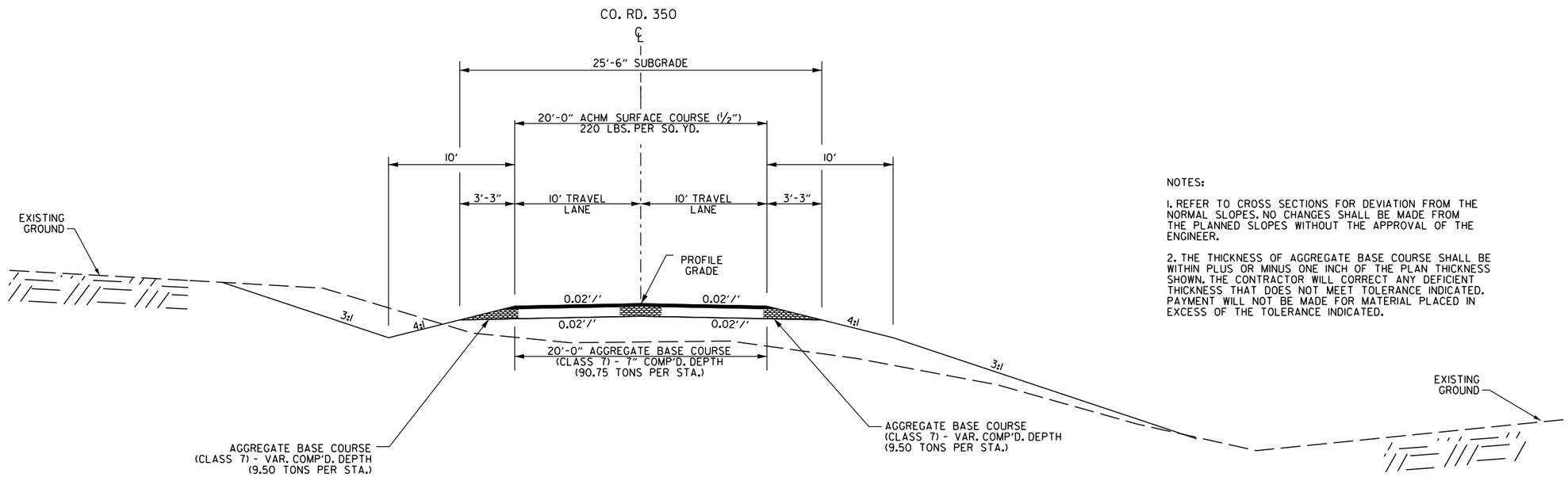

CO. RD. 350 TYPICAL SECTION

STA. 10+12.00 TO STA. 13+38.83

NOTES:

1. REFER TO CROSS SECTIONS FOR DEVIATION FROM THE NORMAL SLOPES. NO CHANGES SHALL BE MADE FROM THE PLANNED SLOPES WITHOUT THE APPROVAL OF THE ENGINEER.

2. THE THICKNESS OF AGGREGATE BASE COURSE SHALL BE WITHIN PLUS OR MINUS ONE INCH OF THE PLAN THICKNESS SHOWN. THE CONTRACTOR WILL CORRECT ANY DEFICIENT THICKNESS THAT DOES NOT MEET TOLERANCE INDICATED. PAYMENT WILL NOT BE MADE FOR MATERIAL PLACED IN EXCESS OF THE TOLERANCE INDICATED.

Scott.Thornsberry 2/2/2024 4:45:58 PM
WORKSPACE: ARDOT
Y:\Projects\ARDOT_16938T_070458 UPRR Grade Separation\Design\CIVIL\Drawings\R070458_04_TS_001.dgn
REVISED DATE: $$REVDATE$$

DATE REVISED	DATE FILMED	DATE REVISED	DATE FILMED	FED.RD. DIST.NO.	STATE	FED.AID PROJ.NO.	SHEET NO.	TOTAL SHEETS
				6	ARK.			
				JOB NO.		070458	8	125

(2) SPECIAL DETAILS

STATE OF ARKANSAS
LICENSED PROFESSIONAL ENGINEER
No.10887
SCOTT P. THORNSBERRY
2-2-2024

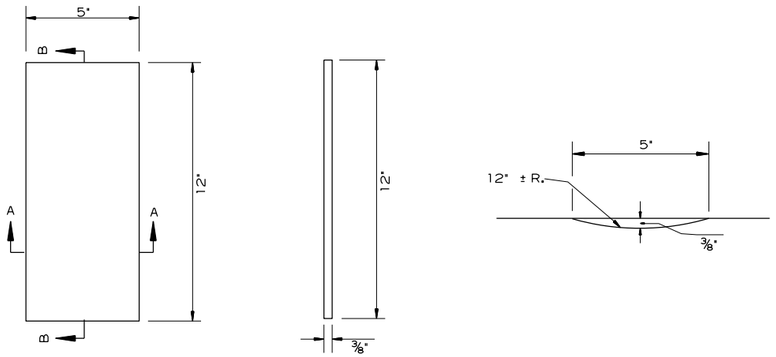

PLAN SECTION B-B SECTION A-A

DETAILS OF RUMBLE STRIPS

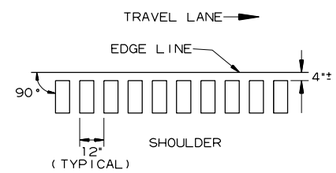

LOCATION PLAN OF RUMBLE STRIPS
LEFT OR RIGHT SHOULDER

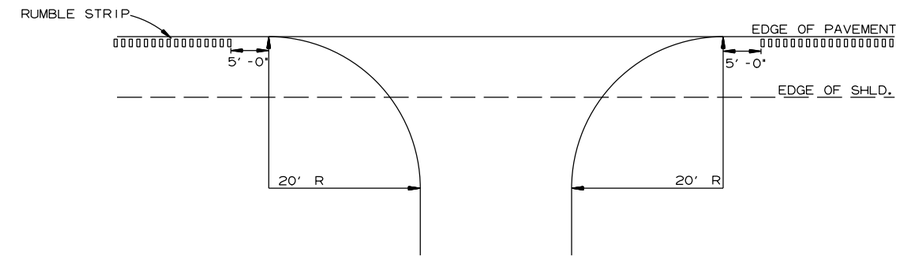

DETAIL FOR RUMBLE STRIP GAP
AT DRIVEWAY TURNOUTS

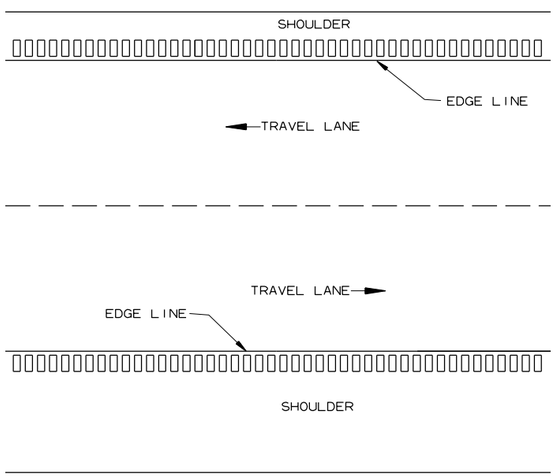

PLAN VIEW

GENERAL NOTES

1. RUMBLE STRIPS SHALL NOT BE INSTALLED ON CURB SECTIONS, BRIDGE DECKS, APPROACH SLABS, INTERSECTING STREETS OR ROADWAYS, RESIDENTIAL OR COMMERCIAL DRIVEWAYS OR ACROSS TRANSVERSE JOINTS OF CONCRETE SHOULDERS.
2. RUMBLE STRIPS SHALL NOT BE INSTALLED ON A PAVED SHOULDER THAT IS USED AS A DECELERATION LANE FOR THE LENGTH DEEMED APPROPRIATE BY THE ENGINEER.
3. THE 4" OFFSET FROM THE EDGE LINE MAY BE INCREASED TO AVOID LONGITUDINAL JOINTS. IN ALL CASES, THE LATERAL DEVIATION FROM THE PLANNED OFFSET SHOULD BE KEPT TO A MINIMUM.
4. RUMBLE STRIPS SHALL BE MEASURED BY THE LINEAR FOOT LONGITUDINALLY ALONG THE SHOULDER. PAYMENT SHALL ONLY INCLUDE THAT PORTION OF THE SHOULDER ON WHICH RUMBLE STRIPS HAVE BEEN CONSTRUCTED. NO MEASUREMENT OR PAYMENT WILL BE MADE FOR GAPS, DRIVEWAYS, TURNOUTS, OR OTHER PUBLIC ROAD INTERSECTIONS WHERE RUMBLE STRIPS HAVE NOT BEEN CONSTRUCTED.
5. THE 3/8" DEPTH SHALL GENERALLY APPLY FOR THE ENTIRE 12" LENGTH. SOME VARIATION TO SUIT SHOULDER SLOPE BREAKS MAY BE NECESSARY.

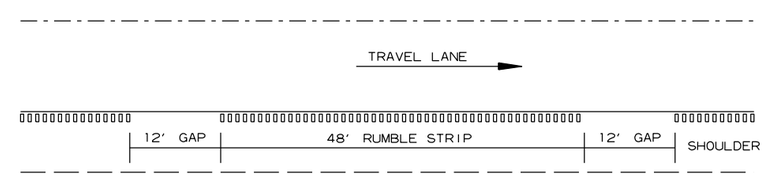

NOTE: GAP PATTERN SHALL BE ADJUSTED BY THE ENGINEER IN THE FIELD ALLOWING FOR DRIVEWAYS TO SERVE AS THE GAP.

DETAIL FOR GAP PATTERN RUMBLE STRIP

Scott.Thornsberry 2/2/2024 4:45:59 PM
WORKSPACE: ARDOT
Y:\Projects\ARDOT_I6938T_070458 UPRR Grade Separation\Design\CIVL\Drawings\R070458_05_SD_001.dgn
REVISED DATE: $$REVDATE$$

DATE REVISED	DATE FILMED	DATE REVISED	DATE FILMED	FED.RD. DIST.NO.	STATE	FED.AID PROJ.NO.	SHEET NO.	TOTAL SHEETS
				6	ARK.			
				JOB NO.		070458	9	125
				(2)	SPECIAL DETAILS			

STATE OF ARKANSAS
LICENSED PROFESSIONAL ENGINEER
No.10887
SCOTT P. THORNSBERRY
2-2-2024

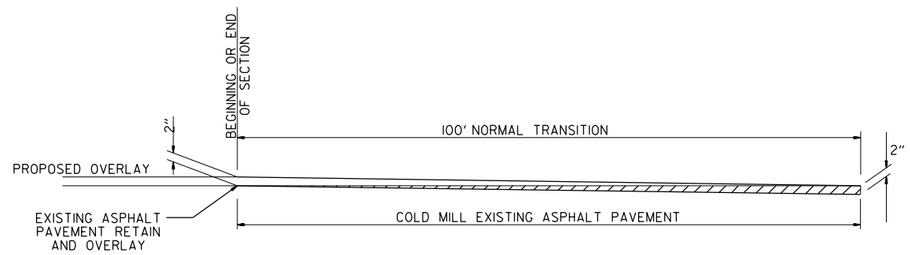

DETAIL FOR TRANSITIONS

6.0" Radius, 1.3" Border, Black on Orange;
"Job XXXXXX" C 2K; "Start Date Mo Year" C 2K;
"Est Completion Mo Year" C 2K; "IDRIVE " Arial;
" ARKANSAS.COM " Arial;

CONSTRUCTION PROJECT INFORMATION SIGN

Scott.Thornsberry 2/2/2024 4:45:59 PM
WORKSPACE: ARDOT
Y:\Projects\ARDOT_169387_070458 UPRR Grade Separation\Design\CIVIL\Drawings\R070458_05_SD_001.dgn
REVISED DATE: $$REVDATE$$

DATE REVISED	DATE FILMED	DATE REVISED	DATE FILMED	FED.RD. DIST.NO.	STATE	FED.AID PROJ.NO.	SHEET NO.	TOTAL SHEETS
				6	ARK.			
				JOB NO.		070458	10	125

(2) SPECIAL DETAILS

STATE OF ARKANSAS
LICENSED PROFESSIONAL ENGINEER
No.10887
SCOTT P. THORNSBERRY
2-2-2024

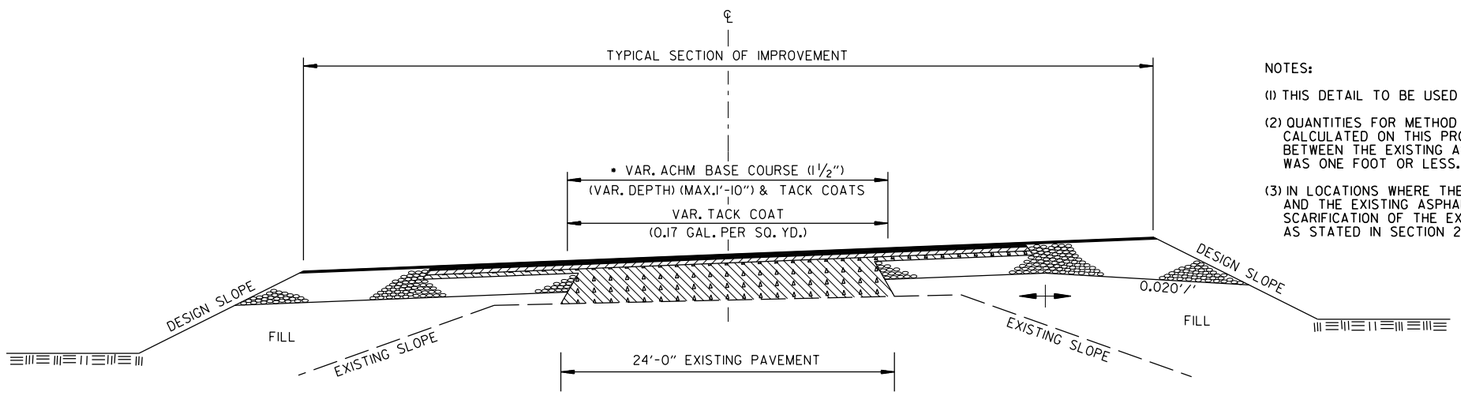

• 6" AGGREGATE BASE COURSE (CLASS 7)
TO BE REPLACED WITH A.C.H.M. BINDER COURSE (1")

METHOD OF RAISING GRADE

NOTES:

(1) THIS DETAIL TO BE USED ONLY WHERE DIRECTED BY THE ENGINEER.

(2) QUANTITIES FOR METHOD OF GRADE RAISE USING ASPHALT WERE CALCULATED ON THIS PROJECT AT LOCATIONS WHERE THE DISTANCE BETWEEN THE EXISTING ASPHALT ROADWAY AND THE PROPOSED SUBGRADE WAS ONE FOOT OR LESS.

(3) IN LOCATIONS WHERE THE DISTANCE BETWEEN THE PROPOSED SUBGRADE AND THE EXISTING ASPHALT ROADWAY IS MORE THAN ONE FOOT, SCARIFICATION OF THE EXISTING ASPHALT ROADWAY WILL BE REQUIRED AS STATED IN SECTION 210, SUBSECTION 210.09, OF THE STANDARD SPECIFICATIONS.

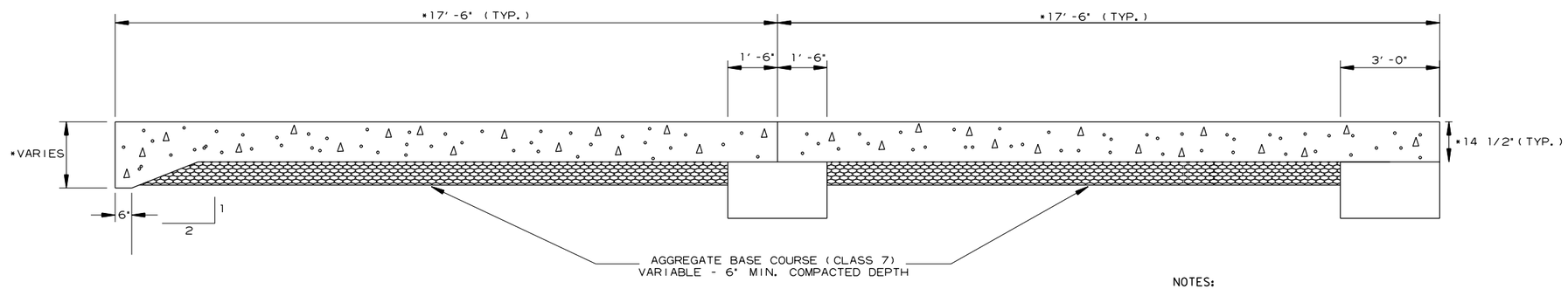

* SEE BRIDGE DRAWINGS FOR DETAILS

SECTION OF APPROACH SLAB (TYPE F)
(FOR ASPHALT PAVEMENT)

NOTES:

(1) REFER TO BRIDGE STANDARD DRAWINGS 55040F1 AND 55030F.

(2) APPROACH SLAB WIDTH IS 71' - 0"

(3) APPROACH GUTTER WIDTH IS 2' - 0"

Scott.Thornsberry@2/2/2024 4:46:00 PM
WORKSPACE: ARDOT
Y:\Projects\ARDOT_163187_070458 UPRR Grade Separation\Design\CIVIL\Drawings\R070458_05_SD_001.dgn
REVISED DATE: $$REVDATE$$

DATE REVISED	DATE FILMED	DATE REVISED	DATE FILMED	FED.RD. DIST.NO.	STATE	FED.AID PROJ.NO.	SHEET NO.	TOTAL SHEETS
				6	ARK.			
				JOB NO.		070458	11	125

(2) SPECIAL DETAILS

STATE OF ARKANSAS
LICENSED PROFESSIONAL ENGINEER
No.10887
SCOTT P. THORNSBERRY
2-2-2024

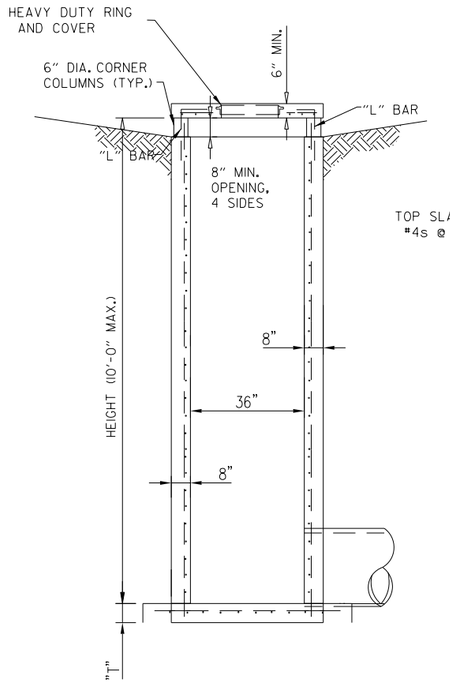

SECTION "A"-"A"

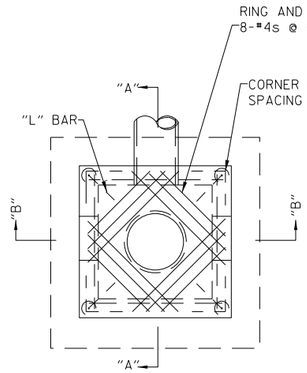

PLAN

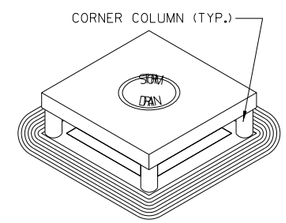

PICTORIAL VIEW

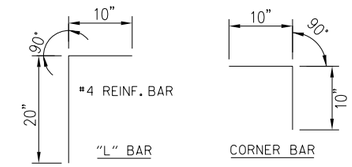

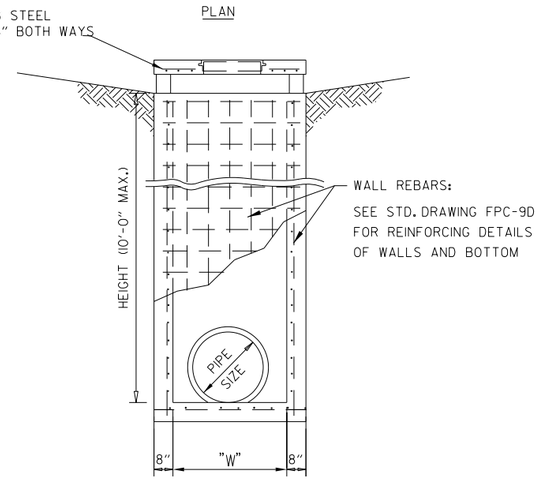

SECTION "B"-"B"

SEE STANDARD DRAWING FPC-9D FOR "T" AND "W"

NOTES:

1. DROP INLET SHALL CONFORM TO APPLICABLE GENERAL NOTES FROM STANDARD DRAWING FPC-9D.
2. SEE STANDARD DRAWING FPC-9M FOR DETAILS OF HEAVY DUTY RING AND COVER.
3. SEE STD. DRAWING FPC-9D FOR REINFORCING DETAILS OF WALLS AND BOTTOM.
4. PAYMENT FOR DROP INLET SHALL BE MADE UNDER "DROP INLET (TYPE RM SPECIAL)".

DROP INLET (TYPE RM SPECIAL)

NTS

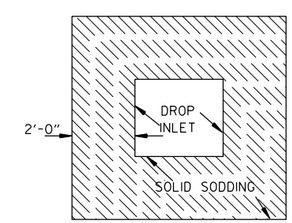

DETAIL FOR SOLID SODDING AROUND DROP INLETS

Scott.Thornsberry@2/2/2024 4:46:00 PM
WORKSPACE: ARDOT
Y:\Projects\ARDOT_16387_070458 UPRR Grade Separation\Design\CIVIL\Drawings\R070458_05_SD_001.dgn
REVISED DATE: $$REVDATE$$

DATE REVISED	DATE FILMED	DATE REVISED	DATE FILMED	FED.RD. DIST.NO.	STATE	FED.AID PROJ.NO.	SHEET NO.	TOTAL SHEETS
				6	ARK.			
				JOB NO.		070458	12	125

(2) TEMPORARY EROSION CONTROL DETAILS

STATE OF ARKANSAS LICENSED PROFESSIONAL ENGINEER No.10887 SCOTT P. THORNSBERRY 7-6-2026

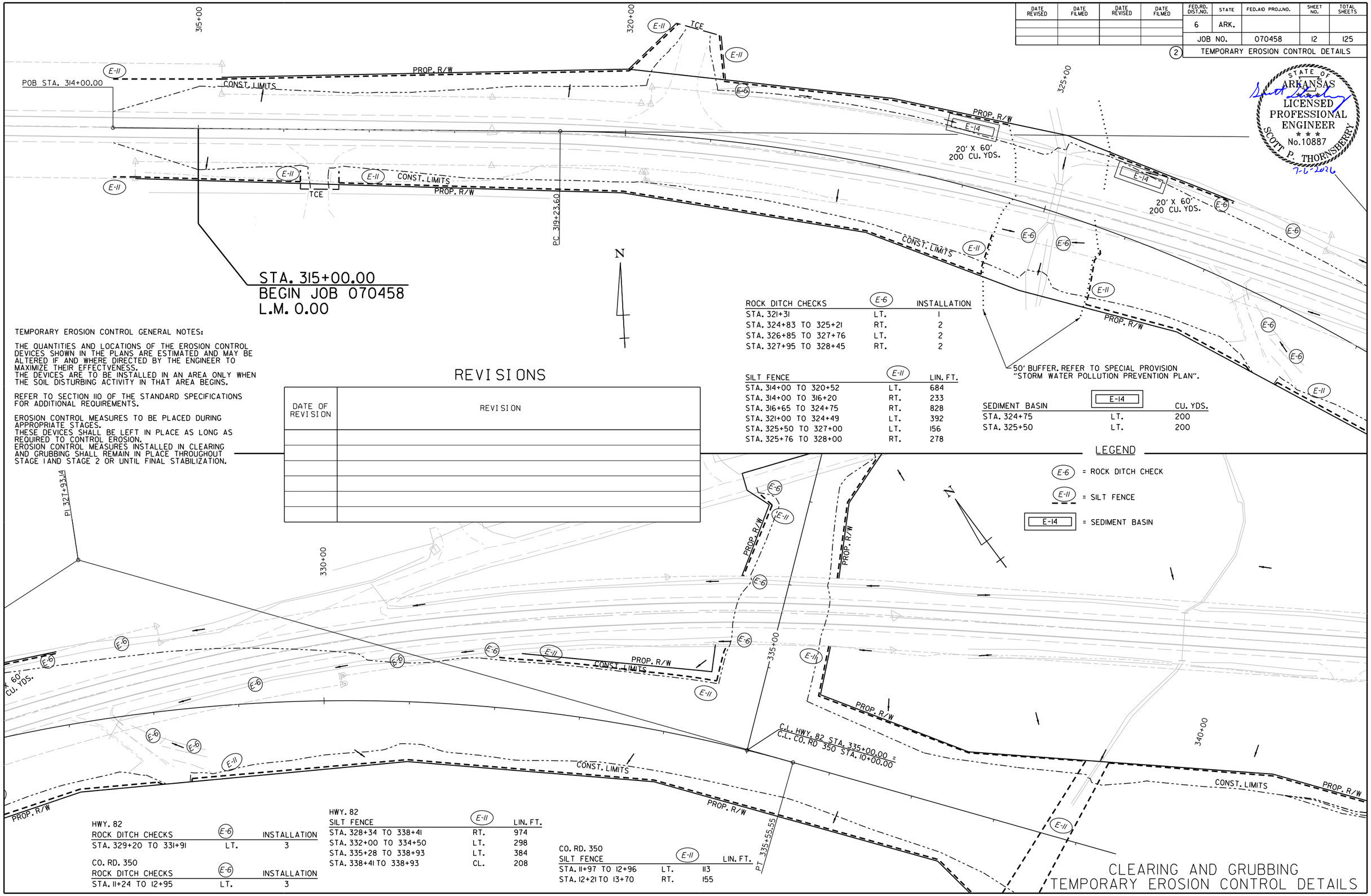

TEMPORARY EROSION CONTROL GENERAL NOTES:

THE QUANTITIES AND LOCATIONS OF THE EROSION CONTROL DEVICES SHOWN IN THE PLANS ARE ESTIMATED AND MAY BE ALTERED IF AND WHERE DIRECTED BY THE ENGINEER TO MAXIMIZE THEIR EFFECTVENESS.
THE DEVICES ARE TO BE INSTALLED IN AN AREA ONLY WHEN THE SOIL DISTURBING ACTIVITY IN THAT AREA BEGINS.

REFER TO SECTION 110 OF THE STANDARD SPECIFICATIONS FOR ADDITIONAL REQUIREMENTS.

EROSION CONTROL MEASURES TO BE PLACED DURING APPROPRIATE STAGES.
THESE DEVICES SHALL BE LEFT IN PLACE AS LONG AS REQUIRED TO CONTROL EROSION.
EROSION CONTROL MEASURES INSTALLED IN CLEARING AND GRUBBING SHALL REMAIN IN PLACE THROUGHOUT STAGE 1 AND STAGE 2 OR UNTIL FINAL STABILIZATION.

REVISIONS

DATE OF REVISION	REVISION

ROCK DITCH CHECKS	(E-6)	INSTALLATION
STA. 321+31	LT.	1
STA. 324+83 TO 325+21	RT.	2
STA. 326+85 TO 327+76	LT.	2
STA. 327+95 TO 328+45	RT.	2

SILT FENCE	(E-11)	LIN. FT.
STA. 314+00 TO 320+52	LT.	684
STA. 314+00 TO 316+20	RT.	233
STA. 316+65 TO 324+75	RT.	828
STA. 321+00 TO 324+49	LT.	392
STA. 325+50 TO 327+00	LT.	156
STA. 325+76 TO 328+00	RT.	278

50' BUFFER. REFER TO SPECIAL PROVISION "STORM WATER POLLUTION PREVENTION PLAN".

SEDIMENT BASIN	(E-14)	CU. YDS.
STA. 324+75	LT.	200
STA. 325+50	LT.	200

LEGEND

(E-6) = ROCK DITCH CHECK

(E-11) = SILT FENCE

(E-14) = SEDIMENT BASIN

HWY. 82 ROCK DITCH CHECKS	(E-6)	INSTALLATION
STA. 329+20 TO 331+91	LT.	3

CO. RD. 350 ROCK DITCH CHECKS	(E-6)	INSTALLATION
STA. 11+24 TO 12+95	LT.	3

HWY. 82 SILT FENCE	(E-11)	LIN. FT.
STA. 328+34 TO 338+41	RT.	974
STA. 332+00 TO 334+50	LT.	298
STA. 335+28 TO 338+93	LT.	384
STA. 338+41 TO 338+93	CL.	208

CO. RD. 350 SILT FENCE	(E-11)	LIN. FT.
STA. 11+97 TO 12+96	LT.	113
STA. 12+21 TO 13+70	RT.	155

CLEARING AND GRUBBING TEMPORARY EROSION CONTROL DETAILS

Brendan.Barns 7/6/2026 11:23:42 AM
WORKSPACE: Brendan.Barns
Y:\Projects\ARDOT_169387_070458 UPRR Grade Separation\Design\CIVIL\Drawings\R070458_05E_ECI_001.dgn
REVISED DATE: $$REVDATE$$

DATE REVISED	DATE FILMED	DATE REVISED	DATE FILMED

FED.RD. DIST.NO.	STATE	FED.AID PROJ.NO.	SHEET NO.	TOTAL SHEETS
6	ARK.			
JOB NO.		070458	13	125

2 TEMPORARY EROSION CONTROL DETAILS

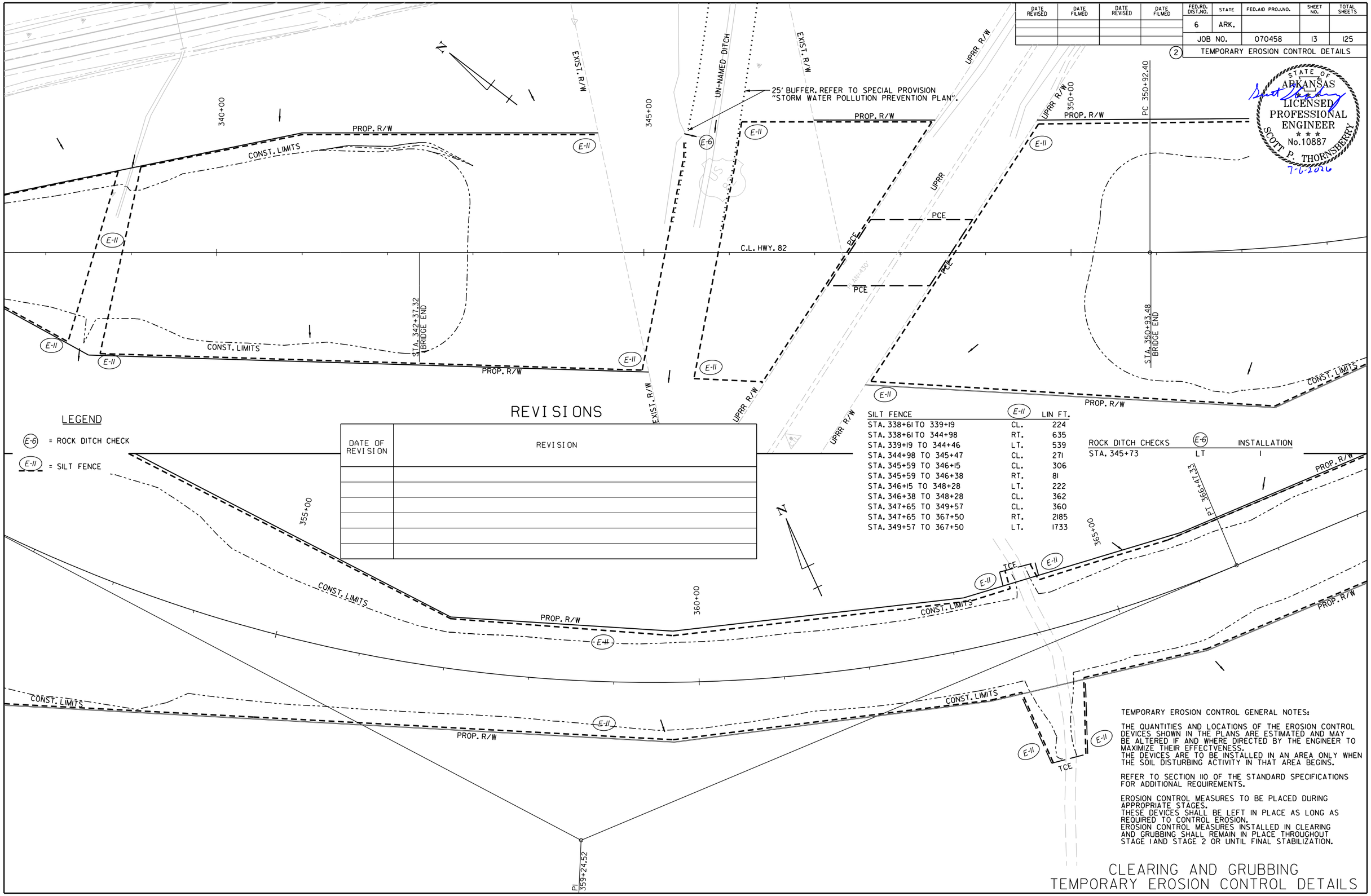

STATE OF ARKANSAS LICENSED PROFESSIONAL ENGINEER No.10887 SCOTT P. THORNSBERRY 7-6-2026

LEGEND

E-6 = ROCK DITCH CHECK

E-11 = SILT FENCE

REVISIONS

DATE OF REVISION	REVISION

SILT FENCE	E-11	LIN FT.
STA. 338+61 TO 339+19	CL.	224
STA. 338+61 TO 344+98	RT.	635
STA. 339+19 TO 344+46	LT.	539
STA. 344+98 TO 345+47	CL.	271
STA. 345+59 TO 346+15	CL.	306
STA. 345+59 TO 346+38	RT.	81
STA. 346+15 TO 348+28	LT.	222
STA. 346+38 TO 348+28	CL.	362
STA. 347+65 TO 349+57	CL.	360
STA. 347+65 TO 367+50	RT.	2185
STA. 349+57 TO 367+50	LT.	1733

ROCK DITCH CHECKS	E-6	INSTALLATION
STA. 345+73	LT	1

TEMPORARY EROSION CONTROL GENERAL NOTES:

THE QUANTITIES AND LOCATIONS OF THE EROSION CONTROL DEVICES SHOWN IN THE PLANS ARE ESTIMATED AND MAY BE ALTERED IF AND WHERE DIRECTED BY THE ENGINEER TO MAXIMIZE THEIR EFFECTVENESS.
THE DEVICES ARE TO BE INSTALLED IN AN AREA ONLY WHEN THE SOIL DISTURBING ACTIVITY IN THAT AREA BEGINS.

REFER TO SECTION 110 OF THE STANDARD SPECIFICATIONS FOR ADDITIONAL REQUIREMENTS.

EROSION CONTROL MEASURES TO BE PLACED DURING APPROPRIATE STAGES.
THESE DEVICES SHALL BE LEFT IN PLACE AS LONG AS REQUIRED TO CONTROL EROSION.
EROSION CONTROL MEASURES INSTALLED IN CLEARING AND GRUBBING SHALL REMAIN IN PLACE THROUGHOUT STAGE 1 AND STAGE 2 OR UNTIL FINAL STABILIZATION.

CLEARING AND GRUBBING TEMPORARY EROSION CONTROL DETAILS

Brendan.Barns 7/6/2026 11:23:42 AM
WORKSPACE: Brendan.Barns
Y:\Projects\ARDOT_16938T_070458 UPRR Grade Separation\Design\CIVIL\Drawings\R070458_05E_EC1.002.dgn
REVISED DATE: $$REVDATE$$

DATE REVISED	DATE FILMED	DATE REVISED	DATE FILMED	FED.RD. DIST.NO.	STATE	FED.AID PROJ.NO.	SHEET NO.	TOTAL SHEETS
				6	ARK.			
				JOB NO.		070458	14	125

(2) TEMPORARY EROSION CONTROL DETAILS

STATE OF ARKANSAS
LICENSED PROFESSIONAL ENGINEER
No.10887
SCOTT P. THORNSBERRY
7-6-2026

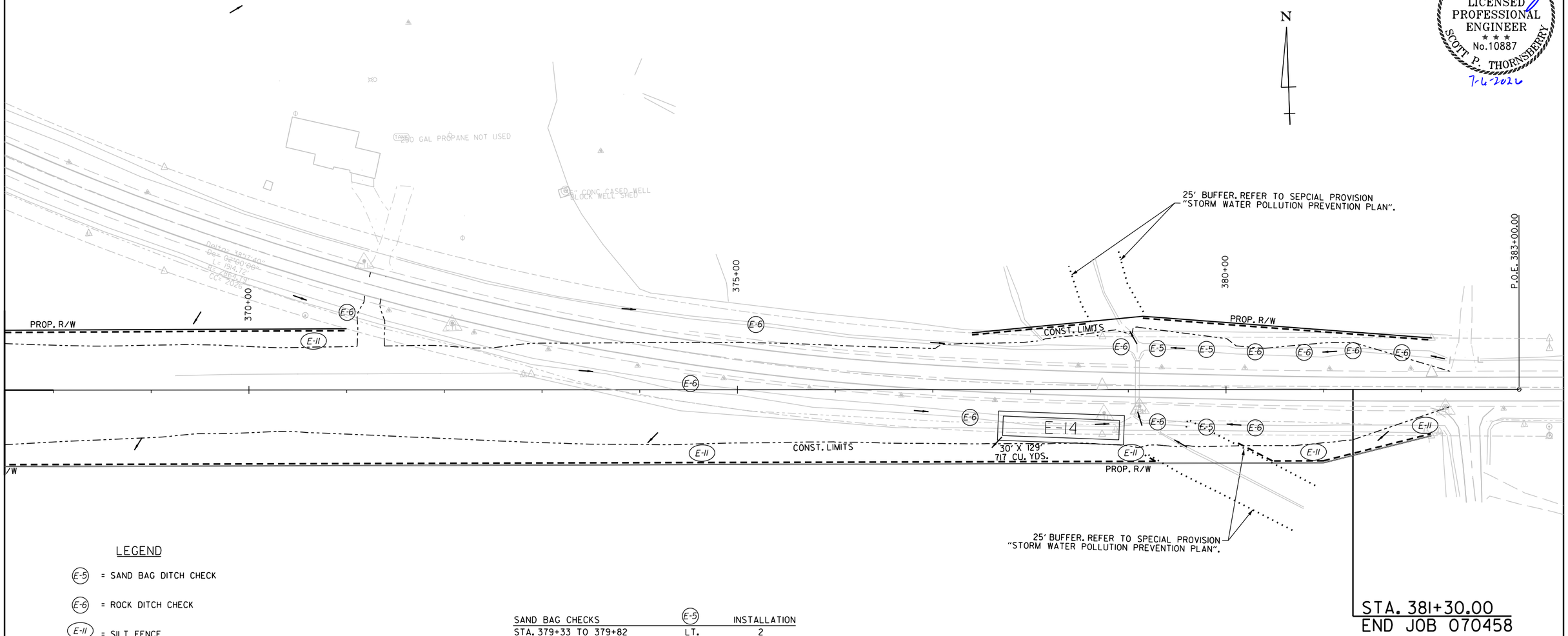

LEGEND

(E-5) = SAND BAG DITCH CHECK

(E-6) = ROCK DITCH CHECK

(E-11) = SILT FENCE

[E-14] = SEDIMENT BASIN

TEMPORARY EROSION CONTROL GENERAL NOTES:

THE QUANTITIES AND LOCATIONS OF THE EROSION CONTROL DEVICES SHOWN IN THE PLANS ARE ESTIMATED AND MAY BE ALTERED IF AND WHERE DIRECTED BY THE ENGINEER TO MAXIMIZE THEIR EFFECTVENESS.
THE DEVICES ARE TO BE INSTALLED IN AN AREA ONLY WHEN THE SOIL DISTURBING ACTIVITY IN THAT AREA BEGINS.

REFER TO SECTION 110 OF THE STANDARD SPECIFICATIONS FOR ADDITIONAL REQUIREMENTS.

EROSION CONTROL MEASURES TO BE PLACED DURING APPROPRIATE STAGES.
THESE DEVICES SHALL BE LEFT IN PLACE AS LONG AS REQUIRED TO CONTROL EROSION.
EROSION CONTROL MEASURES INSTALLED IN CLEARING AND GRUBBING SHALL REMAIN IN PLACE THROUGHOUT STAGE 1 AND STAGE 2 OR UNTIL FINAL STABILIZATION.

SAND BAG CHECKS	(E-5)	INSTALLATION
STA. 379+33 TO 379+82	LT.	2
STA. 379+81	RT.	1

ROCK DITCH CHECKS	(E-6)	INSTALLATION
STA. 371+00 TO 374+50	LT.	2
STA. 375+25 TO 378+90	LT.	2
STA. 377+40	RT.	1
STA. 379+31 TO 380+32	RT.	2
STA. 380+32 TO 381+80	LT.	4

SILT FENCE	(E-11)	LIN FT.
STA. 367+50 TO 371+00	LT.	350
STA. 367+50 TO 379+30	RT.	1191
STA. 380+12 TO 382+25	RT.	206
STA. 377+40 TO 378+60	LT.	120
STA. 379+14 TO 382+10	LT.	297

SEDIMENT BASIN	[E-14]	CU. YDS.
STA. 378+27	RT.	717

REVISIONS

DATE OF REVISION	REVISION

CLEARING AND GRUBBING
TEMPORARY EROSION CONTROL DETAILS

Brendan.Barns 7/6/2026 11:23:43 AM
WORKSPACE: Brendan.Barns
Y:\Projects\ARDOT_16938T_070458 UPRR Grade Separation\Design\CIVIL\Drawings\R070458_05E_EC1_003.dgn
REVISED DATE: $$REVDATE$$

DATE REVISED	DATE FILMED	DATE REVISED	DATE FILMED

FED.RD. DIST.NO.	STATE	FED.AID PROJ.NO.	SHEET NO.	TOTAL SHEETS
6	ARK.			
JOB NO.		070458	15	125

(2) TEMPORARY EROSION CONTROL DETAILS

STATE OF ARKANSAS
LICENSED PROFESSIONAL ENGINEER
No.10887
SCOTT P. THORNSBERRY
7-6-2026

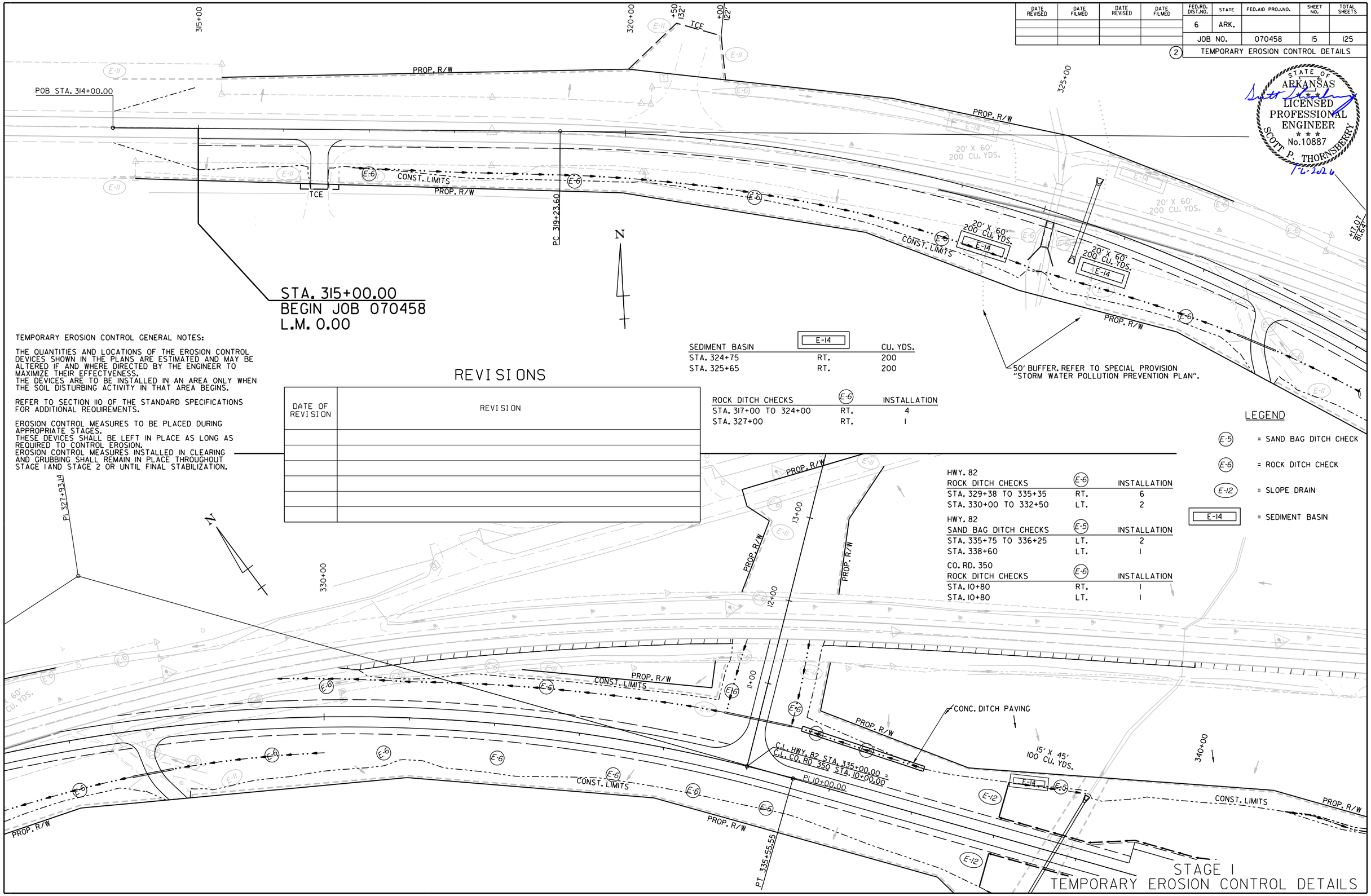

TEMPORARY EROSION CONTROL GENERAL NOTES:

THE QUANTITIES AND LOCATIONS OF THE EROSION CONTROL DEVICES SHOWN IN THE PLANS ARE ESTIMATED AND MAY BE ALTERED IF AND WHERE DIRECTED BY THE ENGINEER TO MAXIMIZE THEIR EFFECTVENESS.
THE DEVICES ARE TO BE INSTALLED IN AN AREA ONLY WHEN THE SOIL DISTURBING ACTIVITY IN THAT AREA BEGINS.

REFER TO SECTION 110 OF THE STANDARD SPECIFICATIONS FOR ADDITIONAL REQUIREMENTS.

EROSION CONTROL MEASURES TO BE PLACED DURING APPROPRIATE STAGES.
THESE DEVICES SHALL BE LEFT IN PLACE AS LONG AS REQUIRED TO CONTROL EROSION.
EROSION CONTROL MEASURES INSTALLED IN CLEARING AND GRUBBING SHALL REMAIN IN PLACE THROUGHOUT STAGE 1 AND STAGE 2 OR UNTIL FINAL STABILIZATION.

REVISIONS

DATE OF REVISION	REVISION

SEDIMENT BASIN	(E-14)	CU. YDS.
STA. 324+75	RT.	200
STA. 325+65	RT.	200

ROCK DITCH CHECKS	(E-6)	INSTALLATION
STA. 317+00 TO 324+00	RT.	4
STA. 327+00	RT.	1

HWY. 82 ROCK DITCH CHECKS	(E-6)	INSTALLATION
STA. 329+38 TO 335+35	RT.	6
STA. 330+00 TO 332+50	LT.	2

HWY. 82 SAND BAG DITCH CHECKS	(E-5)	INSTALLATION
STA. 335+75 TO 336+25	LT.	2
STA. 338+60	LT.	1

CO. RD. 350 ROCK DITCH CHECKS	(E-6)	INSTALLATION
STA. 10+80	RT.	1
STA. 10+80	LT.	1

LEGEND

(E-5) = SAND BAG DITCH CHECK
(E-6) = ROCK DITCH CHECK
(E-12) = SLOPE DRAIN
(E-14) = SEDIMENT BASIN

Brendan.Barns 7/6/2026 11:23:44 AM
WORKSPACE: Brendan.Barns
Y:\Projects\ARDOT_16387_070458 UPRR Grade Separation\Design\CIVIL\Drawings\R070458_05E_EC2_001.dgn
REVISED DATE: $$REVDATE$$

DATE REVISED	DATE FILMED	DATE REVISED	DATE FILMED

FED.RD. DIST.NO.	STATE	FED.AID PROJ.NO.	SHEET NO.	TOTAL SHEETS
6	ARK.			
JOB NO.		070458	16	125

2 TEMPORARY EROSION CONTROL DETAILS

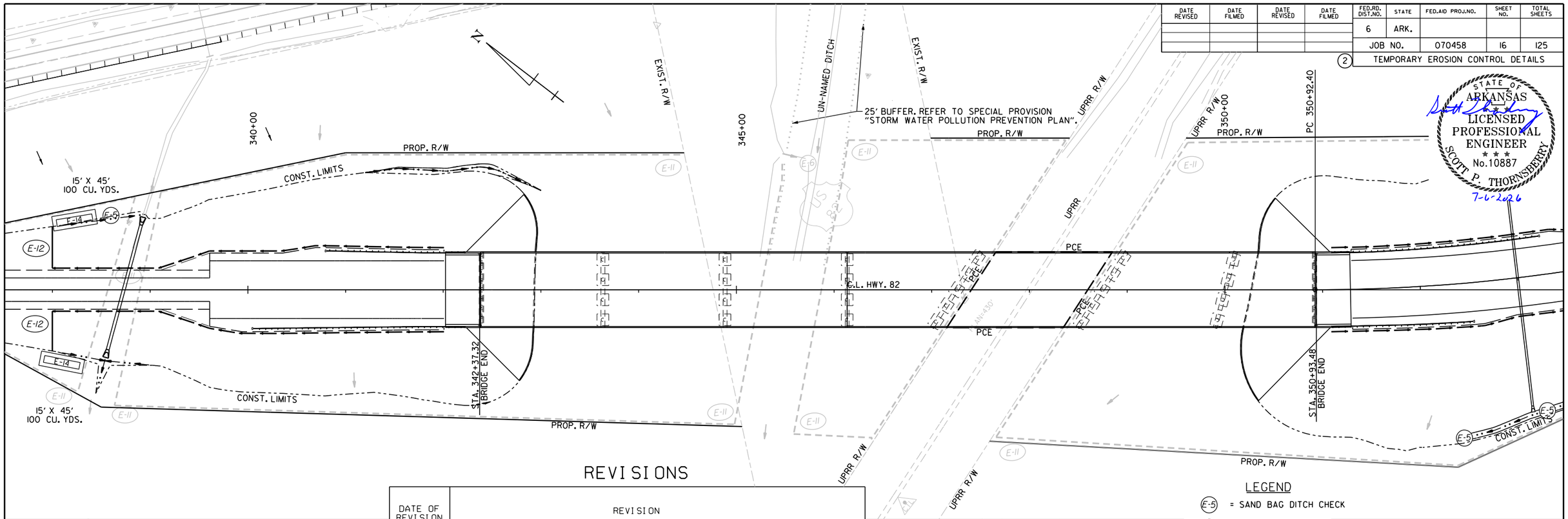

REVISIONS

DATE OF REVISION	REVISION

LEGEND

- (E-5) = SAND BAG DITCH CHECK
- (E-6) = ROCK DITCH CHECK
- (E-8) = DIVERSION DITCH
- (E-12) = SLOPE DRAIN
- [E-14] = SEDIMENT BASIN

TEMPORARY EROSION CONTROL GENERAL NOTES:

THE QUANTITIES AND LOCATIONS OF THE EROSION CONTROL DEVICES SHOWN IN THE PLANS ARE ESTIMATED AND MAY BE ALTERED IF AND WHERE DIRECTED BY THE ENGINEER TO MAXIMIZE THEIR EFFECTVENESS.
THE DEVICES ARE TO BE INSTALLED IN AN AREA ONLY WHEN THE SOIL DISTURBING ACTIVITY IN THAT AREA BEGINS.

REFER TO SECTION 110 OF THE STANDARD SPECIFICATIONS FOR ADDITIONAL REQUIREMENTS.

EROSION CONTROL MEASURES TO BE PLACED DURING APPROPRIATE STAGES.
THESE DEVICES SHALL BE LEFT IN PLACE AS LONG AS REQUIRED TO CONTROL EROSION.
EROSION CONTROL MEASURES INSTALLED IN CLEARING AND GRUBBING SHALL REMAIN IN PLACE THROUGHOUT STAGE 1 AND STAGE 2 OR UNTIL FINAL STABILIZATION.

SEDIMENT BASIN	[E-14]	C.Y.
STA. 338+00	RT.	100
STA. 338+00	LT.	100
STA. 355+27	RT.	100
STA. 355+27	LT.	100

ROCK DITCH CHECKS	(E-6)	INSTALLATION
STA. 353+14	LT.	1
STA. 358+50 TO 362+30	LT.	2
STA. 365+14 TO 365+44	LT.	2
STA. 365+60 TO 365+98	RT.	2
STA. 367+10	RT.	1
STA. 367+40	LT.	1

SAND BAG DITCH CHECKS	(E-5)	INSTALLATION
STA. 352+30 TO STA. 354+00	RT.	3

DIVERSION DITCH	(E-8)	LIN. FT.
STA. 338+00 TO STA. 342+01	RT.	405
STA. 338+00 TO STA. 342+01	LT.	405
STA. 351+09 TO STA. 355+27	RT.	431
STA. 351+09 TO STA. 355+27	LT.	431

SLOPE DRAIN	(E-12)	LIN. FT.
STA. 338+00	RT.	41
STA. 338+00	LT.	43
STA. 355+27	RT.	55
STA. 355+27	LT.	42

STAGE 1
TEMPORARY EROSION CONTROL DETAILS

Brendan.Barns 7/6/2026 11:23:45 AM
WORKSPACE: Brendan.Barns
Y:\Projects\ARDOT_16387_070458 UPRR Grade Separation\Design\CIVIL\Drawings\R070458_05E_EC2_002.dgn
REVISED DATE: $$REVDATE$$

DATE REVISED	DATE FILMED	DATE REVISED	DATE FILMED	FED.RD. DIST.NO.	STATE	FED.AID PROJ.NO.	SHEET NO.	TOTAL SHEETS
				6	ARK.			
				JOB NO.		070458	17	125

(2) TEMPORARY EROSION CONTROL DETAILS

STATE OF ARKANSAS
LICENSED PROFESSIONAL ENGINEER
No.10887
SCOTT P. THORNSBERRY
7-6-2026

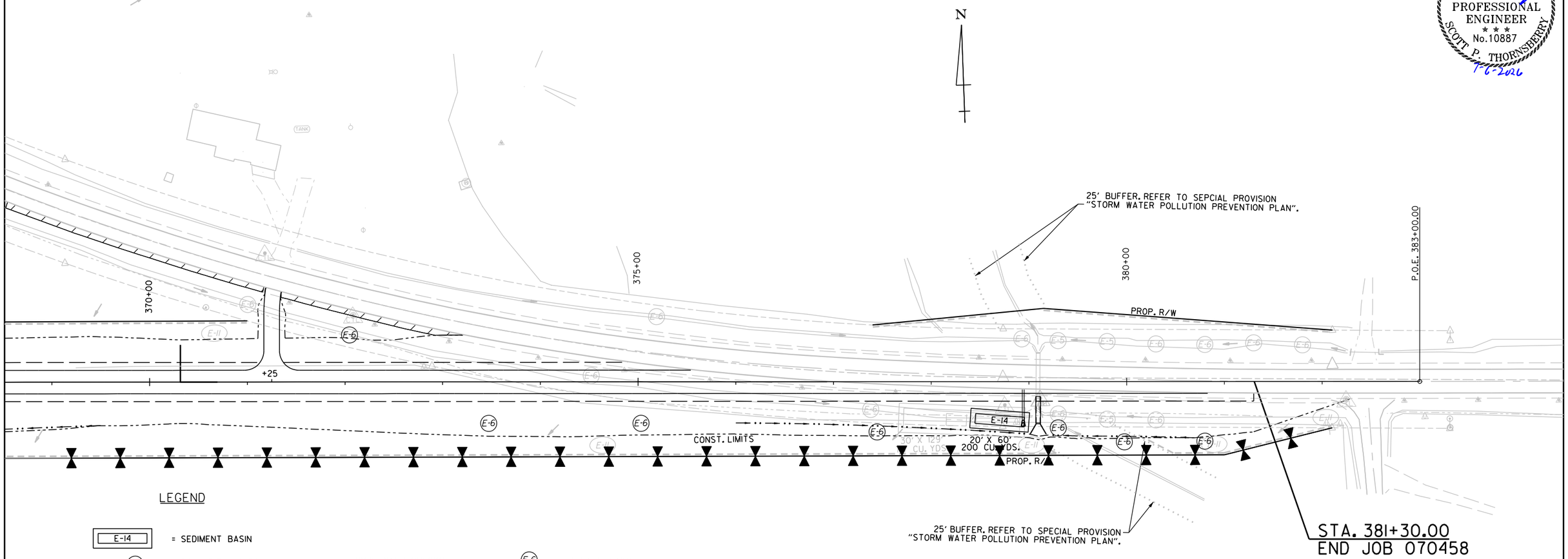

LEGEND

E-14 = SEDIMENT BASIN

(E-6) = ROCK DITCH CHECK

ROCK DITCH CHECKS	(E-6)	INSTALLATION
STA. 372+05	LT.	1
STA. 373+50 TO 377+50	RT.	3
STA. 379+25 TO 380+80	RT.	3

SEDIMENT BASIN	E-14	CU. YDS.
STA. 378+75	RT.	200

TEMPORARY EROSION CONTROL GENERAL NOTES:

THE QUANTITIES AND LOCATIONS OF THE EROSION CONTROL DEVICES SHOWN IN THE PLANS ARE ESTIMATED AND MAY BE ALTERED IF AND WHERE DIRECTED BY THE ENGINEER TO MAXIMIZE THEIR EFFECTVENESS.
THE DEVICES ARE TO BE INSTALLED IN AN AREA ONLY WHEN THE SOIL DISTURBING ACTIVITY IN THAT AREA BEGINS.

REFER TO SECTION 110 OF THE STANDARD SPECIFICATIONS FOR ADDITIONAL REQUIREMENTS.

EROSION CONTROL MEASURES TO BE PLACED DURING APPROPRIATE STAGES.
THESE DEVICES SHALL BE LEFT IN PLACE AS LONG AS REQUIRED TO CONTROL EROSION.
EROSION CONTROL MEASURES INSTALLED IN CLEARING AND GRUBBING SHALL REMAIN IN PLACE THROUGHOUT STAGE 1 AND STAGE 2 OR UNTIL FINAL STABILIZATION.

REVISIONS

DATE OF REVISION	REVISION

STAGE 1
TEMPORARY EROSION CONTROL DETAILS

Brendan.Barns 7/6/2026 11:23:46 AM
WORKSPACE: Brendan.Barns
Y:\Projects\ARDOT_16938T_070458 UPRR Grade Separation\Design\CIVIL\Drawings\R070458_05E_EC2_003.dgn
REVISED DATE: $$REVDATE$$

DATE REVISED	DATE FILMED	DATE REVISED	DATE FILMED

FED.RD. DIST.NO.	STATE	FED.AID PROJ.NO.	SHEET NO.	TOTAL SHEETS
6	ARK.			
JOB NO.		070458	18	125

(2) TEMPORARY EROSION CONTROL DETAILS

STATE OF ARKANSAS
LICENSED PROFESSIONAL ENGINEER
No.10887
SCOTT P. THORNSBERRY
7-6-2026

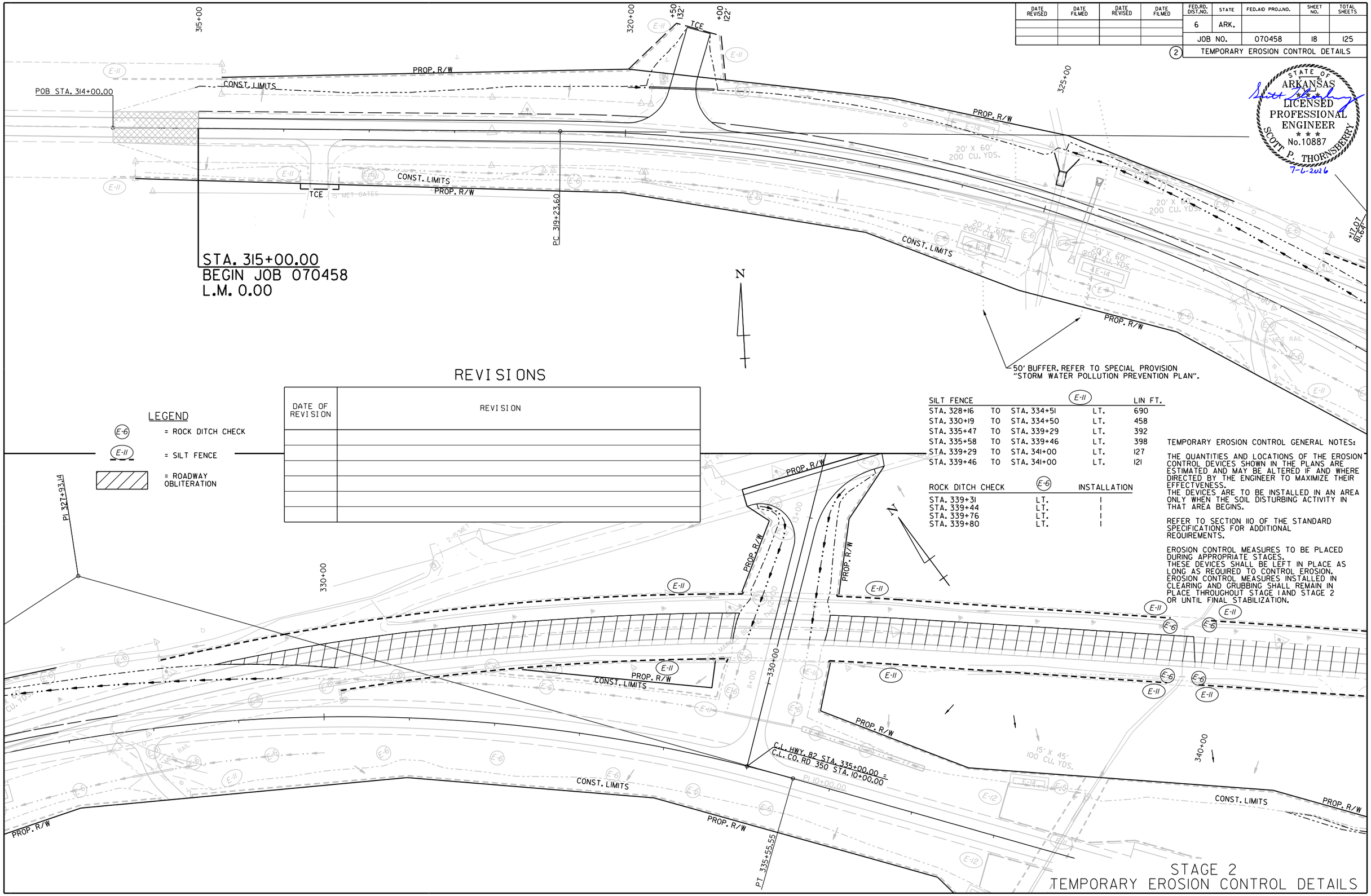

LEGEND

- (E-6) = ROCK DITCH CHECK
- (E-11) = SILT FENCE
- = ROADWAY OBLITERATION

REVISIONS

DATE OF REVISION	REVISION

SILT FENCE			(E-11)	LIN FT.
STA. 328+16	TO	STA. 334+51	LT.	690
STA. 330+19	TO	STA. 334+50	LT.	458
STA. 335+47	TO	STA. 339+29	LT.	392
STA. 335+58	TO	STA. 339+46	LT.	398
STA. 339+29	TO	STA. 341+00	LT.	127
STA. 339+46	TO	STA. 341+00	LT.	121

ROCK DITCH CHECK	(E-6)	INSTALLATION
STA. 339+31	LT.	1
STA. 339+44	LT.	1
STA. 339+76	LT.	1
STA. 339+80	LT.	1

TEMPORARY EROSION CONTROL GENERAL NOTES:

THE QUANTITIES AND LOCATIONS OF THE EROSION CONTROL DEVICES SHOWN IN THE PLANS ARE ESTIMATED AND MAY BE ALTERED IF AND WHERE DIRECTED BY THE ENGINEER TO MAXIMIZE THEIR EFFECTVENESS.
THE DEVICES ARE TO BE INSTALLED IN AN AREA ONLY WHEN THE SOIL DISTURBING ACTIVITY IN THAT AREA BEGINS.

REFER TO SECTION 110 OF THE STANDARD SPECIFICATIONS FOR ADDITIONAL REQUIREMENTS.

EROSION CONTROL MEASURES TO BE PLACED DURING APPROPRIATE STAGES.
THESE DEVICES SHALL BE LEFT IN PLACE AS LONG AS REQUIRED TO CONTROL EROSION.
EROSION CONTROL MEASURES INSTALLED IN CLEARING AND GRUBBING SHALL REMAIN IN PLACE THROUGHOUT STAGE 1 AND STAGE 2 OR UNTIL FINAL STABILIZATION.

STAGE 2
TEMPORARY EROSION CONTROL DETAILS

BrendanBarns 7/6/2026 11:23:47 AM
WORKSPACE: BrendanBarns
Y:\Projects\ARDOT_16938T_070458 UPRR Grade Separation\Design\CIVIL\Drawings\R070458.05E_EC3.001.dgn
REVISED DATE: $$REVDATE$$

DATE REVISED	DATE FILMED	DATE REVISED	DATE FILMED	FED.RD. DIST.NO.	STATE	FED.AID PROJ.NO.	SHEET NO.	TOTAL SHEETS
				6	ARK.			
				JOB NO.		070458	19	125

(2) TEMPORARY EROSION CONTROL DETAILS

REVISIONS

DATE OF REVISION	REVISION

LEGEND

- (E-6) = ROCK DITCH CHECK
- (E-11) = SILT FENCE
- (E-13) = FILTER SOCK (18")
- = ROADWAY OBLITERATION

TEMPORARY EROSION CONTROL GENERAL NOTES:

THE QUANTITIES AND LOCATIONS OF THE EROSION CONTROL DEVICES SHOWN IN THE PLANS ARE ESTIMATED AND MAY BE ALTERED IF AND WHERE DIRECTED BY THE ENGINEER TO MAXIMIZE THEIR EFFECTVENESS.
THE DEVICES ARE TO BE INSTALLED IN AN AREA ONLY WHEN THE SOIL DISTURBING ACTIVITY IN THAT AREA BEGINS.

REFER TO SECTION 110 OF THE STANDARD SPECIFICATIONS FOR ADDITIONAL REQUIREMENTS.

EROSION CONTROL MEASURES TO BE PLACED DURING APPROPRIATE STAGES.
THESE DEVICES SHALL BE LEFT IN PLACE AS LONG AS REQUIRED TO CONTROL EROSION.
EROSION CONTROL MEASURES INSTALLED IN CLEARING AND GRUBBING SHALL REMAIN IN PLACE THROUGHOUT STAGE 1 AND STAGE 2 OR UNTIL FINAL STABILIZATION.

STATE OF ARKANSAS
LICENSED PROFESSIONAL ENGINEER
No.10887
SCOTT P. THORNSBERRY
7-6-2026

SILT FENCE (E-11)				LIN FT.
STA. 341+00	TO	STA. 351+64	LT.	1273
STA. 341+00	TO	STA. 344+08	LT.	313
STA. 346+65	TO	STA. 350+65	LT.	471

ROCK DITCH CHECK (E-6)		INSTALLATION
STA. 344+64	LT.	1
STA. 344+84	LT.	1
STA. 346+08	LT.	1

FILTER SOCK (18") (E-13)		LIN FT.
STA. 345+98	LT.	23
STA. 348+19	LT.	23
STA. 350+43	LT.	23
STA. 350+38	LT.	23

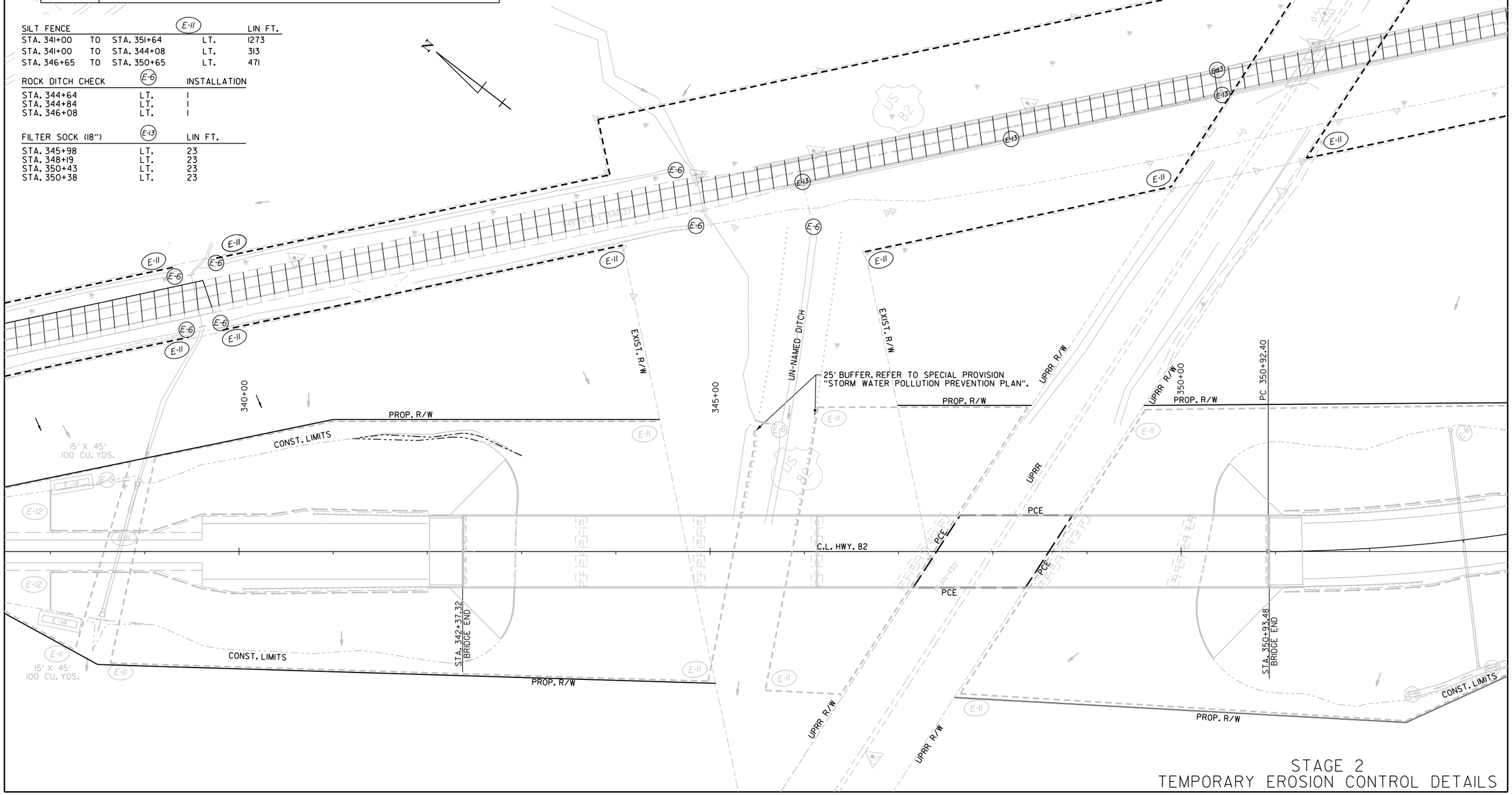

STAGE 2
TEMPORARY EROSION CONTROL DETAILS

Brendan.Barns 7/6/2026 11:23:47 AM
WORKSPACE: Brendan.Barns
Y:\Projects\ARDOT_16938T_070458 UPRR Grade Separation\Design\CIVIL\Drawings\R070458_05E_EC3_002.dgn
REVISED DATE: $$REVDATE$$

DATE REVISED	DATE FILMED	DATE REVISED	DATE FILMED	FED.RD. DIST.NO.	STATE	FED.AID PROJ.NO.	SHEET NO.	TOTAL SHEETS
				6	ARK.			
				JOB NO.		070458	20	125

(2) TEMPORARY EROSION CONTROL DETAILS

STATE OF ARKANSAS
LICENSED PROFESSIONAL ENGINEER
No.10887
SCOTT P. THORNSBERRY
7-6-2026

REVISIONS

DATE OF REVISION	REVISION

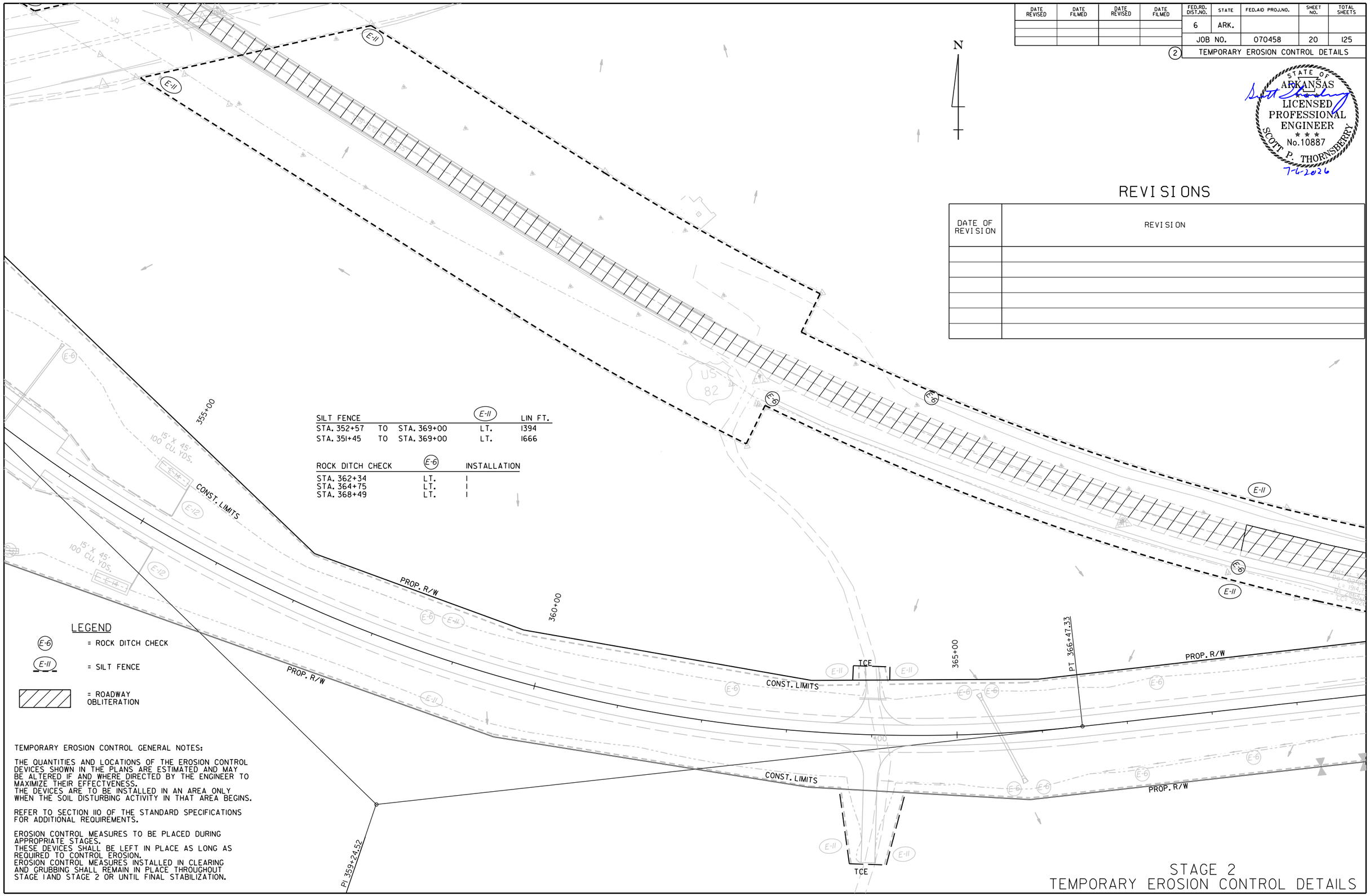

SILT FENCE			(E-11)	LIN FT.
STA. 352+57	TO	STA. 369+00	LT.	1394
STA. 351+45	TO	STA. 369+00	LT.	1666

ROCK DITCH CHECK	(E-6)	INSTALLATION
STA. 362+34	LT.	1
STA. 364+75	LT.	1
STA. 368+49	LT.	1

LEGEND

(E-6) = ROCK DITCH CHECK

(E-11) = SILT FENCE

= ROADWAY OBLITERATION

TEMPORARY EROSION CONTROL GENERAL NOTES:

THE QUANTITIES AND LOCATIONS OF THE EROSION CONTROL DEVICES SHOWN IN THE PLANS ARE ESTIMATED AND MAY BE ALTERED IF AND WHERE DIRECTED BY THE ENGINEER TO MAXIMIZE THEIR EFFECTVENESS.
THE DEVICES ARE TO BE INSTALLED IN AN AREA ONLY WHEN THE SOIL DISTURBING ACTIVITY IN THAT AREA BEGINS.

REFER TO SECTION 110 OF THE STANDARD SPECIFICATIONS FOR ADDITIONAL REQUIREMENTS.

EROSION CONTROL MEASURES TO BE PLACED DURING APPROPRIATE STAGES.
THESE DEVICES SHALL BE LEFT IN PLACE AS LONG AS REQUIRED TO CONTROL EROSION.
EROSION CONTROL MEASURES INSTALLED IN CLEARING AND GRUBBING SHALL REMAIN IN PLACE THROUGHOUT STAGE 1 AND STAGE 2 OR UNTIL FINAL STABILIZATION.

STAGE 2
TEMPORARY EROSION CONTROL DETAILS

Brendan.Barns 7/6/2026 11:23:48 AM
WORKSPACE: Brendan.Barns
Y:\Projects\ARDOT_16938T_070458 UPRR Grade Separation\Design\CIVIL\Drawings\R070458_05E_EC3_003.dgn
REVISED DATE: $$REVDATE$$

DATE REVISED	DATE FILMED	DATE REVISED	DATE FILMED	FED.RD. DIST.NO.	STATE	FED.AID PROJ.NO.	SHEET NO.	TOTAL SHEETS
				6	ARK.			
				JOB NO.		070458	21	125

(2) TEMPORARY EROSION CONTROL DETAILS

STATE OF ARKANSAS
LICENSED PROFESSIONAL ENGINEER
No.10887
SCOTT P. THORNSBERRY
7-6-2026

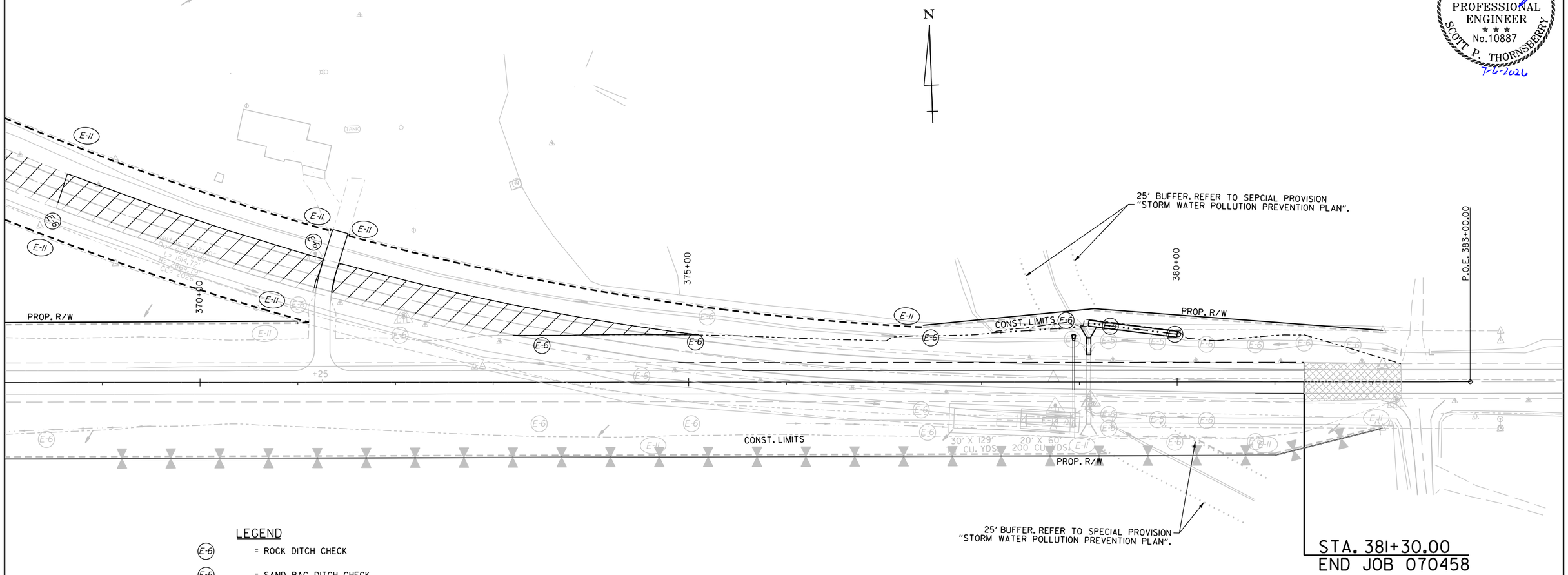

LEGEND

- (E-6) = ROCK DITCH CHECK
- (E-5) = SAND BAG DITCH CHECK
- (E-11) = SILT FENCE
- (E-13) = FILTER SOCK
- = ROADWAY OBLITERATION

SILT FENCE (E-11)				LIN FT.
STA. 369+00	TO	STA. 377+40	LT.	845
STA. 369+00	TO	STA. 371+20	LT.	234

SAND BAG CHECKS (E-5)		INSTALLATION
STA. 379+30 TO 379+97	LT.	2

ROCK DITCH CHECKS (E-6)		INSTALLATION
STA. 371+16 TO 378+86	LT.	5

TEMPORARY EROSION CONTROL GENERAL NOTES:

THE QUANTITIES AND LOCATIONS OF THE EROSION CONTROL DEVICES SHOWN IN THE PLANS ARE ESTIMATED AND MAY BE ALTERED IF AND WHERE DIRECTED BY THE ENGINEER TO MAXIMIZE THEIR EFFECTVENESS.
THE DEVICES ARE TO BE INSTALLED IN AN AREA ONLY WHEN THE SOIL DISTURBING ACTIVITY IN THAT AREA BEGINS.

REFER TO SECTION 110 OF THE STANDARD SPECIFICATIONS FOR ADDITIONAL REQUIREMENTS.

EROSION CONTROL MEASURES TO BE PLACED DURING APPROPRIATE STAGES.
THESE DEVICES SHALL BE LEFT IN PLACE AS LONG AS REQUIRED TO CONTROL EROSION.
EROSION CONTROL MEASURES INSTALLED IN CLEARING AND GRUBBING SHALL REMAIN IN PLACE THROUGHOUT STAGE 1 AND STAGE 2 OR UNTIL FINAL STABILIZATION.

REVISIONS

DATE OF REVISION	REVISION

STAGE 2
TEMPORARY EROSION CONTROL DETAILS

BrendanBarns 7/6/2026 11:23:49 AM
WORKSPACE: BrendanBarns
Y:\Projects\ARDOT_16938T_070458 UPRR Grade Separation\Design\CIVIL\Drawings\R070458_05E_EC3_004.dgn
REVISED DATE: $$REVDATE$$

DATE REVISED	DATE FILMED	DATE REVISED	DATE FILMED	FED.RD. DIST.NO.	STATE	FED.AID PROJ.NO.	SHEET NO.	TOTAL SHEETS
				6	ARK.			
				JOB NO.		070458	22	125

(2) MAINTENANCE OF TRAFFIC DETAILS

STATE OF ARKANSAS
LICENSED PROFESSIONAL ENGINEER
No.10887
SCOTT P. THORNSBERRY
6-18-2026

LEGEND

TRAFFIC FLOW ARROWS

TEMPORARY SIGNS

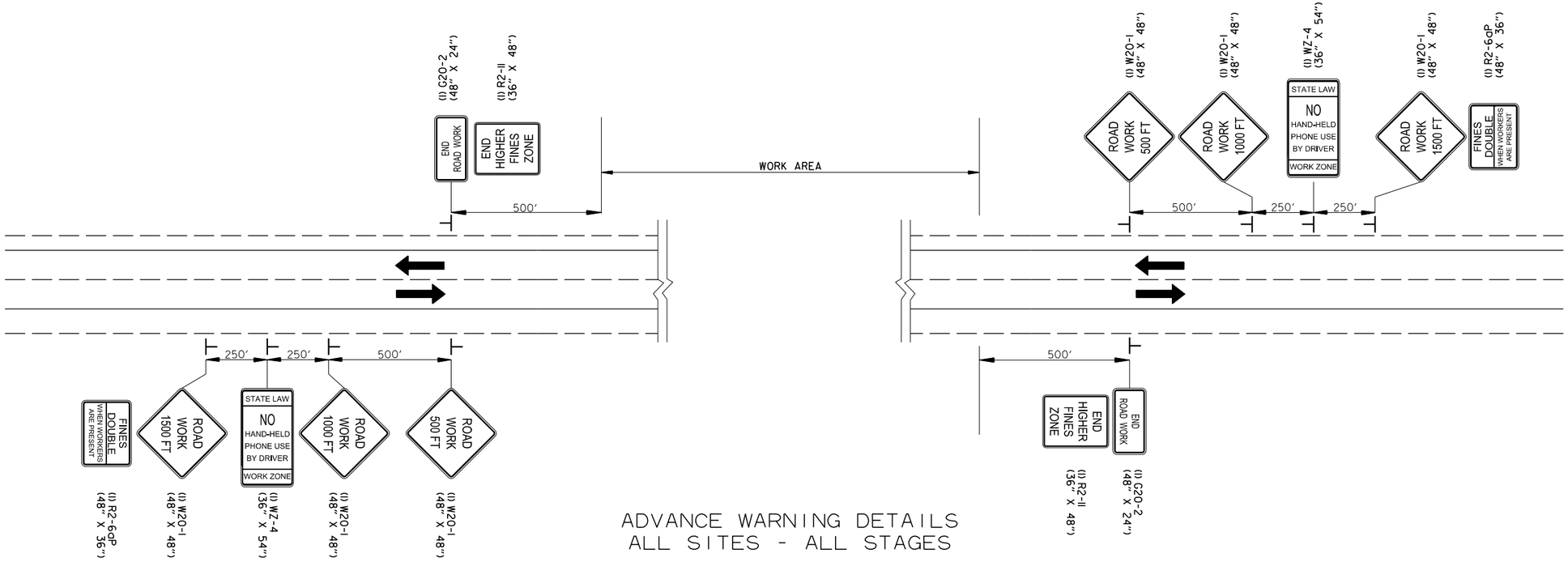

ADVANCE WARNING DETAILS
ALL SITES - ALL STAGES

CONSTRUCTION SEQUENCE

STAGE 1:
INSTALL ADVANCE WARNING SIGNS AND END ROAD WORK SIGNS AT THE LOCATIONS SHOWN ON THE ADVANCE WARNING DETAILS.

CLEARING AND GRUBBING OPERATIONS MAY BEGIN IF AND WHERE DIRECTED BY THE ENGINEER.

INSTALL MAINTENANCE OF TRAFFIC DEVICES AND CONSTRUCT ROADWAY, TEMPORARY WIDENING, EMBANKMENT, BRIDGE, AND DRAINAGE FOR PROJECT AS SHOWN IN STAGE IMAINTENANCE OF TRAFFIC DETAILS.

STAGE 2:
INSTALL STAGE 2 MAINTENANCE OF TRAFFIC DEVICES, AND CONSTRUCTION PAVEMENT MARKINGS. SHIFT TRAFFIC ONTO NEWLY CONSTRUCTED ROADWAY AND BRIDGE.

CONSTRUCT REMAINING MILL AND INLAY AREAS, ROADWAY TIES, DRAINAGE, FINAL GRADING AND EMBANKMENT AS SHOWN ON THE STAGE 2 MAINTENANCE OF TRAFFIC DETAILS.

STAGE 3:
SHIFT TRAFFIC TO PROPOSED PAVEMENT, OBLITERATE TEMP. WIDENING, PLACE FINAL SURFACE AND INSTALL PERMANENT PAVEMENT MARKINGS.

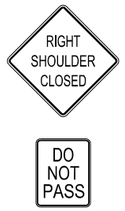

* (2) W21-5a (36" X 36")

* (2) R4-1 (24" X 30")

* SIGNS TO BE USED IF AND WHERE DIRECTED BY THE ENGINEER

BrendanBarns 6/16/2026 1:23:47 PM
WORKSPACE: BrendanBarns
Y:\Projects\ARDOT_16938T_070458 UPRR Grade Separation\Design\CIVIL\Drawings\R070458_06_MOT1_001.dgn
REVISED DATE: $$REVDATE$$

DATE REVISED	DATE FILMED	DATE REVISED	DATE FILMED	FED.RD. DIST.NO.	STATE	FED.AID PROJ.NO.	SHEET NO.	TOTAL SHEETS
				6	ARK.			
				JOB NO.		070458	22A	125

(2) MAINTENANCE OF TRAFFIC DETAILS

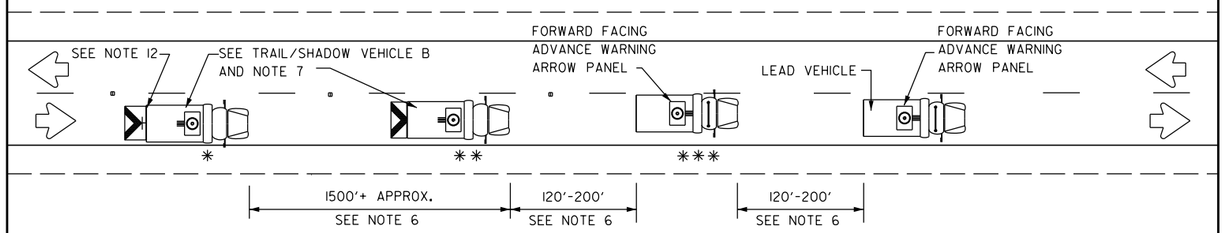

TWO LANE HIGHWAY
(WORK ON TRAVEL LANE)

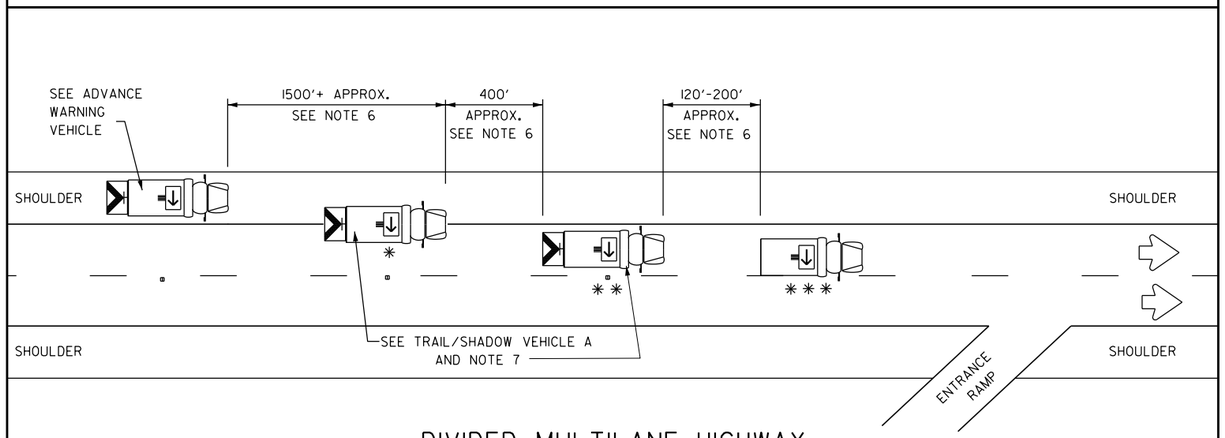

DIVIDED MULTILANE HIGHWAY

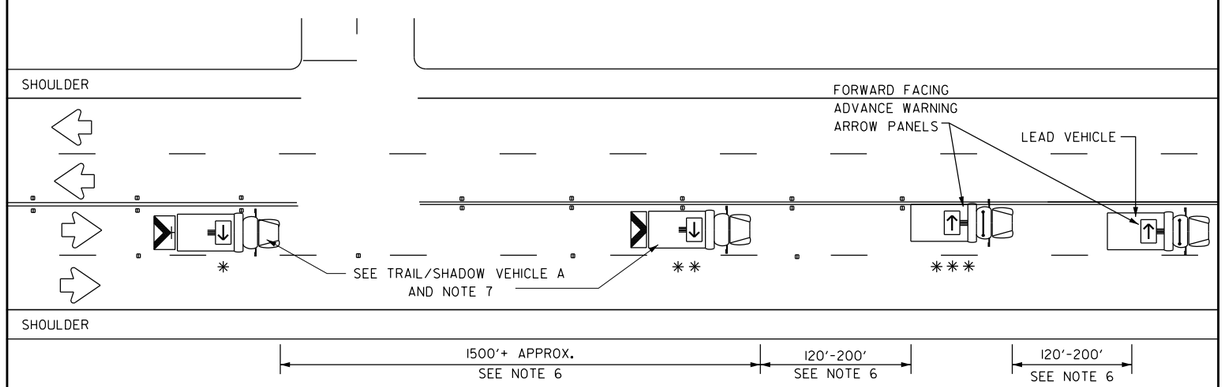

UNDIVIDED MULTILANE HIGHWAY

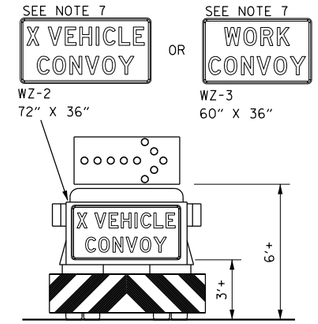

TRAIL/SHADOW VEHICLE A

WITH RIGHT DIRECTIONAL
ADVANCE WARNING ARROW PANEL

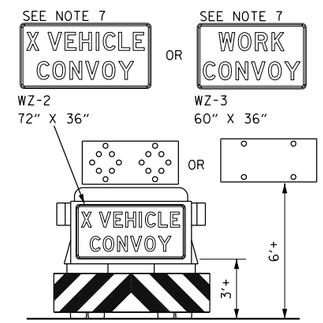

TRAIL/SHADOW VEHICLE B

WITH ADVANCE WARNING ARROW PANEL
IN CAUTION MODE

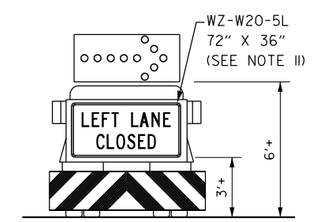

ADVANCE WARNING VEHICLE

WITH RIGHT DIRECTIONAL
ADVANCE WARNING ARROW PANEL

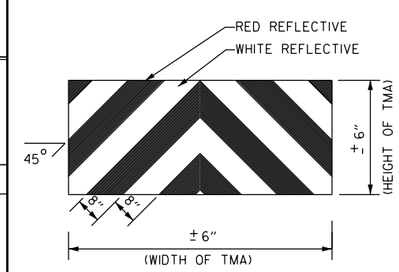

STRIPING FOR TMA

LEGEND			
*	TRAIL VEHICLE	ADVANCE WARNING ARROW PANEL DISPLAY	
**	SHADOW VEHICLE		
***	WORK VEHICLE		RIGHT DIRECTIONAL
	HEAVY WORK VEHICLE		LEFT DIRECTIONAL
	TRUCK MOUNTED ATTENUATOR (TMA)		DOUBLE ARROW
	TRAFFIC FLOW		CAUTION (ALTERNATING DIAMOND OR 4 CORNER FLASH)

TYPICAL APPLICATION - MOBILE WORK ZONE

STATE OF ARKANSAS
LICENSED PROFESSIONAL ENGINEER
No.10887
SCOTT P. THORNSBERRY
1-7-2026

GENERAL NOTES:

1. TRAIL, SHADOW, AND LEAD VEHICLES SHALL BE EQUIPPED WITH ADVANCE WARNING ARROW PANELS AS ILLUSTRATED.
2. THE USE OF AMBER OR GREEN HIGH-INTENSITY ROTATING, FLASHING, OSCILLATING, OR STROBE LIGHTS ON ALL VEHICLES ARE REQUIRED. VEHICLE HAZARD WARNING SIGNALS SHALL NOT BE USED INSTEAD OF THE VEHICLE'S HIGH-INTENSITY ROTATING, FLASHING, OSCILLATING, OR STROBE LIGHTS.
3. THE USE OF TRUCK MOUNTED ATTENUATORS (TMA) ON THE SHADOW VEHICLE, ADVANCE WARNING AND TRAIL VEHICLE ARE REQUIRED.
4. EACH VEHICLE SHALL HAVE TWO-WAY RADIO COMMUNICATION CAPABILITY.
5. WHEN WORK CONVOYS MUST CHANGE LANES, THE TRAIL VEHICLE SHOULD CHANGE LANES FIRST TO SHADOW THE OTHER CONVOY VEHICLES. WHEN WORK CONVOY EXITS THE ROADWAY, THE TRAIL VEHICLE SHOULD EXIT LAST.
6. VEHICLE SPACING BETWEEN THE TRAIL VEHICLE AND THE SHADOW VEHICLE WILL VARY DEPENDING ON SIGHT DISTANCE RESTRICTIONS AND QUEUE LENGTHS. MOTORISTS APPROACHING THE CONVOY SHOULD BE ABLE TO SEE THE TRAIL VEHICLE IN TIME TO SLOW DOWN AND/OR CHANGE LANES AS THEY APPROACH THE TRAIL VEHICLE. VEHICLE SPACING BETWEEN THE WORK VEHICLE AND SHADOW VEHICLE AND VEHICLE SPACING BETWEEN THE WORK VEHICLE AND LEAD VEHICLE MAY VARY ACCORDING TO TERRAIN, WORK ACTIVITY AND OTHER FACTORS.
7. X VEHICLE CONVOY (WZ-2) OR WORK CONVOY (WZ-3) SIGNS SHALL BE USED ON TRAIL VEHICLES AND SHADOW VEHICLES AS SHOWN. AS AN OPTION 48" X 48" DIAMOND SHAPED WORK CONVOY (WZ-2A) OR X VEHICLE CONVOY (WZ-3A) SIGNS MAY BE USED WHERE ADEQUATE MOUNTING SPACE EXISTS. WHEN USED, THE X VEHICLE CONVOY SIGN SHALL HAVE THE NUMBER OF THE CONVOY VEHICLES DISPLAYED ON THE SIGN IN THE NUMBER DESIGNATION "X" LOCATION. THE X VEHICLE CONVOY SIGN SHALL NOT BE USED ON THE SHADOW VEHICLE.
8. FOR DIVIDED HIGHWAYS WITH TWO OR THREE LANES IN ONE DIRECTION, THE APPROPRIATE LEFT LANE CLOSED (WZ-W20-5L), RIGHT LANE CLOSED (WZ-W20-5R), OR CENTER LANE CLOSED (WZ-W20-5C) SIGN SHOULD BE USED ON THE ADVANCE WARNING VEHICLE. AS AN OPTION, A PORTABLE CHANGEABLE MESSAGE SIGN (PCMS) OR TRUCK MOUNTED CHANGEABLE MESSAGE SIGN (TMCMS) WITH A MINIMUM CHARACTER HEIGHT OF 12", AND DISPLAYING THE SAME LEGEND MAY BE SUBSTITUTED FOR THESE SIGNS. AN APPROPRIATE DIRECTIONAL ARROW DISPLAY, SIMULATING THE SIZE AND LEGIBILITY OF THE ADVANCE WARNING ARROW PANEL MAY BE USED IN THE SECOND PHASE OF THE PCMS/TMCMS MESSAGE. WHEN THIS IS DONE, THE ARROW BOARD WILL NOT BE REQUIRED ON THE ADVANCE WARNING VEHICLE.
9. A DOUBLE ARROW SHALL NOT BE DISPLAYED ON THE ADVANCE WARNING ARROW PANEL ON THE ADVANCE WARNING VEHICLE.
10. STANDARD DIAMOND SHAPE VERSIONS OF THE WZ SERIES SIGNS MAY BE USED AS AN OPTION IF THE RECTANGULAR SIGNS SHOWN ARE NOT AVAILABLE.
11. THE ADVANCE WARNING VEHICLE MAY STRADDLE THE EDGELINE WHEN SHOULDER WIDTH MAKES IT NECESSARY.
12. ON TWO-LANE TWO-WAY ROADWAYS, THE WORK AND PROTECTION VEHICLES SHOULD PULL OVER PERIODICALLY TO ALLOW MOTOR VEHICLE TRAFFIC TO PASS. A DO NOT PASS (R4-1) SIGN SHALL BE PLACED ON THE BACK OF THE REARMOST PROTECTION VEHICLE.
13. MOBILE WORK ZONE METHODS AS DEPICTED IN THIS STANDARD DRAWING SHALL BE UTILIZED ON ALL PROJECTS THAT INCLUDE INSTALLATION OR REMOVAL OF RAISED PAVEMENT MARKERS OR PAVEMENT MARKINGS UNLESS APPROVED BY THE ENGINEER ON PROJECTS LESS THAN 0.5 MILE IN LENGTH.
14. NO DIRECT PAYMENT WILL BE MADE FOR COMPLIANCE WITH THE METHODS DEPICTED IN THIS STANDARD DRAWING (WHICH INCLUDES ALL SIGNS, DEVICES, MATERIALS, LABOR, TOOLS, EQUIPMENT, AND INCIDENTALS NECESSARY TO COMPLY) BUT SHALL BE CONSIDERED SUBSIDIARY TO THE MAINTENANCE OF TRAFFIC PAY ITEM.

MAINTENANCE OF TRAFFIC DETAILS

Scott.Thornsberry 1/7/2026 12:57:09 PM
WORKSPACE: scott.thornsberry
Y:\Projects\ARDOT_16938?_070458 UPRR Grade Separation\Design\CIVIL\Drawings\R070458.06_MOT1.001A.dgn
REVISED DATE: $$REVDATE$$

DATE REVISED	DATE FILMED	DATE REVISED	DATE FILMED	FED.RD. DIST.NO.	STATE	FED.AID PROJ.NO.	SHEET NO.	TOTAL SHEETS
				6	ARK.			
				JOB NO.		070458	23	125

(2) MAINTENANCE OF TRAFFIC DETAILS

STATE OF ARKANSAS LICENSED PROFESSIONAL ENGINEER No.10887 SCOTT P. THORNSBERRY
6-17-2026

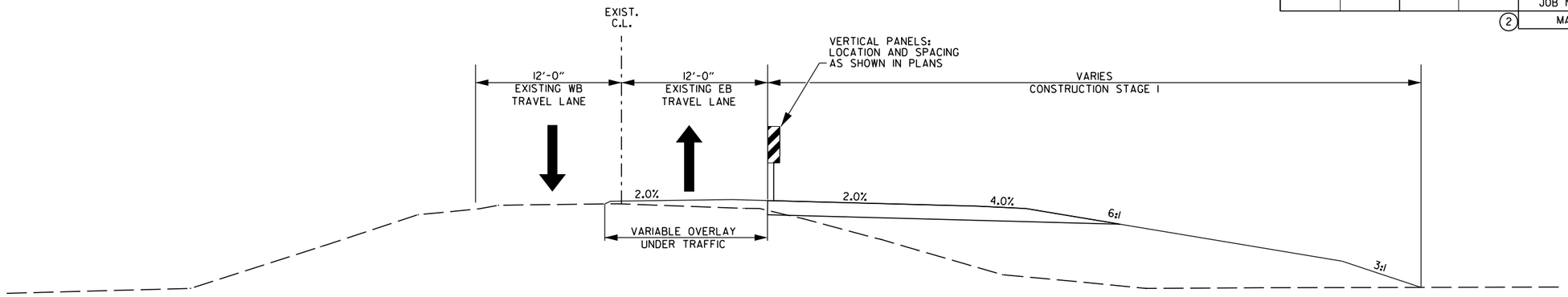

STAGE 1- NOTCH AND WIDEN MAINTENANCE OF TRAFFIC DETAILS TYPICAL SECTION

STA. 315+00.00 TO 326+32.00
STA. 375+58.22 TO 381+30.00

CONSTRUCTION SEQUENCE

STAGE 1:
INSTALL ADVANCE WARNING SIGNS AND END ROAD WORK SIGNS AT THE LOCATIONS SHOWN ON THE ADVANCE WARNING DETAILS.

CLEARING AND GRUBBING OPERATIONS MAY BEGIN IF AND WHERE DIRECTED BY THE ENGINEER.

INSTALL MAINTENANCE OF TRAFFIC DEVICES AND CONSTRUCT ROADWAY, TEMPORARY WIDENING, EMBANKMENT, BRIDGE, AND DRAINAGE FOR PROJECT AS SHOWN IN STAGE 1 MAINTENANCE OF TRAFFIC DETAILS.

STAGE 2:
INSTALL STAGE 2 MAINTENANCE OF TRAFFIC DEVICES, AND CONSTRUCTION PAVEMENT MARKINGS. SHIFT TRAFFIC ONTO NEWLY CONSTRUCTED ROADWAY AND BRIDGE.

CONSTRUCT REMAINING MILL AND INLAY AREAS, ROADWAY TIES, DRAINAGE, FINAL GRADING AND EMBANKMENT AS SHOWN ON THE STAGE 2 MAINTENANCE OF TRAFFIC DETAILS.

STAGE 3:
SHIFT TRAFFIC TO PROPOSED PAVEMENT, OBLITERATE TEMP. WIDENING, PLACE FINAL SURFACE AND INSTALL PERMANENT PAVEMENT MARKINGS.

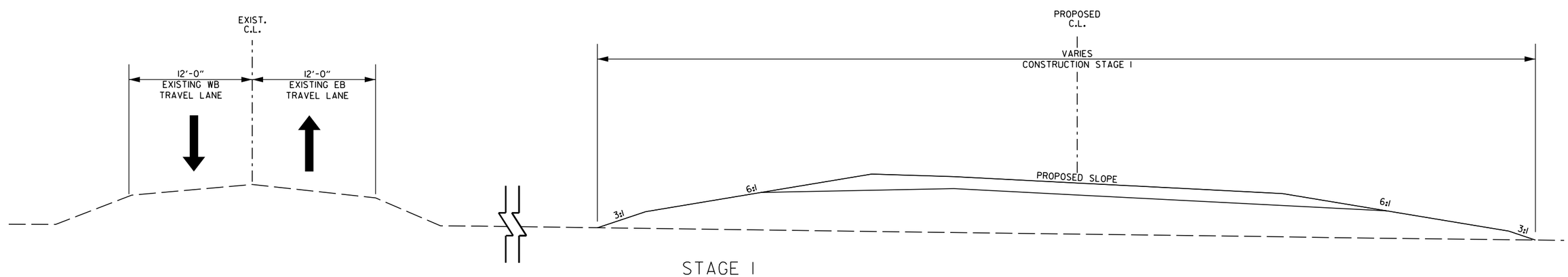

STAGE 1 MAINTENANCE OF TRAFFIC DETAILS TYPICAL SECTION

STA. 326+32.00 TO STA. 342+37.32 (BR. END)
STA. 350+93.48 (BR. END) TO STA. 375+58.22

STAGE 1 TYPICAL SECTION MAINTENANCE OF TRAFFIC DETAILS

Brendan.Barns 6/16/2026 1:23:48 PM
WORKSPACE: Brendan.Barns
Y:\Projects\ARDOT_169387_070458 UPRR Grade Separation\Design\CIVIL\Drawings\R070458_06_MOT1_002.dgn
REVISED DATE: $$REVDATE$$

DATE REVISED	DATE FILMED	DATE REVISED	DATE FILMED	FED.RD. DIST.NO.	STATE	FED.AID PROJ.NO.	SHEET NO.	TOTAL SHEETS
				6	ARK.			
				JOB NO.		070458	24	125

(2) MAINTENANCE OF TRAFFIC DETAILS

STATE OF ARKANSAS
LICENSED PROFESSIONAL ENGINEER
No.10887
SCOTT P. THORNSBERRY
6-18-2026

LEGEND

- STAGE CONST. AREA
- TYPE 3 BARRICADE
- TRAFFIC FLOW ARROWS
- VERTICAL PANEL
- PRECAST CONCRETE BARRIER WALL
- TRAFFIC DRUM

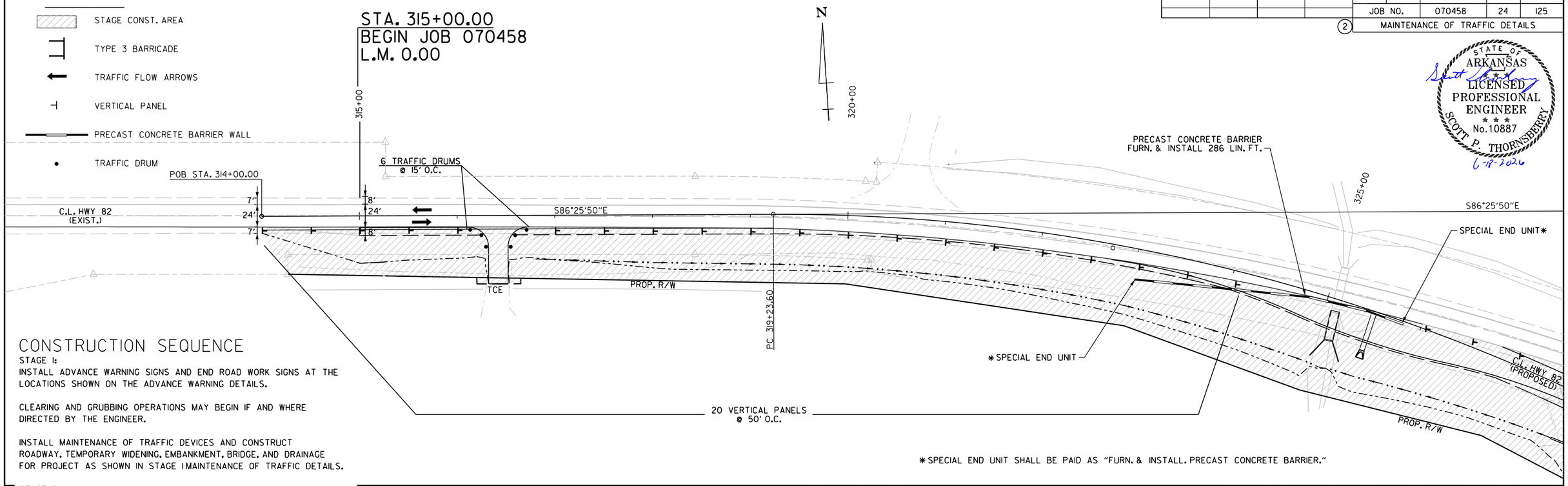

*SPECIAL END UNIT SHALL BE PAID AS "FURN. & INSTALL. PRECAST CONCRETE BARRIER."

CONSTRUCTION SEQUENCE

STAGE 1:
INSTALL ADVANCE WARNING SIGNS AND END ROAD WORK SIGNS AT THE LOCATIONS SHOWN ON THE ADVANCE WARNING DETAILS.

CLEARING AND GRUBBING OPERATIONS MAY BEGIN IF AND WHERE DIRECTED BY THE ENGINEER.

INSTALL MAINTENANCE OF TRAFFIC DEVICES AND CONSTRUCT ROADWAY, TEMPORARY WIDENING, EMBANKMENT, BRIDGE, AND DRAINAGE FOR PROJECT AS SHOWN IN STAGE 1 MAINTENANCE OF TRAFFIC DETAILS.

STAGE 2:
INSTALL STAGE 2 MAINTENANCE OF TRAFFIC DEVICES, AND CONSTRUCTION PAVEMENT MARKINGS. SHIFT TRAFFIC ONTO NEWLY CONSTRUCTED ROADWAY AND BRIDGE.

CONSTRUCT REMAINING MILL AND INLAY AREAS, ROADWAY TIES, DRAINAGE, FINAL GRADING AND EMBANKMENT AS SHOWN ON THE STAGE 2 MAINTENANCE OF TRAFFIC DETAILS.

STAGE 3:
SHIFT TRAFFIC TO PROPOSED PAVEMENT, OBLITERATE TEMP. WIDENING, PLACE FINAL SURFACE AND INSTALL PERMANENT PAVEMENT MARKINGS.

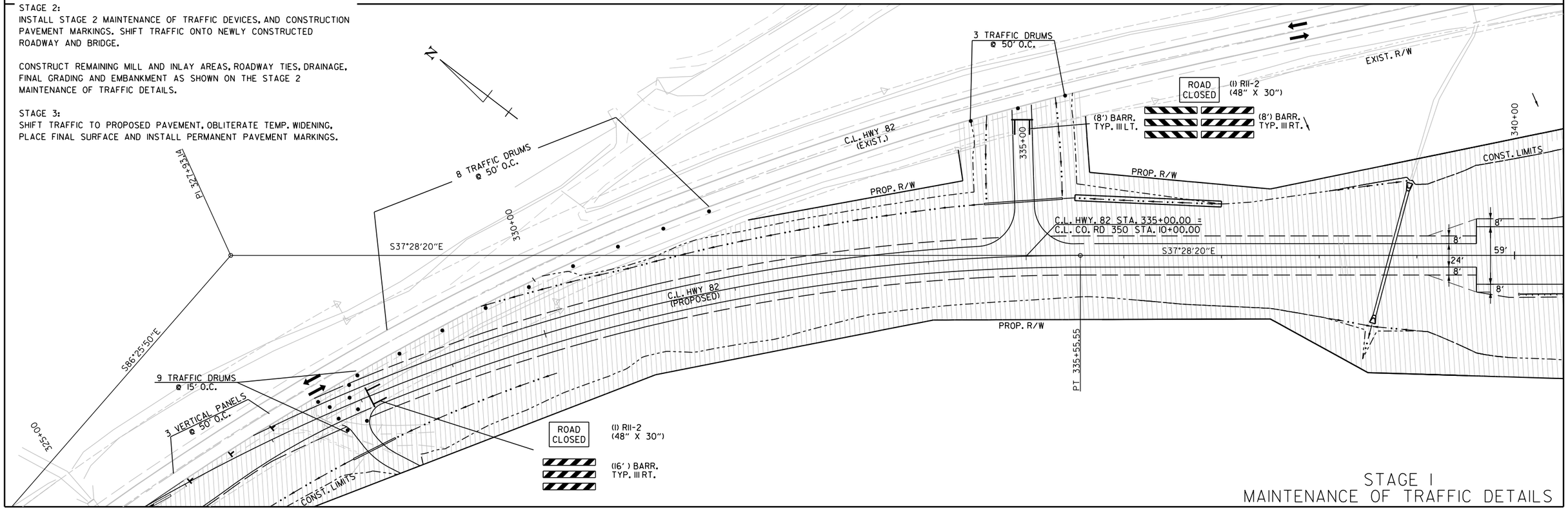

STAGE 1
MAINTENANCE OF TRAFFIC DETAILS

BrendanBarns 6/16/2026 1:23:49 PM
WORKSPACE: BrendanBarns
Y:\Projects\ARDOT_16938T_070458 UPRR Grade Separation\Design\CIVIL\Drawings\R070458_06_MOT1_003.dgn
REVISED DATE: $$REVDATE$$

DATE REVISED	DATE FILMED	DATE REVISED	DATE FILMED	FED.RD. DIST.NO.	STATE	FED.AID PROJ.NO.	SHEET NO.	TOTAL SHEETS
				6	ARK.			
				JOB NO.		070458	25	125

(2) MAINTENANCE OF TRAFFIC DETAILS

STATE OF ARKANSAS
LICENSED PROFESSIONAL ENGINEER
No.10887
SCOTT P. THORNSBERRY
6-16-2026

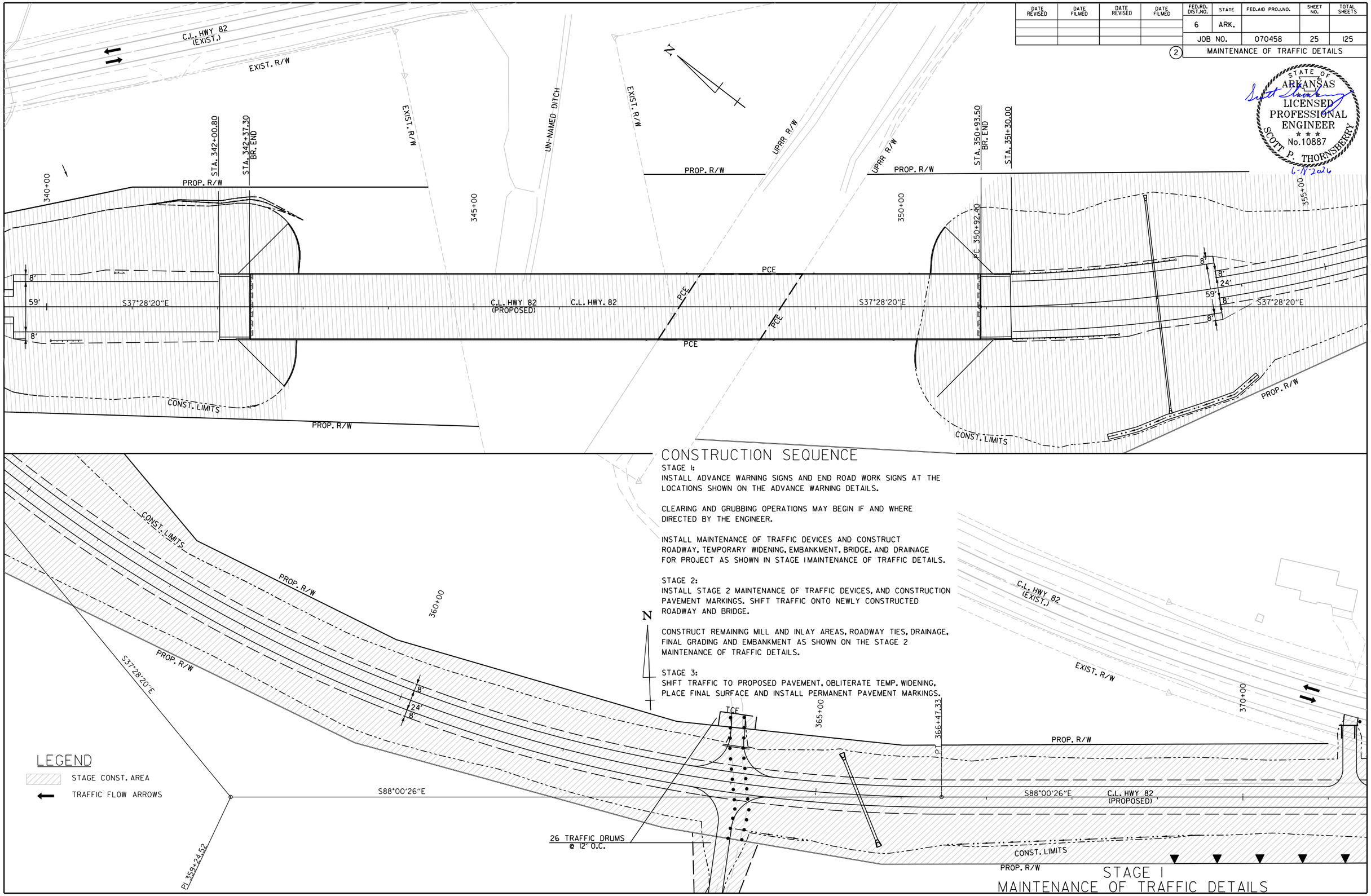

CONSTRUCTION SEQUENCE

STAGE 1:
INSTALL ADVANCE WARNING SIGNS AND END ROAD WORK SIGNS AT THE LOCATIONS SHOWN ON THE ADVANCE WARNING DETAILS.

CLEARING AND GRUBBING OPERATIONS MAY BEGIN IF AND WHERE DIRECTED BY THE ENGINEER.

INSTALL MAINTENANCE OF TRAFFIC DEVICES AND CONSTRUCT ROADWAY, TEMPORARY WIDENING, EMBANKMENT, BRIDGE, AND DRAINAGE FOR PROJECT AS SHOWN IN STAGE IMAINTENANCE OF TRAFFIC DETAILS.

STAGE 2:
INSTALL STAGE 2 MAINTENANCE OF TRAFFIC DEVICES, AND CONSTRUCTION PAVEMENT MARKINGS. SHIFT TRAFFIC ONTO NEWLY CONSTRUCTED ROADWAY AND BRIDGE.

CONSTRUCT REMAINING MILL AND INLAY AREAS, ROADWAY TIES, DRAINAGE, FINAL GRADING AND EMBANKMENT AS SHOWN ON THE STAGE 2 MAINTENANCE OF TRAFFIC DETAILS.

STAGE 3:
SHIFT TRAFFIC TO PROPOSED PAVEMENT, OBLITERATE TEMP. WIDENING, PLACE FINAL SURFACE AND INSTALL PERMANENT PAVEMENT MARKINGS.

LEGEND

STAGE CONST. AREA

TRAFFIC FLOW ARROWS

STAGE I
MAINTENANCE OF TRAFFIC DETAILS

Brandon.Barns 6/16/2026 12:35:50 PM
WORKSPACE: Brandon.Barns
Y:\Projects\ARDOT_16938T_070458 UPRR Grade Separation\Design\CIVIL\Drawings\R070458_06_MOTI_004.dgn
REVISED DATE: $$REVDATE$$

DATE REVISED	DATE FILMED	DATE REVISED	DATE FILMED	FED.RD. DIST.NO.	STATE	FED.AID PROJ.NO.	SHEET NO.	TOTAL SHEETS
				6	ARK.			
				JOB NO.		070458	26	125
				2	MAINTENANCE OF TRAFFIC DETAILS			

STATE OF ARKANSAS
LICENSED PROFESSIONAL ENGINEER
No.10887
SCOTT P. THORNSBERRY
6-16-2026

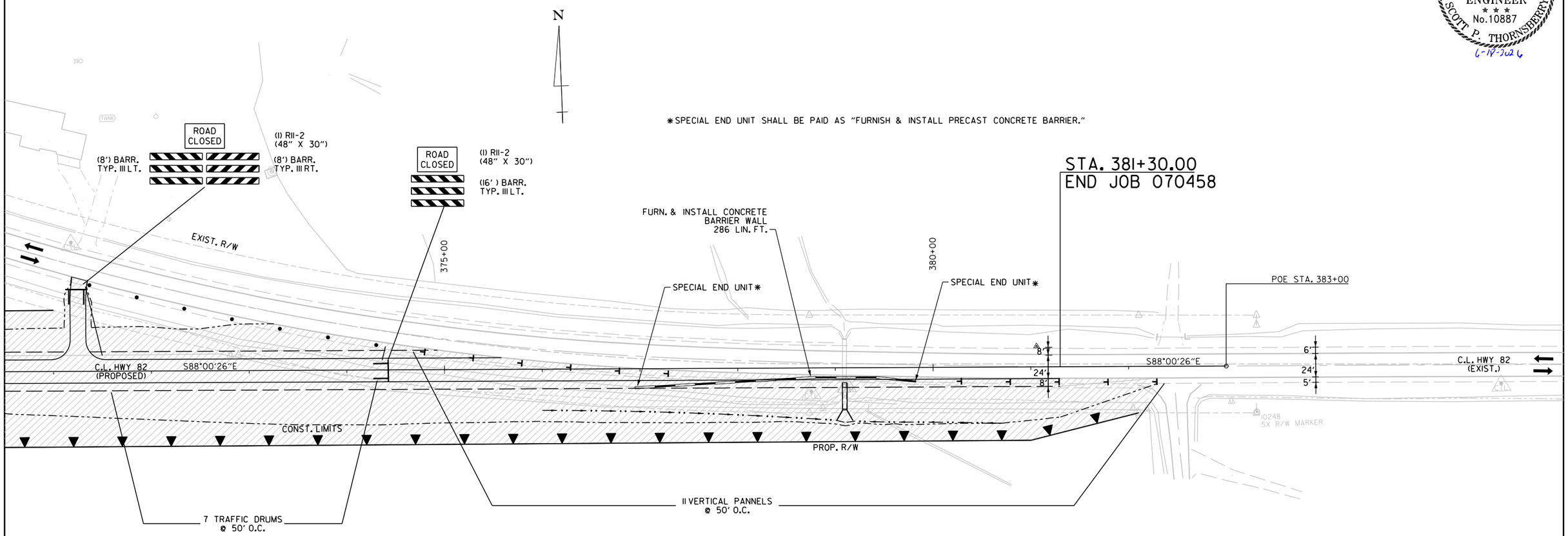

LEGEND

- STAGE CONST. AREA
- TYPE 3 BARRICADE
- TRAFFIC FLOW ARROWS
- VERTICAL PANEL
- PRECAST CONCRETE BARRIER WALL

STAGE 1- MAINTENANCE OF TRAFFIC SIGNS AND DEVICES:

TRAFFIC DRUMS		59 EACH
VERTICAL PANELS		34 EACH
FURN. & INSTALLING PRECAST CONCRETE BARRIER		572 LIN. FT.
"ROAD CLOSED" SIGNS	4 @ 10 SQ. FT. =	40 SQ. FT.
BARRICADES:	16' - RT. = 1	64 LIN. FT.
	16' - LT. = 1	
	8' - RT. = 2	
	8' - LT. = 2	

CONSTRUCTION SEQUENCE

STAGE 1:
INSTALL ADVANCE WARNING SIGNS AND END ROAD WORK SIGNS AT THE LOCATIONS SHOWN ON THE ADVANCE WARNING DETAILS.

CLEARING AND GRUBBING OPERATIONS MAY BEGIN IF AND WHERE DIRECTED BY THE ENGINEER.

INSTALL MAINTENANCE OF TRAFFIC DEVICES AND CONSTRUCT ROADWAY, TEMPORARY WIDENING, EMBANKMENT, BRIDGE, AND DRAINAGE FOR PROJECT AS SHOWN IN STAGE 1 MAINTENANCE OF TRAFFIC DETAILS.

STAGE 2:
INSTALL STAGE 2 MAINTENANCE OF TRAFFIC DEVICES, AND CONSTRUCTION PAVEMENT MARKINGS. SHIFT TRAFFIC ONTO NEWLY CONSTRUCTED ROADWAY AND BRIDGE.

CONSTRUCT REMAINING MILL AND INLAY AREAS, ROADWAY TIES, DRAINAGE, FINAL GRADING AND EMBANKMENT AS SHOWN ON THE STAGE 2 MAINTENANCE OF TRAFFIC DETAILS.

STAGE 3:
SHIFT TRAFFIC TO PROPOSED PAVEMENT, OBLITERATE TEMP. WIDENING, PLACE FINAL SURFACE AND INSTALL PERMANENT PAVEMENT MARKINGS.

STAGE 1
MAINTENANCE OF TRAFFIC DETAILS

Brendan.Barns 6/16/2026 1:23:50 PM
WORKSPACE: Brendan.Barns
Y:\Projects\ARDOT_169387_070458 UPRR Grade Separation\Design\CIVIL\Drawings\R070458_06_MOT1_005.dgn
REVISED DATE: $$REVDATE$$

DATE REVISED	DATE FILMED	DATE REVISED	DATE FILMED	FED.RD. DIST.NO.	STATE	FED.AID PROJ.NO.	SHEET NO.	TOTAL SHEETS
				6	ARK.			
				JOB NO.		070458	27	125

(2) MAINTENANCE OF TRAFFIC DETAILS

STATE OF ARKANSAS
LICENSED PROFESSIONAL ENGINEER
No.10887
SCOTT P. THORNSBERRY
6-17-2026

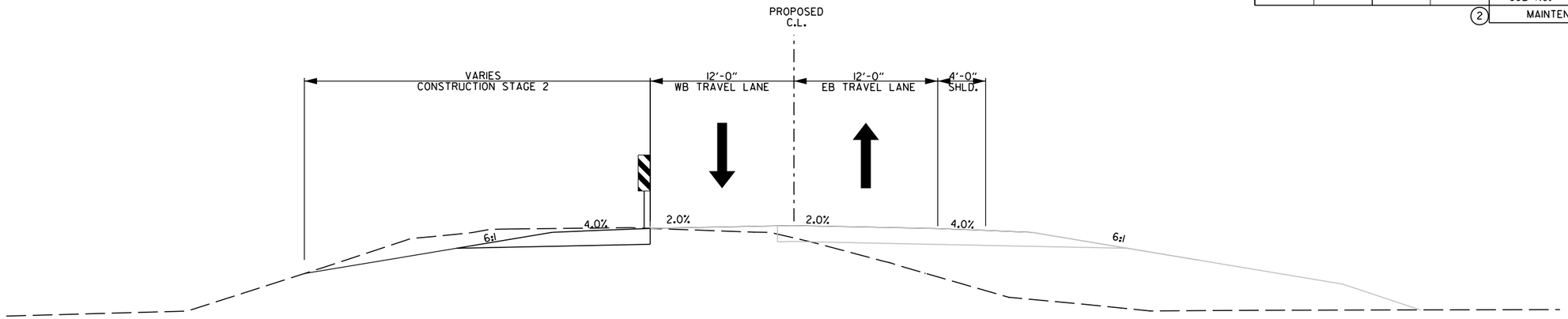

STAGE 2
MAINTENANCE OF TRAFFIC DETAILS
TYPICAL SECTION

STA. 315+00.00 TO 326+32.00
STA. 375+58.22 TO 381+30.00

CONSTRUCTION SEQUENCE

STAGE 1:
INSTALL ADVANCE WARNING SIGNS AND END ROAD WORK SIGNS AT THE LOCATIONS SHOWN ON THE ADVANCE WARNING DETAILS.

CLEARING AND GRUBBING OPERATIONS MAY BEGIN IF AND WHERE DIRECTED BY THE ENGINEER.

INSTALL MAINTENANCE OF TRAFFIC DEVICES AND CONSTRUCT ROADWAY, TEMPORARY WIDENING, EMBANKMENT, BRIDGE, AND DRAINAGE FOR PROJECT AS SHOWN IN STAGE IMAINTENANCE OF TRAFFIC DETAILS.

STAGE 2:
INSTALL STAGE 2 MAINTENANCE OF TRAFFIC DEVICES, AND CONSTRUCTION PAVEMENT MARKINGS. SHIFT TRAFFIC ONTO NEWLY CONSTRUCTED ROADWAY AND BRIDGE.

CONSTRUCT REMAINING MILL AND INLAY AREAS, ROADWAY TIES, DRAINAGE, FINAL GRADING AND EMBANKMENT AS SHOWN ON THE STAGE 2 MAINTENANCE OF TRAFFIC DETAILS.

STAGE 3:
SHIFT TRAFFIC TO PROPOSED PAVEMENT, OBLITERATE TEMP. WIDENING, PLACE FINAL SURFACE AND INSTALL PERMANENT PAVEMENT MARKINGS.

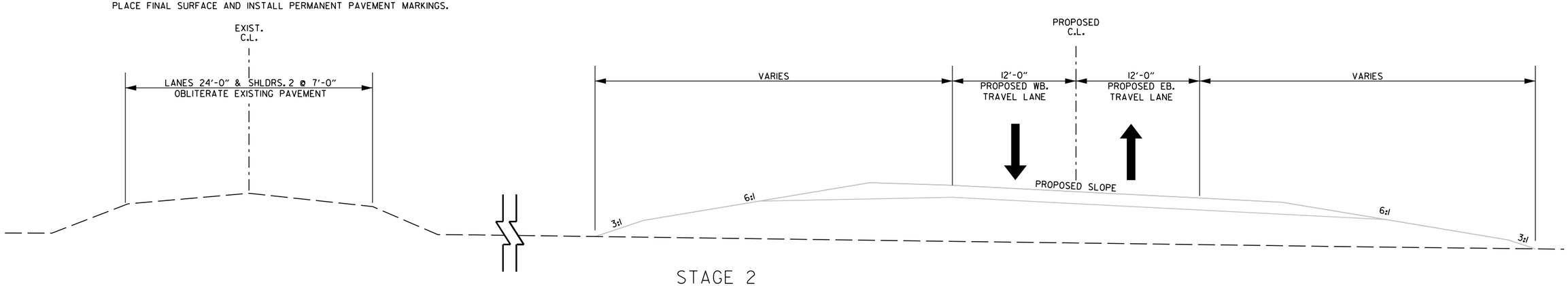

STAGE 2
MAINTENANCE OF TRAFFIC DETAILS
TYPICAL SECTION

STA. 326+32.00 TO STA. 342+37.32 (BR. END)
STA. 350+93.48 (BR. END) TO STA. 375+58.22

STAGE 2
TYPICAL SECTION
MAINTENANCE OF TRAFFIC DETAILS

Brandon.Barns 6/16/2026 1:23:51 PM
WORKSPACE: Brandon.Barns
Y:\Projects\ARDOT_16938T_070458 UPRR Grade Separation\Design\CIVIL\Drawings\R070458_06_MOT2_001.dgn
REVISED DATE: $$REVDATE$$

DATE REVISED	DATE FILMED	DATE REVISED	DATE FILMED

FED.RD. DIST.NO.	STATE	FED.AID PROJ.NO.	SHEET NO.	TOTAL SHEETS
6	ARK.			
JOB NO.		070458	28	125

(2) MAINTENANCE OF TRAFFIC DETAILS

LEGEND

- STAGE CONST. AREA
- TYPE 3 BARRICADE
- TRAFFIC FLOW ARROWS
- VERTICAL PANEL
- TRAFFIC DRUM

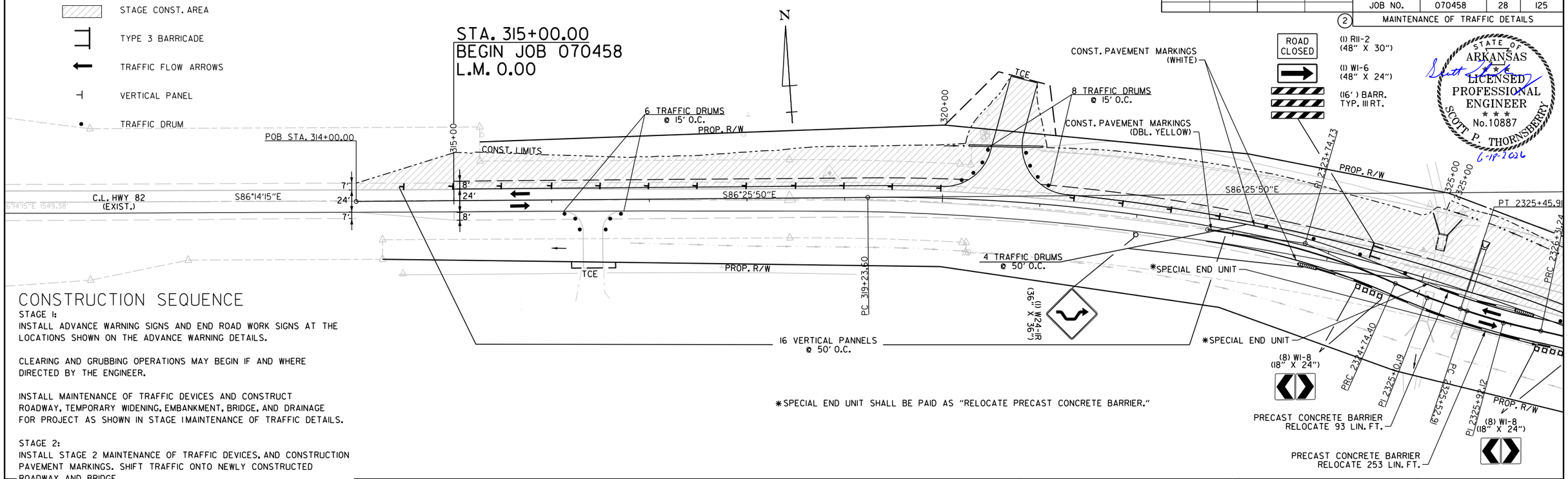

*SPECIAL END UNIT SHALL BE PAID AS "RELOCATE PRECAST CONCRETE BARRIER."

STATE OF ARKANSAS
LICENSED PROFESSIONAL ENGINEER
No.10887
SCOTT P. THORNSBERRY
6-18-2026

CONSTRUCTION SEQUENCE

STAGE 1:
INSTALL ADVANCE WARNING SIGNS AND END ROAD WORK SIGNS AT THE LOCATIONS SHOWN ON THE ADVANCE WARNING DETAILS.

CLEARING AND GRUBBING OPERATIONS MAY BEGIN IF AND WHERE DIRECTED BY THE ENGINEER.

INSTALL MAINTENANCE OF TRAFFIC DEVICES AND CONSTRUCT ROADWAY, TEMPORARY WIDENING, EMBANKMENT, BRIDGE, AND DRAINAGE FOR PROJECT AS SHOWN IN STAGE 1 MAINTENANCE OF TRAFFIC DETAILS.

STAGE 2:
INSTALL STAGE 2 MAINTENANCE OF TRAFFIC DEVICES, AND CONSTRUCTION PAVEMENT MARKINGS. SHIFT TRAFFIC ONTO NEWLY CONSTRUCTED ROADWAY AND BRIDGE.

CONSTRUCT REMAINING MILL AND INLAY AREAS, ROADWAY TIES, DRAINAGE, FINAL GRADING AND EMBANKMENT AS SHOWN ON THE STAGE 2 MAINTENANCE OF TRAFFIC DETAILS.

STAGE 3:
SHIFT TRAFFIC TO PROPOSED PAVEMENT, OBLITERATE TEMP. WIDENING, PLACE FINAL SURFACE AND INSTALL PERMANENT PAVEMENT MARKINGS.

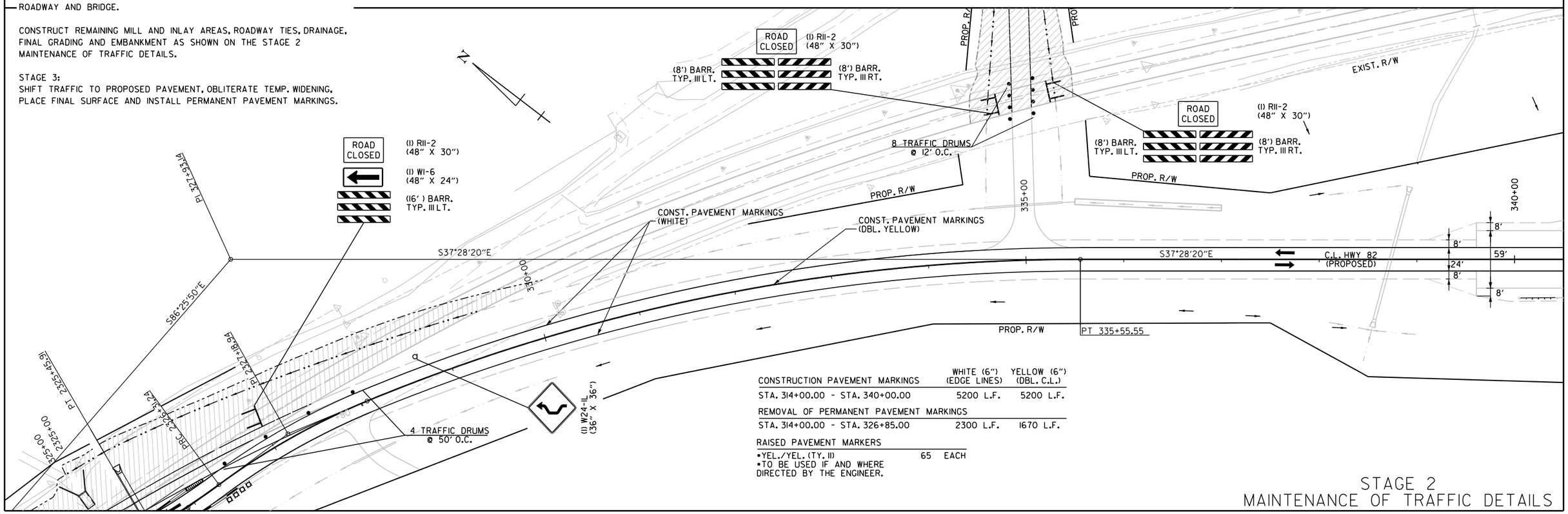

CONSTRUCTION PAVEMENT MARKINGS	WHITE (6") (EDGE LINES)	YELLOW (6") (DBL. C.L.)
STA. 314+00.00 - STA. 340+00.00	5200 L.F.	5200 L.F.
REMOVAL OF PERMANENT PAVEMENT MARKINGS		
STA. 314+00.00 - STA. 326+85.00	2300 L.F.	1670 L.F.

RAISED PAVEMENT MARKERS

•YEL./YEL. (TY. II)	65	EACH

•TO BE USED IF AND WHERE DIRECTED BY THE ENGINEER.

STAGE 2
MAINTENANCE OF TRAFFIC DETAILS

Brendan.Barns 6/16/2026 12:35:52 PM
WORKSPACE: Brendan.Barns
Y:\Projects\ARDOT_169387_070458 UPRR Grade Separation\Design\CIVIL\Drawings\R070458_06_MOT2_002.dgn
REVISED DATE: $$REVDATE$$

DATE REVISED	DATE FILMED	DATE REVISED	DATE FILMED	FED.RD. DIST.NO.	STATE	FED.AID PROJ.NO.	SHEET NO.	TOTAL SHEETS
				6	ARK.			
				JOB NO.		070458	29	125

(2) MAINTENANCE OF TRAFFIC DETAILS

STATE OF ARKANSAS
LICENSED PROFESSIONAL ENGINEER
No.10887
SCOTT P. THORNSBERRY
6-18-2026

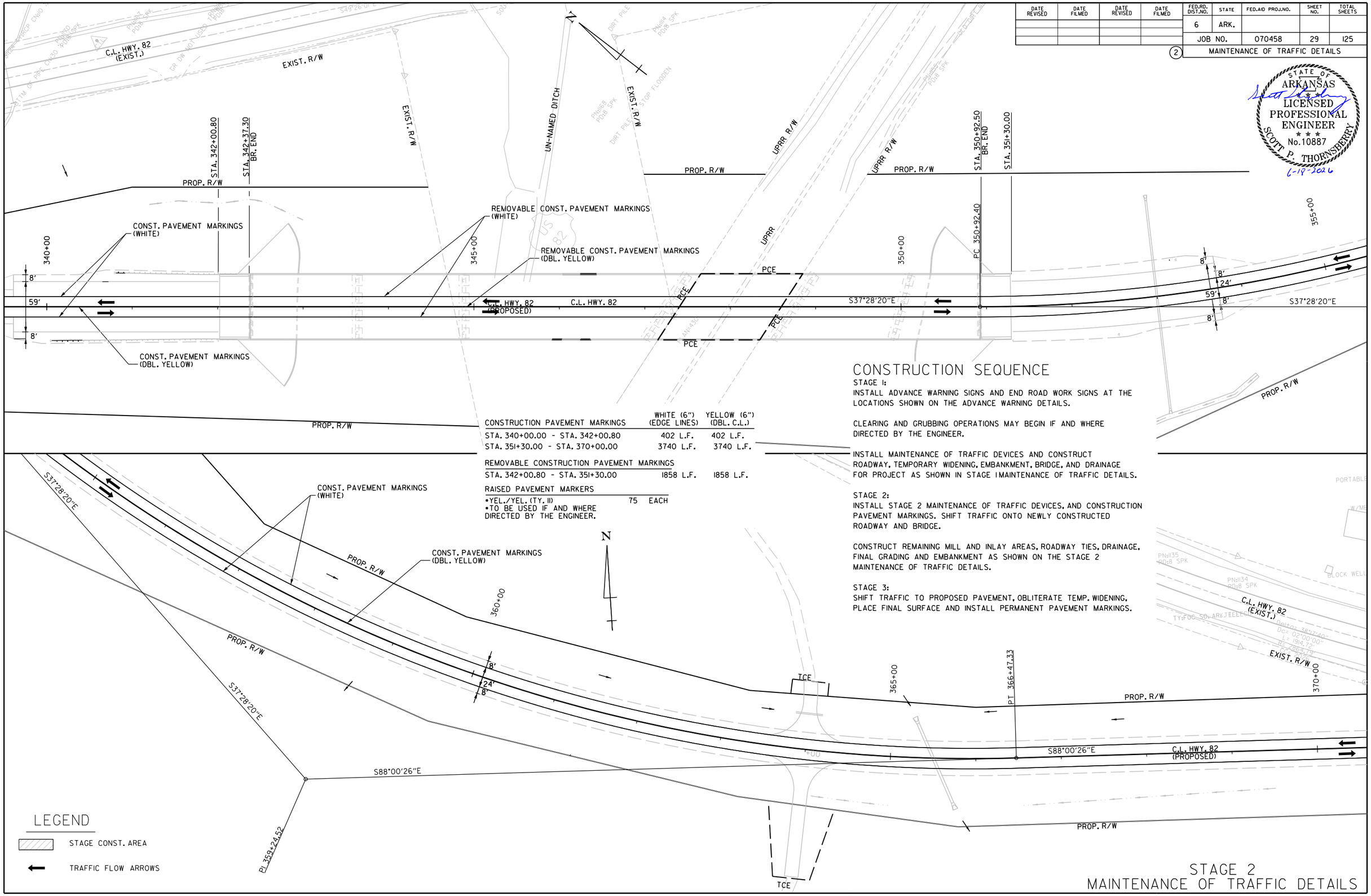

CONSTRUCTION PAVEMENT MARKINGS	WHITE (6") (EDGE LINES)	YELLOW (6") (DBL. C.L.)
STA. 340+00.00 - STA. 342+00.80	402 L.F.	402 L.F.
STA. 351+30.00 - STA. 370+00.00	3740 L.F.	3740 L.F.
REMOVABLE CONSTRUCTION PAVEMENT MARKINGS		
STA. 342+00.80 - STA. 351+30.00	1858 L.F.	1858 L.F.
RAISED PAVEMENT MARKERS		
•YEL./YEL. (TY. II)	75 EACH	

•TO BE USED IF AND WHERE DIRECTED BY THE ENGINEER.

CONSTRUCTION SEQUENCE

STAGE 1:
INSTALL ADVANCE WARNING SIGNS AND END ROAD WORK SIGNS AT THE LOCATIONS SHOWN ON THE ADVANCE WARNING DETAILS.

CLEARING AND GRUBBING OPERATIONS MAY BEGIN IF AND WHERE DIRECTED BY THE ENGINEER.

INSTALL MAINTENANCE OF TRAFFIC DEVICES AND CONSTRUCT ROADWAY, TEMPORARY WIDENING, EMBANKMENT, BRIDGE, AND DRAINAGE FOR PROJECT AS SHOWN IN STAGE 1 MAINTENANCE OF TRAFFIC DETAILS.

STAGE 2:
INSTALL STAGE 2 MAINTENANCE OF TRAFFIC DEVICES, AND CONSTRUCTION PAVEMENT MARKINGS. SHIFT TRAFFIC ONTO NEWLY CONSTRUCTED ROADWAY AND BRIDGE.

CONSTRUCT REMAINING MILL AND INLAY AREAS, ROADWAY TIES, DRAINAGE, FINAL GRADING AND EMBANKMENT AS SHOWN ON THE STAGE 2 MAINTENANCE OF TRAFFIC DETAILS.

STAGE 3:
SHIFT TRAFFIC TO PROPOSED PAVEMENT, OBLITERATE TEMP. WIDENING, PLACE FINAL SURFACE AND INSTALL PERMANENT PAVEMENT MARKINGS.

LEGEND

STAGE CONST. AREA

TRAFFIC FLOW ARROWS

STAGE 2
MAINTENANCE OF TRAFFIC DETAILS

Brendan.Barns 6/16/2026 1:23:54 PM
WORKSPACE: Brendan.Barns
Y:\Projects\ARDOT_16387_070458 UPRR Grade Separation\Design\CIVIL\Drawings\R070458_06_MOT2_003.dgn
REVISED DATE: $$REVDATE$$

DATE REVISED	DATE FILMED	DATE REVISED	DATE FILMED	FED.RD. DIST.NO.	STATE	FED.AID PROJ.NO.	SHEET NO.	TOTAL SHEETS
				6	ARK.			
				JOB NO.		070458	30	125

(2) MAINTENANCE OF TRAFFIC DETAILS

STATE OF ARKANSAS LICENSED PROFESSIONAL ENGINEER No.10887 SCOTT P. THORNSBERRY
6-16-2026

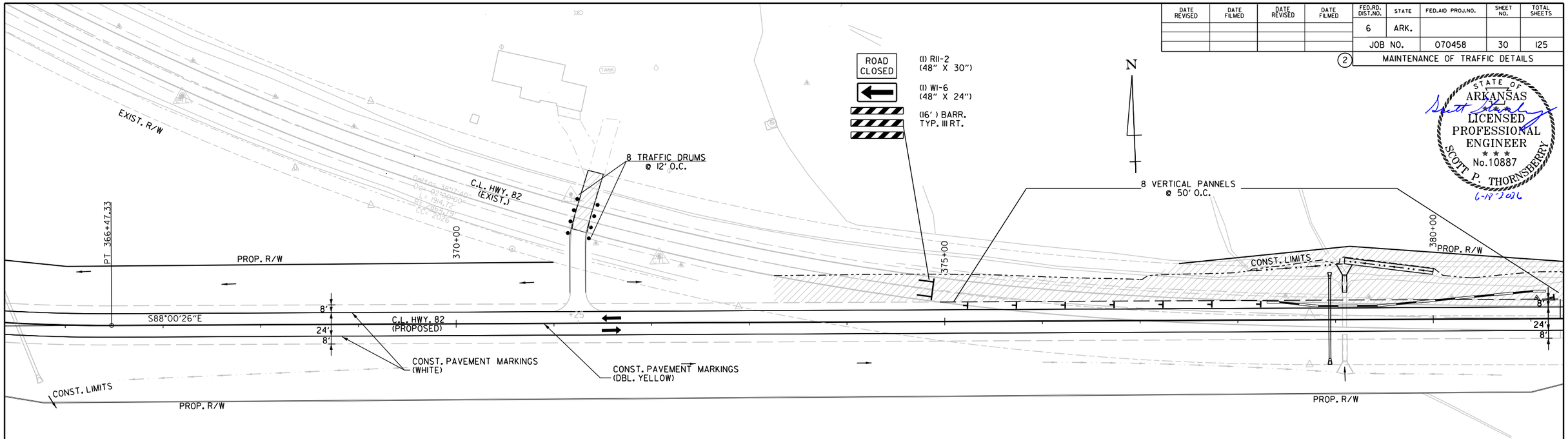

CONSTRUCTION SEQUENCE

STAGE 1:
INSTALL ADVANCE WARNING SIGNS AND END ROAD WORK SIGNS AT THE LOCATIONS SHOWN ON THE ADVANCE WARNING DETAILS.

CLEARING AND GRUBBING OPERATIONS MAY BEGIN IF AND WHERE DIRECTED BY THE ENGINEER.

INSTALL MAINTENANCE OF TRAFFIC DEVICES AND CONSTRUCT ROADWAY, TEMPORARY WIDENING, EMBANKMENT, BRIDGE, AND DRAINAGE FOR PROJECT AS SHOWN IN STAGE 1 MAINTENANCE OF TRAFFIC DETAILS.

STAGE 2:
INSTALL STAGE 2 MAINTENANCE OF TRAFFIC DEVICES, AND CONSTRUCTION PAVEMENT MARKINGS. SHIFT TRAFFIC ONTO NEWLY CONSTRUCTED ROADWAY AND BRIDGE.

CONSTRUCT REMAINING MILL AND INLAY AREAS, ROADWAY TIES, DRAINAGE, FINAL GRADING AND EMBANKMENT AS SHOWN ON THE STAGE 2 MAINTENANCE OF TRAFFIC DETAILS.

STAGE 3:
SHIFT TRAFFIC TO PROPOSED PAVEMENT, OBLITERATE TEMP. WIDENING, PLACE FINAL SURFACE AND INSTALL PERMANENT PAVEMENT MARKINGS.

CONSTRUCTION PAVEMENT MARKINGS	WHITE (6") (EDGE LINES)	YELLOW (6") (DBL. C.L.)
STA. 370+00.00 - STA. 382+30.00	2460 L.F.	2460 L.F.

RAISED PAVEMENT MARKERS		
•YEL./YEL. (TY. II)	31	EACH

•TO BE USED IF AND WHERE DIRECTED BY THE ENGINEER.

LEGEND

N

- STAGE CONST. AREA
- TYPE 3 BARRICADE
- TRAFFIC FLOW ARROWS
- TRAFFIC DRUM

STA. 381+30.00
END JOB 070458

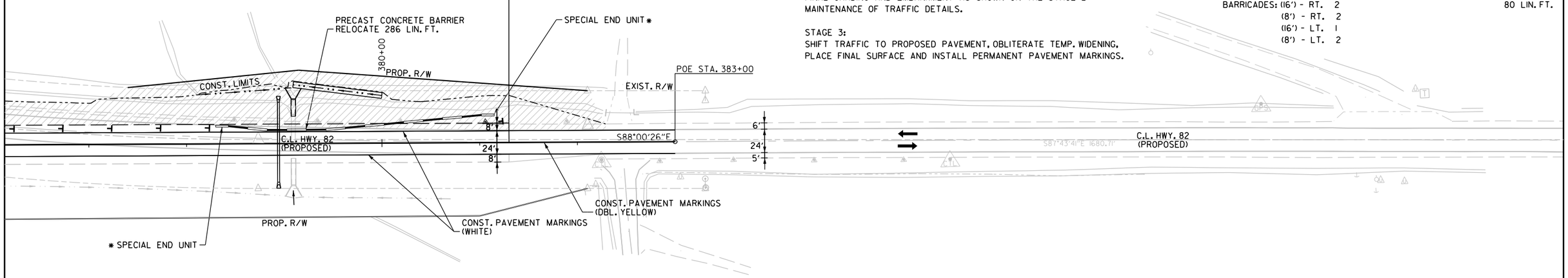

* SPECIAL END UNIT SHALL BE PAID AS "RELOC. PRECAST CONCRETE BARRIER."

STAGE 2: MAINTENANCE OF TRAFFIC SIGNS AND DEVICES:

TRAFFIC DRUMS	32 EACH
VERTICAL PANELS	24 EACH
FURN. & INSTALLING PRECAST CONCRETE BARRIER	60 LIN. FT.
RELOCATING PRECAST CONCRETE BARRIER WALL	572 LIN. FT.
"ROAD CLOSED" SIGNS: 4 @ 10 SQ. FT.	40 SQ. FT.
LARGE ARROW: 3 @ 8 SQ. FT.	24 SQ. FT.
CHEVRONS: 16 @ 3 SQ. FT.	48 SQ. FT.
DOUBLE REVERSE CURVE: 2 @ 9 SQ. FT.	18 SQ. FT.
BARRICADES: (16') - RT. 2	80 LIN. FT.
(8') - RT. 2	
(16') - LT. 1	
(8') - LT. 2	

STAGE 2
MAINTENANCE OF TRAFFIC DETAILS

Brandon.Barns 6/16/2026 1:23:55 PM
WORKSPACE: Brandon.Barns
Y:\Projects\ARDOT_16938T_070458 UPRR Grade Separation\Design\CIVIL\Drawings\R070458_06_MOT2_004.dgn
REVISED DATE: $$REVDATE$$

DATE REVISED	DATE FILMED	DATE REVISED	DATE FILMED	FED.RD. DIST.NO.	STATE	FED.AID PROJ.NO.	SHEET NO.	TOTAL SHEETS
				6	ARK.			
				JOB NO.		070458	31	125

(2) PERMANENT PAVEMENT MARKINGS DETAILS

STATE OF ARKANSAS LICENSED PROFESSIONAL ENGINEER No.10887 SCOTT P. THORNSBERRY

2-2-2024

NOTE:

THE 6" YELLOW STRIPING QUANTITY HAS BEEN ESTIMATED BASED ON A DOUBLE YELLOW CENTERLINE STRIPE FOR THE ENTIRE PROJECT. THE PROJECT MUST BE MARKED FOR PASSING/NO PASSING ZONES PRIOR TO THE PLACEMENT OF ANY FINAL STRIPING. CONTACT THE MAINTENANCE DIVISION AFTER THE FINAL LIFT OF SURFACE COURSE HAS BEEN PLACED TO SCHEDULE THE ZONING OF PROJECT.

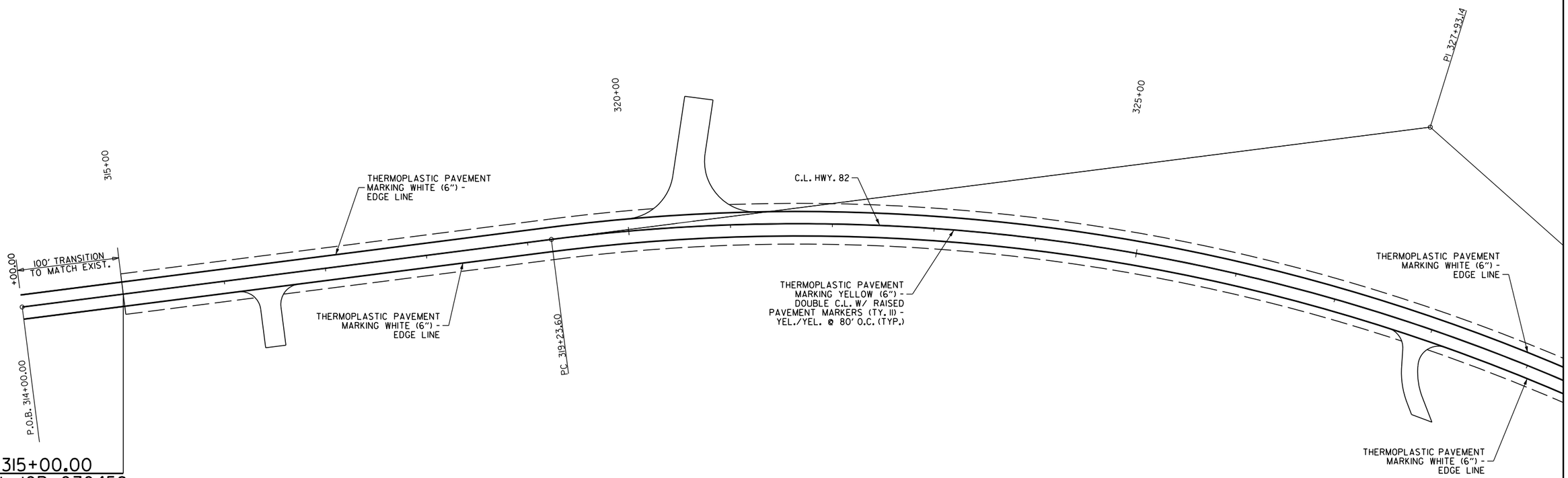

STA. 315+00.00
BEGIN JOB 070458
L.M. 0.00

THERMOPLASTIC PAVEMENT MARKING YELLOW (6")
DOUBLE YELLOW C.L. W/ RAISED PAVEMENT MARKERS (TY. II)
YEL./YEL. - 80' O.C. (TYP.) - U.S. HWY. 82

STA. 314+00 TO 329+00 - 3000 LIN. FT. - 19 R.P.M.

THERMOPLASTIC PAVEMENT MARKING WHITE (6")
EDGE LINE RT. - HWY. 82

STA. 314+00 TO 329+00 - 1500 LIN. FT.

THERMOPLASTIC PAVEMENT MARKING WHITE (6")
EDGE LINE LT. - HWY. 82

STA. 314+00 TO 329+00 - 1500 LIN. FT.

HWY. 82 PROJECT QUANTITY TOTALS:

THERMOPLASTIC PAVEMENT MARKINGS
6" WHITE EDGE = 13,640 LIN. FT.
6" YELLOW C.L. = 13,660 LIN. FT.
YELLOW/YELLOW RAISED PAVEMENT MARKERS = 86

Scott.Thornsberry 2/2/2024 4:46:20 PM
WORKSPACE: ARDOT
Y:\Projects\ARDOT_169387_070458 UPRR Grade Separation\Design\CIVIL\Drawings\R070458_07_PM_001.dgn
REVISED DATE: $$REVDATE$$

DATE REVISED	DATE FILMED	DATE REVISED	DATE FILMED

FED.RD. DIST.NO.	STATE	FED.AID PROJ.NO.	SHEET NO.	TOTAL SHEETS
6	ARK.			
JOB NO.		070458	32	125

(2) PERMANENT PAVEMENT MARKINGS DETAILS

NOTE:

THE 6" YELLOW STRIPING QUANTITY HAS BEEN ESTIMATED BASED ON A DOUBLE YELLOW CENTERLINE STRIPE FOR THE ENTIRE PROJECT. THE PROJECT MUST BE MARKED FOR PASSING/NO PASSING ZONES PRIOR TO THE PLACEMENT OF ANY FINAL STRIPING. CONTACT THE MAINTENANCE DIVISION AFTER THE FINAL LIFT OF SURFACE COURSE HAS BEEN PLACED TO SCHEDULE THE ZONING OF PROJECT.

STATE OF ARKANSAS
LICENSED PROFESSIONAL ENGINEER
No.10887
SCOTT P. THORNSBERRY
2-2-2024

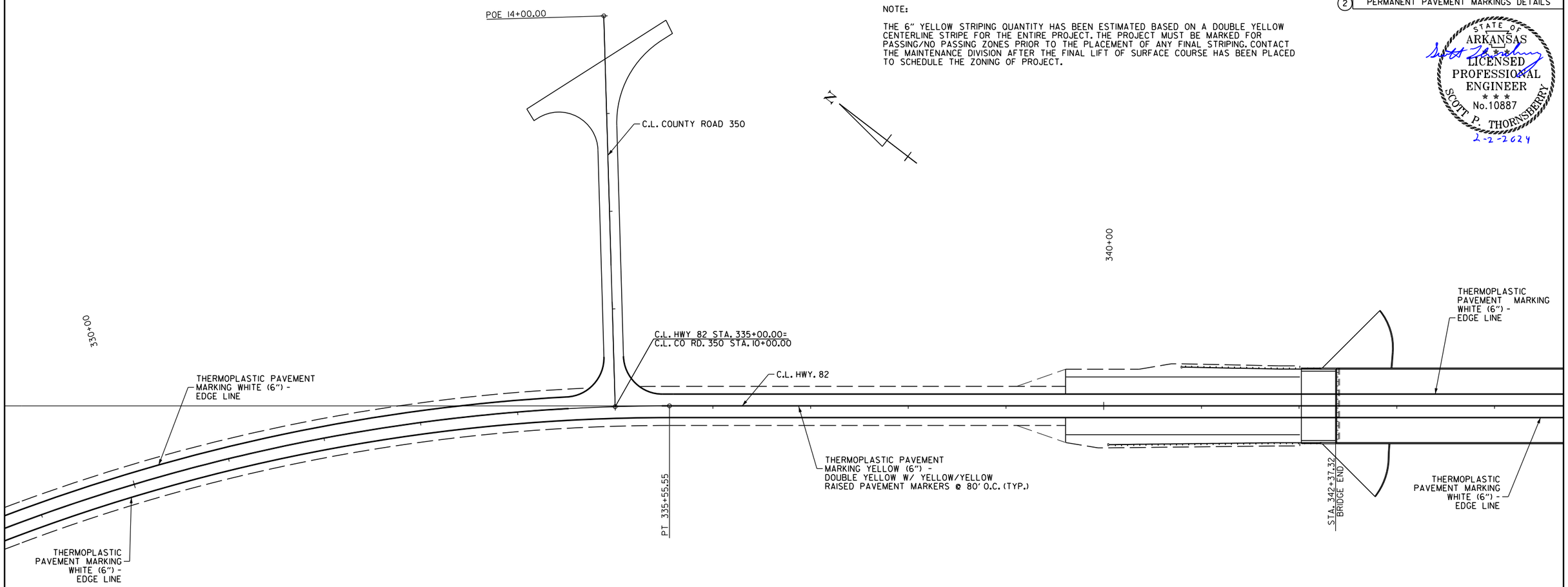

THERMOPLASTIC PAVEMENT MARKING YELLOW (6") - DOUBLE C.L. W/ RAISED PAVEMENT MARKERS (TY. II) YEL./YEL. @ 80' O.C. (TYP.) - U.S. HWY. 82

STA. 329+00 TO 344+00 - 3000 LIN. FT. - 19 R.P.M.

THERMOPLASTIC PAVEMENT MARKING WHITE (6") - EDGE LINE RT. - HWY. 82

STA. 329+00 TO 344+00 - 1500 LIN. FT.

THERMOPLASTIC PAVEMENT MARKING WHITE (6") - EDGE LINE LT. - HWY. 82

STA. 329+00 TO 334+90 - 590 LIN. FT.
STA. 335+10 TO 344+00 - 890 LIN. FT.

Scott.Thornsberry@2/2/2024 4:46:21PM
WORKSPACE: ARDOT
Y:\Projects\ARDOT_169387_070458 UPRR Grade Separation\Design\CIVIL\Drawings\R070458.07_PM_002.dgn
REVISED DATE: $$REVDATE$$

DATE REVISED	DATE FILMED	DATE REVISED	DATE FILMED	FED.RD. DIST.NO.	STATE	FED.AID PROJ.NO.	SHEET NO.	TOTAL SHEETS
				6	ARK.			
				JOB NO.		070458	33	125

(2) PERMANENT PAVEMENT MARKINGS DETAILS

STATE OF ARKANSAS
LICENSED PROFESSIONAL ENGINEER
No.10887
SCOTT P. THORNSBERRY
2-2-2024

NOTE:

THE 6" YELLOW STRIPING QUANTITY HAS BEEN ESTIMATED BASED ON A DOUBLE YELLOW CENTERLINE STRIPE FOR THE ENTIRE PROJECT. THE PROJECT MUST BE MARKED FOR PASSING/NO PASSING ZONES PRIOR TO THE PLACEMENT OF ANY FINAL STRIPING. CONTACT THE MAINTENANCE DIVISION AFTER THE FINAL LIFT OF SURFACE COURSE HAS BEEN PLACED TO SCHEDULE THE ZONING OF PROJECT.

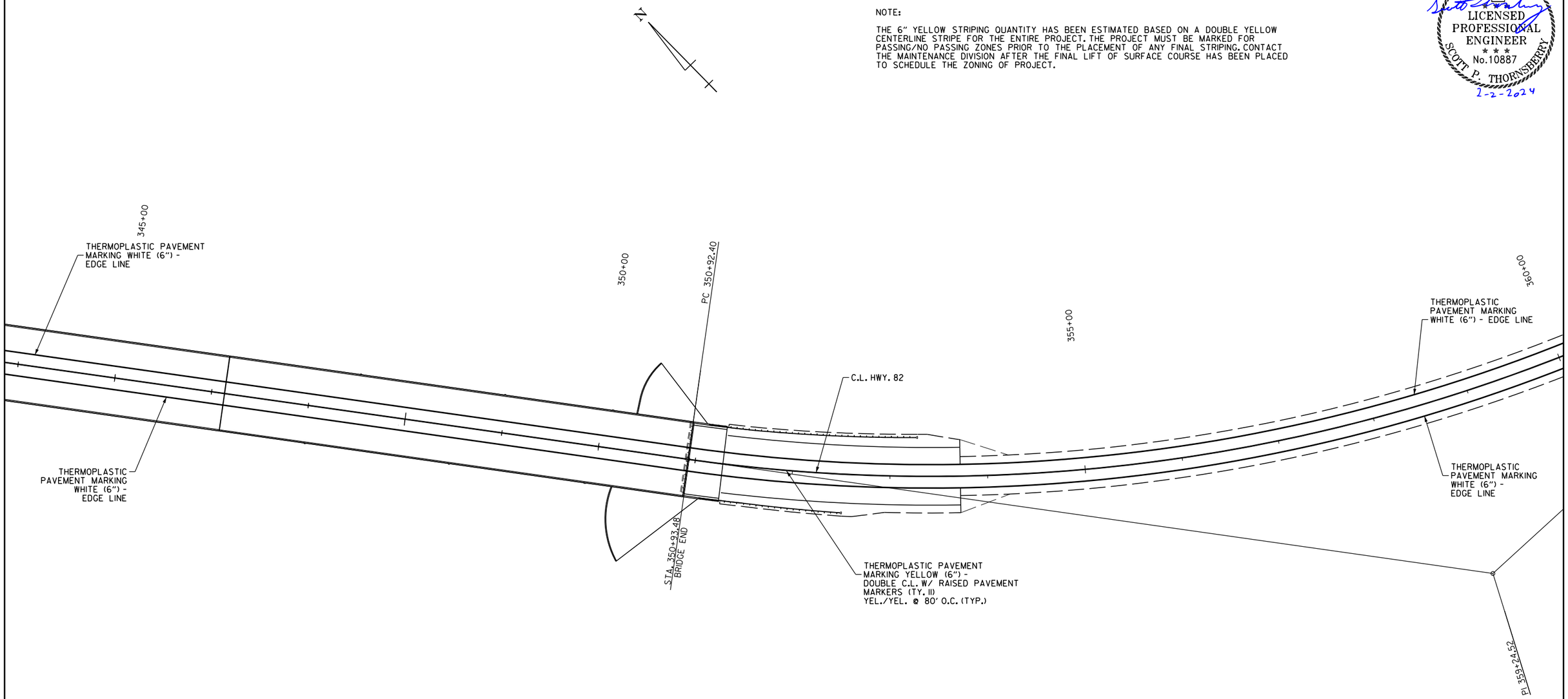

THERMOPLASTIC PAVEMENT MARKING YELLOW (6")
DOUBLE C.L. W/RAISED PAVEMENT MARKERS (TY. II)
YEL./YEL. @ 80' O.C. (TYP.) - U.S. HWY. 82

STA. 344+00 TO 360+00 - 3200 LIN. FT. - 20 R.P.M.

THERMOPLASTIC PAVEMENT MARKING WHITE (6")
EDGE LINE RT. - HWY. 82

STA. 344+00 TO 360+00 - 1600 LIN. FT.

THERMOPLASTIC PAVEMENT MARKING WHITE (6")
EDGE LINE LT. - HWY. 82

STA. 344+00 TO 360+00 - 1600 LIN. FT.

Scott.Thornsberry@2/2/2024 4:46:21PM
WORKSPACE: ARDOT
Y:\Projects\ARDOT_169387_070458 UPRR Grade Separation\Design\CIVIL\Drawings\R070458.07_PM.003.dgn
REVISED DATE: $$REVDATE$$

PERMANENT PAVEMENT MARKINGS DETAILS

DATE REVISED	DATE FILMED	DATE REVISED	DATE FILMED	FED.RD. DIST.NO.	STATE	FED.AID PROJ.NO.	SHEET NO.	TOTAL SHEETS
				6	ARK.			
				JOB NO.		070458	34	125
				(2) PERMANENT PAVEMENT MARKINGS DETAILS				

NOTE:

THE 6" YELLOW STRIPING QUANTITY HAS BEEN ESTIMATED BASED ON A DOUBLE YELLOW CENTERLINE STRIPE FOR THE ENTIRE PROJECT. THE PROJECT MUST BE MARKED FOR PASSING/NO PASSING ZONES PRIOR TO THE PLACEMENT OF ANY FINAL STRIPING. CONTACT THE MAINTENANCE DIVISION AFTER THE FINAL LIFT OF SURFACE COURSE HAS BEEN PLACED TO SCHEDULE THE ZONING OF PROJECT.

STATE OF ARKANSAS
LICENSED PROFESSIONAL ENGINEER
No.10887
SCOTT P. THORNSBERRY
2-2-2024

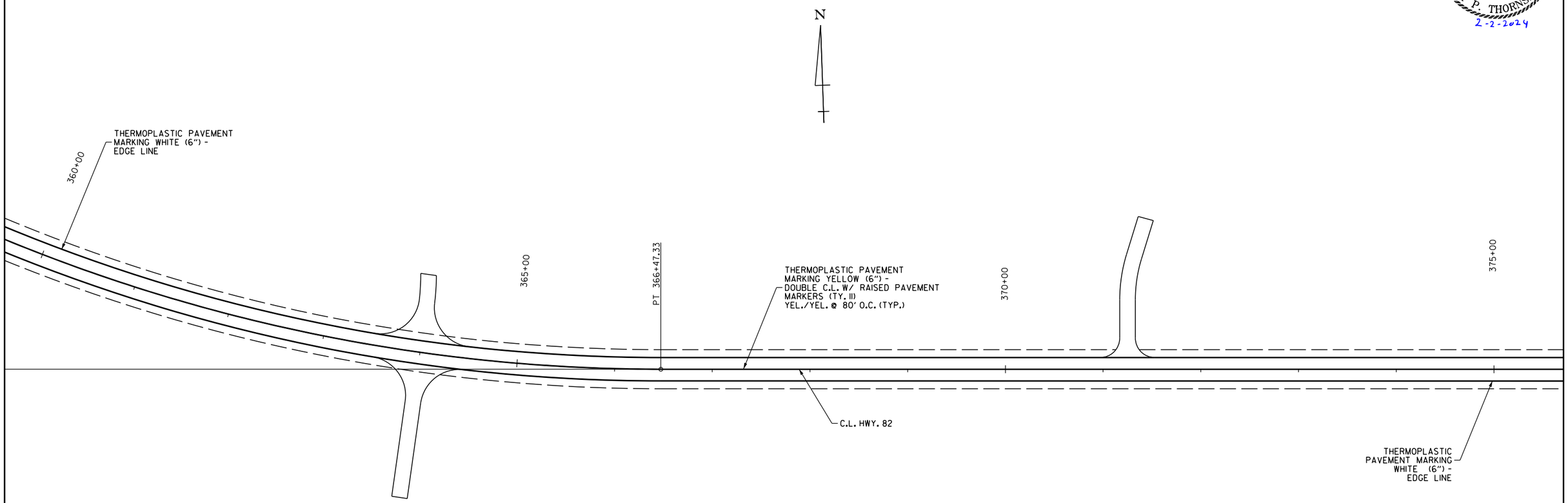

THERMOPLASTIC PAVEMENT MARKING YELLOW (6")
DOUBLE C.L. W/ RAISED PAVEMENT MARKERS (TY. II)
YEL./YEL. @ 80' O.C. (TYP.) - U.S. HWY. 82

STA. 360+00 TO 375+00 - 3000 LIN. FT. - 19 R.P.M.

THERMOPLASTIC PAVEMENT MARKING WHITE (6")
EDGE LINE RT. - HWY. 82

STA. 360+00 TO 375+00 - 1500 LIN. FT.

THERMOPLASTIC PAVEMENT MARKING MARKING WHITE (6")
EDGE LINE LT. - HWY. 82

STA. 360+00 TO 375+00 - 1500 LIN. FT.

Scott.Thornsberry 2/2/2024 4:46:22 PM
WORKSPACE: ARDOT
Y:\Projects\ARDOT_16938T_070458 UPRR Grade Separation\Design\CIVIL\Drawings\R070458_07_PM_004.dgn
REVISED DATE: $$REVDATE$$

PERMANENT PAVEMENT MARKINGS DETAILS

DATE REVISED	DATE FILMED	DATE REVISED	DATE FILMED	FED.RD. DIST.NO.	STATE	FED.AID PROJ.NO.	SHEET NO.	TOTAL SHEETS
				6	ARK.			
				JOB NO.		070458	35	125

(2) PERMANENT PAVEMENT MARKINGS DETAILS

STATE OF ARKANSAS
LICENSED PROFESSIONAL ENGINEER
No.10887
SCOTT P. THORNSBERRY
2-2-2024

NOTE:

THE 6" YELLOW STRIPING QUANTITY HAS BEEN ESTIMATED BASED ON A DOUBLE YELLOW CENTERLINE STRIPE FOR THE ENTIRE PROJECT. THE PROJECT MUST BE MARKED FOR PASSING/NO PASSING ZONES PRIOR TO THE PLACEMENT OF ANY FINAL STRIPING. CONTACT THE MAINTENANCE DIVISION AFTER THE FINAL LIFT OF SURFACE COURSE HAS BEEN PLACED TO SCHEDULE THE ZONING OF PROJECT.

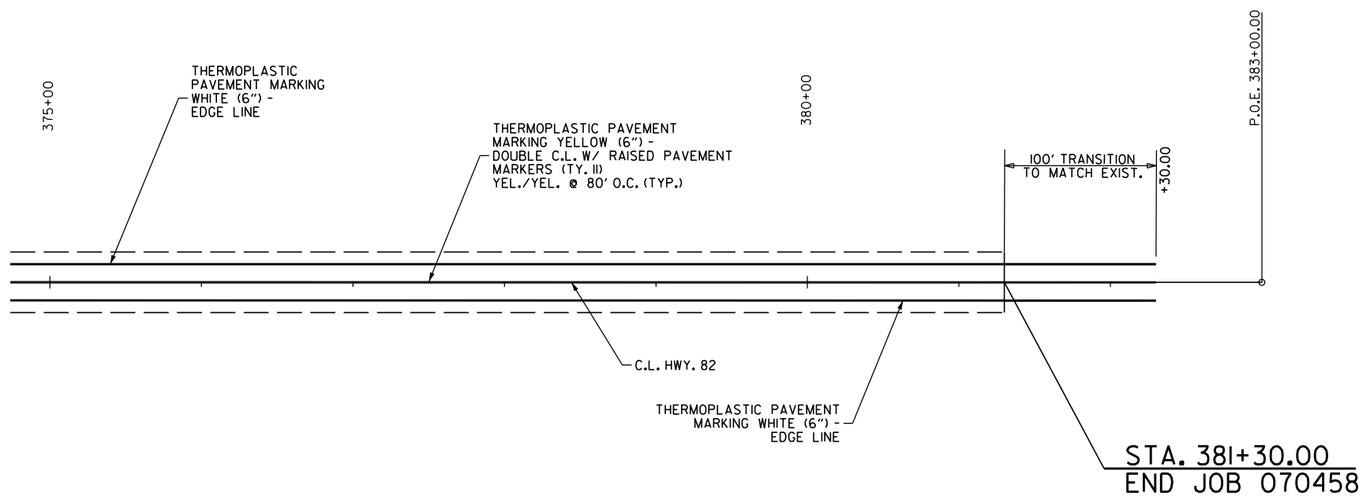

THERMOPLASTIC PAVEMENT MARKING YELLOW (6") - DOUBLE C.L. W/ RAISED PAVEMENT MARKERS (TY. II) YEL./YEL @ 80' O.C. (TYP.) - U.S. HWY. 82

STA. 375+00 TO 382+30 - 1460 LIN. FT. - 9 R.P.M.

THERMOPLASTIC PAVEMENT MARKING WHITE (6") EDGE LINE RT. - HWY. 82

STA. 375+00 TO 382+30 - 730 LIN. FT.

THERMOPLASTIC PAVEMENT MARKING WHITE (6") EDGE LINE LT. - HWY. 82

STA. 375+00 TO 382+30 - 730 LIN. FT.

Scott.Thornsberry@2/2/2024 4:46:23 PM
WORKSPACE: ARDOT
Y:\Projects\ARDOT_169387_070458 UPRR Grade Separation\Design\CIVIL\Drawings\R070458_07_PM_005.dgn
REVISED DATE: $$REVDATE$$

DATE REVISED	DATE FILMED	DATE REVISED	DATE FILMED	FED.RD. DIST.NO.	STATE	FED.AID PROJ.NO.	SHEET NO.	TOTAL SHEETS
				6	ARK.			
				JOB NO.		070458	36	125

(2) QUANTITIES

STATE OF ARKANSAS LICENSED PROFESSIONAL ENGINEER No.10887 SCOTT P. THORNSBERRY
6-16-2026

ADVANCE WARNING SIGNS AND DEVICES

SIGN NUMBER	DESCRIPTION	SIGN SIZE	STAGE 1	STAGE 2	MAXIMUM NUMBER REQUIRED	TOTAL SIGNS REQUIRED		VERTICAL PANELS	TRAFFIC DRUMS	BARRICADES (TYPE III)		FURNISHING & INSTALLING PRECAST CONC. BARRIER	RELOCATING PRECAST CONCRETE BARRIER	CONSTRUCTION PROJECT INFORMATION SIGN UPDATES
										RIGHT	LEFT			
			LIN. FT. - EACH			NO.	SQ. FT.	EACH				LIN. FT.		EACH
W20-1	ROAD WORK 1500 FT.	48"X48"	2	2	2	2	32.0							
W20-1	ROAD WORK 1000 FT.	48"X48"	2	2	2	2	32.0							
W20-1	ROAD WORK 500 FT.	48"X48"	2	2	2	2	32.0							
G20-2	END ROAD WORK	48"X24"	2	2	2	2	16.0							
WZ-4	NO HAND-HELD PHONE USE BY DRIVER	36"X54"	2	2	2	2	27.0							
R2-6aP	FINES DOUBLE WHEN WORKERS ARE PRESENT	48"x36"	2	2	2	2	24.0							
R2-11	END HIGHER FINES ZONE	36"x48"	2	2	2	2	24.0							
R11-2	ROAD CLOSED	48"x30"	4	4	4	4	40.0							
W1-6	LARGE ARROW	48"x24"		3	3	3	24.0							
W1-8	CHEVRONS	18"x24"		16	16	16	48.0							
* R4-1	DO NOT PASS	24"x30"	2	2	2	2	10.0							
* W21-5a	RIGHT SHOULDER CLOSED	36"x36"	2	2	2	2	18.0							
W24-1R	DOUBLE REVERSE CURVE RT.	36"x36"		1	1	1	9.0							
W24-1L	DOUBLE REVERSE CURVE LT.	36"x36"		1	1	1	9.0							
	CONSTRUCTION PROJECT INFORMATION SIGN	96"X48"	2	2	2	2	64.0							6
	VERTICAL PANELS		34	24	34			34						
	TRAFFIC DRUMS		59	32	59				59					
	TYPE III BARRICADE-RT. (16')		1	2	2					32				
	TYPE III BARRICADE-RT. (8')		2	2	2					16				
	TYPE III BARRICADE-LT. (16')		1	1	1						16			
	TYPE III BARRICADE-LT. (8')		2	2	2						16			
	FURNISHING AND INSTALLING PRECAST CONCRETE BARRIER		572	60	632							632		
	RELOCATING PRECAST CONCRETE BARRIER			572	572								572	
TOTALS:							**409.0**	**34**	**59**	**48**	**32**	**632**	**572**	**6**

NOTE: THIS IS A HIGH TRAFFIC VOLUME ROAD AS DEFINED IN SECTION 604.03, STANDARD SPECIFICATIONS FOR HIGHWAY CONSTRUCTION.

* QUANTITY ESTIMATED.
SEE SECTION 104.03 OF THE STD. SPECS.
TO BE USED IF AND WHERE DIRECTED BY THE ENGINEER.

CONSTRUCTION PAVEMENT MARKINGS AND PERMANENT PAVEMENT MARKINGS

DESCRIPTION	STAGE 2	END OF JOB	REMOVAL OF PERMANENT PAVEMENT MARKINGS	CONSTRUCTION PAVEMENT MARKINGS	REMOVABLE CONSTRUCTION PAVEMENT MARKINGS	RAISED PAVEMENT MARKERS	THERMOPLASTIC PAVEMENT MARKING	
						TYPE II	6"	
						(YEL/YEL)	WHITE	YELLOW
	LIN. FT. - EACH		LIN. FT.		LIN. FT.	EACH	LIN. FT.	
REMOVAL OF PERMANENT PAVEMENT MARKINGS	3970		3970					
CONSTRUCTION PAVEMENT MARKINGS	23604			23604				
REMOVABLE CONSTRUCTION PAVEMENT MARKINGS	3716		3716		3716			
RAISED PAVEMENT MARKERS TYPE II (YEL/YEL)	171	86				257		
THERMOPLASTIC PAVEMENT MARKING WHITE (6")		13640					13640	
THERMOPLASTIC PAVEMENT MARKING YELLOW (6")		13660						13660
TOTALS:			**7686**	**23604**	**3716**	**257**	**13640**	**13660**

NOTE: THIS IS A HIGH TRAFFIC VOLUME ROAD AS DEFINED IN SECTION 604.03, STANDARD SPECIFICATIONS FOR HIGHWAY CONSTRUCTION.

APPROACH GUTTERS AND SLABS

STATION	STATION	LOCATION	APPROACH GUTTER (TYPE F)	APPROACH SLABS (TYPE F)	REINFORCING STEEL-RDWY. (GR. 60)	AGGREGATE BASE CRS. (CLASS 7)
			CU.YD.	CU.YD.	POUND	TON
342+02.32	342+37.32	APPROACH SLAB		140.20	16990	74.55
342+02.32	342+37.32	APPROACH GUTTER - LT.	4.20		210	2.65
342+02.32	342+37.32	APPROACH GUTTER - RT.	4.20		210	2.65
350+93.48	351+28.48	APPROACH SLAB		140.20	16990	74.55
350+93.48	351+28.48	APPROACH GUTTER - LT.	4.20		210	2.65
350+93.48	351+28.48	APPROACH GUTTER - RT.	4.20		210	2.65
TOTALS:			**16.80**	**280.40**	**34820**	**159.70**

NOTE: USE T=8.5" FOR 8' SHOULDER.

COLD MILLING ASPHALT PAVEMENT

STATION	STATION	LOCATION	AVG. WIDTH	COLD MILLING ASPHALT PAVEMENT
			FEET	SQ. YD.
314+00.00	315+00.00	HWY. 82 - TRANSITION	34.00	377.78
381+30.00	382+30.00	HWY. 82 - TRANSITION	35.00	388.89
TOTAL:				**766.67**

NOTE: COORDINATE COLD MILLING STOCKPILE LOCATION WITH DISTRICT ENGINEER.
STOCKPILE LOCATION SHALL BE NO FURTHER THAN FIVE MILES FROM SITE.

REMOVAL AND DISPOSAL OF ITEMS

STATION	STATION	LOCATION	CURB AND GUTTER	CONCRETE DITCH PAVING	CONCRETE PAVEMENT
			LIN. FT.	SQ. YD.	SQ. YD.
ENTIRE	PROJECT	EXIST HWY. 82 LT.	1300	430	
ENTIRE	PROJECT	EXIST HWY. 82 RT.	1295	410	
* ENTIRE	PROJECT	EXIST HWY. 82			4100
TOTALS:			**2595**	**840**	**4100**

* QUANTITY ESTIMATED.
SEE SECTION 104.03 OF THE STD. SPECS.

CLEARING AND GRUBBING

STATION	STATION	LOCATION	CLEARING	GRUBBING
			STATION	
314+00	382+30	ENTIRE PROJECT	69	69
TOTALS:			**69**	**69**

Brendan.Barns 6/16/2026 2:23:16 PM
WORKSPACE: Brendan.Barns
Y:\Projects\ARDOT_16938?_070458 UPRR Grade Separation\Design\CIVIL\Drawings\R070458_088_QYT_001.dgn
REVISED DATE: $$REVDATE$$

DATE REVISED	DATE FILMED	DATE REVISED	DATE FILMED	FED.RD. DIST.NO.	STATE	FED.AID PROJ.NO.	SHEET NO.	TOTAL SHEETS
				6	ARK.			
				JOB NO.		070458	37	125

(2) QUANTITIES

STATE OF ARKANSAS LICENSED PROFESSIONAL ENGINEER No.10887 SCOTT P. THORNSBERRY 7-29-2026

REMOVAL AND DISPOSAL OF FENCE

STATION	STATION	LOCATION	FENCE	GATES
			LIN. FT.	EACH
327+61	327+78	RT. OF C.L. OF HWY. 82	19	1
328+03	328+11	RT. OF C.L. OF HWY. 82	10	
369+29	373+48	LT. OF C.L. OF HWY. 82	439	
373+48	382+12	RT. OF C.L. OF HWY. 82	852	
TOTAL:			1320	1

REMOVAL AND DISPOSAL OF PIPE CULVERTS

STATION	DESCRIPTION	PIPE CULVERTS
		EACH
327+52	RT. OF C.L. OF HWY. 82: 8" X 24' METAL PIPE	1
TOTAL:		1

NOTE: QUANTITIES SHOWN ABOVE SHALL INCLUDE REMOVAL & DISPOSAL OF ALL HEADWALLS AND FLARED END SECTIONS IF APPLICABLE.

SELECTED PIPE BEDDING

LOCATION	SELECTED PIPE BEDDING
	CU.YD.
ENTIRE PROJECT TO BE USED IF	
AND WHERE DIRECTED BY THE	60
ENGINEER	
TOTAL:	60

NOTE: QUANTITY ESTIMATED.
SEE SECTION 104.03 OF THE STD. SPECS.

EROSION CONTROL

STATION	STATION	LOCATION	PERMANENT EROSION CONTROL					TEMPORARY EROSION CONTROL													
			SEEDING	LIME	MULCH COVER	WATER	SECOND SEEDING APPLICATION	TEMPORARY SEEDING	MULCH COVER	WATER	SAND BAG DITCH CHECKS	ROCK DITCH CHECKS	SILT FENCE	DIVERSION DITCH	PIPE FOR SLOPE DRAINS	DUMPED RIPRAP	FILTER SOCK (18")	SEDIMENT BASIN	OBLITERATION OF SEDIMENT BASIN	*SEDIMENT REMOVAL & DISPOSAL
											(E-5)	(E-6)	(E-11)	(E-8)	(E-12)		(E-13)	(E-14)		
			ACRE	TON	ACRE	M,GAL,	ACRE	ACRE	ACRE	M,GAL.	BAG	CU,YD.	LIN. FT.	LIN. FT.	LIN. FT.	CU,YD.	LIN. FT.	CU,YD.	CU,YD.	CU. YD.
ENTIRE	PROJECT	CLEARING AND GRUBBING						22.02	22.02	449.2	66	75	13785					1117		1656
ENTIRE	PROJECT	STAGE 1	18.06	36.12	18.06	1842.1	18.06	18.06	18.06	368.4	132	93		1672	181			1000	1117	1037
ENTIRE	PROJECT	STAGE 2	17.95	35.90	17.95	1830.9	17.95	17.95	17.95	366.2	44	45	8382				92		1000	327
*ENTIRE PROJECT TO BE USED IF AND WHERE DIRECTED BY THE ENGINEER.			9.00	18.00	9.00	918.0	9.00	9.00	9.00	183.6	22	21	5542			10				213
TOTALS:			45.01	90.02	45.01	4591.0	45.01	67.03	67.03	1367.4	264	234	27709	1672	181	10	92	2117	2117	3233

BASIS OF ESTIMATE:
LIME .....2 TONS / ACRE OF SEEDING
WATER.....102.0 M.G. / ACRE OF SEEDING
WATER.....20.4 M.G. / ACRE OF TEMPORARY SEEDING
SAND BAG DITCH CHECKS.....22 BAGS / LOCATION
ROCK DITCH CHECKS.....3 CU.YD./LOCATION
FILTER SOCKS.....23 LIN. FT./ 4' DIA. INLET

NOTE: THE TEMPORARY EROSION CONTROL DEVICES SHOWN ABOVE AND ON THE PLANS SHALL BE INSTALLED IN SUCH A SEQUENCE AS TO DETER EROSION AND SEDIMENTATION ON U.S. WATERWAYS AS EXPLAINED BY THE NATIONAL POLLUTANT DISCHARGE ELIMINATION SYSTEM PERMIT.

*QUANTITIES ESTIMATED.
SEE SECTION 104.03 OF THE STD. SPECS.

EROSION CONTROL MATTING

STATION	STATION	LOCATION	LENGTH	CLASS 3
			LIN. FT.	SQ. YD.
ENTIRE	PROJECT	TO BE USED IF AND WHERE	100.00	88.89
		DIRECTED BY THE ENGINEER		
TOTAL:				88.89

NOTE: AVERAGE WIDTH = 8'-0"

DRIVEWAYS & TURNOUTS

STATION	SIDE	LOCATION	WIDTH	ACHM SURFACE COURSE (1/2") 220 LBS. PER SQ. YD. (PG 70-22)		AGGREGATE BASE COURSE (CLASS 7)	SIDE DRAINS	STANDARD DRAWINGS
							18"	
			FEET	SQ. YD.	TON	TON	LIN. FT.	
316+42	RT.	C.L. HWY. 82	20	114.51	12.60	46.76		
320+50	LT.	C.L. HWY. 82	28	399.04	43.89	162.94	76	DR-2, PCC-1, PCM-1, PCP-1, PCP-2, PCP-3
327+80	RT.	C.L. HWY. 82	16	143.38	15.77	58.55	48	DR-2, PCC-1, PCM-1, PCP-1, PCP-2, PCP-3
364+00	LT.	C.L. HWY. 82	16	73.35	8.07	29.95	32	DR-2, PCC-1, PCM-1, PCP-1, PCP-2, PCP-3
364+00	RT.	C.L. HWY. 82	16	200.07	22.01	81.70		
371+25	LT.	C.L. HWY. 82	16	172.29	18.95	70.35		
*ENTIRE PROJECT TEMPORARY DRIVES						50.00		
TOTALS:				1102.64	121.29	500.25	156	

BASIS OF ESTIMATE:
ACHM SURFACE COURSE (1/2").....93.7% MIN. AGGR.....6.3% ASPHALT BINDER

* QUANTITY ESTIMATED
SEE SECTION 104.03 OF THE STD. SPECS.
TO BE USED IF AND WHERE DIRECTED BY THE ENGINEER.

NOTE: FOR R.C. PIPE CULVERT INSTALLATIONS USE TYPE 3 BEDDING UNLESS OTHERWISE SPECIFIED.
FOR C.M. PIPE CULVERT INSTALLATIONS USE TYPE 2 BEDDING UNLESS OTHERWISE SPECIFIED.

EARTHWORK

STATION	STATION	LOCATION / DESCRIPTION	UNCLASSIFIED EXCAVATION	COMPACTED EMBANKMENT
			CU. YD.	
ENTIRE	PROJECT	HWY. 82 - MAIN LANES: STAGE 1	12876	144183
	335+00	HWY. 82 (LT.): CO. RD. 350	1402	555
ENTIRE	PROJECT	APPROACHES		1835
ENTIRE	PROJECT	STAGE 2 TEMP. WIDENING REMOVAL	58	14
* ENTIRE	PROJECT	EXIST. HWY. 82 - OBLIT.	12000	
* ENTIRE	PROJECT	CHANNEL CHANGE	150	
TOTALS:			26486	146587

* QUANTITY ESTIMATED.
SEE SECTION 104.03 OF THE STD. SPECS.

SOIL STABILIZATION

STATION	STATION	LOCATION / DESCRIPTION	SOIL STABILIZATIO
			TON
ENTIRE	PROJECT	TO BE USED IF AND WHERE	1500
		DIRECTED BY THE ENGINEER	
TOTAL:			1500

QUANTITY ESTIMATED.
SEE SECTION 104.03 OF THE STD. SPECS.

PAVEMENT REPAIR OVER CULVERTS (ASPHALT)

STATION	LOCATION	WIDTH	LENGTH	TON
		FEET		
325+50	HWY 82-MAIN LANES	12.00	28	20
378+94	HWY 82- MAIN LANES	8.50	28	14
TOTAL:				34

AVG. DEPTH = 9.5"

BENCH MARKS

STATION	LOCATION	BENCH MARKS
		EACH
	ENTIRE PROJECT	1

NOTE: SHOWN FOR INFORMATION ONLY. BENCH MARKS SHALL BE FURNISHED AND PLACED BY STATE FORCES.

Brendan.Barns 7/29/2026 3:32:34 PM
WORKSPACE: Brendan.Barns
Y:\Projects\ARDOT_I69387_070458 UPRR Grade Separation\Design\CIVIL\Drawings\R070458_0BB_0YT_001.dgn
REVISED DATE: $$REVDATE$$

DATE REVISED	DATE FILMED	DATE REVISED	DATE FILMED	FED.RD. DIST.NO.	STATE	FED.AID PROJ.NO.	SHEET NO.	TOTAL SHEETS
				6	ARK.			
				JOB NO.		070458	38	125

(2) QUANTITIES

STATE OF ARKANSAS LICENSED PROFESSIONAL ENGINEER No.10887 SCOTT P. THORNSBERRY 7-31-2026

STRUCTURES

STATION	DESCRIPTION	REINFORCED CONCRETE PIPE CULVERT CL. III 24"	CL. III 60"	CL. IV 36"	(CLASS V) 24"	SIDE DRAIN 18"	FLARED END SECTIONS FOR R.C. PIPE CULVERTS 24"	36"	60"	MODIFYING DROP INLETS TYPE RM SPECIAL	SPAN	HEIGHT	LENGTH	CLASS S CONCRETE-ROADWAY	REINF. STEEL-ROADWAY (GRADE 60)	UNCL.EXC. FOR STR.-ROADWAY	SOLID SODDING	WATER	STD. DWG. NOS.
		LIN. FT.			EACH	EACH	EACH			EACH	LIN. FT.			CU.YD.	POUND	CU.YD.	SQ.YD.	M.GAL.	
325+10	HWY. 82 - R.C. BOX EXTENTION										8	8	46	72.11	7261	28	23	0.29	RCB-1, RCB-2, RCB-3,W-X003-1, R-100X-0
325+50	HWY. 82 - CROSSDRAIN		88						2								90	1.13	PCC-1, FES-1, FES-2
* 335+00	HWY. 82 - LT. SIDE DRAIN - CO. RD.					80													PCC-1, PCM-1, PCP-1, PCP-2, PCP-3
338+73	HWY. 82 - CROSSDRAIN			132				2									34	0.43	PCC-1, FES-1, FES-2
353+00	HWY. 82 - CROSSDRAIN				245		2										16	0.20	PCC-1, FES-1, FES-3
365+50	HWY. 82 - CROSSDRAIN			102				2									34	0.43	PCC-1, FES-1, FES-2
379+09	HWY. 82 - R.C. BOX EXTENTION										4	4	42	23.28	2309	8	13	0.16	RCB-1, RCB-2, RCB-3,W-X003-1, R-100X-0
378+94	HWY 82 - CROSSDRAIN	82																	PCC-1, FES-1, FES-2
345+99	EXIST. HWY. 82 RT.									1							6	0.08	SPECIAL DETAILS, FPC-9D, FPC-9M
348+20	EXIST. HWY. 82 RT.									1							6	0.08	SPECIAL DETAILS, FPC-9D, FPC-9M
350+38	EXIST. HWY. 82 LT.									1							6	0.08	SPECIAL DETAILS, FPC-9D, FPC-9M
350+44	EXIST. HWY. 82 RT.									1							6	0.08	SPECIAL DETAILS, FPC-9D, FPC-9M
TOTALS:		**82**	**88**	**234**	**245**	**80**	**2**	**4**	**2**	**4**				**95.39**	**9,570**	**36**	**234**	**2.96**	

BASIS OF ESTIMATE:
WATER.....12.6 GAL. / SQ. YD. OF SOLID SODDING

NOTE: FOR R.C. PIPE CULVERT INSTALLATIONS USE TYPE 3 BEDDING UNLESS OTHERWISE SPECIFIED.

* FOR C.M. PIPE CULVERT INSTALLATIONS USE TYPE 2 BEDDING UNLESS OTHERWISE SPECIFIED.

FENCING

STATION	STATION	LOCATION	WIRE FENCE (TYPE C)
			LIN. FT.
369+20	382+10	RT. OF C.L. HWY. 82	1293
TOTAL:			**1293**

CONCRETE DITCH PAVING

STATION	STATION	LOCATION	LENGTH	"W"	"B"	CONC. DITCH PAVING (TYPE B)	SOLID SODDING	WATER
			LIN. FT.	FEET	FEET	SQ. YD.	SQ. YD.	M. GAL.
335+50.00	337+00.00	LT. OF C.L. OF HWY. 82	150.00	6.00		100.00	66.67	0.84
352+30.00	354+00.00	LT. OF C.L. OF HWY. 82	170.00	6.00		113.33	75.56	0.95
379+09.00	380+00.00	LT. OF C.L. OF HWY. 82	91.00	6.00		60.67	40.44	0.51
TOTALS:						**274.00**	**182.67**	**2.30**

BASIS OF ESTIMATE:
WATER.....12.6 GAL. / SQ. YD. OF SOLID SODDING.

RUMBLE STRIPS IN ASPHALT SHOULDERS

STATION	STATION	LOCATION	* RUMBLE STRIPS IN ASPHALT SHOULDERS
			LIN.FT.
314+00	316+15	HWY. 82: RIGHT SHOULDER	172
316+70	327+60	HWY. 82: RIGHT SHOULDER	874
328+20	342+00	HWY. 82: RIGHT SHOULDER	1104
351+30	363+55	HWY. 82: RIGHT SHOULDER	980
364+45	382+30	HWY. 82: RIGHT SHOULDER	1428
314+00	320+00	HWY. 82: LEFT SHOULDER	480
321+30	334+45	HWY. 82: LEFT SHOULDER	1052
335+56	342+00	HWY. 82: LEFT SHOULDER	515
351+30	363+45	HWY. 82: LEFT SHOULDER	972
364+50	370+95	HWY. 82: LEFT SHOULDER	516
371+55	382+30	HWY. 82: LEFT SHOULDER	860
TOTAL:			**8953**

* QUANTITY ESTIMATED.
SEE SECTION 104.03 OF THE STD. SPECS.
TO BE USED IF AND WHERE DIRECTED BY THE ENGINEER.

GUARDRAIL

STATION	STATION	LOCATION	GUARDRAIL (TYPE A)	THRIE BEAM GUARDRAIL TERMINAL	GUARDRAIL TERMINAL (TYPE 2)
			LIN. FT.	EACH	
340+02.15	342+20.90	RT. OF C.L. HWY. 82	150	1	1
340+77.15	342+20.90	LT. OF C.L. HWY 82	75	1	1
351+09.90	352+53.65	RT. OF C.L. HWY. 82	75	1	1
351+09.90	353+28.65	LT. OF C.L. HWY 82	150	1	1
TOTALS:			**450**	**4**	**4**

4" PIPE UNDERDRAIN

STATION	STATION	LOCATIONS	4" PIPE UNDERDRAINS	UNDERDRAIN OUTLET PROTECTORS
			LIN. FT.	EACH
* ENTIRE PROJECT TO BE USED IF AND			3000	12
WHERE DIRECTED BY THE ENGINEER				
TOTALS:			**3000**	**12**

* NOTE: QUANTITY ESTIMATED.
SEE SECTION 104.03 OF THE STD. SPECS.

ASPHALT CONCRETE PATCHING FOR MAINTENANCE OF TRAFFIC

LOCATION	TON	TACK COAT
		GALLON
ENTIRE PROJECT - TO BE USED IF AND WHERE	10	20
DIRECTED BY THE ENGINEER		
TOTALS:	**10**	**20**

BASIS OF ESTIMATE:
ASPHALT CONCRETE PATCHING FOR MAINTENANCE OF TRAFFIC...25 TON/MILE
TACK COAT FOR MAINTENANCE OF TRAFFIC.....50 GAL./MILE

ACHM PATCHING OF EXISTING ROADWAY

DESCRIPTION	TON
ENTIRE PROJECT - TO BE USED IF AND WHERE	10
DIRECTED BY THE ENGINEER	
TOTAL:	**10**

NOTE: QUANTITY ESTIMATED.
SEE SECTION 104.03 OF THE STD. SPECS.

Brendan.Barns 7/31/2026 2:52:02 PM
WORKSPACE: Brendan.Barns
Y:\Projects\ARDOT_I69387_070458 UPRR Grade Separation\Design\CIVIL\Drawings\R070458.08B.01T.001.dgn
REVISED DATE: $$REVDATE$$

DATE REVISED	DATE FILMED	DATE REVISED	DATE FILMED	FED.RD. DIST.NO.	STATE	FED.AID PROJ.NO.	SHEET NO.	TOTAL SHEETS
				6	ARK.			
				JOB NO.		070458	39	125

(2) QUANTITIES

STATE OF ARKANSAS
LICENSED PROFESSIONAL ENGINEER
No.10887
SCOTT P. THORNSBERRY
7-29-2026

BASE AND SURFACING

STATION	STATION	LOCATION	LENGTH	AGGREGATE BASE COURSE (CLASS 7)		TACK COAT							ACHM BASE COURSE (1 1/2")				ACHM BINDER COURSE (1")				ACHM SURFACE COURSE (1/2")								
						(0.05 GAL. PER SQ. YD.)			(0.10 GAL. PER SQ. YD.)																				
				TON / STATION	TON	TOTAL WID.	SQ.YD.	GALLON	TOTAL WID.	SQ.YD.	GALLON	TOTAL GALLONS	AVG. WID.	SQ.YD.	POUND / SQ.YD.	PG 70-22	AVG. WID.	SQ.YD.	POUND / SQ.YD.	PG 70-22	AVG. WID.	SQ.YD.	POUND / SQ.YD.	PG 70-22	AVG. WID.	SQ.YD.	POUND / SQ.YD.	PG 70-22	TOTAL PG 70-22
			FEET			FEET			FEET				FEET			TON	FEET			TON	FEET			TON	FEET			TON	TON
MAIN LANES																													
314+00.00	315+00.00	C.L. HWY. 82 - TRANSITION	100.00	100.00	100.00				34.00	377.78	37.78	37.78													37.00	411.11	220	45.22	45.22
315+00.00	319+23.60	C.L. HWY. 82 - NOTCH AND WIDENING	423.60	215.50	912.86	13.48	634.46	31.72				31.72	4.76	224.04	440	49.29	4.46	209.92	330	34.64	4.26	200.50	220	22.06	40.00	1882.67	220	207.09	229.15
319+23.60	322+90.00	C.L. HWY. 82 - NOTCH AND WIDENING - RT.	366.40	209.25	766.69	18.74	762.93	38.15				38.15	6.38	259.74	440	57.14	6.23	253.63	330	41.85	6.13	249.56	220	27.45	40.00	1628.44	220	179.13	206.58
322+90.00	323+15.80	C.L. HWY. 82 - NOTCH AND WIDENING - TRANSITION	25.80	215.50	55.60	13.48	38.64	1.93				1.93	4.76	13.65	440	3.00	4.46	12.79	330	2.11	4.26	12.21	220	1.34	40.00	114.67	220	12.61	13.95
323+15.80	324+13.34	C.L. HWY. 82 - NOTCH AND WIDENING - LT. SHLDR. OVERLAY	97.54	192.75	188.01	30.74	333.15	16.66				16.66	10.38	112.50	440	24.75	10.23	110.87	330	18.29	10.13	109.79	220	12.08	40.00	433.51	220	47.69	59.77
324+13.34	326+00.00	C.L. HWY. 82 - NOTCH AND WIDENING - LT. SHLDR. OVERLAY	186.66	206.50	385.45	41.45	859.67	42.98				42.98	13.95	289.32	440	63.65	13.80	286.21	330	47.22	13.70	284.14	220	31.26	40.00	829.60	220	91.26	122.52
326+00.00	339+61.15	C.L. HWY. 82 - 2 LANES	1361.15	309.00	4205.95	85.46	12924.88	646.24				646.24	28.75	4348.12	440	956.59	28.46	4304.26	330	710.20	28.25	4272.50	220	469.98	40.00	6049.56	220	665.45	1135.43
339+61.15	342+00.82	C.L. HWY. 82 - 5 LANES	239.67	445.00	1066.53	190.46	5071.95	253.60				253.60	63.75	1697.66	440	373.49	63.46	1689.94	330	278.84	63.25	1684.35	220	185.28	75.00	1997.25	220	219.70	404.98
351+29.98	353+71.65	C.L. HWY. 82 - 5 LANES	241.67	445.00	1075.43	190.46	5114.27	255.71				255.71	63.75	1711.83	440	376.60	63.46	1704.04	330	281.17	63.25	1698.40	220	186.82	75.00	2013.92	220	221.53	408.35
353+71.65	375+58.22	C.L. HWY. 82 - 2 LANES	2186.57	309.00	6756.50	85.46	20762.70	1038.14				1038.14	28.75	6984.88	440	1536.67	28.46	6914.42	330	1140.88	28.25	6863.40	220	754.97	40.00	9718.09	220	1068.99	1823.96
375+58.22	378+00.00	C.L. HWY. 82 - NOTCH AND WIDENING - LT. SHLDR. OVERLAY	241.78	225.50	545.21	56.03	1505.21	75.26				75.26	18.81	505.32	440	111.17	18.66	501.29	330	82.71	18.56	498.60	220	54.85	40.00	1074.58	220	118.20	173.05
378+00.00	380+00.00	C.L. HWY. 82 - NOTCH AND WIDENING - LT. SHLDR. OVERLAY	200.00	192.75	385.50	30.74	683.11	34.16				34.16	10.38	230.67	440	50.75	10.23	227.33	330	37.51	10.13	225.11	220	24.76	40.00	888.89	220	97.78	122.54
380+00.00	381+00.00	C.L. HWY. 82 - NOTCH AND WIDENING - LT.	100.00	209.25	209.25	18.74	208.22	10.41				10.41	6.38	70.89	440	15.60	6.23	69.22	330	11.42	6.13	68.11	220	7.49	40.00	444.44	220	48.89	56.38
381+00.00	381+30.00	C.L. HWY. 82 - NOTCH AND WIDENING	30.00	215.50	64.65	13.48	44.93	2.25				2.25	4.76	15.87	440	3.49	4.46	14.87	330	2.45	4.26	14.20	220	1.56	40.00	133.33	220	14.67	16.23
381+30.00	382+30.00	C.L. HWY. 82 - TRANSITION	100.00	100.00	100.00				34.00	377.78	37.78	37.78													37.50	416.67	220	45.83	45.83
ADDITIONAL FOR STAGE 2 TEMPORARY WIDENING																													
2322+73.74	2323+95.97	C.L. HWY. 82 STAGE 2	122.23	26.50	32.39	4.13	56.09	2.80				2.80	2.19	29.74	440.00	6.54	1.94	26.35	330	4.35	1.83	223.87	220.00	24.63					24.63
2323+95.97	2326+87.74	C.L. HWY. 82 STAGE 2	291.77	73.50	214.45	28.19	913.89	45.69				45.69	14.22	461.00	440.00	101.42	13.97	452.89	330	74.73	13.86	4044.75	220.00	444.92					444.92
2326+87.74	2327+37.70	C.L. HWY. 82 STAGE 2	49.96	26.50	13.24	4.01	22.26	1.11				1.11	2.13	11.82	440.00	2.60	1.88	10.44	330	1.72	1.77	88.58	220.00	9.74					9.74
LOCAL ROAD																													
10+12.00	13+38.83	C.L. COUNTY ROAD 350	326.83	109.75	358.70																				20.00	726.29	220	79.89	79.89
ADDITIONAL FOR LEVELING & METHOD OF RAISING GRADE																													
315+00.00	324+13.34	C.L. HWY. 82 - NOTCH AND WIDENING	913.34			48.00	4871.15	243.56	24.00	2435.57	243.56	487.12					24.00	2435.57	180	219.20	24.00	2435.57	220	267.91					267.91
324+13.34	326+00.00	C.L. HWY. 82 - NOTCH AND WIDENING	186.66			61.29	1271.15	63.56	20.43	423.72	42.37	105.93					20.43	423.72	680	144.06	20.43	423.72	220	46.61					46.61
375+58.22	378+00.00	C.L. HWY. 82 - NOTCH AND WIDENING	241.78			31.14	836.56	41.83	15.57	418.28	41.83	83.66					15.57	418.28	110	23.01	15.57	418.28	220	46.01					46.01
378+00.00	381+30.00	C.L. HWY. 82 - NOTCH AND WIDENING	330.00			48.00	1760.00	88.00	24.00	880.00	88.00	176.00					24.00	880.00	280	123.20	24.00	880.00	220	96.80					96.80
ADDITIONAL FOR GUARDRAIL																													
339+61.15	339+94.15	C.L. HWY. 82 - GUARDRAIL WIDENING RT. (TAPER)	33.00	21.75	7.18																				2.75	10.08	220	1.11	1.11
339+94.15	340+04.15	C.L. HWY. 82 - GUARDRAIL WIDENING RT.	10.00	43.25	4.33																				5.50	6.11	220	0.67	0.67
340+04.15	341+79.15	C.L. HWY. 82 - GUARDRAIL WIDENING RT.	175.00	35.75	62.56																				4.50	87.50	220	9.63	9.63
341+79.15	342+00.82	C.L. HWY. 82 - GUARDRAIL WIDENING RT.	21.67	28.00	6.07																				3.50	8.43	220	0.93	0.93
340+36.15	340+69.15	C.L. HWY. 82 - GUARDRAIL WIDENING LT. (TAPER)	33.00	21.75	7.18																				2.75	10.08	220	1.11	1.11
340+69.15	340+79.15	C.L. HWY. 82 - GUARDRAIL WIDENING LT.	10.00	43.25	4.33																				5.50	6.11	220	0.67	0.67
340+79.15	341+79.15	C.L. HWY. 82 - GUARDRAIL WIDENING LT.	100.00	35.75	35.75																				4.50	50.00	220	5.50	5.50
341+79.15	342+00.82	C.L. HWY. 82 - GUARDRAIL WIDENING LT.	21.67	28.00	6.07																				3.50	8.43	220	0.93	0.93
351+29.98	351+52.00	C.L. HWY. 82 - GUARDRAIL WIDENING RT.	22.02	28.00	6.17																				3.50	8.56	220	0.94	0.94
351+52.00	352+52.00	C.L. HWY. 82 - GUARDRAIL WIDENING RT.	100.00	35.75	35.75																				4.50	50.00	220	5.50	5.50
352+52.00	352+62.00	C.L. HWY. 82 - GUARDRAIL WIDENING RT.	10.00	43.25	4.33																				5.50	6.11	220	0.67	0.67
352+62.00	352+95.00	C.L. HWY. 82 - GUARDRAIL WIDENING RT. (TAPER)	33.00	21.75	7.18																				2.75	10.08	220	1.11	1.11
351+29.98	351+53.00	C.L. HWY. 82 - GUARDRAIL WIDENING LT.	23.02	28.00	6.45																				3.50	8.95	220	0.98	0.98
351+53.00	353+28.00	C.L. HWY. 82 - GUARDRAIL WIDENING LT.	175.00	35.75	62.56																				4.50	87.50	220	9.63	9.63
353+28.00	353+38.00	C.L. HWY. 82 - GUARDRAIL WIDENING LT.	10.00	43.25	4.33																				5.50	6.11	220	0.67	0.67
353+38.00	353+71.00	C.L. HWY. 82 - GUARDRAIL WIDENING LT. (TAPER)	33.00	21.75	7.18																				2.75	10.08	220	1.11	1.11
ADDITIONAL FOR SUPERELEVATION																													
315+18.60	327+03.87	C.L. HWY. 82 - NOTCH AND WIDENING	1185.27	5.25	62.23																								
326+50.00	339+60.55	C.L. HWY. 82 - 2 LANES	1310.55	5.25	68.80																								
351+29.98	353+71.65	C.L. HWY. 82 - 5 LANES	241.67	5.50	13.29																								
353+71.65	370+52.33	C.L. HWY. 82 - 2 LANES	1680.68	5.50	92.44																								
TOTALS:					**17940.59**		**58675.22**			**4913.13**		**3425.08**		**16967.05**		**3732.75**		**20946.04**		**3279.56**		**24695.64**		**2716.52**		**29137.15**		**3205.09**	**5921.61**

BASIS OF ESTIMATE:
ACHM SURFACE COURSE (1/2").....93.7% MIN. AGGR.....6.3% ASPHALT BINDER
ACHM BINDER COURSE (1").....95.0% MIN. AGGR.....5.0% ASPHALT BINDER
ACHM BASE COURSE (1 1/2").....95.2% MIN. AGGR.....4.8% ASPHALT BINDER
TACK COAT QUANTITIES WERE CALCULATED USING THE EMULSIFIED ASPHALT RATES. REFER TO SS-400-1 FOR THE RESIDUAL ASPHALT APPLICATION RATES.

* QUANTITY ESTIMATED: TO BE USED IF AND WHERE DIRECTED BY THE ENGINEER. REFER TO SECTION 104.03 OF THE STD. SPECS.

BrendanBarns 7/29/2026 2:17:15 PM
WORKSPACE: BrendanBarns
Y:\Projects\ARDOT_16938T_070458 UPRR Grade Separation\Design\CIVIL\Drawings\R070458_08B_OYT_001.dgn
REVISED DATE: $$REVDATE$$

STATE OF ARKANSAS
LICENSED PROFESSIONAL ENGINEER
No.10887
SCOTT P. THORNSBERRY
2-2-2024

SUMMARY SOIL CLASSIFICATION TEST RESULTS

BORING N0.	APPROX. STATION	SAMPLE DEPTH (ft.)	WATER CONTENT (%)	ATTERBERG LIMITS LIQUID LIMIT	PLASTIC LIMIT	PLASTICITY INDEX	PERCENT PASSING #200	UNIFIED CLASS.	AASHTO CLASS.
B-1		3.5 - 5	17	29	16	13	59	CL	A-6
B-1		8.5 - 10.5	--	22	17	5	59	CL-ML	A-4
B-1		18.5 - 20	--	20	18	2	55	ML	A-4
B-1		28.5 - 30.5	--	33	20	13	90	CL	A-6
B-2		3.5 - 5.5	--	22	16	6	68	CL-ML	A-4
B-2		13.5 - 15	22	NP	NP	NP	41	SM	A-4
B-2		28.5 - 30.5	--	33	14	19	90	CL	A-6
B-2		58.5 - 60	--	39	13	26	93	CL	A-6
B-3		2 -3.5	20	NP	NP	NP	65	ML	A-6
B-3		8 -10	20	NP	NP	NP	49	SM	A-4
B-3		23.5 - 25	24	48	16	32	91	CL	A-6
B-3		33.5 - 35	--	44	13	31	96.2	CL	A-7-6
B-4		3.5 - 5.5	17	34	14	20	52	CL	A-6
B-4		8 - 10	17	NP	NP	NP	31	SM	A-2-4
B-4		18.5 - 20.5	--	31	16	15	89	CL	A-6
B-4		38.5 - 40	--	50	14	36	96	CH	A-7-6
B-5		3.5 - 5.5	--	30	16	14	58	CL	A-6
B-5		8 - 10	20	35	12	23	71	CL	A-6
B-5		18.5 - 20.5	21	47	14	33	83	CL	A-7-6
B-5		33.5 - 35	--	38	13	25	93	CL	A-6
B-5		43.5 - 45	--	44	13	41	97	CL	A-6
B-6		2 - 3.5	17	33	14	19	70	CL	A-6
B-6		13.5 - 15.5	--	40	14	26	79	CL	A-6
B-6		18.5 - 20	27	66	18	48	97	CH	A-7-6
B-6		28.5 - 30	25	NP	NP	NP	38	SM	A-4
B-6		38.5 - 40	--	38	15	23	88	CL	A-6
B-7		8.5 - 10.5	--	38	13	25	67	CL	A-6
B-7		18.5 - 20	--	35	14	21	86	CL	A-6
B-7		33.5 - 35	26	NP	NP	NP	53	ML	A-4
B-7		43.5 - 45	--	50	14	36	87	CH	A-7-6
B-7		58.6 - 60	--	36	13	23	95	CL	A-6
B-8		5 - 7	20	46	16	30	68	CL	A-7-6
B-8		18.5 - 20	25	49	14	35	66	CL	A-7-6
B-8		38.5 - 40	--	52	14	38	96	CH	A-7-6
R-1		2 - 3.5	13	32	14	18	60	CL	A-6
R-2		2 - 3.5	23	47	15	32	59	CL	A-7-6
R-2		13.5 - 15	25	36	15	21	54	CL	A-6
R-3		0.5 - 2	13	24	13	11	59	CL	A-6
R-3		5 - 6.5	13	21	11	10	44	SC	A-4
R-4		2 - 3.5	13	34	13	21	66	CL	A-6

NOTE: SOIL CHARACTERISTICS TABULATED ABOVE ARE REPRESENTATIVE AT THE LOCATION OF THE SAMPLE, AND FROM SURFACE INDICATIONS ARE TYPICAL FOR THE LIMITS SHOWN. THESE DATA ARE SHOWN FOR INFORMATION ONLY. THE STATE WILL NOT BE RESPONSIBLE FOR VARIATIONS IN THE SOIL CHARACTERISTICS AND/OR EXTENT OF SAME DIFFERING FROM THE ABOVE TABULATIONS.

DATE REVISED	DATE FILMED	DATE REVISED	DATE FILMED	FED.RD. DIST.NO.	STATE	FED.AID PROJ.NO.	SHEET NO.	TOTAL SHEETS
				6	ARK.			
				JOB NO.		070458	41	125
				(1) 07537 - QUANTITIES - 64251				

SCHEDULE OF BRIDGE QUANTITIES - JOB NO. 070458

BRIDGE NUMBER	NAME PLATE TITLE	UNIT OF STRUCTURE	ITEM NUMBER	SS & 619	801	SP, SS, & 802	SP, SS, & 802	SP & 803	SS & 804	SS & 804	SS & 805	SS & 805	SP, SS, & 807	SS & 807	SS & 808	SS & 809	812	SS & 816
			ITEM	7' STEEL CHAIN LINK FENCE	UNCLASSIFIED EXCAVATION FOR STRUCTURES-BRIDGE	CLASS S CONCRETE -BRIDGE	CLASS S(AE) CONCRETE -BRIDGE	CLASS 2 PROTECTIVE SURFACE TREATMENT	REINFORCING STEEL-BRIDGE (GRADE 60)	EPOXY COATED REINFORCING STEEL (GRADE 60)	CONCRETE PILING (18" SQUARE)	TEST PILE (18" SQUARE)	STRUCTURAL STEEL IN PLATE GIRDER SPANS (A709, GR. 50W)	PAINTING (1) STRUCTURAL STEEL	ELASTOMERIC BEARINGS	ARMORED JOINT WITH NEOPRENE STRIP SEAL	BRIDGE NAME PLATE (TYPE D)	CONCRETE RIPRAP
			UNIT	LIN.FT.	CU. YD.	CU. YD.	CU. YD.	SQ. YD.	POUND	POUND	LIN. FT.	LIN. FT.	POUND	TON	CU. IN.	LIN. FT.	EACH	CU. YD.
07537	HIGHWAY 82 OVER UPRR	END BENT NO. 1				78.60		36.1	7,781	675	880	100	2,726		5,841	77	1	157
		INTERMEDIATE BENT NO. 2			68	173.20			38,911		1,750	55	652		8,434			
		INTERMEDIATE BENT NO. 3			84	182.00			41,742		1,750	55	652		8,434			
		INTERMEDIATE BENT NO. 4			93	193.70			41,145		1,400	45	2,800		14,265			
		INTERMEDIATE BENT NO. 5			105	314.20			61,071		2,420	60	660		10,620			
		INTERMEDIATE BENT NO. 6			76	239.30			52,868		1,980	50	626		9,293			
		INTERMEDIATE BENT NO. 7			117	314.70			49,493		1,925	60	626		7,718			
		END BENT NO. 8				77.30		36.1	7,189	675	850	96	2,758		6,120	77		
		375'-0" CONT. COMP. PLATE GIRDER UNIT					784.50	3,427.1		206,415			861,274	60.6				199
		479'-0" CONT. COMP. PLATE GIRDER UNIT		260			1,000.50	4,377.5		283,535			1,208,276	71.2				
TOTALS FOR JOB NO. 070458				260	543	1,573.00	1,785.00	7,876.8	300,200	491,300	12,955	521	2,081,050	131.8	70,725	154	1	356

TABLE OF APPROACH SLAB QUANTITIES

(FOR INFORMATION ONLY)

BRIDGE NO.	ITEM	REINFORCING STEEL	CONCRETE
	UNIT	LBS.	CU.YDS.
07537	BEGIN BRIDGE	16,990	140.20
	END BRIDGE	16,990	140.20

(1) PAINTING: The following weathering steel surfaces shall be painted as specified in Subsection 807.75:

- All steel surfaces within 9.5 feet of bridge deck expansion joints, including cross-frames, connection bolts, bearings, and bumper plates.
- All steel surfaces exposed to the outside face of the bridge, including outside faces and bottom of the exterior beams or girders, splice plates and bolts, stiffeners, drip plates and bearings.

ASTM F3125, Grade A325 Type 3 bolts shall be used within these painted zones and shall be painted. Galvanized members, the expansion device, and surfaces in contact with concrete shall not be painted. The color of paint shall be Brown equal or close to Fed. Std. 595 B, Color Chip No. 30070 and as approved by the Engineer. The finish system may be applied in the shop. Any damage to the paint system occurring during transport or installation shall be corrected according to the manufacturer's recommendations at no cost to the Department.

STATE OF ARKANSAS
LICENSED PROFESSIONAL ENGINEER
No.14501
STEPHEN F. HARPER

5/20/2024

BRIDGE ENGINEER
PRINT DATE: 5/14/2024

SCHEDULE OF BRIDGE QUANTITIES
UPRR GRADE SEPARATION
(EAST OF LAFAYETTE CO. LINE) (S)
COLUMBIA COUNTY
ROUTE 82 SECTION 3
ARKANSAS STATE HIGHWAY COMMISSION
LITTLE ROCK, ARKANSAS

DRAWN BY:	KDH	DATE:	05/2021	FILENAME:	B070458X1_Q1.dgn
CHECKED BY:	MKL	DATE:	05/2021		
DESIGNED BY:	-	DATE:	-	SCALE:	NONE
BRIDGE NO.	07537			DRAWING NO.	64251

Msgan.Land 5/14/2024 12:33:10 PM
WORKSPACE: ARDOT
Y:\Projects\ARDOT_I69387_070458 UPRR Grade Separation\Design\BRIDGE\Drawings\B070458X1_Q1.dgn
REVISED DATE:

DATE REVISED	DATE FILMED	DATE REVISED	DATE FILMED	FED.RD. DIST.NO.	STATE	FED.AID PROJ.NO.	SHEET NO.	TOTAL SHEETS
9-16-2026				6	ARK.			
				JOB NO.		070458	42	125

(2) SUMMARY OF QUANTITIES AND REVISIONS

STATE OF ARKANSAS
LICENSED PROFESSIONAL ENGINEER
No.10887
SCOTT P. THORNSBERRY
9-16-2026

SUMMARY OF QUANTITIES

ITEM NUMBER	ITEM	QUANTITY	UNIT
201	CLEARING	69	STATION
201	GRUBBING	69	STATION
202	REMOVAL AND DISPOSAL OF CURB AND GUTTER	2595	LIN. FT.
202	REMOVAL AND DISPOSAL OF FENCE	1320	LIN. FT.
202	REMOVAL AND DISPOSAL OF GATES	1	EACH
202	REMOVAL AND DISPOSAL OF CONCRETE PAVEMENT	4100	SQ. YD.
202	REMOVAL AND DISPOSAL OF PIPE CULVERTS	1	EACH
202	REMOVAL AND DISPOSAL OF CONCRETE DITCH PAVING	840	SQ. YD.
SP, SS, & 210	UNCLASSIFIED EXCAVATION	26486	CU. YD.
SP & 210	COMPACTED EMBANKMENT	146587	CU. YD.
SP & 210	SOIL STABILIZATION	1500	TON
SP, SS, & 303	AGGREGATE BASE COURSE (CLASS 7)	18601	TON
SS & 401	TACK COAT	3445	GAL.
SP, SS, & 405	MINERAL AGGREGATE IN ACHM BASE COURSE (1 1/2")	3554	TON
SP, SS, & 405	ASPHALT BINDER (PG 70-22) IN ACHM BASE COURSE (1 1/2")	179	TON
SP, SS, & 406	MINERAL AGGREGATE IN ACHM BINDER COURSE (1")	3116	TON
SP, SS, & 406	ASPHALT BINDER (PG 70-22) IN ACHM BINDER COURSE (1")	164	TON
SP, SS, & 407	MINERAL AGGREGATE IN ACHM SURFACE COURSE (1/2")	5662	TON
SP, SS, & 407	ASPHALT BINDER (PG 70-22) IN ACHM SURFACE COURSE (1/2")	381	TON
SP & 412	COLD MILLING ASPHALT PAVEMENT	767	SQ. YD.
SP, SS, & 414	ASPHALT CONCRETE PATCHING FOR MAINTENANCE OF TRAFFIC	10	TON
SP, SS, & 415	ACHM PATCHING OF EXISTING ROADWAY	10	TON
SP, SS, & 504	APPROACH SLABS	280.40	CU. YD.
SP, SS, & 504	APPROACH GUTTERS	16.80	CU. YD.
601	MOBILIZATION	1.00	LUMP SUM
SP & 602	FURNISHING FIELD OFFICE	1	EACH
SS & 603	MAINTENANCE OF TRAFFIC	1.00	LUMP SUM
SS & 604	SIGNS	409	SQ. FT.
SP, SS, & 604	CONSTRUCTION PROJECT INFORMATION SIGN UPDATE	6	EACH
SS & 604	BARRICADES	80	LIN. FT.
SS & 604	TRAFFIC DRUMS	59	EACH
SS & 604	FURNISHING AND INSTALLING PRECAST CONCRETE BARRIER	632	LIN. FT.
SS & 604	RELOCATING PRECAST CONCRETE BARRIER	572	LIN. FT.
604	CONSTRUCTION PAVEMENT MARKINGS	23604	LIN. FT.
604	REMOVABLE CONSTRUCTION PAVEMENT MARKINGS	3716	LIN. FT.
604	REMOVAL OF PERMANENT PAVEMENT MARKINGS	7686	LIN. FT.
SS & 604	VERTICAL PANELS	34	EACH
SP, SS, & 605	CONCRETE DITCH PAVING (TYPE B)	274	SQ. YD.
SS & 606	24" REINFORCED CONCRETE PIPE CULVERTS (CLASS III)	82	LIN. FT.
SS & 606	24" REINFORCED CONCRETE PIPE CULVERTS (CLASS V)	245	LIN. FT.
SS & 606	36" REINFORCED CONCRETE PIPE CULVERTS (CLASS IV)	234	LIN. FT.
SS & 606	60" REINFORCED CONCRETE PIPE CULVERTS (CLASS III)	88	LIN. FT.
SS & 606	24" FLARED END SECTIONS FOR REINFORCED CONCRETE PIPE CULVERTS	2	EACH
SS & 606	36" FLARED END SECTIONS FOR REINFORCED CONCRETE PIPE CULVERTS	4	EACH
SS & 606	60" FLARED END SECTIONS FOR REINFORCED CONCRETE PIPE CULVERTS	2	EACH
SP, SS, & 606	18" SIDE DRAIN	236	LIN. FT.
SS & 606	SELECTED PIPE BEDDING	60	CU. YD.
SS & 609	DROP INLETS (TYPE RM SPECIAL)	4	EACH
SS & 611	UNDERDRAIN OUTLET PROTECTORS	12	EACH
SS & 611	4" PIPE UNDERDRAINS	3000	LIN. FT.
SS & 615	PAVEMENT REPAIR OVER CULVERTS (ASPHALT)	34	TON
SS & 617	GUARDRAIL (TYPE A)	450	LIN. FT.
SS & 617	GUARDRAIL TERMINAL (TYPE 2)	4	EACH
SS & 617	THRIE BEAM GUARDRAIL TERMINAL	4	EACH
SS & 619	WIRE FENCE (TYPE C)	1293	LIN. FT.
620	LIME	90	TON
620	SEEDING	45.01	ACRE
SS & 620	MULCH COVER	112.04	ACRE
620	WATER	5963.7	M. GAL.
621	TEMPORARY SEEDING	67.03	ACRE
621	SILT FENCE	27709	LIN. FT.
621	SAND BAG DITCH CHECKS	264	BAG
621	DIVERSION DITCH	1672	LIN. FT.
621	SEDIMENT BASIN	2117	CU. YD.
621	OBLITERATION OF SEDIMENT BASIN	2117	CU. YD.
621	SEDIMENT REMOVAL AND DISPOSAL	3233	CU. YD.
621	PIPE FOR SLOPE DRAINS	181	LIN. FT.
621	ROCK DITCH CHECKS	234	CU. YD.
SS & 621	FILTER SOCK (18")	92	LIN. FT.
623	SECOND SEEDING APPLICATION	45.01	ACRE
624	SOLID SODDING	417	SQ. YD.
626	EROSION CONTROL MATTING (CLASS 3)	89	SQ. YD.
635	ROADWAY CONSTRUCTION CONTROL	1.00	LUMP SUM
642	RUMBLE STRIPS IN ASPHALT SHOULDERS	8953	LIN. FT.
719	THERMOPLASTIC PAVEMENT MARKING WHITE (6")	13640	LIN. FT.
719	THERMOPLASTIC PAVEMENT MARKING YELLOW (6")	13660	LIN. FT.
721	RAISED PAVEMENT MARKERS (TYPE II)	257	EACH
801	UNCLASSIFIED EXCAVATION FOR STRUCTURES-ROADWAY	36	CU. YD.
SP, SS, & 802	CLASS S CONCRETE-ROADWAY	95.39	CU. YD.
SS & 804	REINFORCING STEEL-ROADWAY (GRADE 60)	44390	POUND
SS & 816	DUMPED RIPRAP	10	CU. YD.
	STRUCTURES OVER 20' SPAN		
SS & 619	7' STEEL CHAIN LINK FENCE	260	LIN. FT.
636	BRIDGE CONSTRUCTION CONTROL	1.00	LUMP SUM
801	UNCLASSIFIED EXCAVATION FOR STRUCTURES-BRIDGE	543	CU. YD.
SP, SS, & 802	CLASS S CONCRETE-BRIDGE	1573.00	CU. YD.
SP, SS, & 802	CLASS S(AE) CONCRETE-BRIDGE	1785.00	CU. YD.
SP & 803	CLASS 2 PROTECTIVE SURFACE TREATMENT	7876.8	SQ. YD.
SS & 804	REINFORCING STEEL-BRIDGE (GRADE 60)	300200	POUND
SS & 804	EPOXY COATED REINFORCING STEEL (GRADE 60)	491300	POUND
SS & 805	CONCRETE PILING (18" SQUARE)	12955	LIN. FT.
SS & 805	TEST PILE (18" SQUARE)	521	LIN. FT.
SP, SS, & 807	STRUCTURAL STEEL IN PLATE GIRDER SPANS (A709, GR. 50W)	2081050	POUND
SS & 807	PAINTING STRUCTURAL STEEL	131.8	TON
SS & 808	ELASTOMERIC BEARINGS	70725	CU. IN.
SS & 809	ARMORED JOINT WITH NEOPRENE STRIP SEAL	154	LIN. FT.
812	BRIDGE NAME PLATE (TYPE D)	1	EACH
SS & 816	CONCRETE RIPRAP	356.0	CU. YD.

REVISIONS

DATE	REVISION	SHEET NUMBER
9/16/2026	REVISED COMPACTED EMBANKMENT SP. REVISED DATES ON STANDARD DRAWINGS PM-1 AND TC-6. ADDED STANDARD DRAWING TC-1A.	2 & 42

Scott.Thornsberry 9/16/2026 11:37 PM
WORKSPACE: scott.thornsberry
Y:\Projects\ARDOT_16387_070458 UPRR Grade Separation\Design\CIVIL\Drawings\R070458.088.OYT_001.dgn
REVISED DATE: $$REVDATE$$

DATE REVISED	DATE FILMED	DATE REVISED	DATE FILMED	FED.RD. DIST.NO.	STATE	FED.AID PROJ.NO.	SHEET NO.	TOTAL SHEETS
				6	ARK.			
				JOB NO.		070458	43	125

(2) SURVEY CONTROL DETAILS

STATE OF ARKANSAS
LICENSED PROFESSIONAL ENGINEER
No.10887
SCOTT P. THORNSBERRY
6-18-2026

SURVEY CONTROL COORDINATES

Project Name: s070458
Date: 5/17/2018
Coordinate System: ARKANSAS STATE PLANE - SOUTH ZONE BASED ON GPS CONTROL, 370007 - 140001 & 140014 - 140014A
PROJECTED TO GROUND.
Units: U.S. SURVEY FOOT

Point Name	Northing	Easting	Elev	Feature	Description
1	1564442.1214	886896.9248	279.589	CTL	ARDOT STD. MON. STAMPED PN: 1
2	1564624.2370	886145.5669	283.807	CTL	ARDOT STD. MON. STAMPED PN: 2
3	1564969.1918	885355.5479	285.942	CTL	ARDOT STD. MON. STAMPED PN: 3
4	1565498.1290	884822.3116	277.342	CTL	ARDOT STD. MON. STAMPED PN: 4
5	1565399.2032	883904.3908	267.570	CTL	ARDOT STD. MON. STAMPED PN: 5
6	1565581.8620	885920.9439	280.086	CTL	ARDOT STD. MON. STAMPED PN: 6
7	1565690.5353	884554.7400	261.142	CTL	ARDOT STD. MON. STAMPED PN: 7
8	1565839.8739	884376.4364	262.260	CTL	ARDOT STD. MON. STAMPED PN: 8
9	1566208.1356	883951.0166	265.132	CTL	ARDOT STD. MON. STAMPED PN: 9
10	1564422.5144	887602.7712	303.074	CTL	ARDOT STD. MON. STAMPED PN: 10
11	1566622.9747	883458.2631	264.946	CTL	ARDOT STD. MON. STAMPED PN: 11
12	1566956.9263	882884.5684	257.125	CTL	ARDOT STD. MON. STAMPED PN: 12
13	1567189.8112	881963.6949	256.687	CTL	ARDOT STD. MON. STAMPED PN: 13
14	1566717.8721	883596.9457	263.475	CTL	ARDOT STD. MON. STAMPED PN: 14
100	1567390.2383	878409.0716	266.625	GPS	ARDOT GPS #370007
101	1567265.1979	880811.5886	256.698	GPS	ARDOT GPS #140001
102	1564466.3490	887923.0326	302.517	GPS	ARDOT GPS #140014
103	1564264.1923	889773.4940	312.511	GPS	ARDOT GPS #140014A
901	1564447.6661	886933.3713	281.886	TBM	CHISELED SQUARE CTR OF HW
902	1565487.8207	884789.5269	279.261	TBM	CHISELED SQUARE NW CORNER OF OVERPASS
903	1565923.5082	884280.5151	262.382	TBM	CHISELED SQUARE 19.5' NE OF CL HWY 82
999	1565516.8234	885929.2584	280.800	BM	NGS 1ST ORDER BM Q 202

*Note - Rebar and Cap - Standard - 5/8" Rebar with 2" Aluminum Cap stamped
*(standard markings common to all caps), or as indicated
(other markings indicated in the point description of the individual point).
ALL DISTANCES ARE GROUND.
USE CAF = 1.0 FOR STAKEOUT FOR THIS PROJECT.
A PROJECT CAF OF 0.999974405 HAS BEEN USED TO COMPUTE THE ABOVE GROUND COORDINATES.
THIS CAF IS INTENDED FOR USE WITHIN THE PROJECT LIMITS.
GRID DISTANCE = GROUND DISTANCE X CAF.
GRID COORDINATES ARE STORED UNDER FILE NAME s070458gi.CTL
HORIZONTAL DATUM: NAD 83 (1997)
VERTICAL DATUM: NAVD 88 POSITIONAL ACCURACY THIRD ORDER, UNLESS SPECIFIED OTHERWISE
AT A SPECIFIC POINT.

REFERENCE POINTS (1500 SERIES) ARE TO BE USED TO ESTABLISH CONTROL
IF THE PRIMARY CONTROL POINTS LISTED ABOVE HAVE BEEN DESTROYED.
REFERENCE POINTS ARE NOT TO BE USED FOR VERTICAL CONTROL

BASIS OF BEARING:
ARKANSAS STATE PLANE GRID BEARINGS - 0302-SOUTH ZONE
DETERMINED FROM GPS CONTROL POINTS: 370007 - 140001 & 140014 - 140014A
CONVERGENCE ANGLE: 00 46 57.47 LEFT AT PN: 3 LT: N 33-21-10.11 LG: W 093-23-53.97
GRID AZIMUTH = ASTRONOMICAL AZIMUTH - CONVERGENCE ANGLE.

ALIGNMENT NAME: HWY. 82

POINT	STATION	TYPE	NORTHING	EASTING
8000	314+00.00	POB	1567194.5942	881478.2448
8001	319+23.60	PC	1567161.9954	882000.8325
8003	335+55.55	PT	1566417.7537	883397.6858
8004	350+92.40	PC	1565198.0367	884332.6670
8006	366+47.33	PT	1564508.6904	885670.5280
8007	383+00.00	POE	1564451.2244	887322.2033

ALIGNMENT NAME: HWY. 82 STAGE 2

POINT	STATION	TYPE	NORTHING	EASTING
8011	2322+93.47	PC	1567103.4783	882365.4561
8013	2324+68.00	PRC	1567039.2568	882527.2763
8015	2325+46.33	PT	1567005.5580	882597.9445
8016	2325+53.33	PC	1567002.8948	882604.4183
8018	2326+31.66	PRC	1566977.1110	882678.3422
8020	2328+06.19	PT	1566908.8727	882838.5099

ALIGNMENT NAME: COUNTY ROAD 350

POINT	STATION	TYPE	NORTHING	EASTING
8008	10+00.00	POB	1566461.3430	883363.2544
8009	14+00.00	POE	1566713.8227	883673.5026

Brendan.Barns 6/16/2026 12:40:05 PM
WORKSPACE: Brendan.Barns
Y:\Projects\ARDOT_16938T_070458 UPRR Grade Separation\Design\CIVIL\Drawings\R070458_II_SC_001.dgn
REVISED DATE: $$REVDATE$$

DATE REVISED	DATE FILMED	DATE REVISED	DATE FILMED

FED.RD. DIST.NO.	STATE	FED.AID PROJ.NO.	SHEET NO.	TOTAL SHEETS
6	ARK.			
JOB NO.		070458	44	125

2 SURVEY CONTROL DETAILS

STATE OF ARKANSAS
LICENSED PROFESSIONAL ENGINEER
No.10887
SCOTT P. THORNSBERRY
2-2-2024

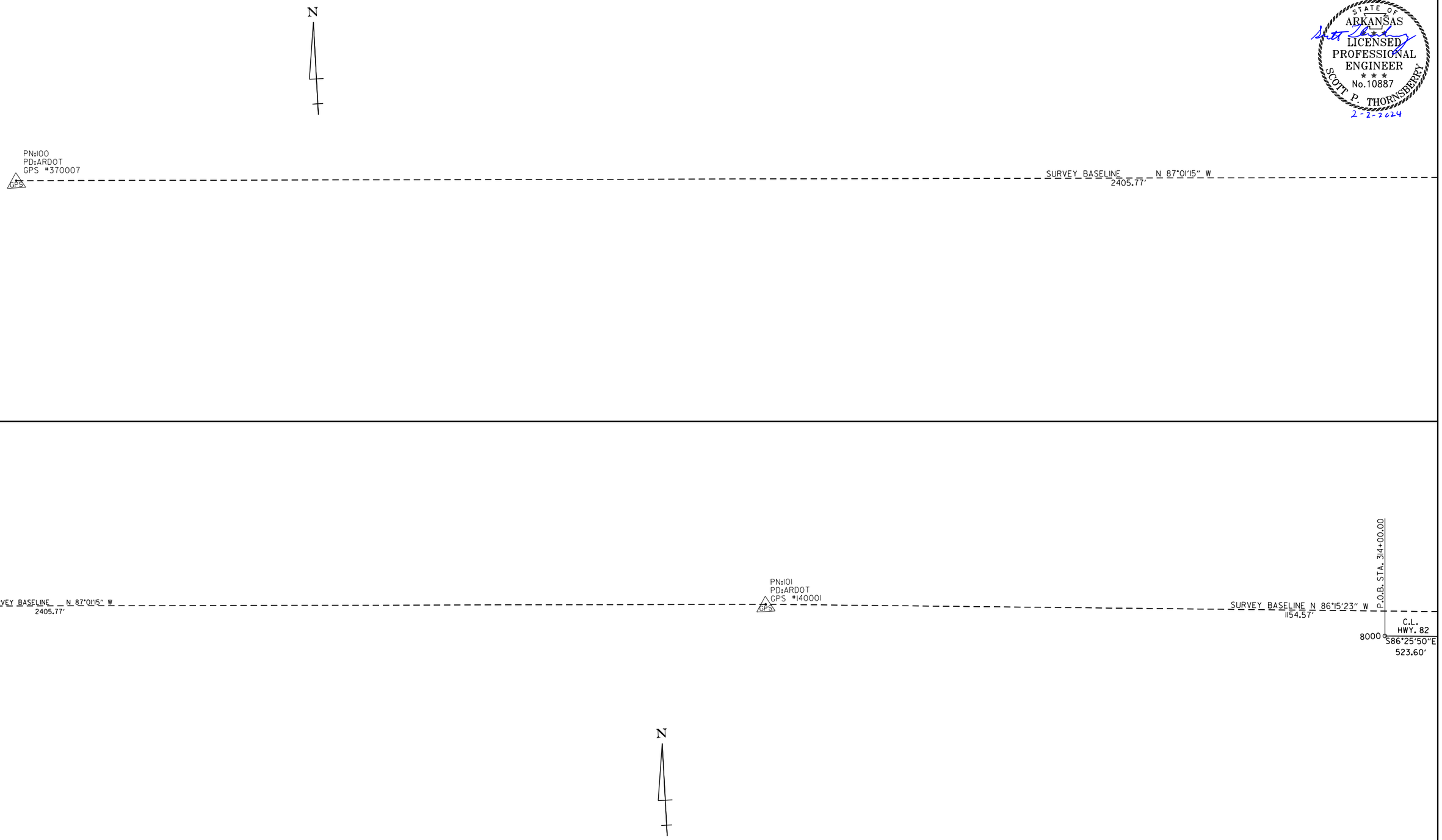

SURVEY CONTROL DETAILS

Scott.Thornsberry 2/2/2024 4:46:30 PM
WORKSPACE: ARDOT
Y:\Projects\ARDOT_16938T_070458 UPRR Grade Separation\Design\CIVIL\Drawings\R070458_II_SC_002.dgn
REVISED DATE: $$REVDATE$$

DATE REVISED	DATE FILMED	DATE REVISED	DATE FILMED	FED.RD. DIST.NO.	STATE	FED.AID PROJ.NO.	SHEET NO.	TOTAL SHEETS
				6	ARK.			
				JOB NO.		070458	45	125

(2) SURVEY CONTROL DETAILS

STATE OF ARKANSAS
LICENSED PROFESSIONAL ENGINEER
No.10887
SCOTT P. THORNSBERRY
6-18-2026

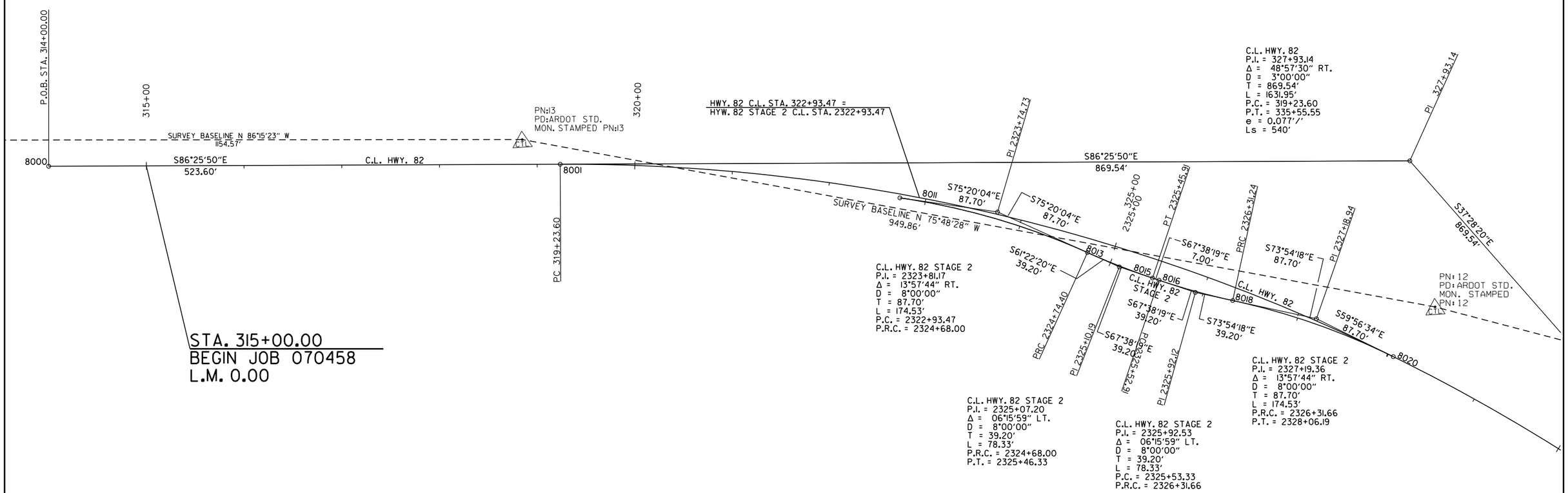

Brandon.Barns 6/16/2026 2:00:13 PM
WORKSPACE: Brandon.Barns
Y:\Projects\ARDOT_16938T_070458 UPRR Grade Separation\Design\CIVIL\Drawings\R070458_IL_SC_003.dgn
REVISED DATE: $$REVDATE$$

SURVEY CONTROL DETAILS

DATE REVISED	DATE FILMED	DATE REVISED	DATE FILMED	FED.RD. DIST.NO.	STATE	FED.AID PROJ.NO.	SHEET NO.	TOTAL SHEETS
				6	ARK.			
				JOB NO.		070458	46	125

(2) SURVEY CONTROL DETAILS

STATE OF ARKANSAS
LICENSED PROFESSIONAL ENGINEER
No.10887
SCOTT P. THORNSBERRY
6-19-2026

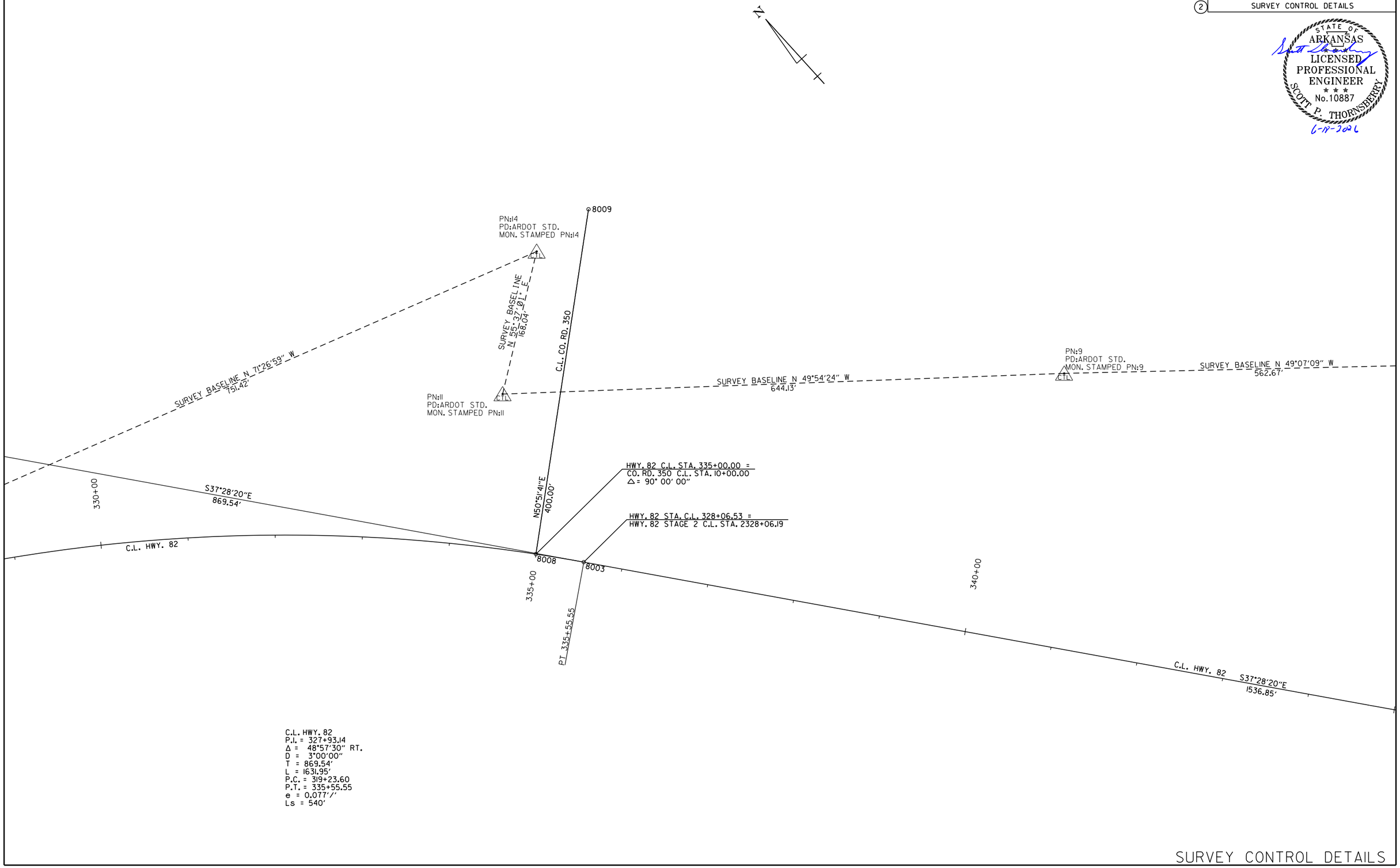

C.L. HWY. 82
P.I. = 327+93.14
Δ = 48°57'30" RT.
D = 3°00'00"
T = 869.54'
L = 1631.95'
P.C. = 319+23.60
P.T. = 335+55.55
e = 0.077'/'
Ls = 540'

Brendan.Barns 6/16/2026 2:00:4 PM
WORKSPACE: Brendan.Barns
Y:\Projects\ARDOT_16938T_070458 UPRR Grade Separation\Design\CIVIL\Drawings\R070458_11_SC_004.dgn
REVISED DATE: $$REVDATE$$

SURVEY CONTROL DETAILS

DATE REVISED	DATE FILMED	DATE REVISED	DATE FILMED

FED.RD. DIST.NO.	STATE	FED.AID PROJ.NO.	SHEET NO.	TOTAL SHEETS
6	ARK.			
JOB NO.		070458	47	125

2 SURVEY CONTROL DETAILS

STATE OF ARKANSAS
LICENSED PROFESSIONAL ENGINEER
No.10887
SCOTT P. THORNSBERRY
2-2-2024

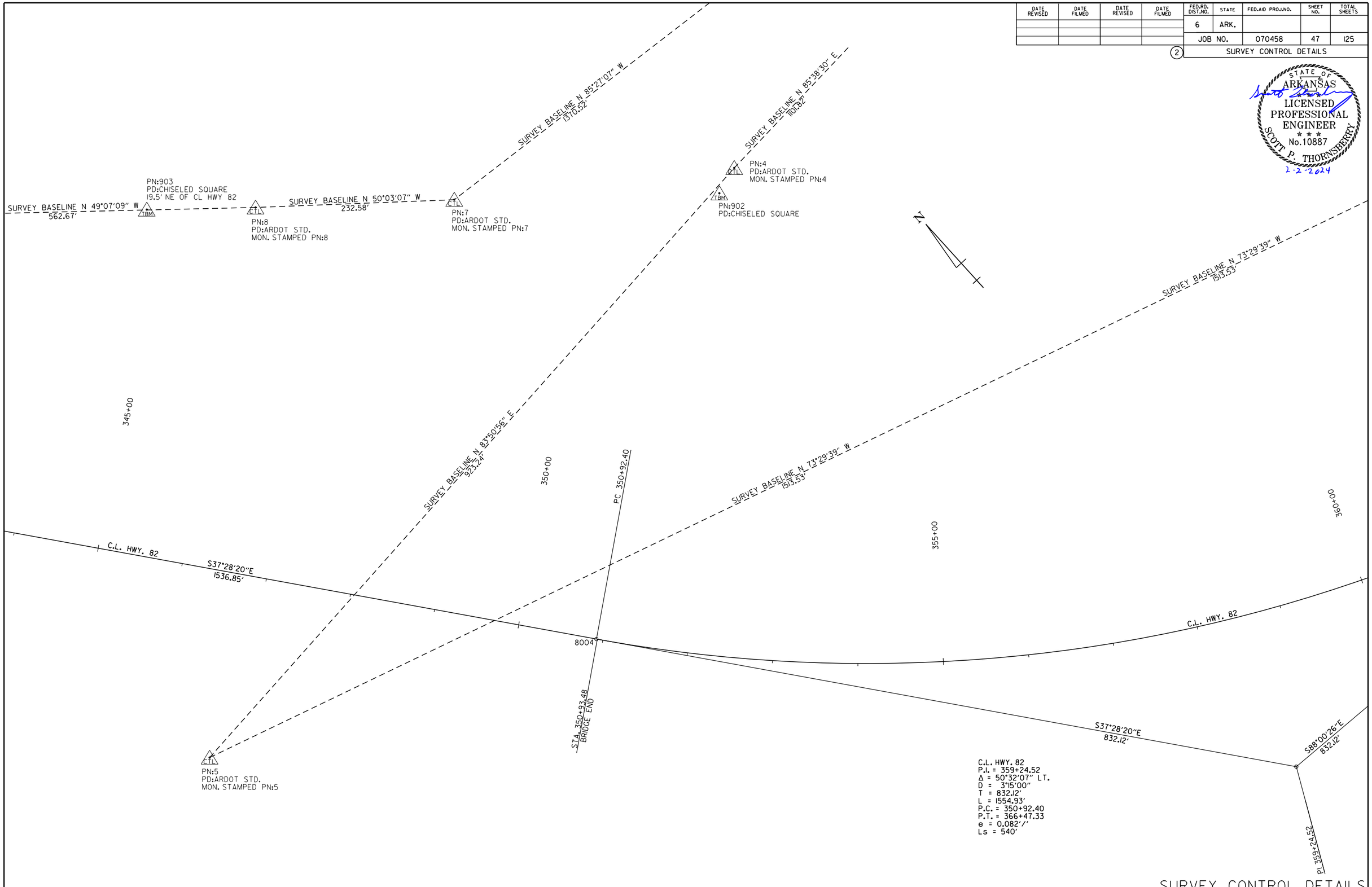

SURVEY CONTROL DETAILS

Scott.Thornsberry 2/2/2024 4:46:32 PM
WORKSPACE: ARDOT
Y:\Projects\ARDOT_169387_070458 UPRR Grade Separation\Design\CIVIL\Drawings\R070458.II.SC.005.dgn
REVISED DATE: $$REVDATE$$

DATE REVISED	DATE FILMED	DATE REVISED	DATE FILMED

FED.RD. DIST.NO.	STATE	FED.AID PROJ.NO.	SHEET NO.	TOTAL SHEETS
6	ARK.			
JOB NO.		070458	48	125

2 SURVEY CONTROL DETAILS

STATE OF ARKANSAS
LICENSED PROFESSIONAL ENGINEER
No.10887
SCOTT P. THORNSBERRY

2-2-2024

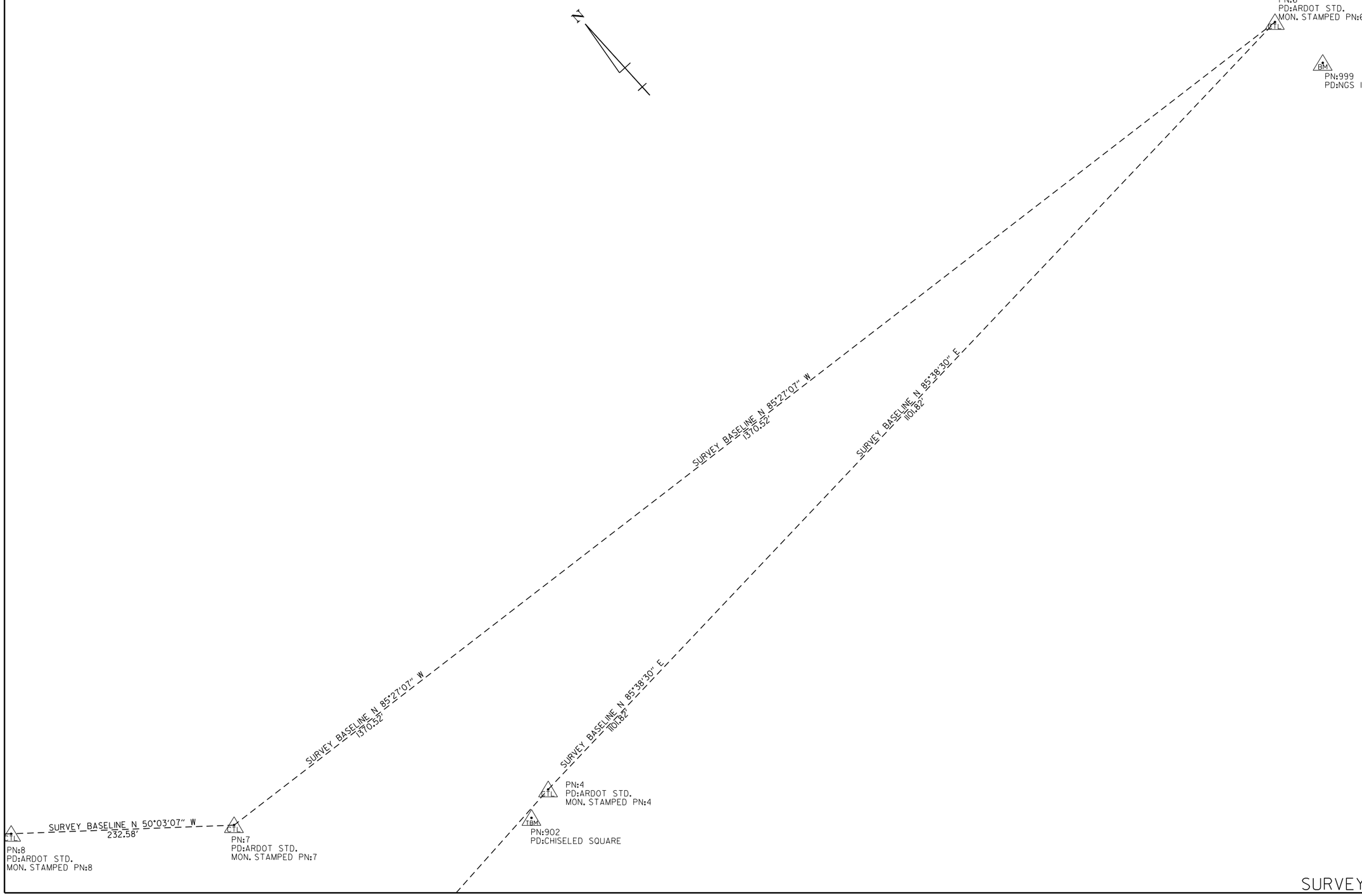

Scott.Thornsberry@2/2024 4:46:33 PM
WORKSPACE: ARDOT
Y:\Projects\ARDOT_16938_070458 UPRR Grade Separation\Design\CIVIL\Drawings\R070458_H_SC_006.dgn
REVISED DATE: $$REVDATE$$

SURVEY CONTROL DETAILS

DATE REVISED	DATE FILMED	DATE REVISED	DATE FILMED	FED.RD. DIST.NO.	STATE	FED.AID PROJ.NO.	SHEET NO.	TOTAL SHEETS
				6	ARK.			
				JOB NO.		070458	49	125

(2) SURVEY CONTROL DETAILS

STATE OF ARKANSAS
LICENSED PROFESSIONAL ENGINEER
No.10887
SCOTT P. THORNSBERRY
2-2-2024

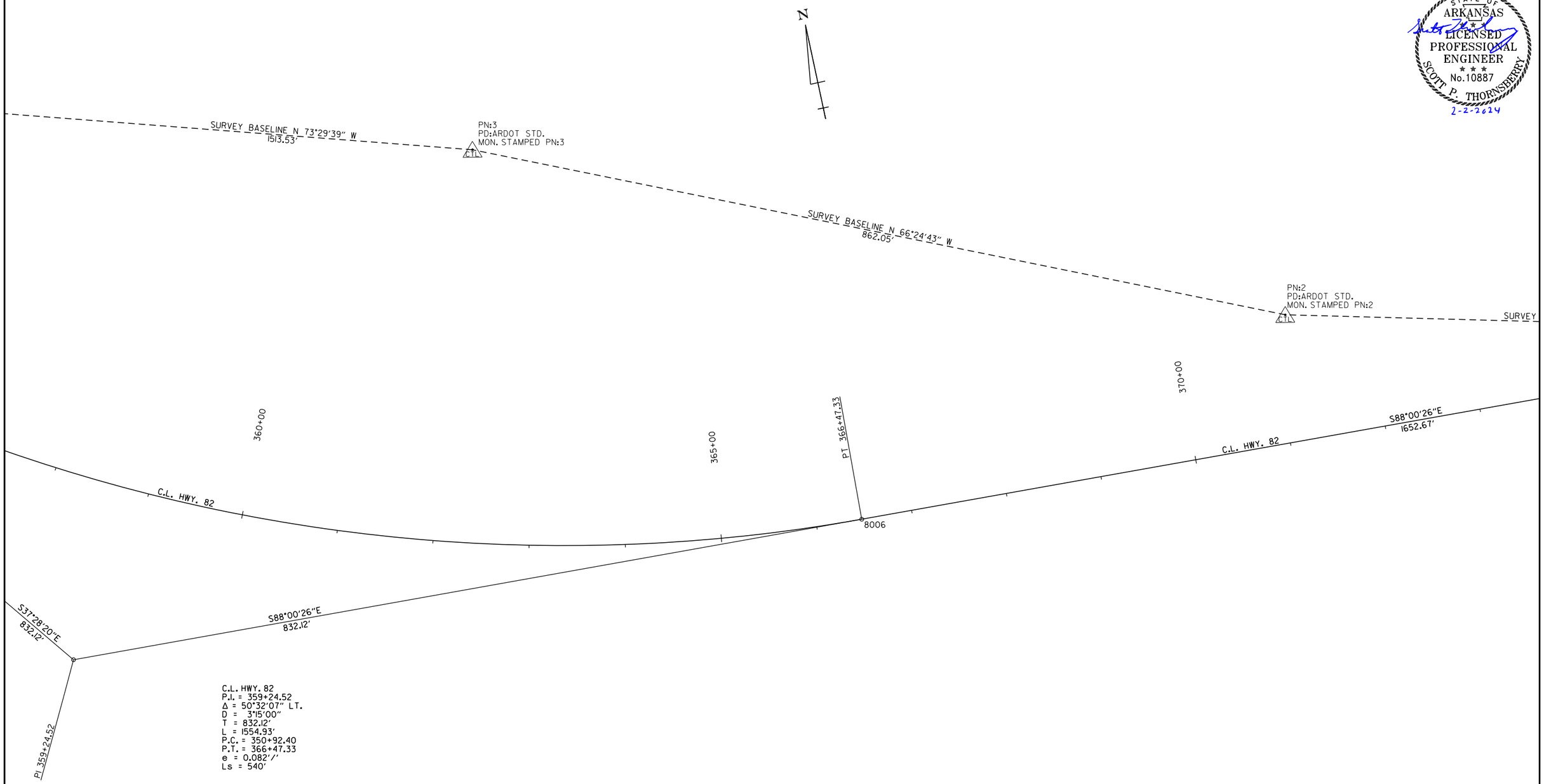

C.L. HWY. 82
P.I. = 359+24.52
Δ = 50°32'07" LT.
D = 3°15'00"
T = 832.12'
L = 1554.93'
P.C. = 350+92.40
P.T. = 366+47.33
e = 0.082'/'
Ls = 540'

Scott.Thornsberry@y 2/2/2024 4:46:34 PM
WORKSPACE: ARDOT
Y:\Projects\ARDOT_163387_070458 UPRR Grade Separation\Design\CIVIL\Drawings\R070458_II_SC_001.dgn
REVISED DATE: $$REVDATE$$

SURVEY CONTROL DETAILS

DATE REVISED	DATE FILMED	DATE REVISED	DATE FILMED	FED.RD. DIST.NO.	STATE	FED.AID PROJ.NO.	SHEET NO.	TOTAL SHEETS
				6	ARK.			
				JOB NO.		070458	50	125

(2) SURVEY CONTROL DETAILS

STATE OF ARKANSAS
LICENSED PROFESSIONAL ENGINEER
No.10887
SCOTT P. THORNSBERRY
2-2-2024

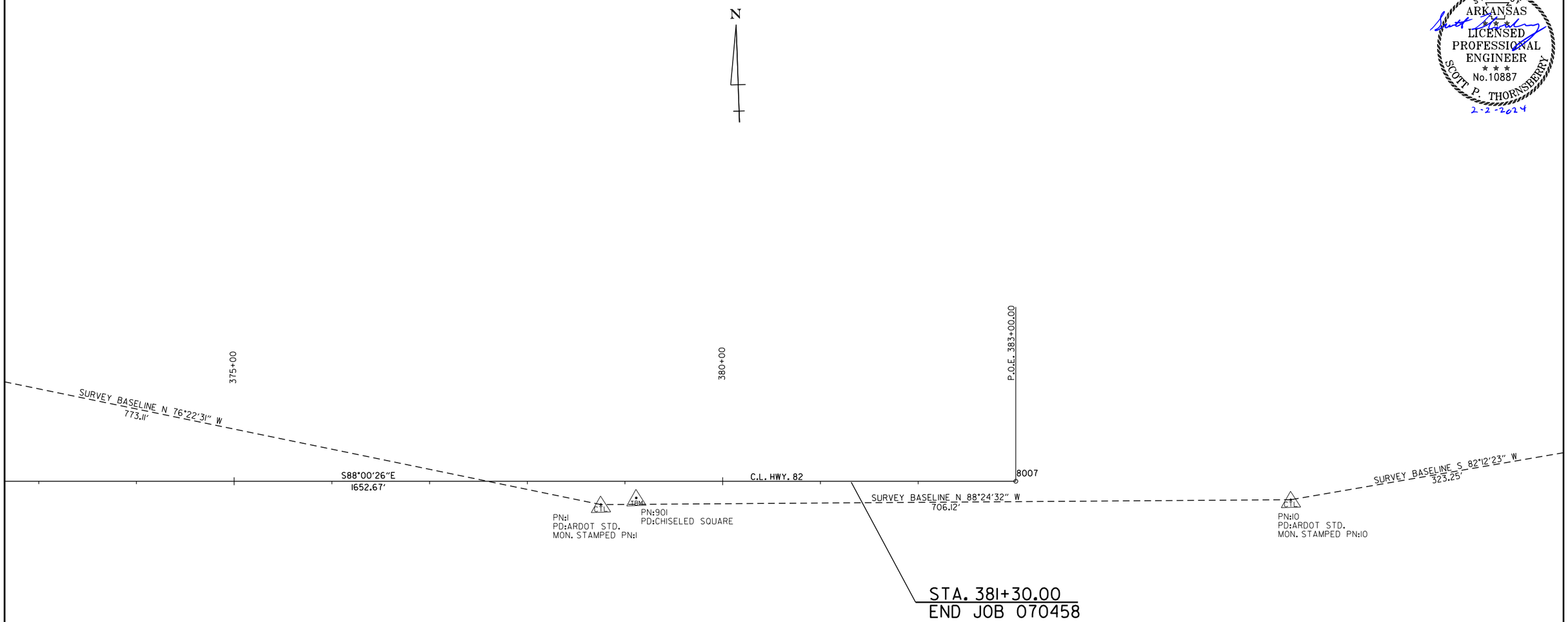

Scott.Thornsberry@2/2/2024 4:46:34 PM
WORKSPACE: ARDOT
Y:\Projects\ARDOT_169387_070458 UPRR Grade Separation\Design\CIVIL\Drawings\R070458.II.SC.008.dgn
REVISED DATE: $$REVDATE$$

SURVEY CONTROL DETAILS

DATE REVISED	DATE FILMED	DATE REVISED	DATE FILMED	FED.RD. DIST.NO.	STATE	FED.AID PROJ.NO.	SHEET NO.	TOTAL SHEETS
				6	ARK.			
				JOB NO.		070458	51	125

(2) SURVEY CONTROL DETAILS

STATE OF ARKANSAS
LICENSED PROFESSIONAL ENGINEER
No.10887
SCOTT P. THORNSBERRY
2-2-2024

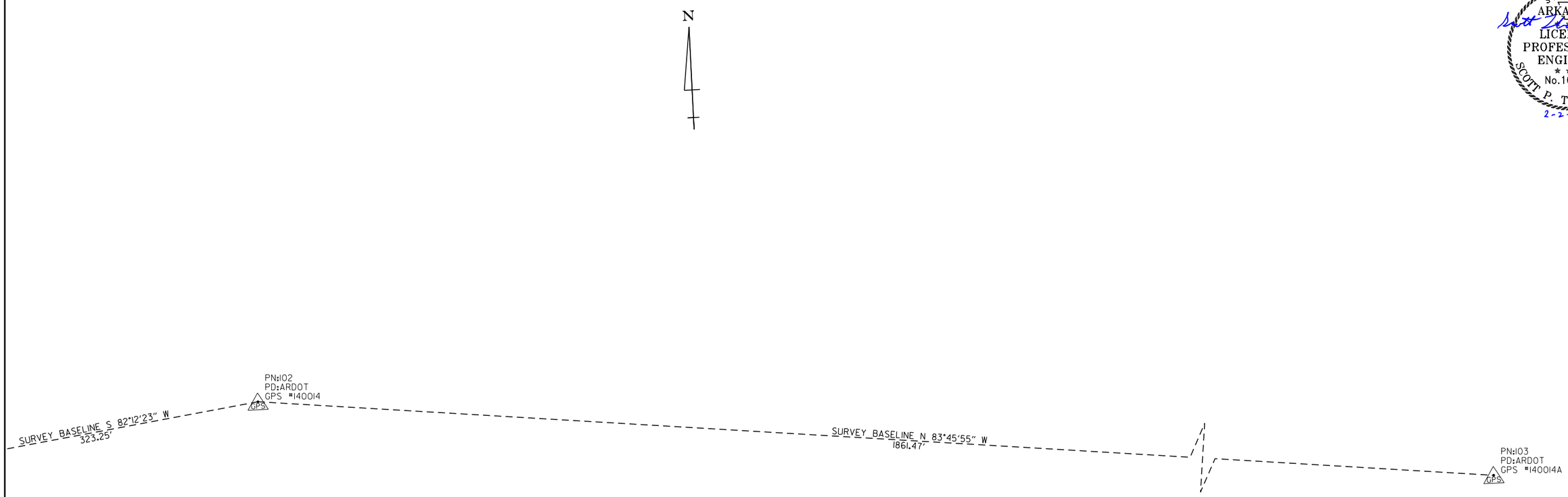

Scott.Thornsberry 2/2/2024 4:46:35 PM
WORKSPACE: ARDOT
Y:\Projects\ARDOT_169387_070458 UPRR Grade Separation\Design\CIVIL\Drawings\R070458_JL_SC_003.dgn
REVISED DATE: $$REVDATE$$

SURVEY CONTROL DETAILS

DATE REVISED	DATE FILMED	DATE REVISED	DATE FILMED	FED.RD. DIST.NO.	STATE	FED.AID PROJ.NO.	SHEET NO.	TOTAL SHEETS
				6	ARK.			
				JOB NO.		070458	52	125
				(2)	PLAN AND PROFILE SHEETS			

STATE OF ARKANSAS
LICENSED PROFESSIONAL ENGINEER
No.10887
7-2-2024
SCOTT P. THORNSBERRY

LEGEND

PAVEMENT TRANSITION

N

STA. 320+50.00 INSTALL
18" X 76' PIPE CULVERT
LT. SIDE DRAIN
CONSTRUCTAPPROACH
945 CU. YDS.

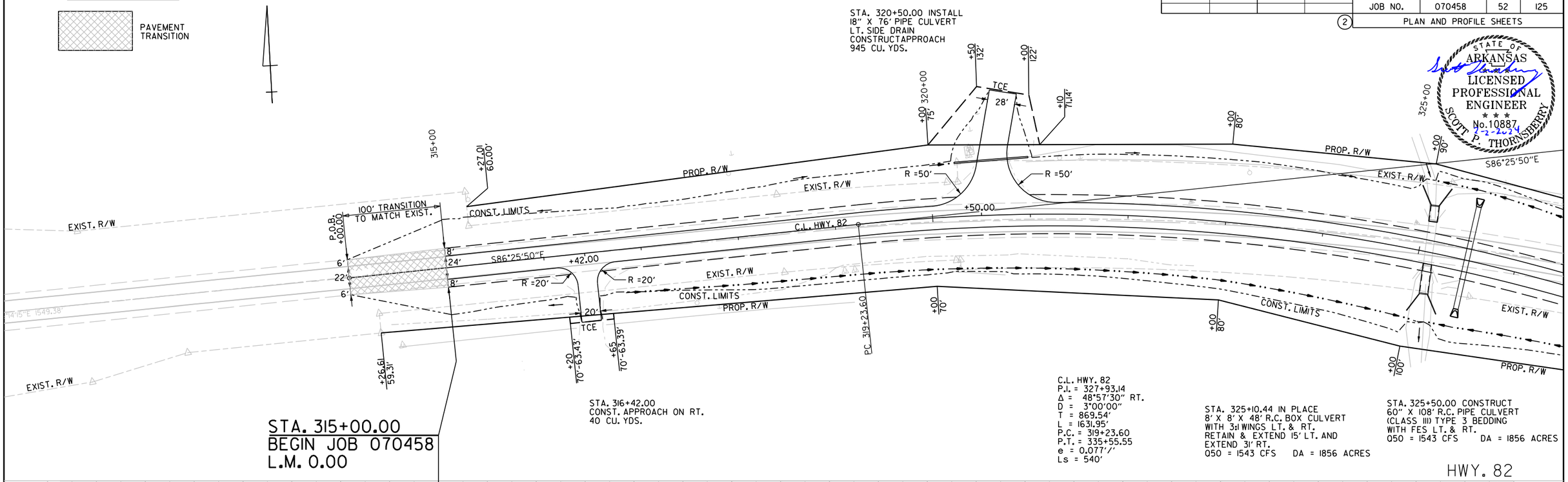

STA. 315+00.00
BEGIN JOB 070458
L.M. 0.00

STA. 316+42.00
CONST. APPROACH ON RT.
40 CU. YDS.

C.L. HWY. 82
P.I. = 327+93.14
Δ = 48°57'30" RT.
D = 3°00'00"
T = 869.54'
L = 1631.95'
P.C. = 319+23.60
P.T. = 335+55.55
e = 0.077'/'
Ls = 540'

STA. 325+10.44 IN PLACE
8' X 8' X 48' R.C. BOX CULVERT
WITH 3:1 WINGS LT. & RT.
RETAIN & EXTEND 15' LT. AND
EXTEND 31' RT.
Q50 = 1543 CFS DA = 1856 ACRES

STA. 325+50.00 CONSTRUCT
60" X 108' R.C. PIPE CULVERT
(CLASS III) TYPE 3 BEDDING
WITH FES LT. & RT.
Q50 = 1543 CFS DA = 1856 ACRES

HWY. 82

REFER TO SURVEY CONTROL
DETAIL SHEETS FOR HORIZONTAL
AND VERTICAL CONTROLS.

STA. 315+18.60 BEGIN SUPERELEVATION
STA. 320+58.60 MAX SUPERELEVATION (0.077'/')
STA. 334+20.55 MAX SUPERELEVATION (0.077'/')
STA. 339+60.55 END SUPERELEVATION

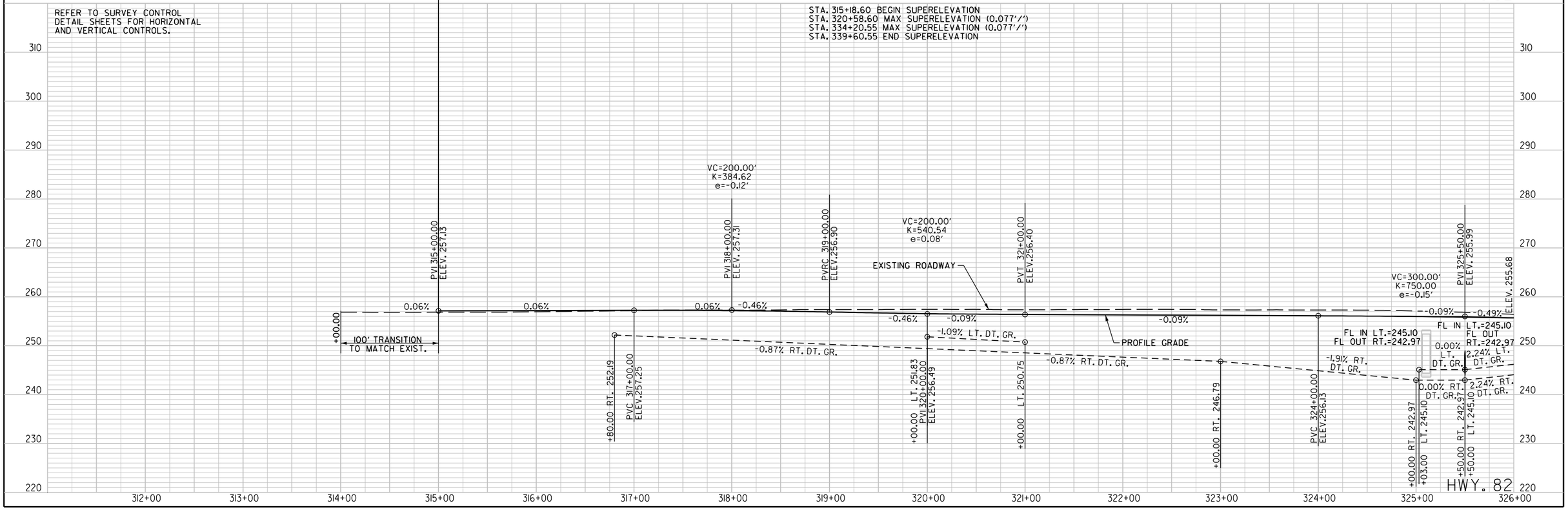

HWY. 82

Scott.Thornsberry 7/2/2024 4:46:36 PM
WORKSPACE: ARDOT
Y:\Projects\ARDOT_I6938T_070458 UPRR Grade Separation\Design\CIVIL\Drawings\R070458_I2_PP_001.dgn
REVISED DATE: $$REVDATE$$

DATE REVISED	DATE FILMED	DATE REVISED	DATE FILMED

FED.RD. DIST.NO.	STATE	FED.AID PROJ.NO.	SHEET NO.	TOTAL SHEETS
6	ARK.			
JOB NO.		070458	53	125

(2) PLAN AND PROFILE SHEETS

STATE OF ARKANSAS LICENSED PROFESSIONAL ENGINEER No.10887 SCOTT P. THORNSBERRY 2-2-2024

LEGEND

OBLITERATION OF PAVEMENT

APPROXIMATE LOCATION OF 100 YEAR FLOOD PLAIN

STA. 335+00 INSTALL 18" X 80' PIPE CULVERT LT. SIDE DRAIN (REFER TO CO. RD. 350 PLAN & PROFILE SHEET)

STA. 339+55.13 IN PLACE 24" X 57' PIPE CULVERT RETAIN

N

330+00

PT 327+34.14

S37°28'20"E

S86°25'50"E

+00 / 86.79

EXIST. R/W

PROP. R/W

CONST. LIMITS

+25.15 / 65.70

+96 / 55.87

+37.44 / 111.95

+40 / 80'

CO. RD. 350

N50°51'41"E

20'

+41 / 62.62

+55 / 65

+50 / 68

WETLANDS

R =40'

90°00'00"

C.L. HWY. 82

C.L. HWY. 82 STA. 335+00.00 = C.L. CO. RD. 350 STA. 10+00.00

340+00

+80

R =20'

R =67'

16'

R =83'

+00 / 70'

+00 / 60'

PT 335+55.55

+50 / 65

+50 / 120'

+61.15

8'

13.50

59'

24'

50' EARTHWORK TRANSITION

S37°28'20"E

+00 / 80

STA. 327+52 IN PLACE 8" X 24' METAL PIPE REMOVE
STA. 327+80.00 INSTALL 18" X 48' PIPE CULVERT RT. SIDE DRAIN CONSTRUCTAPPROACH 140 CU. YDS.

GAS WELL

C.L. HWY. 82
P.I. = 327+93.14
Δ = 48°57'30" RT.
D = 3°00'00"
T = 869.54'
L = 1631.95'
P.C. = 319+23.60
P.T. = 335+55.55
e = 0.077'/'
Ls = 540'

STA. 338+73.00 CONSTRUCT 36" X 132' R.C. PIPE CULVERT 15° LT. FWD. SKEW (CLASS IV) TYPE III BEDDING WITH FES LT. & RT.
Q50 = 6.81 CFS DA = 5.22 ACRES

2 LANE SECTION

5 LANE SECTION

HWY. 82

REMOVAL AND DISPOSAL OF FENCE				LIN. FT.	GATE
STA. 327+61	TO	STA. 327+78	RT. OF C.L.	=19	1
STA. 328+03	TO	STA. 328+11	RT. OF C.L.	=10	

CONCRETE DITCH PAVING (TYPE B)

STA.	STA.	SIDE	LENGTH	"W"	SQ.YDS.
335+50.00	337+00.00	LT. =	150 LIN. FT.	6'- 0"	100.00

REFER TO SURVEY CONTROL DETAIL SHEETS FOR HORIZONTAL AND VERTICAL CONTROLS.

STA. 315+18.60 BEGIN SUPERELEVATION
STA. 320+58.60 MAX SUPERELEVATION (0.077'/')
STA. 334+20.55 MAX SUPERELEVATION (0.077'/')
STA. 339+60.55 END SUPERELEVATION

ELEV. 255.68

VC=300.00'
K=750.00
e=-0.15'

-0.49%

PVRC 327+00.00
ELEV.255.26

VC=300.00'
K=162.16
e=0.69'

-0.49%

1.36%

2.24% RT. DT. GR.

EXISTING GROUND

PVI 328+50.00
ELEV. 254.52

PVT 330+00.00
ELEV.256.56

2.24% LT. DT. GR.

+00.00 RT. 253.04

1.36%

+00.00 LT. 257.42

PVC 332+40.00
ELEV.259.82

PROFILE GRADE

0.37% LT. DT. GR.

VC=620.00'
K=234.85
e=2.05'

4.00%

+50.00 LT. 259.10

PVI 335+50.00
ELEV. 264.04

3.69% LT. DT. GR.

EXISTING GROUND

+00.00 LT. 264.63

-2.43% RT. DT. GR.

-0.97% LT. DT. GR.

+10.00 LT. 263.30

+10.00 RT. 262.85

0.87% RT. DT. GR.

+54.04 RT. 261.78

FL OUT RT.=261.78
FL IN LT.=262.50

+93.00 LT. 262.50

+99.50 RT. 262.17

PVT 338+60.00
ELEV.276.44

4.00%

ELEV. 286.04

HWY. 82

310 / 300 / 290 / 280 / 270 / 260 / 250 / 240 / 230 / 220

326+00 / 327+00 / 328+00 / 329+00 / 330+00 / 331+00 / 332+00 / 333+00 / 334+00 / 335+00 / 336+00 / 337+00 / 338+00 / 339+00 / 340+00 / 341+00

Scott.Thornsberry 2/2/2024 4:46:36 PM
WORKSPACE: ARDOT
Y:\Projects\ARDOT_16938T_070458 UPRR Grade Separation\Design\CIVIL\Drawings\R070458_12_PP_002.dgn
REVISED DATE: $$REVDATE$$

DATE REVISED	DATE FILMED	DATE REVISED	DATE FILMED	FED.RD. DIST.NO.	STATE	FED.AID PROJ.NO.	SHEET NO.	TOTAL SHEETS
				6	ARK.			
				JOB NO.		070458	54	125
				(2)	PLAN AND PROFILE SHEETS			

STA. 353+00.00 INSTALL
24" X 245' R.C. PIPE CULVERT
WITH FES RT. & LT.
Q25= 16.48 CFS D.A. = 9.51 ACRES
24" R.C. PIPE (CLASS V) (TYPE 3 BEDDING) = 245 LIN. FT.
24" FES = 2 EACH

STATE OF ARKANSAS
LICENSED PROFESSIONAL ENGINEER
No.10887
SCOTT P. THORNSBERRY
4-11-2024

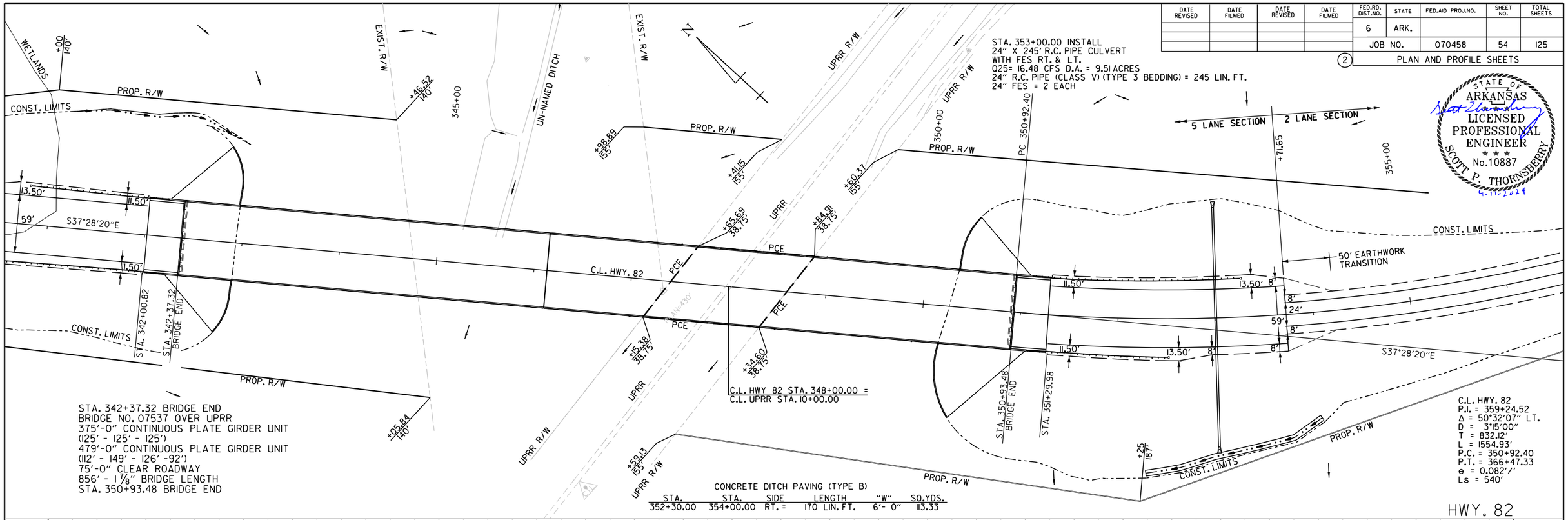

STA. 342+37.32 BRIDGE END
BRIDGE NO. 07537 OVER UPRR
375'-0" CONTINUOUS PLATE GIRDER UNIT
(125' - 125' - 125')
479'-0" CONTINUOUS PLATE GIRDER UNIT
(112' - 149' - 126' -92')
75'-0" CLEAR ROADWAY
856' - 1 7/8" BRIDGE LENGTH
STA. 350+93.48 BRIDGE END

CONCRETE DITCH PAVING (TYPE B)

STA.	STA.	SIDE	LENGTH	"W"	SQ.YDS.
352+30.00	354+00.00	RT. =	170 LIN. FT.	6'- 0"	113.33

C.L. HWY. 82
P.I. = 359+24.52
Δ = 50°32'07" LT.
D = 3°15'00"
T = 832.12'
L = 1554.93'
P.C. = 350+92.40
P.T. = 366+47.33
e = 0.082'/'
Ls = 540'

HWY. 82

REFER TO SURVEY CONTROL
DETAIL SHEETS FOR HORIZONTAL
AND VERTICAL CONTROLS.

STA.	STA.	LOCATION	GUARDRAIL (TYPE A)	THRIE BEAM GUARDRAIL TERMINAL	GUARDRAIL TERMINAL (TYPE 2)
340+02.15	342+20.90	RT. OF C.L. HWY. 82 =	150 LIN. FT.	1 EACH	1 EACH
340+77.15	342+20.90	LT. OF C.L. HWY. 82 =	75 LIN. FT.	1 EACH	1 EACH
351+09.90	352+53.65	RT. OF C.L. HWY. 82 =	75 LIN. FT.	1 EACH	1 EACH
351+09.90	353+28.65	LT. OF C.L. HWY. 82 =	150 LIN. FT.	1 EACH	1 EACH

STA. 346+87.40 BEGIN SUPERELEVATION
STA. 352+27.40 MAX SUPERELEVATION (0.082'/')
STA. 365+12.33 MAX SUPERELEVATION (0.082'/')
STA. 370+52.33 END SUPERELEVATION

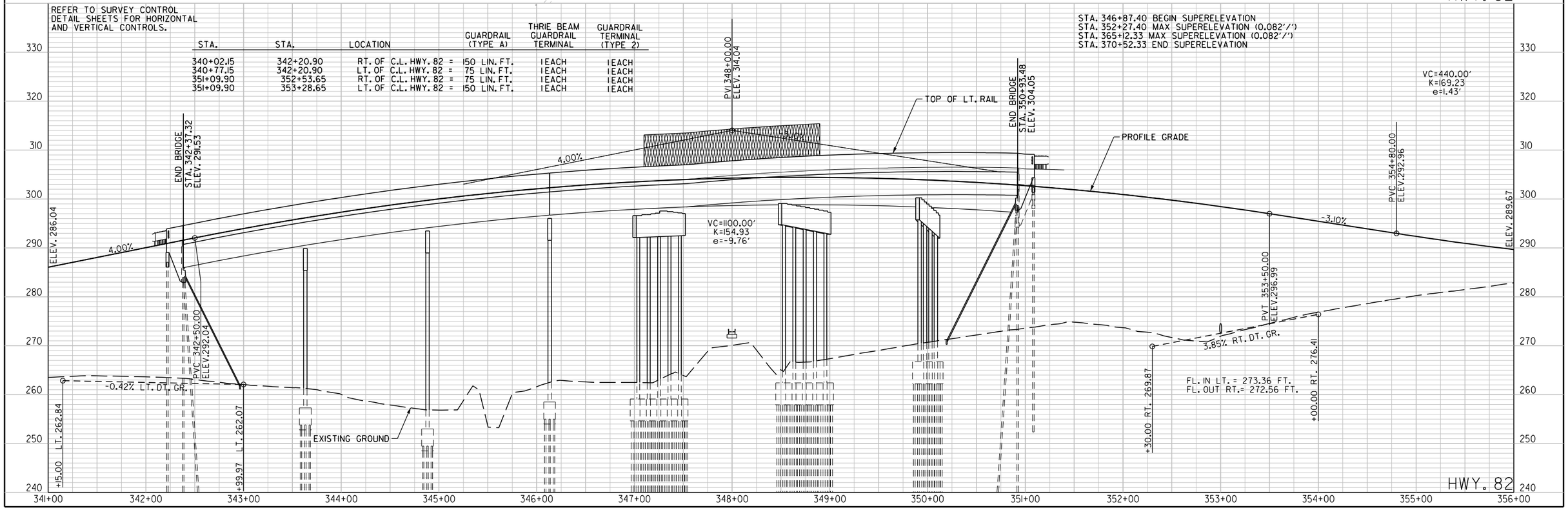

HWY. 82

Scott.Thornsberry@W/2024 2:29:07 PM
WORKSPACE: ARDOT
Y:\Projects\ARDOT_16938T_070458 UPRR Grade Separation\Design\CIVIL\Drawings\R070458_12_PP_003.dgn
REVISED DATE: $$REVDATE$$

DATE REVISED	DATE FILMED	DATE REVISED	DATE FILMED	FED.RD. DIST.NO.	STATE	FED.AID PROJ.NO.	SHEET NO.	TOTAL SHEETS
				6	ARK.			
				JOB NO.		070458	55	125
				(2)	PLAN AND PROFILE SHEETS			

LEGEND

OBLITERATION OF PAVEMENT

N

C.L. HWY. 82
P.I. = 359+24.52
Δ = 50°32'07" LT.
D = 3°15'00"
T = 832.12'
L = 1554.93'
P.C. = 350+92.40
P.T. = 366+47.33
e = 0.082'/'
Ls = 540'

STA. 365+50.00 CONSTRUCT
36" X 102' R.C. PIPE CULVERT
30° RT. FWD. SKEW
(CLASS IV) TYPE 3 BEDDING
WITH FES LT. & RT.
Q50 = 10.31 CFS DA = 7.23 ACRES

STA. 371+25.00
CONSTRUCTAPPROACH
110 CU. YDS.

STA. 364+00.00 INSTALL
18" X 32' PIPE CULVERT
LT. SIDE DRAIN
CONSTRUCTAPPROACH
55 CU. YDS.

STA. 364+00.00
CONSTRUCTAPPROACH
545 CU. YDS.

EXIST. R/W

PROP. R/W

CONST. LIMITS

C.L. HWY. 82

S88°00'26"E

S37°28'20"E

PI 359+24.52

TCE

R =40'

R =158'

R =142'

R =20'

PT 366+47.33

REMOVAL AND DISPOSAL OF FENCE	LIN. FT
STA. 369+29 TO 371+00 LT. OF C.L.	= 191

STA.	STA.	LOCATION	FENCE (TYPE C)
369+20.00	371+25.00	RT. OF C.L. HWY. 82 =	205 LIN. FT.

HWY. 82

STATE OF ARKANSAS LICENSED PROFESSIONAL ENGINEER No.10887 SCOTT P. THORNSBERRY 2-2-2024

REFER TO SURVEY CONTROL DETAIL SHEETS FOR HORIZONTAL AND VERTICAL CONTROLS.

STA. 346+87.40 BEGIN SUPERELEVATION
STA. 352+27.40 MAX SUPERELEVATION (0.082'/')
STA. 365+12.33 MAX SUPERELEVATION (0.082'/')
STA. 370+52.33 END SUPERELEVATION

ELEV. 283.67

VC=440.00'
K=169.23
e=1.43'

-3.10%

-0.50%

PVT 359+20.00
ELEV.285.04

PVI 357+00.00
ELEV. 286.14

EXISTING GROUND

PROFILE GRADE

PVC 364+00.00
ELEV.282.64

-1.77% RT. DT. GR.

+11.98 RT. 278.59

+00.00 RT. 277.03

VC=300.00'
K=200.00
e=0.56'

PVI 365+50.00
ELEV. 281.89

FL IN LT.=276.00
FL OUT RT.=273.39

1.00%

PVT 367+00.00
ELEV.283.39

+50.00 RT. 277.02

1.53% RT. DT. GR.

+50.00 RT. 281.61

VC=430.00'
K=181.43
e=-1.27'

PVC 369+85.00
ELEV.286.24

ELEV. 287.03

HWY. 82

Scott.Thornsberry 2/2/2024 4:46:38 PM
WORKSPACE: ARDOT
Y:\Projects\ARDOT_16938T_070458 UPRR Grade Separation\Design\CIVIL\Drawings\R070458_12_PP_004.dgn
REVISED DATE: $$REVDATE$$

DATE REVISED	DATE FILMED	DATE REVISED	DATE FILMED	FED.RD. DIST.NO.	STATE	FED.AID PROJ.NO.	SHEET NO.	TOTAL SHEETS
				6	ARK.			
				JOB NO.		070458	56	125
				(2)	PLAN AND PROFILE SHEETS			

REMOVAL AND DISPOSAL OF FENCE				LIN. FT
STA. 371+00	TO	373+48	LT. OF C.L.	= 248
STA. 373+48	TO	382+12	RT. OF C.L.	= 852

N

LEGEND

PAVEMENT TRANSITION

OBLITERATION OF PAVEMENT

STATE OF ARKANSAS
LICENSED PROFESSIONAL ENGINEER
No.10887
SCOTT P. THORNSBERRY
6-16-2026

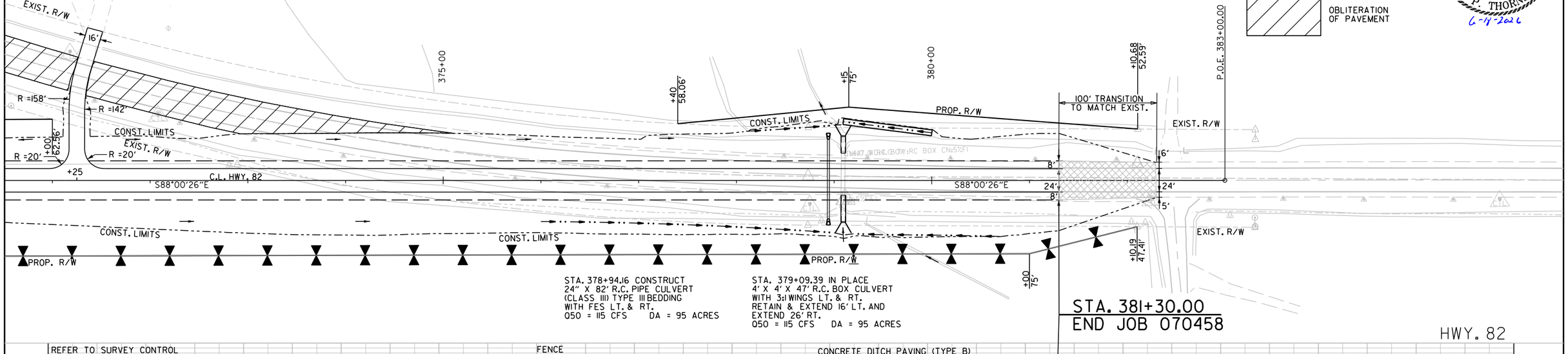

STA. 378+94.16 CONSTRUCT
24" X 82' R.C. PIPE CULVERT
(CLASS III) TYPE III BEDDING
WITH FES LT. & RT.
Q50 = 115 CFS DA = 95 ACRES

STA. 379+09.39 IN PLACE
4' X 4' X 47' R.C. BOX CULVERT
WITH 3:1 WINGS LT. & RT.
RETAIN & EXTEND 16' LT. AND
EXTEND 26' RT.
Q50 = 115 CFS DA = 95 ACRES

REFER TO SURVEY CONTROL
DETAIL SHEETS FOR HORIZONTAL
AND VERTICAL CONTROLS.

STA.	STA.	LOCATION	FENCE (TYPE C)
371+25.00	382+10.00	RT. OF C.L. HWY. 82 =	1088 LIN. FT.

CONCRETE DITCH PAVING (TYPE B)

STA.	STA.	SIDE	LENGTH	"W"	SQ.YDS.
379+09.00	380+00.00	LT. =	91 LIN. FT.	6'- 0"	60.67

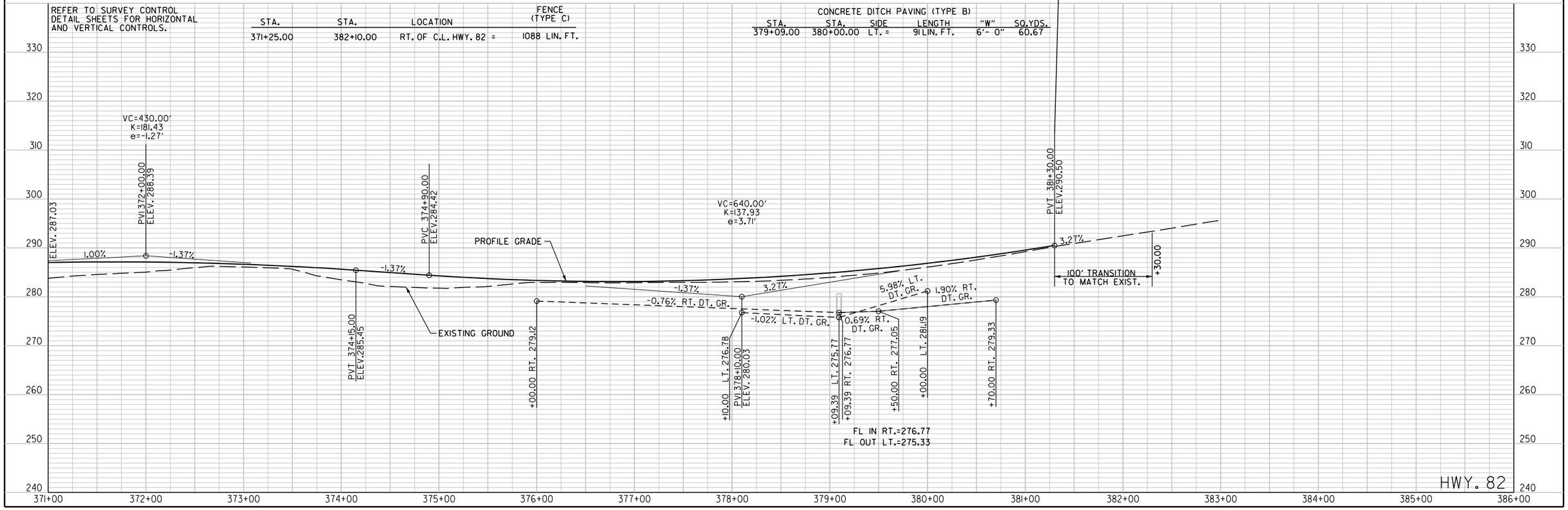

BrendanBarns 6/16/2026 1:24:16 PM
WORKSPACE: BrendanBarns
Y:\Projects\ARDOT_16938T_070458 UPRR Grade Separation\Design\CIVIL\Drawings\R070458_12_PP_005.dgn
REVISED DATE: $$REVDATE$$

DATE REVISED	DATE FILMED	DATE REVISED	DATE FILMED	FED.RD. DIST.NO.	STATE	FED.AID PROJ.NO.	SHEET NO.	TOTAL SHEETS
				6	ARK.			
				JOB NO.		070458	57	125
				(2)	PLAN AND PROFILE SHEETS			

STATE OF ARKANSAS
LICENSED PROFESSIONAL ENGINEER
No.10887
SCOTT P. THORNSBERRY
2-2-2024

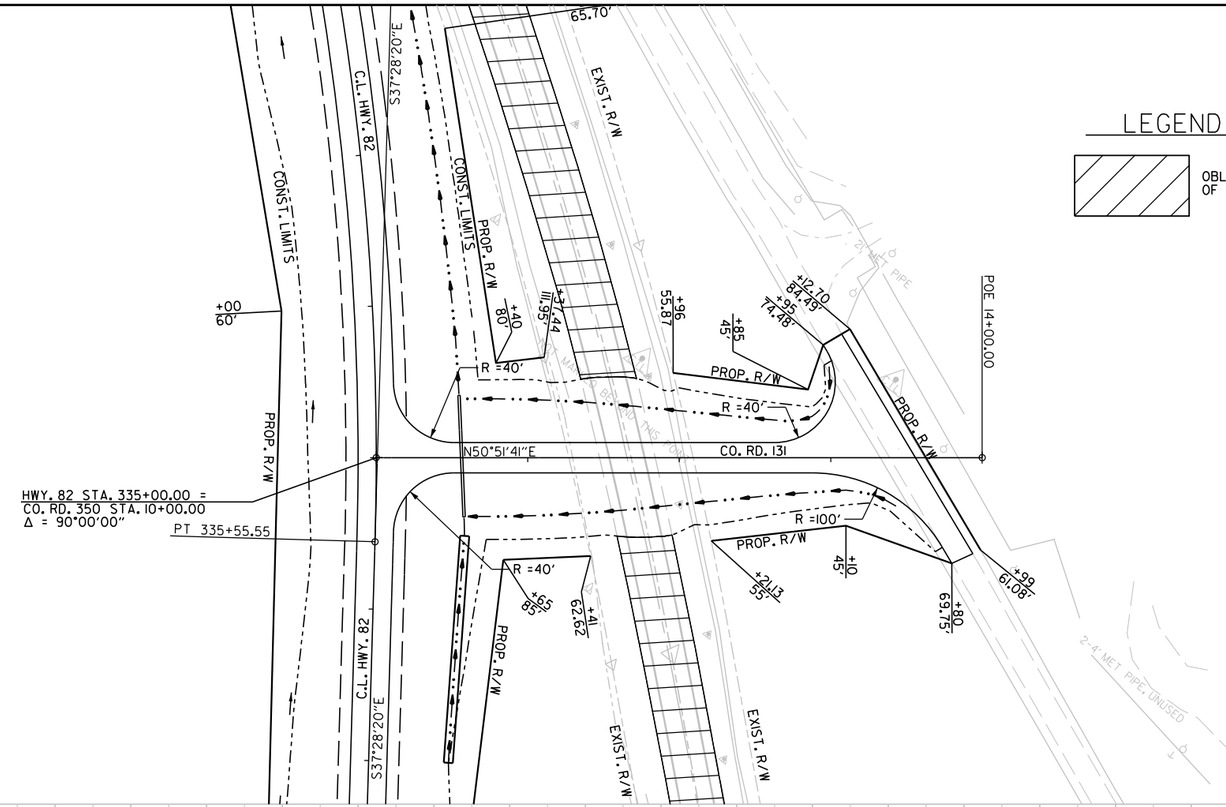

COUNTY RD. 131

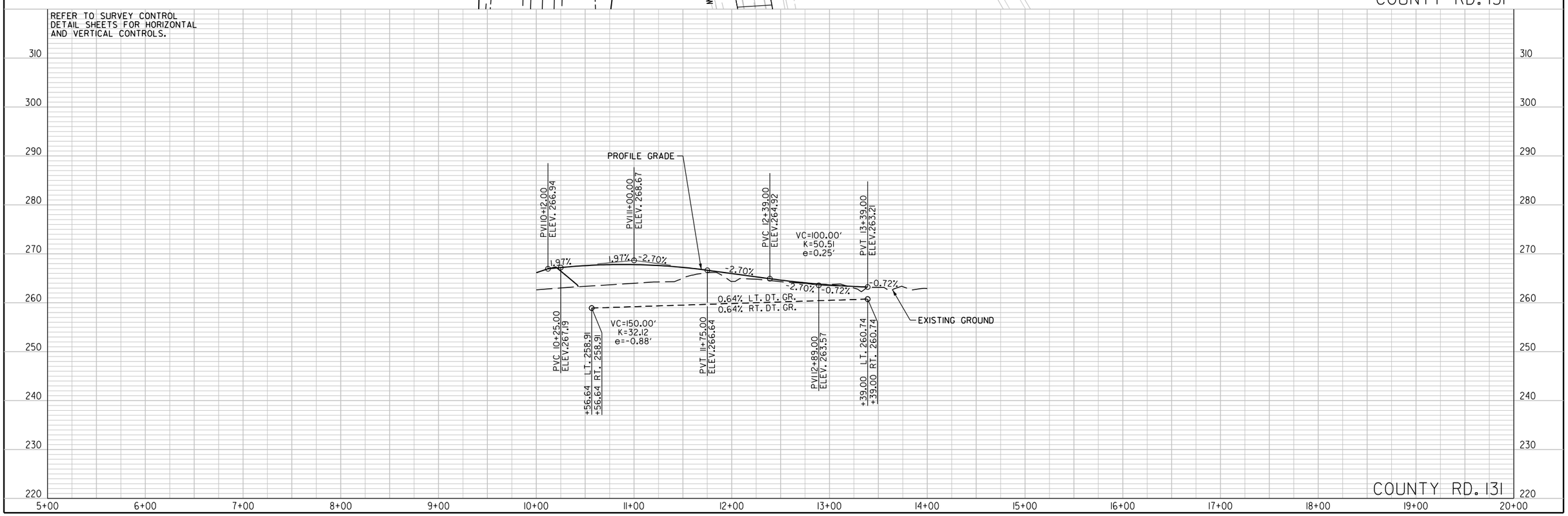

COUNTY RD. 131

Scott.Thornsberry 2/2/2024 4:46:40 PM
WORKSPACE: ARDOT
Y:\Projects\ARDOT_16938T_070458 UPRR Grade Separation\Design\CIVIL\Drawings\R070458_12_PP_006.dgn
REVISED DATE: $$REVDATE$$

DATE REVISED	DATE FILMED	DATE REVISED	DATE FILMED	FED.RD. DIST.NO.	STATE	FED.AID PROJ.NO.	SHEET NO.	TOTAL SHEETS
				6	ARK.			
				JOB NO.		070458	58	125
				(2)	PLAN AND PROFILE SHEETS			

LEGEND

OBLITERATION OF PAVEMENT

STATE OF ARKANSAS
LICENSED PROFESSIONAL ENGINEER
No.10887
SCOTT P. THORNSBERRY
4-11-2024

STA. 339+55.13 OFFSET 266' LT. IN PLACE
24" X 57' PIPE CULVERT
RETAIN

STA. 344+89.03 OFFSET 380' LT. IN PLACE
24" X 57' PIPE CULVERT
RETAIN

STA. 345+99.00 OFFSET 390' LT. IN PLACE
DROP INLET
WITH 24" X 45' PIPE OUTLET
RETAIN & MODIFY TOP
DROP INLET (TYPE RM SPECIAL)

STA. 348+20 OFFSET 436' LT. IN PLACE
DROP INLET
WITH 24" X 223' PIPE OUTLET
TO DROP INLET @ STA. 345+99.00
RETAIN & MODIFY TOP
DROP INLET (TYPE RM SPECIAL)

STA. 350+38.00 OFFSET 510' LT. IN PLACE
DROP INLET
WITH 24" X 24' PIPE OUTLET
TO DROP INLET @ STA. 350+44.00
RETAIN & MODIFY TOP
DROP INLET (TYPE RM SPECIAL)

STA. 350+44.00 OFFSET 484' LT. IN PLACE
DROP INLET
WITH 24" X 227' PIPE OUTLET
TO DROP INLET @ STA. 348+20.00
RETAIN & MODIFY TOP
DROP INLET (TYPE RM SPECIAL)

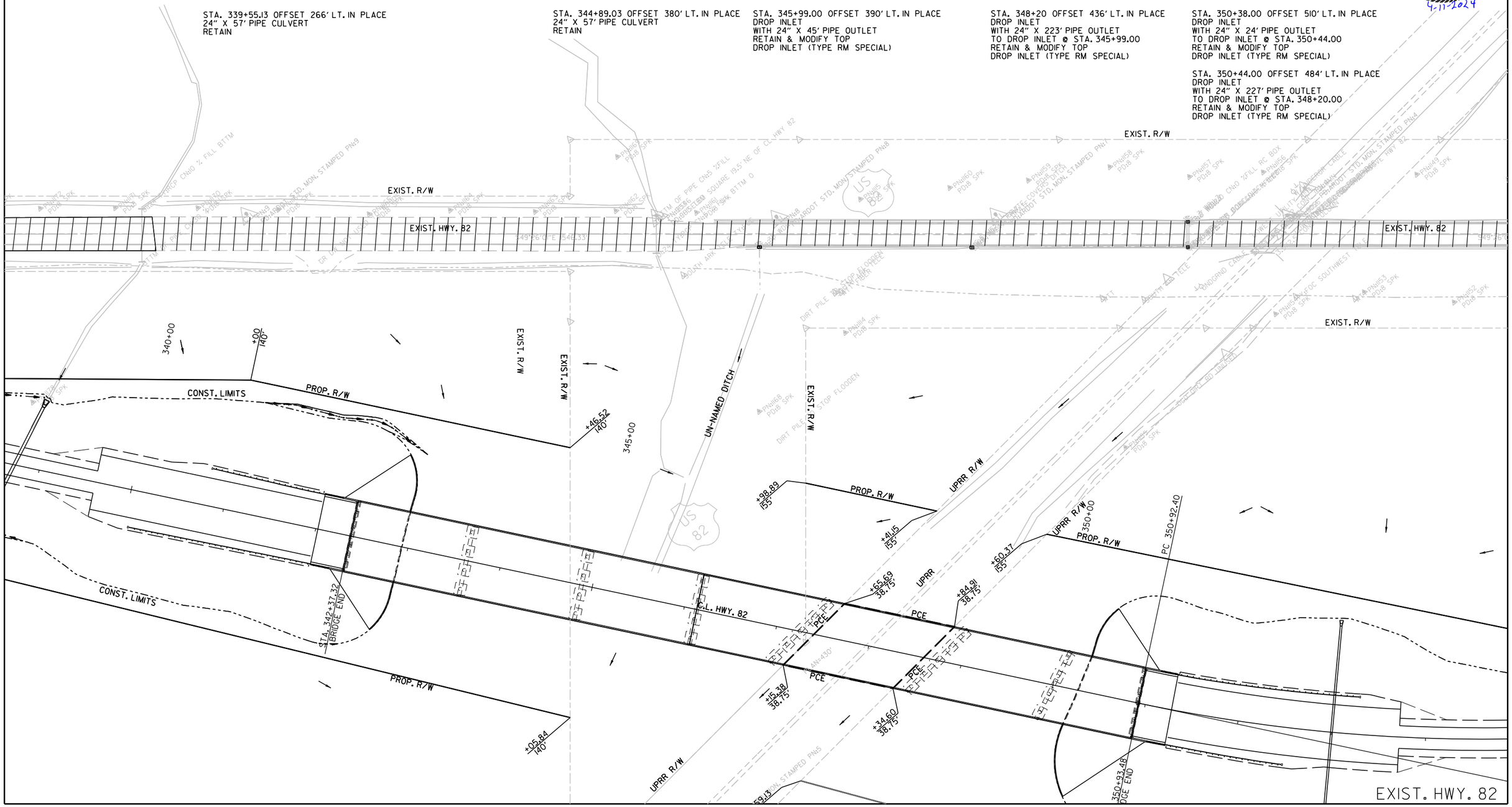

Travis.Keymer 4/10/2024 2:59:57 PM
WORKSPACE: ARDOT
Y:\Projects\ARDOT_I69387_070458 UPRR Grade Separation\Design\CIVIL\Drawings\R070458_I2_PP_001.dgn
REVISED DATE: $$REVDATE$$

DATE REVISED	DATE FILMED	DATE REVISED	DATE FILMED	FED.RD. DIST.NO.	STATE	FED.AID PROJ.NO.	SHEET NO.	TOTAL SHEETS
				6	ARK.			
				JOB NO.		070458	59	125
				(2)	PLAN AND PROFILE SHEETS			

STATE OF ARKANSAS
LICENSED PROFESSIONAL ENGINEER
No.10887
SCOTT P. THORNSBERRY
2-2-2024

LEGEND

OBLITERATION OF PAVEMENT

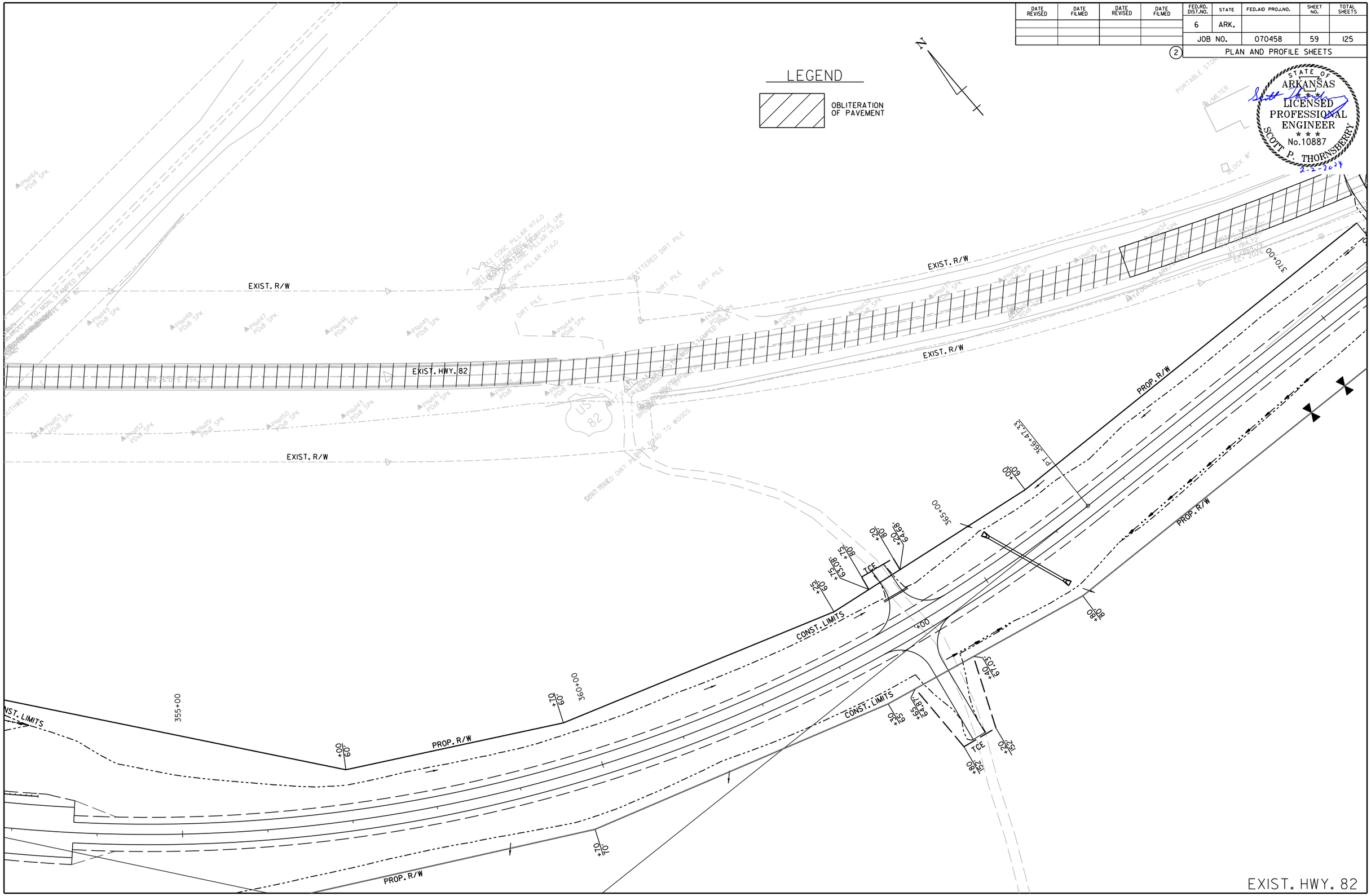

Scott.Thornsberry 2/2/2024 4:46:42 PM
WORKSPACE: ARDOT
Y:\Projects\ARDOT_I6938T_070458 UPRR Grade Separation\Design\CIVIL\Drawings\R070458_I2_PP_008.dgn
REVISED DATE: $$REVDATE$$

For R/W Data and Guard Rail Details, See Roadway plans.

DATE REVISED	DATE FILMED	DATE REVISED	DATE FILMED	FED.RD. DIST.NO.	STATE	FED.AID PROJ.NO.	SHEET NO.	TOTAL SHEETS
				6	ARK.			
				JOB NO.		070458	60	125
				07537 - LAYOUT - 64252				

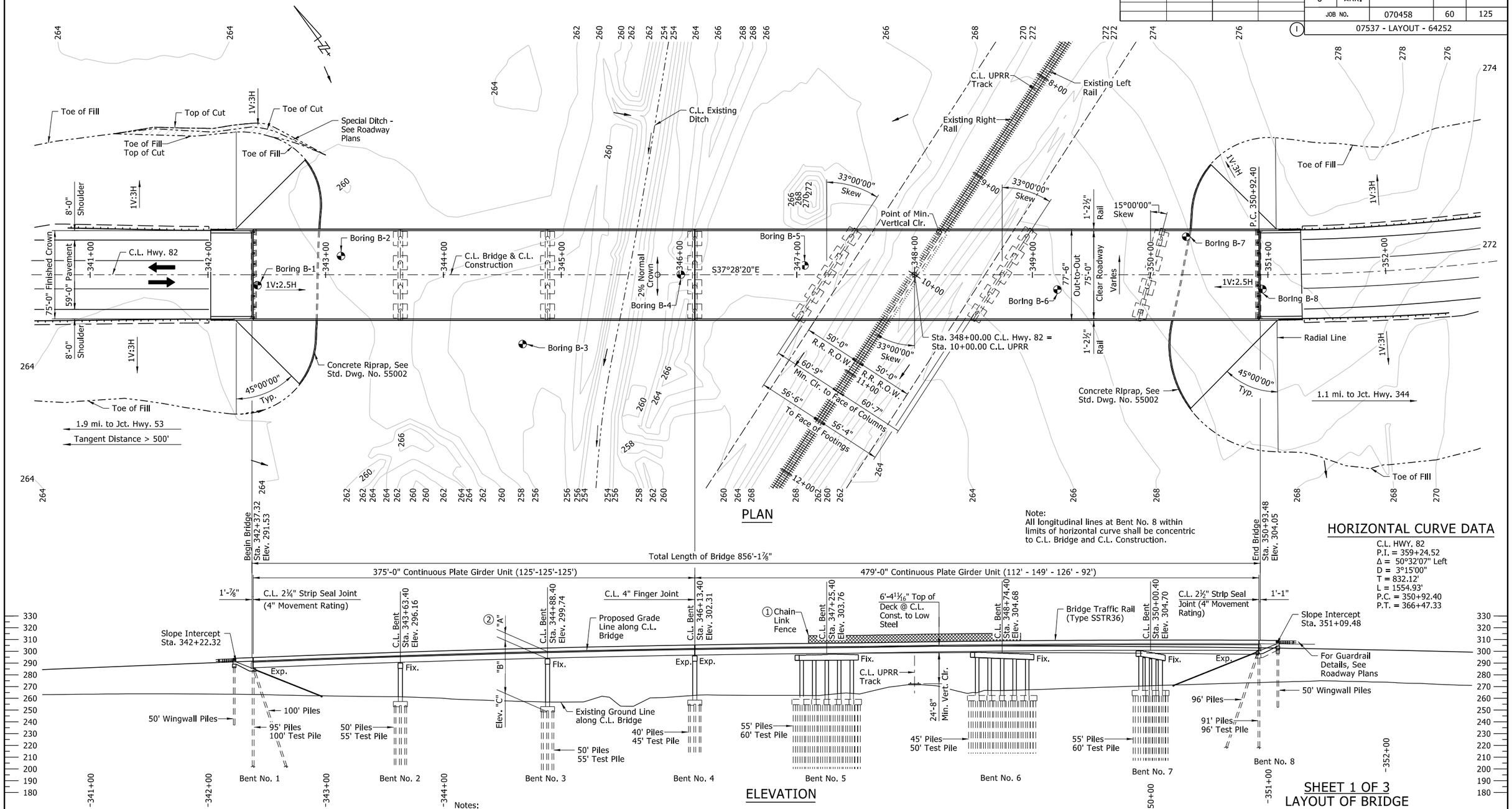

PLAN

Note:
All longitudinal lines at Bent No. 8 within limits of horizontal curve shall be concentric to C.L. Bridge and C.L. Construction.

HORIZONTAL CURVE DATA

C.L. HWY. 82
P.I. = 359+24.52
Δ = 50°32'07" Left
D = 3°15'00"
T = 832.12'
L = 1554.93'
P.C. = 350+92.40
P.T. = 366+47.33

ELEVATION

Notes:
For Soil Borings See Dwg. No. 64254.

Stations shown are along C.L. Construction. Elevations shown before Station 348+19.11 are theoretical working point elevations. Elevations shown at and after Station 348+19.11 are actual top of deck elevations at C.L. Construction; see "ROUNDING DETAIL" on Dwg No. 64253 for additional information.

Use Type F Approach Slab (W=71') and Type F Approach Gutters at both ends of bridge. See Std. Dwg. No. 55040F1 and Std. Dwg. No. 55030F, respectively.

① Steel fence from Hwy. 82 C.L. Sta. 347+60.00 to Sta. 348+90.00 on Left side of bridge and from Sta. 347+10.00 to Sta. 348+40.00 on right side of bridge. See Dwg. No. 64255 for additional details.

② Dimensions are taken from Top of Deck at C.L. Const. and C.L. Bent to Low Side Top of Cap.

TABLE OF VARIABLES

Bent No(s).	Top of Deck @ C.L. Bent to Low Seat of Cap "A"	Low Seat of Cap to Bottom of Footing "B"	Bottom of Footing Elev. "C"	③ Min. Pile Tip Elevation "D"	Min. Ultimate Bearing Capacity (Tons)
1	-	-	-	242	335
2	6'-10³⁄₁₆"	36'-6"	252.81	222	213
3	6'-10³⁄₁₆"	45'-0"	247.89	217	215
4	7'-0¼"	42'-0"	253.29	223	182
5	6'-11⅞"	42'-0"	254.77	224	245
6	7'-3¼"	39'-6"	257.91	227	210
7	7'-11³⁄₁₆"	34'-6"	262.27	232	258
8	-	-	-	252	310

③ Not applicable to wing piles.

STATE OF ARKANSAS LICENSED PROFESSIONAL ENGINEER No.14501 STEPHEN F. HARPER

4/12/2024

BRIDGE ENGINEER
PRINT DATE: 4/12/2024

DRAWN BY:	JPC	DATE:	08/2019
CHECKED BY:	SRN	DATE:	05/2021
DESIGNED BY:	JPC	DATE:	08/2019
BRIDGE NO.	07537	DRAWING NO.	64252

FILENAME: B070458X1_LX1.dgn
SCALE: 1" = 40'

SHEET 1 OF 3
LAYOUT OF BRIDGE
HWY. 82 OVER UNION PACIFIC RAILROAD
UPRR GRADE SEPARATION
(EAST OF LAFAYETTE CO. LINE) (S)
COLUMBIA COUNTY
ROUTE 82 SECTION 3

ARKANSAS STATE HIGHWAY COMMISSION
LITTLE ROCK, ARKANSAS

Megan.Land 4/12/2024 1:28:04 PM
WORKSPACE: ARDOT
Y:\Projects\ARDOT_169387_070458 UPRR Grade Separation\Design\BRIDGE\Drawings\B070458X1_LX1.dgn
REVISED DATE:

DATE REVISED	DATE FILMED	DATE REVISED	DATE FILMED	FED.RD. DIST.NO.	STATE	FED.AID PROJ.NO.	SHEET NO.	TOTAL SHEETS
				6	ARK.			
				JOB NO.		070458	61	125
				(1)	07537 - LAYOUT - 64253			

GENERAL NOTES

BENCH MARK: Vertical Control Data are shown on the Survey Control Data Sheets.

CONSTRUCTION SPECIFICATIONS: Arkansas State Highway and Transportation Department Standard Specifications for Highway Construction (2014 Edition) with applicable Supplemental Specifications and Special Provisions. Unless otherwise noted, Section and Subsection refer to the Standard Construction Specifications.

DESIGN SPECIFICATIONS: AASHTO LRFD Bridge Design Specifications, Eighth Edition

LIVE LOADING: HL-93

SEISMIC ZONE: 1 S_{D1}=0.12 SITE CLASS = D

SEISMIC OPERATIONAL CLASSIFICATION: Essential

MATERIALS AND STRENGTHS:

Class S(AE) Concrete (superstructure)	f'c = 4,000 psi
Class S Concrete (substructure)	f'c = 3,500 psi
Reinforcing Steel (AASHTO M 31 or M 322, Type A, Gr. 60)	fy = 60,000 psi
Structural Steel (ASTM A709, Gr. 50W)	Fy = 50,000 psi
Structural Steel (ASTM A709, Gr. 36)	Fy = 36,000 psi

BORING LOGS: Boring logs may be obtained from the Construction Contract Procurement Section of the Program Management Division.

CONCRETE PILING: Piling in Bents 1 through 8 shall be 18" square prestressed concrete piling and shall be driven to a minimum ultimate bearing capacity as shown in the "TABLE OF VARIABLES" on Dwg. No 64252. Piling shall be driven to the Min. Pile Tip Elevation "D" shown in the "TABLE OF VARIABLES" on Dwg. No. 64252 or lower. All piling shall be driven with an approved air, steam or diesel hammer. Piling in end bents shall be driven after embankment to bottom of cap is in place. Lengths of piling shown are assumed for estimating quantities only. Actual lengths to be determined in the field. Drive one test pile per bent to the lengths shown on Dwg. No. 64252.

DRIVING SYSTEM: The driving system approval and the ultimate bearing capacity determination for piling shall be based on the requirements of Subsection 805.09(b), "Method B-Wave Equation Analysis (WEAP)". It is estimated that a minimum rated hammer energy for all piles will be 90 kip-ft. per blow.

PILE FOOTINGS: The top of the footings at Bents 2 thru 7 shall be set a minimum of 3' below natural ground or at the elevations shown on the plans, whichever is lower. Foundations for footings shall be prepared in accordance with Section 801.04. Foundation piles shall not be driven until after the excavation to bottom of footing is complete. Excavations shall be backfilled and compacted to the level of the existing ground in accordance with Subsection 801.08.

PAINTING: The following weathering steel surfaces shall be painted as specified in Subsection 807.75:

- All steel surfaces within 9.5 feet of bridge deck expansion joints, including cross-frames, connection bolts, bearings, and bumper plates.
- All steel surfaces exposed to the outside face of the bridge, including outside faces and bottom of the exterior beams or girders, splice plates and bolts, stiffeners, drip plates and bearings.

ASTM F3125, Grade A325 Type 3 bolts shall be used within these painted zones and shall be painted. Galvanized members, the expansion device, and surfaces in contact with concrete shall not be painted. The color of paint shall be Brown equal or close to Fed. Std. 595 B, Color Chip No. 30070 and as approved by the Engineer. The finish system may be applied in the shop. Any damage to the paint system occurring during transport or installation shall be corrected according to the manufacturer's recommendations at no cost to the Department.

BRIDGE DECK: The concrete bridge deck, shall be given a tine finish as specified for final finishing in Subsection 802.19 for Class 5 Tined Bridge Roadway Surface Finish.

PROTECTIVE SURFACE TREATMENT: Class 2 Protective Surface Treatment shall be applied to the roadway surface and to the roadway face and top of the concrete rails in accordance with Section 803.

DETAIL DRAWINGS	DRAWING NOS.
End Bent 1	64256 - 64258
Intermediate Bents 2 & 3	64259 - 64260
Intermediate Bent 4	64261 - 64262
Intermediate Bent 5	64263 - 64264
Intermediate Bent 6	64265 - 64266
Intermediate Bent 7	64267 - 64268
End Bent 8	64269 - 64271
Elastomeric Bearings	64272 - 64273
Details for Neoprene Strip Seal Joints	64274
Details for Finger Joint	64275
375'-0" Cont. Comp. Plate Girder Unit	64276 - 64281
479'-0" Cont. Comp. Plate Girder Unit	64282 - 64296
Standard Details for Concrete Riprap	55002
Standard General Notes for Steel Bridge Structures	55006
Standard Details for Steel Bridge Structures	55007
Standard Details for Concrete Piles	55022
Standard Details for Chain Link Fence	55018
Standard Details for Type F Approach Gutters	55030F
Standard Details for Type F Approach Slab	55040F1
Standard Details for Bridge Traffic Rail Type SSTR36	55070

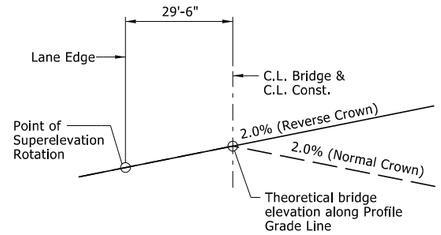

End Normal Crown (0.020'/') - Sta. 346+87.40
Reverse Crown (0.020'/') - Sta. 348+19.11

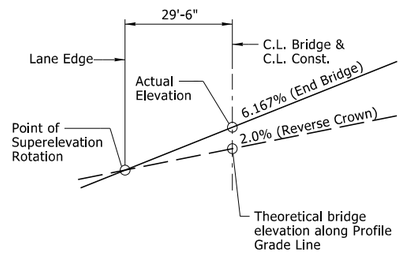

Reverse Crown (0.020'/') - Sta. 348+19.11
End Bridge (0.06167'/') - Sta. 350+93.48

CROSS-SLOPE TRANSITION SKETCH

Looking Ahead

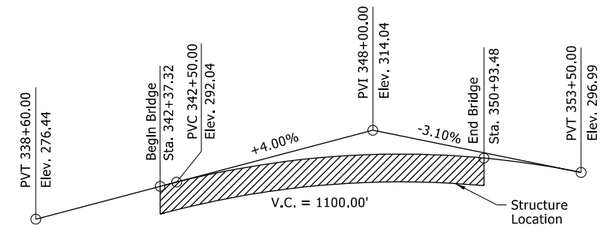

VERTICAL CURVE DATA

(Stations and Elevations are along C.L. Bridge and Profile Grade Line)

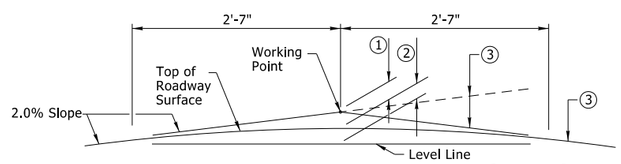

Note: Working Point matches Theoretical Roadway Grade.

ROUNDING DETAIL

(1) Varies - 5/16" at and before Normal Crown Sta. 346+87.40 to 0" at Reverse Crown Sta. 348+19.11

(2) Varies - 5/16" at and before Normal Crown Sta. 346+87.40 to 5/8" at Reverse Crown Sta. 348+19.11

(3) Varies - -2.0% at and before Normal Crown Sta. 346+87.40 to +2.0% at Reverse Crown Sta. 348+19.11

STATE OF ARKANSAS
LICENSED PROFESSIONAL ENGINEER
No.14501
STEPHEN F. HARPER
3/19/2024

BRIDGE ENGINEER
PRINT DATE: 3/15/2024

SHEET 2 OF 3
LAYOUT OF BRIDGE
HWY. 82 OVER UNION PACIFIC RAILROAD
UPRR GRADE SEPARATION
(EAST OF LAFAYETTE CO. LINE) (S)
COLUMBIA COUNTY
ROUTE 82 SECTION 3
ARKANSAS STATE HIGHWAY COMMISSION
LITTLE ROCK, ARKANSAS

DRAWN BY:	JPC	DATE:	08/2019	FILENAME:	B070458X1_LX2.dgn
CHECKED BY:	SRN	DATE:	05/2021		
DESIGNED BY:	JPC	DATE:	08/2019	SCALE:	No Scale
BRIDGE NO.	07537		DRAWING NO.	64253	

Megan.Land 3/15/2024 4:33:00 PM
WORKSPACE: ARDOT
Y:\Projects\ARDOT_169387_070458 UPRR Grade Separation\Design\BRIDGE\Drawings\B070458X1_LX2.dgn
REVISED DATE:

DATE REVISED	DATE FILMED	DATE REVISED	DATE FILMED	FED.RD. DIST.NO.	STATE	FED.AID PROJ.NO.	SHEET NO.	TOTAL SHEETS
				6	ARK.			
				JOB NO.		070458	62	125

1 07537 - LAYOUT - 64254

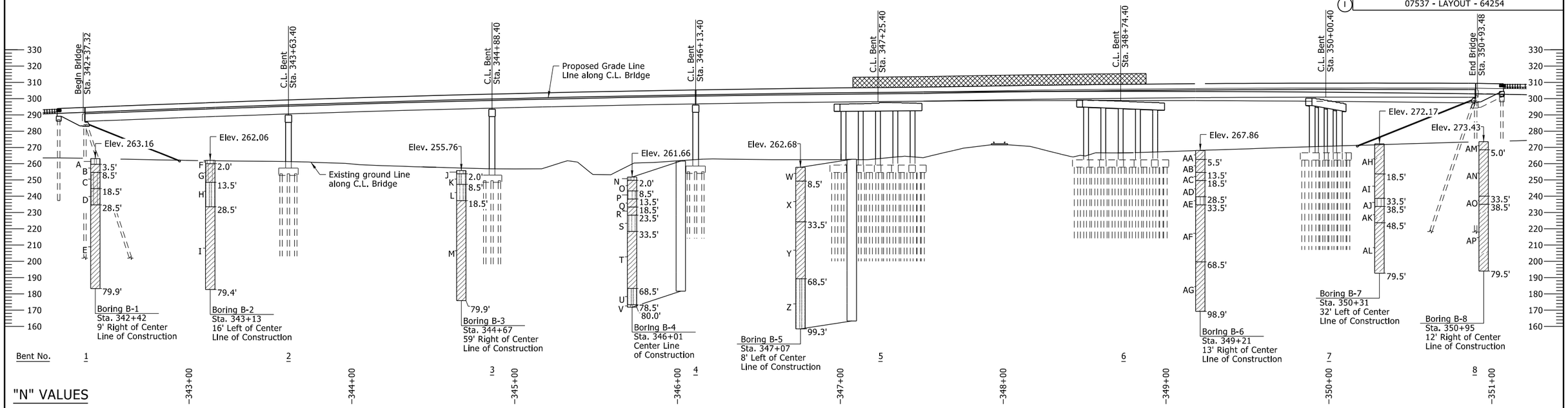

ELEVATION OF SOIL BORINGS

"N" VALUES

Boring B-1
Sta. 342+42
9' Right of Center
Line of Construction

1.0 - 2.0	N=6
2.5 - 3.5	N=5
6.0 - 7.0	N=7
14.0 - 15.0	N=7
24.0 - 25.0	N=8
34.0 - 35.0	N=22
39.0 - 40.0	N=25
44.0 - 45.0	N=32
49.0 - 50.0	N=34
59.0 - 60.0	N=71
68.5 - 69.0	N=50/6"
79.5 - 79.9	N=50/5"

Boring B-2
Sta. 343+13
16' Left of Center
Line of Construction

1.0 - 2.0	N=3
2.5 - 3.5	N=4
6.0 - 7.0	N=15
10.0 - 11.0	N=14
14.0 - 15.0	N=16
19.0 - 20.0	N=11
24.0 - 25.0	N=11
34.0 - 35.0	N=23
39.0 - 40.0	N=29
44.0 - 45.0	N=36
49.0 - 50.0	N=44
59.5 - 59.8	N=50/4"
68.5 - 69.0	N=50/6"
79.0 - 79.4	N=50/5"

Boring B-3
Sta. 344+67
59' Right of Center
Line of Construction

1.0 - 2.0	N=5
2.5 - 3.5	N=3
4.0 - 5.0	N=3
14.0 - 15.0	N=19
24.0 - 25.0	N=24
29.0 - 30.0	N=27
34.0 - 35.0	N=31
39.0 - 40.0	N=33
44.0 - 45.0	N=37
49.0 - 50.0	N=39
59.0 - 60.0	N=76
69.5 - 69.9	N=50/5"
79.5 - 79.9	N=50/5"

Boring B-4
Sta. 346+01
Center Line
of Construction

1.0 - 2.0	N=3
2.5 - 3.5	N=5
6.0 - 7.0	N=7
14.0 - 15.0	N=10
24.0 - 25.0	N=49
29.0 - 30.0	N=66
34.0 - 35.0	N=33
39.0 - 40.0	N=29
44.0 - 45.0	N=33
49.0 - 50.0	N=44
59.5 - 59.9	N=50/5"
69.0 - 69.4	N=50/5"
79.0 - 80.0	N=75

Boring B-5
Sta. 347+07
8' Left of Center
Line of Construction

1.0 - 2.0	N=5
2.5 - 3.5	N=6
6.0 - 7.0	N=9
14.0 - 15.0	N=13
24.0 - 25.0	N=64
29.0 - 30.0	N=70
34.0 - 35.0	N=43
39.0 - 40.0	N=32
44.0 - 45.0	N=32
49.0 - 50.0	N=44
59.0 - 60.0	N=75
69.0 - 69.5	N=50/6"
79.5 - 79.8	N=50/4"
89.5 - 89.8	N=50/3"
99.0 - 99.3	N=50/4"

Boring B-6
Sta. 349+21
13' Right of Center
Line of Construction

1.0 - 2.0	N=3
2.5 - 3.5	N=5
4.0 - 5.0	N=9
6.3 - 7.3	N=16
9.0 - 10.0	N=14
19.0 - 20.0	N=15
25.0 - 26.0	N=18
29.0 - 30.0	N=78
34.0 - 35.0	N=61
39.0 - 40.0	N=45
44.0 - 45.0	N=34
49.0 - 50.0	N=52
59.0 - 60.0	N=57
69.0 - 70.0	N=78
79.0 - 80.0	N=75
89.5 - 89.9	N=50/5"
98.5 - 98.9	N=50/5"

Boring B-7
Sta. 350+31
32' Left of Center
Line of Construction

1.0 - 2.0	N=4
2.5 - 3.5	N=2
4.0 - 5.0	N=2
5.5 - 6.5	N=10
14.0 - 15.0	N=8
24.0 - 25.0	N=20
30.0 - 31.0	N=24
34.0 - 35.0	N=89
39.0 - 40.0	N=65
44.0 - 45.0	N=40
49.0 - 50.0	N=49
59.0 - 60.0	N=61
69.5 - 69.8	N=50/3"
79.0 - 79.5	N=50/6"

Boring B-8
Sta. 350+95
12' Right of Center
Line of Construction

1.0 - 2.0	N=4
2.5 - 3.5	N=7
4.0 - 5.0	N=9
9.0 - 10.0	N=11
19.0 - 20.0	N=14
25.0 - 26.0	N=24
29.0 - 30.0	N=22
34.0 - 35.0	N=73
39.5 - 39.9	N=50/5"
44.0 - 45.0	N=56
49.0 - 50.0	N=45
59.0 - 60.0	N=51
69.5 - 69.8	N=50/4"
79.0 - 79.4	N=50/5"

BORING LEGEND

A- SILTY SAND (SM), light reddish brown, loose
B- SANDY LEAN CLAY (CL), reddish-brown and light gray, medium stiff
C- SANDY SILTY CLAY (CL-ML), reddish-brown and light gray, medium stiff
D- SANDY SILT (ML), with clay seams, reddish-brown, brown and gray, medium stiff
E- LEAN CLAY (CL), with silt seams, light gray and gray, very stiff to hard
F- SILTY SAND (SM), brown, very loose
G- SANDY SILTY CLAY (CL-ML), reddish-brown, brown and gray, stiff to very stiff
H- SILTY SAND (SM), light brown, gray and reddish-brown, medium dense
I- LEAN CLAY (CL), with silt seams, gray, very stiff to hard - with gravel at about 33.5 feet
J- SILTY SAND (SM), light gray, loose
K- SANDY SILT (ML), brown, reddish-brown and light gray, soft
L- SILTY SAND (SM), with gravel, brown, light gray and dark brown, medium dense
M- LEAN CLAY (CL), with sand and silt seams, gray, very stiff to hard
N- SILTY SAND (SM), fine grained, brown, very loose
O- SANDY LEAN CLAY (CL), brown, gray and reddish-brown, medium stiff, mottled
P- SILTY SAND (SM), brown and light gray, loose
Q- SANDY FAT CLAY (CH), with silt seams, dark brown, stiff
R- LEAN CLAY (CL), dark brown, very stiff
S- SILTY SAND (SM), with clay seams, gray, dense to very dense
T- FAT CLAY (CH), with silt seams, dark gray and light gray, very stiff to hard
U- SILTY SAND (SM), dark gray and light gray, very dense
V- SILTY CLAY (CL-ML), dark gray and light gray, hard
W- SANDY LEAN CLAY (CL), brown, reddish-brown and gray, medium stiff to stiff
X- LEAN CLAY WITH SAND (CL), with sand and silt seams, brown, reddish brown and gray, stiff to hard - gray and light gray at about 20 feet
Y- LEAN CLAY (CL), gray and light gray, hard
Z- SILTY SAND (SM), light gray and dark gray, very dense
AA- SANDY LEAN CLAY (CL), brown, soft to stiff
AB- CLAYEY SAND (SC), reddish-brown, medium dense
AC- LEAN CLAY WITH SAND (CL), gray and brown, very stiff
AD- FAT CLAY (CH), gray, very stiff
AE- SILTY SAND (SM), fine grained, gray, very dense
AF- LEAN CLAY (CL), gray, hard
AG- CLAYEY SAND (SC), gray, very dense
AH- SANDY LEAN CLAY (CL), light brown, brown and gray, soft to stiff
AI- LEAN CLAY (CL), with sand and silt seams, gray, very stiff
AJ- SANDY SILT (ML), gray, hard
AK- FAT CLAY (CH), gray, hard
AL- LEAN CLAY (CL), with sand and silt seams, gray, hard
AM- LEAN CLAY WITH SAND (CL), brown, soft to medium stiff
AN- SANDY LEAN CLAY (CL), gray and brown, stiff to very stiff
AO- SANDY FAT CLAY (CH), gray, hard
AP- FAT CLAY (CH), with sand lenses, gray and dark gray, hard

STATE OF ARKANSAS
LICENSED PROFESSIONAL ENGINEER
No.14501
STEPHEN F. HARPER
2/2/2024

BRIDGE ENGINEER
PRINT DATE: 2/2/2024

SHEET 3 OF 3
LAYOUT OF BRIDGE
HWY. 82 OVER UNION PACIFIC RAILROAD
UPRR GRADE SEPARATION
(EAST OF LAFAYETTE CO. LINE) (S)
COLUMBIA COUNTY
ROUTE 82 SECTION 3
ARKANSAS STATE HIGHWAY COMMISSION
LITTLE ROCK, ARKANSAS

DRAWN BY: JPC	DATE: 08/2019	FILENAME: B070458X1_LX3.dgn	
CHECKED BY: SRN	DATE: 05/2021		
DESIGNED BY: JPC	DATE: 08/2019	SCALE: 1" = 30'	
BRIDGE NO. 07537		DRAWING NO. 64254	

Scott.Thornsberry 2/2/2024 4:46:45 PM
WORKSPACE: ARDOT
Y:\Projects\ARDOT_169387_070458 UPRR Grade Separation\Design\BRIDGE\Drawings\B070458X1_LX3.dgn
REVISED DATE:

DATE REVISED	DATE FILMED	DATE REVISED	DATE FILMED	FED.RD. DIST.NO.	STATE	FED.AID PROJ.NO.	SHEET NO.	TOTAL SHEETS
				6	ARK.			
				JOB NO.		070458	63	125
				07537 - EXHIBIT A - 64255				

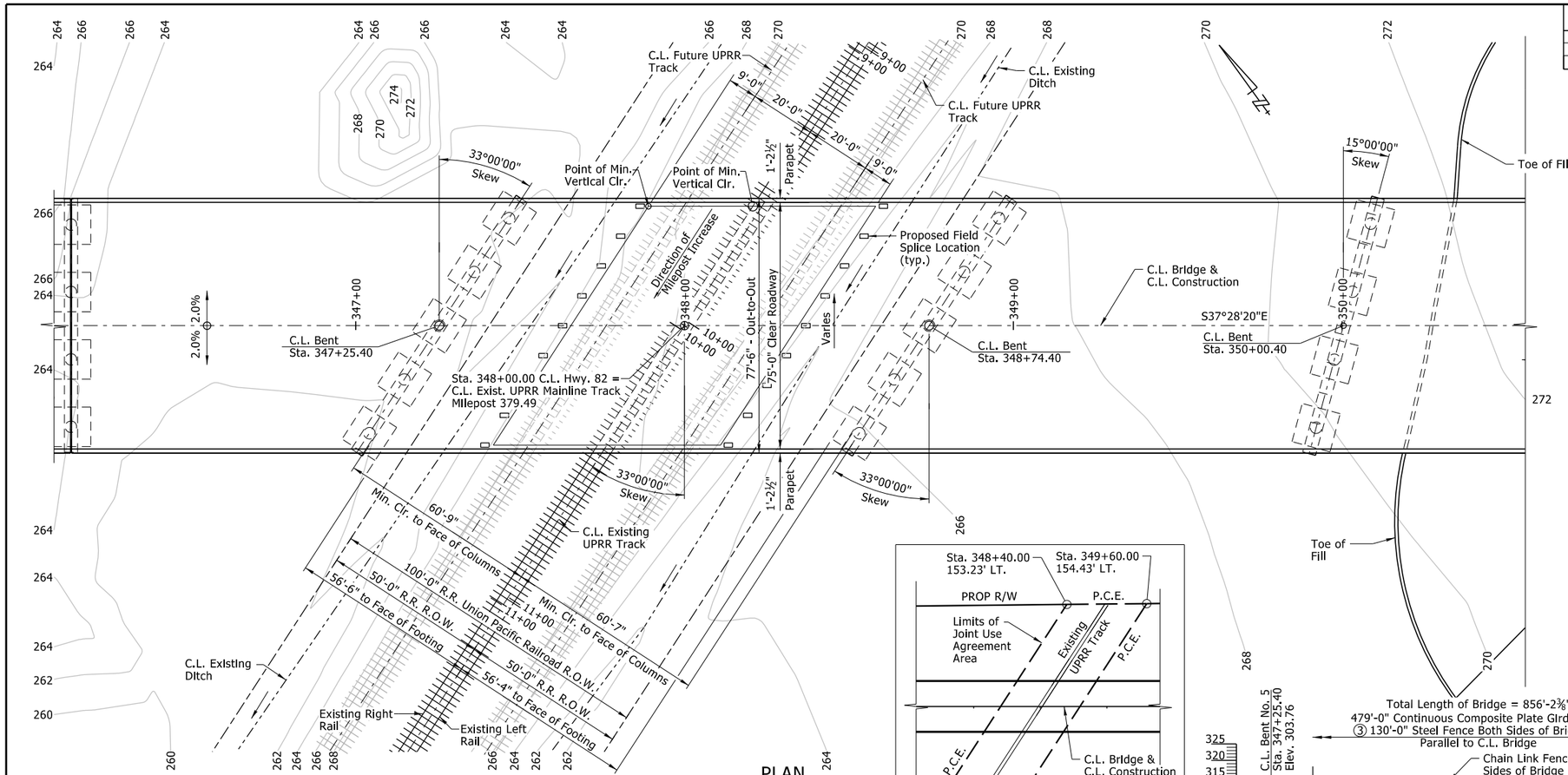

PLAN

Scale: 1"=20'

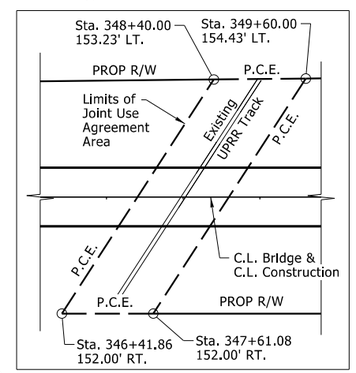

LIMITS OF JOINT USE AGREEMENT AREA

No Scale

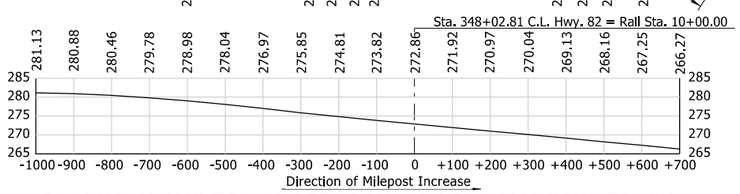

PROFILE ALONG TOP OF LEFT RAIL OF UPRR MAINLINE TRACK

No Scale

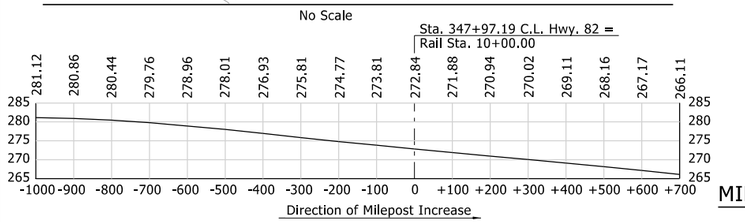

PROFILE ALONG TOP OF RIGHT RAIL OF UPRR MAINLINE TRACK

No Scale

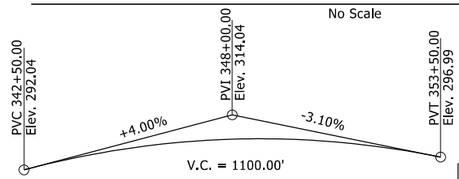

VERTICAL CURVE DATA

(Stations and Elevations are along C.L. Bridge and Profile Grade Line)

② MInimum Vertical Clearances:		
29'-0" Left of C.L. Existing Track	At Right Rail - Existing Track	29'-0" Right of C.L. Existing Track
24'-8"	24'-8"	24'-6"

	BEGIN OF PROJECT	MID-POINT OF PROJECT	END PROJECT
LATITUDE	N 33°21'32"	N 33°21'15"	N 33°21'05"
LONGITUDE	W 93°24'41"	W 93°24'09"	W 93°24'32"
STATION	315+00.00	348+12.50	381+25.00

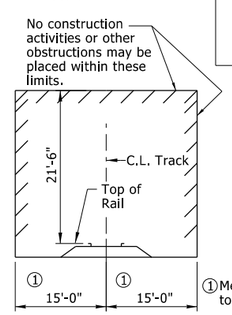

Note: No excavation permitted within 15' of C.L. track.

MINIMUM CONSTRUCTION CLEARANCES

No Scale

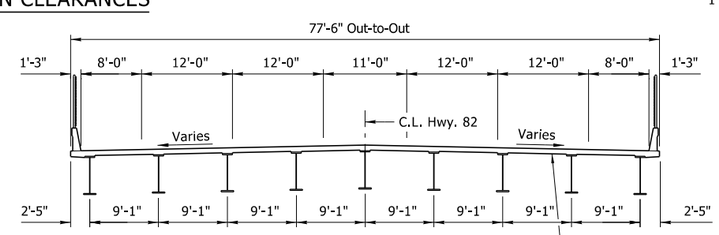

TYPICAL SECTION THRU BRIDGE

No Scale

GENERAL NOTES

1. Site(s) shall be accessed without crossing track(s) except at existing road crossing(s), unless explicit approvals have been obtained from UPRR.
2. The elevation of the existing top-of-rail profile shall be verified before beginning construction. All discrepancies shall be brought to the attention of the Railroad prior to construction.
3. Currently there are no known utilities on the Railroad right-of-way other than those shown. Contractor shall open a ticket at http://www.up.com/aboutup/community/telecom/groups/index.htm for UPRR Utility coordination prior to construction.
4. Construction shall comply with requirements noted in Special Provision "Insurance, Construction, and Flagging Requirements on Railroad Property (UPRR)", including the use of permanent steel deck pans over the Railroad right-of-way.
5. The proposed grade separation project shall not change the quantity and/or characteristics of the flow in the Railroad ditches and/or drainage structures. Existing drainage patterns will be maintained. Closed parapet railing (no deck drains) are typical on both sides of the bridge deck over the Railroad right-of-way.
6. The Contractor must submit a proposed method of erosion and sediment control and have the method approved by the Railroad prior to beginning any grading on the project site.
7. Temporary construction clearances, including falsework clearances, shall comply with the details shown in "Minimum Construction Clearance Envelope". All unauthorized equipment, materials, and personnel shall remain outside this envelope.
8. All shoring systems that Impact the Railroad's operations and/or supports the Railroad's embankment shall be designed and constructed per the Railroad temporary shoring requirements.
9. Erection over the Railroad right-of-way shall be designed to cause no Interruption to all Railroad operations. Falsework will not be allowed in Railroad Right-of-way without Railroad approval.
10. All personnel must clear the area within 25 feet of track and secure all equipment during the approach and passage of a train. All work within 50 feet of truck must cease during the approach and passage of a train.
11. All permanent clearances shall be verified before project closeout.
12. All demolition within the Railroad right-of-way and/or demolition that may impact the Railroad tracks or operations shall comply with the Railroad demolition requirements.
13. "The State shall not plow ice, snow, or sleet over the sides of the structure. In consideration of this practice, the Carrier waives its request for the State to attach splash boards to sides of the structure." This statement is in the State-Railroad Agreement.

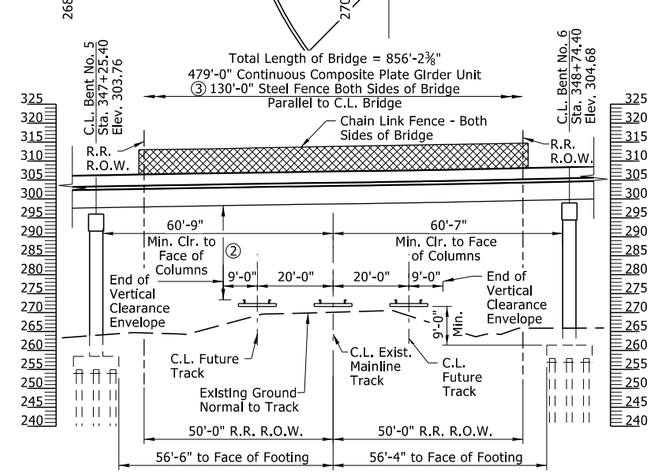

② 24'-6" Min. Clr. @ Sta. 347+89.02 36'-4" Lt.

SECTION NORMAL TO TRACK

(Looking In Direction of Milepost Decrease)
1"=20'

③ Steel fence from Hwy. 82 C.L. Sta. 347+60.00 to Sta. 348+90.00 on Left side of bridge and from Sta. 347+10.00 to Sta. 348+40.00 on right side of bridge.

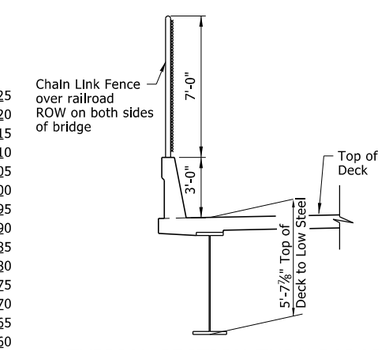

TYPICAL SECTION THRU PARAPET

No Scale

Note: A Steel Fence is required as shown on each side. The fence is to be mounted on top of the concrete parapet rail.

4/12/2024
STATE OF ARKANSAS
LICENSED PROFESSIONAL ENGINEER
No.14501
STEPHEN F. HARPER

BRIDGE ENGINEER
PRINT DATE: 4/12/2024

EXHIBIT A
LAYOUT OF BRIDGE
HWY. 82 OVER UNION PACIFIC RAILROAD
UPRR GRADE SEPARATION
(EAST OF LAFAYETTE CO. LINE) (S)
PINE BLUFF SUBDIVISION - M.P. 379.49
COLUMBIA COUNTY

ROUTE 82 SECTION 3

ARKANSAS STATE HIGHWAY COMMISSION
LITTLE ROCK, ARKANSAS

DRAWN BY:	JPC	DATE:	08/2019	FILENAME:	B070458X1_LEA1.dgn
CHECKED BY:	SFH	DATE:	11/2019		
DESIGNED BY:	JPC	DATE:	08/2019	SCALE:	As Shown
BRIDGE NO.	07537		DRAWING NO.	64255	

Megan.Land 4/12/2024 1:28:06 PM
WORKSPACE: ARDOT
Y:\Projects\ARDOT_169387_070458 UPRR Grade Separation\Design\BRIDGE\Drawings\B070458X1_LEA1.dgn
REVISED DATE:

DATE REVISED	DATE FILMED	DATE REVISED	DATE FILMED	FED.RD. DIST.NO.	STATE	FED.AID PROJ.NO.	SHEET NO.	TOTAL SHEETS
				6	ARK.			
				JOB NO.		070458	64	125
				(1)	07537 - BENT 1 - 64256			

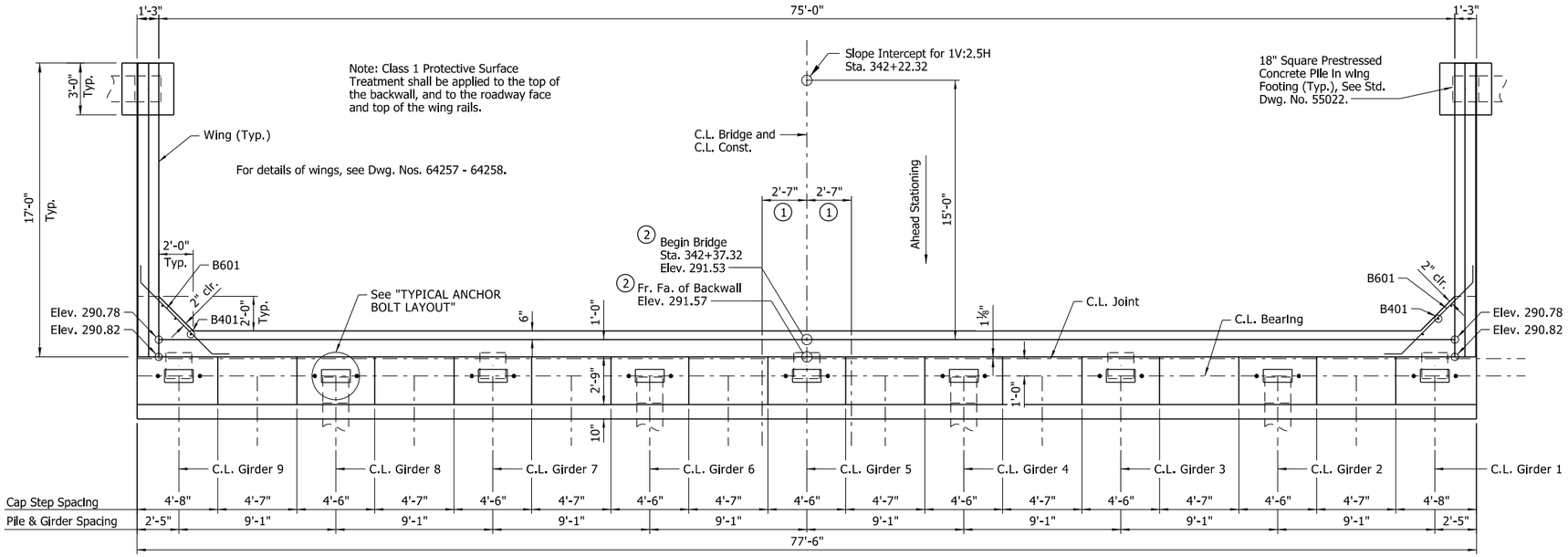

PLAN

¼" = 1'-0"

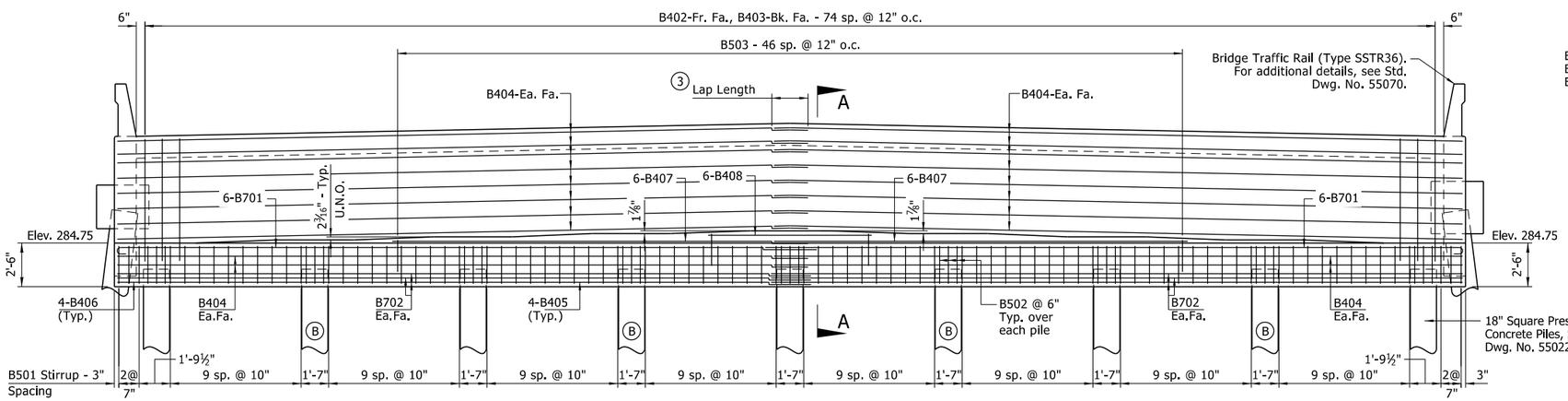

ELEVATION

(Looking Back)

¼" = 1'-0"

(B) Batter 3V: 1H

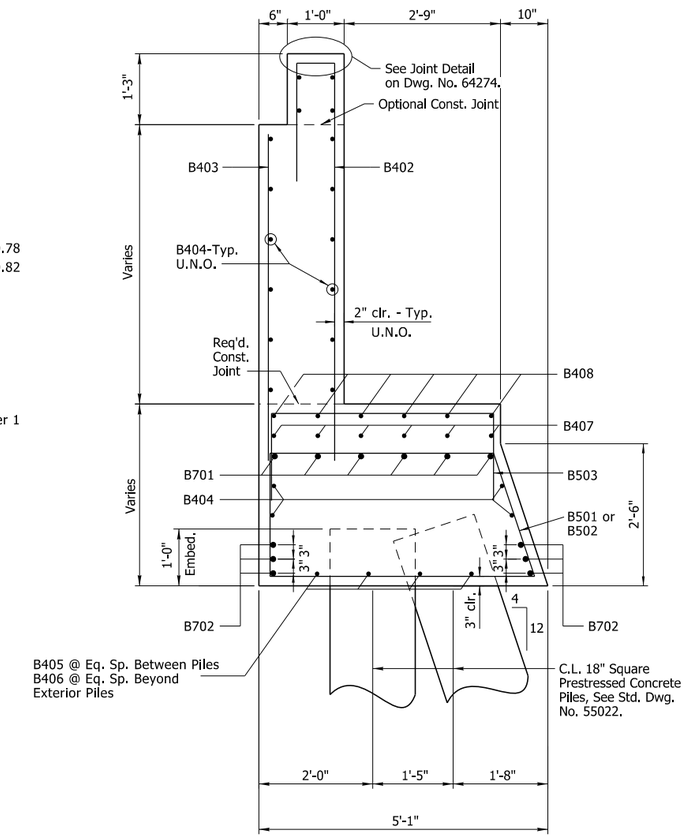

SECTION A-A

¾" = 1'-0"

Notes:

For details of elastomeric bearings, see Dwg. Nos. 64272 - 64273.

(1) See "ROUNDING DETAIL", Std. Dwg. No. 55007.

(2) Measured to Working Point. See "ROUNDING DETAIL", Std. Dwg. No. 55007.

(3) Lap Length: 2'-3" for #4 bars
3'-10" for #7 bars in top of cap
4'-4" for #7 bars in bottom of cap

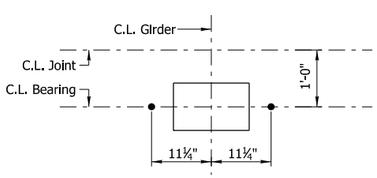

TYPICAL ANCHOR BOLT LAYOUT

¾" = 1'-0"

For details of elastomeric bearings, see Dwg. Nos. 64272 - 64273.

STATE OF ARKANSAS
LICENSED PROFESSIONAL ENGINEER
No.14501
STEPHEN F. HARPER
2/2/2024

BRIDGE ENGINEER
PRINT DATE: 2/2/2024

SHEET 1 OF 3
DETAILS OF END BENT 1
ROUTE SECTION
ARKANSAS STATE HIGHWAY COMMISSION
LITTLE ROCK, ARKANSAS

DRAWN BY:	KDH	DATE:	08/2020	FILENAME:	B070458X1_B11.dgn
CHECKED BY:	SRN	DATE:	05/2021		
DESIGNED BY:	AHS	DATE:	08/2020	SCALE:	As Shown
BRIDGE NO.	07537		DRAWING NO.	64256	

Scott.Thornsberry 2/2/2024 4:46:46 PM
WORKSPACE: ARDOT
Y:\Projects\ARDOT_169387_070458 UPRR Grade Separation\Design\BRIDGE\Drawings\B070458X1_B11.dgn
REVISED DATE:

DATE REVISED	DATE FILMED	DATE REVISED	DATE FILMED	FED.RD. DIST.NO.	STATE	FED.AID PROJ.NO.	SHEET NO.	TOTAL SHEETS
				6	ARK.			
				JOB NO.		070458	65	125
				(1)	07537 - BENT 1 - 64257			

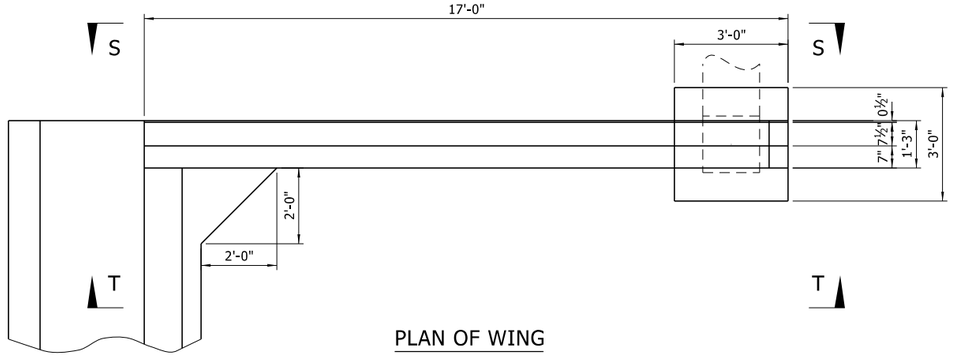

PLAN OF WING

½" = 1'-0"

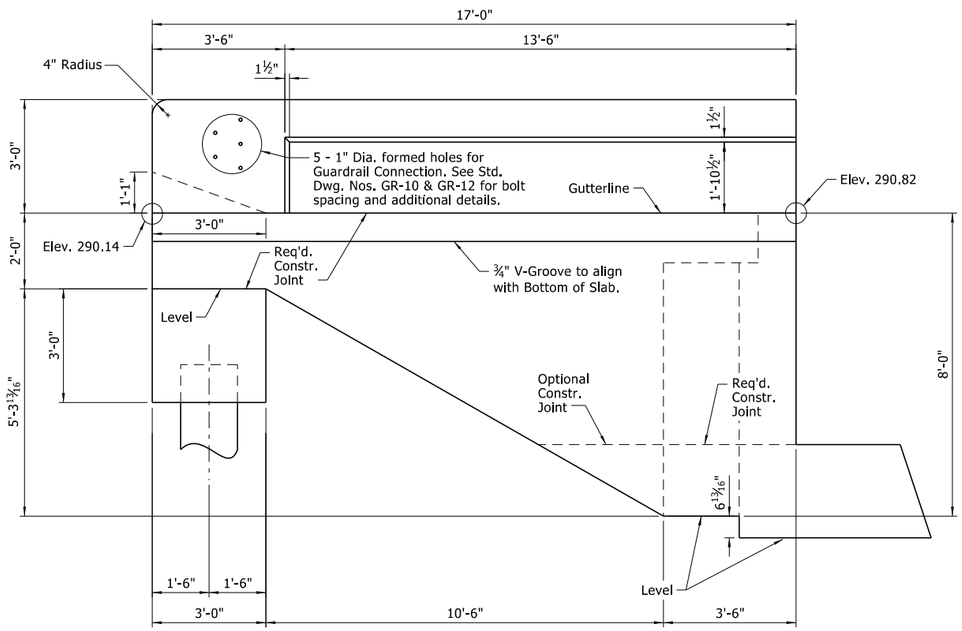

VIEW S-S

½" = 1'-0"

Note: For "SECTION V-V", "SECTION W-W", "SECTION X-X" & "SECTION Y-Y", See Dwg. No. 64258.

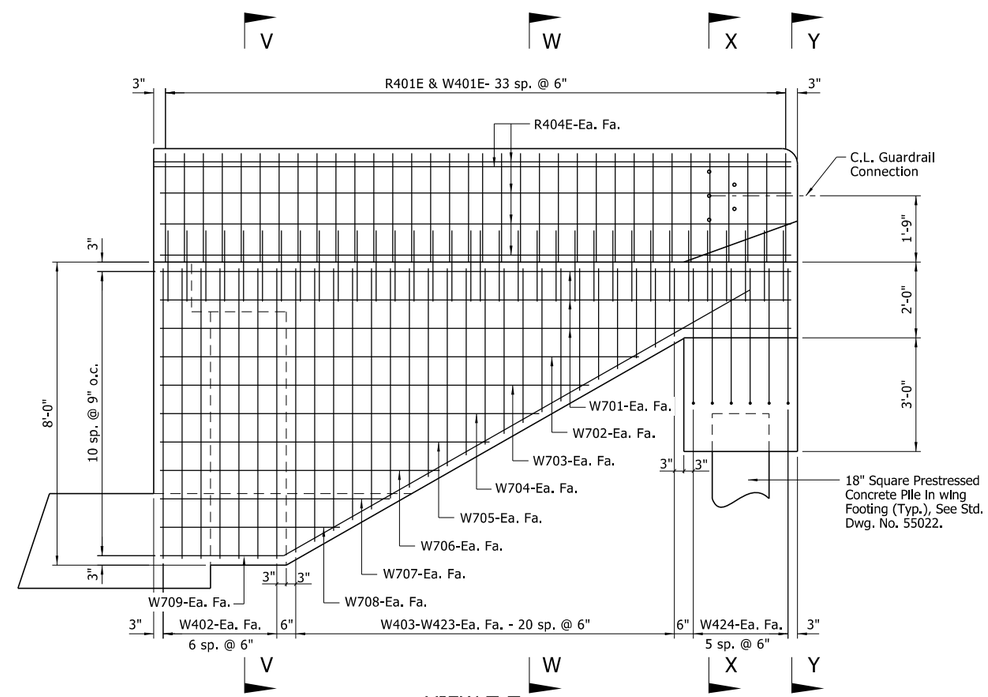

VIEW T-T

½" = 1'-0"

NOTES:

For "GENERAL NOTES" see Std. Dwg. No. 55006.

For details of Concrete Piling, See Std. Dwg. No. 55022.

No portion of the backwall shall be poured until the girders are in place. Refer to "EXPANSION DEVICE INSTALLATION AT END BENTS" note on Dwg. No. 64274.

Finish top of backwall to match the bridge deck.

Structural steel in end bents shall be ASTM A709, Gr. 50W and shall be paid for as "STRUCTURAL STEEL IN PLATE GIRDER SPANS (A709, GR. 50W)".

For additional information, see "LAYOUT OF BRIDGE".

No heavy construction equipment shall be allowed within 10' of the backwall until the deck concrete placement for the adjacent span has been complete.

BAR LIST

MARK	NO. REQ'D.	LENGTH	P.D.	MARK	NO. REQ'D.	LENGTH	P.D.
B401	6	6'-5"	Str.	W401E	68	3'-11"	3¾"
B402	75	9'-1"	2"	W402	28	7'-8"	Str.
B403	75	5'-10"	Str.	W403-W423	4 ea.	Var. 1'-9" to 7'-6"	Str.
B404	40	39'-8"	Str.				
B405	32	7'-3"	Str.	W424	24	3'-5"	2"
B406	8	1'-4"	Str.	W425	4	8'-5"	2"
B407	12	23'-11"	Str.	W701	12	16'-8"	Str.
B408	6	9'-4"	Str.	W702	4	12'-7"	Str.
				W703	4	11'-4"	Str.
B501	86	13'-6"	2½"	W704	4	10'-0"	Str.
B502	27	8'-2"	2½"	W705	4	8'-8"	Str.
B503	47	7'-5"	2½"	W706	4	7'-4"	Str.
				W707	4	6'-0"	Str.
B601	14	7'-10"	4½"	W708	4	4'-9"	Str.
				W709	4	17'-6"	5¼"
B701	12	41'-4"	5¼"				
B702	12	40'-9"	Str.	R401E	68	6'-4"	As Shown
				R402E	8	5'-6"	Str.
F601	12	2'-6"	Str.	R404E	16	16'-8"	Str.

BENDING DIAGRAMS

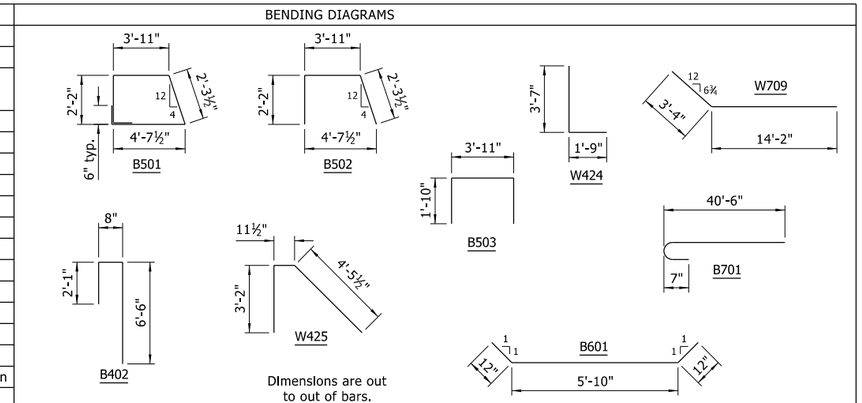

Dimensions are out to out of bars.

STATE OF ARKANSAS
LICENSED PROFESSIONAL ENGINEER
No.14501
STEPHEN F. HARPER
2/2/2024

BRIDGE ENGINEER
PRINT DATE: 2/2/2024

SHEET 2 OF 3
DETAILS OF END BENT 1
ROUTE SECTION
ARKANSAS STATE HIGHWAY COMMISSION
LITTLE ROCK, ARKANSAS

DRAWN BY:	KDH	DATE:	08/2020	FILENAME:	B070458X1_B12.dgn
CHECKED BY:	SRN	DATE:	05/2021		
DESIGNED BY:	AHS	DATE:	08/2020	SCALE:	As Shown
BRIDGE NO.	07537		DRAWING NO.	64257	

Scott.Thornsberry 2/2/2024 4:46:47 PM
WORKSPACE: ARDOT
Y:\Projects\ARDOT_169387_070458 UPRR Grade Separation\Design\BRIDGE\Drawings\B070458X1_B12.dgn
REVISED DATE:

DATE REVISED	DATE FILMED	DATE REVISED	DATE FILMED	FED.RD. DIST.NO.	STATE	FED.AID PROJ.NO.	SHEET NO.	TOTAL SHEETS
				6	ARK.			
				JOB NO.		070458	66	125
				(1)	07537 - BENT 1 - 64258			

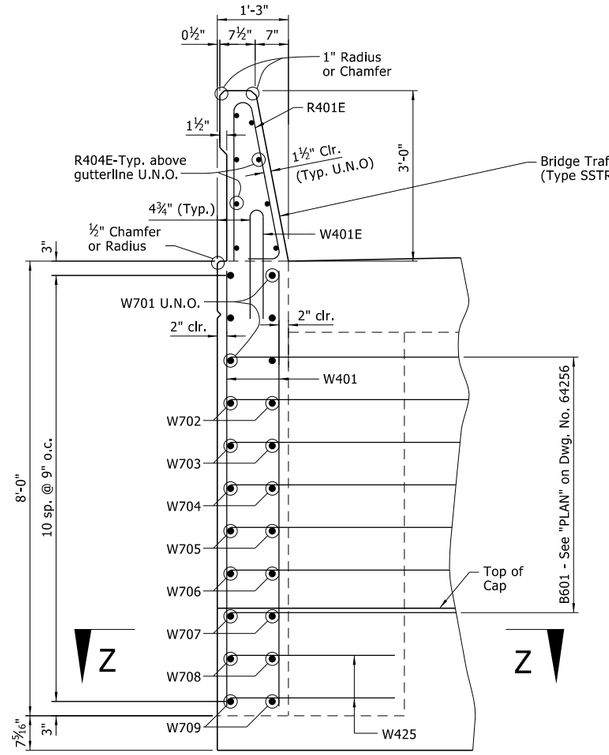

VIEW V-V

¾" = 1'-0"

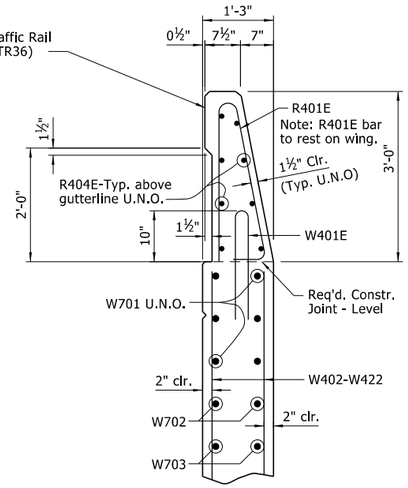

SECTION W-W

¾" = 1'-0"

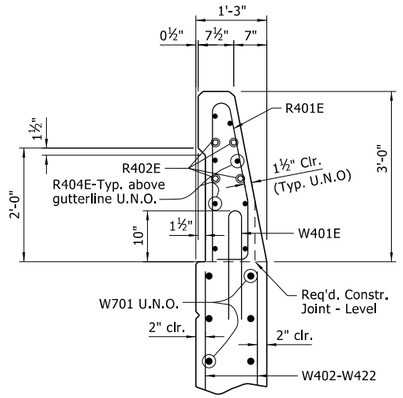

SECTION X-X

¾" = 1'-0"

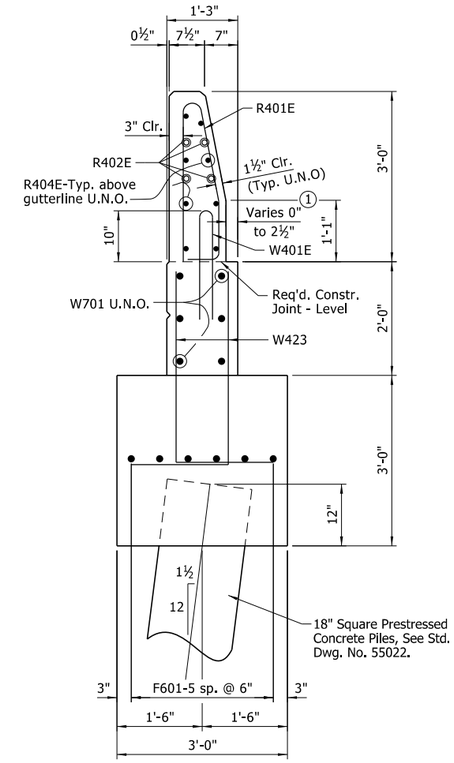

SECTION Y-Y

¾" = 1'-0"

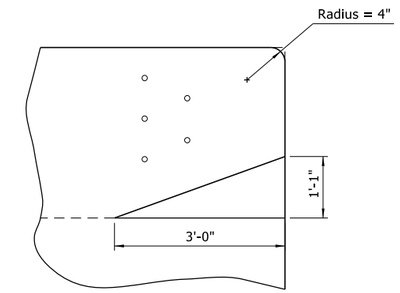

VERTICAL TAPER

¾" = 1'-0"

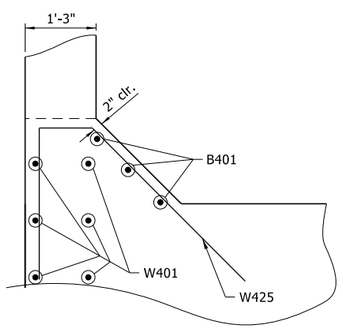

SECTION Z-Z

¾" = 1'-0"

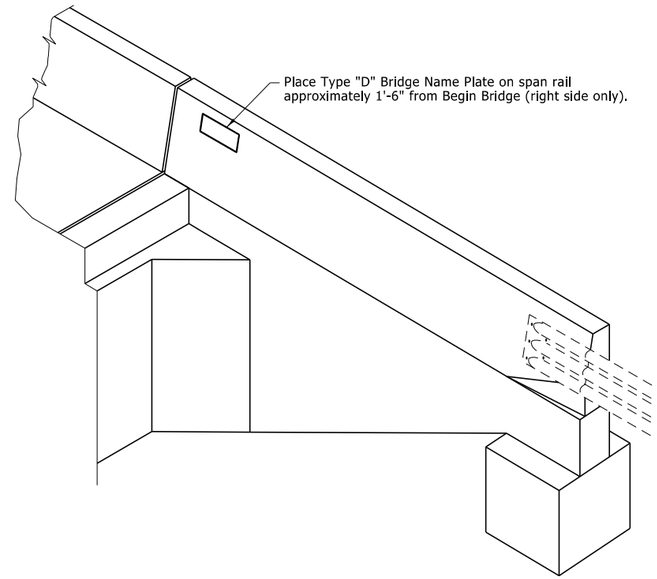

THREE DIMENSIONAL VIEW OF RAIL & END BENT

No Scale

Notes:

For rail reinforcing, "RAIL TERMINUS DETAILS", and additional details, See Std. Dwg. 55070.

(1) Field bend front leg of R401E bar as required to maintain minimum 1½" front face clearance within limits of taper.

STATE OF ARKANSAS
LICENSED PROFESSIONAL ENGINEER
No.14501
STEPHEN F. HARPER

2/2/2024

BRIDGE ENGINEER
PRINT DATE: 2/2/2024

SHEET 3 OF 3
DETAILS OF END BENT 1
ROUTE SECTION
ARKANSAS STATE HIGHWAY COMMISSION
LITTLE ROCK, ARKANSAS

DRAWN BY:	KDH	DATE:	08/2020	FILENAME:	B070458X1_B13.dgn
CHECKED BY:	SRN	DATE:	05/2021		
DESIGNED BY:	AHS	DATE:	08/2020	SCALE:	As Shown
BRIDGE NO.	07537			DRAWING NO.	64258

Scott.Thornsberry 2/2/2024 4:46:48 PM
WORKSPACE: ARDOT
Y:\Projects\ARDOT_169387_070458 UPRR Grade Separation\Design\BRIDGE\Drawings\B070458X1_B13.dgn
REVISED DATE:

DATE REVISED	DATE FILMED	DATE REVISED	DATE FILMED	FED.RD. DIST.NO.	STATE	FED.AID PROJ.NO.	SHEET NO.	TOTAL SHEETS
				6	ARK.			
				JOB NO.		070458	67	125
				(1)	07537 - BENTS 2 & 3 - 64259			

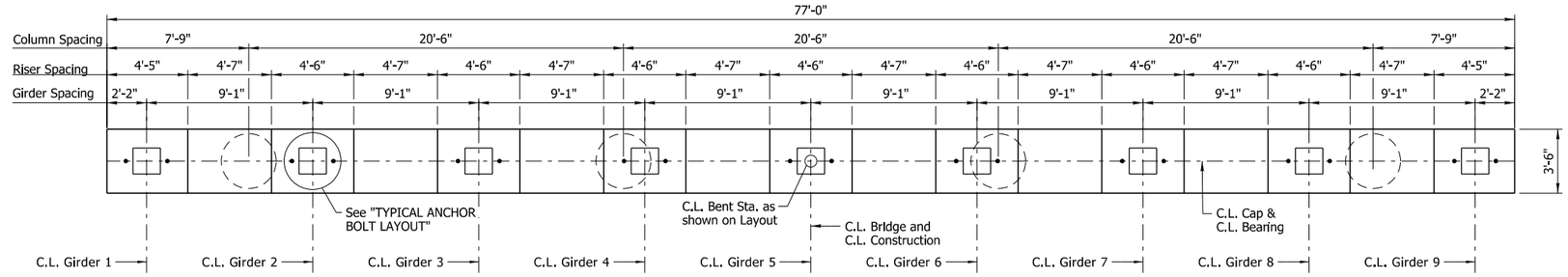

PLAN

¼" = 1'-0"

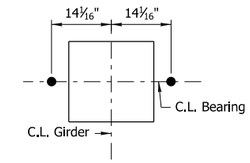

TYPICAL ANCHOR BOLT LAYOUT

¾" = 1'-0"

For details of elastomeric bearings, see Dwg. Nos. 64272 - 64273.

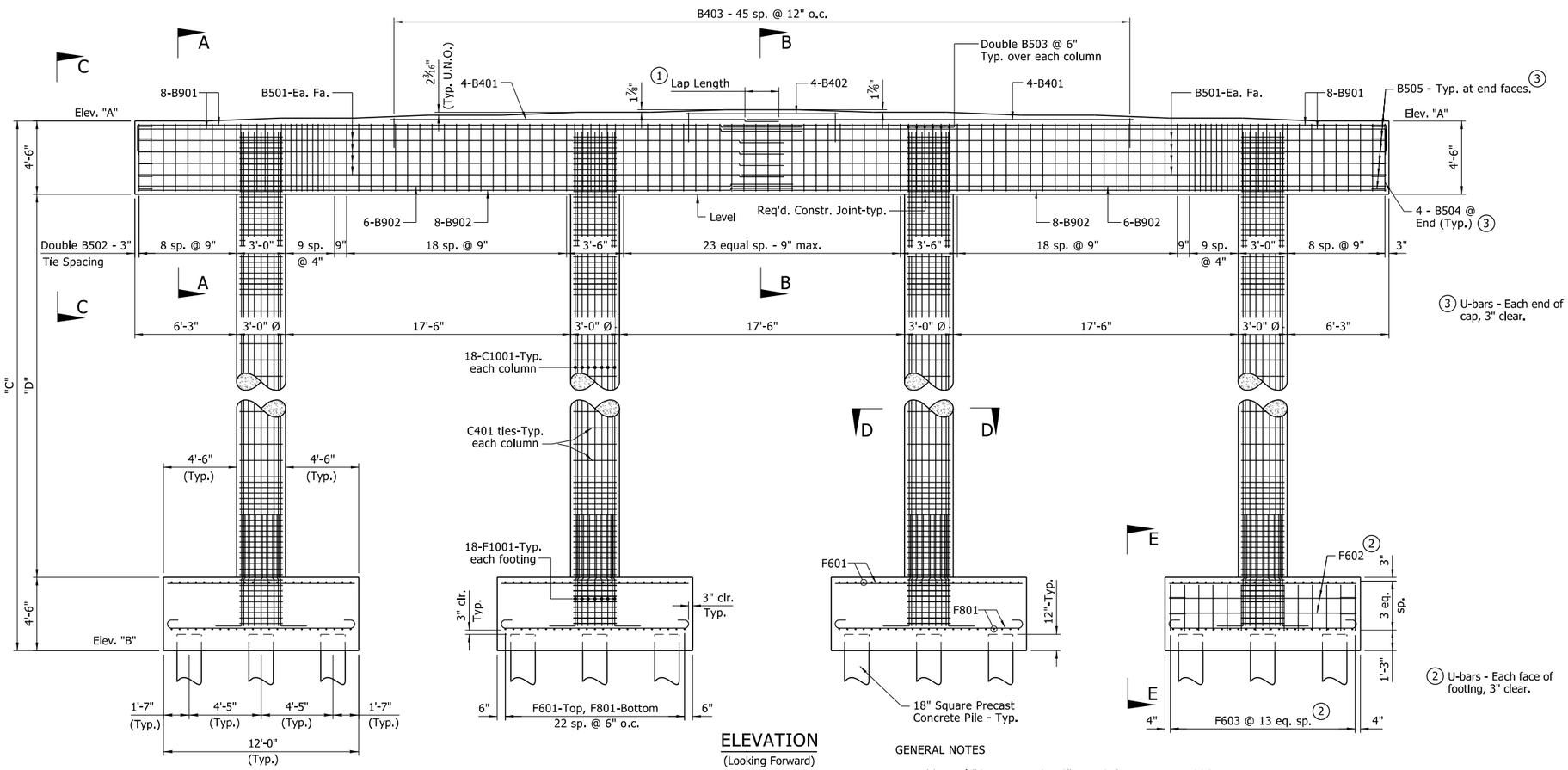

ELEVATION

(Looking Forward)

¼" = 1'-0"

(2) U-bars - Each face of footing, 3" clear.

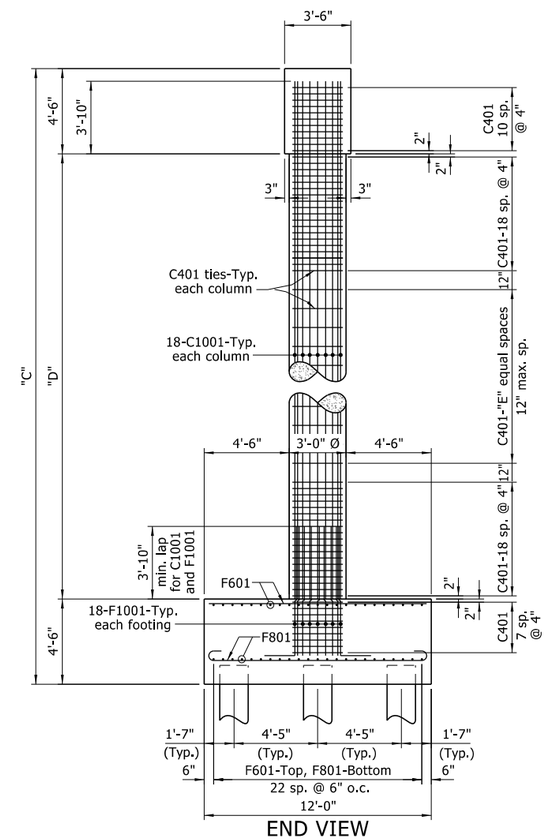

END VIEW

¼" = 1'-0"

TABLE OF VARIABLES

	Elev. "A"	Elev. "B"	"C"	"D"	"E"
Bent 2	289.31	252.81	36'-6"	27'-6"	14
Bent 3	292.89	247.89	45'-0"	36'-0"	22

GENERAL NOTES

For additional "GENERAL NOTES", see Std. Dwg. No. 55006.

If anchor bolts are drilled into cap, top reinforcing bars shall be properly placed to avoid damage.

For additional information see "LAYOUT OF BRIDGE".

For details of elastomeric bearings, see Dwg. Nos. 64272 - 64273.

For "SECTION A-A", "SECTION B-B", " VIEW C-C", "SECTION D-D", & "VIEW E-E" see Dwg. No. 64260.

For details of Concrete Piling, See Std. Dwg. No. 55022.

(1) Lap Length: 2'-3" for #4 bars
2'-9" for #5 bars
6'-3" for #9 bars in top of cap
4'-10" for #9 bars in bottom of cap

STATE OF ARKANSAS
LICENSED PROFESSIONAL ENGINEER
No.14501
STEPHEN F. HARPER
2/2/2024

BRIDGE ENGINEER
PRINT DATE: 2/2/2024

SHEET 1 OF 2
DETAILS OF INTERMEDIATE BENTS 2 & 3
ROUTE SECTION
ARKANSAS STATE HIGHWAY COMMISSION
LITTLE ROCK, ARKANSAS

DRAWN BY:	KDH	DATE:	08/2020	FILENAME:	B070458X1_B21.dgn
CHECKED BY:	SRN	DATE:	05/2021		
DESIGNED BY:	AHS	DATE:	08/2020	SCALE:	As Shown
BRIDGE NO.	07537			DRAWING NO.	64259

Scott.Thornsberry 2/2/2024 4:46:48 PM
WORKSPACE: ARDOT
Y:\Projects\ARDOT_169387_070458 UPRR Grade Separation\Design\BRIDGE\Drawings\B070458X1_B21.dgn
REVISED DATE:

DATE REVISED	DATE FILMED	DATE REVISED	DATE FILMED	FED.RD. DIST.NO.	STATE	FED.AID PROJ.NO.	SHEET NO.	TOTAL SHEETS
				6	ARK.			
				JOB NO.		070458	68	125
				(1)	07537 - BENTS 2 & 3 - 64260			

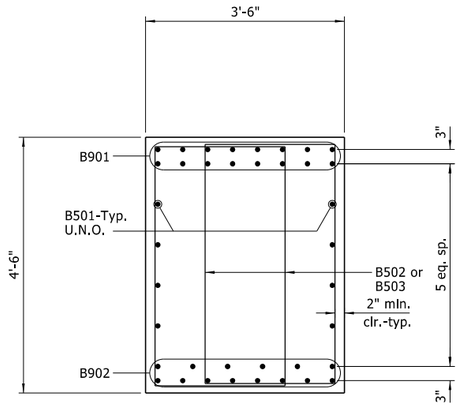

SECTION A-A

¾" = 1'-0"

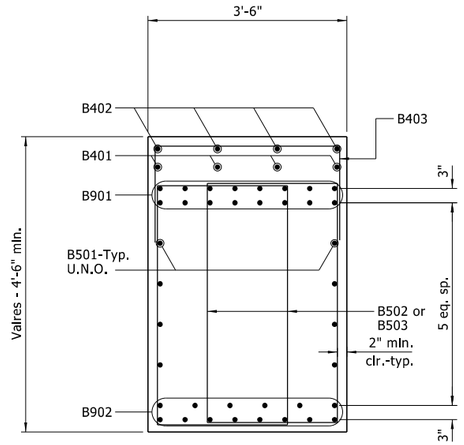

SECTION B-B

¾" = 1'-0"

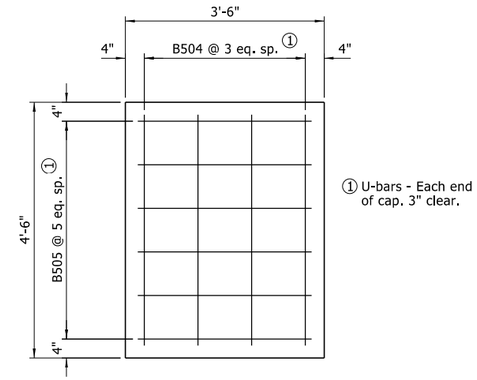

VIEW C-C

¾" = 1'-0"

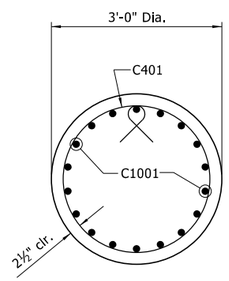

SECTION D-D

¾" = 1'-0"

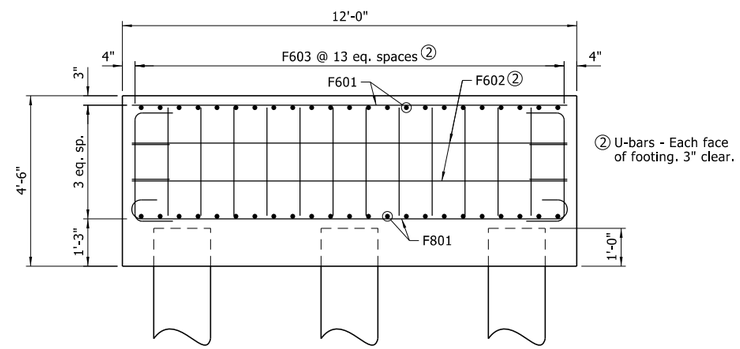

VIEW E-E

½" = 1'-0"

BAR LIST- PER BENT

MARK	NO. REQ'D.	LENGTH	PIN DIA.
B401	8	24'-0"	Str.
B402	4	9'-4"	Str.
B403	46	6'-8"	2"
C401	"F"	9'-3"	3"
B501	16	39'-9"	Str.
B502	200	13'-7"	2½"
B503	48	10'-6"	2½"
B504	8	5'-6"	3¾"
B505	12	4'-6"	3¾"
F601	184	11'-6"	Str.
F602	32	13'-3"	4½"
F603	208	4'-7"	4½"
F801	184	13'-4"	6"
B901	32	42'-9½"	9"
B902	28	40'-9"	Str.
C1001	72	"G"	Str.
F1001	72	8'-5"	10"

BENDING DIAGRAMS
Dimensions are out to out of bars.

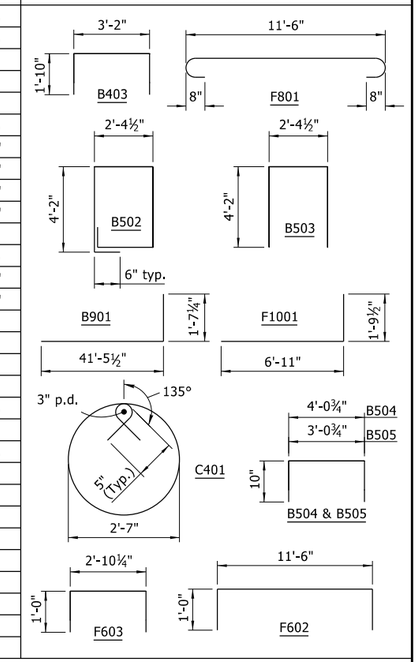

TABLE OF VARIABLES

Bent No.	"F"	"G"
2	288	31'-4"
3	320	39'-10"

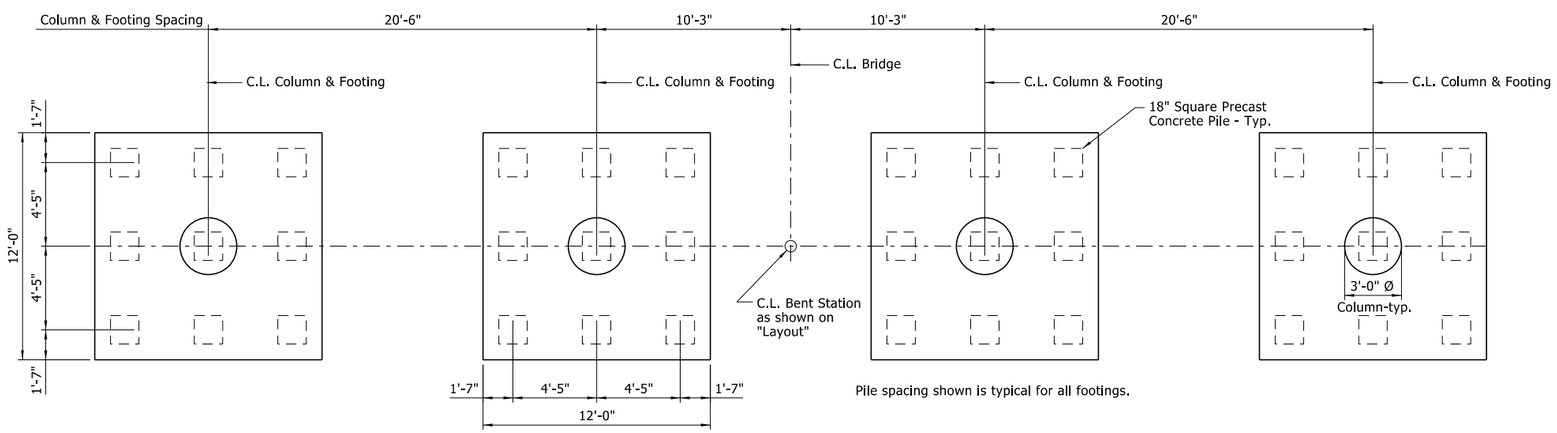

Pile spacing shown is typical for all footings.

COLUMN AND FOOTING PLAN

¼" = 1'-0"

STATE OF ARKANSAS
LICENSED PROFESSIONAL ENGINEER
No.14501
STEPHEN F. HARPER

2/2/2024

BRIDGE ENGINEER
PRINT DATE: 2/2/2024

SHEET 2 OF 2
DETAILS OF INTERMEDIATE BENTS 2 & 3
ROUTE SECTION
ARKANSAS STATE HIGHWAY COMMISSION
LITTLE ROCK, ARKANSAS

DRAWN BY:	KDH	DATE:	08/2020	FILENAME:	B070458X1_B22.dgn
CHECKED BY:	SRN	DATE:	05/2021		
DESIGNED BY:	AHS	DATE:	08/2020	SCALE:	As Shown
BRIDGE NO.	07537			DRAWING NO.	64260

Scott.Thornsberry 2/2/2024 4:46:49 PM
WORKSPACE: ARDOT
Y:\Projects\ARDOT_169387_070458 UPRR Grade Separation\Design\BRIDGE\Drawings\B070458X1_B22.dgn
REVISED DATE:

DATE REVISED	DATE FILMED	DATE REVISED	DATE FILMED	FED.RD. DIST.NO.	STATE	FED.AID PROJ.NO.	SHEET NO.	TOTAL SHEETS
				6	ARK.			
				JOB NO.		070458	69	125
				1	07537 - BENT 4 - 64261			

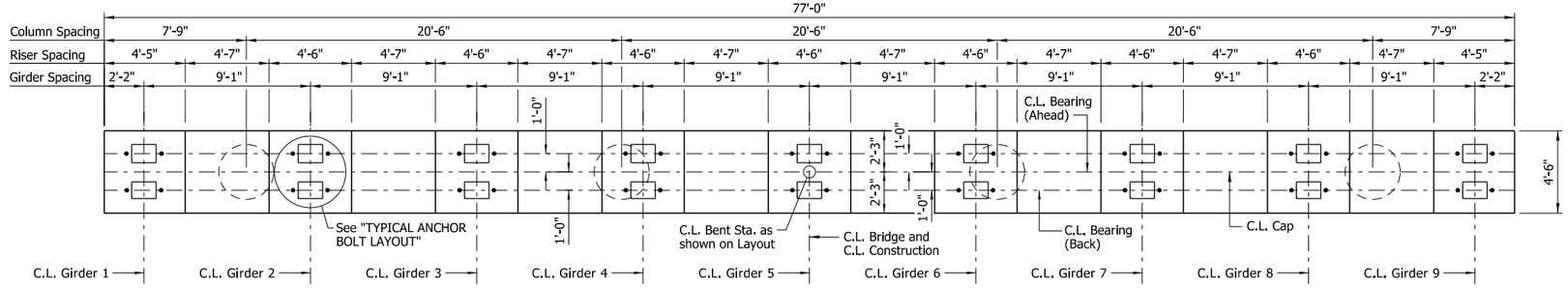

PLAN

¼" = 1'-0"

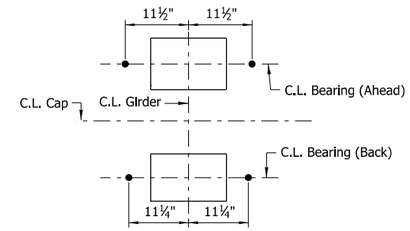

TYPICAL ANCHOR BOLT LAYOUT

¾" = 1'-0"

For details of elastomeric bearings, See Dwg. Nos. 64272 - 64273.

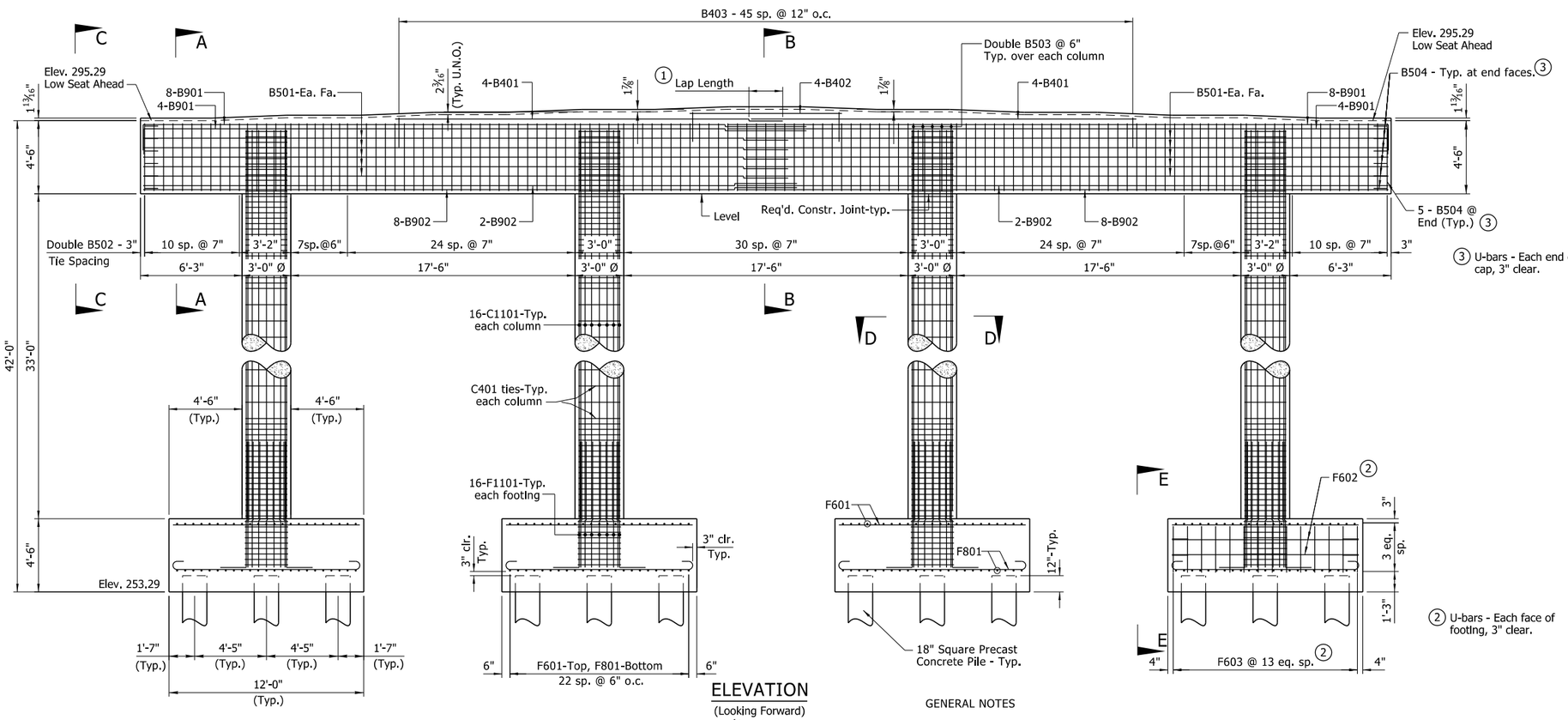

ELEVATION

(Looking Forward)
¼" = 1'-0"

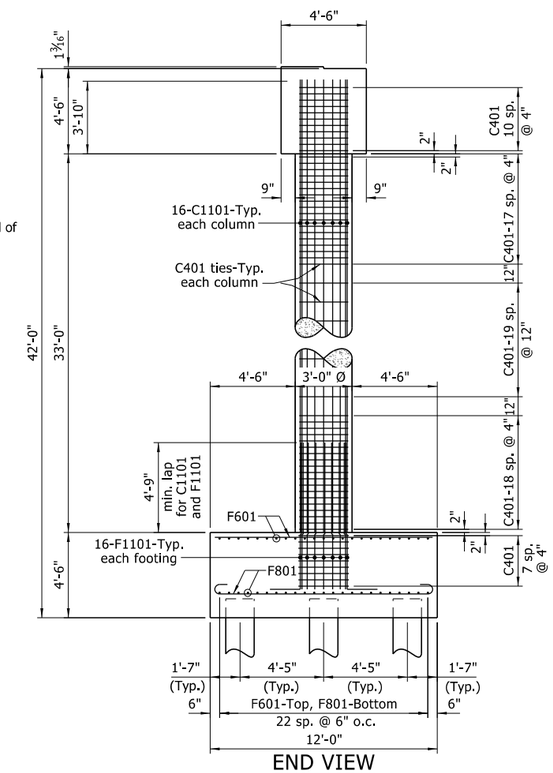

END VIEW

¼" = 1'-0"

2 U-bars - Each face of footing, 3" clear.

GENERAL NOTES

For additional "GENERAL NOTES", see Std. Dwg. No. 55006.

If anchor bolts are drilled into cap, top reinforcing bars shall be properly placed to avoid damage.

For additional information see "LAYOUT OF BRIDGE".

For details of elastomeric bearings, see Dwg. Nos. 64272 - 64273.

For "SECTION A-A", "SECTION B-B", "VIEW C-C", "SECTION D-D", & "VIEW E-E" see Dwg. No. 64262.

For details of Concrete Piling, See Std. Dwg. No. 55022.

1 Lap Length: 2'-3" for #4 bars
2'-9" for #5 bars
6'-3" for #9 bars in top of cap
4'-10" for #9 bars in bottom of cap

STATE OF ARKANSAS
LICENSED PROFESSIONAL ENGINEER
No.14501
STEPHEN F. HARPER
2/2/2024

BRIDGE ENGINEER
PRINT DATE: 2/2/2024

SHEET 1 OF 2
DETAILS OF INTERMEDIATE BENT 4

ROUTE SECTION

ARKANSAS STATE HIGHWAY COMMISSION

LITTLE ROCK, ARKANSAS

DRAWN BY:	KDH	DATE:	09/2020	FILENAME:	B070458X1_B41.dgn
CHECKED BY:	SRN	DATE:	05/2021		
DESIGNED BY:	AHS	DATE:	08/2020	SCALE:	As Shown
BRIDGE NO.	07537		DRAWING NO.	64261	

Scott.Thornsberry 2/2/2024 4:46:50 PM
WORKSPACE: ARDOT
Y:\Projects\ARDOT_169387_070458 UPRR Grade Separation\Design\BRIDGE\Drawings\B070458X1_B41.dgn
REVISED DATE:

DATE REVISED	DATE FILMED	DATE REVISED	DATE FILMED	FED.RD. DIST.NO.	STATE	FED.AID PROJ.NO.	SHEET NO.	TOTAL SHEETS
				6	ARK.			
				JOB NO.		070458	70	125
				(1)	07537 - BENT 4 - 64262			

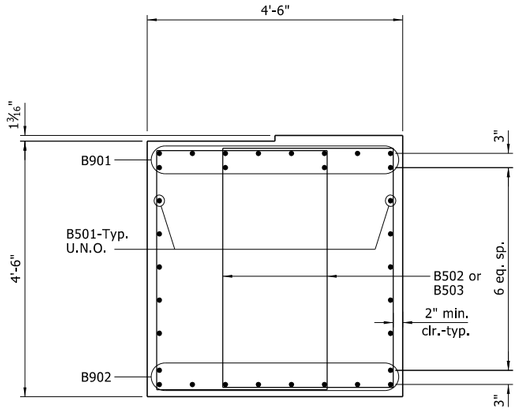

SECTION A-A

¾" = 1'-0"

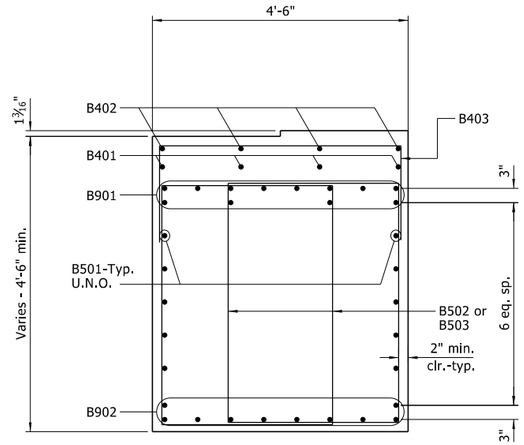

SECTION B-B

¾" = 1'-0"

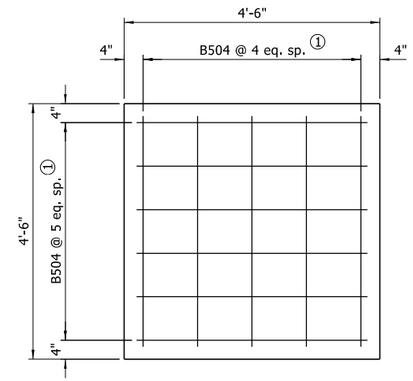

VIEW C-C

¾" = 1'-0"

(1) U-bars - Each end of cap. 3" clear.

BAR LIST- PER BENT

MARK	NO. REQ'D.	LENGTH	PIN DIA.
B401	8	24'-0"	Str.
B402	4	9'-4"	Str.
B403	46	7'-8"	2"
C401	304	9'-3"	3"
B501	20	39'-9"	Str.
B502	234	14'-11"	2½"
B503	40	11'-2"	2½"
B504	22	5'-6"	3¾"
F601	184	11'-6"	Str.
F602	32	13'-3"	4½"
F603	208	4'-7"	4½"
F801	184	13'-4"	6"
B901	24	42'-9½"	9"
B902	20	40'-9"	Str.
C1101	64	36'-10"	Str.
F1101	64	9'-6"	11¼"

BENDING DIAGRAMS
Dimensions are out to out of bars.

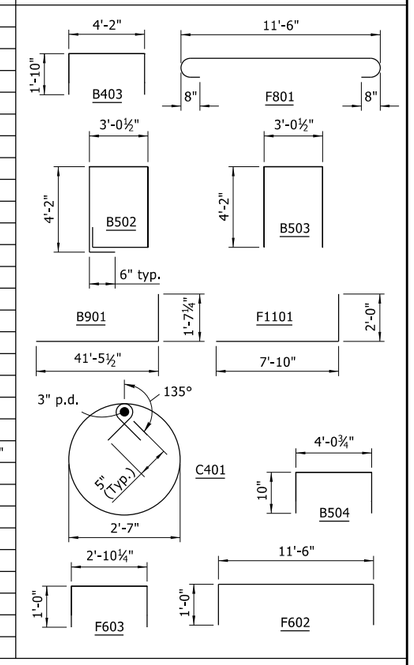

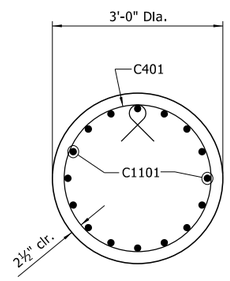

SECTION D-D

¾" = 1'-0"

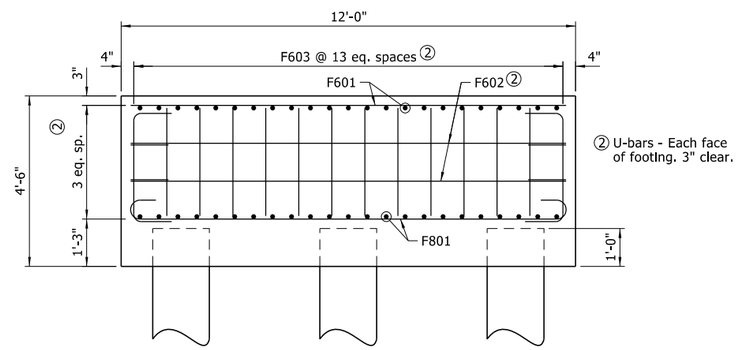

(2) U-bars - Each face of footing. 3" clear.

VIEW E-E

½" = 1'-0"

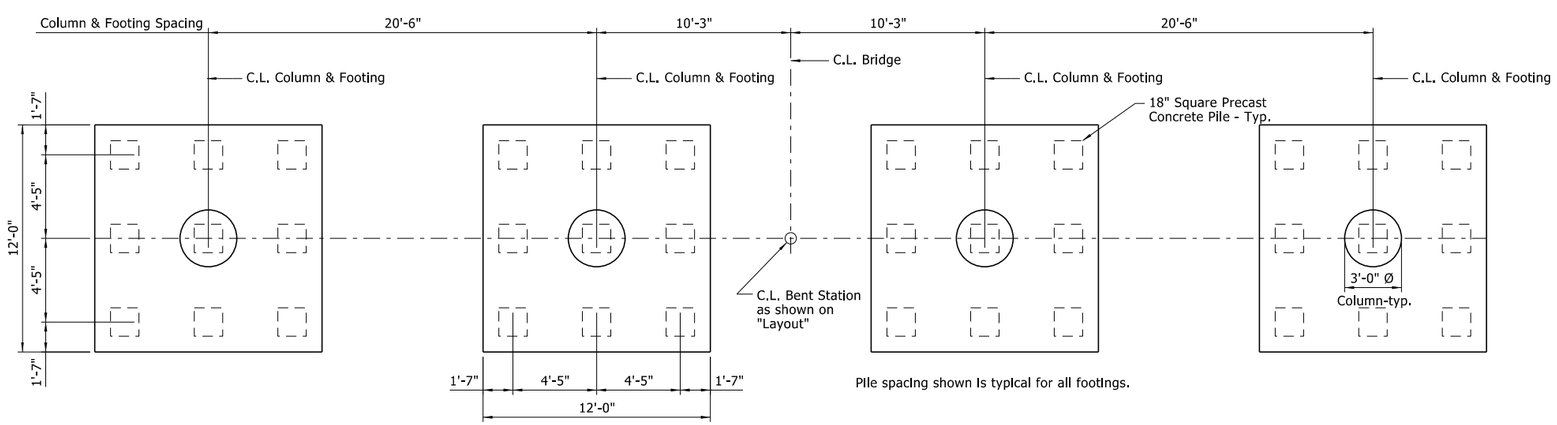

Pile spacing shown is typical for all footings.

COLUMN AND FOOTING PLAN

¼" = 1'-0"

STATE OF ARKANSAS
LICENSED PROFESSIONAL ENGINEER
No.14501
STEPHEN F. HARPER

2/2/2024

BRIDGE ENGINEER
PRINT DATE: 2/2/2024

SHEET 2 OF 2
DETAILS OF INTERMEDIATE BENT 4
ROUTE SECTION
ARKANSAS STATE HIGHWAY COMMISSION
LITTLE ROCK, ARKANSAS

DRAWN BY:	KDH	DATE:	09/2020	FILENAME:	B070458X1_B42.dgn
CHECKED BY:	SRN	DATE:	05/2021		
DESIGNED BY:	AHS	DATE:	08/2020	SCALE:	As Shown
BRIDGE NO.	07537		DRAWING NO.	64262	

Scott.Thornsberry 2/2/2024 4:46:50 PM
WORKSPACE: ARDOT
Y:\Projects\ARDOT_169387_070458 UPRR Grade Separation\Design\BRIDGE\Drawings\B070458X1_B42.dgn
REVISED DATE:

DATE REVISED	DATE FILMED	DATE REVISED	DATE FILMED	FED.RD. DIST.NO.	STATE	FED.AID PROJ.NO.	SHEET NO.	TOTAL SHEETS
				6	ARK.			
				JOB NO.		070458	71	125

(1) 07537 - BENT 5 - 64263

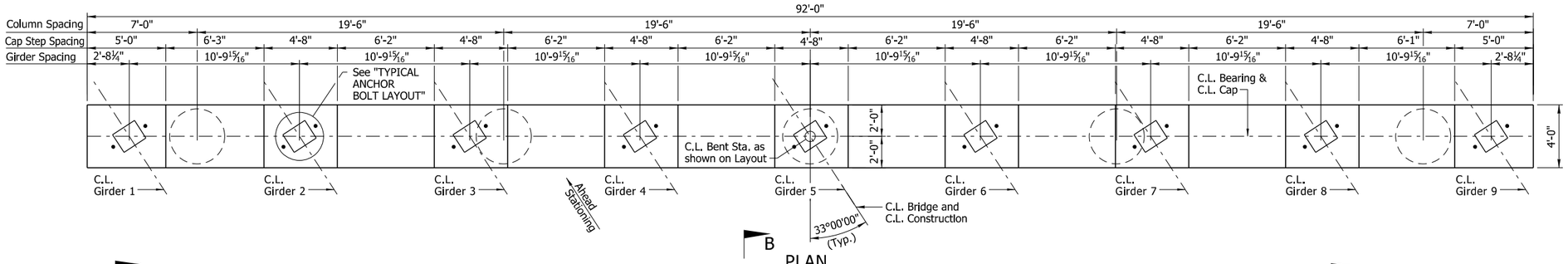

PLAN

¼" = 1'-0"

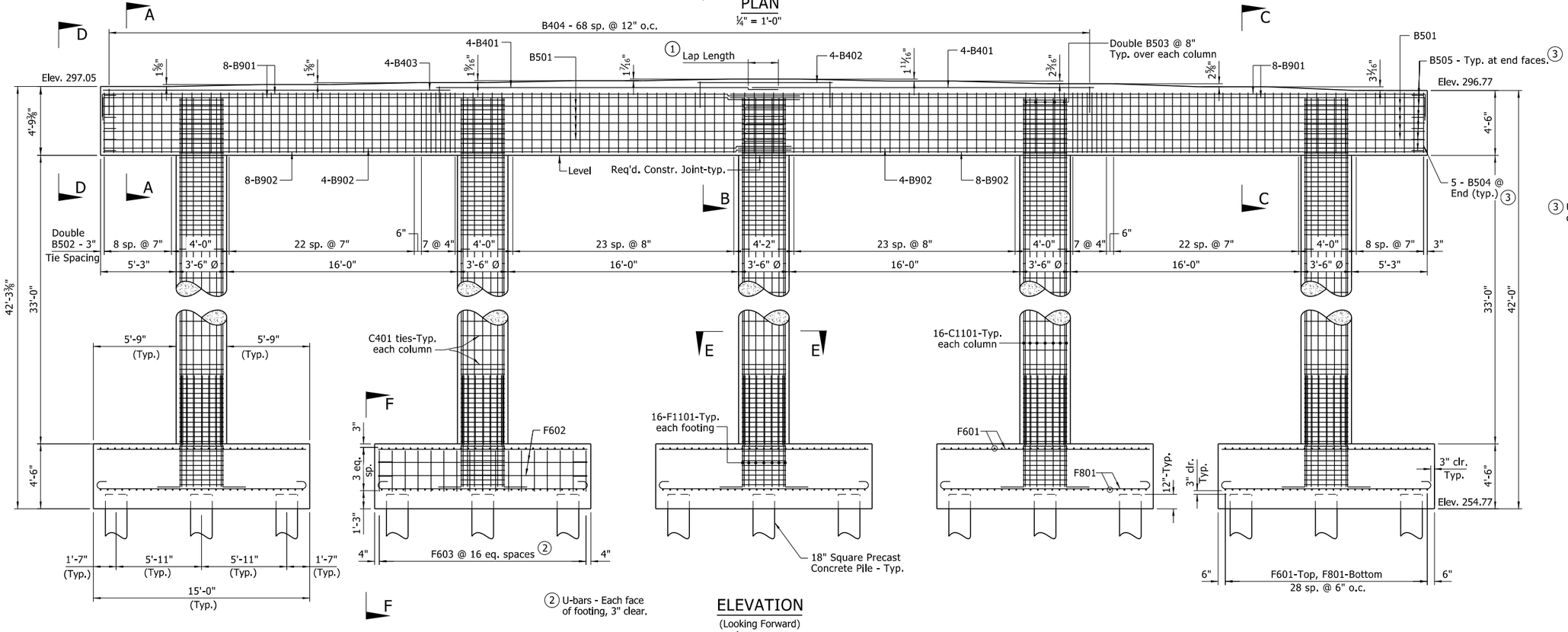

(3) U-bars - Each end of cap, 3" clear.

(2) U-bars - Each face of footing, 3" clear.

ELEVATION

(Looking Forward)
¼" = 1'-0"

GENERAL NOTES

For additional "GENERAL NOTES", see Std. Dwg. No. 55006.

If anchor bolts are drilled into cap, top reinforcing bars shall be properly placed to avoid damage.

For additional information see "LAYOUT OF BRIDGE".

For details of elastomeric bearings, see Dwg. Nos. 64272 - 64273.

For "END VIEW", "SECTION A-A", "SECTION B-B", "SECTION C-C", "VIEW D-D", "SECTION E-E", & "VIEW F-F" see Dwg. No. 64264.

For details of Concrete Piling, See Std. Dwg. No. 55022.

(1) Lap Length: 2'-3" for #4 bars
2'-9" for #5 bars
6'-3" for #9 bars in top of cap
4'-10" for #9 bars in bottom of cap

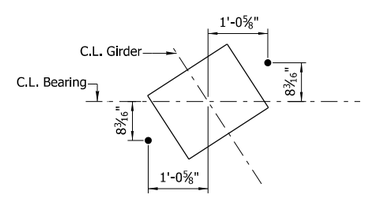

TYPICAL ANCHOR BOLT LAYOUT

¾" = 1'-0"

For details of elastomeric bearings, see Dwg. Nos. 64272 - 64273.

STATE OF ARKANSAS LICENSED PROFESSIONAL ENGINEER No.14501 STEPHEN F. HARPER

2/2/2024

BRIDGE ENGINEER
PRINT DATE: 2/2/2024

DRAWN BY: KDH DATE: 10/2020
CHECKED BY: SRN DATE: 05/2021
DESIGNED BY: AHS DATE: 05/2020
BRIDGE NO. 07537

FILENAME: B070458X1_B51.dgn
SCALE: As Shown
DRAWING NO. 64263

SHEET 1 OF 2
DETAILS OF INTERMEDIATE BENT 5
ROUTE SECTION
ARKANSAS STATE HIGHWAY COMMISSION
LITTLE ROCK, ARKANSAS

Scott.Thornsberry 2/2/2024 4:46:51 PM
WORKSPACE: ARDOT
Y:\Projects\ARDOT_169387_070458 UPRR Grade Separation\Design\BRIDGE\Drawings\B070458X1_B51.dgn
REVISED DATE:

DATE REVISED	DATE FILMED	DATE REVISED	DATE FILMED	FED.RD. DIST.NO.	STATE	FED.AID PROJ.NO.	SHEET NO.	TOTAL SHEETS
				6	ARK.			
				JOB NO.		070458	72	125
				(1)	07537 - BENT 5 - 64264			

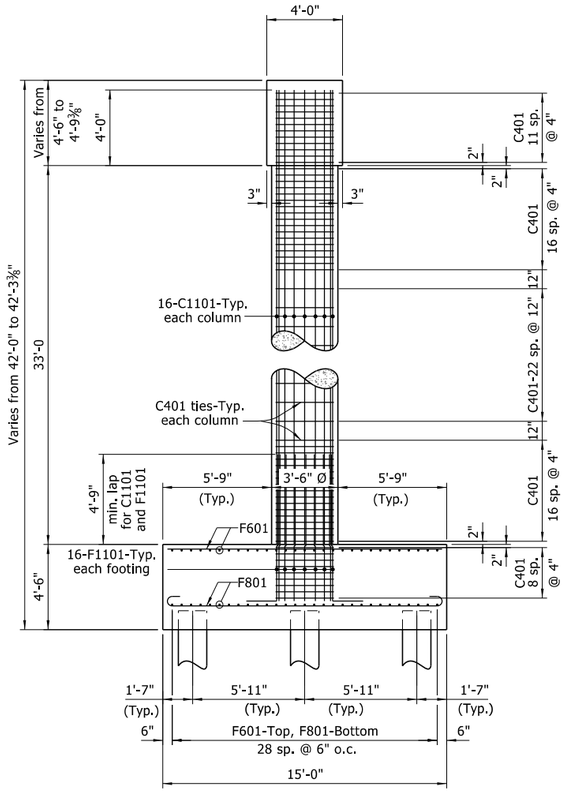

END VIEW

¼" = 1'-0"

(Typ.)

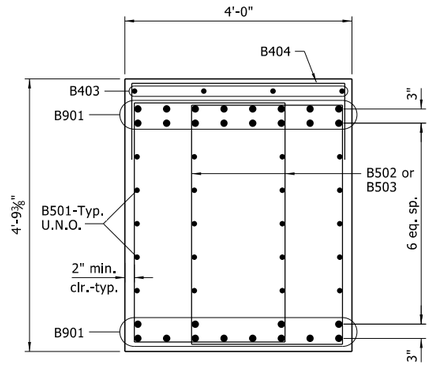

SECTION A-A

¾" = 1'-0"

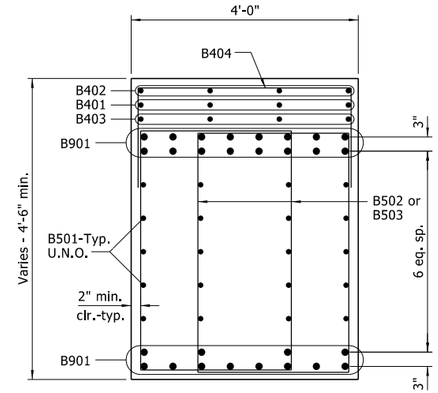

SECTION B-B

¾" = 1'-0"

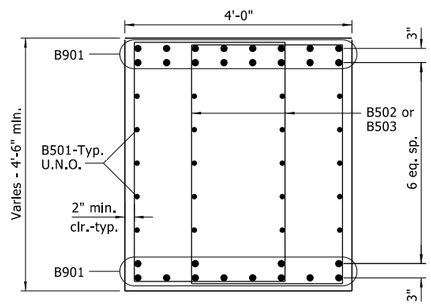

SECTION C-C

¾" = 1'-0"

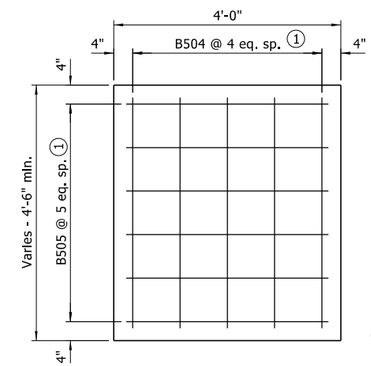

VIEW E-E

¾" = 1'-0"

(1) U-bars - Each end of cap, 3" clear.

BAR LIST- PER BENT

MARK	NO. REQ'D.	LENGTH	PIN DIA.
B401	8	24'-0"	Str.
B402	4	9'-4"	Str.
B403	4	24'-2"	Str.
B404	69	7'-2"	2"
C401	390	10'-9"	3"
B501	40	47'-3"	Str.
B502	256	14'-1"	2½"
B503	50	10'-9"	2½"
B504	10	5'-6"	3¾"
B505	12	4'-6"	3¾"
F601	290	14'-6"	Str.
F602	40	16'-3"	4½"
F603	320	4'-7"	4½"
F801	290	16'-4"	6"
B901	32	50'-3½"	9"
B902	24	48'-3"	Str.
C1101	80	37'-0"	Str.
F1101	80	9'-6"	11¼"

BENDING DIAGRAMS
Dimensions are out to out of bars.

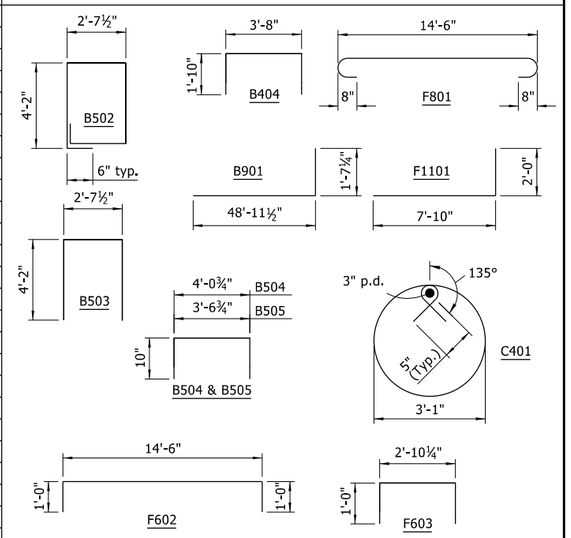

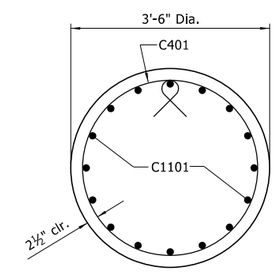

SECTION E-E

¾" = 1'-0"

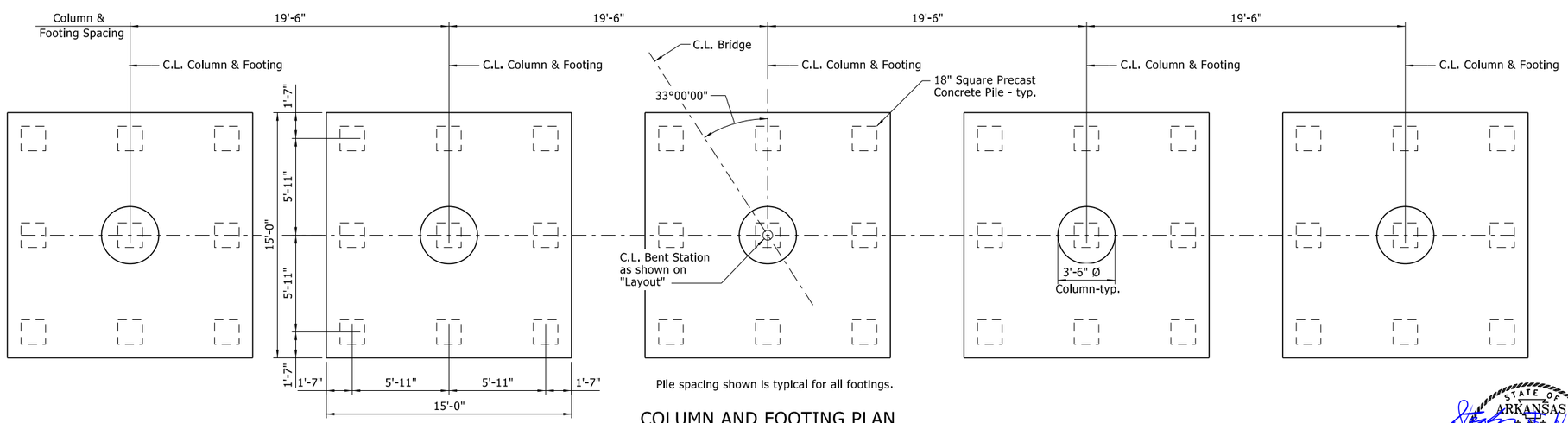

Pile spacing shown is typical for all footings.

COLUMN AND FOOTING PLAN

¼" = 1'-0"

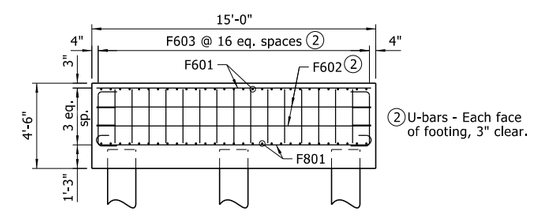

VIEW F-F

¼" = 1'-0"

STATE OF ARKANSAS LICENSED PROFESSIONAL ENGINEER No.14501 STEPHEN F. HARPER

2/2/2024

BRIDGE ENGINEER
PRINT DATE: 2/2/2024

SHEET 2 OF 2
DETAILS OF INTERMEDIATE BENT 5
ROUTE SECTION
ARKANSAS STATE HIGHWAY COMMISSION
LITTLE ROCK, ARKANSAS

DRAWN BY:	KDH	DATE:	06/2020	FILENAME:	B070458X1_B52.dgn
CHECKED BY:	SRN	DATE:	05/2021		
DESIGNED BY:	AHS	DATE:	08/2020	SCALE:	As Shown
BRIDGE NO.	07537			DRAWING NO.	64264

Scott.Thornsberry 2/2/2024 4:46:52 PM
WORKSPACE: ARDOT
Y:\Projects\ARDOT_169387_070458 UPRR Grade Separation\Design\BRIDGE\Drawings\B070458X1_B52.dgn
REVISED DATE:

DATE REVISED	DATE FILMED	DATE REVISED	DATE FILMED	FED.RD. DIST.NO.	STATE	FED.AID PROJ.NO.	SHEET NO.	TOTAL SHEETS
				6	ARK.			
				JOB NO.		070458	73	125

(1) 07537 - BENT 6 - 64265

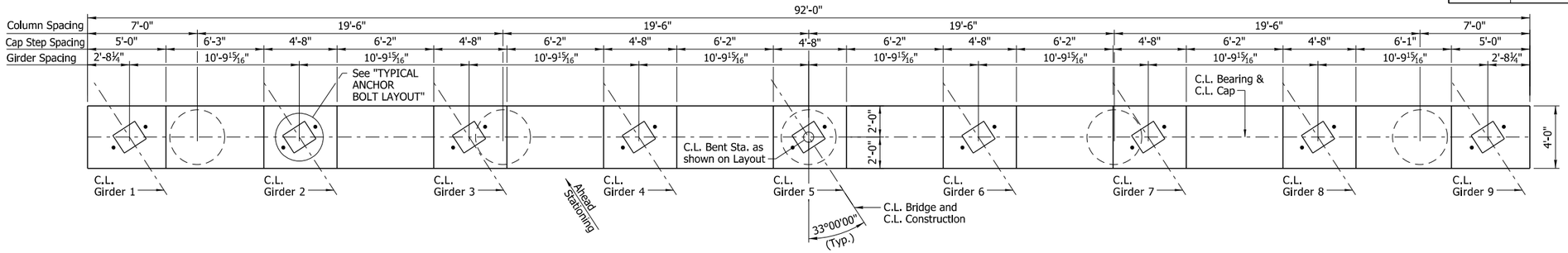

PLAN

¼" = 1'-0"

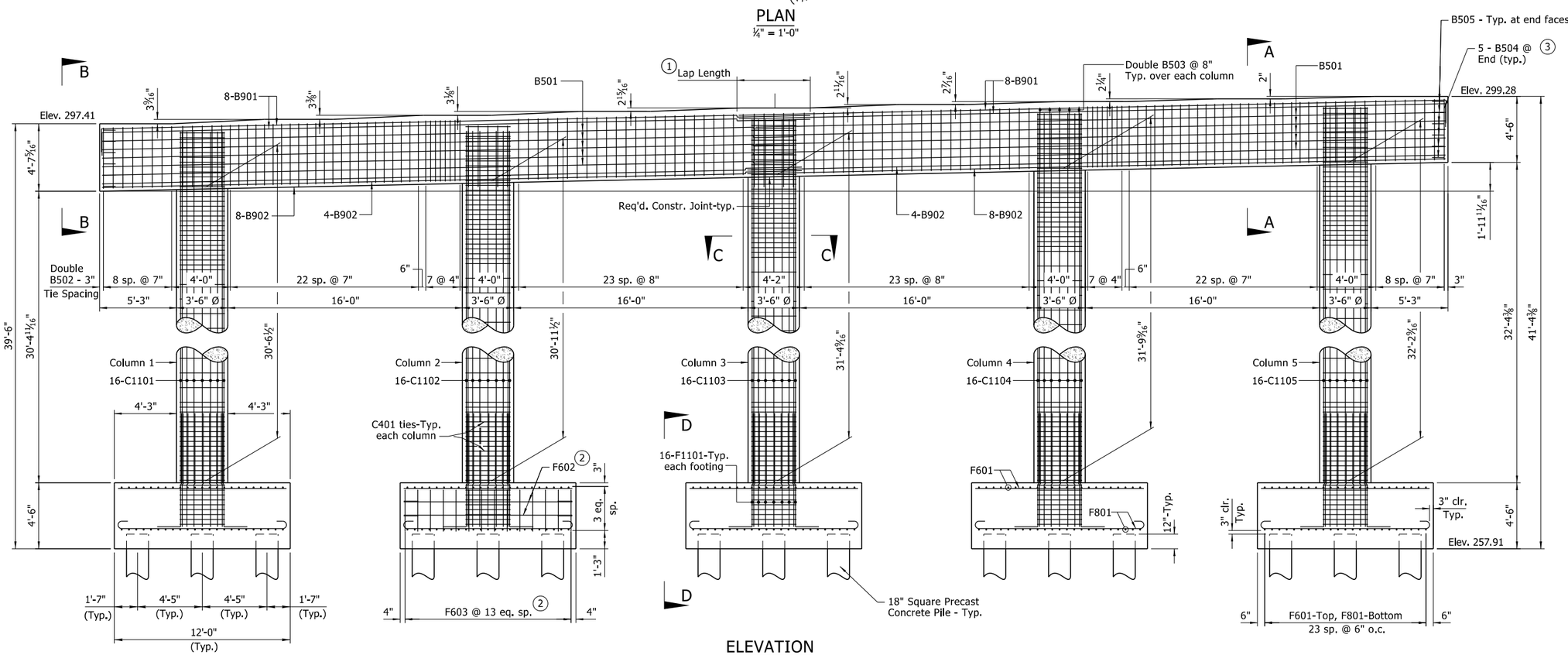

(3) U-bars - Each end of cap, 3" clear.

(2) U-bars - Each face of footing, 3" clear.

ELEVATION

(Looking Forward)
¼" = 1'-0"

GENERAL NOTES

For additional "GENERAL NOTES", see Std. Dwg. No. 55006.

If anchor bolts are drilled into cap, top reinforcing bars shall be properly placed to avoid damage.

For additional information see "LAYOUT OF BRIDGE".

For details of elastomeric bearings, see Dwg. Nos. 64272 - 64273.

For "END VIEW", "SECTION A-A", "VIEW B-B", "SECTION C-C", & "VIEW D-D" see Dwg. No. 64266.

For details of Concrete Piling, See Std. Dwg. No. 55022.

(1) Lap Length: 2'-9" for #5 bars
6'-3" for #9 bars in top of cap
4'-10" for #9 bars in bottom of cap

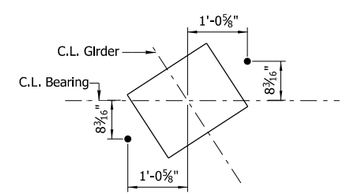

TYPICAL ANCHOR BOLT LAYOUT

¾" = 1'-0"

For details of elastomeric bearings, see Dwg. Nos. 64272 - 64273.

STATE OF ARKANSAS LICENSED PROFESSIONAL ENGINEER No.14501 STEPHEN F. HARPER

2/2/2024

BRIDGE ENGINEER
PRINT DATE: 2/2/2024

DRAWN BY: KDH DATE: 08/2019
CHECKED BY: SRN DATE: 05/2021
DESIGNED BY: AHS DATE: 08/2020
BRIDGE NO. 07537

FILENAME: B070458X1_B61.dgn
SCALE: As Shown
DRAWING NO. 64265

SHEET 1 OF 2
DETAILS OF INTERMEDIATE BENT 6
ROUTE SECTION
ARKANSAS STATE HIGHWAY COMMISSION
LITTLE ROCK, ARKANSAS

Scott.Thornsberry 2/2/2024 4:46:53 PM
WORKSPACE: ARDOT
Y:\Projects\ARDOT_169387_070458 UPRR Grade Separation\Design\BRIDGE\Drawings\B070458X1_B61.dgn
REVISED DATE:

DATE REVISED	DATE FILMED	DATE REVISED	DATE FILMED	FED.RD. DIST.NO.	STATE	FED.AID PROJ.NO.	SHEET NO.	TOTAL SHEETS
				6	ARK.			
				JOB NO.		070458	74	125
				(1)	07537 - BENT 6 - 64266			

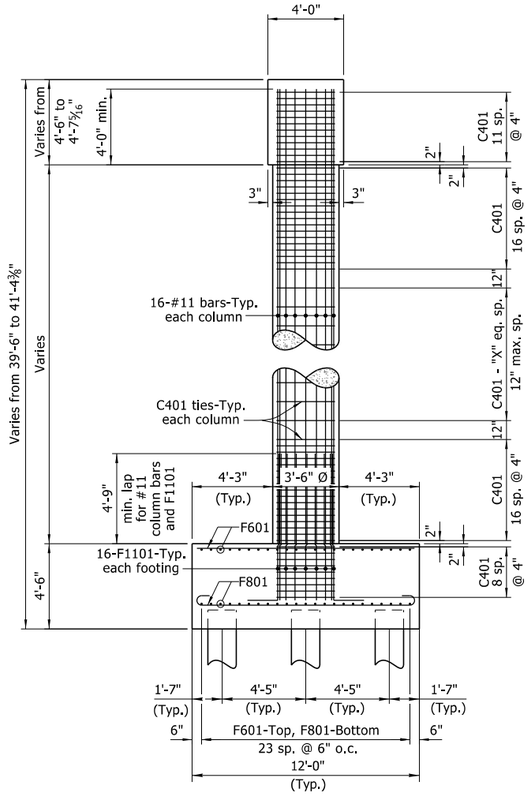

END VIEW

¼" = 1'-0"

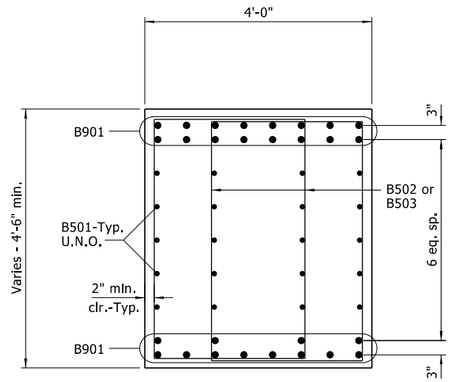

SECTION A-A

¾" = 1'-0"

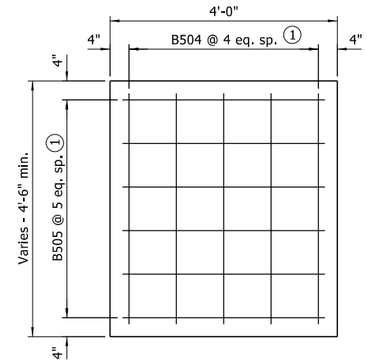

(1) U-bars - Each end of cap, 3" clear.

VIEW B-B

¾" = 1'-0"

TABLE OF VARIABLES

Column	"X"
1	18
2	18
3	19
4	19
5	20

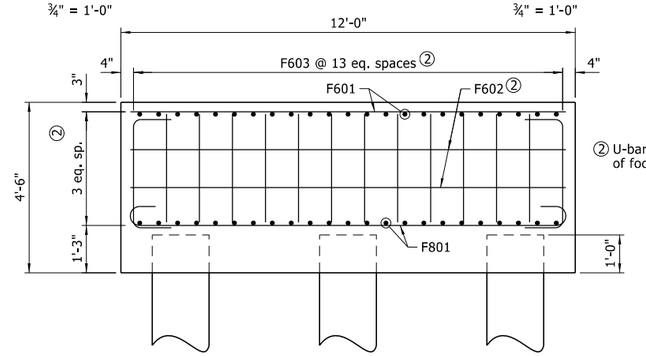

(2) U-bars - Each face of footing. 3" clear.

VIEW D-D

½" = 1'-0"

BAR LIST- PER BENT

MARK	NO. REQ'D.	LENGTH	PIN DIA.
C401	374	10'-9"	3"
B501	40	47'-3"	Str.
B502	256	14'-1"	2½"
B503	50	10'-9"	2½"
B504	10	5'-6"	3¾"
B505	12	4'-6"	3¾"
F601	240	11'-6"	Str.
F602	40	13'-3"	4½"
F603	260	4'-7"	4½"
F801	240	13'-4"	6"
B901	32	50'-3½"	9"
B902	24	48'-3"	Str.
C1101	16	34'-7"	Str.
C1102	16	35'-0"	Str.
C1103	16	35'-5"	Str.
C1104	16	35'-10"	Str.
C1105	16	36'-3"	Str.
F1101	80	9'-6"	11¼"

BENDING DIAGRAMS
Dimensions are out to out of bars.

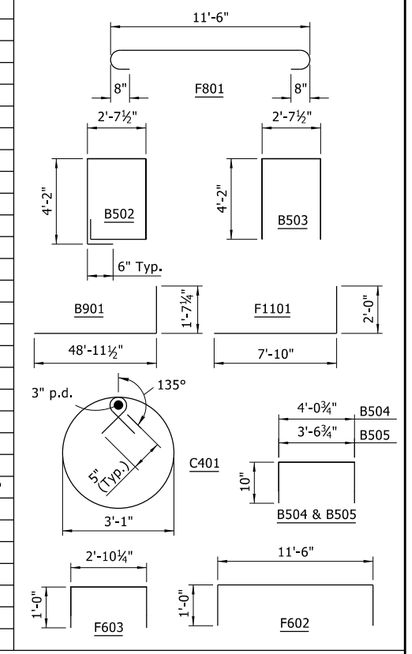

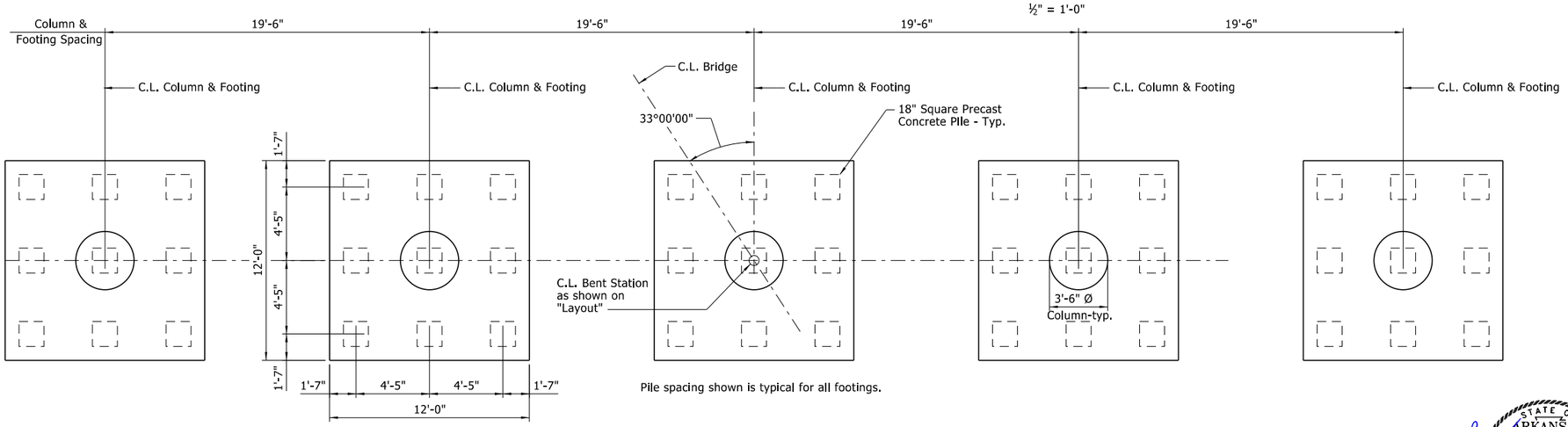

COLUMN AND FOOTING PLAN

¼" = 1'-0"

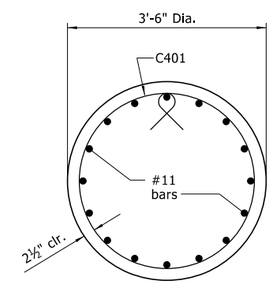

SECTION C-C

¾" = 1'-0"

STATE OF ARKANSAS
LICENSED PROFESSIONAL ENGINEER
No.14501
STEPHEN F. HARPER
2/2/2024

BRIDGE ENGINEER
PRINT DATE: 2/2/2024

SHEET 2 OF 2
DETAILS OF INTERMEDIATE BENT 6

ROUTE SECTION

ARKANSAS STATE HIGHWAY COMMISSION

LITTLE ROCK, ARKANSAS

DRAWN BY: KDH	DATE: 10/2020	FILENAME: B070458X1_B62.dgn		
CHECKED BY: SRN	DATE: 05/2021			
DESIGNED BY: AHS	DATE: 08/2020	SCALE: As Shown		
BRIDGE NO. 07537	DRAWING NO. 64266			

Scott.Thornsberry 2/2/2024 4:46:53 PM
WORKSPACE: ARDOT
Y:\Projects\ARDOT_169387_070458 UPRR Grade Separation\Design\BRIDGE\Drawings\B070458X1_B62.dgn
REVISED DATE:

DATE REVISED	DATE FILMED	DATE REVISED	DATE FILMED	FED.RD. DIST.NO.	STATE	FED.AID PROJ.NO.	SHEET NO.	TOTAL SHEETS
				6	ARK.			
				JOB NO.		070458	75	125
				1	07537 - BENT 7 - 64267			

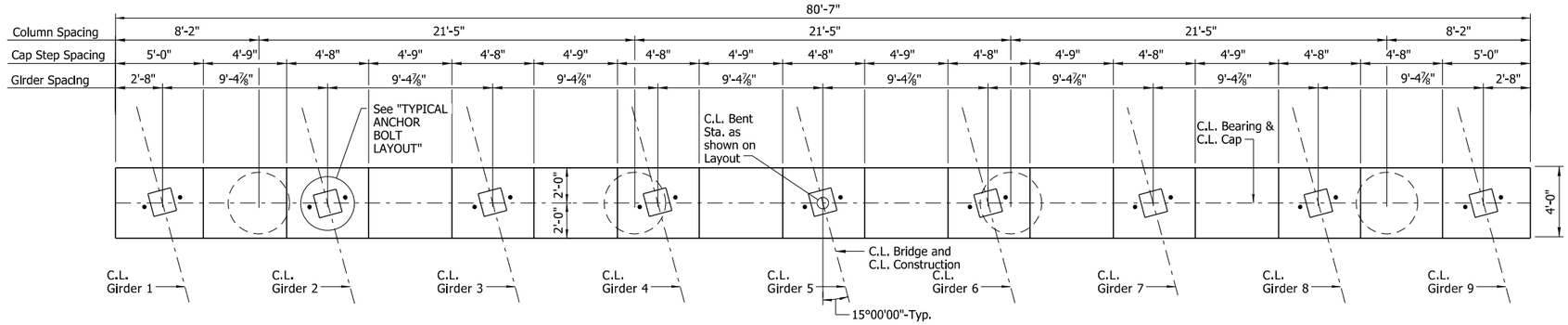

PLAN

¼" = 1'-0"

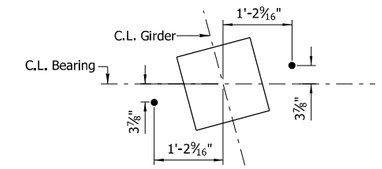

TYPICAL ANCHOR BOLT LAYOUT

¾" = 1'-0"

For details of elastomeric bearings, see Dwg. Nos. 64272 - 64273.

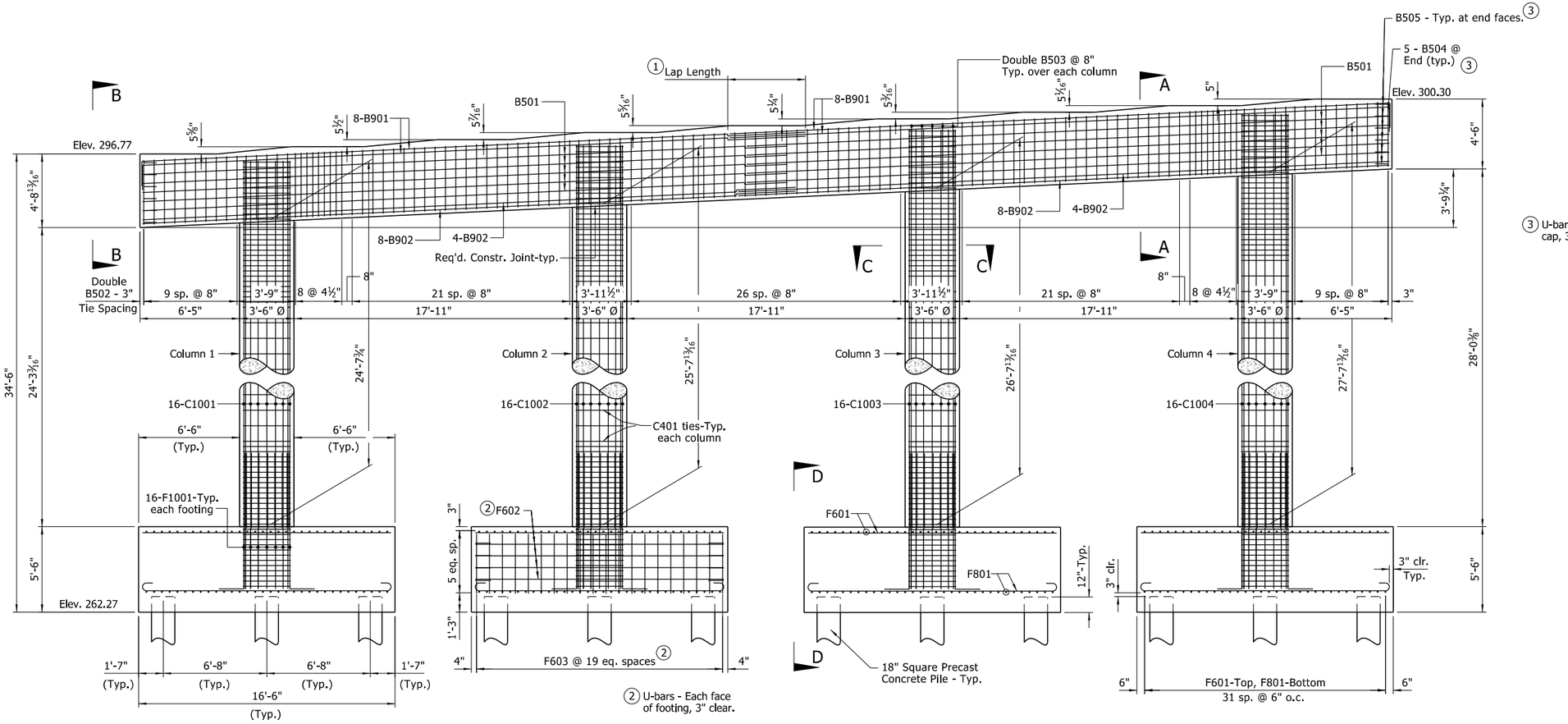

(3) U-bars - Each end of cap, 3" clear.

(2) U-bars - Each face of footing, 3" clear.

ELEVATION

(Looking Forward)
¼" = 1'-0"

GENERAL NOTES

For additional "GENERAL NOTES", see Std. Dwg. No. 55006.

If anchor bolts are drilled into cap, top reinforcing bars shall be properly placed to avoid damage.

For additional information see "LAYOUT OF BRIDGE".

For details of elastomeric bearings, see Dwg. Nos. 64272 - 64273.

For "END VIEW", "SECTION A-A", "VIEW B-B", "SECTION C-C", & "VIEW D-D" see Dwg. No. 64268.

For details of Concrete Piling, See Std. Dwg. No. 55022.

(1) Lap Length: 2'-9" for #5 bars
6'-3" for #9 bars in top of cap
4'-10" for #9 bars in bottom of cap

STATE OF ARKANSAS
LICENSED PROFESSIONAL ENGINEER
No.14501
STEPHEN F. HARPER
2/2/2024

BRIDGE ENGINEER
PRINT DATE: 2/2/2024

SHEET 1 OF 2
DETAILS OF INTERMEDIATE BENT 7
ROUTE SECTION
ARKANSAS STATE HIGHWAY COMMISSION
LITTLE ROCK, ARKANSAS

DRAWN BY:	KDH	DATE:	11/2020	FILENAME:	B070458X1_B71.dgn
CHECKED BY:	SRN	DATE:	05/2021		
DESIGNED BY:	AHS	DATE:	08/2020	SCALE:	As Shown
BRIDGE NO.	07537		DRAWING NO.	64267	

Scott.Thornsberry 2/2/2024 4:46:54 PM
WORKSPACE: ARDOT
Y:\Projects\ARDOT_169387_070458 UPRR Grade Separation\Design\BRIDGE\Drawings\B070458X1_B71.dgn
REVISED DATE:

DATE REVISED	DATE FILMED	DATE REVISED	DATE FILMED	FED.RD. DIST.NO.	STATE	FED.AID PROJ.NO.	SHEET NO.	TOTAL SHEETS
				6	ARK.			
				JOB NO.		070458	76	125

(I) 07537 - BENT 7 - 64268

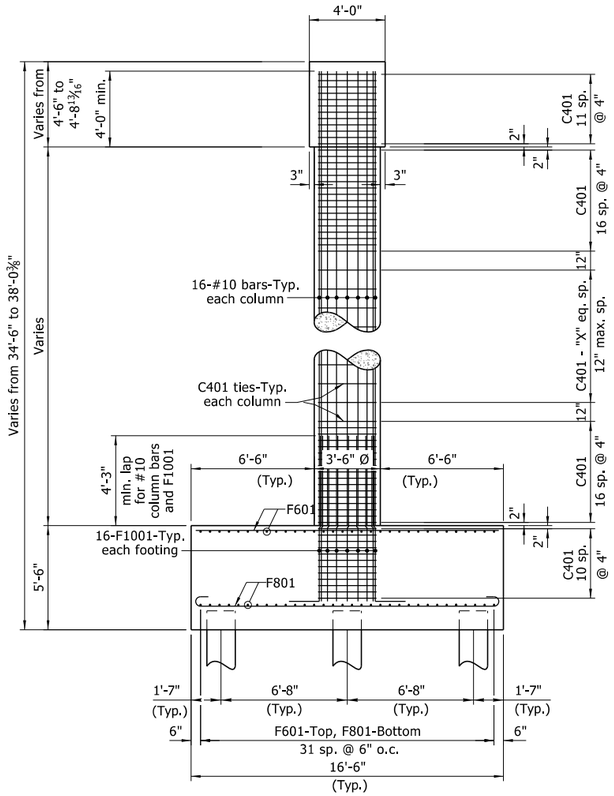

END VIEW

¼" = 1'-0"

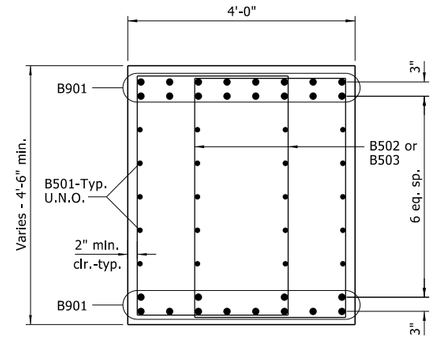

SECTION A-A

¾" = 1'-0"

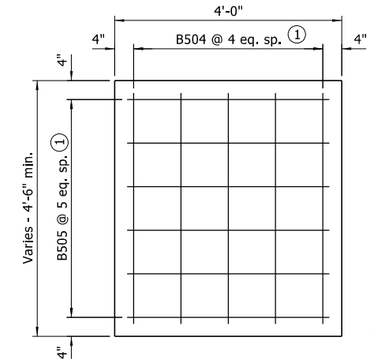

VIEW B-B

¾" = 1'-0"

(1) U-bars - Each end of cap, 3" clear.

TABLE OF VARIABLES

Column	"X"
1	12
2	13
3	14
4	15

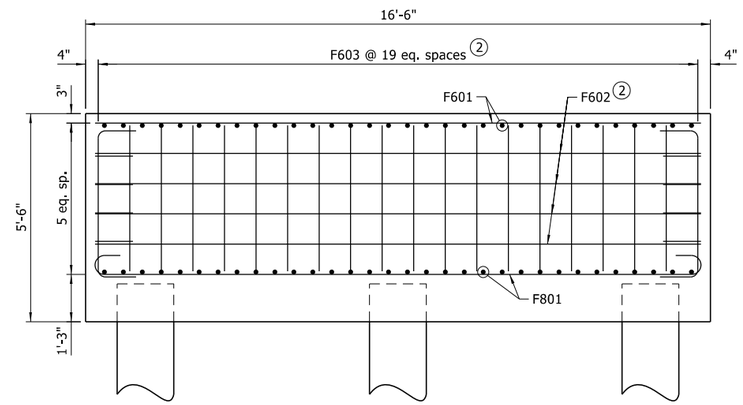

VIEW D-D

½" = 1'-0"

(2) U-bars - Each face of footing, 3" clear.

BAR LIST- PER BENT

MARK	NO. REQ'D.	LENGTH	PIN DIA.
C401	286	10'-9"	3"
B501	40	41'-6"	Str.
B502	218	14'-1"	2½"
B503	40	10'-9"	2½"
B504	10	5'-6"	3¾"
B505	12	4'-6"	3¾"
F601	256	16'-0"	Str.
F602	64	17'-9"	4½"
F603	304	5'-7"	4½"
F801	256	17'-10"	6"
B901	32	44'-7½"	9"
B902	24	42'-7"	Str.
C1001	16	28'-8"	Str.
C1002	16	29'-8"	Str.
C1003	16	30'-8"	Str.
C1004	16	31'-8"	Str.
F1001	64	9'-10"	10"

BENDING DIAGRAMS
Dimensions are out to out of bars.

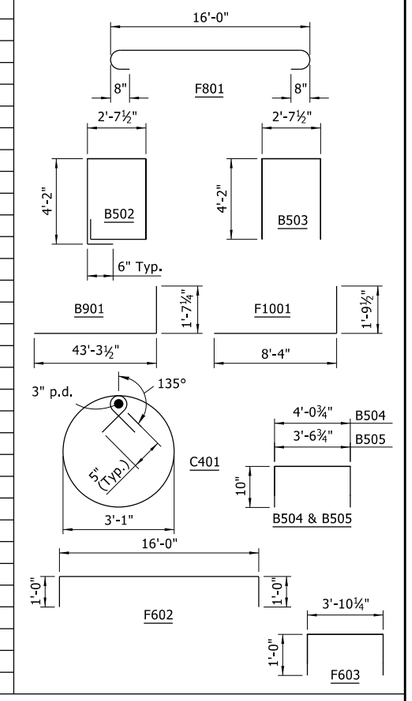

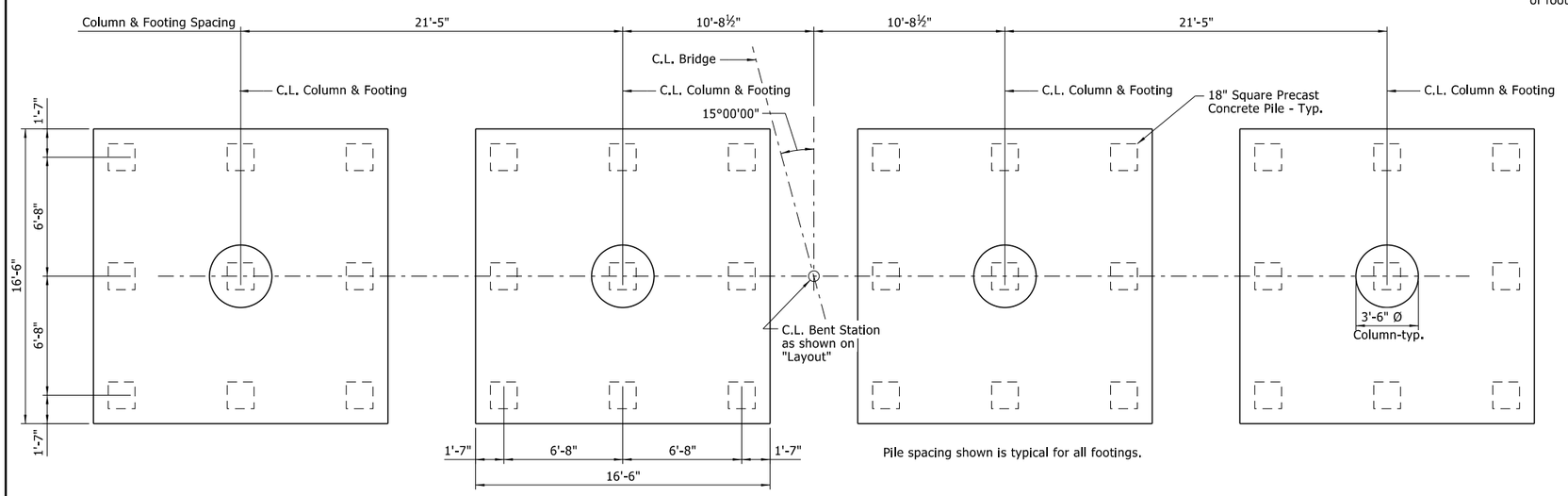

Pile spacing shown is typical for all footings.

COLUMN AND FOOTING PLAN

¼" = 1'-0"

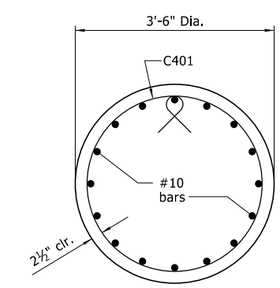

SECTION C-C

¾" = 1'-0"

STATE OF ARKANSAS
LICENSED PROFESSIONAL ENGINEER
No.14501
STEPHEN F. HARPER
2/2/2024

BRIDGE ENGINEER
PRINT DATE: 2/2/2024

SHEET 2 OF 2
DETAILS OF INTERMEDIATE BENT 7
ROUTE SECTION
ARKANSAS STATE HIGHWAY COMMISSION
LITTLE ROCK, ARKANSAS

DRAWN BY: KDH DATE: 11/2020 FILENAME: B070458X1_B72.dgn
CHECKED BY: SRN DATE: 05/2021
DESIGNED BY: AHS DATE: 08/2020 SCALE: As Shown
BRIDGE NO. 07537 DRAWING NO. 64268

Scott.Thornsberry 2/2/2024 4:46:55 PM
WORKSPACE: ARDOT
Y:\Projects\ARDOT_169387_070458 UPRR Grade Separation\Design\BRIDGE\Drawings\B070458X1_B72.dgn
REVISED DATE:

DATE REVISED	DATE FILMED	DATE REVISED	DATE FILMED	FED.RD. DIST.NO.	STATE	FED.AID PROJ.NO.	SHEET NO.	TOTAL SHEETS
				6	ARK.			
				JOB NO.		070458	77	125
				(1)	07537 - BENT 8 - 64269			

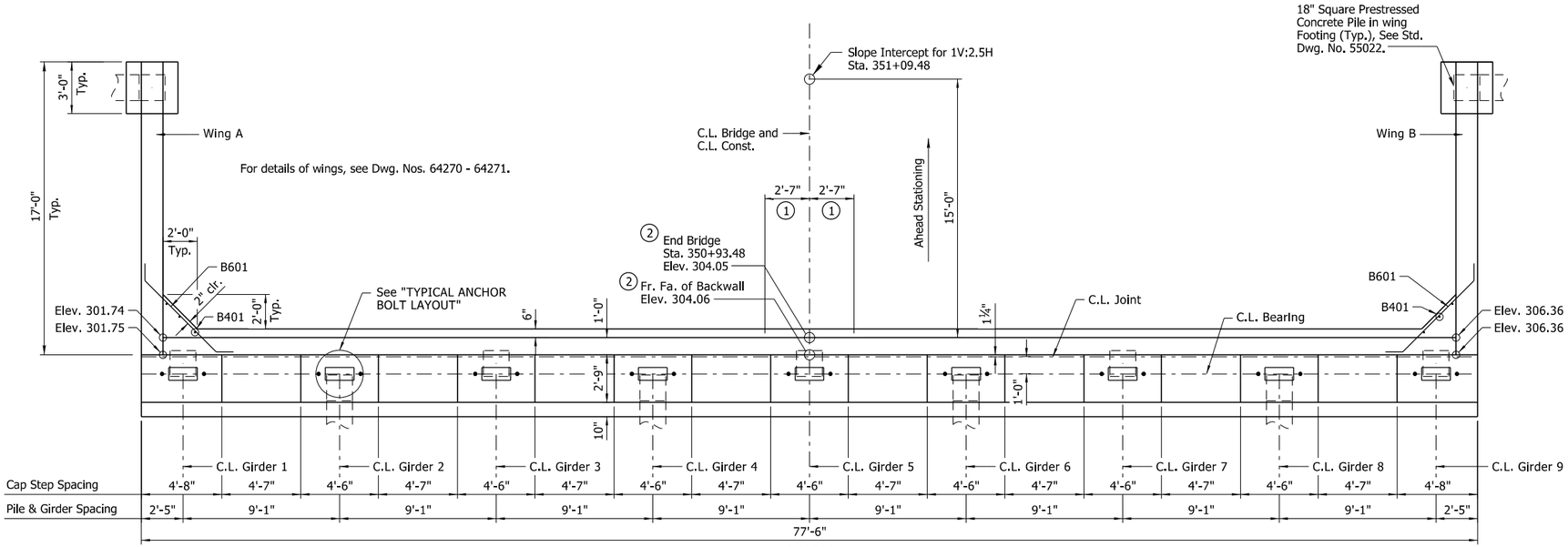

PLAN

¼" = 1'-0"

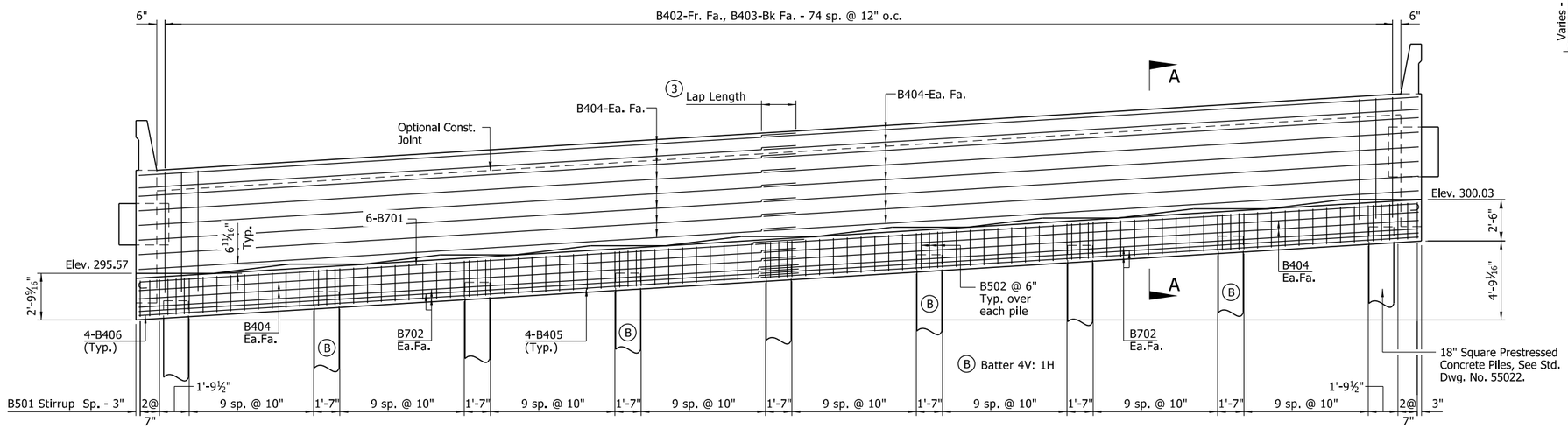

ELEVATION

(Looking Ahead)

¼" = 1'-0"

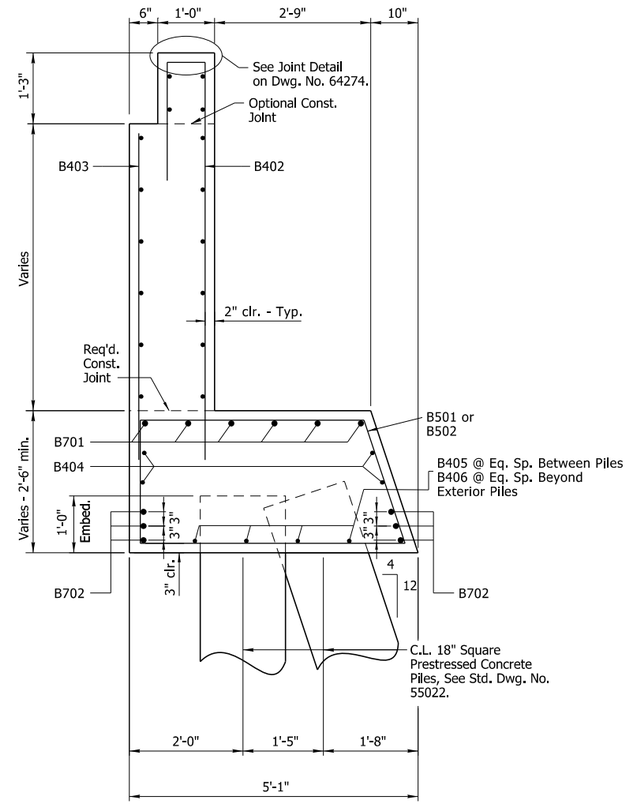

SECTION A-A

¾" = 1'-0"

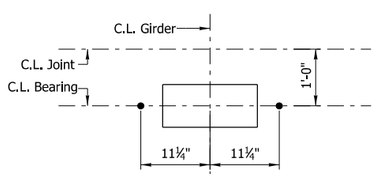

TYPICAL ANCHOR BOLT LAYOUT

¾" = 1'-0"

For details of elastomeric bearings, see Dwg. Nos. 64272 - 64273.

Notes:

For details of elastomeric bearings, see Dwg. Nos. 64272 - 64273.

(1) See "ROUNDING DETAIL", Dwg. No. 55007.

(2) Measured to Working Point. See "ROUNDING DETAIL", Dwg. No. 55007.

(3) Lap Length: 2'-3" for #4 bars
3'-10" for #7 bars in top of cap
4'-4" for #7 bars in bottom of cap

STATE OF ARKANSAS
LICENSED PROFESSIONAL ENGINEER
No.14501
STEPHEN F. HARPER
2/2/2024

BRIDGE ENGINEER
PRINT DATE: 2/2/2024

SHEET 1 OF 3
DETAILS OF END BENT 8
ROUTE SECTION
ARKANSAS STATE HIGHWAY COMMISSION
LITTLE ROCK, ARKANSAS

DRAWN BY:	KDH	DATE:	11/2020	FILENAME:	B070458X1_B81.dgn
CHECKED BY:	SRN	DATE:	05/2021		
DESIGNED BY:	AHS	DATE:	08/2020	SCALE:	As Shown
BRIDGE NO.	07537		DRAWING NO.	64269	

Scott.Thornsberry 2/2/2024 4:46:55 PM
WORKSPACE: ARDOT
Y:\Projects\ARDOT_169387_070458 UPRR Grade Separation\Design\BRIDGE\Drawings\B070458X1_B81.dgn
REVISED DATE:

DATE REVISED	DATE FILMED	DATE REVISED	DATE FILMED	FED.RD. DIST.NO.	STATE	FED.AID PROJ.NO.	SHEET NO.	TOTAL SHEETS
				6	ARK.			
				JOB NO.		070458	78	125
				(1)	07537 - BENT 8 - 64270			

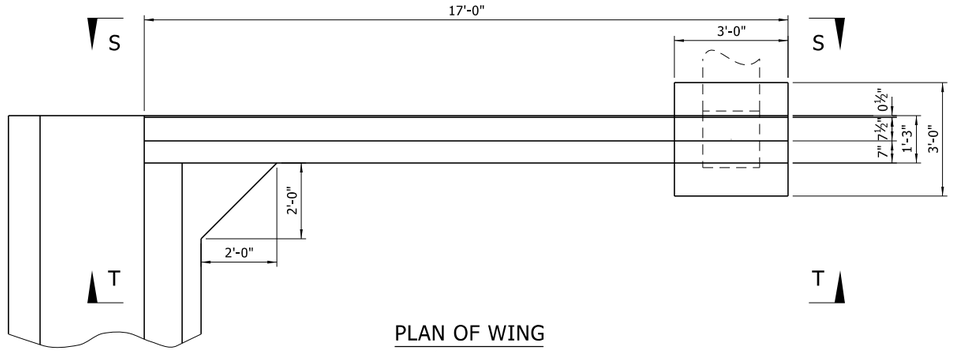

PLAN OF WING

½" = 1'-0"

TABLE OF VARIABLES

WING	ELEV. "A"	ELEV. "B"	"C"	"D"
A	301.75	301.48	5'-8¾"	11⅝"
B	306.36	306.28	5'-11 1/16"	9 15/16"

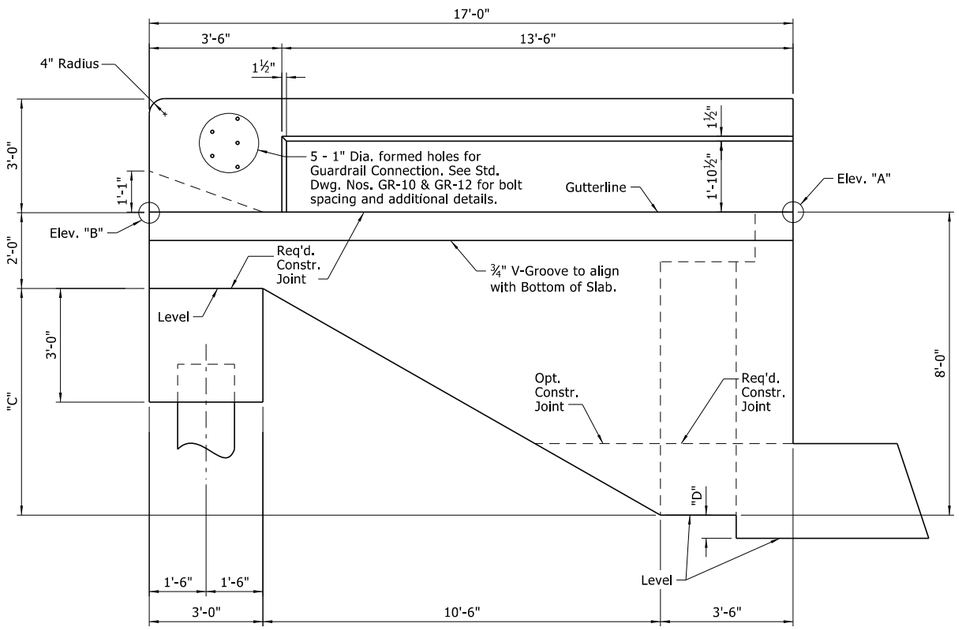

VIEW S-S

½" = 1'-0"

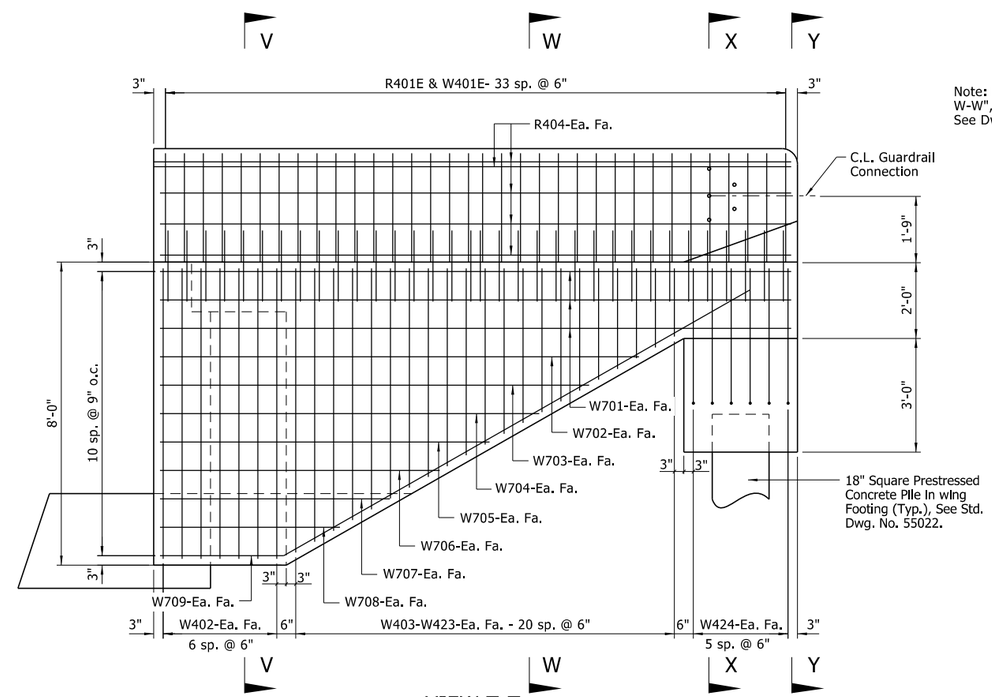

VIEW T-T

½" = 1'-0"

Note: For "SECTION V-V", "SECTION W-W", "SECTION X-X" & "SECTION Y-Y", See Dwg. No. 64271.

NOTES:

For "GENERAL NOTES" see Std. Dwg. No. 55006.

For details of Concrete Piling, See Std. Dwg. No. 55022.

No portion of the backwall shall be poured until the girders are in place. Refer to "EXPANSION DEVICE INSTALLATION AT END BENTS" note on Dwg. No. 64274.

Finish top of backwall to match the bridge deck.

Structural steel in end bents shall be ASTM A709, Gr. 50W and shall be paid for as "STRUCTURAL STEEL IN PLATE GIRDER SPANS (A709, GR. 50W)".

For additional information, see "LAYOUT OF BRIDGE".

No heavy construction equipment shall be allowed within 10' of the backwall until the deck concrete placement for the adjacent span has been complete.

BAR LIST

MARK	NO. REQ'D.	LENGTH	P.D.	MARK	NO. REQ'D.	LENGTH	P.D.
B401	6	6'-5"	Str.	W401E	68	3'-11"	3¾"
B402	75	9'-1"	2"	W402	28	7'-8"	Str.
B403	75	5'-10"	Str.	W403-W423	4 ea.	Var. 1'-9" to 7'-6"	Str.
B404	40	39'-8"	Str.				
B405	32	7'-3"	Str.	W424	24	3'-5"	2"
B406	8	1'-4"	Str.	W425	4	8'-5"	2"
				W701	12	16'-8"	Str.
B501	86	13'-6"	2½"	W702	4	12'-7"	Str.
B502	27	8'-2"	2½"	W703	4	11'-4"	Str.
				W704	4	10'-0"	Str.
B601	14	7'-10"	4½"	W705	4	8'-8"	Str.
				W706	4	7'-4"	Str.
B701	12	41'-4"	5¼"	W707	4	6'-0"	Str.
B702	12	40'-9"	Str.	W708	4	4'-9"	Str.
				W709	4	17'-6"	5¼"
F601	12	2'-6"	Str.				
				R401E	68	6'-4"	As Shown
				R402E	8	5'-6"	Str.
				R404E	16	16'-8"	Str.

BENDING DIAGRAMS

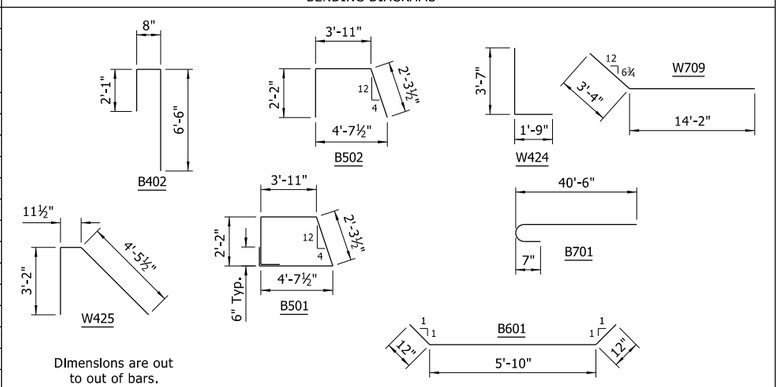

Dimensions are out to out of bars.

STATE OF ARKANSAS LICENSED PROFESSIONAL ENGINEER No.14501 STEPHEN F. HARPER

2/2/2024

BRIDGE ENGINEER
PRINT DATE: 2/2/2024

SHEET 2 OF 3
DETAILS OF END BENT 8

ROUTE SECTION

ARKANSAS STATE HIGHWAY COMMISSION

LITTLE ROCK, ARKANSAS

DRAWN BY:	KDH	DATE:	11/2020	FILENAME:	B070458X1_B82.dgn
CHECKED BY:	SRN	DATE:	05/2021		
DESIGNED BY:	AHS	DATE:	08/2020	SCALE:	As Shown
BRIDGE NO.	07537		DRAWING NO.	64270	

Scott.Thornsberry 2/2/2024 4:46:56 PM
WORKSPACE: ARDOT
Y:\Projects\ARDOT_169387_070458 UPRR Grade Separation\Design\BRIDGE\Drawings\B070458X1_B82.dgn
REVISED DATE:

DATE REVISED	DATE FILMED	DATE REVISED	DATE FILMED	FED.RD. DIST.NO.	STATE	FED.AID PROJ.NO.	SHEET NO.	TOTAL SHEETS
				6	ARK.			
				JOB NO.		070458	79	125
				(1)	07537 - BENT 8 - 64271			

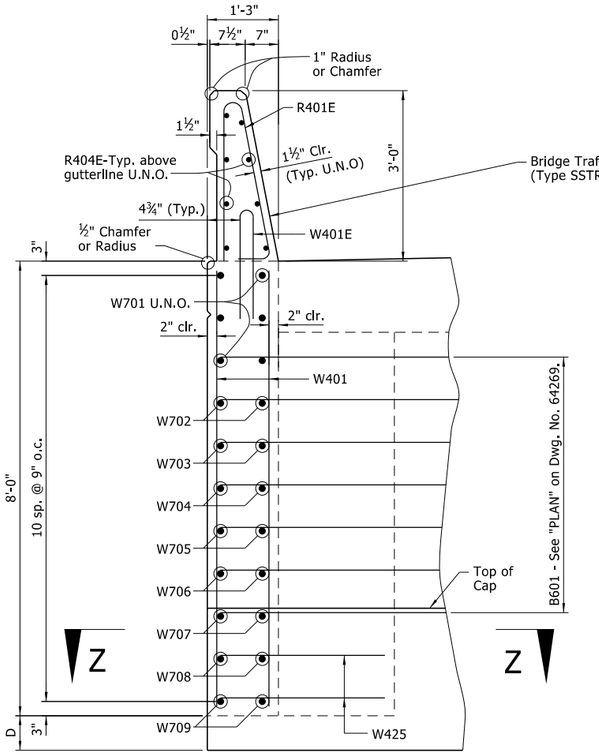

VIEW V-V

¾" = 1'-0"

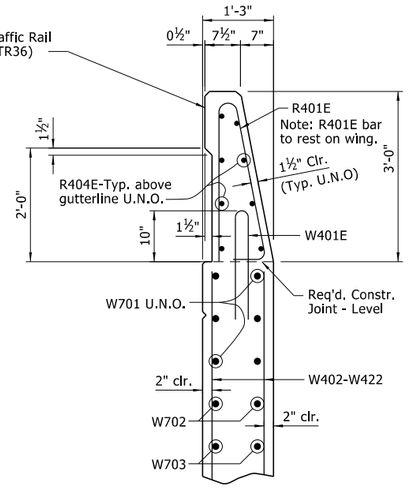

SECTION W-W

¾" = 1'-0"

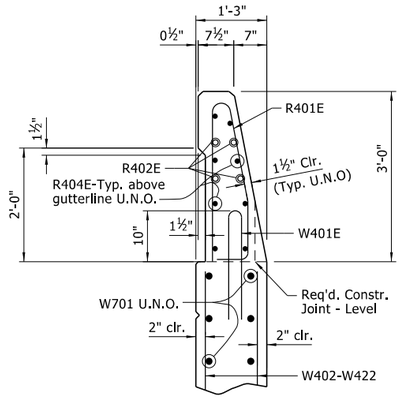

SECTION X-X

¾" = 1'-0"

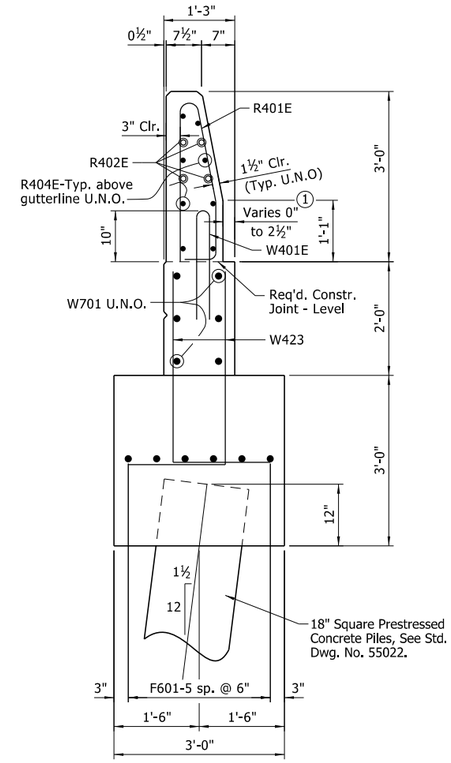

SECTION Y-Y

¾" = 1'-0"

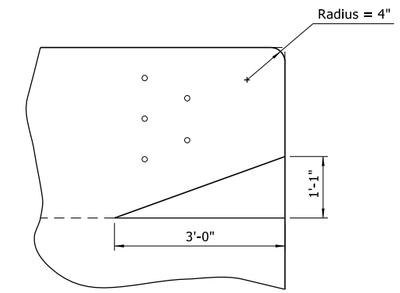

VERTICAL TAPER

¾" = 1'-0"

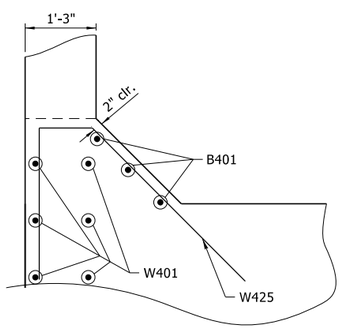

SECTION Z-Z

¾" = 1'-0"

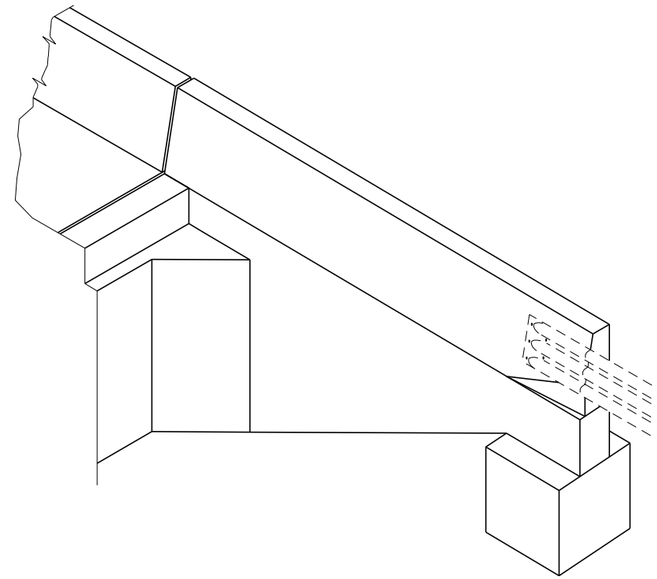

THREE DIMENSIONAL VIEW OF RAIL & END BENT

No Scale

Notes:

For rail reinforcing, "RAIL TERMINUS DETAILS", and additional details, See Std. Dwg. 55070.

(1) Field bend front leg of R401E bar as required to maintain minimum 1½" front face clearance within limits of taper.

STATE OF ARKANSAS LICENSED PROFESSIONAL ENGINEER No.14501 STEPHEN F. HARPER

2/2/2024

BRIDGE ENGINEER

PRINT DATE: 2/2/2024

SHEET 3 OF 3

DETAILS OF END BENT 8

ROUTE SECTION

ARKANSAS STATE HIGHWAY COMMISSION

LITTLE ROCK, ARKANSAS

DRAWN BY:	KDH	DATE:	11/2020	FILENAME:	B070458X1_B83.dgn
CHECKED BY:	SRN	DATE:	05/2021		
DESIGNED BY:	AHS	DATE:	08/2020	SCALE:	As Shown
BRIDGE NO.	07537		DRAWING NO.	64271	

Scott.Thornsberry 2/2/2024 4:46:57 PM
WORKSPACE: ARDOT
Y:\Projects\ARDOT_169387_070458 UPRR Grade Separation\Design\BRIDGE\Drawings\B070458X1_B83.dgn
REVISED DATE:

DATE REVISED	DATE FILMED	DATE REVISED	DATE FILMED	FED.RD. DIST.NO.	STATE	FED.AID PROJ.NO.	SHEET NO.	TOTAL SHEETS
				6	ARK.			
				JOB NO.		070458	80	125
				(I)	07537 - BEARINGS - 64272			

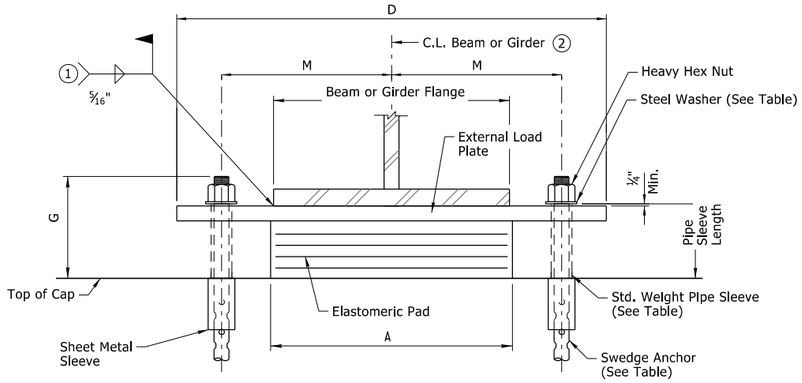

FRONT VIEW - BENTS 1 & 4 BACK

(1) Care shall be taken to ensure that the external load plate is in full and complete contact with the beam or girder flange before welding begins.

(2) C.L. Elastomeric pad shall be aligned with C.L. Beam or Girder.

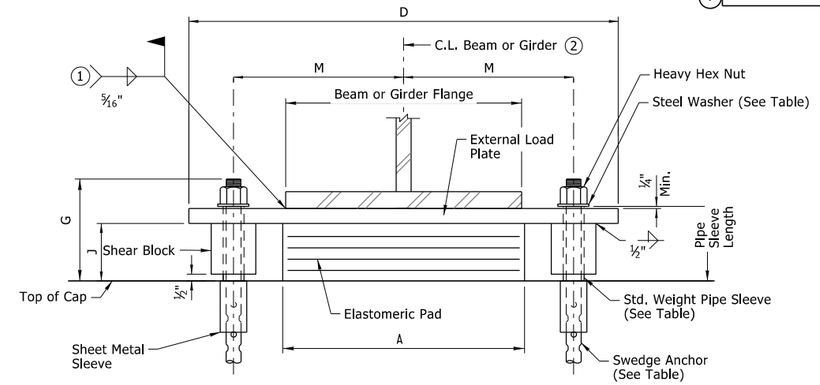

FRONT VIEW - BENTS 2, 3, 5, 6 & 7

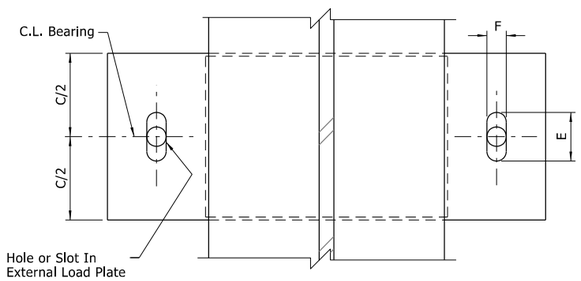

PLAN VIEW - BENTS 1 & 4 BACK

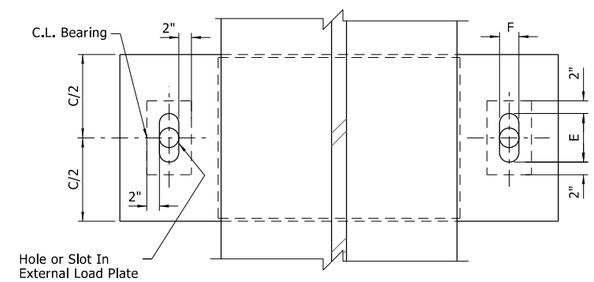

PLAN VIEW - BENTS 2, 3, 5, 6 & 7

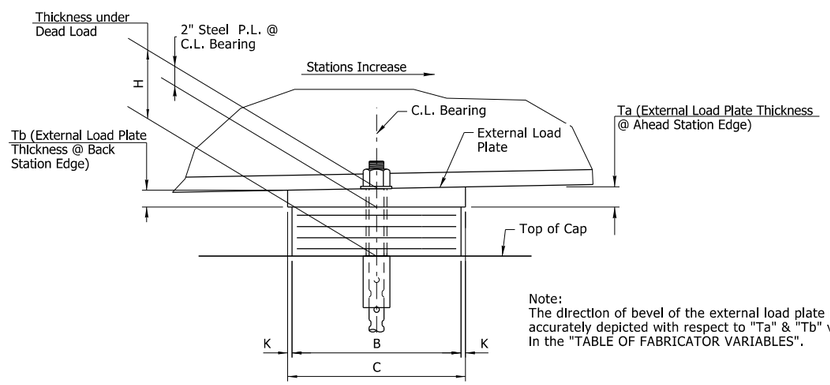

Note:
The direction of bevel of the external load plate may not be accurately depicted with respect to "Ta" & "Tb" values shown in the "TABLE OF FABRICATOR VARIABLES".

SIDE VIEW - BENTS 1 & 4 BACK

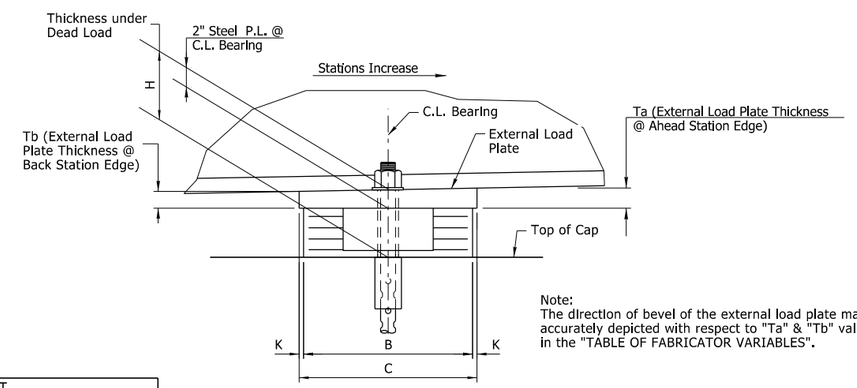

Note:
The direction of bevel of the external load plate may not be accurately depicted with respect to "Ta" & "Tb" values shown in the "TABLE OF FABRICATOR VARIABLES".

SIDE VIEW - BENTS 2, 3, 5, 6 & 7

TABLE OF FABRICATOR VARIABLES

BRIDGE NO.	LOCATION: BENT NO(S).	LOCATION: UNIT	LOCATION: BEAM OR GIRDER NO.	BEARING TYPE	NO. OF BEARINGS EACH BENT	MAXIMUM DESIGN (3) LOAD (kips)	G	H	ELASTOMERIC PAD: A	B	N	t_i	t_e	NO. & THICKNESS OF STEEL LAMINAE	T	EXTERNAL LOAD PLATE: C	D	E	(4) J	F	K	M	T_a	T_b	ANCHOR BOLT: ANCHOR BOLT (Ø x L)	ANCHOR BOLT GRADE	PIPE SLEEVE SIZE (Ø x L)	SHEET METAL SLEEVE SIZE (Ø x L)	STEEL WASHER SIZE (O.D.)
07537	Bent 1	375'	All	Exp.	9	191.1	9 7/16"	5 11/16"	16"	11"	5	1/2"	1/4"	6 @ 12ga.	3 11/16"	12"	29 1/2"	7"	-	3 3/4"	1/2"	11 1/4"	2.24"	1.76"	2 1/2" x 38"	55	3" x 5 15/16"	4" x 12"	4 1/2"
	Bent 2	375'	All	Fix.	9	439.3	8 9/16"	5 1/16"	18"	17"	4	1/2"	1/4"	5 @ 12ga.	3 1/16"	18"	37 1/4"	3 1/8"	2 1/2"	3 1/8"	1/2"	14 1/16"	2.29"	1.71"	2" x 34"	55	2 1/2" x 5 9/16"	4" x 16"	3 3/4"
	Bent 3	375'	All	Fix.	9	439.3	8 9/16"	5 1/16"	18"	17"	4	1/2"	1/4"	5 @ 12ga.	3 1/16"	18"	37 1/4"	3 1/8"	2 1/2"	3 1/8"	1/2"	14 1/16"	2.22	1.78"	2" x 34"	55	2 1/2" x 5 9/16"	4" x 16"	3 3/4"
	Bent 4 Back	375'	All	Exp.	9	191.1	9 7/16"	5 11/16"	16"	11"	5	1/2"	1/4"	6 @ 12ga.	3 11/16"	12"	29 1/2"	7"	-	3 3/4"	1/2"	11 1/4"	1.91"	2.09"	2 1/2" x 41"	55	3" x 5 15/16"	4" x 17"	4 1/2"
	Bent 4 Ahead	479'	All	Exp.	9	182.3	12 1/4"	7 15/16"	16"	12"	7	1/2"	1/4"	8 @ 12ga.	4 7/8"	13"	30"	8 1/16"	-	3 3/4"	1/2"	11 1/2"	2.11"	1.89"	2 3/4" x 44"	55	3" x 7 7/8"	5" x 17"	5"
	Bent 5	479'	All	Fix.	9	430.4	8 15/16"	5 11/16"	20"	16"	5	1/2"	1/4"	6 @ 12ga.	3 11/16"	17"	39 1/4"	3 1/8"	3 1/8"	3 1/8"	1/2"	15 1/16"	2.08"	1.92"	2" x 34"	55	2 1/2" x 5 15/16"	4" x 17"	3 3/4"
	Bent 6	479'	All	Fix.	9	417.3	8 15/16"	5 11/16"	20"	14"	5	1/2"	1/4"	6 @ 12ga.	3 11/16"	15"	39 1/4"	3 1/8"	3 1/8"	3 1/8"	1/2"	15 1/16"	2"	2"	2" x 32"	55	2 1/2" x 5 15/16"	4" x 9"	3 3/4"
	Bent 7	479'	All	Fix.	9	361.4	8 9/16"	5 1/16"	20"	14"	4	1/2"	1/4"	5 @ 12ga.	3 1/16"	15"	39 1/4"	3 1/8"	2 1/2"	3 1/8"	1/2"	15 1/16"	1.94"	2.06"	2" x 32"	55	2 1/2" x 5 9/16"	4" x 10"	3 3/4"
	Bent 8	479'	All	Exp.	9	149.4	11 1/8"	7 3/8"	16"	10"	6	1/2"	1/4"	7 @ 12ga.	4 1/4"	11"	29 1/2"	7 1/2"	-	3 3/4"	1/2"	11 1/2"	1.92"	2.08"	2 1/2" x 39"	55	3" x 6 1/2"	4" x 9"	4 1/2"

(3) Maximum Load = Service I Limit State.

(4) Shear Blocks 4 inches or thicker may be fabricated from built-up plates with a 5/16" groove weld on all sides. No plate shall be less than 2" nominal thickness

STATE OF ARKANSAS LICENSED PROFESSIONAL ENGINEER No.14501 STEPHEN F. HARPER

2/2/2024

BRIDGE ENGINEER
PRINT DATE: 2/2/2024

SHEET 1 OF 2
DETAILS OF
ELASTOMERIC BEARINGS
ROUTE SECTION
ARKANSAS STATE HIGHWAY COMMISSION
LITTLE ROCK, ARKANSAS

DRAWN BY:	KDH	DATE:	07/2020	FILENAME:	B070458X1_EX1.dgn
CHECKED BY:	SRN	DATE:	05/2021		
DESIGNED BY:	MKL/HSS	DATE:	03/2019	SCALE:	No Scale
BRIDGE NO.	07537		DRAWING NO.	64272	

Scott.Thornsberry 2/2/2024 4:46:57 PM
WORKSPACE: ARDOT
Y:\Projects\ARDOT_169387_070458 UPRR Grade Separation\Design\BRIDGE\Drawings\B070458X1_EX1.dgn
REVISED DATE:

DATE REVISED	DATE FILMED	DATE REVISED	DATE FILMED	FED.RD. DIST.NO.	STATE	FED.AID PROJ.NO.	SHEET NO.	TOTAL SHEETS
				6	ARK.			
				JOB NO.		070458	81	125
				(1)	07537 - BEARINGS - 64273			

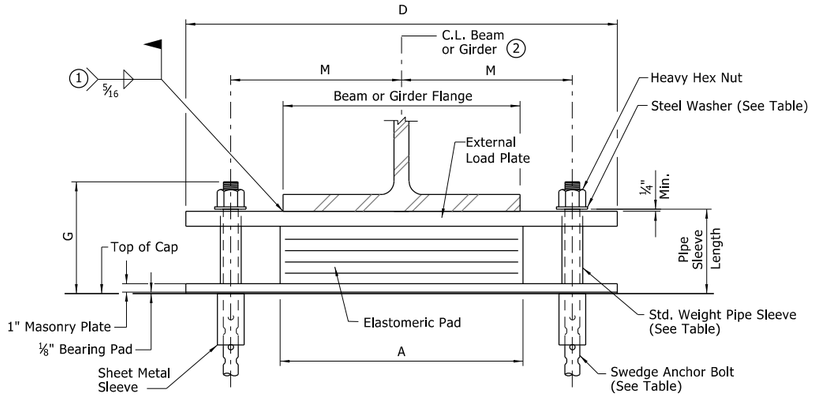

FRONT VIEW - BENTS 4 AHEAD & 8

(1) Care shall be taken to ensure that the external load plate is in full and complete contact with the beam or girder flange before welding begins.

(2) C.L. Elastomeric pad shall be aligned with C.L. Beam or Girder.

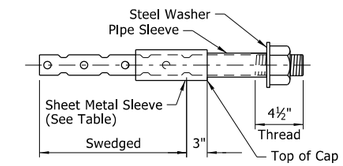

ANCHOR BOLT DETAIL

Note:
Anchor Bolts may be cast in place or drilled and grouted into place. If Anchor Bolts are to be cast in place, the Galvanized Sheet Metal Sleeves will not be required.

If Anchor Bolts are to be drilled and grouted in place, the Galvanized Sheet Metal Sleeves shall be cast in place as shown. Sleeves shall be dry packed with styrofoam, urethane foam or approved equal prior to pouring of concrete. After pouring of the cap and prior to erection of Structural Steel, the dry pack shall be removed and holes for the anchor bolts shall be accurately drilled into the masonry. Bolts placed in drilled holes shall be accurately set and fixed using a QPL approved epoxy or non-shrink grout that completely fills the holes. Galvanized Sheet Metal Sleeves will not be paid for directly, but will be considered subsidiary to the item "STRUCTURAL STEEL IN PLATE GIRDER SPANS (A709, GR. 50W).

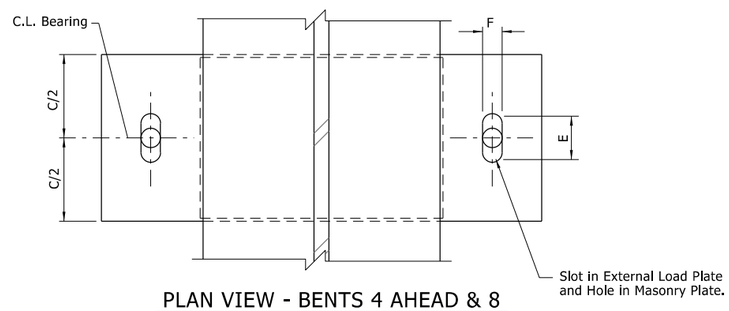

PLAN VIEW - BENTS 4 AHEAD & 8

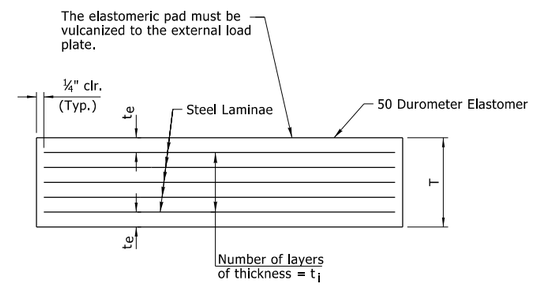

t_i = thickness of elastomer between steel laminae
t_e = thickness of elastomer cover on top and bottom of pad
N = number of elastomer layers of thickness t_i

ELASTOMERIC BEARING

Prior to erection of the beams, the Contractor shall verify the orientation of the bearings with respect to Ta and Tb.

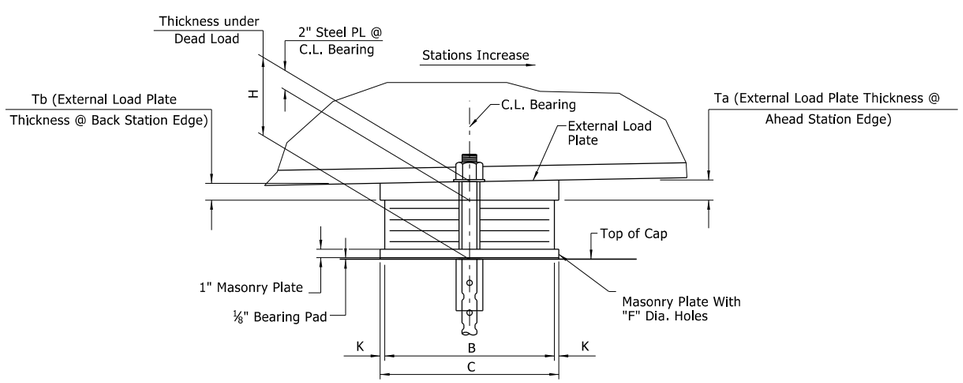

SIDE VIEW - BENTS 4 AHEAD & 8

Unless otherwise approved by the Engineer, welding of the external load plate at expansion bearings to the beam or girder will be allowed only when: 1) the approximate average air temperature during the 24 hour period immediately preceding welding is between 40°F and 80°F; 2) the slots in the external load plates are positioned to center on the anchor bolts; and 3) no horizontal deformation of the elastomeric pad is evident. If welding at other temperatures is required, the Engineer will provide adjustment data.

GENERAL NOTES

Elastomeric Bearings shall conform to Section 808 and shall be paid for at the unit price bid for "ELASTOMERIC BEARINGS".

External load plates shall conform to ASTM A709, Gr. 50W.
Pipe sleeves shall be ASTM A500, Grade B, and shall be galvanized to conform to AASHTO M 232, Class C or ASTM B695, Class 50.

External load plates shall be completely fabricated (including bevel and bolt holes) and shall be cleaned before vulcanizing to the elastomeric bearing. The surface in contact with the elastomeric bearing shall be cleaned in accordance with Subsection 808.03. Other surfaces shall be blast cleaned in accordance with Subsection 807.84(b) for painted steel and 807.84(e) for unpainted Grade 50W steel.

Anchor Bolts, Washers and Nuts shall conform to Subsection 807.07. The anchor bolt grade of steel shall be as specified in the "TABLE OF FABRICATOR VARIABLES". Indentations shall be circular with rounded bottoms and staggered as shown in the details.

Pipe Sleeves, Anchor Bolts, Washers and Nuts shall be paid for at the unit price bid for "STRUCTURAL STEEL IN PLATE GIRDER SPANS (A709, GR. 50W)". External load plates will not be measured or paid for separately, but will be considered incidental to the unit price bid for "ELASTOMERIC BEARINGS".

Bearings without masonry plates shall be seated in accordance with Subsection 808.08. This work and materials are considered subsidiary to the item "ELASTOMERIC BEARINGS" and will not be paid for directly.

STATE OF ARKANSAS
LICENSED PROFESSIONAL ENGINEER
No.14501
STEPHEN F. HARPER
2/2/2024

BRIDGE ENGINEER
PRINT DATE: 2/2/2024

SHEET 2 OF 2
DETAILS OF
ELASTOMERIC BEARINGS
ROUTE SECTION
ARKANSAS STATE HIGHWAY COMMISSION
LITTLE ROCK, ARKANSAS

DRAWN BY:	KDH	DATE:	07/2020	FILENAME:	B070458X1_EX2.dgn
CHECKED BY:	SRN	DATE:	05/2021		
DESIGNED BY:	MKL/HSS	DATE:	03/2019	SCALE:	No Scale
BRIDGE NO.	07537		DRAWING NO.	64273	

Scott.Thornsberry 2/2/2024 4:46:58 PM
WORKSPACE: ARDOT
Y:\Projects\ARDOT_169387_070458 UPRR Grade Separation\Design\BRIDGE\Drawings\B070458X1_EX2.dgn
REVISED DATE:

DATE REVISED	DATE FILMED	DATE REVISED	DATE FILMED	FED.RD. DIST.NO.	STATE	FED.AID PROJ.NO.	SHEET NO.	TOTAL SHEETS
				6	ARK.			
				JOB NO.		070458	82	125

(1) 07537 - STRIP SEAL JOINTS - 64274

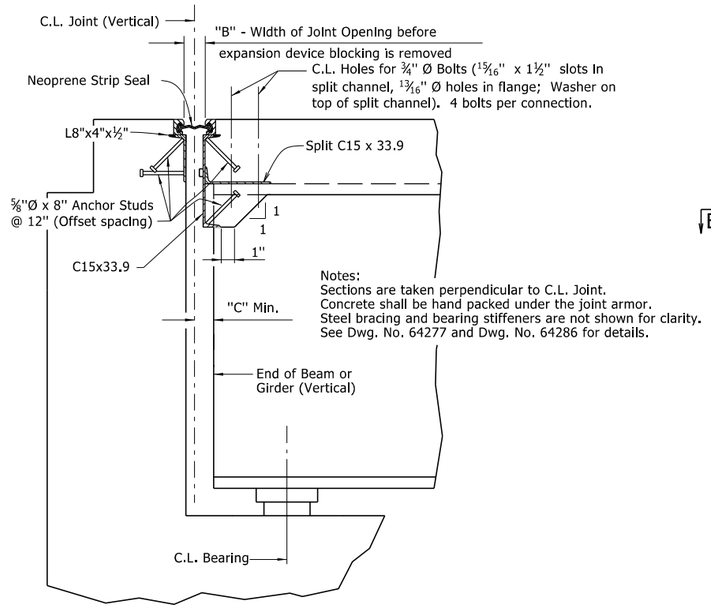

Notes:
Sections are taken perpendicular to C.L. Joint.
Concrete shall be hand packed under the joint armor.
Steel bracing and bearing stiffeners are not shown for clarity.
See Dwg. No. 64277 and Dwg. No. 64286 for details.

SECTION THRU JOINT AT END BENT

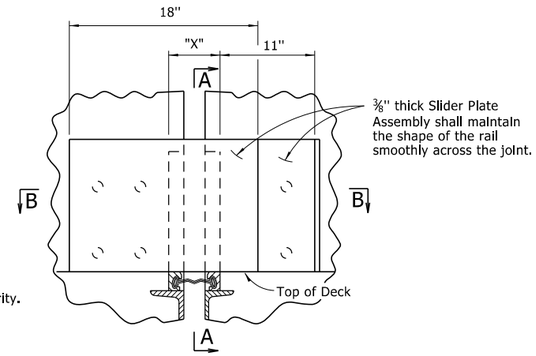

Dimension "X" equals the width of opening in rail to allow for removal or repair of joint.

DETAIL OF RAIL SLIDER PLATES

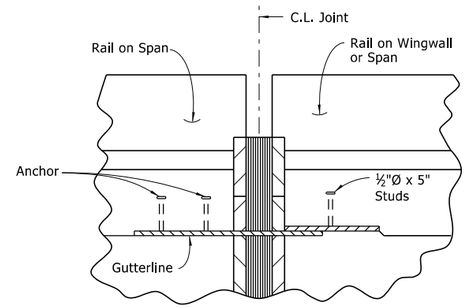

The method of attachment of the slider plate assembly shall allow for removal to provide for future replacement of the neoprene seal. Anchors shall not be paid for directly, but shall be considered subsidiary to the item "ARMORED JOINT WITH NEOPRENE STRIP SEAL".

Method of installation and fabrication shall be determined by the Manufacturer.

SECTION B-B

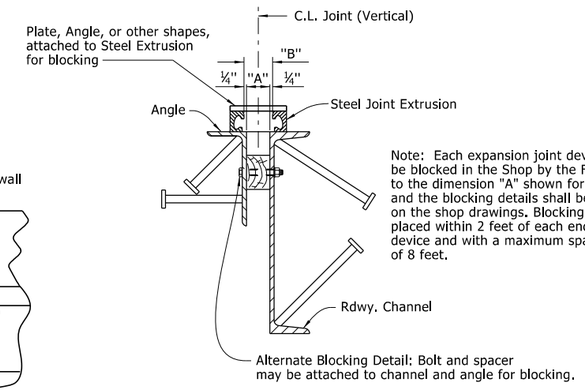

Note: Each expansion joint device shall be blocked in the Shop by the Fabricator to the dimension "A" shown for 60° F and the blocking details shall be shown on the shop drawings. Blocking shall be placed within 2 feet of each end of the device and with a maximum spacing of 8 feet.

DETAILS FOR BLOCKING EXPANSION JOINT DEVICE

EXPANSION DEVICE INSTALLATION AT END BENTS:

The Contractor may elect to install the expansion device using one of the following two alternatives:

1) The concrete span pour adjacent to joint shall be placed before the end bent backwall is placed. After the end bent backwall forms are in place and the beams or girders erected, the blocked expansion device shall be installed and adjusted for grade. All connection bolts shall be fully tightened prior to placing the deck concrete adjacent to the bent. Immediately prior to pouring the backwall concrete, the blocking shall be removed, and the opening adjusted for temperature and grade.

2) The backwall shall be poured to the optional construction joint after beams or girders are erected. The blocked expansion device shall be installed and adjusted for grade. All connection bolts shall be fully tightened prior to placing the deck concrete adjacent to the bent. Immediately prior to pouring the remainder of the backwall concrete, the blocking shall be removed and the opening adjusted for temperature and grade.

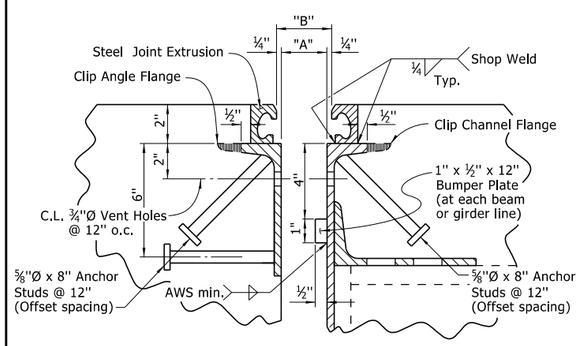

DETAIL OF STRIP SEAL JOINT

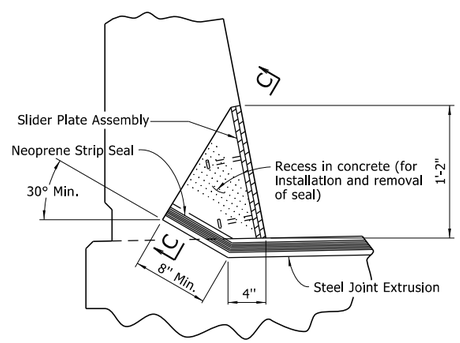

Details of Joint turn-up in rail are general and show basic design controls only.

SECTION A-A

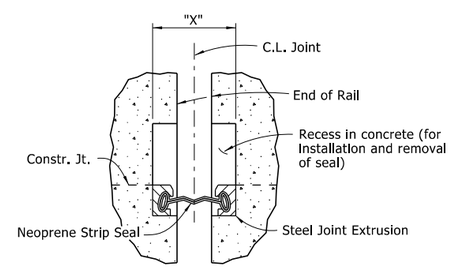

SECTION C-C

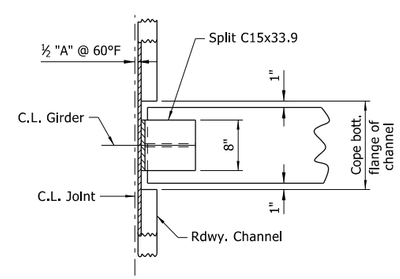

CHANNEL CONNECTION DETAIL

GENERAL NOTES FOR NEOPRENE STRIP SEAL JOINTS:

The steel extrusion and neoprene strip seal material and installation shall be in accordance with Section 809.

The expansion device shall provide for the movement rating(s) shown in the "TABLE OF STRIP SEAL JOINT DATA". The expansion joint shall be capable of sealing the deck surface and rail area to prevent moisture and other contaminants from descending through the joint.

Details of proposed slider plate assembly shall be submitted to the Engineer for approval prior to the fabrication of any structural steel at the expansion device.

All structural steel shall conform to ASTM A709, Grade 50W and all exposed surfaces shall be cleaned in accordance with Subsection 807.84(e). The rail slider plates and structural steel completely embedded in concrete shall conform to ASTM A709, Grade 36, 50 or 50W steel. All exposed surfaces of the rail slider plates shall be cleaned and painted in accordance with Section 638. Painting shall not be paid for directly but will be considered subsidiary to "STRUCTURAL STEEL IN PLATE GIRDER SPANS (A709, GR. 50W)". Structural steel completely embedded in concrete need not be painted. Structural steel shall be paid for as "STRUCTURAL STEEL IN PLATE GIRDER SPANS (A709, GR. 50W)" unless otherwise noted.

TABLE OF STRIP SEAL JOINT DATA

Bent Nos.	Movement Rating	"A" width perpendicular to joint at 24 hour average temperature of:			"B" width perpendicular to joint at 24 hour average temperature of:			"C" width perpendicular to joint at 24 hour average temperature of:
		40°F	60°F	80°F	40°F	60°F	80°F	60°F
1	4"	2 1/16"	1¾"	1 7/16"	2 9/16"	2¼"	1 15/16"	3"
8	4"	2⅜"	2"	1⅝"	2⅞"	2½"	2⅛"	3"

Note:
The temperature used to set the joint opening shall be the approximate average air temperature during the preceding 24 hour period. The Engineer shall establish the temperature. Interpolation of the table may be necessary. Installation is limited to 40°F min. and 80°F max.

STATE OF ARKANSAS
LICENSED PROFESSIONAL ENGINEER
No.14501
STEPHEN F. HARPER
2/2/2024

BRIDGE ENGINEER
PRINT DATE: 2/2/2024

DETAILS FOR NEOPRENE STRIP SEAL JOINTS

ROUTE SECTION

ARKANSAS STATE HIGHWAY COMMISSION

LITTLE ROCK, ARKANSAS

DRAWN BY:	KDH	DATE:	05/2021	FILENAME:	B070458X1_JT1.dgn
CHECKED BY:	SRN	DATE:	05/2021		
DESIGNED BY:	HSS	DATE:	05/2021	SCALE:	No Scale
BRIDGE NO.	07537			DRAWING NO.	64274

Scott.Thornberry 2/2/2024 4:46:59 PM
WORKSPACE: ARDOT
Y:\Projects\ARDOT_169387_070458 UPRR Grade Separation\Design\BRIDGE\Drawings\B070458X1_JT1.dgn
REVISED DATE:

DATE REVISED	DATE FILMED	DATE REVISED	DATE FILMED	FED.RD. DIST.NO.	STATE	FED.AID PROJ.NO.	SHEET NO.	TOTAL SHEETS
				6	ARK.			
				JOB NO.		070458	83	125

(1) 07537 - FINGER JOINTS - 64275

Note: Top of expansion joints shall conform to the profile grade of the roadway surfaces. Dimensions shown are at 60° F.

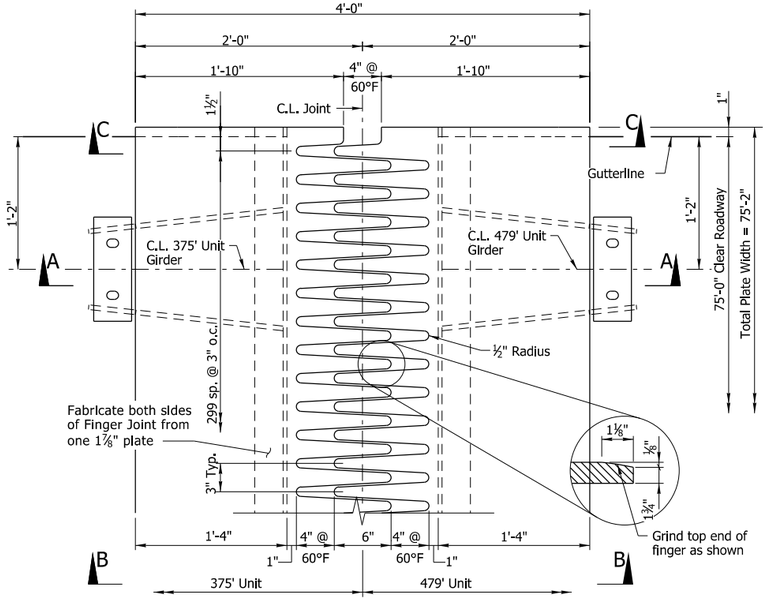

EXPANSION PLATE DETAIL

1½" = 1'-0"

Bent No.	Joint Width at 24 hour Average Temperature		
	40°F	60°F	80°F
4	4¾"	4"	3¼"

Notes:
Before joint closure pours are done, joint shall be set and adjusted for grade. Set joint width by interpolating from table.

All structural steel shall be ASTM A709, Gr. 50W unless noted otherwise.

Parapet slider plates shall be ASTM A709, Gr. 36 and shall be paid for as "STRUCTURAL STEEL IN PLATE GIRDER SPANS (A709, GR. 50W)". The surfaces of the plates which will not be in contact with the concrete shall be cleaned and painted in accordance with Section 638, or as directed by the Engineer. Only one coat is required and shall be applied in the Fabricator's shop. Painting shall not be paid directly but will be considered subsidiary to "STRUCTURAL STEEL IN PLATE GIRDER SPANS (A709, GR. 50W)".

(1) Varies - 3" at C.L. Bridge

(2) Varies - 1" at end of channel

Note: Bent drip plate and channel shall be located on the expansion device to provide maximum slope for runoff.

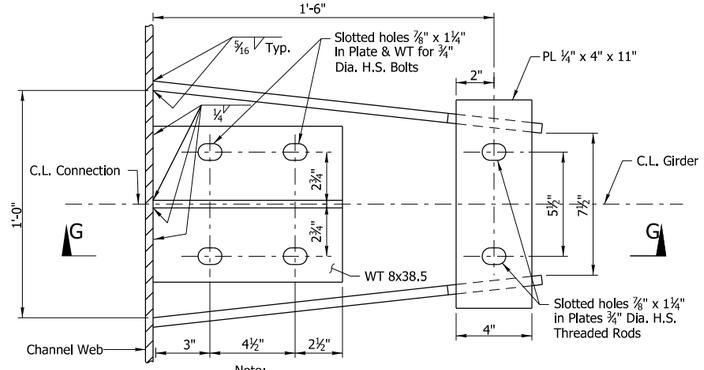

Note:
Detail device ⅛" high and provide ¼" shims for Tee using 1-⅛" PL and 2-1/16" PL's.

PLAN OF CONNECTION TO GIRDER

3" = 1'-0"

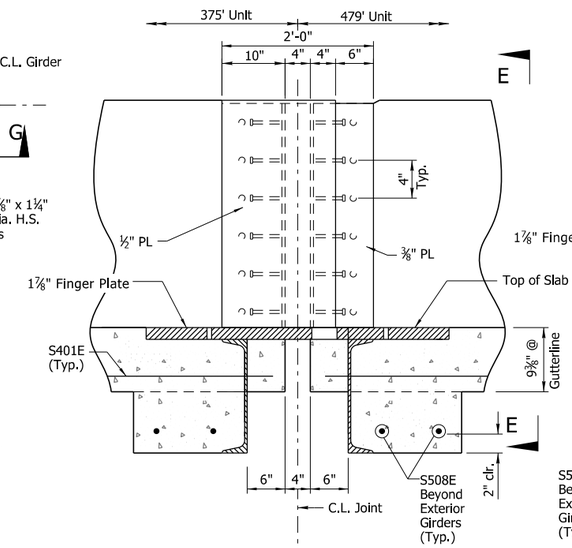

SECTION C-C

1" = 1'-0"

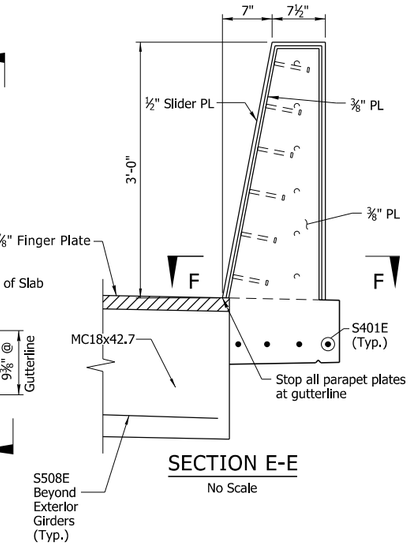

SECTION E-E

No Scale

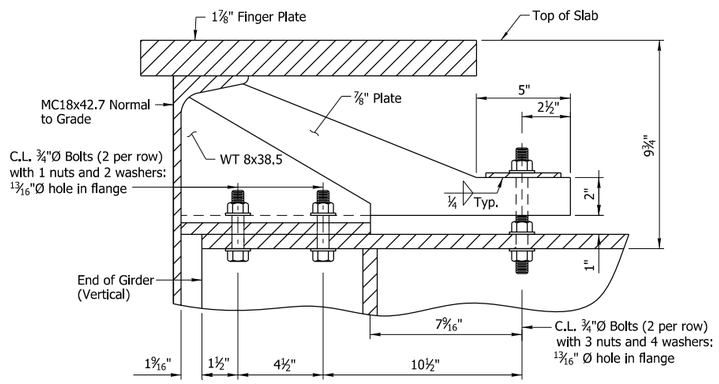

SECTION G-G AT GIRDER

No Scale

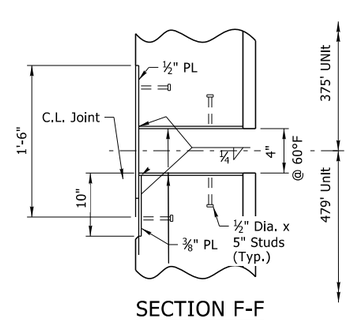

SECTION F-F

No Scale

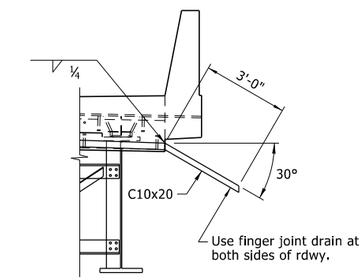

DRAIN DETAIL

No Scale

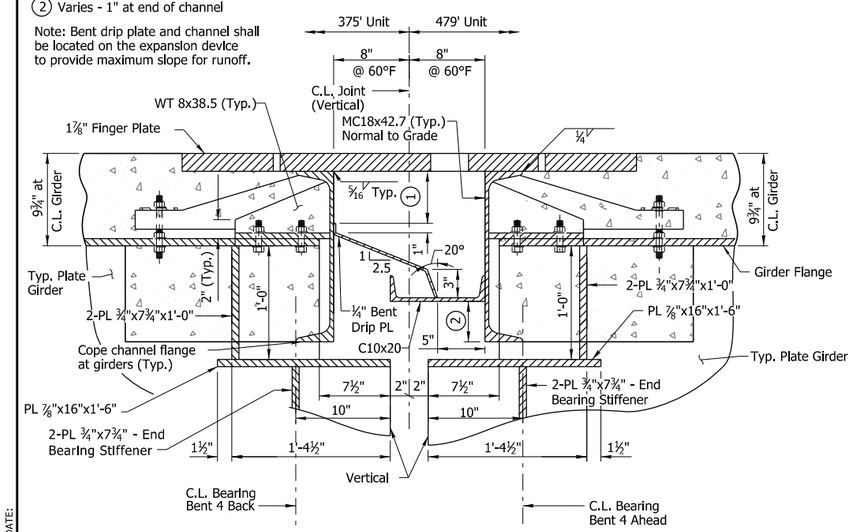

SECTION A-A AT GIRDERS

1½" = 1'-0"

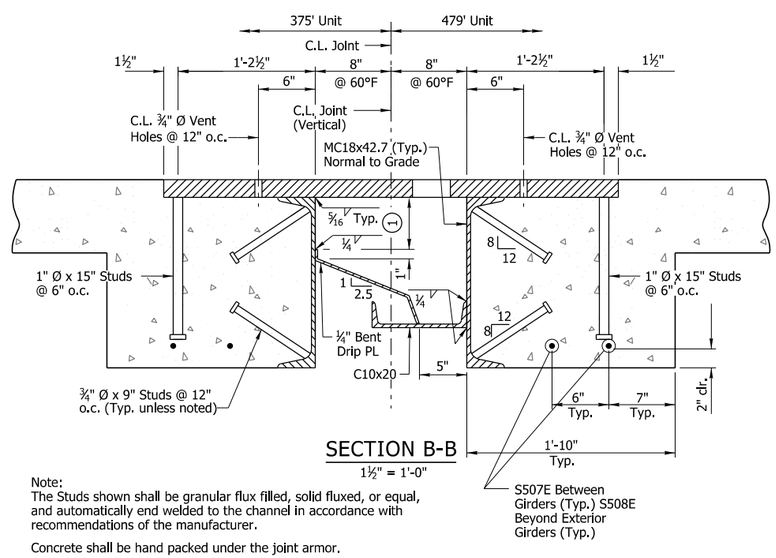

SECTION B-B

1½" = 1'-0"

Note:
The Studs shown shall be granular flux filled, solid fluxed, or equal, and automatically end welded to the channel in accordance with recommendations of the manufacturer.

Concrete shall be hand packed under the joint armor.

STATE OF ARKANSAS
LICENSED PROFESSIONAL ENGINEER
No.14501
STEPHEN F. HARPER

2/2/2024

BRIDGE ENGINEER
PRINT DATE: 2/2/2024

DETAILS FOR FINGER JOINT

ROUTE SECTION

ARKANSAS STATE HIGHWAY COMMISSION

LITTLE ROCK, ARKANSAS

DRAWN BY:	JPC	DATE:	02/2020	FILENAME:	B070458X1_CX1.dgn
CHECKED BY:	SRN	DATE:	05/2021		
DESIGNED BY:	HSS	DATE:	02/2020	SCALE:	As Shown
BRIDGE NO.	07537			DRAWING NO.	64275

Scott.Thornberry 2/2/2024 4:46:59 PM
WORKSPACE: ARDOT
Y:\Projects\ARDOT_169387_070458 UPRR Grade Separation\Design\BRIDGE\Drawings\B070458X1_CX1.dgn
REVISED DATE:

Slab Reinforcing:

Transverse: S501E lapped with S502E @ 12" o.c. in top
S505E lapped with S505E @ 12" o.c. in bottom
S503E lapped with S504E @ 12" o.c. bent up over girders
— Alternate
S506E @ 6" o.c. in top of overhangs (bundled with other top #5 bars)

Longitudinal: S401E in top and bottom (Placed as shown)
S601E/S602E placed as shown over interior supports (See "REINFORCING PLAN AND SLAB POURING SEQUENCE", Dwg. Nos. 64280 & 64281)

Notes:
Class 1 Protective Surface Treatment shall be applied to the Roadway Surface, and the Roadway Face and Top of Concrete Parapet Rail.

Bar positions and clearances from the forms shall be maintained by means of stays, tie hangers, or other approved devices per Subsection 804.06. Placement of slab bolsters or high chairs with full length lower runners directly on removable deck forms will not be allowed.

At the Contractor's option, two straight epoxy coated #5 bars may be substituted for Bar S503E/S504E. Payment for reinforcing will be based on the weight of Bar S503E/S504E.

(1) Profile Grade Line to Gutterline

(2) Tolerance: Minus = ¼"; Plus equal to the amount of slab thickening used to meet slab thickness tolerance. See "ADJUSTMENT FOR SLAB THICKNESS TOLERANCE" on Std. Dwg. No. 55007.

(3) See "ADJUSTMENT FOR SLAB THICKNESS TOLERANCE" on Std. Dwg. No. 55007.

(4) 3'-6" min lap #5 bars.

DATE REVISED	DATE FILMED	DATE REVISED	DATE FILMED	FED.RD. DIST.NO.	STATE	FED.AID PROJ.NO.	SHEET NO.	TOTAL SHEETS
				6	ARK.			
				JOB NO.		070458	84	125
				(1)	07537 - 375'-0" CONT. UNIT - 64276			

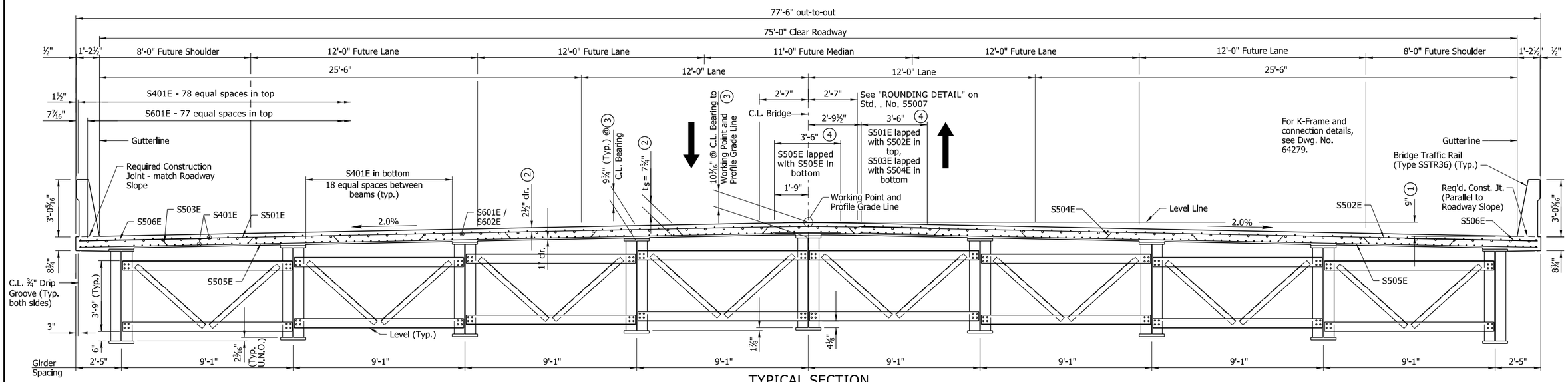

TYPICAL SECTION

(Looking Ahead)

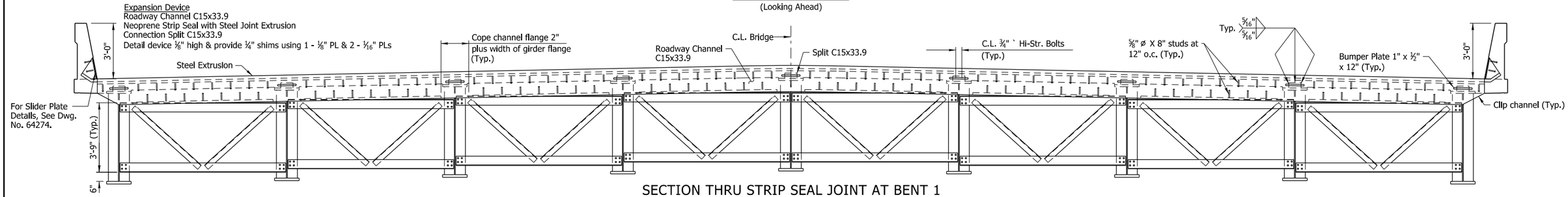

SECTION THRU STRIP SEAL JOINT AT BENT 1

(Looking Ahead)

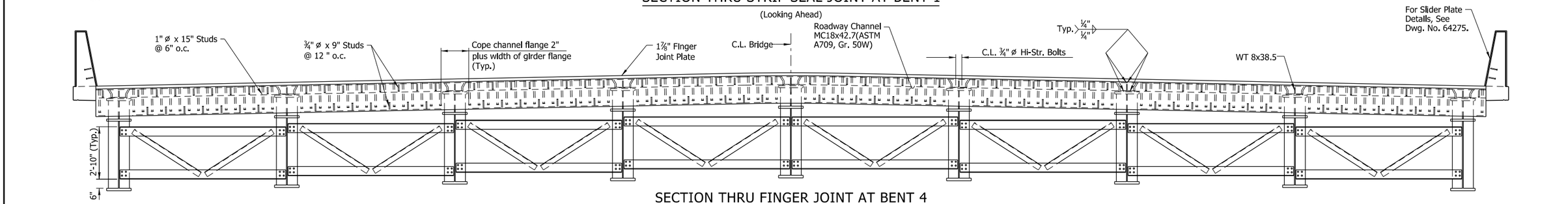

SECTION THRU FINGER JOINT AT BENT 4

(Looking Ahead)

Expansion Device
4" Finger Joint
Roadway Channel MC18x42.7
Channel Conn. - WT 8x38.5
Finger Joint - 4" Movement
Detail Device ⅛" high and provide ¼" shims using 1 - ⅛" PL and 2 - ¹⁄₁₆" PL's

For Additional Details of Expansion Device, See Dwg. No. 64275.

TABLE OF RAIL VARIABLES

For Additional Details, See Std. Dwg. No. 55070.

Closed Rail Panels			Open Rail Panels						
Panel Length	A	R4XXE	Panel Length	B	C	D	E	R4XXE
12'-6"	24	R404E	19'-0"	8	3'-0"	17	9'-0"	R407E
17'-0"	33	R405E	20'-0"	8	3'-0"	19	10'-0"	R406E
20'-0"	39	R406E	-	-	-	-	-	-

STATE OF ARKANSAS
LICENSED PROFESSIONAL ENGINEER
No.14501
STEPHEN F. HARPER
2/2/2024

BRIDGE ENGINEER
PRINT DATE: 2/2/2024

SHEET 1 OF 6
DETAILS OF 375'-0" CONTINUOUS COMPOSITE PLATE GIRDER UNIT
ROUTE SECTION
ARKANSAS STATE HIGHWAY COMMISSION
LITTLE ROCK, ARKANSAS

DRAWN BY:	JPC	DATE:	02/2020	FILENAME: B070458X1_S11.dgn
CHECKED BY:	MNA	DATE:	05/2021	
DESIGNED BY:	MKL	DATE:	02/2020	SCALE: ⅜" = 1'-0"
BRIDGE NO.	07537		DRAWING NO.	64276

Scott.Thornsberry 2/2/2024 4:47:00 PM
WORKSPACE: ARDOT
Y:\Projects\ARDOT_169387_070458 UPRR Grade Separation\Design\BRIDGE\Drawings\B070458X1_S11.dgn
REVISED DATE:

DATE REVISED	DATE FILMED	DATE REVISED	DATE FILMED	FED.RD. DIST.NO.	STATE	FED.AID PROJ.NO.	SHEET NO.	TOTAL SHEETS
				6	ARK.			
				JOB NO.		070458	85	125

(1) 07537 - 375'-0" CONT. UNIT - 64277

(1) This line of Connection Plates used as Intermediate Stiffeners (PL ½" x 6½")

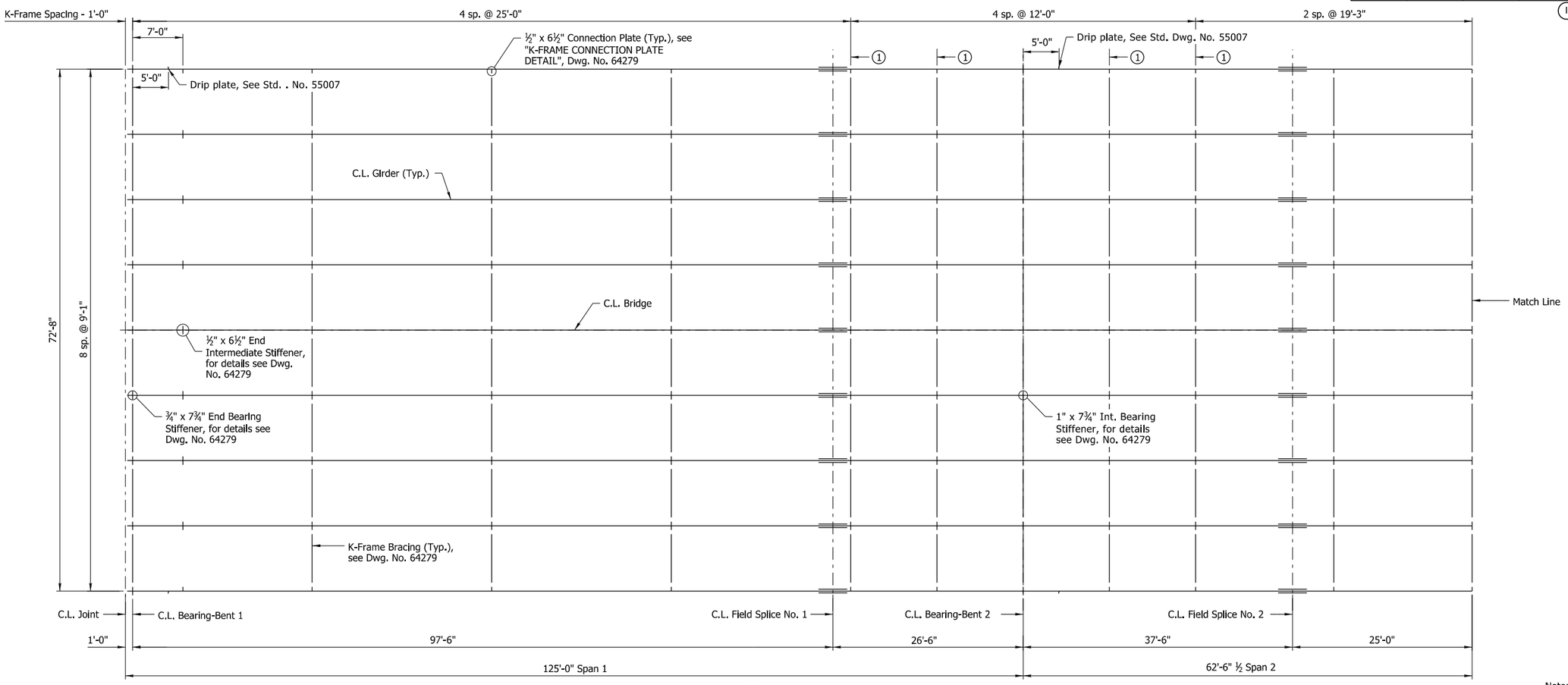

FRAMING PLAN

⅛" = 1'-0"

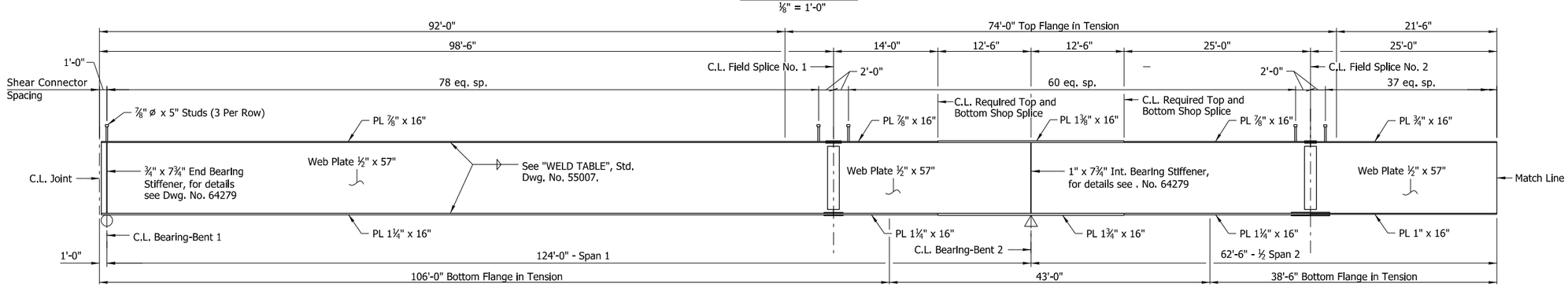

GIRDER ELEVATION

(Dimensions measured along C.L. of girder.)
No Scale

Notes:

All Structural Steel shall be ASTM A709, Grade 50W unless otherwise noted, and shall be paid for as "STRUCTURAL STEEL IN PLATE GIRDER SPANS (A709, GR. 50W)".

For additional information, see "LAYOUT OF BRIDGE".

For General Notes, See Std. Dwg. No. 55006.

For additional details, see Std. Dwg. No. 55007.

The erection of the structural steel shall be performed according to a plan permitting the steel to be erected plumb with bolts tightened while the steel is as close as possible to the no-load condition, so that the bolt holes can be aligned.This requirement may necessitate the use of large capacity temporary shoring or jacking frames.

The Contractor shall ensure that the girders are stable throughout the erection process. The Contractor will be responsible for providing temporary bracing or stiffening devices to accommodate handling stresses in individual members or segments of the structure during erection.

For "DETAILS OF WELDED SPLICES FOR PLATE GIRDERS," See Std. Dwg. No. 55007.

STATE OF ARKANSAS
LICENSED PROFESSIONAL ENGINEER
No.14501
STEPHEN F. HARPER
2/2/2024

BRIDGE ENGINEER
PRINT DATE: 2/2/2024

SHEET 2 OF 6
DETAILS OF 375'-0" CONTINUOUS COMPOSITE PLATE GIRDER UNIT
ROUTE SECTION
ARKANSAS STATE HIGHWAY COMMISSION
LITTLE ROCK, ARKANSAS

DRAWN BY:	JPC	DATE:	02/2020	FILENAME: B070458X1_S12.dgn
CHECKED BY:	MNA	DATE:	05/2021	
DESIGNED BY:	MKL	DATE:	02/2020	SCALE: As Shown
BRIDGE NO.	07537		DRAWING NO.	64277

Scott.Thornsberry 2/2/2024 4:47:01 PM
WORKSPACE: ARDOT
Y:\Projects\ARDOT_169387_070458 UPRR Grade Separation\Design\BRIDGE\Drawings\B070458X1_S12.dgn
REVISED DATE:

DATE REVISED	DATE FILMED	DATE REVISED	DATE FILMED

FED.RD. DIST.NO.	STATE	FED.AID PROJ.NO.	SHEET NO.	TOTAL SHEETS
6	ARK.			
JOB NO.		070458	86	125

(1) 07537 - 375'-0" CONT. UNIT - 64278

(1) This line of Connection Plates used as Intermediate Stiffeners (PL ½" x 6½")

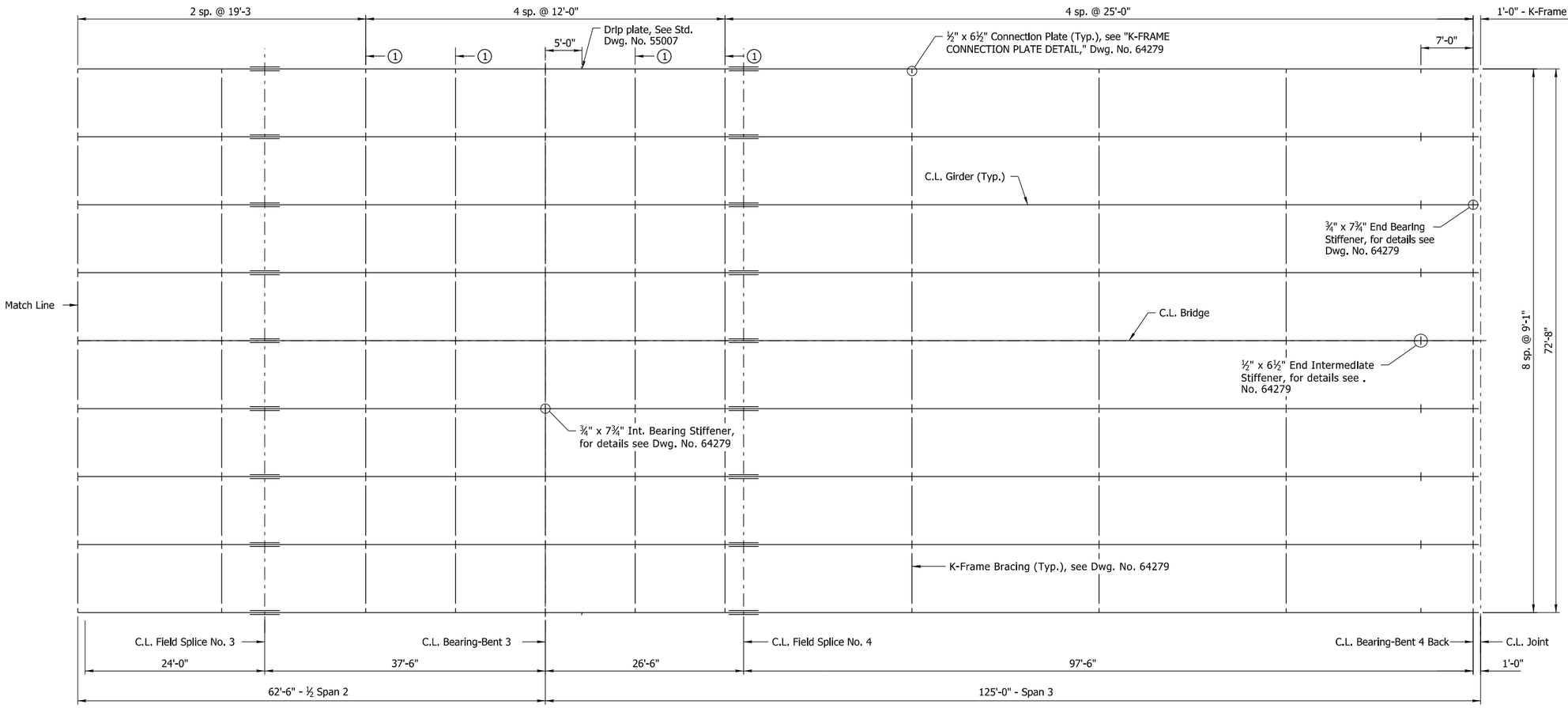

FRAMING PLAN

⅛" = 1'-0"

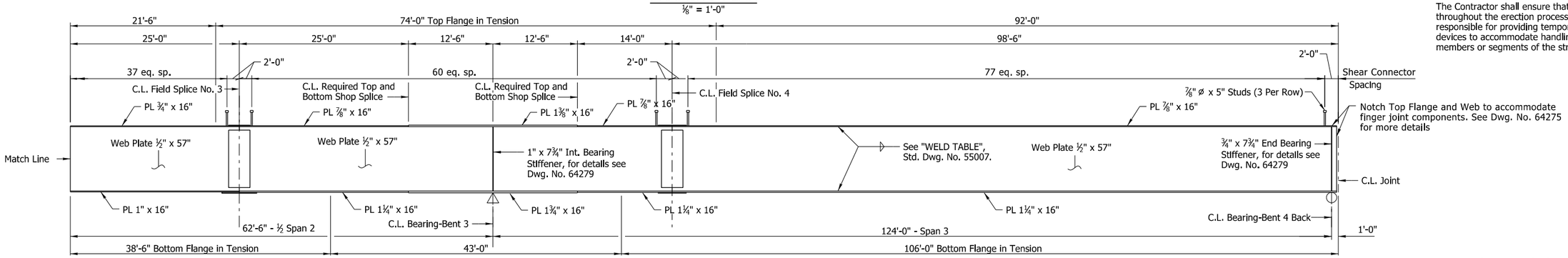

GIRDER ELEVATION

(Dimensions measured along C.L. of girder.)
No Scale

For "DETAILS OF WELDED SPLICES FOR PLATE GIRDERS," See Std. Dwg. No. 55007.

Notes:

All Structural Steel shall be ASTM A709, Grade 50W unless otherwise noted, and shall be paid for as "STRUCTURAL STEEL IN PLATE GIRDER SPANS (A709, GR. 50W)".

For additional information, see "LAYOUT OF BRIDGE".

For General Notes, See Std. Dwg. No. 55006.

For additional details, see Std. Dwg. No. 55007.

The erection of the structural steel shall be performed according to a plan permitting the steel to be erected plumb with bolts tightened while the steel is as close as possible to the no-load condition, so that the bolt holes can be aligned.This requirement may necessitate the use of large capacity temporary shoring or jacking frames.

The Contractor shall ensure that the girders are stable throughout the erection process. The Contractor will be responsible for providing temporary bracing or stiffening devices to accommodate handling stresses in individual members or segments of the structure during erection.

STATE OF ARKANSAS
LICENSED PROFESSIONAL ENGINEER
No.14501
STEPHEN F. HARPER
2/2/2024

BRIDGE ENGINEER
PRINT DATE: 2/2/2024

SHEET 3 OF 6
DETAILS OF 375'-0" CONTINUOUS COMPOSITE PLATE GIRDER UNIT
ROUTE SECTION
ARKANSAS STATE HIGHWAY COMMISSION
LITTLE ROCK, ARKANSAS

DRAWN BY:	JPC	DATE:	02/2020	FILENAME:	B070458X1_S13.dgn
CHECKED BY:	MNA	DATE:	05/2021		
DESIGNED BY:	MKL	DATE:	02/2020	SCALE:	As Shown
BRIDGE NO.	07537			DRAWING NO.	64278

Scott.Thornsberry 2/2/2024 4:47:02 PM
WORKSPACE: ARDOT
Y:\Projects\ARDOT_169387_070458 UPRR Grade Separation\Design\BRIDGE\Drawings\B070458X1_S13.dgn
REVISED DATE:

DATE REVISED	DATE FILMED	DATE REVISED	DATE FILMED	FED.RD. DIST.NO.	STATE	FED.AID PROJ.NO.	SHEET NO.	TOTAL SHEETS
				6	ARK.			
				JOB NO.		070458	87	125

(1) 07537 - 375'-0" CONT. UNIT - 64279

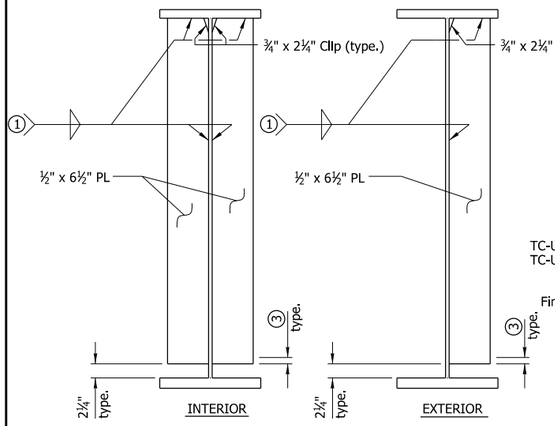

END INTERMEDIATE STIFFENER DETAIL

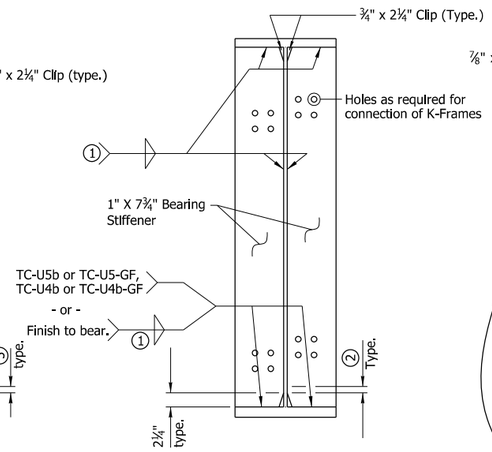

INT. BEARING STIFFENER DETAIL

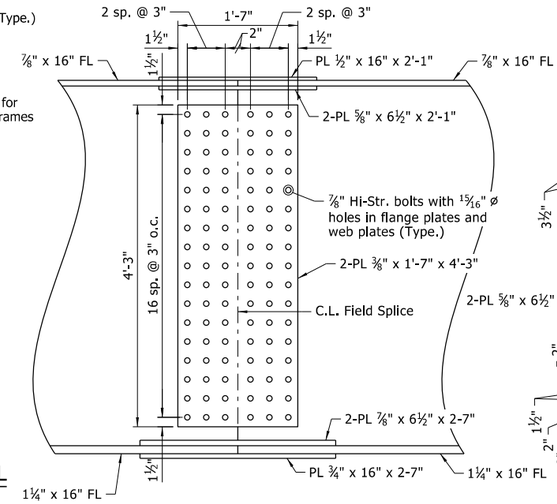

WEB SPLICE

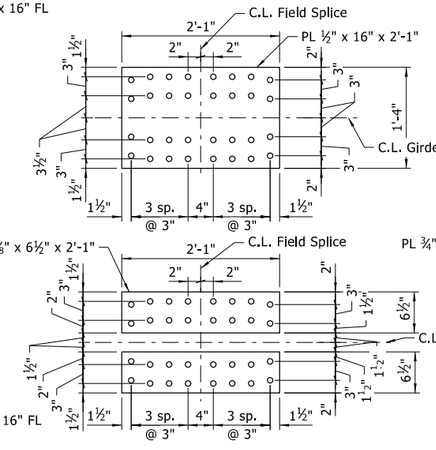

TOP FLANGE SPLICE

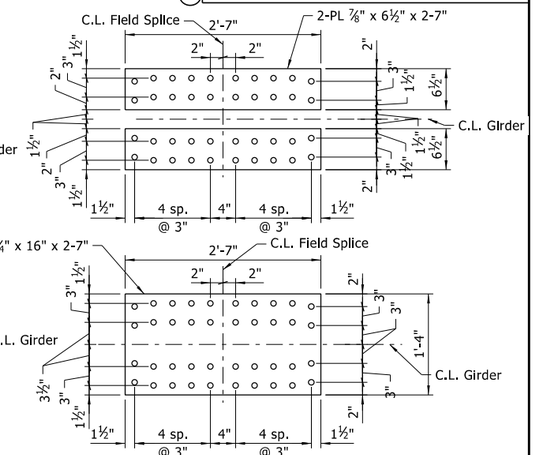

BOTTOM FLANGE SPLICE

DETAILS OF FIELD SPLICE NO.1 & 4

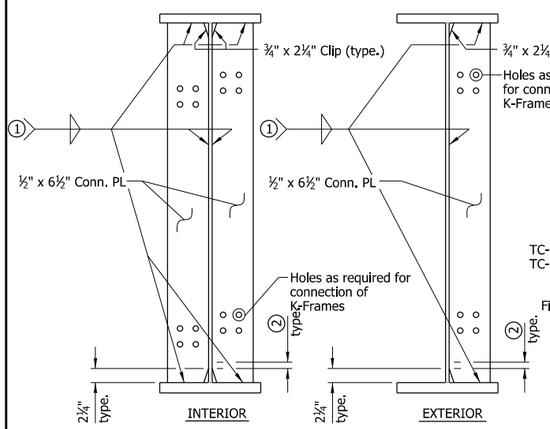

K-FRAME CONNECTION PLATE DETAIL

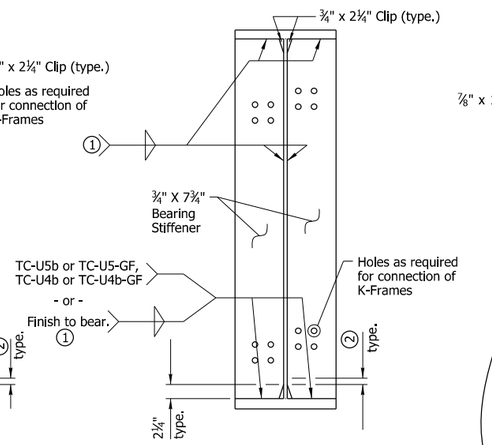

END BEARING STIFFENER DETAIL

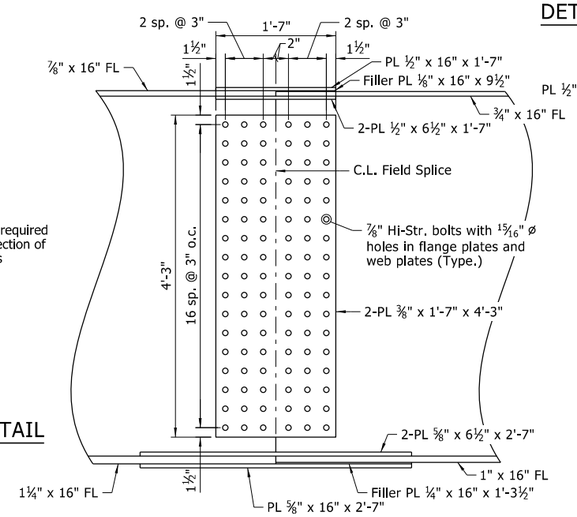

WEB SPLICE

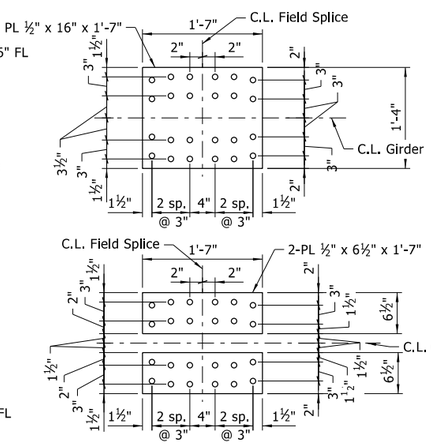

TOP FLANGE SPLICE

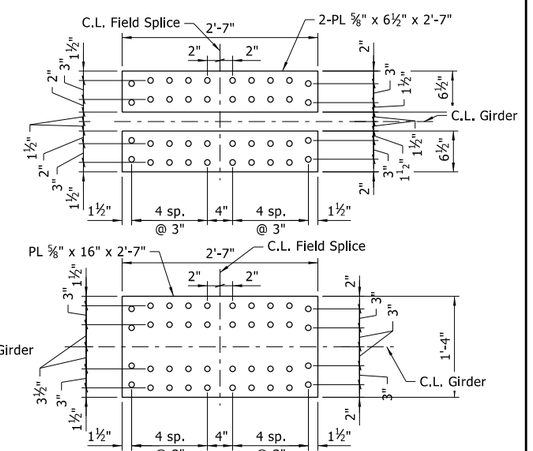

BOTTOM FLANGE SPLICE

DETAILS OF FIELD SPLICE NO.2 & 3

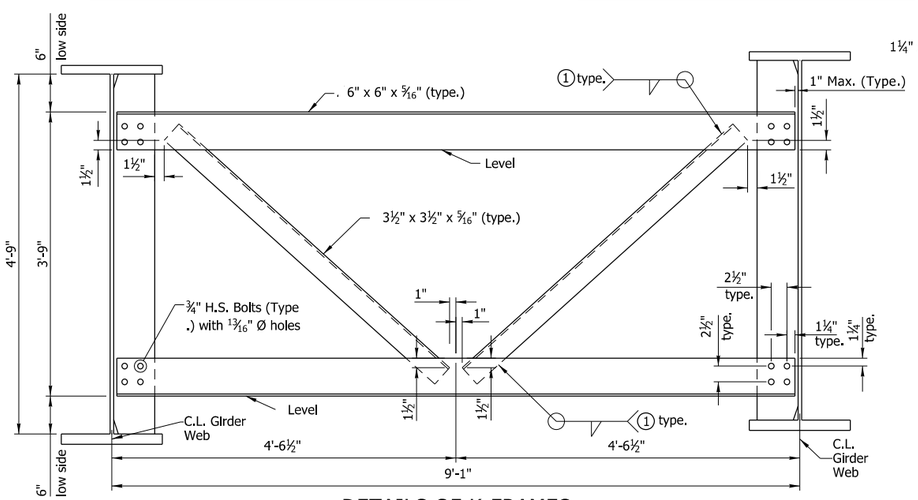

DETAILS OF K-FRAMES

Note: All bearing stiffeners shall be vertical in their final position

(1) See "WELD TABLE" on Std. Dwg. No. 55007.
(2) Stop Weld ¼" to 1" from end of clip.
(3) Stop Weld ¼" to 1" from end of PL.

STATE OF ARKANSAS LICENSED PROFESSIONAL ENGINEER No.14501 STEPHEN F. HARPER
2/2/2024

BRIDGE ENGINEER
PRINT DATE: 2/2/2024

SHEET 4 OF 6
DETAILS OF 375'-0" CONTINUOUS COMPOSITE PLATE GIRDER UNIT
ROUTE SECTION
ARKANSAS STATE HIGHWAY COMMISSION
LITTLE ROCK, ARKANSAS

DRAWN BY:	JPC	DATE:	02/2020	FILENAME: B070458X1_S14.dgn
CHECKED BY:	MNA	DATE:	05/2021	
DESIGNED BY:	MKL	DATE:	02/2020	SCALE: 1" = 1'-0"
BRIDGE NO.	07537		DRAWING NO.	64279

Scott.Thornsberry 2/2/2024 4:47:03 PM
WORKSPACE: ARDOT
Y:\Projects\ARDOT_169387_070458 UPRR Grade Separation\Design\BRIDGE\Drawings\B070458X1_S14.dgn
REVISED DATE:

DATE REVISED	DATE FILMED	DATE REVISED	DATE FILMED

FED.RD. DIST.NO.	STATE	FED.AID PROJ.NO.	SHEET NO.	TOTAL SHEETS
6	ARK.			
JOB NO.		070458	88	125

(I) 07537 - 375'-0" CONT. UNIT - 64280

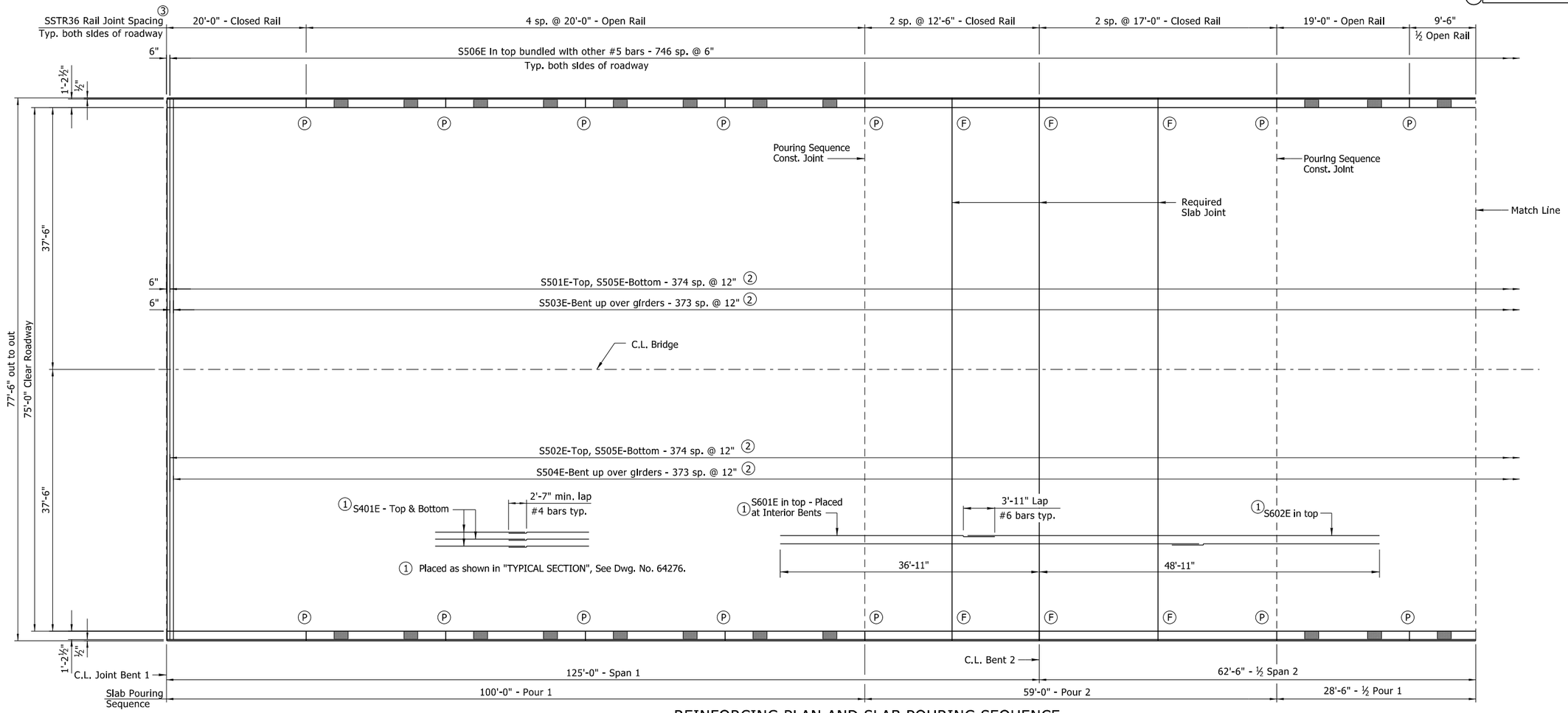

REINFORCING PLAN AND SLAB POURING SEQUENCE

⅛" = 1'-0"

(P) Partial depth rail joint at this location. (Stop 1'-4" above top of slab)
(F) Full depth rail joint at this location. (Stop 6" above top of slab)
(1) Placed as shown in "TYPICAL SECTION", See Dwg. No. 64276.
(2) Lap as shown in "TYPICAL SECTION", . No. 64276.
(3) See "TABLE OF RAIL VARIABLES" on Dwg. No. 64276. For additional details, see Std. Dwg. No. 55070.

Note:
Pours with the same number may be placed simultaneously or separately. All pours (1) must be placed before pour (2) can be placed. 48 hours shall elapse before the end of a pour and the start of the next pour. 72 hours shall elapse between the end of a pour and the start of an adjacent pour. 72 hours shall elapse between the completion of the entire deck and the pouring of the parapet. Any railing pours made before the entire slab unit has been placed must be approved by the Engineer. The Contractor must obtain approval from the Engineer for any deviations from the pouring sequence shown.

BAR LIST

MARK	NO. REQ'D	LENGTH	P.D.
S401E	2410	40'-0"	Str.
S501E	375	44'-10½"	Str.
S502E	375	35'-9½"	Str.
S503E	374	45'-11"	3"
S504E	374	36'-9"	3"
S505E	748	40'-4"	Str.
S506E	1,494	7'-0"	Str.
S507E	32	8'-7"	Str.
S508E	8	8"	Str.
S601E	156	34'-9"	Str.
S602E	156	60'-0"	Str.
R400E	176	5'-3"	2½"
R401E	1,404	6'-4"	As Shown
R403E	1,404	3'-6"	3¾"
R404E	64	12'-2"	Str.
R405E	64	16'-8"	Str.
R406E	128	19'-8"	Str.
R407E	48	18'-8"	Str.

BENDING DIAGRAMS

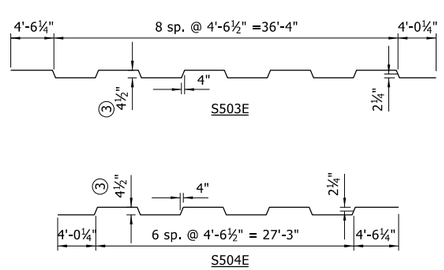

(3) ½" Overtolerance
No Undertolerance

Dimensions are out to out of bars.

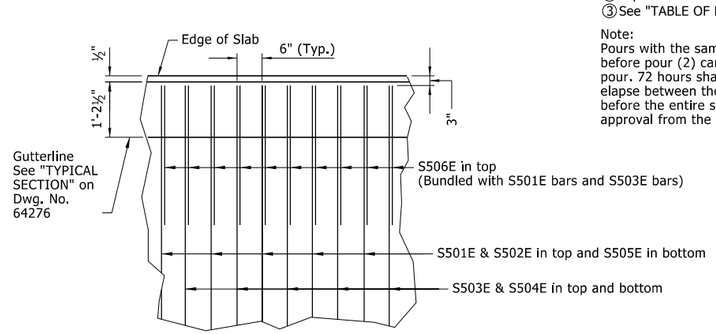

REINFORCING DETAIL

No Scale

STATE OF ARKANSAS LICENSED PROFESSIONAL ENGINEER No.14501 STEPHEN F. HARPER

2/2/2024

BRIDGE ENGINEER
PRINT DATE: 2/2/2024

DRAWN BY:	JPC	DATE:	02/2020	FILENAME: B070458X1_S15.dgn
CHECKED BY:	MNA	DATE:	05/2021	
DESIGNED BY:	MKL	DATE:	02/2020	SCALE: As Shown
BRIDGE NO.	07537		DRAWING NO.	64280

SHEET 5 OF 6
DETAILS OF 375'-0" CONTINUOUS COMPOSITE PLATE GIRDER UNIT
ROUTE SECTION
ARKANSAS STATE HIGHWAY COMMISSION
LITTLE ROCK, ARKANSAS

Scott.Thornsberry 2/2/2024 4:47:03 PM
WORKSPACE: ARDOT
Y:\Projects\ARDOT_169387_070458 UPRR Grade Separation\Design\BRIDGE\Drawings\B070458X1_S15.dgn
REVISED DATE:

DATE REVISED	DATE FILMED	DATE REVISED	DATE FILMED	FED.RD. DIST.NO.	STATE	FED.AID PROJ.NO.	SHEET NO.	TOTAL SHEETS
				6	ARK.			
				JOB NO.		070458	89	125

(I) 07537 - 375'-0" CONT. UNIT - 64281

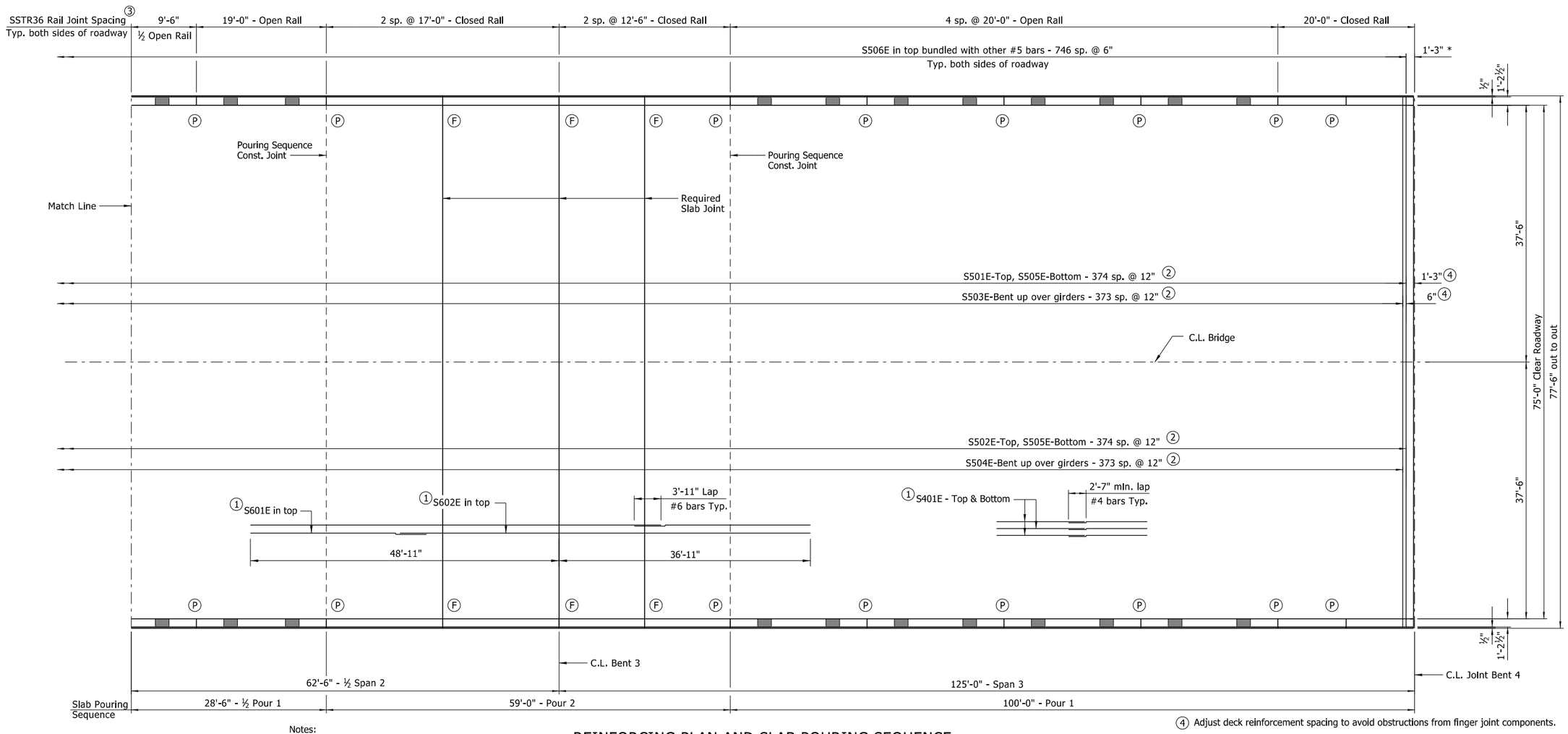

④ Adjust deck reinforcement spacing to avoid obstructions from finger joint components.

REINFORCING PLAN AND SLAB POURING SEQUENCE

⅛" = 1'-0"

Ⓟ Partial depth rail joint at this location. (Stop 1'-4" above top of slab)
Ⓕ Full depth rail joint at this location. (Stop 6" above top of slab)
① Placed as shown in "TYPICAL SECTION", See Dwg. No. 64276.
② Lap as shown in "TYPICAL SECTION", Dwg. No. 64276.
③ See "TABLE OF RAIL VARIABLES" on Dwg. No. 64276. For additional details, see Std. Dwg. No. 55070.

Note:
Pours with the same number may be placed simultaneously or separately. All pours (1) must be placed before pour (2) can be placed. 48 hours shall elapse before the end of a pour and the start of the next pour. 72 hours shall elapse between the end of a pour and the start of an adjacent pour. 72 hours shall elapse between the completion of the entire deck and the pouring of the parapet. Any railing pours made before the entire slab unit has been placed must be approved by the Engineer. The Contractor must obtain approval from the Engineer for any deviations from the pouring sequence shown.

TABLE OF DEAD LOAD DEFLECTIONS - INCHES

Span	Point of Deflection	Structural Steel		Structural Steel + Slab		Structural Steel + Slab + Rail	
		Ext.	Int.	Ext.	Int.	Ext.	Int.
Span 1 or 3	0	0	0	0	0	0	0
	0.1	0.231	0.241	0.919	1.171	1.022	1.267
	0.2	0.429	0.448	1.706	2.175	1.898	2.352
	0.3	0.571	0.595	2.267	2.888	2.521	3.124
	0.4	0.640	0.668	2.543	3.241	2.828	3.505
	0.5	0.635	0.662	2.520	3.210	2.802	3.472
	0.6	0.559	0.583	2.217	2.824	2.466	3.055
	0.7	0.428	0.447	1.697	2.162	1.880	2.339
	0.8	0.268	0.280	1.061	1.351	1.181	1.463
	0.9	0.114	0.119	0.449	0.571	0.499	0.618
½ Span 2	0	0	0	0	0	0	0
	0.1	-0.052	-0.054	-0.200	-0.254	-0.220	-0.273
	0.2	-0.053	-0.055	-0.196	-0.249	-0.213	-0.264
	0.3	-0.027	-0.028	-0.087	-0.109	-0.090	-0.112
	0.4	0.000	0.000	0.024	0.032	0.034	0.042
	0.5	0.010	0.011	0.068	0.089	0.084	0.104

Table is symm. about C.L. Unit

Notes:
Camber for Dead Load Deflection plus Vertical Curve + or - ¼" tolerance. Deflections shown are along C.L. Girder from a chord from C.L. Bearing to C.L. Bearing. Vertical curve corrections not included. Negative sign (-) indicates point above chord.

Dead load Deflections shown include an assumed loading of 15 psf to account for stay-in-place metal deck form. Revision to the deflection table may be necessary upon review of contractor's submitted forming details.

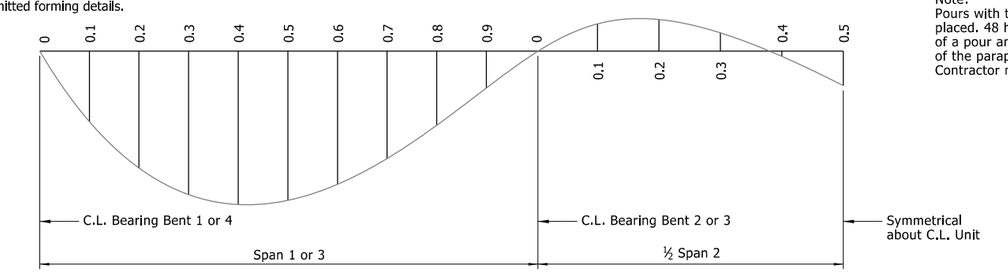

DEAD LOAD DEFLECTION DIAGRAM

No Scale

STATE OF ARKANSAS
LICENSED PROFESSIONAL ENGINEER
No.14501
STEPHEN F. HARPER
2/2/2024

BRIDGE ENGINEER
PRINT DATE: 2/2/2024

SHEET 6 OF 6
DETAILS OF 375'-0" CONTINUOUS COMPOSITE PLATE GIRDER UNIT

ROUTE SECTION

ARKANSAS STATE HIGHWAY COMMISSION
LITTLE ROCK, ARKANSAS

DRAWN BY: JPC	DATE: 02/2020	FILENAME: B070458X1_S16.dgn		
CHECKED BY: MNA	DATE: 05/2021			
DESIGNED BY: MKL	DATE: 02/2020	SCALE: As Shown		
BRIDGE NO. 07537	DRAWING NO. 64281			

Scott.Thornsberry 2/2/2024 4:47:04 PM
WORKSPACE: ARDOT
Y:\Projects\ARDOT_169387_070458 UPRR Grade Separation\Design\BRIDGE\Drawings\B070458X1_S16.dgn
REVISED DATE:

DATE REVISED	DATE FILMED	DATE REVISED	DATE FILMED	FED.RD. DIST.NO.	STATE	FED.AID PROJ.NO.	SHEET NO.	TOTAL SHEETS
				6	ARK.			
				JOB NO.		070458	90	125
				(1)	07537 - 479'-0" CONT. UNIT - 64282			

Slab Reinforcing:

Transverse: S501E lapped with S502E @ 12" o.c. in top
S505E lapped with S505E @ 12" o.c. in bottom
S503E lapped with S504E @ 12" o.c. bent up over girders
S506E @ 6" o.c. in top of overhangs (bundled with other top #5 bars)
— Alternate

Longitudinal: S401E in top and bottom (Placed as shown)
S601E placed as shown over interior supports (See "REINFORCING PLAN AND SLAB POURING SEQUENCE", Dwg. Nos. 64294-64296)

Notes:
Class 1 Protective Surface Treatment shall be applied to the Roadway Surface, and the Roadway Face and Top of Concrete Parapet Rail.

Bar positions and clearances from the forms shall be maintained by means of stays, tie hangers, or other approved devices per Subsection 804.06. Placement of slab bolsters or high chairs with full length lower runners directly on removable deck forms will not be allowed.

At the Contractor's option, two straight epoxy coated #5 bars may be substituted for Bar S503E/S504E. Payment for reinforcing will be based on the weight of Bar S503E/S504E.

(1) Profile Grade Line to Gutterline

(2) Tolerance: Minus = ¼"; Plus equal to the amount of slab thickening used to meet slab thickness tolerance. See "ADJUSTMENT FOR SLAB THICKNESS TOLERANCE" on Std. Dwg. No. 55007.

(3) See "ADJUSTMENT FOR SLAB THICKNESS TOLERANCE" on Std. Dwg. No. 55007.

(4) See "CROSS-SLOPE TRANSITION SKETCH", Dwg. No. 64253.

(5) 3'-6" min lap #5 bars.

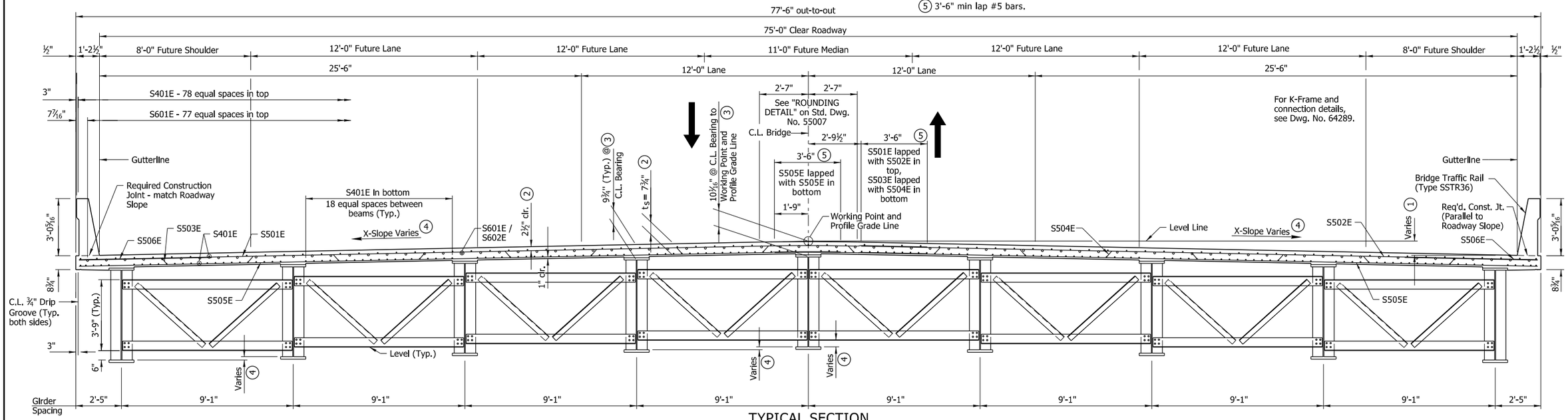

TYPICAL SECTION

(Looking Ahead)

BAR LIST

MARK	NO. REQ'D.	LENGTH	P.D.	MARK	NO. REQ'D.	LENGTH	P.D.
R400E	216	5'-3"	2½"	S401E	3,380	38'-8"	Str.
R401E	1,865	6'-4"	As Shown				
R403E	1,865	3'-6"	3¾"	S501E	478	43'-10"	Str.
R404E	8	15'-0"	Str.	S502E	478	35'-10"	Str.
R405E	64	18'-8"	Str.	S503E	477	44'-9"	3"
R406E	96	18'-2"	Str.	S504E	477	36'-8"	3"
R407E	32	12'-2"	Str.	S505E	956	39'-10"	Str.
R408E	8	15'-1"	Str.	S506E	1,910	7'-0"	Str.
R409E	8	14'-3"	Str.	S507E	32	8'-7"	Str.
R410E	8	17'-2"	Str.	S508E	8	8"	Str.
R411E	48	16'-8"	Str.				
R412E	32	15'-8"	Str.	S601E	234	41'-11"	Str.
R413E	8	15'-10"	Str.	S602E	390	50"-0"	Str.
R414E	120	17'-8"	Str.				
R415E	8	18'-5"	Str.				

BENDING DIAGRAMS

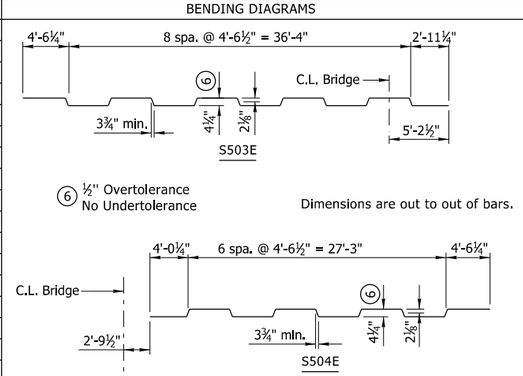

STATE OF ARKANSAS
LICENSED PROFESSIONAL ENGINEER
No.14501
STEPHEN F. HARPER
2/2/2024

BRIDGE ENGINEER
PRINT DATE: 2/2/2024

SHEET 1 OF 15
DETAILS OF 479'-0" CONTINUOUS COMPOSITE PLATE GIRDER UNIT
ROUTE SECTION
ARKANSAS STATE HIGHWAY COMMISSION
LITTLE ROCK, ARKANSAS

DRAWN BY:	KDH	DATE:	02/2020	FILENAME: B070458X1_S21.dgn
CHECKED BY:	SRN	DATE:	05/2021	
DESIGNED BY:	HSS	DATE:	02/2020	SCALE: ⅜" = 1'-0"
BRIDGE NO.	07537		DRAWING NO.	64282

Scott.Thornsberry 2/2/2024 4:47:05 PM
WORKSPACE: ARDOT
Y:\Projects\ARDOT_169387_070458 UPRR Grade Separation\Design\BRIDGE\Drawings\B070458X1_S21.dgn
REVISED DATE:

DATE REVISED	DATE FILMED	DATE REVISED	DATE FILMED	FED.RD. DIST.NO.	STATE	FED.AID PROJ.NO.	SHEET NO.	TOTAL SHEETS
				6	ARK.			
				JOB NO.		070458	91	125

(1) 07537 - 479'-0" CONT. UNIT - 64283

Expansion Device
4" Finger Joint
Roadway Channel MC18x42.7
Channel Conn. - WT 8x38.5
Finger Joint - 4" Movement
Detail Device ⅛" high and provide ¼" shims using 1 - ⅛" PL and 2 - 1/16" PL's

For Additional Details of Expansion Device, See Dwg. No. 64275.

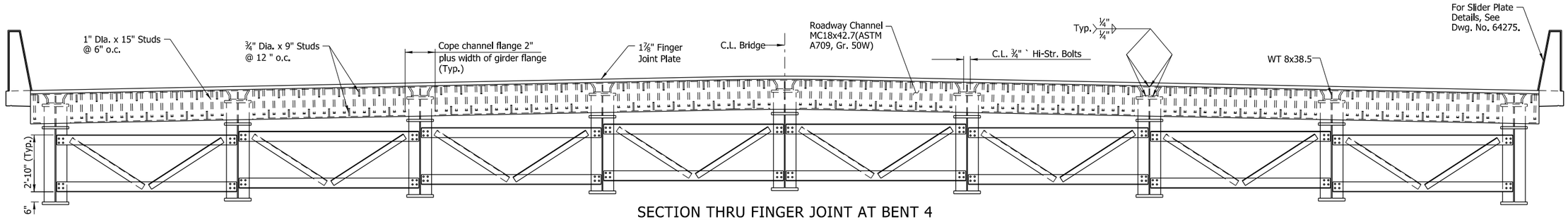

SECTION THRU FINGER JOINT AT BENT 4

(Looking Ahead)

Expansion Device
Roadway Channel C15x33.9
Neoprene Strip Seal with Steel Joint Extrusion
Connection Split C15x33.9
Detail device ⅛" high & provide ¼" shims using 1 - ⅛" PL & 2 - 1/16" PLs

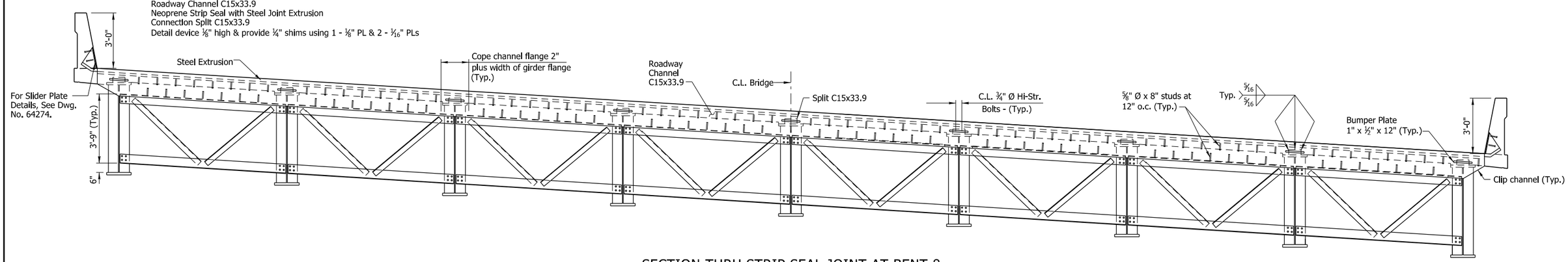

SECTION THRU STRIP SEAL JOINT AT BENT 8

(Looking Back)

STATE OF ARKANSAS
LICENSED PROFESSIONAL ENGINEER
No.14501
STEPHEN F. HARPER
2/2/2024

BRIDGE ENGINEER
PRINT DATE: 2/2/2024

SHEET 2 OF 15
DETAILS OF 479'-0" CONTINUOUS COMPOSITE PLATE GIRDER UNIT
ROUTE SECTION
ARKANSAS STATE HIGHWAY COMMISSION
LITTLE ROCK, ARKANSAS

DRAWN BY:	JPC	DATE:	02/2020	FILENAME: B070458X1_S22.dgn
CHECKED BY:	SRN	DATE:	05/2021	
DESIGNED BY:	HSS	DATE:	02/2020	SCALE: ⅜" = 1'-0"
BRIDGE NO.	07537		DRAWING NO.	64283

Scott.Thornsberry 2/2/2024 4:47:05 PM
WORKSPACE: ARDOT
Y:\Projects\ARDOT_169387_070458 UPRR Grade Separation\Design\BRIDGE\Drawings\B070458X1_S22.dgn
REVISED DATE:

DATE REVISED	DATE FILMED	DATE REVISED	DATE FILMED

FED.RD. DIST.NO.	STATE	FED.AID PROJ.NO.	SHEET NO.	TOTAL SHEETS
6	ARK.			
JOB NO.		070458	92	125

(1) 07537 - 479'-0" CONT. UNIT - 64284

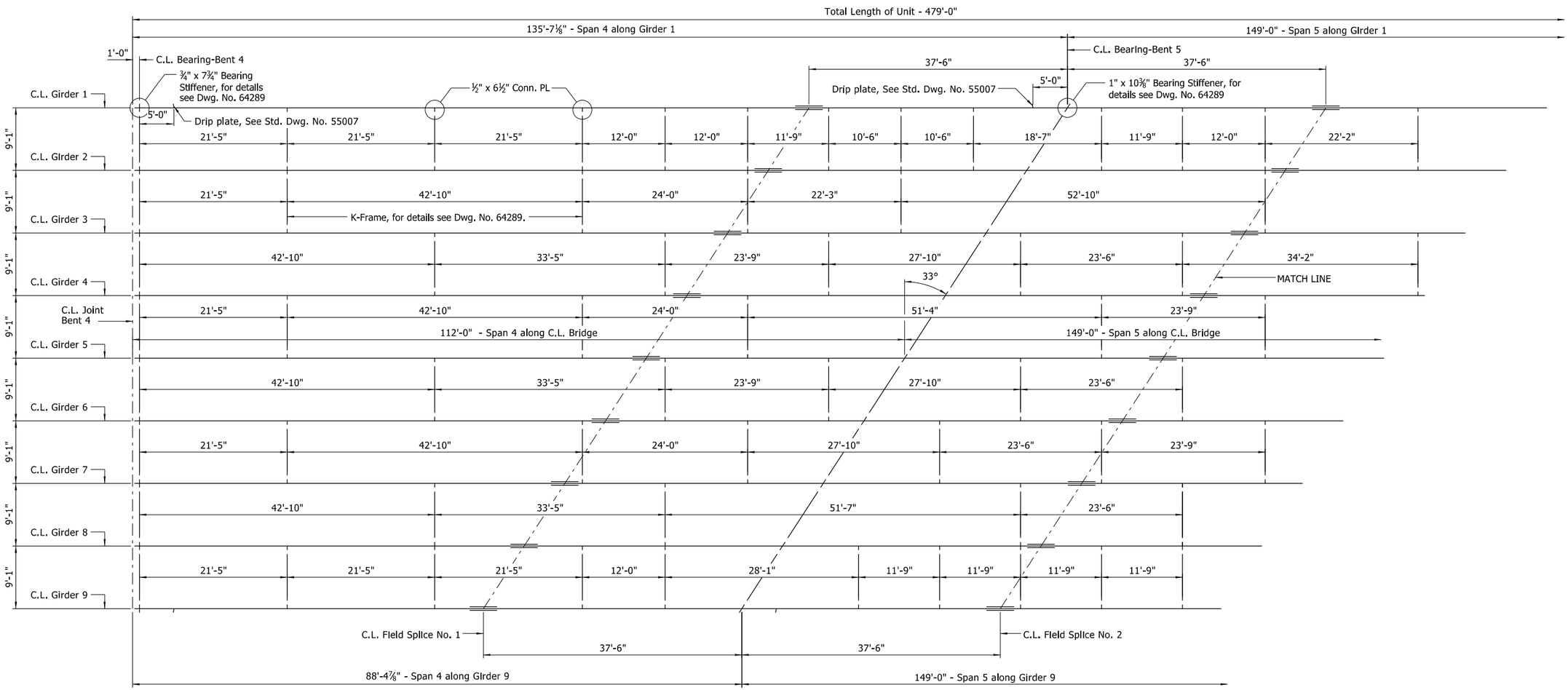

FRAMING PLAN

STATE OF ARKANSAS
LICENSED PROFESSIONAL ENGINEER
No.14501
STEPHEN F. HARPER

2/2/2024

BRIDGE ENGINEER
PRINT DATE: 2/2/2024

SHEET 3 OF 15
DETAILS OF 479'-0" CONTINUOUS COMPOSITE PLATE GIRDER UNIT
ROUTE SECTION
ARKANSAS STATE HIGHWAY COMMISSION
LITTLE ROCK, ARKANSAS

DRAWN BY:	KDH	DATE:	09/2020	FILENAME: B070458X1_S23.dgn
CHECKED BY:	SRN	DATE:	05/2021	
DESIGNED BY:	HSS	DATE:	02/2020	SCALE: ⅛" = 1'-0"
BRIDGE NO.	07537		DRAWING NO.	64284

Scott.Thornsberry 2/2/2024 4:47:06 PM
WORKSPACE: ARDOT
Y:\Projects\ARDOT_169387_070458 UPRR Grade Separation\Design\BRIDGE\Drawings\B070458X1_S23.dgn
REVISED DATE:

DATE REVISED	DATE FILMED	DATE REVISED	DATE FILMED	FED.RD. DIST.NO.	STATE	FED.AID PROJ.NO.	SHEET NO.	TOTAL SHEETS
				6	ARK.			
				JOB NO.		070458	93	125

(1) 07537 - 479'-0" CONT. UNIT - 64285

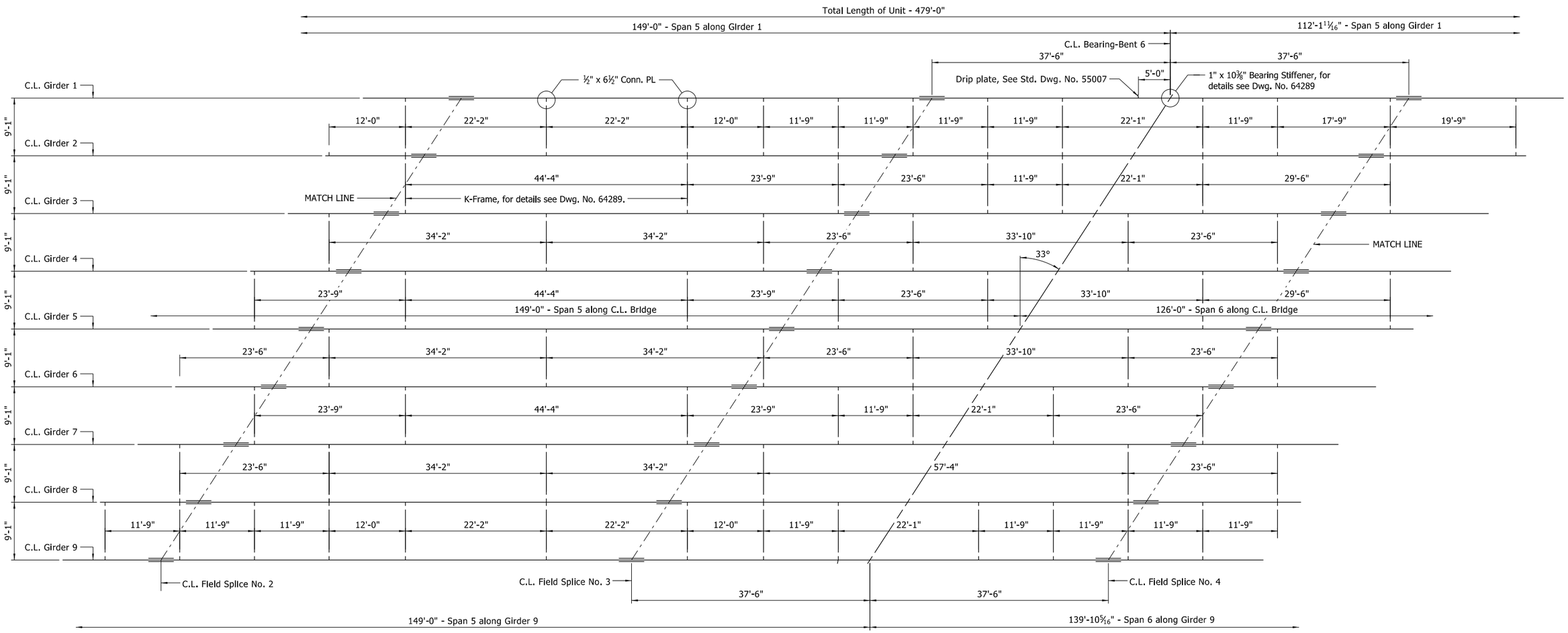

FRAMING PLAN

STATE OF ARKANSAS
LICENSED PROFESSIONAL ENGINEER
No.14501
STEPHEN F. HARPER
2/2/2024

BRIDGE ENGINEER
PRINT DATE: 2/2/2024

SHEET 4 OF 15
DETAILS OF 479'-0" CONTINUOUS COMPOSITE PLATE GIRDER UNIT
ROUTE SECTION
ARKANSAS STATE HIGHWAY COMMISSION
LITTLE ROCK, ARKANSAS

DRAWN BY:	KDH	DATE:	09/2020	FILENAME:	B070458X1_S24.dgn
CHECKED BY:	SRN	DATE:	05/2021		
DESIGNED BY:	HSS	DATE:	02/2020	SCALE:	1/8" = 1'-0"
BRIDGE NO.	07537		DRAWING NO.	64285	

Scott.Thornsberry 2/2/2024 4:47:06 PM
WORKSPACE: ARDOT
Y:\Projects\ARDOT_169387_070458 UPRR Grade Separation\Design\BRIDGE\Drawings\B070458X1_S24.dgn
REVISED DATE:

DATE REVISED	DATE FILMED	DATE REVISED	DATE FILMED	FED.RD. DIST.NO.	STATE	FED.AID PROJ.NO.	SHEET NO.	TOTAL SHEETS
				6	ARK.			
				JOB NO.		070458	94	125

(1) 07537 - 479'-0" CONT. UNIT - 64286

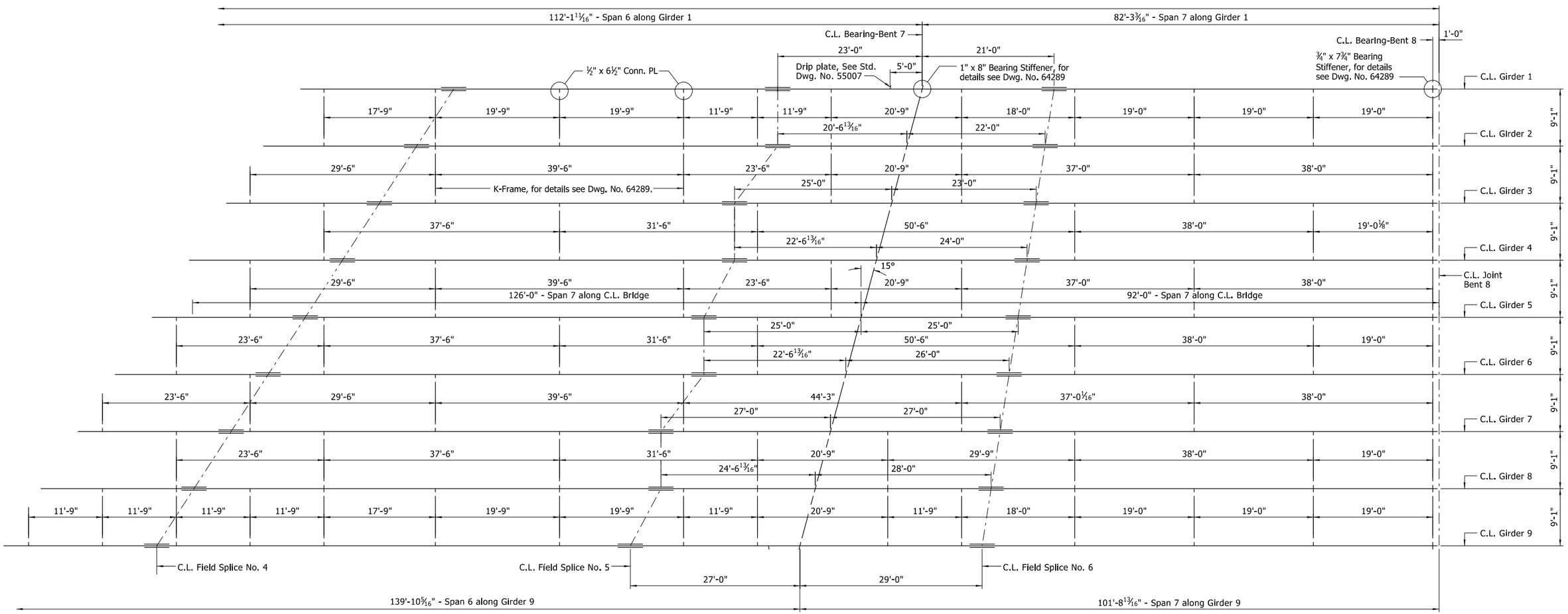

FRAMING PLAN

STATE OF ARKANSAS
LICENSED PROFESSIONAL ENGINEER
No.14501
STEPHEN F. HARPER

2/2/2024

BRIDGE ENGINEER
PRINT DATE: 2/2/2024

SHEET 5 OF 15
DETAILS OF 479'-0" CONTINUOUS COMPOSITE PLATE GIRDER UNIT
ROUTE SECTION
ARKANSAS STATE HIGHWAY COMMISSION
LITTLE ROCK, ARKANSAS

DRAWN BY: KDH	DATE: 09/2020	FILENAME: B070458X1_S25.dgn		
CHECKED BY: SRN	DATE: 05/2021			
DESIGNED BY: HSS	DATE: 02/2020	SCALE: 1/8" = 1'-0"		
BRIDGE NO. 07537	DRAWING NO. 64286			

Scott.Thornsberry 2/2/2024 4:47:07 PM
WORKSPACE: ARDOT
Y:\Projects\ARDOT_169387_070458 UPRR Grade Separation\Design\BRIDGE\Drawings\B070458X1_S25.dgn
REVISED DATE:

DATE REVISED	DATE FILMED	DATE REVISED	DATE FILMED	FED.RD. DIST.NO.	STATE	FED.AID PROJ.NO.	SHEET NO.	TOTAL SHEETS
				6	ARK.			
				JOB NO.		070458	95	125

(1) 07537 - 479'-0" CONT. UNIT - 64287

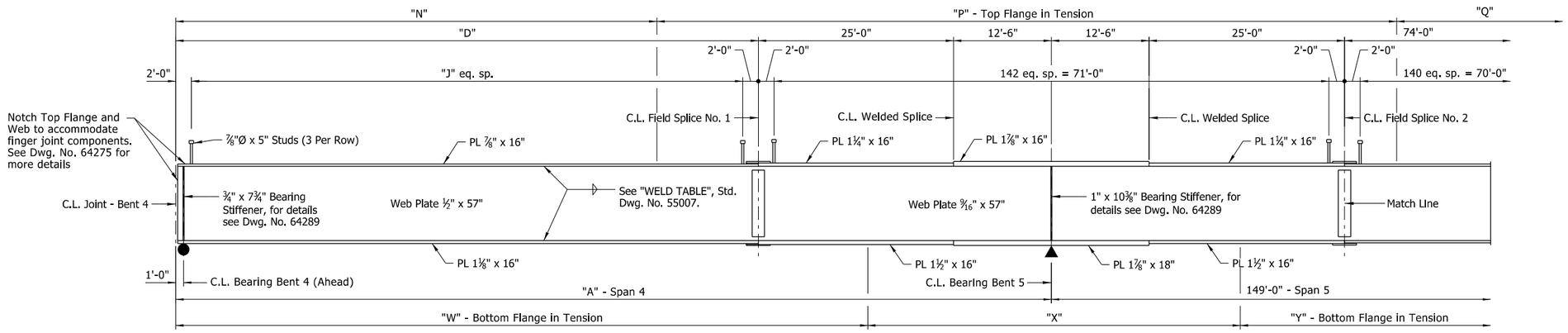

GIRDER ELEVATION

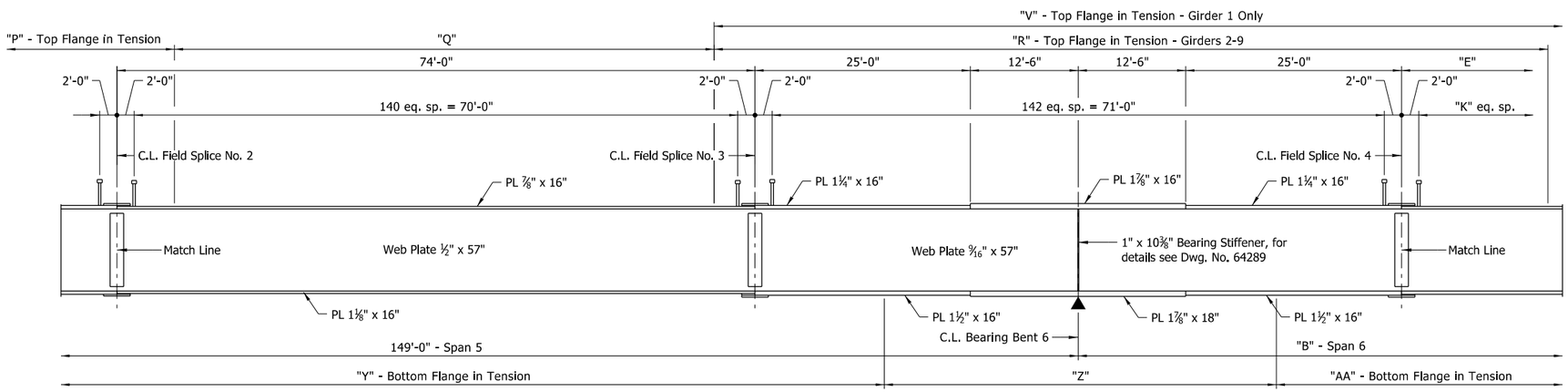

GIRDER ELEVATION

(Dimensions measured along C.L. of girder.)
No Scale

Notes:

All Structural Steel shall be ASTM A709, Grade 50W unless otherwise noted, and shall be paid for as "STRUCTURAL STEEL IN PLATE GIRDER SPANS (A709, GR. 50W)".

For additional information, see "LAYOUT OF BRIDGE".

For General Notes, See Std. Dwg. No. 55006.

For additional details, see Std. Dwg. No. 55007.

The erection of the structural steel shall be performed according to a plan permitting the steel to be erected plumb with bolts tightened while the steel is as close as possible to the no-load condition, so that the bolt holes can be aligned. This requirement may necessitate the use of large capacity temporary shoring or jacking frames.

The Contractor shall ensure that the girders are stable throughout the erection process. The Contractor will be responsible for providing temporary bracing or stiffening devices to accommodate handling stresses in individual members or segments of the structure during erection.

For "DETAILS OF WELDED SPLICES FOR PLATE GIRDERS," See Std. Dwg. No. 55007.

For variables, see "TABLE OF GIRDER VARIABLES", Dwg. No. 64288.

STATE OF ARKANSAS
LICENSED PROFESSIONAL ENGINEER
No.14501
STEPHEN F. HARPER
2/2/2024

BRIDGE ENGINEER
PRINT DATE: 2/2/2024

SHEET 6 OF 15
DETAILS OF 479'-0" CONTINUOUS COMPOSITE PLATE GIRDER UNIT
ROUTE SECTION
ARKANSAS STATE HIGHWAY COMMISSION
LITTLE ROCK, ARKANSAS

DRAWN BY:	KDH	DATE:	10/2020	FILENAME:	B070458X1_S26.dgn
CHECKED BY:	SRN	DATE:	05/2021		
DESIGNED BY:	HSS	DATE:	02/2020	SCALE:	⅛" = 1'-0"
BRIDGE NO.	07537			DRAWING NO.	64287

Scott.Thornsberry 2/2/2024 4:47:07 PM
WORKSPACE: ARDOT
Y:\Projects\ARDOT_169387_070458 UPRR Grade Separation\Design\BRIDGE\Drawings\B070458X1_S26.dgn
REVISED DATE:

DATE REVISED	DATE FILMED	DATE REVISED	DATE FILMED	FED.RD. DIST.NO.	STATE	FED.AID PROJ.NO.	SHEET NO.	TOTAL SHEETS
				6	ARK.			
				JOB NO.		070458	96	125

(1) 07537 - 479'-0" CONT. UNIT - 64288

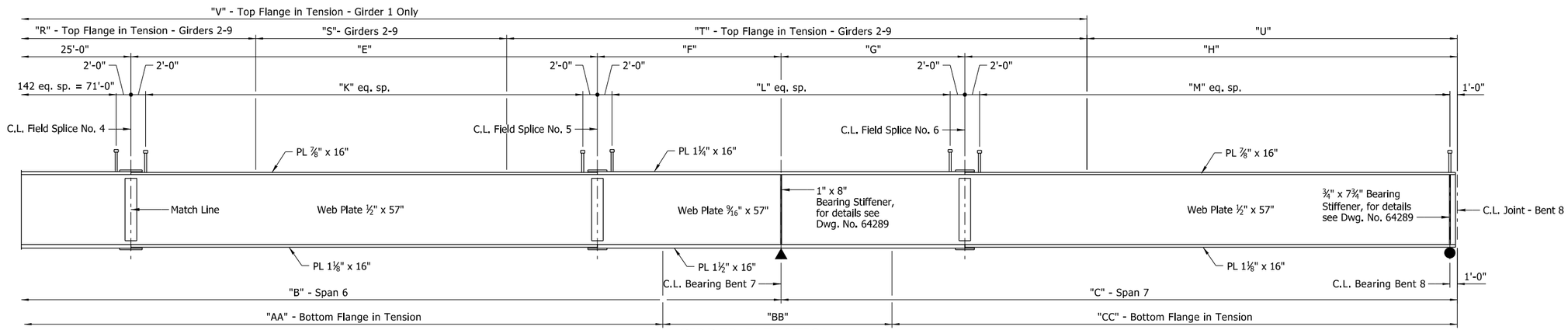

GIRDER ELEVATION

For "DETAILS OF WELDED SPLICES FOR PLATE GIRDERS," See Std. Dwg. No. 55007.

TABLE OF GIRDER VARIABLES

GIRDER	"A"	"B"	"C"	"D"	"E"	"F"	"G"	"H"	"J"	"K"	"L"	"M"	"N"	"P"	"Q"	"R"	"S"	"T"	"U"	"V"	"W"	"X"	"Y"	"Z"	"AA"	"BB"	"CC"
1	135'-7 7/8"	112'-1 11/16"	82'-3 3/16"	98'-1 1/8"	52'-0"	22'-7 11/16"	21'-0"	61'-3 3/16"	189	96	80	115	82'-5 1/16"	109'-9"	50'-1 7/8"	------	------	------	38'-7"	198'-1 1/16"	109'-8 5/8"	50'-3 13/16"	105'-0 3/4"	37'-3 3/8"	82'-4 1/4"	21'-0"	73'-3 5/16"
2	129'-8 3/8"	115'-7 1/4"	84'-8 3/8"	92'-2 3/8"	57'-6"	20'-7 1/4"	22'-0"	62'-8 3/8"	177	107	78	118	78'-10 3/16"	102'-9 11/16"	56'-1 1/2"	100'-7 3/8"	15'-10 5/16"	80'-3 7/8"	44'-5 1/8"	------	105'-2 5/8"	50'-2 11/16"	103-1 7/8"	40'-4 1/4"	81'-3 3/8"	25'-3 3/8"	73'-5 13/16"
3	123'-9 9/16"	119'-0 7/8"	87'-1 9/16"	86'-3 9/16"	56'-6 13/16"	25'-0"	23'-3 3/16"	63-10 7/16"	165	106	89	120	75'-7 1/2"	97'-9 1/4"	59'-4 11/16"	95'-10 7/8"	25'-11 1/4"	76'-11 5/16"	47'-5 3/16"	------	100'-0 13/16"	48'-4 3/16"	103'-11 3/16"	41'-7"	83'-7 5/8"	26'-7 1/8"	74'-9 5/8"
4	117'-10 13/16"	122'-6 3/8"	89'-6 13/16"	80'-4 13/16"	60'-0 7/16"	25'-0"	24'-3 3/16"	65'-3 9/16"	153	113	91	123	69'-0 1/16"	95'-8 5/16"	61'-2 7/8"	97'-8 1/4"	28'-0"	79'-0"	48'-4 1/2"	------	94'-9 15/16"	47'-6 1/2"	104'-1 7/8"	42'-6 3/4"	85'-6 9/16"	28'-3 9/16"	76'-0 13/16"
5	112'-0"	126'-0"	92'-0"	74'-6"	63'-6"	25'-0"	25'-0"	67'-0"	141	119	92	126	60'-6 3/16"	95'-4 15/16"	62'-7 3/8"	98'-1 11/16"	32'-6 3/4"	80'-0 1/16"	49'-9"	------	88'-9 7/8"	47'-2 3/8"	102'-8 9/16"	45'-5 11/16"	86'-8 9/16"	30'-6 7/16"	77'-6 1/2"
6	106'-1 3/16"	129'-5 5/8"	94'-5 3/16"	68'-7 3/16"	66'-11 9/16"	25'-0"	26'-3 9/16"	68'-1 15/16"	130	126	95	129	52'-1 3/4"	95'-6"	63'-10 1/16"	97'-4 5/16"	37'-4 7/16"	81'-1 3/4"	51'-7 5/8"	------	83'-9 5/8"	44'-1 1/16"	104'-8 1/2"	45'-3 9/16"	89'-11 3/4"	31'-8 1/2"	79'-5 1/16"
7	100'-2 7/16"	132'-11 1/8"	96'-10 7/16"	62'-8 7/16"	70'-5 3/16"	25'-0"	27'-3 3/8"	69'-7"	118	133	97	132	45'-6 5/16"	94'-7 11/16"	64'-8 3/16"	96'-9 9/16"	41'-6 15/16"	81'-11 15/16"	53'-9 3/8"	------	78'-7 13/16"	43'-2 5/16"	104'-10 15/16"	45'-8 1/2"	92'-5 3/16"	32'-11 1/8"	81'-2 1/4"
8	94'-3 5/8"	136'-4 3/4"	99'-3 5/8"	56'-9 5/8"	73'-10 3/4"	25'-0"	28-3 3/8"	71'-0 1/4"	106	140	99	135	34'-9 3/16"	98'-3 7/8"	64'-4 13/16"	102'-4 3/4"	39'-4 3/4"	86'-11"	52'-9 11/16"	------	73'-9 7/8"	41'-9 3/16"	105'-2 3/16"	46'-9 11/16"	94'-1 9/16"	33'-11 3/16"	83'-4 5/16"
9	88'-4 7/8"	139'-10 5/16"	101'-8 13/16"	50'-10 7/8"	77'-4 9/16"	25'-0"	29'-3 7/16"	72'-5 3/8"	94	147	101	137	15'-8 1/16"	111'-10 13/16"	60'-9 1/4"	109'-0 5/8"	35'-6 7/16"	95'-11"	50'-1 13/16"	------	69'-3 7/8"	39'-4 9/16"	106'-10 1/8"	46'-0 3/16"	98'-7 5/8"	32'-10 11/16"	85'-11 1/8"

Notes:

All Structural Steel shall be ASTM A709, Grade 50W unless otherwise noted, and shall be paid for as "STRUCTURAL STEEL IN PLATE GIRDER SPANS (A709, GR. 50W)".

For additional information, see "LAYOUT OF BRIDGE".

For General Notes, See Std. Dwg. No. 55006.

For additional details, see Std. Dwg. No. 55007.

The erection of the structural steel shall be performed according to a plan permitting the steel to be erected plumb with bolts tightened while the steel is as close as possible to the no-load condition, so that the bolt holes can be aligned. This requirement may necessitate the use of large capacity temporary shoring or jacking frames.

The Contractor shall ensure that the girders are stable throughout the erection process. The Contractor will be responsible for providing temporary bracing or stiffening devices to accommodate handling stresses in individual members or segments of the structure during erection.

STATE OF ARKANSAS
LICENSED PROFESSIONAL ENGINEER
No.14501
STEPHEN F. HARPER
2/2/2024

BRIDGE ENGINEER
PRINT DATE: 2/2/2024

SHEET 7 OF 15
DETAILS OF 479'-0" CONTINUOUS COMPOSITE PLATE GIRDER UNIT
ROUTE SECTION
ARKANSAS STATE HIGHWAY COMMISSION
LITTLE ROCK, ARKANSAS

DRAWN BY:	KDH	DATE:	10/2020	FILENAME:	B070458X1_S27.dgn
CHECKED BY:	SRN	DATE:	05/2021		
DESIGNED BY:	HSS	DATE:	02/2020	SCALE:	1/8" = 1'-0"
BRIDGE NO.	07537			DRAWING NO.	64288

Scott.Thornsberry 2/2/2024 4:47:08 PM
WORKSPACE: ARDOT
Y:\Projects\ARDOT_169387_070458 UPRR Grade Separation\Design\BRIDGE\Drawings\B070458X1_S27.dgn
REVISED DATE:

DATE REVISED	DATE FILMED	DATE REVISED	DATE FILMED	FED.RD. DIST.NO.	STATE	FED.AID PROJ.NO.	SHEET NO.	TOTAL SHEETS
				6	ARK.			
				JOB NO.		070458	97	125
				(1)	07537 - 479'-0" CONT. UNIT - 64289			

Note: All bearing stiffeners shall be vertical in their final position

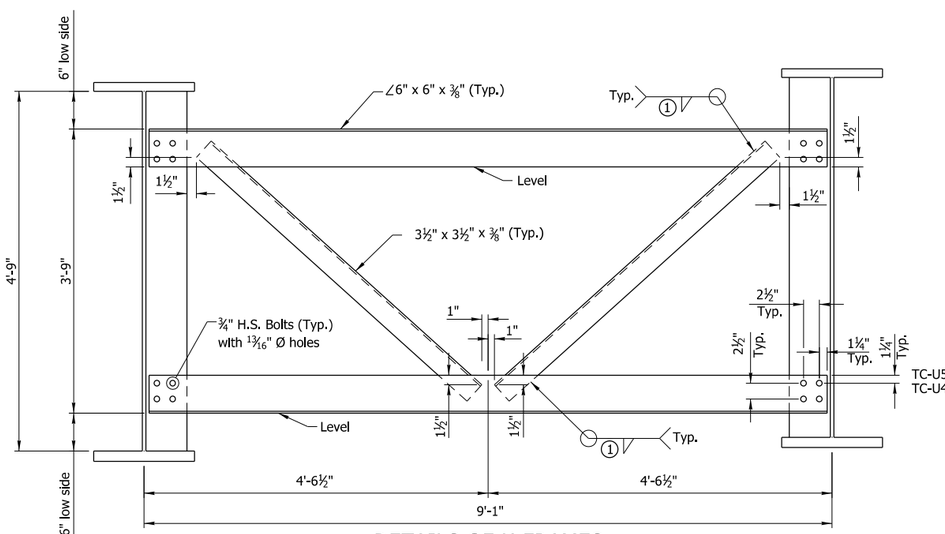

DETAILS OF K-FRAMES

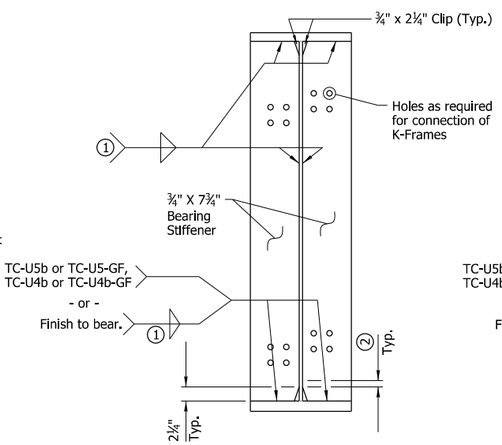

BEARING STIFFENER DETAIL - BTS. 4 & 8

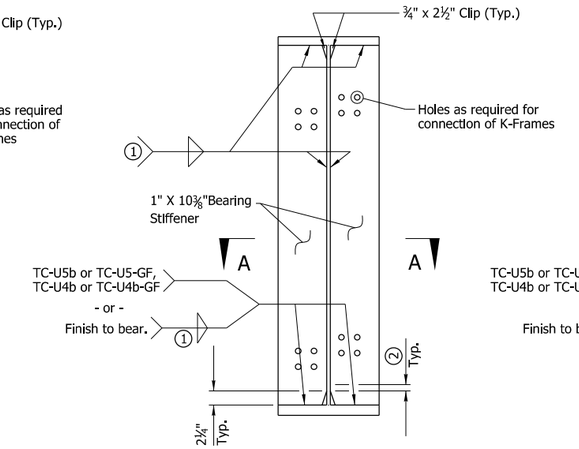

BEARING STIFFENER DETAIL - BTS. 5 & 6

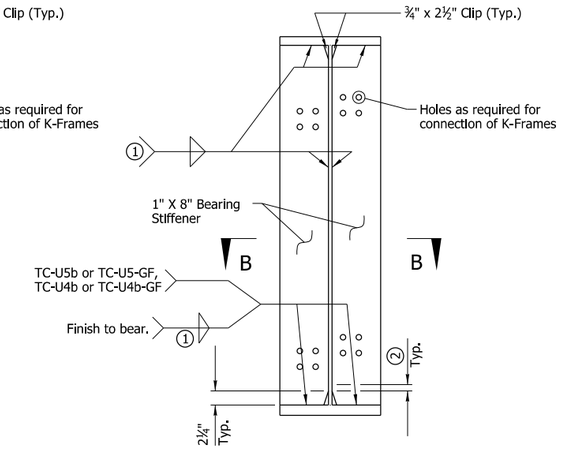

BEARING STIFFENER DETAIL - BT. 7

(1) See "WELD TABLE" on Std. Dwg. No. 55007.

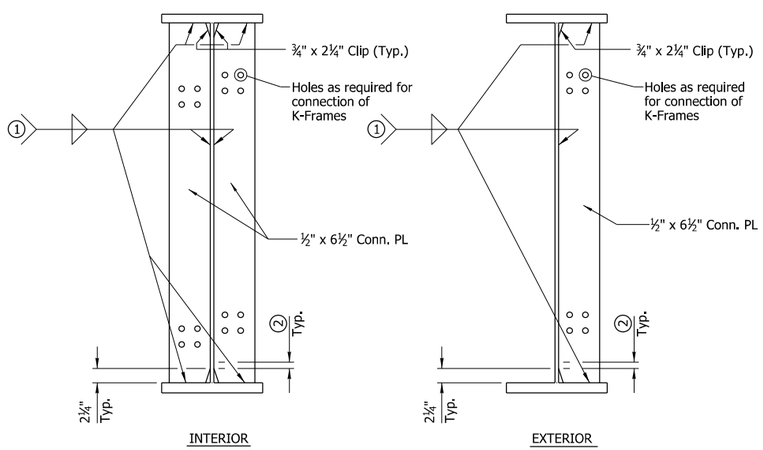

K-FRAME CONNECTION PLATE DETAIL

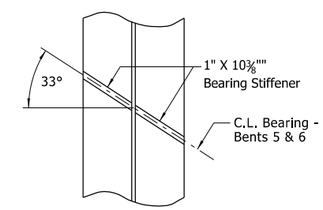

SECTION A-A

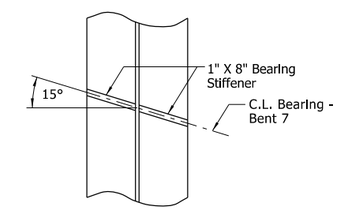

SECTION B-B

STATE OF ARKANSAS
LICENSED PROFESSIONAL ENGINEER
No.14501
STEPHEN F. HARPER
2/2/2024

BRIDGE ENGINEER
PRINT DATE: 2/2/2024

SHEET 8 OF 15
DETAILS OF 479'-0" CONTINUOUS COMPOSITE PLATE GIRDER UNIT
ROUTE SECTION
ARKANSAS STATE HIGHWAY COMMISSION
LITTLE ROCK, ARKANSAS

DRAWN BY:	KDH	DATE:	09/2020	FILENAME: B070458X1_S28.dgn
CHECKED BY:	SRN	DATE:	05/2021	
DESIGNED BY:	HSS	DATE:	02/2020	SCALE: 1" = 1'-0"
BRIDGE NO.	07537		DRAWING NO.	64289

Scott.Thornsberry 2/2/2024 4:47:09 PM
WORKSPACE: ARDOT
Y:\Projects\ARDOT_169387_070458 UPRR Grade Separation\Design\BRIDGE\Drawings\B070458X1_S28.dgn
REVISED DATE:

DATE REVISED	DATE FILMED	DATE REVISED	DATE FILMED	FED.RD. DIST.NO.	STATE	FED.AID PROJ.NO.	SHEET NO.	TOTAL SHEETS
				6	ARK.			
				JOB NO.		070458	98	125
				(1)	07537 - 479'-0" CONT. UNIT - 64290			

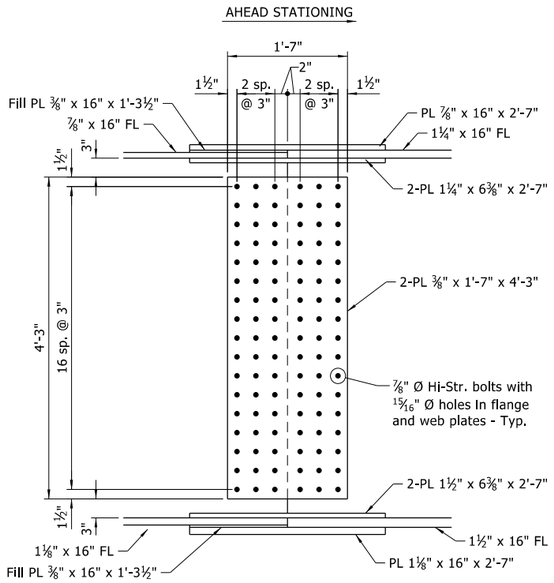

FIELD SPLICE NOS. 1, 3 & 5

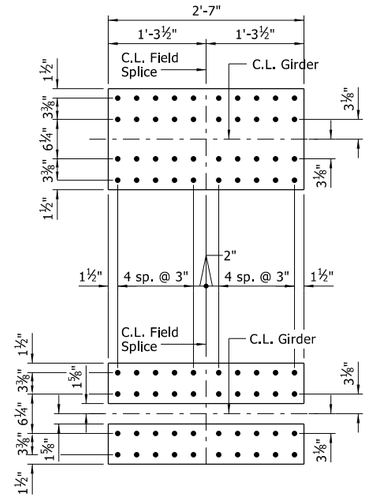

FLANGE SPLICE

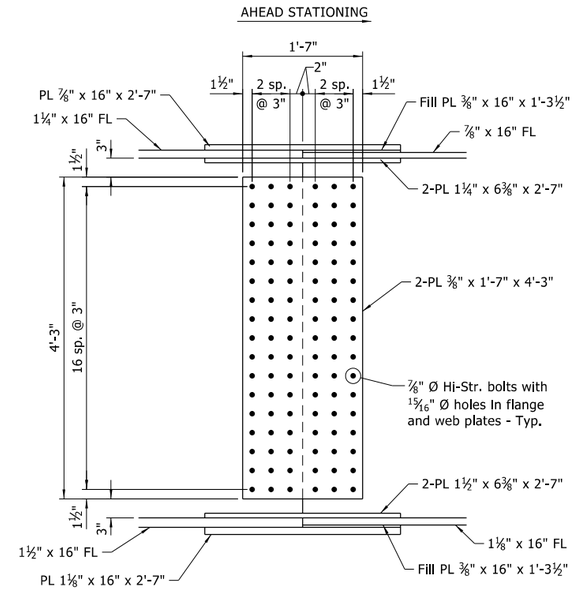

FIELD SPLICE NOS. 2, 4 & 6

STATE OF ARKANSAS
LICENSED PROFESSIONAL ENGINEER
No.14501
STEPHEN F. HARPER
2/2/2024

BRIDGE ENGINEER
PRINT DATE: 2/2/2024

SHEET 9 OF 15
DETAILS OF 479'-0" CONTINUOUS
COMPOSITE PLATE GIRDER UNIT
ROUTE SECTION
ARKANSAS STATE HIGHWAY COMMISSION
LITTLE ROCK, ARKANSAS

DRAWN BY: KDH	DATE: 09/2020	FILENAME: B070458X1_S29.dgn		
CHECKED BY: SRN	DATE: 05/2021			
DESIGNED BY: HSS	DATE: 02/2020	SCALE: 1" = 1'-0"		
BRIDGE NO. 07537		DRAWING NO. 64290		

Scott.Thornsberry 2/2/2024 4:47:09 PM
WORKSPACE: ARDOT
Y:\Projects\ARDOT_169387_070458 UPRR Grade Separation\Design\BRIDGE\Drawings\B070458X1_S29.dgn
REVISED DATE:

DATE REVISED	DATE FILMED	DATE REVISED	DATE FILMED	FED.RD. DIST.NO.	STATE	FED.AID PROJ.NO.	SHEET NO.	TOTAL SHEETS
				6	ARK.			
				JOB NO.		070458	99	125
				(I)	07537 - 479-0" CONT. UNIT - 64291			

TABLE OF DEAD LOAD DEFLECTIONS - INCHES

Span	Point of Deflection	GIRDER NO. 1			GIRDER NO. 2			GIRDER NO. 3			GIRDER NO. 4			GIRDER NO. 5			GIRDER NO. 6			GIRDER NO. 7			GIRDER NO. 8			GIRDER NO. 9		
		Structural Steel	Structural Steel + Slab	Structural Steel + Slab + Rail	Structural Steel	Structural Steel + Slab	Structural Steel + Slab + Rail	Structural Steel	Structural Steel + Slab	Structural Steel + Slab + Rail	Structural Steel	Structural Steel + Slab	Structural Steel + Slab + Rail	Structural Steel	Structural Steel + Slab	Structural Steel + Slab + Rail	Structural Steel	Structural Steel + Slab	Structural Steel + Slab + Rail	Structural Steel	Structural Steel + Slab	Structural Steel + Slab + Rail	Structural Steel	Structural Steel + Slab	Structural Steel + Slab + Rail	Structural Steel	Structural Steel + Slab	Structural Steel + Slab + Rail
Span 4	0	0	0	0	0	0	0	0	0	0	0	0	0	0	0	0	0	0	0	0	0	0	0	0	0	0	0	0
	0.1	0.240	1.104	1.160	0.198	0.996	1.041	0.158	0.877	0.912	0.121	0.677	0.695	0.091	0.504	0.515	0.066	0.366	0.374	0.046	0.264	0.275	0.031	0.173	0.239	0.017	0.075	0.079
	0.2	0.462	2.121	2.232	0.381	1.908	1.998	0.303	1.678	1.746	0.232	1.291	1.323	0.173	0.962	0.979	0.125	0.694	0.706	0.087	0.498	0.517	0.058	0.323	0.401	0.030	0.131	0.137
	0.3	0.613	2.813	2.963	0.507	2.535	2.657	0.402	2.218	2.309	0.304	1.695	1.735	0.226	1.252	1.272	0.161	0.893	0.906	0.109	0.629	0.653	0.072	0.400	0.482	0.035	0.146	0.151
	0.4	0.681	3.120	3.287	0.560	2.789	2.924	0.444	2.439	2.540	0.332	1.846	1.888	0.243	1.343	1.362	0.170	0.941	0.952	0.112	0.647	0.669	0.071	0.396	0.474	0.028	0.115	0.116
	0.5	0.657	3.006	3.165	0.542	2.681	2.811	0.423	2.319	2.416	0.313	1.738	1.777	0.225	1.236	1.252	0.153	0.842	0.848	0.095	0.552	0.569	0.056	0.319	0.389	0.014	0.048	0.041
	0.6	0.556	2.538	2.666	0.459	2.251	2.357	0.352	1.917	1.997	0.255	1.411	1.443	0.177	0.970	0.981	0.114	0.625	0.625	0.064	0.374	0.381	0.031	0.190	0.240	-0.006	-0.041	-0.055
	0.7	0.400	1.822	1.907	0.330	1.603	1.675	0.247	1.334	1.389	0.172	0.946	0.967	0.113	0.612	0.618	0.065	0.353	0.348	0.027	0.165	0.164	0.004	0.049	0.086	-0.024	-0.121	-0.142
	0.8	0.227	1.032	1.072	0.188	0.898	0.935	0.134	0.715	0.743	0.086	0.473	0.484	0.049	0.263	0.264	0.020	0.104	0.097	-0.004	-0.007	-0.015	-0.016	-0.061	-0.032	-0.034	-0.162	-0.185
	0.9	0.081	0.369	0.375	0.067	0.311	0.319	0.042	0.223	0.230	0.022	0.123	0.126	0.006	0.033	0.032	-0.005	-0.032	-0.037	-0.015	-0.078	-0.086	-0.020	-0.089	-0.062	-0.027	-0.126	-0.143
Span 5	0	0	0	0	0	0	0	0	0	0	0	0	0	0	0	0	0	0	0	0	0	0	0	0	0	0	0	0
	0.1	0.034	0.128	0.177	0.046	0.232	0.270	0.061	0.319	0.350	0.076	0.394	0.403	0.089	0.463	0.468	0.101	0.533	0.552	0.110	0.568	0.612	0.117	0.552	0.608	0.125	0.550	0.617
	0.2	0.144	0.603	0.727	0.162	0.814	0.912	0.182	0.969	1.048	0.210	1.108	1.133	0.232	1.226	1.241	0.251	1.332	1.374	0.266	1.395	1.494	0.277	1.320	1.427	0.291	1.283	1.435
	0.3	0.283	1.221	1.422	0.303	1.515	1.678	0.326	1.748	1.878	0.358	1.908	1.953	0.383	2.042	2.066	0.405	2.167	2.229	0.423	2.234	2.385	0.434	2.093	2.240	0.451	1.998	2.231
	0.4	0.403	1.758	2.017	0.419	2.084	2.297	0.443	2.379	2.548	0.472	2.530	2.592	0.496	2.656	2.688	0.517	2.775	2.851	0.534	2.834	3.021	0.543	2.639	2.813	0.560	2.488	2.777
	0.5	0.466	2.048	2.332	0.477	2.352	2.588	0.499	2.679	2.867	0.521	2.801	2.874	0.540	2.898	2.934	0.557	2.993	3.071	0.569	3.032	3.229	0.573	2.812	2.991	0.589	2.619	2.926
	0.6	0.453	1.995	2.264	0.459	2.242	2.468	0.476	2.548	2.727	0.489	2.632	2.705	0.502	2.695	2.729	0.515	2.761	2.831	0.521	2.775	2.955	0.522	2.572	2.733	0.533	2.368	2.651
	0.7	0.368	1.623	1.839	0.372	1.797	1.983	0.382	2.034	2.180	0.389	2.085	2.147	0.395	2.112	2.141	0.402	2.149	2.203	0.402	2.135	2.275	0.401	1.985	2.107	0.406	1.799	2.023
	0.8	0.235	1.035	1.174	0.237	1.133	1.255	0.242	1.276	1.372	0.243	1.297	1.340	0.245	1.302	1.321	0.248	1.315	1.348	0.244	1.285	1.372	0.242	1.202	1.271	0.242	1.065	1.206
	0.9	0.098	0.430	0.491	0.099	0.467	0.522	0.099	0.520	0.563	0.099	0.527	0.547	0.098	0.518	0.527	0.099	0.522	0.535	0.095	0.493	0.528	0.093	0.465	0.487	0.091	0.396	0.455
Span 6	0	0	0	0	0	0	0	0	0	0	0	0	0	0	0	0	0	0	0	0	0	0	0	0	0	0	0	0
	0.1	-0.013	-0.066	-0.081	-0.010	-0.045	-0.057	-0.009	-0.050	-0.059	-0.006	-0.044	-0.053	-0.003	-0.025	-0.030	0.001	0.001	-0.002	0.007	0.036	0.037	0.014	0.057	0.063	0.018	0.072	0.068
	0.2	0.003	-0.005	-0.019	0.012	0.065	0.055	0.017	0.089	0.083	0.026	0.123	0.110	0.036	0.181	0.172	0.048	0.251	0.250	0.064	0.344	0.361	0.082	0.379	0.419	0.096	0.407	0.426
	0.3	0.036	0.134	0.129	0.050	0.258	0.258	0.061	0.331	0.336	0.077	0.396	0.383	0.095	0.494	0.484	0.115	0.615	0.619	0.142	0.768	0.806	0.171	0.815	0.887	0.195	0.851	0.904
	0.4	0.069	0.280	0.286	0.088	0.448	0.460	0.104	0.570	0.586	0.124	0.653	0.642	0.149	0.788	0.778	0.177	0.952	0.960	0.211	1.149	1.206	0.246	1.197	1.295	0.281	1.236	1.320
	0.5	0.091	0.377	0.393	0.111	0.562	0.583	0.131	0.713	0.738	0.153	0.813	0.806	0.180	0.958	0.949	0.211	1.140	1.151	0.248	1.352	1.419	0.285	1.402	1.512	0.323	1.429	1.532
	0.6	0.094	0.393	0.414	0.113	0.566	0.591	0.133	0.722	0.749	0.154	0.817	0.813	0.178	0.950	0.943	0.207	1.118	1.129	0.241	1.316	1.382	0.276	1.367	1.489	0.314	1.392	1.496
	0.7	0.078	0.326	0.345	0.093	0.459	0.481	0.109	0.589	0.613	0.125	0.664	0.662	0.145	0.771	0.766	0.167	0.902	0.910	0.193	1.050	1.103	0.221	1.095	1.219	0.252	1.116	1.202
	0.8	0.049	0.202	0.214	0.077	0.376	0.395	0.068	0.365	0.380	0.079	0.411	0.409	0.091	0.476	0.472	0.104	0.556	0.560	0.120	0.650	0.683	0.137	0.678	0.776	0.156	0.689	0.744
	0.9	0.019	0.074	0.079	0.021	0.100	0.105	0.026	0.137	0.143	0.030	0.151	0.150	0.035	0.180	0.178	0.039	0.207	0.208	0.046	0.246	0.259	0.052	0.258	0.326	0.060	0.264	0.285
Span 7	0	0	0	0	0	0	0	0	0	0	0	0	0	0	0	0	0	0	0	0	0	0	0	0	0	0	0	0
	0.1	0.013	0.060	0.068	0.014	0.075	0.082	0.014	0.080	0.087	0.015	0.083	0.084	0.014	0.082	0.083	0.015	0.084	0.086	0.016	0.088	0.095	0.017	0.085	0.160	0.017	0.074	0.082
	0.2	0.034	0.155	0.172	0.037	0.197	0.214	0.039	0.218	0.234	0.041	0.233	0.236	0.044	0.245	0.247	0.047	0.263	0.267	0.051	0.287	0.307	0.055	0.276	0.395	0.057	0.250	0.275
	0.3	0.058	0.265	0.292	0.064	0.339	0.366	0.068	0.386	0.412	0.074	0.413	0.419	0.079	0.444	0.446	0.086	0.480	0.487	0.094	0.529	0.562	0.102	0.516	0.684	0.108	0.481	0.526
	0.4	0.079	0.362	0.397	0.088	0.464	0.500	0.095	0.538	0.572	0.103	0.577	0.585	0.112	0.625	0.628	0.122	0.681	0.691	0.134	0.755	0.800	0.146	0.738	0.927	0.155	0.696	0.758
	0.5	0.092	0.423	0.464	0.103	0.545	0.585	0.112	0.636	0.675	0.122	0.684	0.693	0.133	0.745	0.748	0.146	0.815	0.827	0.160	0.906	0.959	0.175	0.893	1.119	0.188	0.847	0.921
	0.6	0.095	0.436	0.477	0.106	0.561	0.602	0.115	0.657	0.696	0.126	0.709	0.718	0.138	0.775	0.778	0.152	0.850	0.861	0.167	0.946	1.001	0.183	0.937	1.166	0.198	0.890	0.967
	0.7	0.085	0.390	0.426	0.095	0.503	0.540	0.104	0.591	0.626	0.114	0.640	0.648	0.125	0.701	0.704	0.137	0.769	0.780	0.152	0.859	0.908	0.166	0.852	1.076	0.180	0.811	0.881
	0.8	0.064	0.290	0.317	0.071	0.377	0.404	0.078	0.443	0.469	0.086	0.481	0.487	0.094	0.527	0.529	0.103	0.578	0.585	0.114	0.647	0.683	0.125	0.642	0.865	0.135	0.613	0.666
	0.9	0.032	0.148	0.162	0.036	0.193	0.207	0.040	0.227	0.240	0.044	0.247	0.250	0.048	0.271	0.272	0.053	0.297	0.301	0.059	0.334	0.353	0.065	0.333	0.536	0.070	0.319	0.346
	0	0	0	0	0	0	0	0	0	0	0	0	0	0	0	0	0	0	0	0	0	0	0	0	0	0	0	0

STATE OF ARKANSAS
LICENSED PROFESSIONAL ENGINEER
No.14501
STEPHEN F. HARPER

2/2/2024

BRIDGE ENGINEER
PRINT DATE: 2/2/2024

SHEET 10 OF 15
DETAILS OF 479'-0" CONTINUOUS
COMPOSITE PLATE GIRDER UNIT
ROUTE SECTION
ARKANSAS STATE HIGHWAY COMMISSION
LITTLE ROCK, ARKANSAS

DRAWN BY: KDH DATE: 10/2020 FILENAME: B070458X1_S2A.dgn
CHECKED BY: SRN DATE: 05/2021
DESIGNED BY: HSS DATE: 02/2020 SCALE: No Scale
BRIDGE NO. 07537 DRAWING NO. 64291

Scott.Thornsberry 2/2/2024 4:47:10 PM
WORKSPACE: ARDOT
Y:\Projects\ARDOT_169387_070458 UPRR Grade Separation\Design\BRIDGE\Drawings\B070458X1_S2A.dgn
REVISED DATE:

DATE REVISED	DATE FILMED	DATE REVISED	DATE FILMED	FED.RD. DIST.NO.	STATE	FED.AID PROJ.NO.	SHEET NO.	TOTAL SHEETS
				6	ARK.			
				JOB NO.		070458	100	125
				(1)	07537 - 479'-0" CONT. UNIT - 64292			

Note:
Camber for Dead Load Deflection plus Vertical Curve + or - ¼" tolerance.
Deflections shown are along C.L. Girder from a chord from C.L. Bearing to C.L. Bearing. Vertical curve corrections not included. Negative sign (-) indicates point above chord.

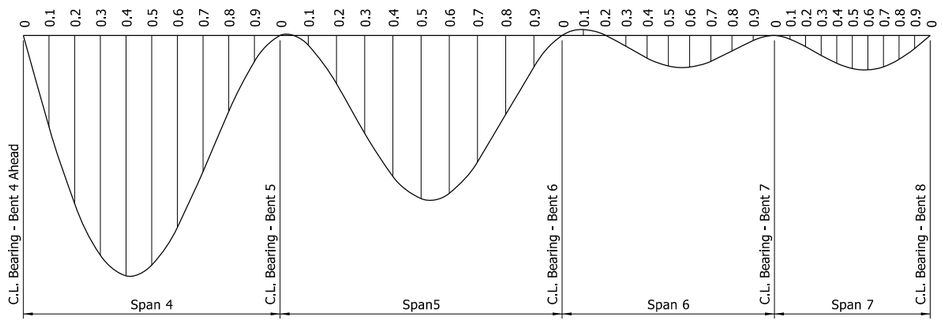

DEAD LOAD DEFLECTION DIAGRAM - GIRDER NO. 1

No Scale

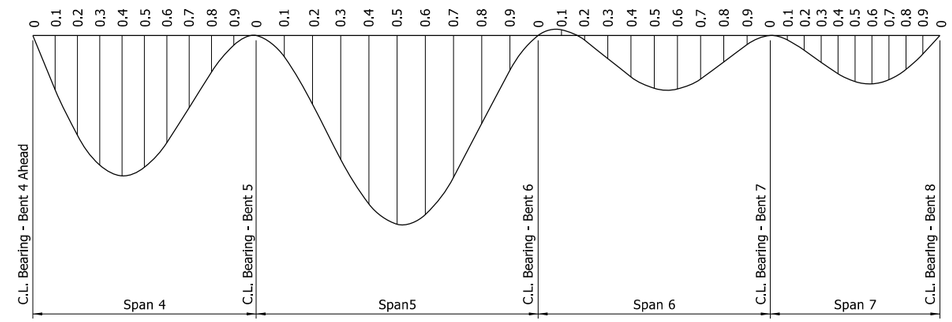

DEAD LOAD DEFLECTION DIAGRAM - GIRDER NO. 4

No Scale

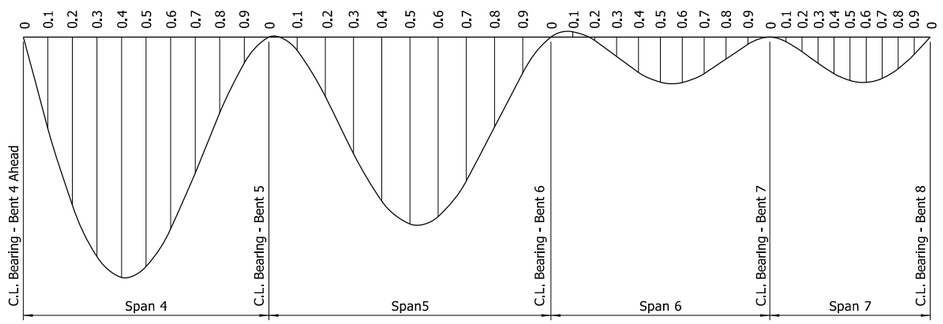

DEAD LOAD DEFLECTION DIAGRAM - GIRDER NO. 2

No Scale

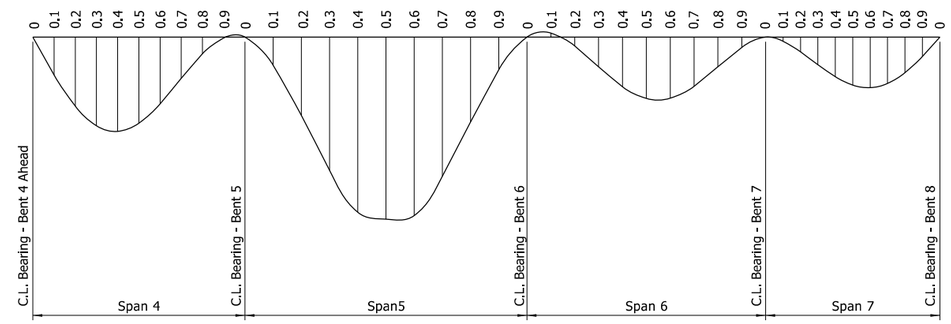

DEAD LOAD DEFLECTION DIAGRAM - GIRDER NO. 5

No Scale

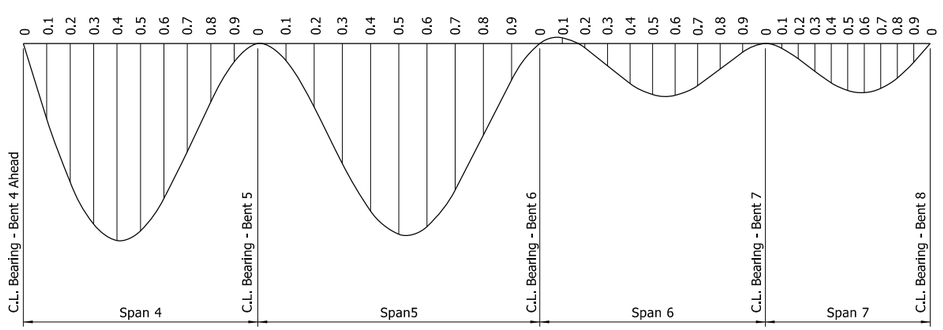

DEAD LOAD DEFLECTION DIAGRAM - GIRDER NO. 3

No Scale

STATE OF ARKANSAS
LICENSED PROFESSIONAL ENGINEER
No.14501
STEPHEN F. HARPER

2/2/2024

BRIDGE ENGINEER
PRINT DATE: 2/2/2024

SHEET 11 OF 15
DETAILS OF 479'-0" CONTINUOUS COMPOSITE PLATE GIRDER UNIT
ROUTE SECTION
ARKANSAS STATE HIGHWAY COMMISSION
LITTLE ROCK, ARKANSAS

DRAWN BY:	KDH	DATE:	10/2020	FILENAME:	B070458X1_S2B.dgn
CHECKED BY:	SRN	DATE:	05/2021		
DESIGNED BY:	HSS	DATE:	02/2020	SCALE:	No Scale
BRIDGE NO.	07537		DRAWING NO.	64292	

Scott.Thornsberry 2/2/2024 4:47:11 PM
WORKSPACE: ARDOT
Y:\Projects\ARDOT_169387_070458 UPRR Grade Separation\Design\BRIDGE\Drawings\B070458X1_S2B.dgn
REVISED DATE:

DATE REVISED	DATE FILMED	DATE REVISED	DATE FILMED	FED.RD. DIST.NO.	STATE	FED.AID PROJ.NO.	SHEET NO.	TOTAL SHEETS
				6	ARK.			
				JOB NO.		070458	101	125
				(1)	07537 - 479'-0" CONT. UNIT - 64293			

Note:
Camber for Dead Load Deflection plus Vertical Curve + or - ¼" tolerance.
Deflections shown are along C.L. Girder from a chord from C.L. Bearing to C.L. Bearing. Vertical curve corrections not included. Negative sign (-) indicates point above chord.

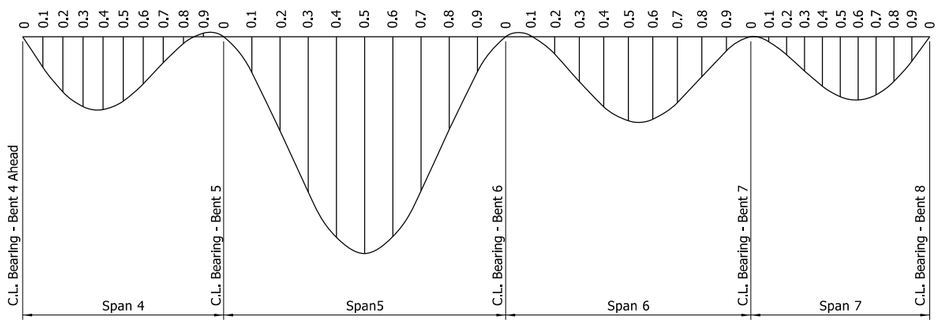

DEAD LOAD DEFLECTION DIAGRAM - GIRDER NO. 6

No Scale

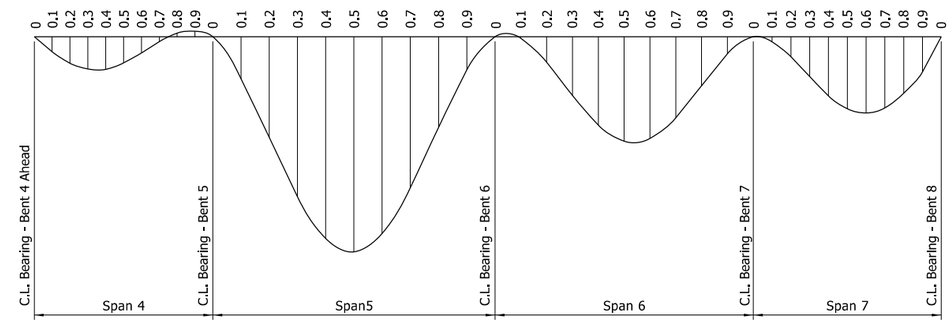

DEAD LOAD DEFLECTION DIAGRAM - GIRDER NO. 8

No Scale

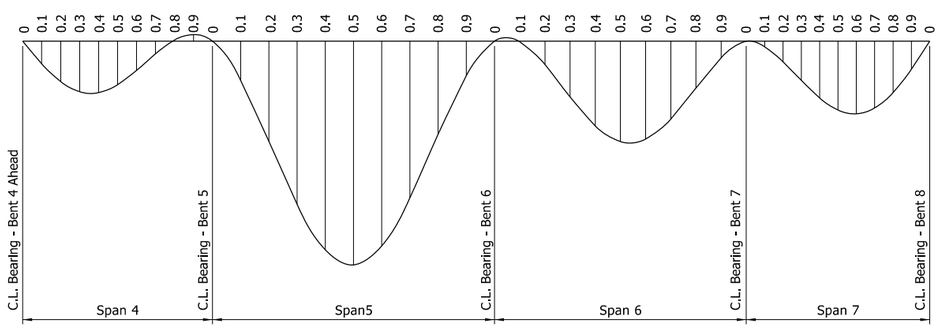

DEAD LOAD DEFLECTION DIAGRAM - GIRDER NO. 7

No Scale

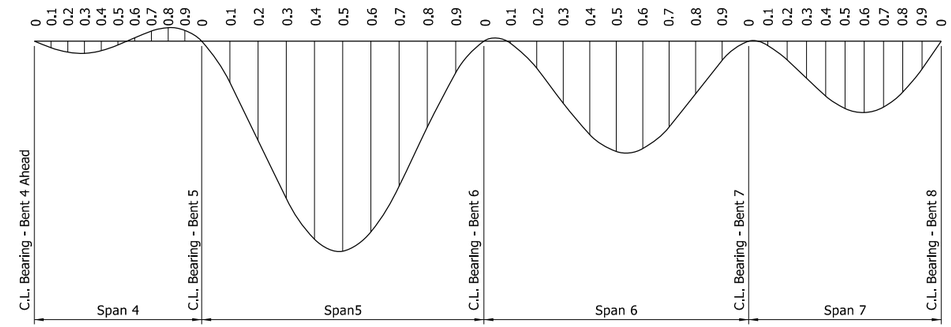

DEAD LOAD DEFLECTION DIAGRAM - GIRDER NO. 9

No Scale

STATE OF ARKANSAS
LICENSED PROFESSIONAL ENGINEER
No.14501
STEPHEN F. HARPER
2/2/2024

BRIDGE ENGINEER
PRINT DATE: 2/2/2024

SHEET 12 OF 15
DETAILS OF 479'-0" CONTINUOUS COMPOSITE PLATE GIRDER UNIT
ROUTE SECTION
ARKANSAS STATE HIGHWAY COMMISSION
LITTLE ROCK, ARKANSAS

DRAWN BY: KDH	DATE: 10/2020	FILENAME: B070458X1_S2C.dgn		
CHECKED BY: SRN	DATE: 05/2021			
DESIGNED BY: HSS	DATE: 02/2020	SCALE: No Scale		
BRIDGE NO. 07537	DRAWING NO. 64293			

Scott.Thornsberry 2/2/2024 4:47:17 PM
WORKSPACE: ARDOT
Y:\Projects\ARDOT_169387_070458 UPRR Grade Separation\Design\BRIDGE\Drawings\B070458X1_S2C.dgn
REVISED DATE:

DATE REVISED	DATE FILMED	DATE REVISED	DATE FILMED	FED.RD. DIST.NO.	STATE	FED.AID PROJ.NO.	SHEET NO.	TOTAL SHEETS
				6	ARK.			
				JOB NO.		070458	102	125

(I) 07537 - 479'-0" CONT. UNIT - 64294

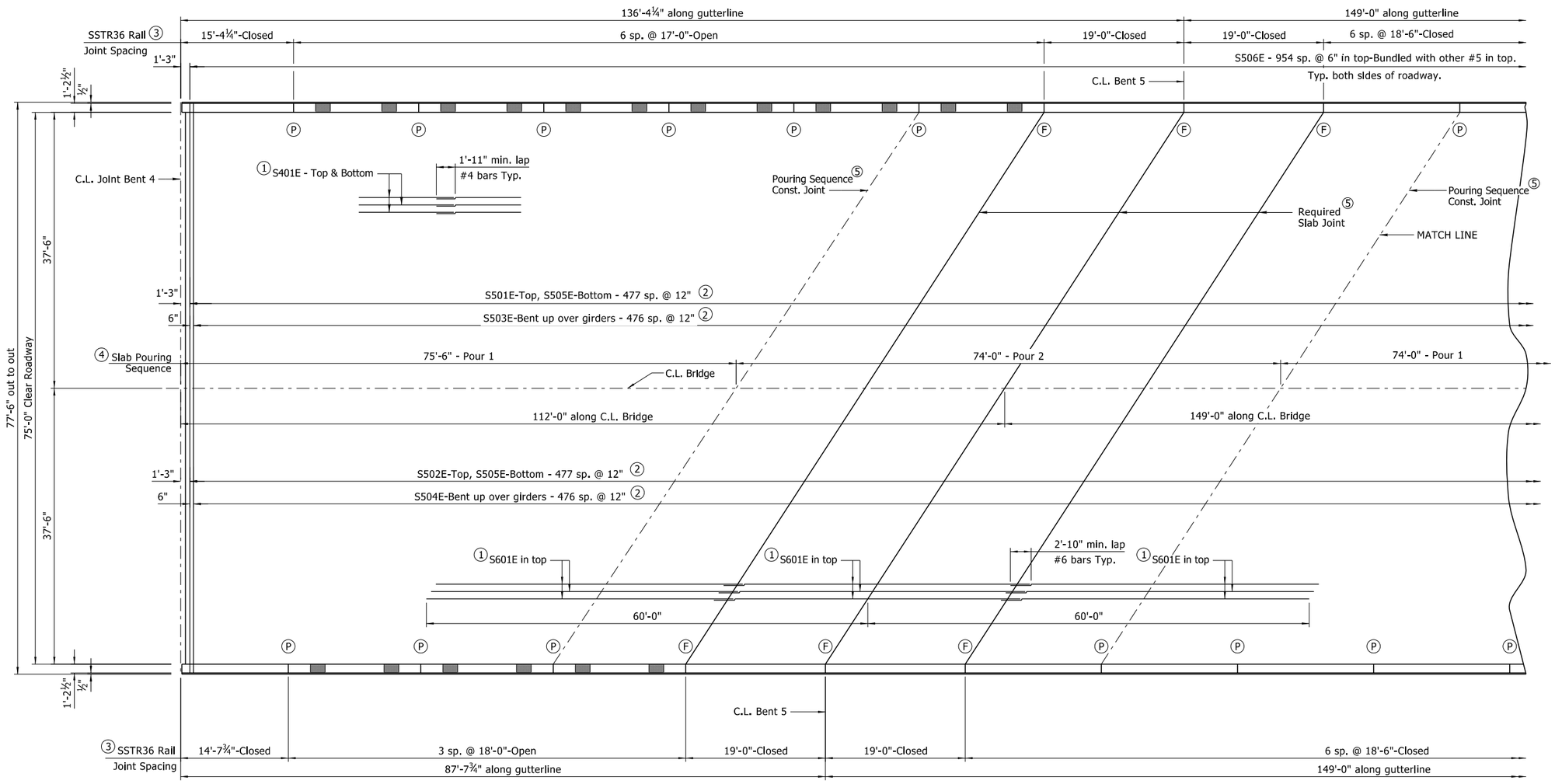

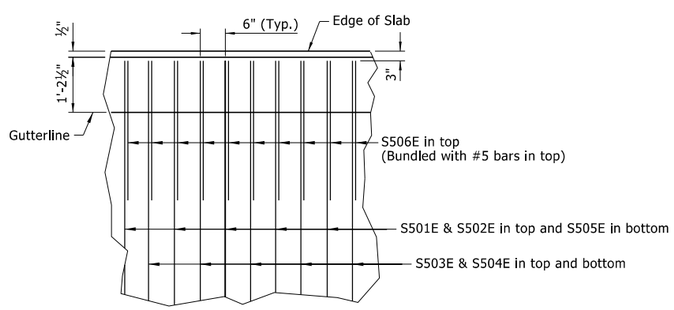

REINFORCING DETAIL

No Scale

REINFORCING PLAN AND SLAB POURING SEQUENCE

⅛" = 1'-0"

Ⓟ Partial depth rail joint at this location. (Stop 1'-4" above top of slab)
Ⓕ Full depth rail joint at this location. (Stop 6" above top of slab)
① Placed as shown in "TYPICAL SECTION", See Dwg. No. 64282.
② Lap as shown in "TYPICAL SECTION", Dwg. No. 64282.
③ See "TABLE OF RAIL VARIABLES" on Dwg. No. 64295. For additional details, see Std. Dwg. No. 55070.
④ Measured along C.L. Bridge.
⑤ Align with railing open joint unless noted otherwise.

Note:
Pours with the same number may be placed simultaneously or separately. All pours (1) must be placed before pour (2) can be placed. 48 hours shall elapse before the end of a pour and the start of the next pour. 72 hours shall elapse between the end of a pour and the start of an adjacent pour. 72 hours shall elapse between the completion of the entire deck and the pouring of the parapet. Any railing pours made before the entire slab unit has been placed must be approved by the Engineer. The Contractor must obtain approval from the Engineer for any deviations from the pouring sequence shown.

STATE OF ARKANSAS
LICENSED PROFESSIONAL ENGINEER
No.14501
STEPHEN F. HARPER
2/2/2024

BRIDGE ENGINEER
PRINT DATE: 2/2/2024

SHEET 13 OF 15
DETAILS OF 479'-0" CONTINUOUS COMPOSITE PLATE GIRDER UNIT
ROUTE SECTION
ARKANSAS STATE HIGHWAY COMMISSION
LITTLE ROCK, ARKANSAS

DRAWN BY:	KDH	DATE:	09/2020	FILENAME:	B070458X1_S2D.dgn
CHECKED BY:	SRN	DATE:	05/2021		
DESIGNED BY:	HSS	DATE:	02/2020	SCALE:	As Shown
BRIDGE NO.	07537		DRAWING NO.	64294	

Scott.Thornsberry 2/2/2024 4:47:17 PM
WORKSPACE: ARDOT
Y:\Projects\ARDOT_169387_070458 UPRR Grade Separation\Design\BRIDGE\Drawings\B070458X1_S2D.dgn
REVISED DATE:

DATE REVISED	DATE FILMED	DATE REVISED	DATE FILMED	FED.RD. DIST.NO.	STATE	FED.AID PROJ.NO.	SHEET NO.	TOTAL SHEETS
				6	ARK.			
				JOB NO.		070458	103	125

(I) 07537 - 479'-0" CONT. UNIT - 64295

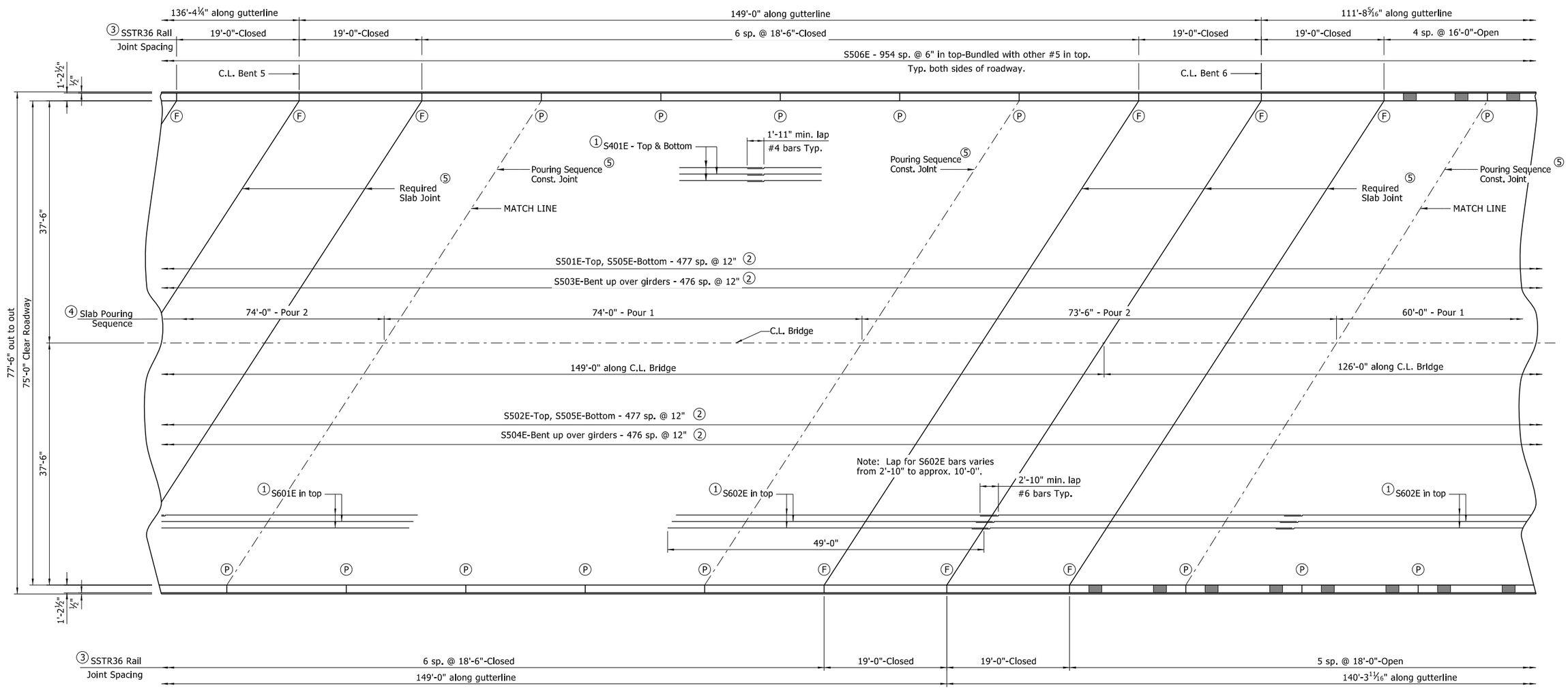

TABLE OF RAIL VARIABLES

For Additional Details, See Std. Dwg. No. 55070.

Closed Rail Panels			Open Rail Panels					
Panel Length	A	R4XXE	Panel Length	B	C	D	E	R4XXE
12'-6"	24	R407E	16'-0"	8	3'-0"	11	6'-0"	R412E
14'-7¾"	29	R409E	16'-2 5/16"	8	3'-0"	12	6'-2 5/16"	R413E
15'-4¼"	30	R404E	17'-0"	8	3'-0"	13	7'-0"	R411E
15'-5 7/16"	30	R408E	18'-0"	8	3'-0"	15	8'-0"	R414E
17'-6 9/16"	35	R410E	18'-9 11/16"	8	3'-0"	17	8'-9 11/16"	R415E
18'-6"	36	R406E	-	-	-	-	-	-
19'-0"	37	R405E	-	-	-	-	-	-

REINFORCING PLAN AND SLAB POURING SEQUENCE

⅛" = 1'-0"

(P) Partial depth rail joint at this location. (Stop 1'-4" above top of slab)
(F) Full depth rail joint at this location. (Stop 6" above top of slab)
(1) Placed as shown in "TYPICAL SECTION", See Dwg. No. 64282.
(2) Lap as shown in "TYPICAL SECTION", Dwg. No. 64282.
(3) See "TABLE OF RAIL VARIABLES".
(4) Measured along C.L. Bridge.
(5) Align with railing open joint unless noted otherwise.

Note:
Pours with the same number may be placed simultaneously or separately. All pours (1) must be placed before pour (2) can be placed. 48 hours shall elapse before the end of a pour and the start of the next pour. 72 hours shall elapse between the end of a pour and the start of an adjacent pour. 72 hours shall elapse between the completion of the entire deck and the pouring of the parapet. Any railing pours made before the entire slab unit has been placed must be approved by the Engineer. The Contractor must obtain approval from the Engineer for any deviations from the pouring sequence shown.

STATE OF ARKANSAS
LICENSED PROFESSIONAL ENGINEER
No.14501
STEPHEN F. HARPER

2/2/2024

BRIDGE ENGINEER
PRINT DATE: 2/2/2024

SHEET 14 OF 15
DETAILS OF 479'-0" CONTINUOUS COMPOSITE PLATE GIRDER UNIT
ROUTE SECTION
ARKANSAS STATE HIGHWAY COMMISSION
LITTLE ROCK, ARKANSAS

DRAWN BY:	KDH	DATE:	09/2020	FILENAME:	B070458X1_S2E.dgn
CHECKED BY:	SRN	DATE:	05/2021		
DESIGNED BY:	HSS	DATE:	02/2020	SCALE:	As Shown
BRIDGE NO.	07537		DRAWING NO.		64295

Scott.Thornsberry 2/2/2024 4:47:18 PM
WORKSPACE: ARDOT
Y:\Projects\ARDOT_169387_070458 UPRR Grade Separation\Design\BRIDGE\Drawings\B070458X1_S2E.dgn
REVISED DATE:

DATE REVISED	DATE FILMED	DATE REVISED	DATE FILMED	FED.RD. DIST.NO.	STATE	FED.AID PROJ.NO.	SHEET NO.	TOTAL SHEETS
				6	ARK.			
				JOB NO.		070458	104	125

(I) 07537 - 479'-0" CONT. UNIT - 64296

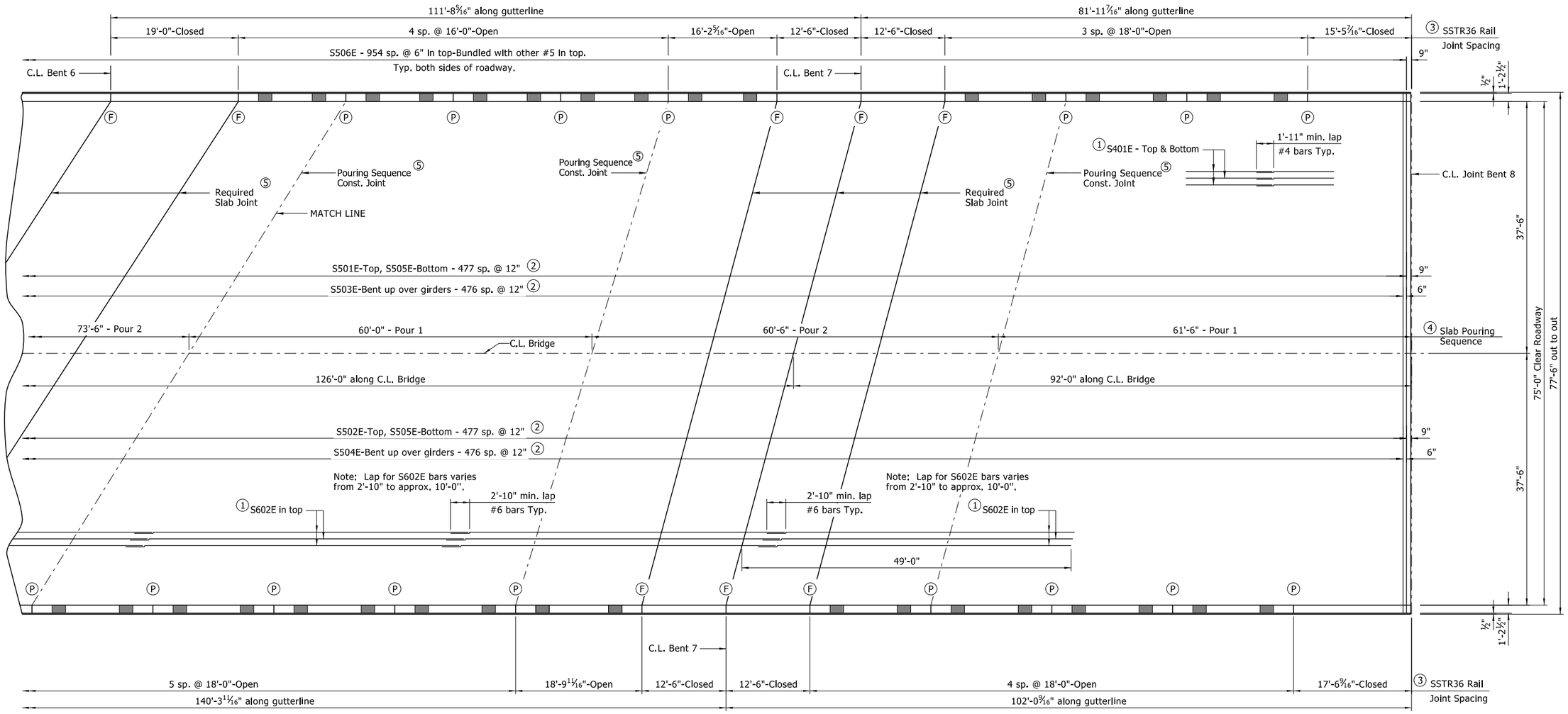

REINFORCING PLAN AND SLAB POURING SEQUENCE

⅛" = 1'-0"

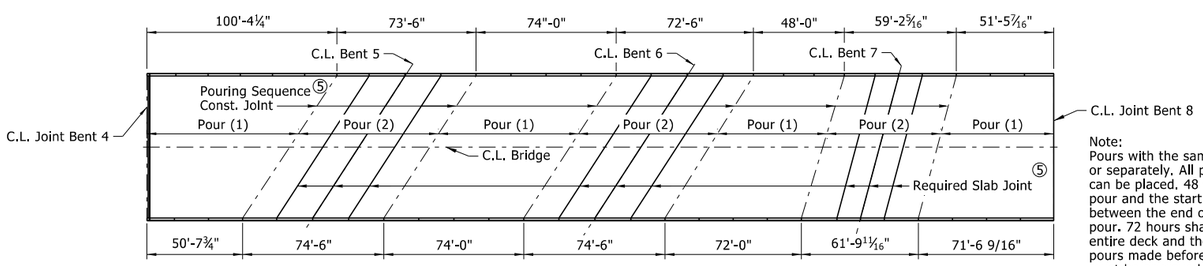

POURING SEQUENCE

No Scale

Note:
Pours with the same number may be placed simultaneously or separately. All pours (1) must be placed before pour (2) can be placed. 48 hours shall elapse before the end of a pour and the start of the next pour. 72 hours shall elapse between the end of a pour and the start of an adjacent pour. 72 hours shall elapse between the completion of the entire deck and the pouring of the parapet. Any railing pours made before the entire slab unit has been placed must be approved by the Engineer. The Contractor must obtain approval from the Engineer for any deviations from the pouring sequence shown.

Ⓟ Partial depth rail joint at this location. (Stop 1'-4" above top of slab)
Ⓕ Full depth rail joint at this location. (Stop 6" above top of slab)
① Placed as shown in "TYPICAL SECTION", See Dwg. No. 64282.
② Lap as shown in "TYPICAL SECTION", Dwg. No. 64282.
③ See "TABLE OF RAIL VARIABLES" on Dwg. No. 64295. For additional details, see Std. Dwg. No. 55070.
④ Measured along C.L. Bridge.
⑤ Align with railing open joint unless noted otherwise.

STATE OF ARKANSAS
LICENSED PROFESSIONAL ENGINEER
No.14501
STEPHEN F. HARPER
2/2/2024

BRIDGE ENGINEER
PRINT DATE: 2/2/2024

SHEET 15 OF 15
DETAILS OF 479'-0" CONTINUOUS COMPOSITE PLATE GIRDER UNIT
ROUTE SECTION
ARKANSAS STATE HIGHWAY COMMISSION
LITTLE ROCK, ARKANSAS

DRAWN BY:	KDH	DATE:	09/2020	FILENAME:	B070458X1_S2F.dgn
CHECKED BY:	SRN	DATE:	05/2021		
DESIGNED BY:	HSS	DATE:	02/2020	SCALE:	As Shown
BRIDGE NO.	07537			DRAWING NO.	64296

Scott.Thornsberry 2/2/2024 4:47:18 PM
WORKSPACE: ARDOT
Y:\Projects\ARDOT_169387_070458 UPRR Grade Separation\Design\BRIDGE\Drawings\B070458X1_S2F.dgn
REVISED DATE:

DATE REVISED	DATE FILMED	DATE REVISED	DATE FILMED	FED.RD. DIST.NO.	STATE	FED.AID PROJ.NO.	SHEET NO.	TOTAL SHEETS
				6	ARK.			
				JOB NO.		070458	105	125

(2) CROSS SECTIONS

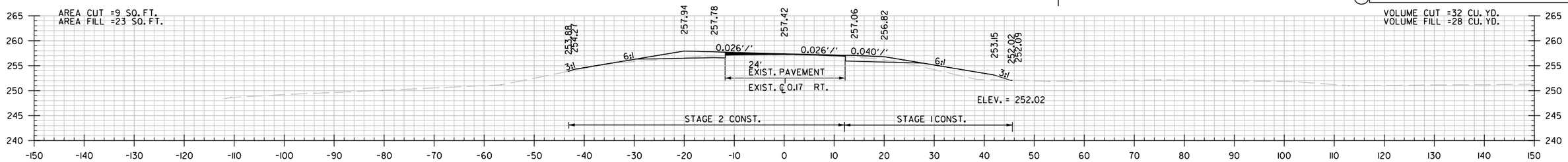

317+00.00

STA. 316+42.00
CONST. APPROACH ON RT.
40 CU. YDS.

STA. 316+80.00
BEGIN SP. DITCH RT. -0.87%
ELEV. = 252.19

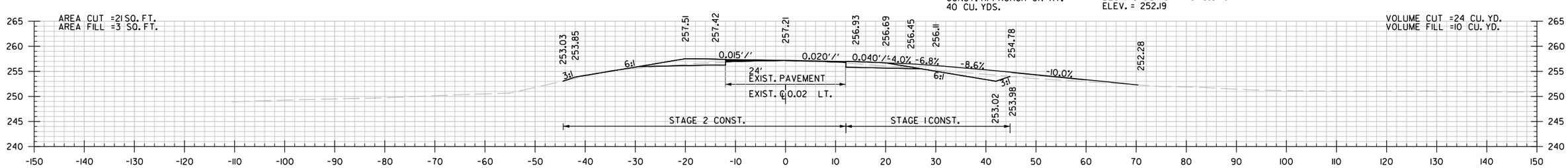

316+42.00

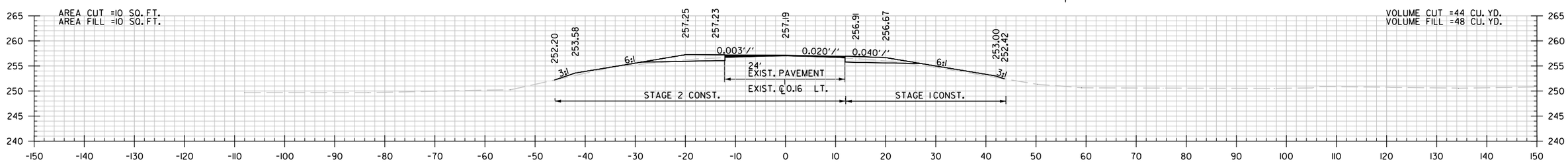

316+00.00

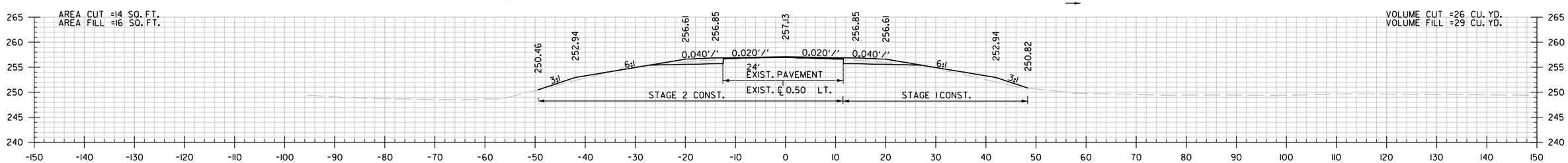

315+00.00

STA. 315+00.00 BEGIN JOB 070458 & END 100' TRANSITION

314+00.00

HWY. 82 STA. 314+00.00 BEGIN 100' TRANSITION

STA. 314+00 TO STA. 317+00

Brandon.Barns 6/16/2026 12:55:1PM
WORKSPACE: Brandon.Barns
Y:\Projects\ARDOT_16938T_070458 UPRR Grade Separation\Design\CIVIL\Drawings\R070458.21.CX.001.dgn
REVISED DATE: $$REVDATE$$

DATE REVISED	DATE FILMED	DATE REVISED	DATE FILMED	FED.RD. DIST.NO.	STATE	FED.AID PROJ.NO.	SHEET NO.	TOTAL SHEETS
				6	ARK.			
				JOB NO.		070458	106	125

(2) CROSS SECTIONS

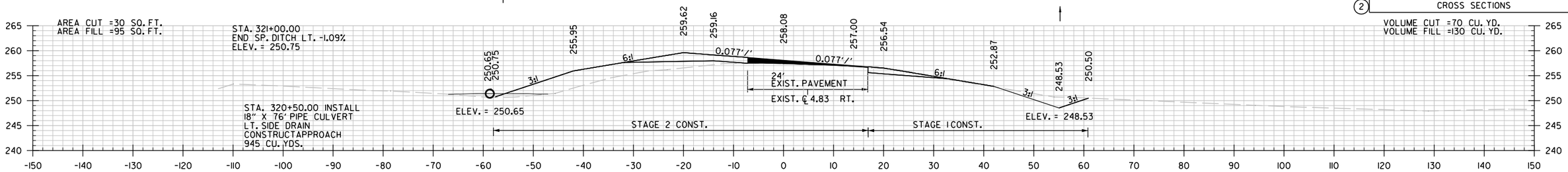

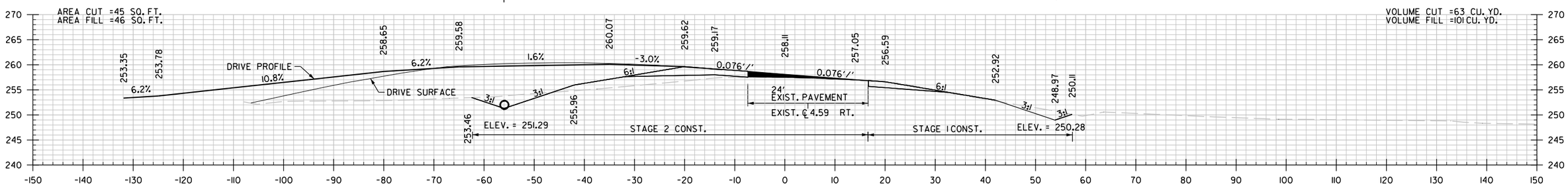

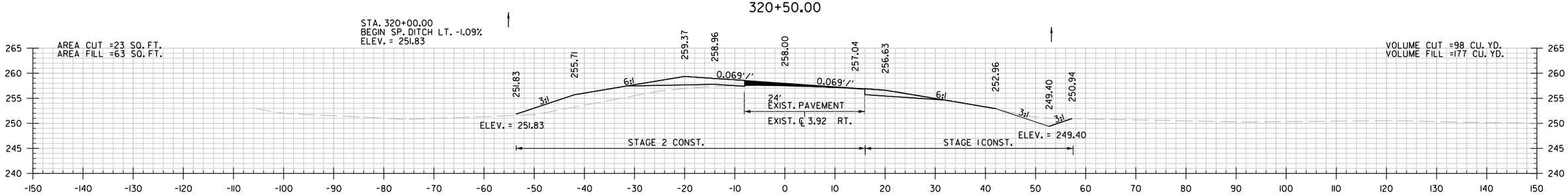

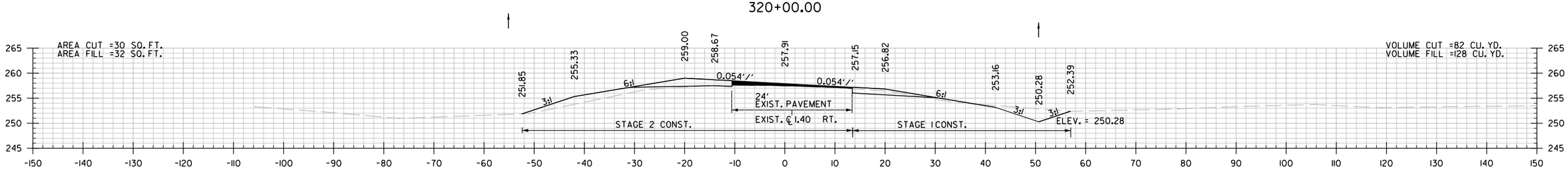

STA. 318+00 TO STA. 321+00

Brendan.Barns 6/16/2026 1:25:52 PM
WORKSPACE: Brendan.Barns
Y:\Projects\ARDOT_16938T_070458 UPRR Grade Separation\Design\CIVIL\Drawings\R070458.21.CX.001.dgn
REVISED DATE: $$REVDATE$$

DATE REVISED	DATE FILMED	DATE REVISED	DATE FILMED	FED.RD. DIST.NO.	STATE	FED.AID PROJ.NO.	SHEET NO.	TOTAL SHEETS
				6	ARK.			
				JOB NO.		070458	107	125
				(2)	CROSS SECTIONS			

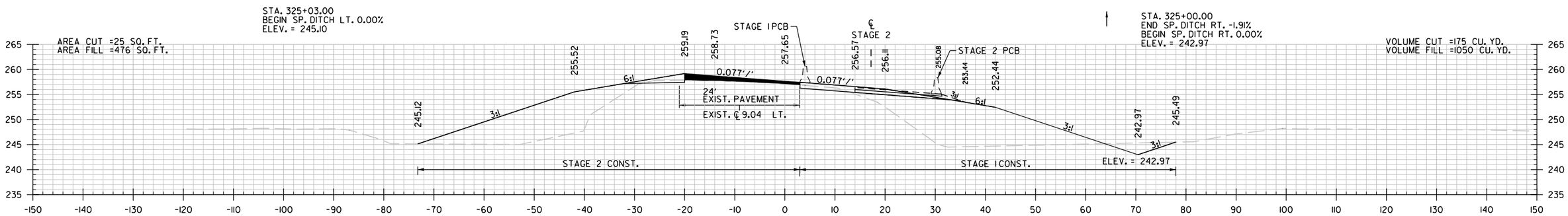

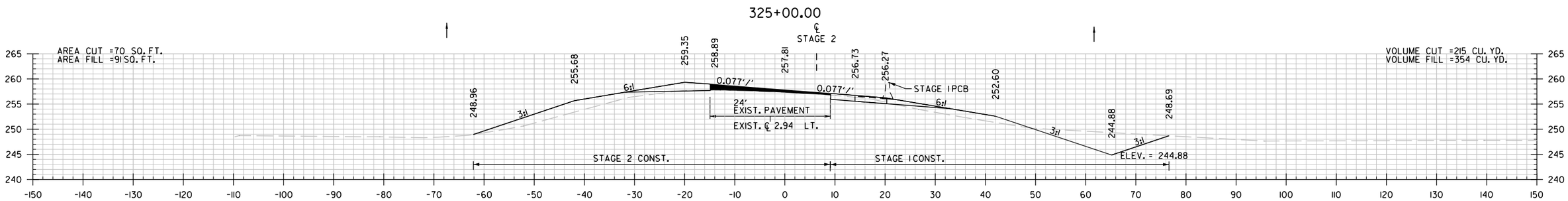

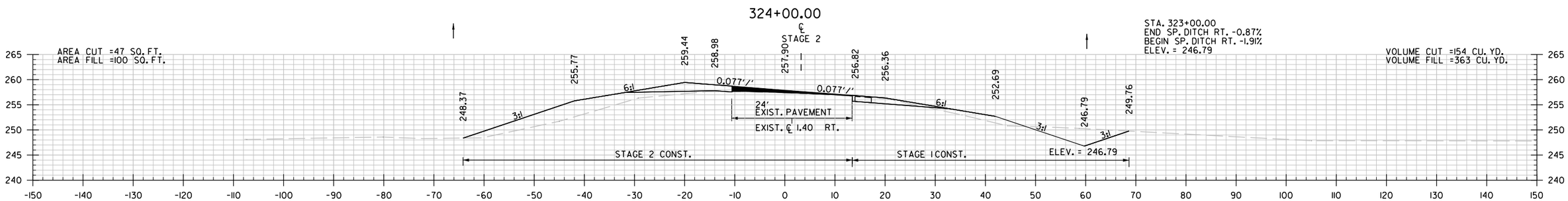

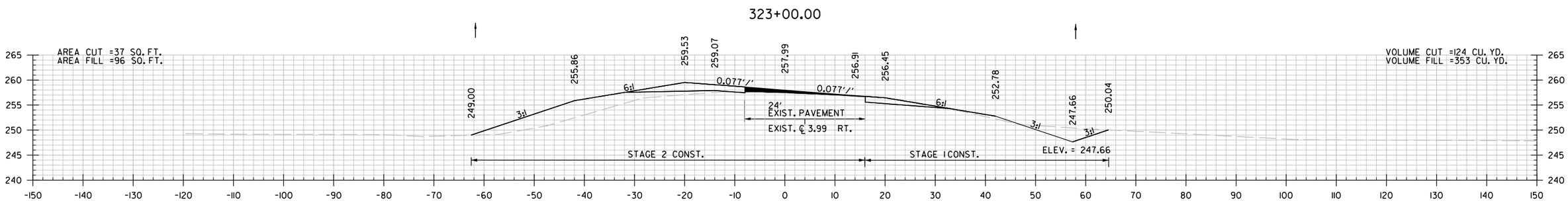

322+00.00

STA. 322+00 TO STA. 325+00

BrendanBarns 6/16/2026 1:25:52 PM
WORKSPACE: BrendanBarns
Y:\Projects\ARDOT_16938T_070458 UPRR Grade Separation\Design\CIVIL\Drawings\R070458_21_CX_001.dgn
REVISED DATE: $$REVDATE$$

STA. 325+50.00 CONSTRUCT
60" X 88' R.C. PIPE CULVERT
(CLASS III) TYPE 3 BEDDING
WITH FES LT. & RT.
Q50 = 1543 CFS DA = 1856 ACRES

DATE REVISED	DATE FILMED	DATE REVISED	DATE FILMED	FED.RD. DIST.NO.	STATE	FED.AID PROJ.NO.	SHEET NO.	TOTAL SHEETS
				6	ARK.			
				JOB NO.		070458	108	125
				(2)	CROSS SECTIONS			

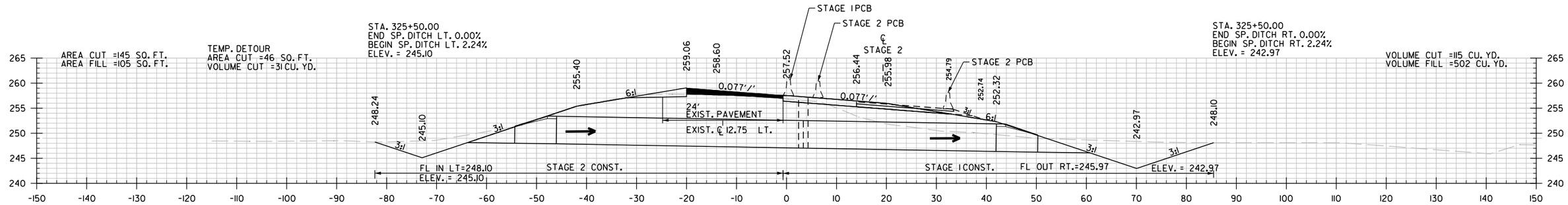

325+50.00

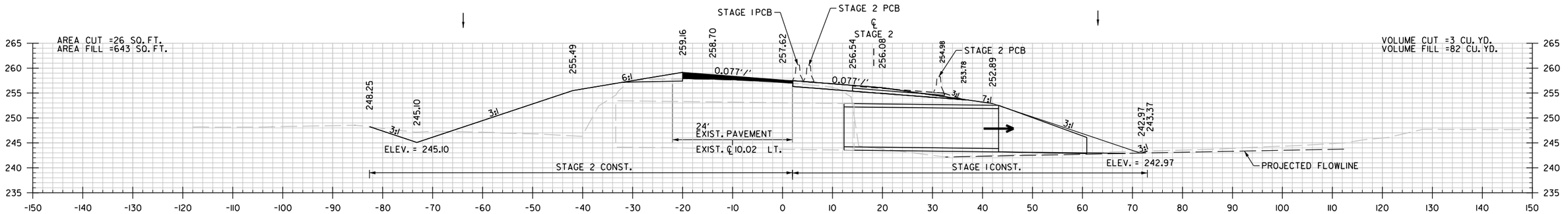

325+13.76

STA. 325+10.44 IN PLACE
8' X 8' X 48' R.C. BOX CULVERT
WITH 3:1 WINGS LT. & RT.
RETAIN & EXTEND 15' LT. AND
EXTEND 31' RT.
Q50 = 1543 CFS DA = 1856 ACRES

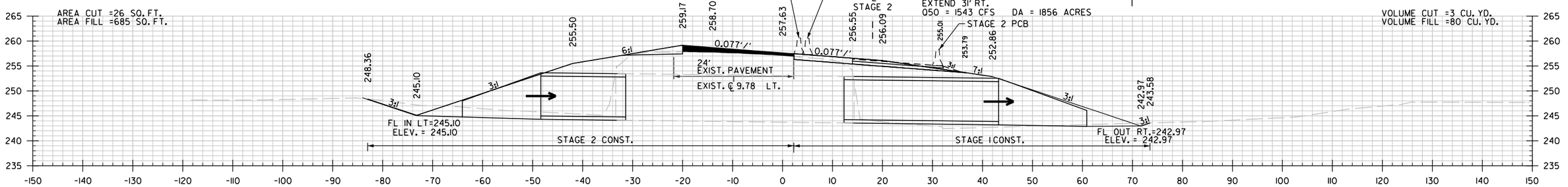

325+10.44

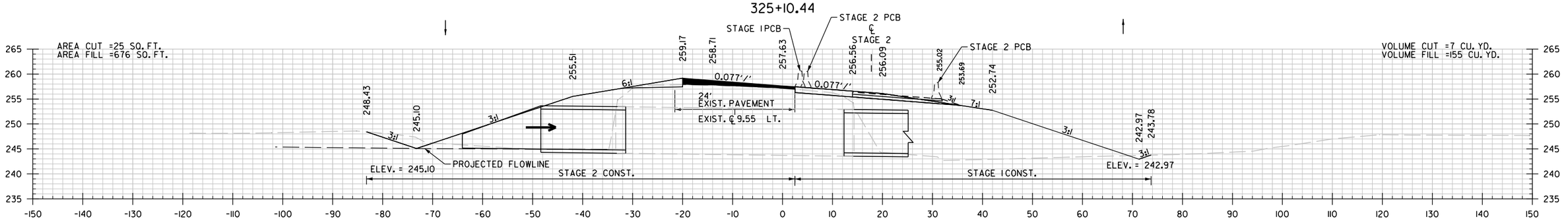

325+07.26

STA. 325+07 TO STA. 326+00

Brendan.Barns 6/16/2026 1:25:53 PM
WORKSPACE: Brendan.Barns
Y:\Projects\ARDOT_16387_070458 UPRR Grade Separation\Design\CIVIL\Drawings\R070458.21.CX.001.dgn
REVISED DATE: $$REVDATE$$

DATE REVISED	DATE FILMED	DATE REVISED	DATE FILMED	FED.RD. DIST.NO.	STATE	FED.AID PROJ.NO.	SHEET NO.	TOTAL SHEETS
				6	ARK.			
				JOB NO.		070458	109	125

(2) CROSS SECTIONS

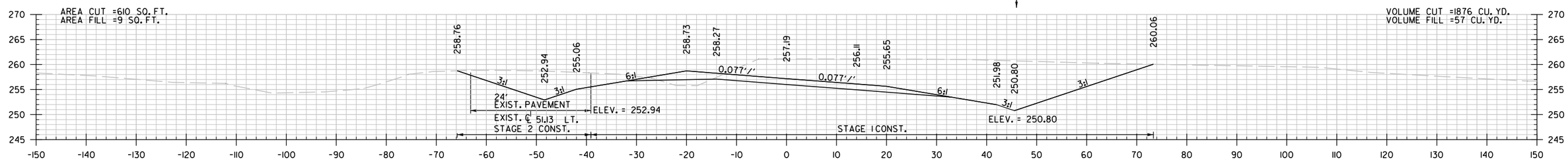

329+00.00

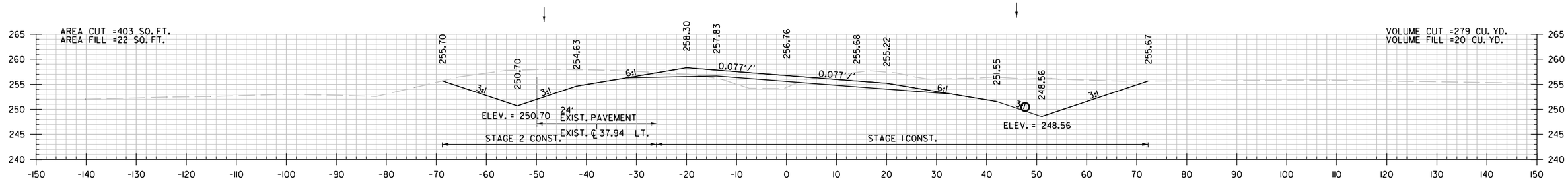

328+00.00

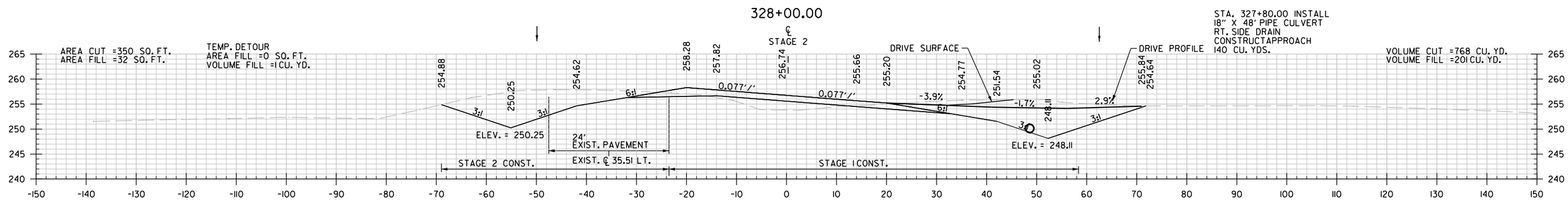

327+80.00

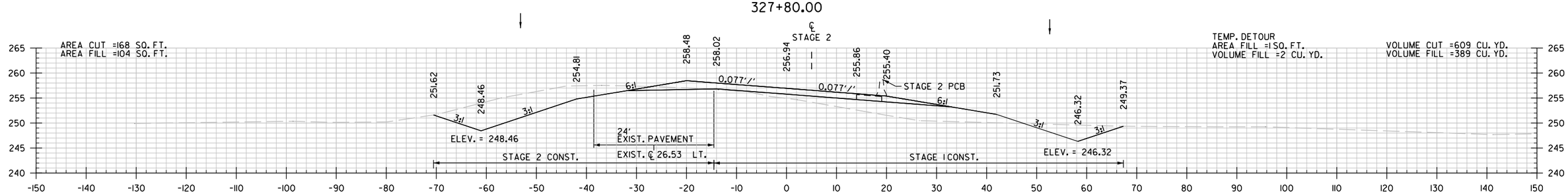

327+00.00

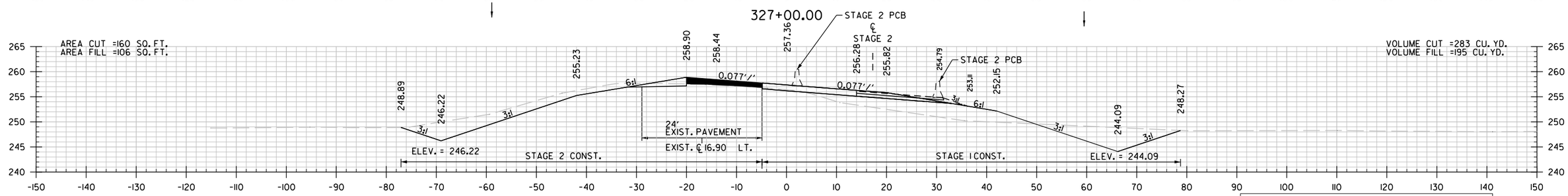

326+00.00

STA. 326+00 TO STA. 329+00

Brendan.Barns 6/16/2026 1:25:53 PM
WORKSPACE: Brendan.Barns
Y:\Projects\ARDOT_16387_070458 UPRR Grade Separation\Design\CIVIL\Drawings\R070458_21_CX_001.dgn
REVISED DATE: $$REVDATE$$

DATE REVISED	DATE FILMED	DATE REVISED	DATE FILMED	FED.RD. DIST.NO.	STATE	FED.AID PROJ.NO.	SHEET NO.	TOTAL SHEETS
				6	ARK.			
				JOB NO.		070458	110	125

(2) CROSS SECTIONS

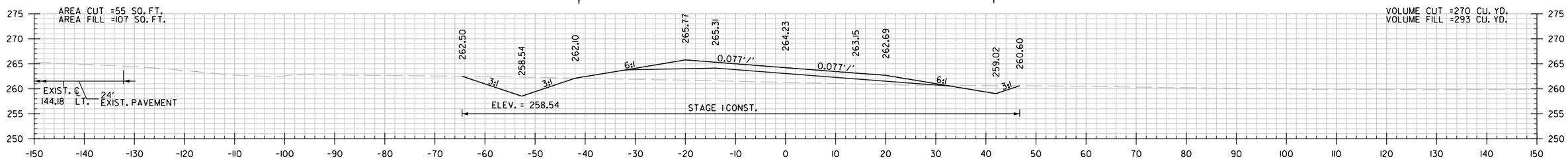

334+00.00

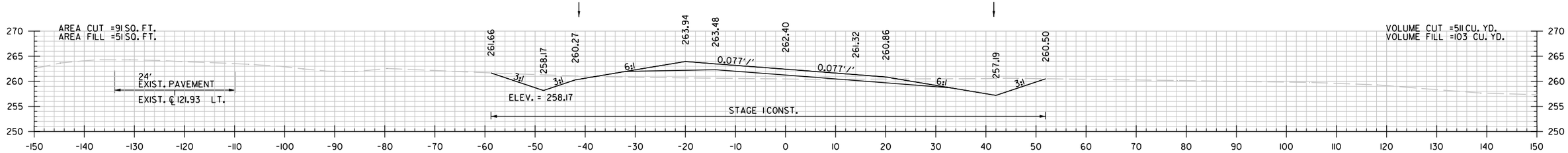

333+00.00

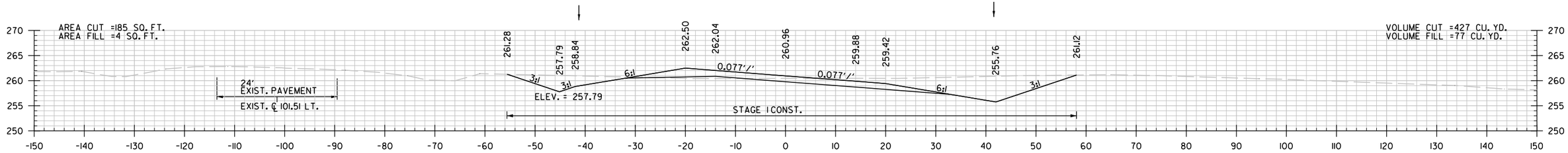

332+00.00

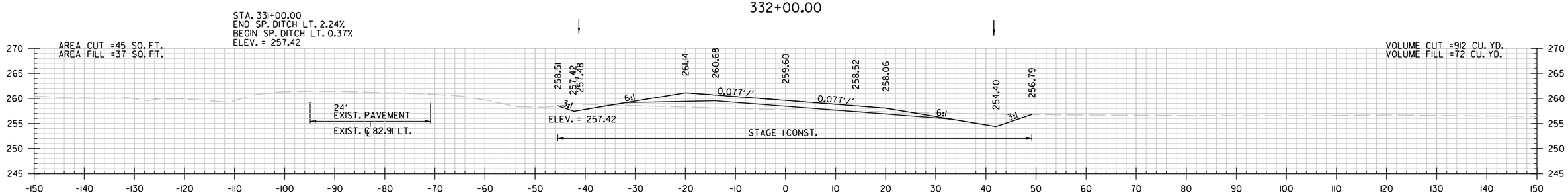

331+00.00

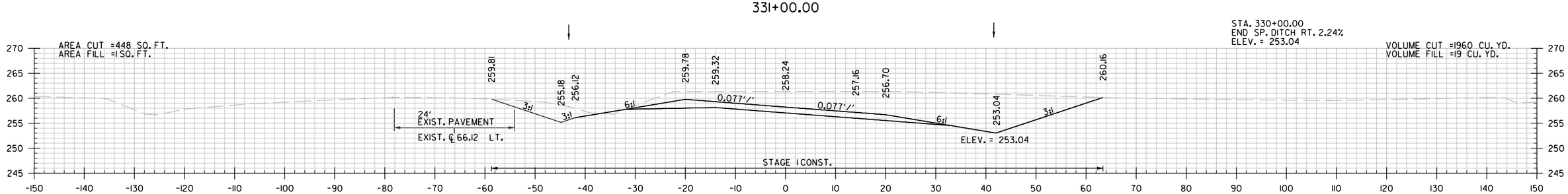

330+00.00

STA. 330+00 TO STA. 334+00

Brandon.Barns 6/16/2026 1:25:54 PM
WORKSPACE: Brandon.Barns
Y:\Projects\ARDOT_16938T_070458 UPRR Grade Separation\Design\CIVIL\Drawings\R070458.21.CX.001.dgn
REVISED DATE: $$REVDATE$$

DATE REVISED	DATE FILMED	DATE REVISED	DATE FILMED	FED.RD. DIST.NO.	STATE	FED.AID PROJ.NO.	SHEET NO.	TOTAL SHEETS
				6	ARK.			
				JOB NO.		070458	III	125

(2) CROSS SECTIONS

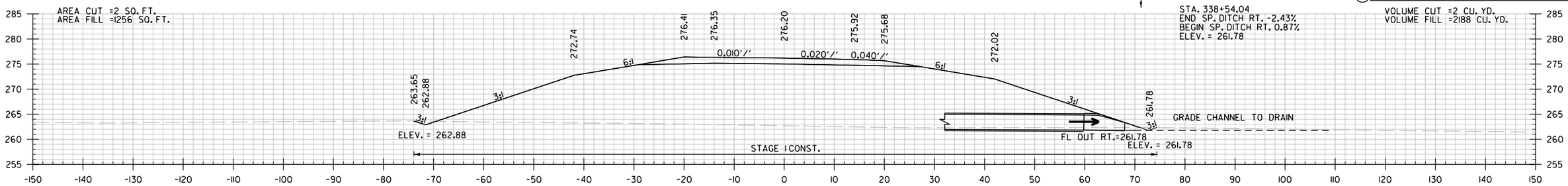

338+54.04

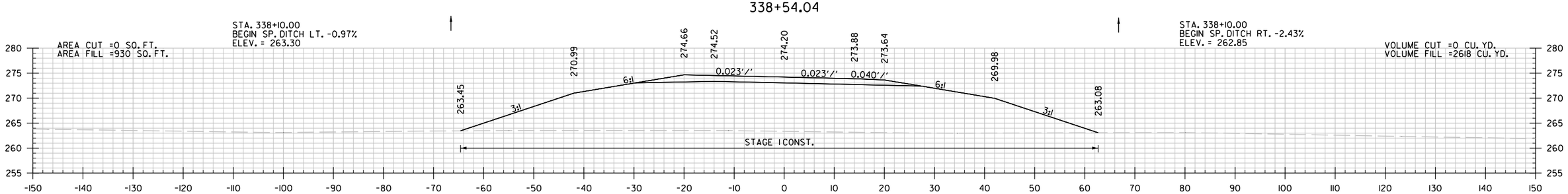

338+00.00

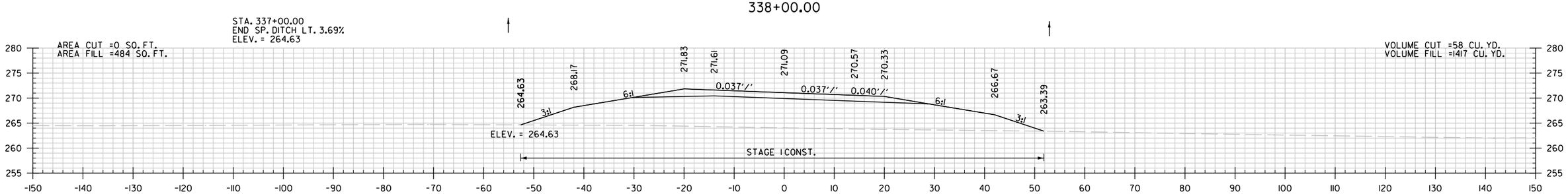

337+00.00

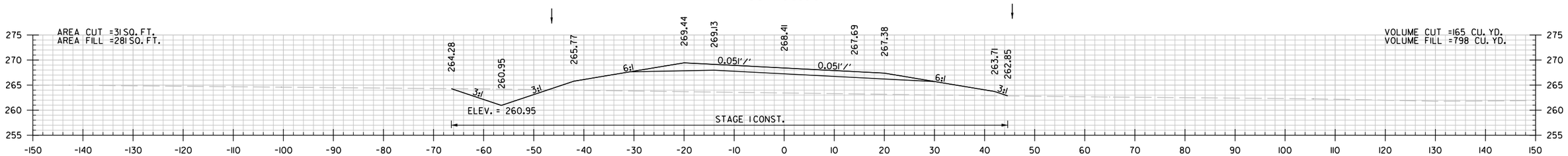

336+00.00

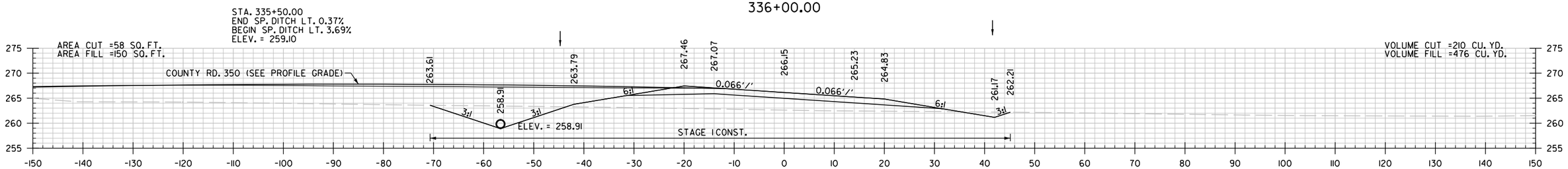

335+00.00

STA. 335+00 TO STA. 338+54

BrendanBarns 6/16/2026 1:25:54 PM
WORKSPACE: BrendanBarns
Y:\Projects\ARDOT_16938T_070458 UPRR Grade Separation\Design\CIVIL\Drawings\R070458.21.CX.001.dgn
REVISED DATE: $$REVDATE$$

DATE REVISED	DATE FILMED	DATE REVISED	DATE FILMED	FED.RD. DIST.NO.	STATE	FED.AID PROJ.NO.	SHEET NO.	TOTAL SHEETS
				6	ARK.			
				JOB NO.		070458	112	125
				(2)	CROSS SECTIONS			

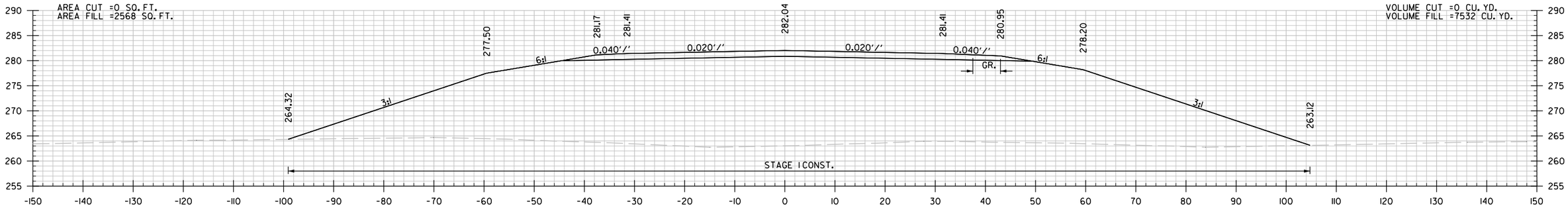

340+00.00

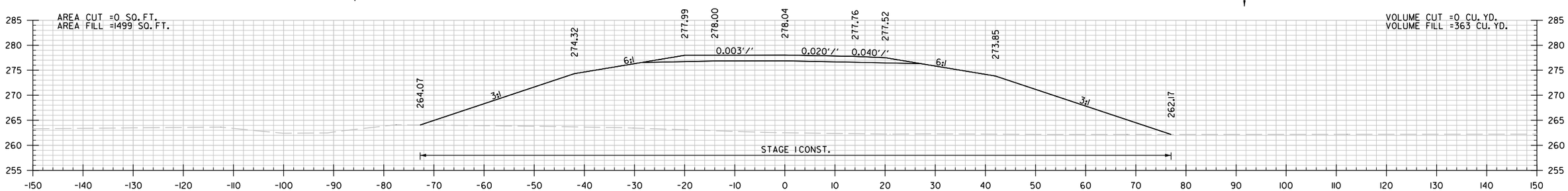

339+00.00

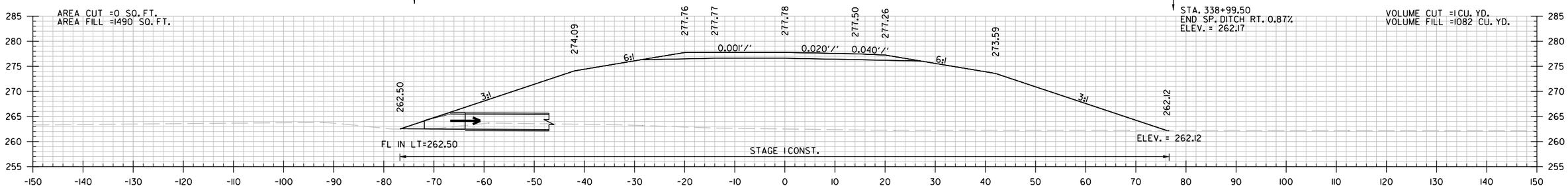

338+93.45

STA. 338+93.00
END SP. DITCH LT. -0.97%
ELEV. = 262.50

STA. 338+73.00 CONSTRUCT
36" X 132' R.C. PIPE CULVERT
15° LT. FWD. SKEW
(CLASS IV) TYPE III BEDDING
WITH FES LT. & RT.
Q50 = 6.81 CFS DA = 5.22 ACRES

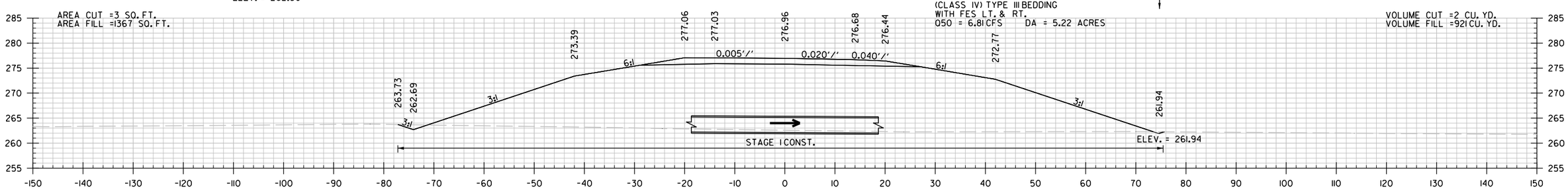

338+73.00

STA. 338+73 TO STA. 340+00

Brendan.Barns 6/16/2026 1:25:55 PM
WORKSPACE: Brendan.Barns
Y:\Projects\ARDOT_16387_070458 UPRR Grade Separation\Design\CIVIL\Drawings\R070458.21.CX.001.dgn
REVISED DATE: $$REVDATE$$

DATE REVISED	DATE FILMED	DATE REVISED	DATE FILMED	FED.RD. DIST.NO.	STATE	FED.AID PROJ.NO.	SHEET NO.	TOTAL SHEETS
				6	ARK.			
				JOB NO.		070458	113	125

(2) CROSS SECTIONS

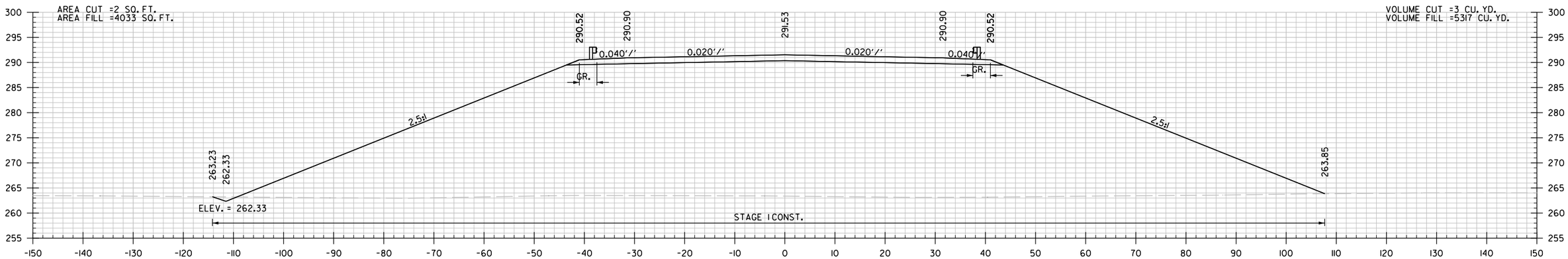

342+37.32
BEGIN BRIDGE STA. 342+37.30

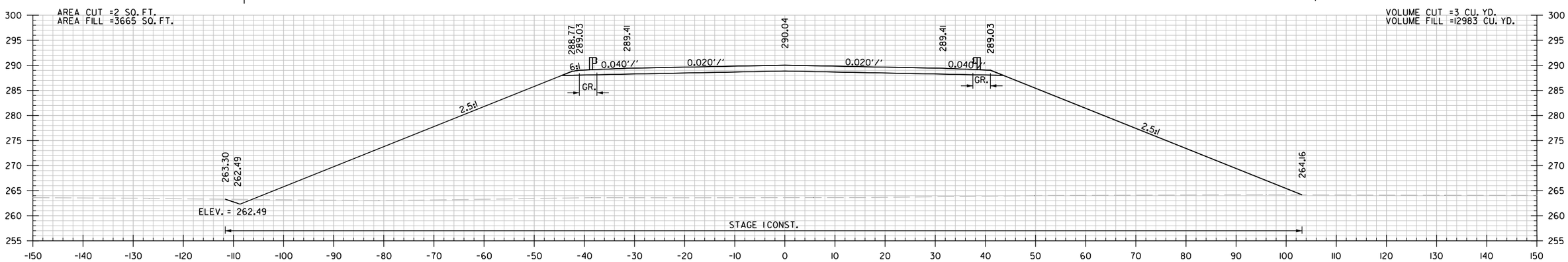

342+00.00

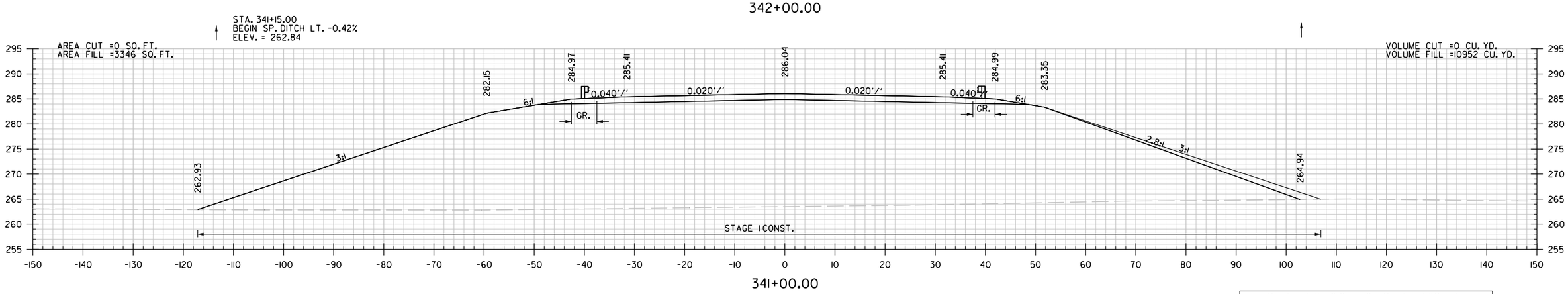

341+00.00

STA. 341+00 TO STA. 342+37

BrendanBarns 6/16/2026 1:25:55 PM
WORKSPACE: BrendanBarns
Y:\Projects\ARDOT_I6938T_070458 UPRR Grade Separation\Design\CIVIL\Drawings\R070458_21_CX_001.dgn
REVISED DATE: $$REVDATE$$

DATE REVISED	DATE FILMED	DATE REVISED	DATE FILMED	FED.RD. DIST.NO.	STATE	FED.AID PROJ.NO.	SHEET NO.	TOTAL SHEETS
				6	ARK.			
				JOB NO.		070458	114	125
				(2)	CROSS SECTIONS			

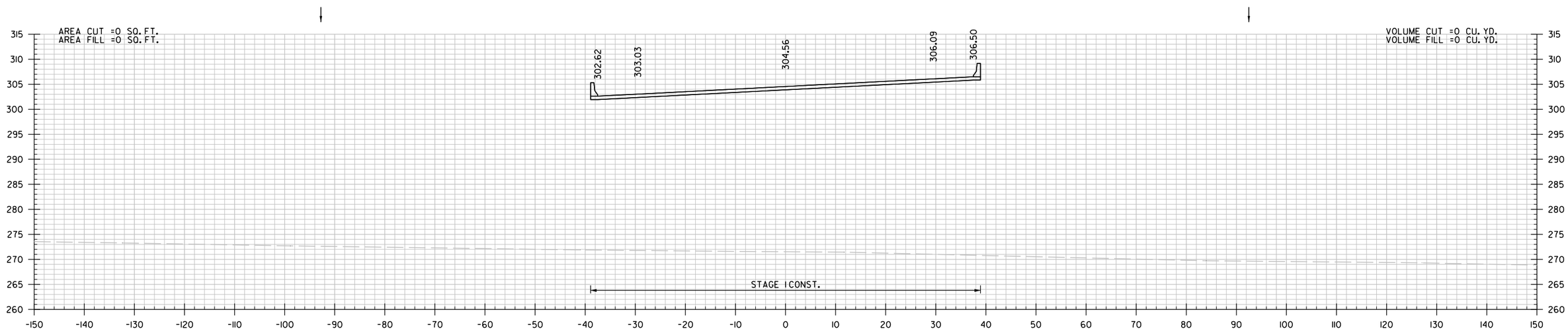

350+28.62

BRIDGE TOE OF SLOPE STA. 350+28.62

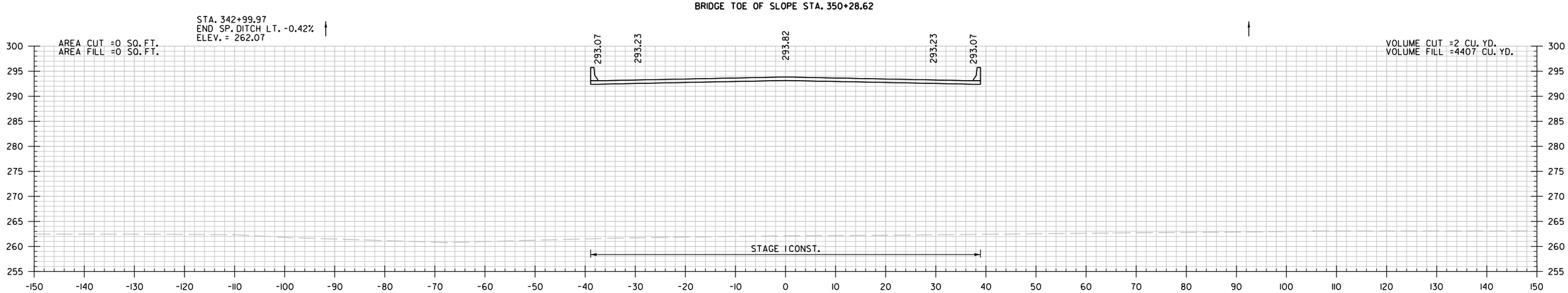

342+96.31

BRIDGE TOE OF SLOPE STA. 342+96.31

STA. 342+96 TO STA. 350+29

Brendan.Barns 6/16/2026 1:25:56 PM
WORKSPACE: Brendan.Barns
Y:\Projects\ARDOT_169387_070458 UPRR Grade Separation\Design\CIVIL\Drawings\R070458_21_CX_001.dgn
REVISED DATE: $$REVDATE$$

DATE REVISED	DATE FILMED	DATE REVISED	DATE FILMED	FED.RD. DIST.NO.	STATE	FED.AID PROJ.NO.	SHEET NO.	TOTAL SHEETS
				6	ARK.			
				JOB NO.		070458	115	125
				(2)	CROSS SECTIONS			

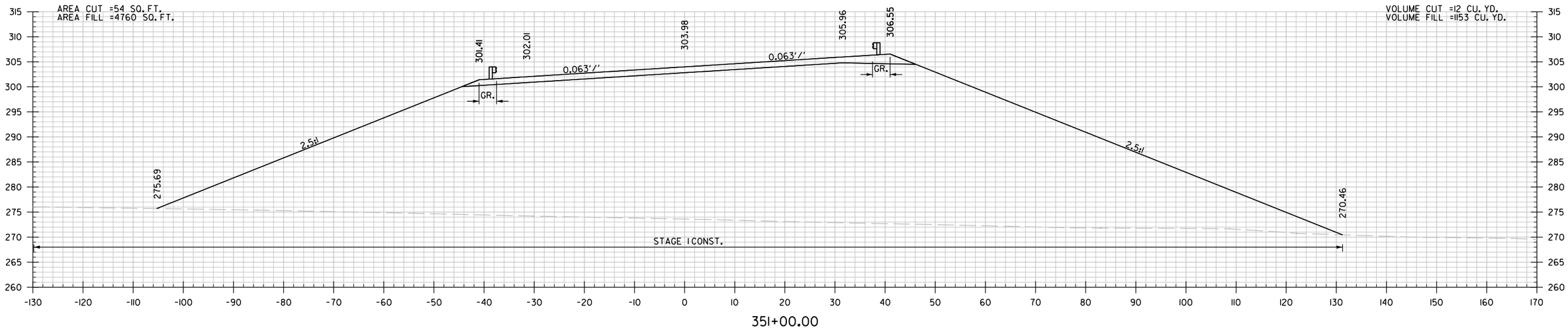

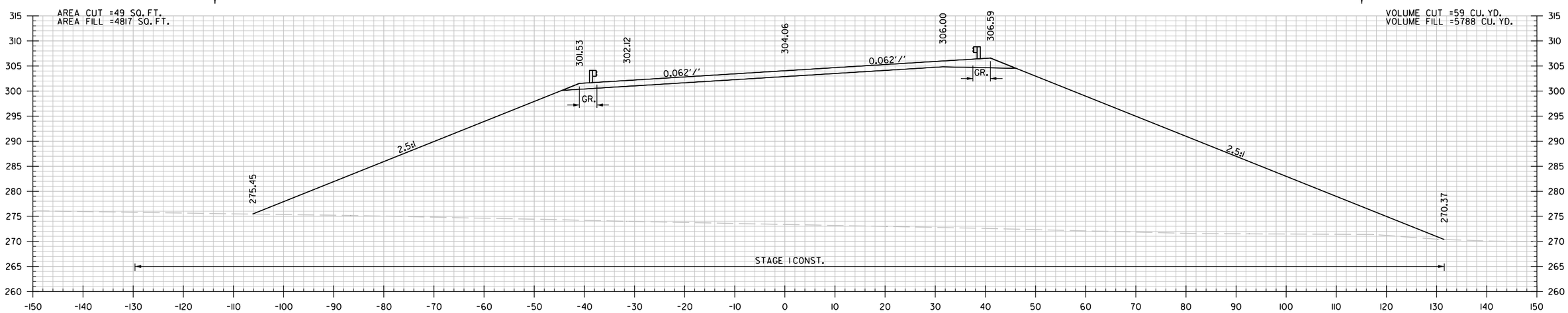

STA. 350+94 TO STA. 351+00

Brendan.Barns 6/16/2026 1:25:56 PM
WORKSPACE: Brendan.Barns
Y:\Projects\ARDOT_16938?_070458 UPRR Grade Separation\Design\CIVIL\Drawings\R070458.21.CX_001.dgn
REVISED DATE: $$REVDATE$$

DATE REVISED	DATE FILMED	DATE REVISED	DATE FILMED	FED.RD. DIST.NO.	STATE	FED.AID PROJ.NO.	SHEET NO.	TOTAL SHEETS
				6	ARK.			
				JOB NO.		070458	116	125

(2) CROSS SECTIONS

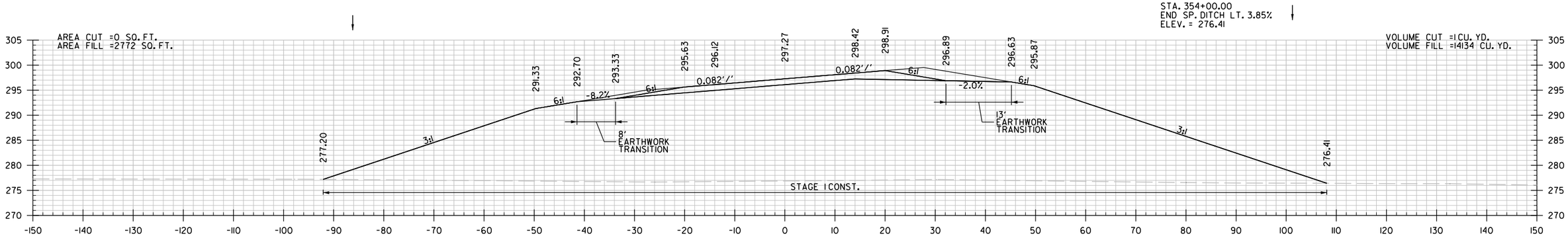

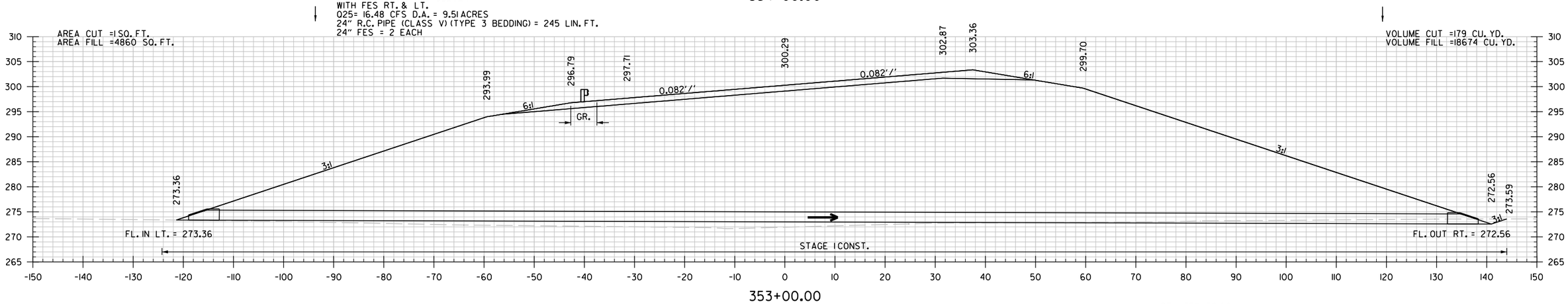

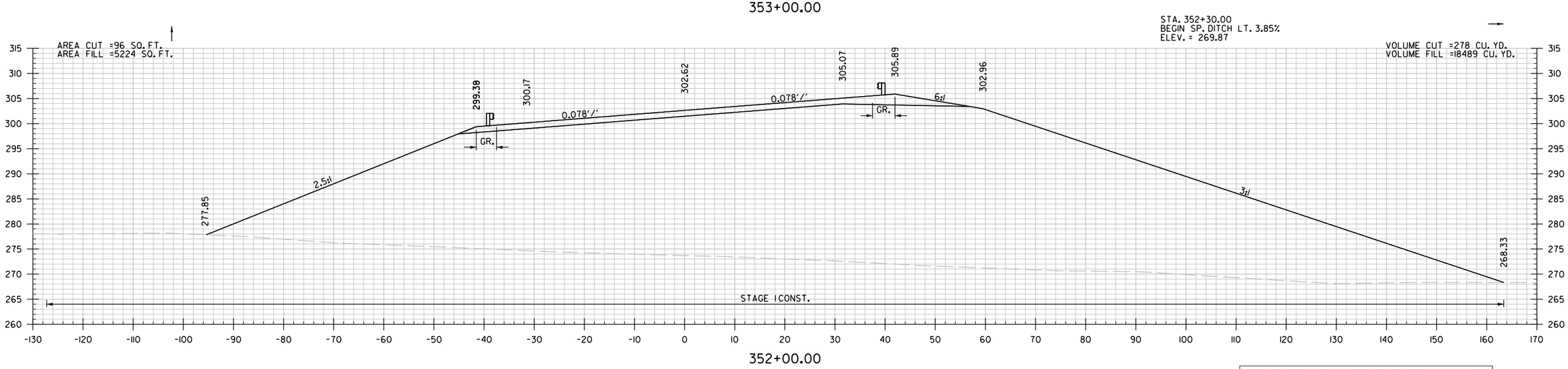

STA. 352+00 TO STA. 354+00

Brandon.Barns 6/16/2026 1:25:57 PM
WORKSPACE: Brandon.Barns
Y:\Projects\ARDOT_16938T_070458 UPRR Grade Separation\Design\CIVIL\Drawings\R070458.21.CX.001.dgn
REVISED DATE: $$REVDATE$$

DATE REVISED	DATE FILMED	DATE REVISED	DATE FILMED	FED.RD. DIST.NO.	STATE	FED.AID PROJ.NO.	SHEET NO.	TOTAL SHEETS
				6	ARK.			
				JOB NO.		070458	117	125

(2) CROSS SECTIONS

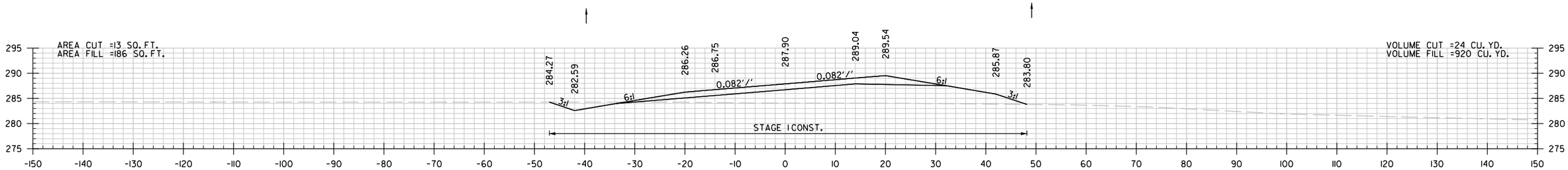

358+00.00

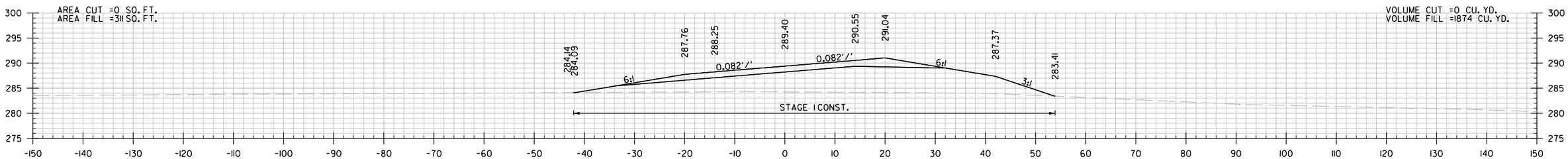

357+00.00

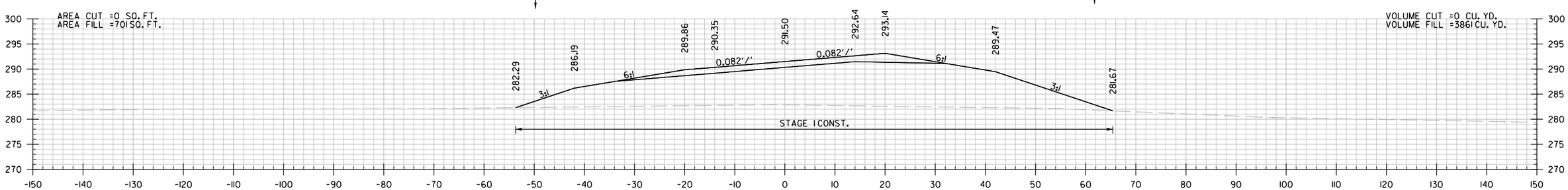

356+00.00

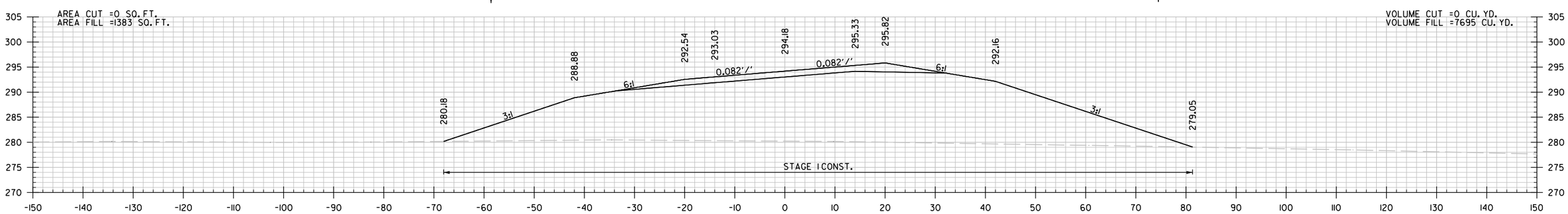

355+00.00

STA. 355+00 TO STA. 358+00

Brendan.Barns 6/16/2026 1:25:57 PM
WORKSPACE: Brendan.Barns
Y:\Projects\ARDOT_169387_070458 UPRR Grade Separation\Design\CIVIL\Drawings\R070458_2L_CX_001.dgn
REVISED DATE: $$REVDATE$$

DATE REVISED	DATE FILMED	DATE REVISED	DATE FILMED	FED.RD. DIST.NO.	STATE	FED.AID PROJ.NO.	SHEET NO.	TOTAL SHEETS
				6	ARK.			
				JOB NO.		070458	118	125
				(2)	CROSS SECTIONS			

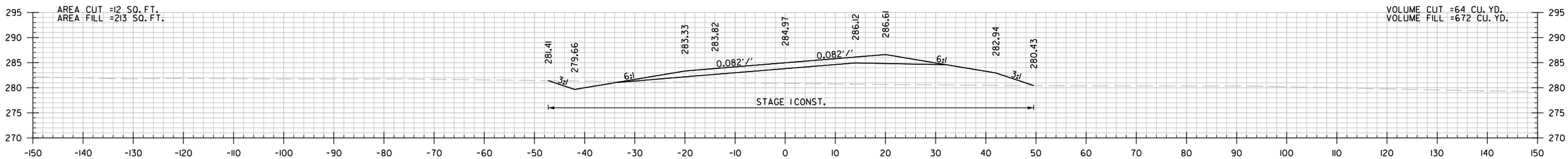

363+00.00

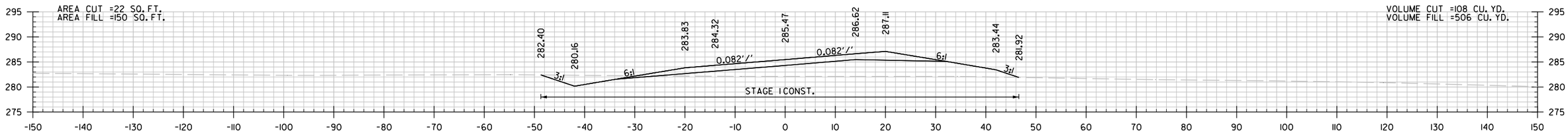

362+00.00

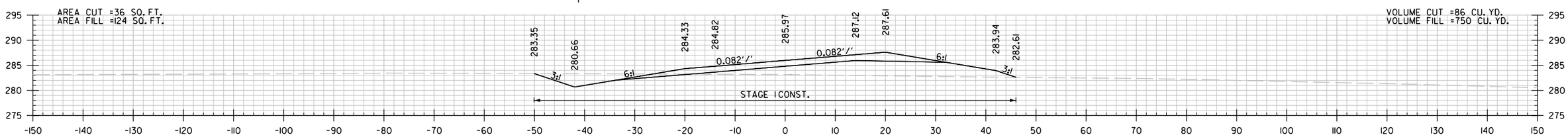

361+00.00

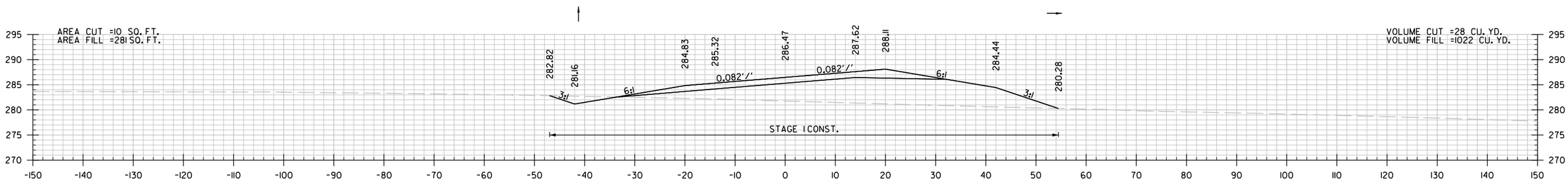

360+00.00

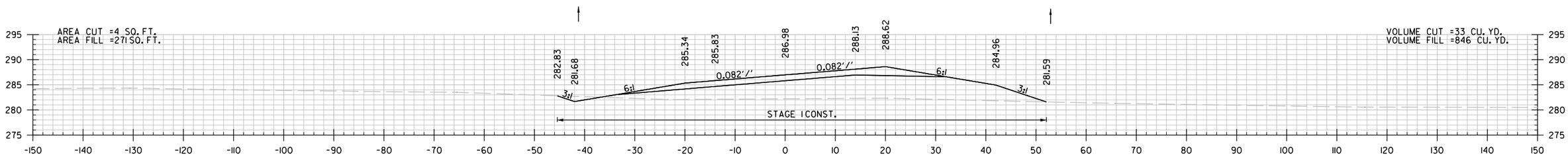

359+00.00

STA. 359+00 TO STA. 363+00

Brendan.Barns 6/16/2026 1:25:58 PM
WORKSPACE: Brendan.Barns
Y:\Projects\ARDOT_169387_070458 UPRR Grade Separation\Design\CIVIL\Drawings\R070458.21.CX.001.dgn
REVISED DATE: $$REVDATE$$

DATE REVISED	DATE FILMED	DATE REVISED	DATE FILMED	FED.RD. DIST.NO.	STATE	FED.AID PROJ.NO.	SHEET NO.	TOTAL SHEETS
				6	ARK.			
				JOB NO.		070458	119	125
				(2)	CROSS SECTIONS			

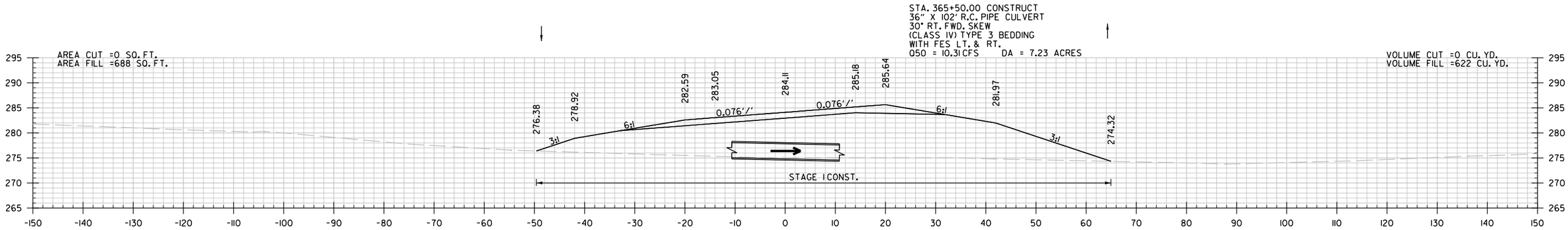

365+50.00

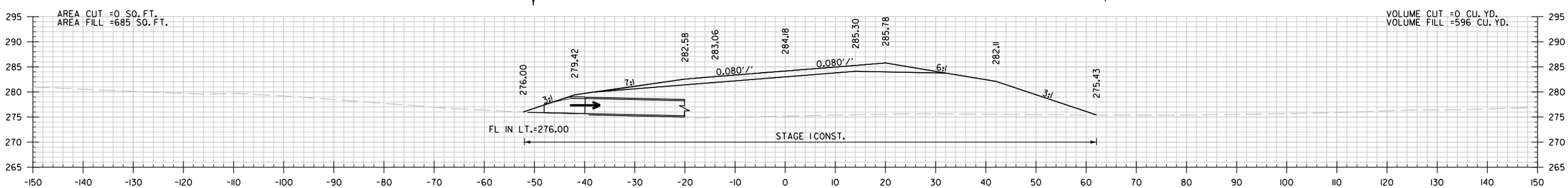

365+25.52

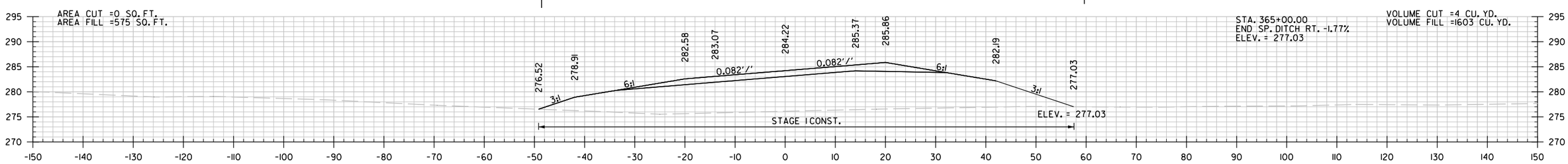

365+00.00

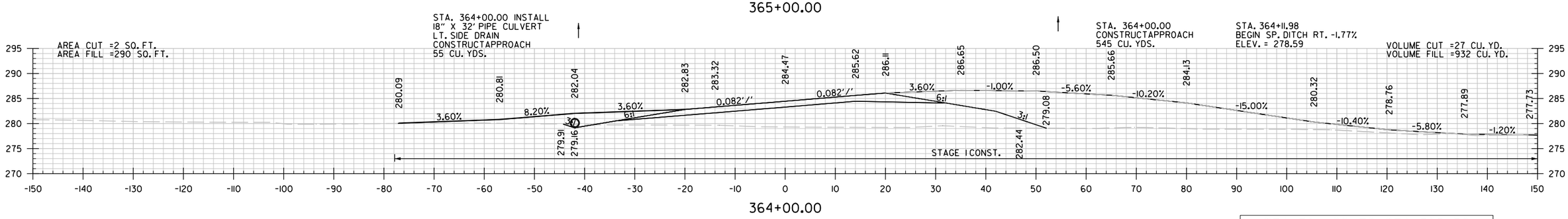

364+00.00

STA. 364+00 TO STA. 365+50

Brandon.Barns 6/16/2026 1:25:58 PM
WORKSPACE: Brandon.Barns
Y:\Projects\ARDOT_16938T_070458 UPRR Grade Separation\Design\CIVIL\Drawings\R070458.21.CX.001.dgn
REVISED DATE: $$REVDATE$$

DATE REVISED	DATE FILMED	DATE REVISED	DATE FILMED	FED.RD. DIST.NO.	STATE	FED.AID PROJ.NO.	SHEET NO.	TOTAL SHEETS
				6	ARK.			
				JOB NO.		070458	120	125

(2) CROSS SECTIONS

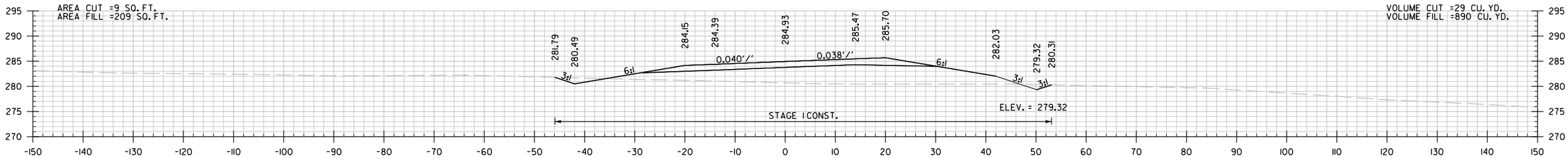

368+00.00

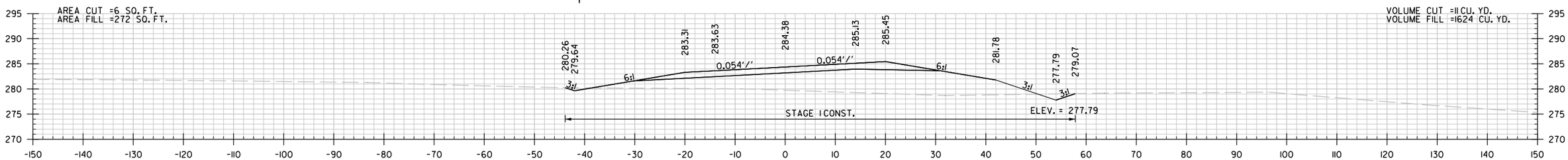

367+00.00

STA. 366+50.00
BEGIN SP. DITCH RT. 1.53%
ELEV. = 277.02

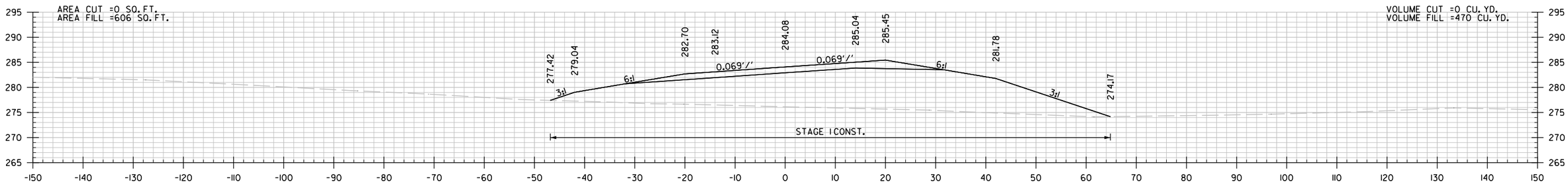

366+00.00

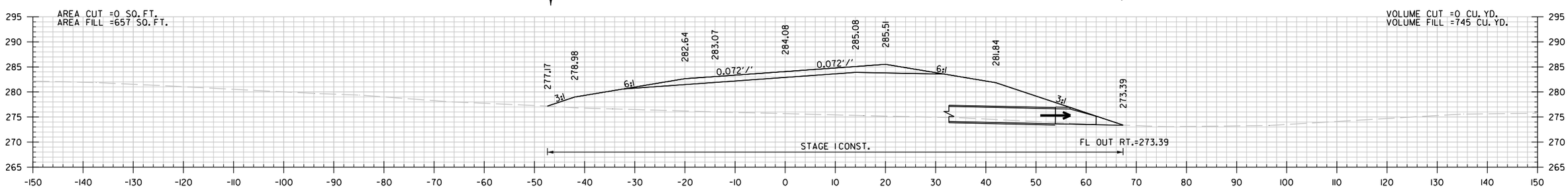

365+79.91

STA. 365+80 TO STA. 368+00

Brendan.Barns 6/16/2026 1:25:59 PM
WORKSPACE: Brendan.Barns
Y:\Projects\ARDOT_16387_070458 UPRR Grade Separation\Design\CIVIL\Drawings\R070458.21.CX.001.dgn
REVISED DATE: $$REVDATE$$

DATE REVISED	DATE FILMED	DATE REVISED	DATE FILMED	FED.RD. DIST.NO.	STATE	FED.AID PROJ.NO.	SHEET NO.	TOTAL SHEETS
				6	ARK.			
				JOB NO.		070458	121	125

(2) CROSS SECTIONS

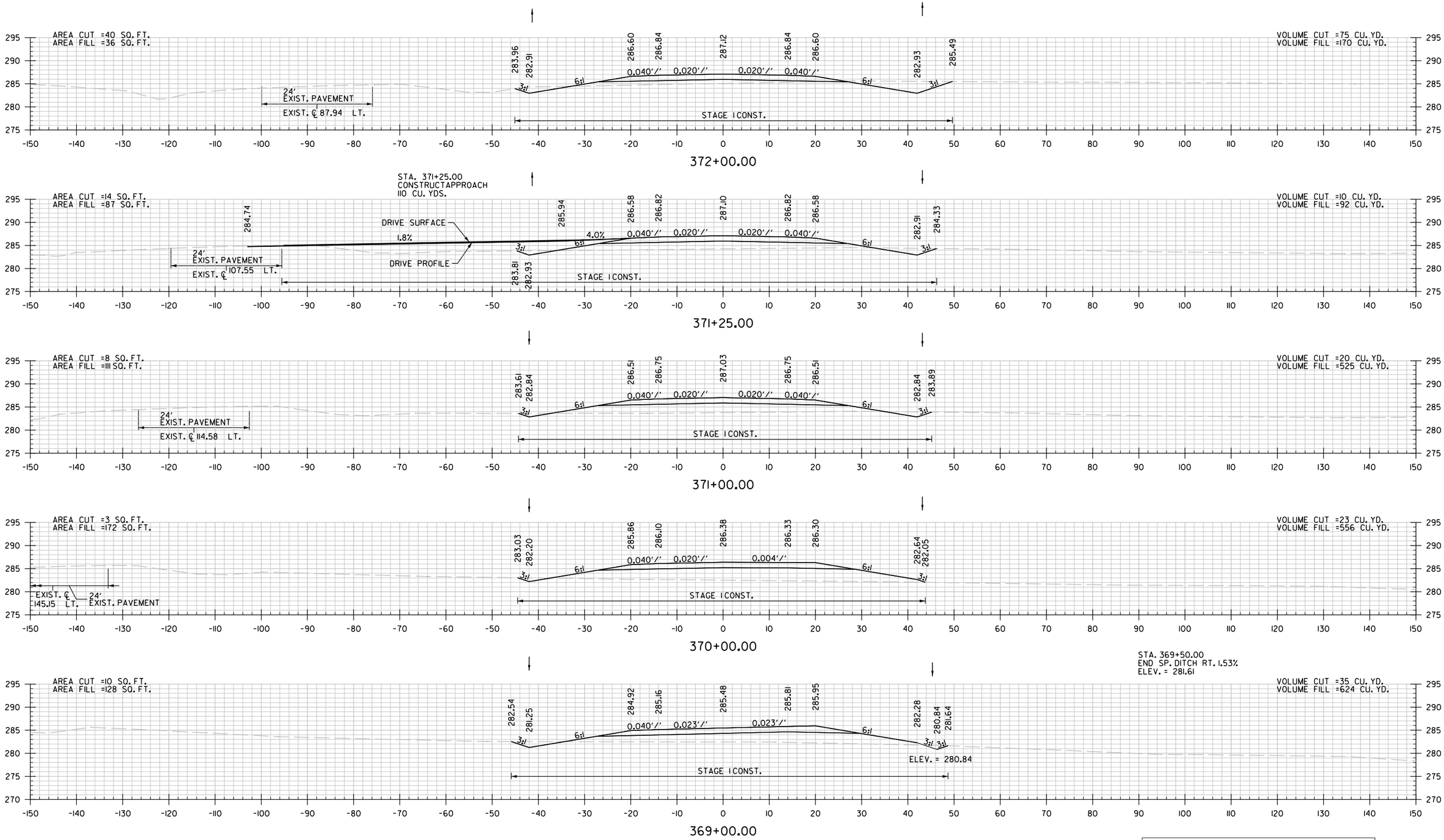

STA. 369+00 TO STA. 372+00

Brendan.Barns 6/16/2026 1:25:59 PM
WORKSPACE: Brendan.Barns
Y:\Projects\ARDOT_169387_070458 UPRR Grade Separation\Design\CIVIL\Drawings\R070458_21_CX_001.dgn
REVISED DATE: $$REVDATE$$

DATE REVISED	DATE FILMED	DATE REVISED	DATE FILMED	FED.RD. DIST.NO.	STATE	FED.AID PROJ.NO.	SHEET NO.	TOTAL SHEETS
				6	ARK.			
				JOB NO.		070458	122	125

(2) CROSS SECTIONS

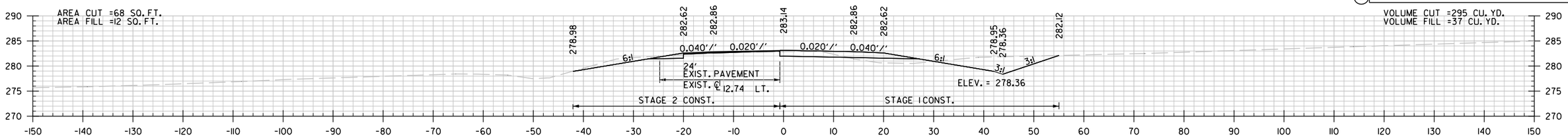

377+00.00

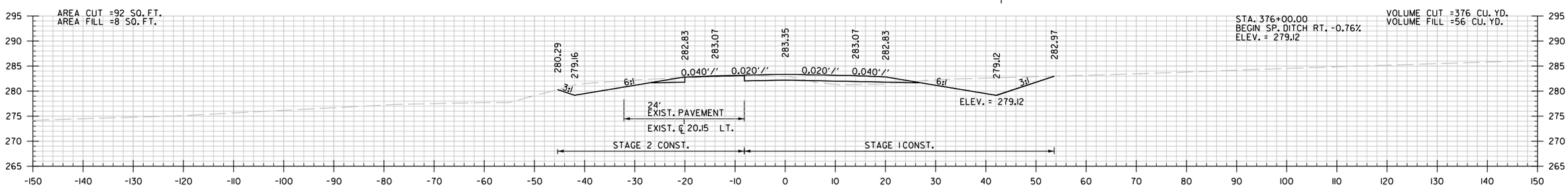

376+00.00

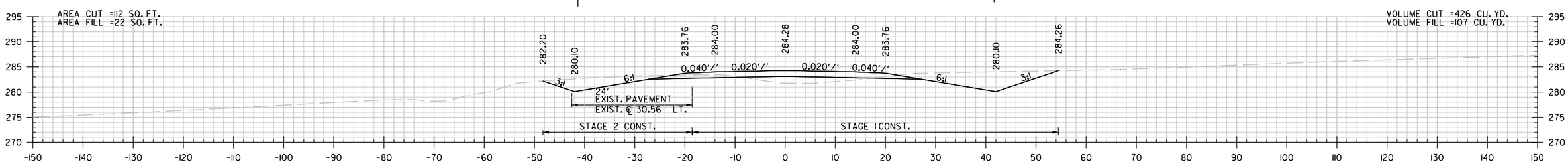

375+00.00

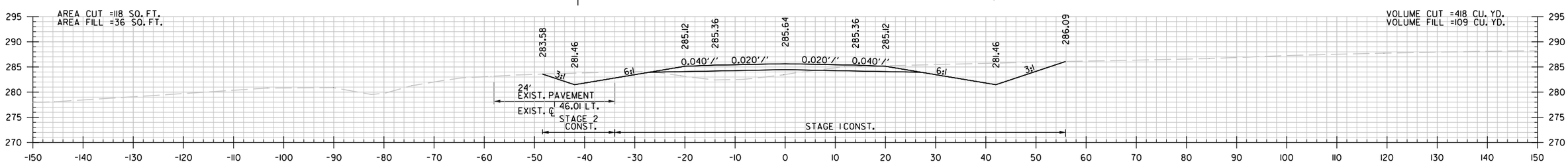

374+00.00

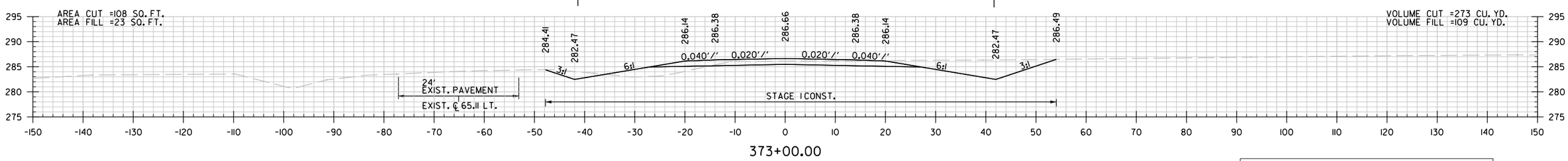

373+00.00

STA. 373+00 TO STA. 377+00

BrendanBarns 6/16/2026 1:26:00 PM
WORKSPACE: BrendanBarns
Y:\Projects\ARDOT_16938T_070458 UPRR Grade Separation\Design\CIVIL\Drawings\R070458_21_CX_001.dgn
REVISED DATE: $$REVDATE$$

DATE REVISED	DATE FILMED	DATE REVISED	DATE FILMED	FED.RD. DIST.NO.	STATE	FED.AID PROJ.NO.	SHEET NO.	TOTAL SHEETS
				6	ARK.			
				JOB NO.		070458	123	125
				CROSS SECTIONS				

STA. 380+70.00
END SP. DITCH RT. 1.90%
ELEV. = 279.33

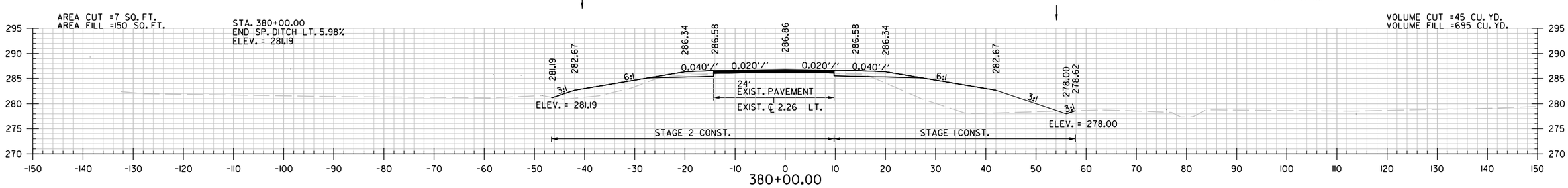

380+00.00

STA. 379+09.39 IN PLACE
4' X 4' X 47' R.C. BOX CULVERT
WITH 3:1 WINGS LT. & RT.
RETAIN & EXTEND 16' LT. AND
EXTEND 26' RT.
Q50 = 115 CFS DA = 95 ACRES

STA. 379+50.00
END SP. DITCH RT. 0.69%
BEGIN SP. DITCH RT. 1.90%
ELEV. = 277.05

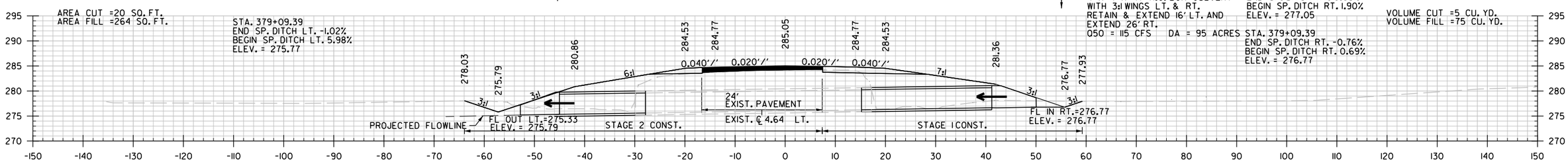

379+09.39

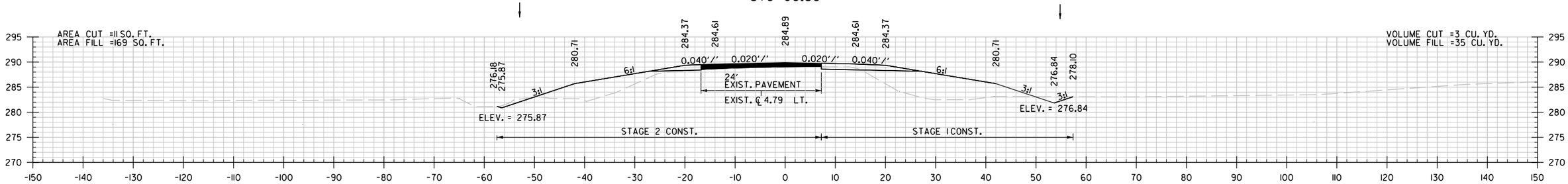

379+00.00

STA. 378+94.16 CONSTRUCT
24" X 82' R.C. PIPE CULVERT
(CLASS III) TYPE III BEDDING
WITH FES LT. & RT.
Q50 = 115 CFS DA = 95 ACRES

378+94.16

STA. 378+10.00
BEGIN SP. DITCH LT. -1.02%
ELEV. = 276.78

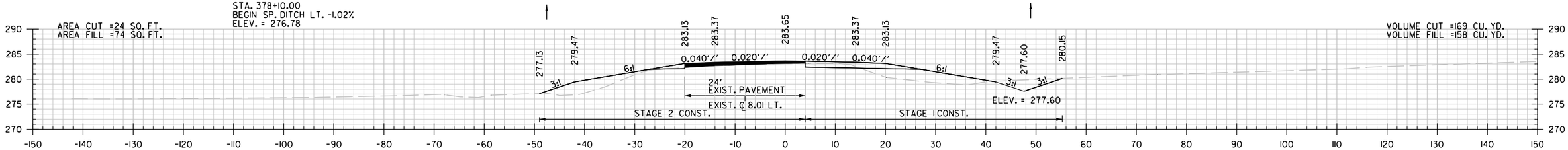

378+00.00

STA. 378+00 TO STA. 380+00

Brendan.Barns 6/16/2026 1:26:00 PM
WORKSPACE: Brendan.Barns
Y:\Projects\ARDOT_16938T_070458 UPRR Grade Separation\Design\CIVIL\Drawings\R070458_21_CX_001.dgn
REVISED DATE: $$REVDATE$$

DATE REVISED	DATE FILMED	DATE REVISED	DATE FILMED	FED.RD. DIST.NO.	STATE	FED.AID PROJ.NO.	SHEET NO.	TOTAL SHEETS
				6	ARK.			
				JOB NO.		070458	124	125

(2) CROSS SECTIONS

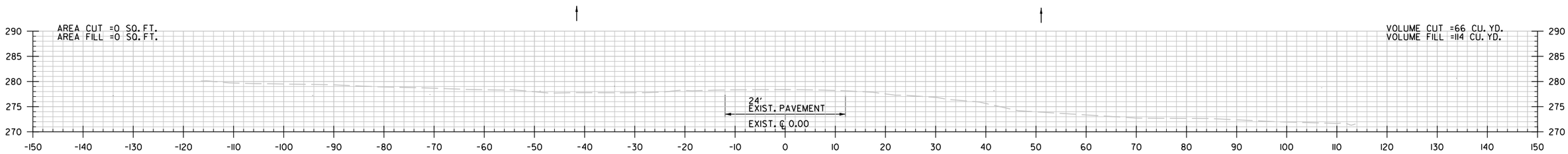

382+30.00
STA. 382+30.00 END 100' TRANSITION

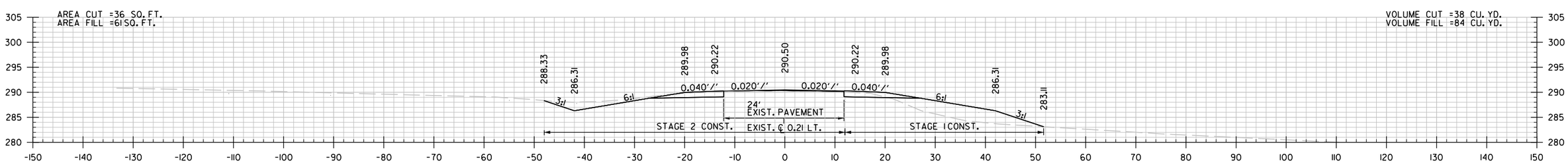

381+30.00
STA. 381+30.00 END JOB 070458 - HWY. 82

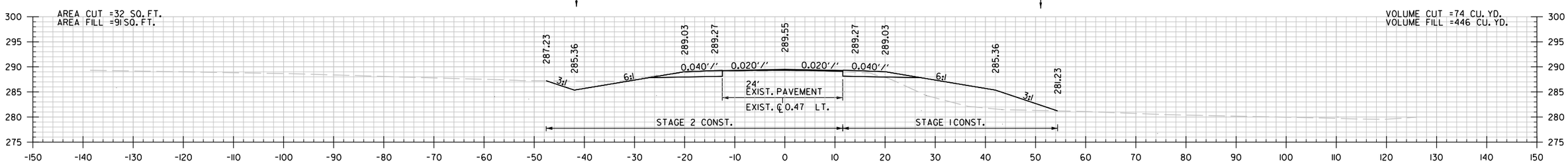

381+00.00

STA. 381+00 TO STA. 382+30

Brendan.Barns 6/16/2026 1:26:01 PM
WORKSPACE: Brendan.Barns
Y:\Projects\ARDOT_169387_070458 UPRR Grade Separation\Design\CIVIL\Drawings\R070458.21.CX.001.dgn
REVISED DATE: $$REVDATE$$

DATE REVISED	DATE FILMED	DATE REVISED	DATE FILMED	FED.RD. DIST.NO.	STATE	FED.AID PROJ.NO.	SHEET NO.	TOTAL SHEETS
				6	ARK.			
				JOB NO.		070458	125	125

(2) CROSS SECTIONS

STA. 13+39.00 END CO. RD. 131

STA. 13+39.00 MATCH EXIST. CO. RD. 131 EDGE OF PAVEMENT

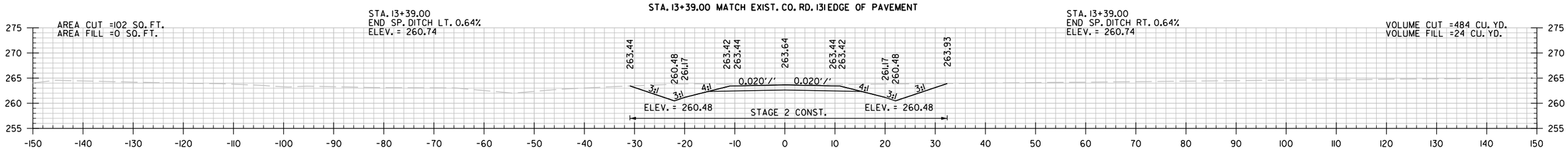

13+00.00

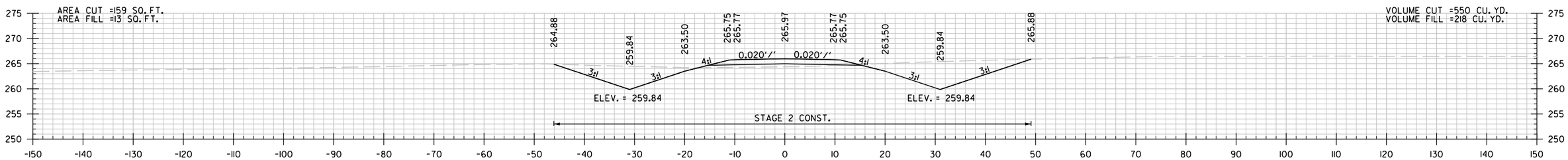

12+00.00

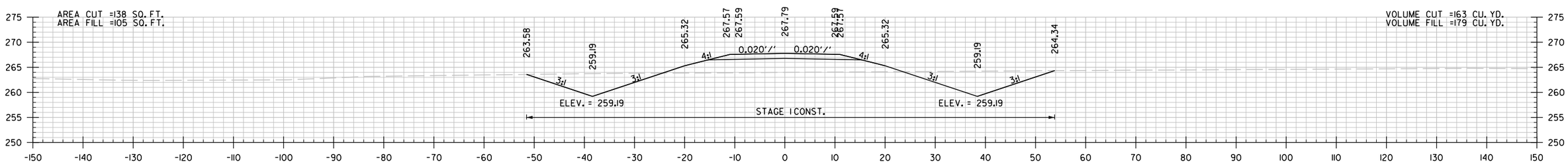

11+00.00

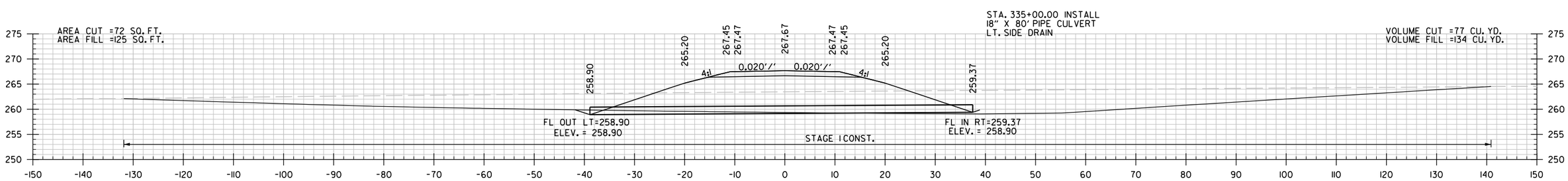

STA. 10+56.64
BEGIN SP. DITCH LT. 0.64%
ELEV. = 258.91

10+57.92

STA. 10+56.64
BEGIN SP. DITCH RT. 0.64%
ELEV. = 258.91

STA. 10+12.00 MATCH PROP. HWY. 82 EDGE OF PAVEMENT

STA. 10+12.00 BEGIN CO. RD. 131

COUNTY RD. 131

STA. 10+00 TO STA. 13+00

AbigailPahls 7/3/2025 11:33:54 AM
WORKSPACE: AbigailPahls
Y:\Projects\ARDOT_16938?_070458 UPRR Grade Separation\Design\CIVIL\Drawings\R070458.21.CX.002.dgn
REVISED DATE: $$REVDATE$$

DATE REVISED	DATE FILMED	DATE REVISED	DATE FILMED	FED. ROAD DIST. NO.	STATE	FED. AID PROJ. NO.	SHEET NO.	TOTAL SHEETS
				6	ARK.			
				JOB NO.				
				1	EMBANKMENT & BACKFILL		55000	

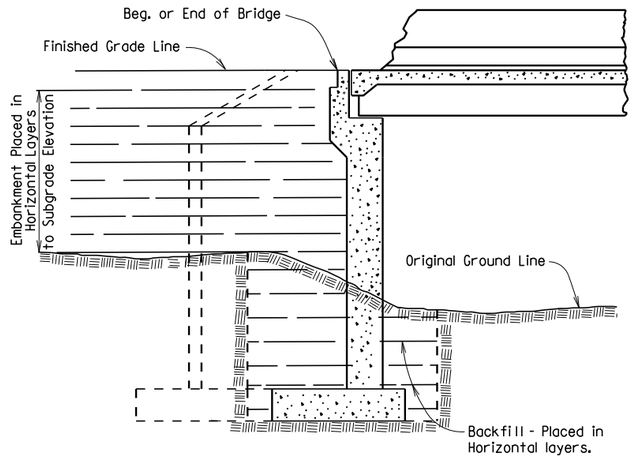

EMBANKMENT CONSTRUCTION AND FOOTING BACKFILL AT VERTICAL WALL ABUTMENTS

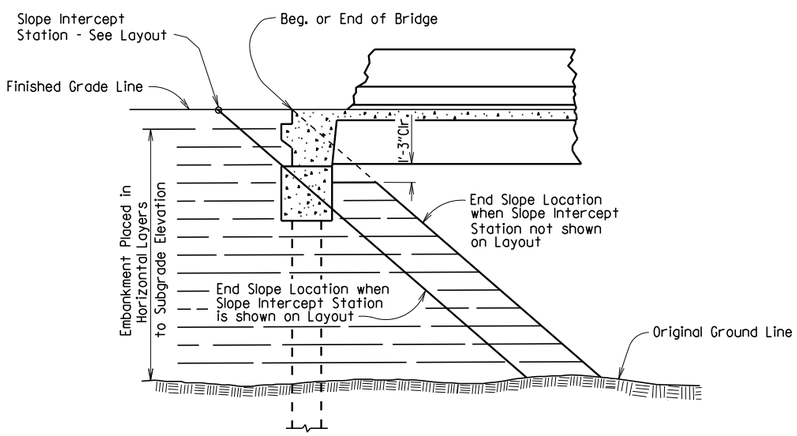

EMBANKMENT CONSTRUCTION AT SPILL-THROUGH PILE END BENTS

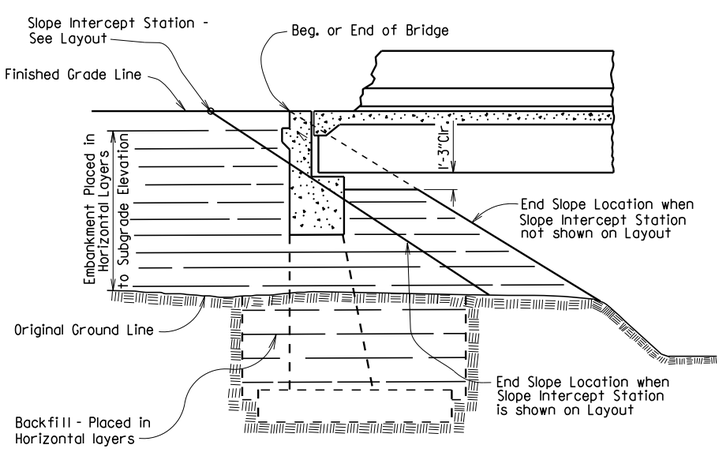

EMBANKMENT CONSTRUCTION AND FOOTING BACKFILL AT SPILL-THROUGH END BENTS

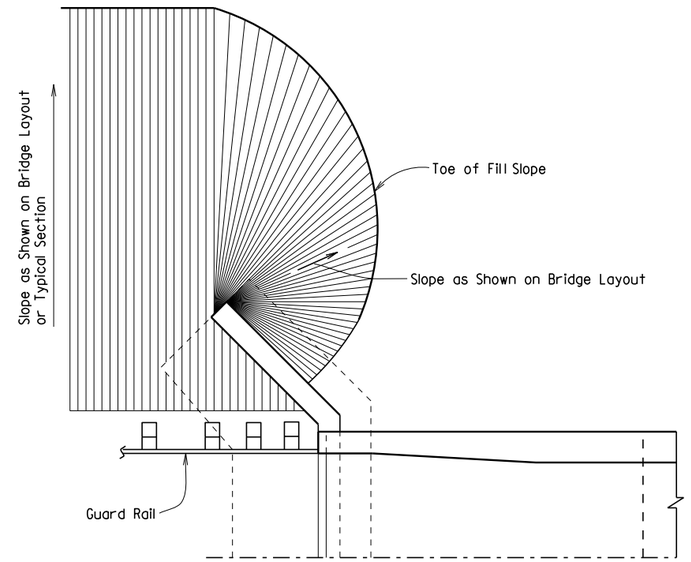

VERTICAL WALL ABUTMENTS

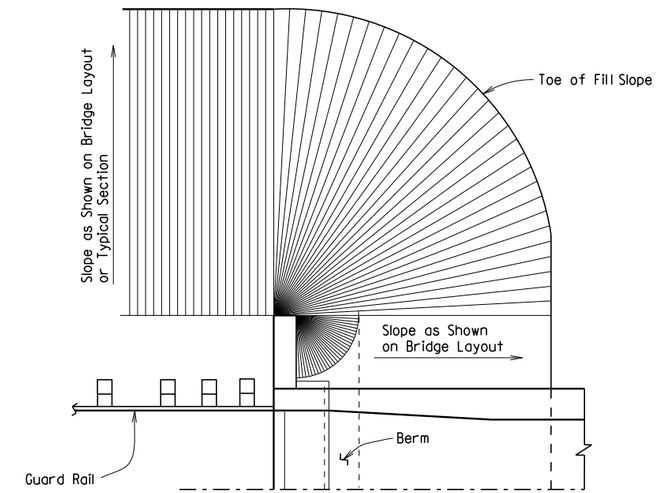

SPILL-THROUGH END BENTS WITH STUB WING

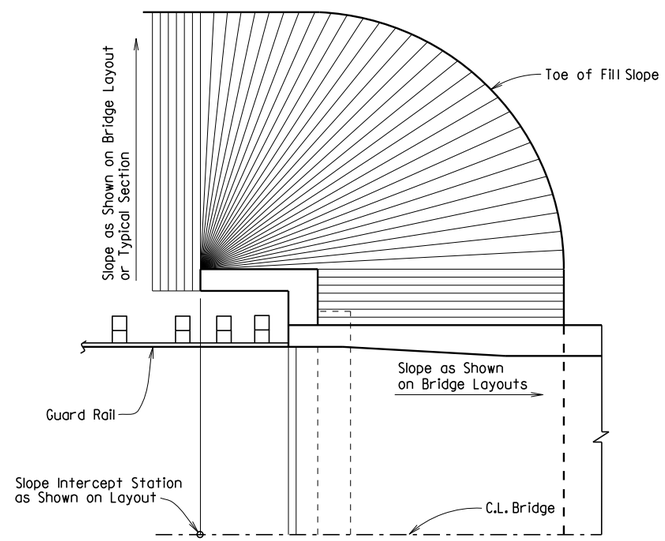

SPILL-THROUGH END BENTS WITH TURNBACK WING

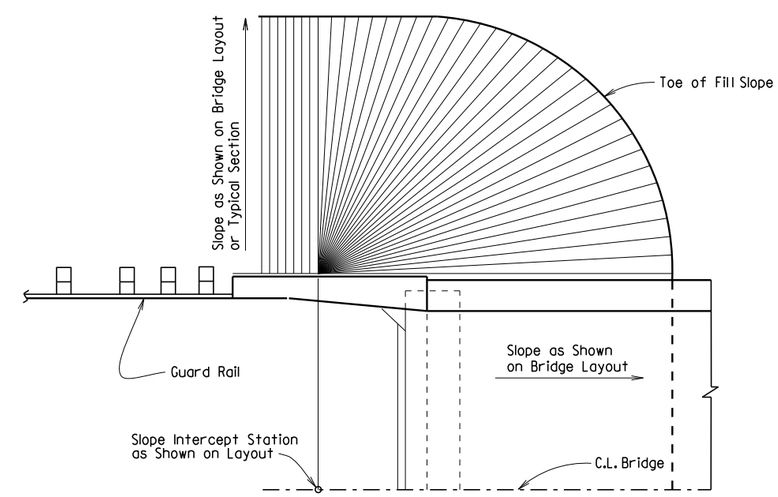

SPILL-THROUGH END BENTS WITH TRANSITION WING

METHOD OF DETERMINING FILL SLOPE LOCATION AT BRIDGE ENDS

GENERAL NOTES

The Bridge End Embankment shall be defined as a section of embankment, not less than 20 feet long adjacent to the bridge end, together with the side slopes and slopes under the bridge end including around the end of wingwalls. Embankment adjacent to structures shall be constructed in 6 inch horizontal layers (loose measure) and compacted by the use of mechanical equipment to the satisfaction of the Engineer. Refer to Subsections 210.09, 210.10 and 801.08 for construction requirements.

STANDARD DETAILS FOR EMBANKMENT CONSTRUCTION AND BACKFILL AT BRIDGE ENDS

ARKANSAS STATE HIGHWAY COMMISSION

LITTLE ROCK, ARK.

DRAWN BY:	KDH	DATE:	2-27-2014	FILENAME:	b55000.dgn
CHECKED BY:	BEF	DATE:	2-27-2014	SCALE:	NO SCALE
DESIGNED BY:	STD.	DATE:	-		

DRAWING NO. 55000

DATE REVISED	DATE FILMED	DATE REVISED	DATE FILMED	FED. ROAD DIST. NO.	STATE	FED. AID PROJ. NO.	SHEET NO.	TOTAL SHEETS
				6	ARK.			
				JOB NO.				
				1	CONCRETE RIPRAP 55002			

Note:
Sloped surfaces of concrete riprap to be marked off into blocks (construction joints optional) with an approved grooving tool, spacing the grooved lines about 5' apart.

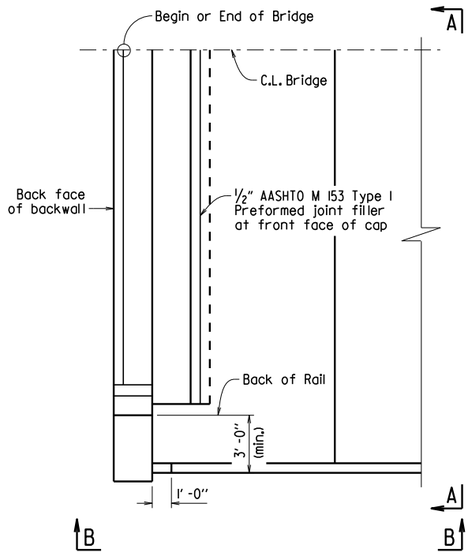

PLAN OF CONCRETE RIPRAP PERPENDICULAR TO WING
1/4" = 1'-0"

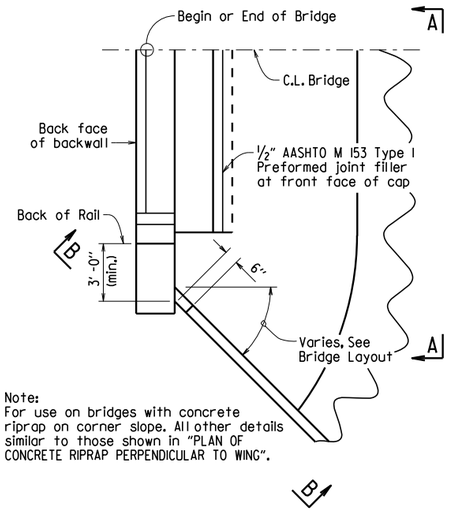

Note:
For use on bridges with concrete riprap on corner slope. All other details similar to those shown in "PLAN OF CONCRETE RIPRAP PERPENDICULAR TO WING".

PLAN OF CONCRETE RIPRAP AT ANGLE TO WING
1/4" = 1'-0"

Note:
For use on bridges with turned back wings. All other details similar to those shown in "PLAN OF CONCRETE RIPRAP PERPENDICULAR TO WING".

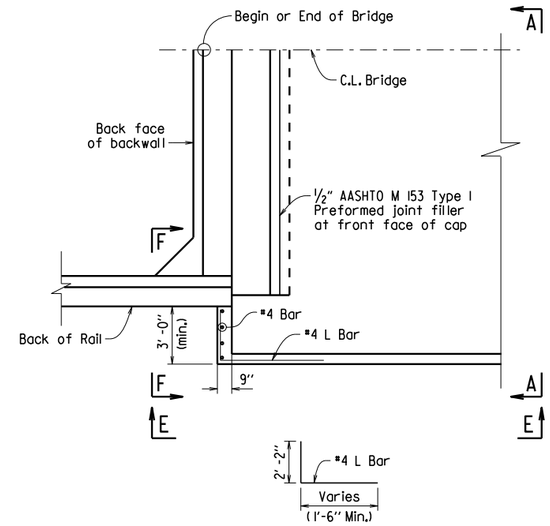

PLAN OF CONCRETE RIPRAP PERPENDICULAR TO TURNED BACK WING
1/4" = 1'-0"

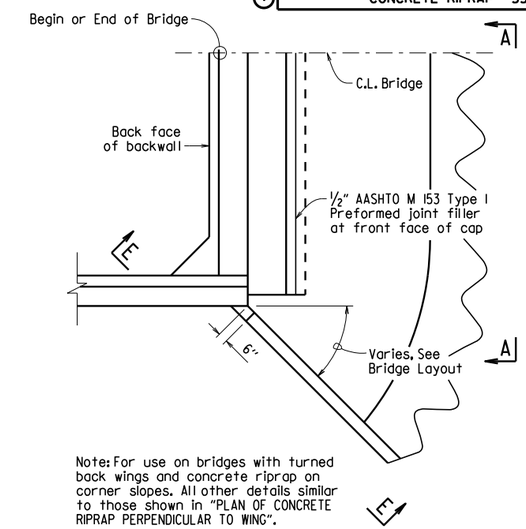

Note: For use on bridges with turned back wings and concrete riprap on corner slopes. All other details similar to those shown in "PLAN OF CONCRETE RIPRAP PERPENDICULAR TO WING".

PLAN OF CONCRETE RIPRAP AT ANGLE FROM TURNED BACK WING
1/4" = 1'-0"

Note:
Wing is shown perpendicular to concrete riprap. Details are similar when wing is at an angle to riprap.

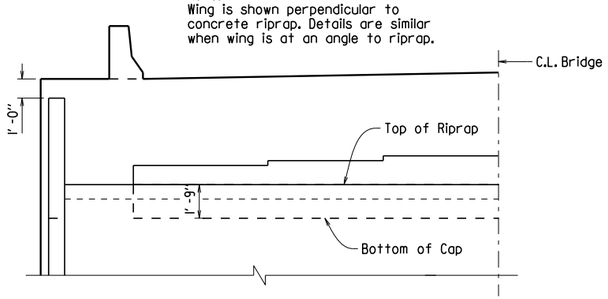

VIEW A-A
1/4" = 1'-0"

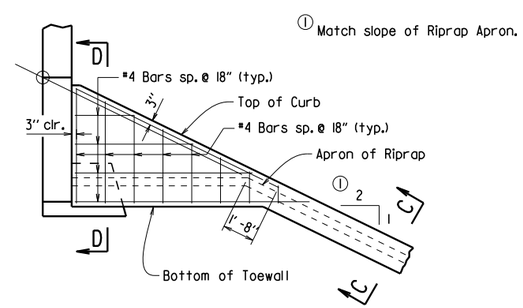

VIEW B-B
1/4" = 1'-0"

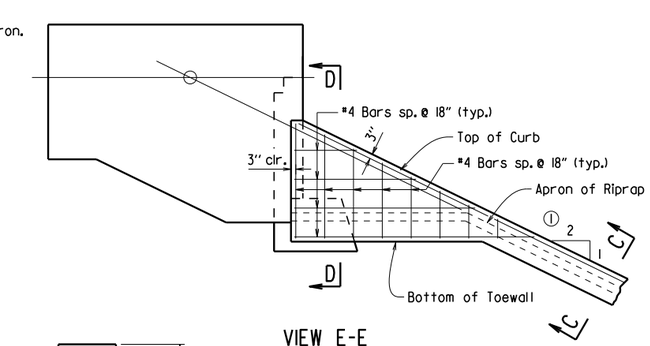

VIEW E-E
1/4" = 1'-0"

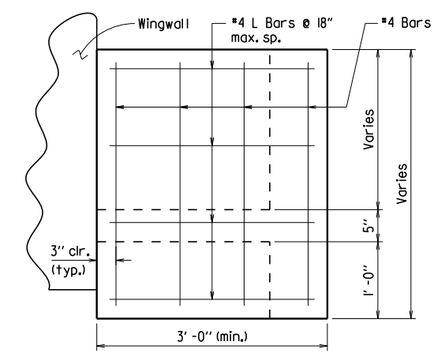

VIEW F-F
1" = 1'-0"

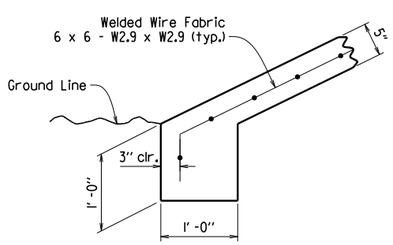

TOE OF CONCRETE RIPRAP
1" = 1'-0"

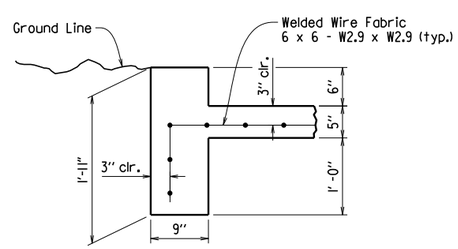

SECTION C-C
1" = 1'-0"

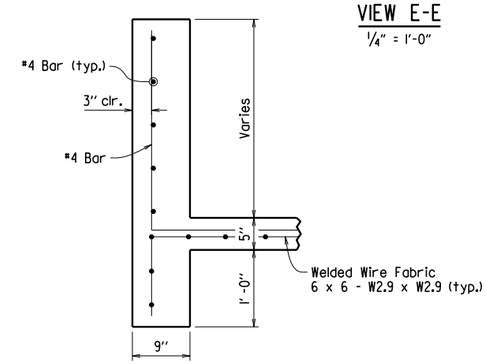

SECTION D-D
1" = 1'-0"

GENERAL NOTES

All concrete shall be Class A with a minimum compressive strength, f'c = 2,100 psi.

Welded wire fabric shall conform to AASHTO M55 or M221.

STANDARD DETAILS FOR CONCRETE RIPRAP

ARKANSAS STATE HIGHWAY COMMISSION

LITTLE ROCK, ARK.

DRAWN BY:	ACP	DATE:	2/27/2014	FILENAME:	b55002.dgn
CHECKED BY:	BEF	DATE:	2/27/2014	SCALE:	AS SHOWN
DESIGNED BY:	Std.	DATE:	---		

DRAWING NO. 55002

DATE REVISED	DATE FILMED	DATE REVISED	DATE FILMED	FED. ROAD DIST. NO.	STATE	FED. AID PROJ. NO.	SHEET NO.	TOTAL SHEETS
3/24/16				6	ARK.			
				JOB NO.				
				① BRIDGE DECK FORMS			55005	

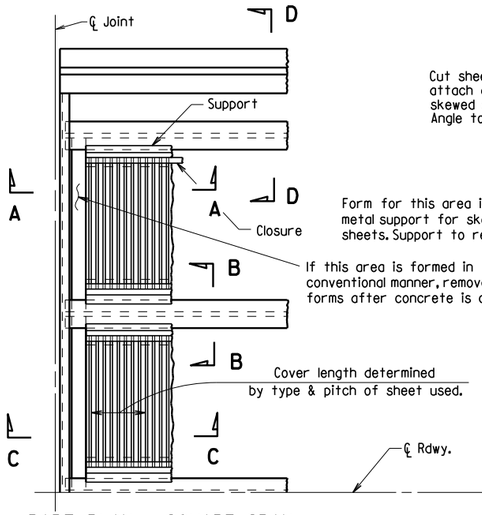

PART PLAN - SQUARE SPAN

3/8" = 1'-0"

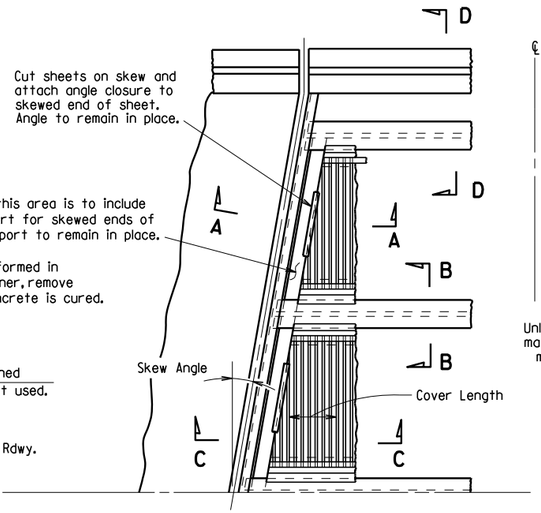

PART PLAN - SKEWED SPAN

3/8" = 1'-0"

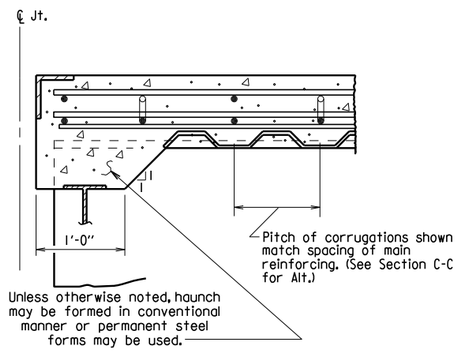

SECTION A-A

N.T.S.
(Angle at end of span)

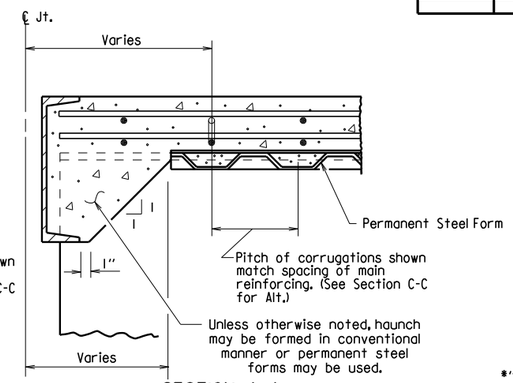

SECTION A-A

N.T.S.
(Channel at end of span)

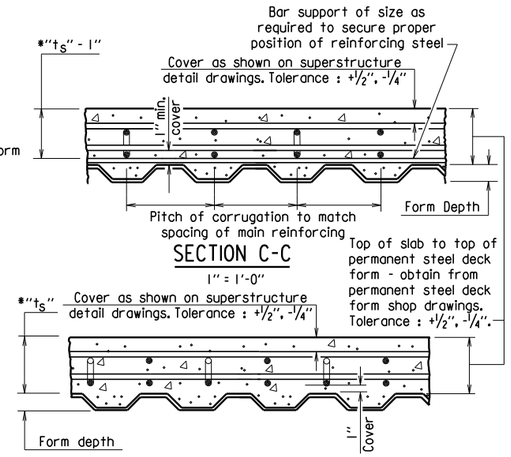

SECTION C-C

1" = 1'-0"

SECTION C-C - ALTERNATE

1" = 1'-0"
(Applicable when corrugations do not match spacing of main reinforcement)

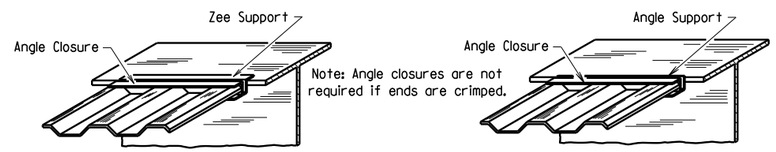

SKETCH OF PERMISSIBLE SUPPORTS

N.T.S.

$*t_s$ = slab thickness as shown on superstructure detail drawings.

GENERAL NOTES

Permanent steel deck forms may be used at the Contractor's option and shall be at no additional cost to the Department. Such use may result in changes to the dead load deflection of the girder. Any cost for adjustments due to a change in the dead load deflection will be borne by the Contractor. Payment for deck concrete and structural steel will not be increased due to use of permanent steel deck forms.

Permanent steel deck forms shall conform to Subsection 802.14(b). Detailed plans, including detailed calculations and manufacturer's technical brochure, shall be submitted to and approved by the Engineer before work of forming the bridge deck is started.

Welding of form supports to the tension flange of steel girders will be permitted only in areas where shear connectors are used. When welding is not allowed, the method of fastening Z or ∠ supports to the flange must be approved by the Engineer.

Form sheets shall be fastened to supporting members and to each other with galvanized metal screws sufficient in size and number to provide a secure attachment. Alternate methods of attachment must be approved by the Engineer.

When the pitch of form corrugations match the reinforcing spacing, transversely align form sheets across the bridge to maintain the correct orientation of continuous reinforcing bars in the corrugations.

Bar support rods, when used, shall be sized and spaced to adequately support the bottom reinforcing mat at the required position.

High chairs shall be sized to support the top mat of reinforcing at the proper position. High chairs shall be placed at locations shown on the detail drawings.

Specifications: Arkansas State Highway and Transportation Department Standard Specifications for Highway Construction (2014 Edition), with applicable Supplemental Specifications and Special Provisions.

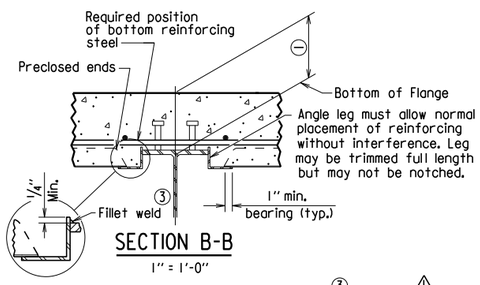

SECTION B-B

1" = 1'-0"
(Showing permissible support for tension flange where shear connectors are used, and for all compression flanges)

③ ⚠ Minimum weld: 1/8" x 1" @ 18". More weld may be required; maximum length per weld = 1 1/2" (typ.)

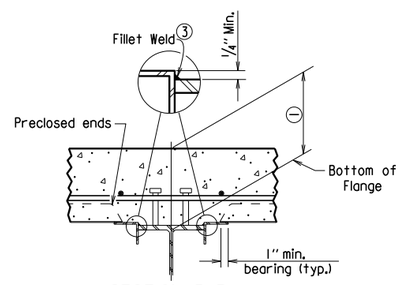

SECTION B-B

1" = 1'-0"
(Showing permissible support for tension flange where shear connectors are used and for all compression flanges)

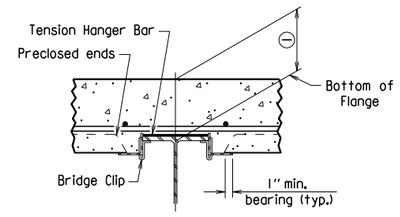

SECTION B-B

1" = 1'-0"
(Showing permissible support for tension flange where shear connectors are not used)

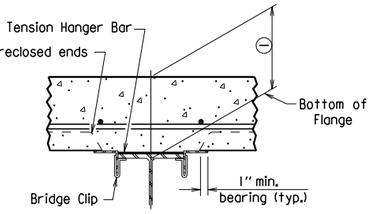

SECTION B-B

1" = 1'-0"
(Showing permissible support for tension flange where shear connectors are not used)

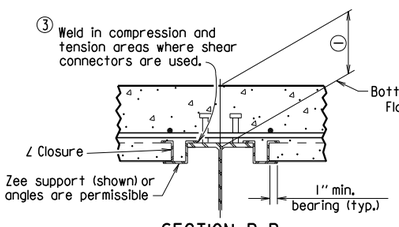

SECTION B-B

1" = 1'-0"
(Showing ∠ Closure)

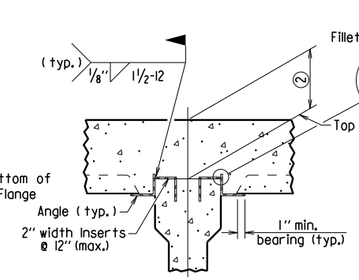

SECTION B-B
(FOR CONCRETE GIRDERS)

1" = 1'-0"
(Showing support by Insert cast in girder)

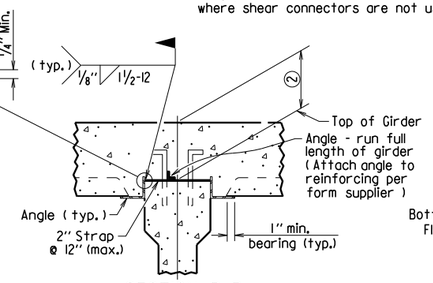

SECTION B-B
(FOR CONCRETE GIRDERS)

1" = 1'-0"
(Showing support by Strap)

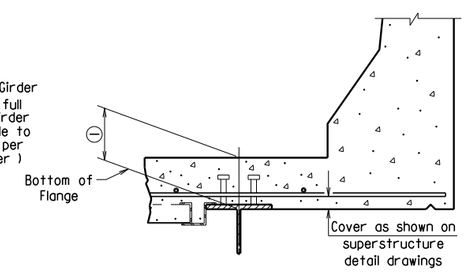

SECTION D-D

1" = 1'-0"
Note: Only Bottom Reinforcing is shown.

① Distance from top of slab to bottom of top flange as measured at centerline girder and as shown on superstructure detail drawings. This dimension may vary within the following limits to maintain the grade and slab thickness tolerances : Minimum - occurs when either the top flange or the support angle leg contacts the bottom reinforcing steel; Maximum = t_s + 1 3/4" + flange thickness. See Section C-C for slab thickness tolerance between adjacent girder flanges.

② Distance from top of slab to top of girder as measured at centerline girder and as shown on superstructure detail drawings. This dimension may vary within the following limits to maintain the grade and slab thickness tolerances : Minimum - occurs when either the top of girder or the support angle leg contacts the bottom reinforcing steel; Maximum - value shown on the superstructure detail drawings when removable forms are used. See Section C-C for slab thickness tolerance between adjacent girder flanges.

⚠ Revised weld dimension by KWY, Ck'd. by BEF, 3/24/16.

STANDARD DETAILS FOR PERMANENT STEEL BRIDGE DECK FORMS FOR STEEL & CONCRETE GIRDER SPANS

ARKANSAS STATE HIGHWAY COMMISSION

LITTLE ROCK, ARK.

DRAWN BY:	KDH	DATE:	2-27-2014	FILENAME:	b55005.dgn
CHECKED BY:	BEF	DATE:	2-27-2014	SCALE:	NONE
DESIGNED BY:	STD.	DATE:	—		

DRAWING NO. 55005

DATE REVISED	DATE FILMED	DATE REVISED	DATE FILMED	FED. ROAD DIST. NO.	STATE	FED. AID PROJ. NO.	SHEET NO.	TOTAL SHEETS
				6	ARK.			
				JOB NO.				
				1		GENERAL NOTES	55006	

GENERAL NOTES

These GENERAL NOTES are applicable unless otherwise shown in the Plan Details, Special Provisions, or Supplemental Specifications.

CONSTRUCTION SPECIFICATIONS: Arkansas State Highway and Transportation Department Standard Specifications for Highway Construction (2014 Edition) with applicable Supplemental Specifications and Special Provisions. Section and Subsection refer to the Standard Specifications.

DESIGN SPECIFICATIONS: See Bridge Layout(s).

SUPERSTRUCTURE NOTES:

MATERIALS AND STRENGTHS:

Class S(AE) Concrete	f'c =	4,000 psi
Reinforcing Steel (Gr. 60, AASHTO M 31 or M 322, Type A)	fy =	60,000 psi
Structural Steel (AASHTO M 270, Gr. 36)	Fy =	36,000 psi
Structural Steel (AASHTO M 270, Gr. 50)	Fy =	50,000 psi
Structural Steel (AASHTO M 270, Gr. 50W)	Fy =	50,000 psi
Structural Steel (AASHTO M 270, Gr. HPS70W)	Fy =	70,000 psi

See Plan Details for Grade(s) of Structural Steel required.

CONCRETE:

All concrete shall be Class S(AE) with a minimum 28 day compressive strength f'c = 4,000 psi. Concrete shall be poured in the dry and all exposed corners shall be chamfered 3/4" unless otherwise noted.

The superstructure details shown are for use when removable deck forming is used and are the basis for measurement of Class S(AE) Concrete. See Standard Drawing No. 55005 for allowable modifications and for tolerances when Permanent Steel Bridge Deck Forms are used.

Use of a longitudinal screed is not permitted on any span of a bridge deck with horizontal curvature.

The concrete deck (roadway surface) shall be given a tine finish in accordance with Subsection 802.19 for Class 5 Tined Bridge Roadway Surface Finish. Sidewalks shall receive a broomed finish as specified for final finishing in Subsection 802.19 for Class 6 Broomed Finish. Movement of the finishing machine across new concrete shall be on planks placed on the surface and shall be prohibited for 72 hours after finishing the pour. Sufficient concrete must be placed ahead of the strike-off to fully load the beam or girder. When permitted, the use of a longitudinal strike-off will require that a vertical camber adjustment be made in the strike-off to account for the future dead load deflection due to any railings, median barrier, and sidewalks.

REINFORCING STEEL:

All reinforcing steel shall be Grade 60 conforming to AASHTO M 31 or M 322, Type A, with mill test reports and shall be epoxy coated. The reinforcing steel is to be accurately located in the forms and firmly held in place by steel wire supports, sufficient in number and size to prevent displacement during the course of construction. The wire supports will not be paid for directly, but will be considered subsidiary to the item "Epoxy Coated Reinforcing Steel (Grade 60)".

STRUCTURAL STEEL (COMMON TO W-BEAMS AND PLATE GIRDERS):

Structural steel shall be AASHTO M 270 with grade and payment as specified in the plans. Grade 50W steel shall not be painted and all exposed surfaces shall be cleaned in accordance with Subsection 807.84(e). Grade 36 and Grade 50 steel shall be painted unless otherwise noted and all exposed surfaces shall be cleaned in accordance with Subsection 807.84. Structural steel completely embedded in concrete may be AASHTO M 270, Gr. 36, Gr. 50 or Gr. 50W unless otherwise noted.

Drawings show general features of design only. Shop drawings shall be made in accordance with the specifications, submitted and approval secured before fabrication is begun.

Requests for substitution of structural steel shapes shown with shapes of greater size must be submitted by the Contractor to the Engineer for approval. Steels of equal or greater strengths will be accepted only when shown on the approved shop drawings. Payment will be based on the basis of shapes and materials shown in the plans, and no additional compensation will be made for any adjustments due to substitutions.

All welding that is to be done during fabrication of structural steel, including temporary welds, shall be detailed on the shop drawings and submitted for approval. If additional welds are required, whether permanent or temporary, a formal request with detailed drawings shall be submitted to the Engineer for approval; however, additional welds used for attaching falsework support devices or screed rail supports to the structural steel that do not exceed the limitations of Subsection 802.13 will not require approval prior to construction. All welding shall conform to Subsection 807.26.

Unless otherwise noted, field connections shall be bolted with 3/4" ø high-strength bolts using 13/16" ø open holes. Holes for 3/4" ø high-strength bolts may be 15/16" ø if a washer is supplied for use under both the nut and head of the bolt. The use of oversized holes will not be allowed on main members unless otherwise noted. Bolts shall be placed with heads on the outside face of the exterior beam or girder webs and on the bottom of the beam or girder flanges.

All stud shear connectors shall be granular flux filled, solid fluxed, or equal and shall be automatically end welded in accordance with recommendations of the Manufacturer.

When painting is required, all structural steel except galvanized steel and steel completely encased in concrete shall be painted in accordance with Subsection 807.75. The color of paint shall be as specified in the plans.

STRUCTURAL STEEL (W-BEAMS):

All beams and field splice plates, and all diaphragms and connection plates attached to horizontally curved beams are considered main load carrying members and shall meet the Longitudinal Charpy V-Notch Test specified in Subsection 807.05. This work and material will not be paid for directly, but shall be considered subsidiary to the item "Structural Steel in Beam Spans (M 270, Gr. ___)".

All beams in continuous units and simple spans with field splices shall be blocked in their true position in the shop in groups as specified in Subsection 807.54(b)(2) with the webs horizontal. The camber, length of sections, distance between bearings, and openings of joints shall be measured and this information shall become part of the permanent records. The component parts shall be match marked in this assembly and these marks shall be shown on the erection diagram.

All beams in simple spans without field splices shall be blocked in their true position with webs horizontal. The camber, distance between bearings, and openings of joints shall be measured and this information shall become part of the permanent records.

Flange field splice plates shall be cut and fabricated so that the primary direction of rolling is parallel to the direction of the main tensile and/or compressive stresses.

All beam dimensions are based on a temperature of 60 degrees F. A tolerance of 1/4" +/- is allowed for camber.

Bent plate diaphragms for horizontally curved beams shall be cut and fabricated so that the primary direction of rolling is parallel to the direction of the main tensile and/or compressive stresses. Bent plate diaphragms for straight beams may be cut and fabricated in accordance with Subsection 807.35 or as required for horizontally curved beams.

Unless otherwise noted, diaphragms shall be installed as beams are erected. All bolts in diaphragms and field splices shall be installed and tightened in accordance with Subsection 807.71 prior to pouring the concrete deck.

STRUCTURAL STEEL (PLATE GIRDERS):

All references to cross-frames shall include "X" or "K" types.

All girder web and flange plates, all field splice plates, and all diaphragms, cross-frames and connection plates attached to horizontally curved girders are considered main load carrying members and shall meet the Longitudinal Charpy V-Notch Test specified in Subsection 807.05. This work and material will not be paid for directly, but shall be considered subsidiary to the item "Structural Steel in Plate Girder Spans (M 270, Gr. ___)".

All girders in continuous units and simple spans with field splices shall be assembled in the shop as specified in Subsection 807.54(b)(2) and blocked in their true position with webs horizontal. The camber, length of sections, distance between bearings, and openings of joints shall be measured and this information shall become part of the permanent records. The component parts shall be match marked in this assembly and these marks shall be shown on the erection diagram.

All girders in simple spans without field splices shall be blocked in their true position with webs horizontal. The camber, distance between bearings, and openings of joints shall be measured and this information shall become part of the permanent records.

Web and flange plates for main members and flange splice plates for main members shall be cut and fabricated so that the primary direction of rolling is parallel to the direction of the main tensile and/or compressive stresses.

Girder webs may be made by shop splicing with minimum lengths of 25 feet for sections. Flange plates longer than 50 feet may be made by shop splicing with minimum lengths of 25 feet for sections. No additional payment will be made for shop welded splices.

All girder dimensions are based on a temperature of 60 degrees F. A tolerance of 1/4" +/- is allowed for camber.

Groove welds in web and flange plates shall be Quality Control (Q.C.) tested by nondestructive testing, as required in Subsection 807.23(b). Fillet welds at flange to web plate connections shall be Q.C. tested by the magnetic particle method. All Q.C. testing shall be considered subsidiary to the item "Structural Steel in Plate Girder Spans (M 270, Gr. ___)".

Bent plate diaphragms for horizontally curved girders shall be cut and fabricated so that the primary direction of rolling is parallel to the direction of the main tensile and/or compressive stresses. Bent plate diaphragms for straight girders may be cut and fabricated in accordance with Subsection 807.35 or as required for horizontally curved girders.

Unless otherwise noted, cross-frames and diaphragms shall be installed as girders are erected. All bolts in cross-frames, diaphragms, and field splices shall be installed and tightened in accordance with Subsection 807.71 prior to pouring the concrete deck.

SUBSTRUCTURE NOTES:

CONCRETE:

Unless otherwise noted, concrete in caps, columns and footings (except seal footings) shall be Class "S" with a minimum 28 day compressive strength f'c = 3,500 psi and shall be poured in the dry. Seal Concrete for footings shall have a minimum 28 day compressive strength f'c = 2,100 psi.

Concrete in drilled shafts shall be Class "S" as modified by Job SP "Drilled Shaft Foundations".

All exposed corners shall be chamfered 3/4" unless otherwise noted.

REINFORCING STEEL:

All reinforcing steel shall be Grade 60 (yield strength = 60,000 psi) conforming to AASHTO M 31 or M 322, Type A, with mill test reports.

Top reinforcing bars in cap shall be properly placed to avoid interference with anchor bolts or sheet metal sleeves.

STRUCTURAL STEEL:

Structural steel in end bents shall be AASHTO M 270 with grade and payment as specified in the plans.

FOR ADDITIONAL INFORMATION AND NOTES, SEE LAYOUT(S) AND PLAN DETAILS.

STANDARD GENERAL NOTES
FOR STEEL BRIDGE STRUCTURES

ARKANSAS STATE HIGHWAY COMMISSION
LITTLE ROCK, ARK.

DRAWN BY:	A.M.S.	DATE:	9-2-2015	FILENAME:	b55006.dgn
CHECKED BY:	B.E.F.	DATE:	9-2-2015	SCALE:	NO SCALE
DESIGNED BY:	STD.	DATE:			

DRAWING NO. 55006

PRINT DATE: 11/7/2019

DATE REVISED	DATE FILMED	DATE REVISED	DATE FILMED	FED. ROAD DIST. NO.	STATE	FED. AID PROJ. NO.	SHEET NO.	TOTAL SHEETS
				6	ARK.			
				JOB NO.				
				1	STEEL BRIDGE STRUCTURES 55007			

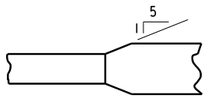

Plan-Unequal Width (Flg.)

FLANGE SPLICE

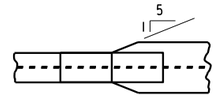

FLANGE SPLICE AT UNEQUAL BOTTOM FLANGE WIDTHS

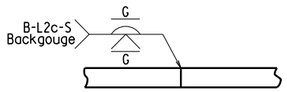

Equal Thickness

WEB & FLANGE SPLICE

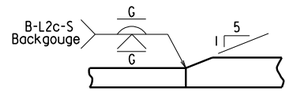

Unequal Thickness

FLANGE SPLICE

(Use when Base Metal Thickness is Equal to or Less than 2")

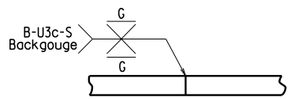

Equal Thickness

WEB & FLANGE SPLICE

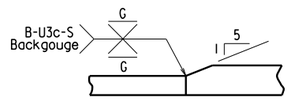

Unequal Thickness

FLANGE SPLICE

(Use when Base Metal Thickness is Greater than 2")

DETAILS OF WELDED SPLICES FOR PLATE GIRDERS

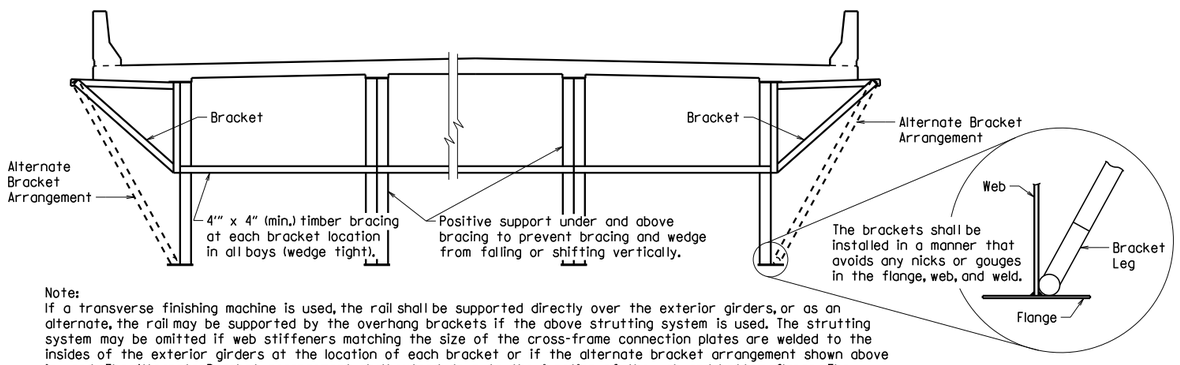

Note:
If a transverse finishing machine is used, the rail shall be supported directly over the exterior girders, or as an alternate, the rail may be supported by the overhang brackets if the above strutting system is used. The strutting system may be omitted if web stiffeners matching the size of the cross-frame connection plates are welded to the insides of the exterior girders at the location of each bracket or if the alternate bracket arrangement shown above is used. The Alternate Bracket arrangement shall extend down to the junction of the web and bottom flange. The stiffener shall conform to the details for cross frame connection plates shown on the plans. No direct payment will be made for brackets, timber bracing, supports, or welded stiffeners. Payment shall be subsidiary to "Structural Steel in Plate Girder Spans (____)".

SCREED RAIL SUPPORT FOR PLATE GIRDERS

(USE WHEN WEB DEPTHS ARE 48" OR GREATER)

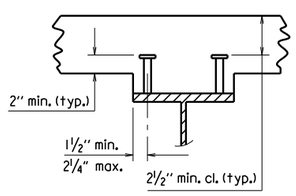

2 STUDS PER ROW

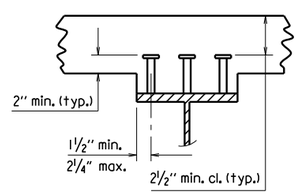

3 STUDS PER ROW

Stud Shear Connectors shall be automatically end welded to the beam or girder flange in accordance with the recommendations of the Manufacturer. See plan details for number and size.

SHEAR CONNECTOR DETAIL

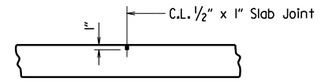

Use Type 3 or 4 Joint Sealer. See Subsections 501.02(h) and 501.05(j). Backer Rod filler will not be required. Joint Sealer shall be measured and paid for as Class S(AE) Concrete-Bridge. Slab Joints shall extend to the outside edge of the deck slab and shall align with open joints at the front face of the parapet. Slab joints shall be installed before the parapet railing is poured. If slab joints are to be sawed, they shall be sawed as soon as the concrete has sufficiently set to allow sawing of the joint without damage to the slab. Slab joints shall be placed at all pouring sequence construction joints and required slab joint locations. The joint sealer shall extend across the deck from gutterline to gutterline.

ADDITIONAL NOTES IF SIDEWALKS OR RAISED MEDIANS ARE REQUIRED:
Slab Joints shall be installed before the sidewalk or raised median is poured. After installation of the joint in the sidewalk or raised median and prior to pouring the parapet rail, the joint sealer shall be placed extending across the deck slab from gutterline to gutterline and acrosss the top of the sidwalk or raised median to the edge of the slab. No joint sealer shall be placed on the deck slab under the sidewalk or raised median.

TRANSVERSE SLAB JOINT DETAIL

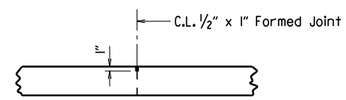

Use ½" x 1" Type 3 or 4 Joint Sealer. See Subsections 501.02(h) and 501.05(j). Backer Rod filler will not be required. Joint sealer shall be measured and paid for as Class S(AE) Concrete-Bridge. This joint shall be formed. Seal color shall be gray or other color similar to concrete.

LONGITUDINAL CONSTRUCTION JOINT

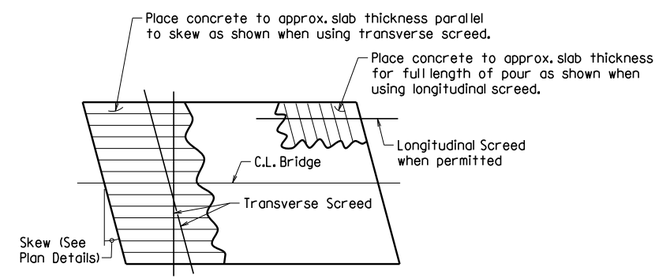

Note: At the Contractor's option, the transverse screed may be placed parallel to the skew or perpendicular to C.L. Bridge.

CONCRETE PLACEMENT PROCEDURE FOR BRIDGES WITH SKEW

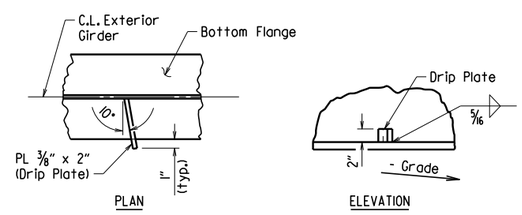

Drip Plate to be welded to the outer side of the bottom flange of the exterior girders.

Locate drip plate 5'-0" from C.L. Bearing on high side of each Bent, unless otherwise noted in the plans.

BOTTOM FLANGE DRIP PLATE

(USE WHEN WEB DEPTHS ARE 54" OR GREATER AND UNIT OR SPAN IS NOT IN LEVEL GRADE)

t_s = slab thickness. See "Typical Roadway Section" in the plans.

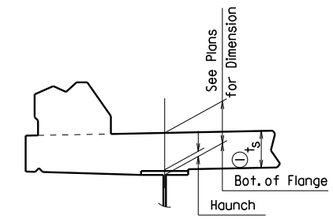

EXTERIOR BEAM OR GIRDER

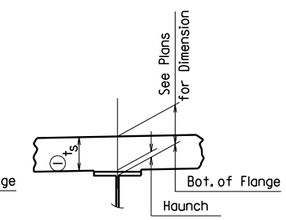

INTERIOR BEAM OR GIRDER

(1) Tolerance when removable deck forming is used is + ½", - ¼". Haunch forming is required and shall be adjusted to maintain slab thickness tolerance.

NOTES:
Haunch dimension may vary within the following limits to maintain the grade and slab thickness tolerance: Minimum occurs when top flange contacts bottom reinforcing steel; Maximum = top flange thickness plus 1¾" unless otherwise noted in the plans. No increase in concrete and structural steel quantities will be made to maintain tolerances.

Tolerances shown are applicable only when removable deck forming is used. See Std. Dwg. No. 55005 for tolerances when permanent steel deck forms are used. Payment for concrete shall be based on removable deck forming.

ADJUSTMENT FOR SLAB THICKNESS TOLERANCE

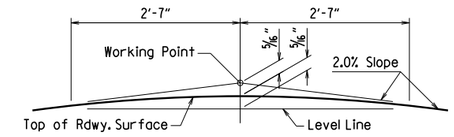

NOTE: Working Point matches Theoretical Roadway Grade.

ROUNDING DETAIL

BRIDGES IN NORMAL CROWN

WELD TABLE

Material Thickness of Thicker Part Joined (Inches)	Minimum Size of Fillet Weld (Inches)	Single Pass Weld Must Be Used
To ¾" Inclusive	¼"	
Over ¾"	5/16"	

NOTE: When a fillet weld size, as shown on the plans, is larger than the minimum, the first pass shall be that specified for minimum size of fillet weld.

SECTION AND SUBSECTION REFER TO THE ARKANSAS STATE HIGHWAY AND TRANSPORTATION DEPARTMENT STANDARD SPECIFICATIONS FOR HIGHWAY CONSTRUCTION (2014 EDITION).

THESE DETAILS ARE APPLICABLE UNLESS OTHERWISE SHOWN IN THE PLAN DETAILS, SPECIAL PROVISIONS, OR SUPPLEMENTAL SPECIFICATIONS.

STANDARD DETAILS FOR STEEL BRIDGE STRUCTURES

ARKANSAS STATE HIGHWAY COMMISSION

LITTLE ROCK, ARK.

DRAWN BY:	JYP	DATE:	2/11/2016	FILENAME:	b55007.dgn
CHECKED BY:	AMS	DATE:	2/11/2016	SCALE:	No Scale
DESIGNED BY:	STD.	DATE:	—		

DRAWING NO. 55007

DATE REVISED	DATE REVISED	FED. RD. DIST. NO.	STATE	JOB NO.	SHEET NO.	TOTAL SHEETS
4-14-23		6	ARK.			
1-28-25		TYPE D NAME PLATE - 55010				

The name of the bridge as shown on the plans shall be placed on Lines 1 & 2 using ⅛" raised letters and numerals ⅜" high.

	Example 1	Example 2	Example 3	Example 4
Line 1	RED RIVER	SOUTHERN RAILROAD	SALINE RIVER	HIGHWAY 5
Line 2	RELIEF	OVERPASS		

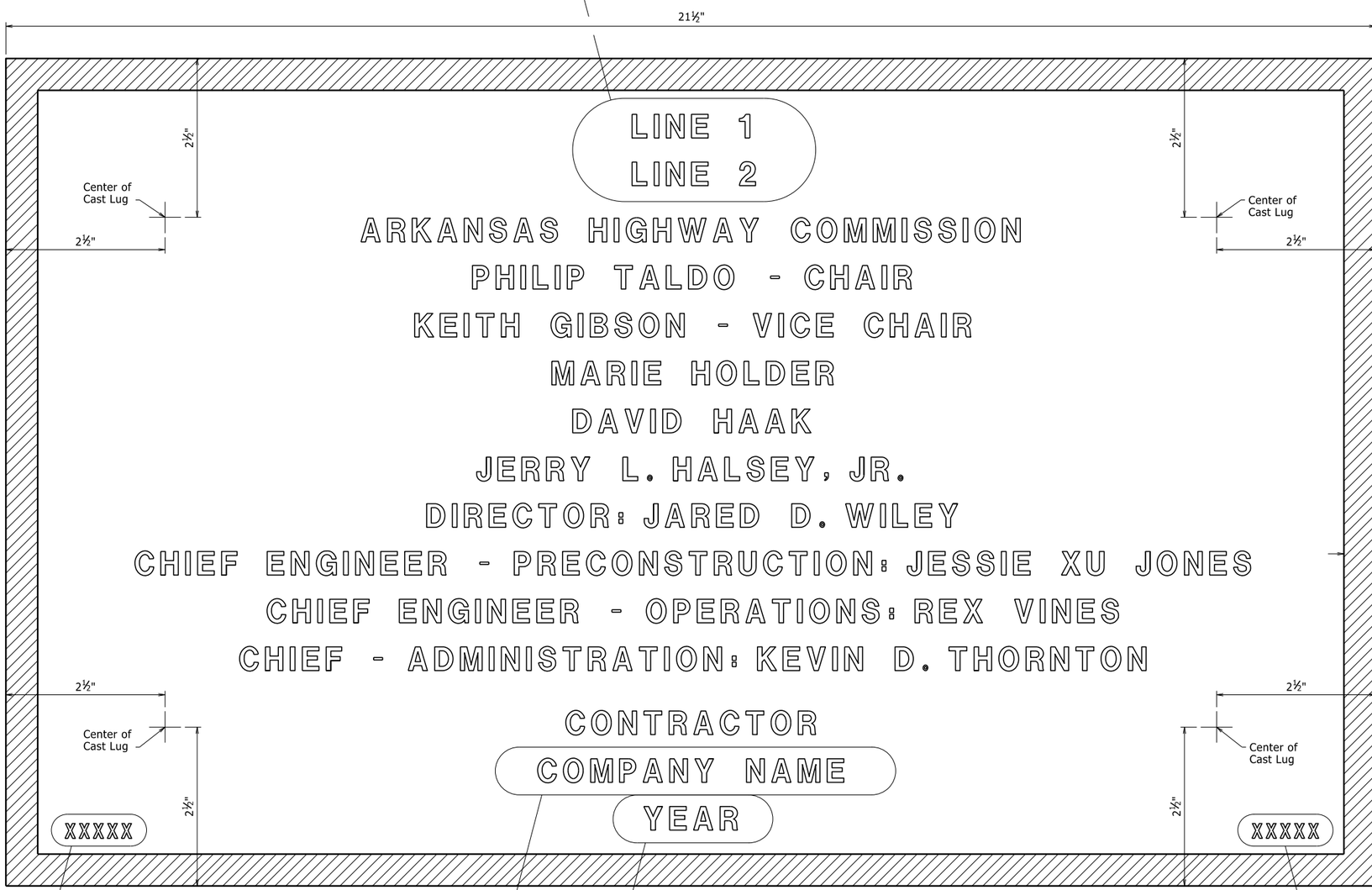

TYPICAL BRIDGE NAME PLATE

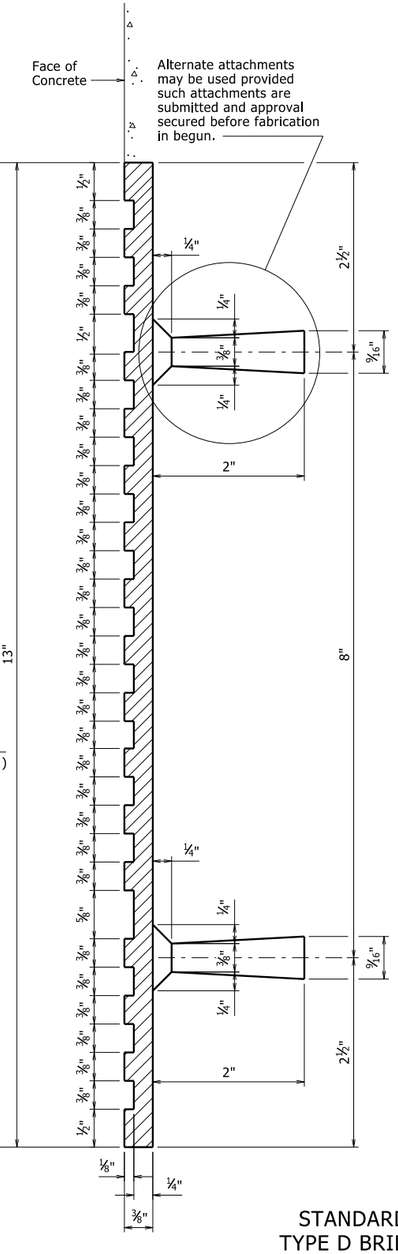

GENERAL NOTES

Specifications: Arkansas State Highway and Transportation Department Standard Specifications for Highway Construction, (2014 Edition) with applicable Supplemental Specifications and Special Provisions.

Name plates shall be cast bronze and shall meet the material requirements as specified in Section 812.

Body of plate shall be ¼" thick and shall include four tapering cone lugs ⅜" to 9/16" x 2" long. The border and all lettering shall be raised ⅛" above the face of plate and shall be polished.

All lettering shall be plain gothic, square cut and not tapered.

The number of plates required and the location and name on the plate for each bridge shall be as designated on the plans.

2 Updated names
1-28-25 CGP Checked By: CRE

1 Revised and Redrawn
4-14-23 CGP Checked By: CRE

STANDARD DETAILS FOR
TYPE D BRIDGE NAME PLATE

ROUTE SEC.

ARKANSAS STATE HIGHWAY COMMISSION
LITTLE ROCK, ARK.

DRAWN BY: KDH DATE: 2-27-2014 FILENAME: b55010.dgn
CHECKED BY: BEF DATE: 2-27-2014 SCALE: NO SCALE
DESIGNED BY: STD. DATE:

DRAWING NO. 55010

PRINT DATE: 1/28/2025

DATE REVISED	DATE FILMED	DATE REVISED	DATE FILMED	FED. ROAD DIST. NO.	STATE	FED. AID PROJ. NO.	SHEET NO.	TOTAL SHEETS
				6	ARK.			
				JOB NO.				
				1	CHAIN LINK FENCE		55018	

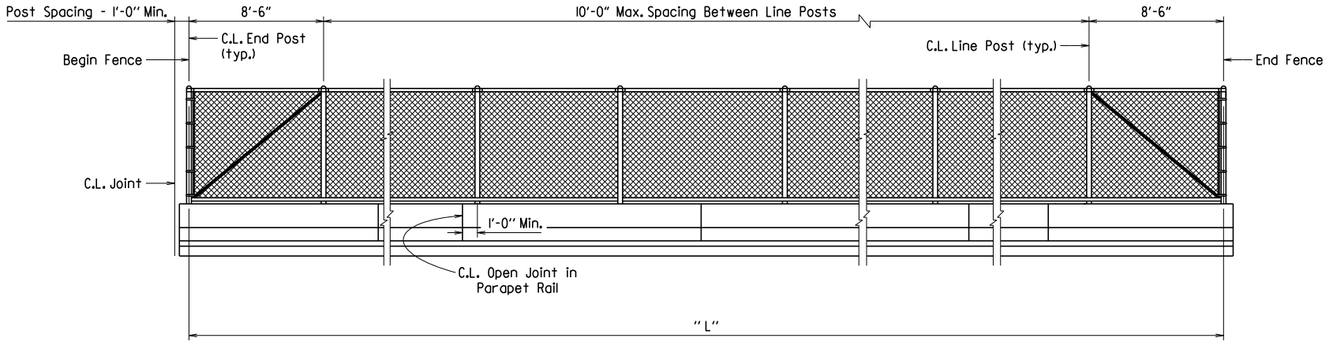

NOTE: The fence location, height "H", total length "L" and parapet panel spacing shall be as specified in plans.

LONGITUDINAL VIEW OF CHAIN LINK FENCE

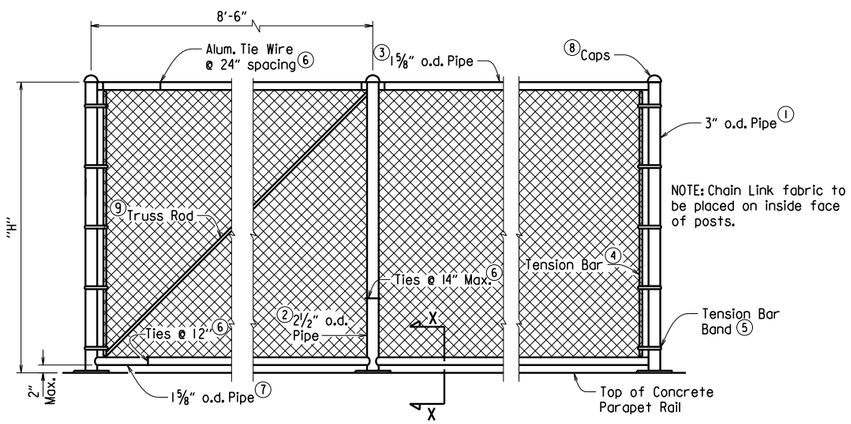

DETAILS OF CHAIN LINK FENCE

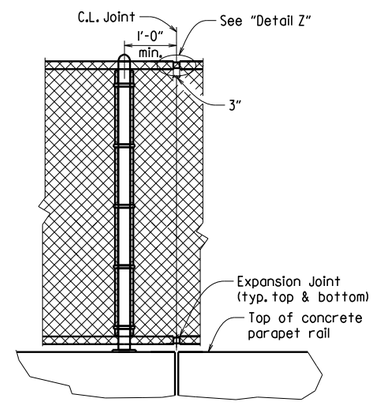

DETAIL AT EXPANSION JOINTS

1. END POST: 3" O.D.
2. LINE POST: 2 1/2" O.D.
3. TOP RAIL: 1 5/8" O.D.
4. TENSION BAR: 3/16" x 3/4" Bar
5. TENSION BAR BAND: 3/4" x .074 w/5/16"ø x 1 1/4" Bolt (1 Band Top and Bottom w/15" Max. spaces)
6. TIE WIRE: 9 Ga. Aluminum
7. BOTTOM RAIL: 1 5/8" O.D.
8. CAPS: All Posts shall be Capped and Shall Conform to ASTM F626-84
9. TRUSS ROD: Min. of 5/16" Round with Tighteners and Fittings

FABRIC: 9 Ga. 2" Mesh w/Knocklug or Twisting Selvage

GENERAL NOTES FOR CHAIN LINK FENCE:

Fence layout shall conform to the vertical and horizontal bridge alignments. Fence posts shall be set plumb (true vertical position). Parapet rail concrete shall be at least 7 days old before stretching and securing fabric to posts.

Base plates shall not be placed upon areas that are improperly finished, deformed, or irregular.

Chain Link Fence attached to Bridge, including neoprene pad and template plates, shall be paid for as "__' Steel Chain Link Fence". For additional details of Chain Link Fence, See Standard Drawing WF-3.

Cast-in-place anchor bolts, nuts, washers, and set screws shall be galvanized high-strength steel or stainless steel. Mixing of galvanized fasteners and stainless steel will not be permitted.

High-Strength Steel:
Cast-in-place anchor bolts shall conform to ASTM A325, Type 1.
Nuts shall conform to ASTM A563, Grade DH or AASHTO M 292, Grade 2H.
Washers shall conform to ASTM F436.
Plate Washers shall conform to AASHTO M 270, Grade 36.
Splice Set Screws shall conform to AASHTO M 270, Grade 36.
Anchor bolts, nuts, washers, plate washers, and set screws shall be galvanized in accordance with AASHTO M 232, Class C or ASTM B695, Class 50.

Stainless Steel:
Cast-in-place anchor bolts shall conform to ASTM A193 or A320-Grade B8 with a minimum yield strength of 80,000 psi.
Nuts shall conform to AASHTO M 292, Grade 8 or ASTM A563.
Washers shall conform to ASTM A240, Type 302.
Plate Washers shall conform to ASTM A240, Type 302.
Splice Set Screws shall conform to ASTM A193 or A320-Grade B8.

Threads on bolts, screws, and nuts shall conform to American Standard Course Series, Class 2 Fit, ASA Specification B1.1. Plate washers shall have dimensions meeting the requirements of ANSI/ASME B18.22.1, Type A plain washer (Wide Series). Neoprene pads shall conform to the requirements of Subsection 807.15(b).

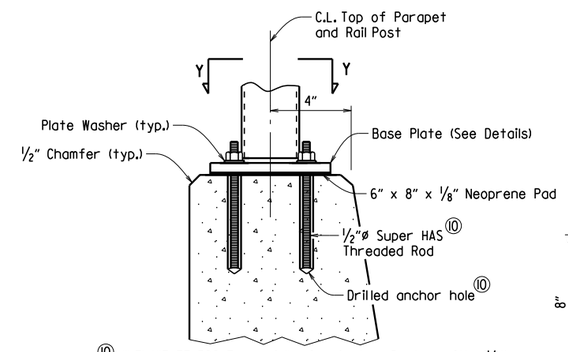

10 HILTI HIT RE 500 Epoxy Adhesive Anchor System with 4 1/2" embedment or approved equal.

The HILTI Adhesive Anchor System shall be installed in accordance with Manufacturer's recommendations.

VIEW X-X

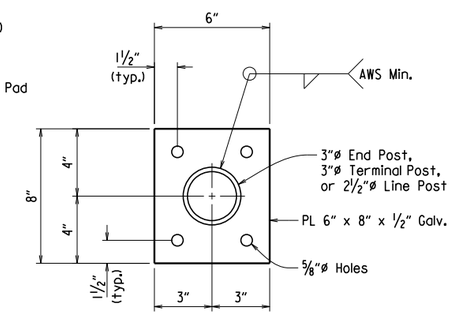

VIEW Y-Y

DETAILS OF ALTERNATE POST ANCHOR SYSTEM
(EPOXY ADHESIVE ANCHORS)

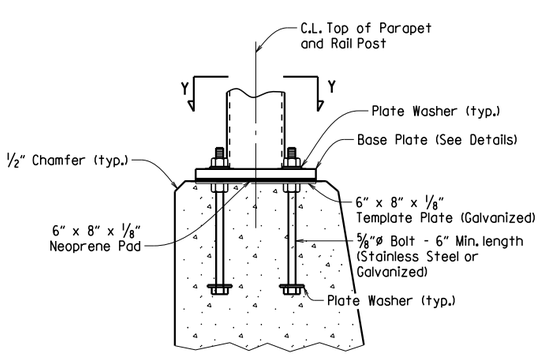

VIEW X-X

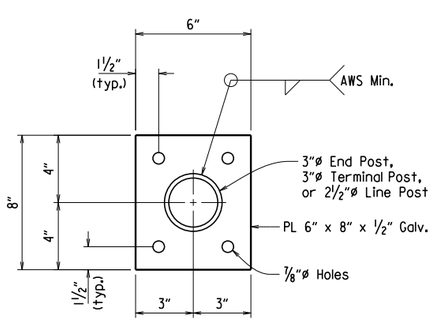

VIEW Y-Y

DETAILS OF POST ANCHOR SYSTEM
(CAST-IN-PLACE BOLTS)

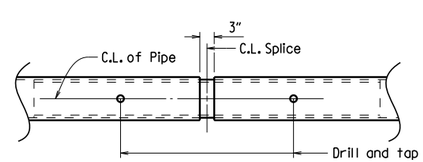

DETAIL Z

Drill and tap 5/16" square head set screw on outside face of rails. Tighten set screw on one side and snug only on the other side to permit thermal expansion and contraction.

SECTION AND SUBSECTION REFER TO THE ARKANSAS STATE HIGHWAY AND TRANSPORTATION DEPARTMENT STANDARD SPECIFICATIONS FOR HIGHWAY CONSTRUCTION (2014 EDITION).

THESE DETAILS ARE APPLICABLE UNLESS OTHERWISE SHOWN IN THE PLAN DETAILS, SPECIAL PROVISIONS, OR SUPPLEMENTAL SPECIFICATIONS.

STANDARD DETAILS FOR CHAIN LINK FENCE

ARKANSAS STATE HIGHWAY COMMISSION

LITTLE ROCK, ARK.

DRAWN BY:	E.O.R.	DATE:	2-11-2016	FILENAME:	b55018.dgn
CHECKED BY:	A.M.S.	DATE:	2-11-2016	SCALE:	No Scale
DESIGNED BY:	STD.	DATE:	——		

DRAWING NO. 55018

DATE REVISED	DATE FILMED	DATE REVISED	DATE FILMED	FED. ROAD DIST. NO.	STATE	FED. AID PROJ. NO.	SHEET NO.	TOTAL SHEETS
3/24/16				6	ARK.			
				JOB NO.				
				CONC. PILES 55022				

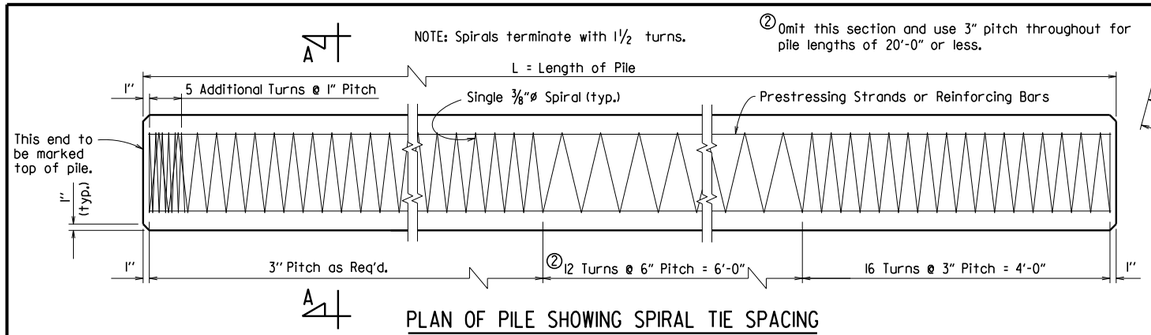

PLAN OF PILE SHOWING SPIRAL TIE SPACING

For anchorage of pile to bent, see Bent Details.

NOTE: Strand location shall be symmetrical about the axis of the pile with no more than one strand difference between any two adjacent sides. Circular spiral ties are required for odd number of strands.

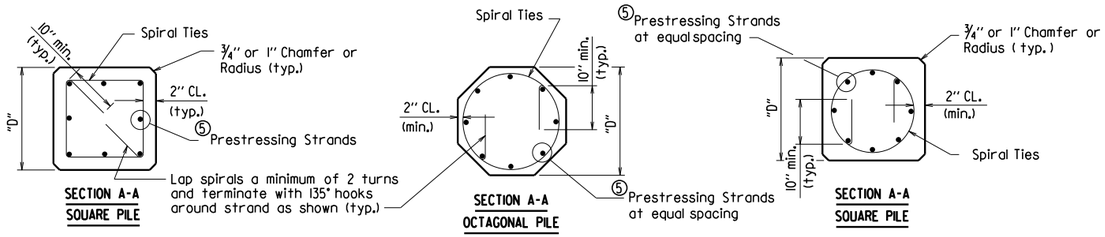

PRESTRESSED CONCRETE PILES

① Number based on initial pre-stress force of "B" x Ultimate Tensile Stress, Prestress Losses and min. 700 psi Unit Prestress on concrete after Losses.

"B" — 0.75 Low Relaxation; 0.70 Stress-Relieved

⑤ See table "Prestressed Concrete Pile Properties" for actual number of strands per pile size.

PRESTRESSED CONCRETE PILE PROPERTIES

	Grade	Strand Diameter	① Number of Strands per Size "D"							Minimum Ultimate Tensile Strength Per Strand (Lbs.)	Initial Prestressing Force Per Strand (Lbs.)
			16" Oct.	18" Oct.	④ 14" Sq.	16" Sq.	18" Sq.	⚠ 20" Sq.	⚠ 24" Sq.		
Stress-Relieved	250	7/16"	11	13	10	13	16	20	28	27,000	18,900
		1/2"	8	10	8	10	12	15	21	36,000	25,200
	270	7/16"	9	11	8	12	14	17	24	31,000	21,700
		1/2"	7	9	6	8	10	13	18	41,300	28,900
Low Relaxation	250	7/16"	9	11	8	11	14	17	24	27,000	20,200
		1/2"	7	9	6	8	10	13	18	36,000	27,000
	270	7/16"	8	10	7	9	12	15	21	31,000	23,300
		1/2"	6	8	6	7	9	11	16	41,300	31,000

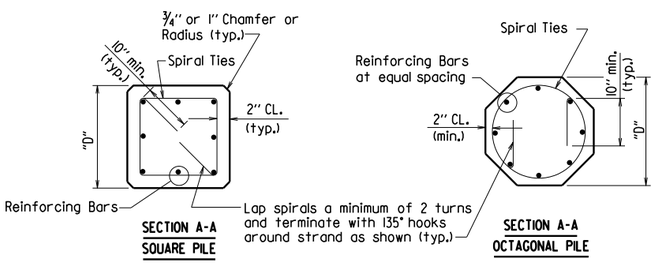

NON-PRESTRESSED CONCRETE PILES

NON-PRESTRESSED PILE REINFORCING

Pile Size	No. Req'd.	Bar Size
16" Oct.	8	#7
18" Oct.	8	#7
④ 14" Sq.	8	#7
16" Sq.	8	#7
18" Sq.	8	#8

④ 14" sq. piles to be used in Seismic Performance Zone 1 only.

⚠ Revised to accommodate 20" and 24" square prestressed piles by KWY, Ck'd. by BEF, 3/24/16.

⚠ PILE BUILD-UP FOR 20" & 24" PRESTRESSED PILES

Pile Size	No. Req'd.	Bar Size
20" Sq.	8	#9
24" Sq.	12	#9

NOTE: Reinforcing bars shall meet the requirements for Grade 60, AASHTO M 31 or M 322, Type A.

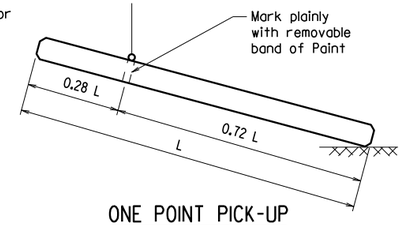

ONE POINT PICK-UP

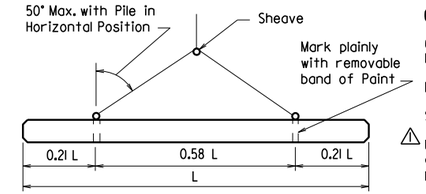

TWO POINT PICK-UP

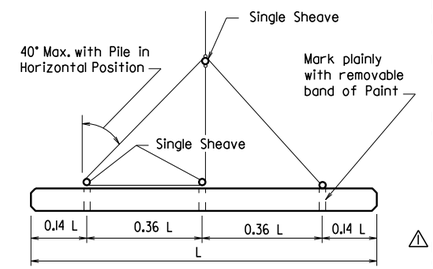

THREE POINT PICK-UP

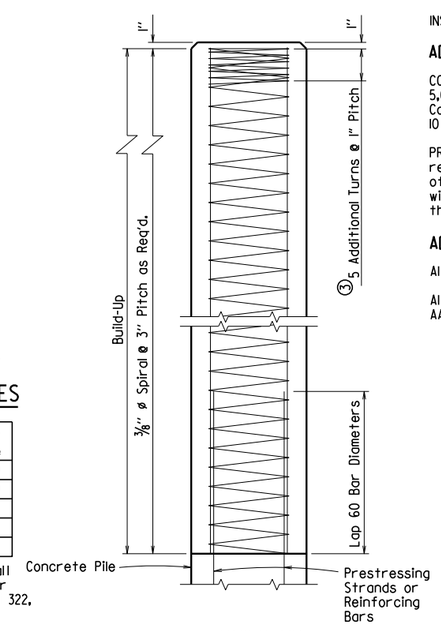

BUILD-UP

③ The five additional turns of spiral reinforcing may be omitted for build-up without additional driving.

MAXIMUM PICKUP LENGTHS "L" ①

Type of Pick-Up	Prestressed		Non-Prestressed	Prestressed					Non-Prestressed		
	16" Oct.	18" Oct.	16" or 18" Oct.	④ 14" Sq.	16" Sq.	18" Sq.	⚠ 20" Sq.	⚠ 24" Sq.	④ 14" Sq.	16" Sq.	18" Sq.
One Point	52'	55'	46'	55'	59'	63'	66'	71'	52'	51'	55'
Two Point	75'	80'	67'	79'	84'	90'	95'	102'	75'	74'	79'
Three Point	105'	112'	93'	110'	117'	126'	132'	143'	104'	103'	111'

GENERAL NOTES:

CONSTRUCTION SPECIFICATIONS: Arkansas State Highway and Transportation Department Standard Specifications for Highway Construction (2014 Edition) with applicable Supplemental Specifications and Special Provisions.

DESIGN SPECIFICATIONS: AASHTO LRFD Bridge Design Specifications, current Edition with interim Specifications.

SEISMIC PERFORMANCE ZONES: 1 & 2

⚠ Unless otherwise noted in the plans, the Contractor may use prestressed or non-prestressed piles for 14", 16" and 18" piles. The Contractor shall use prestressed piles for 20" and 24" piles. Prestressed and non-prestressed piling shall be measured and paid for at the contract unit price bid for "Concrete Piling".

SPIRAL REINFORCING: Spiral reinforcing shall be steel wire meeting the requirements of AASHTO M 32 or M 225 or shall be plain round steel bars meeting the requirements of Grade 60, AASHTO M 31 or M 322, Type A.

MANUFACTURE, TRANSPORTATION AND STORAGE: Shipment of piles from the plant site or pile driving will not be permitted until the required minimum compressive strength is reached, and in no case less than 10 days after pouring the concrete. Prestressed piles may be removed from the casting bed to nearby storage any time after transfer of stress. See Section 802 "Concrete for Structures" for additional information.

Unless otherwise approved by the Engineer, all protruding or exposed pile lifting or transporting devices above the finished ground shall be removed after pile driving is complete. Removal shall be a minimum of 1" below the surface of the pile and the cavity shall be filled with a non-shrink grout listed on the Department's QPL.

FORMS: For forming exterior of piles, the use of steel forms on concrete-founded casting beds is required unless otherwise approved by the Engineer. Side forms may have a maximum drift on each side not exceeding ¼" per foot.

TOLERANCES: Pile ends shall be plane surfaces perpendicular to the longitudinal axis of pile with a maximum tolerance of ⅛" per foot transversely.

The maximum sweep (deviation from straightness measured from end to end of the pile, while not subject to bending forces) shall not exceed ⅛" in 10 feet.

⚠ BUILD-UPS: To provide for build-ups of piles where authorized by the Engineer, the concrete in the pile shall be cut back to provide a 60 bar diameter lap splice. For piles equal to or less than 18", the reinforcing for build-up shall be the reinforcing shown for non-prestressed piles. Otherwise, the reinforcing for build-up shall be as shown in the table "Pile Build-Up for 20" & 24" Prestressed Piles" and the 60 bar diameter splice length shall be based on the bar sizes shown.

INSTALLATION, MEASUREMENT AND PAYMENT: See Section 805 "Piling".

ADDITIONAL NOTES FOR PRESTRESSED PILES ONLY:

CONCRETE: Concrete in prestressed piles shall be Class S(AE) and shall have a minimum compressive strength (f'c) of 5,000 psi at 28 days. Compressive strength at transfer of the prestressing force shall be not less than 4,000 psi. Concrete in build-ups shall have a minimum compressive strength of 4,000 psi and shall be cured for a minimum of 10 days.

PRESTRESSING REINFORCING: Seven-wire stress-relieved or low relaxation strands shall conform to the general requirements of AASHTO M 203. Broken wires within individual strands will be permitted up to 2% of the total number of wires in each pile, providing that there is not more than one broken wire per strand. Two or more broken wires per strand will be cause for replacement of the strand, even though the two broken wires are within the 2% limitation.

ADDITIONAL NOTES FOR NON-PRESTRESSED PILES ONLY:

All concrete shall be Class S(AE) and shall have a minimum compressive strength (f'c) of 4,000 psi at 28 days.

All longitudinal reinforcing bars shall be deformed bars and shall conform to the requirements of Grade 60, AASHTO M 31 or M 322, Type A.

This document was originally issued and sealed by Charles R. Ellis, PE No. 9235, on March 24, 2016. This copy is not a signed and sealed document.

STATE OF ARKANSAS
REGISTERED PROFESSIONAL ENGINEER
No. 9235
CHARLES R. ELLIS

BRIDGE ENGINEER

STANDARD DETAILS FOR CONCRETE PILES

ARKANSAS STATE HIGHWAY COMMISSION

LITTLE ROCK, ARK.

DRAWN BY: KDH	DATE: 2-27-2014	FILENAME: b55022.dgn	
CHECKED BY: BEF	DATE: 2-27-2014	SCALE: NO SCALE	
DESIGNED BY: STD.	DATE: —		

DRAWING NO. 55022

DATE REVISED	DATE FILMED	DATE REVISED	DATE FILMED	FED. ROAD DIST. NO.	STATE	FED. AID PROJ. NO.	SHEET NO.	TOTAL SHEETS
				6	ARK.			
				JOB NO.				

(1) Type F Approach Gutters - 55030F

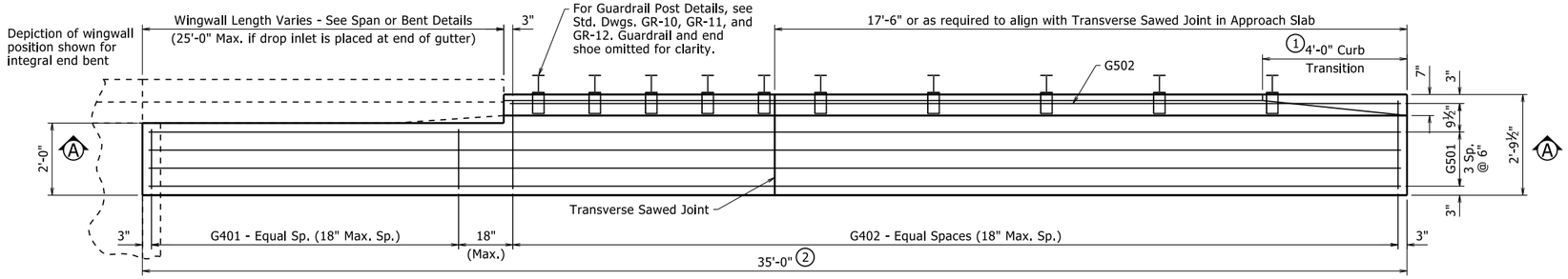

HALF PLAN OF APPROACH GUTTERS FOR SQUARE END BENT

½" = 1'-0"

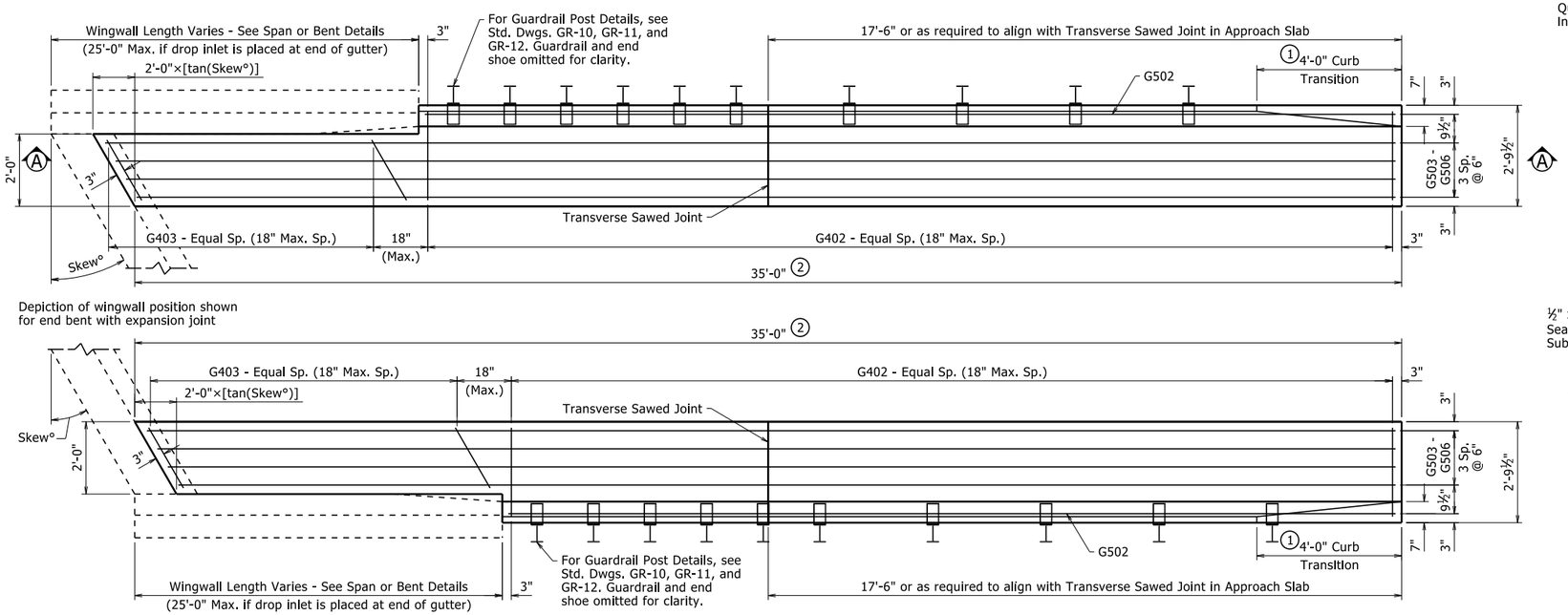

PLAN OF SKEWED APPROACH GUTTERS FOR SKEWED END BENT

½" = 1'-0"

QUANTITIES FOR ONE APPROACH GUTTER

(For Information Only)

Reinforcing Steel (Lbs.)	Concrete (Cu. Yds.)
210	4.20

Quantities are based on one gutter for a square, integral end bent and a wingwall length of 10'-0"

BAR LIST FOR ONE APPROACH GUTTER

	Mark	No. Req'd.	Length
Square End Bent	G401	(4)	1'-8"
	G402	(4)	2'-5½"
	G501	4	34'-8"
	G502	1	(4)
Skewed End Bent	G402	(4)	2'-5½"
	G403	(4)	(4)
	G502	1	(4)
	G503 - G506	1 ea.	(4)

(4) Varies with Skew and/or Wingwall Length

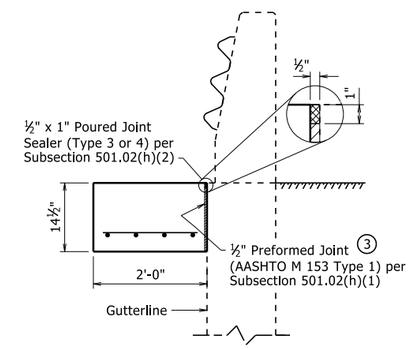

SECTION B-B

¾" = 1'-0"

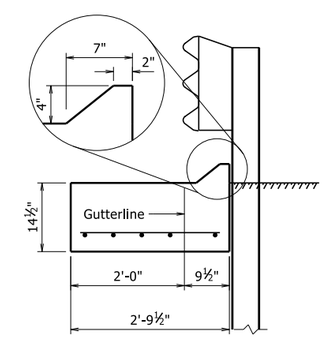

SECTION C-C

¾" = 1'-0"

(1) Construct gutter curb with height transition as shown if drop inlet is not placed at end of gutter.

Construct gutter curb full height (no height transition) if drop inlet is placed at end of gutter. Curb height transition placed on drop inlet.

(2) Adjust gutter length as necessary to avoid outlet pipe interference with guardrail post if drop inlet is placed at end of gutter.

(3) Eliminate Type 1 Preformed Joint when bridge details show reinforcing dowels across these joints. Poured joint sealer is required, however, backer rod shall be eliminated.

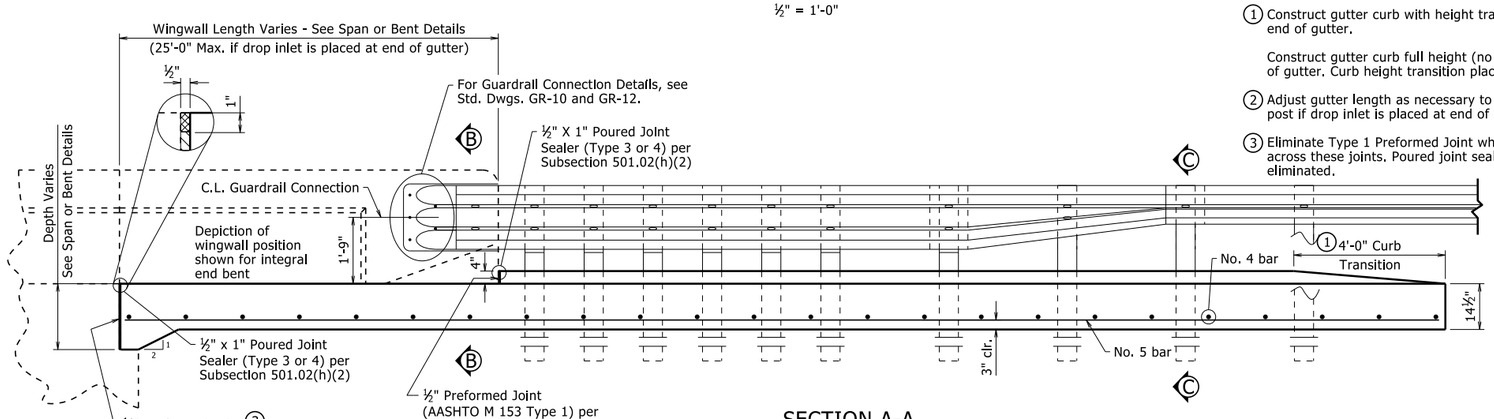

SECTION A-A

½" = 1'-0"

(Approach Gutter for Square End Bent Shown)

GENERAL NOTES

All concrete shall be Class S(AE) with a minimum 28 day compressive strength f'c = 4,000 psi and shall be poured in the dry.

All reinforcing steel shall be Grade 60 (yield strength = 60,000 psi) conforming to AASHTO M 31 or M 322, Type A, with mill test reports.

Approach Gutters will be measured and paid for in accordance with Section 504.

All longitudinal lines within the limits of horizontal curves shall be on curves concentric to C.L. Bridge. Adjustment to longitudinal bar lengths may be required. Transverse reinforcing shall be placed on radial lines to C.L. Bridge.

Scales shown are for 22"x34" drawings. When using 11"x17" drawings, reduce scale by one half.

STANDARD DETAILS FOR TYPE F APPROACH GUTTERS

ARKANSAS STATE HIGHWAY COMMISSION

LITTLE ROCK, ARK.

DRAWN BY:	NAC	DATE:	4-8-2021	FILENAME:	b55030f.dgn
CHECKED BY:	LJB	DATE:	4-8-2021	SCALE:	AS NOTED
DESIGNED BY:	STD	DATE:	-		

DRAWING NO. 55030F

PRINT DATE: 9/8/2023

DATE REVISED	DATE REVISED	FED. RD. DIST. NO.	STATE	JOB NO.	SHEET NO.	TOTAL SHEETS
		6	ARK.			

Type F Approach Slab - 55040F1

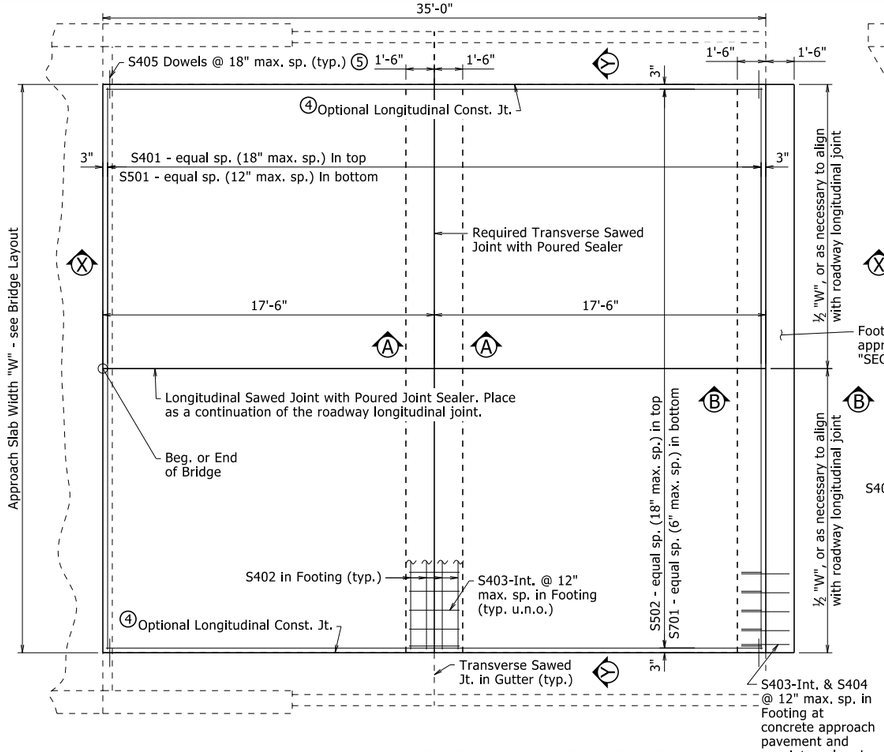

PLAN - APPROACH SLAB AT SQUARE END BENT

Integral End Bent Shown
¼" = 1'-0"

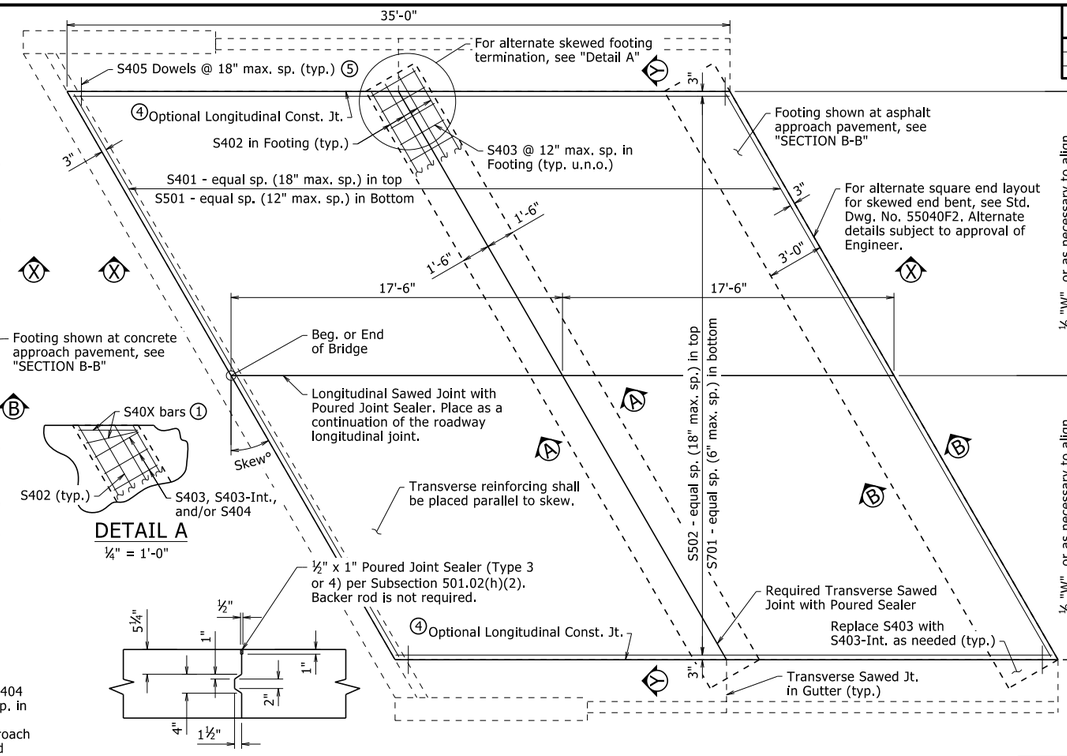

DETAIL A

¼" = 1'-0"

LONGITUDINAL CONSTRUCTION JOINT

½" = 1'-0"

PLAN - APPROACH SLAB AT SKEWED END BENT

Non-Integral End Bent Shown
¼" = 1'-0"

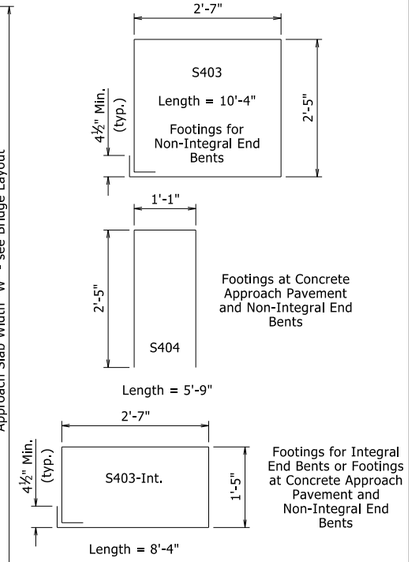

BENDING DIAGRAMS

No Scale
Dimensions are out to out of bar
2" PIn Diameter (typ.)

BAR LIST - PER APPROACH SLAB

	Square End Bent		Skewed End Bent	
Mark	No. Req'd.	Length	No. Req'd.	Length
S401	24	"W" - 0.33'	24	("W" - 0.33') / cos (Skew°)
S402	8	"W" - 0.33'	8	"W"/cos(Skew°) + 3.0'×tan(Skew°) - 0.33'
S403	①	②	①	②
S403-Int.	①	②	①	②
S404	①	②	①	②
S405	48	1'-6"	48	1'-6"
S501	36	"W" - 0.33'	36	("W" - 0.33') / cos (Skew°)
S502	①	34'-8"	①	34'-8"
S701	①	34'-8"	①	34'-8"

All bar lengths are in feet.

① Varies with Approach Slab Type, Width and/or Skew.
② See "BENDING DIAGRAMS"

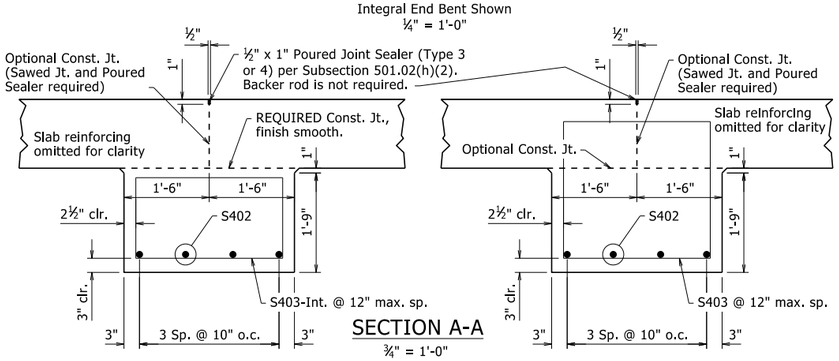

SECTION A-A

¾" = 1'-0"

INTERIOR FOOTING FOR INTEGRAL END BENT

INTERIOR FOOTING FOR NON-INTEGRAL END BENT

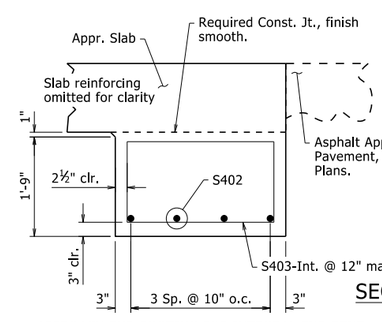

SECTION B-B

¾" = 1'-0"

APPROACH END FOOTING FOR INTEGRAL END BENT

Asphalt Approach Shown. For Concrete Approach, adjust footing location by 1'-6" to add paving notch and include expansion joint.

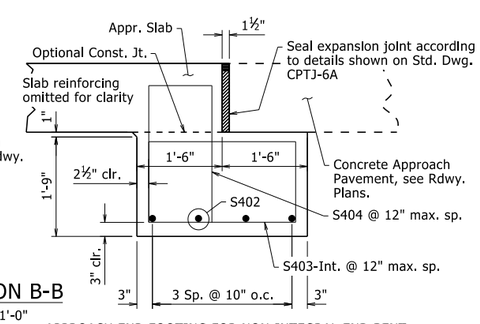

APPROACH END FOOTING FOR NON-INTEGRAL END BENT

Concrete Approach Shown. For Asphalt Approach, adjust footing location by 1'-6", omit expansion joint, and replace bars S403-Int. & S404 with S403.

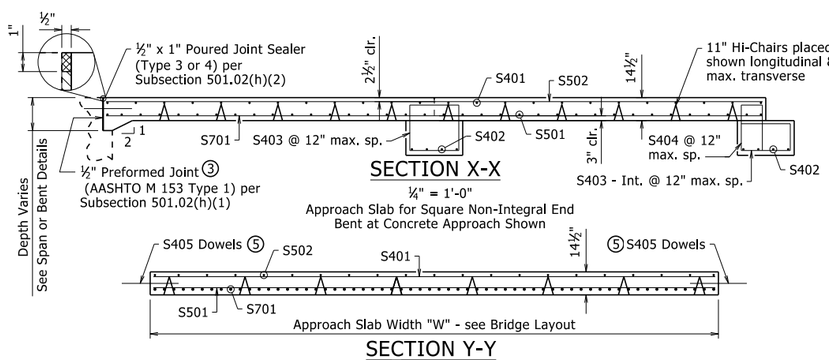

SECTION X-X

¼" = 1'-0"

Approach Slab for Square Non-Integral End Bent at Concrete Approach Shown

SECTION Y-Y

¼" = 1'-0"

GENERAL NOTES

All concrete shall be Class S(AE) with a minimum 28 day compressive strength f'c = 4,000 psi and shall be poured in the dry.

All reinforcing steel shall be Grade 60 (yield strength = 60,000 psi) conforming to AASHTO M 31 or M 322, Type A, with mill test reports.

The surface finish for Approach Slabs shall match that used on the bridge deck.

All longitudinal lines within the limits of horizontal curves shall be on curves concentric to C.L. Bridge. Adjustment to longitudinal bar lengths may be required. Transverse reinforcing shall be placed on radial lines to C.L. Bridge.

See Plans for actual Approach Slab Width, "W", end bent or span details, and approach pavement. Units of "W" are in Feet.

Approach Slabs will be measured and paid for in accordance with Section 504.

Scales shown are for full size 22"x34" drawings. When using 11"x17" drawings, reduce scale by one half.

For Table of Quantities, see "SCHEDULE OF BRIDGE QUANTITIES".

③ Eliminate Type 1 Preformed Joint when bridge details show reinforcing dowels across these joints. Poured joint sealer is required, however, backer rod shall be eliminated.

④ When construction joint is eliminated, place 1" Sawed Joint with ½" x 1" Poured Joint Sealer (Type 3 or 4) per Subsection 501.02(h)(2). Backer rod is not required.

⑤ Eliminate dowels when approach slab is adjacent to curb and gutter, or as directed by the Engineer.

MINIMUM BAR LAP LENGTH

#4	1'-8"
#5	2'-0"
#7	2'-10"

The document was originally issued and sealed by Charles R. Ellis, PE No. 9235, on September 7, 2023. This copy is not a signed and sealed document.

STATE OF ARKANSAS
LICENSED PROFESSIONAL ENGINEER
No. 9235
CHARLES R. ELLIS

BRIDGE ENGINEER

STANDARD DETAILS FOR
TYPE F APPROACH SLAB

ARKANSAS STATE HIGHWAY COMMISSION

LITTLE ROCK, ARK.

DRAWN BY:	CGP	DATE:	05/12/2023	FILENAME:	b55040f.dgn
CHECKED BY:	JYP	DATE:	05/15/2023	SCALE:	AS NOTED
DESIGNED BY:	STD.	DATE:	-		

DRAWING NO. 55040F1

DATE REVISED	DATE FILMED	DATE REVISED	DATE FILMED	FED. ROAD DIST. NO.	STATE	FED. AID PROJ. NO.	SHEET NO.	TOTAL SHEETS
09/27/2022				6	ARK.			
				JOB NO.				

1 TYPE SSTR36 - 55070

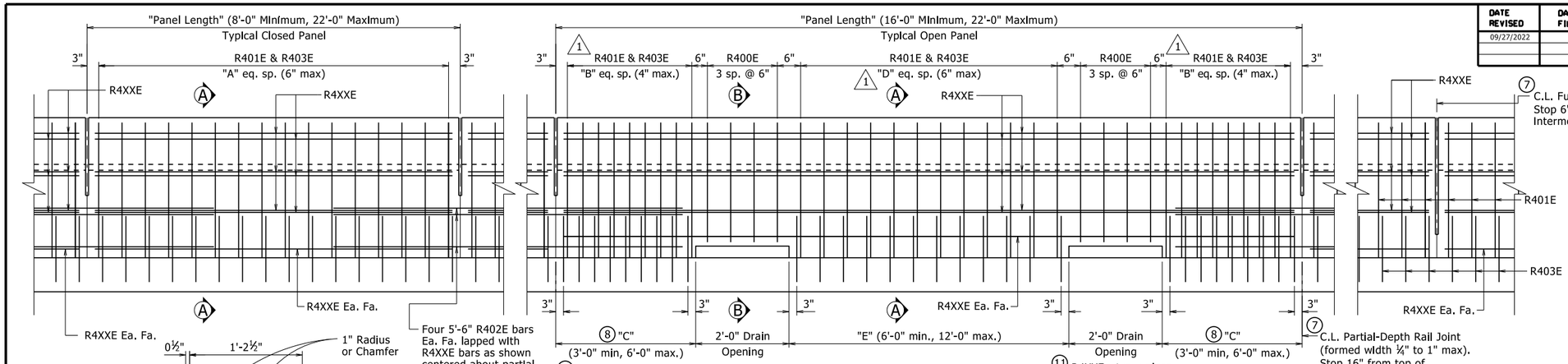

1 ELEVATION - SINGLE SLOPE TRAFFIC RAIL

¾" = 1'-0"

1. All measurements shown are along gutterline at base of rail.
2. Minimum embedment into deck/slab.
3. Eliminate recess when formliner with architectural finish is used. See Plans for additional information.
4. C.L. 1" ø formed holes for ⅞" ø bolts. See Standard Drawings GR-10 and GR-12 for additional information.
5. Only applicable for bridges with rail cast directly on bridge deck/slab surface. Increase height as necessary for sidewalks, see Plans for additional information.
6. Field bend front leg of R401E bar as required to maintain minimum 1½" front face clearance within limits of taper.
7. When optional slip forming is used: to control cracking, all rail joints must be V-grooved around the perimeter of the rail prior to concrete set and sawing. Depth of V-groove shall be ½". Sawing of the joints shall be done as soon as practical to a width of ¼", and must be controlled so it will follow the V-Groove.
8. End posts shall be the same length within a panel.

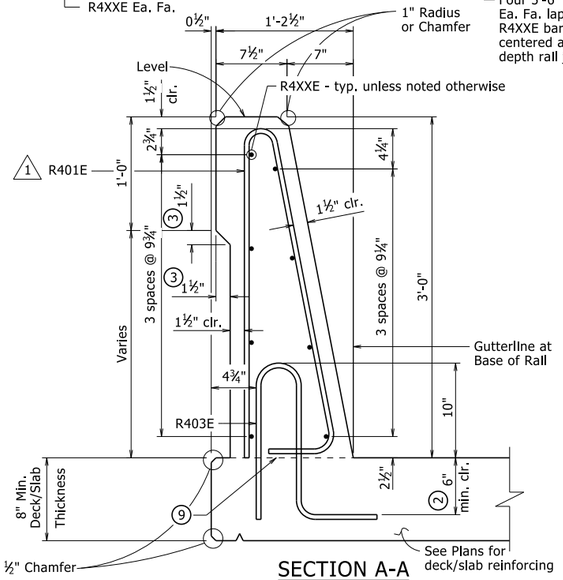

SECTION A-A

1½" = 1'-0"

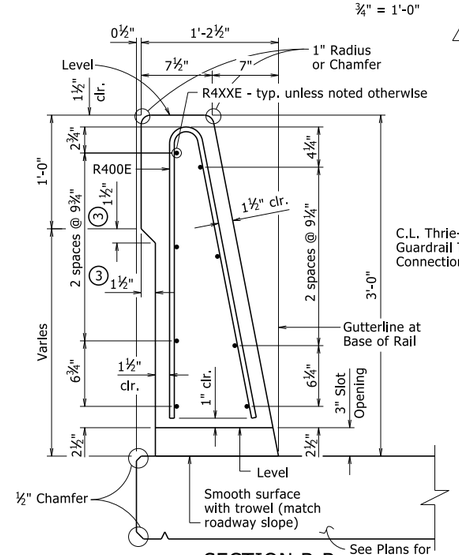

SECTION B-B

1½" = 1'-0"

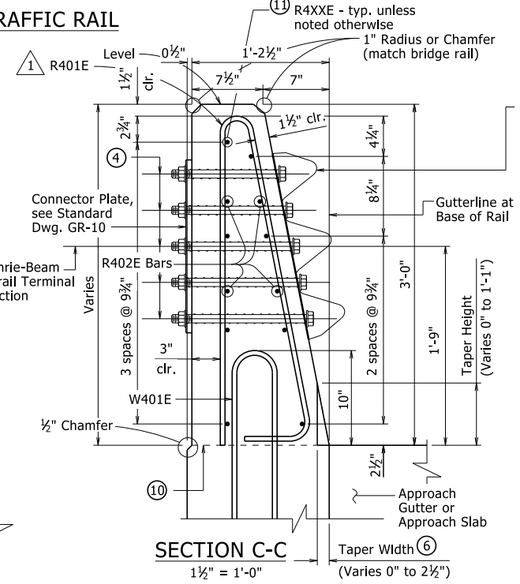

Bolt Special End Shoe to face of rail as shown. Tapered washers are not required between the head of the bolts and the sloped face of the rail. Tighten the five terminal connection bolts in a well distributed pattern to prevent damage or distortion of the thrie-beam connection. Cut bolts off after installation so as to extend no more than ¾" beyond nut. Paint ends of cut-off bolts with zinc-rich paint. This work and material will not be paid for directly but shall be considered subsidiary to associated contract items.

SECTION C-C

1½" = 1'-0"

BENDING DIAGRAM

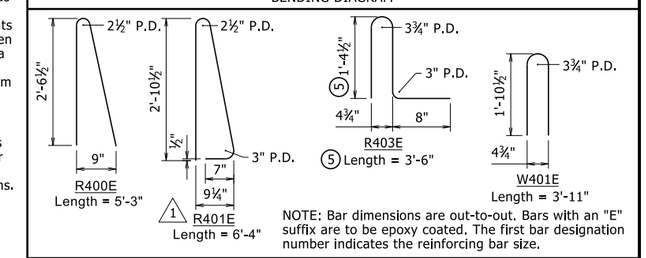

NOTE: Bar dimensions are out-to-out. Bars with an "E" suffix are to be epoxy coated. The first bar designation number indicates the reinforcing bar size.

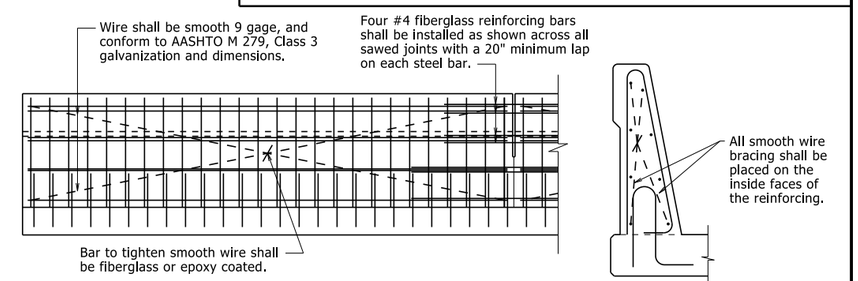

The extruded rail shall conform to the horizontal and vertical lines shown on the plans or as directed by the Engineer and shall present a smooth, uniform appearance and texture. Unless otherwise noted, exposed surfaces may be given a light brush finish or a Class 3, Textured Coating Finish in place of Class 2, Rubbed Finish.

All panels shall be braced as required to prevent racking.

Slip forming will not be allowed on bridges where formliner with architectural treatment is used unless approval from the Engineer is obtained.

DETAILS OF OPTIONAL SLIP FORMING OF BRIDGE TRAFFIC RAIL

No Scale

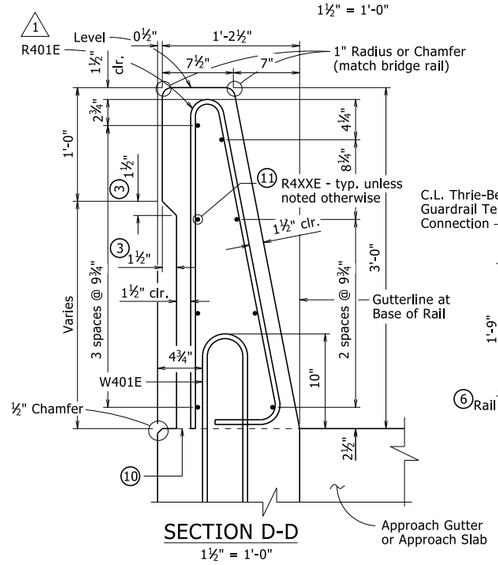

SECTION D-D

1½" = 1'-0"

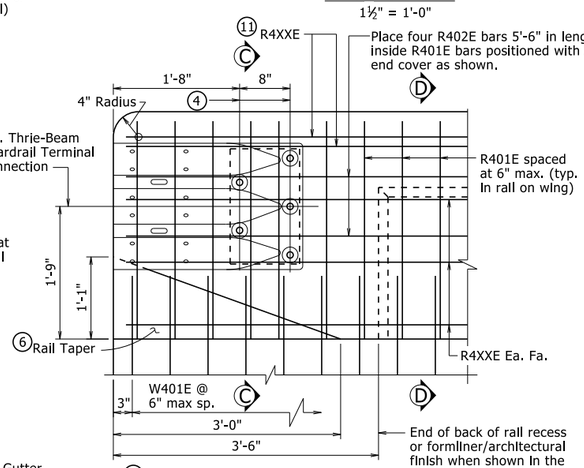

1 RAIL TERMINUS DETAILS

1" = 1'-0"

9 Required Construction Joint. Level where water flows away from rail, match roadway slope where water flows toward rail.

10 Top of Abutment Wing & Required Construction Joint (match bridge deck/slab construction joint slope). See Plans for Wing reinforcing.

11 These bars will not be included in the "Table of Variables". See Plans for details.

TABLE OF VARIABLES

Closed Rail Panels			Open Rail Panels					
Panel Length	A	R4XXE	Panel Length	B	C	D	E	R4XXE

See Plans for table with values.

GENERAL NOTES

This rail has been successfully evaluated by full-scale crash test to meet MASH TL-4 criteria.

Details shown are general for bridges without sidewalks. See Plans for additional details and requirements specific to bridges with sidewalks.

For Table of Variables, Rail Bar List, locations of Full and Partial Depth Rail Joints, and Wing & Rail Bar Lists, see Plans.

For location of drain openings, see Plans. Drain openings shown are not applicable for bridges with sidewalks. Drain openings will not be allowed over Railroad Right of Way, travelled roadways, and protected waterways.

Rail Terminus details, including Rail Taper, are not applicable for bridges with sidewalks or when bridge railing is continuous with roadway railing.

Scales shown are for 22"x34" drawings. When using 11"x17" drawings, reduce scale by one half.

1 Modified bending diagram and spacing for R401E bar.

By: CGP, Checked by: CMW 09/27/2022

This document was originally issued and sealed by Charles R. Ellis, PE No. 9235, on November 5, 2020. This copy is not a signed and sealed document.

STATE OF ARKANSAS
LICENSED PROFESSIONAL ENGINEER
No. 9235
CHARLES R. ELLIS

BRIDGE ENGINEER

THESE DETAILS ARE APPLICABLE UNLESS OTHERWISE SHOWN IN THE PLAN DETAILS, SPECIAL PROVISIONS, OR SUPPLEMENTAL SPECIFICATIONS.

STANDARD DETAILS FOR BRIDGE TRAFFIC RAIL TYPE SSTR36

ARKANSAS STATE HIGHWAY COMMISSION

LITTLE ROCK, ARK.

DRAWN BY:	KWY	DATE:	11/5/2020	FILENAME:	b55070.dgn
CHECKED BY:	LJB	DATE:	11/5/2020	SCALE:	As Noted
DESIGNED BY:	STD.	DATE:	-----		

DRAWING NO. 55070

PRINT DATE: 10/6/2022

REFER TO TABULATION OF QUANTITIES FOR "W" & "B" DIMENSIONS

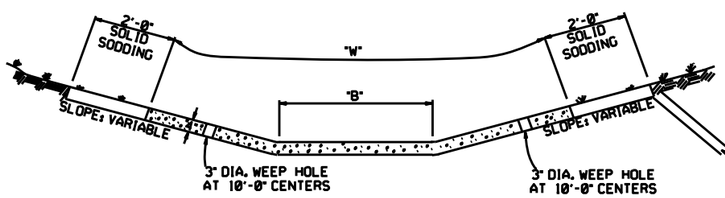

TYPE A

EXCAVATE TO NEAT LINES TO CONSTRUCT DITCH PAVING AND SOLID SODDING.

REFER TO TABULATION OF QUANTITIES FOR "W" DIMENSIONS

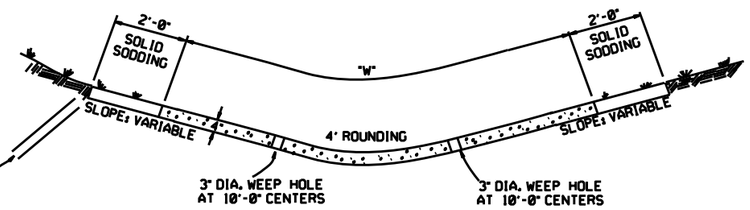

TYPE B

THE STEEL AND ADDITIONAL CONCRETE FOR THE WALLS SHALL NOT BE PAID FOR DIRECTLY, BUT SHALL BE CONSIDERED TO BE INCLUDED IN THE PRICE BID FOR "CONCRETE DITCH PAVING."

TOE WALL DEPTH MAY BE ALTERED TO 1'-0" WHEN DIRECTED BY THE ENGINEER IN ROCK EXCAVATION

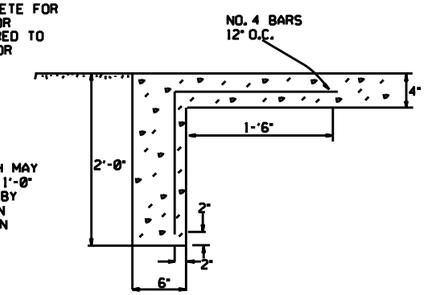

TOE WALL DETAIL FOR CONCRETE DITCH PAVING

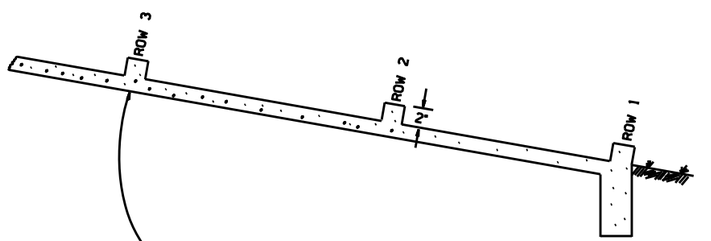

NUMBER OF ELEMENTS PER ROW VARIES WITH WIDTH OF PAVING SPECIFIED

ENERGY DISSIPATORS TO BE USED FOR THE ENTIRE LENGTH OF DITCH WHEN SLOPE OF DITCH PAVING EXCEEDS 7%. THE DISSIPATORS WILL NOT BE PAID FOR DIRECTLY, BUT SHALL BE CONSIDERED TO BE INCLUDED IN THE PRICE BID FOR CONCRETE DITCH PAVING.

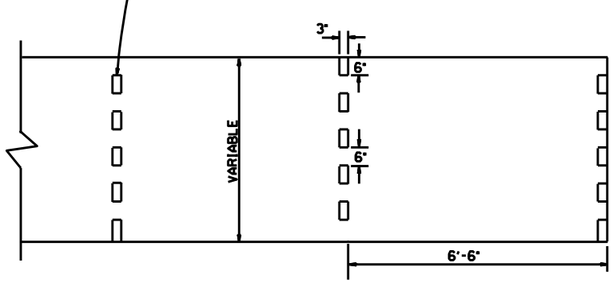

ENERGY DISSIPATORS
(NO SCALE)

GENERAL NOTES:

THE FULL WIDTH OF EACH SECTION SHALL BE POURED MONOLITHICALLY.

TOE WALLS TO BE CONSTRUCTED FULL WIDTH AT EACH END OF DITCH PAVING, AND POURED MONOLITHICALLY.

SOLID SOD ALONG DITCH PAVING TO BE PLACED WITHIN 14 DAYS OF DITCH PAVING CONSTRUCTION.

1" WIDE TRANSVERSE EXPANSION JOINTS SHALL BE PLACED IN CONCRETE DITCH PAVING AT 45' INTERVALS. THE SPACE SHALL BE FILLED WITH APPROVED JOINT FILLER COMPLYING WITH AASHTO M213.

DATE	REVISION	DATE FILMED
12-8-16	CORRECTED ENERGY DISSIPATOR DRAWING AND NOTE	
11-17-10	ADDED GENERAL NOTE	
6-2-94	ADDED GENERAL NOTE ABOUT SOLID SODDING	
11-30-8	ELIMINATED MIN. ROWS OF ELEMENTS	111-30-89
7-15-88	REVISED DISSIPATOR NOTE	653-7-15-88
4-3-87	REVISED ENERGY DISSIPATOR	671-4-3-87
1-9-87	MODIFIED NOTE ON ENERGY DISS.	532-1-9-87
11-3-86	ADDED NOTE TO ENERGY DISS.	599-12-1-86
11-1-84	ENERGY DISSIPATOR DETAILS ADDED	508-11-1-84
11-1-84	EXCAVATION DETAILS ADDED TYPED A & B	
10-2-72	REVISED AND REDRAWN	508-10-2-72

ARKANSAS STATE HIGHWAY COMMISSION

CONCRETE DITCH PAVING

STANDARD DRAWING CDP-1

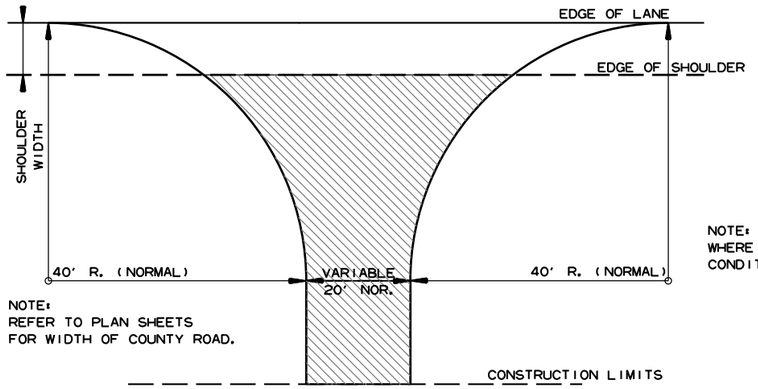

NOTE:
REFER TO PLAN SHEETS
FOR WIDTH OF COUNTY ROAD.

NOTE: TURNOUTS SHALL BE MODIFIED WHERE NECESSARY TO MEET LOCAL CONDITIONS AS DIRECTED BY THE ENGINEER.

ACHM SURFACE COURSE (1/2") (220 LBS. PER SQ. YD.) AND AGGREGATE BASE COURSE (CLASS 7) 7" COMP. DEPTH, UNLESS OTHERWISE SPECIFIED IN PLANS.

DETAIL FOR COUNTY ROAD TURNOUTS OPEN SHOULDER SECTION

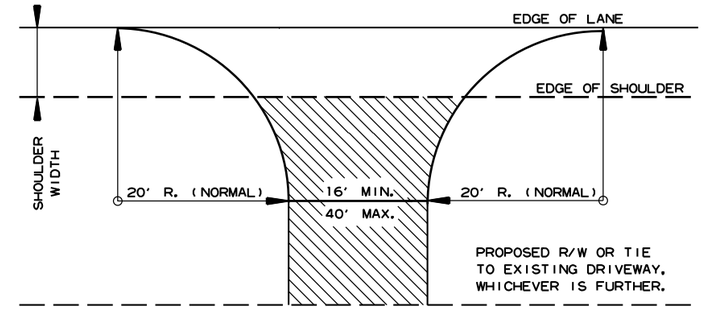

NOTE: TURNOUTS AND PRIVATE DRIVES SHALL BE MODIFIED WHERE NECESSARY TO MEET LOCAL CONDITIONS AS DIRECTED BY THE ENGINEER.

ACHM SURFACE COURSE (1/2") (220 LBS. PER SQ. YD.) AND AGGREGATE BASE COURSE (CLASS 7) 7" COMP. DEPTH IF ASPHALT OR GRAVEL DRIVE EXISTING; OR 6" CONCRETE IF CONCRETE DRIVE EXISTING.

DETAIL FOR DRIVEWAY TURNOUTS OPEN SHOULDER SECTION (ARTERIALS)

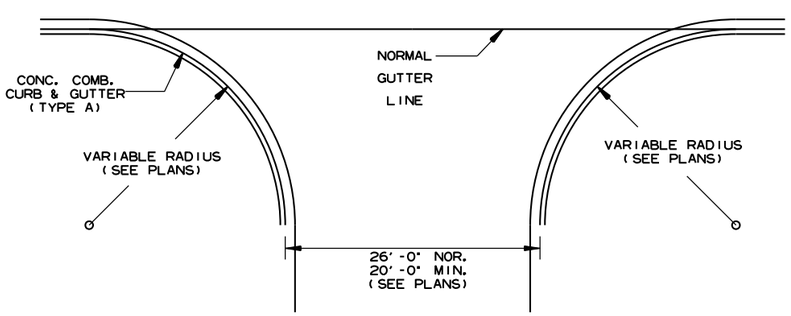

NOTE:
PAVEMENT STRUCTURE FOR STATE HIGHWAYS, CITY STREETS, & COUNTY ROADS TO BE SAME AS MAIN LANES.

DETAIL OF TURNOUTS, ASPHALT STREETS, COUNTY ROADS & STATE HIGHWAYS CURB & GUTTER SECTION

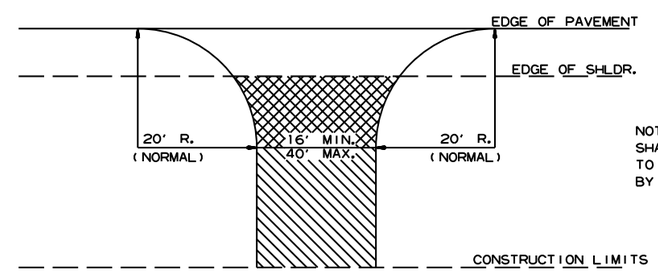

NOTE: TURNOUTS AND PRIVATE DRIVES SHALL BE MODIFIED WHERE NECESSARY TO MEET LOCAL CONDITIONS AS DIRECTED BY THE ENGINEER.

ASPHALT CONCRETE HOT MIX SURFACE COURSE (220 LBS. PER SQ. YD.) AGGREGATE BASE COURSE (CLASS 7) 7" COMP. DEPTH IF ASPHALT DRIVE EXIST OR 6" CONCRETE IF CONCRETE DRIVE EXIST.

AGGREGATE BASE COURSE (CLASS 7) 9" COMP. DEPTH OR CONFORM TO EXISTING DRIVEWAY

DETAIL FOR DRIVEWAY TURNOUTS (COLLECTORS)

DATE REV	DATE FILMED	DESCRIPTION
5-19-22		ISSUED

ARKANSAS STATE HIGHWAY COMMISSION

DETAILS OF DRIVEWAYS & STREET TURNOUTS

STANDARD DRAWING DR-2

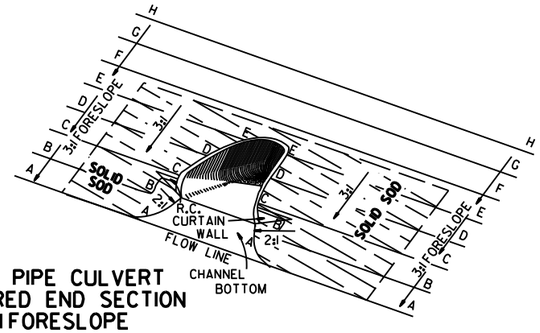

TYPICAL PIPE CULVERT
WITH FLARED END SECTION
& 3:1 FORESLOPE

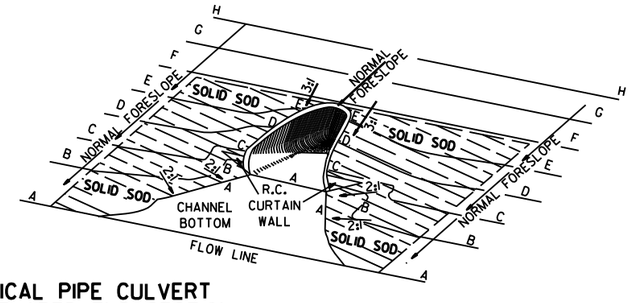

TYPICAL PIPE CULVERT
WITH FLARED END SECTION
& FLATTENED ADJACENT SLOPES

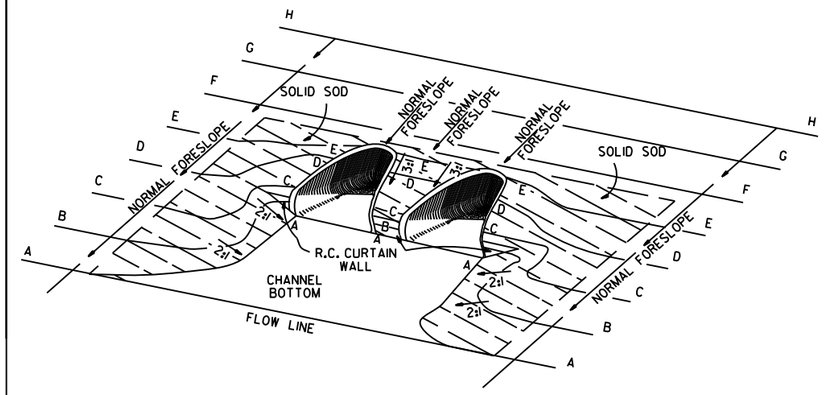

TYPICAL MULTIPLE PIPE CULVERT
WITH FLARED END SECTIONS
& FLATTENED ADJACENT SLOPES

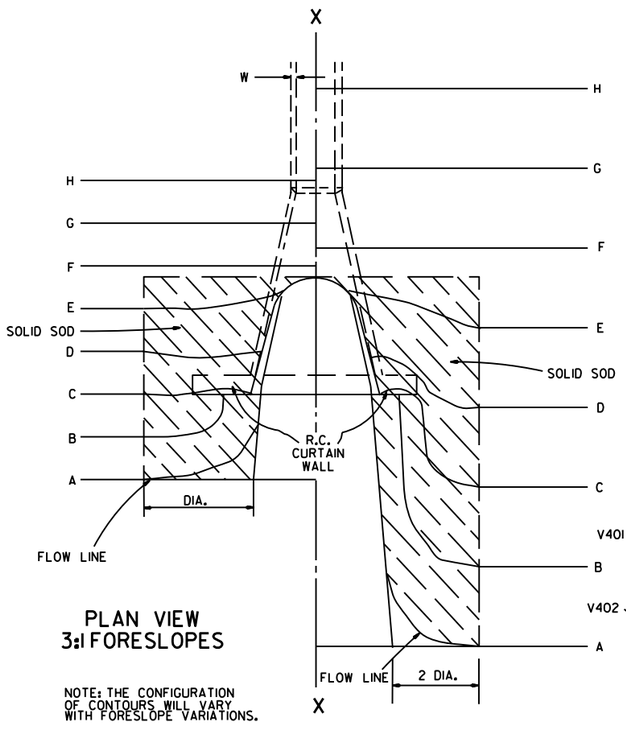

PLAN VIEW
3:1 FORESLOPES

NOTE: THE CONFIGURATION OF CONTOURS WILL VARY WITH FORESLOPE VARIATIONS.

PLAN VIEW
FLATTENED FORESLOPES

R.C. CURTAIN WALL DIMENSIONS & QUANTITIES

PIPE DIA.	H_1	L_1	L	L (DBL.)/2	SINGLE R.C.P.C. CONC.	SINGLE R.C.P.C. REINF. STEEL	DOUBLE R.C.P.C. CONC.	DOUBLE R.C.P.C. REINF. STEEL
					CU. YDS.	LBS.	CU. YDS.	LBS.
18"	11½"	3'-5"	8'-0"	6'-3"	0.31	27.7	0.45	39.5
24"	1'-0½"	4'-6"	9'-6"	7'-6"	0.37	33.4	0.53	48.0
30"	1'-3½"	5'-7"	11'-0"	9'-0"	0.45	39.0	0.67	59.0
36"	1'-7"	6'-8"	13'-0"	10'-6"	0.58	52.6	0.83	73.9
42"	2'-1½"	7'-3"	15'-6"	12'-0"	0.82	77.1	1.10	100.7
48"	2'-5"	7'-10"	17'-0"	13'-0"	0.98	94.9	1.27	120.4
54"	2'-9½"	8'-5"	18'-6"	14'-0"	1.16	115.8	1.47	143.7
60"	3'-4"	9'-0"	20'-6"	15'-6"	1.47	149.7	1.84	180.3
72"	4'-5"	10'-2"	25'-6"	18'-6"	2.31	232.6	2.73	271.0

NOTE: QUANTITIES SHOWN ARE FOR ONE (1) CURTAIN WALL.

REINFORCING STEEL SCHEDULE

PIPE DIA.	SINGLE R.C. PIPE CULVERT H401 L	H401 NO.	H402 L	H402 NO.	V401 L	V401 NO.	V402 L	V402 NO.	DOUBLE R.C. PIPE CULVERT H401 L	H401 NO.	H402 L	H402 NO.	H403 L	H403 NO.	V401 L	V401 NO.	V402 L	V402 NO.
18"	7'-8"	2	1'-11½"	4	1'-7½"	8	8"	8	12'-2"	2	1'-11½"	4	8"	2	1'-7½"	10	8"	14
24"	9'-2"	2	2'-2"	4	1'-8½"	10	8"	9	14'-8"	2	2'-2"	4	8"	2	1'-8½"	12	8"	18
30"	10'-8"	2	2'-4½"	4	1'-11½"	10	8"	12	17'-8"	2	2'-4½"	4	8"	2	1'-11½"	14	8"	22
36"	12'-8"	2	2'-10"	6	2'-3"	12	8"	14	20'-8"	2	2'-10"	6	8"	3	2'-3"	14	8"	28
42"	15'-2"	2	3'-9½"	8	2'-9½"	16	8"	15	23'-8"	2	3'-9½"	8	8"	4	2'-9½"	18	8"	30
48"	16'-8"	2	4'-3"	10	3'-1"	18	8"	16	25'-8"	2	4'-3"	10	8"	5	3'-1"	20	8"	32
54"	18'-2"	2	4'-8½"	12	3'-5½"	20	8"	17	27'-8"	2	4'-9"	12	8"	6	3'-5½"	22	8"	34
60"	20'-2"	2	5'-5"	14	4'-0"	24	8"	18	30'-8"	2	5'-5"	14	8"	7	4'-0"	26	8"	36
72"	25'-2"	2	7'-4"	18	5'-1"	30	8"	20	36'-8"	2	7'-4"	18	8"	9	5'-1"	33	8"	40

ALL REINFORCING STEEL #4 BARS @ 6" O.C.

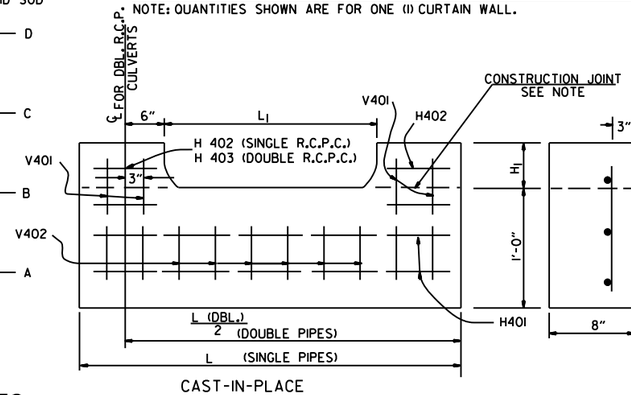

CAST-IN-PLACE

NOTE: THE PORTION OF THE R.C. CURTAIN WALL BENEATH THE FLARED END SECTION (LOWER 1'-0") SHALL BE PLACED MONOLITHICALLY. THE FLARED END SECTION SHALL THEN BE SET IN PLACE & THE REMAINING PORTIONS OF THE R.C. CURTAIN WALL PLACED.

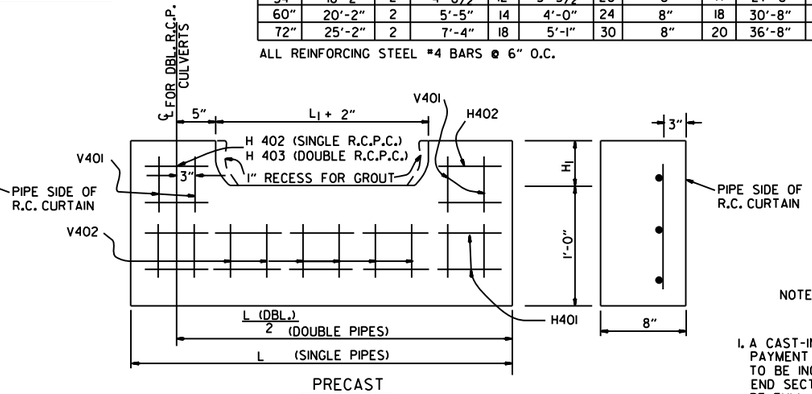

PRECAST

NOTE: THE PRECAST CURTAIN WALL WILL BE SET AND BACKFILLED WITH COMPACTED MATERIAL. THE FLARED END SECTION SHALL THEN BE SET IN PLACE AND THE 1" RECESS FILLED WITH GROUT. WHERE "L" EXCEEDS 11' THE CURTAIN WALL MAY BE CAST IN TWO (2) OR MORE SECTIONS. THE METHOD OF JOINING THE SECTIONS FOR INSTALLATION SHALL BE APPROVED BY THE ENGINEER.

R.C. CURTAIN WALL DETAILS

SOLID SODDING

PIPE DIA.	SINGLE R.C.P.C. 3:1	SINGLE R.C.P.C. 4:1	SINGLE R.C.P.C. 6:1	DOUBLE R.C.P.C. 3:1	DOUBLE R.C.P.C. 4:1	DOUBLE R.C.P.C. 6:1
	SQ. YDS.			SQ. YDS.		
18"	5	7	12	6	8	13
24"	8	12	19	9	13	20
30"	13	18	29	14	19	30
36"	17	26	41	18	28	43
42"	23	35	55	25	37	57
48"	29	46	68	31	48	70
54"	35	57	85	37	59	87
60"	45	62	104	48	65	107
72"	64	92	156	67	95	159

NOTE: QUANTITIES SHOWN ABOVE ARE FOR ONE (1) END OF F.E.S.

GENERAL NOTES

1. A CAST-IN-PLACE OR PRECAST CURTAIN WALL MAY BE USED. PAYMENT FOR THE CURTAIN WALL SHALL BE CONSIDERED TO BE INCLUDED IN THE UNIT PRICE BID EACH FOR FLARED END SECTIONS OF THE SEVERAL SIZES, WHICH PRICE SHALL BE FULL COMPENSATION FOR FURNISHING ALL MATERIALS INCLUDING REINFORCING STEEL AND CONCRETE; FOR FORMS, MIXING AND PLACING; FOR EXCAVATION AND BACKFILL, AND FOR ALL LABOR, TOOLS, EQUIPMENT AND INCIDENTALS NECESSARY TO COMPLETE THE WORK.
2. ALL EXPOSED EDGES SHALL BE CHAMFERED ¾".
3. CONCRETE FOR CURTAIN WALL SHALL MEET THE REQUIREMENTS FOR CLASS A OR S CONCRETE AS PROVIDED IN SECTION 802 OF THE STANDARD SPECIFICATIONS OR FOR PAVING CONCRETE AS PROVIDED IN SECTION 501 OF THE STANDARD SPECIFICATIONS.
4. WELDED WIRE MESH 3 x 3 W/10 x W10 MAY BE USED IN LIEU OF REINFORCING BARS.

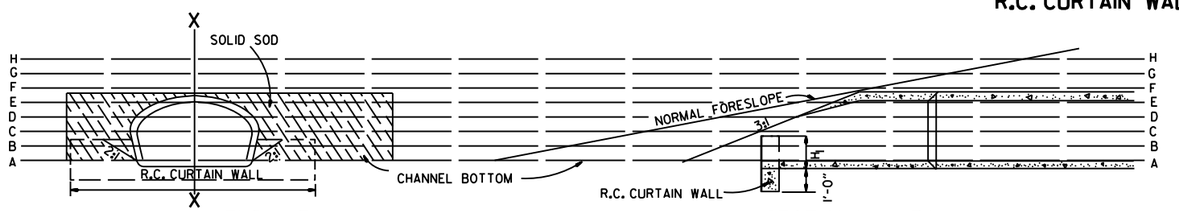

END VIEW

SECTIONAL VIEW "X-X"

DATE	REVISION	FILMED
10-18-96	ADDED NOTE TO SOLID SODDING	
10-12-95	CORRECTED SPELLING	
11- 3-94	ADDED GENERAL NOTE NO. 4	
8-15-91	REV. CURTAIN WALL QUANT. STEEL SCH. & SOLID SOD QUANT.	
3-2-81	ALLOW PRECAST IN 2 OR MORE PIECES CHAMFER EDGES	
5-15-80	ADDED PRECAST WALL & GENERAL NOTES	
10-2-72	REVISED AND REDRAWN	

ARKANSAS STATE HIGHWAY COMMISSION

FLARED END SECTION

STANDARD DRAWING FES-1

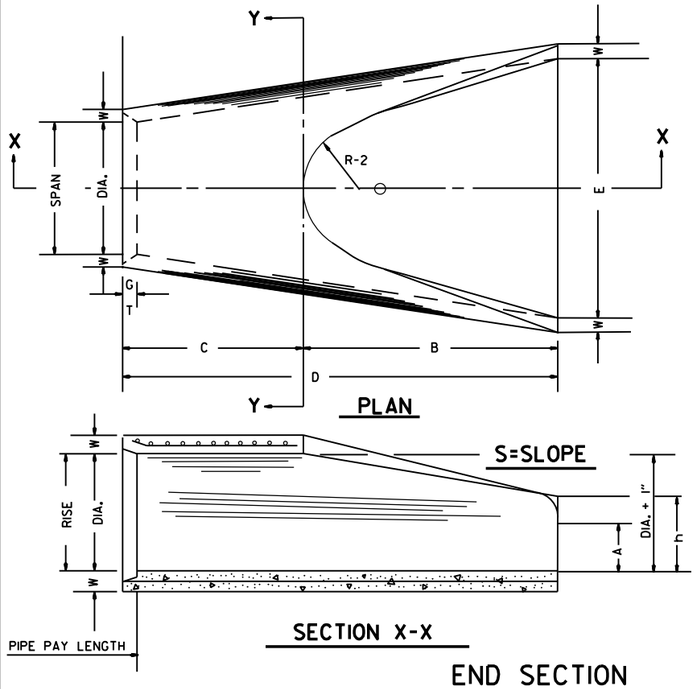

TABLE OF DIMENSIONS

DIA.	WALL	A	B	C	D	E	S	DIA. + 1"	P	R-1	R-2	G-T	WT.	h
18"	2½"	9"	2'-3"	3'-10"	6'-1"	3'-0"	3:1	19"	29"	15½"	12"	2"	1000	1'-0½"
24"	3"	9½"	3'-7½"	2'-6"	6'-1½"	4'-0"	3:1	25"	33 3/16"	16 15/16"	14"	2½"	1600	1'-1½"
30"	3½"	1'-0"	4'-6"	1'-7¾"	6'-1¾"	5'-0"	3:1	31"	37"	18½"	15"	3¼"	1940	1'-4⅝"
36"	4"	1'-3"	5'-3"	2'-10¾"	8'-1¾"	6'-0"	3:1	37"	47 13/16"	24 5/16"	20"	3½"	4100	1'-8"
42"	4½"	1'-9"	5'-3"	2'-11"	8'-2"	6'-6"	3:1	43"	53⅞"	27½"	22"	3½"	5380	2'-2½"
48"	5"	2'-0"	6'-0"	2'-2"	8'-2"	7'-0"	3:1	49"	56½"	28½"	22"	3½"	6550	2'-6"
54"	5½"	2'-4"	6'-6"	1'-10"	8'-4"	7'-6"	3:1	55"	65½"	33⅛"	24"	4"	8750	2'-10½"
60"	6"	2'-10"	6'-6"	1'-10"	8'-4"	8'-0"	3:1	61"	72½"	36 11/16"	24"	4"	9270	3'-5"
72"	7"	3'-10"	6'-6"	1'-10"	8'-4"	9'-0"	3:1	73"	77 13/16"	38 15/16"	24"	5"	13250	4'-6"

ARCH PIPE

EQUIV. DIA.	• SPAN AASHTO M 206	• SPAN AHD NOMINAL	• RISE AASHTO M 206	• RISE AHD NOMINAL	W	A	B	C	D	E	P	R2	G-T	S
INCHES														
15	18	18	11	11	2"	4"	2'-0"	4'-0"	6'-0"	3'-0"	29"	12"	1½"	2½:1
18	22	22	13½	14	2½"	5"	2'-0"	4'-1"	6'-1"	3'-6"	32⅛"	13"	2½"	2½:1
21	26	26	15½	16	2¾"	7"	2'-3"	3'-10"	6'-1"	4'-0"	34⅛"	14"	2½"	2½:1
24	28½	29	18	18	3"	9"	2'-3"	3'-10"	6'-1"	5'-0"	36 11/16"	15"	2½"	2½:1
30	36¼	36	22½	23	3½"	10"	3'-1"	3'-0½"	6'-1½"	6'-0"	47 11/16"	20"	3"	2½:1
36	43¾	44	26⅝	27	4"	10½"	4'-0"	2'-11½"	6'-1½"	6'-6"	54 5/16"	22"	3½"	2½:1
42	51⅛	51	31 5/16	31	4½"	11½"	4'-7"	1-10¼"	6'-5¼"	7'-2"	59½"	23"	3¾"	2½:1
48	58½	59	36	36	5"	1'-3"	5'-3"	2'-10¾"	8'-1¾"	7'-10"	70 5/16"	24"	4¼"	2½:1
54	65	65	40	40	5½"	1'-7"	5'-3"	2'-11"	8'-2"	8'-6"	72 1/16"	24"	4¾"	2¼:1
60	73	73	45	45	6"	1'-10"	5'-6"	2'-8"	8'-2"	9'-0"	77 13/16"	24"	5"	2¼:1

• THE MEASURED SPAN AND RISE SHALL NOT VARY MORE THAN ± 2 PER CENT FROM THE VALUES SPECIFIED BY AASHTO M 206.

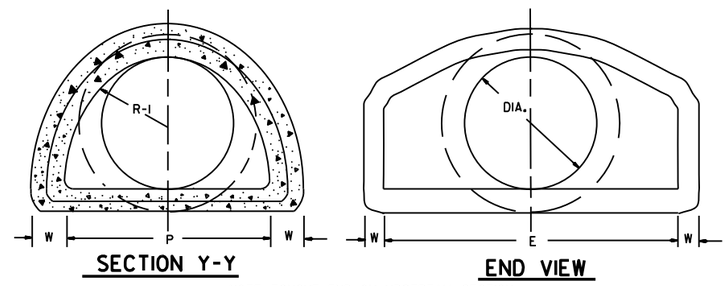

NOTE: TONGUE END ON UPSTREAM SECTION
GROOVE END ON DOWNSTREAM SECTION

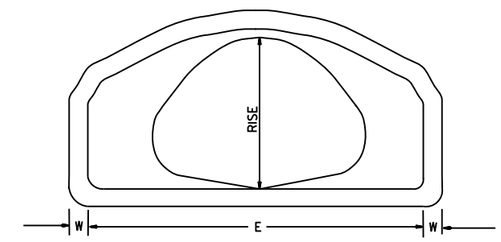

END VIEW
CONCRETE ARCH PIPE

END SECTION FOR REINFORCED CONCRETE PIPE CULVERTS

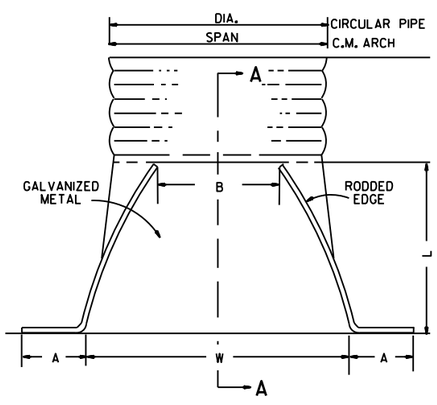

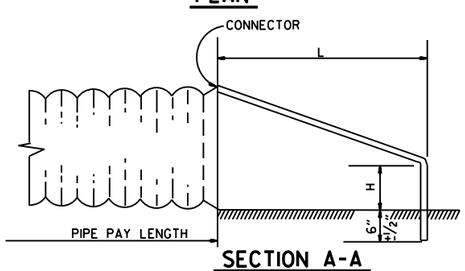

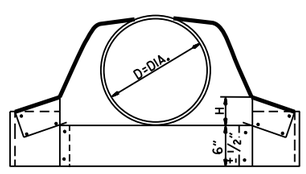

CIRCULAR PIPE

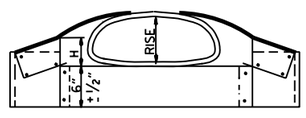

C.M. ARCH PIPE

CIRCULAR PIPE

D. DIA.	GAUGE	A 1" ±	B. MAX.	H 1" ±	L 1½" ±	W 2" ±	S
		INCHES					
12	16	6	6	6	21	24	2½:1
15	16	7	8	6	26	30	2½:1
18	16	8	10	6	31	36	2½:1
21	16	9	12	6	36	42	2½:1
24	16	10	13	6	41	48	2½:1
30	14	12	16	8	51	60	2½:1
36	14	14	19	9	60	72	2½:1
42	12	16	22	11	69	84	2½:1
48	12	18	27	12	78	90	2½:1
54	12	18	30	12	84	102	2:1
60	12	18	33	12	87	114	1¾:1
66	12	18	36	12	87	120	1½:1
72	12	18	39	12	87	126	1 1/3:1

C.M. ARCH PIPE

EQUIV. DIA.	SPAN	RISE	A 1" ±	B MAX.	H 1" ±	L 1½" ±	W 2" ±	S	GAUGE
	INCHES								
15"	17	13	7	9	6	19	30	2½:1	16
18"	21	15	7	10	6	23	36	2½:1	16
21"	24	18	8	12	6	28	42	2½:1	16
24"	28	20	9	14	6	32	48	2½:1	16
30"	35	24	10	16	6	39	60	2½:1	14
36"	42	29	12	18	8	46	75	2½:1	14
42"	49	33	13	21	9	53	85	2½:1	12
48"	57	38	18	26	12	63	90	2½:1	12
54"	64	43	18	30	12	70	102	2¼:1	12
60"	71	47	18	33	12	77	114	2¼:1	12

NOTE: ALTERNATE CONNECTIONS TO THE PIPE CULVERTS, IN ACCORDANCE WITH MANUFACTURER'S STANDARD PRACTICES, MAY BE MADE SUBJECT TO THE APPROVAL OF THE ENGINEER.

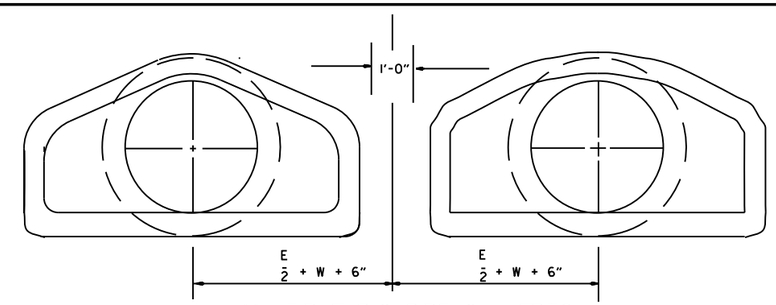

MULTIPLE R.C. PIPE CULVERTS

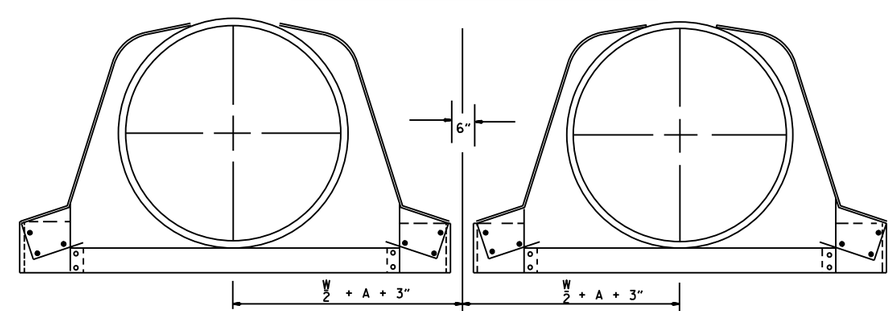

MULTIPLE C.M. PIPE CULVERTS

END SECTIONS FOR CORRUGATED METAL PIPE CULVERTS

DATE	REVISION	FILMED
10-18-96	REVISED ASTM REF. TO AASHTO	
5-15-80	REVISED DISTANCE BETWEEN MULTIPLE R.C.P. F.E.S.	664-5-15-80
7-14-78	C.M. ARCH SIZES TO CONFORM WITH AASHTO SIZES	752-7-14-78
8-22-75	ADDED MULTIPLE PIPE CULVERTS	517-8-22-75
12-5-74	REMOVED NOTE RE REINF. FOR R.C. F.E.S.	500-12-5-74
5-24-73	CMP END SECTION, SHOW PIPE PAY LENGTH	627-5-24-73
10-2-72	REVISED AND REDRAWN	760-10-2-72

ARKANSAS STATE HIGHWAY COMMISSION

FLARED END SECTION

STANDARD DRAWING FES-2

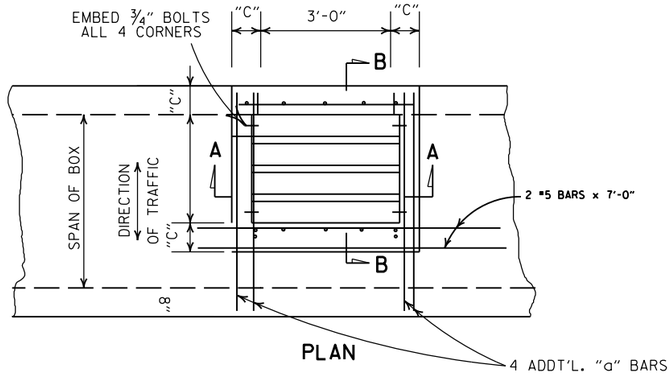

PLAN

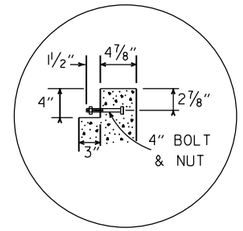

DETAIL A

GENERAL NOTES:

1. STEEL PIPE FOR GRATES AND BOLTS SHALL CONFORM TO THE REQUIREMENTS OF SECTION 807. BOLTS SHALL CONFORM TO ONE OF THE FOLLOWING: ASTM A193, GRADE B8 CLASS 1OR 2, ASTM A307 OR AASHTO M 164.
2. STEEL PIPE FOR GRATES SHALL BE "STANDARD WEIGHT" PIPE CONFORMING TO ASTM A53 NATIONAL STANDARD PIPE.
3. BOLTS, NUTS, WASHERS SHALL BE GALVANIZED IN ACCORDANCE WITH AASHTO M 232 OR AASHTO M 298, CLASS 40 OR 50.
4. ALL EXPOSED CORNERS TO HAVE ¾" CHAMFER.
5. ALL #4 AND #5 REINFORCING BARS TO HAVE 1½" COVER. LARGER SIZES TO HAVE 2" COVER.
6. THE COMPLETE PIPE GRATE SHALL BE PAINTED IN ACCORDANCE WITH THE STANDARD SPECIFICATIONS.

TABLE OF "W" DIMENSIONS

I.D. PIPE	SKEW OF CROSS DRAIN		
	STRAIGHT	30°	45°
	"W"	"W"	"W"
24"	4'-0"	4'-0"	4'-0"
30"	4'-0"	4'-0"	4'-5"
36"	4'-0"	4'-3"	5'-3"
42"	4'-3"	4'-11"	6'-1"
48"	4'-10"	5'-7"	6'-11"

NOTE: DIMENSIONS SHOWN ABOVE ARE FOR PIPES INTERSECTING DROP INLET ON ONE SIDE ONLY. FOR SKEWED PIPES INTERSECTING BOTH SIDES OF DROP INLET, "W" WILL NEED TO BE INCREASED OR AXIS OF INTERSECTING PIPES WILL NEED TO BE SHIFTED.

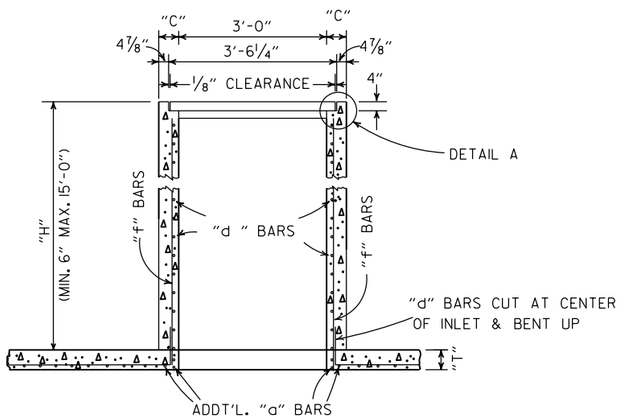

SECTION A-A

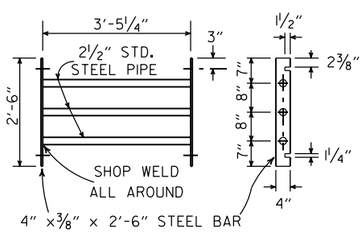

GRATE DETAIL

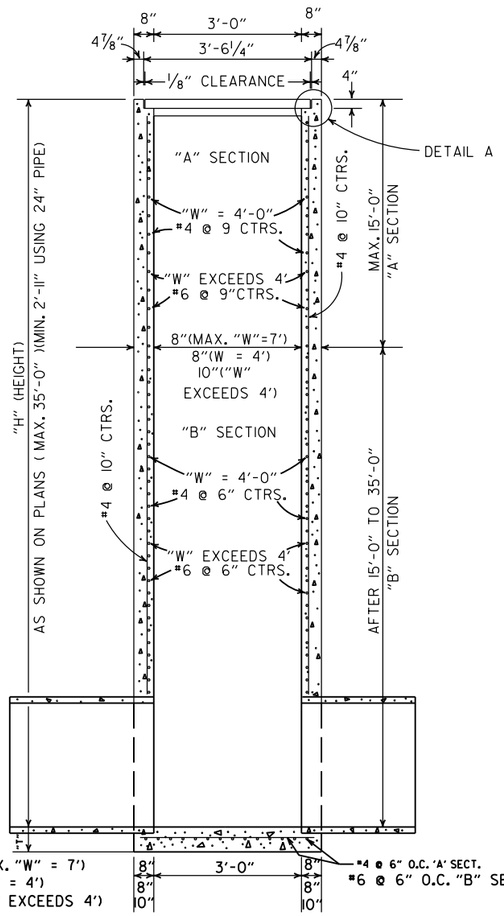

SECTION B-B

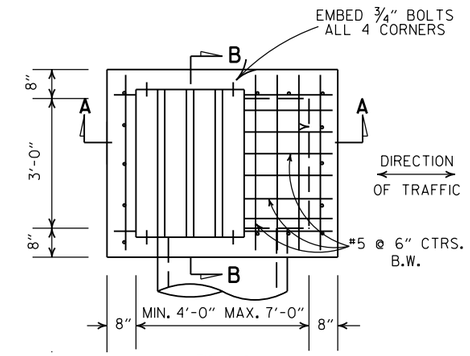

PLAN

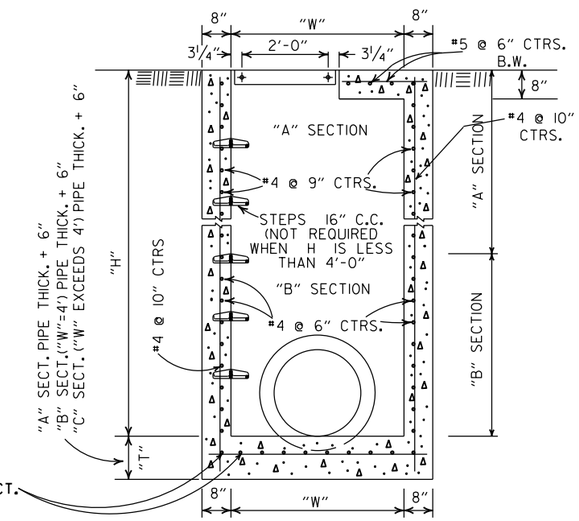

SECTION A-A

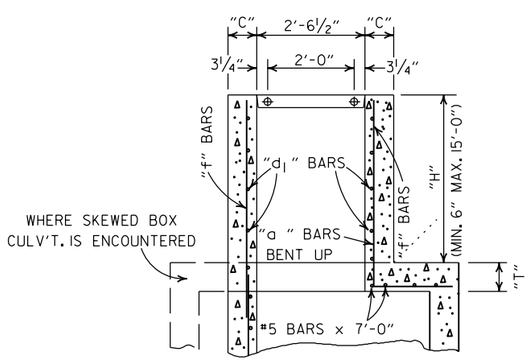

SECTION B-B

NOTE: ADDT'L.REINF. STEEL TO BE INCLUDED IN UNIT PRICE BID PER TYPE "TM" D.I.

DIMENSIONS & REINF. BARS FOR D.I. TO BE THE SAME AS THOSE SHOWN ON APPLICABLE STD. BARREL DRAWING FOR R.C. BOX CULVERTS.

DROP INLET TYPE "TM"
FOR REINFORCED CONC. BOX CULVERTS

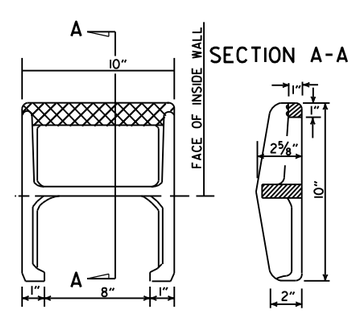

PLAN

APPROX. WEIGHT = 11 LBS. (CAST IRON)

NOTE: THIS DETAIL IS TYPICAL. OTHERS MAY BE USED WITH PRIOR APPROVAL OF THE ENGINEER.

DETAIL OF STEP FOR DROP INLET

DROP INLET(TYPE RM)

REVISED		DATE FILMED
8-22-02	ADDED & REVISED DIMENSION TO SECTION A-A	
1-12-00	CORRECTED DIMENSION ON SECTION B-B	
11-06-97	ADDED DIMENSION TO SECTION A-A	
10-18-96	REVISED ASTM REF. TO AASHTO AND ADDED NOTE TO TABLE OF "W" DIMENSIONS	
10-1-92	ADDED DIRECTION OF TRAFFIC	10-1-92
8-15-91	ADDED NOTE ABOUT PAINTING OF GRATE	8-15-91
11-30-89	ALTERED DETAIL A	11-30-89
7-15-88	REVISED STEP DETAIL,TM & RM D.I. & GRATE DETAIL	719-7-15-88
10-2-72	REVISED AND REDRAWN	542-10-2-72

ARKANSAS STATE HIGHWAY COMMISSION

DETAILS OF DROP INLETS

STANDARD DRAWING FPC-9D

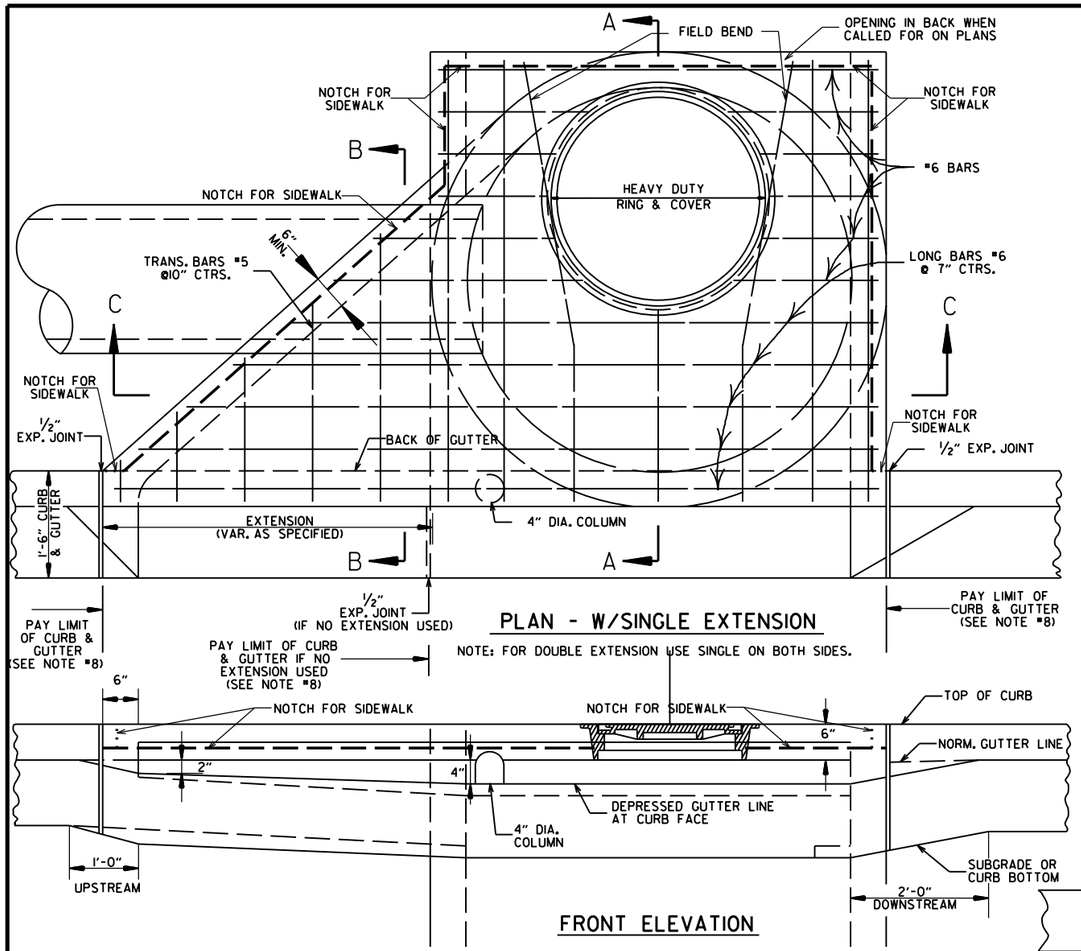

PLAN - W/SINGLE EXTENSION

NOTE: FOR DOUBLE EXTENSION USE SINGLE ON BOTH SIDES.

FRONT ELEVATION

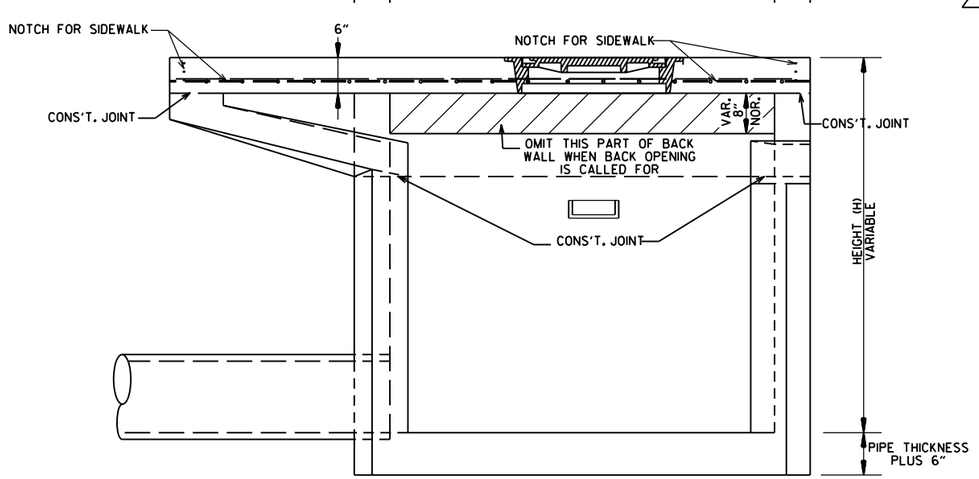

SECTION C-C

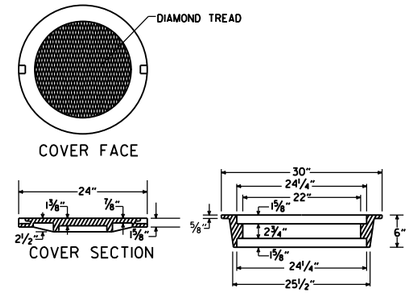

APPROXIMATE TOTAL WEIGHT = 333 LBS.

HEAVY DUTY RING & COVER

1. HEAVY DUTY RING AND COVER SHALL BE CONSTRUCTED OF CAST IRON AND SHALL CONFORM TO THE REQUIREMENTS OF THE STANDARD SPECIFICATIONS FOR GRAY IRON CASTINGS AASHTO M105 CLASS 35B & AASHTO M306.
2. HEAVY DUTY RING AND COVER SHALL NOT BE PAINTED.
3. HEAVY DUTY RING SHALL ALWAYS BE INSTALLED WITH FLANGE ON TOP.

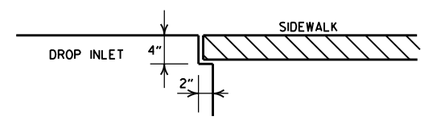

DETAIL OF NOTCH FOR SIDEWALKS

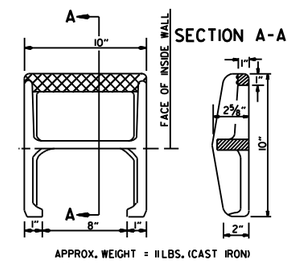

APPROX. WEIGHT = 11 LBS. (CAST IRON)

PLAN

NOTE: THIS DETAIL IS TYPICAL. OTHERS MAY BE USED WITH PRIOR APPROVAL OF THE ENGINEER.

DETAIL OF STEP FOR DROP INLET

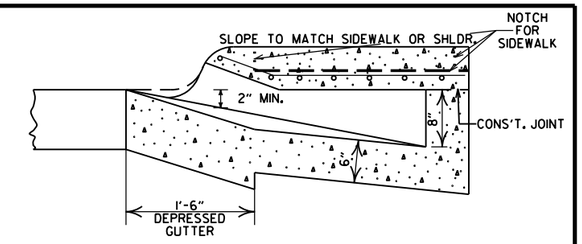

SECTION B-B

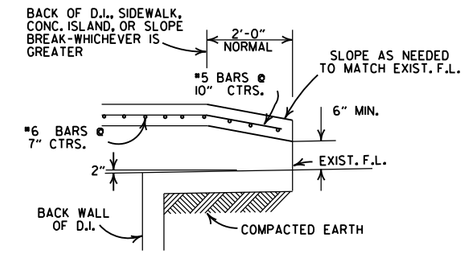

BACK OPENING

WHEN OPENING IN BACK IS CALLED FOR ON PLANS EXTEND OPENING AS SHOWN IN DETAIL. PAYMENT TO BE INCLUDED IN PRICE BID FOR DROP INLET (TYPE MO).

GENERAL NOTES:

1. ALL EXPOSED CORNERS TO HAVE 3/4" CHAMFER.
2. STEPS SHALL BE INSTALLED IN ALL INLETS 4'-0" HIGH AND OVER OR AS DIRECTED BY THE ENGINEER.
3. ALL REINFORCING BARS SHALL BE GRADE 60 AND HAVE MIN. 1 1/2" COVER.
4. DROP INLETS AND EXTENSION ON CURVED SECTIONS SHALL CONFORM TO THE CURVATURE OF THE CURB.
5. 4" DIA. COLUMNS SPACED AT MAX. 4'-0" INTERVALS SHALL BE INSTALLED ALONG INLET AND EXTENSION TO SUPPORT TOP.
6. BASE AND INLET WALLS SHALL BE CAST MONOLITHICALLY.
7. THE THROAT SHALL BE CAST INTEGRALLY WITH THE GUTTER.
8. PAYMENT FOR CURB AND/OR CURB AND GUTTER WITHIN THE LIMITS OF DROP INLETS AND DROP INLET EXTENSIONS SHALL BE CONSIDERED INCLUDED IN PAYMENT MADE FOR DROP INLETS AND/OR DROP INLET EXTENSIONS.
9. PIPES MAY ENTER DROP INLET FROM ANY ANGLE OR ELEVATION AS MAY BE APPROVED BY THE ENGINEER.
10. APPROPRIATE SIZE TYPE C DROP INLETS MAY BE SUBSTITUTED FOR TYPE MO DROP INLETS AS APPROVED BY THE ENGINEER. PAYMENT TO BE AS DROP INLET (TYPE MO).
11. DURING CONSTRUCTION OF THE ROADWAY THE CONTRACTOR SHALL MAINTAIN DRAINAGE INTO OR AROUND THE DROP INLET AS APPROVED BY THE ENGINEER.
12. 4"x2" NOTCH SHALL BE FORMED IN ALL DROP INLETS TO SUPPORT SIDEWALK CONSTRUCTION. REFER TO DETAIL OF NOTCH FOR SIDEWALKS.
13. DIMENSIONS SHOWN FOR RING AND COVER ARE TYPICAL. THE CONTRACTOR MAY SUBSTITUTE SIMILAR CASTINGS WITH THE APPROVAL OF THE ENGINEER. REQUESTING APPROVAL FOR CASTING DESIGNS MAY BE MADE BY REFERRING TO PREVIOUSLY APPROVED DRAWINGS.

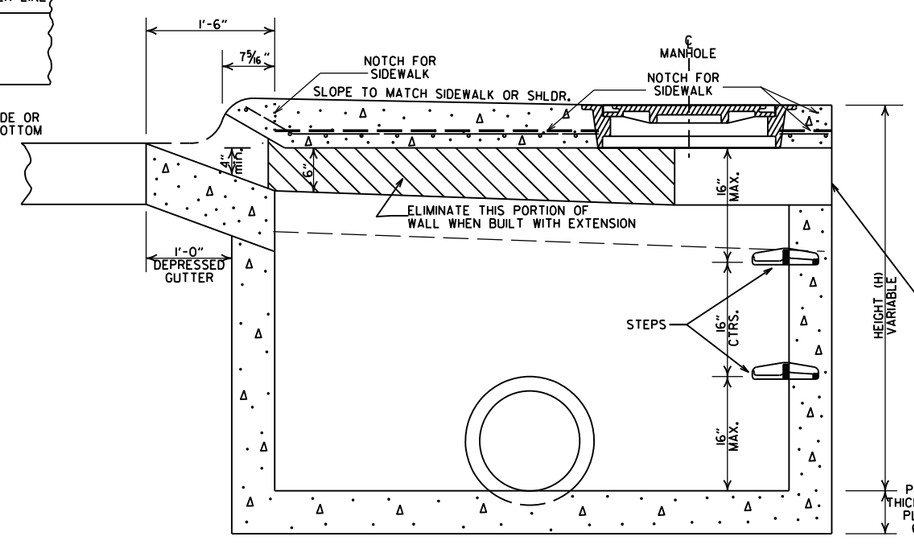

SECTION A-A

DIA. OF D.I.	DIA. OF OUTLET PIPE	MINIMUM WALL THICKNESS CAST IN PLACE	MINIMUM WALL THICKNESS PRECAST
4' I.D.	12" THRU 27"	6"	5"
5' I.D.	30" THRU 42"	8"	6"
6' I.D.	48" THRU 54"	8"	7"

DATE	REVISIONS	DATE FILMED
8-22-02	ADDED PAY LIMIT CURB NOTES TO SECTIONS A-A & B-B	
11-16-01	ADDED NOTE 13	
1-12-00	REVISED HEAVY DUTY RING & COVER	
5-13-99	ADDED NOTCH DETAIL FOR SIDEWALKS	
7-02-98	REP. NOTE 8, REM. PLAN DET., REV. PICTURE FOR NEW RING & COVER, ADDED HEAVY DUTY RING & COVER AND DETAIL OF STEP FOR DROP INLET	
4-26-96	ADDED NOTE 11, ADJ. OPENING DIMENSION	
10-12-95	CORRECTED #6 BAR SPACING	
7-20-95	CORRECTED DIAMETER OF D.I. IN BOX	
2-2-95	TYPE C TO MO (OPEN. BACK DETAIL)	
11-3-94	REVISED GENERAL NOTES	11-3-94
4-1-93	REV. BACK OPEN. DETAIL & NOTE	4-1-93
8-16-91	REVISED NOTES 1,12 & ADDED BK.OPEN DETAIL	8-15-91
11-30-89	ADDED NOTE NO. 12	11-30-89
3-23-89	ADDED NOTE & MINIMUM WALL THICKNESS	513-3-23-89
7-15-88	ADDED EXTEND NOTE TO SECTION A-A	629-7-15-88
1-14-87	MODIFIED WALL THICKNESS	783-1-14-87
6-12-87	ISSUED	4-6-12-87

ARKANSAS STATE HIGHWAY COMMISSION

DETAILS OF DROP INLET (TYPE MO)

STANDARD DRAWING FPC-9M

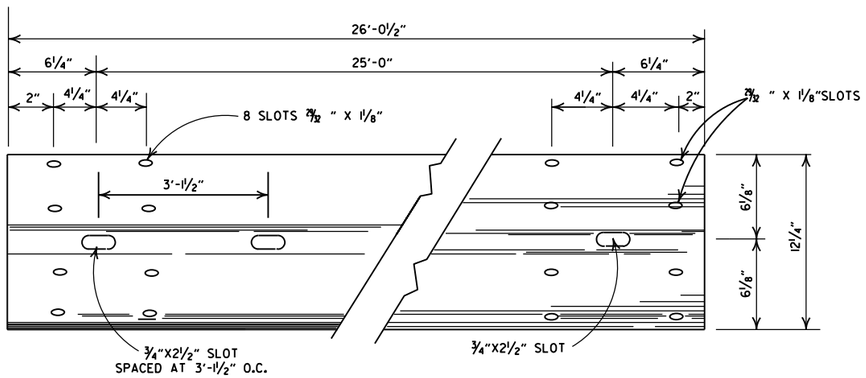

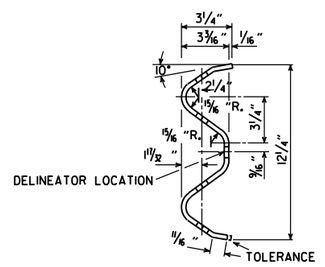

DETAILS OF W-BEAM GUARDRAIL

RAIL SECTION OF CLOSELY SIMILAR DIMENSIONS AND COMPARABLE STRENGTH MAY BE SUBSTITUTED IF APPROVED BY THE ENGINEER.

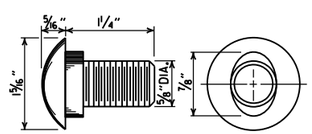

SPLICE BOLT
POST BOLT - SAME EXCEPT LENGTH

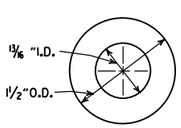

CUT STEEL WASHER

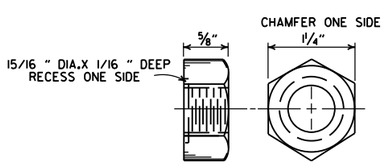

NUT

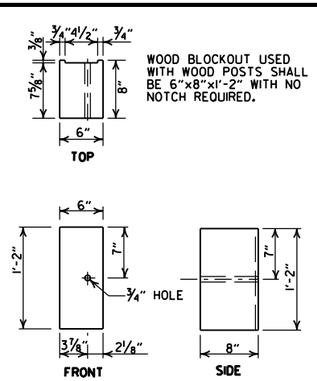

WOOD BLOCKOUT USED WITH WOOD POSTS SHALL BE 6"x8"x1'-2" WITH NO NOTCH REQUIRED.

WOOD BLOCKOUT (W-BEAM)

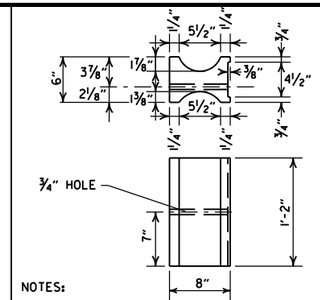

NOTES:

1. SIMILAR SHAPED PLASTIC BLOCKOUTS MAY BE USED AS LONG AS THEY MEET REQUIREMENTS FOR MANUAL FOR ASSESSING SAFETY HARDWARE (MASH).
2. DIMENSIONS ARE SUBJECT TO MANUFACTURERS TOLERANCES.

PLASTIC BLOCKOUT (W-BEAM)

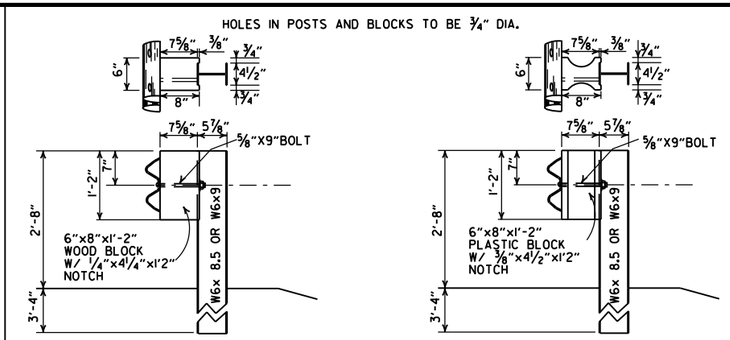

WOOD BLOCKOUT CONNECTIONS

PLASTIC BLOCKOUT CONNECTIONS

DETAILS OF STEEL LINE POST CONNECTIONS (W-BEAM)

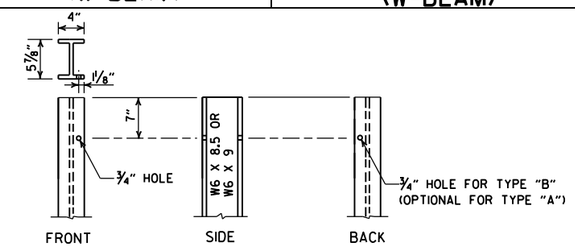

STEEL POST

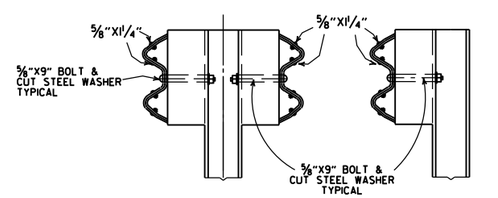

DETAILS OF STEEL LINE POST CONNECTIONS (W-BEAM)

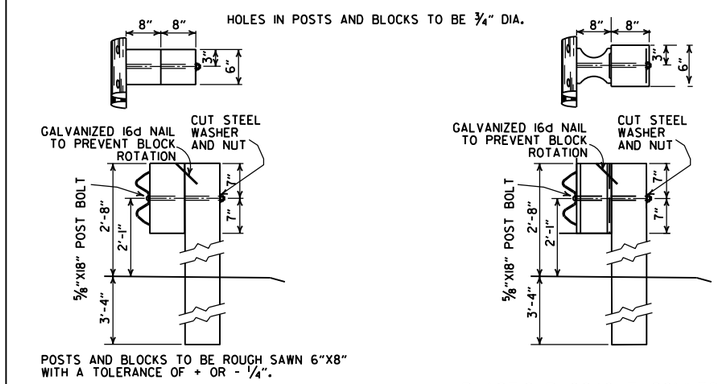

WOOD BLOCKOUT CONNECTIONS

PLASTIC BLOCKOUT CONNECTIONS

DETAILS OF WOOD LINE POST CONNECTIONS (W-BEAM)

-GENERAL NOTES-

ALL BOLTS SHALL BE SUFFICIENT LENGTH TO EXTEND THROUGH THE FULL THICKNESS OF THE NUT AND NO MORE THAN ¾" BEYOND IT.

WHERE W-BEAM GUARDRAIL CONTINUES, THE INTERMEDIATE SECTIONS SHALL HAVE A POST SPACING OF 6'-3" UNLESS OTHERWISE NOTED.

W-BEAM GUARDRAIL REPRESENTING INTERMEDIATE SECTIONS WILL BE MEASURED ALONG THE ROADWAY FACE FROM CENTERLINE OF POST TO CENTERLINE OF POST.

USE W-BEAM GUARDRAIL COMPONENTS OF SAME MATERIAL FOR ENTIRE JOB. FOR EXTENSIONS OR MODIFICATION OF EXISTING GUARDRAIL, W-BEAM GUARDRAIL COMPONENTS OF THE SAME TYPE AS THOSE EXISTING SHALL BE USED.

ANY BACKFILLING UNDER OR AROUND POST SHALL BE DAMP SAND THOROUGHLY TAMPED IN PLACE.

WOOD POSTS & WOOD BLOCKS SHALL BE EITHER DENSE NO. 1 STRUCTURAL OR BETTER 9.7f (1400 f) OR NO. 1 1350 f SOUTHERN PINE.

CONTRACTOR SHALL HAVE THE OPTION OF USING WOOD BLOCKOUTS FOR W-BEAM GUARDRAIL OR PLASTIC BLOCKOUTS, AS LONG AS BLOCKOUT USED MEETS REQUIREMENTS FOR MANUAL FOR ASSESSING SAFETY HARDWARE (MASH) FOR W-BEAM GUARDRAIL.

DELINEATORS SHALL BE MOUNTED AT 37.5' SPACING ON THE FRONT FACE OF THE GUARDRAIL. SPACING MAY BE REDUCED IN CURVES, AS DIRECTED BY THE ENGINEER. COLOR SHALL BE IN ACCORDANCE WITH THE MANUAL ON UNIFORM TRAFFIC CONTROL DEVICES. PAYMENT FOR DELINEATORS SHALL BE CONSIDERED INCLUDED IN THE PRICE BID PER LIN. FT. FOR GUARDRAIL.

DATE	REVISION	FILMED
05-19-22	REVISED GENERAL NOTES. ADDED DELINEATOR LOCATION.	
11-07-19	RENUMBERED AND RENAMED	
11-16-17	REVISED GENERAL NOTES AND RAISED GUARDRAIL HEIGHT 3"	
07-14-10	RAISED HEIGHT OF GUARDRAIL 1"	
10-15-09	ADDED REFERENCE TO MASH	
04-10-03	REVISED GENERAL NOTES	
08-22-02	REVISED DIMENSION ON WOOD & PLASTIC BLOCKOUT CONNECTIONS & STEEL POST	
11-16-01	REVISED WOOD BLOCKOUT & DETAILS OF WOOD LINE POST CONNECTIONS	
03-30-00	REMOVED GUARDRAIL AT BRIDGE ENDS	
01-12-00	ADDED PLASTIC BLOCKOUT	
08-12-98	REV. BLOCKOUTS TO WOOD. DELETED CONC. POST & REV. GENERAL NOTE. DELETED DET. OF GUARDRAIL REPLACE. BEHIND CURB & DET. OF POST PLACE. IN SOLID ROCK. & ADDED DETAILS OF STEEL LINE POST CONN. REMOVED BACK-UP PLATE. REVISED HOLES IN STEEL POLES	
04-03-97	REMOVED "LAP IN DIRECTION OF TRAFFIC" NOTE & PLACED ARROWS ON WASHERS	
10-18-96	REVISED WOOD POST NOTE	
06-02-94	ADDED ALT. STEEL POST SIZE	
08-05-93	REVISED STEEL POST SIZE	8-5-93
10-01-92	REDRAWN & REVISED	10-1-92
08-15-91	REVISED WASHER NOTE	8-15-91
08-02-90	REV. GEN. NOTE & DEPTH OF ANC. POST IN ROCK	8-2-90
07-15-88	REVISED SECTION 3 & GENERAL NOTES	
03-04-88	REV. ANCHOR POST, ELEV. NOTES & POST IN ROCK	780-3-4-88
10-30-87	REVISED WOOD LINE POST DETAIL	546-10-30-87
10-09-87	REDRAWN & REVISED	802-10-9-87

ARKANSAS STATE HIGHWAY COMMISSION

GUARDRAIL DETAILS

STANDARD DRAWING GR-6

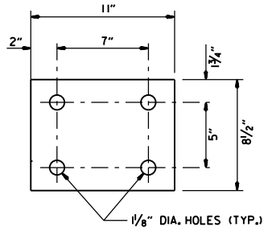

WASHER PLATE

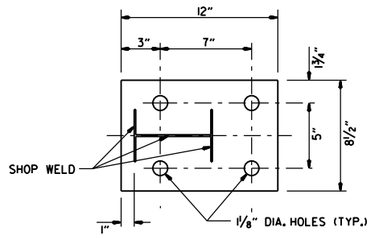

BASE PLATE

Note: Bolts, nuts, washers and plates shall be galvanized in accordance with Section 807 of the Standard Specifications.

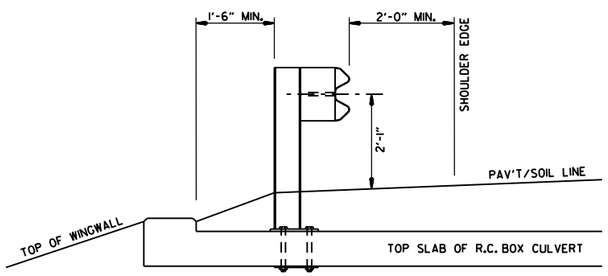

SECTION A-A

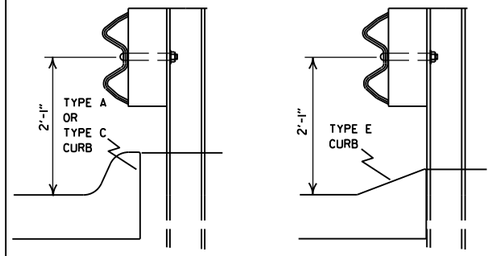

FOR DESIGN SPEEDS OF 50 MPH OR LESS

ALIGN FACE OF GUARDRAIL WITH FACE OF CURB.

FOR DESIGN SPEEDS OF 55 MPH OR MORE

PLACE GUARDRAIL POSTS AGAINST BACK OF CURB.

DETAIL OF GUARDRAIL PLACEMENT BEHIND CURB (W-BEAM)

FOR DESIGN SPEEDS OF 50 MPH OR LESS ALL CURB FACES, AS SHOWN ON STD. DRWG. CG-1, MAY BE USED. FOR DESIGN SPEEDS OF 55 MPH OR MORE TYPE "E" CURB FACE SHALL BE USED.

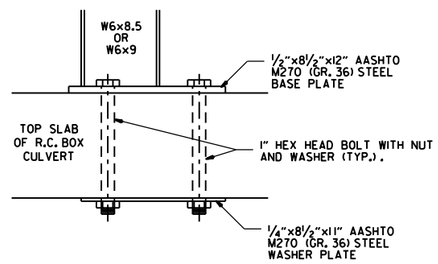

DETAIL OF CONNECTION

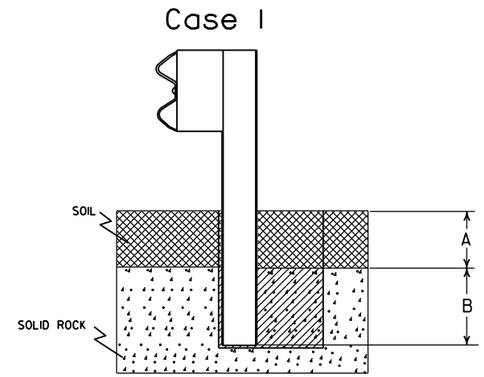

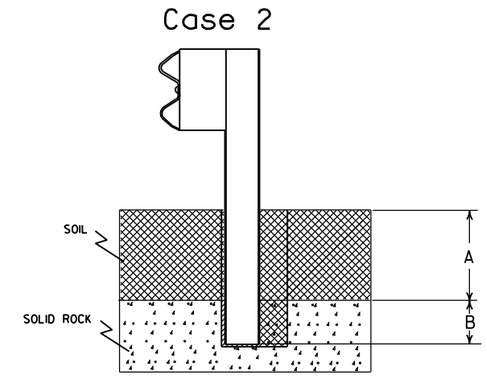

Plan View Steel Posts

Either hole configuration acceptable

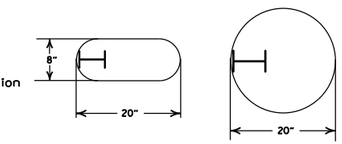

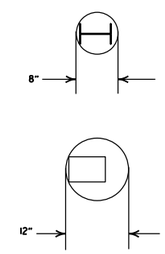

Plan View Wood Posts

Either hole configuration acceptable

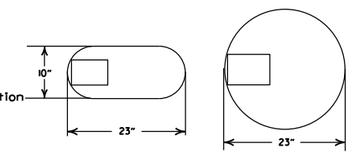

Notes: For overlying soil depths (A) ranging from 0 to 18", the depth of required drilling (B) is equal to 24".

Zone A:
Backfill according to Section 617.03(a).

Zone B:
Backfill hole in 6" lifts with material meeting the requirements of Section 802.02(c) - Alternate gradation. Compact to 95% maximum dry density per ASTM D-698.

Notes: For overlying soil depths (A) ranging from 18" to 44", the depth of required drilling (B) is equal to either 12" or 44" minus the depth of soil whichever is less.

Zone A & B:
Backfill according to Section 617.03(a).

DETAIL OF POST PLACEMENT IN SOLID ROCK (W-BEAM)

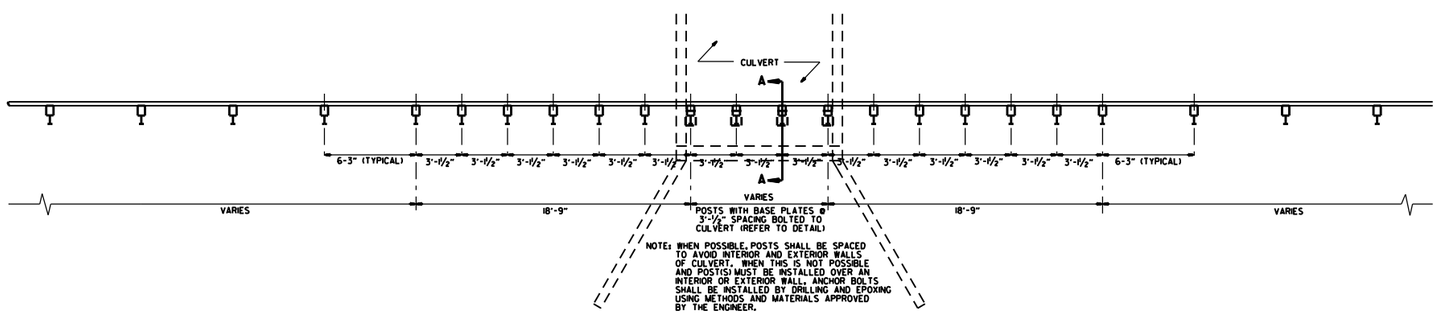

PLAN LAYOUT OF TYPE A GUARDRAIL AT LOW-FILL CULVERTS

NOTE: THIS DETAIL IS TO BE USED ONLY WHEN THE COVER OVER THE CULVERT DOES NOT PERMIT FULL EMBEDMENT OF GUARDRAIL POSTS AS SHOWN ON STD. DWG. GR-6.

DATE	REVISION	FILMED
11-07-19	RENUMBERED, RENAMED, REVISED REFERENCE	
11-16-17	REVISED GUARDRAIL HEIGHT	
07-14-10	RAISED HEIGHT OF GUARDRAIL 1"	
04-12-07	REVISED DETAIL OF GUARDRAIL PLACEMENT BEHIND CURB	
11-10-05	ADDED GUARDRAIL PLACEMENT BEHIND CURB; REVISED DETAIL OF CONNECTION	
11-18-04	REVISED POST PLACEMENT IN ROCK & CULVERT CONNECTION DETAILS. ADDED DETAIL FOR GUARDRAIL PLACEMENT AT LOW-FILL CULVERTS	
03-30-00	REMOVED CONCRETE INSERT ANCHOR	
08-12-98	CHANGED STEEL SPACER BLOCK TO WOOD BLOCKOUT. ADDED DET. OF GUARDRAIL CONNECTION TO R.C. BOX CULV'T., DELETED DET. OF STEEL LINE POST CONN. & ADDED DET. OF GUARDRAIL PLACE. BEHIND CURB & DET. OF POSTPLACE. IN SOLID ROCK	
04-03-96	PLACED ARROWS AT CUT STEEL WASHERS	4-3-96
10-18-96	REV. ASTM REF. TO AASHTO	
11-22-95	ADDED OPTIONAL HOLES	
06-02-94	REVISED ALTERNATE POST SIZE	
08-05-93	REVISED STEEL POST SIZE	
10-01-92	REDRAWN & REVISED	10-1-92
08-02-90	DEL. WASHER ON ANCHOR ASSEMBLY	8-2-90
07-15-88	CONFORMED TO 1988 SPECS	
03-04-88	REVISED ANCHOR NOTE	
10-30-87	REVISED ANCHOR ASSEMBLY	712-10-30-87
10-30-87	REVISED PLACEMENT BEHIND CURB	547-10-30-87
10-09-87	REDRAWN & REVISED	803-10-9-87

ARKANSAS STATE HIGHWAY COMMISSION

GUARDRAIL DETAILS

STANDARD DRAWING GR-7

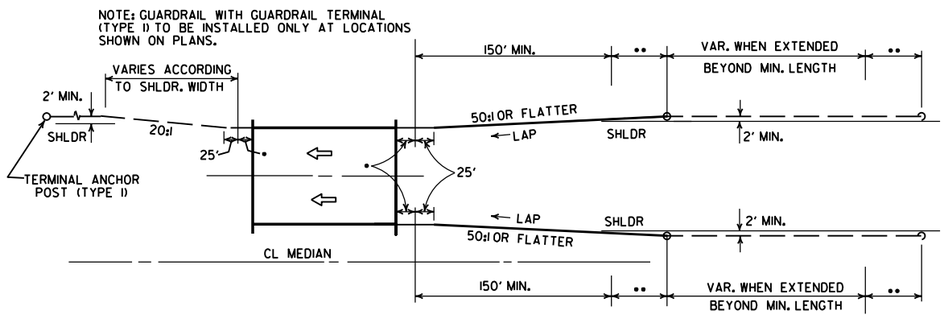

ONE-WAY TRAFFIC

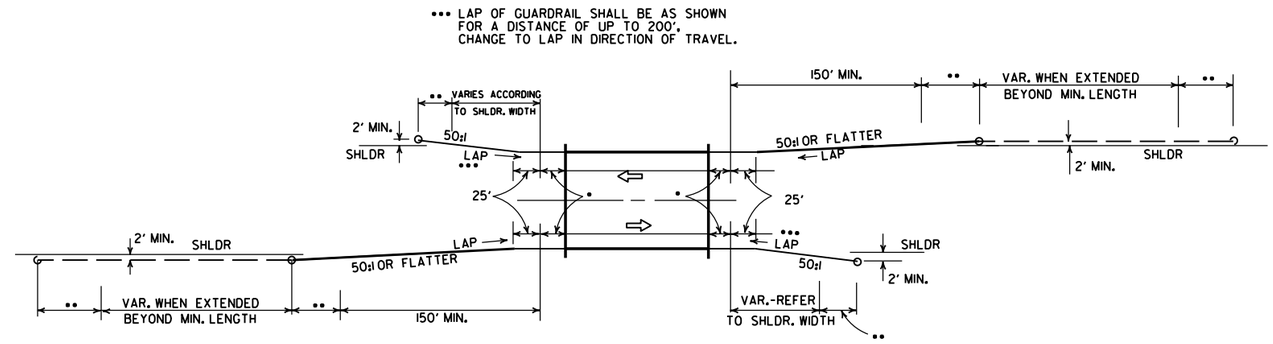

TWO-WAY TRAFFIC

METHODS OF INSTALLATION OF GUARDRAIL AT LESS THAN FULL SHOULDER WIDTH BRIDGES USING GUARDRAIL TERMINAL (TYPE 2)

••• LAP OF GUARDRAIL SHALL BE AS SHOWN FOR A DISTANCE OF UP TO 200'. CHANGE TO LAP IN DIRECTION OF TRAVEL.

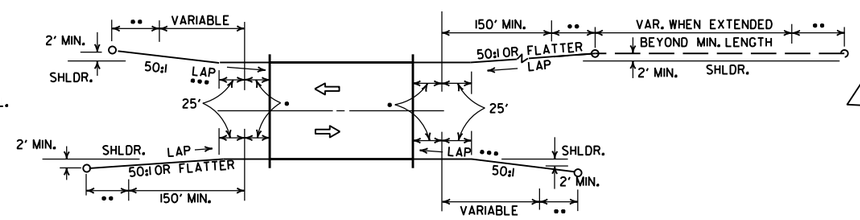

TWO-WAY TRAFFIC

NOTE: GUARDRAIL WITH GUARDRAIL TERMINAL (TYPE I) TO BE INSTALLED ONLY AT LOCATIONS SHOWN ON PLANS.

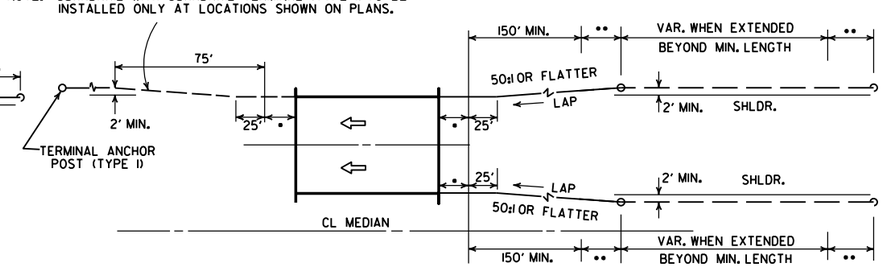

ONE-WAY TRAFFIC

METHOD OF INSTALLATION OF GUARDRAIL AT FULL SHOULDER WIDTH BRIDGES USING GUARDRAIL TERMINAL (TYPE 2)

••• LAP OF GUARDRAIL SHALL BE AS SHOWN FOR A DISTANCE OF UP TO 200'. CHANGE TO LAP IN DIRECTION OF TRAVEL.

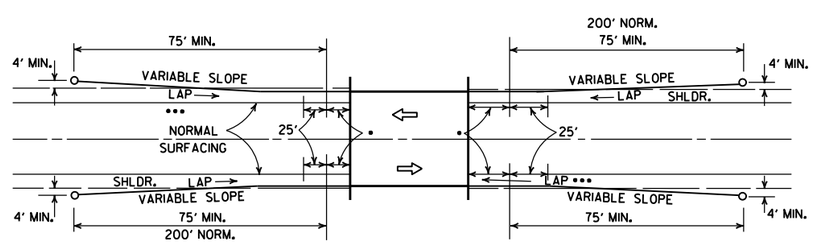

METHOD OF INSTALLATION OF GUARDRAIL USING GUARDRAIL TERMINAL (TYPE I) (FULL SHOULDER WIDTH OR LESS BRIDGES)

LEGEND

- • THRIE BEAM GUARDRAIL TERMINAL
- •• GUARDRAIL TERMINAL (TYPE 2)

DATE	REVISION	DATE FILM
11-07-19	RENUMBERED AND RENAMED	
4-17-08	REVISED LAYOUTS	
11-10-05	REMOVED GUARDRAIL NOTES AND DETAILS	
11-16-01	DELETED NOTE-METHOD OF INSTALLATION OF GUARDRAIL USING GUARDRAIL TERM. (TY. I)	
1-12-00	ADDED CONSTRUCTION NOTE	1-12-00
6-26-97	REVISED LAYOUT	
10-1-92	REDRAWN & REVISED	10-1-92
	ADDED NOTE	
10-9-87	REDRAWN & REVISED	

ARKANSAS STATE HIGHWAY COMMISSION

GUARDRAIL DETAILS

STANDARD DRAWING GR-8

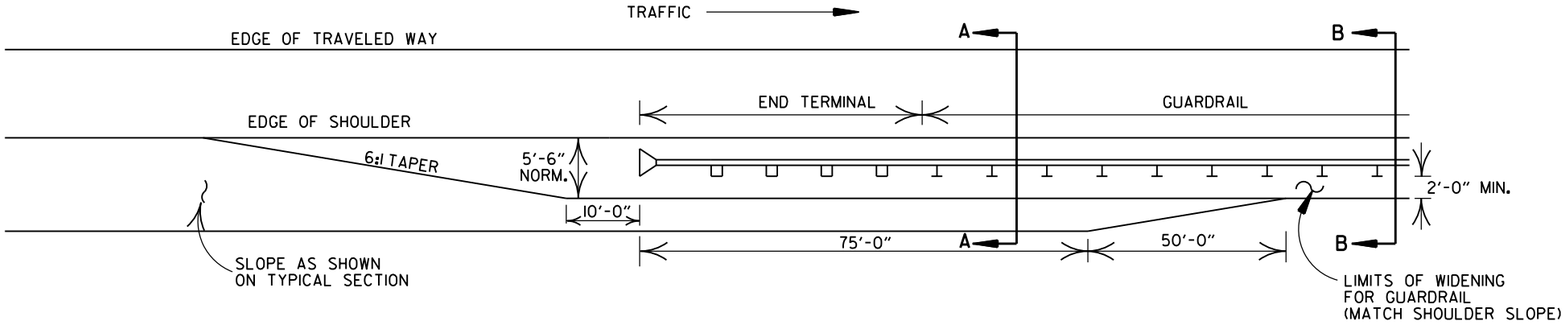

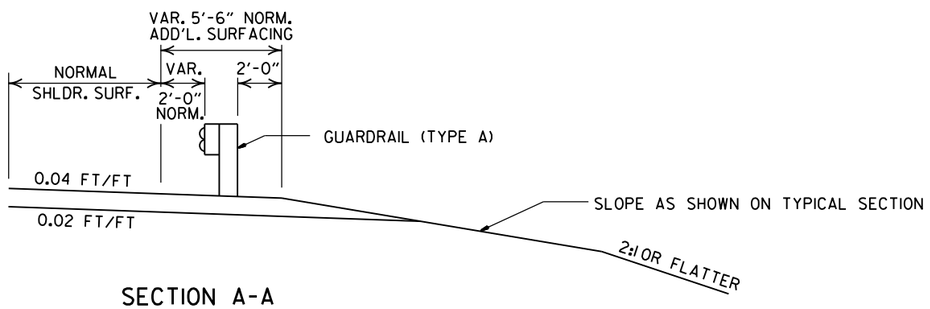

SECTION A-A

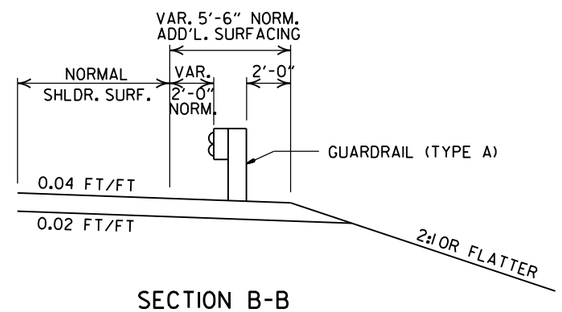

SECTION B-B

DETAILS OF WIDENING FOR GUARDRAIL

NOTE: NORMAL SECTION TO BE WIDENED APPROX. 5'-6" EACH SIDE TO SUPPORT GUARDRAIL.

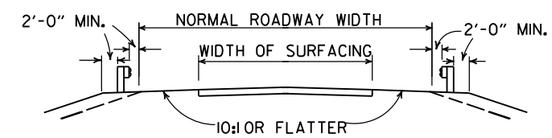

SECTION ON TANGENT

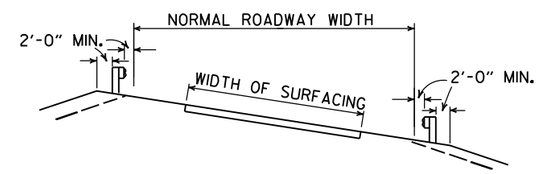

SECTION ON CURVE

DETAILS SHOWING POSITION OF GUARDRAIL ON HIGHWAY

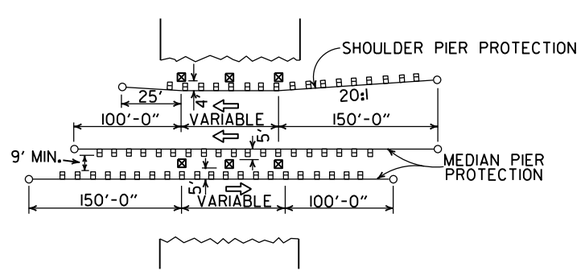

METHOD OF INSTALLATION OF GUARDRAIL AT FIXED OBSTACLE

DATE	REVISION	DATE FILM
11-07-19	RENUMBERED AND RENAMED	
4-17-08	MINOR REVISION	
11-10-05	DRAWN	

ARKANSAS STATE HIGHWAY COMMISSION

GUARDRAIL DETAILS

STANDARD DRAWING GR-9

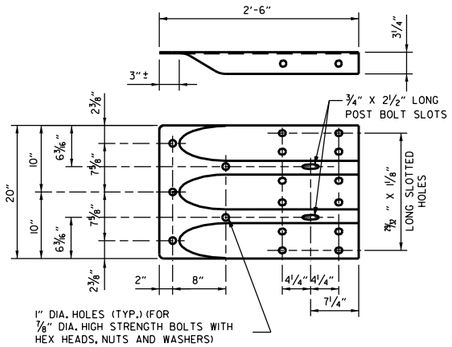

SPECIAL END SHOE

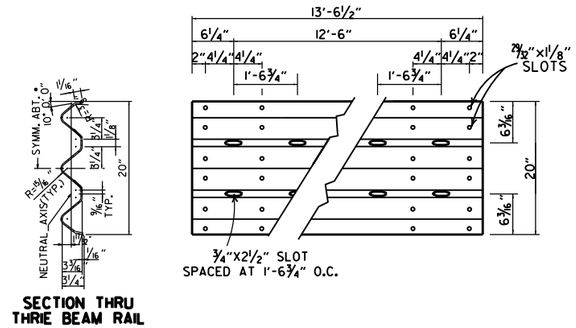

THRIE BEAM RAIL

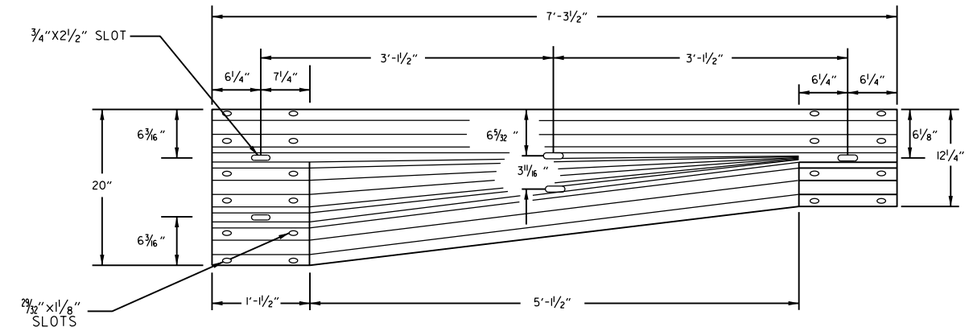

TRANSITION SECTION

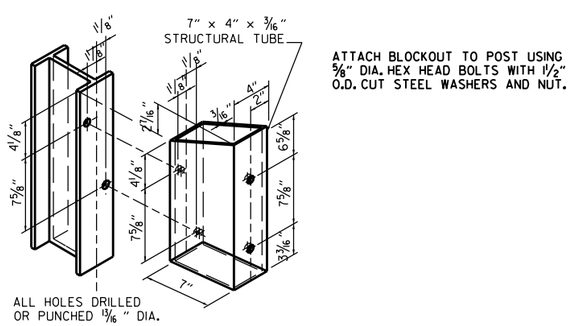

STRUCTURAL STEEL TUBING BLOCKOUT DETAIL

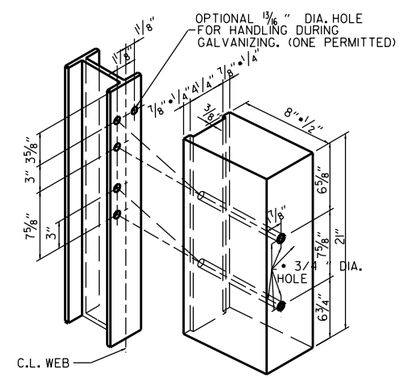

ALL HOLES 13/16" DIAMETER EXCEPT AS NOTED

HOLE PUNCHING DETAIL FOR STEEL POST & WOOD OR PLASTIC BLOCKOUTS

NOTE: BLOCKS SHALL BE THE SAME TYPE THROUGHOUT THE PROJECT LIMITS.

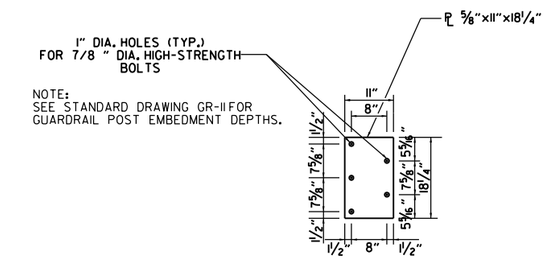

NOTE:
SEE STANDARD DRAWING GR-11 FOR GUARDRAIL POST EMBEDMENT DEPTHS.

CONNECTOR PLATE

CONNECTOR PLATE SHALL BE AASHTO M270, GR. 36 AND SHALL BE GALVANIZED AFTER FABRICATION. GALVANIZING SHALL CONFORM TO SUBSECTION 807.19 OF THE STANDARD SPECIFICATIONS. CONNECTOR PLATE TO BE BOLTED TO SPECIAL END SHOE USING 7/8" DIA. HIGH STRENGTH BOLTS, WITH THE HEADS PLACED ON THE TRAFFIC FACE. WASHERS SHALL BE USED UNDER THE HEAD AND NUT. BOLTS, NUTS AND WASHERS SHALL BE GALVANIZED AND SHALL CONFORM TO SUBSECTION 807.06.

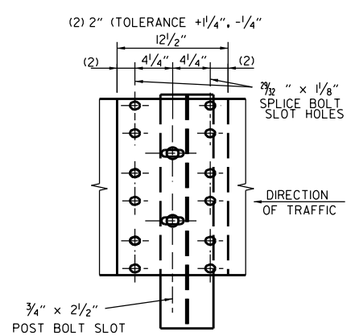

THRIE BEAM RAIL SPLICE AT POST

GENERAL NOTES:

THE THRIE BEAM RAIL, SPECIAL END SHOE, AND THE TRANSITION SECTION SHALL BE MADE OF STEEL AND SHALL BE 12 GAGE. ZINC COATING SHALL BE TYPE I.

RAIL POSTS SHALL BE SET PERPENDICULAR TO THE ROADWAY PROFILE GRADE AND VERTICALLY IN CROSS SECTION.

ALL BOLTS SHALL BE SUFFICIENT LENGTH TO EXTEND THROUGH THE FULL THICKNESS OF THE NUT AND NO MORE THAN 3*4" BEYOND IT.

ALL LAP SPLICES, INCLUDING SPECIAL END SHOES, SHALL BE MADE IN THE DIRECTION SHOWN ON STANDARD DRAWINGS GR-8 & GR-13.

REFER TO STD. DRWG. GR-11 FOR POST DETAILS.

USE THRIE BEAM GUARDRAIL COMPONENTS OF SAME MATERIAL FOR ENTIRE JOB.

THRIE BEAM POSTS SHALL BE SAME MATERIAL AS W-BEAM POSTS FOR ENTIRE JOB.

WOOD POSTS & WOOD BLOCKS SHALL BE EITHER DENSE NO. 1 STRUCTURAL OR BETTER 9.7f (1400 f) OR NO. 1 1350 f SOUTHERN PINE.

DATE	REVISION	FILMED
11-07-19	RENAMED AND REVISED REFERENCES	
11-16-17	REVISED TRANSITION SECTION, GUARD RAIL HEIGHT, AND GENERAL NOTES; MOVED THRIE BEAM GUARD RAIL CONNECTIONS AT BRIDGES ENDS TO STD. DRWG. GR-12	
07-14-10	RAISED HEIGHT OF W-BEAM 1"	
11-29-07	ADDED PLASTIC BLOCKOUTS	
11-10-05	ADDED NOTE FOR ATTACHING STEEL BLOCKOUT	
11-18-04	REVISED GENERAL NOTES	
10-9-03	REVISED GENERAL NOTES	
04-10-03	REVISED GENERAL NOTES	
08-22-02	REVISED NOTE (2)	
06-29-00	MOVED DIMENSION LINES	
05-18-00	ADDED NOTE	
03-30-00	DRAWN & ISSUED	

ARKANSAS STATE HIGHWAY COMMISSION

GUARDRAIL DETAILS

STANDARD DRAWING GR-10

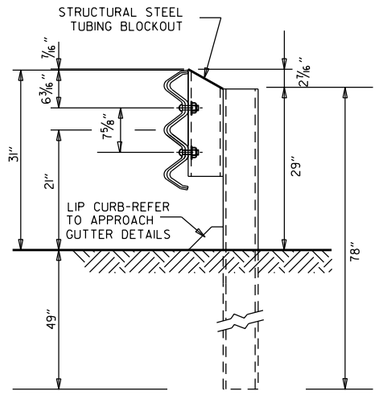

THRIE BEAM RAIL WITH STEEL TUBING BLOCKOUT
AND STEEL POST
POSTS 1-7

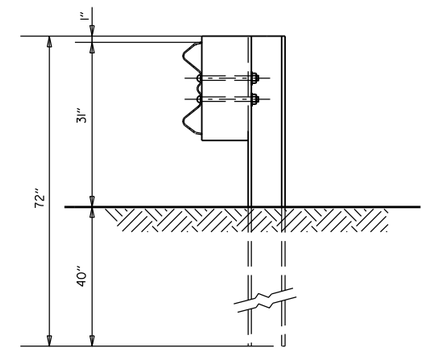

W-BEAM TO THRIE BEAM TRANSITION RAIL
WITH WOOD OR PLASTIC BLOCKOUT AND STEEL POST
POST 8

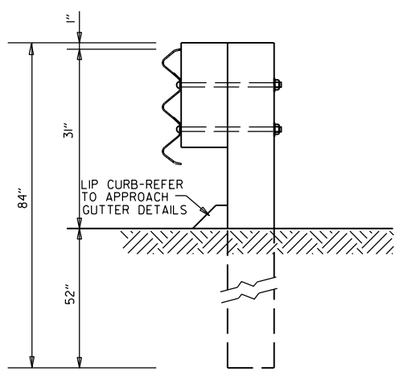

THRIE BEAM RAIL
WITH WOOD OR PLASTIC
BLOCKOUTS & WOOD POSTS
POSTS 1-6

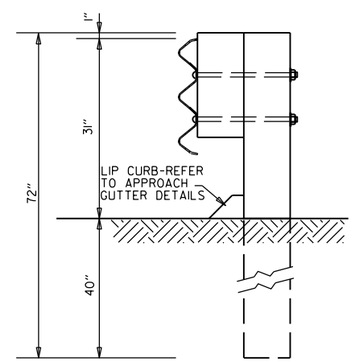

THRIE BEAM RAIL
WITH WOOD OR PLASTIC
BLOCKOUT & WOOD POST
POST 7

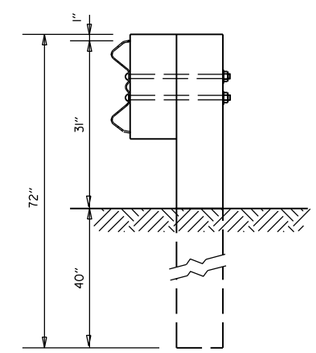

W-BEAM TO THRIE BEAM
TRANSITION RAIL WITH WOOD OR
PLASTIC BLOCKOUT & WOOD POST
POST 8

GENERAL NOTES:

RAIL POSTS SHALL BE SET PERPENDICULAR TO THE ROADWAY PROFILE GRADE AND VERTICALLY IN CROSS SECTION.

WOOD POSTS & WOOD BLOCKS SHALL BE EITHER DENSE NO. 1 STRUCTURAL OR BETTER 9.7f (1400 f) OR NO. 1 1350 f SOUTHERN PINE.

DATE	REVISION	FILMED
11-07-19	RENAMED	
11-16-17	REVISED GUARDRAIL HEIGHT, CHANGED STD. DWG. NUMBER FROM GR-10A TO GR-11	
07-14-10	REVISED POST 8 DIMENSIONS	
11-29-07	ADDED PLASTIC BLOCKOUTS	
08-22-02	REVISED LIP CURB NOTE	
03-30-00	DRAWN & ISSUED	

ARKANSAS STATE HIGHWAY COMMISSION

GUARDRAIL DETAILS

STANDARD DRAWING GR-11

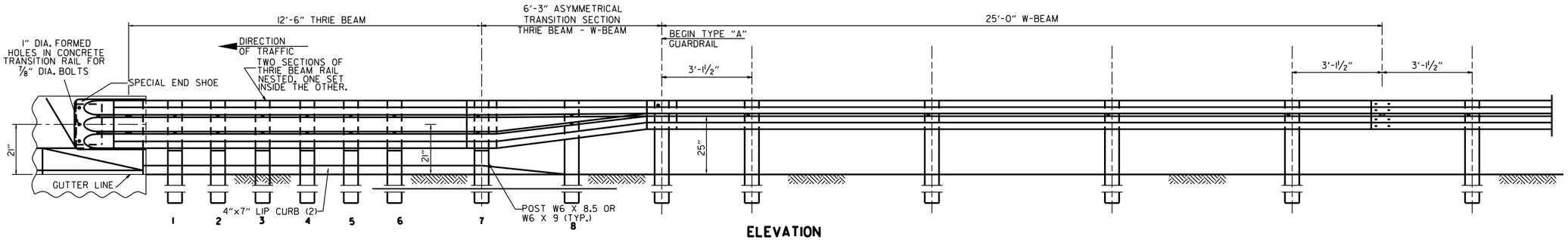

ELEVATION

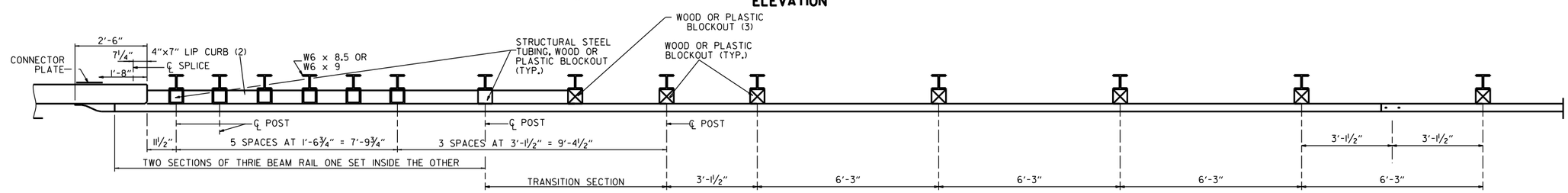

PLAN

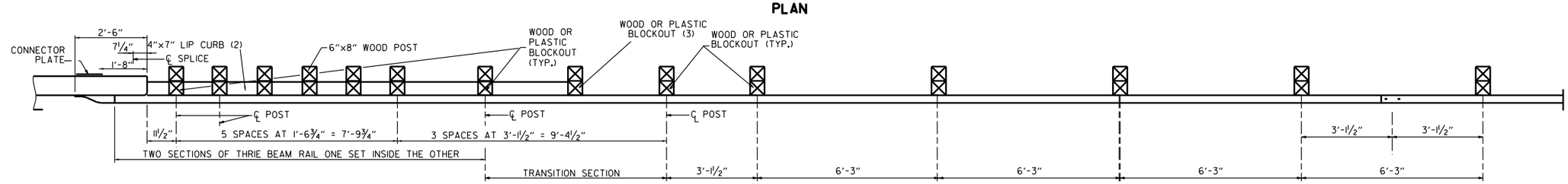

PLAN

(1) VERIFY BOLT SPACING FROM RAIL TRANSITION PRODUCER.
(2) REFER TO APPROACH GUTTER DETAILS.
(3) LENGTH OF BLOCKOUT ON POST 8 TO BE MODIFIED TO FIT RAIL WIDTH.

THRIE BEAM GUARDRAIL CONNECTION AT BRIDGE ENDS

GENERAL NOTES:

THE THRIE BEAM RAIL, SPECIAL END SHOE, AND THE TRANSITION SECTION SHALL BE MADE OF STEEL AND SHALL BE 12 GAGE. ZINC COATING SHALL BE TYPE I.

RAIL POSTS SHALL BE SET PERPENDICULAR TO THE ROADWAY PROFILE GRADE AND VERTICALLY IN CROSS SECTION.

ALL BOLTS SHALL BE SUFFICIENT LENGTH TO EXTEND THROUGH THE FULL THICKNESS OF THE NUT AND NO MORE THAN 3/4" BEYOND IT.

ALL LAP SPLICES, INCLUDING SPECIAL END SHOES, SHALL BE MADE IN THE DIRECTION SHOWN ON STANDARD DRAWINGS GR-8 & GR-13.

REFER TO STD. DRWG. GR-11 FOR POST DETAILS.

USE THRIE BEAM GUARDRAIL COMPONENTS OF SAME MATERIAL FOR ENTIRE JOB.

THRIE BEAM POSTS SHALL BE SAME MATERIAL AS W-BEAM POSTS FOR ENTIRE JOB.

POSTS SHALL NOT BE PLACED AT SPLICE LOCATIONS ALONG W-BEAM RAILS.

WOOD POSTS & WOOD BLOCKS SHALL BE EITHER DENSE NO. 1 STRUCTURAL OR BETTER 9.7f (1400 f) OR NO. 1 1350 f SOUTHERN PINE.

DATE	REVISION	FILMED
05-14-20	REVISED NOTES	
11-07-19	RENAMED & REVISED REFERENCES	
11-16-17	RE-DRAWN FROM STD. DWG. GR-10 & ISSUED	

ARKANSAS STATE HIGHWAY COMMISSION

GUARDRAIL DETAILS

STANDARD DRAWING GR-12

REINFORCED CONCRETE ARCH PIPE DIMENSIONS

EQUIV. DIA.	SPAN		RISE	
	AASHTO M 206	ARDOT NOMINAL	AASHTO M 206	ARDOT NOMINAL
INCHES	INCHES			
15	18	18	11	11
18	22	22	13½	14
21	26	26	15½	16
24	28½	29	18	18
30	36¼	36	22½	23
36	43⅜	44	26⅝	27
42	51⅛	51	31⅝	31
48	58½	59	36	36
54	65	65	40	40
60	73	73	45	45
72	88	88	54	54
84	102	102	62	62
90	115	115	72	72
96	122	122	77½	77
108	138	138	87⅛	87
120	154	154	96⅞	97
132	168¾	169	106½	107

THE MEASURED SPAN AND RISE SHALL NOT VARY MORE THAN ± 2 PERCENT FROM THE VALUES SPECIFIED BY AASHTO M206.

REINFORCED CONCRETE HORIZONTAL ELLIPTICAL PIPE DIMENSIONS

EQUIV. DIA.	AASHTO M 207	
	SPAN	RISE
INCHES	INCHES	
18	23	14
24	30	19
27	34	22
30	38	24
33	42	27
36	45	29
39	49	32
42	53	34
48	60	38
54	68	43
60	76	48
66	83	53
72	91	58
78	98	63
84	106	68

THE MEASURED SPAN AND RISE SHALL NOT VARY MORE THAN ± 2 PERCENT FROM THE VALUES SPECIFIED BY AASHTO M207.

CONSTRUCTION SEQUENCE

1. PLACE STRUCTURAL BEDDING MATERIAL TO GRADE. DO NOT COMPACT.
2. INSTALL PIPE TO GRADE.
3. COMPACT STRUCTURAL BEDDING OUTSIDE THE MIDDLE THIRD OF THE PIPE.
4. PLACE AND COMPACT THE HAUNCH AREA UP TO THE MIDDLE OF THE PIPE.
5. COMPLETE BACKFILL ACCORDING TO SUBSECTION 606.03.(f)(1).

NOTE: HAUNCH AND STRUCTURAL BEDDING MATERIAL WILL NOT BE PAID FOR SEPARATELY, BUT COMPENSATION WILL BE CONSIDERED TO BE INCLUDED IN THE PRICE BID PER LINEAR FOOT OF CONCRETE PIPE.

- LEGEND -

D_1 = NORMAL INSIDE DIAMETER OF PIPE
D_O = OUTSIDE DIAMETER OF PIPE
H = FILL COVER HEIGHT OVER PIPE (FEET)
MIN. = MINIMUM
= UNDISTURBED SOIL

INSTALLATION TYPE	MATERIAL REQUIREMENTS FOR HAUNCH AND STRUCTURAL BEDDING
TYPE 1	AGGREGATE BASE COURSE (CLASS 5 OR CLASS 7)
TYPE 2	SELECTED MATERIALS (CLASS SM-1, SM-2, OR SM-4) OR TYPE 1 INSTALLATION MATERIAL*
TYPE 3**	AASHTO CLASSIFICATION A-1 THRU A-6 SOIL OR TYPE 1 OR 2 INSTALLATION MATERIAL

* SM-3 WILL NOT BE ALLOWED.

** MATERIALS SHALL NOT INCLUDE ORGANIC MATERIALS OR STONES LARGER THAN 3 INCHES.

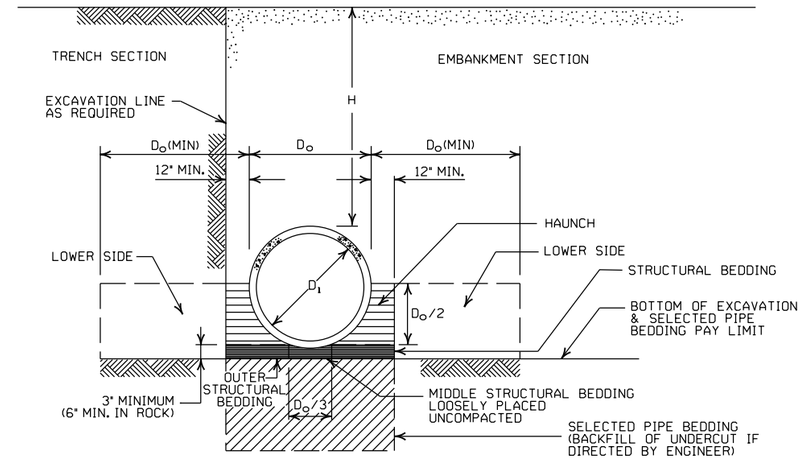

EMBANKMENT AND TRENCH INSTALLATIONS

1. MATERIAL IN THE HAUNCH AND OUTER STRUCTURAL BEDDING SHALL BE COMPACTED TO 95% OF THE MAXIMUM DENSITY ACCORDING TO THE TYPE OR CLASS OF MATERIAL USED.
2. FOR TRENCHES WITH WALLS OF NATURAL SOIL, THE DENSITY OF THE SOIL IN THE LOWER SIDE ZONE SHALL BE AS FIRM AS THE 95% DENSITY REQUIRED FOR THE HAUNCH. IF THE EXISTING SOIL DOES NOT MEET THIS CRITERIA, IT SHALL BE REMOVED AND RECOMPACTED TO 95% OF THE MAXIMUM DENSITY ACCORDING TO THE TYPE OF MATERIAL USED.
3. FOR EMBANKMENTS, THE MATERIAL IN THE LOWER SIDE ZONE SHALL BE COMPACTED TO 95% OF THE MAXIMUM DENSITY ACCORDING TO THE TYPE OR CLASS OF MATERIAL USED.

MINIMUM HEIGHT OF FILL "H" OVER CIRCULAR R.C. PIPE CULVERTS

	CLASS OF PIPE			
	CLASS III		CLASS IV	CLASS V
INSTALLATION TYPE	TYPE 1 OR 2	TYPE 3	ALL	ALL
PIPE ID (IN.)	FEET			
12-15	2	2.5	2	1
18-24	2.5	3	2	1
27-33	3	4	2	1
36-42	3.5	5	2	1
48	4.5	5.5	2	1
54-60	5	7	2	1
66-78	6	8	2	1
84-108	7.5	8	2	1

NOTE: FOR MINIMUM COVER VALUES, "H" SHALL INCLUDE A MINIMUM OF 12" OF PAVEMENT AND/OR BASE.

MAXIMUM HEIGHT OF FILL "H" OVER CIRCULAR R.C. PIPE CULVERTS

INSTALLATION TYPE	CLASS OF PIPE		
	CLASS III	CLASS IV	CLASS V
	FEET		
TYPE 1	21	32	50
TYPE 2	16	25	39
TYPE 3	12	20	30

NOTE: IF FILL HEIGHT EXCEEDS 50 FEET, A SPECIAL DESIGN CONCRETE PIPE WILL BE REQUIRED USING TYPE 1 INSTALLATION.

MINIMUM HEIGHT OF FILL "H" OVER R.C. ARCH & HORIZONTAL ELLIPTICAL PIPE CULVERTS

INSTALLATION TYPE	CLASS OF PIPE	
	CLASS III	CLASS IV
	FEET	
TYPE 2 OR TYPE 3	2.5	1.5

NOTE: TYPE 1 INSTALLATION WILL NOT BE ALLOWED FOR ARCH & HORIZONTAL ELLIPTICAL PIPE CULVERTS.

NOTE: FOR MINIMUM COVER VALUES, "H" SHALL INCLUDE A MINIMUM OF 12" OF PAVEMENT AND/OR BASE.

MAXIMUM HEIGHT OF FILL "H" OVER R.C. ARCH & HORIZONTAL ELLIPTICAL PIPE CULVERTS

INSTALLATION TYPE	CLASS OF PIPE	
	CLASS III	CLASS IV
	FEET	
TYPE 2	13	21
TYPE 3	10	16

NOTE: TYPE 1 INSTALLATION WILL NOT BE ALLOWED FOR ARCH & HORIZONTAL ELLIPTICAL PIPE CULVERTS.

GENERAL NOTES

1. CONCRETE PIPE CULVERT CONSTRUCTION SHALL CONFORM TO ARKANSAS DEPARTMENT OF TRANSPORTATION STANDARD SPECIFICATIONS FOR HIGHWAY CONSTRUCTION (CURRENT EDITION), WITH APPLICABLE SUPPLEMENTAL SPECIFICATIONS AND SPECIAL PROVISIONS. UNLESS OTHERWISE NOTED IN THE PLANS, SECTION AND SUBSECTION REFER TO THE STANDARD CONSTRUCTION SPECIFICATIONS.
2. CONCRETE PIPE CULVERT DESIGN SHALL CONFORM TO AASHTO LRFD BRIDGE DESIGN SPECIFICATIONS, FIFTH EDITION (2010) WITH 2010 INTERIMS.
3. ALL PIPE SHALL CONFORM TO SECTION 606. CIRCULAR R.C. PIPE CULVERTS SHALL CONFORM TO AASHTO M170. R.C. ARCH PIPE CULVERTS SHALL CONFORM TO AASHTO M206 AND HORIZONTAL ELLIPTICAL PIPE CULVERTS SHALL CONFORM TO AASHTO M207.
4. ALL PIPE SHALL BE PROTECTED DURING CONSTRUCTION BY A COVER SUFFICIENT TO PREVENT DAMAGE FROM PASSAGE OF EQUIPMENT.
5. THE MINIMUM TRENCH WIDTH SHALL BE THE OUTSIDE DIAMETER OF THE PIPE PLUS 24 INCHES. THE MAXIMUM ALLOWABLE TRENCH WIDTH SHALL BE THE MINIMUM WIDTH PRACTICABLE FOR WORKING CONDITIONS.
6. MULTIPLE PIPE CULVERTS SHALL BE INSTALLED WITH A MINIMUM CLEARANCE OF 24 INCHES BETWEEN STRINGS OF PIPE. REFER TO STD. DWG. FES-2 FOR MINIMUM CLEARANCE WHERE FLARED END SECTIONS ARE USED.
7. IMPERVIOUS MATERIAL SHOULD BE PLACED AS DIRECTED BY THE ENGINEER AT THE ENDS OF THE CULVERT TO PREVENT LOSS OF STRUCTURAL BEDDING WHEN PERVIOUS MATERIAL IS USED FOR STRUCTURAL BEDDING AND/OR BACKFILL.
8. NOT MORE THAN ONE LIFTING HOLE MAY BE PROVIDED IN CONCRETE PIPE TO FACILITATE HANDLING. HOLE MAY BE CAST IN PLACE, CUT INTO THE FRESH CONCRETE AFTER FORMS ARE REMOVED, OR DRILLED. THE HOLE SHALL NOT BE MORE THAN TWO INCHES IN DIAMETER OR TWO INCHES SQUARE. CUTTING OR DISPLACEMENT OF REINFORCEMENT WILL NOT BE PERMITTED. SPALLED AREAS AROUND THE HOLE SHALL BE REPAIRED IN A WORKMANLIKE MANNER. LIFTING HOLE SHALL BE FILLED WITH MORTAR, CONCRETE, OR OTHER METHOD AS APPROVED BY THE ENGINEER.
9. WHEN DIRECTED BY THE ENGINEER, UNSUITABLE MATERIAL THAT IS ENCOUNTERED AT THE BOTTOM OF THE EXCAVATED TRENCH (BELOW THE AREA IDENTIFIED AS "STRUCTURAL BEDDING" ABOVE) WILL BE EXCAVATED AND REPLACED WITH SELECTED PIPE BEDDING. THE QUANTITY OF MATERIAL REQUIRED TO BACKFILL THE UNDERCUT AREA UP TO THE SELECTED PIPE BEDDING PAY LIMIT DESIGNATED ABOVE WILL BE MEASURED AND PAID FOR AS "SELECTED PIPE BEDDING."
10. WHEN THE EXISTING MATERIAL EXCAVATED FOR THE PIPE TRENCH IS DETERMINED BY THE ENGINEER TO BE UNSUITABLE FOR BACKFILLING THE PIPE (ABOVE THE AREA IDENTIFIED ABOVE AS THE HAUNCH), BORROW MATERIAL OR MATERIAL FROM THE ROADWAY EXCAVATION WILL BE USED TO BACKFILL THE PIPE. IF SUITABLE MATERIAL IS NOT AVAILABLE, THE ENGINEER MAY AUTHORIZE THE USE OF "SELECTED PIPE BACKFILL."

DATE	REVISION	DATE FILMED
2-27-14	REVISED GENERAL NOTE 1.	
12-15-11	REVISED FOR LRFD DESIGN SPECIFICATIONS	
5-18-00	REVISED TYPE 3 BEDDING & ADDED NOTE	
3-30-00	REVISED INSTALLATIONS	
11-06-97	ISSUED	

ARKANSAS STATE HIGHWAY COMMISSION

CONCRETE PIPE CULVERT FILL HEIGHTS & BEDDING

STANDARD DRAWING PCC-1

CORRUGATED STEEL PIPE (ROUND)

PIPE DIAMETER (INCHES)	① MINUMUM COVER TOP OF PIPE TO TOP OF GROUND "H" (FEET)	MAX. FILL HEIGHT "H" ABOVE TOP OF PIPE (FEET)				
		METAL THICKNESS (INCHES)				
		0.064	0.079	0.109	0.138	0.168
2⅔ INCH BY ½ INCH CORRUGATION RIVETED, WELDED, OR HELICAL LOCK-SEAM						
12	1	84	91			
15	1	67	73			
18	1	56	61			
24	1	42	46	59		
30	2	34	36	47		
36	2		30	39	41	
42	2		43	67	70	73
48	2		37	58	61	64
② 3 INCH BY 1 INCH OR 5 INCH BY 1 INCH CORRUGATION RIVETED, WELDED, BOLTED, OR HELICAL LOCK-SEAM						
36	1	48	60	88	111	118
42	1	41	51	72	90	102
48	1	36	45	64	77	85
54	2	32	40	59	71	79
60	2	29	36	53	64	71
66	2	26	33	47	58	64
72	2	24	30	44	53	59
78	2		28	41	49	54
84	2		26	38	45	51
90	2		24	35	43	45
96	2		22	33	40	44
102	2			31	38	42
108	2			30	35	39
114	2			28	34	37
120	2			27	32	35

CORRUGATED ALUMINUM PIPE (ROUND)

PIPE DIAMETER (INCHES)	① MINUMUM COVER TOP OF PIPE TO TOP OF GROUND "H" (FEET)	MAX. FILL HEIGHT "H" ABOVE TOP OF PIPE (FEET)				
		METAL THICKNESS IN INCHES				
		0.060	0.075	0.105	0.135	0.164
		2 ⅔ INCH BY ½ INCH CORRUGATION RIVETED OR HELICAL LOCK-SEAM				
12	1	45	45			
18	2	30	30	52		
24	2	22	22	39	41	
30	2		18	31	32	34
36	2.5		15	26	27	28
42	2			43	43	44
48	2			40	41	43
54	2			35	37	38
60	2				33	34
66	2					31
72	2					29

CORRUGATED METAL PIPE ARCHES

EQUIV. DIA. (INCHES)	PIPE DIMENSION SPAN X RISE (INCHES)	MINUMUM CORNER RADIUS (INCHES)	STEEL				ALUMINUM		
			MIN. THICKNESS REQUIRED INCHES	① MIN. HEIGHT OF FILL, "H" (FT.)		MAX. HEIGHT OF FILL, "H" (FT.)	MIN. THICKNESS REQUIRED INCHES	① MIN. HEIGHT OF FILL, "H" (FT.)	MAX. HEIGHT OF FILL, "H" (FT.)
				INSTALLATION		INSTALLATION		INSTALLATION	INSTALLATION
				TYPE 1		TYPE 1		TYPE 1	TYPE 1
			2 ⅔ INCH BY ½ INCH CORRUGATION RIVETED, WELDED, OR HELICAL LOCK-SEAM				2 ⅔ INCH BY ½ INCH CORRUGATION RIVETED OR HELICAL LOCK-SEAM		
15	17x13	3	0.064	2		15	0.060	2	15
18	21x15	3	0.064	2		15	0.060	2	15
21	24x18	3	0.064	2.25		15	0.060	2.25	15
24	28x20	3	0.064	2.5		15	0.075	2.5	15
30	35x24	3	0.079	3		12	0.075	3	12
36	42x29	3½	0.079	3		12	0.105	3	12
42	49x33	4	0.079	3		12	0.105	3	12
48	57x38	5	0.109	3		13	0.135	3	13
54	64x43	6	0.109	3		14	0.135	3	14
60	71x47	7	0.138	3		15	0.164	3	15
66	77x52	8	0.168	3		15			
72	83x57	9	0.168	3		15			
			② 3 INCH BY 1 INCH OR 5 INCH BY 1 INCH CORRUGATION RIVETED, WELDED, OR HELICAL LOCK-SEAM						
				INSTALLATION		INSTALLATION			
				TYPE 2	TYPE 1	TYPE 2 TYPE 1			
36	40x31	5	0.079	3	2	12 15			
42	46x36	6	0.079	3	2	13 15			
48	53x41	7	0.079	3	2	13 15			
54	60x46	8	0.079	3	2	13 15			
60	66x51	9	0.079	3	2	13 15			
66	73x55	12	0.079	3	2	15 15			
72	81x59	14	0.079	3	2	15 15			
78	87x63	14	0.079	3	2	15 15			
84	95x67	16	0.109	3	2	15 15			
90	103x71	16	0.109	3	2	15 15			
96	112x75	18	0.109	3	2	15 15			
102	117x79	18	0.109	3	2	15 15			
108	128x83	18	0.138	3	2	15 15			

CONSTRUCTION SEQUENCE

1. PLACE STRUCTURAL BEDDING MATERIAL TO GRADE. DO NOT COMPACT.
2. INSTALL PIPE TO GRADE.
3. COMPACT STRUCTURAL BEDDING OUTSIDE THE MIDDLE THIRD OF THE PIPE.
4. COMPLETE STRUCTURAL BACKFILL OPERATION BY WORKING FROM SIDE TO SIDE OF THE PIPE. THE SIDE TO SIDE STRUCTURAL BACKFILL DIFFERENTIAL SHALL NOT EXCEED 24 INCHES OR 1/3 THE SIZE OF THE PIPE, WHICHEVER IS LESS.

NOTE: STRUCTURAL BACKFILL AND STRUCTURAL BEDDING MATERIAL WILL NOT BE PAID FOR SEPARATELY, BUT COMPENSATION WILL BE CONSIDERED TO BE INCLUDED IN THE PRICE BID PER LINEAR FOOT OF METAL PIPE.

INSTALLATION TYPE	MATERIAL REQUIREMENTS FOR STRUCTURAL BACKFILL AND STRUCTURAL BEDDING
TYPE 1	AGGREGATE BASE COURSE (CLASS 4, 5, 6, OR 7)
TYPE 2	SELECTED MATERIALS (CLASS SM-1, SM-2, OR SM-4) OR TYPE 1 INSTALLATION MATERIAL ③

③ SM-3 WILL NOT BE ALLOWED.

EQUIVALENT METAL THICKNESSES AND GAUGES

METAL THICKNESS IN INCHES			GAUGE NUMBER
STEEL			
ZINC COATED	UNCOATED	ALUMINUM	
0.064	0.0598	0.060	16
0.079	0.0747	0.075	14
0.109	0.1046	0.105	12
0.138	0.1345	0.135	10
0.168	0.1644	0.164	8

- LEGEND -

D_o = OUTSIDE DIAMETER OF PIPE
MAX. = MAXIMUM
MIN. = MINIMUM
= STRUCTURAL BACKFILL MATERIAL
= UNDISTURBED SOIL
EQUIV. DIA. = EQUIVALENT DIAMETER
H = FILL COVER HEIGHT OVER PIPE (FEET)

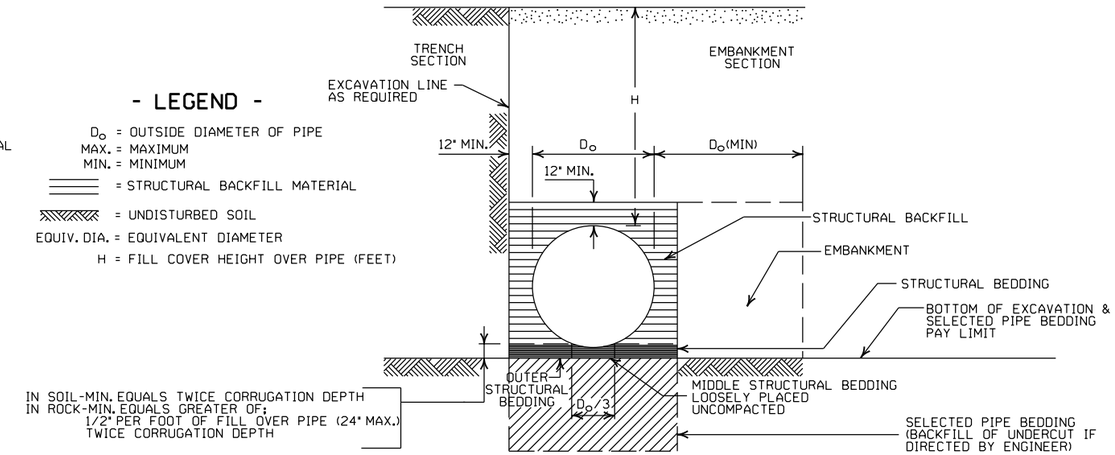

EMBANKMENT AND TRENCH INSTALLATIONS

1. STRUCTURAL BACKFILL, EMBANKMENT, AND OUTER STRUCTURAL BEDDING MATERIAL SHALL BE COMPACTED TO 95% OF THE MAXIMUM DENSITY ACCORDING TO THE TYPE OR CLASS OF MATERIAL USED.
2. INSTALLATION TYPE 1 OR 2 MAY BE USED FOR CORRUGATED STEEL OR ALUMINUM PIPE (ROUND).
3. INSTALALTION TYPE 1 SHALL BE USED FOR CORRUGATED STEEL OR ALUMINUM PIPE ARCHES WITH 2⅔" X ½" CORRUGATION.
4. INSTALLATION TYPE 1 OR 2 MAY BE USED FOR CORRUGATED STEEL OR ALUMINUM PIPE ARCHES WITH 3" X 1" OR 5" X 1" CORRUGATION.

GENERAL NOTES

1. METAL PIPE CULVERT CONSTRUCTION SHALL CONFORM TO ARKANSAS DEPARTMENT OF TRANSPORTATION STANDARD SPECIFICATIONS FOR HIGHWAY CONSTRUCTION (CURRENT EDITION), WITH APPLICABLE SUPPLEMENTAL SPECIFICATIONS AND SPECIAL PROVISIONS. UNLESS OTHERWISE NOTED IN THE PLANS, SECTION AND SUBSECTION REFER TO THE STANDARD CONSTRUCTION SPECIFICATIONS.
2. METAL PIPE CULVERT DESIGN SHALL CONFORM TO AASHTO LRFD BRIDGE DESIGN SPECIFICATIONS, FIFTH EDITION (2010) WITH 2010 INTERIMS.
3. METAL PIPE CULVERT MATERIALS AND INSTALLATIONS SHALL CONFORM TO SECTION 606 AND JOB SPECIAL PROVISION "METAL PIPE".
4. ALL PIPE SHALL BE PROTECTED DURING CONSTRUCTION BY A COVER SUFFICIENT TO PREVENT DAMAGE FROM PASSAGE OF EQUIPMENT.
5. THE MINIMUM TRENCH WIDTH SHALL BE THE OUTSIDE DIAMETER OF THE PIPE PLUS 24 INCHES. THE MAXIMUM ALLOWABLE TRENCH WIDTH SHALL BE THE MINIMUM WIDTH PRACTICABLE FOR WORKING CONDITIONS.
6. MULTIPLE PIPE CULVERTS SHALL BE INSTALLED WITH A MINIMUM CLEARANCE OF 24 INCHES BETWEEN STRINGS OF PIPE. REFER TO STD. DWG. FES-2 FOR MINIMUM CLEARANCE WHERE FLARED END SECTIONS ARE USED.
7. IMPERVIOUS MATERIAL SHOULD BE PLACED AS DIRECTED BY THE ENGINEER AT THE ENDS OF THE CULVERT TO PREVENT LOSS OF STRUCTURAL BEDDING WHEN PERVIOUS MATERIAL IS USED FOR STRUCTURAL BEDDING AND/OR BACKFILL.
8. WHEN DIRECTED BY THE ENGINEER, UNSUITABLE MATERIAL THAT IS ENCOUNTERED AT THE BOTTOM OF THE EXCAVATED TRENCH (BELOW THE AREA IDENTIFIED AS "STRUCTURAL BEDDING" ABOVE) WILL BE EXCAVATED AND REPLACED WITH SELECTED PIPE BEDDING. THE QUANTITY OF MATERIAL REQUIRED TO BACKFILL THE UNDERCUT AREA UP TO THE SELECTED PIPE BEDDING PAY LIMIT DESIGNATED ABOVE WILL BE MEASURED AND PAID FOR AS "SELECTED PIPE BEDDING."
9. WHEN THE EXISTING MATERIAL EXCAVATED FOR THE PIPE TRENCH IS DETERMINED BY THE ENGINEER TO BE UNSUITABLE FOR BACKFILLING THE PIPE (ABOVE THE AREA IDENTIFIED AS STRUCTURAL BACKFILL), BORROW MATERIAL OR MATERIAL FROM THE ROADWAY EXCAVATION WILL BE USED TO BACKFILL THE PIPE. IF SUITABLE MATERIAL IS NOT AVAILABLE, THE ENGINEER MAY AUTHORIZE THE USE OF "SELECTED PIPE BACKFILL."

① FOR MINIMUM COVER VALUES, "H" SHALL INCLUDE A MINIMUM 12" OF PAVEMENT AND/OR BASE.

② WHERE THE STANDARD 2 2/3"× ½" CORRUGATION AND GAUGE IS SPECIFIED FOR A GIVEN DIAMETER, A PIPE OF THE SAME DIAMETER WITH A 3" × 1" OR 5" × 1" CORRUGATION MAY BE SUBSTITUTED, PROVIDING IT IS GAUGED FOR A FILL HEIGHT CONDITION EQUAL TO OR GREATER THAN THE MAXIMUM FILL HEIGHT CONDITION FOR THE SPECIFIED GAUGE AND CORRUGATION.

DATE	REVISION	DATE FILMED
2-27-14	REVISED GENERAL NOTE 1.	
12-15-11	REVISED FOR LRFD DESIGN SPECS	
3-30-00	REVISED INSTALLATIONS	
11-06-97	ISSUED	

ARKANSAS STATE HIGHWAY COMMISSION

METAL PIPE CULVERT FILL HEIGHTS & BEDDING

STANDARD DRAWING PCM-1

INSTALLATION TYPE	•• MATERIAL REQUIREMENTS FOR STRUCTURAL BACKFILL AND STRUCTURAL BEDDING
TYPE 2	•SELECTED MATERIALS (CLASS SM-1, SM-2 OR SM-4)

• AGGREGATE BASE COURSE (CLASS 4, 5, 6, OR 7) MAY BE USED IN LIEU OF SELECTED MATERIAL.

SM3 WILL NOT BE ALLOWED.

•• STRUCTURAL BEDDING MATERIAL SHALL HAVE A MAXIMUM PARTICLE SIZE OF 1 INCH. STRUCTURAL BACKFILL MATERIAL SHALL BE FREE OF ORGANIC MATERIAL, STONES LARGER THAN 1.50 INCH IN GREATEST DIMENSION, OR FROZEN LUMPS.

STRUCTURAL BACKFILL AND STRUCTURAL BEDDING MATERIAL WILL NOT BE PAID FOR SEPARATELY, BUT COMPENSATION WILL BE CONSIDERED TO BE INCLUDED IN THE PRICE BID PER LINEAR FOOT OF HDPE PIPE.

MINIMUM TRENCH WIDTH BASED ON FILL HEIGHT "H"

PIPE DIAMETER	TRENCH WIDTH (FEET) "H" < 10'-0"	TRENCH WIDTH (FEET) "H" >OR= 10'-0"
18"	4'-6"	4'-6"
24"	5'-0"	6'-0"
30"	5'-6"	7'-6"
36"	6'-0"	9'-0"
42"	7'-0"	10'-6"
48"	8'-0"	12'-0"

①NOTE:
18" MIN. (18" - 30" DIAMETERS)
24" MIN. (36" - 48" DIAMETERS)

MINIMUM COVER VALUES, "H" SHALL INCLUDE A MINIMUM 12" OF PAVEMENT AND/OR BASE.

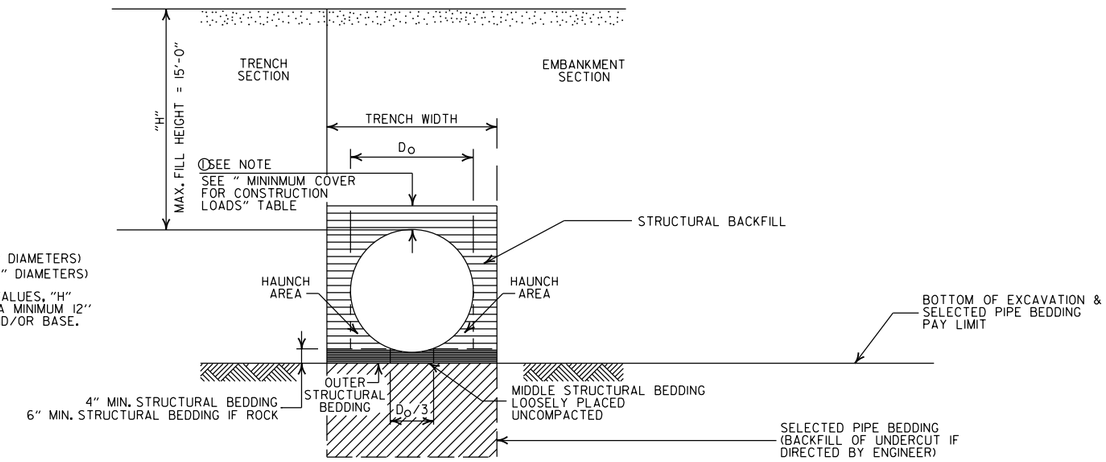

TYPE 2 EMBANKMENT AND TRENCH INSTALLATIONS

1. STRUCTURAL BACKFILL, EMBANKMENT, AND OUTER STRUCTURAL BEDDING MATERIAL SHALL BE COMPACTED TO 95% OF THE MAXIMUM DENSITY ACCORDING TO THE TYPE OR CLASS OF MATERIAL USED.

MULTIPLE INSTALLATION OF HIGH DENSITY POLYETHYLENE PIPES

PIPE DIAMETER	CLEAR DISTANCE BETWEEN PIPES
18"	1'-6"
24"	2'-0"
30"	2'-6"
36"	3'-0"
42"	3'-6"
48"	4'-0"

MINIMUM COVER FOR CONSTRUCTION LOADS

PIPE DIAMETER	② MIN. COVER (FEET) FOR INDICATED CONSTRUCTION LOADS 18.0-50.0 (KIPS)	50.0-75.0 (KIPS)	75.0-110.0 (KIPS)	110.0-175.0 (KIPS)
36" OR LESS	2'-0"	2'-6"	3'-0"	3'-0"
42" OR GREATER	3'-0"	3'-0"	3'-6"	4'-0"

②MINIMUM COVER SHALL BE MEASURED FROM TOP OF PIPE TO TOP OF THE MAINTAINED CONSTRUCTION ROADWAY SURFACE. THE SURFACE SHALL BE MAINTAINED.

CONSTRUCTION SEQUENCE

1. PLACE STRUCTURAL BEDDING MATERIAL TO GRADE. DO NOT COMPACT.
2. INSTALL PIPE TO GRADE.
3. COMPACT STRUCTURAL BEDDING OUTSIDE THE MIDDLE THIRD OF THE PIPE.
4. THE STRUCTURAL BACKFILL SHALL BE PLACED AND COMPACTED IN LAYERS NOT EXCEEDING 8". THE LAYERS SHALL BE BROUGHT UP EVENLY AND SIMULTANEOUSLY TO THE ELEVATION OF THE MINIMUM COVER.
5. PIPE INSTALLATION MAY REQUIRE THE USE OF RESTRAINTS, WEIGHTING OR OTHER APPROVED METHODS IN ORDER TO HELP MAINTAIN GRADE AND ALIGNMENT.

GENERAL NOTES

1. PIPE SHALL CONFORM TO AASHTO M294, TYPE S. INSTALLATION SHALL CONFORM TO JOB SPECIAL PROVISION "PLASTIC PIPE" AND SECTION 606 OF THE STANDARD SPECIFICIATIONS FOR HIGHWAY CONSTRUCTION (CURRENT EDITION).
2. PLASTIC PIPE CULVERT DESIGN SHALL CONFORM TO AASHTO LRFD BRIDGE DESIGN SPECIFICATIONS, FIFTH EDITION (2010) WITH 2010 INTERIMS.
3. THE MAXIMUM ALLOWABLE TRENCH WIDTH SHALL BE THE MINIMUM WIDTH PLUS A SUFFICIENT WIDTH TO ENSURE WORKING ROOM TO PROPERLY AND SAFELY PLACE AND COMPACT HAUNCHING AND OTHER BACKFILL MATERIAL.
4. IMPERVIOUS MATERIAL SHOULD BE PLACED AS DIRECTED BY THE ENGINEER AT THE ENDS OF THE CULVERT TO PREVENT LOSS OF STRUCTURAL BEDDING WHEN PERVIOUS MATERIAL IS USED FOR STRUCTURAL BEDDING AND/OR BACKFILL.
5. WHEN DIRECTED BY THE ENGINEER, UNSUITABLE MATERIAL THAT IS ENCOUNTERED AT THE BOTTOM OF THE EXCAVATED TRENCH (BELOW THE AREA IDENTIFIED AS "STRUCTURAL BEDDING" ABOVE) WILL BE EXCAVATED AND REPLACED WITH SELECTED PIPE BEDDING. THE QUANTITY OF MATERIAL REQUIRED TO BACKFILL THE UNDERCUT AREA UP TO THE SELECTED PIPE BEDDING PAY LIMIT DESIGNATED ABOVE WILL BE MEASURED AND PAID FOR AS "SELECTED PIPE BEDDING."
6. WHEN THE EXISTING MATERIAL EXCAVATED FOR THE PIPE TRENCH IS DETERMINED BY THE ENGINEER TO BE UNSUITABLE FOR BACKFILLING THE PIPE (ABOVE THE AREA IDENTIFIED ABOVE AS STRUCTURAL BACKFILL), BORROW MATERIAL OR MATERIAL FROM THE ROADWAY EXCAVATION WILL BE USED TO BACKFILL THE PIPE. IF SUITABLE MATERIAL IS NOT AVAILABLE, THE ENGINEER MAY AUTHORIZE THE USE OF "SELECTED PIPE BACKFILL."
7. FOR PIPE TYPES THAT ARE NOT SMOOTH ON THE OUTSIDE (CORRUGATED OR PROFILE WALLS), BACKFILL GRADATIONS SHOULD BE SELECTED THAT WILL PERMIT THE FILLING OF THE CORRUGATION OR PROFILE VALLEY.
8. HIGH DENSITY POLYETHYLENE PIPES OF DIAMETERS OTHER THAN SHOWN WILL NOT BE ALLOWED.
9. JOINTS FOR HDPE PIPE SHALL MEET THE REQUIREMENTS FOR SOIL TIGHTNESS AS SPECIFIED IN AASHTO SECTION 26.4.2.4 AND 30.4.2 "AASHTO LRFD BRIDGE CONSTRUCTION SPECIFICATIONS." JOINTS SHALL BE INSTALLED PER MANUFACTURER'S RECOMMENDATIONS.

- LEGEND -

H = FILL HEIGHT (FT.)
Ø = OUTSIDE DIAMETER OF PIPE
MAX. = MAXIMUM
MIN. = MINIMUM

= STRUCTURAL BACKFILL MATERIAL

= UNDISTURBED SOIL

DATE	REVISION	DATE FILMED
2-27-14	REVISED GENERAL NOTE 1.	
12-15-11	REVISED GENERAL NOTES & MINIMUM COVER NOTE	
11-17-10	ISSUED	

ARKANSAS STATE HIGHWAY COMMISSION

PLASTIC PIPE CULVERT (HIGH DENSITY POLYETHYLENE)

STANDARD DRAWING PCP-1

INSTALLATION TYPE	•• MATERIAL REQUIREMENTS FOR STRUCTURAL BACKFILL AND STRUCTURAL BEDDING
TYPE 2	•SELECTED MATERIALS (CLASS SM-1, SM-2, OR SM-4)

• AGGREGATE BASE COURSE (CLASS 4, 5, 6, OR 7) MAY BE USED IN LIEU OF SELECTED MATERIAL.

SM3 WILL NOT BE ALLOWED.

•• STRUCTURAL BEDDING MATERIAL SHALL HAVE A MAXIMUM PARTICLE SIZE OF 1INCH. STRUCTURAL BACKFILL MATERIAL SHALL BE FREE OF ORGANIC MATERIAL, STONES LARGER THAN 1.50 INCH IN GREATEST DIMENSION, OR FROZEN LUMPS.

STRUCTURAL BACKFILL AND STRUCTURAL BEDDING MATERIAL WILL NOT BE PAID FOR SEPARATELY, BUT COMPENSATION WILL BE CONSIDERED TO BE INCLUDED IN THE PRICE BID PER LINEAR FOOT OF PVC PIPE.

MINIMUM TRENCH WIDTH BASED ON FILL HEIGHT "H"

PIPE DIAMETER	TRENCH WIDTH (FEET) "H" < 10'-0"	TRENCH WIDTH (FEET) "H" >OR= 10'-0"
18"	4'-6"	4'-6"
24"	5'-0"	6'-0"
30"	5'-6"	7'-6"
36"	6'-0"	9'-0"

MULTIPLE INSTALLATION OF PVC PIPES

PIPE DIAMETER	CLEAR DISTANCE BETWEEN PIPES
18"	1'-6"
24"	2'-0"
30"	2'-6"
36"	3'-0"

MAXIMUM FILL HEIGHT BASED ON STRUCTURAL BACKFILL

PIPE DIAMETER	"H"
18"	45'-0"
24"	45'-0"
30"	40'-0"
36"	40'-0"

① NOTE:
12" MIN. (18" - 36" DIAMETERS)
MINIMUM COVER VALUE, "H" SHALL INCLUDE A MINIMUM 12" OF PAVEMENT AND/OR BASE.

MINIMUM COVER FOR CONSTRUCTION LOADS

PIPE DIAMETER	② MIN. COVER (FEET) FOR INDICATED CONSTRUCTION LOADS 18.0-50.0 (KIPS)	50.0-75.0 (KIPS)	75.0-110.0 (KIPS)	110.0-175.0 (KIPS)
18" THRU 36"	2'-0"	2'-6"	3'-0"	3'-0"

②MINIMUM COVER SHALL BE MEASURED FROM TOP OF PIPE TO TOP OF THE MAINTAINED CONSTRUCTION ROADWAY SURFACE. THE SURFACE SHALL BE MAINTAINED.

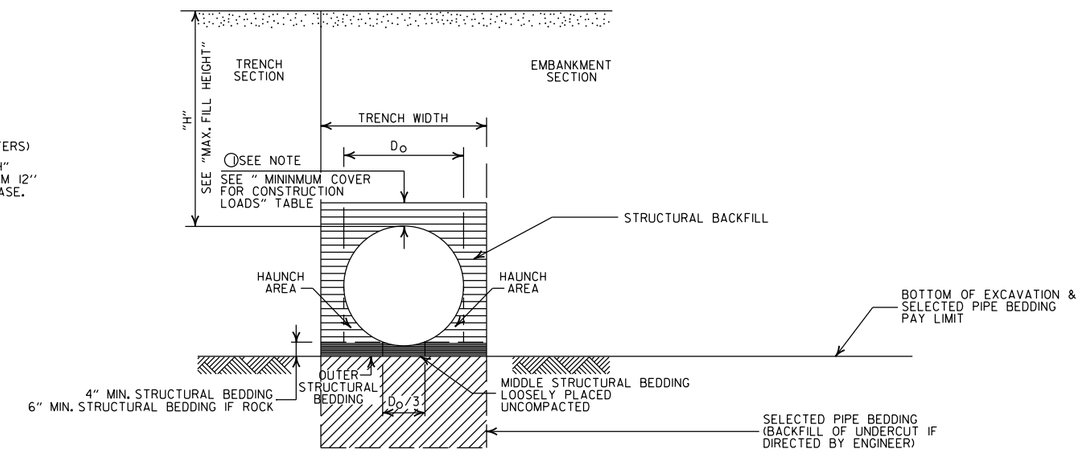

TYPE 2 EMBANKMENT AND TRENCH INSTALLATIONS

1. STRUCTURAL BACKFILL, EMBANKMENT, AND OUTER STRUCTURAL BEDDING MATERIAL SHALL BE COMPACTED TO 95% OF THE MAXIMUM DENSITY ACCORDING TO THE TYPE OR CLASS OF MATERIAL USED.

CONSTRUCTION SEQUENCE

1. PLACE STRUCTURAL BEDDING MATERIAL TO GRADE. DO NOT COMPACT.
2. INSTALL PIPE TO GRADE.
3. COMPACT STRUCTURAL BEDDING OUTSIDE THE MIDDLE THIRD OF THE PIPE.
4. THE STRUCTURAL BACKFILL SHALL BE PLACED AND COMPACTED IN LAYERS NOT EXCEEDING 8". THE LAYERS SHALL BE BROUGHT UP EVENLY AND SIMULTANEOUSLY TO THE ELEVATION OF THE MINIMUM COVER.
5. PIPE INSTALLATION MAY REQUIRE THE USE OF RESTRAINTS, WEIGHTING OR OTHER APPROVED METHODS IN ORDER TO HELP MAINTAIN GRADE AND ALIGNMENT.

GENERAL NOTES

1. PIPE SHALL CONFORM TO ASTM F949, CELL CLASS 12454. INSTALLATION SHALL CONFORM TO JOB SPECIAL PROVISION "PLASTIC PIPE" AND SECTION 606 OF THE STANDARD SPECIFICATIONS FOR HIGHWAY CONSTRUCTION (CURRENT EDITION).
2. PLASTIC PIPE CULVERT DESIGN SHALL CONFORM TO AASHTO LRFD BRIDGE DESIGN SPECIFICATIONS, FIFTH EDITION (2010) WITH 2010 INTERIMS.
3. THE MAXIMUM ALLOWABLE TRENCH WIDTH SHALL BE THE MINIMUM WIDTH PLUS A SUFFICIENT WIDTH TO ENSURE WORKING ROOM TO PROPERLY AND SAFELY PLACE AND COMPACT HAUNCHING AND OTHER BACKFILL MATERIAL.
4. IMPERVIOUS MATERIAL SHOULD BE PLACED AS DIRECTED BY THE ENGINEER AT THE ENDS OF THE CULVERT TO PREVENT LOSS OF STRUCTURAL BEDDING WHEN PERVIOUS MATERIAL IS USED FOR STRUCTURAL BEDDING AND/OR BACKFILL.
5. WHEN DIRECTED BY THE ENGINEER, UNSUITABLE MATERIAL THAT IS ENCOUNTERED AT THE BOTTOM OF THE EXCAVATED TRENCH (BELOW THE AREA IDENTIFIED AS "STRUCTURAL BEDDING" ABOVE) WILL BE EXCAVATED AND REPLACED WITH SELECTED PIPE BEDDING. THE QUANTITY OF MATERIAL REQUIRED TO BACKFILL THE UNDERCUT AREA UP TO THE SELECTED PIPE BEDDING PAY LIMIT DESIGNATED ABOVE WILL BE MEASURED AND PAID FOR AS "SELECTED PIPE BEDDING."
6. WHEN THE EXISTING MATERIAL EXCAVATED FOR THE PIPE TRENCH IS DETERMINED BY THE ENGINEER TO BE UNSUITABLE FOR BACKFILLING THE PIPE (ABOVE THE AREA IDENTIFIED ABOVE AS STRUCTURAL BACKFILL), BORROW MATERIAL OR MATERIAL FROM THE ROADWAY EXCAVATION WILL BE USED TO BACKFILL THE PIPE. IF SUITABLE MATERIAL IS NOT AVAILABLE, THE ENGINEER MAY AUTHORIZE THE USE OF "SELECTED PIPE BACKFILL."
7. FOR PIPE TYPES THAT ARE NOT SMOOTH ON THE OUTSIDE (CORRUGATED OR PROFILE WALLS), BACKFILL GRADATIONS SHOULD BE SELECTED THAT WILL PERMIT THE FILLING OF THE CORRUGATION OR PROFILE VALLEY.
8. PVC PIPES OF DIAMETERS OTHER THAN SHOWN WILL NOT BE ALLOWED.
9. JOINTS FOR PVC PIPE SHALL MEET THE REQUIREMENTS FOR SOIL TIGHTNESS AS SPECIFIED IN AASHTO SECTION 26.4.2.4 AND 30.4.2 "AASHTO LRFD BRIDGE CONSTRUCTION SPECIFICATIONS." JOINTS SHALL BE INSTALLED PER MANUFACTURER'S RECOMMENDATIONS.

- LEGEND -

H = FILL HEIGHT (FT.)
D_O = OUTSIDE DIAMETER OF PIPE
MAX. = MAXIMUM
MIN. = MINIMUM

= STRUCTURAL BACKFILL MATERIAL

= UNDISTURBED SOIL

DATE	REVISION	DATE FILMED
2-27-14	REVISED GENERAL NOTE 1.	
12-15-11	REV GENERAL NOTES & MINIMUM COVER NOTE; DELETED SM3 MATERIAL	
11-17-10	ISSUED	

ARKANSAS STATE HIGHWAY COMMISSION

PLASTIC PIPE CULVERT (PVC F949)

STANDARD DRAWING PCP-2

INSTALLATION TYPE	**MATERIAL REQUIREMENTS FOR STRUCTURAL BACKFILL AND STRUCTURAL BEDDING
TYPE 1	AGGREGATE BASE COURSE (CLASS 4, 5, 6, OR 7)
TYPE 2	*SELECTED MATERIALS (CLASS SM-1, SM-2 OR SM-4) OR TYPE 1 INSTALLATION MATERIAL

*SM3 WILL NOT BE ALLOWED.

** STRUCTURAL BEDDING MATERIAL SHALL HAVE A MAXIMUM PARTICLE SIZE OF 1 INCH. STRUCTURAL BACKFILL MATERIAL SHALL BE FREE OF ORGANIC MATERIAL, STONES LARGER THAN 1.50 INCH IN GREATEST DIMENSION, OR FROZEN LUMPS.

STRUCTURAL BACKFILL AND STRUCTURAL BEDDING MATERIAL WILL NOT BE PAID FOR SEPARATELY, BUT COMPENSATION WILL BE CONSIDERED TO BE INCLUDED IN THE PRICE BID PER LINEAR FOOT OF POLYPROPYLENE PIPE.

MINIMUM TRENCH WIDTH BASED ON FILL HEIGHT "H"

PIPE DIAMETER	TRENCH WIDTH (FEET) "H" < 10'-0"	TRENCH WIDTH (FEET) "H" >OR= 10'-0"
18"	4'-6"	4'-6"
24"	5'-0"	6'-0"
30"	5'-6"	7'-6"
36"	6'-0"	9'-0"
42"	7'-0"	10'-6"
48"	8'-0"	12'-0"
60"	10'-0"	15'-0"

(1) NOTE:
12" MIN. (18" - 42" DIAMETERS)
24" MIN. (60" DIAMETER)

MINIMUM COVER VALUES, "H" SHALL INCLUDE A MINIMUM 12" OF PAVEMENT AND/OR BASE.

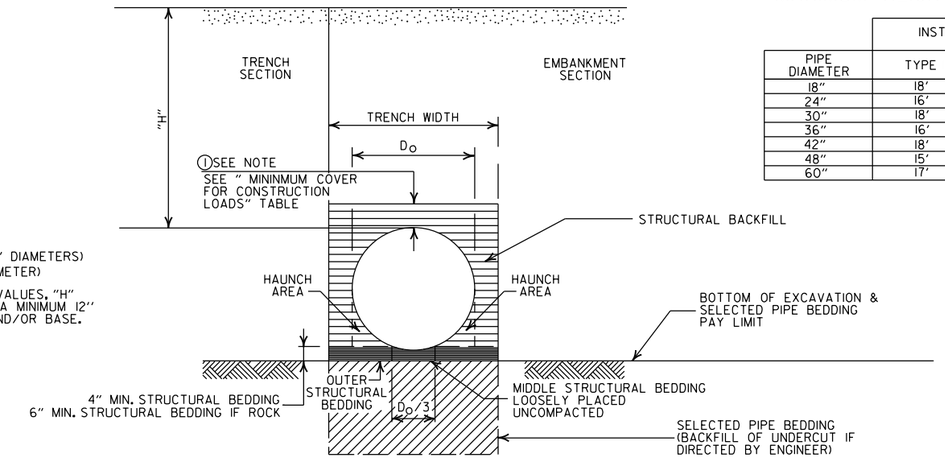

MAXIMUM HEIGHT OF FILL "H"

PIPE DIAMETER	INSTALLATION TYPE TYPE 1	INSTALLATION TYPE TYPE 2
18"	18'	14'
24"	16'	12'
30"	18'	14'
36"	16'	12'
42"	18'	13'
48"	15'	11'
60"	17'	12'

MULTIPLE INSTALLATION OF POLYPROPYLENE PIPES

PIPE DIAMETER	CLEAR DISTANCE BETWEEN PIPES
18"	1'-6"
24"	2'-0"
30"	2'-6"
36"	3'-0"
42"	3'-6"
48"	4'-0"
60"	5'-0"

MINIMUM COVER FOR CONSTRUCTION LOADS

PIPE DIAMETER	(2) MIN. COVER (FEET) FOR INDICATED CONSTRUCTION LOADS 18.0-50.0 (KIPS)	50.0-75.0 (KIPS)	75.0-110.0 (KIPS)	110.0-150.0 (KIPS)
36" OR LESS	2'-0"	2'-6"	3'-0"	3'-0"
42" OR GREATER	3'-0"	3'-0"	3'-6"	4'-0"

(2) MINIMUM COVER SHALL BE MEASURED FROM TOP OF PIPE TO TOP OF THE MAINTAINED CONSTRUCTION ROADWAY SURFACE. THE SURFACE SHALL BE MAINTAINED.

EMBANKMENT AND TRENCH INSTALLATIONS

1. STRUCTURAL BACKFILL, EMBANKMENT, AND OUTER STRUCTURAL BEDDING MATERIAL SHALL BE COMPACTED TO 95% OF THE MAXIMUM DENSITY ACCORDING TO THE TYPE OR CLASS OF MATERIAL USED.

CONSTRUCTION SEQUENCE

1. PLACE STRUCTURAL BEDDING MATERIAL TO GRADE. DO NOT COMPACT.
2. INSTALL PIPE TO GRADE.
3. COMPACT STRUCTURAL BEDDING OUTSIDE THE MIDDLE THIRD OF THE PIPE.
4. THE STRUCTURAL BACKFILL SHALL BE PLACED AND COMPACTED IN LAYERS NOT EXCEEDING 8". THE LAYERS SHALL BE BROUGHT UP EVENLY AND SIMULTANEOUSLY TO THE ELEVATION OF THE MINIMUM COVER.
5. PIPE INSTALLATION MAY REQUIRE THE USE OF RESTRAINTS, WEIGHTING OR OTHER APPROVED METHODS IN ORDER TO HELP MAINTAIN GRADE AND ALIGNMENT.

GENERAL NOTES

1. PIPE SHALL CONFORM TO AASHTO M330, TYPE S. INSTALLATION SHALL CONFORM TO JOB SPECIAL PROVISION "PLASTIC PIPE" AND SECTION 606 OF THE STANDARD SPECIFICIATIONS FOR HIGHWAY CONSTRUCTION (CURRENT EDITION).
2. PLASTIC PIPE CULVERT DESIGN SHALL CONFORM TO AASHTO LRFD BRIDGE DESIGN SPECIFICATIONS, SIXTH EDITION (2012) WITH 2013 INTERIMS.
3. THE MAXIMUM ALLOWABLE TRENCH WIDTH SHALL BE THE MINIMUM WIDTH PLUS A SUFFICIENT WIDTH TO ENSURE WORKING ROOM TO PROPERLY AND SAFELY PLACE AND COMPACT HAUNCHING AND OTHER BACKFILL MATERIAL.
4. IMPERVIOUS MATERIAL SHOULD BE PLACED AS DIRECTED BY THE ENGINEER AT THE ENDS OF THE CULVERT TO PREVENT LOSS OF STRUCTURAL BEDDING WHEN PERVIOUS MATERIAL IS USED FOR STRUCTURAL BEDDING AND/OR BACKFILL.
5. WHEN DIRECTED BY THE ENGINEER, UNSUITABLE MATERIAL THAT IS ENCOUNTERED AT THE BOTTOM OF THE EXCAVATED TRENCH (BELOW THE AREA IDENTIFIED AS "STRUCTURAL BEDDING" ABOVE) WILL BE EXCAVATED AND REPLACED WITH SELECTED PIPE BEDDING. THE QUANTITY OF MATERIAL REQUIRED TO BACKFILL THE UNDERCUT AREA UP TO THE SELECTED PIPE BEDDING PAY LIMIT DESIGNATED ABOVE WILL BE MEASURED AND PAID FOR AS "SELECTED PIPE BEDDING."
6. WHEN THE EXISTING MATERIAL EXCAVATED FOR THE PIPE TRENCH IS DETERMINED BY THE ENGINEER TO BE UNSUITABLE FOR BACKFILLING THE PIPE (ABOVE THE AREA IDENTIFIED ABOVE AS STRUCTURAL BACKFILL), BORROW MATERIAL OR MATERIAL FROM THE ROADWAY EXCAVATION WILL BE USED TO BACKFILL THE PIPE. IF SUITABLE MATERIAL IS NOT AVAILABLE, THE ENGINEER MAY AUTHORIZE THE USE OF "SELECTED PIPE BACKFILL."
7. FOR PIPE TYPES THAT ARE NOT SMOOTH ON THE OUTSIDE (CORRUGATED OR PROFILE WALLS), BACKFILL GRADATIONS SHOULD BE SELECTED THAT WILL PERMIT THE FILLING OF THE CORRUGATION OR PROFILE VALLEY.
8. POLYPROPYLENE PIPES OF DIAMETERS OTHER THAN SHOWN WILL NOT BE ALLOWED.
9. JOINTS FOR POLYPROPYLENE PIPE SHALL MEET THE REQUIREMENTS FOR SOIL TIGHTNESS AS SPECIFIED IN SECTION 26.4.2.4 AND 30.4.2 OF THE AASHTO LRFD BRIDGE CONSTRUCTION SPECIFICATIONS 3RD EDITION (2010) WITH 2012 INTERIMS. JOINTS SHALL BE INSTALLED PER MANUFACTURER'S RECOMMENDATIONS.

- LEGEND -

H = FILL HEIGHT (FT.)
D_O = OUTSIDE DIAMETER OF PIPE
MAX. = MAXIMUM
MIN. = MINIMUM

= STRUCTURAL BACKFILL MATERIAL
= UNDISTURBED SOIL

DATE	REVISION	DATE FILMED
02-27-20	REVISED	
11-07-19	ISSUED	

ARKANSAS STATE HIGHWAY COMMISSION

PLASTIC PIPE CULVERT (POLYPROPYLENE)

STANDARD DRAWING PCP-3

NOTES:

1. REFER TO THE STRIPING DETAILS FOR PAVEMENT MARKING LINE WIDTHS.
2. THIS DRAWING SHALL BE USED IN CONJUNCTION WITH THE LATEST REVISED ADDITION OF THE "MANUAL ON UNIFORM TRAFFIC CONTROL DEVICES."
3. RAISED PAVEMENT MARKERS SHALL BE PLACED ON AN 80 FEET SPACING UNLESS OTHERWISE SHOWN IN THE PLANS.

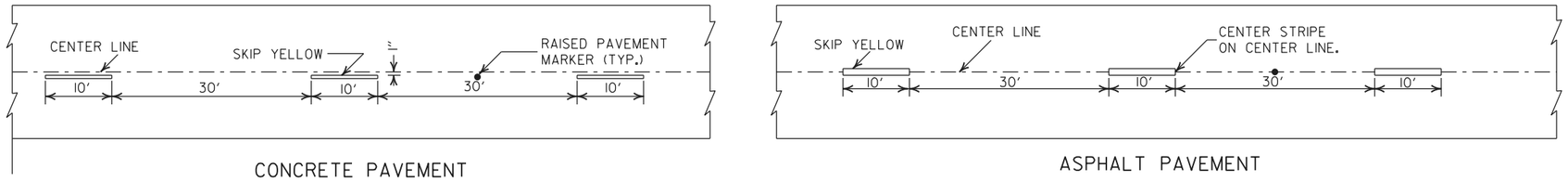

BROKEN LINE STRIPING

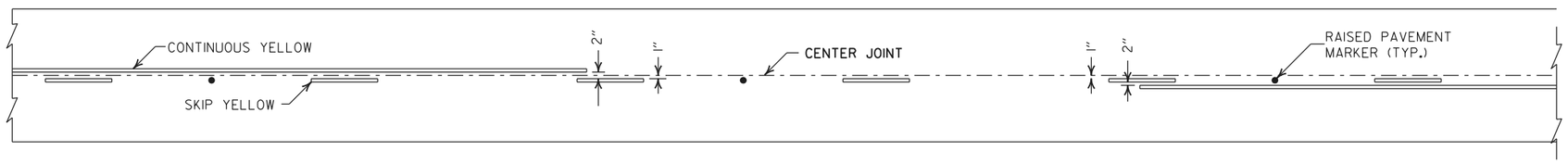

SOLID LINE STRIPING ON CONCRETE PAVEMENT

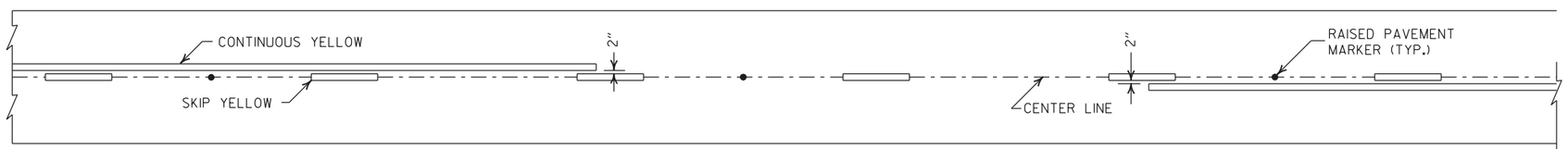

SOLID LINE STRIPING ON ASPHALT PAVEMENT

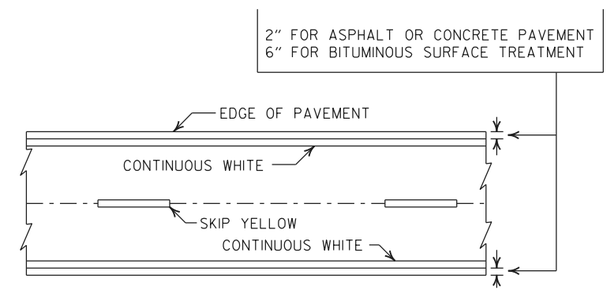

PAVEMENT EDGE LINE MARKING

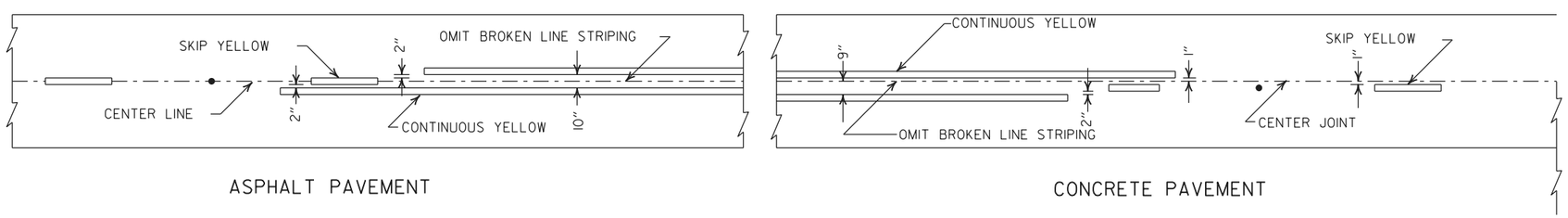

STRIPING AT ADJACENT NO PASSING LANES

NOTE:
THE RED LENS OF THE TYPE II R.P.M. SHALL FACE THE INCORRECT TRAFFIC MOVEMENT.

NOTE:
DIMENSIONS SHOWN FOR RAISED PAVEMENT MARKERS ARE TYPICAL. THE CONTRACTOR MAY SUBSTITUTE SIMILAR MARKERS WITH THE APPROVAL OF THE ENGINEER. REQUESTING APPROVAL FOR SIMILAR MARKERS MAY BE MADE BY REFERRING TO THE ARDOT QUALIFIED PRODUCTS LIST.

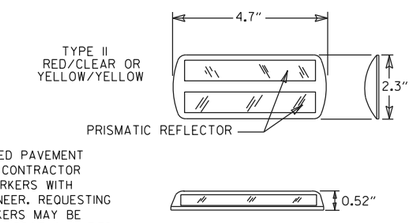

DETAIL OF STANDARD RAISED PAVEMENT MARKERS

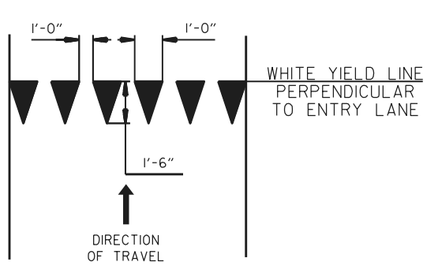

YIELD LINE DETAIL

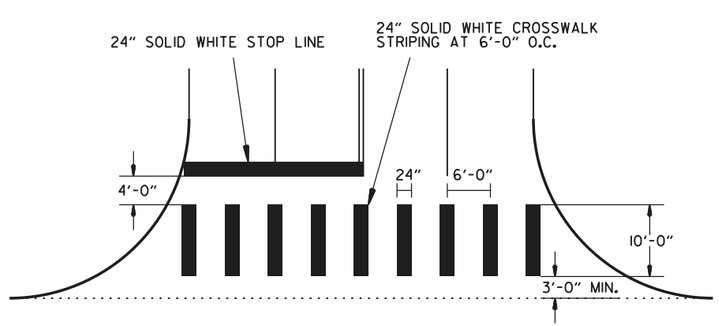

CROSSWALK AND STOP LINE DETAILS

DATE	REV	DESCRIPTION
04-09-26		REV. CROSSWALK & STOP LINE DETAILS
02-27-20		REV. STOP LINE DETAILS
06-01-17		ADDED YIELD LINE DETAIL
05-12-16		REVISED LINE WIDTHS, SPACING, & NOTES
09-12-13		REVISED DETAIL OF STANDARD RAISED PAVEMENT MARKERS

ARDOT ARKANSAS DEPARTMENT OF TRANSPORTATION

ARKANSAS STATE HIGHWAY COMMISSION

PAVEMENT MARKING DETAILS

DATE EFFECTIVE 04-09-2026

STANDARD DRAWING

PM-1

STEEL FABRICATION: REINFORCING STEEL FABRICATION SHALL CONFORM TO THE DIMENSIONS LISTED IN THE TABLE BELOW:

BAR SIZE	PIN DIAMETER	HOOK EXTENSION "K"
3	2¼"	4"
4	3 "	4½"
5	3¾"	5"
6	4½"	6"
7	5¼"	7"
8	6"	8"

IF THE OVERALL HEIGHT OF THE HOOK (SEE DIAGRAM BELOW) FOR A "b", "b1", "b2" or "b3" BENT BAR IS GREATER THAN THE CORRESPONDING TOP OR BOTTOM SLAB THICKNESS, LESS 2¾ INCHES, EACH BENT BAR SHALL BE REPLACED WITH ONE HOOKED BAR AND ONE STRAIGHT BAR, USING LENGTHS AS SHOWN IN THE TABLE BELOW. THE TWO BARS SHALL BE THE SAME DIAMETER AS, AND PLACED AT THE SAME SPACING AS, THE "b", "b1", "b2" OR "b3" BENT BARS THEY REPLACE.

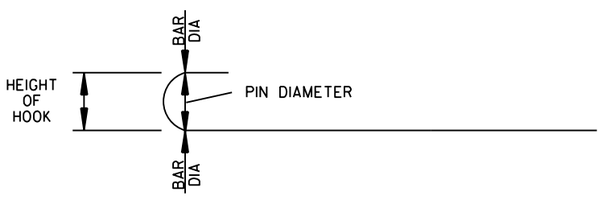

NOTE: DIMENSIONS OF BARS ARE MEASURED OUT TO OUT OF BARS.

OVERALL HEIGHT OF HOOKED BAR DIAGRAM

THE HOOKED BARS SHALL BE PLACED IN THE BOTTOM OF THE TOP SLAB AND THE TOP OF THE BOTTOM SLAB. THE STRAIGHT BARS SHALL BE PLACED IN THE TOP OF THE TOP SLAB AND THE BOTTOM OF THE BOTTOM SLAB. SEE TABLE BELOW FOR LENGTHS OF REPLACEMENT HOOKED AND STRAIGHT BARS.

FOR SKEWED CULVERTS, THE REPLACEMENT STRAIGHT BAR MAY HAVE TO BE CUT IN FIELD TO FIT.

REPLACEMENT BAR LENGTHS TABLE

BAR SIZE: "b", "b1", "b2" OR "b3"	LENGTH OF HOOKED BAR	LENGTH OF STRAIGHT BAR
#4	L + 1' - 0"	SEE "c" BAR LENGTH
#5	L + 1' - 2"	SEE "c" BAR LENGTH
#6	L + 1' - 4"	SEE "c" BAR LENGTH
#7	L + 1' - 8"	SEE "c" BAR LENGTH
#8	L + 1' - 10"	SEE "c" BAR LENGTH
#9	L + 2' - 6"	SEE "c" BAR LENGTH

L = "OW" - 3 INCHES

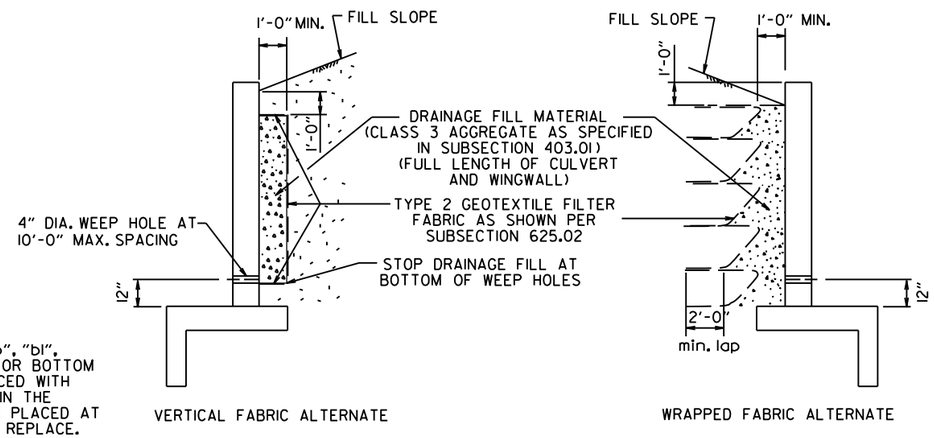

WINGWALL & CULVERT DRAINAGE DETAIL

REINFORCED CONCRETE BOX CULVERT GENERAL NOTES

CONCRETE SHALL BE CLASS S WITH A MINIMUM 28 DAY COMPRESSIVE STRENGTH OF 3500 PSI.

REINFORCING STEEL SHALL BE AASHTO M 31 OR M 53, GRADE 60.

CONSTRUCTION AND MATERIALS FOR WINGWALL & CULVERT DRAINAGE, INCLUDING WEEP HOLES AND GRANULAR MATERIAL, SHALL BE SUBSIDIARY TO THE BID ITEM, "CLASS S CONCRETE".

MEMBRANE WATERPROOFING SHALL CONFORM TO THE REQUIREMENTS OF SECTION 815 OF THE STANDARD SPECIFICATIONS.

MEMBRANE WATERPROOFING SHALL BE APPLIED TO ALL CONSTRUCTION JOINTS IN THE TOP SLAB AND THE SIDEWALLS OF R.C. BOX CULVERTS AS DIRECTED BY THE ENGINEER. NO PAYMENT SHALL BE MADE FOR THIS ITEM, BUT PAYMENT WILL BE CONSIDERED TO BE INCLUDED IN THE VARIOUS ITEMS BID FOR THE R.C. BOX CULVERT.

REINFORCING STEEL TOLERANCES: THE TOLERANCES FOR REINFORCING STEEL SHALL MEET THOSE LISTED IN "MANUAL OF STANDARD PRACTICE" PUBLISHED BY CONCRETE REINFORCING STEEL INSTITUTE (CRSI) EXCEPT THAT THE TOLERANCE FOR TRUSS BARS SUCH AS FIGURE 3 ON PAGE 7-4 OF THE CRSI MANUAL SHALL BE MINUS ZERO TO PLUS ½ INCH.

WEEP HOLES IN BOX CULVERT WALLS SHALL HAVE A MAXIMUM HORIZONTAL SPACING OF 10'-0" AND SHALL BE SPACED TO CLEAR ALL REINFORCING STEEL. THE DRAIN OPENING SHALL BE 4" DIAMETER AND SHALL BE PLACED 12" ABOVE THE TOP OF THE BOTTOM SLAB.

WEEP HOLES IN WINGWALLS SHALL HAVE A MAXIMUM HORIZONTAL SPACING OF 10'-0" AND SHALL BE SPACED TO CLEAR ALL REINFORCING STEEL. THERE SHALL BE A MINIMUM OF TWO (2) WEEP HOLES IN EACH WINGWALL. THE DRAIN OPENING SHALL BE 4" DIAMETER AND SHALL BE PLACED 12" ABOVE THE TOP OF THE WINGWALL FOOTING.

THE REQUIREMENTS SHOWN ON THIS DRAWING SHALL SUPERCEDE THE CORRESPONDING REQUIREMENTS ON ALL REINFORCED CONCRETE BOX CULVERT STANDARD DRAWINGS.

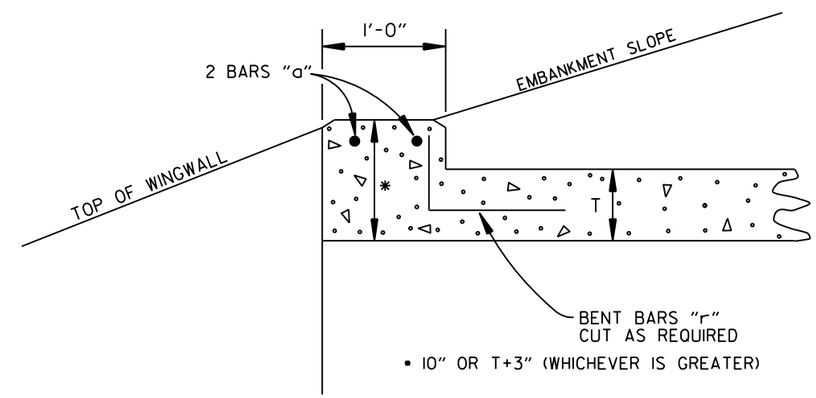

NOTE: FOR ALL SKEWED R.C. BOX CULVERTS THE LENGTH "K" OF THE MODIFIED HEADWALL SHALL BE EQUAL TO THE ROADWAY LENGTH "RL". THE ENDS OF THE HEADWALL SHALL BE CONSTRUCTED PARALLEL TO THE SKEW ANGLE OF THE BOX CULVERT.

R.C. BOX CULVERT HEADWALL MODIFICATIONS

DATE	REVISION	DATE FILMED
7/26/12	REV. DRAINAGE FILL MATERIAL & DETAIL	
12/15/11	REQUIRE WEEP HOLES IN BOX CULVERT WALLS	
5-25-06	REV. GEN. NOTES AND DETAILS FOR WEEP HOLES; BAR DIAGRAM	
11-16-01	ADDED WINGWALL DRAINAGE DETAIL/EDITED GEN. NOTES	
10-18-96	REV. ASTM REF. TO AASHTO & ADDED BAR DIAGRAM	
10-12-95	MOVED SOLID SODDING DETAIL TO RCB-2	
6-2-94	ADDED SOLID SODDING PLAN DETAIL	
8-5-93	REVISED PIN DIAMETER TO SPECS.	
8-15-91	DRAWN AND ISSUED	

ARKANSAS STATE HIGHWAY COMMISSION

REINFORCED CONCRETE BOX CULVERT DETAILS

STANDARD DRAWING RCB-1

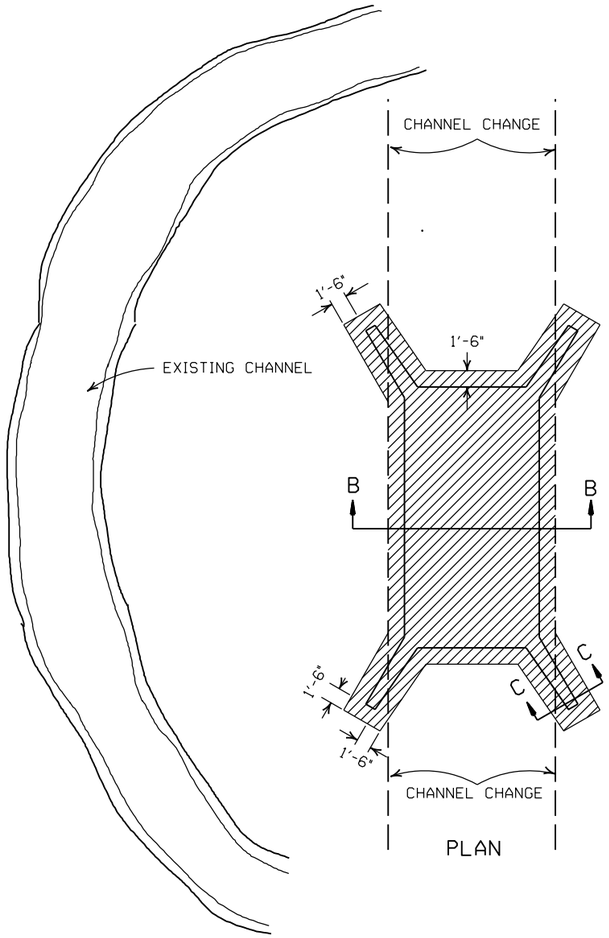

PLAN

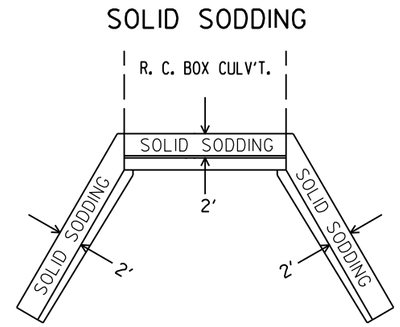

PLAN

PARTIAL SECTION SHOWING SOLID SODDING AT HEADWALLS AND WING WALLS

NOTE: LENGTH MEASURED ALONG THE CENTER OF 2' STRIP OF SOLID SODDING.

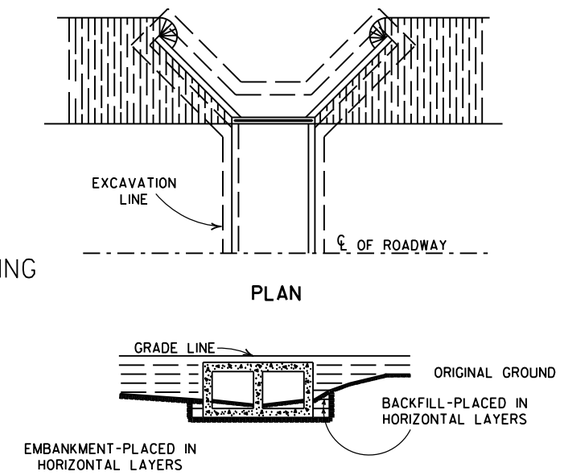

BACKFILL DETAILS FOR BOX CULVERT

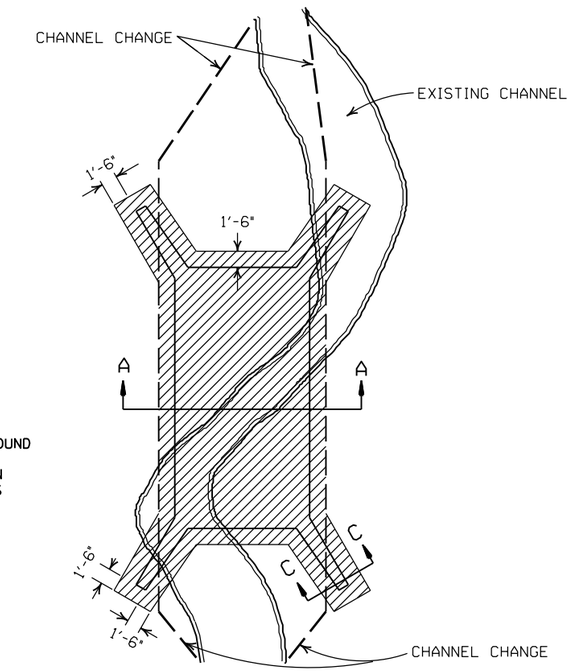

PLAN

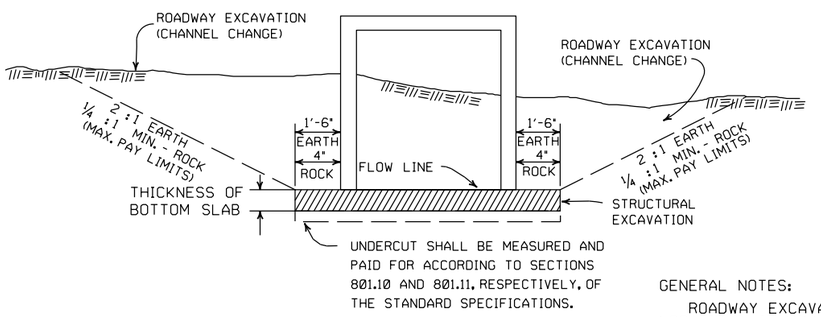

SECTION B-B

DETAILS FOR NEW CHANNELS

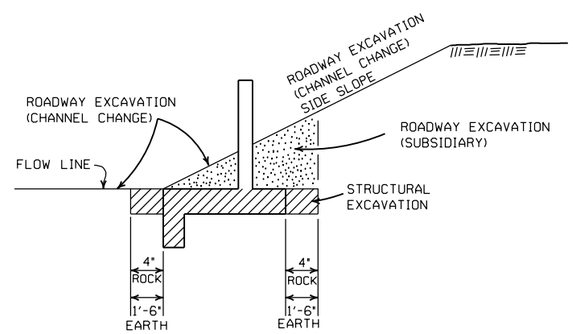

SECTION C-C

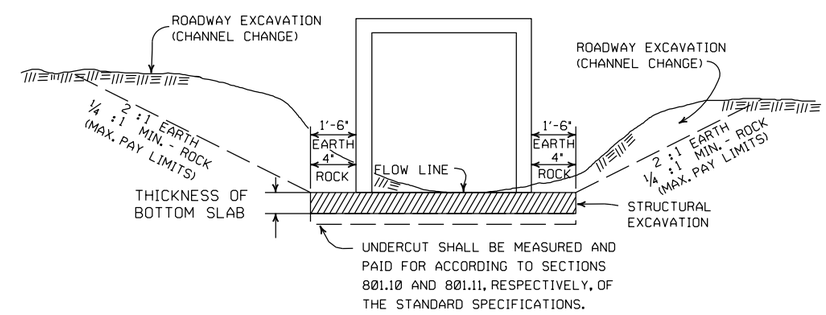

SECTION A-A

DETAILS THROUGH EXISTING CHANNELS

GENERAL NOTES:

ROADWAY EXCAVATION (CHANNEL CHANGE) WILL BE PAID FOR AT R.C. BOX CULVERT LOCATIONS. IT WILL BE PAID TO THE LIMITS ACTUALLY CUT AND WILL BE CONFINED TO THAT PORTION OF THE INDICATED AREA THAT IS ABOVE THE FLOW LINE. ROADWAY EXCAVATION (CHANNEL CHANGE) SHALL BE MEASURED BY CROSS SECTIONS AND VOLUMES COMPUTED BY AVERAGE END AREA METHOD. ALL CHANNEL CHANGES SHALL BE BROUGHT TO GRADE PRIOR TO MAKING ANY EXCAVATION FOR STRUCTURES.

EXCAVATION FOR STRUCTURES WILL BE PAID FOR AT ALL R.C. BOX CULVERT LOCATIONS. IT WILL BE PAID TO THE LIMITS SHOWN AND SHALL BE CONFINED TO THAT PORTION OF THE INDICATED AREA THAT IS BELOW THE CHANNEL FLOW LINE.

ROADWAY EXCAVATION SHOWN IN SECTION C-C ABOVE AS SUBSIDIARY WILL NOT BE MEASURED OR PAID FOR DIRECTLY, BUT PAYMENT WILL BE CONSIDERED TO BE INCLUDED IN THE VARIOUS ITEMS OF EXCAVATION.

DATE	REVISION	FILMED
11-20-03	REVISED SECTION A-A NOTE	
8-22-02	REVISED SECTION B-B NOTE	
10-12-95	COMBINED 1891B AND 1888A	
1-4-83	REVISED GENERAL NOTES	674-1-4-83
	AND ADDED MAXIMUM PAY	
	LIMIT NOTES.	
2-2-76	EXCAV. PAY LIMITS	917-2-2-76
10-2-72	REVISED AND REDRAWN	564-10-16-72

ARKANSAS STATE HIGHWAY COMMISSION

EXCAVATION PAY LIMITS, BACKFILL, & SOLID SODDING FOR BOX CULVERTS

STANDARD DRAWING RCB-2

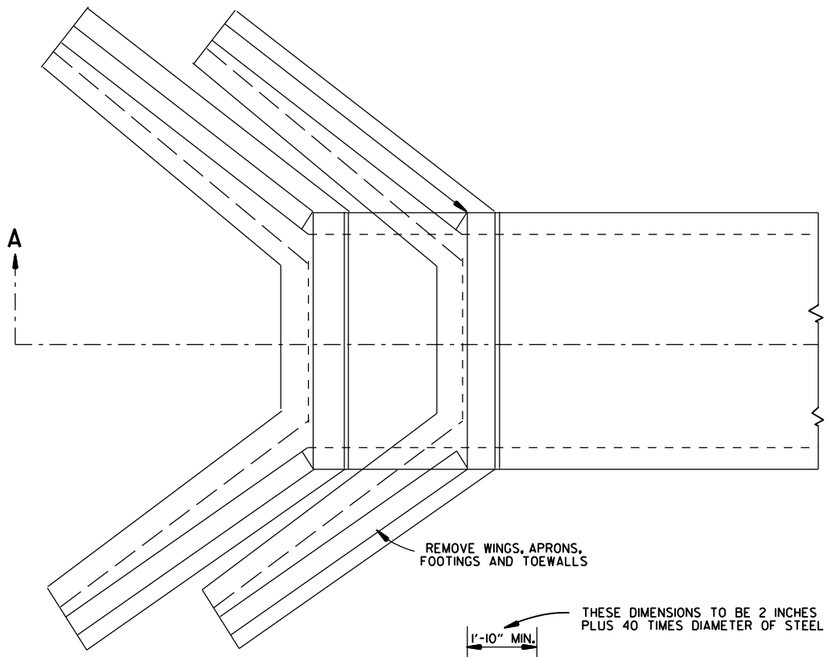

TOP VIEW
R.C. BOX CULVERT

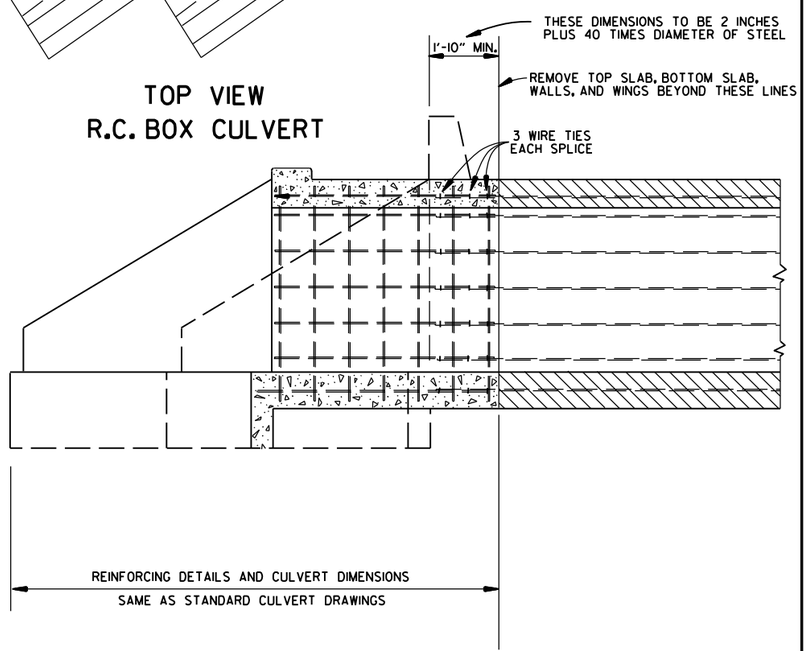

SECTION A-A

METHOD 1

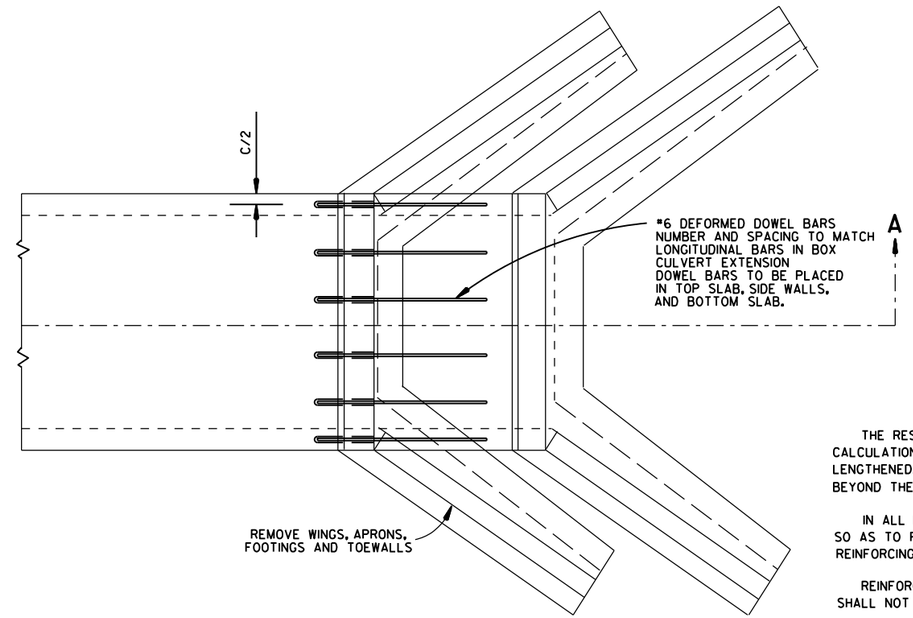

TOP VIEW
R.C. BOX CULVERT

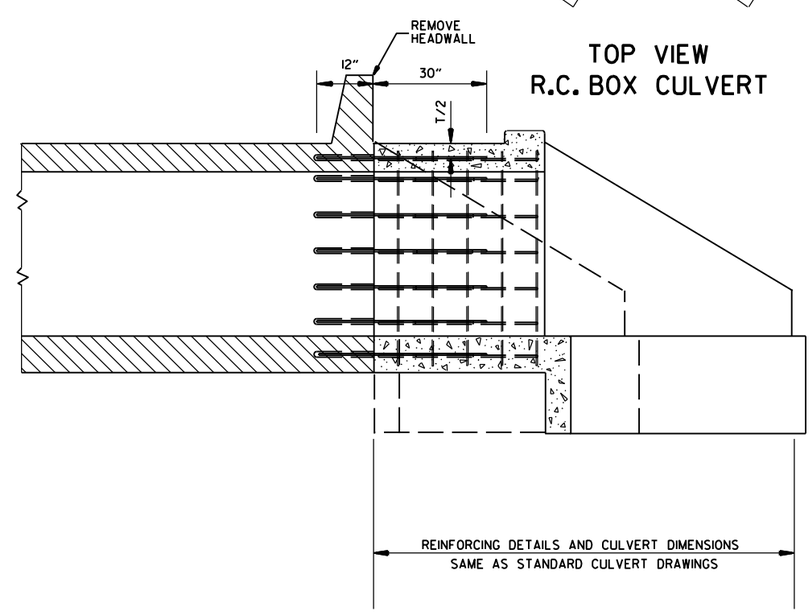

SECTION A-A

METHOD 2

GENERAL NOTES

	USE FOR METHOD
THE RESIDENT ENGINEER WILL MAKE INDIVIDUAL CALCULATIONS OF QUANTITIES FOR EACH STRUCTURE LENGTHENED, MAKING NO ALLOWANCE FOR OVERBREAKAGE BEYOND THE LINES INDICATED.	1
IN ALL INSTANCES CONCRETE SHALL BE REMOVED SO AS TO PERMIT FULL 40 DIAMETER SPLICE OF REINFORCING STEEL.	1
REINFORCING STEEL REMOVED FROM EXISTING STRUCTURE SHALL NOT BE REUSED IN CONSTRUCTING EXTENSION.	1&2
ON R.C. BOX CULVERTS THAT HAVE AN EXISTING CONCRETE APRON; THE CONCRETE APRON SHALL BE REMOVED WITH THE WINGS. THE COST OF REMOVING ALL OLD CONCRETE WILL BE INCLUDED IN THE PRICE BID PER CUBIC YARD FOR NEW CONCRETE OF THE CLASS SPECIFIED AND NO ADDITIONAL COMPENSATION WILL BE ALLOWED.	1&2
MATERIALS FOR SECURING DOWEL BARS SHALL MEET THE REQUIREMENTS OF SECTION 507.02 OF THE STANDARD SPECIFICATIONS.	2
DOWEL BARS SHALL BE INSTALLED AS FOLLOWS: THE DRILLING PROCEDURE SHALL BE APPROVED BY THE ENGINEER. THE FILLING SYSTEM SHALL BE APPROVED BY THE ENGINEER, AND SHALL BE AN INJECTION-TYPE SYSTEM WHICH WILL INSURE THAT SUFFICIENT MATERIAL IS INJECTED SO IT COMPLETELY SURROUNDS THE BARS AND FILLS THE HOLES.	2
THE CONTRACTOR SHALL HAVE THE OPTION OF USING EITHER METHOD 1 OR METHOD 2. REGARDLESS OF WHICH METHOD IS USED, PAY QUANTITIES WILL BE CALCULATED BASED ON METHOD 1.	1&2

NOTE:
NO PART OF THIS STANDARD IS TO BE USED FOR ANY DETAILS RELATIVE TO NEW CONSTRUCTION.

SEE STANDARD DRAWING LISTED IN TABULATION OF STRUCTURES FOR ALL NEW CONSTRUCTION DETAILS.

DATE	REVISION	DATE FILM
10-12-95	CHANGED DRAWING # FROM 144-A	
4-1-93	ADDED GENERAL NOTE	
10-1-92	ADDED ALT. METHOD OF EXTENSION	
11-30-89	REDRAWN	
1-4-83	ELIMINATED CONCRETE CLASS	
12-20-56	RETRACED	

ARKANSAS STATE HIGHWAY COMMISSION

METHOD OF EXTENDING EXISTING R.C. BOX CULVERTS

STANDARD DRAWING RCB-3

SUPERELEVATION TABLE FOR TWO - WAY TRAFFIC

DEGREE OF CURVE	30 MPH e	30 MPH Ls (FT) MINIMUM	30 MPH Ls (FT) DESIRABLE	35 MPH e	35 MPH Ls (FT) MINIMUM	35 MPH Ls (FT) DESIRABLE	40 MPH e	40 MPH Ls (FT) MINIMUM	40 MPH Ls (FT) DESIRABLE	45 MPH e	45 MPH Ls (FT) MINIMUM	45 MPH Ls (FT) DESIRABLE	50 MPH e	50 MPH Ls (FT) MINIMUM	50 MPH Ls (FT) DESIRABLE	55 MPH e	55 MPH Ls (FT) MINIMUM	55 MPH Ls (FT) DESIRABLE	60 MPH e	60 MPH Ls (FT) MINIMUM	60 MPH Ls (FT) DESIRABLE	65 MPH e	65 MPH Ls (FT) MINIMUM	65 MPH Ls (FT) DESIRABLE	70 MPH e	70 MPH Ls (FT) MINIMUM	70 MPH Ls (FT) DESIRABLE	75 MPH e	75 MPH Ls (FT) MINIMUM	75 MPH Ls (FT) DESIRABLE
0° 15'	NC			NC			NC			NC			NC			NC			NC			NC			NC			NC		
0° 30'	NC			NC			NC			NC			NC			NC			RC	96		RC	96		RC	96		0.022	101	
0° 45'	NC			NC			NC			NC			RC	96		RC	96		0.024	106		0.026	110		0.030	120		0.032	125	
1° 00'	NC			NC			NC			RC	90		0.022	101		0.026	110		0.030	120		0.034	130		0.038	139		0.042	149	300
1° 15'	NC			NC			RC	84		0.022	95		0.028	115		0.032	125		0.038	139		0.042	149		0.046	158	300	0.052	173	
1° 30'	NC			RC	78		0.022	88		0.028	108		0.032	125		0.038	139		0.044	154		0.050	168		0.056	182		0.062	197	
1° 45'	RC	72		RC	78		0.026	97		0.030	113		0.036	134		0.044	154		0.050	168	300	0.056	182	300	0.064	202		0.070	216	
2° 00'	RC	72		0.024	86		0.028	101		0.034	122		0.042	149		0.048	163		0.056	182		0.064	202		0.070	216		0.080	240	
2° 15'	RC	72		0.026	90		0.032	109		0.038	131		0.046	158		0.054	178	300	0.062	197		0.070	216		0.078	235		0.088	259	350
2° 30'	0.022	75		0.028	94		0.034	113		0.042	140		0.050	168		0.058	187		0.068	211		0.076	230		0.086	254	350	0.096	278	
2° 45'	0.024	79		0.030	98		0.038	122		0.046	149	200	0.054	178	250	0.064	202		0.072	221		0.082	245		0.092	269		0.100	288	400
3° 00'	0.026	83		0.034	105		0.040	126		0.050	158		0.058	187		0.068	211		0.078	235		0.088	259		0.098	283		D MAX = 2° 45'		
3° 15'	0.028	86		0.036	109		0.044	134	200	0.052	162		0.062	197		0.072	221		0.082	245		0.092	269		0.100	288	400			
3° 30'	0.030	90		0.038	113		0.046	139		0.056	171		0.066	206		0.076	230		0.086	254		0.096	278	350	D MAX = 3° 30'					
3° 45'	0.032	93		0.040	117		0.050	147		0.058	176		0.070	216		0.080	240		0.090	264		0.098	283							
4° 00'	0.034	97		0.042	121	200	0.052	151		0.062	185		0.072	221		0.084	250		0.094	274	350	0.100	288							
4° 15'	0.036	100		0.044	125		0.054	155		0.064	189		0.076	230		0.086	254		0.096	278		D MAX = 4° 15'								
4° 30'	0.036	100	200	0.046	129		0.056	160		0.068	198		0.078	235		0.090	264		0.098	283										
4° 45'	0.038	104		0.048	133		0.060	168		0.070	203		0.082	245		0.092	269	350	0.100	288										
5° 00'	0.040	108		0.050	137		0.062	172		0.072	207		0.084	250		0.094	274		D MAX = 5° 15'										
5° 30'	0.044	115		0.054	144		0.066	181		0.078	221	250	0.088	259		0.098	283													
6° 00'	0.046	119		0.058	152		0.070	189		0.082	230		0.092	269		0.100	288													
6° 30'	0.050	126		0.062	160		0.074	198		0.086	239		0.096	278	300	D MAX = 6° 30'														
7° 00'	0.052	130		0.064	164		0.078	206		0.090	248		0.098	283																
7° 30'	0.054	133		0.068	172		0.080	210		0.092	252	300	0.100	288																
8° 00'	0.058	140		0.070	176		0.084	219		0.094	257		D MAX = 8° 25'																	
8° 30'	0.060	144		0.072	179		0.086	223	250	0.096	261																			
9° 00'	0.062	148		0.076	187		0.088	227		0.098	266																			
9° 30'	0.064	151		0.078	191		0.092	235		0.100	270																			
10° 00'	0.066	155		0.080	195		0.094	240		D MAX = 10° 30'																				
11° 00'	0.070	162		0.084	203		0.096	244																						
12° 00'	0.074	169		0.088	211	250	0.098	248																						
13° 00'	0.076	173		0.090	215		0.100	252	300																					
14° 00'	0.080	180		0.094	222		D MAX = 13° 45'																							
15° 00'	0.082	184		0.096	226																									
16° 00'	0.086	191		0.098	230																									
17° 00'	0.088	194		0.100	234																									
18° 00'	0.090	198	250	D MAX = 19° 30'																										
19° 00'	0.092	202																												
20° 00'	0.094	205																												
21° 00'	0.096	209																												
22° 00'	0.096	209																												
23° 00'	0.098	212																												
24° 00'	0.098	212																												
25° 00'	0.100	216																												
D MAX = 28° 30'																														

ABBREVIATIONS

NC - NORMAL CROWN
RC - REVERSE CROWN, SUPERELEVATION AT NORMAL CROWN SLOPE
e - RATE OF SUPERELEVATION (FT. PER FT.)
Ls - LENGTH OF SUPERELEVATION TRANSITION (FT.)
L - DISTANCE FROM BEGINNING OF SUPERELEVATION TRANSITION TO ANY POINT (FT.)
d - WIDTH OF PAVEMENT (FT.) OR WIDTH OF SUBGRADE (FT.)
C - NORMAL CROWN (FT.)

GENERAL NOTES

1. ON PAVEMENT WITH TWO-WAY TRAFFIC, THE SUPERELEVATION SHALL BE REVOLVED ON THE INSIDE PAVEMENT EDGE UNLESS OTHERWISE NOTED ON THE PLANS
2. SUPERELEVATION VALUES SHOWN ON THE CROSS SECTIONS ARE VALUES (+) OR (-) TO BE ADDED TO OR SUBTRACTED FROM THE POINT OF CONTROL.
3. LENGTHS FOR L MAY BE ROUNDED IN MULTIPLES OF 25 FT. OR 50 FT. TO PERMIT SIMPLER CALCULATIONS.
4. PAVEMENTS WIDER THAN 2 LANES SHALL HAVE ADDITIONAL TRANSITION LENGTHS AS FOLLOWS:

3 LANE UNDIVIDED - - - - - +20%
4 LANE UNDIVIDED - - - - - +50%
5 LANE UNDIVIDED - - - - - +80%
6 LANE UNDIVIDED - - - - - +100%

NOTE: MAINTAIN NORMAL CROWN ON INSIDE UNTIL SUPERELEVATION EXCEEDS 2C.

RATE OF SUPERELEVATION SHALL BE COMPUTED ON STRAIGHT LINE METHOD USING APPLICABLE Ls.

SUPERELEVATION FORMULA $= \frac{Lde}{Ls}$

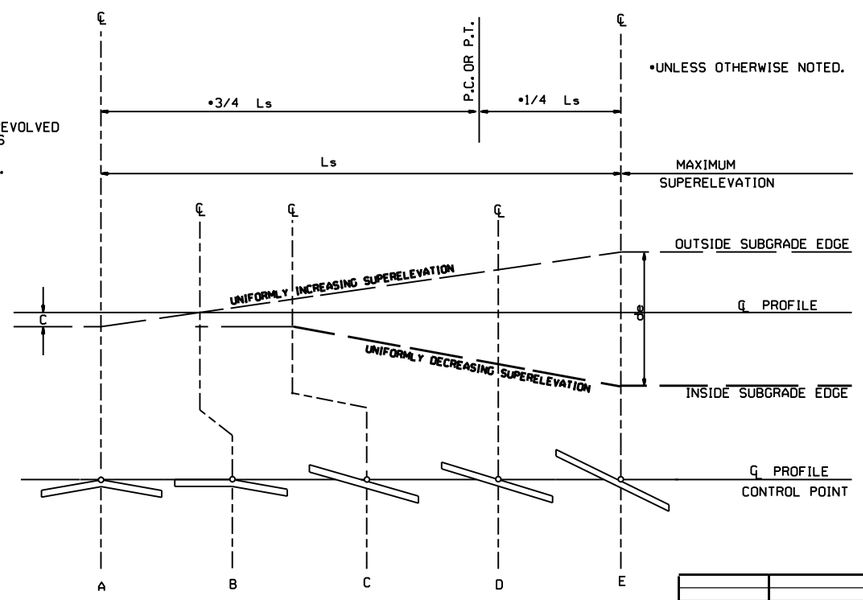

STANDARD METHOD WHEN SUPERELEVATION REVOLVES AROUND CENTER LINE

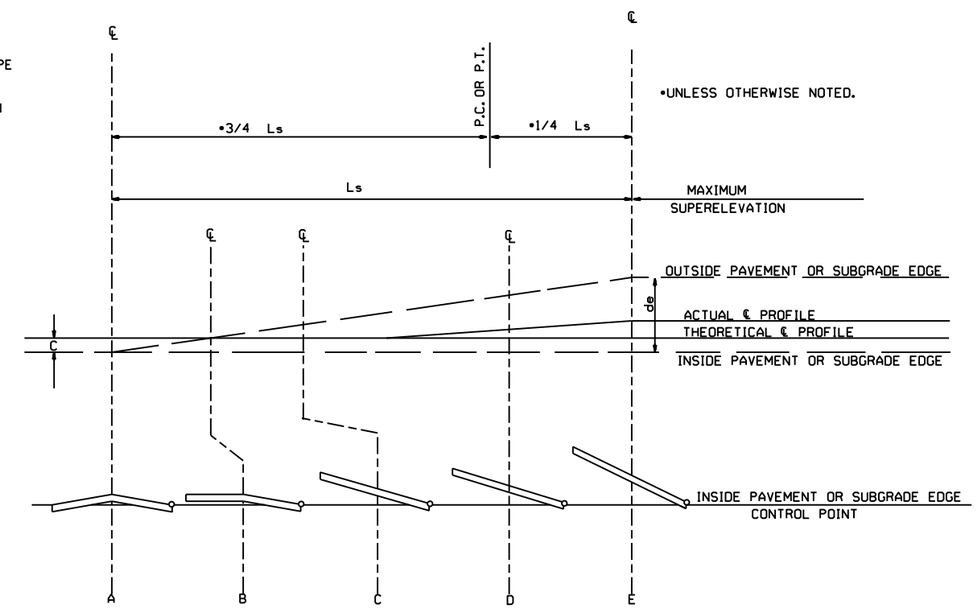

STANDARD METHOD WHEN SUPERELEVATION REVOLVES AROUND INNER SUBGRADE POINT OR INNER PAVEMENT EDGE

NOTE: MAINTAIN NORMAL CROWN ON INSIDE UNTIL SUPERELEVATION EXCEEDS 2C.

DATE	REVISION	DATE FILMED
11-07-19	REVISED SUPERELEVATION TABLE	
10-18-96	ADDED FORMULA	
01-09-87	ISSUED	534-1-9-87

ARKANSAS STATE HIGHWAY COMMISSION

TABLES AND METHOD OF SUPERELEVATION FOR TWO-WAY TRAFFIC

STANDARD DRAWING SE-2

R1-1 STOP STANDARD 30"X30" EXPRESSWAY 36"X36" SPECIAL 48"X48"	R1-2 YIELD STD. 36"X36"X36" EXPWY. 48"X48"X48" FWY. 60"X60"X60"	R2-1 SPEED LIMIT 50 STD. 24"X30" EXPWY. 36"X48" FWY. 48"X60"	W3-5 SPEED LIMIT XX STD. 36"X36" EXPWY. 48"X48" FWY. 48"X48"	W3-5a XX MPH SPEED ZONE AHEAD STD. 36"X36" EXPWY. 48"X48" FWY. 48"X48"	R4-1 DO NOT PASS STD. 24"X30" EXPWY. 36"X48" FWY. 48"X60"	R4-2 PASS WITH CARE STD. 24"X30" EXPWY. 36"X48" FWY. 48"X60"	R2-6aP FINES DOUBLE* WHEN WORKERS ARE PRESENT** 48"X36" * USE 6" C LETTERS ** USE 4" D LETTERS
R5-1 DO NOT ENTER STD. 30"X30" EXPWY. 36"X36" SPECIAL 48"X48"	R11-2 ROAD CLOSED 48"X30"	R11-3A ROAD CLOSED XX MILES AHEAD LOCAL TRAFFIC ONLY 60"X30"	R11-4 ROAD CLOSED TO THRU TRAFFIC 60"X30"	W21-5a RIGHT SHOULDER CLOSED STD. 36"X36" FWY. 48"X48"	W1-1 STD. 36"X36" FWY. 48"X48"	W1-2 STD. 36"X36" FWY. 48"X48"	R2-11 END HIGHER FINES ZONE 36"X48"
W1-3 STD. 48"X48"	W1-4 STD. 48"X48"	W1-6 STD. 48"X24" SPECIAL 60"X30"	W1-8 STD. 18"X24" SPECIAL 24"X30" EXPWY. 30"X36" FWY. 36"X48"	W3-1 STD. 36"X36" SPECIAL 48"X48"	W3-2 STD. 36"X36" SPECIAL 48"X48"	W4-2 STD. 36"X36" FWY. 48"X48"	R56-1 CONTROLLED ACCESS HWY. NO EXIT STD. 18"X18"
W5-1 ROAD NARROWS STD. 36"X36" SPECIAL 48"X48"	W6-3 EXPWY. 36"X36" SPECIAL 48"X48"	W8-7 LOOSE GRAVEL EXPWY. 36"X36" FWY. 48"X48"	W9-2 LANE ENDS MERGE RIGHT STD. 36"X36" FWY. 48"X48"	W13-1 XX M.P.H. STD. 24"X24"	W20-1 ROAD WORK XXXX STD. 48"X48"	W20-2 DETOUR XXXX STD. 48"X48"	W20-3 ROAD CLOSED XXXX STD. 48"X48"
W20-4 ONE LANE ROAD XXXX STD. 48"X48"	W20-5 RIGHT LANE CLOSED XXXX STD. 48"X48"	W20-7a 18" 500 FEET W16-2 24" STD. 36"X36" FWY. 48"X48"	W21-2 FRESH OIL STD. 30"X30" SPECIAL 36"X36"	W21-5 SHOULDER WORK STD. 30"X30" SPECIAL 36"X36"	W24-1 STD. 36"X36"	W1-4b STD. 48"X48"	
W8-11 UNEVEN LANES STD. 36"X36" FWY. 48"X48"	W8-9 LOW SHOULDER STD. 36"X36" FWY. 48"X48"	G20-1 ROAD WORK NEXT XX MILES 60"X24"	G20-2 END ROAD WORK 48"X24"	OM-3L OM-3R YELLOW BLACK 12"X36"	M4-9 DETOUR STD. 30"X24" SPECIAL 48"X36" SPECIAL 60"X48"	M4-10 DETOUR 48"X18"	

GENERAL NOTES:

1. ALL TRAFFIC CONTROL DEVICES USED ON ROAD CONSTRUCTION SHALL CONFORM TO THE MANUAL ON UNIFORM TRAFFIC CONTROL DEVICES, LATEST EDITION, AND TO THE STANDARD HIGHWAY SIGNS, LATEST EDITION, OR AS APPROVED BY THE FEDERAL HIGHWAY ADMINISTRATION.
2. TRAFFIC CONTROL DEVICES SHALL BE SET UP JUST BEFORE THE START OF CONSTRUCTION OPERATIONS AND SHALL BE PROPERLY MAINTAINED DURING THE TIME SUCH CONDITIONS EXIST. THEY SHALL REMAIN IN PLACE ONLY AS LONG AS NEEDED AND REMOVED THEREAFTER.
3. EXISTING SIGNS AND CONSTRUCTION SIGNS SHALL BE KEPT IN PROPER POSITION, AND BE CLEAN AND LEGIBLE AT ALL TIMES. SIGNS THAT DO NOT APPLY TO EXISTING CONDITIONS SHALL BE REMOVED. SIGNS THAT ARE DAMAGED, DEFACED, OR THAT ACCUMULATE DIRT DURING CONSTRUCTION SHALL BE CLEANED, REPAIRED, OR REPLACED.
4. SIGNS ARE USUALLY MOUNTED ON A SINGLE POST, ALTHOUGH THOSE WIDER THAN 36" OR LARGER THAN 10 SQ. FT. SHALL BE MOUNTED ON TWO POSTS OR ABOVE A TYPE III BARRICADE.
5. SIGN POSTS DIRECT BURIED IN SOIL SHALL BE 2 LB. MINIMUM CHANNEL POST OR 4"x4" WOOD POSTS. CHANNEL POSTS SHALL BE PAINTED GREEN. WOOD POSTS SHALL BE PAINTED WHITE. ALL POSTS SHALL BE NEATLY CONSTRUCTED, AND SHALL BE REPLUMBED, CLEANED, OR REPAIRED AS NEEDED FOR THE DURATION OF THE JOB. THERE SHALL NOT BE MORE THAN 2 POSTS IN A 7' PATH FOR WOOD OR CHANNEL POSTS. ANY CHANNEL POST SPLICE SHALL BE IN ACCORDANCE WITH STANDARD DRAWING TC-3.
6. POST MOUNTED SIGNS IN RURAL AREAS SHALL BE CONSTRUCTED WITH THE NEAR EDGE OF THE SIGN FROM 6 TO 12 FEET FROM THE PAVEMENT EDGE. SIGNS IN URBAN AREAS AND BARRICADE MOUNTED SIGNS SHALL BE MOUNTED A MINIMUM OF 2 FEET FROM THE PAVEMENT EDGE.
7. ALL POST AND BARRICADE MOUNTED SIGNS MOUNTED IN URBAN AREAS SHALL BE MOUNTED A MINIMUM DISTANCE OF 7' FROM THE BOTTOM OF THE SIGN TO THE ROADWAY SURFACE. ALL POST AND BARRICADE MOUNTED SIGNS MOUNTED IN RURAL AREAS SHALL BE MOUNTED A MINIMUM DISTANCE OF 7' FROM THE BOTTOM OF THE SIGN TO THE ROADWAY SURFACE, EXCEPT A MINIMUM OF 6' SHALL BE USED WHEN MOUNTING AN ADVISORY SIGN BELOW A WARNING SIGN. TEMPORARY SIGNS MAY BE MOUNTED ON PORTABLE SUPPORTS FOR INTERMEDIATE TERM STATIONARY WORK CONDITIONS. THE SIGNS MINIMUM MOUNTING HEIGHT SHALL BE 5'. RETROREFLECTIVE DEVICES SHALL BE USED. TEMPORARY SIGNS MAY BE MOUNTED ON PORTABLE SUPPORTS FOR SHORT-TERM, SHORT DURATION, AND MOBILE CONDITIONS. THEY SHALL BE NO LESS THAN ONE (1) FOOT ABOVE THE TRAVELED WAY. LONG-TERM STATIONARY SIGNS SHALL BE DIRECT BURIED IN SOIL, UNLESS CONDITIONS NECESSITATE THE USE OF PORTABLE SIGNS, OR AS APPROVED BY THE ENGINEER. CONCRETE PADS, CONCRETE OR ROCK BALLAST, OR OTHER SOLID MATERIALS SHALL NOT BE UTILIZED WITH PORTABLE SIGN SUPPORTS.
8. FLAGGERS SHALL USE REFLECTORIZED STOP-SLOW PADDLES. FLAGS MAY BE USED ONLY FOR EMERGENCY SITUATIONS.
9. MOST OF THE SIGNS SHOWN ARE ORIENTED TO THE RIGHT. HOWEVER, THIS DOES NOT PRECLUDE THE USE OF MIRROR IMAGES OF THESE SIGNS WHERE THE REVERSE ORIENTATION MIGHT BETTER CONVEY TO MOTORISTS THE PROPER DIRECTION OF MOVEMENT.
10. R2-6aP PLAQUES SHALL BE MOUNTED BELOW AN APPLICABLE ADVANCE WARNING SIGN THAT IS LOCATED AT LEAST 1500' BUT NOT MORE THAN 1 MILE IN ADVANCE OF THE WORK ZONE. IF A SPEED LIMIT REDUCTION IS IN EFFECT, THE PLAQUE SHALL BE PLACED A MINIMUM OF 500' IN ADVANCE OF THE W3-5 "REDUCED SPEED AHEAD" SIGN. R2-11 SIGNS SHALL BE INSTALLED AT OR NEAR THE DOWNSTREAM END OF THE WORK ZONE. SEE STANDARD DRAWINGS TC-2, TC-3, AND TC-6 FOR TYPICAL PLACEMENT LOCATIONS.

* NOTE: SUPPORTS FOR SIGNS, BARRICADES, AND VERTICAL PANELS THAT ARE DIFFERENT FROM THE REQUIREMENTS SHOWN IN NOTES 4 & 5, BUT MEET THE REQUIREMENTS OF MANUAL FOR ASSESSING SAFETY HARDWARE (MASH), WILL BE ACCEPTED. COMPLIANCE WITH THE REQUIREMENTS OF MANUAL FOR ASSESSING SAFETY HARDWARE (MASH) IS REQUIRED FOR ALL PROJECTS.

DATE	REV	DESCRIPTION
08-14-25		REPLACED R55-1 WITH R2-6aP, ADDED R2-11 & REVISED NOTE 10
11-07-19		REVISED FOR MASH
04-13-17		DELETED RSP-1 & ADDED W21-5a
09-02-15		REVISED REDUCED SPEED LIMIT AHEAD SIGNS REVISED ROAD WORK NEXT XX MILES
12-15-11		REVISED W24-1

ARDOT ARKANSAS DEPARTMENT OF TRANSPORTATION

ARKANSAS STATE HIGHWAY COMMISSION

STANDARD TRAFFIC CONTROLS FOR HIGHWAY CONSTRUCTION

DATE EFFECTIVE 08-14-2025

STANDARD DRAWING

TC-1

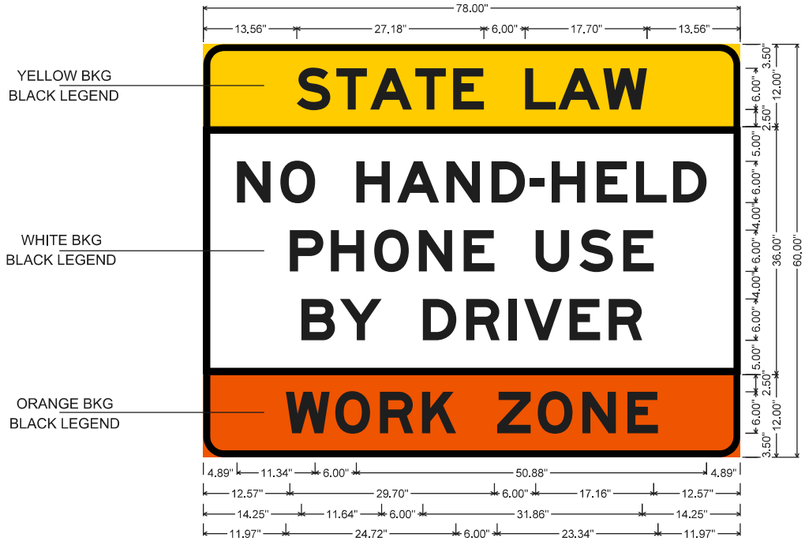

3.0" Radius, 1.0" Border, Black on Yellow;
"STATE LAW", E Mod 2K;

3.0" Radius, 1.0" Border, Black on White;
"NO HAND-HELD", E Mod 2K; "PHONE USE", E Mod 2K; "BY DRIVER", E Mod 2K;

3.0" Radius, 1.0" Border, Black on Orange;
"WORK ZONE", E Mod 2K;

WZ-4 (INTERSTATE) SIGN

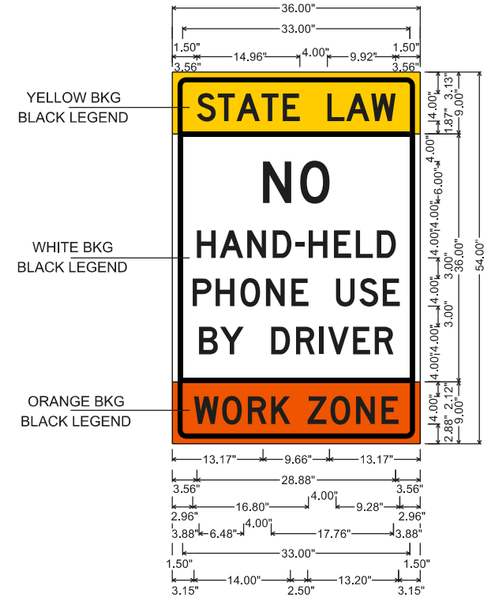

2.00" Radius, 0.75" Border, 0.75" Indent, Black on Yellow;
"STATE LAW", D 2K;

3.00" Radius, 0.75" Border, 0.75" Indent, Black on White;
"NO", D 2K; "HAND-HELD", D 2K;
"PHONE USE", D 2K;
"BY DRIVER", D 2K;

2.00" Radius, 0.75" Border, 0.75" Indent, Black on Orange;
"WORK", D 2K; "ZONE", D 2K;

WZ-4 (NON-INTERSTATE) SIGN

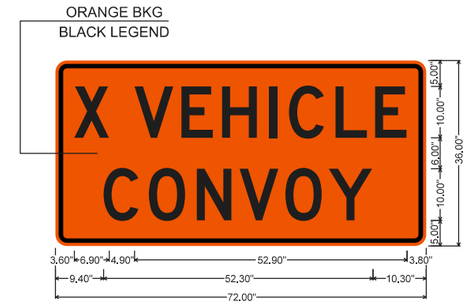

2.3" Radius, 0.9" Border, 0.6" Indent, Black on Orange;
"X", D; "VEHICLE", D; "CONVOY", D;

WZ-2 SIGN

2.3" Radius, 0.9" Border, 0.6" Indent, Black on Orange;
"WORK", D; "CONVOY", D;

WZ-3 SIGN

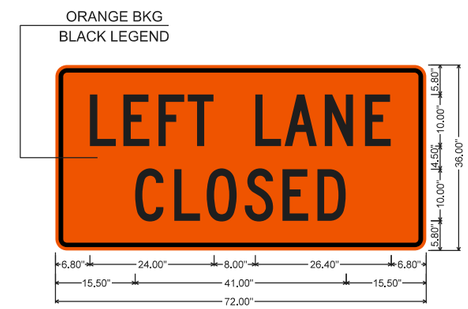

2.3" Radius, 0.9" Border, 0.6" Indent, Black on Orange;
"LEFT LANE", C; "CLOSED", C;

WZ-W20-5L SIGN

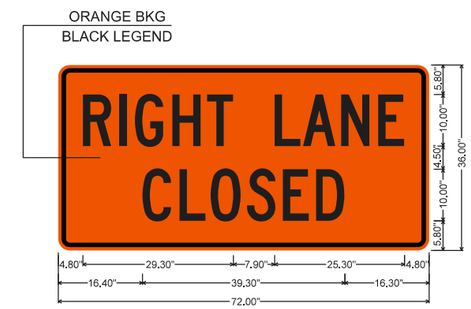

2.3" Radius, 0.9" Border, 0.6" Indent, Black on Orange;
"RIGHT", C specified length; "LANE", C specified length;
"CLOSED", C specified length;

WZ-W20-5R SIGN

NOTE: REFER TO STANDARD DRAWING TC-1 FOR GENERAL NOTES.

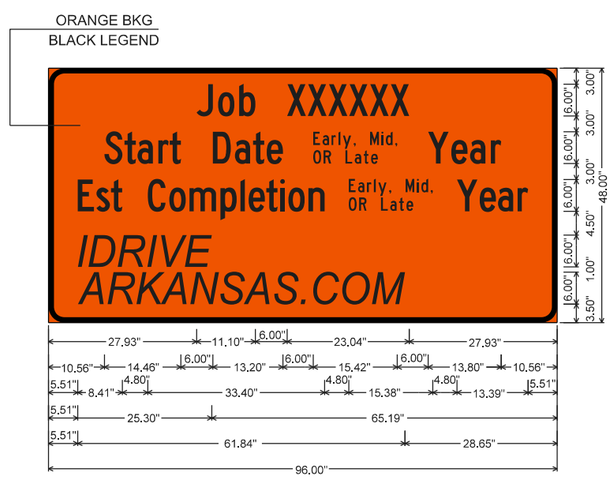

3.0" Radius, 1.0" Border, Black on Orange;
"Job XXXXXX" C 2K; "Start Date Xxxx Year" C 2K;
"Est Completion Xxxx Year" C 2K 80% spacing;
"IDRIVE" Arial, Italic; "ARKANSAS.COM" Arial, Italic;

CONSTRUCTION PROJECT INFORMATION SIGN

WZ-1 (INTERSTATE) SIGN

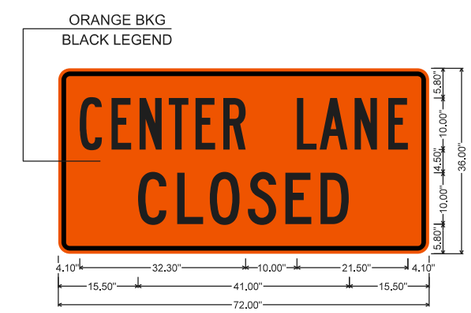

2.3" Radius, 0.9" Border, 0.6" Indent, Black on Orange;
"CENTER LANE", B 2K; "CLOSED", C;

WZ-W20-5C SIGN

MOBILE WORK ZONE SIGNS

DATE REV	ISSUED	DESCRIPTION
	04-09-26	

ARKANSAS STATE HIGHWAY COMMISSION

STANDARD TRAFFIC CONTROLS FOR HIGHWAY CONSTRUCTION

DATE EFFECTIVE	STANDARD DRAWING	TC-1A
04-09-2026		

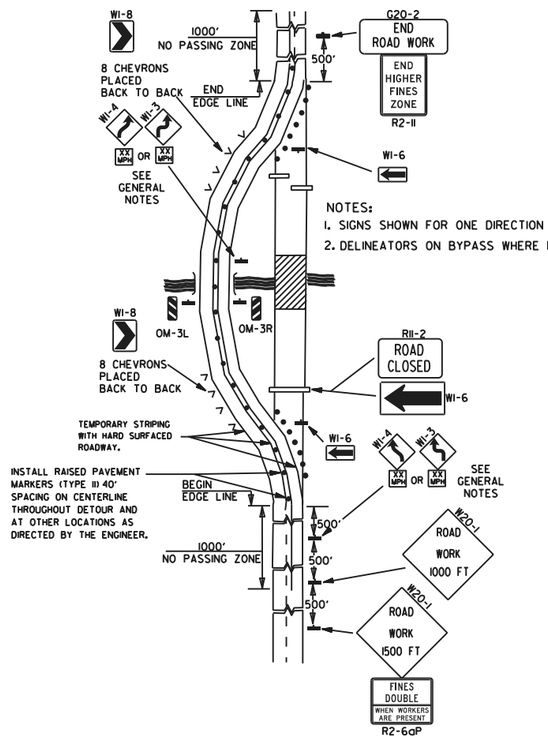

(A) TYPICAL APPLICATION OF TRAFFIC CONTROL DEVICES ON A 2-LANE HIGHWAY WHERE THE ENTIRE ROADWAY IS CLOSED AND A BYPASS DETOUR IS PROVIDED.

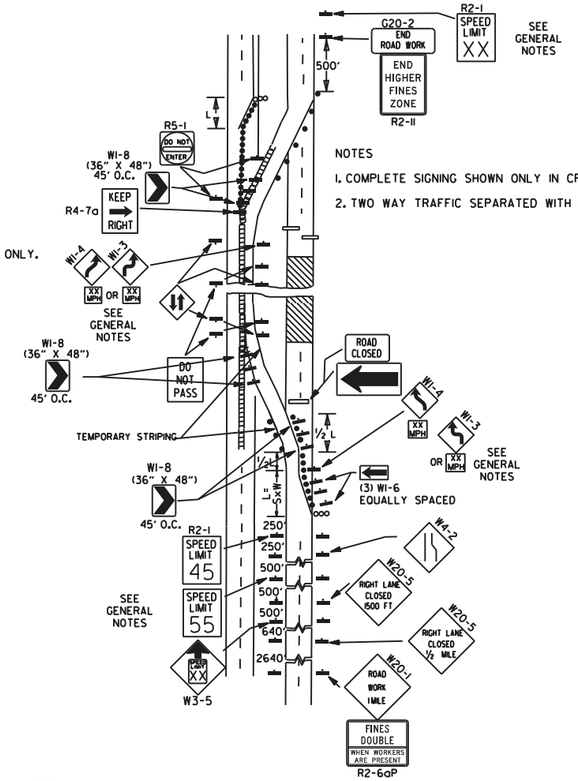

(B) TYPICAL APPLICATION - 4-LANE DIVIDED ROADWAY WHERE ONE ROADWAY IS CLOSED.

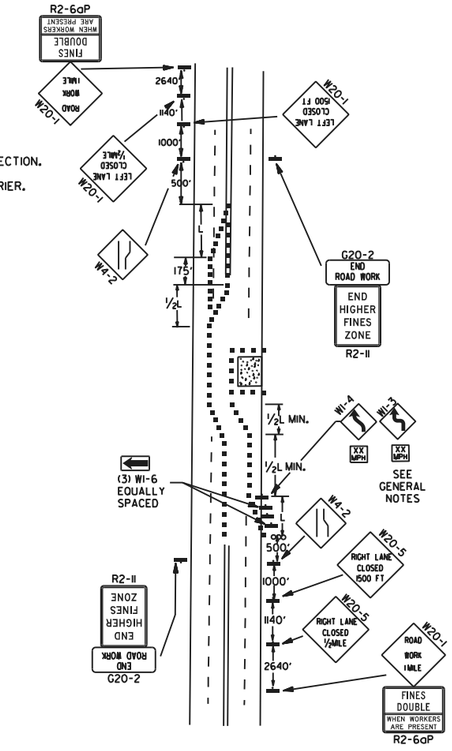

(C) TYPICAL APPLICATION - 4-LANE UNDIVIDED ROADWAY WHERE HALF OF THE ROADWAY IS CLOSED.

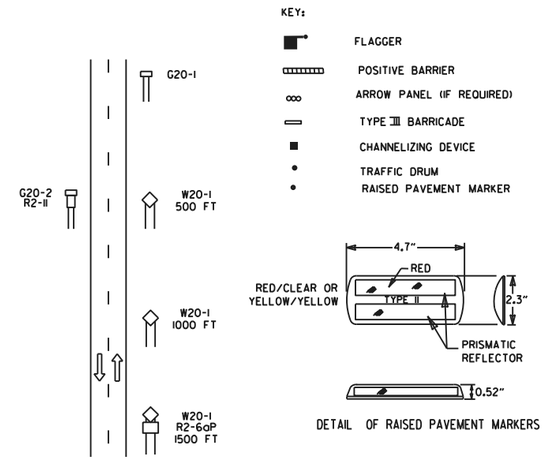

TYPICAL ADVANCE WARNING SIGN PLACEMENT

TAPER FORMULAE:

L=SXW FOR SPEEDS OF 45MPH OR MORE.

$L = \frac{WS^2}{60}$ FOR SPEEDS OF 40MPH OR LESS.

WHERE:

L= MINIMUM LENGTH OF TAPER.

S= NUMERICAL VALUE OF POSTED SPEED LIMIT PRIOR TO WORK OR 85TH PERCENTILE SPEED.

W= WIDTH OF OFFSET.

GENERAL NOTES:

1. THE MAINTENANCE DIVISION SHALL CONDUCT A BALL BANK STUDY TO DETERMINE THE ADVISORY SPEED LIMIT PRIOR TO OPENING TO TRAFFIC. THE ADVISORY SPEED WILL BE POSTED ON W1-3 OR W1-4 CURVE WARNING SIGNS. USE W1-4 WHEN SPEED IS GREATER THAN 30MPH AND W1-3 WHEN 30MPH OR LESS
2. WHEN THE EXISTING SPEED LIMIT IS 55MPH AND THE PLANS REQUIRE A SPEED LIMIT OF 45MPH, THE R2-1(55) SHALL BE OMITTED AND THE W3-5 SHALL BE INSTALLED AT THAT LOCATION. ADDITIONAL R2-1 45MPH SPEED LIMIT SIGNS SHALL BE INSTALLED AT A MAXIMUM OF 1MILE INTERVALS. AT THE END OF THE WORK AREA A R2-1(XX) SHALL BE INSTALLED TO MATCH ORIGINAL SPEED LIMIT.
3. WHEN THE EXISTING SPEED LIMIT IS 65MPH AND THE PLANS REQUIRE A SPEED LIMIT OF 55MPH, THE R2-1(45) SHALL BE OMITTED. ADDITIONAL R2-1 55MPH SPEED LIMIT SIGNS SHALL BE INSTALLED AT A MAXIMUM OF 1MILE INTERVALS. AT THE END OF THE WORK AREA A R2-1(XX) SHALL BE INSTALLED TO MATCH ORIGINAL SPEED LIMIT.
4. THE MAXIMUM SPACING BETWEEN CHANNELIZING DEVICES IN A TAPER SHOULD BE APPROXIMATELY EQUAL IN FEET TO THE SPEED LIMIT. BEYOND THE TAPER, MAXIMUM SPACING SHALL BE TWO TIMES THE SPEED LIMIT, OR AS DIRECTED BY THE ENGINEER.
5. WARNING LIGHTS AND/OR FLAGS MAY BE MOUNTED TO SIGNS OR CHANNELIZING DEVICES AT NIGHT AS NEEDED.
6. PAVEMENT MARKINGS NO LONGER APPLICABLE WHICH MIGHT CREATE CONFUSION IN THE MINDS OF VEHICLE OPERATORS SHALL BE REMOVED OR OBLITERATED AS SOON AS PRACTICABLE.
7. TRAILER MOUNTED DEVICES SUCH AS ARROW PANELS AND PORTABLE CHANGEABLE MESSAGE SIGNS SHALL BE DELINEATED BY AFFIXING CONSPICUITY MATERIAL IN A CONTINUOUS LINE ON THE FACE OF THE TRAILER. WHEN PLACED ON OR ADJACENT TO THE SHOULDER AND NOT BEHIND A POSITIVE BARRIER, THESE DEVICES SHALL BE DELINEATED BY PLACING FIVE (5) TRAFFIC DRUMS, EQUALLY SPACED ALONG THE TRAFFIC SIDE OF THE DEVICE. PAYMENT FOR TRAFFIC DRUMS SHALL BE CONSIDERED INCLUDED IN THE PRICE BID FOR VARIOUS TRAILER MOUNTED DEVICES.
8. DIMENSIONS SHOWN FOR RAISED PAVEMENT MARKERS ARE TYPICAL. THE CONTRACTOR MAY SUBSTITUTE SIMILAR MARKERS WITH THE APPROVAL OF THE ENGINEER. REQUESTING APPROVAL FOR SIMILAR MARKERS MAY BE MADE BY REFERRING TO THE ARDOT QUALIFIED PRODUCTS LIST.
9. ALL TRAILER MOUNTED DEVICES SUCH AS ARROW PANELS AND PORTABLE CHANGEABLE MESSAGE SIGNS SHALL MEET THE REQUIREMENTS OF THE MANUAL FOR ASSESSING SAFETY HARDWARE (MASH).

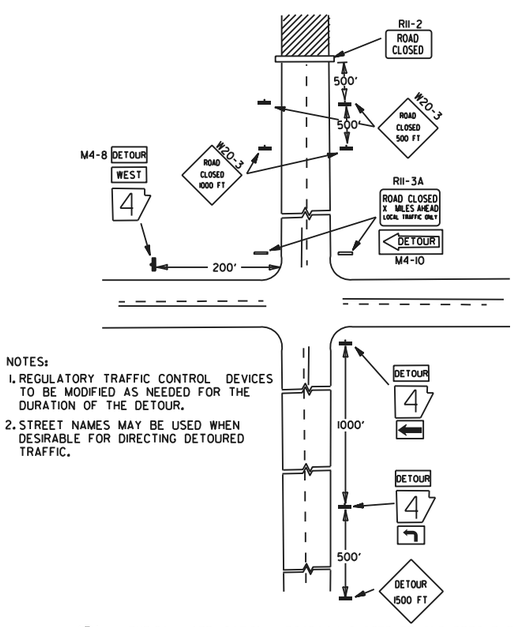

NOTES:

1. REGULATORY TRAFFIC CONTROL DEVICES TO BE MODIFIED AS NEEDED FOR THE DURATION OF THE DETOUR.
2. STREET NAMES MAY BE USED WHEN DESIRABLE FOR DIRECTING DETOURED TRAFFIC.

(D) TYPICAL APPLICATION - ROADWAY CLOSED BEYOND DETOUR POINT.

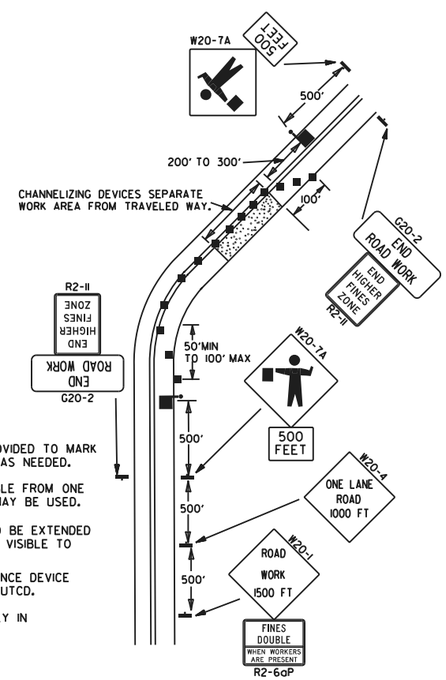

NOTES:

1. FLOOD LIGHTS SHOULD BE PROVIDED TO MARK FLAGGER STATIONS AT NIGHT AS NEEDED.
2. IF ENTIRE WORK AREA IS VISIBLE FROM ONE STATION, A SINGLE FLAGGER MAY BE USED.
3. CHANNELIZING DEVICES ARE TO BE EXTENDED TO A POINT WHERE THEY ARE VISIBLE TO APPROACHING TRAFFIC.
4. AUTOMATED FLAGGER ASSISTANCE DEVICE (AFAD) OPTIONAL. REFER TO MUTCD.
5. COMPLETE SIGNING SHOWN ONLY IN CROSSOVER DIRECTION.

(E) TYPICAL APPLICATION OF TRAFFIC CONTROL DEVICES ON 2-LANE HIGHWAY WHERE ONE LANE IS CLOSED AND FLAGGING IS PROVIDED.

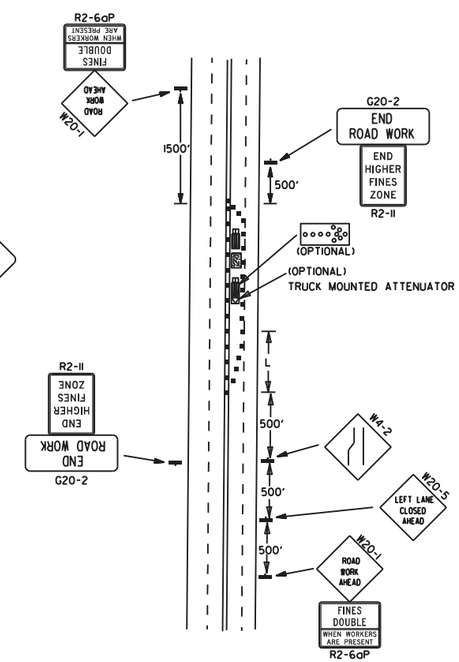

(F) TYPICAL APPLICATION - 4-LANE UNDIVIDED ROADWAY WITH INSIDE LANE CLOSED.

DATE	REV	DESCRIPTION
08-14-25		ADDED R2-6aP AND R2-11
05-20-21		REVISED NOTE 7
11-07-19		REVISED NOTE 1. ADDED NOTE 9
09-02-15		REVISED NOTE 2, ADDED NOTE 8, REVISED DRAWING (A) & REPLACED R2-5A WITH W3-5
09-12-13		REVISED DETAIL OF RAISED PAVEMENT MARKINGS

ARDOT ARKANSAS DEPARTMENT OF TRANSPORTATION

ARKANSAS STATE HIGHWAY COMMISSION

STANDARD TRAFFIC CONTROLS FOR HIGHWAY CONSTRUCTION

DATE EFFECTIVE 08-14-2025

STANDARD DRAWING

TC-2

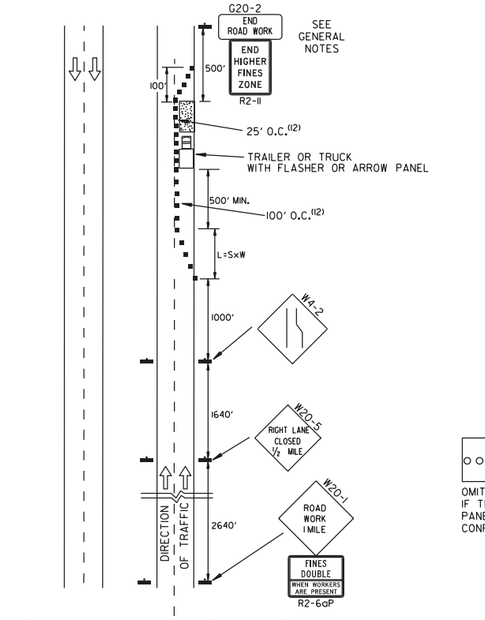

(A) TYPICAL APPLICATION - DAYTIME MAINTENANCE OPERATIONS OF SHORT DURATION ON A 4-LANE DIVIDED ROADWAY WHERE HALF OF THE ROADWAY IS CLOSED.

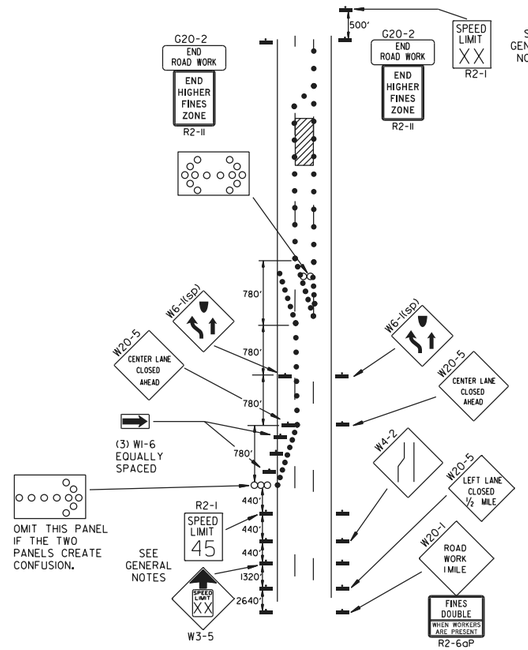

(B) TYPICAL APPLICATION - 3-LANE ONEWAY ROADWAY WHERE CENTER LANE IS CLOSED.

KEY:

ooo ARROW PANEL (IF REQUIRED)

■ CHANNELIZING DEVICE

● TRAFFIC DRUM

GENERAL NOTES:

1. A SPEED LIMIT REDUCTION MAY BE IMPLEMENTED ONLY WHEN DESIGNATED IN THE PLAN OR WHEN RECOMMENDED BY THE ROADWAY DESIGN DIVISION.
2. WHEN THE EXISTING SPEED LIMIT IS 55MPH AND THE PLANS REQUIRE A SPEED LIMIT OF 45MPH, THE R2-1(55) SHALL BE OMITTED AND THE W3-5 SHALL BE INSTALLED AT THAT LOCATION. ADDITIONAL R2-1 45MPH SPEED LIMIT SIGNS SHALL BE INSTALLED AT A MAXIMUM OF 1 MILE INTERVALS. AT THE END OF THE WORK AREA A R2-1(XX) SHALL BE INSTALLED TO MATCH ORIGINAL SPEED LIMIT.
3. WHEN THE EXISTING SPEED LIMIT IS 65MPH AND THE PLANS REQUIRE A SPEED LIMIT OF 55MPH, THE R2-1(45) SHALL BE OMITTED. ADDITIONAL R2-1 55MPH SPEED LIMIT SIGNS SHALL BE INSTALLED AT A MAXIMUM OF 1 MILE INTERVALS. AT THE END OF THE WORK AREA A R2-1(XX) SHALL BE INSTALLED TO MATCH ORIGINAL SPEED LIMIT.
4. THE MAXIMUM SPACING BETWEEN CHANNELIZING DEVICES IN A TAPER SHOULD BE APPROXIMATELY EQUAL IN FEET TO THE SPEED LIMIT. BEYOND THE TAPER, MAXIMUM SPACING SHALL BE TWO TIMES THE SPEED LIMIT OR AS DIRECTED BY THE ENGINEER.
5. WARNING LIGHTS AND/OR FLAGS MAY BE MOUNTED TO SIGNS OR CHANNELIZING DEVICES AT NIGHT AS NEEDED.
6. PAVEMENT MARKINGS NO LONGER APPLICABLE WHICH MIGHT CREATE CONFUSION IN THE MINDS OF VEHICLE OPERATORS SHALL BE REMOVED OR OBLITERATED AS SOON AS PRACTICABLE.
7. THE G20-1 SIGN SHOULD BE INSTALLED ON JOBS OF OVER TWO MILES IN LENGTH. WHEN THE LANE CLOSURE IS NOT AT THE BEGINNING OF THE PROJECT, THE G20-1 SIGN SHALL BE ERECTED 125' IN ADVANCE OF THE JOB LIMIT. ADDITIONAL W20-1 (1 MILE) SIGNS ARE NOT REQUIRED IN ADVANCE OF LANE CLOSURES THAT BEGIN INSIDE THE PROJECT LIMITS. THE DISTANCE DISPLAYED ON THE G20-1 SIGN SHALL BE STATED TO THE NEAREST WHOLE MILE.
8. FLAGGERS SHALL USE STOP/SLOW PADDLES FOR CONTROLLING TRAFFIC THROUGH WORK ZONES. FLAGS MAY BE USED ONLY FOR EMERGENCY SITUATIONS.
9. ALL PLASTIC DRUMS AND CONES SHALL MEET THE REQUIREMENTS OF MANUAL FOR ASSESSING SAFETY HARDWARE (MASH).
10. TRAILER MOUNTED DEVICES SUCH AS ARROW PANELS AND PORTABLE CHANGEABLE MESSAGE SIGNS SHALL BE DELINEATED BY AFFIXING CONSPICUITY MATERIAL IN A CONTINUOUS LINE ON THE FACE OF THE TRAILER. WHEN PLACED ON OR ADJACENT TO THE SHOULDER AND NOT BEHIND A POSITIVE BARRIER, THESE DEVICES SHALL BE DELINEATED BY PLACING FIVE (5) TRAFFIC DRUMS, EQUALLY SPACED ALONG THE TRAFFIC SIDE OF THE DEVICE. PAYMENT FOR TRAFFIC DRUMS SHALL BE CONSIDERED INCLUDED IN THE PRICE BID FOR VARIOUS TRAILER MOUNTED DEVICES.
11. ALL TRAILER MOUNTED DEVICES SUCH AS ARROW PANELS AND PORTABLE CHANGEABLE MESSAGE SIGNS SHALL MEET THE REQUIREMENTS OF THE MANUAL FOR ASSESSING SAFETY HARDWARE (MASH).
12. ONLY WHERE SPACE RESTRICTIONS DO NOT ALLOW FOR TRAFFIC DRUMS, TUBULAR MARKERS MAY BE USED AT 50' O.C. IN STABILIZATION ZONES AND AT 10' O.C. DIRECTLY ADJACENT TO CONSTRUCTION OPERATIONS AND AT EXIT TAPERS. TUBULAR MARKERS SHALL BE STABILIZED WITH WEIGHTED BASES IN ACCORDANCE WITH THE M.U.T.C.D.

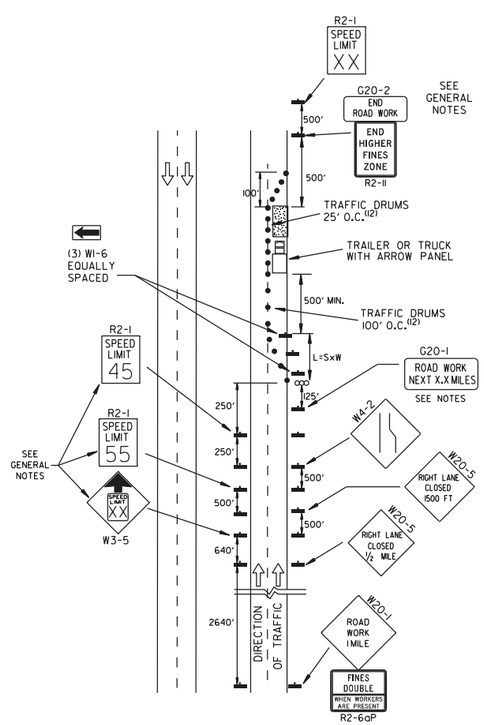

(C) TYPICAL APPLICATION - CONSTRUCTION OPERATIONS OF INTERMEDIATE TO LONG TERM DURATION ON A 4-LANE DIVIDED ROADWAY WHERE HALF OF THE ROADWAY IS CLOSED.

CHANNELIZING DEVICES

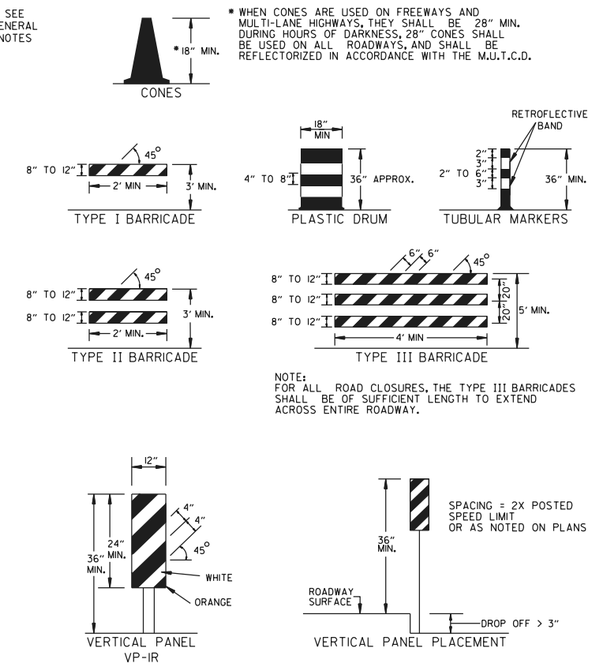

* WHEN CONES ARE USED ON FREEWAYS AND MULTI-LANE HIGHWAYS, THEY SHALL BE 28" MIN. DURING HOURS OF DARKNESS, 28" CONES SHALL BE USED ON ALL ROADWAYS, AND SHALL BE REFLECTORIZED IN ACCORDANCE WITH THE M.U.T.C.D.

NOTE:
FOR ALL ROAD CLOSURES, THE TYPE III BARRICADES SHALL BE OF SUFFICIENT LENGTH TO EXTEND ACROSS ENTIRE ROADWAY.

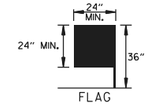

FLAG SHALL BE OF GOOD GRADE RED MATERIAL

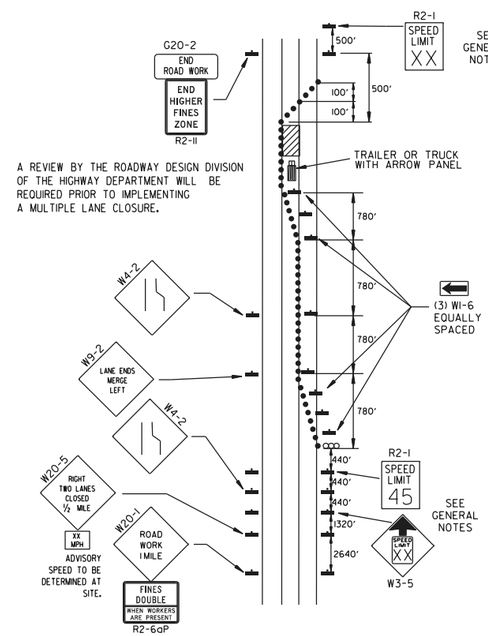

A REVIEW BY THE ROADWAY DESIGN DIVISION OF THE HIGHWAY DEPARTMENT WILL BE REQUIRED PRIOR TO IMPLEMENTING A MULTIPLE LANE CLOSURE.

(D) TYPICAL APPLICATION - CLOSING MULTIPLE LANES OF A MULTILANE HIGHWAY.

TRAFFIC CONTROL DEVICES

NON-INTERSTATE			
VERTICAL DIFFERENTIAL	LOCATION	TRAFFIC CONTROL	
		≤ 45 MPH	> 45 MPH
≤ 1"	CENTERLINE	W8-11	W8-11
> 1" ≤ 3"	CENTERLINE	W8-11 AND CENTERLINE LANE STRIPING	W8-11 AND CENTERLINE LANE STRIPING
> 3"	CENTERLINE	STANDARD LANE CLOSURE(6)	STANDARD LANE CLOSURE(6)
≤ 3"	EDGE OF TRAVELED LANE OR EDGE OF SHOULDER	W8-9 AND TRAFFIC DRUMS(1)	W8-9 AND TRAFFIC DRUMS(1)
> 3" ≤ 6"	EDGE OF TRAVELED LANE OR EDGE OF SHOULDER	W8-17, EDGE LINE STRIPING, AND TRAFFIC DRUMS(1)	W8-17, EDGE LINE STRIPING, AND TRAFFIC DRUMS(1)
> 6" ≤ 18"	EDGE OF TRAVELED LANE OR EDGE OF SHOULDER	W8-17, EDGE LINE STRIPING, AND TRAFFIC DRUMS(1)	W8-17, EDGE LINE STRIPING, AND TRAFFIC DRUMS(2)
> 18" ≤ 24"	EDGE OF TRAVELED LANE OR EDGE OF SHOULDER	W8-17, EDGE LINE STRIPING, AND TRAFFIC DRUMS(1)	A STABILIZED WEDGE, W8-17, EDGE LINE STRIPING, AND TRAFFIC DRUMS(3)
> 24"	EDGE OF TRAVELED LANE OR EDGE OF SHOULDER	PRECAST CONCRETE BARRIER(4) & EDGE LINES	PRECAST CONCRETE BARRIER(4) & EDGE LINES

INTERSTATE		
VERTICAL DIFFERENTIAL	LOCATION	TRAFFIC CONTROL
≤ 3"	CENTERLINE	W8-11 AND LANE STRIPING
≤ 3"	EDGE OF TRAVELED LANE OR EDGE OF SHOULDER	W8-9, EDGE LINE STRIPING, AND TRAFFIC DRUMS(2)
> 3" ≤ 6"	EDGE OF TRAVELED LANE OR EDGE OF SHOULDER	W8-17, EDGE LINE STRIPING, AND TRAFFIC DRUMS(2)
> 6"	EDGE OF TRAVELED LANE OR EDGE OF SHOULDER	PRECAST CONCRETE BARRIER & EDGE LINES

INTERSTATE AND NON-INTERSTATE		
FORESLOPE	HEIGHT	TRAFFIC CONTROL
1:1	> 2 FT	PRECAST CONCRETE BARRIER
2:1	≤ 5 FT	TRAFFIC DRUMS
2:1	> 5 FT	PRECAST CONCRETE BARRIER
Flatter than 2:1	N/A	TRAFFIC DRUMS

GENERAL NOTES:

1. WHEN THE SHOULDER AREA IS USED AS PART OF THE TRAVELED LANE AND THERE IS INSUFFICIENT WIDTH TO PLACE TRAFFIC DRUMS ON THE REMAINING SHOULDER WIDTH, THEN VERTICAL PANELS SHALL BE USED.
2. WHEN THERE IS INSUFFICIENT WIDTH TO PLACE TRAFFIC DRUMS ON THE REMAINING SHOULDER WIDTH, A STABILIZED WEDGE SHALL BE USED.
3. PRECAST CONCRETE BARRIER WALL CAN BE USED IN LIEU OF A STABILIZED WEDGE, W8-17 SIGN, EDGE LINE STRIPING, AND TRAFFIC DRUMS, IF AND WHERE DIRECTED BY THE ENGINEER.
4. A STABILIZED WEDGE, W8-17 SIGN, EDGE LINE STRIPING, AND TRAFFIC DRUMS CAN BE USED IN LIEU OF PRECAST CONCRETE BARRIER WALL, IF AND WHERE DIRECTED BY THE ENGINEER.
5. W21-5, W21-5a, AND/OR W21-5b SIGNS SHALL BE USED WHERE THE ROADWAY IS UNOBSTRUCTED IF AND WHERE DIRECTED BY THE ENGINEER.
6. TIME LIMITATIONS MUST CONFORM TO SECTION 603 OF THE STANDARD SPECIFICATIONS FOR HIGHWAY CONSTRUCTION (CURRENT EDITION).

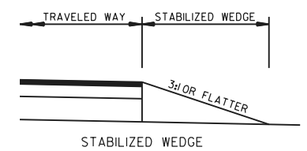

STABILIZED WEDGE

NOTE:
MATERIALS FOR THE STABILIZED WEDGE SHALL MEET THE REQUIREMENTS PROVIDED IN SECTION 603.02 OF THE STANDARD SPECIFICATIONS.

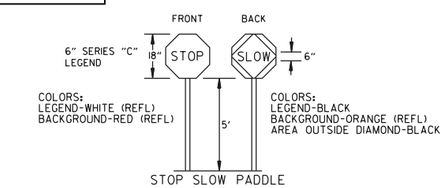

STOP SLOW PADDLE

NOTES:
USE SPLICES ONLY WHEN NECESSARY FOR INSTALLATION. TYPICAL INSTALLATION SHOULD HAVE NO SPLICES (SEE STD. DRAWING NO. SHS-2)

NORMAL INSTALLATIONS WILL REQUIRE 1/4" DIA. BOLTS TO MOUNT SIGNS TO POST AND 5/16" DIA. BOLTS TO ASSEMBLE THE VARIOUS POST SUPPORTS. EACH OF THESE BOLTS SHALL BE CARRIAGE BOLTS.

SIGN POSTS SHALL BE PAINTED GREEN; SIGNS SHALL NOT BE PAINTED, AND ALL SIGN POSTS SHALL BE PLUMB.

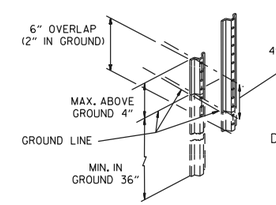

DETAIL OF SPLICES

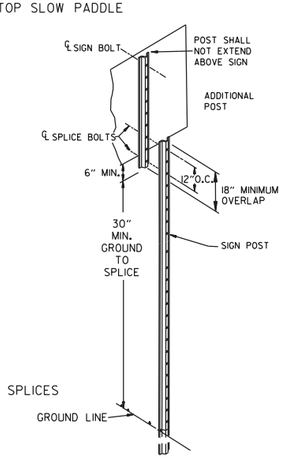

DATE	REV	DESCRIPTION
08-14-25		ADDED R2-6aP AND R2-11
05-22-25		REVISED TRAFFIC CONTROL DEVICES AND NOTES. ADDED NOTE 12
08-12-21		REVISED TRAFFIC CONTROL DEVICES AND NOTES
05-20-21		REVISED NOTE 10
02-27-20		REVISED TRAFFIC CONTROL DEVICES DETAILS

ARDOT ARKANSAS DEPARTMENT OF TRANSPORTATION

ARKANSAS STATE HIGHWAY COMMISSION

STANDARD TRAFFIC CONTROLS FOR HIGHWAY CONSTRUCTION

DATE EFFECTIVE 08-14-2025

STANDARD DRAWING

TC-3

REINFORCING BAR TABLE PER BARRIER UNIT

MARK	LOCATION	BAR SIZE	(NO. BARS)	SKETCH
H-1	HORIZONTAL IN BARRIER TIED INSIDE V-1 BARS	#5	(6)	19'-3"
H-2	CENTERED ABOVE DRAIN SLOTS LONG. & TRANSVERSELY	#5	(6)	6'-6"
H-3	TIED ABOVE H-1 BARS TO SUPPORT H-2, TIED TO V-1	#4	(2)	1'-6"
S-1	OVER LIFT HOLES	#4	(2)	2'-5", 90°, 3 3/8" R, LIFTING HOLE
S-2	HORIZ. AROUND SLOTS BETWEEN V-1'S @ DRAIN SLOTS	#4	(2)	1 1/2" R, SLOTS, 7", 1'-6", 1" MIN. CLEAR TO BAR; 5'-1" BAR W/(4) 1 1/2" R BENDS & MIN. 1'-0" OVERLAP
V-1	VERTICAL IN BARRIER(3) EACH END & (2) AT EACH DRAIN SLOTS	#5	(16)	TOTAL LENGTH 4'-9"; 2 3/16" R, 12°, 1 1/2", 9", 2'-1 3/8", 4 3/8"

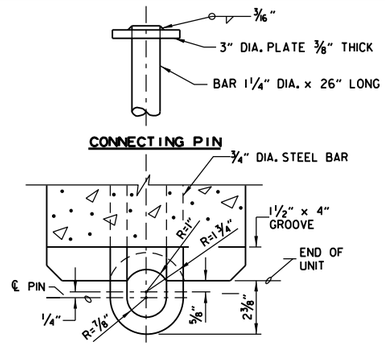

CONNECTION DETAILS

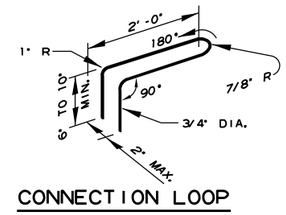

CONNECTION LOOP

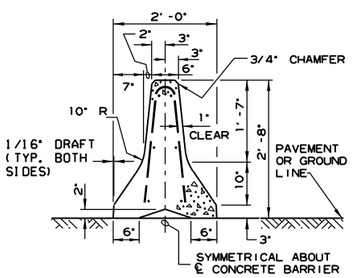

SECTION A-A

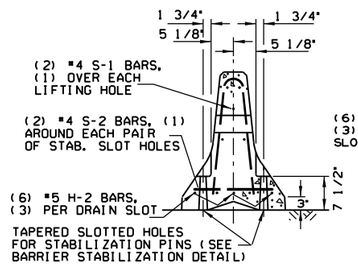

SECTION B-B

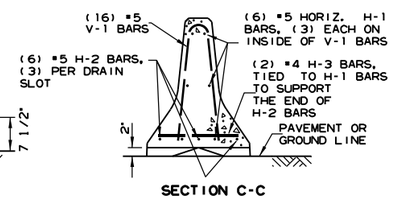

SECTION C-C

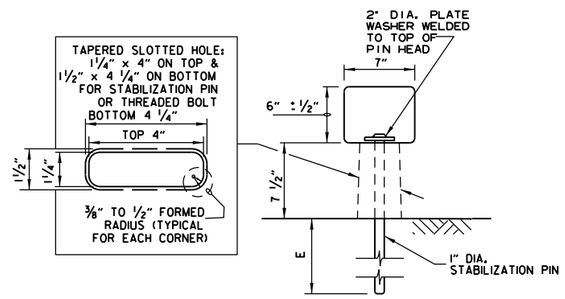

BARRIER STABILIZATION DETAIL

ROADWAY SECTION

(E) 4" - CONCRETE PAVEMENT
8" - ASPHALT PAVEMENT
12" - SHOULDER AREAS

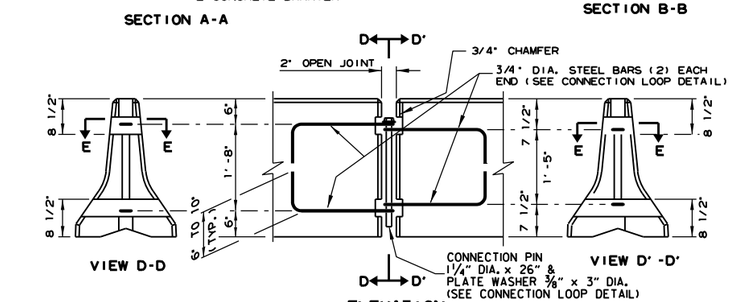

ELEVATION

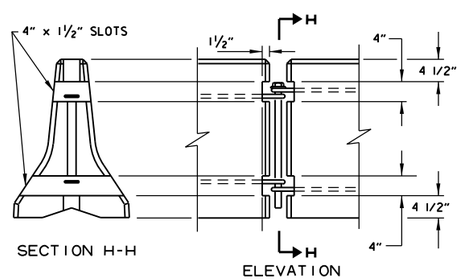

BARRIER REMOVAL SLOT DETAILS

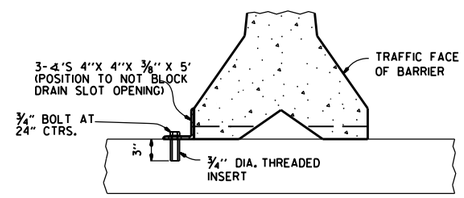

NOTE: " THREADED INSERTS SHALL BE CAST IN PLACE FOR ALL NEW BRIDGE DECKS AND DRILLED AND GROUTED FOR EXISTING BRIDGE DECKS. INSERTS SHALL HAVE A MINIMUM ULTIMATE LOAD CAPACITY OF 8000 LBS. IN TENSION. AFTER REMOVAL OF BARRIER, BOLTS, AND ANGLES, THE INSERTS SHALL BE FILLED WITH APPROVED NON-SHRINK EPOXY.

BARRIER STABILIZATION DETAIL

BRIDGE DECKS

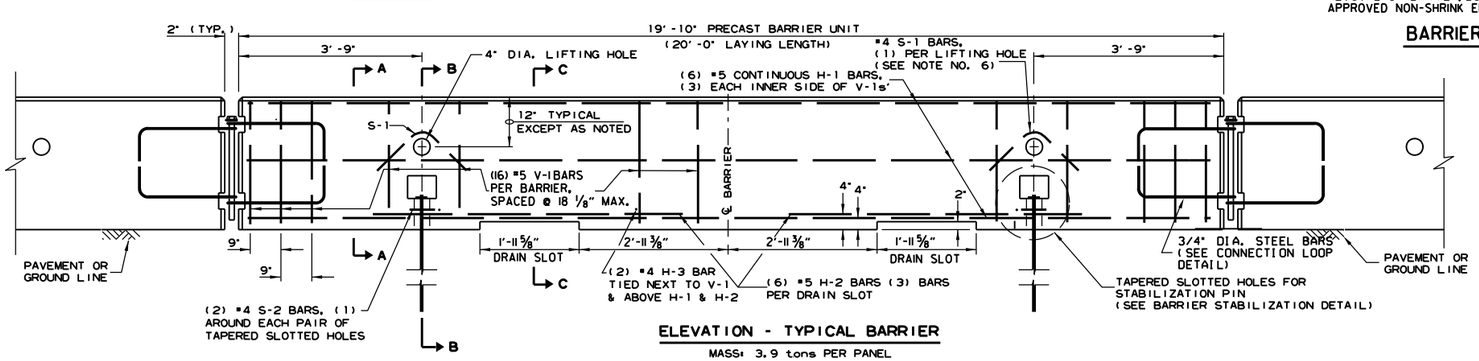

ELEVATION - TYPICAL BARRIER

MASS: 3.9 tons PER PANEL

GENERAL NOTES

1. THE CONTRACTOR SHALL FURNISH THE PRECAST CONCRETE BARRIER UNITS AND SHALL BE RESPONSIBLE FOR THE MANUFACTURE, SHIPMENT, STORAGE, PLACEMENT AND REMOVAL. AT THE COMPLETION OF THE PROJECT, THE PRECAST UNITS WILL REMAIN THE PROPERTY OF THE CONTRACTOR.

2. MATERIALS SHALL MEET THE FOLLOWING MINIMUM REQUIREMENTS:
   CONCRETE: 2500 PSI COMPRESSIVE STRENGTH AT 28 DAYS.
   REINFORCING STEEL: AASHTO M 31 OR M 53, GRADE 60
   STRUCTURAL STEEL: AASHTO-M270 GRADE 36 SHALL BE USED FOR THE CONNECTION PIN, CONNECTION LOOPS, AND STABILIZATION PINS. A ONE PIECE PIN WITH A 3" ROUNDED TOP MAY BE USED IN PLACE OF THE DETAILED CONNECTION PIN.
   DELINEATORS: DELINEATORS SHALL BE MOUNTED AT 10' SPACING ON TOP OF PRECAST BARRIER.

   IN APPLICATIONS WHERE BARRIER WALL IS WITHIN 6 FEET OF A TRAFFIC LANE, ADDITIONAL DELINEATORS SHALL BE PLACED ON THE BARRIER AT 10' SPACING APPROXIMATELY ONE (1) FOOT FROM THE TOP OF THE BARRIER. DELINEATORS SHALL BE ON THE ARDOT QUALIFIED PRODUCTS LIST FOR CONSTRUCTION CONCRETE BARRIER MARKERS.
   DELINEATOR COLOR SHALL BE IN ACCORDANCE WITH THE MANUAL ON UNIFORM TRAFFIC CONTROL DEVICES.
   PAYMENT FOR DELINEATORS SHALL BE CONSIDERED INCLUDED IN THE PRICE BID PER LIN. FT. FOR "FURNISHING AND INSTALLING PRECAST CONCRETE BARRIER". THE CONTRACTOR SHALL CERTIFY TO THE ENGINEER THAT THE MATERIAL AND THE DESIGN USED IN THE PRECAST BARRIER UNITS MEETS THE REQUIREMENTS AS SHOWN ON THIS STANDARD DRAWING.

3. OTHER PRECAST CONCRETE BARRIERS THAT HAVE BEEN CRASH TESTED AND APPROVED BY THE FEDERAL HIGHWAY ADMINISTRATION TO MEET THE REQUIREMENTS OF MANUAL FOR ASSESSING SAFETY HARDWARE (MASH) WILL BE ACCEPTED IN LIEU OF THE BARRIER SHOWN. DRAIN SLOTS SHALL BE PROVIDED AS NEEDED OR AS DIRECTED BY THE ENGINEER. THE CONTRACTOR SHALL FURNISH A CERTIFICATION OF MANUAL FOR ASSESSING SAFETY HARDWARE (MASH) COMPLIANCE FOR ANY OTHER TYPES OF PRECAST BARRIER TO BE USED. THE CERTIFICATION SHALL STATE THAT THE PRECAST CONCRETE BARRIER MEETS THE REQUIREMENTS OF MANUAL FOR ASSESSING SAFETY HARDWARE (MASH). MIXING OF SHAPES WILL NOT BE ALLOWED IN A CONTINUOUS LINE OF UNITS.

4. DOWEL HOLES IN PAVEMENT OR BRIDGE SLABS THAT ARE TO REMAIN IN PLACE SHALL BE FILLED. HOLES IN CONCRETE PAVEMENT AND BRIDGE SLABS SHALL BE FILLED WITH AN APPROVED NON-SHRINK EPOXY GROUT. HOLES IN ASPHALT PAVEMENT SHALL BE FILLED WITH AN APPROVED ASPHALT JOINT FILLER. PAYMENT FOR DRILLING AND FILLING HOLES TO BE INCLUDED IN THE PRICE FOR VARIOUS BARRIER ITEMS.

5. ATTACH UNITS TO ROADWAY SURFACE WITH STABILIZATION PINS AND TO DECK SLABS USING BOLTS WHEN REQUIRED.

6. A 4" WHITE PVC SLEEVE MAY BE USED TO FORM THE LIFTING HOLE AND IF USED THE SLEEVE IS TO BE LEFT IN PLACE.

DATE	REVISION	FILMED
11-07-19	REVISED NOTE 3	
2-27-14	REVISED BARRIER STABILIZATION DETAIL	
10-15-09	ADDED REFERENCE TO MASH	
8-5-09	REV. NOTE 3 CONCERNING DRAIN SLOTS	
11-29-07	REVISED NOTE 3	
5-25-06	DELETED GENERAL NOTE 7	
11-18-04	REVISED BARRIER STABILIZATION DETAIL BRIDGE DECKS	
4-10-03	REVISED GENERAL NOTE 2	
8-22-02	ISSUED NEW DRAWING	

ARKANSAS STATE HIGHWAY COMMISSION

STANDARD TRAFFIC CONTROLS FOR HIGHWAY CONSTRUCTION - TEMPORARY PRECAST BARRIER

STANDARD DRAWING TC-4

Ⓐ 4 feet or greater preferred. If less than 4 feet, Precast Units shall be connected to slab (SEE BARRIER STABILIZATION DETAIL-BRIDGE DECKS STD. DRWG. TC-4)

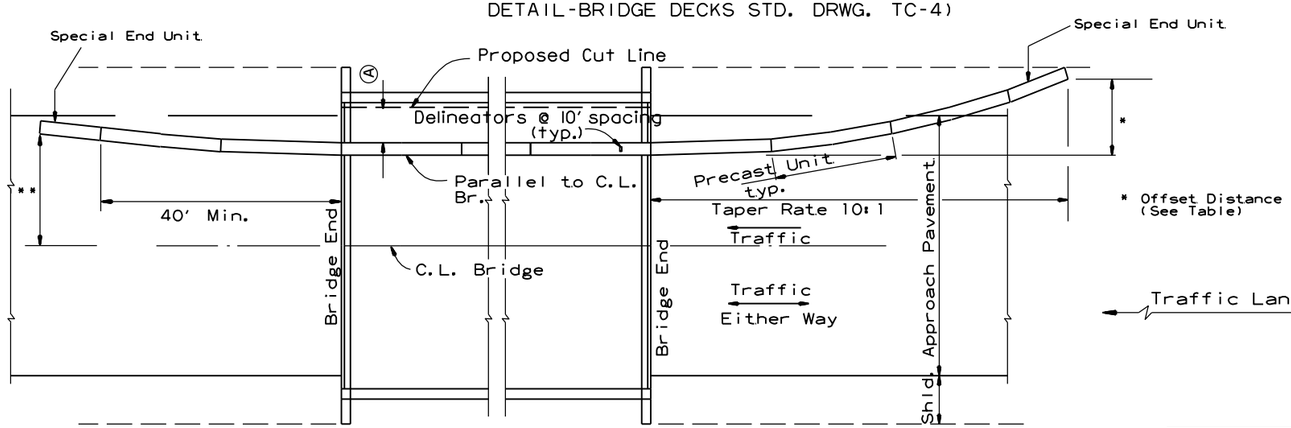

BARRIER PLACEMENT ALONG BRIDGE WITH OFFSET

No Scale

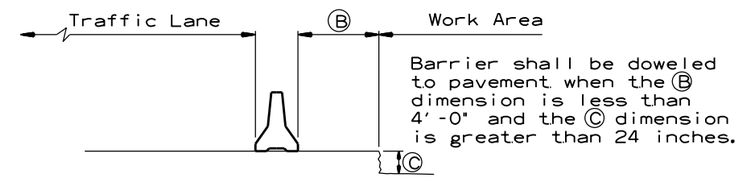

Barrier shall be doweled to pavement when the Ⓑ dimension is less than 4'-0" and the Ⓒ dimension is greater than 24 inches.

SECTION J-J

No Scale

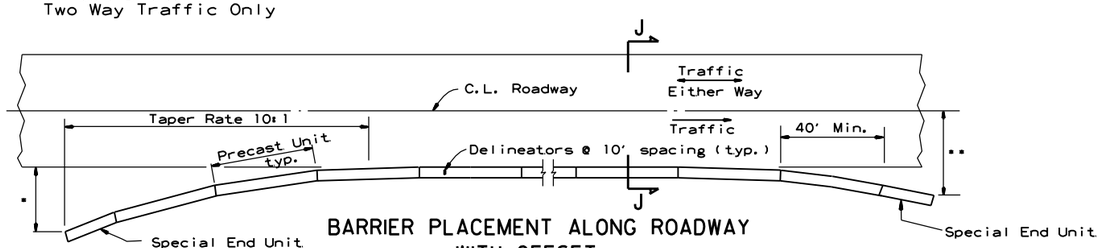

BARRIER PLACEMENT ALONG ROADWAY WITH OFFSET

No Scale

* Offset Distance (See Table)

** Offset Distance For Two Way Traffic Only

Offset Distance Table

Speed (MPH)	Offset Distance (FT.)
≤ 45	12
> 45	18

If offset distance is not attainable, then see "Barrier Placement With Attenuator" Detail shown below.

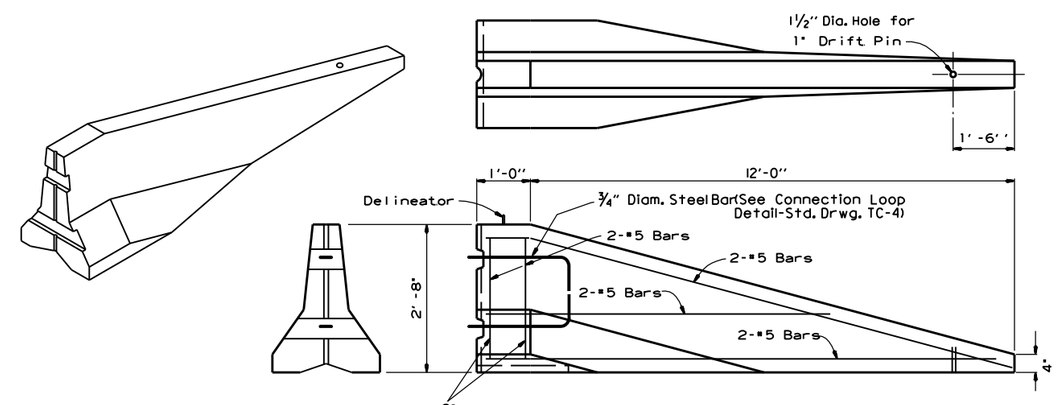

SPECIAL END UNIT

No Scale

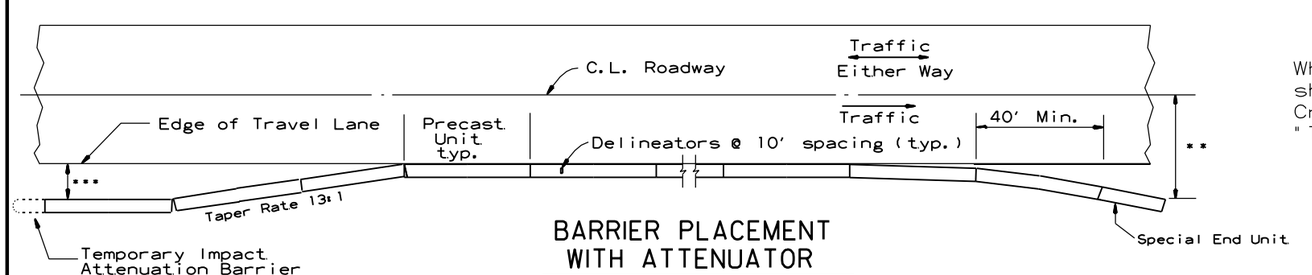

BARRIER PLACEMENT WITH ATTENUATOR

No Scale

*** Min. 3'-0" From Edge of Travel Lane to Nearest Edge of Attenuator

** Offset Distance For Two Way Traffic Only

General Notes

When shown on the Plans, the ends of the Temporary Precast Concrete Barrier shall be protected with a Manual For Assessing Safety Hardware (MASH) approved Crash Cushion. Payment for Crash Cushions shall be made under the item of "Temporary Impact Attenuation Barrier."

DATE	REVISION	FILMED
11-07-19	REVISED NOTE	
10-15-09	ADDED REFERENCE TO MASH	
5-25-06	REVISED BARRIER PLACEMENT	
8-22-02	ISSUED NEW DRAWING	

ARKANSAS STATE HIGHWAY COMMISSION

STANDARD TRAFFIC CONTROLS FOR HIGHWAY CONSTRUCTION - TEMPORARY PRECAST BARRIER

STANDARD DRAWING TC-5

NOTE : W20-1 (VARIOUS DISTANCE) ADVANCE SIGNS TO BE REPLACED AS NEEDED BY EQUIVALENT W20-5 SIGNS AS WORKING AREA SHIFTS.

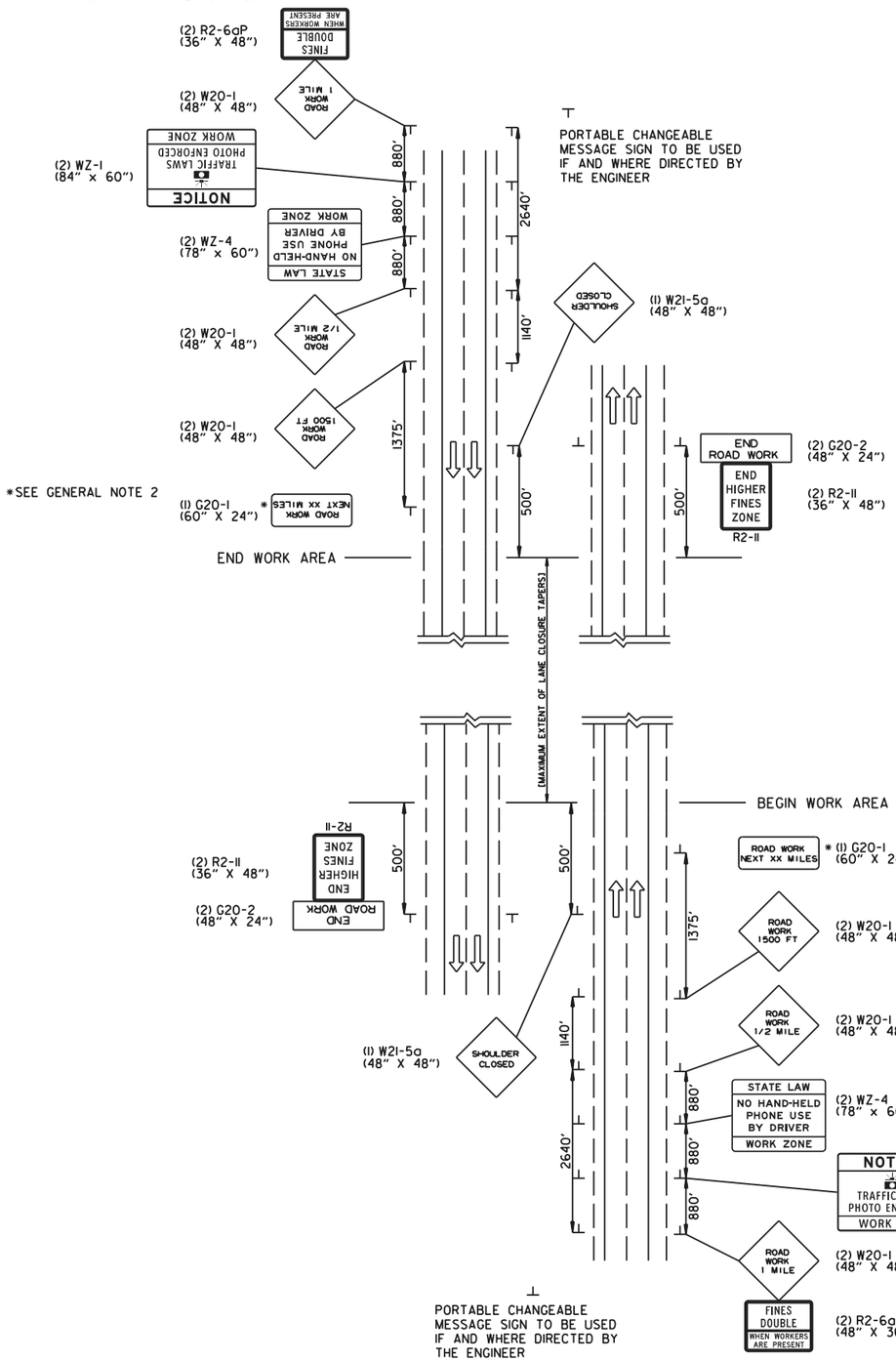

NOTE : W20-1 (VARIOUS DISTANCE) ADVANCE SIGNS TO BE REPLACED AS NEEDED BY EQUIVALENT W20-5 SIGNS AS WORKING AREA SHIFTS.

(A) TYPICAL APPLICATION - ADVANCE WARNING SIGNS AT BEGINNING AND END OF JOB (FULLY CONTROLLED ACCESS FACILITIES) (ALL STAGES)

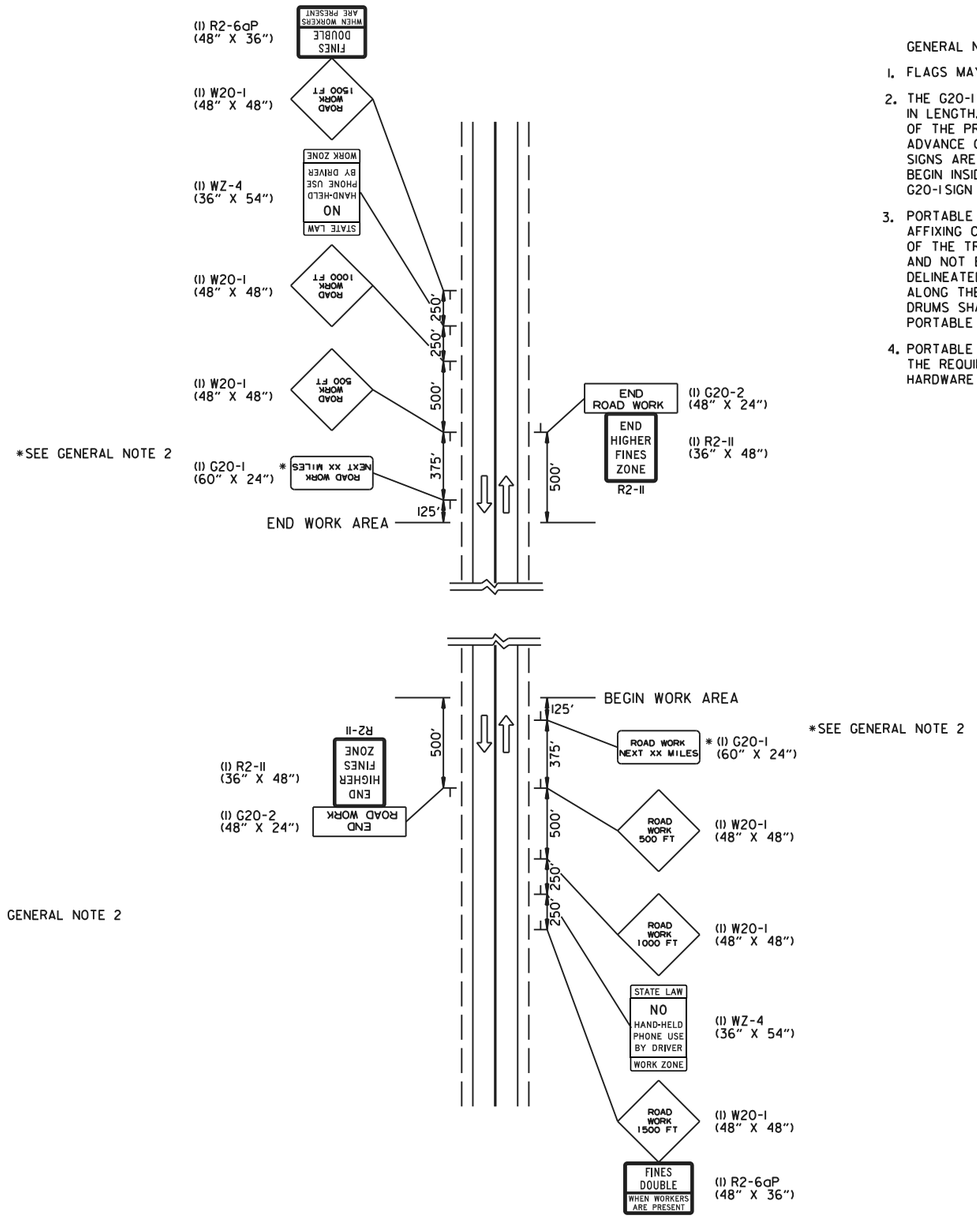

(B) TYPICAL APPLICATION - ADVANCE WARNING SIGNS AT BEGINNING AND END OF JOB (NON-FULLY CONTROLLED ACCESS FACILITIES) (ALL STAGES)

GENERAL NOTES:

1. FLAGS MAY BE MOUNTED TO SIGNS AT NIGHT AS NEEDED.
2. THE G20-1 SIGN SHOULD BE INSTALLED ON JOBS OF OVER TWO MILES IN LENGTH. WHEN THE LANE CLOSURE IS NOT AT THE BEGINNING OF THE PROJECT, THE G20-1 SIGN SHALL BE ERECTED 125' IN ADVANCE OF THE JOB LIMIT. ADDITIONAL W20-1 (1 MILE OR 1500 FT) SIGNS ARE NOT REQUIRED IN ADVANCE OF LANE CLOSURES THAT BEGIN INSIDE THE PROJECT LIMITS. THE DISTANCE DISPLAYED ON THE G20-1 SIGN SHALL BE STATED TO THE NEAREST WHOLE MILE.
3. PORTABLE CHANGEABLE MESSAGE SIGNS SHALL BE DELINEATED BY AFFIXING CONSPICUITY MATERIAL IN A CONTINUOUS LINE ON THE FACE OF THE TRAILER. WHEN PLACED ON OR ADJACENT TO THE SHOULDER AND NOT BEHIND A POSITIVE BARRIER, THIS DEVICE SHALL BE DELINEATED BY PLACING FIVE (5) TRAFFIC DRUMS, EQUALLY SPACED ALONG THE TRAFFIC SIDE OF THE DEVICE. PAYMENT FOR TRAFFIC DRUMS SHALL BE CONSIDERED INCLUDED IN THE PRICE BID FOR PORTABLE CHANGEABLE MESSAGE SIGNS.
4. PORTABLE CHANGEABLE MESSAGE SIGNS SHALL MEET THE REQUIREMENTS OF THE MANUAL FOR ASSESSING SAFETY HARDWARE (MASH).

DATE REV	DESCRIPTION
04-09-26	CORRECTED WZ-4 SIGN DIMENSIONS
01-22-26	ADDED WZ-4 AND REVISED GENERAL NOTE 1
11-06-25	REPLACED "SPEED" WITH "TRAFFIC LAWS" ON WZ-1
08-14-25	ISSUED

ARKANSAS STATE HIGHWAY COMMISSION

STANDARD TRAFFIC CONTROLS FOR HIGHWAY CONSTRUCTION

DATE EFFECTIVE 04-09-2026

STANDARD DRAWING

TC-6

GENERAL NOTES

INSTALL A MINIMUM OF 2 UPSLOPE STAKES AND 4 DOWNSLOPE STAKES AT AN ANGLE TO WEDGE WATTLE TO BOTTOM OF DITCH.

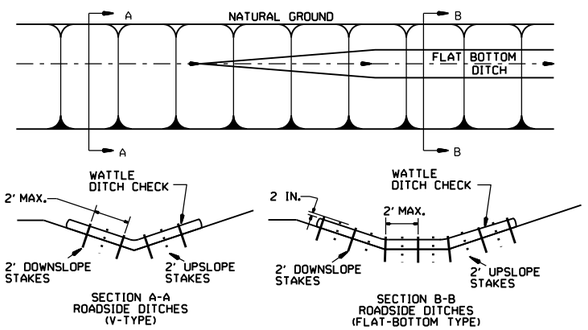

WATTLE DITCH CHECK (E-1)

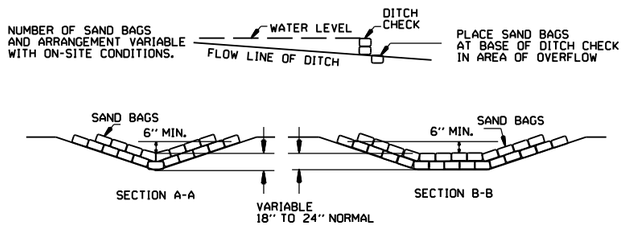

SAND BAG DITCH CHECK (E-5)

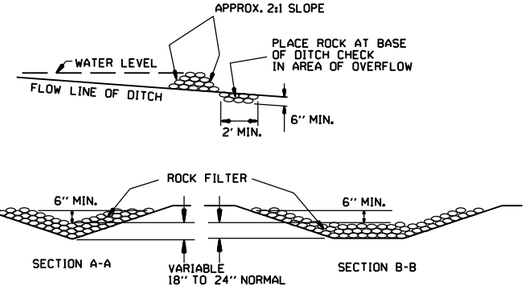

ROCK DITCH CHECK (E-6)

GENERAL NOTES

GEOTEXTILE FABRIC (TYPE 4) IN ACCORDANCE WITH SECTION 625

GEOTEXTILE FABRIC SHALL BE SPLICED TOGETHER WITH A SEWN SEAM ONLY AT A SUPPORT POST OR TWO SECTIONS OF FENCE MAY BE OVERLAPPED INSTEAD. PAYMENT OF ADDITIONAL MATERIAL FOR OVERLAP WILL NOT BE MADE.

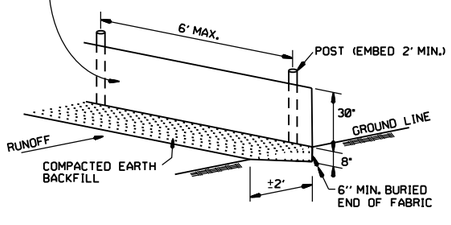

SILT FENCE (E-11)

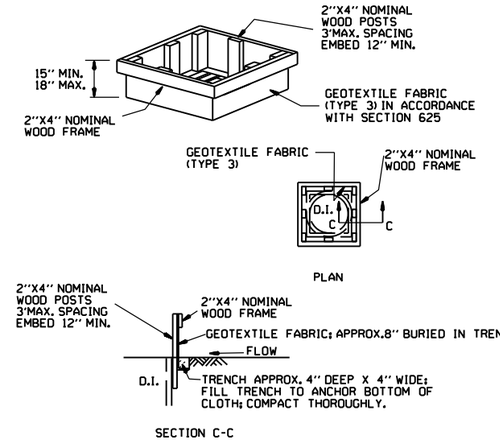

DROP INLET SILT FENCE (E-7)

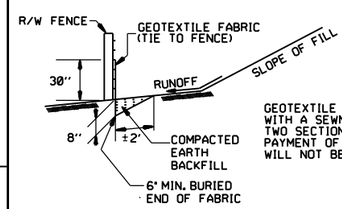

GENERAL NOTES

GEOTEXTILE FABRIC SHALL BE SPLICED TOGETHER WITH A SEWN SEAM ONLY AT A SUPPORT POST, OR TWO SECTIONS OF FENCE MAY BE OVERLAPPED INSTEAD. PAYMENT OF ADDITIONAL MATERIAL FOR OVERLAP WILL NOT BE MADE.

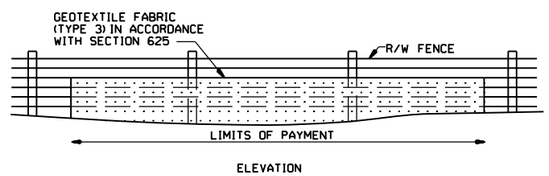

SILT FENCE ON R/W FENCE (E-4)

GENERAL NOTES

1. STRAW BALES SHALL BE INSTALLED SO THAT THE BINDINGS ARE ORIENTED AROUND THE SIDES RATHER THAN ALONG THE TOPS AND BOTTOMS OF THE BALES. THE BALES SHALL BE A MINIMUM OF 30 INCHES IN LENGTH.

2. NO GAPS SHALL BE LEFT BETWEEN BALES.

3. BALED STRAW FILTER BARRIERS COMPLETED AND ACCEPTED WILL BE MEASURED BY THE BALE IN PLACE AS AUTHORIZED BY THE ENGINEER AND WILL BE PAID FOR AT THE CONTRACT UNIT PRICE BID PER BALE FOR BALED STRAW DITCH CHECKS.

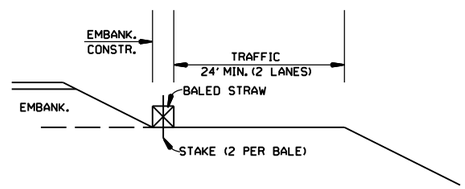

BALED STRAW FILTER BARRIER (E-2)

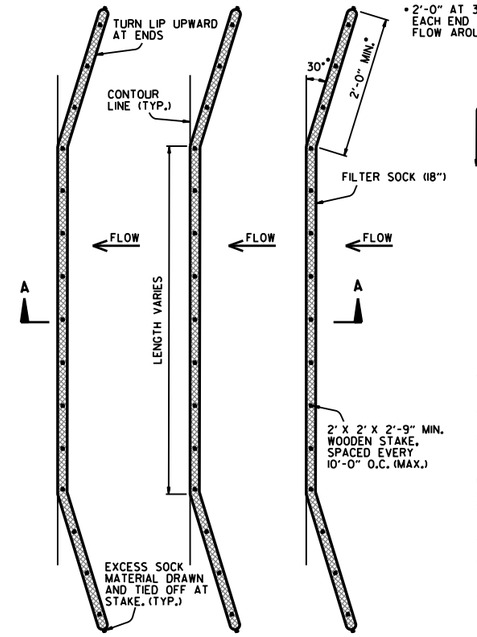

PLAN VIEW
N.T.S.

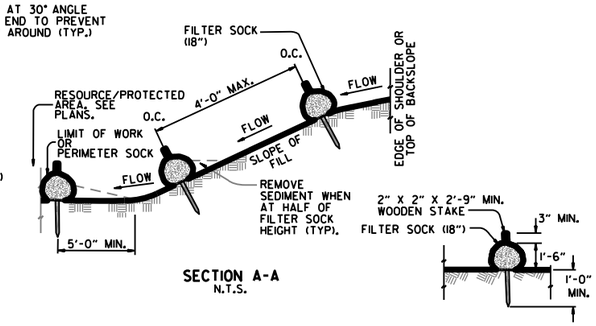

SECTION A-A
N.T.S.

STAKING DETAIL
N.T.S.

NOTES:

1. FILTER SOCKS CAN BE PLACED AT THE TOP, ON THE FACE, AND AT THE TOE OF SLOPES AS SEDIMENT-TRAPPING DEVICES FOR SHEET FLOW RUNOFF.

2. FILTER SOCKS ARE TYPICALLY SUPPLIED AND INSTALLED WITH 18 INCH DIAMETERS. DIAMETER TOLERANCE IS 2 INCHES, AS FILTER SOCKS TEND TO FLATTEN OUT WHEN PLACED.

3. STEEL POSTS MAY BE USED AND SHALL BE ROLLED FROM HIGH CARBON STEEL AND HAVE A MINIMUM OF 1.25 LB./FT. POSTS SHALL BE HOT-DIPPED GALVANIZED OR PAINTED WITH HIGH-GRADE WEATHER RESISTANT BROWN OR BLACK STEEL PAINT. STEEL POSTS SHALL BE EQUIPPED WITH ANCHOR PLATE HAVING A MINIMUM AREA OF 14 SQUARE INCHES. POSTS SHALL BE STUDDED, EMBOSSED, OR PUNCHED. POSTS AND ANCHOR PLATES SHALL CONFORM TO THE REQUIREMENTS OF ASTM A702. NO ADDITIONAL PAYMENT WILL BE PROVIDED FOR STEEL POSTS, BUT PRICE WILL BE CONSIDERED SUBIDIARY TO "FILTER SOCK (18")."

4. FILTER SOCKS MAY BE UP TO 250 FEET LONG. WHEN USED ON LONG SLOPES, FILTER SOCKS MAY BE JOINTED OR STAGGERED AS SHOWN IN DETAILS.

5. INSPECT FILTER SOCKS AFTER EACH RUNOFF EVENT. REMOVE AND REPLACE IF SIGNS OF UNDERCUTTING OR DOWNSTREAM RILLS ARE OBSERVED.

FILTER SOCK ALONG SLOPE (E-3)

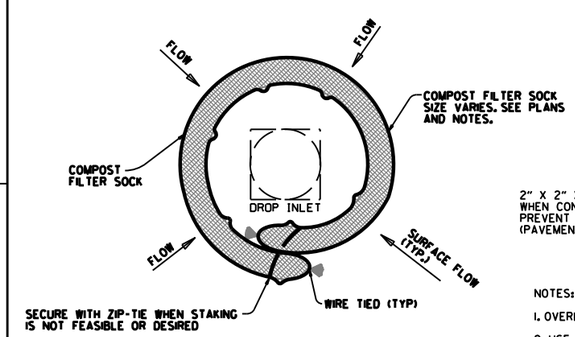

DROP INLET PLAN VIEW
N.T.S.

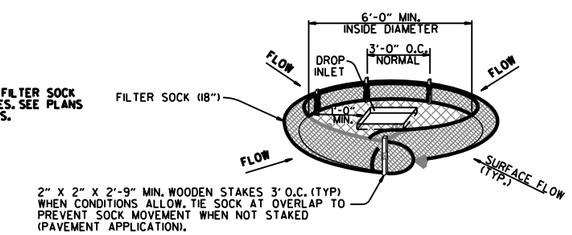

DROP INLET PERSPECTIVE VIEW
N.T.S.

NOTES:

1. OVERLAP ENDS OF SOCK (1' MIN. 3' MAX.).

2. USE 18" DIA. SOCK IN NON-TRAFFIC AREAS OR AREAS WHERE SAFETY IS NOT A CONCERN.

COMPOST FILTER SOCK DROP INLET PROTECTION (E-13)

DATE	REVISION	FILMED
11-16-17	ADDED FILTER SOCK E-3 AND E-13	
12-15-11	DELETED BALED STRAW DITCH CHECK & ADDED WATTLE DITCH CHECK	
11-18-98	ADDED NOTES	
07-02-98	ADDED BALED STRAW FILTER BARRIER (E-2)	
07-20-95	REVISED SILT FENCE E-4 AND E-11	7-20-95
07-15-94	REV. E-4 & E-11 MIN. 13" BURIED END OF FABRIC	
06-02-94	REVISED E-1,4,7 & 11; DELETED E-2 & 3	6-2-94
04-01-93	REDRAWN	
10-01-92	REDRAWN	
08-02-76	ISSUED R.D.M.	298-7-28-76

ARKANSAS STATE HIGHWAY COMMISSION

TEMPORARY EROSION CONTROL DEVICES

STANDARD DRAWING TEC-1

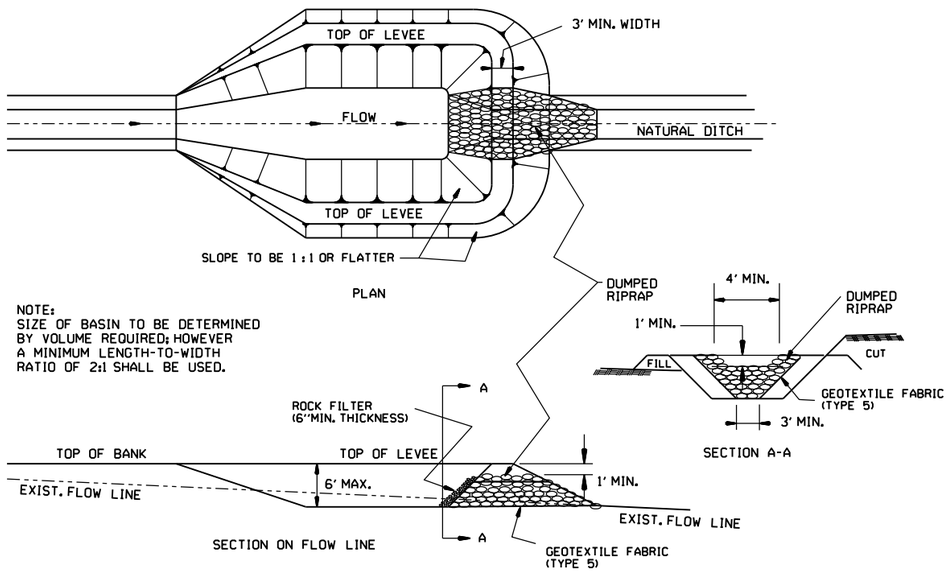

SEDIMENT BASIN WITH RIPRAP OUTLET (E-9)

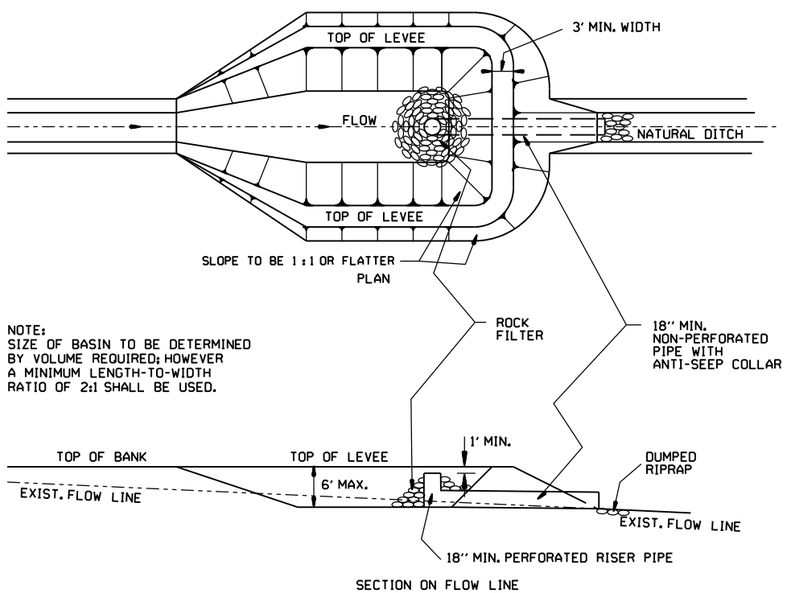

SEDIMENT BASIN WITH PIPE OUTLET (E-10)

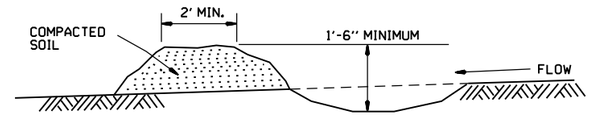

DIVERSION DITCH (E-8)

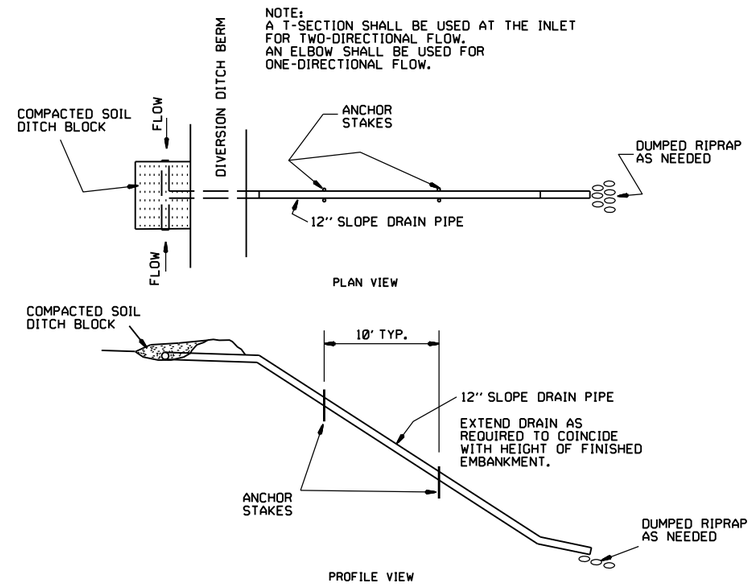

SLOPE DRAIN (E-12)

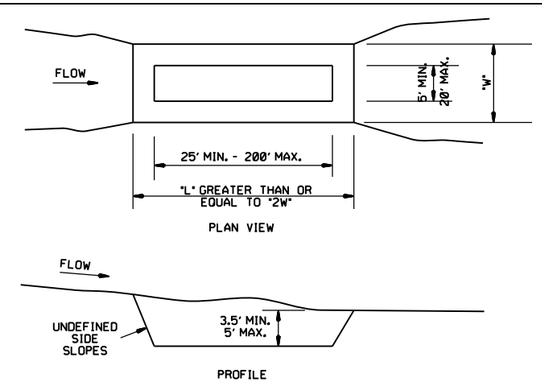

SEDIMENT BASIN (E-14)

DATE	REVISION	FILMED
6-2-94	Revised E-8 & E-12; Added E-14 & Deleted E-13	
4-1-93	ISSUED	

ARKANSAS STATE HIGHWAY COMMISSION

TEMPORARY EROSION CONTROL DEVICES

STANDARD DRAWING TEC-2

CLEARING AND GRUBBING

CONSTRUCTION SEQUENCE

1. PLACE PERIMETER CONTROLS (I.E. SILT FENCES , DIVERSION DITCHES, SEDIMENT BASINS, ETC.)
2. PERFORM CLEARING AND GRUBBING OPERATION.

EXCAVATION

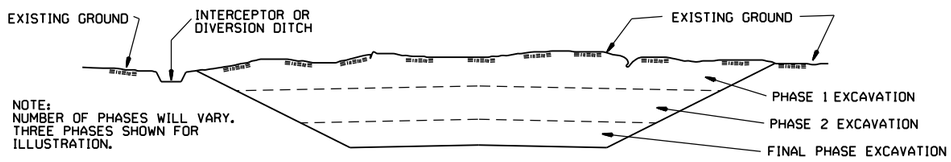

GENERAL NOTE

ALL CUT SLOPES SHALL BE DRESSED, PREPARED, SEEDED, AND MULCHED AS THE WORK PROGRESSES. SLOPES SHALL BE EXCAVATED AND STABILIZED IN EQUAL INCREMENTS NOT TO EXCEED 25 FEET, MEASURED VERTICALLY.

CONSTRUCTION SEQUENCE

1. EXCAVATE AND STABILIZE INTERCEPTOR AND/OR DIVERSION DITCHES.
2. PERFORM PHASE 1 EXCAVATION. PLACE PERMANENT OR TEMPORARY SEEDING.
3. PERFORM PHASE 2 EXCAVATION. PLACE PERMANENT OR TEMPORARY SEEDING.
4. PERFORM FINAL PHASE OF EXCAVATION. PLACE PERMANENT OR TEMPORARY SEEDING. STABILIZE DITCHES. CONSTRUCT DITCH CHECKS, DIVERSION DITCHES, SEDIMENT BASINS, OR OTHER EROSION CONTROL DEVICES AS REQUIRED.

EMBANKMENT

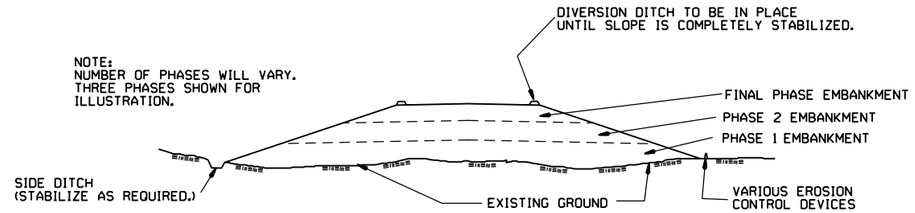

GENERAL NOTE

ALL EMBANKMENT SLOPES SHALL BE DRESSED, PREPARED, SEEDED, AND MULCHED AS THE WORK PROGRESSES. SLOPES SHALL BE CONSTRUCTED AND STABILIZED IN EQUAL INCREMENTS NOT TO EXCEED 25 FEET, MEASURED VERTICALLY.

CONSTRUCTION SEQUENCE

1. CONSTRUCT DIVERSION DITCHES, DITCH CHECKS, SEDIMENT BASINS, SILT FENCES, OR OTHER EROSION CONTROL DEVICES AS SPECIFIED.
2. PLACE PHASE 1 EMBANKMENT WITH PERMANENT OR TEMPORARY SEEDING. PROVIDE DIVERSION DITCHES AND SLOPE DRAINS IF EMBANKMENT CONSTRUCTION IS TO BE TEMPORARILY ABANDONED FOR A PERIOD OF GREATER THAN 21 DAYS.
3. PLACE PHASE 2 EMBANKMENT WITH PERMANENT OR TEMPORARY SEEDING. PROVIDE DIVERSION DITCHES AND SLOPE DRAINS IF EMBANKMENT CONSTRUCTION IS TO BE TEMPORARILY ABANDONED FOR A PERIOD OF GREATER THAN 21 DAYS.
4. PLACE FINAL PHASE OF EMBANKMENT WITH PERMANENT OR TEMPORARY SEEDING. PLACE DIVERSION DITCHES AND SLOPE DRAINS AND MAINTAIN UNTIL ENTIRE SLOPE IS STABILIZED.

DATE	REVISION	FILMED
11-03-94	CORRECTED SPELLING	
6-2-94	Drawn & Issued	6-2-94

ARKANSAS STATE HIGHWAY COMMISSION

TEMPORARY EROSION CONTROL DEVICES

STANDARD DRAWING TEC-3

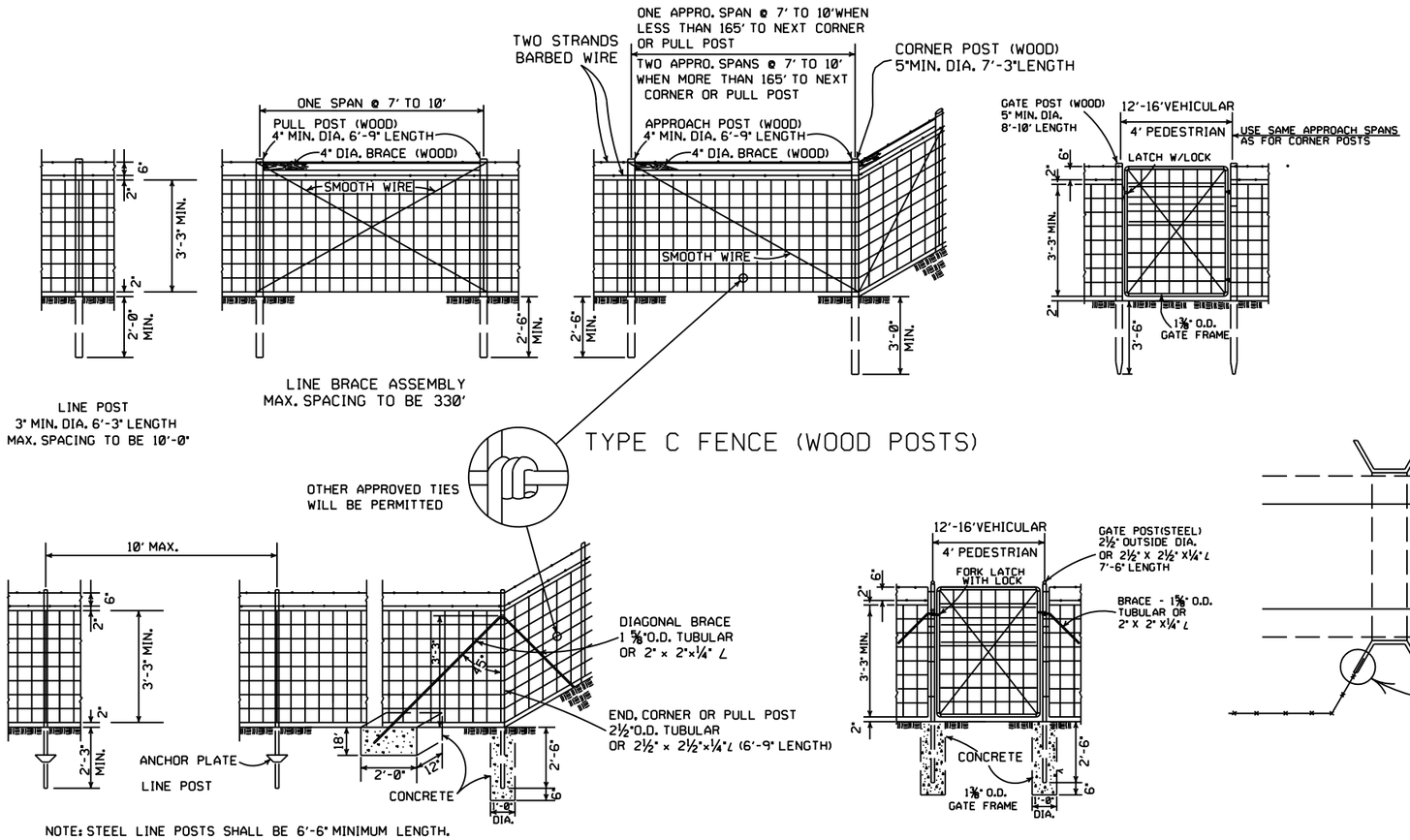

TYPE C FENCE (WOOD POSTS)

TYPE C FENCE (STEEL POSTS)

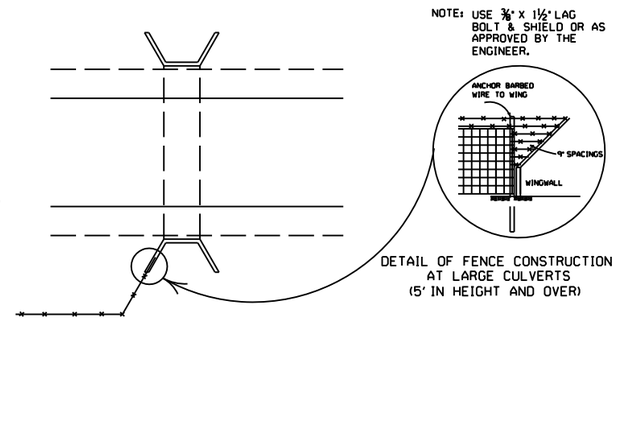

GENERAL NOTES:

STEEL LINE POSTS SHALL BE PAINTED OR GALVANIZED.
TUBULAR END, CORNER, PULL, OR DIAGONAL BRACES MUST CONFORM TO THE DIMENSIONS AND WEIGHTS SPECIFIED ON STANDARD DRAWING WF-3 (CHAIN LINK). APPROVED ALTERNATES ARE ACCEPTABLE.
AN ACCEPTABLE TOLERANCE IN LENGTH OF TUBULAR OR WOODEN POSTS SHALL BE - 1" TO +2".
TUBULAR POSTS MUST BE PAINTED OR GALVANIZED.

THE CONTRACTOR SHALL FURNISH AT LEAST 25% OF TIMBER LINE POSTS OF 7 FOOT LENGTHS IN ORDER TO PROVIDE SUFFICIENT SET IN SOFT GROUND OR SMALL DEPRESSIONS.

DRIVEWAY GATES, EITHER SINGLE 12' TO 16' OR DOUBLE 6' TO 8' OPENING OF THE SAME TYPE AS THE PEDESTRIAN GATE, SHALL BE INSTALLED ON THE RIGHT SIDE OF EACH THROUGH LANE ROAD AT LARGE CULVERTS OR BRIDGE CROSS FENCE, FOR USE OF MAINTENANCE EQUIPMENT. LOCATION OF GATES TO BE SHOWN ON PLANS OR AS DESIGNATED BY THE ENGINEER.

AT STREAM CROSSINGS, THE FENCE SHALL NOT BE CONSTRUCTED ACROSS LARGE STREAMS. WHERE CLEARANCE IS SUFFICIENT FROM THE TOP OF THE BANK TO THE BRIDGE STRUCTURE A CROSS CONNECTION SHALL BE CONSTRUCTED BETWEEN THE FENCE ON EACH SIDE OF THE ROAD. WHERE THE CLEARANCE IS NOT SUFFICIENT, THE FENCE SHALL BE TERMINATED WITH CROSS CONNECTIONS AND END POSTS ADJACENT TO BRIDGE ABUTMENTS OR CULVERT WINGWALLS.

SPLICE FOR BARBED WIRE BETWEEN PULL POST ASSEMBLY SHALL BE BY THE "EYE METHOD" AS DESCRIBED AS FOLLOWS:
THE ENDS OF THE BARBED WIRE SHALL BE BENT TO FORM A LOOP. THE LOOPS SHALL BE CONNECTED. AFTER THE LOOPS ARE CONNECTED THE ENDS OF THE WIRE SHALL BE WRAPPED AROUND THE PROJECTING WIRES A MINIMUM OF 4 TIMES FOR EACH WIRE LOOP.

SPLICE FOR WOVEN WIRE BETWEEN PULL POST SHALL BE BY THE "WESTERN UNION METHOD" AS DESCRIBED AS FOLLOWS: THE VERTICAL WIRES FOR EACH END OF THE FENCE FABRIC SHALL BE PLACED SIDE BY SIDE AND THE PROJECTING HORIZONTAL WIRES SHALL BE WRAPPED A MINIMUM OF 4 TIMES AROUND THE HORIZONTAL WIRES OF THE FIRST WEB.

STAPLE AT LEAST TOP, BOTTOM AND ALTERNATE WIRES OF WOVEN FABRIC FOR WOOD LINE POSTS.

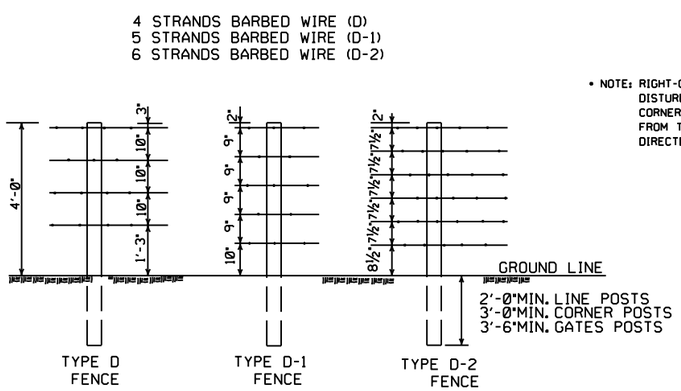

NOTE: SPACING AND SIZE (EXCEPT LENGTH) OF POSTS, APPROACH SPANS, PULL POST ASSEMBLIES, AND CORNER BRACING FOR TYPE D FENCE SHALL CONFORM TO TYPE C FENCE. USE GALVANIZED STAPLES ON WOOD POSTS AND APPROVED FASTENERS ON STEEL POSTS.

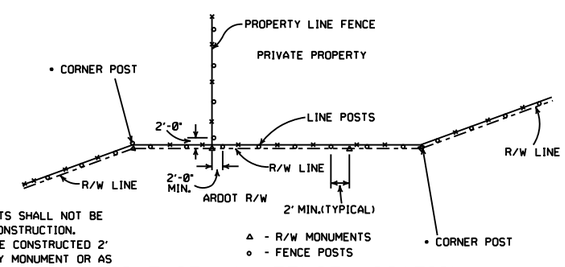

• NOTE: RIGHT-OF-WAY MONUMENTS SHALL NOT BE DISTURBED BY FENCE CONSTRUCTION. CORNER POSTS SHALL BE CONSTRUCTED 2' FROM THE RIGHT-OF-WAY MONUMENT OR AS DIRECTED BY THE ENGINEER.

RIGHT-OF-WAY FENCE LOCATION

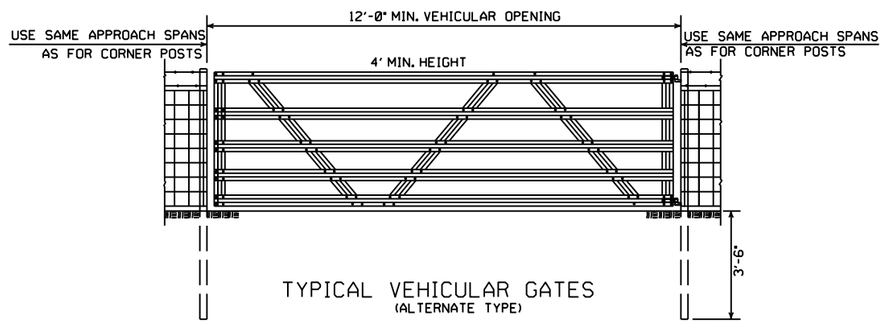

TYPICAL VEHICULAR GATES
(ALTERNATE TYPE)

OTHER STYLE VEHICULAR GATES MAY BE USED WITH THE APPROVAL OF THE ENGINEER.
THE METHOD OF SECURING GATE (LATCH AND/OR LOCK) SHALL MEET THE APPROVAL OF THE ENGINEER.

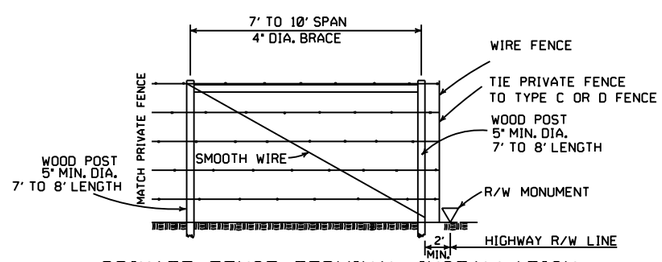

PRIVATE FENCE TERMINAL INSTALLATION
WHERE EXISTING FENCE CONSISTS OF STEEL POSTS, USE END POST ASSEMBLY AS SHOWN IN TYPE C FENCE OR OTHER END POST ASSEMBLY AS APPROVED BY THE ENGINEER.

DATE	REVISION	FILMED
8-22-02	REVISED GENERAL NOTES	
10-18-96	REVISED AASHTO	
11-22-95	REVISED R-O-W LOCATION DETAIL	
6-2-94	REVISED BARB WIRE AND ADDED CORNER POST NOTES	6-2-94
8-5-93	REVISED R/W INSTALLATION FENCE	8-5-93
10-1-92	ADDED STAPLE NOTE	10-1-92
8-15-91	ADDED TYPE D-2 FENCE	8-15-91
11-30-89	DELETED CLASS CONCRETE	11-30-89
7-15-88	ADDED SPLICE NOTE	700-7-15-88
10-30-87	GENERAL REVISIONS	549-10-30-87
11-1-84	MAX. POST SPACING MIN. WIRE GAUGE	507-11-1-84
1-4-83	MIN. DIA. LINE POST	648-1-4-83
3-2-81	TOLERANCE FOR POST LENGTH	722-3-2-81
12-1-72	ADDED D-1 & FENCE INSTALLATION	564-12-1-72
10-2-72	REVISED AND REDRAWN	540-10-2-72

ARKANSAS STATE HIGHWAY COMMISSION

WIRE FENCE TYPE C AND D

STANDARD DRAWING WF-4

FED. ROAD Div.	STATE	FED. AID PROJECT	FISCAL YEAR	SHEET No.	TOTAL SHEETS
6	ARK.				
JOB No.					

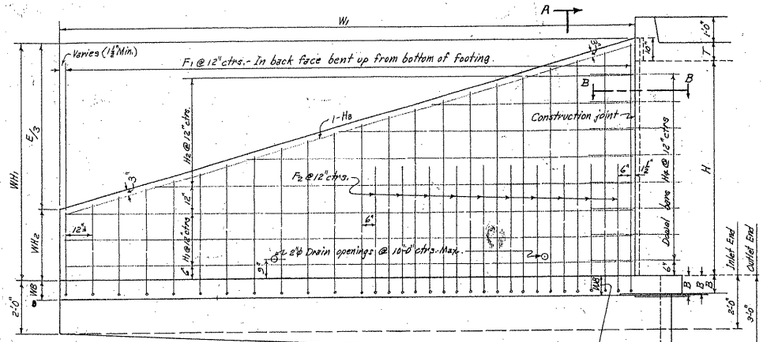

REAR ELEVATION OF WING - SHOWING BACK FACE REINF.

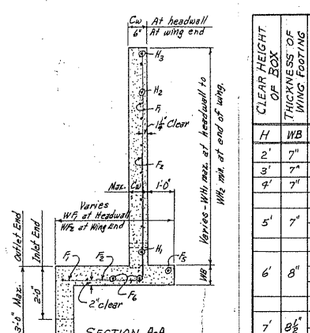

SECTION A-A

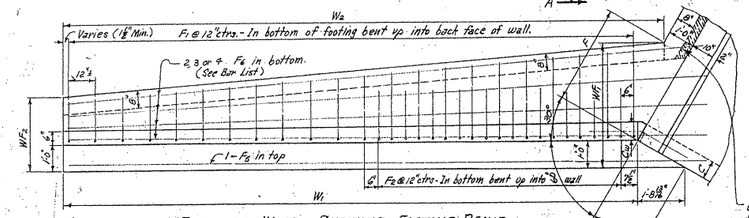

PLAN OF WING - SHOWING FOOTING REINF.

When B is more than W8, the shaded portion of the apron shall be made the same thickness as the barrel base B.

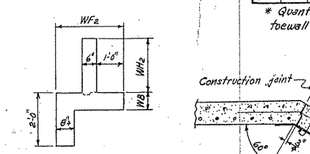

END VIEW OF WING

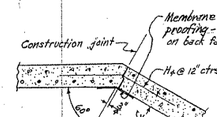

SECTION B-B THRU CONSTRUCTION JOINT

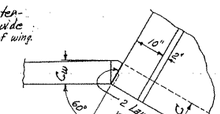

DETAIL AT TOP OF WING.

NOTE:- Payment for membrane waterproofing and roofing felt to be included in the price bid for Class S Concrete.

WING DIMENSIONS

CLEAR HEIGHT OF BOX	THICKNESS OF WING FOOTING	THICKNESS OF WING AT HEADWALL = C	WINGWALL HEIGHTS: AT HEADWALL	WINGWALL HEIGHTS: AT END OF WING	WIDTHS OF WING FOOTINGS: AT HEADWALL	WIDTHS OF WING FOOTINGS: AT END OF WING	PERPENDICULAR FOOTING DIMENSION	PERPENDICULAR DIST. FROM HEAD TO END OF WING	LENGTH OF WING WALLS	INSIDE FOOTING DIMENSION	* QUANTITY PER WING CLASS S CONCRETE: INLET END	* QUANTITY PER WING CLASS S CONCRETE: OUTLET END
H	WB	C_W	WH_1	WH_2	W_{F1}	W_{F2}	F	E	W_1	W_2	CU.YD.	CU.YD.
2'	7"	6"	2'-10"	0'-8"	2'-4"	2'-0"	0'-11⅜"	6'-6"	7'-6"	7'-1½"	0.889	0.986
3'	7"	6"	3'-10"	1'-0"	2'-8"	2'-1⅛"	1'-4⅜"	8'-6"	9'-3⅜"	9'-2⅝"	1.338	1.466
4'	7"	6"	4'-10"	1'-4"	3'-0"	2'-3"	1'-9"	10'-6"	12'-1⅛"	12'-1⅝"	1.868	2.027
5'	7"	6"	5'-10"	1'-8"	3'-4"	2'-4⅝"	2'-1⅜"	12'-6"	14'-5⅝"	14'-7⅛"	2.478	2.668
		7"	5'-10"	1'-8"	3'-4"	2'-4⅝"	2'-1⅜"	12'-6"	14'-5⅝"	14'-7⅛"	2.582	2.772
6'	8"	7"	6'-10"	2'-0"	3'-8"	2'-6"	2'-6⅝"	14'-6"	16'-9"	17'-1⅛"	3.440	3.661
		7⅝"	6'-10"	2'-0"	3'-8"	2'-6"	2'-6⅝"	14'-6"	16'-9"	17'-1⅛"	3.511	3.732
		8"	6'-10"	2'-0"	3'-8"	2'-6"	2'-6⅝"	14'-6"	16'-9"	17'-1⅛"	3.582	3.803
7'	8⅝"	7⅝"	7'-10"	2'-4"	4'-2"	2'-7½"	3'-1⅛"	16'-6"	19'-0⅝"	19'-10⅜"	4.505	4.758
		8"	7'-10"	2'-4"	4'-2"	2'-7½"	3'-1⅛"	16'-6"	19'-0⅝"	19'-10⅜"	4.597	4.851
8'	9"	8"	8'-10"	2'-8"	4'-8"	2'-9"	3'-8"	18'-6"	21'-4⅝"	22'-9"	5.761	6.047

* Quantity per wing does not include headwall or that portion of apron or toewall for the length W_3.

APRON DIMENSION W_3

$W_3 = (OW - 2F)$

CLEAR SPAN	CLEAR HEIGHT	2 x FOOTING DIMENSION	SINGLE BARREL CULVERT: OW	SINGLE BARREL CULVERT: W_3	DOUBLE BARREL CULVERT: OW	DOUBLE BARREL CULVERT: W_3	TRIPLE BARREL CULVERT: OW	TRIPLE BARREL CULVERT: W_3	QUADRUPLE BARREL CULVERT: OW	QUADRUPLE BARREL CULVERT: W_3	QUINTUPLE BARREL CULVERT: OW	QUINTUPLE BARREL CULVERT: W_3
S	H	2F	OW	W_3	OW	W_3	OW	W_3	OW	W_3	OW	W_3
4'	2'	1'-11⅛"	5'-0"	3'-0⅞"	9'-8"	7'-8⅛"	14'-4"	12'-4⅜"	19'-0"	17'-0⅜"	23'-8"	21'-8⅜"
	3'	2'-8⅜"	5'-0"	2'-3⅜"	9'-8"	6'-11⅝"	14'-4"	11'-7⅝"	19'-0"	16'-3⅝"	23'-8"	20'-11⅝"
	4'	3'-6"	5'-0"	1'-6"	9'-8"	6'-2"	14'-4"	10'-10"	19'-0"	16'-6"	23'-8"	20'-2"
	5'	4'-3⅜"	5'-0"	0'-8⅜"	9'-8"	5'-4⅜"	14'-4"	10'-0⅜"	19'-0"	14'-8⅜"	23'-8"	19'-4⅜"
	6'	5'-0⅞"	5'-2"	0'-1⅛"	9'-11"	4'-10⅞"	14'-8"	9'-7⅞"	19'-5"	14'-4⅞"	24'-2"	19'-1⅞"
5'	3'	2'-8⅜"	6'-0"	3'-3⅜"	11'-8"	8'-11⅛"	17'-4"	14'-7⅛"	23'-0"	20'-3⅛"	28'-8"	25'-11⅛"
	4'	3'-6"	6'-0"	2'-6"	11'-8"	8'-2"	17'-4"	13'-10"	23'-0"	19'-6"	28'-8"	25'-2"
	5'	4'-3⅜"	6'-0"	1'-8⅜"	11'-8"	7'-4⅜"	17'-4"	13'-0⅜"	23'-0"	18'-8⅜"	28'-8"	24'-4⅜"
	6'	5'-0⅞"	6'-2"	1'-1⅛"	11'-11"	6'-10⅞"	17'-8"	12'-7⅞"	23'-5"	18'-4⅞"	29'-2"	24'-1⅞"
	7'	6'-2⅝"	6'-5"	0'-0⅞"	12'-1"	5'-10⅝"	17'-11"	11'-8⅝"	23'-9"	17'-6⅝"	29'-7"	23'-4⅝"
6'	3'	2'-8⅜"	7'-0"	4'-3⅜"	13'-8"	10'-11⅛"	20'-4"	17'-7⅛"	27'-0"	24'-3⅛"	33'-8"	30'-11⅛"
	4'	3'-6"	7'-0"	3'-6"	13'-8"	10'-2"	20'-4"	16'-10"	27'-0"	23'-6"	33'-8"	30'-2"
	5'	4'-3⅜"	7'-0"	2'-8⅜"	13'-8"	9'-4⅜"	20'-4"	16'-0⅜"	27'-0"	22'-8⅜"	33'-8"	29'-4⅜"
	6'	5'-0⅞"	7'-2"	2'-1⅛"	13'-11"	8'-10⅞"	20'-8"	15'-7⅞"	27'-5"	22'-4⅞"	34'-2"	29'-1⅞"
	7'	6'-2⅝"	7'-5"	1'-0⅞"	14'-1"	7'-10⅝"	20'-11"	14'-8⅝"	27'-9"	21'-6⅝"	34'-7"	28'-4⅝"
	8'	7'-4⅝"	7'-8"	0'-0"	14'-4"	6'-10"	21'-0"	13'-8"	27'-10"	20'-8"	34'-10"	27'-8"
7'	4'	3'-6"	8'-0"	4'-6"	15'-8"	12'-2"	23'-4"	19'-10"	31'-0"	27'-6"	38'-8"	35'-2"
	5'	4'-3⅜"	8'-0"	3'-8⅜"	15'-8"	11'-4⅜"	23'-4"	19'-0⅜"	31'-0"	26'-8⅜"	38'-8"	34'-4⅜"
	6'	5'-0⅞"	8'-2"	3'-1⅛"	15'-11"	10'-10⅞"	23'-8"	18'-7⅞"	31'-5"	26'-4⅞"	39'-2"	34'-1⅞"
	7'	6'-2⅝"	8'-5"	2'-0⅞"	16'-1"	9'-10⅝"	23'-11"	17'-8⅝"	31'-9"	25'-6⅝"	39'-7"	32'-4⅝"
	8'	7'-4⅝"	8'-8"	1'-0"	16'-4"	8'-10"	24'-0"	16'-8"	31'-10"	24'-8"	39'-10"	32'-8"
8'	4'	3'-6"	9'-0"	5'-6"	17'-8"	14'-2"	26'-4"	22'-10"	35'-6"	31'-6"	43'-8"	40'-2"
	5'	4'-3⅜"	9'-2"	4'-10⅜"	17'-11"	13'-7⅜"	26'-8"	22'-0⅜"	35'-5"	31'-1⅜"	44'-2"	39'-10⅜"
	6'	5'-0⅞"	9'-2"	4'-1⅛"	17'-11"	12'-10⅞"	26'-8"	21'-7⅞"	35'-5"	30'-9⅞"	44'-2"	39'-1⅞"
	7'	6'-2⅝"	9'-5"	3'-0⅞"	18'-1"	11'-10⅝"	26'-11"	20'-8⅝"	35'-9"	29'-10⅝"	44'-7"	38'-4⅝"
	8'	7'-4⅝"	9'-9"	2'-0"	18'-2"	10'-10"	27'-0"	19'-8"	35'-10"	28'-6"	44'-8"	37'-10"
9'	5'	4'-3⅜"	10'-2"	5'-10⅜"	19'-11"	15'-7⅜"	29'-8"	25'-4⅜"	39'-5"	35'-1⅜"	49'-2"	44'-10⅜"
	6'	5'-0⅞"	10'-3"	5'-2⅞"	20'-1"	15'-0⅞"	29'-11"	24'-10⅞"	39'-9"	34'-8⅞"	49'-7"	44'-1⅞"
	7'	6'-2⅝"	10'-3"	4'-0⅞"	20'-1"	13'-10⅝"	29'-11"	23'-8⅝"	39'-9"	33'-6⅝"	49'-7"	43'-4⅝"
	8'	7'-4⅝"	10'-4"	3'-0"	20'-2"	12'-10"	30'-0"	22'-8"	39'-10"	32'-6"	49'-8"	42'-8"
10'	5'	4'-3⅜"	11'-2"	6'-10⅜"	21'-11"	17'-7⅜"	32'-8"	28'-4⅜"	43'-5"	39'-1⅜"	54'-2"	49'-10⅜"
	6'	5'-0⅞"	11'-3"	6'-2⅞"	22'-1"	17'-0⅞"	32'-11"	27'-10⅞"	43'-9"	38'-8⅞"	54'-7"	49'-1⅞"
	7'	6'-2⅝"	11'-3"	5'-0⅞"	22'-1"	15'-10⅝"	32'-11"	26'-8⅝"	43'-9"	37'-6⅝"	54'-7"	48'-4⅝"
	8'	7'-4⅝"	11'-4"	4'-0"	22'-2"	14'-10"	33'-0"	25'-8"	43'-10"	36'-6"	54'-8"	47'-8"
11'	6'	5'-0⅞"	12'-9"	7'-3⅞"	24'-8"	19'-7⅞"	36'-0"	30'-11⅞"	47'-10"	42'-9⅞"		
	7'	6'-2⅝"	12'-9"	6'-1⅞"	24'-8"	17'-11⅞"	36'-0"	29'-9⅞"	47'-10"	41'-7⅞"		
	8'	7'-4"	12'-9"	5'-0"	24'-8"	16'-10"	36'-0"	28'-8"	47'-10"	40'-6"		
12'	6'	5'-0⅞"	13'-8"	8'-3⅞"	26'-2"	21'-1⅞"	39'-0"	33'-11⅞"	51'-10"	46'-9⅞"		
	7'	6'-2⅝"	13'-8"	7'-1⅞"	26'-2"	19'-11⅞"	39'-0"	32'-9⅞"	51'-10"	45'-7⅞"		
	8'	7'-4"	13'-8"	6'-0"	26'-2"	18'-10"	39'-0"	31'-8"	51'-10"	44'-6"		

QUANTITIES

CLEAR SPAN	CLEAR HEIGHT	THICKNESS OF WING AT HEADWALL	THICKNESS OF WING FOOTING	REINFORCING STEEL - FOR 4 WINGS ⊛	CLASS S CONCRETE - 4 WINGS (HEADWALLS, WINGWALLS, FOOTINGS, TOEWALLS AND APRONS): SINGLE BARREL CULVERT	DOUBLE BARREL CULVERT	TRIPLE BARREL CULVERT	QUADRUPLE BARREL CULVERT	QUINTUPLE BARREL CULVERT
S	H	C_W	WB	LB.	CU.YD.	CU.YD.	CU.YD.	CU.YD.	CU.YD.
4'	2'	6"	7"	108.0	4.50	5.96	6.42	7.38	8.34
	3'	6"	7"	169.4	6.26	7.21	8.17	9.13	10.09
	4'	6"	7"	259.6	8.33	9.28	10.24	11.20	12.16
	5'	6"	7"	357.8	10.72	11.68	12.64	13.60	14.56
	6'	7"	8"	583.1	14.55	15.53	16.52	17.51	18.49
5'	3'	6"	7"	164.9	6.97	7.68	8.79	9.96	11.12
	4'	6"	7"	254.6	8.54	9.70	10.87	10.03	12.20
	5'	6"	7"	357.8	10.94	12.10	13.26	14.43	15.59
	6'	7"	8"	583.1	14.77	15.96	17.15	18.34	19.54
	7'	7⅝"	8⅝"	1139.6	18.94	20.15	21.37	22.59	23.80
6'	3'	6"	7"	164.9	6.68	8.06	9.42	10.80	12.18
	4'	6"	7"	254.6	8.75	10.14	11.49	12.87	14.25
	5'	6"	7"	357.8	11.15	12.53	13.89	15.27	16.65
	6'	7"	8"	583.1	14.98	16.39	17.78	19.18	20.59
	7'	7⅝"	8⅝"	1139.6	19.15	20.58	22.00	23.43	24.86
	8'	8"	9"	1925.6	24.09	25.53	26.96	28.39	29.83
7'	4'	6"	7"	254.6	8.97	10.58	12.15	13.76	15.35
	5'	6"	7"	357.8	11.36	12.97	14.58	16.15	17.75
	6'	7"	8"	583.1	15.20	16.82	18.42	20.04	21.66
	7'	7⅝"	8⅝"	1139.6	19.38	21.02	22.68	24.28	25.92
	8'	8"	9"	1925.6	24.32	25.97	27.60	29.25	30.89
8'	4'	6"	7"	254.6	9.19	11.03	12.82	14.65	16.45
	5'	7"	7"	357.8	12.03	13.89	15.70	17.55	19.34
	6'	7"	8"	583.1	15.92	17.27	19.09	20.93	22.75
	7'	7⅝"	8⅝"	1139.6	19.59	21.46	23.30	25.16	26.99
	8'	8"	9"	1925.6	24.54	26.41	28.29	30.11	31.96
9'	5'	7"	7"	357.8	12.26	14.39	16.87	18.95	20.97
	6'	7⅝"	8"	583.1	15.94	18.04	20.09	22.19	24.23
	7'	7⅝"	8⅝"	1139.6	19.81	21.91	23.96	26.06	28.10
	8'	8"	9"	1925.6	24.76	26.86	28.91	31.00	33.05
10'	5'	7"	7"	357.8	12.49	14.80	17.05	19.24	21.52
	6'	7⅝"	8"	583.1	16.17	18.50	20.77	22.99	25.28
	7'	7⅝"	8⅝"	1139.6	20.04	22.37	24.64	26.87	29.15
	8'	8"	9"	1925.6	24.98	27.31	29.58	31.81	34.10
11'	6'	8"	8"	583.1	16.69	19.27	21.76	24.23	
	7'	8"	8⅝"	1139.6	20.64	23.22	25.71	28.18	
	8'	8"	9"	1925.6	25.19	27.77	30.27	32.74	
12'	6'	8"	8"	583.1	16.92	19.75	22.45	25.18	
	7'	8"	8⅝"	1139.6	20.87	23.69	26.40	29.13	
	8'	8"	9"	1925.6	25.42	28.25	30.96	33.69	

⊛ For reinforcing steel in Headwalls and Aprons, See Details of Standard Barrel Sections for R.C. Box Culverts for the desired Span and Height.

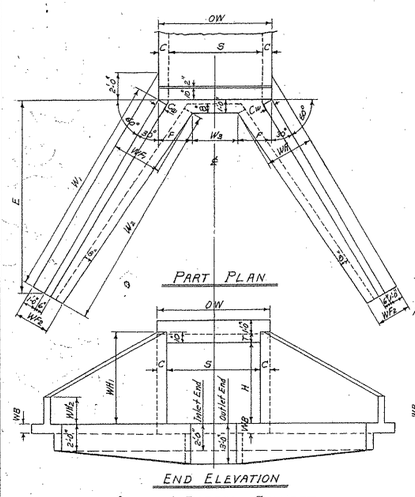

SINGLE BARREL CULVERT

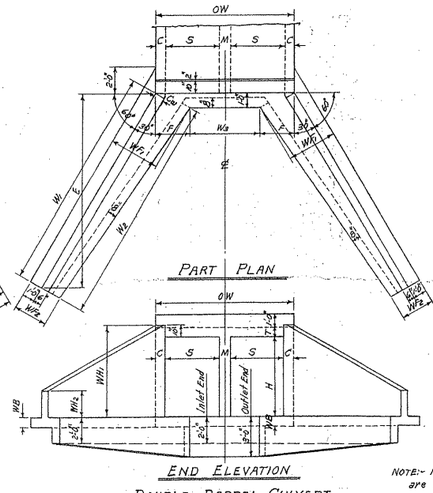

DOUBLE BARREL CULVERT

NOTE:- Plans and Elevations are not to scale.

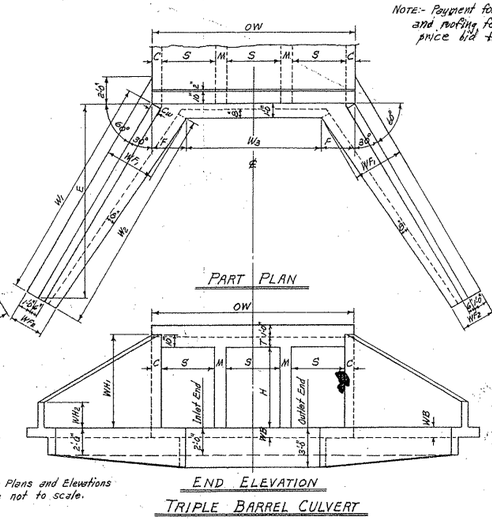

TRIPLE BARREL CULVERT

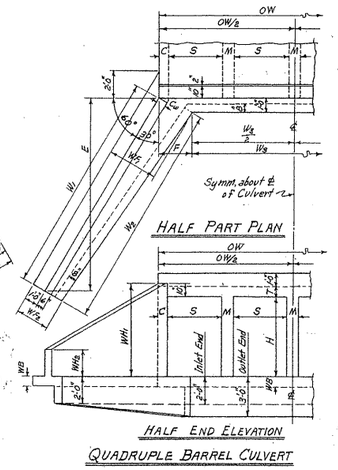

QUADRUPLE BARREL CULVERT

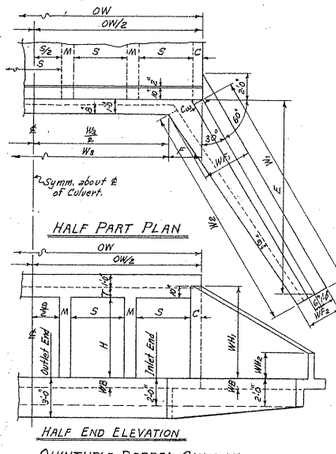

QUINTUPLE BARREL CULVERT

MEMBRANE:- A membrane waterproofing 12" wide, consisting of three mopings of waterproofing asphalt and two alternate layers of treated cotton fabric shall be applied to the back face of wing to cover the construction joints in wings.

GENERAL NOTES:-

CONCRETE:- All concrete to be Class S, and shall be poured in the dry. All exposed corners to have ¾" chamfers.

REINFORCING STEEL:- Reinforcing steel to be deformed bars of intermediate or hard grade.

CONSTRUCTION JOINTS:- Construction joints between wingwall, footings and sidewalls shall be only where shown on plans.

SPECIFICATIONS:- Arkansas State Highway Commission Standard Specifications for Highway Construction and applicable Special Provisions.

UNIT STRESSES:-

Class S Concrete (n=10) 1200#/□"

Reinforcing Steel 20,000#/□"

NOTE:- This drawing to be used in conjunction with Standard Barrel Sections, Drawing Nos. as listed below.

SINGLES	DOUBLES	TRIPLES	QUADRUPLES	QUINTUPLES
R-100X-0	R-200X-0	R-300X-0	R-400X-0	R-500X-0
R-100X-X1	R-200X-X1	R-300X-X1	R-400X-X1	R-500X-X1
R-100X-X2	R-200X-X2	R-300X-X2	R-400X-X2	
	R-200X-X3	R-300X-X3		

CLASS S CONCRETE

BAR LIST FOR ONE WING - 4 REQUIRED

CLEAR HEIGHT	F_1 Bent (In bottom of footing, bent up into back face of wing. One bar of each length.): SIZE	SPACING	NO. REQD	LENGTHS VARY X MIN.	X MAX.	Y MIN.	Y MAX.	F_2 Bent (In bottom of footing, bent up into back face of wing. Alt. with F_1 bars.): SIZE	SPACING	NO. REQD	LENGTH	X	Y
H	SIZE	SPACING	NO. REQD	MIN.	MAX.	MIN.	MAX.	SIZE	SPACING	NO. REQD	LENGTH	X	Y
2'	#3	12"	8	1'-6"	3'-10"	0'-8"	1'-0"	0'-11"	2'-11"	—	—	—	—
3'	#3	12"	10	2'-2"	5'-2"	0'-10"	1'-3"	1'-5"	4'-0"	—	—	—	—
4'	#3	12"	13	2'-9"	6'-6"	0'-11"	1'-7"	1'-6"	5'-0"	—	—	—	—
5'	#3	12"	15	2'-11"	7'-10"	1'-1"	1'-11"	1'-11"	6'-0"	#3	12"	4	3'-6"
6'	#4	12"	17	3'-6"	9'-3"	1'-2"	2'-3"	2'-5"	7'-1"	#3	12"	4	4'-6"
7'	#4	12"	20	3'-9"	10'-9"	1'-3"	2'-9"	2'-7"	8'-1"	#4	12"	7	5'-6"
8'	#4	12"	22	4'-4"	12'-3"	1'-5"	3'-12"	3'-0"	9'-2"	#4	12"	10	6'-6"

CLEAR HEIGHT	F_3 Straight (Longitudinal in top of wing footing heel.): SIZE	NO. REQD	LENGTH	F_4 Straight (Longitudinal in bottom of wing footing toe.): SIZE	NO. REQD	LENGTH	H_1 Straight (Horizontal in back face of wing.): SIZE	SPACING	NO. REQD	LENGTH	H_2 Straight (Horizontal in back face of wing. One bar of each length.): SIZE	SPACING	NO. REQD	LENGTHS VARY MAX.	MIN.
H	SIZE	NO. REQD	LENGTH	SIZE	NO. REQD	LENGTH	SIZE	SPACING	NO. REQD	LENGTH	SIZE	SPACING	NO. REQD	MAX.	MIN.
2'	#3	1	9'-8"	#3	2	8'-6"	#3	12"	1	7'-2"	#3	12"	1	—	9'-0"
3'	#3	1	12'-0"	#3	2	11'-0"	#3	12"	1	9'-6"	#3	12"	2	7'-6"	9'-0"
4'	#3	1	14'-4"	#3	3	13'-6"	#3	12"	1	11'-10"	#3	12"	3	10'-11"	9'-0"
5'	#3	1	16'-8"	#3	3	16'-0"	#3	12"	2	14'-2"	#3	12"	3	10'-11"	9'-0"
6'	#3	1	19'-0"	#3	3	18'-6"	#3	12"	2	16'-6"	#3	12"	4	14'-6"	9'-0"
7'	#4	1	21'-4"	#4	4	21'-0"	#4	12"	2	18'-9"	#4	12"	5	17'-9"	9'-0"
8'	#4	1	23'-8"	#4	4	23'-9"	#4	12"	3	21'-1"	#4	12"	5	17'-9"	9'-0"

CLEAR HEIGHT	H_3 Straight (In back face of wing at top - on slope.): SIZE	NO. REQD	LENGTH	H_4 Bent (Dowels thru construction joint at headwall.): SIZE	SPACING	NO. REQD	LENGTH	X	QUANTITY REINFORCING STEEL PER WING
H	SIZE	NO. REQD	LENGTH	SIZE	SPACING	NO. REQD	LENGTH	X	LB.
2'	#3	1	7'-9"	#3	12"	2	2'-8"	1'-9"	27.0
3'	#3	1	9'-9"	#3	12"	3	2'-8"	1'-9"	41.1
4'	#3	1	12'-2"	#3	12"	4	2'-8"	1'-9"	63.7
5'	#3	1	14'-7"	#3	12"	5	2'-8"	1'-9"	89.5
6'	#3	1	17'-0"	#3	12"	6	2'-8"	1'-9"	145.8
7'	#4	1	19'-5"	#4	12"	7	3'-6"	1'-9"	283.7
8'	#4	1	21'-10"	#4	12"	8	3'-6"	1'-9"	356.4

BAR BENDING DIAGRAMS

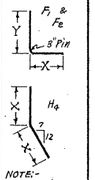

REVISIONS:- Membrane added. 5-10-66 W.C.H.

Designed By:- W.C.H. 8-20-62. Checked By:-
Drawn By:- W.C.H. 12-4-62. Checked By:-
Quantities By:- W.C.H. 12-14-62. Checked By:-
Rechecked By:-

RMS - 1-31-63
RMS - 1-31-63
RMS - 3-29-63

ARKANSAS STATE HIGHWAY COMMISSION

DETAILS OF STANDARD WINGS FOR REINFORCED CONCRETE BOX CULVERTS

4', 5', 6', 7', 8', 9', 10', 11' & 12' SPANS — 3:1 SLOPES

SINGLES, DOUBLES, TRIPLES, QUADRUPLES & QUINTUPLES. — ALL DEPTHS OF COVER FOR H = 8'-0" OR LESS

STANDARD DRAWING NO. W-X003-1

Mylar

FED. ROAD No.	STATE	FED. AID PROJECT	FISCAL YEAR	SHEET No.	TOTAL SHEETS
6	ARK.				
JOB No.					

BAR LIST FOR BARREL SECTION 60'-0" IN LENGTH

DEPTH OF COVER D	CLEAR SPAN S	CLEAR HEIGHT H	"a" bars STRAIGHT In Top and Bottom Slabs of Barrel. 2 Add'l in Apron and Headwall- Each. SIZE	SPACING	NUMBER REQ'D 3:1	NUMBER REQ'D 4:1	LENGTH	"b" bars BENT - See Diagram below. In Top and Bottom Slabs of Barrel. Alternate with "a" bars. SIZE	SPACING	NUMBER REQ'D 3:1	NUMBER REQ'D 4:1	LENGTH	X	"d" bars STRAIGHT. Longitudinal in Top Slab of Barrel SIZE	SPACING	No. REQ'D	LENGTH	"d1" bars STRAIGHT. Longitudinal in Sidewalls SIZE	SPACING	No. REQ'D	LENGTH	"e" bars. STRAIGHT Longitudinal in Bottom Slab of Barrel SIZE	SPACING	No. REQ'D	LENGTH	"f" bars STRAIGHT Verticals in Sidewalls SIZE	SPACING	NUMBER REQ'D 3:1	NUMBER REQ'D 4:1	LENGTH
0'-0" TO 5'-0" MAXIMUM	1 @ 4'	2'	#5	13"	120	120	4'-9"	#6	13"	110	110	5'-10"	4'-8"	#5	10½"	6	#4	16"	4	#4	12"	5	#4	12"	120	120	2'-11"
		3'			120	120	4'-9"			110	110	5'-10"	4'-8"			6			5			5			120	120	3'-11"
		4'			120	120	4'-9"			110	110	5'-10"	4'-8"			8			5			5			120	120	4'-11"
		5'			120	120	4'-9"			110	110	5'-10"	4'-8"			10			5			5			120	120	5'-11"
		6'			120	120	4'-11"			110	110	6'-0"	4'-10"			12			5			5			120	120	6'-11"
	1 @ 5'	3'	#6	13"	120	120	5'-9"	#6	13"	110	110	6'-10"	5'-8"	#5	10½"	6	#4	12"	6	#4	12"	6	#4	12"	120	120	5'-0"
		4'			120	120	5'-9"			110	110	6'-10"	5'-8"			7			6			6			120	120	6'-0"
		5'			120	120	5'-9"			110	110	6'-10"	5'-8"			7			6			6			120	120	7'-0"
		6'			120	120	5'-11"			110	110	7'-0"	5'-10"			7			6			6			120	120	8'-0"
		7'			120	120	6'-0"			110	110	7'-1"	5'-11"			7			6			6			120	120	4'-1"
	1 @ 6'	3'	#6	12"	128	128	6'-9"	#6	12"	118	118	7'-10"	6'-8"	#5	10½"	8	#4	12"	6	#4	12"	7	#4	12"	120	120	5'-1"
		4'			128	128	6'-9"			118	118	7'-10"	6'-8"			8			8			7			120	120	6'-1"
		5'			128	128	6'-9"			118	118	7'-10"	6'-8"			8			8			7			120	120	7'-1"
		6'			128	128	6'-11"			118	118	8'-0"	6'-10"			8			8			7			120	120	8'-1"
		7'			128	128	7'-0"			118	118	8'-1"	6'-11"			8			8			7	#5	12"	120	120	9'-1"
		8'			128	128	7'-1"			118	118	8'-2"	7'-0"			8			8			7			120	120	5'-2"
	1 @ 7'	4'	#6	11"	140	140	7'-9"	#6	11"	130	130	8'-10"	7'-8"	#5	10½"	9	#4	12"	8	#4	12"	8	#4	12"	120	120	6'-2"
		5'			140	140	7'-9"			130	130	8'-10"	7'-8"			9			10			8			120	120	7'-2"
		6'			140	140	7'-11"			130	130	9'-0"	7'-10"			9			14			8			120	120	8'-2"
		7'			140	140	8'-0"			130	130	9'-1"	7'-11"			9			16			8	10"	144	144	9'-2"
		8'			140	140	8'-1"			130	130	9'-2"	8'-0"			9			18			8	#5	12"	120	120	10'-2"
		9'			140	140	8'-3"			130	130	9'-4"	8'-2"			9											
	1 @ 8'	4'	#7	12"	128	128	8'-9"	#6	12"	118	118	9'-10"	8'-8"			11			8			9			120	120	5'-9"
		5'			128	128	8'-11"			118	118	10'-0"	8'-10"			11			10			9			120	120	6'-9"
		6'			128	128	8'-11"			118	118	10'-0"	8'-10"			11			12			9			120	120	7'-9"
		7'			128	128	9'-0"			118	118	10'-1"	8'-11"			11			14			9			120	120	8'-9"
		8'			128	128	9'-1"			118	118	10'-2"	9'-0"			11			16			9	10"	144	144	9'-9"
		9'			128	128	9'-3"			118	118	10'-4"	9'-2"			11			18			9	12"	120	120	10'-9"
		10'			128	128	9'-5"			118	118	10'-5"	9'-4"			11			20			9	12"	120	120	11'-9"
	1 @ 9'	5'	#7	11"	140	140	9'-11"	#6	11"	130	130	11'-0"	9'-10"			12			10			10	#4	12"	120	120	6'-5"
		6'			140	140	10'-0"			130	130	11'-1"	9'-11"			12			12			10			120	120	7'-5"
		7'			140	140	10'-0"			130	130	11'-1"	9'-11"			12			14			10			120	120	8'-5"
		8'			140	140	10'-1"			130	130	11'-2"	10'-0"			12			16			10	10"	144	144	9'-5"
		9'			140	140	10'-3"			130	130	11'-4"	10'-2"			12			18			10	#5	12"	120	120	10'-5"
		10'			140	140	10'-5"			130	130	11'-6"	10'-4"			12			20			10	11"	132	132	11'-5"
		11'			140	140	10'-7"			130	130	11'-8"	10'-6"			12			22			10	14"	144	144	12'-5"
	1 @ 10'	5'	#7	12"	128	128	10'-11"	#7	12"	118	118	12'-2"	10'-10"			13			10			11	#4	12"	120	120	6'-6"
		6'			128	128	11'-0"			118	118	12'-3"	10'-11"			13			12			11			120	120	7'-6"
		7'			128	128	11'-0"			118	118	12'-3"	10'-11"			13			14			11			120	120	8'-6"
		8'			128	128	11'-1"			118	118	12'-4"	11'-0"			13			16			11	10"	144	144	9'-6"
		9'			128	128	11'-3"			118	118	12'-6"	11'-2"			13			18			11	#5	12"	120	120	10'-6"
		10'			128	128	11'-5"			118	118	12'-8"	11'-4"			13			20			11	10"	144	144	12'-6"
		11'			128	128	11'-7"			118	118	12'-10"	11'-6"			13			22			11	#6	12"	120	120	13'-6"
		12'			128	128	11'-9"			118	118	13'-0"	11'-8"			13			24			11					
	1 @ 11'	6'	#7	11"	140	140	12'-1"	#7	11"	130	130	13'-4"	12'-0"	#5	9½"	15	#4	12"	12	#4	12"	12	#4	12"	120	120	7'-7"
		7'			140	140	12'-1"			130	130	13'-4"	12'-0"			15			14			12			120	120	8'-7"
		8'			140	140	12'-1"			130	130	13'-4"	12'-0"			15			16			12	10"	144	144	9'-7"
		9'			140	140	12'-3"			130	130	13'-6"	12'-2"			15			18			12	12"	120	120	10'-7"
		10'			140	140	12'-5"			130	130	13'-8"	12'-4"			15			20			12	#5	11"	132	132	11'-7"
		11'			140	140	12'-7"			130	130	13'-10"	12'-6"			15			22			12	10"	144	144	12'-7"
		12'			140	140	12'-9"			130	130	14'-0"	12'-8"			15			24			12	#6	12"	120	120	13'-7"
	1 @ 12'	6'	#8	12"	128	128	13'-1"	#7	12"	118	118	14'-4"	13'-0"	#5	9½"	16	#4	12"	12	#4	12"	13	#4	12"	120	120	7'-9"
		7'			128	128	13'-1"			118	118	14'-4"	13'-0"			16			14			13			120	120	8'-9"
		8'			128	128	13'-1"			118	118	14'-4"	13'-0"			16			16			13	10"	144	144	9'-9"
		9'			128	128	13'-3"			118	118	14'-6"	13'-2"			16			18			13	12"	120	120	10'-9"
		10'			128	128	13'-5"			118	118	14'-8"	13'-4"			16			20			13	#5	11"	132	132	11'-9"
		11'			128	128	13'-7"			118	118	14'-10"	13'-6"			16			22			13	10"	144	144	12'-9"
		12'			128	128	13'-9"			118	118	15'-0"	13'-8"			16			24			13	#6	12"	120	120	13'-9"

2 @ 30'-6" For 60'-0" Length Barrel. (1'-3" Lap)

2 @ 31'-6" For 60'-0" Length Barrel. (1'-3" Lap)

2 @ 30'-6" For 60'-0" Length Barrel. (1'-3" Lap)

DIMENSIONS — QUANTITIES

MAX. DESIGN DEPTH OF COVER D	CLEAR SPAN S	CLEAR HEIGHT H	BARREL DIMENSIONS: SQ. FT. OPENING A	OVERALL WIDTH OW	THICKNESS OF TOP SLAB T	THICKNESS OF SIDEWALLS C	THICKNESS OF BOTTOM SLAB B	OVERALL HEIGHT OH	UNIT QUANTITIES: CLASS S CONC. PER LIN. FT. OF BARREL CU.YD.	REINFORCING STEEL: PER LIN. FT. OF BARREL LB.	ADDITIONAL: PER LAP LB.	ADDITIONAL: TWO HEADWALLS & APRONS LB.
5'-0"	1 @ 4'	2'	8	5'-0"	7"	6"	6½"	3'-1½"	0.282	41.99	17.95	66.35
		3'	12	5'-0"		6"		4'-1½"	0.319	44.16	19.62	66.35
		4'	16	5'-0"		6"		5'-1½"	0.356	46.83	21.29	66.35
		5'	20	5'-0"		6"		6'-1½"	0.394	49.50	22.96	66.35
		6'	24	5'-2"		7"		7'-1½"	0.474	52.96	29.63	67.75
	1 @ 5'	3'	15	6'-0"	7½"	6"	7"	4'-2½"	0.380	55.55	22.19	101.27
		4'	20	6'-0"		6"		5'-2½"	0.417	58.23	23.86	101.27
		5'	25	6'-0"		6"		6'-2½"	0.454	60.90	25.53	101.27
		6'	30	6'-2"		7"		7'-2½"	0.535	64.49	27.20	103.27
		7'	35	6'-3"		7½"		8'-2½"	0.604	67.63	28.87	104.27
	1 @ 6'	3'	18	7'-0"	8"	6"	8"	4'-3½"	0.496	66.29	29.76	118.96
		4'	24	7'-0"		6"		5'-3½"	0.583	68.96	26.93	118.96
		5'	30	7'-0"		6"		6'-3½"	0.520	71.64	28.10	118.96
		6'	36	7'-2"		7"		7'-3½"	0.602	75.31	29.77	120.96
		7'	42	7'-3"		7½"		8'-3½"	0.671	78.98	31.44	121.97
		8'	48	7'-4"		8"		9'-3½"	0.746	88.47	33.11	122.97
	1 @ 7'	4'	28	8'-0"	8½"	6"	9½"	5'-5"	0.568	81.32	29.01	136.88
		5'	35	8'-0"		6"		6'-5"	0.605	84.00	30.68	136.88
		6'	42	8'-2"		7"		7'-5"	0.688	87.76	32.35	138.88
		7'	49	8'-3"		7½"		8'-5"	0.757	90.98	34.02	139.88
		8'	56	8'-4"		8"		9'-5"	0.832	96.65	35.69	140.88
		9'	63	8'-6"		9"		10'-5"	0.996	105.59	37.36	142.89
	1 @ 8'	4'	32	9'-0"	9½"	6"	10"	5'-7"	0.676	95.26	33.32	194.07
		5'	40	9'-2"		7"		6'-7"	0.759	99.12	34.99	196.80
		6'	48	9'-2"		7"		7'-7"	0.797	101.79	36.66	196.80
		7'	56	9'-3"		7½"		8'-7"	0.867	105.05	38.33	198.16
		8'	64	9'-4"		8"		9'-7"	0.942	110.81	40.00	199.52
		9'	72	9'-6"		9"		10'-7"	1.057	119.92	41.67	202.25
		10'	80	9'-8"		10"		11'-7"	1.184	126.67	43.34	204.97
	1 @ 9'	5'	45	10'-2"	10"	7"	11"	6'-8"	0.849	119.72	37.56	213.61
		6'	54	10'-3"		7½"		7'-8"	0.910	118.04	39.23	220.97
		7'	63	10'-3"		7½"		8'-8"	0.957	120.71	40.90	220.97
		8'	72	10'-4"		8"		9'-8"	1.033	126.54	42.57	222.33
		9'	81	10'-6"		9"		10'-8"	1.148	135.80	44.24	225.06
		10'	90	10'-8"		10"		11'-8"	1.276	142.68	45.91	227.78
		11'	99	10'-10"		11"		12'-8"	1.416	150.90	47.58	230.51
	1 @ 10'	5'	50	11'-2"	10½"	7"	11"	6'-9½"	0.957	130.64	40.13	242.64
		6'	60	11'-3"		7½"		7'-9½"	1.024	133.99	41.80	244.00
		7'	70	11'-3"		7½"		8'-9½"	1.071	136.66	43.47	244.00
		8'	80	11'-4"		8"		9'-9½"	1.147	142.55	45.14	245.36
		9'	90	11'-6"		9"		10'-9½"	1.263	151.92	46.81	248.09
		10'	100	11'-8"		10"		11'-9½"	1.391	158.89	48.48	250.81
		11'	110	11'-10"		11"		12'-9½"	1.532	166.71	50.15	253.54
		12'	120	12'-0"		12"		13'-9½"	1.685	178.67	51.82	256.26
	1 @ 11'	6'	66	12'-4"	11"	8"	11½"	7'-10½"	1.153	155.16	46.12	268.62
		7'	77	12'-4"		8"		8'-10½"	1.202	157.83	47.79	268.62
		8'	88	12'-6"		8"		9'-10½"	1.252	163.06	49.46	268.62
		9'	99	12'-6"		9"		10'-10½"	1.368	172.60	51.13	271.34
		10'	110	12'-8"		10"		11'-10½"	1.497	179.70	52.80	274.07
		11'	121	12'-10"		11"		12'-10½"	1.638	187.67	54.47	276.79
		12'	132	13'-0"		12"		13'-10½"	1.792	199.79	56.14	279.52
	1 @ 12'	6'	72	13'-4"	11¾"	8"	12¼"	8'-0"	1.284	172.20	48.69	357.62
		7'	84	13'-6"		8"		9'-0"	1.333	179.87	50.36	357.62
		8'	96	13'-8"		8"		10'-0"	1.383	180.15	52.03	357.62
		9'	108	13'-6"		9"		11'-0"	1.500	189.85	53.70	361.18
		10'	120	13'-8"		10"		12'-0"	1.630	197.07	55.37	364.74
		11'	132	13'-10"		11"		13'-0"	1.772	205.16	57.04	368.30
		12'	144	14'-0"		12"		14'-0"	1.926	217.95	58.71	371.86

W-X002-1, W-X003-1 or W-X004-1
W-X002-2, W-X003-2 or W-X004-2.

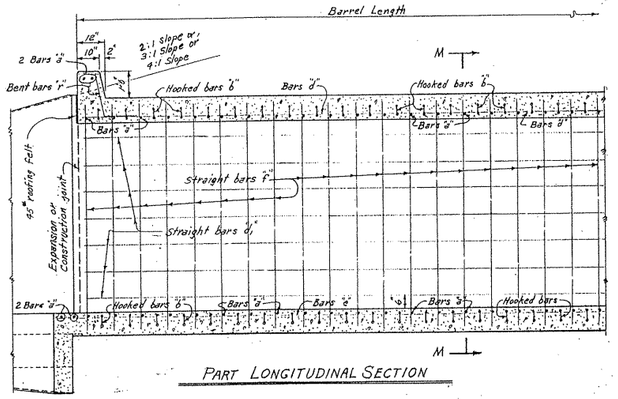

PART LONGITUDINAL SECTION

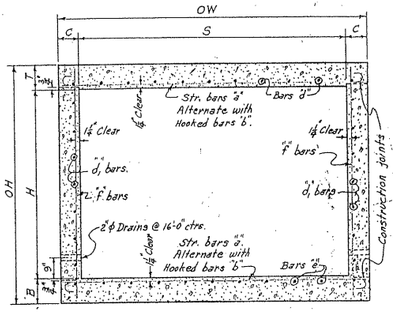

TYPICAL SECTION M-M

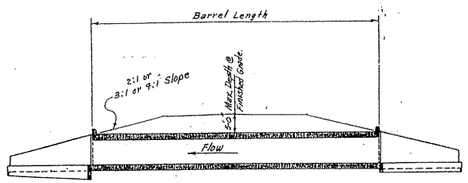

LONGITUDINAL SECTION

Note- For details of wings and bar lists, see Drawing Nos. W-X002-1, W-X003-1, W-X004-1 and W-X002-2, W-X003-2, W-X004-2.

GENERAL NOTES:-

CONCRETE:- All concrete to be Class S, and shall be poured in the dry. All exposed corners to have ¾" chamfers.

REINFORCING STEEL:- Reinforcing to be deformed bars of intermediate or hard grade.

BAR LAP:- In computing the quantities of steel from the tables add one lap for each additional 33'-0" length of barrel over 32'-0". Lap longitudinal bars 30 diameters.

CONSTRUCTION JOINTS:- Construction joints between wingwalls, sidewalls and slabs shall be only where shown on plans.

SPECIFICATIONS:- Arkansas State Highway Commission Standard Specifications for Highway Construction and applicable Special Provisions.

BAR SIZE	PIN DIAM.	K	ADD FOR 2 HOOKS
#6	3"	5"	1'-2"
#7	3⅝"	5¾"	1'-9"

BENDING DIAGRAM Bars "b".

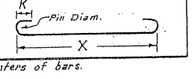

NOTE:- Dimensions are to centers of bars.

DOWEL BARS FOR TWO HEADWALLS

SPAN	SIZE	SPACING	NO. REQ'D	LENGTH	X
4'	#4	11"±	12	2'-6"	1'-3"
5'	#4	11"±	14	2'-7"	1'-3⅛"
6'	#4	11"±	16	2'-8"	1'-4"
7'	#4	11"±	18	2'-9"	1'-4⅛"
8'	#4	11⅛"±	20	2'-11"	1'-5⅛"
9'	#4	11⅛"±	22	3'-0"	1'-6"
10'	#4	11⅛"±	24	3'-1"	1'-6⅛"
11'	#4	12"±	26	3'-2"	1'-7"
12'	#4	12"±	28	3'-3"	1'-7⅛"

Bars "r" Dowel bars in Headwalls.

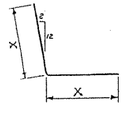

DESIGN LIVE LOAD

H20-S16 LOADING A.A.S.H.O. 1961
AND
SPECIAL MILITARY LOADING
Two 29,000 Lb. Axles @ 4'-0" ctrs.

UNIT STRESSES:-
Class S Concrete (n=10) 1200 #/□"
Reinforcing Steel 20,000 #/□"

NOTE:- This drawing to be used in conjunction with Standard Drawing Nos. W-X003-1 or W-X003-2 and W-X004-1 or W-X004-2. Also Drawing Nos. W-X002-1 or W-X002-2.

CLASS S CONCRETE

ARKANSAS STATE HIGHWAY COMMISSION

DETAILS OF STANDARD BARREL SECTIONS
FOR
REINFORCED CONCRETE BOX CULVERTS

4', 5', 6', 7', 8', 9', 10', 11' & 12' SPANS — 3:1 OR 4:1 SLOPES
SINGLES — UNDER 5'-0" COVER

STANDARD DRAWING NO. R-100X-0

Designed By:- W.C.H. 1-23-63. Checked By:- RBG 5-8-63
Drawn By:- W.C.H. 2-8-63. Checked By:- RBG 5-8-63
Quantities By:- W.C.H. 2-12-63. Checked By:- RBG 5-24-63