DATE REVISED	DATE FILMED	DATE REVISED	DATE FILMED	FED.RD. DIST.NO.	STATE	FED.AID PROJ.NO.	SHEET NO.	TOTAL SHEETS
				6	ARK.			
				JOB NO.		050347	1	121
				(2)	HWY. 9 STRS. & APPRS. (S)			

ARKANSAS DEPARTMENT OF TRANSPORTATION
CONSTRUCTION PLANS FOR STATE HIGHWAY

HWY. 9
STRS. & APPRS. (S)

FULTON COUNTY
ROUTE 9 SECTION 14

JOB 050347
FED. AID PROJ. BFP-0025(21)

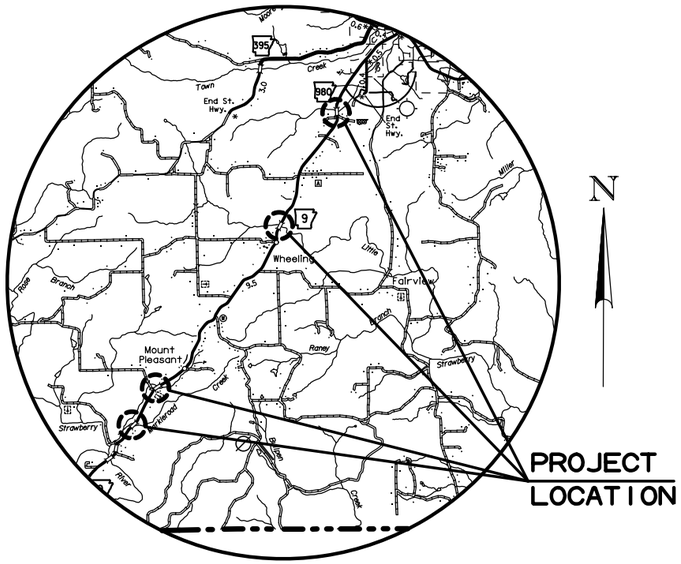

VICINITY MAP

NOT TO SCALE

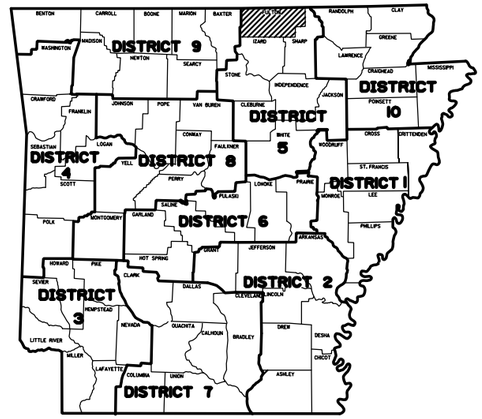

ARK. HWY. DIST. NO. 5

STRUCTURES OVER 20'-0" SPAN

(1) STA. 104+39 - CONSTRUCT
QUAD. 12' x 7' x 105' R.C. BOX CULV'T.
45° RT. FWD. SKEW
WITH 3:1 WINGS LT. & RT.
Q50= 1681 CFS D.A.= 916.6 ACRES
SPAN = 72.36'

(2) STA. 207+90 CONSTRUCT
QUAD. 8' x 6' x 103' R.C. BOX CULV'T.
45° RT. FWD. SKEW
WITH 3:1 WINGS LT. & RT.
Q50 = 671 CFS D.A. = 279.0 ACRES
SPAN = 49.62'

(4) STA. 410+85 - CONSTRUCT
QUAD. 10' x 9' x 90' R.C. BOX CULV'T.
40° LT. FWD. SKEW
WITH 3:1 WINGS LT. & RT.
Q50= 2953 CFS D.A.= 1511.4 ACRES
SPAN = 56.68'
CHANNEL CHANGE = 470 CU. YD.

BRIDGE DATA

(3) STA. 308+08.50 BRIDGE END
CONSTRUCT BRIDGE NO. 07454
111'-0" INTEGRAL CONTINUOUS
W-BEAM UNIT (34'-43'-34')
34'-0" CLEAR ROADWAY
112'-0" BRIDGE LENGTH
STA. 309+20.50 BRIDGE END

STA. 420+15.00
END JOB 050347
& SITE 4
LOG MILE 8.43

STA. 399+00.00
BEGIN SITE 4
LOG MILE 8.03

STA. 216+25.00
END SITE 2

STA. 198+75.57
BEGIN SITE 2
LOG MILE 2.71

STA 112+00.00
END SITE 1

STA. 100+00.00
BEGIN JOB 050347
& SITE 1
LOG MILE 2.10

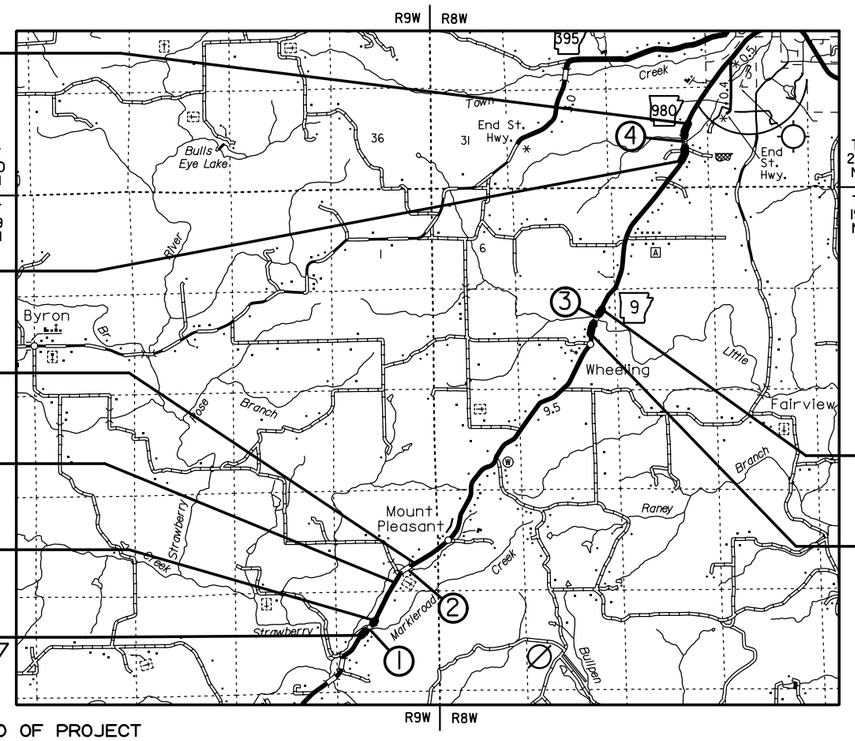

STA. 321+50.00
END SITE 3

STA. 296+90.39
BEGIN SITE 3
LOG MILE 5.98

DESIGN TRAFFIC DATA

DESIGN YEAR	2042
2022 ADT	1,300
2042 ADT	1,400
2042 DHV	154
DIRECTIONAL DISTRIBUTION	0.60
TRUCKS	2%
DESIGN SPEED	55 MPH

	BEGINNING OF PROJECT	MID-POINT OF PROJECT	END OF PROJECT
SITE NO. 1	LAT. = N 36°16'46" LONG. = W 91°54'6"	LAT. = N 36°16'49" LONG. = W 91°54'1"	LAT. = N 36°16'53" LONG. = W 91°53'57"
SITE NO. 2	LAT. = N 36°17'14" LONG. = W 91°53'43"	LAT. = N 36°17'19" LONG. = W 91°53'37"	LAT. = N 36°17'22" LONG. = W 91°53'31"
SITE NO. 3	LAT. = N 36°19'20" LONG. = W 91°51'31"	LAT. = N 36°19'27" LONG. = W 91°51'28"	LAT. = N 36°19'34" LONG. = W 91°51'23"
SITE NO. 4	LAT. = N 36°20'50" LONG. = W 91°50'28"	LAT. = N 36°20'59" LONG. = W 91°50'27"	LAT. = N 36°21'8" LONG. = W 91°50'24"

LENGTH OF PROJECT CALCULATED ALONG C.L.

GROSS	LENGTH OF	PROJECT	7524.04	FEET	OR	1.425	MILES
NET	"	" ROADWAY	7233.38	"	"	1.370	"
NET	"	" BRIDGES	290.66	"	"	0.055	"
NET	"	" PROJECT	7524.04	"	"	1.425	"

CERTIFICATE OF AUTHORIZATION
CRAFTON, TULL & ASSOCIATES, INC.
No. 109
ARKANSAS ENGINEER

STATE OF ARKANSAS
REGISTERED PROFESSIONAL ENGINEER
No. 9620
4-22-22
HUBERT BURNS

P.E. JOB 050347

USER: jh595
DESIGN FILE: G:\18105601_050347hwy9\TRANSP\dgn\misc\r050347 TTL.dgn
PLOTTED: 4/22/2022 10:00
SCALE: 1:200

G:\18105601_050347hwy9\TRANSP\dgn\misc\r050347 TTL.dgn 4/22/2022 10:00

DATE REVISED	DATE FILMED	DATE REVISED	DATE FILMED	FED.RD. DIST.NO.	STATE	FED.AID PROJ.NO.	SHEET NO.	TOTAL SHEETS
				6	ARK.			
				JOB NO.		050347	2	121

(2) INDEX OF SHEETS AND STANDARD DRAWINGS

STATE OF ARKANSAS
REGISTERED PROFESSIONAL ENGINEER
No. 9620
5-20-22
HUBERT BURNS

INDEX OF SHEETS

SHEET NO.		TITLE	BRIDGE NO.	DRWG.NO.
1		TITLE SHEET		
2		INDEX OF SHEETS AND STANDARD DRAWINGS		
3		GOVERNING SPECIFICATIONS AND GENERAL NOTES		
4	- 6	TYPICAL SECTIONS OF IMPROVEMENT		
7	- 8	SPECIAL DETAILS		
9		NOT USED		
10	- 21	SPECIAL DETAILS		
22	- 35	TEMPORARY EROSION CONTROL DETAILS		
36	- 47	MAINTENANCE OF TRAFFIC DETAILS		
48		PERMANENT PAVEMENT MARKING DETAILS		
49	- 54	QUANTITIES		
55		SCHEDULE OF BRIDGE QUANTITIES	07454	60921
56		SUMMARY OF QUANTITIES AND REVISIONS		
57	- 64	SURVEY CONTROL DETAILS		
65	- 72	PLAN AND PROFILE SHEETS		
73		LAYOUT OF BRIDGE HIGHWAY 9 OVER LITTLE STRAWBERRY RIVER (SHEET 1 OF 2)	07454	60922
74		LAYOUT OF BRIDGE HIGHWAY 9 OVER LITTLE STRAWBERRY RIVER (SHEET 2 OF 2)	07454	60923
75		DETAILS OF BENTS 1 & 4 (SHEET 1 OF 2)	07454	60924
76		DETAILS OF BENTS 1 & 4 (SHEET 2 OF 2)	07454	60925
77		DETAILS OF BENTS 2 & 3 (SHEET 1 OF 2)	07454	60926
78		DETAILS OF BENTS 2 & 3 (SHEET 2 OF 2)	07454	60927
79		DETAILS OF ELASTOMERIC BEARINGS	07454	60928
80		DETAILS OF 111'-0" INTEGRAL CONTINUOUS W-BEAM UNIT (SHEET 1 OF 6)	07454	60929
81		DETAILS OF 111'-0" INTEGRAL CONTINUOUS W-BEAM UNIT (SHEET 2 OF 6)	07454	60930
82		DETAILS OF 111'-0" INTEGRAL CONTINUOUS W-BEAM UNIT (SHEET 3 OF 6)	07454	60931
83		DETAILS OF 111'-0" INTEGRAL CONTINUOUS W-BEAM UNIT (SHEET 4 OF 6)	07454	60932
84		DETAILS OF 111'-0" INTEGRAL CONTINUOUS W-BEAM UNIT (SHEET 5 OF 6)	07454	60933
85		DETAILS OF 111'-0" INTEGRAL CONTINUOUS W-BEAM UNIT (SHEET 6 OF 6)	07454	60934
86		DETAILS FOR TYPE SPECIAL APPROACH SLABS	07454	60935
87		DETAILS FOR TYPE SPECIAL APPROACH GUTTERS	07454	60935A
88	- 121	CROSS SECTIONS		

NOTE: CROSS SECTIONS NOT NORMALLY INCLUDED IN PLANS SOLD TO PROSPECTIVE BIDDERS, BUT MAY BE HAD UPON REQUEST.

BRIDGE STANDARD DRAWINGS

DRWG.NO.	TITLE	DATE
55000	STANDARD DETAILS FOR EMBANKMENT CONSTRUCTION AND BACKFILL AT BRIDGE ENDS	02-27-14
55001	STANDARD DETAILS FOR DUMPED RIPRAP AND FILTER BLANKET AND COMPUTING EXCAVATION FOR STRUCTURES	02-27-14
55005	STANDARD DETAILS FOR PERMANENT STEEL BRIDGE DECK FORMS FOR STEEL & CONCRETE GIRDER SPANS	03-24-16
55006	STANDARD GENERAL NOTES FOR STEEL BRIDGE STRUCTURES	09-02-15
55007	STANDARD DETAILS FOR STEEL BRIDGE STRUCTURES	02-11-16
55010	STANDARD DETAILS FOR TYPE D BRIDGE NAME PLATE	05-11-21
55020	STANDARD DETAILS FOR STEEL H-PILES AND PILE ENCASEMENTS	03-24-16

ROADWAY STANDARD DRAWINGS

DRWG.NO.	TITLE	DATE
CDP-1	CONCRETE DITCH PAVING	12-08-16
FES-1	FLARED END SECTION	10-18-96
FES-2	FLARED END SECTION	10-18-96
GR-6	GUARDRAIL DETAILS	05-19-22
GR-7	GUARDRAIL DETAILS	11-07-19
GR-8	GUARDRAIL DETAILS	11-07-19
GR-9	GUARDRAIL DETAILS	11-07-19
GR-10	GUARDRAIL DETAILS	11-07-19
GR-11	GUARDRAIL DETAILS	11-07-19
GR-12	GUARDRAIL DETAILS	05-14-20
MB-1	MAILBOX DETAILS	11-18-04
PBC-1	PRECAST CONCRETE BOX CULVERTS	01-28-15
PCC-1	CONCRETE PIPE CULVERT FILL HEIGHTS & BEDDING	02-27-14
PCM-1	METAL PIPE CULVERT FILL HEIGHTS & BEDDING	02-27-14
PCP-1	PLASTIC PIPE CULVERT (HIGH DENSITY POLYETHYLENE)	02-27-14
PCP-2	PLASTIC PIPE CULVERT (PVC F949)	02-27-14
PCP-3	PLASTIC PIPE CULVERT (POLYPROPYLENE)	02-27-20
PM-1	PAVEMENT MARKING DETAILS	02-27-20
PU-1	DETAILS OF PIPE UNDERDRAIN	12-08-16
RCB-1	REINFORCED CONCRETE BOX CULVERT DETAILS	07-26-12
RCB-2	EXCAVATION PAY LIMITS, BACKFILL, & SOLID SODDING FOR BOX CULVERTS	11-20-03
SE-2	TABLES AND METHOD OF SUPERELEVATION FOR TWO-WAY TRAFFIC	11-07-19
SI-1	DETAILS OF SPECIAL ITEMS	10-25-18
TC-1	STANDARD TRAFFIC CONTROLS FOR HIGHWAY CONSTRUCTION	11-07-19
TC-2	STANDARD TRAFFIC CONTROLS FOR HIGHWAY CONSTRUCTION	05-20-21
TC-3	STANDARD TRAFFIC CONTROLS FOR HIGHWAY CONSTRUCTION	08-12-21
TC-4	STANDARD TRAFFIC CONTROLS FOR HIGHWAY CONSTRUCTION-TEMPORARY PRECAST BARRIER	11-07-19
TC-5	STANDARD TRAFFIC CONTROLS FOR HIGHWAY CONSTRUCTION-TEMPORARY PRECAST BARRIER	11-07-19
TEC-1	TEMPORARY EROSION CONTROL DEVICES	11-16-17
TEC-2	TEMPORARY EROSION CONTROL DEVICES	06-02-94
TEC-3	TEMPORARY EROSION CONTROL DEVICES	11-03-94
WF-2	WIRE FENCE WATER GAPS	04-20-79
WF-3	CHAIN LINK FENCE	11-17-10
WF-4	WIRE FENCE TYPE C AND D	08-22-02

USER: dp5181
DESIGN FILE: G:\181056O1_050347hwy9\TRANSP\dgn\misc\r050347 IND.dgn
PLOTTED: 5/19/2022 16:20 SCALE: 1:200

DATE REVISED	DATE FILMED	DATE REVISED	DATE FILMED	FED.RD. DIST.NO.	STATE	FED.AID PROJ.NO.	SHEET NO.	TOTAL SHEETS
06-14-22				6	ARK.			
				JOB NO.		050347	3	121

2 GOVERNING SPECIFICATIONS AND GENERAL NOTES

GOVERNING SPECIFICATIONS

ARKANSAS STATE HIGHWAY COMMISSION STANDARD SPECIFICATIONS FOR HIGHWAY CONSTRUCTION, EDITION OF 2014, AND THE FOLLOWING SPECIAL PROVISIONS AND SUPPLEMENTAL SPECIFICATIONS:

NUMBER	TITLE
ERRATA____	ERRATA FOR THE BOOK OF STANDARD SPECIFICATIONS
FHWA-1273__	REQUIRED CONTRACT PROVISIONS FEDERAL-AID CONSTRUCTION CONTRACTS
FHWA-1273__	SUPPLEMENT - EQUAL EMPLOYMENT OPPORTUNITY - NOTICE TO CONTRACTORS
FHWA-1273__	SUPPLEMENT - SPECIFIC EQUAL EMPLOYMENT OPPORTUNITY RESPONSIBILITIES (23 U.S.C. 140)
FHWA-1273__	SUPPLEMENT - EQUAL EMPLOYMENT OPPORTUNITY - GOALS AND TIMETABLES
FHWA-1273__	SUPPLEMENT - EQUAL EMPLOYMENT OPPORTUNITY - FEDERAL STANDARDS
FHWA-1273__	SUPPLEMENT - POSTERS AND NOTICES REQUIRED FOR FEDERAL-AID PROJECTS
FHWA-1273__	SUPPLEMENT - WAGE RATE DETERMINATION
100-3_____	CONTRACTOR'S LICENSE
100-4_____	DEPARTMENT NAME CHANGE
102-2_____	ISSUANCE OF PROPOSALS
105-4_____	MAINTENANCE DURING CONSTRUCTION
107-2_____	RESTRAINING CONDITIONS
108-1_____	LIQUIDATED DAMAGES
108-2_____	WORK ALLOWED PRIOR TO ISSUANCE OF WORK ORDER
110-1_____	PROTECTION OF WATER QUALITY AND WETLANDS
210-1_____	UNCLASSIFIED EXCAVATION
303-1_____	AGGREGATE BASE COURSE
306-1_____	QUALITY CONTROL AND ACCEPTANCE
307-1_____	CEMENT
308-1_____	CEMENT
400-1_____	TACK COATS
400-4_____	DESIGN AND QUALITY CONTROL OF ASPHALT MIXTURES
400-5_____	PERCENT AIR VOIDS FOR ACHM MIX DESIGNS
400-6_____	LIQUID ANTI-STRIP ADDITIVE
400-7_____	TRACKLESS TACK
404-3_____	DESIGN OF ASPHALT MIXTURES
410-1_____	CONSTRUCTION REQUIREMENTS AND ACCEPTANCE OF ASPHALT CONCRETE PLANT MIX COURSES
410-2_____	DEVICES FOR MEASURING DENSITY FOR ROLLING PATTERNS
410-4_____	EVALUATION OF ACHM SUBLOT REPLACEMENT MATERIAL
501-2_____	CEMENT
600-2_____	INCIDENTAL CONSTRUCTION
603-1_____	LANE CLOSURE NOTIFICATION
604-1_____	RETROREFLECTIVE SHEETING FOR TRAFFIC CONTROL DEVICES IN CONSTRUCTION ZONES
604-3_____	TRAFFIC CONTROL DEVICES IN CONSTRUCTION ZONES (MASH)
605-1_____	CONCRETE DITCH PAVING
606-1_____	PIPE CULVERTS FOR SIDE DRAINS
617-1_____	GUARDRAIL TERMINAL (TYPE 2)
620-1_____	MULCH COVER
621-1_____	FILTER SOCKS
800-1_____	STRUCTURES
802-3_____	CONCRETE FOR STRUCTURES
802-4_____	CEMENT
804-2_____	REINFORCING STEEL FOR STRUCTURES
807-2_____	STEEL STRUCTURES
808-1_____	INSTALLATION OF ELASTOMERIC BEARINGS
808-2_____	ELASTOMERIC BEARINGS
JOB 050347__	AIRPORT CLEARANCE REQUIREMENTS
JOB 050347__	BIDDING REQUIREMENTS AND CONDITIONS
JOB 050347__	BROADBAND INTERNET SERVICE FOR ASPHALT CONCRETE PLANT
JOB 050347__	BROADBAND INTERNET SERVICE FOR FIELD OFFICE
JOB 050347__	CARGO PREFERENCE ACT REQUIREMENTS
JOB 050347__	CAVE DISCOVERY
JOB 050347__	CLASS C FLY ASH IN PORTLAND CEMENT CONCRETE PAVEMENT AND CLASS S(AE) CONCRETE
JOB 050347__	COLD MILLING - COUNTY PROPERTY
JOB 050347__	CONCRETE BRIDGE DECK CURING AND SURFACE TREATMENT RESTRICTIONS
JOB 050347__	DIRECT TENSION INDICATORS FOR HIGH STRENGTH BOLT ASSEMBLIES
JOB 050347__	DISADVANTAGED BUSINESS ENTERPRISE BIDDER'S RESPONSIBILITIES
JOB 050347__	ESTABLISHING CONTRACT TIME - WORKING DAY CONTRACT
JOB 050347__	FLEXIBLE BEGINNING OF WORK
JOB 050347__	GOALS FOR DISADVANTAGED BUSINESS ENTERPRISE PARTICIPATION
JOB 050347__	LIQUIDATED DAMAGES PROCEDURE FOR BID LETTINGS
JOB 050347__	LONGITUDINAL JOINT DENSITIES FOR ACHM SURFACE COURSES
JOB 050347__	MANDATORY ELECTRONIC CONTRACT
JOB 050347__	MANDATORY ELECTRONIC DOCUMENT SUBMITTAL
JOB 050347__	NESTING SITES OF MIGRATORY BIRDS
JOB 050347__	OFF-SITE RESTRAINING CONDITIONS FOR INDIANA AND NORTHERN LONG-EARED BATS
JOB 050347__	PARTNERING REQUIREMENTS

STATE OF ARKANSAS
LICENSED PROFESSIONAL ENGINEER
No. 15360
JEROME PAUL DAVIS
6-14-2022

GOVERNING SPECIFICATIONS - CONTINUED

NUMBER	TITLE
JOB 050347__	PLASTIC PIPE
JOB 050347__	PRICE ADJUSTMENT FOR ASPHALT BINDER
JOB 050347__	PROHIBITION OF CERTAIN TELECOMMUNICATIONS AND VIDEO SURVEILLANCE SERVICES OR EQUIPMENT
JOB 050347__	REMOVAL AND DISPOSAL OF GUARDRAIL
JOB 050347__	REMOVING AND REPLACING TOPSOIL
JOB 050347__	SECTION 404 NATIONWIDE 14 PERMIT REQUIREMENTS
JOB 050347__	SHORING
JOB 050347__	SHORING FOR CULVERTS
JOB 050347__	SOIL STABILIZATION
JOB 050347__	STORM WATER POLLUTION PREVENTION PLAN
JOB 050347__	SUBMISSION OF ASPHALT CONCRETE HOT MIX ACCEPTANCE TEST RESULTS
JOB 050347__	UTILITY ADJUSTMENTS
JOB 050347__	VALUE ENGINEERING
JOB 050347__	VEGETATED BUFFER ZONE
JOB 050347__	WARM MIX ASPHALT
JOB 050347__	WATER POLLUTION CONTROL
JOB 050347__	WELLHEAD PROTECTION

GENERAL NOTES

1. GRADE LINE DENOTES FINISHED GRADE WHERE SHOWN ON PLANS.
2. ALL PIPE LINES, POWER, TELEPHONE, AND TELEGRAPH LINES TO BE MOVED OR LOWERED BY THE RESPECTIVE OWNERS AS PER AGREEMENT WITH SUCH OWNERS.
3. ANY EQUIPMENT OR APPURTENANCE THAT INTERFERES WITH THE PROPOSED CONSTRUCTION AND WHICH MAY BE THE PROPERTY OF UTILITY SERVICE ORGANIZATIONS SHALL BE MOVED BY THE OWNERS UNLESS OTHERWISE PROVIDED.
4. THE CONTRACTOR SHALL BE RESPONSIBLE FOR MAINTAINING U. S. MAILBOXES WITHIN THE PROJECT LIMITS IN SUCH A MANNER THAT THE PUBLIC MAY RECEIVE CONTINUED MAIL SERVICE. PAYMENT WILL BE CONSIDERED INCLUDED IN THE PRICE BID FOR THE VARIOUS BID ITEMS.
5. ALL LAND MONUMENTS LOCATED WITHIN THE CONSTRUCTION AREA SHALL BE PROTECTED IN ACCORDANCE WITH SECTION 107.12 OF THE STANDARD SPECIFICATIONS.
6. ALL TREES THAT DO NOT DIRECTLY INTERFERE WITH THE PROPOSED CONSTRUCTION SHALL BE SPARED AS DIRECTED BY THE ENGINEER. CARE AND DISCRETION SHALL BE USED TO ENSURE THAT ALL TREES NOT TO BE REMOVED SHALL BE HARMED AS LITTLE AS POSSIBLE DURING THE CONSTRUCTION OPERATIONS.
7. THE CONTRACTOR SHALL BE RESPONSIBLE FOR PROVIDING A FENCE TO CONTROL LIVESTOCK IN AREAS WHERE PASTURES ARE SEVERED. WIRE FENCE MAY BE CONSTRUCTED INITIALLY, OR IN LIEU THEREOF, THE CONTRACTOR AT HIS OWN EXPENSE, MAY ELECT TO PROVIDE TEMPORARY FENCING SUITABLE TO CONTAIN LIVESTOCK.
8. THE SEQUENCE AS SHOWN ON THE MAINTENANCE OF TRAFFIC PLANS IS A GENERAL OUTLINE FOR THE CONSTRUCTION OF THIS PROJECT, AND IN NO WAY IS IT INTENDED TO COVER EVERY ITEM IN THE PROJECT. ITEMS NOT CRITICAL TO THE CONSTRUCTION SEQUENCE MAY BE CONSTRUCTED IN ANY STAGE AS APPROVED BY THE RESIDENT ENGINEER.
9. ALL FLEXIBLE BASE AND ASPHALTIC PAVEMENTS REMOVED SHALL BE PAID FOR UNDER THE ITEM NO. 210 - UNCLASSIFIED EXCAVATION.
10. THE EXISTING ASPHALT PAVEMENT TO BE REMOVED FROM THE REMAINING PAVEMENT SHALL BE SEPARATED BY SAWING ALONG A NEAT LINE. AFTER SAWING, THE PAVEMENT TO BE REMOVED SHALL BE CAREFULLY REMOVED IN A MANNER THAT WILL NOT DAMAGE THE PAVEMENT THAT IS TO REMAIN. ANY DAMAGE OF THE ASPHALT PAVEMENT THAT IS TO REMAIN IN PLACE SHALL BE REPAIRED AT THE CONTRACTOR'S EXPENSE.

USER: op518l
DESIGN FILE: G:\1810560l_050347hwy9\TRANSP\dgn\misc\r050347 IND.dgn
PLOTTED: 6/13/2022 16:32
SCALE: 1:200

G:\1810560l_050347hwy9\TRANSP\dgn\misc\r050347 IND.dgn 6/13/2022 16:32

DATE REVISED	DATE FILMED	DATE REVISED	DATE FILMED	FED.RD. DIST.NO.	STATE	FED.AID PROJ.NO.	SHEET NO.	TOTAL SHEETS
				6	ARK.			
				JOB NO.		050347	4	121

(2) TYPICAL SECTIONS OF IMPROVEMENT

STATE OF ARKANSAS
LICENSED PROFESSIONAL ENGINEER
No. 15560
11-30-2020
JEROME PAUL DAVIS

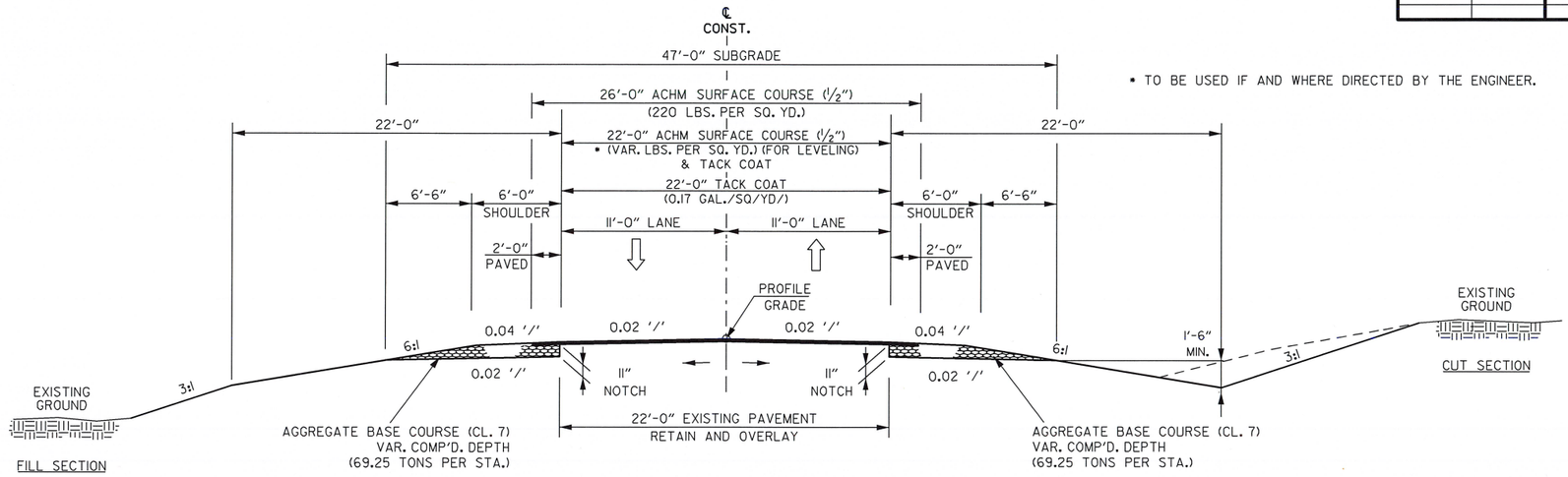

* TO BE USED IF AND WHERE DIRECTED BY THE ENGINEER.

NOTCH AND WIDEN TYPICAL SECTION OF IMPROVEMENT HWY. 9

STA. 100+00.00 TO STA. 102+37.75
STA. 108+76.52 TO STA. 112+00.00
STA. 198+75.57 TO STA. 202+00.00
STA. 214+00.00 TO STA. 216+25.00
STA. 296+90.39 TO STA. 301+93.21
STA. 316+56.00 TO STA. 321+50.00
STA. 399+00.00 TO STA. 402+29.41
STA. 415+00.00 TO STA. 420+15.00

TYPICAL SECTION NOTES:

1. REFER TO CROSS SECTIONS FOR DEVIATIONS FROM THE NORMAL SLOPES. NO CHANGES SHALL BE MADE FROM THE PLANNED SLOPES WITHOUT THE APPROVAL OF THE ENGINEER.
2. THE FINAL 2" OF SURFACE COURSE IS TO BE PLACED AFTER ALL OTHER COURSES HAVE BEEN LAID. LONGITUDINAL JOINTS SHALL BE AT LANE LINES.
3. THE THICKNESS OF AGGREGATE BASE COURSE SHALL BE WITHIN PLUS OR MINUS ONE INCH OF THE PLAN THICKNESS SHOWN. THE CONTRACTOR WILL CORRECT ANY DEFICIENT THICKNESS THAT DOES NOT MEET TOLERANCE INDICATED. PAYMENT WILL NOT BE MADE FOR MATERIAL PLACED IN EXCESS OF THE TOLERANCE INDICATED.
4. ASPHALT FOR LEVELING OF EXISTING PAVEMENT SHALL BE PLACED ONLY IF AND WHERE DIRECTED BY THE ENGINEER. CALCULATIONS FOR THE AMOUNT OF LEVELING AND LEVELING OPERATIONS SHALL BE PERFORMED BEFORE CONSTRUCTING NOTCH AND WIDENING, CALCULATIONS WILL NOT BE PAID FOR DIRECTLY BUT PAYMENT WILL BE CONSIDERED INCLUDED IN THE VARIOUS PAY ITEMS.
5. WITH THE APPROVAL OF THE ENGINEER, THE CONTRACTOR WILL BE ALLOWED TO SUBSTITUTE, AT NO ADDITIONAL COST TO THE DEPARTMENT, THE FIRST LIFT OF ACHM SURFACE COURSE (1/2") IN LIEU OF AGGREGATE BASE COURSE ON THE SHOULDERS.

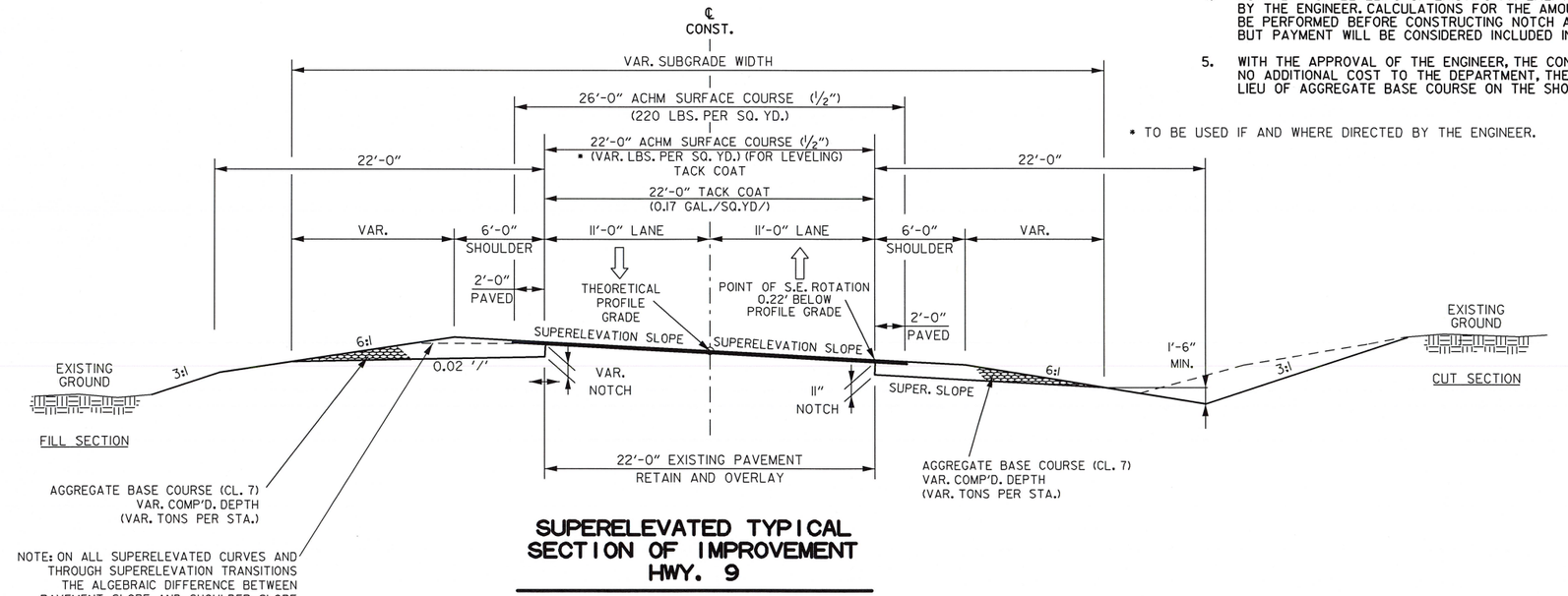

* TO BE USED IF AND WHERE DIRECTED BY THE ENGINEER.

NOTE: ON ALL SUPERELEVATED CURVES AND THROUGH SUPERELEVATION TRANSITIONS THE ALGEBRAIC DIFFERENCE BETWEEN PAVEMENT SLOPE AND SHOULDER SLOPE SHALL NOT EXCEED 0.08'/'.

SUPERELEVATED TYPICAL SECTION OF IMPROVEMENT HWY. 9

TYPICAL SECTIONS OF IMPROVEMENT

USER: dp5181
DESIGN FILE: G:\18105601_050347hwy9\TRANSP\dgn\typical\050347_TYP01.dgn
PLOTTED: 11/30/2020 12:16
SCALE: 1:10

G:\18105601_050347hwy9\TRANSP\dgn\typical\050347_TYP01.dgn 11/30/2020 12:16

DATE REVISED	DATE FILMED	DATE REVISED	DATE FILMED	FED.RD. DIST.NO.	STATE	FED.AID PROJ.NO.	SHEET NO.	TOTAL SHEETS
				6	ARK.			
				JOB NO.		050347	5	121

(2) TYPICAL SECTIONS OF IMPROVEMENT

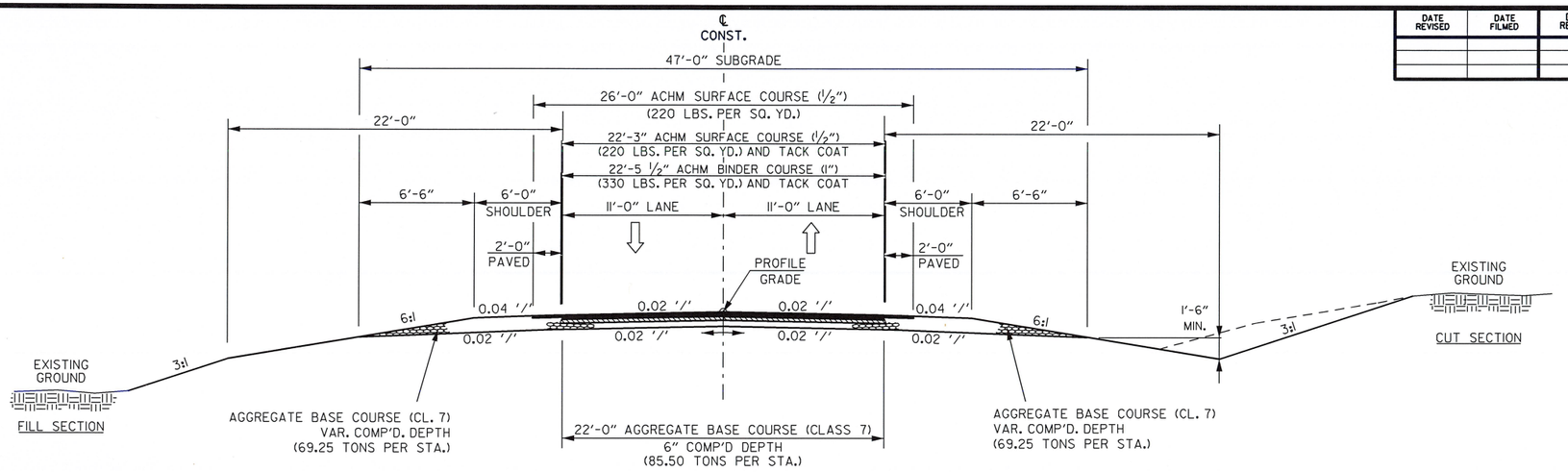

TYPICAL SECTION OF IMPROVEMENT HWY. 9

STA. 102+37.75 TO STA. 108+76.52
STA. 202+00.00 TO STA. 214+00.00
STA. 301+93.21 TO STA. 308+08.50
STA. 309+20.50 TO STA. 316+56.00
STA. 402+29.41 TO STA. 415+00.00

STATE OF ARKANSAS
LICENSED PROFESSIONAL ENGINEER
No. 15560
JEROME PAUL DAVIS
11-30-2020

TYPICAL SECTION NOTES:

1. REFER TO CROSS SECTIONS FOR DEVIATIONS FROM THE NORMAL SLOPES. NO CHANGES SHALL BE MADE FROM THE PLANNED SLOPES WITHOUT THE APPROVAL OF THE ENGINEER.
2. THE FINAL 2" OF SURFACE COURSE IS TO BE PLACED AFTER ALL OTHER COURSES HAVE BEEN LAID. LONGITUDINAL JOINTS SHALL BE AT LANE LINES.
3. THE THICKNESS OF AGGREGATE BASE COURSE SHALL BE WITHIN PLUS OR MINUS ONE INCH OF THE PLAN THICKNESS SHOWN. THE CONTRACTOR WILL CORRECT ANY DEFICIENT THICKNESS THAT DOES NOT MEET TOLERANCE INDICATED. PAYMENT WILL NOT BE MADE FOR MATERIAL PLACED IN EXCESS OF THE TOLERANCE INDICATED.
4. WITH THE APPROVAL OF THE ENGINEER, THE CONTRACTOR WILL BE ALLOWED TO SUBSTITUTE, AT NO ADDITIONAL COST TO THE DEPARTMENT, THE FIRST LIFT OF ACHM SURFACE COURSE (1/2") IN LIEU OF AGGREGATE BASE COURSE ON THE SHOULDERS.

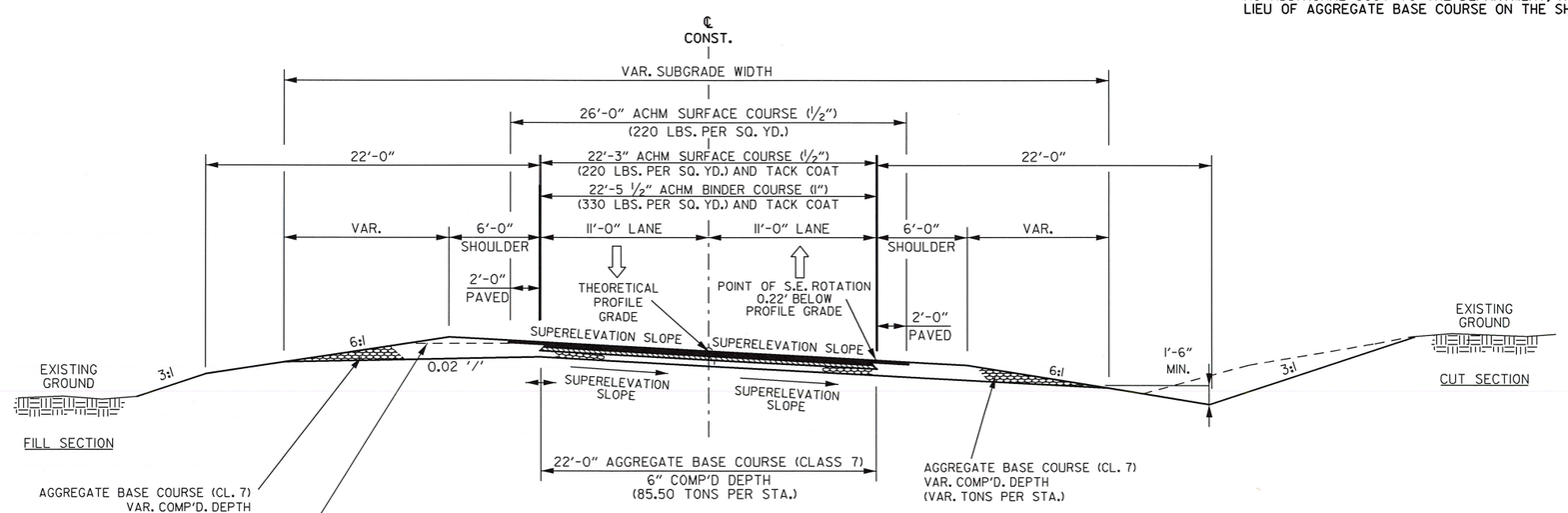

NOTE: ON ALL SUPERELEVATED CURVES AND THROUGH SUPERELEVATION TRANSITIONS THE ALGEBRAIC DIFFERENCE BETWEEN PAVEMENT SLOPE AND SHOULDER SLOPE SHALL NOT EXCEED 0.08'/'.

NOTCH AND WIDEN SUPERELEVATED TYPICAL SECTION OF IMPROVEMENT HWY. 9

TYPICAL SECTIONS OF IMPROVEMENT

USER: ap5181
DESIGN FILE: G:\181056O1_050347hwy9\TRANSP\dgn\typical\050347_TYP01.dgn
PLOTTED: 11/30/2020 12:16
SCALE: NO

DATE REVISED	DATE FILMED	DATE REVISED	DATE FILMED

FED.RD. DIST.NO.	STATE	FED.AID PROJ.NO.	SHEET NO.	TOTAL SHEETS
6	ARK.			
JOB NO.		050347	6	121

(2) TYPICAL SECTIONS OF IMPROVEMENT

STATE OF ARKANSAS
LICENSED PROFESSIONAL ENGINEER
No. 15560
JEROME PAUL DAVIS
11-30-2020

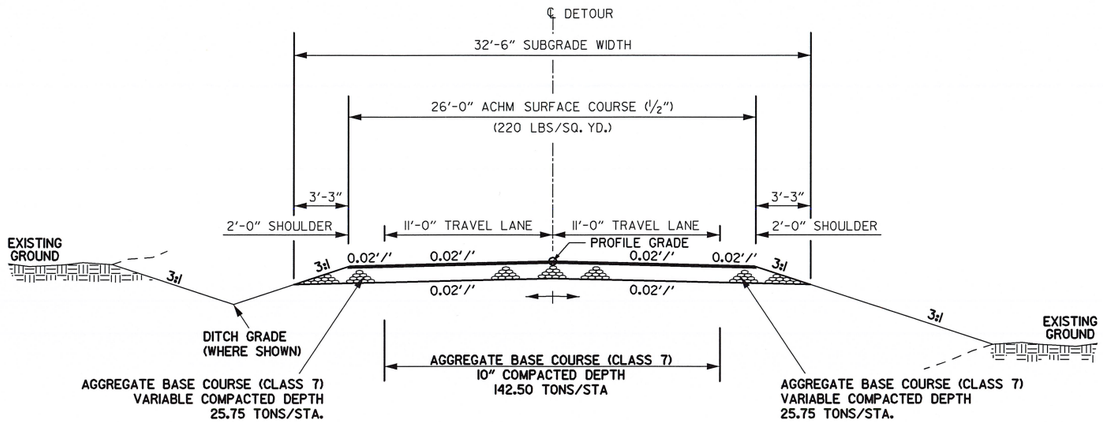

DETOUR

TYPICAL SECTION NOTES:

1. REFER TO CROSS SECTIONS FOR DEVIATION FROM THE NORMAL SLOPES. NO CHANGES SHALL BE MADE FROM THE PLANNED SLOPES WITHOUT THE APPROVAL OF THE ENGINEER.
2. THE THICKNESS OF AGGREGATE BASE COURSE SHALL BE WITHIN PLUS OR MINUS ONE INCH OF THE PLAN THICKNESS SHOWN. THE CONTRACTOR WILL CORRECT ANY DEFICIENT THICKNESS THAT DOES NOT MEET TOLERANCE INDICATED. PAYMENT WILL NOT BE MADE FOR MATERIAL PLACED IN EXCESS OF THE TOLERANCE INDICATED.
3. THE FINAL 2" OF SURFACE COURSE IS TO BE PLACED AFTER ALL OTHER COURSES HAVE BEEN LAID. LONGITUDINAL JOINTS SHALL BE AT LANE LINES.

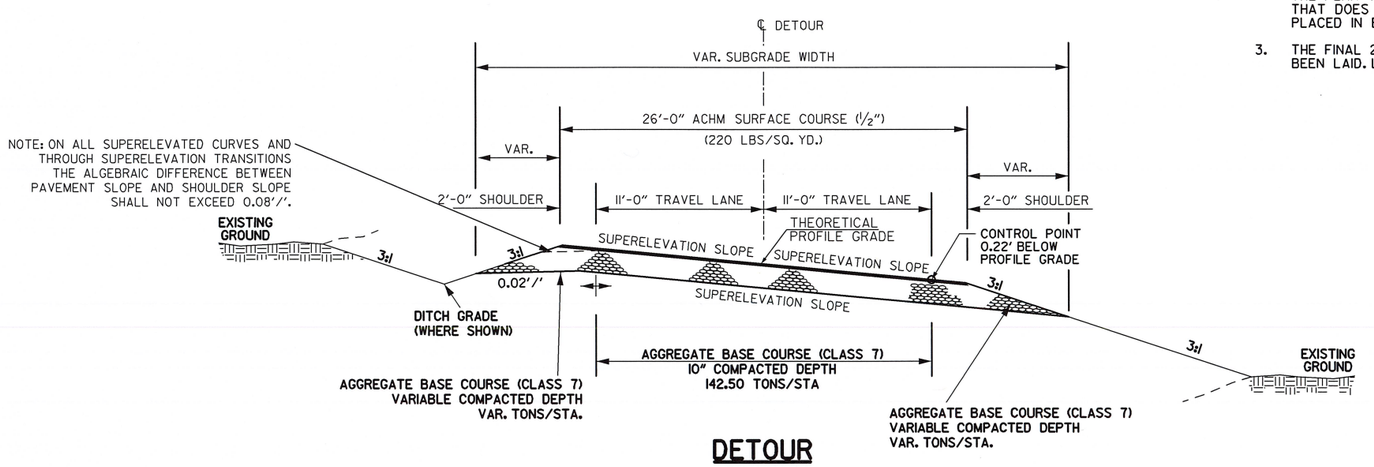

DETOUR SUPERELEVATION

USER: dp5181
DESIGN FILE: G:\18105601_050347hwy9\TRANSP\dgn\typical\050347_TYP01.dgn
PLOTTED: 11/30/2020 12:16
SCALE: 1:10

DATE REVISED	DATE FILMED	DATE REVISED	DATE FILMED	FED.RD. DIST.NO.	STATE	FED.AID PROJ.NO.	SHEET NO.	TOTAL SHEETS
				6	ARK.			
				JOB NO.		050347	7	121

(2) SPECIAL DETAILS

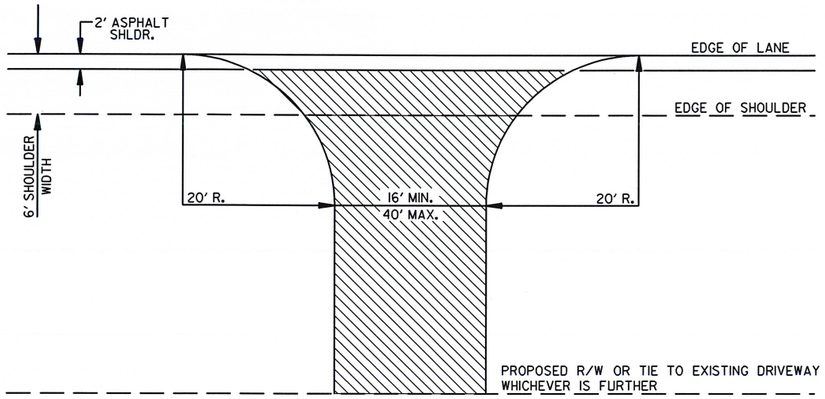

DETAIL FOR DRIVEWAY TURNOUTS
OPEN SHOULDER SECTION

NOTE: TURNOUTS AND PRIVATE DRIVES SHALL BE MODIFIED WHERE NECESSARY TO MEET LOCAL CONDITIONS AS DIRECTED BY THE ENGINEER.

ACHM SURFACE COURSE(½") (220 LBS. PER SQ.YD.) AND AGGREGATE BASE COURSE (CLASS 7) 7" COMP. DEPTH IF ASPHALT OR GRAVEL DRIVE EXISTING; OR 6" CONCRETE IF CONCRETE DRIVE EXISTING.

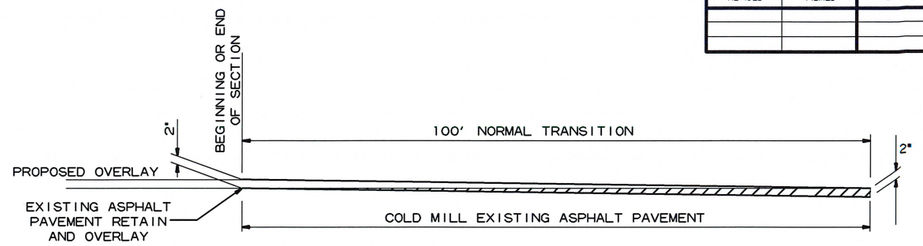

DETAIL FOR TRANSITIONS

STATE OF ARKANSAS
LICENSED PROFESSIONAL ENGINEER
No. 15560
11-30-2020
JEROME PAUL DAVIS

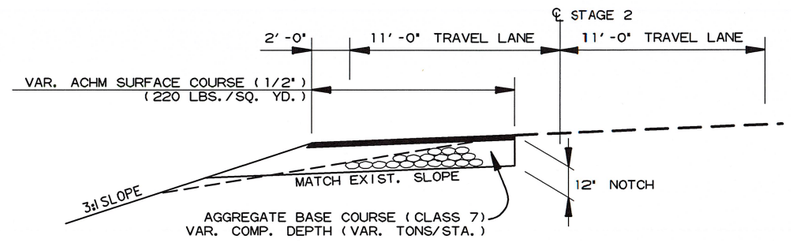

WIDENING FOR MAINTENANCE OF TRAFFIC

STA. 197+52.10 TO STA. 203+99.63
STA. 209+64.93 TO STA. 215+26.75

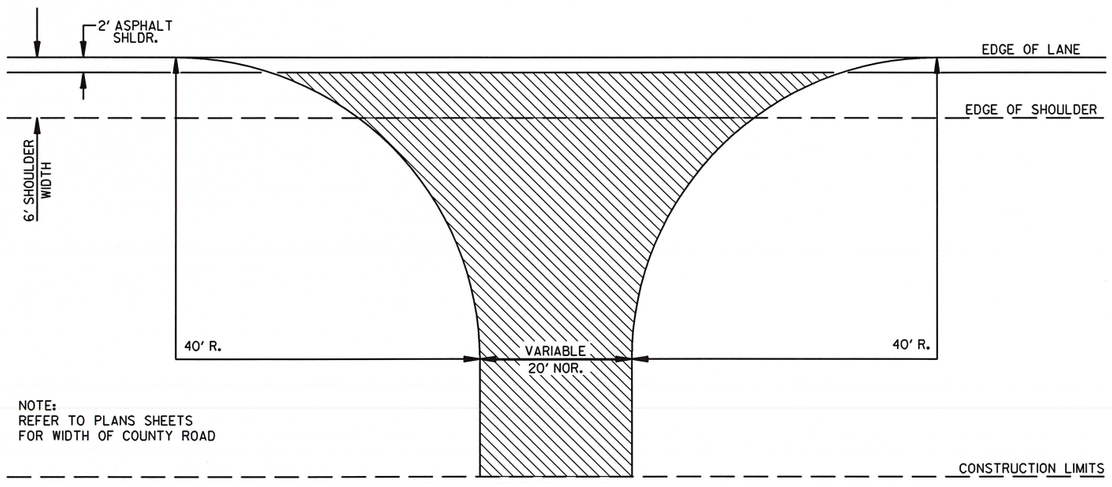

DETAIL FOR COUNTY ROAD TURNOUTS
OPEN SHOULDER SECTION

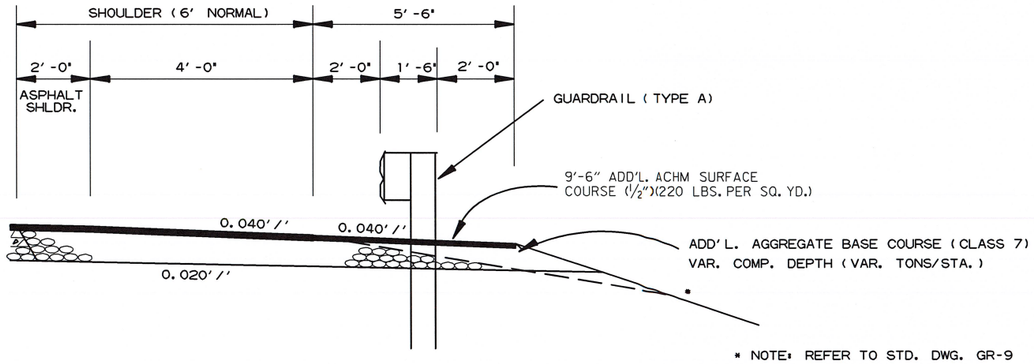

* NOTE: REFER TO STD. DWG. GR-9 AND CROSS SECTIONS FOR SLOPE REQUIREMENTS BEHIND GUARDRAIL.

WIDENING FOR GUARDRAIL

SPECIAL DETAILS

USER: dp5181
DESIGN FILE: G:\18105601_050347hwy9\TRANSP\dgn\special_details\050347 Special Details.dgn
PLOTTED: 11/30/2020 12:16
SCALE: 1:2

DATE REVISED	DATE FILMED	DATE REVISED	DATE FILMED	FED.RD. DIST.NO.	STATE	FED.AID PROJ.NO.	SHEET NO.	TOTAL SHEETS
				6	ARK.			
				JOB NO.		050347	8	121
				(2) SPECIAL DETAILS				

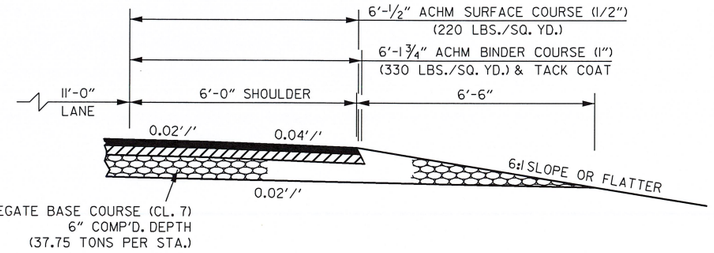

FULL DEPTH SHOULDER FOR MAINTENANCE OF TRAFFIC
(SHOWN IN THE DIRECTION OF TRAFFIC)
SITE 2 - HWY. 9 STA. 198+75.57 TO STA. 203+50 RT.
AND STA. 209+50 TO STA. 216+25 RT.

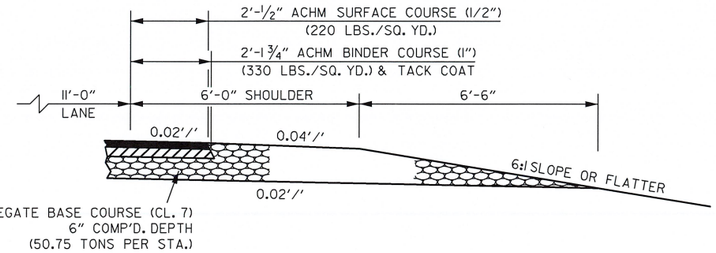

FULL DEPTH SHOULDER FOR MAINTENANCE OF TRAFFIC
(SHOWN IN THE DIRECTION OF TRAFFIC)
SITE 3 - HWY. 9 STA. 301+00 TO STA. 303+00
& STA. 314+00 TO STA. 318+00 RT.

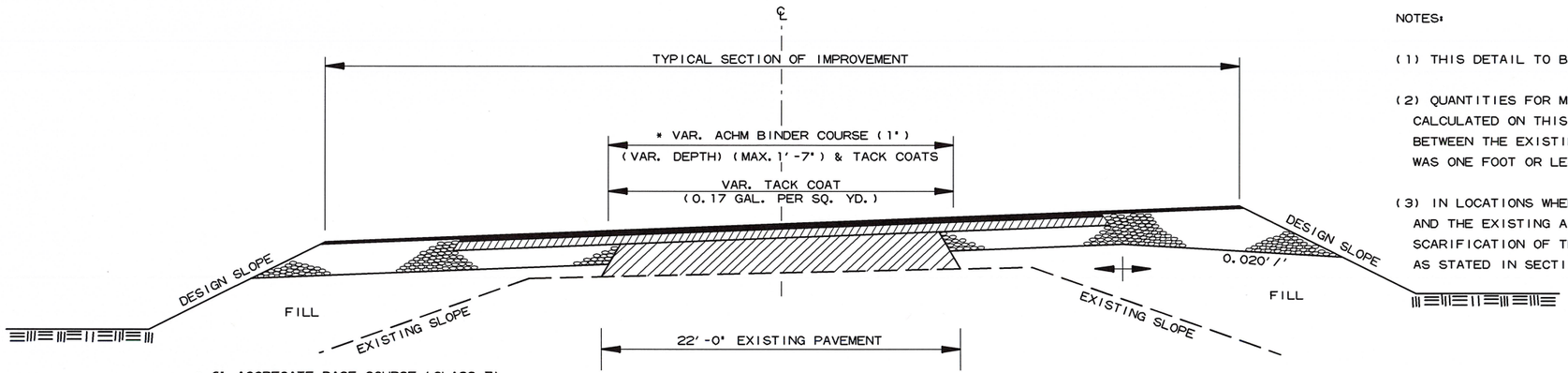

METHOD OF RAISING GRADE

NOTES:

(1) THIS DETAIL TO BE USED ONLY WHERE DIRECTED BY THE ENGINEER.

(2) QUANTITIES FOR METHOD OF GRADE RAISE USING ASPHALT WERE CALCULATED ON THIS PROJECT AT LOCATIONS WHERE THE DISTANCE BETWEEN THE EXISTING ASPHALT ROADWAY AND THE PROPOSED SUBGRADE WAS ONE FOOT OR LESS.

(3) IN LOCATIONS WHERE THE DISTANCE BETWEEN THE PROPOSED SUBGRADE AND THE EXISTING ASPHALT ROADWAY IS MORE THAN ONE FOOT, SCARIFICATION OF THE EXISTING ASPHALT ROADWAY WILL BE REQUIRED AS STATED IN SECTION 210, SUBSECTION 210.09, OF THE STANDARD SPECIFICATIONS.

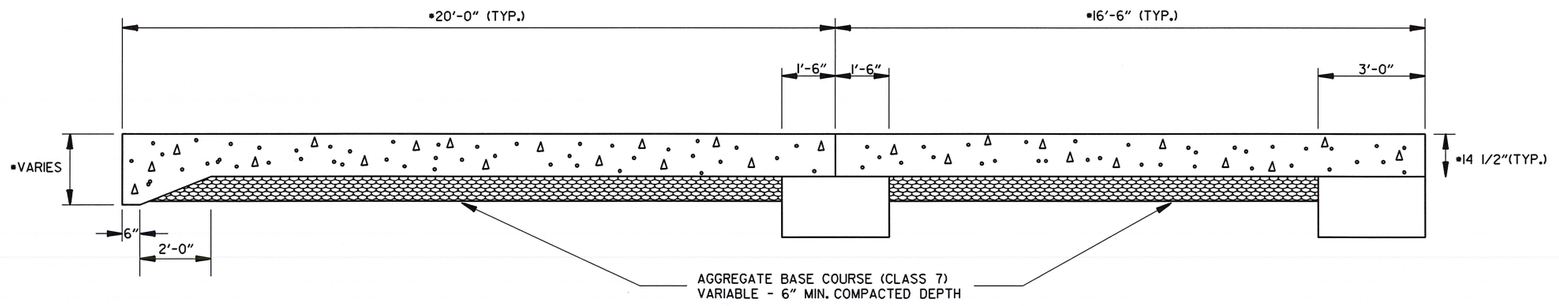

* SEE APPROACH SLAB DETAILS IN BRIDGE DRAWINGS

SECTION OF APPROACH SLAB

STATE OF ARKANSAS
LICENSED PROFESSIONAL ENGINEER
No. 15560
JEROME PAUL DAVIS
11-20-2020

SPECIAL DETAILS

USER: ap5181
DESIGN FILE: G:\18105601_050347hwy9\TRANSP\dgn\special_details\050347 Special Details.dgn
PLOTTED: 11/30/2020 12:16
SCALE: 1:2

G:\18105601_050347hwy9\TRANSP\dgn\special_details\050347 Special Details.dgn 11/30/2020 12:16

DATE REVISED	DATE FILMED	DATE REVISED	DATE FILMED

FED.RD. DIST.NO.	STATE	FED.AID PROJ.NO.	SHEET NO.	TOTAL SHEETS
6	ARK.			
JOB NO.		050347	9	121

(2)

THIS PAGE LEFT INTENTIONALLY BLANK

SPECIAL DETAILS

USER: dp5181
DESIGN FILE: G:\18105601_050347hwy9\TRANSP\dgn\special_details\050347 SpecialDetails.dgn
PLOTTED: 2/8/2021 11:02 SCALE: 1:2

DATE REVISED	DATE FILMED	DATE REVISED	DATE FILMED	FED. ROAD DIST. NO.	STATE	FED. AID PROJ. NO.	SHEET NO.	TOTAL SHEETS
				6	ARK.			
				JOB NO.		050347	10	121

① SPECIAL DETAILS

INLET WINGWALL TABLE

OVER ALL WIDTH	CLEAR HEIGHT	FOOTING THK.	WING WALL THK.	BOX SKEW (DEG.)	SLOPE	HDWL LENGTH	HEEL	WALL HEIGHT AT HDWL	WALL HEIGHT AT WING END	WINGWALL ANGLE (DEGREE) WING A	WINGWALL ANGLE (DEGREE) WING B	FOOTING WIDTH AT WALL END	WIDTH OF WING FOOTINGS AT HDWL WING A	WIDTH OF WING FOOTINGS AT HDWL WING B	FOOTING DIMENSION PARALLEL WITH HDWL WING A	FOOTING DIMENSION PARALLEL WITH HDWL WING B	LENGTH OF WINGWALLS WING A	LENGTH OF WINGWALLS WING B	LENGTH OF FOOTING HEEL WING A	LENGTH OF FOOTING HEEL WING B
OW	H	WB	CW	SK	SL	K	HL	WH1	WH2	AF1	AF2	WE	WF1	WF2	G1	G2	W1	W2	W3	W4
51'-2"	7'-0"	0'-9"	0'-8"	45	3:1	70'-8 1/2"	2'-0"	7'-10"	2'-4"	0	60	3'-2"	3'-5 3/4"	4'-2 1/4"	0'-9 3/4"	1'-3 5/8"	16'-6"	33'-0"	18'-4 1/8"	40'-8 3/8"

CLASS "S" CONCRETE (Includes apron)	REINFORCING STEEL (Includes apron and laps if required)
INLET	INLET
CU.YD	LBS.
16.93	1503

WING	F1 BAR SIZE	F1 MAX. SPACING	F1 NO. REQ'D	F1 LENGTHS VARY			F2 BAR SIZE	F2 SPACING	F2 NO. REQ'D	F2 LENGTHS			F3 BAR SIZE	F3 SPACING	F3 NO. REQ'D	F3 LENGTHS			F4 BAR SIZE	F4 SPACING	F4 NO. REQ'D	F4 LENGTHS VARY			F5 BAR SIZE	F5 SPACING	F5 NO. REQ'D	F5 LENGTHS	F6 BAR SIZE	F6 SPACING	F6 NO. REQ'D	F6 LENGTHS VARY			F7 BAR SIZE	F7 NO. REQ'D	F7 LENGTHS	F8 BAR SIZE	F8 SPACING	F8 NO. REQ'D	F8 LENGTHS VARY			F9 BAR SIZE	F9 SPACING	F9 NO. REQ'D	F9 LENGTHS			F10 BAR SIZE	F10 NO. REQ'D	F10 LENGTHS	F11 BAR SIZE	F11 NO. REQ'D	F11 LENGTHS	F12 BAR SIZE	F12 SPACING	F12 NO. REQ'D	F12 LENGTHS		REINF. STEEL QTY. PER WING (LBS)
WING A	4	12	17	L	Min	3'-4"	4	12	3	L	3'-5"		-	-	-	L	-		4	18	6	Min			4	18	4	16'-2"	4	18	11	L	Min	5'-3"	4	8	19'-2"	6	18	11	Min			-	-	-	Min	-		4	2	16'-11"	4	2	17'-4"	6	12	7	L	3'-4"	489
					Max	9'-0"																3'-4"										Max	10'-3"								2'-8"					Max	-									X	1'-8"	
				X	Min	0'-9"				X	1'-0"					X	-				Max									X	Min	2'-4"								Max																
					Max	1'-1"																12'-4"										Max	2'-4"								3'-0"					Min	3'-0"										
				Y	Min	2'-8"				Y	2'-6"					Y	-				Min									Y	Min	3'-0"								Max									Max	8'-0"										
					Max	8'-0"																24'-10"										Max	8'-0"								3'-8"																
WING B	4	12	33	L	Min	3'-4"	4	12	6	L	4'-0"		-	-	-	L	-		4	18	6	Min			4	18	4	32'-8"	4	18	22	L	Min	5'-1"	4	8	41'-6"	6	18	23	Min			4	18	2	Min	52'-2"		4	2	33'-0"	4	2	36'-7"	6	12	7	L	3'-4"	1014
					Max	9'-8"																6'-10"										Max	10'-3"								2'-8"					Max	52'-2"									X	1'-8"	
				X	Min	0'-9"				X	1'-7"					X	-				Max									X	Min	2'-4"								Max																
					Max	1'-9"																24'-10"										Max	2'-4"								3'-8"																
				Y	Min	2'-8"				Y	2'-6"					Y	-				Min									Y	Min	2'-10"								Max									Max	8'-0"										
					Max	8'-0"																										Max	8'-0"																								

MID-SECTION BAR LAP TABLE

# of Long. Laps Req'd.	SL = Section Length
0	< 40.0 ft
1	>40.0 ft - 78.0 ft
2	>78.0 ft - 116.0 ft
3	>116.0 ft - 154.0 ft
4	>154.0 ft - 192.0 ft
5	>192.0 ft - 230.0 ft
6	>230.0 ft - 268.0 ft
7	>268.0 ft - 306.0 ft
8	>306.0 ft -344.0 ft

Min. Bar Lap Length	
#4	1'-9"
#5	2'-2"
#6	2'-7"
#7	3'-6"
#8	4'-7"

Bar Pin Dia. Table	
#4	3"
#5	3 3/4"
#6	4 1/2"
#7	5 1/4"
#8	6"

STATE OF ARKANSAS
REGISTERED PROFESSIONAL ENGINEER
No. 11856
CHARLES A. WILFF
11/30/2020

TABULAR DATA BY: CAW DATE: 02/18/19
CHECKED BY: LDG DATE: 08/16/19

This drawing to be used in conjunction with
SHEET 1 OF 4, "GENERAL DETAILS OF R.C. BOX CULVERT", 'GENERAL NOTES & LONGITUDINAL SECTION LENGTH SCHEDULE',
SHEET 3 OF 4, "GENERAL DETAILS OF R.C. BOX CULVERT", 'DETAILS OF MULTI-BARREL R.C. BOX CULVERT',
SHEET 4 OF 4, "GENERAL DETAILS OF R.C. BOX CULVERT", 'DETAILS OF WINGWALLS', and
STANDARD DRAWING RCB-2.
For additional information and outlet sections, see Sheet 2 of 2.

INLET SKEWED END SECTION

SKEW (DEGREE)	SLOPE	DESIGN FILL DEPTH (FT.)	CLEAR SPAN (FT.)	CLEAR HEIGHT (FT.)	SECTION LENGTH	TOP SLAB THK.	HDWL DEPTH	BOTTOM SLAB THK.	SIDE WALL THK.	INTERIOR WALL THK.	OVER ALL WIDTH	OVER ALL HEIGHT	TOP SLAB REINF. STEEL "a" SIZE	"a" SPACING	"a" LENGTHS VARY	"a" NO. REQ'D	TOP SLAB REINF. STEEL "c" SIZE	"c" SPACING	"c" LENGTHS VARY	"c" NO. REQ'D	BOTTOM SLAB REINF. STEEL "d" SIZE	"d" SPACING	"d" LENGTHS VARY	"d" NO. REQ'D	BOTTOM SLAB REINF. STEEL "f" SIZE	"f" SPACING	"f" LENGTHS VARY	"f" NO. REQ'D	SIDE WALL REINF. STEEL "f0" SIZE	"f0" SPACING	"f0" NO. REQ'D	"f0" LENGTH	INTERIOR WALL REINF. STEEL "f1" SIZE	"f1" SPACING	"f1" NO. REQ'D	"f1" LENGTH	TOP SLAB DISTRIBUTION REINF. STEEL "g" SIZE	"g" SPACING	"g" NO. REQ'D	"g" LENGTHS VARY	BOTTOM SLAB DISTRIBUTION REINF. STEEL "e" SIZE	"e" SPACING	"e" NO. REQ'D	"e" LENGTHS VARY	SIDE WALL DISTRIBUTION REINF. STEEL "d1" SIZE	"d1" SPACING	"d1" NO. REQ'D	"d1" LENGTH	INTERIOR WALL DISTRIBUTION REINF. STEEL "d2" SIZE	"d2" SPACING	"d2" NO. REQ'D	"d2" LENGTH
SK	SL	D	S	H	LL	T	HD	B	C	W	OW	OH																																																			
45	3	5	12	7	27'-7"	14	3.5	14	7	8	51'-2"	9'-4"	7	10	Max	59	5	6	Max	98	4	5	Max	117	5	10	Max	59	6	7.5	90	9'-0"	4	12	172	9'-0"	5	12	103	Max	5	12	103	Max	4	12	7	LONG	4	12	14	LONG
															50'-10"				50'-10"				50'-10"																53'-0"			53'-0"				52'-7"			40'-3"
															Min				Min				Min																Min			Min				SHORT			MID
															2'-2"				2'-2"				2'-2"																1'-10"			1'-10"				2'-3"			27'-5"
															50'-10"	3			50'-10"	4			50'-10"	5			3																						14	SHORT
																																																			14'-8"

"k1" HDWL BARS			"k2" HDWL BARS			"h" HDWL BARS			
SIZE	LENGTH	NO. REQ'D	SIZE	LENGTH	NO. REQ'D	SIZE	LENGTH	Y	NO. REQ'D
8	38'-4"	12	8	38'-4"	12	4	2'-1"	1'-1"	74

CLASS "S" CONCRETE (Includes HDWL) CU. YDS.	REINFORCING STEEL (GR 60) (Includes HDWL) LBS.
146.31	22186

① Any Bar Lap Required for the Skewed End Section shall be considered subsidiary to the item "Reinforcing Steel - Roadway (Grade 60)."

INLET SLOPE SECTION(S)

R.C. BOX SECTION	DESIGN FILL DEPTH (FT.) D	CLEAR SPAN (FT.) S	CLEAR HEIGHT (FT.) H	TOP SLAB THK. T	BOTTOM SLAB THK B	SIDE WALL THK C	INTERIOR WALL THK. W	OVER ALL WIDTH OW	OVER ALL HEIGHT OH	SECTION LENGTH (FT.) SL	TOP SLAB REINF. STEEL LENGTH = OW - 4" + BENDS "a" SIZE	"a" L	Bent "b" SIZE	Bent "b" L	"c" SIZE	"c" L	"c" SPACING	"c" NO. REQ'D	BOTTOM SLAB REINF. STEEL LENGTH = OW - 4" + BENDS "d" SIZE	"d" L	Bent "b1" SIZE	Bent "b1" L	"f" SIZE	"f" L	"f" SPACING	"f" NO. REQ'D	SIDE WALL REINF. STEEL "f0" LENGTH = OH - 4" SIZE	"f0" SPACING	"f0" NO. REQ'D	"f0" LENGTH	INTERIOR WALL REINF. STEEL "f1" LENGTH = OH - 4" SIZE	"f1" SPACING	"f1" NO. REQ'D	"f1" LENGTH	TOP SLAB DISTRIBUTION REINF. STEEL "g" LENGTH = SL SIZE	"g" SPACING	"g" NO. REQ'D	BOTTOM SLAB DISTRIBUTION REINF. STEEL "e" LENGTH = SL SIZE	"e" SPACING	"e" NO. REQ'D	SIDE WALL DISTRIBUTION REINF. STEEL "d1" LENGTH = SL SIZE	"d1" SPACING	"d1" NO. REQ'D	INTERIOR WALL DISTRIBUTION REINF. STEEL "d2" LENGTH = SL SIZE	"d2" SPACING	"d2" NO. REQ'D
											LENGTH = OW - 4" + BENDS								LENGTH = OW - 4" + BENDS								LENGTH = OH - 4"				LENGTH = OH - 4"				LENGTH = SL			LENGTH = SL			LENGTH = SL			LENGTH = SL			LENGTH = SL		
											"a"		Bent "b"		"c"				"d"		Bent "b1"		"f"																																							
	D	S	H	T	B	C	W	OW	OH	SL	SIZE	L	SIZE	L	SIZE	L	SPACING	NO. REQ'D	SIZE	L	SIZE	L	SIZE	L	SPACING	NO. REQ'D	SIZE	SPACING	NO. REQ'D	LENGTH	SIZE	SPACING	NO. REQ'D	LENGTH	SIZE	SPACING	NO. REQ'D	LENGTH	SIZE	SPACING	NO. REQ'D	SIZE	SPACING	NO. REQ'D	SIZE	SPACING	NO. REQ'D	SIZE	SPACING	NO. REQ'D	SIZE	SPACING	NO. REQ'D
A	5	12	7	14	14	7	8	51'-2"	9'-4"	49.83	5	50'-10"	8	52'-2"	4	50'-10"	18	33	4	50'-10"	4	52'-1"	4	50'-10"	10	59	6	7.5	158	9'-0"	4	12	294	9'-0"	5	12	103	5	12	103	4	12	14	4	12	42

HDWL DEPTH.	ADDITIONAL REINF. FOR HDWL	"h" HDWL BARS			
HD	LBS.	SIZE	Y	LENGTH	NO. REQ'D

CLASS "S" CONCRETE CU. YDS.	REINFORCING STEEL (GR. 60) LBS.
TOTAL	

Design Fill Depth	Range of Actual Fill Depth
2	0.0 ft - 2.0 ft
5	>2.0 ft - 5.0 ft
10	>5.0 ft - 10.0 ft
15	>10.0 ft - 15.0 ft
20	>15.0 ft - 20.0 ft
25	>20.0 ft - 25.0 ft
30	>25.0 ft - 30.0 ft
35	>30.0 ft - 35.0 ft
40	>35.0 ft - 40.0 ft

Data shown for Mid-Section, Slope Section(s), and Skewed End Section is based on the design fill depth shown in the table, see PLAN AND PROFILE SHEETS for actual fill depth.

MID-SECTION

R.C. BOX SECTION	DESIGN FILL DEPTH (FT.) D	CLEAR SPAN (FT.) S	CLEAR HEIGHT (FT.) H	TOP SLAB THK. T	BOTTOM SLAB THK B	SIDE WALL THK C	INTERIOR WALL THK. W	OVER ALL WIDTH OW	OVER ALL HEIGHT OH	SECTION LENGTH (FT.) SL	TOP SLAB REINF. STEEL LENGTH = OW - 4" + BENDS "a" SIZE	"a" L	Bent "b" SIZE	Bent "b" L	"c" SIZE	"c" L	"c" SPACING	"c" NO. REQ'D	BOTTOM SLAB REINF. STEEL LENGTH = OW - 4" + BENDS "d" SIZE	"d" L	Bent "b1" SIZE	Bent "b1" L	"f" SIZE	"f" L	"f" SPACING	"f" NO. REQ'D	SIDE WALL REINF. STEEL "f0" LENGTH = OH - 4" SIZE	"f0" SPACING	"f0" NO. REQ'D	"f0" LENGTH	INTERIOR WALL REINF. STEEL "f1" LENGTH = OH - 4" SIZE	"f1" SPACING	"f1" NO. REQ'D	"f1" LENGTH	TOP SLAB DISTRIBUTION REINF. STEEL "g" LENGTH = SL SIZE	"g" SPACING	"g" NO. REQ'D	BOTTOM SLAB DISTRIBUTION REINF. STEEL "e" LENGTH = SL SIZE	"e" SPACING	"e" NO. REQ'D	SIDE WALL DISTRIBUTION REINF. STEEL "d1" LENGTH = SL SIZE	"d1" SPACING	"d1" NO. REQ'D	INTERIOR WALL DISTRIBUTION REINF. STEEL "d2" LENGTH = SL SIZE	"d2" SPACING	"d2" NO. REQ'D
	D	S	H	T	B	C	W	OW	OH	SL	LENGTH = OW - 4" + BENDS								LENGTH = OW - 4" + BENDS								LENGTH = OH - 4"				LENGTH = OH - 4"				LENGTH = SL			LENGTH = SL			LENGTH = SL			LENGTH = SL		
											"a"		Bent "b"		"c"				"d"		Bent "b1"		"f"																																						
											SIZE	L	SIZE	L	SIZE	L	SPACING	NO. REQ'D	SIZE	L	SIZE	L	SIZE	L	SPACING	NO. REQ'D	SIZE	SPACING	NO. REQ'D	LENGTH	SIZE	SPACING	NO. REQ'D	LENGTH	SIZE	SPACING	NO. REQ'D	LENGTH	SIZE	SPACING	NO. REQ'D	SIZE	SPACING	NO. REQ'D	SIZE	SPACING	NO. REQ'D	SIZE	SPACING	NO. REQ'D	SIZE	SPACING	NO. REQ'D
A	5	12	7	14	14	7	8	51'-2"	9'-4"	49.83	5	50'-10"	8	52'-2"	4	50'-10"	18	33	4	50'-10"	4	52'-1"	4	50'-10"	10	59	6	7.5	158	9'-0"	4	12	294	9'-0"	5	12	103	5	12	103	4	12	14	4	12	42

CLASS "S" CONCRETE CU. YDS.	REINFORCING STEEL (GR. 60) LBS.
261.27	31444

SHEET 1 OF 2
DETAILS OF R.C. BOX CULVERT
QUADRUPLE BARREL BOX CULVERT
STA. 104+39

SPECIAL DETAILS

Ver. 1.17 FILENAME

DATE REVISED	DATE FILMED	DATE REVISED	DATE FILMED	FED. ROAD DIST. NO.	STATE	FED. AID PROJ. NO.	SHEET NO.	TOTAL SHEETS
				6	ARK.			
				JOB NO.		050347	11	121

(1) SPECIAL DETAILS

STATE OF ARKANSAS
REGISTERED PROFESSIONAL ENGINEER
No. 11856
CHARLES A. WIPF
11/20/2020

TABULAR DATA BY: CAW DATE: 02/18/19
CHECKED BY: LDG DATE: 08/16/19

OUTLET WINGWALL TABLE

OVER ALL WIDTH	CLEAR HEIGHT	FOOTING THK.	WING WALL THK.	BOX SKEW (DEG.)	SLOPE	HDWL LENGTH	HEEL	WALL HEIGHT AT HDWL	WALL HEIGHT AT WING END	WINGWALL ANGLE (DEGREE) WING A	WINGWALL ANGLE (DEGREE) WING B	FOOTING WIDTH AT WALL END	WIDTH OF WING FOOTINGS AT HDWL WING A	WIDTH OF WING FOOTINGS AT HDWL WING B	FOOTING DIMENSION PARALLEL WITH HDWL WING A	FOOTING DIMENSION PARALLEL WITH HDWL WING B	LENGTH OF WINGWALLS WING A	LENGTH OF WINGWALLS WING B	LENGTH OF FOOTING HEEL WING A	LENGTH OF FOOTING HEEL WING B
OW	H	WB	CW	SK	SL	K	HL	WH1	WH2	AF1	AF2	WE	WF1	WF2	G1	G2	W1	W2	W3	W4
51'-2"	7'-0"	0'-9"	0'-8"	45	3:1	70'-8 1/2"	2'-0"	7'-10"	2'-4"	0	60	3'-2"	3'-5 3/4"	4'-2 1/4"	0'-9 3/4"	1'-3 5/8"	16'-6"	33'-0"	18'-4 1/8"	40'-8 3/8"

CLASS "S" CONCRETE (Includes apron)	REINFORCING STEEL (Includes apron and laps if required)
OUTLET	OUTLET
CU.YD	LBS.
19.23	1503

WING	F1 BAR SIZE	F1 MAX. SPACING	F1 NO. REQ'D	F1 LENGTHS VARY			F2 BAR SIZE	F2 SPACING	F2 NO. REQ'D	F2 LENGTHS			F3 BAR SIZE	F3 SPACING	F3 NO. REQ'D	F3 LENGTHS			F4 BAR SIZE	F4 SPACING	F4 NO. REQ'D	F4 LENGTHS VARY			F5 BAR SIZE	F5 SPACING	F5 NO. REQ'D	F5 LENGTHS	F6 BAR SIZE	F6 SPACING	F6 NO. REQ'D	F6 LENGTHS VARY			REINF. STEEL QTY. PER WING (LBS)
WING A	4	12	17	L	Min	3'-4"	4	12	3	L	3'-5"					L	-		4	18	6	Min			4	18	4	16'-2"	4	18	11	L	Min	5'-3"	
					Max	9'-0"																3'-4"											Max	10'-3"	
				X	Min	0'-9"				X	1'-0"		-	-	-	X	-					Max										X	Min	2'-4"	
					Max	1'-1"																12'-4"											Max	2'-4"	
				Y	Min	2'-8"				Y	2'-6"					Y	-					Min										Y	Min	3'-0"	
					Max	8'-0"																											Max	8'-0"	
WING B	4	12	33	L	Min	3'-4"	4	12	6	L	4'-0"					L	-		4	18	6	Min			4	18	4	32'-8"	4	18	22	L	Min	5'-1"	1014
					Max	9'-8"																6'-10"											Max	10'-3"	
				X	Min	0'-9"				X	1'-7"		-	-	-	X	-					Max										X	Min	2'-4"	
					Max	1'-9"																24'-10"											Max	2'-4"	
				Y	Min	2'-8"				Y	2'-6"					Y	-															Y	Min	2'-10"	
					Max	8'-0"																											Max	8'-0"	

WING	F7 NO. REQ'D	F7 LENGTHS	F8 BAR SIZE	F8 SPACING	F8 NO. REQ'D	F8 LENGTHS VARY	F9 BAR SIZE	F9 SPACING	F9 NO. REQ'D	F9 LENGTHS	F10 BAR SIZE	F10 NO. REQ'D	F10 LENGTHS	F11 BAR SIZE	F11 NO. REQ'D	F11 LENGTHS	F12 BAR SIZE	F12 SPACING	F12 NO. REQ'D	F12 LENGTHS		
WING A	4	19'-2"	6	18	11	Min				Min										L	3'-4"	489
						2'-8"				-												
						Max				Max	4	2	16'-11"	4	2	17'-4"	6	12	7	X	1'-8"
						3'-0"				-												
WING B	4	41'-6"	6	18	23	Min				Min										L	3'-4"	1014
						2'-8"				52'-2"												
						Max	4	18	2	Max	4	2	33'-0"	4	2	36'-7"	6	12	7	X	1'-8"
						3'-8"				52'-2"												

Min. Bar Lap Length	
#4	1'-9"
#5	2'-2"
#6	2'-7"
#7	3'-6"
#8	4'-7"

Bar Pin Dia. Table	
#4	3"
#5	3 3/4"
#6	4 1/2"
#7	5 1/4"
#8	6"

(1) Any Bar Lap Required for the Skewed End Section shall be considered subsidiary to the item "Reinforcing Steel - Roadway (Grade 60)."

OUTLET SKEWED END SECTION

SKEW (DEGREE)	SLOPE	DESIGN FILL DEPTH (FT.)	CLEAR SPAN (FT.)	CLEAR HEIGHT (FT.)	SECTION LENGTH	TOP SLAB THK.	HDWL DEPTH	BOTTOM SLAB THK.	SIDE WALL THK.	INTERIOR WALL THK.	OVER ALL WIDTH	OVER ALL HEIGHT	TOP SLAB REINF. "a" SIZE	"a" SPACING	"a" LENGTHS VARY	"a" NO. REQ'D	TOP SLAB REINF. "c" SIZE	"c" SPACING	"c" LENGTHS VARY	"c" NO. REQ'D	BOTTOM SLAB REINF. "d" SIZE	"d" SPACING	"d" LENGTHS VARY	"d" NO. REQ'D	BOTTOM SLAB REINF. "f" SIZE	"f" SPACING	"f" LENGTHS VARY	"f" NO. REQ'D	SIDE WALL REINF. "f0" SIZE	"f0" SPACING	"f0" NO. REQ'D	"f0" LENGTH	INTERIOR WALL REINF. "f1" SIZE	"f1" SPACING	"f1" NO. REQ'D	"f1" LENGTH	TOP SLAB DISTRIB. REINF. "g" SIZE	"g" SPACING	"g" NO. REQ'D	"g" LENGTHS VARY	BOTTOM SLAB DISTRIB. REINF. "e" SIZE	"e" SPACING	"e" NO. REQ'D	"e" LENGTHS VARY	SIDE WALL DISTRIB. REINF. "d1" SIZE	"d1" SPACING	"d1" NO. REQ'D	"d1" LENGTH	INTERIOR WALL DISTRIB. REINF. "d2" SIZE	"d2" SPACING	"d2" NO. REQ'D	"d2" LENGTH
SK	SL	D	S	H	LL	T	HD	B	C	W	OW	OH	SIZE	SPACING	LENGTHS VARY	NO. REQ'D	SIZE	SPACING	LENGTHS VARY	NO. REQ'D	SIZE	SPACING	LENGTHS VARY	NO. REQ'D	SIZE	SPACING	LENGTHS VARY	NO. REQ'D	SIZE	SPACING	NO. REQ'D	LENGTH	SIZE	SPACING	NO. REQ'D	LENGTH	SIZE	SPACING	NO. REQ'D	LENGTHS VARY	SIZE	SPACING	NO. REQ'D	LENGTHS VARY	SIZE	SPACING	NO. REQ'D	LENGTH	SIZE	SPACING	NO. REQ'D	LENGTH
45	3:1	5	12	7	27'-7"	14	3.5	14	7	8	51'-2"	9'-4"	7	10	Max	59	5	6	Max	98	4	5	Max	117	5	10	Max	59	6	7.5	90	9'-0"	4	12	172	9'-0"	5	12	103	Max	5	12	103	Max	4	12	7	LONG	4	12	14	LONG
															50'-10"				50'-10"				50'-10"																53'-0"			53'-0"				52'-7"				40'-3"
															Min				Min				Min																Min			Min			7	SHORT			14	MID
															2'-2"				2'-2"				2'-2"																1'-10"			1'-10"				2'-3"				27'-5"
															50'-10"	3			50'-10"	4			50'-10"	5			3																						14	SHORT
																																																			14'-8"

"k1" HDWL BARS			"k2" HDWL BARS			"h" HDWL BARS			
SIZE	LENGTH	NO. REQ'D	SIZE	LENGTH	NO. REQ'D	SIZE	LENGTH	Y	NO. REQ'D
8	38'-4"	12	8	38'-4"	12	4	2'-1"	1'-1"	74

CLASS "S" CONCRETE (Includes HDWL)	REINFORCING STEEL (GR 60) (Includes HDWL)
CU. YDS.	LBS.
146.31	22186

OUTLET SLOPE SECTION(S)

R.C. BOX SECTION	DESIGN FILL DEPTH (FT.)	CLEAR SPAN (FT.)	CLEAR HEIGHT (FT.)	TOP SLAB THK.	BOTTOM SLAB THK	SIDE WALL THK	INTERIOR WALL THK.	OVER ALL WIDTH	OVER ALL HEIGHT	SECTION LENGTH (FT.)	TOP SLAB REINF. LENGTH = OW - 4" + BENDS "a" SIZE	"a" L	Bent "b" SIZE	Bent "b" L	"c" SIZE	"c" L	"a" SPACING	"a" NO. REQ'D	BOTTOM SLAB REINF. LENGTH = OW - 4" + BENDS "d" SIZE	"d" L	Bent "b1" SIZE	Bent "b1" L	"f" SIZE	"f" L	"d" SPACING	"d" NO. REQ'D	SIDE WALL REINF. "f0" LENGTH = OH - 4" SIZE	"f0" SPACING	"f0" NO. REQ'D	"f0" LENGTH	INTERIOR WALL REINF. "f1" LENGTH = OH - 4" SIZE	"f1" SPACING	"f1" NO. REQ'D	"f1" LENGTH	TOP SLAB DISTRIB. REINF. "g" LENGTH = SL SIZE	"g" SPACING	"g" NO. REQ'D	BOTTOM SLAB DISTRIB. REINF. "e" LENGTH = SL SIZE	"e" SPACING	"e" NO. REQ'D	SIDE WALL DISTRIB. REINF. "d1" LENGTH = SL SIZE	"d1" SPACING	"d1" NO. REQ'D	INTERIOR WALL DISTRIB. REINF. "d2" LENGTH = SL SIZE	"d2" SPACING	"d2" NO. REQ'D
D	S	H	T	B	C	W	OW	OH	SL																																									

HDWL DEPTH	ADDITIONAL REINF. FOR HDWL	"h" HDWL BARS			
HD	LBS.	SIZE	Y	LENGTH	NO. REQ'D

CLASS "S" CONCRETE	REINFORCING STEEL (GR. 60)
CU. YDS.	LBS.
TOTAL	

The required number of bars and lengths shown are for estimating purpose only.
The actual number and length required shall be determined in field.

Unless otherwise noted, all dimensions are in inches.

SHEET 2 OF 2
DETAILS OF R.C. BOX CULVERT
QUADRUPLE BARREL BOX CULVERT
STA. 104+39

SPECIAL DETAILS

Ver. 1.1.7 FILENAME

DATE REVISED	DATE FILMED	DATE REVISED	DATE FILMED	FED. ROAD DIST. NO.	STATE	FED. AID PROJ. NO.	SHEET NO.	TOTAL SHEETS
				6	ARK.			
				JOB NO.		050347	12	121

SPECIAL DETAILS

INLET WINGWALL TABLE

OVER ALL WIDTH	CLEAR HEIGHT	FOOTING THK.	WING WALL THK.	BOX SKEW (DEG.)	SLOPE	HDWL LENGTH	HEEL	WALL HEIGHT AT HDWL	WALL HEIGHT AT WING END	WINGWALL ANGLE (DEGREE) WING A	WINGWALL ANGLE (DEGREE) WING B	FOOTING WIDTH AT WALL END	WIDTH OF WING FOOTINGS AT HDWL WING A	WIDTH OF WING FOOTINGS AT HDWL WING B	FOOTING DIMENSION PARALLEL WITH HDWL WING A	FOOTING DIMENSION PARALLEL WITH HDWL WING B	LENGTH OF WINGWALLS WING A	LENGTH OF WINGWALLS WING B	LENGTH OF FOOTING HEEL WING A	LENGTH OF FOOTING HEEL WING B
OW	H	WB	CW	SK	SL	K	HL	WH1	WH2	AF1	AF2	WE	WF1	WF2	G1	G2	W1	W2	W3	W4
35'-1"	6'-0"	0'-9"	0'-8"	45	3:1	48'-1"	2'-0"	6'-10"	2'-0"	0	60	3'-2"	3'-2"	3'-9"	0'-6"	0'-5 1/8"	14'-6"	29'-0"	16'-4 3/4"	36'-10 1/4"

CLASS "S" CONCRETE (Includes apron)	REINFORCING STEEL (Includes apron and laps if required)
INLET	INLET
CU.YD	LBS.
13.16	1148

WING	F1 BAR SIZE	F1 MAX. SPACING	F1 NO. REQ'D	F1 LENGTHS VARY	F1 LENGTHS	F2 BAR SIZE	F2 SPACING	F2 NO. REQ'D	F2 LENGTHS	F3 BAR SIZE	F3 SPACING	F3 NO. REQ'D	F3 LENGTHS	F4 BAR SIZE	F4 SPACING	F4 NO. REQ'D	F4 LENGTHS VARY	F4 LENGTHS	F5 BAR SIZE	F5 SPACING	F5 NO. REQ'D	F5 LENGTHS	F6 BAR SIZE	F6 SPACING	F6 NO. REQ'D	F6 LENGTHS VARY	F6 LENGTHS	F7 BAR SIZE	F7 NO. REQ'D	F7 LENGTHS	F8 BAR SIZE	F8 SPACING	F8 NO. REQ'D	F8 LENGTHS VARY	F8 LENGTHS	F9 BAR SIZE	F9 SPACING	F9 NO. REQ'D	F9 LENGTHS	F10 BAR SIZE	F10 NO. REQ'D	F10 LENGTHS	F11 BAR SIZE	F11 NO. REQ'D	F11 LENGTHS	F12 BAR SIZE	F12 SPACING	F12 NO. REQ'D	F12 LENGTHS	REINF. STEEL QTY. PER WING (LBS)
WING A	4	12	15	L Min	3'-0"				L -				L -	4	18	4	Min	4'-10"	4	18	4	14'-2"	4	18	10	L Min	4'-9"	4	8	17'-3"	6	18	10	Min	2'-8"	-	-	-	Min -	4	2	14'-10"	4	2	15'-4"	6	12	6	L 3'-4"	395
					Max 7'-8"												Max	9'-4"								Max 9'-3"								Max	2'-8"				Max -									X 1'-8"	
				X Min	0'-9"				X -				X -													X Min 2'-4"																					
					Max 0'-9"																					Max 9'-3"																					
				Y Min	2'-4"				Y -				Y -													Y Min 2'-6"																					
					Max 7'-0"																					Max 7'-0"																					
WING B	4	12	29	L Min	3'-0"				L -				L -	4	18	4	Min	9'-10"	4	18	4	28'-8"	4	18	20	L Min	4'-7"	4	8	37'-8"	6	18	20	Min	2'-8"	-	-	-	Min -	4	2	28'-11"	4	2	31'-9"	6	12	6	L 3'-4"	753
					Max 8'-3"												Max	18'-10"								Max 9'-3"								Max	3'-3"				Max -									X 1'-8"	
				X Min	0'-9"				X -				X -													X Min 2'-4"																					
					Max 1'-4"																					Max 2'-4"																					
				Y Min	2'-4"				Y -				Y -													Y Min 2'-4"																					
					Max 7'-0"																					Max 7'-0"																					

INLET SKEWED END SECTION

SKEW (DEGREE)	SLOPE	DESIGN FILL DEPTH (FT.)	CLEAR SPAN (FT.)	CLEAR HEIGHT (FT.)	SECTION LENGTH	TOP SLAB THK.	HDWL DEPTH	BOTTOM SLAB THK.	SIDE WALL THK.	INTERIOR WALL THK.	OVER ALL WIDTH	OVER ALL HEIGHT
SK	SL	D	S	H	LL	T	HD	B	C	W	OW	OH
45	3	5	8	6	19'-6"	10	3	10	6.5	8	35'-1"	7'-8"

TOP SLAB REINFORCING STEEL	SIZE	SPACING	LENGTHS VARY	LENGTH	NO. REQ'D
"a"	6	9	Max	34'-9"	44
			Min	2'-1"	
				34'-9"	3
"c"	5	5	Max	34'-9"	79
			Min	2'-1"	
				34'-9"	5

BOTTOM SLAB REINFORCING STEEL	SIZE	SPACING	LENGTHS VARY	LENGTH	NO. REQ'D
"d"	4	6	Max	34'-9"	66
			Min	2'-1"	
				34'-9"	4
"f"	4	8.5	Max	34'-9"	47
			Min	2'-1"	
				34'-9"	3

SIDE WALL REINFORCING STEEL "f0"	SIZE	SPACING	NO. REQ'D	LENGTH
	5	7	68	7'-4"

INTERIOR WALL REINFORCING STEEL "f1"	SIZE	SPACING	NO. REQ'D	LENGTH
	4	12	124	7'-4"

TOP SLAB DISTRIBUTION REINFORCING STEEL "g"	SIZE	SPACING	NO. REQ'D	LENGTHS VARY	LENGTH
	4	11	79	Max	36'-11"
				Min	1'-10"

BOTTOM SLAB DISTRIBUTION REINFORCING STEEL "e"	SIZE	SPACING	NO. REQ'D	LENGTHS VARY	LENGTH
	4	11	79	Max	36'-11"
				Min	1'-10"

SIDE WALL DISTRIBUTION REINFORCING STEEL "d1"	SIZE	SPACING	NO. REQ'D	LENGTH
	4	12	6	LONG 36'-6"
				SHORT 2'-2"

INTERIOR WALL DISTRIBUTION REINFORCING STEEL "d2"	SIZE	SPACING	NO. REQ'D	LENGTH
	4	12	12	LONG 28'-2"
			12	MID 19'-5"
			12	SHORT 10'-7"

"k1" HDWL BARS	SIZE	LENGTH	NO. REQ'D
	5	25'-9"	12

"k2" HDWL BARS	SIZE	LENGTH	NO. REQ'D
	5	25'-9"	12

"h" HDWL BARS	SIZE	LENGTH	Y	NO. REQ'D
	4	1'-9"	0'-9"	51

CLASS "S" CONCRETE (Includes HDWL)	1 REINFORCING STEEL (GR 60) (Includes HDWL)
CU. YDS.	LBS.
56.71	9123

① Any Bar Lap Required for the Skewed End Section shall be considered subsidiary to the item "Reinforcing Steel - Roadway (Grade 60)."

INLET SLOPE SECTION(S)

R.C. BOX SECTION	DESIGN FILL DEPTH (FT.)	CLEAR SPAN (FT.)	CLEAR HEIGHT (FT.)	TOP SLAB THK.	BOTTOM SLAB THK	SIDE WALL THK	INTERIOR WALL THK.	OVER ALL WIDTH	OVER ALL HEIGHT	SECTION LENGTH (FT.)
	D	S	H	T	B	C	W	OW	OH	SL

TOP SLAB REINFORCING STEEL LENGTH = OW - 4" + BENDS	"a" SIZE	"a" L	Bent "b" SIZE	Bent "b" L	"c" SIZE	"c" L	SPACING	NO. REQ'D

BOTTOM SLAB REINFORCING STEEL LENGTH = OW - 4" + BENDS	"d" SIZE	"d" L	Bent "b1" SIZE	Bent "b1" L	"f" SIZE	"f" L	SPACING	NO. REQ'D

SIDE WALL REINFORCING STEEL "f0" LENGTH = OH - 4"	SIZE	SPACING	NO. REQ'D	LENGTH

INTERIOR WALL REINFORCING STEEL "f1" LENGTH = OH - 4"	SIZE	SPACING	NO. REQ'D	LENGTH

TOP SLAB DISTRIBUTION REINF. STEEL "g" LENGTH = SL	SIZE	SPACING	NO. REQ'D

BOTTOM SLAB DISTRIBUTION REINF. STEEL "e" LENGTH = SL	SIZE	SPACING	NO. REQ'D

SIDE WALL DISTRIBUTION REINF. STEEL "d1" LENGTH = SL	SIZE	SPACING	NO. REQ'D

INTERIOR WALL DISTRIBUTION REINF. STEEL "d2" LENGTH = SL	SIZE	SPACING	NO. REQ'D

HDWL DEPTH.	ADDITIONAL REINF. FOR HDWL	"h" HDWL BARS			
HD	LBS.	SIZE	Y	LENGTH	NO. REQ'D

CLASS "S" CONCRETE	REINFORCING STEEL (GR. 60)
CU. YDS.	LBS.
TOTAL	

MID-SECTION

R.C. BOX SECTION	DESIGN FILL DEPTH (FT.)	CLEAR SPAN (FT.)	CLEAR HEIGHT (FT.)	TOP SLAB THK.	BOTTOM SLAB THK.	SIDE WALL THK.	INTERIOR WALL THK.	OVER ALL WIDTH	OVER ALL HEIGHT	SECTION LENGTH (FT.)
	D	S	H	T	B	C	W	OW	OH	SL
A	5	8	6	10	10	6.5	8	35'-1"	7'-8"	64

TOP SLAB REINFORCING STEEL LENGTH = OW - 4" + BENDS	"a" SIZE	"a" L	Bent "b" SIZE	Bent "b" L	"c" SIZE	"c" L	SPACING	NO. REQ'D
	4	34'-9"	8	35'-6"	5	34'-9"	18	42

BOTTOM SLAB REINFORCING STEEL LENGTH = OW - 4" + BENDS	"d" SIZE	"d" L	Bent "b1" SIZE	Bent "b1" L	"f" SIZE	"f" L	SPACING	NO. REQ'D
	4	34'-9"	4	35'-5"	4	34'-9"	12	64

SIDE WALL REINFORCING STEEL "f0" LENGTH = OH - 4"	SIZE	SPACING	NO. REQ'D	LENGTH
	5	7	218	7'-4"

INTERIOR WALL REINFORCING STEEL "f1" LENGTH = OH - 4"	SIZE	SPACING	NO. REQ'D	LENGTH
	4	12	384	7'-4"

TOP SLAB DISTRIBUTION REINF. STEEL "g" LENGTH = SL	SIZE	SPACING	NO. REQ'D
	4	11	79

BOTTOM SLAB DISTRIBUTION REINF. STEEL "e" LENGTH = SL	SIZE	SPACING	NO. REQ'D
	4	11	79

SIDE WALL DISTRIBUTION REINF. STEEL "d1" LENGTH = SL	SIZE	SPACING	NO. REQ'D
	4	12	12

INTERIOR WALL DISTRIBUTION REINF. STEEL "d2" LENGTH = SL	SIZE	SPACING	NO. REQ'D
	4	12	36

CLASS "S" CONCRETE	REINFORCING STEEL (GR. 60)
CU. YDS.	LBS.
182.45	23674

MID-SECTION BAR LAP TABLE

# of Long. Laps Req'd.	SL = Section Length
0	< 40.0 ft
1	>40.0 ft - 78.0 ft
2	>78.0 ft - 116.0 ft
3	>116.0 ft - 154.0 ft
4	>154.0 ft - 192.0 ft
5	>192.0 ft - 230.0 ft
6	>230.0 ft - 268.0 ft
7	>268.0 ft - 306.0 ft
8	>306.0 ft -344.0 ft

Min. Bar Lap Length	
#4	1'-9"
#5	2'-2"
#6	2'-7"
#7	3'-6"
#8	4'-7"

Bar Pin Dia. Table	
#4	3"
#5	3 3/4"
#6	4 1/2"
#7	5 1/4"
#8	6"

STATE OF ARKANSAS
REGISTERED PROFESSIONAL ENGINEER
No. 11856
CHARLES A. WIPF
11/30/2020

TABULAR DATA BY: CAW DATE: 09/27/18
CHECKED BY: LDG DATE: 08/16/19

This drawing to be used in conjunction with
SHEET 1 OF 4, "GENERAL DETAILS OF R.C. BOX CULVERT", 'GENERAL NOTES & LONGITUDINAL SECTION LENGTH SCHEDULE',
SHEET 3 OF 4, "GENERAL DETAILS OF R.C. BOX CULVERT", 'DETAILS OF MULTI-BARREL R.C. BOX CULVERT',
SHEET 4 OF 4, "GENERAL DETAILS OF R.C. BOX CULVERT", 'DETAILS OF WINGWALLS', and
STANDARD DRAWING RCB-2.
For additional information and outlet sections, see Sheet 2 of 2.

Design Fill Depth	Range of Actual Fill Depth
2	0.0 ft - 2.0 ft
5	>2.0 ft - 5.0 ft
10	>5.0 ft - 10.0 ft
15	>10.0 ft - 15.0 ft
20	>15.0 ft - 20.0 ft
25	>20.0 ft - 25.0 ft
30	>25.0 ft - 30.0 ft
35	>30.0 ft - 35.0 ft
40	>35.0 ft - 40.0 ft

Data shown for Mid-Section, Slope Section(s), and Skewed End Section is based on the design fill depth shown in the table, see PLAN AND PROFILE SHEETS for actual fill depth.

SHEET 1 OF 2
DETAILS OF R.C. BOX CULVERT
QUADRUPLE BARREL BOX CULVERT
STA. 207+90

SPECIAL DETAILS

Ver. LI17 FILENAME

DATE REVISED	DATE FILMED	DATE REVISED	DATE FILMED	FED. ROAD DIST. NO.	STATE	FED. AID PROJ. NO.	SHEET NO.	TOTAL SHEETS
				6	ARK.			
				JOB NO.		050347	13	121

(1) SPECIAL DETAILS

STATE OF ARKANSAS
REGISTERED PROFESSIONAL ENGINEER
No. 11856
CHARLES A. WIPF
11/20/2020

TABULAR DATA BY: CAW DATE: 09/27/18
CHECKED BY: LDG DATE: 08/16/19

OUTLET WINGWALL TABLE

OVER ALL WIDTH	CLEAR HEIGHT	FOOTING THK.	WING WALL THK.	BOX SKEW (DEG.)	SLOPE	HDWL LENGTH	HEEL	WALL HEIGHT AT HDWL	WALL HEIGHT AT WING END	WINGWALL ANGLE (DEGREE) WING A	WINGWALL ANGLE (DEGREE) WING B	FOOTING WIDTH AT WALL END	WIDTH OF WING FOOTINGS AT HDWL WING A	WIDTH OF WING FOOTINGS AT HDWL WING B	FOOTING DIMENSION PARALLEL WITH HDWL WING A	FOOTING DIMENSION PARALLEL WITH HDWL WING B	LENGTH OF WINGWALLS WING A	LENGTH OF WINGWALLS WING B	LENGTH OF FOOTING HEEL WING A	LENGTH OF FOOTING HEEL WING B
OW	H	WB	CW	SK	SL	K	HL	WH1	WH2	AF1	AF2	WE	WF1	WF2	G1	G2	W1	W2	W3	W4
35'-1"	6'-0"	0'-9"	0'-8"	45	3:1	48'-1"	2'-0"	6'-10"	2'-0"	0	60	3'-2"	3'-2"	3'-9"	0'-6"	0'-5 1/8"	14'-6"	29'-0"	16'-4 3/4"	36'-10 1/4"

CLASS "S" CONCRETE (Includes apron)	REINFORCING STEEL (Includes apron and laps if required)
OUTLET	OUTLET
CU.YD	LBS.
14.84	1148

WING	F1 BAR SIZE	F1 MAX. SPACING	F1 NO. REQ'D	F1 LENGTHS VARY	F1 LENGTHS	F2 BAR SIZE	F2 SPACING	F2 NO. REQ'D	F2 LENGTHS	F3 BAR SIZE	F3 SPACING	F3 NO. REQ'D	F3 LENGTHS	F4 BAR SIZE	F4 SPACING	F4 NO. REQ'D	F4 LENGTHS VARY	F5 BAR SIZE	F5 SPACING	F5 NO. REQ'D	F5 LENGTHS	F6 BAR SIZE	F6 SPACING	F6 NO. REQ'D	F6 LENGTHS VARY	F6 LENGTHS	F7 BAR SIZE	F7 NO. REQ'D	F7 LENGTHS	F8 BAR SIZE	F8 SPACING	F8 NO. REQ'D	F8 LENGTHS VARY	F8 LENGTHS	F9 BAR SIZE	F9 SPACING	F9 NO. REQ'D	F9 LENGTHS	F10 BAR SIZE	F10 NO. REQ'D	F10 LENGTHS	F11 BAR SIZE	F11 NO. REQ'D	F11 LENGTHS	F12 BAR SIZE	F12 SPACING	F12 NO. REQ'D	F12 LENGTHS	REINF. STEEL QTY. PER WING (LBS)
WING A	4	12	15	L Min	3'-0"	-	-	-	-	-	-	-	-	4	18	4	Min	4	18	4	14'-2"	4	18	10	L Min	4'-9"	4	8	17'-3"	6	18	10	Min	2'-8"	-	-	-	Min	-	4	2	14'-10"	4	2	15'-4"	6	12	6	L 3'-4"	395
				L Max	7'-8"												4'-10"								Max	9'-3"							Max					Max	-								X 1'-8"	
				X Min	0'-9"												Max								L Min	2'-4"							2'-8"													
				X Max	0'-9"												9'-4"								X Max	2'-4"							Max					Max	-								
				Y Min	2'-4"																				Y Min	2'-6"							2'-8"													
				Y Max	7'-0"																				Y Max	7'-0"							Max					Max	-								
WING B	4	12	29	L Min	3'-0"	-	-	-	-	-	-	-	-	4	18	4	Min	4	18	4	28'-8"	4	18	20	L Min	4'-7"	4	8	37'-8"	6	18	20	Min	2'-8"	-	-	-	Min	-	4	2	28'-11"	4	2	31'-9"	6	12	6	L 3'-4"	753
				L Max	8'-3"												9'-10"								Max	9'-3"							Max					Max	-								X 1'-8"	
				X Min	0'-9"												Max								X Min	2'-4"							2'-8"													
				X Max	1'-4"												18'-10"								X Max	2'-4"							Max					Max	-								
				Y Min	2'-4"																				Y Min	2'-4"							3'-3"													
				Y Max	7'-0"																				Y Max	7'-0"																				

Min. Bar Lap Length	
#4	1'-9"
#5	2'-2"
#6	2'-7"
#7	3'-6"
#8	4'-7"

Bar Pin Dia. Table	
#4	3"
#5	3 3/4"
#6	4 1/2"
#7	5 1/4"
#8	6"

(1) Any Bar Lap Required for the Skewed End Section shall be considered subsidiary to the item "Reinforcing Steel - Roadway (Grade 60)."

OUTLET SKEWED END SECTION

SKEW (DEGREE)	SLOPE	DESIGN FILL DEPTH (FT.)	CLEAR SPAN (FT.)	CLEAR HEIGHT (FT.)	SECTION LENGTH	TOP SLAB THK.	HDWL DEPTH	BOTTOM SLAB THK.	SIDE WALL THK.	INTERIOR WALL THK.	OVER ALL WIDTH	OVER ALL HEIGHT	TOP SLAB REINF. STEEL "a" SIZE	"a" SPACING	"a" LENGTHS VARY	"a" LENGTHS	"a" NO. REQ'D	TOP SLAB REINF. STEEL "c" SIZE	"c" SPACING	"c" LENGTHS VARY	"c" LENGTHS	"c" NO. REQ'D	BOTTOM SLAB REINF. STEEL "d" SIZE	"d" SPACING	"d" LENGTHS VARY	"d" LENGTHS	"d" NO. REQ'D	BOTTOM SLAB REINF. STEEL "f" SIZE	"f" SPACING	"f" LENGTHS VARY	"f" LENGTHS	"f" NO. REQ'D	SIDE WALL REINF. STEEL "f0" SIZE	"f0" SPACING	"f0" NO. REQ'D	"f0" LENGTH	INTERIOR WALL REINF. STEEL "f1" SIZE	"f1" SPACING	"f1" NO. REQ'D	"f1" LENGTH	TOP SLAB DISTRIBUTION REINF. STEEL "g" SIZE	"g" SPACING	"g" NO. REQ'D	"g" LENGTHS VARY	BOTTOM SLAB DISTRIBUTION REINF. STEEL "e" SIZE	"e" SPACING	"e" NO. REQ'D	"e" LENGTHS VARY	SIDE WALL DISTRIBUTION REINF. STEEL "d1" SIZE	"d1" SPACING	"d1" NO. REQ'D	"d1" LENGTH	INTERIOR WALL DISTRIBUTION REINF. STEEL "d2" SIZE	"d2" SPACING	"d2" NO. REQ'D	"d2" LENGTH
SK	SL	D	S	H	LL	T	HD	B	C	W	OW	OH																		

DATE REVISED	DATE FILMED	DATE REVISED	DATE FILMED	FED. ROAD DIST. NO.	STATE	FED. AID PROJ. NO.	SHEET NO.	TOTAL SHEETS
				6	ARK.			
				JOB NO.		050347	14	121

SPECIAL DETAILS

STATE OF ARKANSAS
REGISTERED PROFESSIONAL ENGINEER
No. 11856
CHARLES A. WIPF
4/30/2020

TABULAR DATA BY: LDG DATE: 06/17/20
CHECKED BY: MLC DATE: 06/18/20

INLET WINGWALL TABLE

OVER ALL WIDTH	CLEAR HEIGHT	FOOTING THK.	WING WALL THK.	BOX SKEW (DEG.)	SLOPE	HDWL LENGTH	HEEL	WALL HEIGHT AT HDWL	WALL HEIGHT AT WING END	WINGWALL ANGLE (DEGREE) WING A	WINGWALL ANGLE (DEGREE) WING B	FOOTING WIDTH AT WALL END	WIDTH OF WING FOOTINGS AT HDWL WING A	WIDTH OF WING FOOTINGS AT HDWL WING B	FOOTING DIMENSION PARALLEL WITH HDWL WING A	FOOTING DIMENSION PARALLEL WITH HDWL WING B	LENGTH OF WINGWALLS WING A	LENGTH OF WINGWALLS WING B	LENGTH OF FOOTING HEEL WING A	LENGTH OF FOOTING HEEL WING B
OW	H	WB	CW	SK	SL	K	HL	WH1	WH2	AF1	AF2	WE	WF1	WF2	G1	G2	W1	W2	W3	W4
17'-8"	4'-0"	0'-9"	0'-8"	10	3:1	16'-11 1/8"	1'-0"	4'-10"	1'-4"	20	40	2'-2"	2'-5 3/4"	2'-6 3/4"	0'-6"	0'-4"	11'-0"	13'-6"	12'-10 5/8"	15'-4 5/8"

CLASS "S" CONCRETE (Includes apron)	REINFORCING STEEL (Includes apron and laps if required)
INLET	INLET
CU.YD	LBS.
5.18	488

WING	F1 BAR SIZE	F1 MAX. SPACING	F1 NO. REQ'D	F1 LENGTHS VARY	F1 LENGTHS	F2 BAR SIZE	F2 SPACING	F2 NO. REQ'D	F2 LENGTHS	F3 BAR SIZE	F3 SPACING	F3 NO. REQ'D	F3 LENGTHS	F4 BAR SIZE	F4 SPACING	F4 NO. REQ'D	F4 LENGTHS VARY	F5 BAR SIZE	F5 SPACING	F5 NO. REQ'D	F5 LENGTHS
WING A	4	12	11	L	Min 2'-6"	-	-	-	-	-	-	-	-	4	18	4	Min	4	18	2	10'-8"
					Max 6'-0"												3'-6"				
				X	Min 0'-9"				X -				X -				Max				
					Max 1'-1"												8'-3"				
				Y	Min 1'-10"				Y -				Y -								
					Max 5'-0"																
WING B	4	12	14	L	Min 2'-4"	-	-	-	-	-	-	-	-	4	18	4	Min	4	18	2	13'-2"
					Max 6'-1"												4'-4"				
				X	Min 0'-9"				X -				X -				Max				
					Max 1'-2"												10'-1"				
				Y	Min 1'-8"				Y -				Y -								
					Max 5'-0"																

WING	F6 BAR SIZE	F6 SPACING	F6 NO. REQ'D	F6 LENGTHS VARY	F6 LENGTHS	F7 BAR SIZE	F7 NO. REQ'D	F7 LENGTHS	F8 BAR SIZE	F8 SPACING	F8 NO. REQ'D	F8 LENGTHS VARY	F8 LENGTHS	F9 BAR SIZE	F9 SPACING	F9 NO. REQ'D	F9 LENGTHS	F10 BAR SIZE	F10 NO. REQ'D	F10 LENGTHS	F11 BAR SIZE	F11 NO. REQ'D	F11 LENGTHS	F12 BAR SIZE	F12 SPACING	F12 NO. REQ'D	F12 LENGTHS	REINF. STEEL QTY. PER WING (LBS)
WING A	4	18	8	L	Min 2'-11"	4	6	13'-9"	6	18	7	Min		-	-	-	Min	4	2	11'-1"	4	2	12'-2"	6	12	4	L 3'-4"	223
					Max 6'-3"							1'-8"					-											
				X	Min 1'-4"							Max					Max										X 1'-8"	
					Max 1'-4"							1'-11"					-											
				Y	Min 1'-8"																							
					Max 5'-0"																							
WING B	4	18	9	L	Min 3'-2"	4	6	16'-3"	6	18	9	Min		-	-	-	Min	4	2	13'-6"	4	2	15'-2"	6	12	4	L 3'-4"	265
					Max 6'-3"							1'-8"					-											
				X	Min 1'-4"							Max					Max										X 1'-8"	
					Max 1'-4"							2'-1"					-											
				Y	Min 1'-11"																							
					Max 5'-0"																							

MID-SECTION BAR LAP TABLE

# of Long. Laps Req'd.	SL = Section Length
0	< 40.0 ft
1	>40.0 ft - 78.0 ft
2	>78.0 ft - 116.0 ft
3	>116.0 ft - 154.0 ft
4	>154.0 ft - 192.0 ft
5	>192.0 ft - 230.0 ft
6	>230.0 ft - 268.0 ft
7	>268.0 ft - 306.0 ft
8	>306.0 ft -344.0 ft

Min. Bar Lap Length	
#4	1'-9"
#5	2'-2"
#6	2'-7"
#7	3'-6"
#8	4'-7"

Bar Pin Dia. Table	
#4	3"
#5	3 3/4"
#6	4 1/2"
#7	5 1/4"
#8	6"

This drawing to be used in conjunction with SHEET 1 OF 4, "GENERAL DETAILS OF R.C. BOX CULVERT", 'GENERAL NOTES & LONGITUDINAL SECTION LENGTH SCHEDULE', SHEET 3 OF 4, "GENERAL DETAILS OF R.C. BOX CULVERT", 'DETAILS OF MULTI-BARREL R.C. BOX CULVERT', SHEET 4 OF 4, "GENERAL DETAILS OF R.C. BOX CULVERT", 'DETAILS OF WINGWALLS', and STANDARD DRAWING RCB-2.

For additional information and outlet sections, see Sheet 2 of 2.

① Any Bar Lap Required for the Skewed End Section shall be considered subsidiary to the item "Reinforcing Steel - Roadway (Grade 60)."

INLET SKEWED END SECTION

SKEW (DEGREE)	SLOPE	DESIGN FILL DEPTH (FT.)	CLEAR SPAN (FT.)	CLEAR HEIGHT (FT.)	SECTION LENGTH	TOP SLAB THK.	HDWL DEPTH	BOTTOM SLAB THK.	SIDE WALL THK.	INTERIOR WALL THK.	OVER ALL WIDTH	OVER ALL HEIGHT
SK	SL	D	S	H	LL	T	HD	B	C	W	OW	OH
10	3:1	5	8	4	3'-7"	9	3	9	6	8	17'-8"	5'-6"

TOP SLAB REINFORCING STEEL "a" SIZE	"a" SPACING	"a" LENGTHS VARY	"a" LENGTHS	"a" NO. REQ'D	"c" SIZE	"c" SPACING	"c" LENGTHS VARY	"c" LENGTHS	"c" NO. REQ'D
6	9	Max	17'-4"	3	6	5.5	Max	17'-4"	4
		Min	8'-9"				Min	8'-9"	
			17'-4"	3				17'-4"	5

BOTTOM SLAB REINFORCING STEEL "d" SIZE	"d" SPACING	"d" LENGTHS VARY	"d" LENGTHS	"d" NO. REQ'D	"f" SIZE	"f" SPACING	"f" LENGTHS VARY	"f" LENGTHS	"f" NO. REQ'D
4	4.5	Max	17'-4"	5	4	8.5	Max	17'-4"	3
		Min	8'-9"				Min	8'-9"	
			17'-4"	6				17'-4"	3

SIDE WALL REINFORCING STEEL "f0" SIZE	"f0" SPACING	"f0" NO. REQ'D	"f0" LENGTH
4	8.5	11	5'-2"

INTERIOR WALL REINFORCING STEEL "f1" SIZE	"f1" SPACING	"f1" NO. REQ'D	"f1" LENGTH
4	12	8	5'-2"

TOP SLAB DISTRIBUTION REINFORCING STEEL "g" SIZE	"g" SPACING	"g" NO. REQ'D	"g" LENGTHS VARY	"g" LENGTHS
4	12	35	Max	4'-11"
			Min	1'-10"

BOTTOM SLAB DISTRIBUTION REINFORCING STEEL "e" SIZE	"e" SPACING	"e" NO. REQ'D	"e" LENGTHS VARY	"e" LENGTHS
4	12	35	Max	4'-11"
			Min	1'-10"

SIDE WALL DISTRIBUTION REINFORCING STEEL "d1" SIZE	"d1" SPACING	"d1" NO. REQ'D	"d1" LENGTH
4	12	4	LONG 4'-11"
		4	SHORT 1'-11"

INTERIOR WALL DISTRIBUTION REINFORCING STEEL "d2" SIZE	"d2" SPACING	"d2" NO. REQ'D	"d2" LENGTH
4	12	8	3'-5"

CLASS "S" CONCRETE (Includes HDWL) CU. YDS.	1 REINFORCING STEEL (GR 60) (Includes HDWL) LBS.
4.73	939

"k1" HDWL BARS SIZE	"k1" HDWL BARS LENGTH	"k1" HDWL BARS NO. REQ'D	"k2" HDWL BARS SIZE	"k2" HDWL BARS LENGTH	"k2" HDWL BARS NO. REQ'D
4	17'-3"	6	4	17'-3"	6

"h" HDWL BARS SIZE	"h" HDWL BARS LENGTH	"h" HDWL BARS Y	"h" HDWL BARS NO. REQ'D
4	1'-8"	0'-8"	19

INLET SLOPE SECTION(S)

R.C. BOX SECTION	DESIGN FILL DEPTH (FT.) D	CLEAR SPAN (FT.) S	CLEAR HEIGHT (FT.) H	TOP SLAB THK. T	BOTTOM SLAB THK. B	SIDE WALL THK. C	INTERIOR WALL THK. W	OVER ALL WIDTH OW	OVER ALL HEIGHT OH	SECTION LENGTH (FT.) SL

TOP SLAB REINFORCING STEEL LENGTH = OW - 4" + BENDS "a" SIZE	"a" L	Bent "b" SIZE	Bent "b" L	"c" SIZE	"c" L	SPACING	NO. REQ'D

BOTTOM SLAB REINFORCING STEEL LENGTH = OW - 4" + BENDS "d" SIZE	"d" L	Bent "b1" SIZE	Bent "b1" L	"f" SIZE	"f" L	SPACING	NO. REQ'D

SIDE WALL REINFORCING STEEL "f0" LENGTH = OH - 4" SIZE	SPACING	NO. REQ'D	LENGTH

INTERIOR WALL REINFORCING STEEL "f1" LENGTH = OH - 4" SIZE	SPACING	NO. REQ'D	LENGTH

TOP SLAB DISTRIBUTION REINF. STEEL "g" LENGTH = SL SIZE	SPACING	NO. REQ'D

BOTTOM SLAB DISTRIBUTION REINF. STEEL "e" LENGTH = SL SIZE	SPACING	NO. REQ'D

SIDE WALL DISTRIBUTION REINF. STEEL "d1" LENGTH = SL SIZE	SPACING	NO. REQ'D

INTERIOR WALL DISTRIBUTION REINF. STEEL "d2" LENGTH = SL SIZE	SPACING	NO. REQ'D

HDWL DEPTH HD	ADDITIONAL REINF. FOR HDWL LBS.	"h" HDWL BARS SIZE	Y	LENGTH	NO. REQ'D

CLASS "S" CONCRETE CU. YDS.	REINFORCING STEEL (GR. 60) LBS.
TOTAL	

Design Fill Depth	Range of Actual Fill Depth
2	0.0 ft - 2.0 ft
5	>2.0 ft - 5.0 ft
10	>5.0 ft - 10.0 ft
15	>10.0 ft - 15.0 ft
20	>15.0 ft - 20.0 ft
25	>20.0 ft - 25.0 ft
30	>25.0 ft - 30.0 ft
35	>30.0 ft - 35.0 ft
40	>35.0 ft - 40.0 ft

Data shown for Mid-Section, Slope Section(s), and Skewed End Section is based on the design fill depth shown in the table, see PLAN AND PROFILE SHEETS for actual fill depth.

MID-SECTION

R.C. BOX SECTION	DESIGN FILL DEPTH (FT.) D	CLEAR SPAN (FT.) S	CLEAR HEIGHT (FT.) H	TOP SLAB THK. T	BOTTOM SLAB THK. B	SIDE WALL THK. C	INTERIOR WALL THK. W	OVER ALL WIDTH OW	OVER ALL HEIGHT OH	SECTION LENGTH (FT.) SL
A	5	8	4	9.0	9	6.0	8	17'-8"	5'-6"	67.8333

TOP SLAB REINFORCING STEEL LENGTH = OW - 4" + BENDS "a" SIZE	"a" L	Bent "b" SIZE	Bent "b" L	"c" SIZE	"c" L	SPACING	NO. REQ'D
4	17'-4"	8	17'-6"	7	17'-4"	17	47

BOTTOM SLAB REINFORCING STEEL LENGTH = OW - 4" + BENDS "d" SIZE	"d" L	Bent "b1" SIZE	Bent "b1" L	"f" SIZE	"f" L	SPACING	NO. REQ'D
4	17'-4"	4	17'-6"	4	17'-4"	9	90

SIDE WALL REINFORCING STEEL "f0" LENGTH = OH - 4" SIZE	SPACING	NO. REQ'D	LENGTH
4	8.5	190	5'-2"

INTERIOR WALL REINFORCING STEEL "f1" LENGTH = OH - 4" SIZE	SPACING	NO. REQ'D	LENGTH
4	12	134	5'-2"

TOP SLAB DISTRIBUTION REINF. STEEL "g" LENGTH = SL SIZE	SPACING	NO. REQ'D
4	12	35

BOTTOM SLAB DISTRIBUTION REINF. STEEL "e" LENGTH = SL SIZE	SPACING	NO. REQ'D
4	12	35

SIDE WALL DISTRIBUTION STEEL "d1" LENGTH = SL SIZE	SPACING	NO. REQ'D
4	12	8

INTERIOR WALL DISTRIBUTION STEEL "d2" LENGTH = SL SIZE	SPACING	NO. REQ'D
4	12	8

CLASS "S" CONCRETE CU. YDS.	REINFORCING STEEL (GR. 60) LBS.
83.33	12767

SHEET 1 OF 2
DETAILS OF R.C. BOX CULVERT
DOUBLE BARREL BOX CULVERT
STA. 403+64

SPECIAL DETAILS

Ver. 1.17 FILENAME

DATE REVISED	DATE FILMED	DATE REVISED	DATE FILMED

FED. ROAD DIST. NO.	STATE	FED. AID PROJ. NO.	SHEET NO.	TOTAL SHEETS
6	ARK.			
JOB NO.		050347	15	121

SPECIAL DETAILS

STATE OF ARKANSAS
REGISTERED PROFESSIONAL ENGINEER
No. 11856
CHARLES A. WIPF
11/30/2020

TABULAR DATA BY: LDG DATE: 06/17/20
CHECKED BY: MLC DATE: 06/18/20

OUTLET WINGWALL TABLE

OVER ALL WIDTH	CLEAR HEIGHT	FOOTING THK.	WING WALL THK.	BOX SKEW (DEG.)	SLOPE	HDWL LENGTH	HEEL	WALL HEIGHT AT HDWL	WALL HEIGHT AT WING END	WINGWALL ANGLE (DEGREE) WING A	WINGWALL ANGLE (DEGREE) WING B	FOOTING WIDTH AT WALL END	WIDTH OF WING FOOTINGS AT HDWL WING A	WIDTH OF WING FOOTINGS AT HDWL WING B	FOOTING DIMENSION PARALLEL WITH HDWL WING A	FOOTING DIMENSION PARALLEL WITH HDWL WING B	LENGTH OF WINGWALLS WING A	LENGTH OF WINGWALLS WING B	LENGTH OF FOOTING HEEL WING A	LENGTH OF FOOTING HEEL WING B
OW	H	WB	CW	SK	SL	K	HL	WH1	WH2	AF1	AF2	WE	WF1	WF2	G1	G2	W1	W2	W3	W4
17'-8"	4'-0"	0'-9"	0'-8"	10	3:1	16'-11 1/8"	1'-0"	4'-10"	1'-4"	20	40	2'-2"	2'-5 3/4"	2'-6 3/4"	0'-6"	0'-4"	11'-0"	13'-6"	12'-10 5/8"	15'-4 5/8"

CLASS "S" CONCRETE (Includes apron)	REINFORCING STEEL (Includes apron and laps if required)
OUTLET	OUTLET
CU.YD	LBS.
5.86	488

WING	F1 BAR SIZE	F1 MAX. SPACING	F1 NO. REQ'D	F1 LENGTHS VARY	F1	F2 BAR SIZE	F2 SPACING	F2 NO. REQ'D	F2 LENGTHS	F3 BAR SIZE	F3 SPACING	F3 NO. REQ'D	F3 LENGTHS	F4 BAR SIZE	F4 SPACING	F4 NO. REQ'D	F4 LENGTHS VARY	F5 BAR SIZE	F5 SPACING	F5 NO. REQ'D	F5 LENGTHS	F6 BAR SIZE	F6 SPACING	F6 NO. REQ'D	F6 LENGTHS VARY	F6	F7 BAR SIZE	F7 NO. REQ'D	F7 LENGTHS	F8 BAR SIZE	F8 SPACING	F8 NO. REQ'D	F8 LENGTHS VARY	F9 BAR SIZE	F9 SPACING	F9 NO. REQ'D	F9 LENGTHS	F10 BAR SIZE	F10 NO. REQ'D	F10 LENGTHS	F11 BAR SIZE	F11 NO. REQ'D	F11 LENGTHS	F12 BAR SIZE	F12 SPACING	F12 NO. REQ'D	F12 LENGTHS	REINF. STEEL QTY. PER WING (LBS)
WING A	4	12	11	L	Min 2'-6"	-	-	-	L -	-	-	-	L -	4	18	4	Min	4	18	2	10'-8"	4	18	8	L Min 2'-11"		4	6	13'-9"	6	18	7	Min	-	-	-	Min	4	2	11'-1"	4	2	12'-2"	6	12	4	L 3'-4"	223
					Max 6'-0"												3'-6"								Max 6'-3"								1'-8"				-									X 1'-8"	
				X	Min 0'-9"				X -				X -				Max								X Min 1'-4"								Max				Max									
					Max 1'-1"												8'-3"								Max 1'-4"								1'-11"				-									
				Y	Min 1'-10"				Y -				Y -												Min 1'-8"																					
					Max 5'-0"																				Max 5'-0"																					
WING B	4	12	14	L	Min 2'-4"	-	-	-	L -	-	-	-	L -	4	18	4	Min	4	18	2	13'-2"	4	18	9	L Min 3'-2"		4	6	16'-3"	6	18	9	Min	-	-	-	Min	4	2	13'-6"	4	2	15'-2"	6	12	4	L 3'-4"	265
					Max 6'-1"												4'-4"								Max 6'-3"								1'-8"				-									X 1'-8"	
				X	Min 0'-9"				X -				X -				Max								X Min 1'-4"								Max				Max									
					Max 1'-2"												10'-1"								Max 1'-4"								2'-1"				-									
				Y	Min 1'-8"				Y -				Y -												Min 1'-11"																					
					Max 5'-0"																				Max 5'-0"																					

Min. Bar Lap Length	
#4	1'-9"
#5	2'-2"
#6	2'-7"
#7	3'-6"
#8	4'-7"

Bar Pin Dia. Table	
#4	3"
#5	3 3/4"
#6	4 1/2"
#7	5 1/4"
#8	6"

(1) Any Bar Lap Required for the Skewed End Section shall be considered subsidiary to the item "Reinforcing Steel - Roadway (Grade 60)."

OUTLET SKEWED END SECTION

SKEW (DEGREE)	SLOPE	DESIGN FILL DEPTH (FT.)	CLEAR SPAN (FT.)	CLEAR HEIGHT (FT.)	SECTION LENGTH	TOP SLAB THK.	HDWL DEPTH	BOTTOM SLAB THK.	SIDE WALL THK.	INTERIOR WALL THK.	OVER ALL WIDTH	OVER ALL HEIGHT	TOP SLAB REINF. STEEL "a" SIZE	"a" SPACING	"a" LENGTHS VARY	"a" NO. REQ'D	TOP SLAB REINF. STEEL "c" SIZE	"c" SPACING	"c" LENGTHS VARY	"c" NO. REQ'D	BOTTOM SLAB REINF. STEEL "d" SIZE	"d" SPACING	"d" LENGTHS VARY	"d" NO. REQ'D	BOTTOM SLAB REINF. STEEL "f" SIZE	"f" SPACING	"f" LENGTHS VARY	"f" NO. REQ'D	SIDE WALL REINF. STEEL "f0" SIZE	"f0" SPACING	"f0" NO. REQ'D	"f0" LENGTH	INTERIOR WALL REINF. STEEL "f1" SIZE	"f1" SPACING	"f1" NO. REQ'D	"f1" LENGTH	TOP SLAB DISTRIB. REINF. STEEL "g" SIZE	"g" SPACING	"g" NO. REQ'D	"g" LENGTHS VARY	BOTTOM SLAB DISTRIB. REINF. STEEL "e" SIZE	"e" SPACING	"e" NO. REQ'D	"e" LENGTHS VARY	SIDE WALL DISTRIB. REINF. STEEL "d1" SIZE	"d1" SPACING	"d1" NO. REQ'D	"d1" LENGTH	INTERIOR WALL DISTRIB. REINF. STEEL "d2" SIZE	"d2" SPACING	"d2" NO. REQ'D	"d2" LENGTH
SK	SL	D	S	H	LL	T	HD	B	C	W	OW	OH																																													
10	3:1	5	8	4	3'-7"	9	3	9	6	8	17'-8"	5'-6"	6	9	Max 17'-4" Min 8'-9"	3	6	5.5	Max 17'-4" Min 8'-9"	4	4	4.5	Max 17'-4" Min 8'-9"	5	4	8.5	Max 17'-4" Min 8'-9"	3	4	8.5	11	5'-2"	4	12	8	5'-2"	4	12	35	Max 4'-11" Min 1'-10"	4	12	35	Max 4'-11" Min 1'-10"	4	12	4	LONG 4'-11" SHORT 1'-11"	4	12	8	3'-5"
															17'-4"	3			17'-4"	5			17'-4"	6			17'-4"	3																												

"k1" HDWL BARS SIZE	"k1" HDWL BARS LENGTH	"k1" HDWL BARS NO. REQ'D	"k2" HDWL BARS SIZE	"k2" HDWL BARS LENGTH	"k2" HDWL BARS NO. REQ'D	"h" HDWL BARS SIZE	"h" HDWL BARS LENGTH	"h" HDWL BARS Y	"h" HDWL BARS NO. REQ'D
4	17'-3"	6	4	17'-3"	6	4	1'-8"	0'-8"	19

CLASS "S" CONCRETE (Includes HDWL)	1 REINFORCING STEEL (GR 60) (Includes HDWL)
CU. YDS.	LBS.
4.73	939

OUTLET SLOPE SECTION(S)

R.C. BOX SECTION	DESIGN FILL DEPTH (FT.)	CLEAR SPAN (FT.)	CLEAR HEIGHT (FT.)	TOP SLAB THK.	BOTTOM SLAB THK.	SIDE WALL THK.	INTERIOR WALL THK.	OVER ALL WIDTH	OVER ALL HEIGHT	SECTION LENGTH (FT.)	TOP SLAB REINF. STEEL LENGTH = OW - 4" + BENDS "a" SIZE	"a" L	Bent "b" SIZE	Bent "b" L	"c" SIZE	"c" L	"c" SPACING	"c" NO. REQ'D	BOTTOM SLAB REINF. STEEL LENGTH = OW - 4" + BENDS "d" SIZE	"d" L	Bent "b1" SIZE	Bent "b1" L	"f" SIZE	"f" L	"f" SPACING	"f" NO. REQ'D	SIDE WALL REINF. STEEL "f0" LENGTH = OH - 4" SIZE	"f0" SPACING	"f0" NO. REQ'D	"f0" LENGTH	INTERIOR WALL REINF. STEEL "f1" LENGTH = OH - 4" SIZE	"f1" SPACING	"f1" NO. REQ'D	"f1" LENGTH	TOP SLAB DISTRIB. REINF. STEEL "g" LENGTH = SL SIZE	"g" SPACING	"g" NO. REQ'D	BOTTOM SLAB DISTRIB. REINF. STEEL "e" LENGTH = SL SIZE	"e" SPACING	"e" NO. REQ'D	SIDE WALL DISTRIB. REINF. STEEL "d1" LENGTH = SL SIZE	"d1" SPACING	"d1" NO. REQ'D	INTERIOR WALL DISTRIB. REINF. STEEL "d2" LENGTH = SL SIZE	"d2" SPACING	"d2" NO. REQ'D
D	S	H	T	B	C	W	OW	OH	SL																																										

HDWL DEPTH HD	ADDITIONAL REINF. FOR HDWL LBS.	"h" HDWL BARS SIZE	"h" HDWL BARS Y	"h" HDWL BARS LENGTH	"h" HDWL BARS NO. REQ'D

CLASS "S" CONCRETE CU. YDS.	REINFORCING STEEL (GR. 60) LBS.
TOTAL	

The required number of bars and lengths shown are for estimating purpose only. The actual number and length required shall be determined in field.

Unless otherwise noted, all dimensions are in inches.

SHEET 2 OF 2
DETAILS OF R.C. BOX CULVERT
DOUBLE BARREL BOX CULVERT
STA. 403+64

SPECIAL DETAILS

Ver. L17 FILENAME

DATE REVISED	DATE FILMED	DATE REVISED	DATE FILMED	FED. ROAD DIST. NO.	STATE	FED. AID PROJ. NO.	SHEET NO.	TOTAL SHEETS
				6	ARK.			
				JOB NO.		050347	16	121

SPECIAL DETAILS

INLET WINGWALL TABLE

OVER ALL WIDTH	CLEAR HEIGHT	FOOTING THK.	WING WALL THK.	BOX SKEW (DEG.)	SLOPE	HDWL LENGTH	HEEL	WALL HEIGHT AT HDWL	WALL HEIGHT AT WING END	WINGWALL ANGLE (DEGREE) WING A	WINGWALL ANGLE (DEGREE) WING B	FOOTING WIDTH AT WALL END	WIDTH OF WING FOOTINGS AT HDWL WING A	WIDTH OF WING FOOTINGS AT HDWL WING B	FOOTING DIMENSION PARALLEL WITH HDWL WING A	FOOTING DIMENSION PARALLEL WITH HDWL WING B	LENGTH OF WINGWALLS WING A	LENGTH OF WINGWALLS WING B	LENGTH OF FOOTING HEEL WING A	LENGTH OF FOOTING HEEL WING B
OW	H	WB	CW	SK	SL	K	HL	WH1	WH2	AF1	AF2	WE	WF1	WF2	G1	G2	W1	W2	W3	W4
43'-5"	9'-0"	0'-10"	0'-9"	40	3:1	54'-9 7/8"	2'-0"	9'-10"	3'-0"	0	60	3'-3"	4'-4 3/8"	5'-4 1/2"	1'-7 3/8"	3'-6 1/4"	20'-6"	41'-0"	22'-8 1/8"	46'-5 7/8"

CLASS "S" CONCRETE (Includes apron)	REINFORCING STEEL (Includes apron and laps if required)
INLET	INLET
CU.YD	LBS.
23.92	2117

WING	F1 BAR SIZE	F1 MAX. SPACING	F1 NO. REQ'D	F1 LENGTHS VARY	F1 LENGTHS	F2 BAR SIZE	F2 SPACING	F2 NO. REQ'D	F2 LENGTHS	F3 BAR SIZE	F3 SPACING	F3 NO. REQ'D	F3 LENGTHS	F4 BAR SIZE	F4 SPACING	F4 NO. REQ'D	F4 LENGTHS VARY	F5 BAR SIZE	F5 SPACING	F5 NO. REQ'D	F5 LENGTHS	F6 BAR SIZE	F6 SPACING	F6 NO. REQ'D	F6 LENGTHS VARY	F6 LENGTHS	F7 BAR SIZE	F7 NO. REQ'D	F7 LENGTHS	F8 BAR SIZE	F8 SPACING	F8 NO. REQ'D	F8 LENGTHS VARY	F9 BAR SIZE	F9 SPACING	F9 NO. REQ'D	F9 LENGTHS	F10 BAR SIZE	F10 NO. REQ'D	F10 LENGTHS	F11 BAR SIZE	F11 NO. REQ'D	F11 LENGTHS	F12 BAR SIZE	F12 SPACING	F12 NO. REQ'D	F12 LENGTHS	REINF. STEEL QTY. PER WING (LBS)
WING A	4	12	21	L Min 4'-2" / Max 12'-0"		4	12	6	L 5'-2"	-	-	-	L -	4	18	8	Min 4'-10" / Max 18'-4"	4	18	4	20'-2"	4	18	14	L Min 5'-11" / Max 12'-5"		4	8	23'-6"	6	18	14	Min 2'-9" / Max 3'-10"	4	18	2	Min 28'-2" / Max 28'-2"	4	2	21'-2"	4	2	21'-4"	6	12	9	L 3'-4"	710
				X Min 0'-10" / Max 2'-0"					X 1'-8"				X -										X Min 2'-5" / Max 2'-5"																								X 1'-8"	
				Y Min 3'-5" / Max 10'-1"					Y 3'-7"				Y -										Y Min 3'-7" / Max 10'-1"																								
WING B	4	12	41	L Min 4'-3" / Max 12'-11"		4	12	18	L 6'-5"	-	-	-	L -	4	18	8	Min 9'-10" / Max 36'-10"	4	18	4	40'-8"	4	18	28	L Min 5'-8" / Max 12'-6"		4	8	47'-4"	6	18	30	Min 2'-9" / Max 4'-11"	4	18	2	Min 33'-5" / Max 33'-5"	4	2	41'-1"	4	2	46'-8"	6	12	9	L 3'-4"	1407
				X Min 0'-10" / Max 2'-10"					X 1'-11"				X -										X Min 2'-5" / Max 2'-5"																								X 1'-8"	
				Y Min 3'-6" / Max 10'-2"					Y 4'-7"				Y -										Y Min 3'-4" / Max 10'-2"																								

MID-SECTION BAR LAP TABLE

# of Long. Laps Req'd.	SL = Section Length
0	< 40.0 ft
1	>40.0 ft - 78.0 ft
2	>78.0 ft - 116.0 ft
3	>116.0 ft - 154.0 ft
4	>154.0 ft - 192.0 ft
5	>192.0 ft - 230.0 ft
6	>230.0 ft - 268.0 ft
7	>268.0 ft - 306.0 ft
8	>306.0 ft -344.0 ft

Min. Bar Lap Length	
#4	1'-9"
#5	2'-2"
#6	2'-7"
#7	3'-6"
#8	4'-7"

Bar Pin Dia. Table	
#4	3"
#5	3 3/4"
#6	4 1/2"
#7	5 1/4"
#8	6"

STATE OF ARKANSAS
REGISTERED PROFESSIONAL ENGINEER
No. 11856
CHARLES A. WIPF
4/30/2020

TABULAR DATA BY: CAW DATE: 09/27/18
CHECKED BY: LDG DATE: 08/16/19

This drawing to be used in conjunction with
SHEET 1 OF 4, "GENERAL DETAILS OF R.C. BOX CULVERT", 'GENERAL NOTES & LONGITUDINAL SECTION LENGTH SCHEDULE',
SHEET 3 OF 4, "GENERAL DETAILS OF R.C. BOX CULVERT", 'DETAILS OF MULTI-BARREL R.C. BOX CULVERT',
SHEET 4 OF 4, "GENERAL DETAILS OF R.C. BOX CULVERT", 'DETAILS OF WINGWALLS', and
STANDARD DRAWING RCB-2.
For additional information and outlet sections, see Sheet 2 of 2.

INLET SKEWED END SECTION

SKEW (DEGREE)	SLOPE	DESIGN FILL DEPTH (FT.)	CLEAR SPAN (FT.)	CLEAR HEIGHT (FT.)	SECTION LENGTH	TOP SLAB THK.	HDWL DEPTH	BOTTOM SLAB THK.	SIDE WALL THK.	INTERIOR WALL THK.	OVER ALL WIDTH	OVER ALL HEIGHT	TOP SLAB REINF. STEEL "a" SIZE	"a" SPACING	"a" LENGTHS VARY	"a" NO. REQ'D	TOP SLAB REINF. STEEL "c" SIZE	"c" SPACING	"c" LENGTHS VARY	"c" NO. REQ'D	BOTTOM SLAB REINF. STEEL "d" SIZE	"d" SPACING	"d" LENGTHS VARY	"d" NO. REQ'D	BOTTOM SLAB REINF. STEEL "f" SIZE	"f" SPACING	"f" LENGTHS VARY	"f" NO. REQ'D	SIDE WALL REINF. STEEL "f0" SIZE	"f0" SPACING	"f0" NO. REQ'D	"f0" LENGTH	INTERIOR WALL REINF. STEEL "f1" SIZE	"f1" SPACING	"f1" NO. REQ'D	"f1" LENGTH	TOP SLAB DISTRIBUTION REINF. STEEL "g" SIZE	"g" SPACING	"g" NO. REQ'D	"g" LENGTHS VARY	BOTTOM SLAB DISTRIBUTION REINF. STEEL "e" SIZE	"e" SPACING	"e" NO. REQ'D	"e" LENGTHS VARY	SIDE WALL DISTRIBUTION REINF. STEEL "d1" SIZE	"d1" SPACING	"d1" NO. REQ'D	"d1" LENGTH	INTERIOR WALL DISTRIBUTION REINF. STEEL "d2" SIZE	"d2" SPACING	"d2" NO. REQ'D	"d2" LENGTH
SK	SL	D	S	H	LL	T	HD	B	C	W	OW	OH	SIZE	SPACING	LENGTHS VARY	NO. REQ'D	SIZE	SPACING	LENGTHS VARY	NO. REQ'D	SIZE	SPACING	LENGTHS VARY	NO. REQ'D	SIZE	SPACING	LENGTHS VARY	NO. REQ'D	SIZE	SPACING	NO. REQ'D	LENGTH	SIZE	SPACING	NO. REQ'D	LENGTH	SIZE	SPACING	NO. REQ'D	LENGTHS VARY	SIZE	SPACING	NO. REQ'D	LENGTHS VARY	SIZE	SPACING	NO. REQ'D	LENGTH	SIZE	SPACING	NO. REQ'D	LENGTH
40	3	5	10	9	20'-3"	12	3	12	8.5	8	43'-5"	11'-0"	5	6	Max 43'-1" / Min 2'-6"	69	4	4.5	Max 43'-1" / Min 2'-6"	91	4	5.5	Max 43'-1" / Min 2'-6"	75	4	7.5	Max 43'-1" / Min 2'-6"	55	6	6	81	10'-8"	4	12	128	10'-8"	4	9	119	Max 38'-3" / Min 1'-10"	4	9	119	Max 38'-3" / Min 1'-10"	4	12	9	LONG 37'-10" / SHORT 2'-3"	4	12	18	LONG 29'-2" / MID 20'-1" / SHORT 10'-11"
															43'-1"	4			43'-1"	6			43'-1"	5			43'-1"	4																										

"k1" HDWL BARS SIZE	"k1" HDWL BARS LENGTH	"k1" HDWL BARS NO. REQ'D	"k2" HDWL BARS SIZE	"k2" HDWL BARS LENGTH	"k2" HDWL BARS NO. REQ'D	"h" HDWL BARS SIZE	"h" HDWL BARS LENGTH	"h" HDWL BARS Y	"h" HDWL BARS NO. REQ'D
5	29'-3"	12	5	29'-3"	12	4	1'-11"	0'-11"	58

CLASS "S" CONCRETE (Includes HDWL) CU. YDS.	1 REINFORCING STEEL (GR 60) (Includes HDWL) LBS.
89.17	12783

① Any Bar Lap Required for the Skewed End Section shall be considered subsidiary to the item "Reinforcing Steel - Roadway (Grade 60)."

INLET SLOPE SECTION(S)

R.C. BOX SECTION	DESIGN FILL DEPTH (FT.) D	CLEAR SPAN (FT.) S	CLEAR HEIGHT (FT.) H	TOP SLAB THK. T	BOTTOM SLAB THK B	SIDE WALL THK C	INTERIOR WALL THK. W	OVER ALL WIDTH OW	OVER ALL HEIGHT OH	SECTION LENGTH (FT.) SL	TOP SLAB REINF. STEEL LENGTH = OW - 4" + BENDS "a" SIZE	"a" L	Bent "b" SIZE	Bent "b" L	"c" SIZE	"c" L	"c" SPACING	"c" NO. REQ'D	BOTTOM SLAB REINF. STEEL LENGTH = OW - 4" + BENDS "d" SIZE	"d" L	Bent "b1" SIZE	Bent "b1" L	"f" SIZE	"f" L	"f" SPACING	"f" NO. REQ'D	SIDE WALL REINF. STEEL "f0" LENGTH = OH - 4" SIZE	SPACING	NO. REQ'D	LENGTH	INTERIOR WALL REINF. STEEL "f1" LENGTH = OH - 4" SIZE	SPACING	NO. REQ'D	LENGTH	TOP SLAB DISTRIBUTION REINF. STEEL "g" LENGTH = SL SIZE	SPACING	NO. REQ'D	BOTTOM SLAB DISTRIBUTION REINF. STEEL "e" LENGTH = SL SIZE	SPACING	NO. REQ'D	SIDE WALL DISTRIBUTION REINF. STEEL "d1" LENGTH = SL SIZE	SPACING	NO. REQ'D	INTERIOR WALL DISTRIBUTION REINF. STEEL "d2" LENGTH = SL SIZE	SPACING	NO. REQ'D

HDWL DEPTH. HD	ADDITIONAL REINF. FOR HDWL LBS.	"h" HDWL BARS SIZE	Y	LENGTH	NO. REQ'D

CLASS "S" CONCRETE CU. YDS.	REINFORCING STEEL (GR. 60) LBS.
TOTAL	

Design Fill Depth	Range of Actual Fill Depth
2	0.0 ft - 2.0 ft
5	>2.0 ft - 5.0 ft
10	>5.0 ft - 10.0 ft
15	>10.0 ft - 15.0 ft
20	>15.0 ft - 20.0 ft
25	>20.0 ft - 25.0 ft
30	>25.0 ft - 30.0 ft
35	>30.0 ft - 35.0 ft
40	>35.0 ft - 40.0 ft

Data shown for Mid-Section, Slope Section(s), and Skewed End Section is based on the design fill depth shown in the table, see PLAN AND PROFILE SHEETS for actual fill depth.

MID-SECTION

R.C. BOX SECTION	DESIGN FILL DEPTH (FT.) D	CLEAR SPAN (FT.) S	CLEAR HEIGHT (FT.) H	TOP SLAB THK. T	BOTTOM SLAB THK. B	SIDE WALL THK. C	INTERIOR WALL THK. W	OVER ALL WIDTH OW	OVER ALL HEIGHT OH	SECTION LENGTH (FT.) SL	TOP SLAB REINF. STEEL LENGTH = OW - 4" + BENDS "a" SIZE	"a" L	Bent "b" SIZE	Bent "b" L	"c" SIZE	"c" L	"c" SPACING	"c" NO. REQ'D	BOTTOM SLAB REINF. STEEL LENGTH = OW - 4" + BENDS "d" SIZE	"d" L	Bent "b1" SIZE	Bent "b1" L	"f" SIZE	"f" L	"f" SPACING	"f" NO. REQ'D	SIDE WALL REINF. STEEL "f0" LENGTH = OH - 4" SIZE	SPACING	NO. REQ'D	LENGTH	INTERIOR WALL REINF. STEEL "f1" LENGTH = OH - 4" SIZE	SPACING	NO. REQ'D	LENGTH	TOP SLAB DISTRIBUTION REINF. STEEL "g" LENGTH = SL SIZE	SPACING	NO. REQ'D	BOTTOM SLAB DISTRIBUTION REINF. STEEL "e" LENGTH = SL SIZE	SPACING	NO. REQ'D	SIDE WALL DISTRIBUTION REINF. STEEL "d1" LENGTH = SL SIZE	SPACING	NO. REQ'D	INTERIOR WALL DISTRIBUTION REINF. STEEL "d2" LENGTH = SL SIZE	SPACING	NO. REQ'D
A	5	10	9	12	12	8.5	8	43'-5"	11'-0"	49.5	5	43'-1"	7	44'-2"	4	43'-1"	17	34	4	43'-1"	4	44'-1"	4	43'-1"	11	54	6	6	198	10'-8"	4	12	294	10'-8"	4	9	119	4	9	119	4	12	18	4	12	54

CLASS "S" CONCRETE CU. YDS.	REINFORCING STEEL (GR. 60) LBS.
215.57	26889

SHEET 1 OF 2
DETAILS OF R.C. BOX CULVERT
QUADRUPLE BARREL BOX CULVERT
STA. 410+85

SPECIAL DETAILS

Ver. 1.1.17 FILENAME

DATE REVISED	DATE FILMED	DATE REVISED	DATE FILMED	FED. ROAD DIST. NO.	STATE	FED. AID PROJ. NO.	SHEET NO.	TOTAL SHEETS
				6	ARK.			
				JOB NO.		050347	17	121

(1) SPECIAL DETAILS

STATE OF ARKANSAS
REGISTERED PROFESSIONAL ENGINEER
No. 11856
CHARLES A. WYPE
4/30/2020

TABULAR DATA BY: CAW DATE: 09/27/18
CHECKED BY: LDG DATE: 08/16/19

OUTLET WINGWALL TABLE

OVER ALL WIDTH	CLEAR HEIGHT	FOOTING THK.	WING WALL THK.	BOX SKEW (DEG.)	SLOPE	HDWL LENGTH	HEEL	WALL HEIGHT AT HDWL	WALL HEIGHT AT WING END	WINGWALL ANGLE (DEGREE) WING A	WINGWALL ANGLE (DEGREE) WING B	FOOTING WIDTH AT WALL END	WIDTH OF WING FOOTINGS AT HDWL WING A	WIDTH OF WING FOOTINGS AT HDWL WING B	FOOTING DIMENSION PARALLEL WITH HDWL WING A	FOOTING DIMENSION PARALLEL WITH HDWL WING B	LENGTH OF WINGWALLS WING A	LENGTH OF WINGWALLS WING B	LENGTH OF FOOTING HEEL WING A	LENGTH OF FOOTING HEEL WING B
OW	H	WB	CW	SK	SL	K	HL	WH1	WH2	AF1	AF2	WE	WF1	WF2	G1	G2	W1	W2	W3	W4
43'-5"	9'-0"	0'-10"	0'-9"	40	3:1	54'-9 7/8"	2'-0"	9'-10"	3'-0"	0	60	3'-3"	4'-4 3/8"	5'-4 1/2"	1'-7 3/8"	3'-6 1/4"	20'-6"	41'-0"	22'-8 1/8"	46'-5 7/8"

CLASS "S" CONCRETE (Includes apron)	REINFORCING STEEL (Includes apron and laps if required)
OUTLET	OUTLET
CU.YD	LBS.
25.93	2117

	F1					F2				F3				F4				F5				F6					F7			F8				F9				F10			F11			F12				
WING	BAR SIZE	MAX. SPACING	NO. REQ'D	LENGTHS VARY		BAR SIZE	SPACING	NO. REQ'D	LENGTHS	BAR SIZE	SPACING	NO. REQ'D	LENGTHS	BAR SIZE	SPACING	NO. REQ'D	LENGTHS VARY	BAR SIZE	SPACING	NO. REQ'D	LENGTHS	BAR SIZE	SPACING	NO. REQ'D	LENGTHS VARY		BAR SIZE	NO. REQ'D	LENGTHS	BAR SIZE	SPACING	NO. REQ'D	LENGTHS VARY	BAR SIZE	SPACING	NO. REQ'D	LENGTHS	BAR SIZE	NO. REQ'D	LENGTHS	BAR SIZE	NO. REQ'D	LENGTHS	BAR SIZE	SPACING	NO. REQ'D	LENGTHS	REINF. STEEL QTY. PER WING (LBS)
WING A	4	12	21	L	Min	4'-2"	4	12	6	L	5'-2"	-	-	-	L	-	4	18	8	Min	4	18	14	L	Min	5'-11"	4	8	23'-6"	6	18	14	Min	4	18	2	Min	4	2	21'-2"	4	2	21'-4"	6	12	9	L	3'-4"	710
					Max	12'-0"											4'-10"				20'-2"				Max	12'-5"							2'-9"				28'-2"									
				X	Min	0'-10"				X	-						Max								Min	2'-5"							Max				Max							X	1'-8"	
					Max	2'-0"											18'-4"								Max	2'-5"							3'-10"				28'-2"									
				Y	Min	3'-5"				Y	-						Min								Min	3'-7"							Min				Min									
					Max	10'-1"																			Max	10'-1"																				
WING B	4	12	41	L	Min	4'-3"	4	12	18	L	6'-5"	-	-	-	L	-	4	18	8	Min	4	18	28	L	Min	5'-8"	4	8	47'-4"	6	18	30	Min	4	18	2	Min	4	2	41'-1"	4	2	46'-8"	6	12	9	L	3'-4"	1407
					Max	12'-11"											9'-10"				40'-8"				Max	12'-6"							2'-9"				33'-5"									
				X	Min	0'-10"				X	-						Max								Min	2'-5"							Max				Max							X	1'-8"	
					Max	2'-10"											36'-10"								Max	2'-5"							4'-11"				33'-5"									
				Y	Min	3'-6"				Y	-						Min								Min	3'-4"							Min				Min									
					Max	10'-2"																			Max	10'-2"																				

Min. Bar Lap Length	
#4	1'-9"
#5	2'-2"
#6	2'-7"
#7	3'-6"
#8	4'-7"

Bar Pin Dia. Table	
#4	3"
#5	3 3/4"
#6	4 1/2"
#7	5 1/4"
#8	6"

(1) Any Bar Lap Required for the Skewed End Section shall be considered subsidiary to the item "Reinforcing Steel - Roadway (Grade 60)."

OUTLET SKEWED END SECTION

| SKEW (DEGREE) | SLOPE | DESIGN FILL DEPTH (FT.) | CLEAR SPAN (FT.) | CLEAR HEIGHT (FT.) | SECTION LENGTH | TOP SLAB THK. | HDWL DEPTH | BOTTOM SLAB THK. | SIDE WALL THK. | INTERIOR WALL THK. | OVER ALL WIDTH | OVER ALL HEIGHT | TOP SLAB REINFORCING STEEL "a" SIZE | "a" SPACING | "a" LENGTHS VARY | "a" NO. REQ'D | TOP SLAB REINFORCING STEEL "c" SIZE | "c" SPACING | "c" LENGTHS VARY | "c" NO. REQ'D | BOTTOM SLAB REINFORCING STEEL "d" SIZE | "d" SPACING | "d" LENGTHS VARY | "d" NO. REQ'D | BOTTOM SLAB REINFORCING STEEL "f" SIZE | "f" SPACING | "f" LENGTHS VARY | "f" NO. REQ'D | SIDE WALL REINFORCING STEEL "f0" SIZE | "f0" SPACING | "f0" NO. REQ'D | "f0" LENGTH | INTERIOR WALL REINFORCING STEEL "f1" SIZE | "f1" SPACING | "f1" NO. REQ'D | "f1" LENGTH | TOP SLAB DISTRIBUTION REINFORCING STEEL "g" SIZE | "g" SPACING | "g" NO. REQ'D | "g" LENGTHS VARY | BOTTOM SLAB DISTRIBUTION REINFORCING STEEL "e" SIZE | "e" SPACING | "e" NO. REQ'D | "e" LENGTHS VARY | SIDE WALL DISTRIBUTION REINFORCING STEEL "d1" SIZE | "d1" SPACING | "d1" NO. REQ'D | "d1" LENGTH | INTERIOR WALL DISTRIBUTION REINFORCING STEEL "d2" SIZE | "d2" SPACING | "d2" NO. REQ'D | "d2" LENGTH | CLASS "S" CONCRETE (Includes HDWL) | REINFORCING STEEL (GR 60) (Includes HDWL) |
|---|---|---|---|---|---|---|---|---|---|---|---|---|---|---|---|---|---|---

DATE REVISED	DATE FILMED	DATE REVISED	DATE FILMED	FED. ROAD DIST. NO.	STATE	FED. AID PROJ. NO.	SHEET NO.	TOTAL SHEETS
				6	ARK.			
				JOB NO.		050347	18	121

1 SPECIAL DETAILS

Note: For fill depths 10' and under, use Mid-Section full length of box culvert.

2:1 Slope	20'-0"	10'-0"	10'-0"	10'-0"	10'-0"	10'-0"	10'-0"	
3:1 Slope	30'-0"	15'-0"	15'-0"	15'-0"	15'-0"	15'-0"	15'-0"	
4:1 Slope	40'-0"	20'-0"	20'-0"	20'-0"	20'-0"	20'-0"	20'-0"	

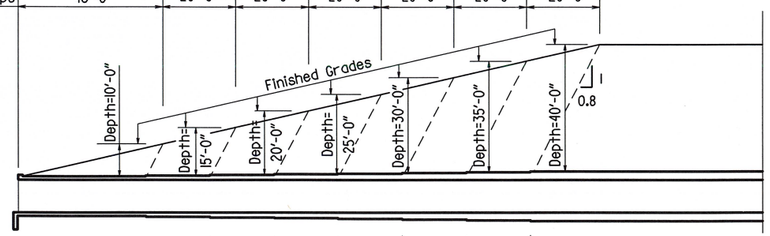

Slope Section Length @ 2:1 Slope	A=12'-0"	B=6'-0"	C=6'-0"	D=6'-0"	E=6'-0"	F=6'-0"	G=6'-0"	Mid-Section Length - Varies
Slope Section Length @ 3:1 Slope	A=22'-0"	B=11'-0"	C=11'-0"	D=11'-0"	E=11'-0"	F=11'-0"	G=11'-0"	Mid-Section Length - Varies
Slope Section Length @ 4:1 Slope	A=32'-0"	B=16'-0"	C=16'-0"	D=16'-0"	E=16'-0"	F=16'-0"	G=16'-0"	Mid-Section Length - Varies

LONGITUDINAL SECTION LENGTH SCHEDULE FOR VARYING FILL DEPTHS OVER 10'

Lengths for Non-Skewed Boxes

*LL = Skewed End Section Length - See "Skewed End Section Details" Length LL varies with skew angle, overall box width and fill depth and may eliminate the need for some slope section lengths as shown.

Section Length	*LL		C	D	E	F	G	Mid-Section Length - Varies	
Section Length	*LL	B	C	D	E	F	G	Mid-Section Length - Varies	
Section Length	*LL	A	B	C	D	E	F	G	Mid-Section Length - Varies
		Depth 10'-0"	Depth 15'-0"	Depth 20'-0"	Depth 25'-0"	Depth 30'-0"	Depth 35'-0"	Depth 40'-0"	

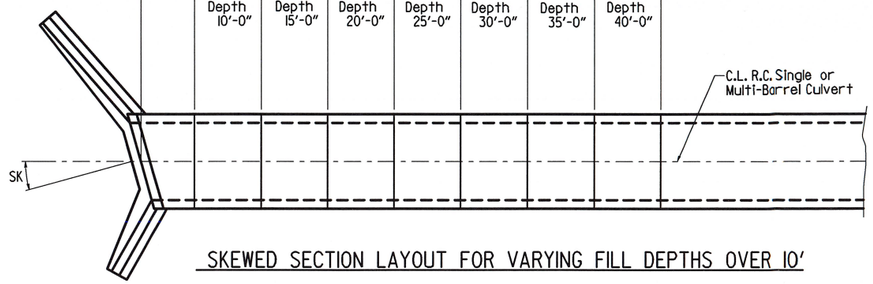

SKEWED SECTION LAYOUT FOR VARYING FILL DEPTHS OVER 10'



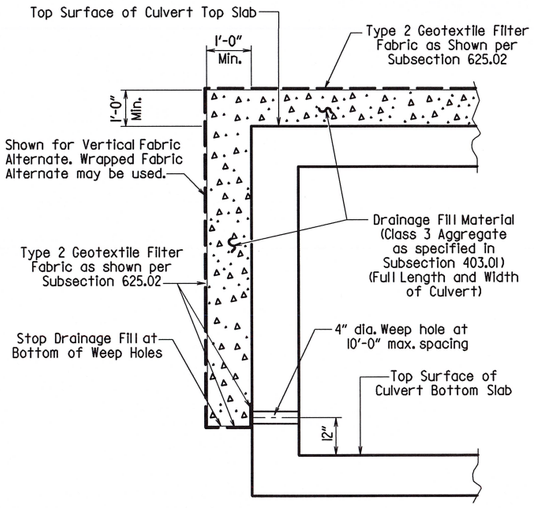

CULVERT DRAINAGE DETAIL FOR ROCK FILL

This detail shall be used when rock fill is specified for embankment construction.

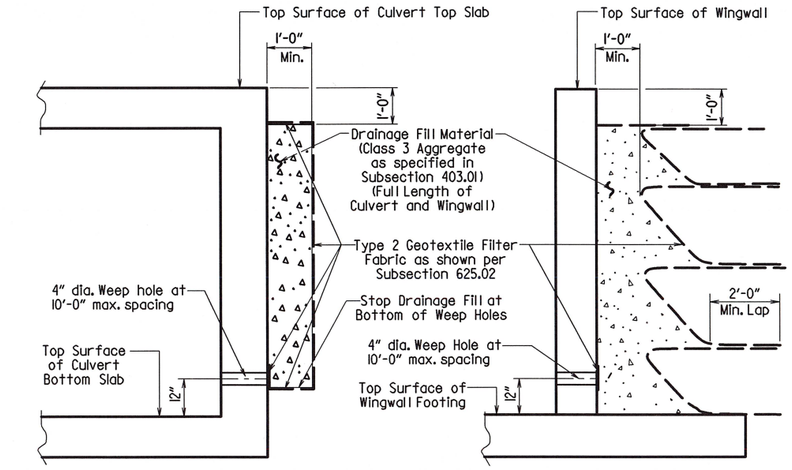

For Details of Excavation and Pay Limits, see Standard Drawing RCB-2.

VERTICAL FABRIC ALTERNATE
(Shown for Culvert, Similar for Wingwall)

WRAPPED FABRIC ALTERNATE
(Shown for Wingwall, Similar for Culvert)

WINGWALL & CULVERT DRAINAGE DETAIL

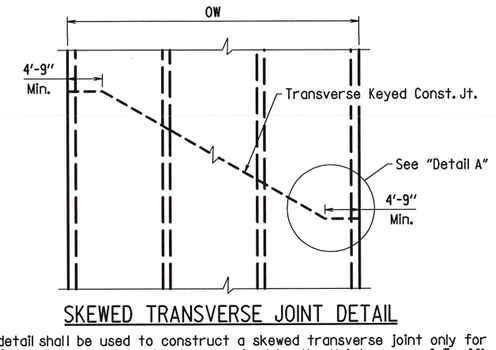

SKEWED TRANSVERSE JOINT DETAIL

This detail shall be used to construct a skewed transverse joint only for Multi-Barrel Culverts and only when required by the Maintenance of Traffic Plans. Otherwise, transverse joints should be made normal to the centerline of the barrel.

Slab bars "a", "b", "c", "d", "b1", or "f". Slab distribution and Wall reinforcing omitted for clarity.

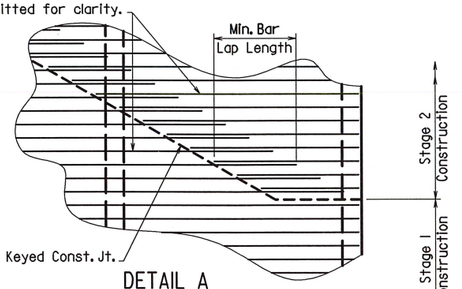

DETAIL A

See Tabular Data Sheets for Minimum Bar Lap Lengths.

Shown for transverse reinforcing, longitudinal reinforcing similar.

GENERAL NOTES:

CONSTRUCTION SPECIFICATIONS: Arkansas State Highway and Transportation Department Standard Specifications for Highway Construction (2014 edition) with applicable Supplemental Specifications and Special Provisions. Section and Subsection refer to the Standard Construction Specifications unless otherwise noted in the Plans.

DESIGN SPECIFICATIONS: AASHTO LRFD Bridge Design Specifications, Fifth Edition (2010) with 2010 interim revisions.

LIVE LOADING: HL-93

All concrete shall be Class S with a minimum 28-day compressive strength of 3,500 psi and shall be poured in the dry. All exposed corners to have ¾" chamfers.

Reinforcing Steel shall be Grade 60 (yield strength = 60,000 psi) conforming to AASHTO M31 or M322, Type A, with mill test reports.

Reinforcing Steel Tolerances: The tolerances for reinforcing steel shall meet those listed in 'Manual of Standard Practice' published by Concrete Reinforcing Steel Institute (CRSI) except that the tolerance for truss bars such as Figure 3 on page 7-4 of the CRSI Manual shall be minus zero to plus 1/2 inch.

Excavation and backfilling shall be in accordance with the requirements of Section 801.

Membrane Waterproofing shall conform to the requirements of Section 815. Membrane Waterproofing shall be Type C and as directed by the Engineer applied to all construction joints in the top slab and the sidewalls of R.C. Box culverts and to the construction joint between wingwalls and R.C. Box culvert walls.

Weep Holes in box culvert walls shall have a maximum horizontal spacing of 10'-0" and shall be spaced to clear all reinforcing steel. The drain opening shall be 4" diameter and shall be placed 12" above the top of the bottom slab.

Weep Holes in wingwalls shall have a maximum horizontal spacing of 10'-0" and shall be spaced to clear all reinforcing steel. There shall be a minimum of two (2) weep holes in each wingwall. The drain opening shall be 4" diameter and shall be placed 12" above the top of the wingwall footing.

The barrel components of the culvert may be constructed using continuous pours. For longer culvert construction, the Contractor may use multiple pours with transverse construction joints spaced a minimum of 50 feet apart unless superseded by stage construction or site constraints as approved by the Engineer. Construction joints between footings and walls shall be made only where shown in the Plans. Joints shall be keyed and shall be normal to the centerline of barrel except as noted. Reinforcing shall be continuous through joints unless noted otherwise. Reinforcing through stage construction joints shall provide the minimum bar lap length shown on the Tabular Data Sheets. All longitudinal construction joints shall be submitted to the Engineer for approval.

Membrane Waterproofing, Weep Holes, Geotextile Filter Fabric, and Drainage Fill Material will not be paid for directly but shall be considered subsidiary to Class S Concrete.

When the top slab of the box culvert serves as finished roadway surface, curing and finishing shall be in accordance with subsections 802.17 and 802.20 for bridge roadway surface and a tine finish shall be applied in accordance with subsection 802.19 for Class 5 Tined Bridge Roadway Surface Finish. Curing and finishing shall not be paid for directly, but shall be considered incidental to the item "Class S Concrete-Roadway". Class 1 Protective Surface Treatment shall be applied to the roadway surface and this work shall be paid for under the unit price bid for "Class 1 Protective Surface Treatment".

When precast reinforced concrete box culverts are substituted for cast in place box culverts, they shall be manufactured according to ASTM C 1577 and meet the requirements of Section 607. When the top slab of the box culvert serves as the finished roadway surface, a precast reinforced concrete box culvert substitution is not allowed.

SHEET 1 OF 4

GENERAL DETAILS OF R.C. BOX CULVERT

GENERAL NOTES & LONGITUDINAL SECTION LENGTH SCHEDULE

SPECIAL DETAILS

V 1.1.7 FILENAME

DATE REVISED	DATE FILMED	DATE REVISED	DATE FILMED	FED. ROAD DIST. NO.	STATE	FED. AID PROJ. NO.	SHEET NO.	TOTAL SHEETS
				6	ARK.			
				JOB NO.		050347	19	121

SPECIAL DETAILS

Note: When top slab of culvert serves as finished roadway surface, see General Notes on Sheet 1 of 4.

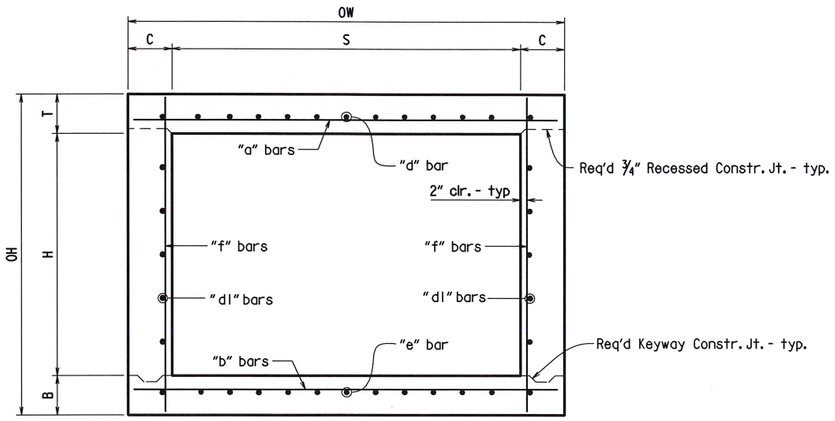

TYPICAL SECTION M-M

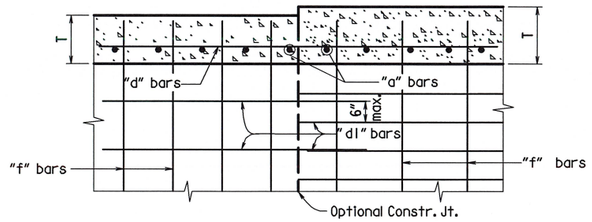

Longitudinal Bar Spacing at individual sections shall be maintained, which may result in noncontact bar laps.

LONGITUDINAL LAP DETAIL AT CHANGE IN SECTIONS

TOP SLAB SHOWN, BOTTOM SLAB SIMILAR

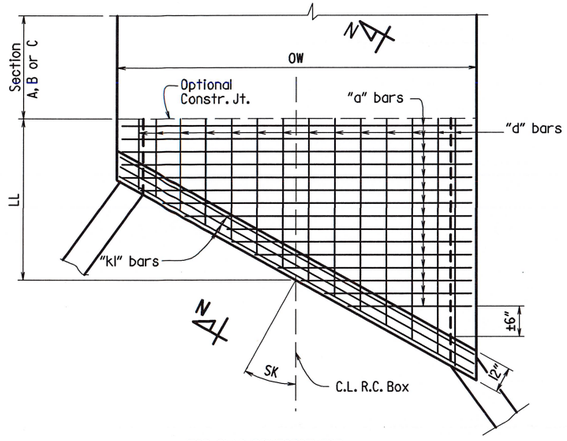

TOP SLAB REINFORCEMENT

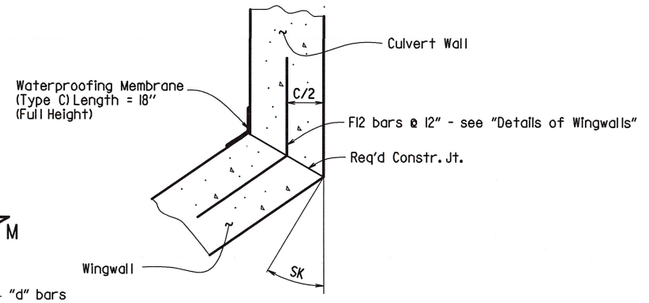

WINGWALL ATTACHMENT

See "Details of Wingwalls" for additional information and wingwall details.

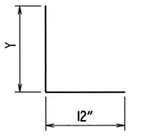

"h" bars sketch

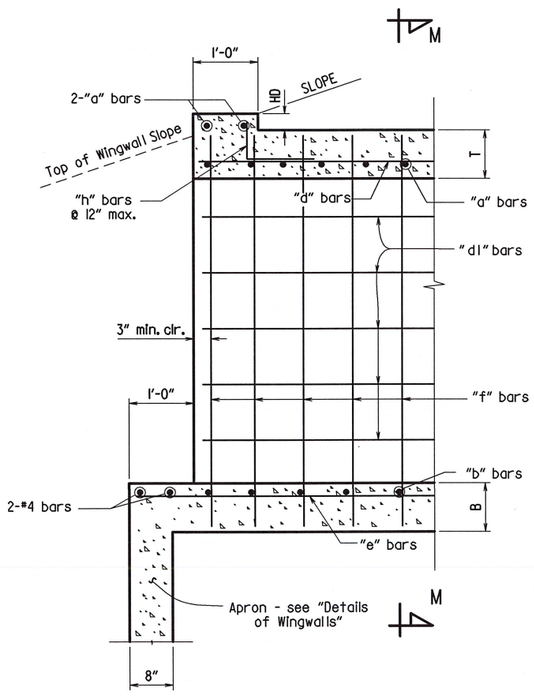

PART LONGITUDINAL SECTION

(Non-Skewed Ends)

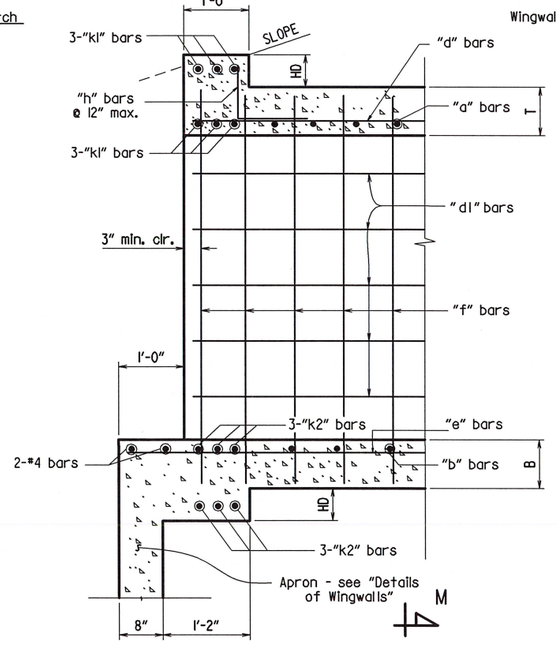

PART LONGITUDINAL SECTION N-N

(Skewed Ends)

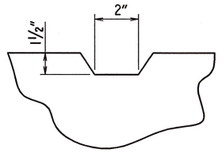

TYPICAL KEYWAY DETAIL

(All Construction Joints)

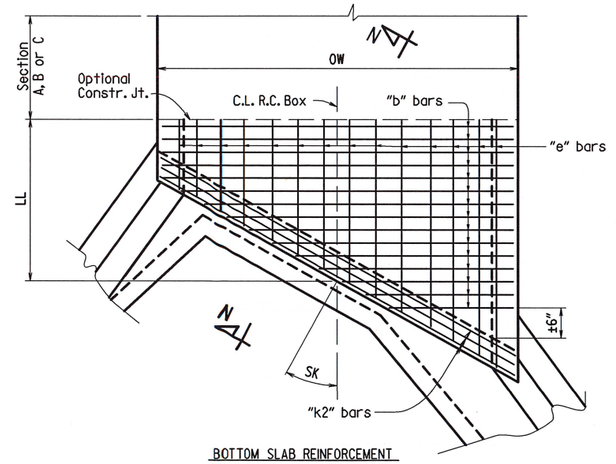

BOTTOM SLAB REINFORCEMENT

SKEWED END SECTION DETAILS

SHEET 2 OF 4
GENERAL DETAILS OF R.C. BOX CULVERT

DETAILS OF SINGLE BARREL R.C. BOX CULVERT

SPECIAL DETAILS

STATE OF ARKANSAS
REGISTERED PROFESSIONAL ENGINEER
No. 11856
CHARLES A. WIPF
11/20/2020

V 1.1.17 FILENAME

DATE REVISED	DATE FILMED	REVISED	DATE FILMED	FED. ROAD DIST. NO.	STATE	FED. AID PROJ. NO.	SHEET NO.	TOTAL SHEETS
				6	ARK.			
				JOB NO.		050347	20	121

SPECIAL DETAILS

① 2" clr. for fill depth (D) greater than 2 ft.
2½" clr. for fill depth (D) equal to or less than 2 ft.

Note: When top slab of culvert serves as finished roadway surface, see General Notes on Sheet 1 of 4.

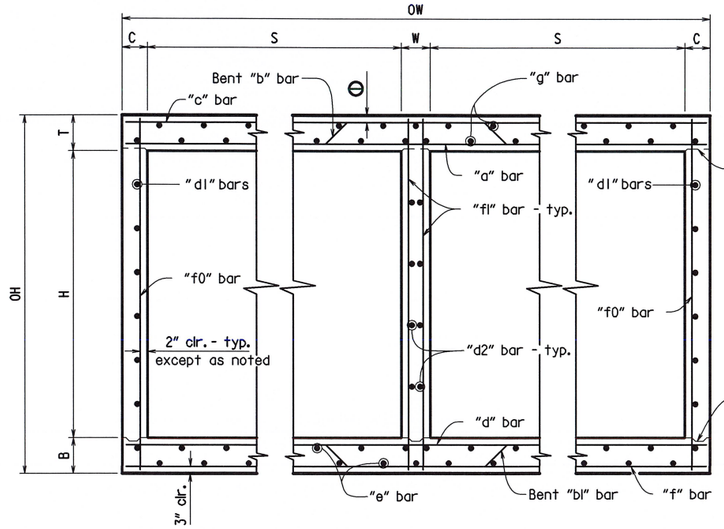

TYPICAL SECTION M-M

Top Slab
Straight "c" bars shall alternate with Bent "b" bars in top.
Straight "a" bars shall alternate with Bent "b" bars in bottom.

Bottom Slab
Straight "d" bars shall alternate with Bent "bl" bars in top.
Straight "f" bars shall alternate with Bent "bl" bars in bottom.

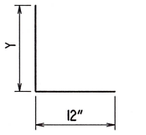

"h" bars sketch

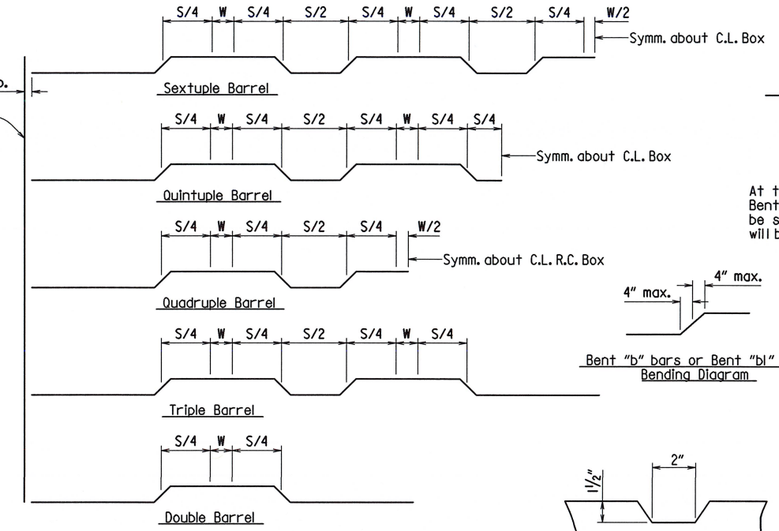

Bent "b" bars or Bent "bl" bars sketch

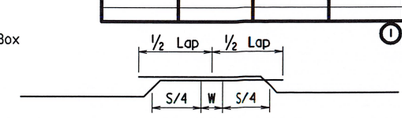

Lap Detail
For Bent "b" bars and Bent "bl" bars

At the Contractor's option in lieu of providing Bent "b" or Bent "bl" bars, one bar top and bottom of equivalent size may be substituted for each bent bar. Payment for the reinforcing will be based on the weight of the "b" or "bl" bar.

Bent "b" bars or Bent "bl" bars Bending Diagram

TYPICAL KEYWAY DETAIL

(All Construction Joints)

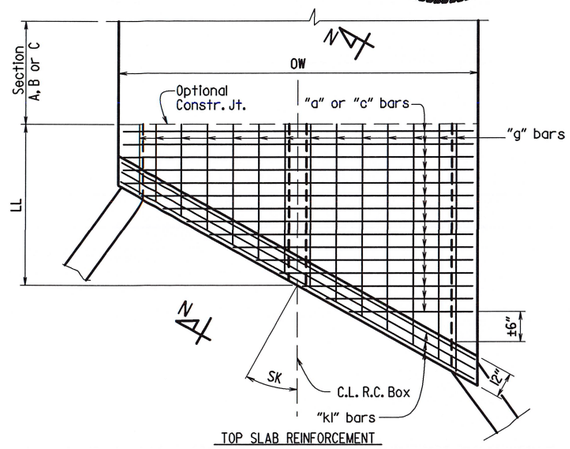

TOP SLAB REINFORCEMENT
Straight "c" bars in top.
Straight "a" bars in bottom.

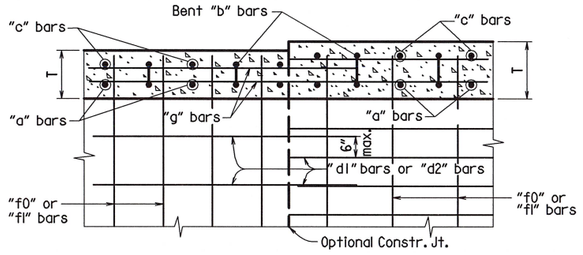

Longitudinal Bar Spacing at individual sections shall be maintained, which may result in noncontact bar laps.

LONGITUDINAL LAP DETAIL AT CHANGE IN SECTIONS

TOP SLAB SHOWN, BOTTOM SLAB SIMILAR

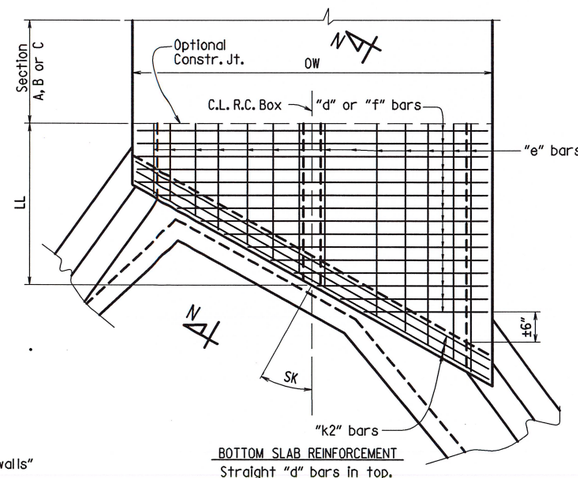

BOTTOM SLAB REINFORCEMENT
Straight "d" bars in top.
Straight "f" bars in bottom.

SKEWED END SECTION DETAILS

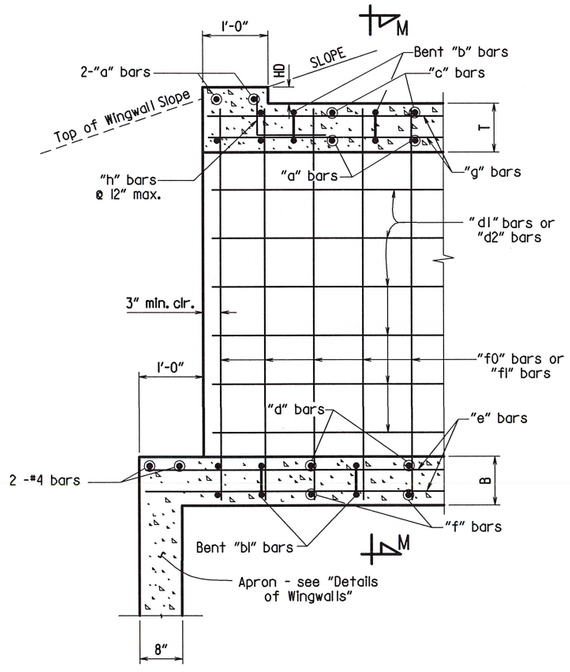

PART LONGITUDINAL SECTION

(Non-Skewed Ends)

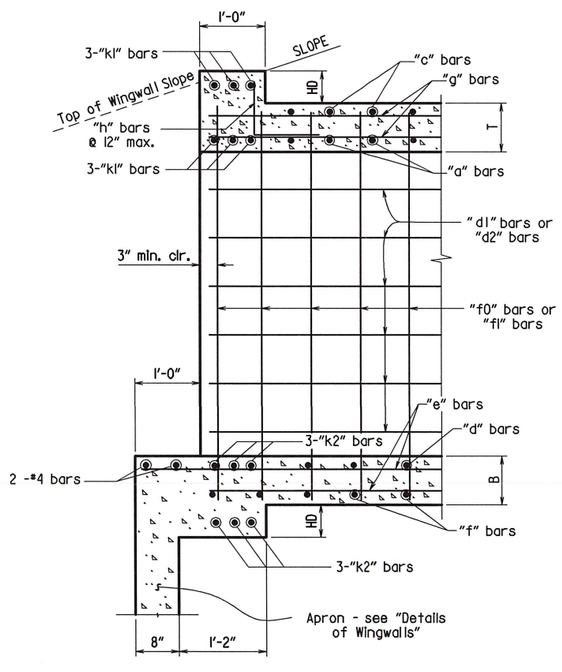

PART LONGITUDINAL SECTION N-N

(Skewed Ends)

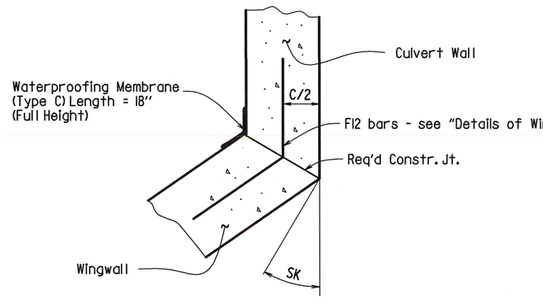

WINGWALL ATTACHMENT

See "Details of Wingwalls" for additional information and wingwall details.

SHEET 3 OF 4
GENERAL DETAILS OF R.C. BOX CULVERT
DETAILS OF MULTI-BARREL R.C. BOX CULVERT

SPECIAL DETAILS

STATE OF ARKANSAS
REGISTERED PROFESSIONAL ENGINEER
No. 11856
CHARLES A. WIPF
4/12/2022

V_LI17 FILENAME

DATE REVISED	DATE FILMED	DATE REVISED	DATE FILMED	FED. ROAD DIST. NO.	STATE	FED. AID PROJ. NO.	SHEET NO.	TOTAL SHEETS
				6	ARK.			
				JOB NO.		050347	21	121

SPECIAL DETAILS

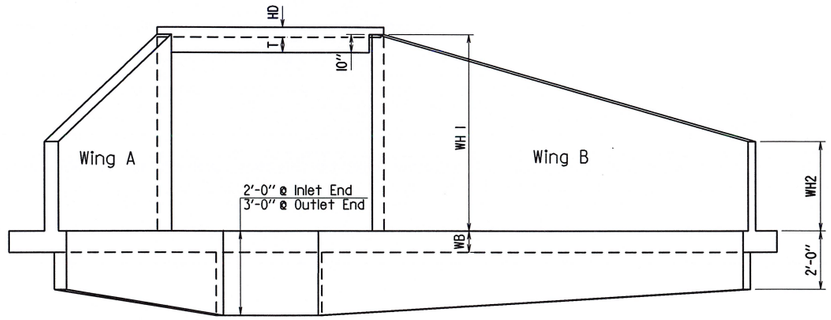

END ELEVATION

Flared Wingwalls Shown

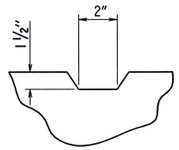

TYPICAL KEYWAY DETAIL

All Construction Joints

PART PLAN - FLARED WINGWALLS

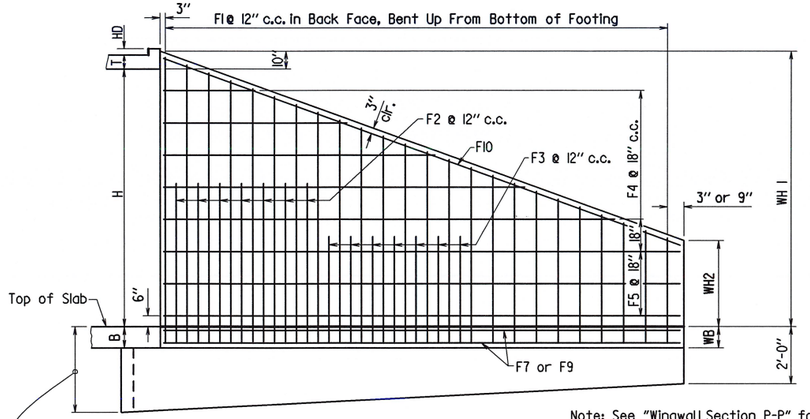

WINGWALL ELEVATION

Showing Back Face Reinforcement

Note: See "Wingwall Section P-P" for additional details and reinforcing.

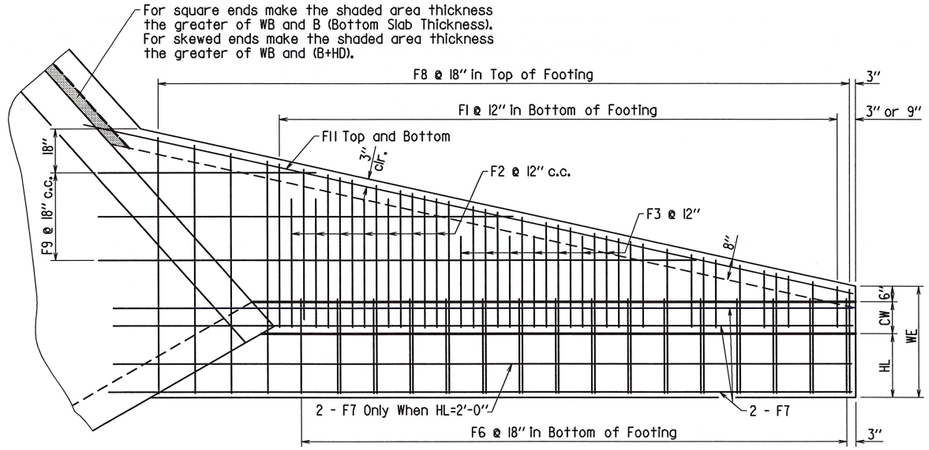

PLAN - FLARED WINGWALLS

Showing Footing Reinforcement

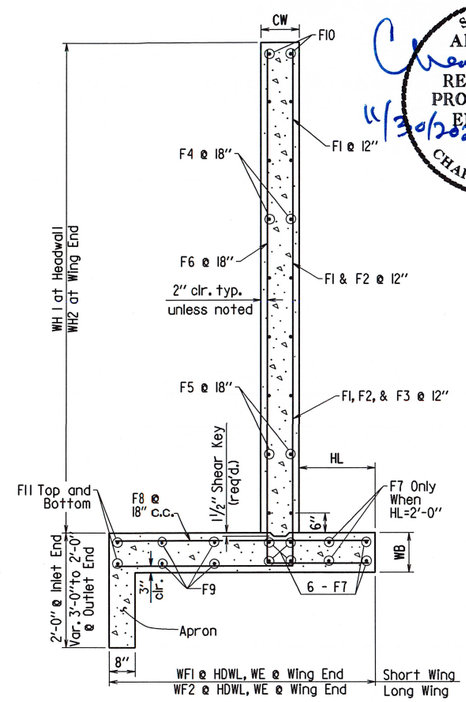

WINGWALL SECTION P-P

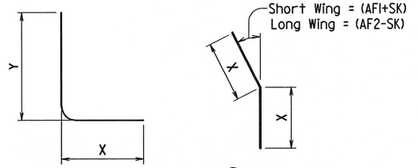

F1, F2, F3, & F6 BARS

ΦF12 BAR

ΦF12 is a straight bar for parallel wingwalls

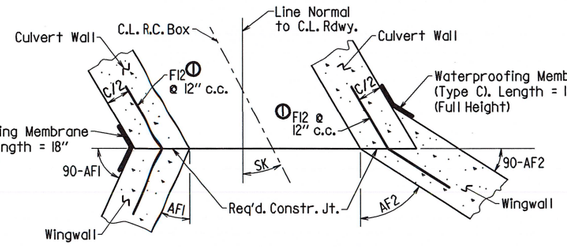

CONSTRUCTION JOINTS

Flared Wingwalls Shown

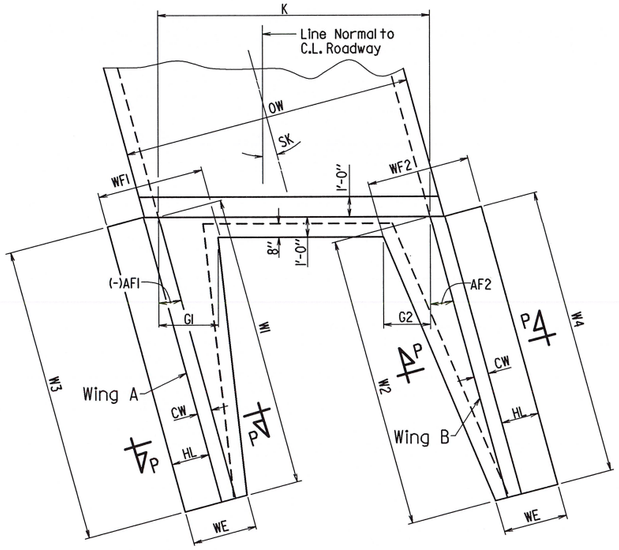

PART PLAN - PARALLEL WINGWALLS

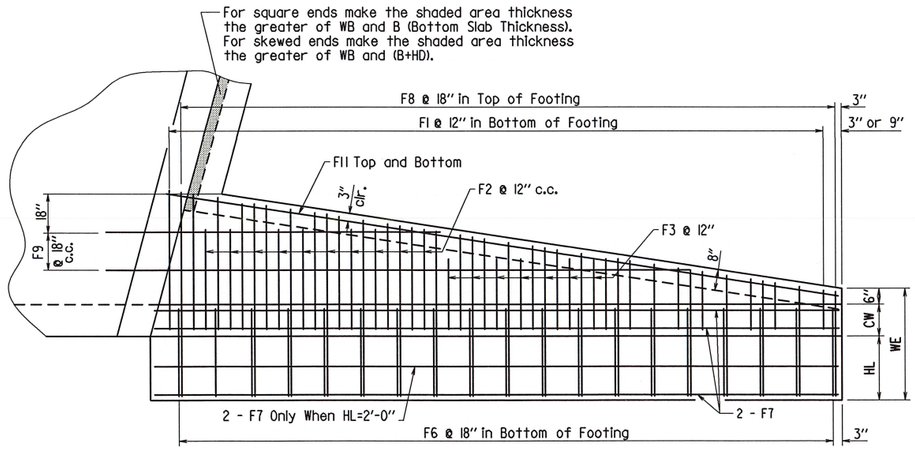

PLAN - PARALLEL WINGWALLS

Showing Footing Reinforcement

SHEET 4 OF 4
GENERAL DETAILS OF R.C. BOX CULVERT
DETAILS OF WINGWALLS
SPECIAL DETAILS

STATE OF ARKANSAS
REGISTERED PROFESSIONAL ENGINEER
No. 11856
CHARLES A. WIPF
11/30/2020

V 1.117 FILENAME

DATE REVISED	DATE FILMED	DATE REVISED	DATE FILMED	FED.RD. DIST.NO.	STATE	FED.AID PROJ.NO.	SHEET NO.	TOTAL SHEETS
				6	ARK.			
				JOB NO.		050347	22	121

(2) TEMPORARY EROSION CONTROL DETAILS

STATE OF ARKANSAS
LICENSED PROFESSIONAL ENGINEER
No. 15560
JEROME PAUL DAVIS
11-30-2020

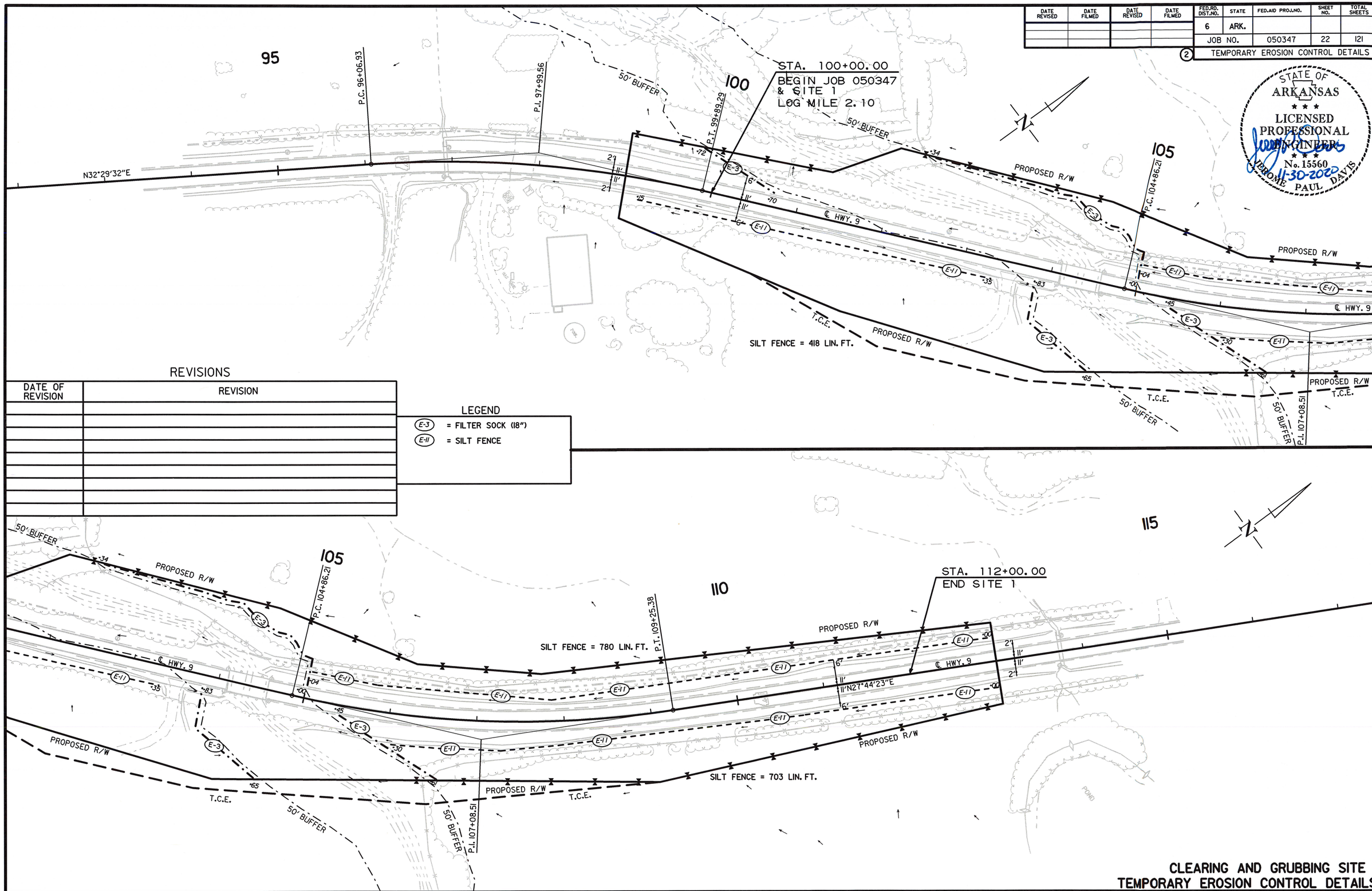

REVISIONS

DATE OF REVISION	REVISION

LEGEND

(E-3) = FILTER SOCK (18")
(E-11) = SILT FENCE

USER: ap5181
DESIGN FILE: G:\18105601_050347hwy9\TRANSP\dgn\erosion\r050347_EC.dgn
PLOTTED: 11/30/2020 12:19
SCALE: 1:100

CLEARING AND GRUBBING SITE 1
TEMPORARY EROSION CONTROL DETAILS

G:\18105601_050347hwy9\TRANSP\dgn\erosion\r050347_EC.dgn 11/30/2020 12:19

DATE REVISED	DATE FILMED	DATE REVISED	DATE FILMED	FED.RD. DIST.NO.	STATE	FED.AID PROJ.NO.	SHEET NO.	TOTAL SHEETS
				6	ARK.			
				JOB NO.		050347	23	121

(2) TEMPORARY EROSION CONTROL DETAILS

STATE OF ARKANSAS
LICENSED PROFESSIONAL ENGINEER
No. 15560
JEROME PAUL DAVIS
11-30-2020

REVISIONS

DATE OF REVISION	REVISION

LEGEND

- (E-3) = FILTER SOCK (18")
- (E-5) = SAND BAG DITCH CHECKS
- (E-6) = ROCK DITCH CHECKS
- (E-11) = SILT FENCE
- E-14 =SEDIMENT BASIN XXXX CU.FT.

STA. 100+00.00
BEGIN JOB 050347
& SITE 1
LOG MILE 2.10

STA. 112+00.00
END SITE 1

N32°29'32"E
P.C. 96+06.93
P.I. 97+99.56
P.T. 99+89.29
P.I. 101+06.15
P.C. 99+94.95
P.C. 104+86.21
P.T. 102+16.19
P.C. 102+39.30
P.I. 106+11.14
P.I. 107+08.51
P.T. 109+25.38
P.I. 110+28.41
P.T. 111+00.57
P.C. 101+55.92
P.T. 101+43.09
N49°41'54"E
N64°04'45"E
N18°20'13"E
N27°44'23"E
PROPOSED R/W
CONST. LIMITS
T.C.E.
℄ HWY. 9
℄ DETOUR HWY. 9
50' BUFFER
107 CU.YD.
133 CU.YD.
POND
95
100
105
110
115

STAGE I SITE I
TEMPORARY EROSION CONTROL DETAILS

USER: dp5181
DESIGN FILE: G:\1810560I_050347hwy9\TRANSP\dgn\erosion\r050347_EC.dgn
PLOTTED: 11/30/2020 12:19
SCALE: 1:100

G:\1810560I_050347hwy9\TRANSP\dgn\erosion\r050347_EC.dgn 11/30/2020 12:19

DATE REVISED	DATE FILMED	DATE REVISED	DATE FILMED

FED.RD. DIST.NO.	STATE	FED.AID PROJ.NO.	SHEET NO.	TOTAL SHEETS
6	ARK.			
JOB NO.		050347	24	121

(2) TEMPORARY EROSION CONTROL DETAILS

STATE OF ARKANSAS
LICENSED PROFESSIONAL ENGINEER
No. 15560
11-30-2020
JEROME PAUL DAVIS

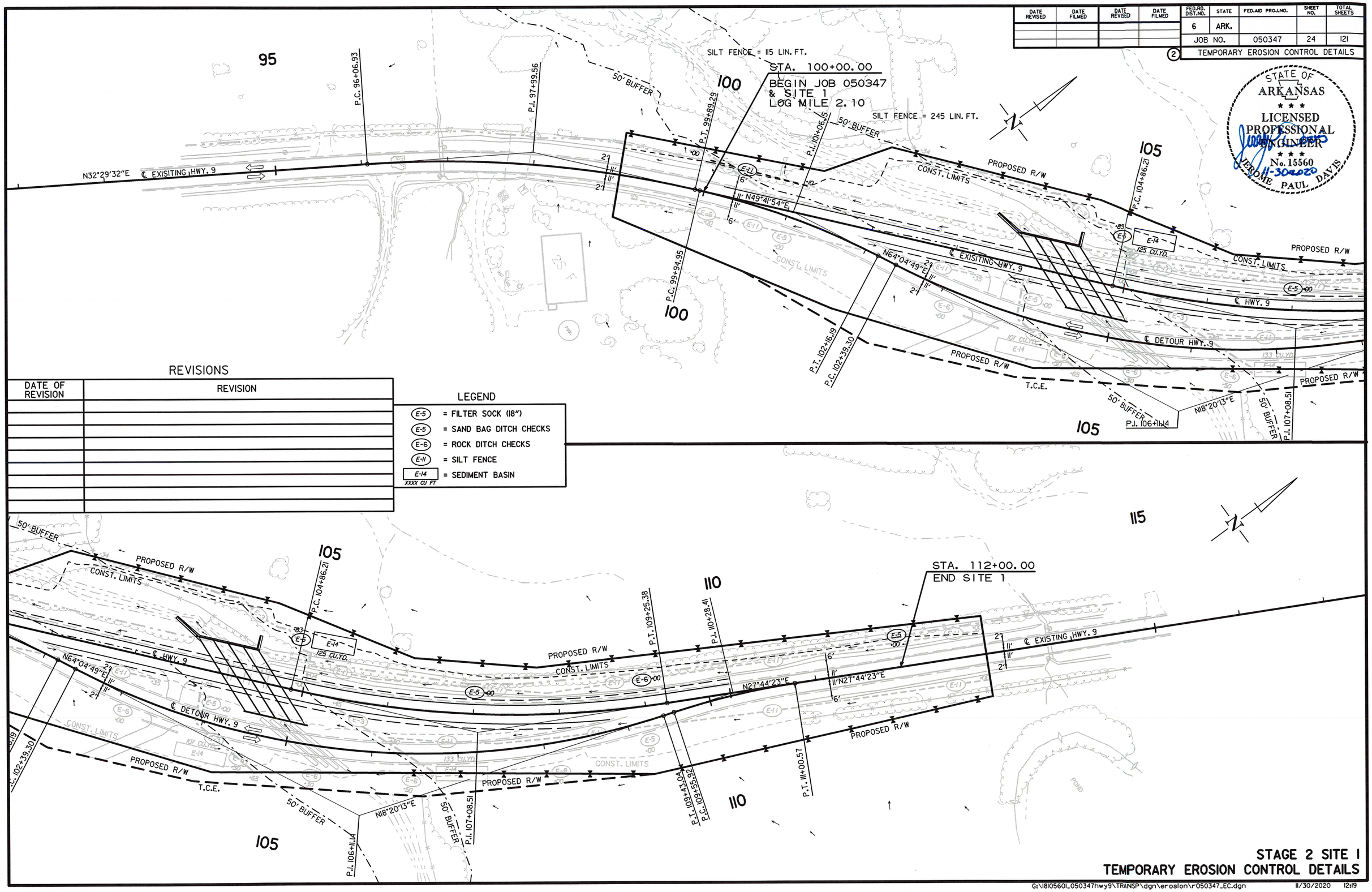

REVISIONS

DATE OF REVISION	REVISION

LEGEND

- E-5 = FILTER SOCK (18")
- E-5 = SAND BAG DITCH CHECKS
- E-6 = ROCK DITCH CHECKS
- E-11 = SILT FENCE
- E-14 XXXX CU FT = SEDIMENT BASIN

STAGE 2 SITE 1
TEMPORARY EROSION CONTROL DETAILS

USER: ap5181
DESIGN FILE: G:\1810560I_050347hwy9\TRANSP\dgn\erosion\r050347_EC.dgn
PLOTTED: 11/30/2020 12:19
SCALE: 1:100

G:\1810560I_050347hwy9\TRANSP\dgn\erosion\r050347_EC.dgn 11/30/2020 12:19

DATE REVISED	DATE FILMED	DATE REVISED	DATE FILMED	FED.RD. DIST.NO.	STATE	FED.AID PROJ.NO.	SHEET NO.	TOTAL SHEETS
				6	ARK.			
				JOB NO.		050347	25	121

(2) TEMPORARY EROSION CONTROL DETAILS

STATE OF ARKANSAS
LICENSED PROFESSIONAL ENGINEER
No. 15560
11-30-2020
JEROME PAUL DAVIS

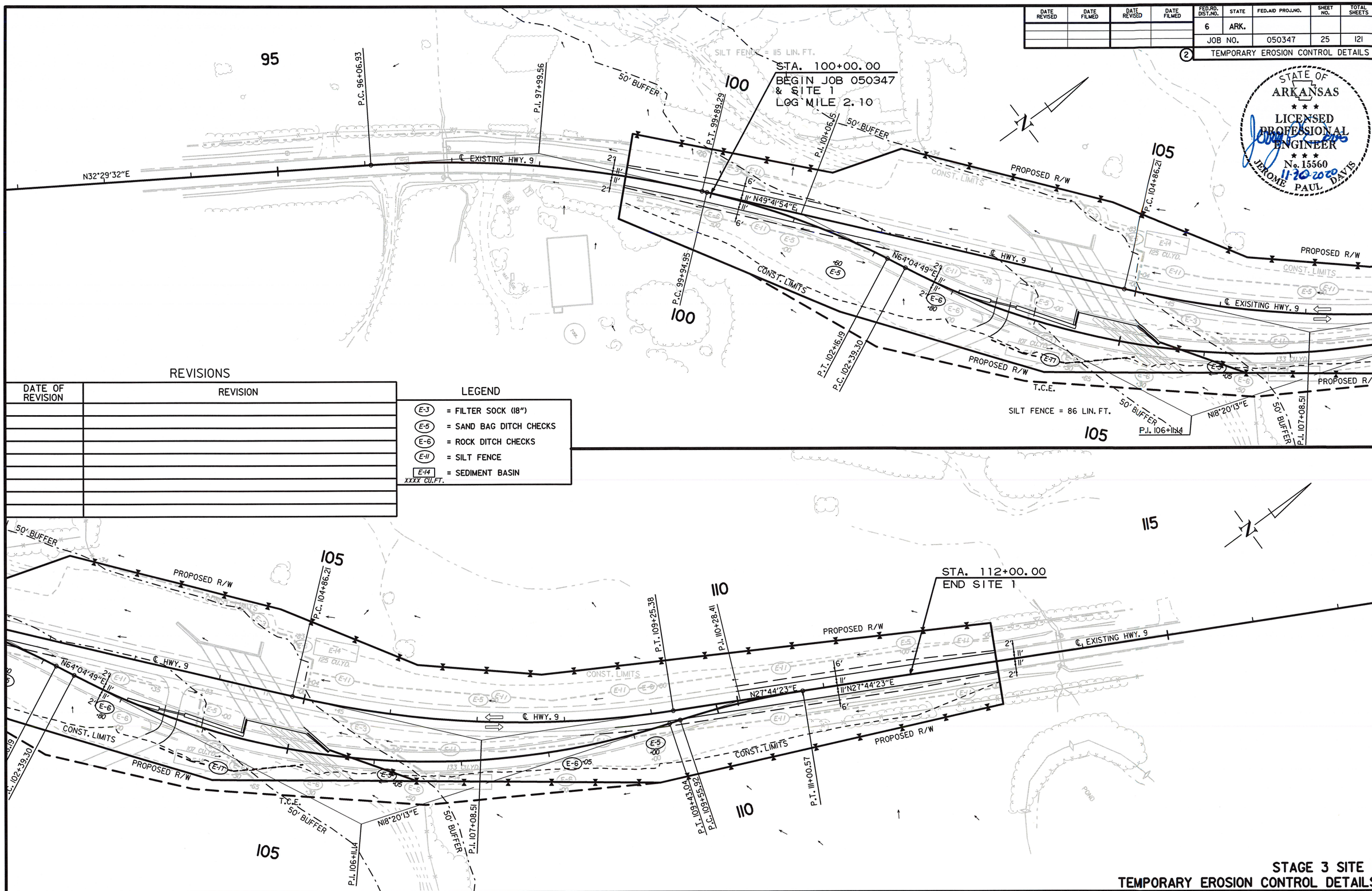

REVISIONS

DATE OF REVISION	REVISION

LEGEND

- (E-3) = FILTER SOCK (18")
- (E-5) = SAND BAG DITCH CHECKS
- (E-6) = ROCK DITCH CHECKS
- (E-11) = SILT FENCE
- [E-14] XXXX CU.FT. = SEDIMENT BASIN

STAGE 3 SITE 1
TEMPORARY EROSION CONTROL DETAILS

USER: ap5181
DESIGN FILE: G:\18105601_050347hwy9\TRANSP\dgn\erosion\r050347_EC.dgn
PLOTTED: 11/30/2020 12:19
SCALE: 1:100

G:\18105601_050347hwy9\TRANSP\dgn\erosion\r050347_EC.dgn 11/30/2020 12:19

DATE REVISED	DATE FILMED	DATE REVISED	DATE FILMED

FED.RD. DIST.NO.	STATE	FED.AID PROJ.NO.	SHEET NO.	TOTAL SHEETS
6	ARK.			
JOB NO.		050347	26	121

2 TEMPORARY EROSION CONTROL DETAILS

STATE OF ARKANSAS
LICENSED PROFESSIONAL ENGINEER
No. 15560
JEROME PAUL DAVIS
11-30-2020

200

P.O.B. 197+00.00

SILT FENCE = 604 LIN. FT.

PROPOSED R/W

P.C. 201+38.07

P.I. 203+10.32

℄ EXISTING HWY. 9

N33°42'53"E

S56°17'07"E

P.O.B. 0+00.00
P.C. 0+38.55

P.I. 0+70.57

N88°12'02"E

P.C. 1+63.19

T.C.E.

P.T. 2+10.57

P.T. 1+00.53

T.C.E.

P.I. 1+86.95

N1°20'33"E

P.O.E. 2+90.48

PROPOSED R/W

SILT FENCE = 245 LIN. FT.

STA. 198+75.57
BEGIN SITE 2
LOG MILE 2.71

2

25' BUFFER

T.C.E.

P.T. 204+18.29

205

SILT FENCE = 262 LIN. FT.

210

PROPOSED R/W

℄ EXISTING HWY. 9

N55°49'43"E

25' BUFFER

SILT FENCE = 522 LIN. FT.

PROPOSED R/W

SILT FENCE = 969 LIN. FT.

P.C. 212+35.52

P.I. 213+17.66

P.T. 213+99.71

215

PROPOSED R/W

℄ EXISTING HWY. 9

PROPOSED R/W

P.O.E. 219+00.00

STA. 216+25.00
END SITE 2

REVISIONS

DATE OF REVISION	REVISION

LEGEND

E-3 = FILTER SOCK (18")

E-11 = SILT FENCE

CLEARING AND GRUBBING SITE 2
TEMPORARY EROSION CONTROL DETAILS

G:\1810560L_050347hwy9\TRANSP\dgn\erosion\r050347_EC.dgn 11/30/2020 12:19

USER: ap5181
DESIGN FILE: G:\1810560L_050347hwy9\TRANSP\dgn\erosion\r050347_EC.dgn
PLOTTED: 11/30/2020 12:19
SCALE: 1:100

DATE REVISED	DATE FILMED	DATE REVISED	DATE FILMED	FED.RD. DIST.NO.	STATE	FED.AID PROJ.NO.	SHEET NO.	TOTAL SHEETS
				6	ARK.			
				JOB NO.		050347	27	121

2 TEMPORARY EROSION CONTROL DETAILS

STATE OF ARKANSAS
LICENSED PROFESSIONAL ENGINEER
No. 15560
JEROME PAUL DAVIS
11-30-2020

TEMPORARY PAVEMENT

200

P.O.B. 197+00.00

PROPOSED R/W

CONST. LIMITS

℄ EXISTING HWY. 9

N33°42'53"E

P.C. 201+38.07

P.I. 203+10.32

T.C.E.

205

P.T. 204+78.29

PROPOSED R/W

℄ HWY. 9

S59°17'07"E

P.O.B. 0+00.00
P.C. 0+38.55

2

P.I. 0+70.57

N88°12'02"E

P.C. 1+63.19

P.T. 2+10.57

P.T. 1+00.53

P.I. 1+86.95

T.C.E.

N77°20'33"E

P.O.E. 2+90.48

PROPOSED R/W

210

℄ EXISTING HWY. 9

N55°49'43"E

25' BUFFER

PROPOSED R/W

CONST. LIMITS

STA. 198+75.57
BEGIN SITE 2
LOG MILE 2.71

REVISIONS

DATE OF REVISION	REVISION

LEGEND

- E-3 = FILTER SOCK (18")
- E-5 = SAND BAG DITCH CHECKS
- E-6 = ROCK DITCH CHECKS
- E-11 = SILT FENCE
- E-14 XXXX CU FT = SEDIMENT BASIN

TEMPORARY PAVEMENT

PROPOSED R/W

℄ EXISTING HWY. 9

P.C. 212+35.52

P.I. 213+17.66

P.T. 213+99.71

CONST. LIMITS

215

PROPOSED R/W

℄ EXISTING HWY. 9

P.O.E. 219+00.00

STA. 216+25.00
END SITE 2

STAGE I SITE 2
TEMPORARY EROSION CONTROL DETAILS

USER: qp5181
DESIGN FILE: G:\18105601_050347hwy9\TRANSP\dgn\erosion\r050347_EC.dgn
PLOTTED: 11/30/2020 12:19
SCALE: 1:100

G:\18105601_050347hwy9\TRANSP\dgn\erosion\r050347_EC.dgn 11/30/2020 12:19

DATE REVISED	DATE FILMED	DATE REVISED	DATE FILMED	FED.RD. DIST.NO.	STATE	FED.AID PROJ.NO.	SHEET NO.	TOTAL SHEETS
				6	ARK.			
				JOB NO.		050347	28	121

(2) TEMPORARY EROSION CONTROL DETAILS

STATE OF ARKANSAS
LICENSED PROFESSIONAL ENGINEER
No. 15560
JEROME PAUL DAVIS
11-30-2020

REVISIONS	
DATE OF REVISION	REVISION

LEGEND
- (E-3) = FILTER SOCK (18")
- (E-5) = SAND BAG DITCH CHECKS
- (E-6) = ROCK DITCH CHECKS
- (E-11) = SILT FENCE
- E-14 XXXX CU FT = SEDIMENT BASIN

TEMPORARY PAVEMENT

200 205 210 215

P.O.B. 197+00.00
P.C. 201+38.07
P.I. 203+10.32
P.T. 204+78.29
T.C.E.
PROPOSED R/W
CONST. LIMITS
℄ EXISITING HWY. 9
℄ EXISTING HWY. 9
℄ HWY. 9
N33°42'53"E
N55°11'07"E
N55°49'43"E
P.O.B. 0+00.00
P.C. 0+38.55
P.I. 0+70.57
N88°12'02"E
P.C. 1+63.19
P.T. 1+00.53
P.T. 2+10.57
P.I. 1+86.95
N77°20'33"E
P.O.E. 2+90.48
E-14 232 CU.YD.
25' BUFFER
P.C. 212+35.52
P.I. 213+17.66
P.T. 213+99.71
P.O.E. 219+00.00
SILT FENCE = 295 LIN. FT.

STA. 198+75.57
BEGIN SITE 2
LOG MILE 2.71

STA. 216+25.00
END SITE 2

STAGE 2 SITE 2
TEMPORARY EROSION CONTROL DETAILS

USER: ap5181
DESIGN FILE: G:\18105601_050347hwy9\TRANSP\dgn\erosion\r050347_EC.dgn
PLOTTED: 11/30/2020 12:19
SCALE: 1:100

G:\18105601_050347hwy9\TRANSP\dgn\erosion\r050347_EC.dgn 11/30/2020 12:19

DATE REVISED	DATE FILMED	DATE REVISED	DATE FILMED	FED.RD. DIST.NO.	STATE	FED.AID PROJ.NO.	SHEET NO.	TOTAL SHEETS
				6	ARK.			
				JOB NO.		050347	29	121

(2) TEMPORARY EROSION CONTROL DETAILS

STATE OF ARKANSAS
LICENSED PROFESSIONAL ENGINEER
No. 15560
JEROME PAUL DAVIS
11-30-2020

TEMPORARY PAVEMENT

200

P.O.B. 197+00.00

PROPOSED R/W

CONST. LIMITS

℄ EXISTING HWY. 9 N33°42'53"E

2' 11' 11' 2' 6' 6'

P.C. 201+38.07

P.I. 203+10.32

T.C.E.

P.T. 204+78.29

205

SILT FENCE = 232 LIN. FT.

25' BUFFER

℄ EXISTING HWY. 9

PROPOSED R/W

P.O.B. 0+00.00
P.C. 0+38.55

N55°17'07"E

T.C.E.

P.I. 0+70.57

N88°12'02"E

P.C. 1+63.19

P.T. 1+00.53

P.T. 2+10.57

N77°20'33"E

P.O.E. 2+90.48

P.I. 1+86.95

T.C.E.

2

PROPOSED R/W

STA. 198+75.57
BEGIN SITE 2
LOG MILE 2.71

REVISIONS

DATE OF REVISION	REVISION

LEGEND

- (E-3) = FILTER SOCK (18")
- (E-5) = SAND BAG DITCH CHECKS
- (E-6) = ROCK DITCH CHECKS
- (E-11) = SILT FENCE
- E-14 XXXX CU.FT. = SEDIMENT BASIN

SILT FENCE = 250 LIN. FT.

210

PROPOSED R/W

3492 CU.FT.
E-14

CONST. LIMITS

℄ EXISTING HWY. 9

N55°49'43"E ℄ HWY. 9

25' BUFFER

CONST. LIMITS

TEMPORARY PAVEMENT

CONST. LIMITS

PROPOSED R/W

25' BUFFER

℄ EXISTING HWY. 9

P.C. 212+35.52

P.I. 213+17.66

P.T. 213+99.71

215

CONST. LIMITS

PROPOSED R/W

℄ EXISTING HWY. 9

P.O.E. 219+00.00

STA. 216+25.00
END SITE 2

STAGE 3 SITE 2
TEMPORARY EROSION CONTROL DETAILS

G:\1810560l_050347hwy9\TRANSP\dgn\erosion\r050347_EC.dgn 11/30/2020 12:19

USER: dp5181
DESIGN FILE: G:\1810560l_050347hwy9\TRANSP\dgn\erosion\r050347_EC.dgn
PLOTTED: 11/30/2020 12:19
SCALE: 1:100

DATE REVISED	DATE FILMED	DATE REVISED	DATE FILMED

FED.RD. DIST.NO.	STATE	FED.AID PROJ.NO.	SHEET NO.	TOTAL SHEETS
6	ARK.			
JOB NO.		050347	30	121

2 TEMPORARY EROSION CONTROL DETAILS

STATE OF ARKANSAS
LICENSED PROFESSIONAL ENGINEER
No. 15560
JEROME PAUL DAVIS
11-30-2020

SILT FENCE = 107 LIN. FT.

SILT FENCE = 80 LIN. FT.

STA. 296+90.39
BEGIN SITE 3
LOG MILE 5.98

300

P.C. 299+52.89

P.I. 301+78.39

P.T. 303+94.42

305

P.T. 296+49.93

PROPOSED R/W

℄ EXISTING HWY. 9

℄ HWY. 9

N00°10'39"E

N28°52'38"E

6'
11'
11'
6'

E-11 E-6 E-3

SILT FENCE = 293 LIN. FT.

SILT FENCE = 159 LIN. FT.

SILT FENCE = 325 LIN. FT.

SILT FENCE = 58 LIN. FT.

50' BUFFER

310

P.C. 309+25.00

℄ EXISIING HWY. 9

P.I. 311+16.45

SILT FENCE = 415 LIN. FT.

315

P.T. 313+07.86

℄ HWY. 9
N26°51'47"E

320

STA. 321+50.00
END SITE 3

P.C. 320+96.84

℄ EXISTING HWY. 9

REVISIONS

DATE OF REVISION	REVISION

LEGEND

E-3 = FILTER SOCK (18")

E-11 = SILT FENCE

CLEARING AND GRUBBING SITE 3
TEMPORARY EROSION CONTROL DETAILS

USER: qp5181
DESIGN FILE: G:\18105601_050347hwy9\TRANSP\dgn\erosion\r050347_EC.dgn
PLOTTED: 11/30/2020 12:19
SCALE: 1:100

G:\18105601_050347hwy9\TRANSP\dgn\erosion\r050347_EC.dgn 11/30/2020 12:19

DATE REVISED	DATE FILMED	DATE REVISED	DATE FILMED

FED.RD. DIST.NO.	STATE	FED.AID PROJ.NO.	SHEET NO.	TOTAL SHEETS
6	ARK.			
JOB NO.		050347	31	121

2 TEMPORARY EROSION CONTROL DETAILS

STATE OF ARKANSAS
LICENSED PROFESSIONAL ENGINEER
No. 15560
JEROME PAUL DAVIS
11-30-2020

STA. 296+90.39
BEGIN SITE 3
LOG MILE 5.98

P.T. 296+49.93
P.C. 299+35.89
P.I. 301+78.39
P.T. 303+94.42
P.C. 309+25.00
P.I. 311+16.45
P.T. 313+07.86
STA. 321+50.00
END SITE 3
P.C. 320+96.84

300 305 310 315 320

PROPOSED R/W
℄ EXISTING HWY. 9
℄ HWY. 9
℄ EXISITING HWY. 9
N00°10'39"E
N28°52'38"E
N26°57'47"E
CONST. LIMITS
50' BUFFER
73 CU.YD.
39 CU.YD.
49 CU.YD.
85 CU.YD.
T.C.E.

REVISIONS

DATE OF REVISION	REVISION

LEGEND

- E-3 = FILTER SOCK (18")
- E-5 = SAND BAG DITCH CHECKS
- E-6 = ROCK DITCH CHECKS
- E-11 = SILT FENCE
- E-14 XXXX CU FT = SEDIMENT BASIN

STAGE I SITE 3
TEMPORARY EROSION CONTROL DETAILS

USER: dp5181
DESIGN FILE: G:\1810560l_050347hwy9\TRANSP\dgn\erosion\r050347_EC.dgn
PLOTTED: 11/30/2020 12:19
SCALE: 1:100

G:\1810560l_050347hwy9\TRANSP\dgn\erosion\r050347_EC.dgn 11/30/2020 12:19

DATE REVISED	DATE FILMED	DATE REVISED	DATE FILMED	FED.RD. DIST.NO.	STATE	FED.AID PROJ.NO.	SHEET NO.	TOTAL SHEETS
				6	ARK.			
				JOB NO.		050347	32	121

(2) TEMPORARY EROSION CONTROL DETAILS

STATE OF ARKANSAS
LICENSED PROFESSIONAL ENGINEER
No. 15560
JEROME PAUL DAVIS
11-30-2020

STA. 296+90.39
BEGIN SITE 3
LOG MILE 5.98

P.T. 296+49.93
P.C. 298+52.89
P.I. 301+78.39
P.T. 303+94.42
P.C. 309+25.00
P.I. 311+16.45
P.T. 313+07.86
STA. 321+50.00
END SITE 3
P.C. 320+96.84

300 305 310 315 320

PROPOSED R/W
CONST. LIMITS
℄ EXISTING HWY. 9 N00°10'39"E
℄ HWY. 9 N28°52'38"E
℄ EXISITING HWY. 9
℄ HWY. 9 N26°57'47"E
50' BUFFER
SILT FENCE = 300 LIN. FT.
T.C.E.

39 CU.YD. E-14
73 CU.YD. E-14
49 CU.YD. E-14
56 CU.YD. E-14
85 CU.YD. E-14

REVISIONS

DATE OF REVISION	REVISION

LEGEND

- (E-3) = FILTER SOCK (18")
- (E-5) = SAND BAG DITCH CHECKS
- (E-6) = ROCK DITCH CHECKS
- (E-11) = SILT FENCE
- E-14 XXXX CU FT = SEDIMENT BASIN

STAGE 2 SITE 3
TEMPORARY EROSION CONTROL DETAILS

USER: qp5181
DESIGN FILE: G:\18105601_050347hwy9\TRANSP\dgn\erosion\r050347_EC.dgn
PLOTTED: 11/30/2020 12:19
SCALE: 1:100

G:\18105601_050347hwy9\TRANSP\dgn\erosion\r050347_EC.dgn 11/30/2020 12:19

DATE REVISED	DATE FILMED	DATE REVISED	DATE FILMED

FED.RD. DIST.NO.	STATE	FED.AID PROJ.NO.	SHEET NO.	TOTAL SHEETS
6	ARK.			
JOB NO.		050347	33	121

(2) TEMPORARY EROSION CONTROL DETAILS

STA. 399+00.00
BEGIN SITE 4
LOG MILE 8.03

P.I. 397+34.42
N39°32'32"E
P.T. 398+13.43
P.C. 400+16.53
400
N28°23'11"E
PROPOSED R/W
SILT FENCE = 403 LIN. FT.
℄ HWY. 9
T.C.E.
405
P.T. 404+92.87
SILT FENCE = 210 LIN. FT.
T.C.E.
SILT FENCE = 159 LIN. FT.
25' BUFFER
P.I. 0+00.00
410
P.I. 0+59.04
Δ = 09°57'16" LT.
N12°51'39"E
N02°54'23"E
P.I. 1+95.45
25' BUFFER
P.C. 412+27.50
℄ EXISTING HWY. 9
N02°34'32"W
SILT FENCE = 203 LIN. FT.
P.I. 402+60.67
SILT FENCE = 165 LIN. FT.
SILT FENCE = 145 LIN. FT.

REVISIONS

DATE OF REVISION	REVISION

LEGEND

(E-3) = FILTER SOCK (18")
(E-11) = SILT FENCE

SILT FENCE = 210 LIN. FT.
N12°51'39"E
N02°54'23"E
415
P.I. 414+79.52
N02°34'32"W
N26°59'34"E
P.T. 417+20.30
420
P.O.E. 421+17.81
SILT FENCE = 350 LIN. FT.
SILT FENCE = 145 LIN. FT.
SILT FENCE = 584 LIN. FT.

STA. 420+15.00
END JOB 050347
& SITE 4
LOG MILE 8.43

STATE OF ARKANSAS
LICENSED PROFESSIONAL ENGINEER
No. 15560
JEROME PAUL DAVIS
11-30-2020

CLEARING AND GRUBBING SITE 4
TEMPORARY EROSION CONTROL DETAILS

USER: dp5181
DESIGN FILE: G:\18105601_050347hwy9\TRANSP\dgn\erosion\r050347_EC.dgn
PLOTTED: 11/30/2020 12:20
SCALE: 1"=100'

G:\18105601_050347hwy9\TRANSP\dgn\erosion\r050347_EC.dgn 11/30/2020 12:20

DATE REVISED	DATE FILMED	DATE REVISED	DATE FILMED

FED.RD. DIST.NO.	STATE	FED.AID PROJ.NO.	SHEET NO.	TOTAL SHEETS
6	ARK.			
JOB NO.		050347	34	121

(2) TEMPORARY EROSION CONTROL DETAILS

STA. 399+00.00
BEGIN SITE 4
LOG MILE 8.03

STA. 420+15.00
END JOB 050347
& SITE 4
LOG MILE 8.43

REVISIONS

DATE OF REVISION	REVISION

LEGEND

- (E-3) = FILTER SOCK (18")
- (E-5) = SAND BAG DITCH CHECKS
- (E-6) = ROCK DITCH CHECKS
- (E-11) = SILT FENCE
- E-14 XXXX CU.YD. = SEDIMENT BASIN

SILT FENCE = 200 LIN. FT.

STATE OF ARKANSAS
LICENSED PROFESSIONAL ENGINEER
No. 15560
11-30-2020
JEROME PAUL DAVIS

STAGE I SITE 4
TEMPORARY EROSION CONTROL DETAILS

USER: dp5181
DESIGN FILE: G:\1810560I_050347hwy9\TRANSP\dgn\erosion\r050347_EC.dgn
PLOTTED: 11/30/2020 12:20
SCALE: 1:100

G:\1810560I_050347hwy9\TRANSP\dgn\erosion\r050347_EC.dgn 11/30/2020 12:20

DATE REVISED	DATE FILMED	DATE REVISED	DATE FILMED	FED.RD. DIST.NO.	STATE	FED.AID PROJ.NO.	SHEET NO.	TOTAL SHEETS
				6	ARK.			
				JOB NO.		050347	35	121

(2) TEMPORARY EROSION CONTROL DETAILS

REVISIONS

DATE OF REVISION	REVISION

LEGEND

- (E-3) = FILTER SOCK (18")
- (E-5) = SAND BAG DITCH CHECKS
- (E-6) = ROCK DITCH CHECKS
- (E-11) = SILT FENCE
- [E-14] XXXX CU FT = SEDIMENT BASIN

STA. 399+00.00
BEGIN SITE 4
LOG MILE 8.03

STA. 420+15.00
END JOB 050347
& SITE4
LOG MILE 8.43

STATE OF ARKANSAS
LICENSED PROFESSIONAL ENGINEER
No. 15560
JEROME PAUL DAVIS
11-30-2020

STAGE 2 SITE 4
TEMPORARY EROSION CONTROL DETAILS

USER: dp5181
DESIGN FILE: G:\18105601_050347hwy9\TRANSP\dgn\erosion\r050347_EC.dgn
PLOTTED: 11/30/2020 12:20
SCALE: 1in00

G:\18105601_050347hwy9\TRANSP\dgn\erosion\r050347_EC.dgn 11/30/2020 12:20

DATE REVISED	DATE FILMED	DATE REVISED	DATE FILMED	FED.RD. DIST.NO.	STATE	FED.AID PROJ.NO.	SHEET NO.	TOTAL SHEETS
				6	ARK.			
				JOB NO.		050347	36	121

(2) MAINTENANCE OF TRAFFIC DETAILS



DO NOT PASS — (4) R4-1 (24" X 30") ALL STAGES

SHOULDER DROP-OFF — (4) W8-9a (36" X 36") ALL STAGES

RIGHT SHOULDER CLOSED — (5) W21-5a (36" X 36") ALL STAGES

BUMP — (2) W8-1 (36" X 36") ALL STAGES

R4-1, W8-9a, W21-5a & W8-1 TO BE USED IF AND WHERE DIRECTED BY THE ENGINEER.

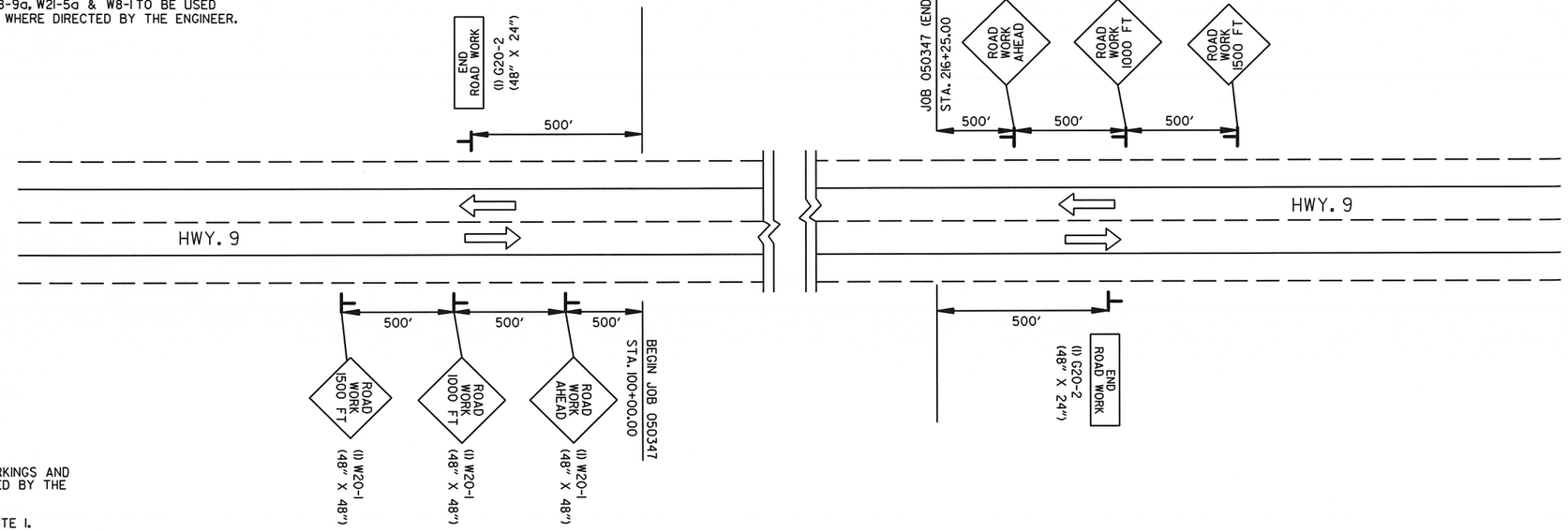

STAGE 1:

1) INSTALL ADVANCE WARNING SIGNS.
2) INSTALL CONSTRUCTION PAVEMENT MARKINGS AND TRAFFIC CONTROL DEVICES AS DIRECTED BY THE ENGINEER.
3) CONSTRUCT TEMPORARY DETOUR AT SITE 1.
4) CONSTRUCT TEMPORARY PAVEMENT AT SITE 2.

STAGE 2:

1) MAINTAIN ADVANCE WARNING SIGNS.
2) INSTALL CONSTRUCTION PAVEMENT MARKINGS AND TRAFFIC CONTROL DEVICES AS DIRECTED BY THE ENGINEER.
3) SHIFT TRAFFIC TO TEMPORARY DETOUR AT SITE 1 AND TO WIDENED AREAS ON SITE 2.
4) CONSTRUCT NEW ROADWAY AND NEW R.C. BOX CULVERT AT SITE 1.
5) CONSTRUCT NEW OFFSET ROADWAY AND R.C. BOX CULVERT AT SITE 2.

STAGE 3:

1) MAINTAIN ADVANCE WARNING SIGNS.
2) INSTALL CONSTRUCTION PAVEMENT MARKINGS AND TRAFFIC CONTROL DEVICES AS DIRECTED BY THE ENGINEER.
3) CONSTRUCT PAVEMENT WIDENING AT CONNECTIONS TO EXISTING ROADWAY. PLACE FINAL LIFT OF ASPHALT, PERMANENT PAVEMENT MARKING AT SITE 1 & SITE 2.
4) SHIFT TRAFFIC TO NEW ROADWAY, REMOVE OLD BRIDGES, OBLITERATE ROADWAY SITE 2 AND SITE 1 DETOUR.

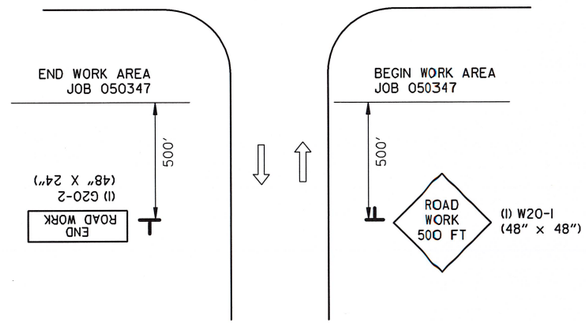

SIDE ROADS
ALL STAGES

STA. 203+78 TO STA. 204+10 LT. - EMILINE RD.

ADVANCE SIGNS AT BEGINNING OF SITE 1
AND END OF SITE 2

ADVANCE WARNING
MAINTENANCE OF TRAFFIC

USER: dp518l
DESIGN FILE: G:\18l0560l_050347hwy9\TRANSP\dgn\maint_of_traffic\r050347 MOT.dgn
PLOTTED: 11/30/2020 12:20
SCALE: 1:100

G:\18l0560l_050347hwy9\TRANSP\dgn\maint_of_traffic\r050347 MOT.dgn 11/30/2020 12:20

DATE REVISED	DATE FILMED	DATE REVISED	DATE FILMED	FED.RD. DIST.NO.	STATE	FED.AID PROJ.NO.	SHEET NO.	TOTAL SHEETS
				6	ARK.			
				JOB NO.	050347		37	121

(2) MAINTENANCE OF TRAFFIC DETAILS

STATE OF ARKANSAS
LICENSED PROFESSIONAL ENGINEER
No. 15560
JEROME PAUL DAVIS
11-30-2020

DO NOT PASS — (4) R4-1 (24" X 30") ALL STAGES

SHOULDER DROP-OFF — (4) W8-9a (36" X 36") ALL STAGES

RIGHT SHOULDER CLOSED — (5) W21-5a (36" X 36") ALL STAGES

BUMP — (2) W8-1 (36" X 36") ALL STAGES

R4-1, W8-9a, W21-5a & W8-1 TO BE USED IF AND WHERE DIRECTED BY THE ENGINEER.

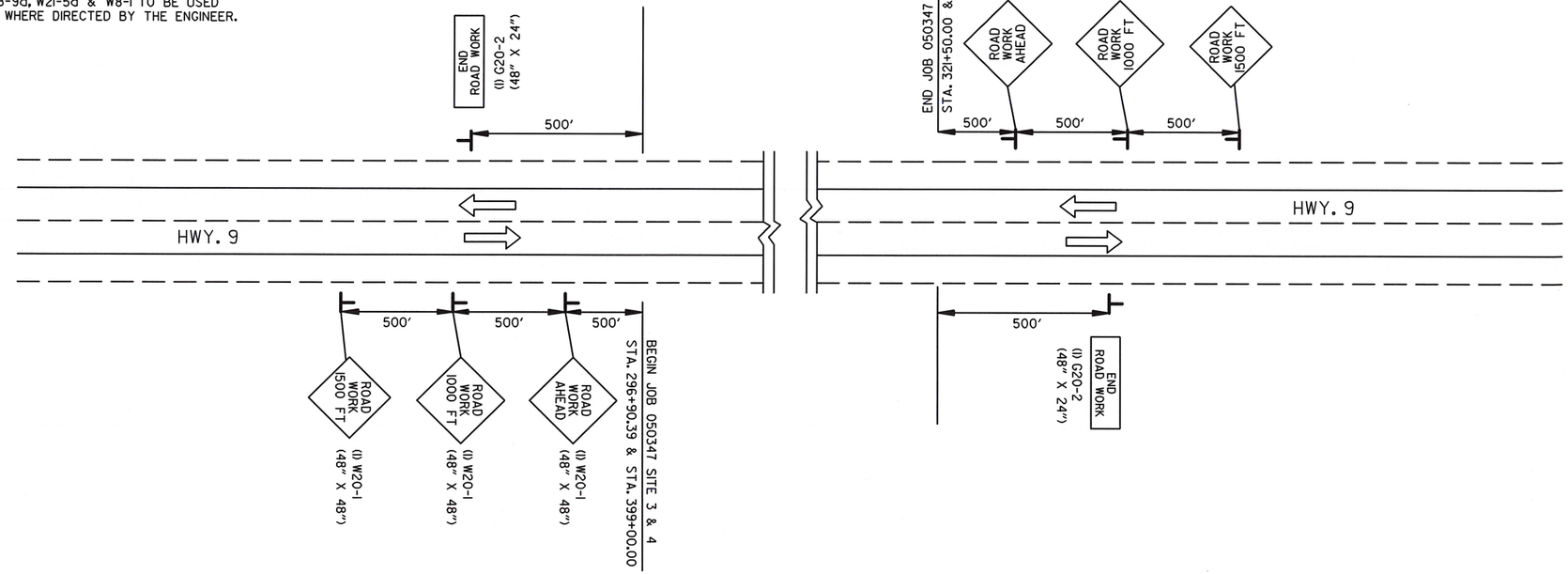

SITE 3

STAGE 1:

1) INSTALL ADVANCE WARNING SIGNS SITE 3.
2) INSTALL CONSTRUCTION PAVEMENT MARKINGS AND TRAFFIC CONTROL DEVICES AS DIRECTED BY THE ENGINEER.
3) CONSTRUCT NEW ROADWAY AND BRIDGE OVER LITTLE STRAWBERRY RIVER.

STAGE 2:

1) MAINTAIN ADVANCE WARNING SINGS.
2) INSTALL CONSTRUCTION PAVEMENT MARKINGS AND TRAFFIC CONTROL DEVICES AS DIRECTED BY THE ENGINEER.
3) CONSTRUCT PAVEMENT WIDENING AT CONNECTIONS TO EXISTING ROADWAY. PLACE FINAL LIFT OF ASPHALT AND PERMANENT PAVEMENT MARKING.
4) SHIFT TRAFFIC TO NEW ROADWAY & BRIDGES, REMOVE OLD BRIDGE AND OBLITERATE EXISTING ROADWAY.

SITE 4

STAGE 1:

1) INSTALL ADVANCE WARNING SIGNS SITE 4.
2) INSTALL CONSTRUCTION PAVEMENT MARKINGS AND TRAFFIC CONTROL DEVICES AS DIRECTED BY THE ENGINEER.
3) CONSTRUCT NEW ROADWAY & R.C. BOX CULVERT AT SOUTH FORK CREEK.

STAGE 2:

1) MAINTAIN ADVANCE WARNING SIGNS.
2) INSTALL CONSTRUCTION PAVEMENT MARKINGS AND TRAFFIC CONTROL DEVICES AS DIRECTED BY THE ENGINEER.
3) CONSTRUCT PAVEMENT WIDENING TO CONNECT EXIST. ROADWAY.
4) CONSTRUCT FINAL LIFT OF ASPHALT, GUARDRAIL & PERM. PAVEMENT MARKINGS.
5) SHIFT TRAFFIC TO NEW ROADWAY, REMOVE OLD BRIDGE AND OBLITERATE EXISTING ROADWAY.

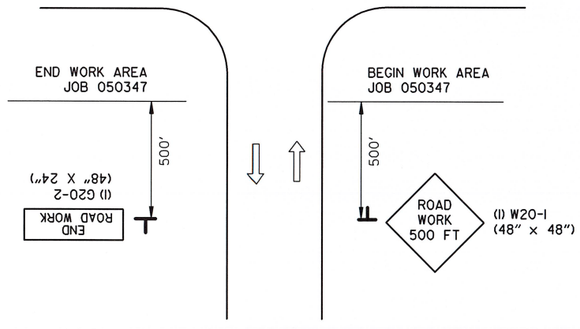

SIDE ROADS ALL STAGES

STA. 406+30 TO STA. 406+61 LT. - OLD QUARRY LN.
STA. 407+44 TO STA. 407.61 RT. - PINE MEADOW LN.

ADVANCE SIGNS AT BEGINNING AND END OF SITE 3 & SITE 4

ADVANCE WARNING MAINTENANCE OF TRAFFIC DETAILS

USER: ap5181
DESIGN FILE: G:\18105601_050347hwy9\TRANSP\dgn\maint_of_traffic\r050347 MOT.dgn
PLOTTED: 11/30/2020 12:20
SCALE: 1:100

G:\18105601_050347hwy9\TRANSP\dgn\maint_of_traffic\r050347 MOT.dgn 11/30/2020 12:20

DATE REVISED	DATE FILMED	DATE REVISED	DATE FILMED	FED.RD. DIST.NO.	STATE	FED.AID PROJ.NO.	SHEET NO.	TOTAL SHEETS
				6	ARK.			
				JOB NO.		050347	38	121
				(2)	MAINTENANCE OF TRAFFIC DETAILS			

STATE OF ARKANSAS
LICENSED PROFESSIONAL ENGINEER
No. 15560
JEROME PAUL DAVIS
3-18-21

95

P.C. 96+06.93

P.I. 97+99.56

50' BUFFER

100

STA. 100+00.00
BEGIN JOB 050347
& SITE 1
LOG MILE 2.10

P.T. 99+89.29

PROPOSED R/W

50' BUFFER

P.I. 101+06.45

105

PROPOSED R/W

MARKLE ROAD

P.C. 104+86.21

N32°29'32"E

2'
11'
11'
2'

N49°41'54"E

℄ EXISTING HWY. 9

PROPOSED R/W

PROPOSED R/W

6 VERTICAL PANELS
@ 50' O.C.

N64°04'49"E

21'
11'
11'
2'

P.C. 99+94.95

100

T.C.E.

CONST. LIMITS

CONST. LIMITS

10'

20'

2'
11'
11'
2'

P.T. 102+16.19

P.C. 102+39.30

PROPOSED R/W

SEQUENCING:

STAGE 1, SITE 1:

1) INSTALL ADVANCE WARNING SIGNS.

2) INSTALL CONSTRUCTION PAVEMENT MARKINGS AND TRAFFIC CONTROL DEVICES AS DIRECTED BY THE ENGINEER.

3) CONSTRUCT TEMPORARY DETOUR AT SITE 1.

TEMPORARY CONNECTION

STA. 105+00 DETOUR
INSTALL TEMPORARY
QUAD. 48" X 85' C.M. CULVERT PIPE
(60°RT. FWD. SKEW)
Q2 = 356 CFS

STA. 103+55 LT. IN PLACE
APPROACH WITH 18" SIDE DRAIN RETAIN
CONSTRUCT 18" X 44' TEMPORARY PIPE BYPASS STA. 103+53 RT.
CONSTRUCT TEMP. APPROACH 50 CU. YDS.

TRAFFIC DRUMS @ 20' O.C.

TRAFFIC DRUMS @ 50' O.C.

50' BUFFER

P.I. 106+11.14

N18°20'13"E

CREEK

T.C.E.

50' BUFFER

P.I. 107+08.51

105

TEMPORARY CONNECTION

STAGE 1 QUANTITIES:

CONSTRUCTION PAVEMENT MARKINGS = 26684 LIN. FT.
RAISED PAVEMENT MARKERS TYPE II (YELLOW/YELLOW) = 17 EACH
VERTICAL PANELS = 66 EACH
TRAFFIC DRUMS = 76 EACH
SIGNS = 1190 SQ. FT.
TYPE III BARRICADES LT. (16') = 32 LIN. FT.
TYPE III BARRICADES RT. (16') = 32 LIN. FT.

115

50' BUFFER

PROPOSED R/W

105

P.C. 104+86.21

PROPOSED R/W

P.T. 109+25.38

P.I. 110+28.41

110

PROPOSED R/W

STA. 112+00.00
END SITE 1

N64°04'49"E

21'
11'
11'
2'

P.T. 102+16.21

P.C. 102+39.30

℄ EXISTING HWY. 9

N27°44'23"E

2'
11'
11'
2'

N27°44'23"E

CONST. LIMITS

10'

20'

CONST. LIMITS

T.C.E.

PROPOSED R/W

PROPOSED R/W

T.C.E.

PROPOSED R/W

TRAFFIC DRUMS @ 20' O.C.

TRAFFIC DRUMS @ 50' O.C.

50' BUFFER

N18°20'13"E

50' BUFFER

P.I. 107+08.51

105

P.I. 106+11.14

P.T. 110+34.04

P.C. 101+55.92

110

5 VERTICAL PANELS
@ 50' O.C.

P.T. 111+00.57

POND

USER: jh5995
DESIGN FILE: G:\18105601_050347hwy9\TRANSP\dgn\maint_of_traffic\r050347 MOT.dgn
PLOTTED: 3/18/2021 11:57
SCALE: 1"=100'

STAGE 1 SITE 1
MAINTENANCE OF TRAFFIC DETAILS

G:\18105601_050347hwy9\TRANSP\dgn\maint_of_traffic\r050347 MOT.dgn 3/18/2021 11:57

DATE REVISED	DATE FILMED	DATE REVISED	DATE FILMED

FED.RD. DIST.NO.	STATE	FED.AID PROJ.NO.	SHEET NO.	TOTAL SHEETS
6	ARK.			
JOB NO.		050347	39	121

(2) MAINTENANCE OF TRAFFIC DETAILS

STATE OF ARKANSAS
LICENSED PROFESSIONAL ENGINEER
No. 15560
3-18-21
JEROME PAUL DAVIS

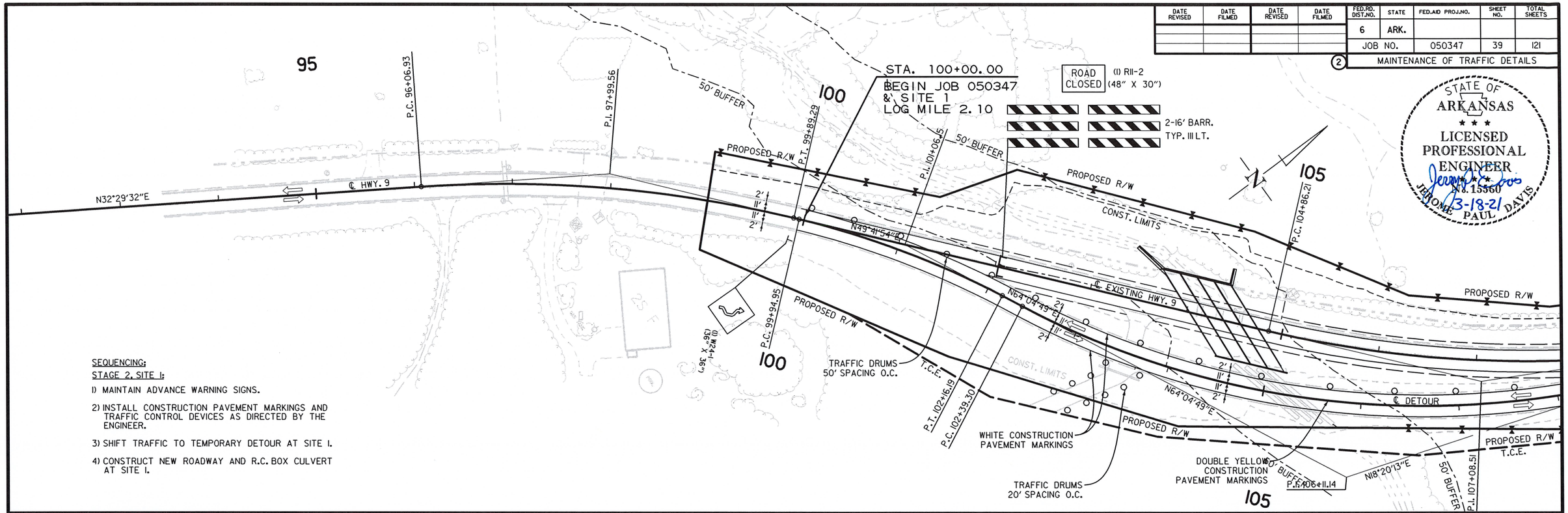

SEQUENCING:

STAGE 2, SITE 1:

1) MAINTAIN ADVANCE WARNING SIGNS.

2) INSTALL CONSTRUCTION PAVEMENT MARKINGS AND TRAFFIC CONTROL DEVICES AS DIRECTED BY THE ENGINEER.

3) SHIFT TRAFFIC TO TEMPORARY DETOUR AT SITE 1.

4) CONSTRUCT NEW ROADWAY AND R.C. BOX CULVERT AT SITE 1.

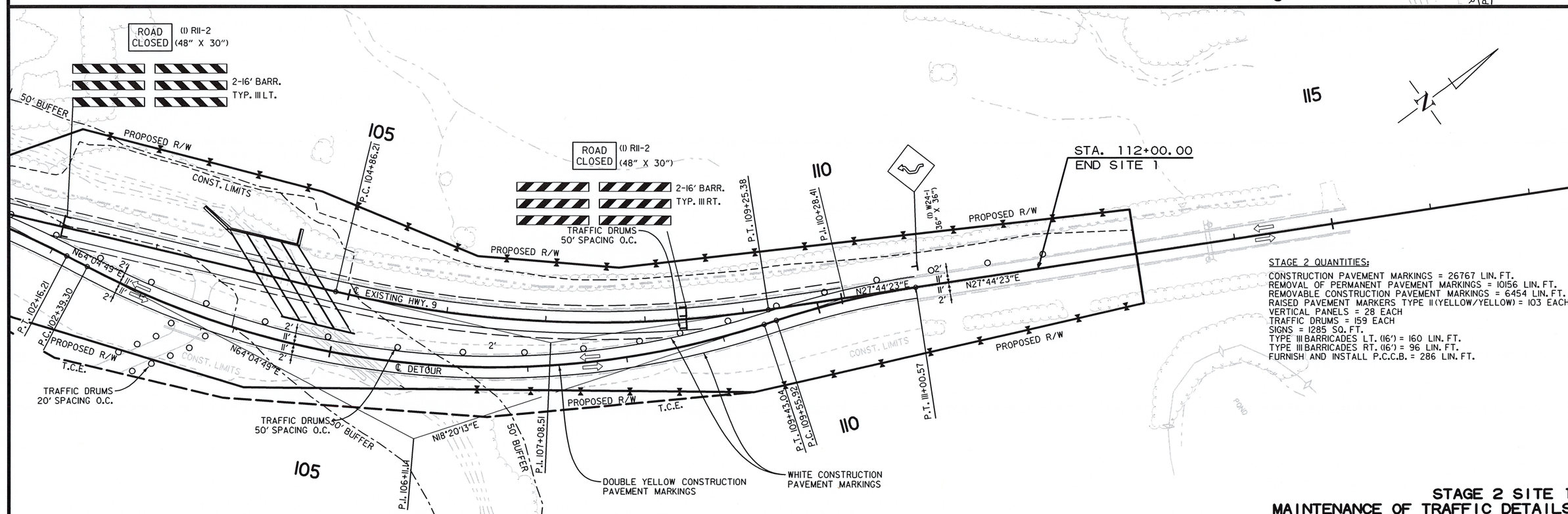

STAGE 2 QUANTITIES:

CONSTRUCTION PAVEMENT MARKINGS = 26767 LIN. FT.
REMOVAL OF PERMANENT PAVEMENT MARKINGS = 10156 LIN. FT.
REMOVABLE CONSTRUCTION PAVEMENT MARKINGS = 6454 LIN. FT.
RAISED PAVEMENT MARKERS TYPE II (YELLOW/YELLOW) = 103 EACH
VERTICAL PANELS = 28 EACH
TRAFFIC DRUMS = 159 EACH
SIGNS = 1285 SQ. FT.
TYPE III BARRICADES LT. (16') = 160 LIN. FT.
TYPE III BARRICADES RT. (16') = 96 LIN. FT.
FURNISH AND INSTALL P.C.C.B. = 286 LIN. FT.

STAGE 2 SITE 1
MAINTENANCE OF TRAFFIC DETAILS

USER: jh5195
DESIGN FILE: G:\1810560I_050347hwy9\TRANSP\dgn\maint_of_traffic\r050347 MOT.dgn
PLOTTED: 3/18/2021 11:57
SCALE: 1:100

G:\1810560I_050347hwy9\TRANSP\dgn\maint_of_traffic\r050347 MOT.dgn 3/18/2021 11:57

DATE REVISED	DATE FILMED	DATE REVISED	DATE FILMED	FED.RD. DIST.NO.	STATE	FED.AID PROJ.NO.	SHEET NO.	TOTAL SHEETS
				6	ARK.			
				JOB NO.		050347	40	121

(2) MAINTENANCE OF TRAFFIC DETAILS

STATE OF ARKANSAS
LICENSED PROFESSIONAL ENGINEER
No. 15560
JEROME PAUL DAVIS
3-18-21

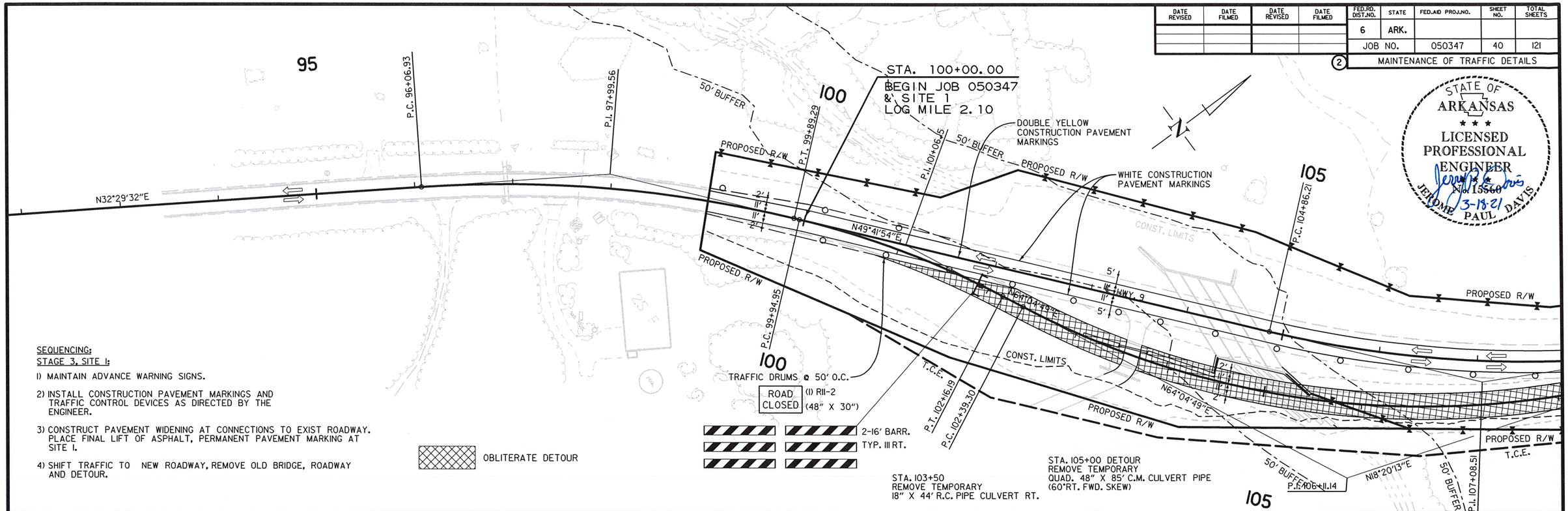

SEQUENCING:
STAGE 3, SITE 1:

1) MAINTAIN ADVANCE WARNING SIGNS.
2) INSTALL CONSTRUCTION PAVEMENT MARKINGS AND TRAFFIC CONTROL DEVICES AS DIRECTED BY THE ENGINEER.
3) CONSTRUCT PAVEMENT WIDENING AT CONNECTIONS TO EXIST ROADWAY. PLACE FINAL LIFT OF ASPHALT, PERMANENT PAVEMENT MARKING AT SITE 1.
4) SHIFT TRAFFIC TO NEW ROADWAY, REMOVE OLD BRIDGE, ROADWAY AND DETOUR.

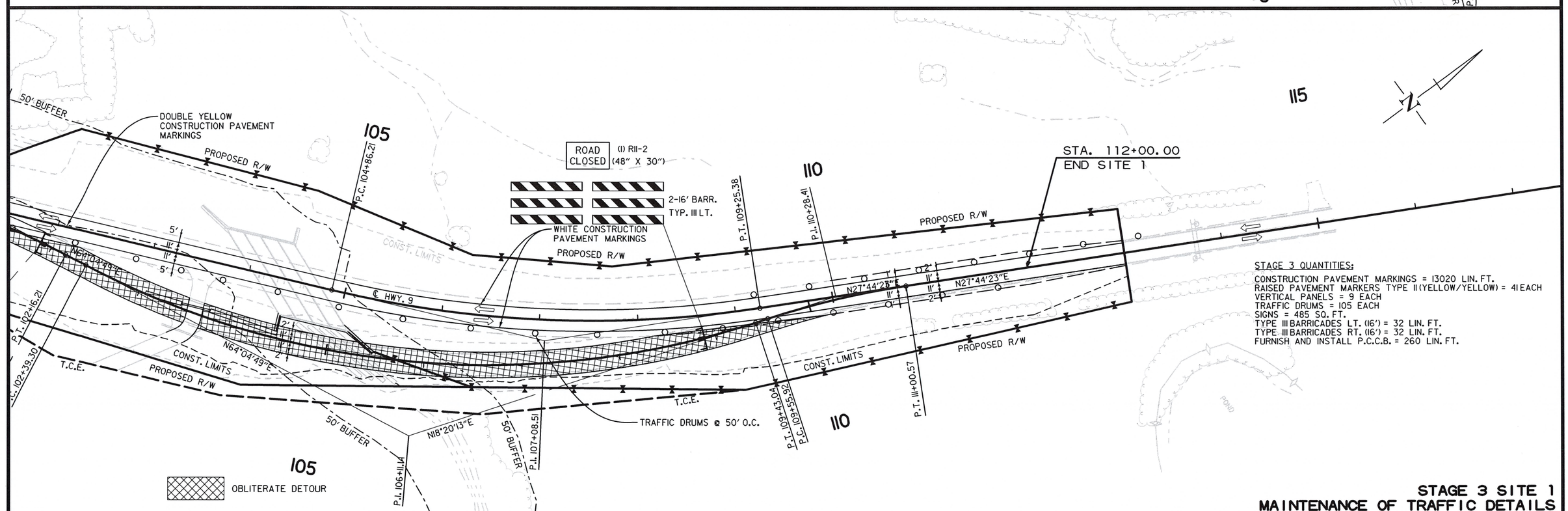

STAGE 3 QUANTITIES:

CONSTRUCTION PAVEMENT MARKINGS = 13020 LIN. FT.
RAISED PAVEMENT MARKERS TYPE II (YELLOW/YELLOW) = 41 EACH
VERTICAL PANELS = 9 EACH
TRAFFIC DRUMS = 105 EACH
SIGNS = 485 SQ. FT.
TYPE III BARRICADES LT. (16') = 32 LIN. FT.
TYPE III BARRICADES RT. (16') = 32 LIN. FT.
FURNISH AND INSTALL P.C.C.B. = 260 LIN. FT.

STAGE 3 SITE 1
MAINTENANCE OF TRAFFIC DETAILS

USER: jh5195
DESIGN FILE: G:\18105601_050347hwy9\TRANSP\dgn\maint_of_traffic\r050347 MOT.dgn
PLOTTED: 3/18/2021 11:57
SCALE: 1:100

G:\18105601_050347hwy9\TRANSP\dgn\maint_of_traffic\r050347 MOT.dgn 3/18/2021 11:57

DATE REVISED	DATE FILMED	DATE REVISED	DATE FILMED	FED.RD. DIST.NO.	STATE	FED.AID PROJ.NO.	SHEET NO.	TOTAL SHEETS
				6	ARK.			
				JOB NO.		050347	41	121

(2) MAINTENANCE OF TRAFFIC DETAILS

STATE OF ARKANSAS
LICENSED PROFESSIONAL ENGINEER
No. 15560
JEROME PAUL DAVIS
11-30-2020

TEMPORARY PAVEMENT

200

P.O.B. 197+00.00

WHITE CONSTRUCTION PAVEMENT MARKINGS

P.C. 201+38.07

P.I. 203+10.32

T.C.E.

P.T. 204+78.29

205

25' BUFFER

PROPOSED R/W

CONST. LIMITS

℄ M.O.T. STAGE I

N33°42'53"E 11'

℄ HWY. 9

13 VERTICAL PANELS @ 50' O.C.

556.70' N

P.O.B. 0+00.00
P.C. 0+38.55

PROPOSED R/W

P.I. 0+70.57

N88°12'02"E

P.C. 1+63.19

P.T. 2+10.57

P.T. 1+00.53

STA. 198+75.57
BEGIN SITE 2
LOG MILE 2.71

P.I. 1+86.95

T.C.E.

N77°20'33"E

P.O.E. 2+90.48

2

PROPOSED R/W

℄ EXISTING HWY. 9

2' 11' 11' 2'

℄ CONST. HWY. 9

N55°49'43"E

210

PROPOSED R/W

CONST. LIMITS

25' BUFFER

25' BUFFER

SEQUENCING:

STAGE I, SITE 2:

1) INSTALL ADVANCE WARNING SIGNS.

2) INSTALL CONSTRUCTION PAVEMENT MARKINGS & TRAFFIC CONTROL DEVICES AS DIRECTED BY THE ENGINEER.

3) CONSTRUCT TEMPORARY PAVEMENT.

TEMPORARY PAVEMENT

210

P.C. 212+35.52

P.I. 213+17.66

P.T. 213+99.71

215

WHITE CONSTRUCTION PAVEMENT MARKINGS

PROPOSED R/W

CONST. LIMITS

PROPOSED R/W

P.O.E. 219+00.00

2' 11' 11' 2'

℄ EXISTING HWY. 9

℄ CONST. HWY. 9

N55°49'43"E

℄ M.O.T. STAGE I

10 VERTICAL PANELS @ 50' O.C.

℄ HWY. 9

25' BUFFER

25' BUFFER

PROPOSED R/W

25' BUFFER

25' BUFFER

PROPOSED R/W

STA. 216+25.00
END SITE 2

STAGE 1 SITE 2
MAINTENANCE OF TRAFFIC DETAILS

USER: qp5181
DESIGN FILE: G:\1810560l_050347hwy9\TRANSP\dgn\maint_of_traffic\r050347 M0T.dgn
PLOTTED: 11/30/2020 12:20
SCALE: 1:100

G:\1810560l_050347hwy9\TRANSP\dgn\maint_of_traffic\r050347 M0T.dgn 11/30/2020 12:20

DATE REVISED	DATE FILMED	DATE REVISED	DATE FILMED	FED.RD. DIST.NO.	STATE	FED.AID PROJ.NO.	SHEET NO.	TOTAL SHEETS
				6	ARK.			
				JOB NO.		050347	42	121

(2) MAINTENANCE OF TRAFFIC DETAILS

STATE OF ARKANSAS
LICENSED PROFESSIONAL ENGINEER
No. 15560
JEROME PAUL DAVIS
11-30-2020

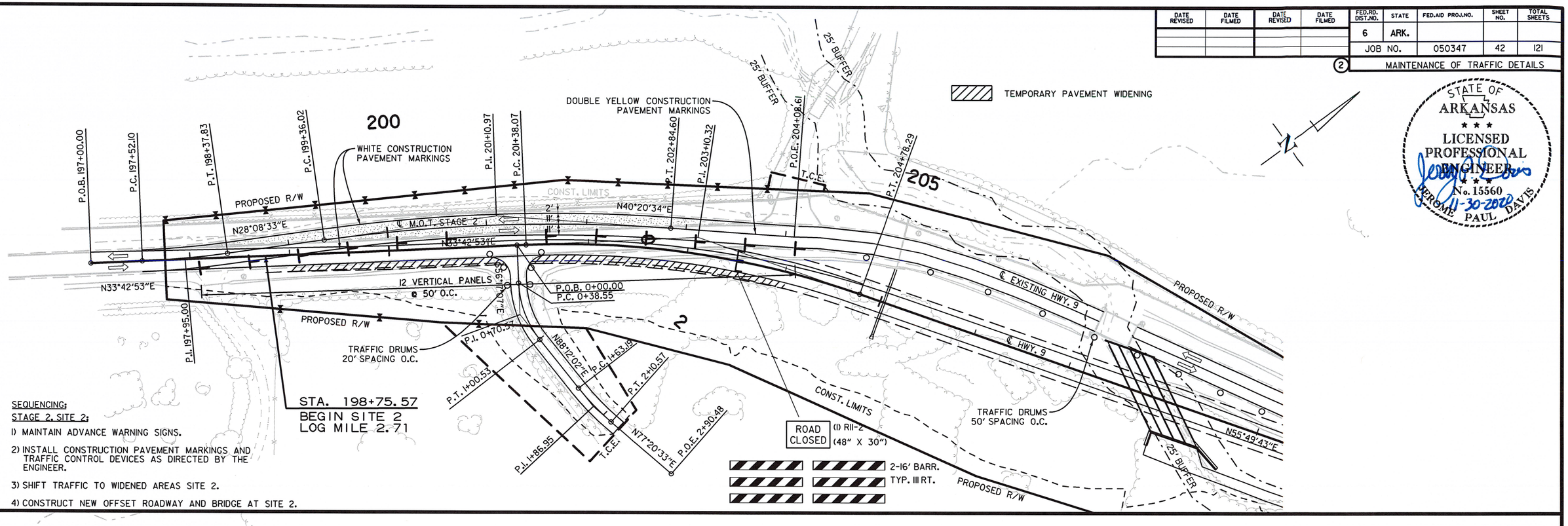

SEQUENCING:

STAGE 2, SITE 2:

1) MAINTAIN ADVANCE WARNING SIGNS.

2) INSTALL CONSTRUCTION PAVEMENT MARKINGS AND TRAFFIC CONTROL DEVICES AS DIRECTED BY THE ENGINEER.

3) SHIFT TRAFFIC TO WIDENED AREAS SITE 2.

4) CONSTRUCT NEW OFFSET ROADWAY AND BRIDGE AT SITE 2.

STAGE 2 SITE 2
MAINTENANCE OF TRAFFIC DETAILS

USER: gp5181
DESIGN FILE: G:\1810560l_050347hwy9\TRANSP\dgn\maint_of_traffic\r050347 MOT.dgn
PLOTTED: 11/30/2020 12:20
SCALE: 1:100

G:\1810560l_050347hwy9\TRANSP\dgn\maint_of_traffic\r050347 MOT.dgn 11/30/2020 12:20

DATE REVISED	DATE FILMED	DATE REVISED	DATE FILMED

FED.RD. DIST.NO.	STATE	FED.AID PROJ.NO.	SHEET NO.	TOTAL SHEETS
6	ARK.			
JOB NO.		050347	43	121

(2) MAINTENANCE OF TRAFFIC DETAILS

STATE OF ARKANSAS
LICENSED PROFESSIONAL ENGINEER
No. 15560
11-30-2020
JEROME PAUL DAVIS

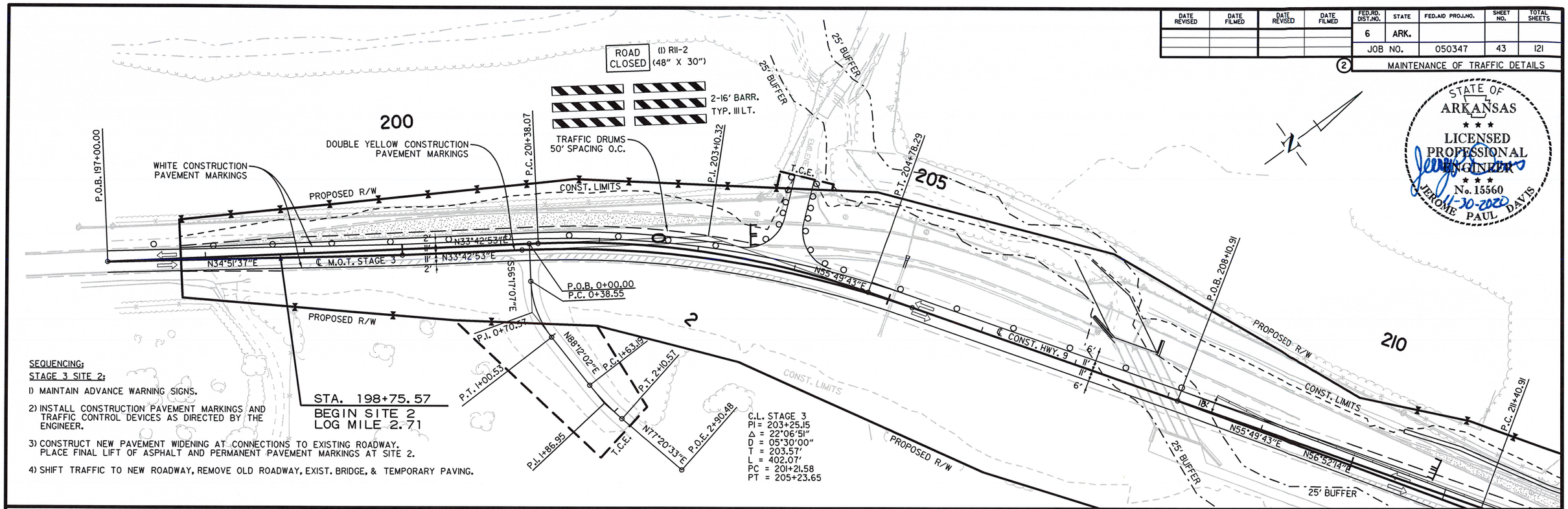

SEQUENCING:

STAGE 3 SITE 2:

1) MAINTAIN ADVANCE WARNING SIGNS.

2) INSTALL CONSTRUCTION PAVEMENT MARKINGS AND TRAFFIC CONTROL DEVICES AS DIRECTED BY THE ENGINEER.

3) CONSTRUCT NEW PAVEMENT WIDENING AT CONNECTIONS TO EXISTING ROADWAY. PLACE FINAL LIFT OF ASPHALT AND PERMANENT PAVEMENT MARKINGS AT SITE 2.

4) SHIFT TRAFFIC TO NEW ROADWAY, REMOVE OLD ROADWAY, EXIST. BRIDGE, & TEMPORARY PAVING.

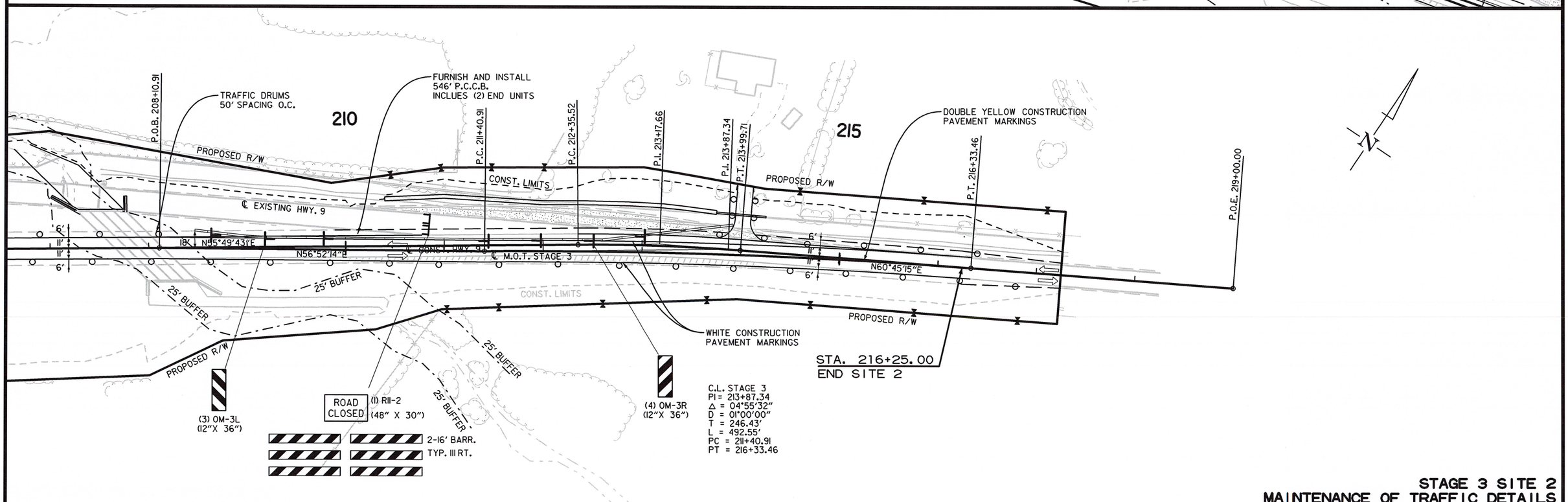

STAGE 3 SITE 2
MAINTENANCE OF TRAFFIC DETAILS

USER: ap5181
DESIGN FILE: G:\1810560I_050347hwy9\TRANSP\dgn\maint_of_traffic\r050347 MOT.dgn
PLOTTED: 11/30/2020 12:20
SCALE: 1:100

G:\1810560I_050347hwy9\TRANSP\dgn\maint_of_traffic\r050347 MOT.dgn 11/30/2020 12:20

DATE REVISED	DATE FILMED	DATE REVISED	DATE FILMED

FED.RD. DIST.NO.	STATE	FED.AID PROJ.NO.	SHEET NO.	TOTAL SHEETS
6	ARK.			
JOB NO.		050347	44	121

(2) MAINTENANCE OF TRAFFIC DETAILS

SEQUENCING:
STAGE 1, SITE 3:

1) INSTALL ADVANCE WARNING SIGNS.

2) INSTALL CONSTRUCTION PAVEMENT MARKINGS AND TRAFFIC CONTROL DEVICES AS DIRECTED BY THE ENGINEER.

3) CONSTRUCT NEW OFFSET ROADWAY AND BRIDGE OVER LITTLE STRAWBERRY RIVER.

STATE OF ARKANSAS
★ ★ ★
LICENSED PROFESSIONAL ENGINEER
★ ★ ★
No. 15560
JEROME PAUL DAVIS
11-30-2020

STA. 296+90.39
BEGIN SITE 3
LOG MILE 5.98

300

P.T. 296+49.93

P.C. 298+52.88

P.I. 301+78.39

P.T. 303+94.42

305

310

PROPOSED R/W

N00°10'39"E

2' II' II' 2'

6'

℄ EXISTING HWY. 9

℄ HWY. 9

CONST. LIMITS

6 VERTICAL PANELS @ 50' O.C.

TRAFFIC DRUMS 50' SPACING O.C.

50' BUFFER

P.C. 309+25.00

N28°52'38"E

P.I. 311+16.45

315

320

P.T. 313+07.86

P.C. 320+96.84

STA. 321+50.00
END SITE 3

P.I. 322+65.53

P.T. 324+30.82

325

N26°57'47"E

N46°34'05"E

15 VERTICAL PANELS @ 50' O.C.

T.C.E.

P.O.E. 326+93.98

STAGE 1 SITE 3
MAINTENANCE OF TRAFFIC DETAILS

USER: ap5181
DESIGN FILE: G:\18105601_050347hwy9\TRANSP\dgn\maint_of_traffic\r050347 MOT.dgn
PLOTTED: 11/30/2020 12:20
SCALE: 1:100

G:\18105601_050347hwy9\TRANSP\dgn\maint_of_traffic\r050347 MOT.dgn 11/30/2020 12:20

DATE REVISED	DATE FILMED	DATE REVISED	DATE FILMED	FED.RD. DIST.NO.	STATE	FED.AID PROJ.NO.	SHEET NO.	TOTAL SHEETS
				6	ARK.			
				JOB NO.		050347	45	121

(2) MAINTENANCE OF TRAFFIC DETAILS

SEQUENCING:

STAGE 2, SITE 3:

1) MAINTAIN ADVANCE WARNING SIGNS.

2) INSTALL CONSTRUCTION PAVEMENT MARKINGS AND TRAFFIC CONTROL DEVICES AS DIRECTED BY THE ENGINEER.

3) CONSTRUCT PAVEMENT WIDENING AT CONNECTIONS TO EXISTING ROADWAY. PLACE FINAL LIFT OF ASPHALT, PERMANENT PAVEMENT MARKING AT SITE 3.

4) SHIFT TRAFFIC TO NEW ROADWAY & BRIDGE. REMOVE OLD BRIDGE AND OBLITERATE EXISTING ROADWAY SITE 3.

STA. 296+90.39
BEGIN SITE 3
LOG MILE 5.98

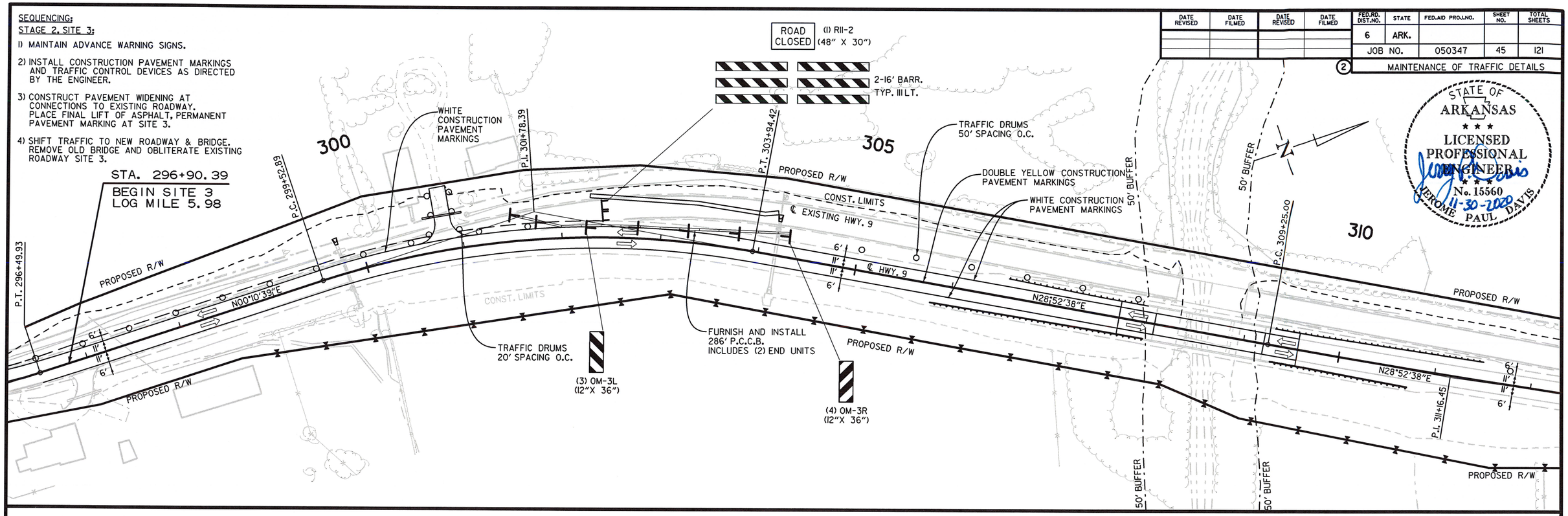

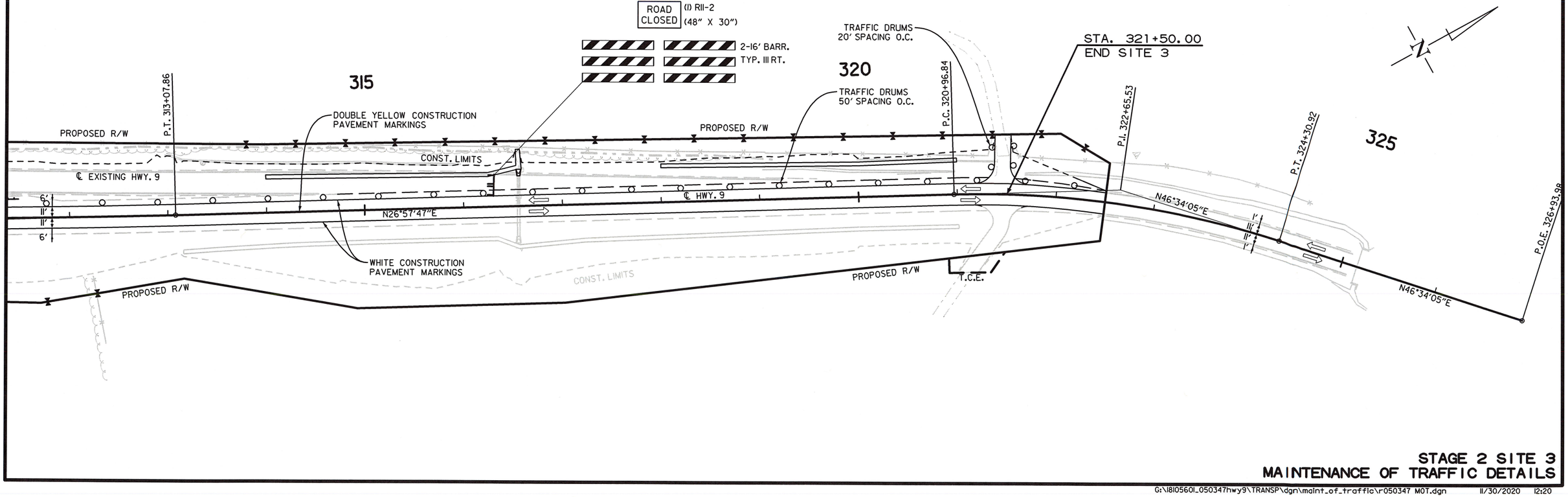

STATE OF ARKANSAS
LICENSED PROFESSIONAL ENGINEER
No. 15560
JEROME PAUL DAVIS
11-30-2020

STAGE 2 SITE 3
MAINTENANCE OF TRAFFIC DETAILS

USER: qp5181
DESIGN FILE: G:\1810560I_050347hwy9\TRANSP\dgn\maint_of_traffic\r050347 MOT.dgn
PLOTTED: 11/30/2020 12:20
SCALE: 1:100

G:\1810560I_050347hwy9\TRANSP\dgn\maint_of_traffic\r050347 MOT.dgn 11/30/2020 12:20

DATE REVISED	DATE FILMED	DATE REVISED	DATE FILMED

FED.RD. DIST.NO.	STATE	FED.AID PROJ.NO.	SHEET NO.	TOTAL SHEETS
6	ARK.			
JOB NO.		050347	46	121

(2) MAINTENANCE OF TRAFFIC DETAILS

STATE OF ARKANSAS
LICENSED PROFESSIONAL ENGINEER
No. 15560
JEROME PAUL DAVIS
11-30-2020

N39°32'32"E
P.I. 397+34.42
P.T. 398+73.43
PROPOSED R/W
400
P.C. 400+16.51
℄ HWY. 9
N28°23'11"E
11'
2'
PROPOSED R/W
6 VERTICAL PANELS @ 50' O.C.
ROAD CLOSED
(1) RII-2 (48" X 30")
2-16' BARR. TYP. III LT.
405
T.C.E.
P.T. 404+92.87
PROPOSED R/W
CONST. LIMITS
T.C.E.
PROPOSED R/W
25' BUFFER
P.I. 0+00.00
410
N12°51'39"E
Δ = 09°57'16" LT.
25' BUFFER
STA. 399+00.00
BEGIN SITE 4
LOG MILE 8.03
WHITE CONSTRUCTION PAVEMENT MARKINGS
N28°23'11"E
6'
11'
11'
6'
N02°34'32"W
2'
11'
11'
2'
℄ EXISITING HWY. 9
N02°34'32"W
2'
11'
11'
2'
P.I. 402+60.67
TRAFFIC DRUMS 20' SPACING O.C.
PROPOSED R/W
PROPOSED R/W

SEQUENCING:

STAGE I, SITE 4:

1) INSTALL ADVANCE WARNING SIGNS.

2) INSTALL CONSTRUCTION PAVEMENT MARKINGS AND TRAFFIC CONTROL DEVICES AS DIRECTED BY THE ENGINEER.

3) CONSTRUCT NEW OFFSET ROADWAY AND R.C. BOX CULVERT AT SOUTH FORK CREEK.

25' BUFFER
410
N12°51'39"E
Δ = 09°57'16" LT.
P.I. 0+59.04
T.C.E.
PROPOSED R/W
N02°54'23"E
P.C. 412+27.50
PROPOSED R/W
TRAFFIC DRUMS 50' SPACING O.C.
415
P.I. 414+79.52
N02°34'32"W
WHITE CONSTRUCTION PAVEMENT MARKINGS
N02°34'32"W
N26°59'34"E
P.T. 417+20.30
2'
11'
11'
2'
℄ EXISITING HWY. 9
PROPOSED R/W
PROPOSED R/W
6 VERTICAL PANELS @ 50' O.C.
PROPOSED R/W
CONST. LIMITS
420
ROAD CLOSED
(1) RII-2 (48" X 30")
2-16' BARR. TYP. III RT.
℄ HWY. 9
N26°59'34"E
6'
11'
11'
6'
P.O.E. 421+17.81
PROPOSED R/W
25' BUFFER
25' BUFFER
2'
11'
11'
2'
STA. 420+15.00
END JOB 050347
& SITE 4
LOG MILE 8.43

STAGE 1 SITE 4
MAINTENANCE OF TRAFFIC DETAILS

USER: ap5181
DESIGN FILE: G:\18105601_050347hwy9\TRANSP\dgn\maint_of_traffic\r050347 MOT.dgn
PLOTTED: 11/30/2020 12:20
SCALE: 1:100

G:\18105601_050347hwy9\TRANSP\dgn\maint_of_traffic\r050347 MOT.dgn 11/30/2020 12:20

DATE REVISED	DATE FILMED	DATE REVISED	DATE FILMED

FED.RD. DIST.NO.	STATE	FED.AID PROJ.NO.	SHEET NO.	TOTAL SHEETS
6	ARK.			
JOB NO.		050347	47	121

(2) MAINTENANCE OF TRAFFIC DETAILS

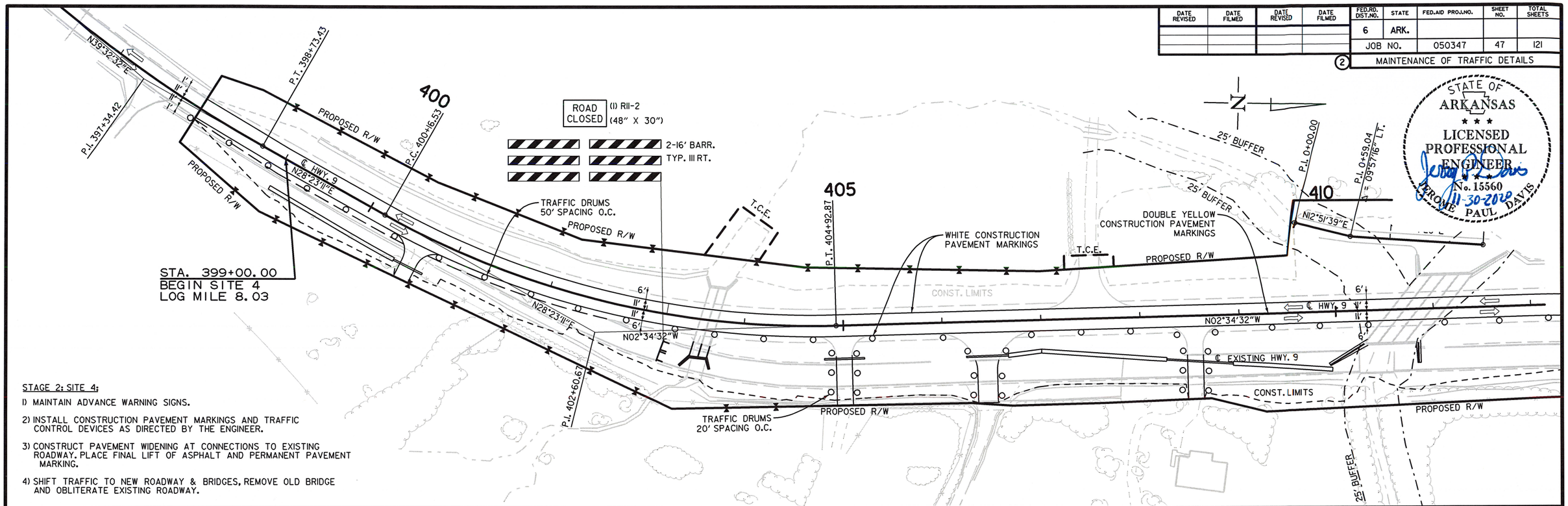

STAGE 2: SITE 4:

1) MAINTAIN ADVANCE WARNING SIGNS.

2) INSTALL CONSTRUCTION PAVEMENT MARKINGS AND TRAFFIC CONTROL DEVICES AS DIRECTED BY THE ENGINEER.

3) CONSTRUCT PAVEMENT WIDENING AT CONNECTIONS TO EXISTING ROADWAY. PLACE FINAL LIFT OF ASPHALT AND PERMANENT PAVEMENT MARKING.

4) SHIFT TRAFFIC TO NEW ROADWAY & BRIDGES, REMOVE OLD BRIDGE AND OBLITERATE EXISTING ROADWAY.

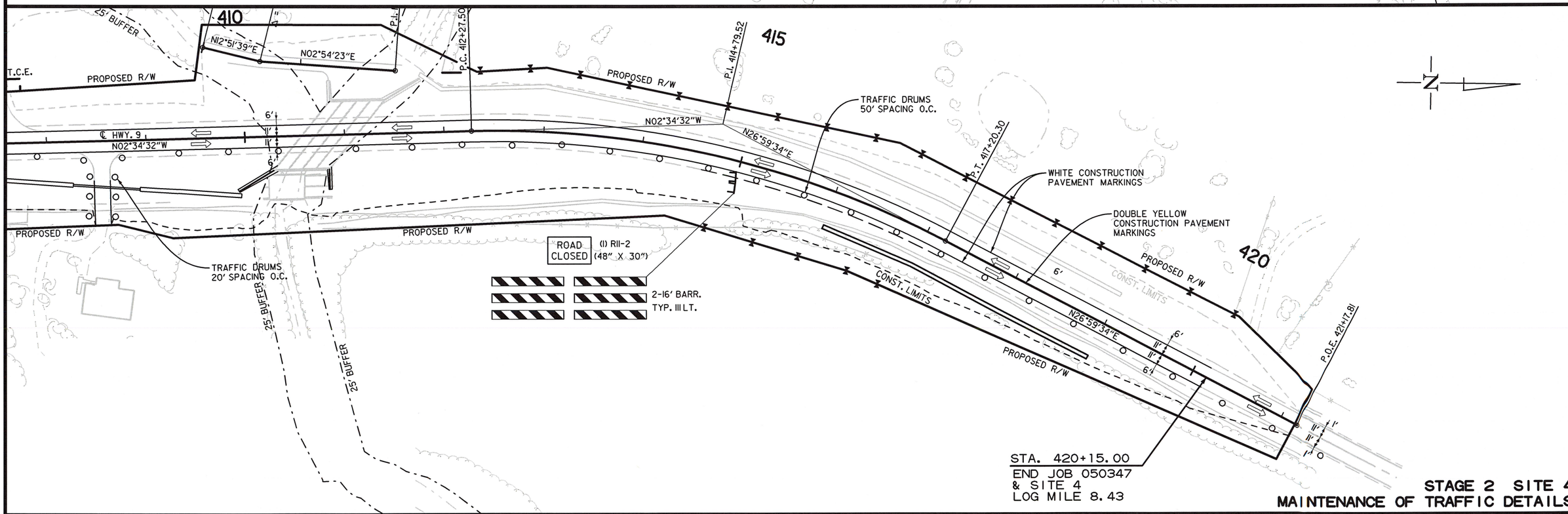

STAGE 2 SITE 4
MAINTENANCE OF TRAFFIC DETAILS

USER: ap5181
DESIGN FILE: G:\18105601_050347hwy9\TRANSP\dgn\maint_of_traffic\r050347 MOT.dgn
PLOTTED: 11/30/2020 12:20
SCALE: 1:100

G:\18105601_050347hwy9\TRANSP\dgn\maint_of_traffic\r050347 MOT.dgn 11/30/2020 12:20

DATE REVISED	DATE FILMED	DATE REVISED	DATE FILMED	FED.RD. DIST.NO.	STATE	FED.AID PROJ.NO.	SHEET NO.	TOTAL SHEETS
				6	ARK.			
				JOB NO.		050347	48	121

(2) PERMAMENT PAVEMENT MARKING DETAILS

PERMANENT PAVEMENT MARKING

SITE 1:

THERMOPLASTIC PAVEMENT MARKING WHITE (6") = 2800 LIN. FT.
THERMOPLASTIC PAVEMENT MARKING YELLOW (6") = 2800 LIN. FT.
RAISED PAVEMENT MARKERS TYPE II (YELLOW/YELLOW) (80' O.C.) = 19 EACH

SITE 2:

THERMOPLASTIC PAVEMENT MARKING WHITE (6") = 3799 LIN. FT.
THERMOPLASTIC PAVEMENT MARKING YELLOW (6") = 3899 LIN. FT.
RAISED PAVEMENT MARKERS TYPE II (YELLOW/YELLOW) (80' O.C.) = 25 EACH

SITE 3:

THERMOPLASTIC PAVEMENT MARKING WHITE (6") = 5319 LIN. FT.
THERMOPLASTIC PAVEMENT MARKING YELLOW (6") = 5319 LIN. FT.
RAISED PAVEMENT MARKERS TYPE II (YELLOW/YELLOW) (80' O.C.) = 34 EACH

SITE 4:

THERMOPLASTIC PAVEMENT MARKING WHITE (6") = 4630 LIN. FT.
THERMOPLASTIC PAVEMENT MARKING YELLOW (6") = 4630 LIN. FT.
RAISED PAVEMENT MARKERS TYPE II (YELLOW/YELLOW) (80' O.C.) = 30 EACH

STATE OF ARKANSAS
LICENSED PROFESSIONAL ENGINEER
No. 15560
JEROME PAUL DAVIS
11-30-2020

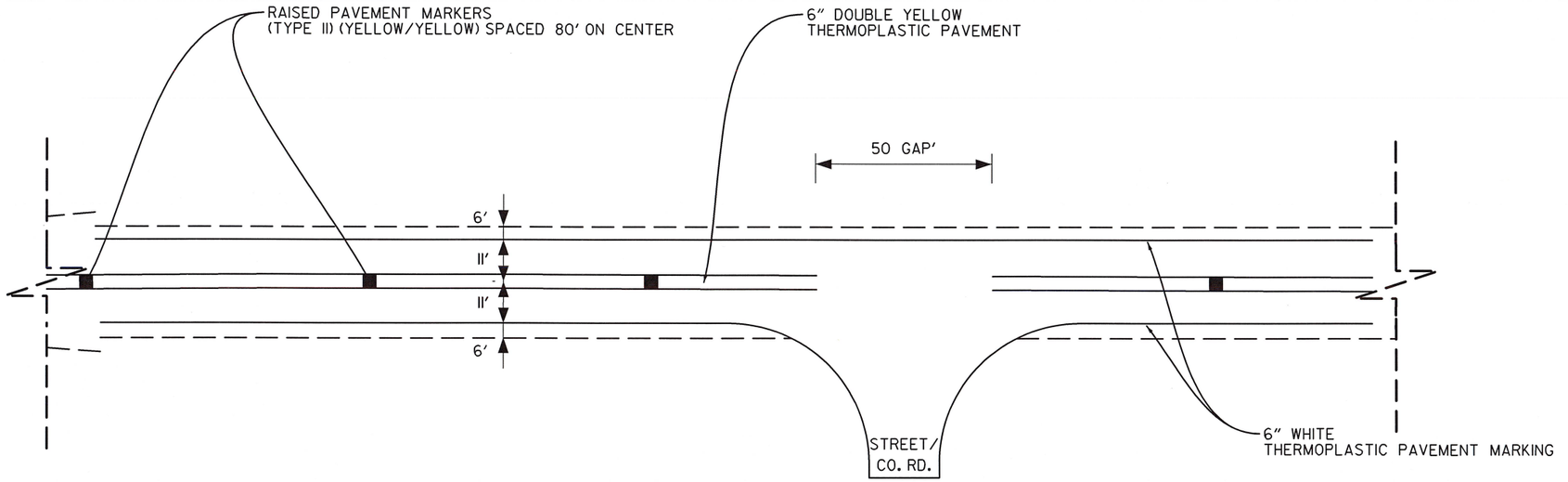

TYPICAL 2-LANE PERMANENT PAVEMENT MARKING LAYOUT

NOTE:

* THE 6" YELLOW STRIPING QUANTITY HAS BEEN ESTIMATED BASED ON A DOUBLE YELLOW CENTERLINE STRIPE FOR THE ENTIRE PROJECT. THE PROJECT MUST BE MARKED FOR PASSING/NO PASSING ZONES PRIOR TO THE PLACEMENT OF ANY FINAL STRIPING. CONTACT THE MAINTENANCE DIVISION AFTER THE FINAL LIFT OF SURFACE COURSE HAS BEEN PLACED TO SCHEDULE THE ZONING OF THE PROJECT.

PERMANENT PAVEMENT MARKING DETAILS

USER: ap918l
DESIGN FILE: G:\18105601_050347hwy9\TRANSP\dgn\misc\r050347 PPM Detail.dgn
PLOTTED: 11/30/2020 12:20
SCALE: 1=40.0072

G:\18105601_050347hwy9\TRANSP\dgn\misc\r050347 PPM Detail.dgn 11/30/2020 12:20

DATE REVISED	DATE FILMED	DATE REVISED	DATE FILMED	FED.RD. DIST.NO.	STATE	FED.AID PROJ.NO.	SHEET NO.	TOTAL SHEETS
				6	ARK.			
				JOB NO.		050347	49	121
				(2)	QUANTITIES			

STATE OF ARKANSAS
LICENSED PROFESSIONAL ENGINEER
No. 15560
JEROME PAUL DAVIS
3-18-21

ADVANCE WARNING SIGNS AND DEVICES

SIGN NUMBER	DESCRIPTION	SIGN SIZE	STAGE 1	STAGE 2	STAGE 3	MAXIMUM NUMBER REQUIRED	TOTAL SIGNS REQUIRED		VERTICAL PANELS	TRAFFIC DRUMS	BARRICADES (TYPE III)		FURNISHING & INSTALLING PRECAST CONC. BARRIER	RELOCATING PRECAST CONCRETE BARRIER
											RIGHT	LEFT		
			LIN. FT. - EACH				NO.	SQ. FT.	EACH				LIN. FT.	
W20-1	ROAD WORK 1500 FT.	48"x48"	6	6	2	6	6	96.0						
W20-1	ROAD WORK 1000 FT.	48"x48"	6	6	2	6	6	96.0						
W20-1	ROAD WORK 500 FT.	48"x48"	3	3	1	3	3	48.0						
W20-1	ROAD WORK AHEAD	48"x48"	6	6	2	6	6	96.0						
G20-2	END ROAD WORK	48"x24"	9	9	3	9	9	72.0						
R11-2	ROAD CLOSED	48"x30"	2	8	2	8	8	80.0						
OM-3L	OBJECT MARKER	12"x36"		3	3	3	3	9.0						
OM-3R	OBJECT MARKER	12"x36"		4	4	4	4	12.0						
R4-1	DO NOT PASS	24"x30"	12	12	4	12	12	60.0						
W21-5a	RIGHT SHOULDER CLOSED	36"x36"	15	15	5	15	15	135.0						
W8-1	BUMP	30"x30"	12	12	4	12	12	75.0						
W8-9a	SHOULDER DROP-OFF	36"X36"	12	12	4	12	12	108.0						
W24-1R	DOUBLE REVERSE CURVE RT.	48"x48"		1		1	1	16.0						
W24-1L	DOUBLE REVERSE CURVE LT.	48"x48"		1		1	1	16.0						
	VERTICAL PANELS		66	28	9	66			66					
	TRAFFIC DRUMS		76	159	105	159				159				
	TYPE III BARRICADE-RT. (16')		2	8	2	8					128			
	TYPE III BARRICADE-LT. (16')		2	10	2	10						160		
	FURNISHING AND INSTALLING PRECAST CONCRETE BARRIER			286	260	546							546	
	RELOCATING PRECAST CONCRETE BARRIER				286	286								286
TOTALS:								**919.0**	**66**	**159**	**128**	**160**	**546**	**286**

NOTE: THIS IS A LOW TRAFFIC VOLUME ROAD AS DEFINED IN SECTION 604.03, STANDARD SPECIFICATIONS FOR HIGHWAY CONSTRUCTION.

CONSTRUCTION PAVEMENT MARKINGS AND PERMANENT PAVEMENT MARKINGS

DESCRIPTION	STAGE 1	STAGE 2	STAGE 3	END OF JOB	REMOVAL OF PERMANENT PAVEMENT MARKINGS	CONSTRUCTION PAVEMENT MARKINGS	REMOVABLE CONSTRUCTION PAVEMENT MARKINGS	RAISED PAVEMENT MARKERS	THERMOPLASTIC PAVEMENT MARKING	
								TYPE II	6"	
								(YELLOW/YELLOW)	WHITE	YELLOW
	LIN. FT. - EACH				LIN. FT.		LIN. FT.	EACH	LIN. FT.	
REMOVAL OF PERMANENT PAVEMENT MARKINGS		10156			10156					
CONSTRUCTION PAVEMENT MARKINGS	26684	26767	13020			66471				
REMOVABLE CONSTRUCTION PAVEMENT MARKINGS		6454					6454			
RAISED PAVEMENT MARKERS TYPE II (YELLOW/YELLOW)	17	103	41	108				269		
THERMOPLASTIC PAVEMENT MARKING WHITE (6")				16648					16648	
THERMOPLASTIC PAVEMENT MARKING YELLOW (6")				16548						16548
TOTALS:					**10156**	**66471**	**6454**	**269**	**16648**	**16548**

NOTE: THIS IS A LOW TRAFFIC VOLUME ROAD AS DEFINED IN SECTION 604.03, STANDARD SPECIFICATIONS FOR HIGHWAY CONSTRUCTION.

NOTE: THE 6" YELLOW STRIPING QUANTITY HAS BEEN ESTIMATED BASED ON A DOUBLE YELLOW CENTERLINE STRIPE FOR THE ENTIRE PROJECT.
THE PROJECT MUST BE MARKED FOR PASSING/NO PASSING ZONES PRIOR TO THE PLACEMENT OF ANY FINAL STRIPING.
CONTACT THE MAINTENANCE DIVISION AFTER THE FINAL LIFT OF SURFACE COURSE HAS BEEN PLACED TO SCHEDULE THE ZONING OF THE PROJECT.

CLEARING AND GRUBBING

STATION	STATION	LOCATION	CLEARING	GRUBBING
			STATION	
99+00	113+00	HWY. 9 - SITE 1	14	14
198+40	217+00	HWY. 9 - SITE 2	19	19
307+00	320+50	HWY. 9 - SITE 3	14	14
398+50	402+25	HWY. 9 - SITE 4	4	4
409+00	420+00	HWY. 9 - SITE 4	11	11
TOTALS:			**62**	**62**

BENCH MARKS

STATION	LOCATION	BENCH MARKS
		EACH
104+39	SITE 1: HEADWALL ON R.C. BOX CULVERT	1
207+90	SITE 2: HEADWALL ON R.C. BOX CULVERT	1
308+00	SITE 3: AT BRIDGE	1
410+85	SITE 4: HEADWALL ON R.C. BOX CULVERT	1
TOTAL:		**4**

NOTE: SHOWN FOR INFORMATION ONLY. BENCH MARKS SHALL BE FURNISHED AND PLACED BY STATE FORCES.

QUANTITIES

DATE REVISED	DATE FILMED	DATE REVISED	DATE FILMED	FED.RD. DIST.NO.	STATE	FED.AID PROJ.NO.	SHEET NO.	TOTAL SHEETS
				6	ARK.			
				JOB NO.		050347	50	121
				(2)	QUANTITIES			

EROSION CONTROL

STATION	STATION	LOCATION	PERMANENT EROSION CONTROL					TEMPORARY EROSION CONTROL									
			SEEDING	LIME	MULCH COVER	WATER	SECOND SEEDING APPLICATION	TEMPORARY SEEDING	MULCH COVER	WATER	FILTER SOCK (18") (E-3)	SAND BAG DITCH CHECKS (E-5)	ROCK DITCH CHECKS (E-6)	SILT FENCE (E-11)	SEDIMENT BASIN (E-14)	OBLITERATION OF SEDIMENT BASIN	*SEDIMENT REMOVAL & DISPOSAL
			ACRE	TON	ACRE	M.GAL.	ACRE	ACRE	ACRE	M.GAL.	LIN. FT.	BAG	CU.YD.	LIN. FT.	CU.YD.	CU.YD.	CU. YD.
ENTIRE	PROJECT	CLEARING AND GRUBBING						7.16	7.16	146.1	2522			7489			277
ENTIRE	PROJECT	STAGE 1	5.89	11.78	5.89	600.8	5.89	5.89	5.89	120.2		484	75	190	762	762	816
ENTIRE	PROJECT	STAGE 2	6.39	12.78	6.39	651.8	6.39	6.39	6.39	130.4		550	81	1088	875	875	967
ENTIRE	PROJECT	STAGE 3	2.04	4.08	2.04	208.1	2.04	2.04	2.04	41.6		66	6	422			21
*ENTIRE PROJECT TO BE USED IF AND WHERE DIRECTED BY THE ENGINEER.			2.86	5.72	2.86	291.7	2.86	2.86	2.86	58.3	631	110	39	2297	175	175	260
TOTALS:			**17.18**	**34.36**	**17.18**	**1752.4**	**17.18**	**24.34**	**24.34**	**496.6**	**3153**	**1210**	**201**	**11486**	**1812**	**1812**	**2341**

BASIS OF ESTIMATE:
LIME .....2 TONS / ACRE OF SEEDING
WATER.....102.0 M.G. / ACRE OF SEEDING
WATER.....20.4 M.G. / ACRE OF TEMPORARY SEEDING
SAND BAG DITCH CHECKS.....22 BAGS / LOCATION
FILTER SOCK (18").....9 LIN. FT. / LOCATION
ROCK DITCH CHECKS.....3 CU.YD./LOCATION

NOTE: THE TEMPORARY EROSION CONTROL DEVICES SHOWN ABOVE AND ON THE PLANS SHALL BE INSTALLED IN SUCH A SEQUENCE AS TO DETER EROSION AND SEDIMENTATION ON U.S. WATERWAYS AS EXPLAINED BY THE NATIONAL POLLUTANT DISCHARGE ELIMINATION SYSTEM PERMIT.

*QUANTITIES ESTIMATED.
SEE SECTION 104.03 OF THE STD. SPECS.



REMOVAL AND DISPOSAL OF FENCE

STATION	STATION	LOCATION	WIRE FENCE	CHAIN LINK FENCE	GATES
			LIN. FT.	LIN. FT.	EACH
99+00	100+84	HWY. 9 - LT. - SITE 1	205		
102+32	113+00	HWY. 9 - LT. - SITE 1	1066		
106+45	113+00	HWY. 9 - RT. - SITE 1	678		
197+75	203+75	HWY. 9 - RT. - SITE 2	627		
198+88	201+23	HWY. 9 - LT. - SITE 2	267		
203+65		HWY. 9 - LT. - SITE 2			1
210+33	212+02	HWY. 9 - LT. - SITE 2	244		
210+95	217+25	HWY. 9 - RT. - SITE 2	651		
214+58	217+25	HWY. 9 - LT. - SITE 2	296		
298+94	312+25	HWY. 9 - RT. - SITE 3	1463		
301+70	302+80	HWY. 9 - LT. - SITE 3	110		
307+04		HWY. 9 - RT. - SITE 3			1
309+00	311+50	HWY. 9 - LT. - SITE 3	250		
311+80		HWY. 9 - RT. - SITE 3			1
314+00	321+37	HWY. 9 - LT. - SITE 3	711		
321+54	322+50	HWY. 9 - LT. - SITE 3	114		
398+03	399+03	HWY. 9 - RT. - SITE 4		99	
399+00	404+43	HWY. 9 - LT. - SITE 4	805		
399+03	404+41	HWY. 9 - RT. - SITE 4	633		
406+64		HWY. 9 - LT. - SITE 4			2
411+70	420+17	HWY. 9 - LT. - SITE 4	950		
414+80	416+70	HWY. 9 - RT. - SITE 4	183		
420+13		HWY. 9 - LT. - SITE 4			1
420+67	421+15	HWY. 9 - LT. - SITE 4	64		
TOTALS:			**9317**	**99**	**6**

CONCRETE DITCH PAVING

STATION	STATION	LOCATION	LENGTH	"W"	"B"	CONC. DITCH PAVING (TYPE A)	CONC. DITCH PAVING (TYPE B)	SOLID SODDING	WATER
			LIN. FT.	FEET	FEET	SQ. YD.	SQ. YD.	SQ. YD.	M. GAL.
103+00	103+40	HWY. 9 - RT - SITE 1	38	4			16.89	17	0.21
103+70	104+36	HWY. 9 - RT - SITE 1	67	4			29.78	30	0.38
210+40	213+73	HWY. 9 - LT. - SITE 2	333	10	4	370.00		148	1.86
302+30	304+24	HWY. 9 - LT. - SITE 3	194	4			86.22	86	1.08
313+15	321+00	HWY. 9 - RT. - SITE 3	785	10	4	872.22		349	4.40
314+00	316+56	HWY. 9 - LT. - SITE 3	256	10	4	284.44		114	1.44
316+56	316+60	HWY. 9 - LT. - SITE 3	20	4	2	8.89		9	0.11
318+00	321+00	HWY. 9 - LT. - SITE 3	300	4			133.33	133	1.68
399+00	400+60	HWY. 9 - RT. - SITE 4	160	4			71.11	71	0.89
399+20	403+55	HWY. 9 - LT. - SITE 4	435	4			193.33	193	2.43
406+66	410+30	HWY. 9 - RT. - SITE 4	262	4			116.44	116	1.46
411+75	419+00	HWY. 9 - LT. - SITE 4	725	4			322.22	322	4.06
416+00	419+00	HWY. 9 - RT. - SITE 4	300	4			133.33	133	1.68
TOTALS:						**1535.55**	**1102.65**	**1721**	**21.68**

BASIS OF ESTIMATE:
WATER.....12.6 GAL. / SQ. YD. OF SOLID SODDING.

EROSION CONTROL MATTING

STATION	STATION	LOCATION	LENGTH	CLASS 3
			LIN. FT.	SQ. YD.
104+45.00	109+00.00	HWY. 9 - LT. - SITE 1	455.00	404.44
105+04.00	109+00.00	HWY. 9 - RT. - SITE 1	396.00	352.00
197+75.00	200+00.00	HWY. 9 - RT. -SITE 2	225.00	200.00
208+00.00	210+00.00	HWY. 9 - RT. -SITE 2	200.00	177.78
409+00.00	410+85.00	HWY. 9 - LT. -SITE 4	185.00	164.44
410+85.00	416+00.00	HWY. 9 - RT. -SITE 4	515.00	457.78
420+15.00	421+15.00	HWY. 9 - LT. -SITE 4	100.00	88.89
TOTAL:				**1845.33**

NOTE: AVERAGE WIDTH = 8'-0"

REMOVAL AND DISPOSAL OF CULVERTS

STATION	DESCRIPTION	PIPE CULVERTS	BOX CULVERTS
		EACH	EACH
103+55	18" X 20' C.M. PIPE CULVERT - RT. - SITE 1	1	
205+10	24" X 50' C.M. PIPE CULVERT - SITE 2	1	
214+00	18" X 24' PIPE CULVERT - LT. - SITE 2	1	
299+78	24" X 40' C.M. PIPE CULVERT - SITE 3	1	
304+18	18" X37' C.M. PIPE CULVERT - SITE 3	1	
316+56	24" X 43' C.M. PIPE CULVERT - SITE 3	1	
400+60	24" X 43' C.M. PIPE CULVERT - SITE 4	1	
403+65	15' x 4' R.C. BOX CULVERT WITH HEADWALLS - SITE 4		1
405+00	18" X 24' R.C. PIPE CULVERT - SITE 4	1	
408+55	18" X 20' C.M. PIPE CULVERT - SITE 4	1	
TOTALS:		**9**	**1**

NOTE: QUANTITIES SHOWN ABOVE SHALL INCLUDE REMOVAL & DISPOSAL OF ALL HEADWALLS AND FLARED END SECTIONS IF APPLICABLE.

MAILBOXES

LOCATION	MAILBOXES	MAILBOX SUPPORTS (SINGLE)	MAILBOX SUPPORTS (DOUBLE)
		EACH	
ENTIRE PROJECT	11	9	1
TOTALS:	**11**	**9**	**1**

USER: JH595
DESIGN FILE: G:\18105601_050347hwy9\TRANSP\dgn\quantities\r050347 Quantities.dgn
PLOTTED: 2/22/2021 15:12
SCALE: 1:200

QUANTITIES

DATE REVISED	DATE FILMED	DATE REVISED	DATE FILMED	FED.RD. DIST.NO.	STATE	FED.AID PROJ.NO.	SHEET NO.	TOTAL SHEETS
				6	ARK.			
				JOB NO.		050347	51	121

(2) QUANTITIES

STATE OF ARKANSAS ★ ★ ★ LICENSED PROFESSIONAL ENGINEER ★ ★ ★ No. 15560 JEROME PAUL DAVIS 4-30-2021

ACHM PATCHING OF EXISTING ROADWAY

DESCRIPTION	TON
ENTIRE PROJECT - TO BE USED IF AND WHERE	250
DIRECTED BY THE ENGINEER	
TOTAL:	**250**

NOTE: QUANTITY ESTIMATED.
SEE SECTION 104.03 OF THE STD. SPECS.

FENCING

STATION	STATION	LOCATION	WIRE FENCE (TYPE C)	WIRE FENCE (TYPE D)	WIRE FENCE (TYPE D-1)	* 4' CHAIN LINK FENCE	* 16'-0" GATES
			LIN. FT.			LIN. FT.	EACH
99+00	100+84	HWY. 9 - LT. - SITE 1			196		
102+30	113+00	HWY. 9 - LT. - SITE 1	1054				
106+47	113+00	HWY. 9 - RT. - SITE 1	675				
197+75	203+74	HWY. 9 - LT. - SITE 2			607		
203+65		HWY. 9 - LT. - SITE 2					1
198+88	201+23	HWY. 9 - RT. - SITE 2		237			
210+33	212+02	HWY. 9 - LT. - SITE 2		170			
210+95	217+25	HWY. 9 - RT. - SITE 2			634		
214+57	217+25	HWY. 9 - LT. - SITE 2			266		
315+00	322+50	HWY. 9 - LT. - SITE 3			737		
321+45		HWY. 9 - LT. - SITE 3					1
321+69	322+50	HWY. 9 - LT. - SITE 3			106		
398+21	399+00	HWY. 9 - RT. - SITE 4				96	
399+00	401+95	HWY. 9 - RT. - SITE 5	295				
412+00	420+11	HWY. 9 - LT. - SITE 4		848			
414+60	416+70	HWY. 9 - RT. - SITE 4	172				
420+00		HWY. 9 - LT. - SITE 4					1
420+67	421+15	HWY. 9 - LT. - SITE 4		51			
TOTALS:			**2196**	**1306**	**2546**	**96**	**3**

* DENOTES ALTERNATE BID ITEM.

APPROACH GUTTERS AND SLABS

STATION	STATION	LOCATION	APPROACH GUTTER (TYPE SPECIAL)	APPROACH SLABS (TYPE SPECIAL)	REINFORCING STEEL-RDWY. (GR. 60)	AGGREGATE BASE CRS. (CLASS 7)
			CU.YD.	CU.YD.	POUND	TON
307+72.00	308+08.50	LT. SIDE	10.86		615	
307+72.00	308+08.50	APPROACH SLAB		44.92	5296	33.75
307+72.00	308+08.50	RT. SIDE	10.86		615	
309+20.50	309+57.00	LT. SIDE	10.86		615	
309+20.50	309+57.00	APPROACH SLAB		44.92	5296	33.75
309+20.50	309+57.00	RT. SIDE	10.86		615	
TOTALS:			**43.44**	**89.84**	**13052**	**67.50**

NOTE: USE T =14.5" FOR 6' SHOULDER.

REMOVAL OF EXISTING BRIDGE STRUCTURE

STATION	STATION	LOCATION	LUMP SUM
104+12.46	104+61.71	HWY. 9 - SITE 1	1.00
207+15.14	207+51.59	HWY. 9 - SITE 2	1.00
410+33.14	410+69.24	HWY. 9 - SITE 4	1.00
TOTAL:			3.00

STRUCTURES

STATION	DESCRIPTION	REINFORCED CONCRETE PIPE CULVERT (CLASS III) 24"	(CLASS IV) 24"	(CLASS IV) 30"	FLARED END SECTIONS FOR R.C. PIPE 24"	30"	TEMPORARY CULVERTS 18"	48"	SPAN	HEIGHT	LENGTH	CLASS S CONCRETE-ROADWAY	REINF. STEEL-ROADWAY (GRADE 60)	UNCL.EXC. FOR STR.-ROADWAY	SOLID SODDING	WATER	STD. DWG. NOS.
		LIN. FT.			EACH		LIN. FT.					CU.YD.	POUND	CU.YD.	SQ.YD.	M.GAL.	
103+50	18"X44' TEMP. PIPE CULVERT -RT. - SITE 1 DETOUR						44										PCC-1, PCM-1, PCP-1, PCP-2, PCP-3
105+61	QUAD. 48"X85' C.M. CULVERT PIPE (60° RT. FWD. SKEW) - SITE 1 DETOUR							340									PCC-1, PCM-1, PCP-1, PCP-3
205+04	24" X 78' R.C. PIPE CULVERT W/ FES LT. & RT. - SITE 2	78			2										16	0.20	FES-1, FES-2, PCC-1
299+78	24" X 63' R.C. PIPE CULVERT W/ FES LT. & RT. - SITE 3		63		2										16	0.20	FES-1, FES-2, PCC-1
304+18	30" X 69' R.C. PIPE CULVERT W/ FES LT. & RT. - SITE 3			69		2									26	0.33	FES-1, FES-2, PCC-1
316+56	24" X 63' R.C. PIPE CULVERT W/ FES LT. & RT. - SITE 3		63		2										16	0.20	FES-1, FES-2, PCC-1
403+64	DBL. 8'X4'X75' R.C. BOX CULVERT (10° LT. FWD. SKEW) W/ 3:1 WINGS LT. & RT. - SITE 4								8	4	75	103.83	15621	50	19	0.24	SPECIAL DETAILS, PBC-1, RCB-1, RCB-2
SUBTOTALS:		**78**	**126**	**69**	**6**	**2**	**44**	**340**				**103.83**	**15621**	**50**	**93**	**1.17**	
STRUCTURES OVER 20' - 0" SPAN																	
104+39	QUAD. 12'X7' X105' R.C. BOX CULVERT (45° RT. FWD. SKEW) W/ 3:1 WINGS LT. & RT. - SITE 1								12	7	105	590.05	78822	297	58	0.73	SPECIAL DETAILS, PBC-1, RCB-1, RCB-2
207+90	QUAD. 8'X6'X103' R.C. BOX CULVERT (45° RT. FWD. SKEW) W/ 3:1 WINGS LT. & RT. - SITE 2								8	6	103	323.87	44216	153	44	0.55	SPECIAL DETAILS, PBC-1, RCB-1, RCB-2
410+85	QUAD. 10'X9'X90' R.C. BOX CULVERT (40° LT. FWD. SKEW) W/ 3:1 WINGS LT. & RT. - SITE 4								10	9	90	443.76	56689	205	56	0.71	SPECIAL DETAILS, PBC-1, RCB-1, RCB-2
SUBTOTALS:												**1357.68**	**179727**	**655**	**158**	**1.99**	
TOTALS:		**78**	**126**	**69**	**6**	**2**	**44**	**340**				**1461.51**	**195348**	**705**	**251**	**3.16**	

BASIS OF ESTIMATE:
WATER.....12.6 GAL. / SQ. YD. OF SOLID SODDING

NOTE: FOR R.C. PIPE CULVERT INSTALLATIONS USE TYPE 3 BEDDING UNLESS OTHERWISE SPECIFIED.

NOTE: FOR C.M. PIPE CULVERT INSTALLATIONS USE TYPE 2 BEDDING UNLESS OTHERWISE SPECIFIED.

USER: ap5181 DESIGN FILE: G:\18105601_050347hwy9\TRANSP\dgn\quantities\r050347 Quantities.dgn PLOTTED: 4/30/2021 09:35 SCALE: 1:200

G:\18105601_050347hwy9\TRANSP\dgn\quantities\r050347 Quantities.dgn 4/30/2021 09:35

DATE REVISED	DATE FILMED	DATE REVISED	DATE FILMED	FED.RD. DIST.NO.	STATE	FED.AID PROJ.NO.	SHEET NO.	TOTAL SHEETS
				6	ARK.			
				JOB NO.		050347	52	121

(2) QUANTITIES

STATE OF ARKANSAS
LICENSED PROFESSIONAL ENGINEER
No. 15560
JEROME PAUL DAVIS
11-30-2020

EARTHWORK

	STATION	STATION	LOCATION / DESCRIPTION	UNCLASSIFIED EXCAVATION	COMPACTED EMBANKMENT	* SOIL STABILIZATION
				CU. YD.		TON
	ENTIRE	PROJECT	STAGE 1-MAIN LANES	18478	23343	
	ENTIRE	PROJECT	STAGE 2-MAIN LANES	29674	12643	
	ENTIRE	PROJECT	STAGE 3-MAIN LANES	7361	4678	
	ENTIRE	PROJECT	APPROACHES	440	810	
	ENTIRE	PROJECT	TEMPORARY APPROACHES		50	
	ENTIRE	PROJECT	BRIDGE EXCAVATION	754		
	403+65		CHANNEL CHANGE	190		
	410+85		CHANNEL CHANGE	470		
*	ENTIRE	PROJECT	TO BE USED IF AND WHERE			50
			DIRECTED BY THE ENGINEER			
	TOTALS:			57367	41524	50

* QUANTITY ESTIMATED.
SEE SECTION 104.03 OF THE STD. SPECS.

4" PIPE UNDERDRAIN

	STATION	STATION	LOCATIONS	4" PIPE UNDERDRAINS	UNDERDRAIN OUTLET PROTECTORS
				LIN. FT.	EACH
*	ENTIRE PROJECT TO BE USED IF AND			4000	16
	WHERE DIRECTED BY THE ENGINEER				
	TOTALS:			4000	16

* NOTE: QUANTITY ESTIMATED.
SEE SECTION 104.03 OF THE STD. SPECS.

SELECTED PIPE BEDDING

LOCATION	SELECTED PIPE BEDDING
	CU.YD.
ENTIRE PROJECT TO BE USED IF	
AND WHERE DIRECTED BY THE	100
ENGINEER	
TOTAL:	100

NOTE: QUANTITY ESTIMATED.
SEE SECTION 104.03 OF THE STD. SPECS.

DUMPED RIPRAP AND FILTER BLANKET

STATION	LOCATION	DUMPED RIPRAP	FILTER BLANKET
		CU. YD.	SQ. YD.
304+18	OUTLET OF PIPE CULVERT	6	12
	TO BE USED IF AND WHERE		
	DIRECTED BY THE ENGINEER		
TOTALS:		6	12

SEE SECTION 104.03 OF THE STANDARD SPECIFICATIONS

NOTE: FILTER BLANKET SHALL BE GEOTEXTILE FABRIC (TYPE 5).

GUARDRAIL

STATION	STATION	LOCATION	GUARDRAIL (TYPE A)	THRIE BEAM GUARDRAIL TERMINAL	GUARDRAIL TERMINAL (TYPE 2)
			LIN. FT.	EACH	
305+80.35	307+99.10	HWY. 9 - RT. - SITE 3	150	1	1
306+55.35	307+99.10	HWY. 9 - LT. - S ITE 3	75	1	1
309+29.89	310+73.64	HWY. 9 - RT. - SITE 3	75	1	1
309+29.89	311+48.64	HWY. 9 - LT. - SITE 3	150	1	1
TOTALS:			450	4	4

REMOVAL AND DISPOSAL OF ITEMS

STATION	STATION	LOCATION	WALKS	GUARDRAIL	BUILDINGS
			SQ. YD.	LIN. FT.	EACH
104+10	104+60	HWY. 9 - RT. - SITE 1		50	
104+11	104+57	HWY. 9 - LT. - SITE 1		46	
207+12	207+48	HWY. 9 - RT. - SITE 2		36	
207+15	207+51	HWY. 9 - LT. - SITE 2		36	
300+45	300+71	HWY. 9 - LT. - SITE 3			1
300+55	300+60	HWY. 9 - LT. - SITE 3	6		
306+75	309+77	HWY. 9 - RT. - SITE 3		302	
307+51	310+54	HWY. 9 - LT. - SITE 3		303	
403+65		HWY. 9 - RT. - SITE 4			
410+24	410+58	HWY. 9 - LT. - SITE 4		34	
410+24	410+58	HWY. 9 - RT. - SITE 4		34	
TOTALS:			6	841	1

NOTE: THE QUANTITY SHOWN ABOVE FOR THE REMOVAL AND DISPOSAL OF GUARDRAIL SHALL INCLUDE THE REMOVAL AND DISPOSAL OF ALL GUARDRAIL TERMINALS AND TERMINAL ANCHOR POSTS.

SOIL LOG

STATION	LOCATION	DEPTH	LIQUID LIMIT	PLASTICITY INDEX	AASHTO CLASSIFICATION	COLOR
		FEET				
303+30	HWY. 9 - SITE 3	.5-1.5	21	9	A-4	GREY REDDISH TAN

SOIL CHARACTERISTICS TABULATED ABOVE ARE REPRESENTATIVE AT THE LOCATION OF THE SAMPLE, AND FROM SURFACE INDICATIONS ARE TYPICAL FOR THE LIMITS SHOWN. THESE DATA ARE SHOWN FOR INFORMATION ONLY. THE STATE WILL NOT BE RESPONSIBLE FOR VARIATIONS IN THE SOIL CHARACTERISTICS AND/OR EXTENT OF SAME DIFFERING FROM THE ABOVE TABULATIONS.

REMOVING & REPLACING TOPSOIL

LOCATION	REMOVING & REPLACING TOPSOIL
	CU.YD.
ENTIRE PROJECT TO BE USED IF	
AND WHERE DIRECTED BY THE	6000
ENGINEER	
TOTAL:	6000

USER: dp5181
DESIGN FILE: G:\181056O1_050347hwy9\TRANSP\dgn\quantities\r050347 Quantities.dgn
PLOTTED: 11/30/2020 12:21
SCALE: 1:200

QUANTITIES

DATE REVISED	DATE FILMED	DATE REVISED	DATE FILMED	FED.RD. DIST.NO.	STATE	FED.AID PROJ.NO.	SHEET NO.	TOTAL SHEETS
				6	ARK.			
				JOB NO.		050347	53	121
				2	QUANTITIES			

DRIVEWAYS & TURNOUTS

STATION	SIDE	LOCATION	WIDTH	ACHM SURFACE COURSE (1/2") 220 LBS. PER SQ. YD. (PG 64-22)		AGGREGATE BASE COURSE (CLASS 7)	SIDE DRAINS		STANDARD DRAWINGS
							18"	22"X14"	
			FEET	SQ. YD.	TON	TON	LIN. FT.		
103+50	RT.	HWY. 9 - DETOUR -SITE 1	16	186.85	20.55	76.30	44		PCC-1, PCM-1, PCP-1, PCP-2, PCP-3
103+55	RT.	HWY. 9 - SITE 1	16	148.86	16.37	54.93	60		PCC-1, PCM-1, PCP-1, PCP-2, PCP-3
201+29	RT.	HWY. 9 - SITE 2	16	381.04	41.91	149.68			
203+88	LT.	HWY. 9 - SITE 2	20	237.70	26.15	97.06			
214+00	LT.	HWY. 9 - SITE 2	16	108.10	11.89	38.40	50		PCC-1, PCM-1, PCP-1, PCP-2, PCP-3
296+90	RT.	HWY. 9 - SITE 3	16	76.06	8.37	60.93		36	PCC-1, PCM-1, PCP-1, PCP-2, PCP-3
300+89	LT.	HWY. 9 - SITE 3	16	105.13	11.56	37.20	40		PCC-1, PCM-1, PCP-1, PCP-2, PCP-3
321+45	LT.	HWY. 9 - SITE 3	16	96.53	10.62	33.83			
321+45	RT.	HWY. 9 - SITE 3	16	149.46	16.44	55.29			
400+60	RT.	HWY. 9 - SITE 4	16	34.58	3.80	26.54	32		PCC-1, PCM-1, PCP-1, PCP-2, PCP-3
405+00	RT.	HWY. 9 - SITE 4	16	134.90	14.84	49.28	42		PCC-1, PCM-1, PCP-1, PCP-2, PCP-3
406+45	RT.	HWY. 9 - SITE 4	20	217.99	23.98	77.11	42		PCC-1, PCM-1, PCP-1, PCP-2, PCP-3
407+50	LT.	HWY. 9 - SITE 4	20	177.80	19.56	60.71			
408+55	RT.	HWY. 9 - SITE 4	16	140.57	15.46	51.53	68		PCC-1, PCM-1, PCP-1, PCP-2, PCP-3
* ENTIRE PROJECT TEMPORARY DRIVES						100.00			
TOTALS:				**2195.57**	**241.50**	**968.79**	**378**	**36**	

BASIS OF ESTIMATE:
ACHM SURFACE COURSE (1/2").....94.7% MIN. AGGR.....5.3% ASPHALT BINDER
MAXIMUM NUMBER OF GYRATIONS = 115 FOR PG 64-22

* QUANTITY ESTIMATED
SEE SECTION 104.03 OF THE STD. SPECS.
TO BE USED IF AND WHERE DIRECTED BY THE ENGINEER.

NOTE: FOR R.C. PIPE CULVERT INSTALLATIONS USE TYPE 3 BEDDING UNLESS OTHERWISE SPECIFIED.
NOTE: FOR C.M. PIPE CULVERT INSTALLATIONS USE TYPE 2 BEDDING UNLESS OTHERWISE SPECIFIED.

COLD MILLING ASPHALT PAVEMENT

STATION	STATION	LOCATION	AVG. WIDTH	COLD MILLING ASPHALT PAVEMENT
			FEET	SQ. YD.
99+00.00	100+00.00	MAIN LANES	22.00	244.44
112+00.00	113+00.00	MAIN LANES	22.00	244.44
197+75.57	198+75.57	MAIN LANES	22.00	244.44
216+25.00	217+25.00	MAIN LANES	22.00	244.44
295+90.39	296+90.39	MAIN LANES	22.00	244.44
321+50.00	322+50.00	MAIN LANES	22.00	244.44
398+00.00	399+00.00	MAIN LANES	22.00	244.44
420+15.00	421+15.00	MAIN LANES	22.00	244.44
TOTAL:				**1955.52**

NOTES:
1) AVERAGE MILLING DEPTH 1".
2) DELIVER COLD MILLING MATERIAL TO:
FULTON COUNTY ROAD DEPARTMENT
190 VETERAN'S WAY
SALEM , AR

STATE OF ARKANSAS
LICENSED PROFESSIONAL ENGINEER
No. 15560
JEROME PAUL DAVIS
4-11-22

BASE AND SURFACING (BOX 1 OF 2)

STATION	STATION	LOCATION	LENGTH	AGGREGATE BASE COURSE (CLASS 7)		TACK COAT						TOTAL GALLONS	ACHM BINDER COURSE (1")				ACHM SURFACE COURSE (1/2")								
				TON / STATION	TON	(0.05 GAL. PER SQ. YD.)			(0.17 GAL. PER SQ. YD.)				AVG. WID.	SQ.YD.	POUND / SQ.YD.	PG 64-22	AVG. WID.	SQ.YD.	POUND / SQ.YD.	PG 64-22	AVG. WID.	SQ.YD.	POUND / SQ.YD.	PG 64-22	TOTAL PG 64-22
			FEET			TOTAL WID. FEET	SQ.YD.	GALLON	TOTAL WID. FEET	SQ.YD.	GALLON		FEET			TON	FEET			TON	FEET			TON	TON
MAIN LANES																									
SITE 1																									
99+00.00	100+00.00	HWY 9 - NOTCH & WIDEN TRANSITION - SITE 1	100.00	104.50	104.50				22.00	244.44	41.55	41.55									24.00	266.67	220.00	29.33	29.33
100+00.00	102+37.75	HWY 9 - NOTCH & WIDEN - SITE 1	237.75	138.50	329.28	13.29	351.08	17.55				17.55	6.71	177.26	330.00	29.25	6.58	173.82	220.00	19.12	26.00	686.83	220.00	75.55	94.67
102+37.75	108+76.52	HWY 9 - FULL DEPTH SUPER - SITE 1	638.77	224.00	1430.84	44.71	3173.27	158.66				158.66	22.46	1594.09	330.00	263.02	22.25	1579.18	220.00	173.71	26.00	1845.34	220.00	202.99	376.70
108+76.52	112+00.00	HWY 9 - NOTCH & WIDEN SUPER - SITE 1	323.48	163.25	528.08	6.41	230.39	11.52				11.52	3.24	116.45	330.00	19.21	3.17	113.94	220.00	12.53	26.00	934.50	220.00	102.80	115.33
112+00.00	113+00.00	HWY 9 - NOTCH & WIDEN TRANSITION - SITE 1	100.00	138.50	138.50				22.00	244.44	41.55	41.55									24.00	266.67	220.00	29.33	29.33
SITE 2																									
197+75.57	198+75.57	HWY 9 - NOTCH & WIDEN TRANSITION - SITE 2	100.00	112.00	112.00				22.00	244.44	41.55	41.55									24.00	266.67	220.00	29.33	29.33
198+75.57	202+00.00	HWY 9 - NOTCH & WIDEN SUPER - SITE 2	324.43	185.00	600.20	10.63	383.19	19.16				19.16	5.37	193.58	330.00	31.94	5.26	189.61	220.00	20.86	26.00	937.24	220.00	103.10	123.96
202+00.00	214+00.00	HWY 9 - FULL DEPTH - SITE 2	1200.00	224.00	2688.00	44.71	5961.33	298.07				298.07	22.46	2994.67	330.00	494.12	22.25	2966.67	220.00	326.33	26.00	3466.67	220.00	381.33	707.66
214+00.00	216+25.00	HWY 9 - NOTCH & WIDEN SUPER - SITE 2	225.00	159.00	357.75	4.00	100.00	5.00				5.00	2.00	50.00	330.00	8.25	2.00	50.00	220.00	5.50	26.00	650.00	220.00	71.50	77.00
216+25.00	217+25.00	HWY 9 - NOTCH & WIDEN TRANSITION - SITE 2	100.00	127.50	127.50				22.00	244.44	41.55	41.55									24.00	266.67	220.00	29.33	29.33
SITE 3																									
295+90.39	296+90.39	HWY 9 - NOTCH & WIDEN TRANSITION - SITE 3	100.00	125.75	125.75				22.00	244.44	41.55	41.55									24.00	266.67	220.00	29.33	29.33
296+90.39	301+93.21	HWY 9 - NOTCH & WIDEN SUPER - SITE 3	502.82	180.25	906.33	11.42	638.02	31.90				31.90	5.76	321.80	330.00	53.10	5.67	316.78	220.00	34.85	26.00	1452.59	220.00	159.78	194.63
301+93.21	307+72.00	HWY 9 - FULL DEPTH - SITE 3	578.79	224.00	1296.49	44.71	2875.30	143.77				143.77	22.46	1444.40	330.00	238.33	22.25	1430.90	220.00	157.40	26.00	1672.06	220.00	183.93	341.33
309+57.00	316+56.00	HWY 9 - FULL DEPTH - SITE 3	699.00	224.00	1565.76	44.71	3472.48	173.62				173.62	22.46	1744.39	330.00	287.82	22.25	1728.08	220.00	190.09	26.00	2019.33	220.00	222.13	412.22
316+56.00	321+50.00	HWY 9 - NOTCH & WIDEN - SITE 3	494.00	188.00	928.72	22.58	1239.39	61.97				61.97	11.38	624.64	330.00	103.07	11.20	614.76	220.00	67.62	26.00	1427.11	220.00	156.98	224.60
321+50.00	322+50.00	HWY 9 - NOTCH & WIDEN SUPER TRANSITION - SITE 3	100.00	167.75	167.75				22.00	244.44	41.55	41.55									24.00	266.67	220.00	29.33	29.33
SITE 4																									
398+00.00	399+00.00	HWY 9 - NOTCH & WIDEN TRANSITION - SITE 4	100.00	138.50	138.50				22.00	244.44	41.55	41.55									24.00	266.67	220.00	29.33	29.33
399+00.00	402+29.41	HWY 9 - NOTCH & WIDEN SUPER - SITE 4	329.41	203.00	668.70	12.23	447.63	22.38				22.38	6.17	225.83	330.00	37.26	6.06	221.80	220.00	24.40	26.00	951.63	220.00	104.68	129.08
402+29.41	415+00.00	HWY 9 - FULL DEPTH SUPER - SITE 4	1270.59	224.00	2846.12	44.71	6312.01	315.60				315.60	22.46	3170.83	330.00	523.19	22.25	3141.18	220.00	345.53	26.00	3670.59	220.00	403.76	749.29
415+00.00	420+15.00	HWY 9 - NOTCH & WIDEN SUPER - SITE 4	515.00	184.00	947.60	10.97	627.73	31.39				31.39	5.53	316.44	330.00	52.21	5.44	311.29	220.00	34.24	26.00	1487.78	220.00	163.66	197.90
420+15.00	421+15.00	HWY 9 - NOTCH & WIDEN TRANSITION - SITE 4	100.00	126.00	126.00				22.00	244.44	41.55	41.55									24.00	266.67	220.00	29.33	29.33
SUBTOTALS: (BOX 1 OF 2)					**16134.37**		**25811.82**	**1290.59**		**1955.52**	**332.40**	**1622.99**		**12974.38**		**2140.77**		**12838.01**		**1412.18**		**23335.03**		**2566.83**	**3979.01**

BASIS OF ESTIMATE:
ACHM SURFACE COURSE (1/2").....94.7% MIN. AGGR.....5.3% ASPHALT BINDER
ACHM BINDER COURSE (1").....95.7% MIN. AGGR.....4.3% ASPHALT BINDER
MAXIMUM NUMBER OF GYRATIONS = 115 FOR PG 64-22
TACK COAT QUANTITIES WERE CALCULATED USING THE EMULSIFIED ASPHALT RATES. REFER TO SS-400-1 FOR THE RESIDUAL ASPHALT APPLICATION RATES.

QUANTITIES

USER: ap5181
DESIGN FILE: G:\18105601_050347hwy9\TRANSP\dgn\quantities\r050347 Quantities.dgn
PLOTTED: 4/11/2022 15:02
SCALE: 1:200

DATE REVISED	DATE FILMED	DATE REVISED	DATE FILMED	FED.RD. DIST.NO.	STATE	FED.AID PROJ.NO.	SHEET NO.	TOTAL SHEETS
				6	ARK.			
				JOB NO.		050347	54	121
				(2) QUANTITIES				

PAVEMENT REPAIR OVER CULVERTS (CONCRETE)

STATION	LOCATION	WIDTH	LENGTH	CU.YD.
		FEET		
299+78	HWY. 9 SITE 3	8.50	22	5.2
304+18	HWY. 9 SITE 3	9.08	22	5.5
316+56	HWY. 9 SITE 3	8.50	22	5.2
TOTAL:				15.9

AVG. DEPTH = 9"

ASPHALT CONCRETE PATCHING FOR MAINTENANCE OF TRAFFIC

LOCATION	TON	TACK COAT
		GALLON
ENTIRE PROJECT - TO BE USED IF AND WHERE DIRECTED BY THE ENGINEER	36	72
TOTALS:	36	72

BASIS OF ESTIMATE:
ASPHALT CONCRETE PATCHING FOR MAINTENANCE OF TRAFFIC...25 TON/MILE
TACK COAT FOR MAINTENANCE OF TRAFFIC.....50 GAL./MILE

STATE OF ARKANSAS
LICENSED PROFESSIONAL ENGINEER
No. 15560
11-30-2020
JEROME PAUL DAVIS

BASE AND SURFACING (BOX 2 OF 2)

STATION	STATION	LOCATION	LENGTH	AGGREGATE BASE COURSE (CLASS 7)		TACK COAT (0.05 GAL. PER SQ. YD.)			TACK COAT (0.17 GAL. PER SQ. YD.)			TACK COAT	ACHM BINDER COURSE (1")				ACHM SURFACE COURSE (1/2")								
				TON / STATION	TON	TOTAL WID.	SQ.YD.	GALLON	TOTAL WID.	SQ.YD.	GALLON	TOTAL GALLONS	AVG. WID.	SQ.YD.	POUND / SQ.YD.	PG 64-22	AVG. WID.	SQ.YD.	POUND / SQ.YD.	PG 64-22	AVG. WID.	SQ.YD.	POUND / SQ.YD.	PG 64-22	TOTAL PG 64-22
			FEET			FEET			FEET				FEET			TON	FEET			TON	FEET			TON	TON
ADDITIONAL FOR LEVELING & RAISING THE GRADE																									
100+00.00	102+37.75	HWY. 9 - NOTCH & WIDEN - SITE 1	237.75			22.00	581.17	29.06	22.00	581.17	98.80	127.86					22.00	581.17	330.00	95.89					95.89
108+76.52	112+00.00	HWY. 9 - NOTCH & WIDEN - SITE 1	323.48			22.00	790.73	39.54	22.00	790.73	134.42	173.96					22.00	790.73	220.00	86.98	22.00	790.73	220.00	86.98	173.96
198+75.57	202+00.00	HWY 9 - NOTCH & WIDEN SUPER - SITE 2	324.43			44.00	1586.10	79.31	22.00	793.05	134.82	214.13	22.00	793.05	550.00	218.09	22.00	793.05	220.00	87.24					87.24
214+00.00	216+25.00	HWY 9 - NOTCH & WIDEN SUPER - SITE 2	225.00			44.00	1100.00	55.00	22.00	550.00	93.50	148.50	22.00	550.00	440.00	121.00	22.00	550.00	220.00	60.50					60.50
296+90.39	301+93.21	HWY. 9 - NOTCH & WIDEN SUPER - SITE 3	502.82			44.00	2458.23	122.91	22.00	1229.12	208.95	331.86	22.00	1229.12	330.00	202.80	22.00	1229.12	220.00	135.20					135.20
316+26.73	321+50.00	HWY. 9 - NOTCH & WIDEN - SITE 3	523.27			22.00	1279.10	63.96	22.00	1279.10	217.45	281.41					22.00	1279.10	110.00	70.35					70.35
399+00.00	402+29.41	HWY. 9 - NOTCH & WIDEN SUPER - SITE 4	329.41			22.00	805.22	40.26	22.00	805.22	136.89	177.15					22.00	805.22	220.00	88.58	22.00	805.22	220.00	88.58	177.16
414+97.88	420+15.00	HWY. 9 - NOTCH & WIDEN SUPER - SITE 4	517.12			22.00	1264.07	63.20	22.00	1264.07	214.89	278.09					22.00	1264.07	330.00	208.57					208.57
DETOUR AND MAINTENANCE OF TRAFFIC																									
99+89.90	102+27.77	HWY 9 - DETOUR - SITE 1	237.87	50.75	120.72																20.95	553.71	220.00	60.91	60.91
102+27.77	109+49.49	HWY 9 - DETOUR SUPER - SITE 1	721.72	255.50	1843.99																26.00	2084.97	220.00	229.35	229.35
109+49.49	112+00.00	HWY 9 - DETOUR - SITE 1	250.51	194.00	485.99																26.00	723.70	220.00	79.61	79.61
197+52.10	203+99.63	HWY 9 - MOT - SITE 2	647.53	121.50	786.75																12.13	872.73	220.00	96.00	96.00
209+64.93	215+26.75	HWY 9 - MOT - SITE 2	561.82	88.75	498.62																9.49	592.41	220.00	65.17	65.17
ADDITIONAL FOR FULL DEPTH SHOULDER																									
198+75.57	203+50.00	HWY 9- RT.	474.43										6.15	324.19	330.00	53.49					4.04	212.97	220.00	23.43	23.43
209+50.00	216+25.00	HWY 9- RT.	675.00										6.15	461.25	330.00	76.11					4.04	303.00	220.00	33.33	33.33
301+00.00	303+00.00	HWY 9- RT.	200.00										2.15	47.78	330.00	7.88									
314+00.00	318+00.00	HWY 9- RT.	400.00										2.15	95.56	330.00	15.77									
ADDITIONAL FOR GUARDRAIL WIDENING																									
305+37.34	308+09.00	HWY 9- RT.	271.66	30.00	81.50																9.34	281.92	220.00	31.01	31.01
306+12.34	308+09.00	HWY 9 - LT.	196.66	29.25	57.52																9.27	202.56	220.00	22.28	22.28
309+20.00	311+16.63	HWY 9 - RT.	196.63	26.00	51.12																8.21	179.37	220.00	19.73	19.73
309+20.00	311+91.65	HWY 9 - LT.	271.65	26.75	72.67																8.56	258.37	220.00	28.42	28.42
ADDITIONAL FOR SUPERELEVATION																									
102+37.75	105+87.75	HWY 9 - SUPERELEVATION TRANSITION - SITE 1	350.00	30.50	106.75																				
105+87.75	108+23.82	HWY 9 - MAXIMUM SUPERELEVATION - SITE 1	236.07	53.00	125.12																				
108+23.82	111+73.82	HWY 9 - SUPERELEVATION TRANSITION - SITE 1	350.00	35.00	122.50																				
198+75.57	202+25.57	HWY 9 - SUPERELEVATION TRANSITION - SITE 2	350.00	47.50	166.25																				
202+25.57	203+90.79	HWY 9 - MAXIMUM SUPERELEVATION - SITE 2	165.22	60.00	99.13																				
203+90.79	207+40.79	HWY 9 - SUPERELEVATION TRANSITION - SITE 2	350.00	33.50	117.25																				
210+10.52	213+10.52	HWY 9 - SUPERELEVATION TRANSITION - SITE 2	300.00	36.00	108.00																				
213+10.52	213+24.71	HWY 9 - MAXIMUM SUPERELEVATION - SITE 2	14.19	44.50	6.31																				
213+24.71	216+24.71	HWY 9 - SUPERELEVATION TRANSITION - SITE 2	300.00	32.25	96.75																				
296+90.39	300+40.39	HWY 9 - SUPERELEVATION TRANSITION - SITE 3	350.00	31.00	108.50																				
300+40.39	303+06.92	HWY 9 - MAXIMUM SUPERELEVATION - SITE 3	266.53	57.25	152.59																				
303+06.92	306+56.92	HWY 9 - SUPERELEVATION TRANSITION - SITE 3	350.00	38.00	133.00																				
320+45.00	321+50.00	HWY 9 - SUPERELEVATION TRANSITION - SITE 3	105.00	37.00	38.85																				
321+50.00	321+65.00	HWY 9 - MAXIMUM SUPERELEVATION - SITE 3	15.00	39.25	5.89																				
399+00.00	402+15.00	HWY 9 - SUPERELEVATION TRANSITION - SITE 4	315.00	36.00	113.40																				
402+15.00	404+05.37	HWY 9 - MAXIMUM SUPERELEVATION - SITE 4	190.37	56.75	108.03																				
404+05.37	407+55.37	HWY 9 - SUPERELEVATION TRANSITION - SITE 4	350.00	32.00	112.00																				
409+65.00	413+15.00	HWY 9 - SUPERELEVATION TRANSITION - SITE 4	350.00	36.25	126.88																				
413+15.00	416+32.81	HWY 9 - MAXIMUM SUPERELEVATION - SITE 4	317.81	60.75	193.07																				
416+32.81	419+82.81	HWY 9 - SUPERELEVATION TRANSITION - SITE 4	350.00	38.75	135.63																				
102+27.77	105+27.77	HWY 9 - SUPERELEVATION TRANSITION - SITE 1 DETOUR	300.00	6.50	19.50																				
105+27.77	106+49.49	HWY 9 - MAXIMUM SUPERELEVATION - SITE 1 DETOUR	121.72	7.25	8.82																				
106+49.49	109+49.49	HWY 9 - SUPERELEVATION TRANSITION - SITE 1 DETOUR	300.00	6.25	18.75																				
SUBTOTALS: (BOX 1 OF 2)					**16134.37**		**25811.82**	**1290.59**		**1955.52**	**332.40**	**1622.99**		**12974.38**		**2140.77**		**12838.01**		**1412.18**		**23335.03**		**2566.83**	**3979.01**
SUBTOTALS: (BOX 2 OF 2)					**6221.85**		**9864.62**	**493.24**		**7292.46**	**1239.72**	**1732.96**		**3500.95**		**695.14**		**7292.46**		**833.31**		**7861.66**		**864.80**	**1698.11**
TOTALS:					**22356.22**		**35676.44**	**1783.83**		**9247.98**	**1572.12**	**3355.95**		**16475.33**		**2835.91**		**20130.47**		**2245.49**		**31196.69**		**3431.63**	**5677.12**

BASIS OF ESTIMATE:
ACHM SURFACE COURSE (1/2").....94.7% MIN. AGGR.....5.3% ASPHALT BINDER
ACHM BINDER COURSE (1").....95.7% MIN. AGGR.....4.3% ASPHALT BINDER
MAXIMUM NUMBER OF GYRATIONS = 115 FOR PG 64-22
TACK COAT QUANTITIES WERE CALCULATED USING THE EMULSIFIED ASPHALT RATES. REFER TO SS-400-1 FOR THE RESIDUAL ASPHALT APPLICATION RATES.

QUANTITIES

USER: qp518l
DESIGN FILE: G:\18105601_050347hwy9\TRANSP\dgn\quantities\r050347 Quantities.dgn
PLOTTED: 11/30/2020 12:22
SCALE: 1:200

DATE REVISED	DATE FILMED	DATE REVISED	DATE FILMED

FED.RD. DIST.NO.	STATE	FED.AID PROJ.NO.	SHEET NO.	TOTAL SHEETS
6	ARK.			
JOB NO.		050347	55	121

(1) 07454 BRIDGE QUANTITIES 60921

SCHEDULE OF BRIDGE QUANTITIES - JOB NO. 050347

BRIDGE NO.	NAME PLATE TITLE	UNIT OF STRUCTURE	ITEM NO.	205	801	SS & 802	SP, SS & 802	SP & 803	SS & 804	SS & 804	SS & 805 (1)	SS & 805	SP, SS & 807	SS & 808	812	SS & 816	SS & 816	SP JOB 050347
			ITEM / UNIT	REMOVAL OF EXISTING BRIDGE STRUCTURE (SITE NO.) LUMP SUM	UNCLASSIFIED EXCAVATION FOR STRUCTURES-BRIDGE CU. YD.	CLASS S CONCRETE -BRIDGE CU. YD.	CLASS S (AE) CONCRETE -BRIDGE CU. YD.	CLASS 2 PROTECTIVE SURFACE TREATMENT SQ. YD.	REINFORCING STEEL - BRIDGE (GRADE 60) LB.	EPOXY COATED REINFORCING STEEL (GRADE 60) LB.	STEEL PILING (HP 12X53) LIN. FT.	PREBORING LIN. FT.	STRUCTURAL STEEL IN BEAM SPANS (A709, GR. 50W) LB.	ELASTOMERIC BEARINGS CU. IN.	BRIDGE NAME PLATE (TYPE D) EACH	FILTER BLANKET SQ. YD.	DUMPED RIPRAP CU. YD.	SHORING (SITE NO. _) LUMP SUM
07454	HIGHWAY 9 OVER LITTLE STRAWBERRY RIVER	BENT NO. 1			10	15.80			1,360	335	205	193				208	109	
		BENT NO. 2			75	33.80			5,895		240			3,274.5				
		BENT NO. 3			78	33.80			5,895		272			3,274.5				
		BENT NO. 4				15.80			1,360	335	230	218				298	157	
		111'-0" INTEGRAL CONTINUOUS W-BEAM UNIT					154.90	531.1		40,820			50,750		1			
		SITE NO. 3 (EX. BR. NO. M0286)		1														1
		TOTALS FOR BRIDGE NO. 07454			163	99.20	154.90	531.1	14,510	41,490	947	411	50,750	6,549.0	1	506	266	
		(2) SITE NO. 1 (EX. BR. NO. M0284)		1														
		(3) SITE NO. 2 (EX. BR. NO. M0285)		1														
		(4) SITE NO. 4 (EX. BR. NO. M0287)		1														
		TOTALS FOR JOB NO. 050347			163	99.20	154.90	531.1	14,510	41,490	947	411	50,750	6,549.0	1	506	266	

(1) All piling shall be ASTM A709, Grade 50. Steel piling (Gr. 50) shall have special QPL approved driving points which shall not be paid for directly, but shall be considered subsidiary to the item "Steel Piling (HP 12x53)."

(2) Existing Bridge No. M0284 (Log Mile 2.29) is 25.5' wide (24.3' clear roadway) and 48.2' long and consists of a concrete deck on steel beam spans (2 spans total) supported by concrete bents. This bridge, including dumped riprap, shall be removed in accordance with Section 205.

(3) Existing Bridge No. M0285 (Log Mile 2.94) is 25.7' wide (24.0' clear roadway) and 34.0' long and consists of a concrete deck on steel beams (1 span total) supported by concrete abutments. This bridge, including dumped riprap, shall be removed in accordance with Section 205.

(4) Existing Bridge No. M0287 (Log Mile 8.35) is 25.4' wide (24.0' clear roadway) and 33.0' long and consists of a concrete deck on steel beams (1 span total) supported by concrete abutments. This bridge, including dumped riprap, shall be removed in accordance with Section 205.

All salvagable guardrail from structures M0284, M0285, and M0287 as selected by District 5 shall remain the property of the Department. The Contractor shall coordinate with the Engineer to provide temporary storage and on site loading onto Department equipment for removal of all salvaged items. Removal of dumped riprap will not be paid for directly but shall be considered subsidiary to the item "Removal of Existing Bridge Structure (Site No.)". All remaining material from the existing bridges shall become the property of the Conctractor.

STATE OF ARKANSAS
REGISTERED PROFESSIONAL ENGINEER
No. 11856
CHARLES A. WIPF
04/07/2022

HWY. 9 STRS. & APPRS. (S)
FULTON COUNTY
ROUTE 9 SEC. 14
ARKANSAS STATE HIGHWAY COMMISSION
LITTLE ROCK, ARK.

DRAWN BY: LDG DATE: 10-18-19 FILENAME: b050347_ql.dgn
CHECKED BY: CAW DATE: 06-09-20 SCALE: NO SCALE
DESIGNED BY: LDG DATE: 10-17-19

BRIDGE NO. 07454 DRAWING NO. 60921

USER: ap5181
DESIGN FILE: G:\1810560l_050347hwy9\TRANSP\dgn\bridge\b050347_ql.dgn
PLOTTED: 4/7/2022 10:24
SCALE: 1:2

DATE REVISED	DATE FILMED	DATE REVISED	DATE FILMED	FED.RD. DIST.NO.	STATE	FED.AID PROJ.NO.	SHEET NO.	TOTAL SHEETS
06-14-22				6	ARK.			
				JOB NO.		050347	56	121

(2) SUMMARY OF QUANTITIES AND REVISIONS

STATE OF ARKANSAS
LICENSED PROFESSIONAL ENGINEER
No. 15560
JEROME PAUL DAVIS
6-14-2022

SUMMARY OF QUANTITIES

ITEM NUMBER	ITEM		QUANTITY	UNIT
201	CLEARING		62	STATION
201	GRUBBING		62	STATION
202	REMOVAL AND DISPOSAL OF WIRE FENCE		9317	LIN. FT.
202	REMOVAL AND DISPOSAL OF CHAIN LINK FENCE		99	LIN. FT.
202	REMOVAL AND DISPOSAL OF GATES		6	EACH
202	REMOVAL AND DISPOSAL OF WALKS		6	SQ. YD.
202	REMOVAL AND DISPOSAL OF PIPE CULVERTS		9	EACH
202	REMOVAL AND DISPOSAL OF BOX CULVERTS		1	EACH
SP & 202	REMOVAL AND DISPOSAL OF GUARDRAIL		841	LIN. FT.
202	REMOVAL AND DISPOSAL OF BUILDINGS		1	EACH
SS & 210	UNCLASSIFIED EXCAVATION		57367	CU. YD.
210	COMPACTED EMBANKMENT		41524	CU. YD.
SP	REMOVING AND REPLACING TOPSOIL		6000	CU. YD.
SP & 210	SOIL STABILIZATION		50	TON
SS & 303	AGGREGATE BASE COURSE (CLASS 7)		23393	TON
SS & 401	TACK COAT		3428	GAL.
SP, SS, & 406	MINERAL AGGREGATE IN ACHM BINDER COURSE (1")		2714	TON
SP, SS, & 406	ASPHALT BINDER (PG 64-22) IN ACHM BINDER COURSE (1")		122	TON
SP, SS, & 407	MINERAL AGGREGATE IN ACHM SURFACE COURSE (1/2")		5605	TON
SP, SS, & 407	ASPHALT BINDER (PG 64-22) IN ACHM SURFACE COURSE (1/2")		314	TON
SP & 412	COLD MILLING ASPHALT PAVEMENT		1956	SQ. YD.
SP, SS, & 414	ASPHALT CONCRETE PATCHING FOR MAINTENANCE OF TRAFFIC		36	TON
SP, SS, & 415	ACHM PATCHING OF EXISTING ROADWAY		250	TON
SS & 504	APPROACH SLABS		89.84	CU. YD.
SS & 504	APPROACH GUTTERS		43.44	CU. YD.
601	MOBILIZATION		1.00	LUMP SUM
SP & 602	FURNISHING FIELD OFFICE		1	EACH
SS & 603	MAINTENANCE OF TRAFFIC		1.00	LUMP SUM
603	18" TEMPORARY CULVERT		44	LIN. FT.
603	48" TEMPORARY CULVERT		340	LIN. FT.
SS & 604	SIGNS		919	SQ. FT.
SS & 604	BARRICADES		288	LIN. FT.
SS & 604	TRAFFIC DRUMS		159	EACH
SS & 604	FURNISHING AND INSTALLING PRECAST CONCRETE BARRIER		546	LIN. FT.
SS & 604	RELOCATING PRECAST CONCRETE BARRIER		286	LIN. FT.
604	CONSTRUCTION PAVEMENT MARKINGS		66471	LIN. FT.
604	REMOVABLE CONSTRUCTION PAVEMENT MARKINGS		6454	LIN. FT.
604	REMOVAL OF PERMANENT PAVEMENT MARKINGS		10156	LIN. FT.
SS & 604	VERTICAL PANELS		66	EACH
SS & 605	CONCRETE DITCH PAVING (TYPE A)		1536	SQ. YD.
SS & 605	CONCRETE DITCH PAVING (TYPE B)		1103	SQ. YD.
SS & 606	24" REINFORCED CONCRETE PIPE CULVERTS (CLASS III)		78	LIN. FT.
SS & 606	24" REINFORCED CONCRETE PIPE CULVERTS (CLASS IV)		126	LIN. FT.
SS & 606	30" REINFORCED CONCRETE PIPE CULVERTS (CLASS IV)		69	LIN. FT.
SP, SS, & 606	18" SIDE DRAIN		378	LIN. FT.
SS & 606	22" X 14" SIDE DRAIN		36	LIN. FT.
SS & 606	24" FLARED END SECTIONS FOR REINFORCED CONCRETE PIPE CULVERTS		6	EACH
SS & 606	30" FLARED END SECTIONS FOR REINFORCED CONCRETE PIPE CULVERTS		2	EACH
SS & 606	SELECTED PIPE BEDDING		100	CU. YD.
SS & 611	4" PIPE UNDERDRAINS		4000	LIN. FT.
SS & 611	UNDERDRAIN OUTLET PROTECTORS		16	EACH
SS & 615	PAVEMENT REPAIR OVER CULVERTS (CONCRETE)		15.9	CU. YD.
SS & 617	GUARDRAIL (TYPE A)		450	LIN. FT.
SS & 617	GUARDRAIL TERMINAL (TYPE 2)		4	EACH
SS & 617	THRIE BEAM GUARDRAIL TERMINAL		4	EACH
SS & 619	WIRE FENCE (TYPE C)		2196	LIN. FT.
SS & 619	WIRE FENCE (TYPE D)		1306	LIN. FT.
SS & 619	WIRE FENCE (TYPE D-1)		2546	LIN. FT.
* SS & 619	4' STEEL CHAIN LINK FENCE	(ALTERNATE NO. 1)	96	LIN. FT.
* SS & 619	4' ALUMINUM CHAIN LINK FENCE	(ALTERNATE NO. 2)	96	LIN. FT.
* SS & 619	16' STEEL GATES	(ALTERNATE NO. 1)	3	EACH
* SS & 619	16' ALUMINUM GATES	(ALTERNATE NO. 2)	3	EACH
620	LIME		34	TON
620	SEEDING		17.18	ACRE
SS & 620	MULCH COVER		41.52	ACRE
620	WATER		2273.8	M. GAL.
621	TEMPORARY SEEDING		24.34	ACRE
621	SILT FENCE		11486	LIN. FT.
621	SAND BAG DITCH CHECKS		1210	BAG
621	SEDIMENT BASIN		1812	CU. YD.
621	OBLITERATION OF SEDIMENT BASIN		1812	CU. YD.
621	SEDIMENT REMOVAL AND DISPOSAL		2341	CU. YD.
621	ROCK DITCH CHECKS		201	CU. YD.
SS & 621	FILTER SOCK (18")		3153	LIN. FT.
623	SECOND SEEDING APPLICATION		17.18	ACRE

* DENOTES ALTERNATE BID ITEMS.

SUMMARY OF QUANTITIES (BOX 2 OF 2)

ITEM NUMBER	ITEM	QUANTITY	UNIT
624	SOLID SODDING	1972	SQ. YD.
626	EROSION CONTROL MATTING (CLASS 3)	1845	SQ. YD.
635	ROADWAY CONSTRUCTION CONTROL	1.00	LUMP SUM
637	MAILBOXES	11	EACH
637	MAILBOX SUPPORTS (SINGLE)	9	EACH
637	MAILBOX SUPPORTS (DOUBLE)	1	EACH
719	THERMOPLASTIC PAVEMENT MARKING WHITE (6")	16648	LIN. FT.
719	THERMOPLASTIC PAVEMENT MARKING YELLOW (6")	16548	LIN. FT.
721	RAISED PAVEMENT MARKERS (TYPE II)	269	EACH
801	UNCLASSIFIED EXCAVATION FOR STRUCTURES-ROADWAY	50	CU. YD.
SS & 802	CLASS S CONCRETE-ROADWAY	103.83	CU. YD.
SS & 804	REINFORCING STEEL-ROADWAY (GRADE 60)	28673	POUND
SS & 816	FILTER BLANKET	12	SQ. YD.
SS & 816	DUMPED RIPRAP	6	CU. YD.
	STRUCTURES OVER 20' SPAN		
205	REMOVAL OF EXISTING BRIDGE STRUCTURE (SITE NO. 1)	1.00	LUMP SUM
205	REMOVAL OF EXISTING BRIDGE STRUCTURE (SITE NO. 2)	1.00	LUMP SUM
205	REMOVAL OF EXISTING BRIDGE STRUCTURE (SITE NO. 3)	1.00	LUMP SUM
205	REMOVAL OF EXISTING BRIDGE STRUCTURE (SITE NO. 4)	1.00	LUMP SUM
636	BRIDGE CONSTRUCTION CONTROL	1.00	LUMP SUM
801	UNCLASSIFIED EXCAVATION FOR STRUCTURES-BRIDGE	163	CU. YD.
801	UNCLASSIFIED EXCAVATION FOR STRUCTURES-ROADWAY	655	CU. YD.
SS & 802	CLASS S CONCRETE-ROADWAY	1357.68	CU. YD.
SS & 802	CLASS S CONCRETE-BRIDGE	99.20	CU. YD.
SP, SS, & 802	CLASS S(AE) CONCRETE-BRIDGE	154.90	CU. YD.
SP & 803	CLASS 2 PROTECTIVE SURFACE TREATMENT	531.1	SQ. YD.
SS & 804	REINFORCING STEEL-ROADWAY (GRADE 60)	179727	POUND
SS & 804	REINFORCING STEEL-BRIDGE (GRADE 60)	14510	POUND
SS & 804	EPOXY COATED REINFORCING STEEL (GRADE 60)	41490	POUND
SS & 805	STEEL PILING (HP 12X53)	947	LIN. FT.
SS & 805	PREBORING	411	LIN. FT.
SP, SS, & 807	STRUCTURAL STEEL IN BEAM SPANS (A709, GR. 50W)	50750	POUND
SS & 808	ELASTOMERIC BEARINGS	6549.0	CU. IN.
812	BRIDGE NAME PLATE (TYPE D)	1	EACH
SS & 816	FILTER BLANKET	506	SQ. YD.
SS & 816	DUMPED RIPRAP	266	CU. YD.
SP	SHORING (SITE NO. 3)	1.00	LUMP SUM

REVISIONS

DATE	REVISION	SHEET NUMBER
6/14/2022	REVISED GOVERNING SPECIFICATIONS	3 & 56

USER: dp5181
DESIGN FILE: G:\18105601_050347hwy9\TRANSP\dgn\quantities\r050347 Quantities.dgn
PLOTTED: 6/13/2022 16:33
SCALE: 1:200

SUMMARY OF QUANTITIES AND REVISIONS

DATE REVISED	DATE FILMED	DATE REVISED	DATE FILMED	FED.RD. DIST.NO.	STATE	FED.AID PROJ.NO.	SHEET NO.	TOTAL SHEETS
				6	ARK.			
				JOB NO.		050347	57	121

(2) SURVEY CONTROL DETAILS

SURVEY CONTROL COORDINATES

Project Name: s050347
Date: 12/8/2017
Coordinate System: ARKANSAS STATE PLANE - NORTH ZONE BASED ON GPS CONTROL, 250017 & 250017A, 250018

& 250018A, 250019 & 250019A PROJECTED TO GROUND.
Units: U.S. SURVEY FOOT

Point Name	Northing	Easting	Elev	Feature	Description
1	707578.5146	1340819.0272	697.340	CTL	STD ARDOT MON. STAMPED PN: 1
2	708303.6706	1341243.8576	707.591	CTL	STD ARDOT MON. STAMPED PN: 2
3	708843.6752	1341889.6723	713.114	CTL	STD ARDOT MON. STAMPED PN: 3
4	709585.9723	1342324.0787	720.024	CTL	STD ARDOT MON. STAMPED PN: 4
5	711060.2625	1343120.1016	737.358	CTL	STD ARDOT MON. STAMPED PN: 5
6	711822.2963	1343837.8014	748.029	CTL	STD ARDOT MON. STAMPED PN: 6
7	712162.8542	1344451.3075	771.399	CTL	STD ARDOT MON. STAMPED PN: 7
8	712489.6743	1345101.9903	776.935	CTL	STD ARDOT MON. STAMPED PN: 8
9	723457.3975	1353946.1575	832.012	CTL	STD ARDOT MON. STAMPED PN: 9
10	724225.8486	1354012.1845	820.185	CTL	STD ARDOT MON. STAMPED PN: 10
11	724859.2178	1354377.2669	812.819	CTL	STD ARDOT MON. STAMPED PN: 11
12	725842.1361	1354881.6185	868.077	CTL	STD ARDOT MON. STAMPED PN: 12
13	726312.5897	1355353.8965	861.503	CTL	STD ARDOT MON. STAMPED PN: 13
14	732735.3502	1359002.9601	741.198	CTL	STD ARDOT MON. STAMPED PN: 14
15	733387.8468	1359309.7757	727.495	CTL	STD ARDOT MON. STAMPED PN: 15
16	734066.0345	1359255.3889	718.834	CTL	STD ARDOT MON. STAMPED PN: 16
17	734667.3984	1359293.8724	729.375	CTL	STD ARDOT MON. STAMPED PN: 17
18	735196.9148	1359559.3564	738.386	CTL	STD ARDOT MON. STAMPED PN: 18
100	710433.4390	1342716.8360	730.804	GPS	AHTD GPS MON. 250017
101	711521.9352	1343421.7732	744.651	GPS	AHTD GPS MON. 250017A
102	718645.2216	1349902.4120	902.918	GPS	AHTD GPS MON. 250018
103	720287.4390	1351063.3290	859.851	GPS	AHTD GPS MON. 250018A
104	730455.3925	1357101.1821	792.780	GPS	AHTD GPS MON. 250019
105	732199.2118	1358579.8348	748.723	GPS	AHTD GPS MON. 250019A
900	708226.8470	1341182.5967	706.871	TBM	SQUARE CUT S END W HW
901	708746.6785	1341746.9651	712.266	TBM	SQUARE CUT NW CORN BR
902	709484.6893	1342274.0780	719.396	TBM	SQUARE CUT NW END OF SE WR
903	710661.2467	1342907.5255	733.631	TBM	SQUARE CUT CENTER E HW
904	711754.8489	1343774.0934	750.118	TBM	SQUARE CUT NE CORN BR
905	712549.0196	1345210.2849	773.488	TBM	SQUARE CUT NE CORN E HW
906	715799.8924	1347374.7233	873.209	TBM	SQUARE CUT NE CORN E HW
907	718133.9752	1349159.5389	927.649	TBM	SQUARE CUT IN RCP 19.0' E OF CL HWY 9
908	720653.1048	1351895.5978	842.471	TBM	SQUARE CUT SW CORN W WR
909	723127.0665	1353759.6977	824.995	TBM	SQUARE CUT NE CORN E HW
910	724699.7752	1354290.2066	812.803	TBM	SQUARE CUT SE CORN BR WR
911	726134.0444	1355172.1868	855.355	TBM	SQUARE CUT NE CORN E HW
912	729000.0713	1356040.1658	854.921	TBM	SQUARE CUT SE END E HW
913	731889.2214	1358310.0827	752.122	TBM	SQUARE CUT NE CORN E HW
914	733323.2111	1359301.2736	727.695	TBM	SQUARE CUT CENTER E HW
915	734033.1856	1359258.0979	719.934	TBM	SQUARE CUT NW END BR
916	736022.1247	1360099.1805	717.535	TBM	SQUARE CUT SE CORN E HW
917	738748.4583	1362236.3604	725.631	TBM	X CUT IN BOLT OF FH
997	741702.9185	1364451.4165	5.000	BM	USGS BRONZE DISK A17
998	740456.2370	1364481.5820	662.514	BM	USGS BRONZE DISK B17 1932
999	709963.4853	1342593.4618	731.796	BM	USGS BRONZE DISK E17 1982

*Note - Rebar and Cap - Standard - 5/8" Rebar with 2" Aluminum Cap stamped
*(standard markings common to all caps), or as indicated
(other markings indicated in the point description of the individual point).
ALL DISTANCES ARE GROUND.
USE CAF = 1.0 FOR STAKEOUT FOR THIS PROJECT.
A PROJECT CAF OF 0.999985050 HAS BEEN USED TO COMPUTE THE ABOVE GROUND COORDINATES.
THIS CAF IS INTENDED FOR USE WITHIN THE PROJECT LIMITS.
GRID DISTANCE = GROUND DISTANCE X CAF.
GRID COORDINATES ARE STORED UNDER FILE NAME s050347gi.CTL
HORIZONTAL DATUM: NAD 83 (1997)
VERTICAL DATUM: NAVD 88 POSITIONAL ACCURACY THIRD ORDER, UNLESS SPECIFIED OTHERWISE
AT A SPECIFIC POINT.

REFERENCE POINTS (1500 SERIES) ARE TO BE USED TO ESTABLISH CONTROL
IF THE PRIMARY CONTROL POINTS LISTED ABOVE HAVE BEEN DESTROYED.
REFERENCE POINTS ARE NOT TO BE USED FOR VERTICAL CONTROL

BASIS OF BEARING:
ARKANSAS STATE PLANE GRID BEARINGS - 0301-NORTH ZONE
DETERMINED FROM GPS CONTROL POINTS: 250017 & 250017A, 250018 & 250018A, 250019 & 250019A
CONVERGENCE ANGLE SECTION 1: 01-03-33 RIGHT AT PN: 4 LT: N 36-15-57 LG: W 91-53-54
CONVERGENCE ANGLE SECTION 2: 01-04-59 RIGHT AT PN: 11 LT: N 36-19-28 LG: W 91-51-26
CONVERGENCE ANGLE SECTION 3: 01-05-34 RIGHT AT PN: 16 LT: N 36-20-59 LG: W 91-51-26
GRID AZIMUTH = ASTRONOMICAL AZIMUTH - CONVERGENCE ANGLE.

STATE OF ARKANSAS
LICENSED PROFESSIONAL ENGINEER
No. 15560
JEROME PAUL DAVIS
11-30-2020

SURVEY CONTROL DETAILS

USER: ap5181
DESIGN FILE: G:\181056O1_050347hwy9\TRANSP\dgn\survey_ctl\r050347 Survey Ctl.dgn
PLOTTED: 11/30/2020 12:23
SCALE: 1:100

DATE REVISED	DATE FILMED	DATE REVISED	DATE FILMED	FED.RD. DIST.NO.	STATE	FED.AID PROJ.NO.	SHEET NO.	TOTAL SHEETS
				6	ARK.			
				JOB NO.		050347	58	121
				(2)	SURVEY CONTROL DETAILS			

STATE OF ARKANSAS
LICENSED PROFESSIONAL ENGINEER
No. 15560
JEROME PAUL DAVIS
11-30-2020

050347 CL - HIGHWAY 9 (SITE 1)

POINT NO.	TYPE	STATION	NORTHING	EASTING
8006	P.O.B.	89+99.43	707636.2374	1340822.8382
8007	P.C.	96+06.93	708148.6426	1341149.1796
8009	P.T.	99+89.29	708435.7109	1341399.5639
8010	P.C.	104+86.21	708757.1198	1341778.5336
8012	P.T.	109+25.38	709097.6802	1342051.5591
8013	P.O.E.	124+55.88	710452.2883	1342763.9398

050347 CL - DETOUR HIGHWAY 9 (SITE 1)

POINT NO.	TYPE	STATION	NORTHING	EASTING
8049	P.C.	99+94.95	708439.3623	1341403.8691
8051	P.T.	102+16.19	708559.9103	1341588.7135
8052	P.C.	102+39.30	708570.0117	1341609.4984
8054	P.T.	109+43.04	709085.4983	1342060.9094
8055	P.C.	109+55.92	709097.7170	1342064.9591
8057	P.T.	111+00.57	709230.6860	1342121.5061

050347 CL - HIGHWAY 9 (SITE 2)

POINT NO.	TYPE	STATION	NORTHING	EASTING
8025	P.O.B.	197+00.00	710966.2592	1343090.4501
8026	P.C.	201+38.07	711330.6516	1343333.6041
8028	P.T.	204+78.29	711570.6813	1343571.7282
8029	P.C.	212+35.52	711995.9969	1344198.2356
8031	P.T.	213+99.71	712082.2656	1344337.8700
8063	P.O.E.	219+00.00	712326.6875	1344774.3921

DRIVEWAY SITE 2 201+29 RT

POINT NO.	TYPE	STATION	NORTHING	EASTING
8100	POB	0+00.00	711323.1068	1343328.5695
8101	PC	0+38.55	711301.7097	1343360.6354
8103	PT	1+00.53	711284.9402	1343419.2812
8104	PC	1+63.19	711286.9076	1343481.9040
8106	PT	2+10.57	711292.8599	1343528.8341
8107	POE	2+90.48	711310.3721	1343606.8119

050347 CL - HIGHWAY 9 (SITE 2 - M.O.T. STAGE 2)

POINT NO.	TYPE	STATION	NORTHING	EASTING
8085	P.C.	197+52.10	711009.5993	1343119.3703
8087	P.T.	198+37.83	711083.1069	1343163.4135
8088	P.C.	199+36.02	711169.6850	1343209.7243
8090	P.T.	202+84.60	711457.2982	1343405.4986
8076	P.O.E.	204+08.61	711551.8217	1343485.7816
8091	P.C.	209+64.93	711869.9692	1343956.7389
8093	P.T.	210+52.85	711916.4695	1344031.3123
8094	P.C.	211+32.38	711961.8583	1344096.6110
8096	P.T.	213+54.67	712070.2891	1344290.2616
8097	P.C.	214+44.16	712106.2445	1344372.2147
8099	P.T.	215+29.66	712144.3337	1344448.7198

050347 CL - HIGHWAY 9 (SITE 2 - M.O.T. STAGE 3)

POINT NO.	TYPE	STATION	NORTHING	EASTING
8025	P.O.B.	197+00.00	710966.2592	1343090.4501
8108	P.I.	200+00.06	711212.4726	1343261.9581
8109	P.C.	201+21.58	711313.5526	1343329.4073
8111	P.T.	205+23.65	711597.2239	1343610.8266
8112	P.O.B.	208+10.91	711757.5070	1343846.9302
8113	P.C.	211+40.91	711937.8631	1344123.2845
8115	P.T.	216+33.46	712196.6692	1344542.1876

050347 CL - HIGHWAY 9 (SITE 3)

POINT NO.	TYPE	STATION	NORTHING	EASTING
8068	P.C.	293+39.27	723298.8201	1353886.9886
8070	P.T.	296+49.93	723583.7848	1353993.4444
8033	P.C.	299+52.89	723886.7370	1353994.3829
8035	P.T.	303+94.42	724309.7018	1354103.9850
8036	P.C.	309+25.00	724774.3052	1354360.2202
8038	P.T.	313+07.86	725112.5836	1354539.4820
8039	P.C.	320+96.84	725815.8055	1354897.2204
8072	P.T.	324+30.92	726082.1254	1355096.2040

050347 CL - HIGHWAY 9 (SITE 4)

POINT NO.	TYPE	STATION	NORTHING	EASTING
8081	P.O.B.	395+82.47	732641.6714	1358907.8470
8082	P.C.	395+94.53	732650.9735	1358915.5267
8084	P.T.	398+73.43	732881.9192	1359071.0929
8041	P.C.	400+16.53	733007.8101	1359139.1236
8043	P.T.	404+92.87	733466.4893	1359244.2211
8044	P.C.	412+27.50	734200.3770	1359211.2085
8046	P.T.	417+20.31	734676.7121	1359314.2709
8047	P.O.E.	421+17.81	735030.9187	1359494.6924

050347 CL - HIGHWAY 9 (SITE 4 CHANNEL CHANGE)

POINT NO.	TYPE	STATION	NORTHING	EASTING
8059	P.O.B.	0+00.00	733929.3318	1359131.3394
8060	P.I.	0+59.04	733986.8865	1359144.4798
8061	P.O.E.	1+95.45	734123.1216	1359151.3966

USER: ap5181
DESIGN FILE: G:\181056O1_050347hwy9\TRANSP\dgn\survey_ctl\r050347 Survey Ctl.dgn
PLOTTED: 11/30/2020 12:23 SCALE: 1:100

SURVEY CONTROL DETAILS

DATE REVISED	DATE FILMED	DATE REVISED	DATE FILMED	FED.RD. DIST.NO.	STATE	FED.AID PROJ.NO.	SHEET NO.	TOTAL SHEETS
				6	ARK.			
				JOB NO.		050347	59	121

(2) SURVEY CONTROL DETAILS

90

95

100

105

110

115

P.T. 89+99.43

8006

N32°29'32"E
607.50'

SURVEY BASELINE N 30°21'50" E
840.44'

℄ HWY. 9

SURVEY BASELINE

C.L. CONST. HWY. 9
PI = 97+99.56
Δ = 17°12'22" RT.
D = 04°30'00"
T = 192.63'
L = 382.36'
PC = 96+06.93
PT = 99+89.29

P.C. 96+06.93

8007

P.I. 97+99.56

N32°29'32"E
192.63'

N49°41'54"E
192.63'

8008

8009

P.T. 99+89.29

50' BUFFER

STA. 100+00.00
BEGIN JOB 050347
& SITE 1
LOG MILE 2.10

P.I. 101+06.15

50' BUFFER

N49°41'54"E
111.20'

8049

N64°04'49"E
111.20'

N64°04'49"E
23.11'

8051

8052

SURVEY BASELINE N 50°05'56" E
841.83'

N49°41'54"E
496.92'

8010

P.C. 99+94.95

DETOUR STA. 99+89.29=
HWY. 9 STA. 99+94.95
BEGIN DETOUR

℄ HWY. 9 DETOUR
PI = 101+06.15
Δ = 14°22'55" RT.
D = 06°30'00"
T = 111.20'
L = 221.24'
PC = 99+94.95
PT = 102+16.21
NO SUPER

P.T. 102+16.19

P.C. 102+39.30

℄ DETOUR

N64°04'49"E
371.84'

8010

ALUM. 3500 DISQUARE CUT S END W HW 9

PK2 FDSTD ARDOT MON. STAMPED PK2

ALUM. 3500 DISQUARE CUT S END W HW 9

ALUM. 3500 DISQUARE CUT NW CORN BR

PK3 FDSTD ARDOT MON. STAMPED PK3

PK1 FDSTD ARDOT MON. STAMPED PK1

W — N — E
S
BEARINGS ARE GRID BASED ON GPS

C.L. HWY. 9 DETOUR
PI = 106+11.14
Δ = 45°44'36" LT.
D = 06°30'00"
T = 371.84
L = 703.74'
PC = 102+39.30
PT = 109+43.04
e = 0.095'/'
Ls = 300'

C.L. CONST. HWY. 9
PI = 107+08.51
Δ = 21°57'31" LT.
D = 05°00'00"
T = 222.30'
L = 439.17'
PC = 104+86.21
PT = 109+25.38
e = 0.091'/'
Ls = 350'

P.C. 104+86.21

P.T. 109+25.38

P.I. 110+28.41

SURVEY BASELINE N 30°20'13" E
860.07'

N27°44'23"E
1530.51'

SURVEY BASELINE N 24°51'55" E
934.05'

℄ HWY. 9

8012

N27°44'23"E
222.30'

N49°41'54"E
222.30'

8054

8055

N18°20'13"E
12.87'

N27°44'23"E
72.48'

N18°20'13"E
72.48'

8057

P.T. 111+00.57

STA. 112+00.00
END SITE 1

DETOUR STA. 111+00.57=
HWY. 9 STA. 110+75.65
END DETOUR

℄ DETOUR

N64°04'49"E
371.84'

50' BUFFER

50' BUFFER

P.I. 107+08.51

P.I. 106+11.14

C.L. HWY. 9 DETOUR
PI = 110+28.41
Δ = 09°24'10" RT.
D = 06°30'00"
T = 72.49'
L = 144.66'
PC = 109+55.92
PT = 111+00.57
NO SUPER

ALUM. 3500 DISQUARE CUT NW END OF SE WR

PK4 FDSTD ARDOT MON. STAMPED PK4

PK998 FDUSGS BRONZE DISK ET 1982

STATE OF ARKANSAS
LICENSED PROFESSIONAL ENGINEER
No. 15560
JEROME PAUL DAVIS
11-30-2020

SITE 1
SURVEY CONTROL DETAILS

USER: dp5181
DESIGN FILE: G:\18105601_050347hwy9\TRANSP\dgn\survey_ctl\r050347 Survey Ctl.dgn
PLOTTED: 11/30/2020 12:23
SCALE: 1:100

G:\18105601_050347hwy9\TRANSP\dgn\survey_ctl\r050347 Survey Ctl.dgn 11/30/2020 12:23

DATE REVISED	DATE FILMED	DATE REVISED	DATE FILMED	FED.RD. DIST.NO.	STATE	FED.AID PROJ.NO.	SHEET NO.	TOTAL SHEETS
				6	ARK.			
				JOB NO.		050347	60	121

(2) SURVEY CONTROL DETAILS

STATE OF ARKANSAS
LICENSED PROFESSIONAL ENGINEER
No. 15560
JEROME PAUL DAVIS
11-30-2020

BEARINGS ARE GRID BASED ON GPS

120

SURVEY BASELINE N 24°51'55" E 934.05'
N27°44'23"E 1530.51'
℄ HWY. 9
PK NAIL ON POINT PDSTD GPS MON. 2500I7
P.O.E. 124+55.88
8013
SURVEY BASELINE
SURVEY BASELINE N 32°45'18" E 745.34'
PK NAIL PDSQUARE CUT CENTER E HW
C.L. STAGE 2
PI = 197+95.00
Δ = 05°34'20" LT.
D = 06°30'00"
T = 42.90'
L = 85.73'
PC = 197+52.10
PT = 198+37.83
MATCH EXIST.
MOT STAGE 3 P.O.B. 197+00.00
P.O.B. 197+00.00
8025
N33°42'53"E 52.10'
℄ HWY. 9
MOT STAGE 2 P.C. 197+52.10
8085
L1
PK NAIL PDSTD
L2
MOT STAGE 2 P.T. 198+37.83
8087
L3
MOT STAGE 2 P.C. 199+36.02
8088
℄ M.O.T. STAGE 2
MOT STAGE 3 P.I. 200+00.06
L4
MOT STAGE 2 P.I. 201+10.97
MOT STAGE 3 P.C. 201+21.58
N33°42'53"E 343.07'
8108
L15
L16
℄ M.O.T. STAGE 3
ARDOT MON. STAMPED PNAIL
MOT STAGE 2 P.I. 197+95.00
STA. 198+75.57
BEGIN SITE 2
LOG MILE 2.71
C.L. STAGE 2
PI = 201+10.97
Δ = 12°12'01" RT.
D = 03°30'00"
T = 174.95'
L = 348.58'
PC = 199+36.02
PT = 202+84.60
MATCH EXIST.
S56°17'07"E 38.55'
P.I. 0+70.57
P.I. 1+00.53
P.T. 1+00.53

200
℄ M.O.T. STAGE 2
MOT STAGE 3 P.I. 200+00.06
MOT STAGE 2 P.I. 201+10.97
MOT STAGE 3 P.C. 201+21.58
L4
SURVEY BASELINE N 33°09'43" E 59.50'
L5
8090
℄ HWY. 9
N33°42'53"E 343.07'
8109
8026
L16
8088
8108
L15
℄ M.O.T. STAGE 3
S56°17'07"E 38.55'
P.O.B. 0+00.00
P.C. 0+38.55
2
8101
S56°17'07"E 32.02'
P.I. 0+70.57
8103
62.66'
N88°12'02"E P.C. 1+63.19
8104
P.T. 2+10.57
N88°12'02"E 32.02'
N88°12'02"E 23.76'
P.I. 1+00.53
P.I. 1+86.95
8106
N77°20'33"E P.O.E. 2+90.48
79.91'
N77°20'33"E 23.76'
8107
C.L. STAGE 2
PI = 201+10.97
Δ = 12°12'01" RT.
D = 03°30'00"
T = 174.95'
L = 348.58'
PC = 199+36.02
PT = 202+84.60
MATCH EXIST.
25' BUFFER
MOT STAGE 3 P.O.E. 204+08.16
P.T. 204+78.29
205
MOT STAGE 2 P.T. 202+84.60
P.I. 203+10.32
MOT STAGE 3 P.I. 203+25.15
PK NAIL PDSTD GPS MON. 2500ITA
8076
L6
L18
8028
8111
℄ HWY. 9
N55°49'43"E 172.25'
N33°42'53"E 172.25'
PI = 203+10.32
Δ = 22°06'50" RT.
D = 06°30'00"
T = 172.25'
L = 340.22'
PC = 201+38.07
PT = 204+78.29
e = 0.010'/'
Ls = 350'
C.L. STAGE 3
PI= 203+25.15
Δ = 22°06'51"
D = 05°30'00"
T = 203.57'
L = 402.07'
PC= 201+21.58
PT= 205+23.65
C.L. DRIVEWAY
PI = 0+70.57
Δ = 35°30'51" LT.
D = 57°17'45"
T = 32.02'
L = 61.98'
PC = 0+38.55
PT = 1+00.53
NO SUPER
C.L. DRIVEWAY
PI = 1+86.95
Δ = 10°51'29" LT.
D = 10°51'29"
T = 23.76'
L = 47.38'
PC = 1+63.19
PT = 2+10.56
NO SUPER

C.L. STAGE 2
PI = 210+08.93
Δ = 05°42'53" LT.
D = 06°30'00"
T = 44.00'
L = 87.92'
PC = 209+64.93
PT = 210+52.85
MATCH EXIST.
MOT STAGE 3 P.O.B. 208+10.91
MOT STAGE 2 P.C. 209+64.93
210
MOT STAGE 2 P.T. 210+52.85
PK NAIL PDSTD ARDOT MON. STAMPED PNAIL
PK NAIL PDSQUARE CUT NE CORN BR
8111
N55°49'43"E 757.23'
P.I. 210+08.93
8091
N55°11'49"E 44.00'
L7
L8
8093
L9
8094
L19
8113
MOT STAGE 2 P.C. 211+32.38
MOT STAGE 3 P.C. 211+40.91
℄ M.O.T. STAGE 2
SURVEY BASELINE N 60°57'55" E 701.69'
L10
L11
8029
8096
N55°49'43"E 82.14'
L20
C.L. STAGE 2
PI = 212+43.87
Δ = 11°06'52" RT.
D = 05°00'00"
T = 111.49'
L = 222.29'
PC = 211+32.38
PT = 213+54.67
MATCH EXIST.
P.C. 212+35.52
MOT STAGE 2 P.I. 212+43.87
P.I. 213+17.66
MOT STAGE 2 P.T. 213+54.67
MOT STAGE 3 P.I. 213+87.34
MOT STAGE 3 P.T. 213+99.71
L12
L13
8031
8097
N60°45'15"E 82.14'
L21
C.L. STAGE 2
PI= 214+86.94
Δ = 05°33'26" LT.
D = 06°30'00"
T = 42.78'
L = 85.50'
PC = 214+44.16
PT = 215+29.66
NO SUPER
N66°18'41"E 89.49'
215
MOT STAGE 2 P.C. 214+44.16
L14
MOT STAGE 2 P.I. 214+86.94
PI = 213+17.66
Δ = 4°55'32" RT.
D = 03°00'00"
T = 82.14'
L = 164.19'
PC = 212+35.52
PT = 213+99.71
e = 0.067'/'
Ls = 300'
C.L. STAGE 3
PI= 213+87.34
Δ = 04°55'32"
D = 01°00'00"
T = 246.43'
L = 492.55'
PC= 211+40.91
PT= 216+33.46
P.I. 0+70.57
P.T. 1+00.53

MOT ALIGNMENT STAGE 2		
MARK	BEARING	DISTANCE
L1	N28°08'33"E	42.90'
L2	N33°42'53"E	42.90'
L3	N28°08'33"E	98.19'
L4	N28°08'33"E	174.95'
L5	N40°20'34"E	174.95'
L6	N40°20'34"E	124.01'
L7	N60°54'42"E	44.00'
L8	N55°11'49"E	44.00'
L9	N55°11'49"E	79.53'
L10	N55°11'49"E	111.49'
L11	N66°18'41"E	111.49'
L12	N66°18'41"E	89.49'
L13	N66°18'41"E	42.78'
L14	N60°45'15"E	42.78'

MOT ALIGNMENT STAGE 3		
MARK	BEARING	DISTANCE
L15	N34°51'37"E	300.06'
L16	N33°42'53"E	121.52'
L17	N33°42'53"E	203.57'
L18	N55°49'43"E	203.57'
L19	N56°52'14"E	330.00'
L20	N55°49'43"E	246.43'
L21	N60°45'15"E	246.43'

BEARINGS ARE GRID BASED ON GPS

SITE 2
SURVEY CONTROL DETAILS

USER: qp5181
DESIGN FILE: G:\18105601_050347hwy9\TRANSP\dgn\survey_ctl\r050347 Survey Ctl.dgn
PLOTTED: 11/30/2020 12:23
SCALE: 1:100

G:\18105601_050347hwy9\TRANSP\dgn\survey_ctl\r050347 Survey Ctl.dgn 11/30/2020 12:23

DATE REVISED	DATE FILMED	DATE REVISED	DATE FILMED	FED.RD. DIST.NO.	STATE	FED.AID PROJ.NO.	SHEET NO.	TOTAL SHEETS
				6	ARK.			
				JOB NO.		050347	61	121

(2) SURVEY CONTROL DETAILS

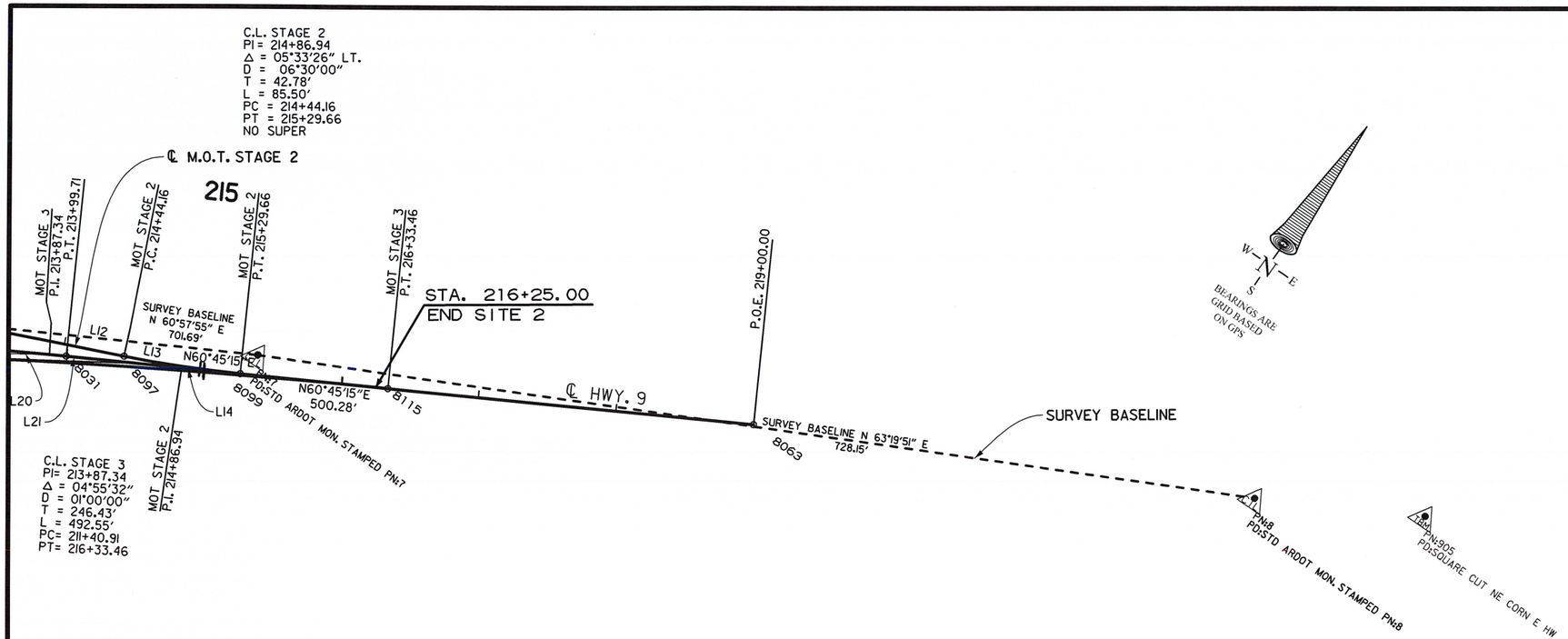

STATE OF ARKANSAS
LICENSED PROFESSIONAL ENGINEER
No. 15560
JEROME PAUL DAVIS
11-30-2020

MOT ALIGNMENT STAGE 2		
MARK	BEARING	DISTANCE
L1	N28°08'33"E	42.90'
L2	N33°42'53"E	42.90'
L3	N28°08'33"E	98.19'
L4	N28°08'33"E	174.95'
L5	N40°20'34"E	174.95'
L6	N40°20'34"E	124.01'
L7	N60°54'42"E	44.00'
L8	N55°11'49"E	44.00'
L9	N55°11'49"E	79.53'
L10	N55°11'49"E	111.49'
L11	N66°18'41"E	111.49'
L12	N66°18'41"E	89.49'
L13	N66°18'41"E	42.78'
L14	N60°45'15"E	42.78'

MOT ALIGNMENT STAGE 3		
MARK	BEARING	DISTANCE
L15	N34°51'37"E	300.06'
L16	N33°42'53"E	121.52'
L17	N33°42'53"E	203.57'
L18	N55°49'43"E	203.57'
L19	N56°52'14"E	330.00'
L20	N55°49'43"E	246.43'
L21	N60°45'15"E	246.43'

SITE 2
SURVEY CONTROL DETAILS

USER: dp5181
DESIGN FILE: G:\181056O1_050347hwy9\TRANSP\dgn\survey_ctl\r050347 Survey Ctl.dgn
PLOTTED: 11/30/2020 12:23
SCALE: 1:100

DATE REVISED	DATE FILMED	DATE REVISED	DATE FILMED	FED.RD. DIST.NO.	STATE	FED.AID PROJ.NO.	SHEET NO.	TOTAL SHEETS
				6	ARK.			
				JOB NO.		050347	62	121

(2) SURVEY CONTROL DETAILS

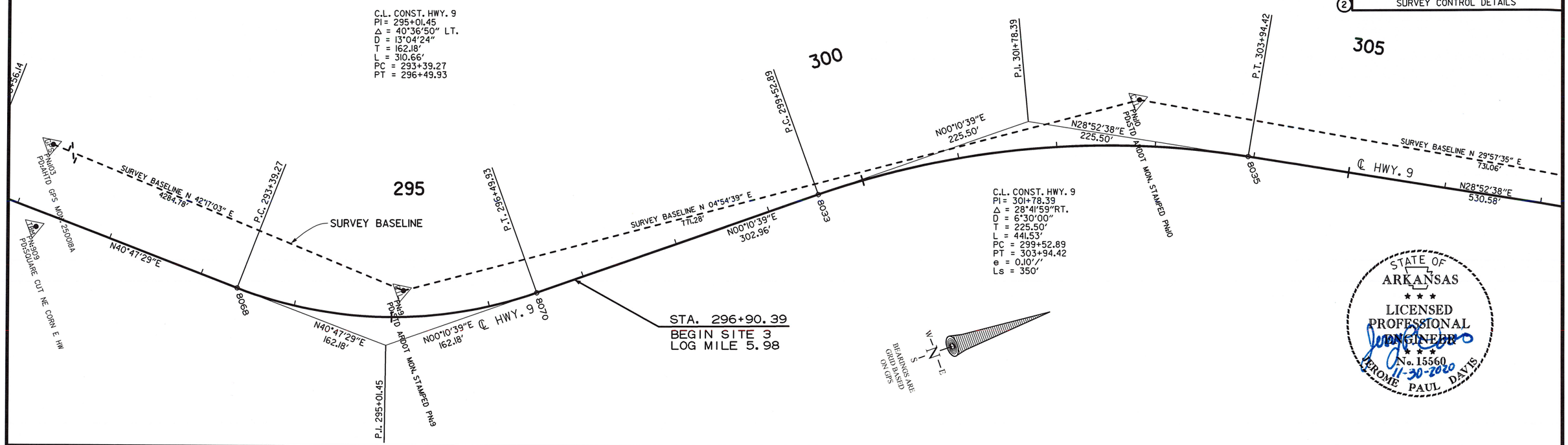

SITE 3
SURVEY CONTROL DETAILS

USER: ap5181
DESIGN FILE: G:\18105601_050347hwy9\TRANSP\dgn\survey_ctl\r050347 Survey Ctl.dgn
PLOTTED: 11/30/2020 12:23
SCALE: 1:100

G:\18105601_050347hwy9\TRANSP\dgn\survey_ctl\r050347 Survey Ctl.dgn 11/30/2020 12:23

DATE REVISED	DATE FILMED	DATE REVISED	DATE FILMED	FED.RD. DIST.NO.	STATE	FED.AID PROJ.NO.	SHEET NO.	TOTAL SHEETS
				6	ARK.			
				JOB NO.		050347	63	121

(2) SURVEY CONTROL DETAILS

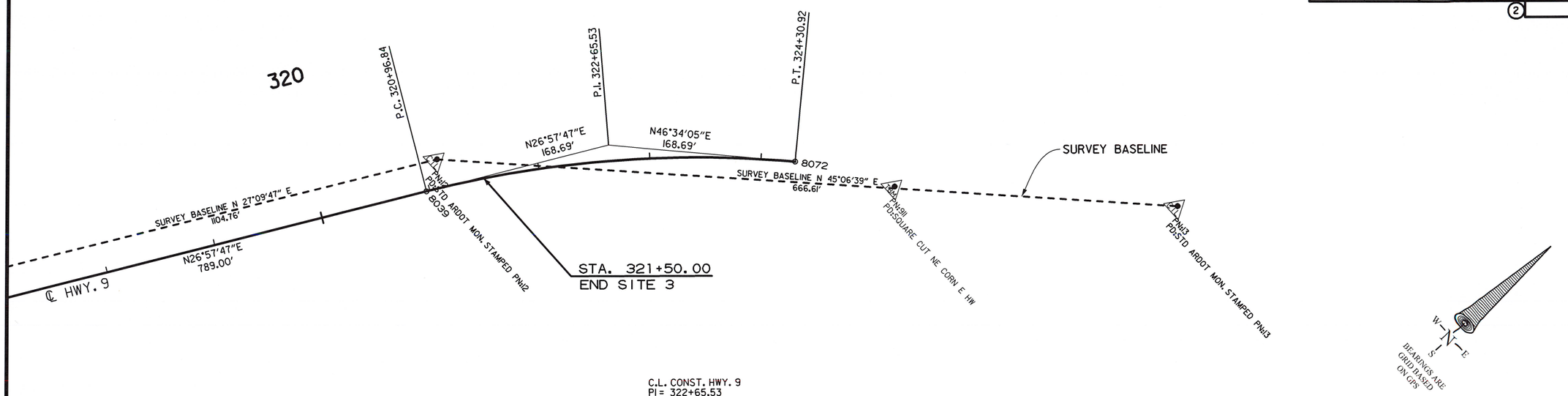

C.L. CONST. HWY. 9
PI= 322+65.53
Δ = 19°36'18"RT.
D = 5°52'07"
T = 168.69'
L = 334.08'
PC = 320+96.84
PT= 324+30.92
e = 0.096'/'
Ls = 350'

STATE OF ARKANSAS
LICENSED PROFESSIONAL ENGINEER
No. 15560
JEROME PAUL DAVIS
11-30-2020

SITE 3
SURVEY CONTROL DETAILS

USER: ap5181
DESIGN FILE: G:\18105601_050347hwy9\TRANSP\dgn\survey_ctl\r050347 Survey Ctl.dgn
PLOTTED: 11/30/2020 12:23 SCALE: 1:100

DATE REVISED	DATE FILMED	DATE REVISED	DATE FILMED	FED.RD. DIST.NO.	STATE	FED.AID PROJ.NO.	SHEET NO.	TOTAL SHEETS
				6	ARK.			
				JOB NO.		050347	64	121

(2) SURVEY CONTROL DETAILS

P.O.B. 395+82.47
P.C. 395+94.53
8081
8082
N39°32'32"E 139.89'
SURVEY BASELINE N 38°16'51" E 682.99'
℄ HWY. 9
N39°32'32"E 12.06'
P.I. 397+34.42
PN#4 PD:STD ARDOT MON. STAMPED PN#4
N28°23'11"E 139.89'
8084
P.T. 398+73.43
N28°23'11"E 143.10'
8041
P.C. 400+16.53
SURVEY BASELINE N 25°11'02" E 721.03'
N28°23'11"E 244.14'
P.I. 402+60.67
N02°34'32"W 244.14'
8043
P.T. 404+92.87
PN#5 PD:STD ARDOT MON. STAMPED PN#5
PN:914 PD:SQUARE CUT CENTER E HW
N02°34'32"W 734.63'
SURVEY BASELINE N 04°35'06" W 680.36'
SURVEY BASELINE
PN:915 PD:SQUARE CUT NW END BR
PN#6 PD:STD ARDOT MON. STAMPED PN#6
SURVEY BASELINE N 03°39'42" E 602.59'

C.L. CONST. HWY. 9
PI = 397+34.42
Δ = 11°09'21" LT.
D = 04°00'00"
T = 139.89'
L = 278.90'
PC = 395+94.53
PT = 398+73.43
E = 0.040'/'
LS = 200'

C.L. CONST. HWY. 9
PI = 402+60.67
Δ = 30°57'43" LT.
D = 06°30'00"
T = 244.14'
L = 476.34'
PC = 400+16.53
PT = 404+92.87
e = 0.10'/'
Ls = 350'

BEARINGS ARE GRID BASED ON GPS

STATE OF ARKANSAS
LICENSED PROFESSIONAL ENGINEER
No. 15560
JEROME PAUL DAVIS
11-30-2020

410
P.O.B. 0+00.00
P.I. 0+59.04
Δ = 09°57'16" LT.
P.O.E. 1+95.45
8059
N12°51'39"E 59.04'
8060
N02°54'23"E 136.41'
8061
℄ CHANNEL CHANGE

STA. 399+00.00
BEGIN SITE 4
LOG MILE 8.03

400
405

410
P.I. 0+59.04
Δ = 09°57'16" LT.
P.O.E. 1+95.45
N02°54'23"E 136.41'
8060
N12°51'39"E 59.04'
8061
P.C. 412+27.50
P.I. 414+79.52
415
N02°34'32"W 252.02'
N26°59'34"E 252.02'
P.T. 417+20.30
8044
℄ HWY. 9
N02°34'32"W 734.63'
SURVEY BASELINE N 04°35'06" W 680.36'
PN#15 PD:SQUARE CUT NW END BR
PN#16 PD:STD ARDOT MON. STAMPED PN#16
SURVEY BASELINE
SURVEY BASELINE N 03°39'42" E 602.59'
8046
PN#17 PD:STD ARDOT MON. STAMPED PN#17
420
N26°59'34"E 397.50'
SURVEY BASELINE N 26°37'40" E 592.34'
P.O.E. 421+17.81
8047
PN#18 PD:STD ARDOT MON. STAMPED PN#18

BEARINGS ARE GRID BASED ON GPS

C.L. CONST. HWY. 9
PI = 414+79.52
Δ = 29°34'06" RT.
D = 06°00'00"
T = 252.02'
L = 492.80'
PC = 412+27.50
PT = 417+20.30
e = 0.096'/'
Ls = 350'

STA. 420+15.00
END JOB 050347
& SITE 4
LOG MILE 8.43

SITE 4
SURVEY CONTROL DETAILS

USER: qp5181
DESIGN FILE: G:\1810560I_050347hwy9\TRANSP\dgn\survey_ctl\r050347 Survey Ctl.dgn
PLOTTED: 11/30/2020 12:23
SCALE: 1:100

G:\1810560I_050347hwy9\TRANSP\dgn\survey_ctl\r050347 Survey Ctl.dgn 11/30/2020 12:23

DATE REVISED	DATE FILMED	DATE REVISED	DATE FILMED	FED.RD. DIST.NO.	STATE	FED.AID PROJ.NO.	SHEET NO.	TOTAL SHEETS
				6	ARK.			
				JOB NO.		050347	65	121
				2	PLAN AND PROFILE SHEETS			

C.L. CONST. HWY. 9
PI = 97+99.56
Δ = 17°12'22" RT.
D = 04°30'00"
T = 192.63'
L = 382.36'
PC = 96+06.93
PT = 99+89.29

FENCE

STA.	STA.	SIDE	TYPE	LIN. FT.
99+00	100+84	LT.	WIRE TYPE D-I	196
102+30	113+00	LT.	WIRE TYPE C	1054
106+47	113+00	RT.	WIRE TYPE C	675

STA. 104+12.46 TO STA. 104+61.71
EXISTING BRIDGE NO. M0284 48.2' X 25.5'
TWO SPAN BRIDGE CONSISTING
OF CONCRETE-CAST-IN-PLACE DECK
& STEEL GIRDERS
REMOVE AS EXISTING BRIDGE
STRUCTURE (SITE NO. 1) = 1.00 LUMP SUM

REMOVAL AND DISPOSAL FENCE

STA.	STA.	SIDE	LIN. FT.
99+00	100+84	LT.	205
102+32	113+00	LT.	1066
106+45	113+00	RT.	678

CONCRETE DITCH PAVING

STA.	STA.	SIDE	TYPE	"W"	SQ. YD.
103+00	103+40	RT.	B	4	17
103+70	104+33	RT.	B	4	30

STATE OF ARKANSAS
LICENSED PROFESSIONAL ENGINEER
No. 15560
JEROME PAUL DAVIS
11-30-2020

P.I. 97+99.56
50' BUFFER
100
P.T. 99+89.29
+38.14' 49.21'
PROPOSED R/W
+30 55'
MARKLEROAD
50' BUFFER
+00 100'
105
STA. 104+39 - CONSTRUCT
QUAD. 12' x 7' x 105' R.C. BOX CULV'T.
45°RT. FWD. SKEW
WITH 3:1 WINGS LT. & RT.
Q50= 168 CFS D.A.= 916.6 ACRES
SPAN = 72.36'
P.C. 104+86.21
+50 95'
+25 60'
110
C.L. CONST. HWY. 9
PI = 107+08.51
Δ = 21°57'31" LT.
D = 05°00'00"
T = 222.30'
L = 439.17'
PC = 104+86.21
PT = 109+25.38
e = 0.09'/'
Ls = 350'
+75 55'
PROPOSED R/W
P.T. 109+25.38
+10.79 52.09'
+00 45'
CONST. LIMITS
N27°44'23"E
100' TRANSITION
+00
+68.53 60'
+00 50'
+00
N32° 29'32"E
100 TRANSITION +00
N49°44'54"E
21' 11' 11' 2'
6' 11' 11' 6'
16'
9%
16' 11' 11' 16'
2' 11' 11' 2'
+00 50'
PROPOSED R/W
+65 80.95'
CONST. LIMITS
+75 100'
+25 130'
+00 130'
+18.18 115'
T.C.E.
50' BUFFER
CREEK
+50 100'
50' BUFFER
P.I. 107+08.51
+00 80'
PROPOSED R/W
+ C.L. CONST.
+55

STA. 103+55 - IN PLACE
18" X 20' PIPE CULVERT RT.
SIDE DRAIN - REMOVE
INSTALL 18" X 60' PIPE CULVERT
RT. SIDE DRAIN
CONST. APPR. = 235 CU. YD.

STA. 112+00.00
END SITE 1

STA. 100+00.00
BEGIN JOB 050347
& SITE 1
LOG MILE 2.10

REFER TO SURVEY CONTROL DETAIL SHEETS
FOR HORIZONTAL AND VERTICAL CONTROL DATA

SITE 1
HWY. 9

STA. 102+37.75 BEGIN SUPERELEVATION
STA. 105+87.75 MAX. SUPERELEVATION (0.09'/')
STA. 108+29.80 MAX. SUPERELEVATION (0.09'/')
STA. 111+73.82 END SUPERELEVATION

730 725 720 715 710 705 700 695

PVC 100+00.00 ELEV. 711.09
2.41%
PVI 101+50.00 ELEV. 714.70
PVT 103+00.00 ELEV. 714.51
PROFILE GRADE
-0.12%
PVC 106+00.00 ELEV. 714.4
PVI 107+00.00 ELEV. 714.02
200' V.C. K = 115.61 e=0.43'
PVRC 108+00.00 ELEV. 715.63
1.61%
PVI 109+10.00 ELEV. 717.40
80' V.C. K = 115.94 e=0.07'
0.00%
PVI 110+60.00 ELEV. 717.40
0.69%
PVI 112+00.00 ELEV. 718.36
300' V.C. K = 118.58 e=-0.95'
220' V.C. K = 136.65 e=-0.44'
PVRC 110+20.00 ELEV. 717.40
PVT 111+00.00 ELEV. 717.60
GRADE TO DRAIN RT.
1.77% RT. DT. GR.
+00 RT. DT. 707.96
+50 RT. DT. 710.62
EXIST. GROUND
+00 RT. DT. 709.60
3.74% RT. DT. GR.
050 DESIGN H.W. ELEV. 708.7'
+00 LT. DT. 700.81
1.37% LT. DT. GR.
+74 LT. DT. 703.19
+38 RT. DT. 704.63
+39
+45 LT. DT. 703.19
+04 RT. DT. 704.63
F.L. IN = 703.63 RT.
F.L. OUT = 702.19 LT.
2.20% RT. DT. GR.
1.12% LT. DT. GR.
+00 LT. DT. 712.82
+09.33 715.33
0.63% RT. DT. GR.
0.80% LT. DT. GR.
+00 LT. DT. 715.23
+00 RT. DT. 715.23

MARKLEROAD CREEK AT STA. 104+10 TO STA. 104+60 IS CLASSIFIED AS AN INTERMITTENT STREAM. THE TOP OF CHANNEL ELEVATION IS 705.00 FT. MSL. REFER TO SECTION 110.05 (C) TEMPORARY FILL (P. 130) OF THE 2014 STANDARD SPECIFICATIONS.

99+00 100+00 101+00 102+00 103+00 104+00 105+00 106+00 107+00 108+00 109+00 110+00 111+00 112+00

USER: ap5181
DESIGN FILE: G:\18105601_050347hwy9\TRANSP\dgn\p&p\r050347 Site 1pp01.dgn
PLOTTED: 11/30/2020 12:23
SCALE: 1in00
MODEL: PLAN AND PROFILE SHEETS

G:\18105601_050347hwy9\TRANSP\dgn\p&p\r050347 Site 1pp01.dgn 11/30/2020 12:23

FENCE				
STA.	STA.	SIDE	TYPE	LIN. FT. 16' GATE
197+75	203+74	LT.	WIRE TYPE D-1	607
198+88	201+23	RT.	WIRE TYPE D	237
203+65		LT.		1

REMOVAL AND DISPOSAL FENCE			
STA.	STA.	SIDE	LIN. FT. GATE
197+75	203+75	LT.	627
198+88	201+23	RT.	267
203+65		LT.	1

DATE REVISED	DATE FILMED	DATE REVISED	DATE FILMED

FED.RD. DIST.NO.	STATE	FED.AID PROJ.NO.	SHEET NO.	TOTAL SHEETS
6	ARK.			
JOB NO.		050347	66	121

2 PLAN AND PROFILE SHEETS

STATE OF ARKANSAS
LICENSED PROFESSIONAL ENGINEER
No. 15560
JEROME PAUL DAVIS
11-30-2020

STA. 207+15.14 TO STA. 207+51.59
EXISTING BRIDGE NO. M0285 34' X 25.7'
SPAN BRIDGE CONSISTING
OF CONCRETE-CAST-IN-PLACE DECK
& STEEL GIRDERS
REMOVE AS EXISTING BRIDGE
STRUCTURE (SITE NO. 2)= 1.00 LUMP SUM

STA. 203+88 CONSTRUCT
APPROACH LT. = 25 CU. YD.

STA. 201+29 CONSTRUCT
APPROACH RT. = 440 CU. YD.

C.L. DRIVEWAY
PI= 0+70.57
Δ = 35°30'51" LT.
D = 57°17'45"
T = 32.02'
L = 61.98'
PC = 0+38.55
PT = 1+00.53

C.L. DRIVEWAY
PI= 1+86.95
Δ = 10°51'29" LT.
D = 22°55'06"
T = 23.76'
L = 47.37'
PC = 1+63.19
PT = 2+10.57

C.L. CONST. HWY. 9
PI= 203+10.32
Δ = 22°06'50" RT.
D = 06°30'00"
T = 172.25'
L = 340.22'
PC = 201+38.07
PT = 204+78.29
e = 0.100'/'
Ls = 350'

STA. 205+04 IN PLACE
24" x 50' C.M. PIPE CULV'T.
REMOVE

STA. 205+04 CONSTRUCT
24" X 78' R.C. PIPE CULV'T.
(CLASS III(TYPE 3 BEDDING)
W/ FES LT. & RT.
Q50 = 9 CFS D.A. = 3.2 ACRES

STA. 207+90 CONSTRUCT
QUAD. 8' x 6' x 103' R.C. BOX CULVERT
45° RT. FWD. SKEW
WITH 3:1 WINGS LT. & RT.
Q50 = 671 CFS D.A. = 279.0 ACRES
SPAN = 49.62'

STA. 198+75.57
BEGIN SITE 2
LOG MILE 2.71

STA. 2+20.00
END DRIVEWAY CONST.

REFER TO SURVEY CONTROL DETAIL SHEETS
FOR HORIZONTAL AND VERTICAL CONTROL DATA

SITE 2
HWY. 9

STA. 198+75.57 BEGIN SUPERELEVATION
STA. 202+25.57 MAX. SUPERELEVATION (0.10'/')
STA. 203+90.79 MAX. SUPERELEVATION (0.10'/')
STA. 207+40.79 END SUPERELEVATION

UNNAMED CREEK AT STA. 206+20 TO STA. 207+50 IS CLASSIFIED AS AN EPHEMERAL STREAM. THE TOP OF CHANNEL ELEVATION IS 745.00 FT. MSL. REFER TO SECTION 110.05 (C) TEMPORARY FILL (P. 130) OF THE 2014 STANDARD SPECIFICATIONS.

DRIVEWAY
201+29 RT.

EXISTING GROUND
PROFILE GRADE
50' V.C.
K=2.85
e=1.10'
14.96%
6.80%
5%
3.32%
0.32%
0.25% RT. DT. GR.
390' V.C.
K = 130.00
e=-1.46'
460' V.C.
K = 123.99
e=2.13'
Q50 DESIGN H.W.
ELEV. = 747.7'
3.00% LT. DT. GR.
1.37% RT. DT. GR.
1.21% RT. DT. GR.
3.99% LT. DT. GR.
3.86% RT. DT. GR.
3.70% RT. DT. GR.
3.46% RT. DT. GR.
3.68% RT. DT. GR.

PVI 198+75.57 ELEV. 741.75
PVC 199+05.00 ELEV. 742.73
PVI 201+00.00 ELEV. 749.20
PVT 202+95.00 ELEV. 749.82
PVC 206+70.00 ELEV. 751.02
PVI 209+00.00 ELEV. 751.76

0+00 747.44
0+25.00 747.23
0+50.00 746.58
0+75.00 750.32
1+00.17.00 747.44
1+60.00 763.04
1+85.00 766.78
2+10.00 768.48
2+20.00 769.16

+15 746.50
+45 RT. DT. 745.00
+04 LT. DT. 742.98
+04 RT. DT. 744.76
+70 RT. DT. 746.00
+00 LT. DT. 746.50
+20 LT. DT. 740.50
+80 LT. DT. 740.90
+95 RT. DT. 743.27
+40 RT. DT. 743.27
+15 LT. DT. 746.50

+04 EXIST.
F.L. IN = 745.39 RT.
F.L. OUT = 743.63 LT.

+04
F.L. IN = 744.10 RT.
F.L. OUT = 742.95 LT.

+90
F.L. IN = 742.27 RT.
F.L. OUT = 739.90 LT.

0+00 1+00 2+00 198+00 199+00 200+00 201+00 202+00 203+00 204+00 205+00 206+00 207+00 208+00 209+00
730 735 740 745 750 755 760 765

USER: qp5181
DESIGN FILE: G:\18105601_050347hwy9\TRANSP\dgn\p&p\r050347 Site 2 pp01.dgn
PLOTTED: 11/30/2020 12:23
SCALE: 1:100
MODEL: PLAN AND PROFILE SHEETS

REMOVAL AND DISPOSAL FENCE			
STA.	STA.	SIDE	LIN. FT.
210+33	212+02	LT.	244
210+95	217+25	RT.	651
214+58	217+25	LT.	296

FENCE				
STA.	STA.	SIDE	TYPE	LIN. FT.
210+33	212+02	LT.	WIRE TYPE D	170
210+95	217+25	RT.	WIRE TYPE D-I	634
214+57	217+25	LT.	WIRE TYPE D-I	266

STA. 214+00 - IN PLACE
18" X 24' PIPE CULVERT LT.
SIDE DRAIN - REMOVE
INSTALL 18" X 50' PIPE CULVERT
LT. SIDE DRAIN
CONST. APPR. = 60 CU. YD.

PI = 213+17.66
Δ = 4°55'32" RT.
D = 03°00'00"
T = 82.14'
L = 164.19'
PC = 212+35.52
PT = 213+99.71
e = 0.067'/'
Ls = 300'

CONCRETE DITCH PAVING						
STA.	STA.	SIDE	TYPE	"B"	"W"	SQ. YD.
210+40	213+73	LT.	A	4'	10'	370

DATE REVISED	DATE FILMED	DATE REVISED	DATE FILMED	FED.RD. DIST.NO.	STATE	FED.AID PROJ.NO.	SHEET NO.	TOTAL SHEETS
				6	ARK.			
				JOB NO.		050347	67	121
				(2) PLAN AND PROFILE SHEETS				

STATE OF ARKANSAS
LICENSED PROFESSIONAL ENGINEER
No. 15560
11-30-2020
JEROME PAUL DAVIS

210

215

PROPOSED R/W

CONST. LIMITS

C.L. EXIST. HWY. 9

N55°49'43"E

25' BUFFER

C.L. CONST.

P.C. 212+35.52

P.I. 213+17.66

P.T. 213+99.71

100' TRANSITION

N60°45'15"E

P.O.E. 219+00.00

UNNAMED CREEK

REFER TO SURVEY CONTROL DETAIL SHEETS
FOR HORIZONTAL AND VERTICAL CONTROL DATA

STA. 216+25.00
END SITE 2

SITE 2
HWY. 9

STA. 210+10.52 BEGIN SUPERELEVATION
STA. 213+10.52 MAX. SUPERELEVATION (0.067'/')
STA. 213+24.71 MAX. SUPERELEVATION (0.067'/')
STA. 216+24.71 END SUPERELEVATION

PVI 209+00.00
ELEV. 751.76

460' V.C.
K = 123.99
e=2.13'

PVI 211+85.00
ELEV. 763.24

PVT 211+30.00
ELEV. 761.02

430' V.C.
K = 134.80
e=1.71'

PVI 214+00.00
ELEV. 771.90

PVT 216+15.00
ELEV. 773.70

PVI 216+25.00
ELEV. 773.78

PROFILE GRADE

EXISTING GROUND

0.32%
4.03%
0.84%
1.00% LT. DT. GR.
1.37% RT. DT. GR.
2.72% RT. DT. GR.
3.08% DT. GR.
7.05% DT. GR.
4.71% LT. DT. GR.

+00 LT. DT. 749.50
+30 RT. DT. 744.50
+40 LT. DT. 749.85
+40 RT. DT. 747.49
+00 LT. DT. 751.70
+00 LT. DT. 766.17
+00 LT. DT. 768.75

775 770 765 760 755 750 745 740

209+00 210+00 211+00 212+00 213+00 214+00 215+00 216+00 217+00 218+00 219+00 220+00

USER: qp5181
DESIGN FILE: G:\18105601_050347hwy9\TRANSP\dgn\p&p\r050347 Site 2 pp02.dgn
PLOTTED: 11/30/2020 12:23
SCALE: 1H00
MODEL: PLAN AND PROFILE SHEETS

G:\18105601_050347hwy9\TRANSP\dgn\p&p\r050347 Site 2 pp02.dgn 11/30/2020 12:23

DATE REVISED	DATE FILMED	DATE REVISED	DATE FILMED	FED.RD. DIST.NO.	STATE	FED.AID PROJ.NO.	SHEET NO.	TOTAL SHEETS
				6	ARK.			
				JOB NO.		050347	68	121

(2) PLAN AND PROFILE SHEETS

STATE OF ARKANSAS
LICENSED PROFESSIONAL ENGINEER
No. 15560
JEROME PAUL DAVIS
2-22-2021

CONCRETE DITCH PAVING

STA.	STA.	SIDE	TYPE	"W"	SQ. YD.
302+30	304+24	LT.	B	4	86

REMOVAL AND DISPOSAL FENCE

STA.	STA.	SIDE	LIN. FT.	GATE
298+94	312+25	RT.	1463	
301+70	302+80	LT.	110	
307+04		RT.		1
309+00	311+50	LT.	250	

STA. 299+78 IN PLACE
24" X 40' C.M. PIPE CULV'T.
REMOVE AND REPLACE W/
24" X 63' R.C. PIPE CULV'T.
(CLASS IV)(TYPE 3 BEDDING)
W/ FES LT. & RT.
Q50 = 11 CFS D.A. = 4.8 ACRES

REMOVAL AND DISPOSAL GUARDRAIL

STA.	STA.	SIDE	LIN. FT.
306+75	308+25	RT.	147
307+47	308+25	LT.	75
308+96	309+77	RT.	81
308+96	310+55	LT.	155

STA. 308+38 TO STA. 309+07
IN PLACE 24.3' X 65' SPAN BRIDGE
NO. M0286 CONSISTING
OF CONCRETE-CAST-IN-PLACE DECK
& STEEL GIRDERS
REMOVE AS EXISTING BRIDGE
STRUCTURE (SITE NO. 3)= 1.00 LUMP SUM

C.L. CONST. HWY. 9
PI = 295+01.45
Δ = 40°36'50" LT.
D = 13°04'24"
T = 162.18'
L = 310.66'
PC = 293+39.27
PT = 296+49.93

STA. 300+83 INSTALL
18" X 40' PIPE CULVERT
LT. SIDE DRAIN
CONST. APPR. = 55 CU. YD.

STA. 296+90 INSTALL
22" X 14" X 36' PIPE CULVERT
RT. SIDE DRAIN
CONST. APPR. = 10 CU. YD.

STA. 308+08.50 BRIDGE END
CONSTRUCT BRIDGE NO. 07454
111'-0" INTEGRAL CONTINUOUS
W-BEAM UNIT (34'-43'-34')
34'-0" CLEAR ROADWAY
112-0" BRIDGE LENGTH
STA. 309+20.50 BRIDGE END

C.L. CONST. HWY. 9
PI = 301+78.39
Δ = 28°41'59"RT.
D = 6°30'00"
T = 225.50'
L = 441.54'
PC = 299+52.89
PT = 303+94.42
e = 0.10'/'
Ls = 350'

STA. 304+18 IN PLACE
18" X 37' C.M. PIPE CULV'T.
REMOVE AND REPLACE W/
30" X 69' R.C. PIPE CULV'T.
(CLASS IV)(TYPE 3 BEDDING)
W/ FES LT. & RT.
Q50 = 21 CFS D.A. = 7.0 ACRES
DUMPED RIPRAP = 6 CU. YD.

STA.	STA.	SIDE	GUARDRAIL (TYPE A)	THRIE BEAM GUARDRAIL TERMINAL	GUARDRAIL TERMINAL (TYPE 2)
305+80.35	307+99.10	HWY. 9 RT.	150 LIN.FT.	1 EACH	1 EACH
306+55.35	307+99.10	HWY. 9 LT.	75 LIN.FT.	1 EACH	1 EACH
309+29.89	310+73.64	HWY. 9 RT.	75 LIN.FT.	1 EACH	1 EACH
309+29.89	311+46.64	HWY. 9 LT.	150 LIN.FT.	1 EACH	1 EACH

C.L. CONST. HWY. 9
PI = 311+16.45
Δ = 01°54'51"LT.
D = 0°30'00"
T = 191.45'
L = 382.86'
PC = 309+25.00
PT = 313+07.86
NO SUPER

STA. 296+90.39
BEGIN SITE 3
LOG MILE 5.98

REFER TO SURVEY CONTROL
DETAIL SHEETS FOR HORIZONTAL
AND VERTICAL CONTROL DATA

SITE 3
HWY. 9

STA. 296+90.39 BEGIN SUPERELEVATION
STA. 300+40.39 MAX. SUPERELEVATION (0.100'/')
STA. 303+06.92 MAX. SUPERELEVATION (0.100'/')
STA. 306+56.92 END SUPERELEVATION

PVC 296+95.00
ELEV. 828.72
PVI 296+90.39
ELEV. 828.87
PVT 295+85.78
ELEV. 825.00
PVI 298+55.00
ELEV. 823.57
320' V.C.
K = 115.94
e=1.10'
PVT 300+15.00
ELEV. 822.84
PVC 300+50.00
ELEV. 822.68
PVI 302+00.00
ELEV. 822.00
300' V.C.
K = 272.73
e=-0.41'
PVI 306+50.00
ELEV. 815.00
PVC 306+25.00
ELEV. 816.94
PROFILE GRADE
250' V.C.
K = 150.60
e=0.52'
EXIST. GROUND
PVT 307+75.00
ELEV. 815.12
STA. 308+08.50
BR. END
PVC 308+15.00
Elev. 815.16
700' V.C.
K = 119.66
e=5.12'
STA. 309+20.50
BR. END
050 DESIGN H.W.
ELEV. 809.4'

F.L. IN = 820.49 LT.
F.L. OUT = 817.11 RT.
.78 EXIST.
F.L. IN = 820.96 LT.
F.L. OUT = 817.55 RT.

F.L. IN = 814.81 LT.
F.L. OUT = 812.08 RT.
.18 EXIST.
F.L. IN = 814.81 LT.
F.L. OUT = 813.88 RT.

LITTLE STRAWBERRY RIVER AT STA. 308+10 TO STA. 309+00 IS CLASSIFIED AS AN INTERMITTENT STREAM. THE TOP OF CHANNEL ELEVATION IS 805.00 FT. MSL. REFER TO SECTION 110.05 (C) TEMPORARY FILL (P. 130) OF THE 2014 STANDARD SPECIFICATIONS.

296+00 297+00 298+00 299+00 300+00 301+00 302+00 303+00 304+00 305+00 306+00 307+00 308+00 309+00 310+00

795 800 805 810 815 820 825 830

USER: jh595
DESIGN FILE: G:\1810560l_050347hwy9\TRANSP\dgn\p&p\r050347 Site 3 pp01.dgn
PLOTTED: 2/22/2021 15:18
SCALE: 1:100
MODEL: PLAN AND PROFILE SHEETS

G:\1810560l_050347hwy9\TRANSP\dgn\p&p\r050347 Site 3 pp01.dgn 2/22/2021 15:18

DATE REVISED	DATE FILMED	DATE REVISED	DATE FILMED	FED.RD. DIST.NO.	STATE	FED.AID PROJ.NO.	SHEET NO.	TOTAL SHEETS
				6	ARK.			
				JOB NO.		050347	69	121
				(2) PLAN AND PROFILE SHEETS				

CONCRETE DITCH PAVING

STA.	STA.	SIDE	TYPE	"B"	"W"	SQ. YD.
313+15	321+00	RT.	A	4′	10′	872
314+00	316+56	LT.	A	4′	10′	284
316+56	316+60	LT.	A	2′	4′	9
318+00	321+00	LT.	B		4′	133

C.L. CONST. HWY. 9
PI = 311+16.45
Δ = 01°54′51″LT.
D = 0°30′00″
T = 191.45′
L = 382.84′
PC = 309+25.00
PT = 313+07.86
NO SUPER

REMOVAL AND DISPOSAL FENCE

STA.	STA.	SIDE	LIN. FT.	GATE
311+80		RT.		1
314+00	321+37	LT.	711	
321+54	322+50	LT.	114	

FENCE

STA.	STA.	SIDE	TYPE	LIN. FT.	16′ GATE
315+00	321+32	LT.	WIRE TYPE D-1	737	
321+45		LT.			1
321+69	322+50	LT.	WIRE TYPE D-1	106	

STA. 316+56 IN PLACE
24" x 43' C.M. PIPE CULV'T.
REMOVE AND REPLACE W/
24" X 63' R.C. PIPE CULV'T.
(CLASS IV)(TYPE 3 BEDDING)
W/ FES LT. & RT.
Q50 = 8 CFS D.A. = 2.7 ACRES

STA. 321+45 CONSTRUCT
APPROACH LT. = 15 CU. YD.

C.L. CONST. HWY. 9
PI = 322+65.53
Δ = 19°36′18″RT.
D = 5°52′07″
T = 168.69
L = 334.08′
PC = 320+96.84
PT = 324+30.92
e = 0.096′/′
Ls = 215′

STATE OF ARKANSAS
LICENSED PROFESSIONAL ENGINEER
No. 15560
JEROME PAUL DAVIS
2-8-2021

310 315 320

C.L. EXIST. HWY. 9
C.L. CONST.
N28°52′38″E
N26°57′47″E
N46°34′05″E
CONST. LIMITS
PROP. R/W
50′ BUFFER
P.I. 311+16.45
P.T. 313+07.86
P.C. 320+96.84
P.I. 322+65.53
P.T. 324+30.92
100′ TRANSITION
16′ GATE
PROP. T.C.E.
STA. 321+50.00
END SITE 3

SITE 3
HWY. 9

REFER TO SURVEY CONTROL DETAIL SHEETS
FOR HORIZONTAL AND VERTICAL CONTROL DATA

STA. 321+45 CONSTRUCT
APPROACH RT. = 20 CU. YD.

STA. 320+45.00 BEGIN SUPERELEVATION
STA. 321+50.00 MATCH EXIST. SUPERELEVATION (0.047′/′)
STA. 322+65.00 EXIST. MAX. SUPERELEVATION (0.096′/′)

PROFILE GRADE
700′ V.C.
K = 119.66
e=5.12′
PVI 311+65.00
ELEV. 815.50
0.10%
5.95%
EXIST. GROUND
PVT 315+15.00
Elev. 836.32
+56
F.L. IN = 840.09 RT.
F.L. OUT = 839.36 LT.
•56 EXIST.
F.L. IN = 841.8 RT.
F.L. OUT = 839.63 LT.
PVI 320+50.00
ELEV. 868.13
PVC 319+50.00
ELEV. 862.18
PVT 321+50.00
ELEV. 869.24
200′ V.C.
K = 41.32
e=1.21′
1.11%
EXIST. GROUND

DATE REVISED	DATE FILMED	DATE REVISED	DATE FILMED

FED.RD. DIST.NO.	STATE	FED.AID PROJ.NO.	SHEET NO.	TOTAL SHEETS
6	ARK.			
JOB NO.		050347	70	121

2 PLAN AND PROFILE SHEETS

REMOVAL AND DISPOSAL FENCE			
STA.	STA.	SIDE	LIN. FT. GATE
398+21	399+03	RT.	99
399+00	404+43	LT.	805
399+03	404+41	RT.	633
406+64		LT.	2

FENCE				
STA.	STA.	SIDE	TYPE	LIN. FT.
398+21	399+00	RT.	4' CHAIN LINK	96
399+00	401+95	RT.	WIRE TYPE C	295

STA. 403+65 - IN PLACE
15' x 4' x 37' R.C. BOX CULV'T.
W/ HDWLS. LT.& RT.
REMOVE

STA. 403+64 - CONSTRUCT
DBL. 8' x 4' x 75' R.C. BOX CULV'T.
10° LT. FWD. SKEW
WITH 3:1 WINGS LT. & RT.
Q50= 187 CFS D.A.= 241.9 ACRES
CHANNEL CHANGE = 190 CU. YD.

C.L. CONST. HWY. 9
PI= 402+60.67
Δ = 30°57'43" LT.
D = 06°30'00"
T = 244.14'
L = 476.34'
PC = 400+16.53
PT = 404+92.87
e = 0.10'/'
Ls = 350'

STA. 407+50
CONST. TURNOUT = 20 CU. YD.

STA. 410+85 - CONSTRUCT
QUAD. 10' x 9' x 90' R.C. BOX CULV'T.
40° LT. FWD. SKEW
WITH 3:1 WINGS LT. & RT.
Q50= 2953 CFS D.A.= 1511.4 ACRES
SPAN = 56.68'
CHANNEL CHANGE = 470 CU. YD.

STA. 399+00.00
BEGIN SITE 4
LOG MILE 8.03

C.L. CONST. HWY. 9
PI= 397+34.42
Δ = 11°09'21" LT.
D = 04°00'00"
T = 139.89'
L = 278.90'
PC = 395+94.53
PT = 398+73.43
e = 0.040'/'
Ls = 200'

CONCRETE DITCH PAVING					
STA.	STA.	SIDE	TYPE	"W"	SQ. YD.
399+00	400+60	RT.	B	4	71
399+20	403+55	LT.	B	4	193
406+66	410+30	RT.	B	4	116

REFER TO SURVEY CONTROL DETAIL SHEETS
FOR HORIZONTAL AND VERTICAL CONTROL DATA

STA. 400+60 - IN PLACE
15" X 29' C.M. PIPE CULV'T.
RT. SIDE DRAIN - REMOVE
INSTALL 18" x 32' PIPE CULV'T.
RT. SIDE DRAIN
CONST. APPR. = 20 CU. YD.

STA. 405+00 - IN PLACE
18" X 24' R.C. PIPE CULV'T.
RT. SIDE DRAIN - REMOVE
INSTALL 18" x 42' PIPE CULV'T.
RT. SIDE DRAIN
CONST. APPR. = 50 CU. YD.

STA. 406+45 INSTALL
18" x 42' PIPE CULV'T.
RT. SIDE DRAIN
CONST. TURNOUT = 35 CU. YD.

STA. 408+55 - IN PLACE
18" X 20' C.M. PIPE CULV'T.
RT. SIDE DRAIN - REMOVE
INSTALL 18" x 68' PIPE CULV'T.
RT. SIDE DRAIN
CONST. APPR. = 175 CU. YD.

C.L. CONST. HWY. 9
PI= 414+79.52
Δ = 29°34'06" RT.
D = 06°00'00"
T = 252.02'
L = 492.80'
PC = 412+27.50
PT = 417+20.30
e = 0.096'/'
Ls = 350'

STA. 410+33.14 TO STA. 410+69.24
EXISTING BRIDGE NO. M0287 33.0' X 25.4'
SPAN BRIDGE CONSISTING
OF CONCRETE-CAST-IN-PLACE DECK
& STEEL GIRDERS
REMOVE AS EXISTING BRIDGE
STRUCTURE (SITE NO. 4)= 1.00 LUMP SUM

SITE 4
HWY. 9

STA. 399+00.00 MATCH EXIST. SUPERELEVATION (0.00'/')
STA. 402+15.00 MAX. SUPERELEVATION (0.10'/')
STA. 404+05.37 MAX. SUPERELEVATION (0.10'/')
STA. 407+55.37 END SUPERELEVATION

STA. 409+65.00 BEGIN SUPERELEVATION
STA. 413+15.00 MAX. SUPERELEVATION (0.096'/')
STA. 416+32.81 MAX. SUPERELEVATION (0.096'/')
STA. 419+82.81 END SUPERELEVATION

PROFILE GRADE
EXIST. GROUND
PVC 400+60.00 ELEV. 734.53
PVI 399+00.00 ELEV. 740.41
PVI 402+65.00 ELEV. 727.00
410' V.C. K = 117.82 e=1.78'
PVC 406+50.00 ELEV. 726.25
PVT 404+70.00 ELEV. 726.60
PVI 407+80.00 ELEV. 726.00
260' V.C. K = 115.04 e=-0.73'
PVC 409+35.00 ELEV. 722.20
PVT 409+10.00 ELEV. 722.81
050 DESIGN H.W. ELEV. 718.0'
+85 F.L. IN = 707.85LT. F.L. OUT = 707.07RT. 710' V.C. K = 115.07 e=-5.48'
+64 EXIST. F.L. IN = 721.21 RT. F.L. OUT = 720.74 LT.
+64 F.L. IN = 720.63 RT. F.L. OUT = 720.03 LT.

SOUTH FORK CREEK AT STA. 410+40 TO STA. 411+90 IS CLASSIFIED AS AN EPHEMERAL STREAM. THE TOP OF CHANNEL ELEVATION IS 713.00 FT. MSL. REFER TO SECTION 110.05 (C) TEMPORARY FILL (P. 130) OF THE 2014 STANDARD SPECIFICATIONS.

STATE OF ARKANSAS
LICENSED PROFESSIONAL ENGINEER
No. 15560
JEROME PAUL DAVIS
2-8-2021

397+00 398+00 399+00 400+00 401+00 402+00 403+00 404+00 405+00 406+00 407+00 408+00 409+00 410+00 411+00 412+00

740 735 730 725 720 715 710 705

USER: qp518l
DESIGN FILE: G:\1810560l_050347hwy9\TRANSP\dgn\p&p\r050347 Site 4 pp0l.dgn
PLOTTED: 2/8/2021 11:09
MODEL: PLAN AND PROFILE SHEETS
SCALE: 1:100

G:\1810560l_050347hwy9\TRANSP\dgn\p&p\r050347 Site 4 pp0l.dgn 2/8/2021 11:09

DATE REVISED	DATE FILMED	DATE REVISED	DATE FILMED

FED.RD. DIST.NO.	STATE	FED.AID PROJ.NO.	SHEET NO.	TOTAL SHEETS
6	ARK.			
JOB NO.		050347	71	121
(2) PLAN AND PROFILE SHEETS				

FENCE

STA.	STA.	SIDE	TYPE	LIN. FT.	16' GATE
414+60	416+70	RT.	WIRE TYPE C	172	

REMOVAL AND DISPOSAL FENCE

STA.	STA.	SIDE	LIN. FT. GATE
411+70	420+17	LT.	950
414+80	416+70	RT.	183
420+13		LT.	
420+67	421+15	LT.	64

CONCRETE DITCH PAVING

STA.	STA.	SIDE	TYPE	"W"	SQ. YD.
411+75	419+00	LT.	B	4	322
416+00	419+00	RT.	B	4	133

STATE OF ARKANSAS
LICENSED PROFESSIONAL ENGINEER
No. 15560
JEROME PAUL DAVIS
2-8-2021

25' BUFFER
25' BUFFER
P.C. 412+27.50
+34.20 60'
+00 65'
PROP. R/W
CONST. LIMITS
N02°34'32"W
C.L. CONST.
P.I. 414+79.52
415
N26°59'34"E
+40 70'
POND
P.T. 417+20.30
C.L. EXIST. HWY. 9
9
+23.83 94.43'
+35 70'
+40 70'
CONST. LIMITS
PROP. R/W
6'
11'
11'
6'
N26°59'34"E
420
PROP. R/W
+15 70'
+15 100' TRANSITION +15
+15 40'
P.O.E. 421+17.81
2'
11'
11'
2'
9
+15 40'

C.L. CONST. HWY. 9
PI = 414+79.52
Δ = 29°34'06" RT.
D = 06°00'00"
T = 252.02'
L = 492.80'
PC = 412+27.50
PT = 417+20.30
e = 0.096'/'
Ls = 350'

STA. 420+15.00
END JOB 05347
& SITE 4
LOG MILE 8.43

REFER TO SURVEY CONTROL DETAIL SHEETS
FOR HORIZONTAL AND VERTICAL CONTROL DATA

SITE 4
HWY. 9

STA. 409+65.00 BEGIN SUPERELEVATION
STA. 413+15.00 MAX. SUPERELEVATION (0.096'/')
STA. 416+32.81 MAX. SUPERELEVATION (0.096'/')
STA. 419+82.81 END SUPERELEVATION

PVI 419+05.00
ELEV. 737.15

PVCC 416+45.00
ELEV. 726.71
PVI 417+20.00
ELEV. 729.50
PVRC 417+95.00
ELEV. 732.60
PVT 420+15.00
ELEV. 739.60

EXIST. GROUND
PROFILE GRADE

710' V.C.
K = 115.07
e=5.48'

150' V.C.
K = 357.14
e=0.08'

220' V.C.
K = 115.18
e=-0.52'

-2.45%
3.72%
3.28% LT. DT. GR.
5.27% LT. DT. GR.
2.60% RT. DT. GR.
4.14%
2.23%
3.88% RT. DT. GR.
2.90% RT. DT. GR.

PVI 412+90.00
ELEV. 713.50
+00 LT. DT. 714.44
+00 RT. DT. 715.26
+25 LT. DT. 721.82
+50 RT. DT. 718.71
+00 RT. DT. 720.16
+00 RT. DT. 735.68

740	735	730	725	720	715	710	705

412+00 413+00 414+00 415+00 416+00 417+00 418+00 419+00 420+00 421+00 422+00

USER: ap5181
DESIGN FILE: G:\18105601_050347hwy9\TRANSP\dgn\p&p\r050347 Site 4 pp02.dgn
PLOTTED: 2/8/2021 11:09
SCALE: 1in00
MODEL: PLAN AND PROFILE SHEETS

DATE REVISED	DATE FILMED	DATE REVISED	DATE FILMED	FED.RD. DIST.NO.	STATE	FED.AID PROJ.NO.	SHEET NO.	TOTAL SHEETS
				6	ARK.			
				JOB NO.		050347	72	121
				(2)	PLAN AND PROFILE SHEETS			

STATE OF ARKANSAS
LICENSED PROFESSIONAL ENGINEER
No. 15560
JEROME PAUL DAVIS
11-30-2020

℄HWY. 9 DETOUR
PI = 110+28.41
Δ = 09°24'10" RT.
D = 06°30'00"
T = 72.49'
L = 144.65'
PC = 109+55.92
PT = 111+00.57
NO SUPER

℄HWY. 9 DETOUR
PI = 106+11.14
Δ = 45°44'35" LT.
D = 06°30'00"
T = 371.84'
L = 703.74'
PC = 102+39.30
PT = 109+43.04
e = 0.095'/'
Ls = 300'

DETOUR STA. 99+89.29=
HWY. 9 STA. 99+94.95
BEGIN DETOUR

DETOUR STA. 103+50 INSTALL
18" X 44' PIPE CULVERT
RT. TEMPORARY SIDE DRAIN
CONST. APPR. 10 CU. YD.
REFER TO SURVEY CONTROL DETAIL SHEETS
FOR HORIZONTAL AND VERTICAL CONTROL DATA

℄HWY. 9 DETOUR
PI = 101+06.15
Δ = 14°22'55" RT.
D = 06°30'00"
T = 111.20'
L = 221.24'
PC = 99+94.95
PT = 102+16.19
NO SUPER

STA. 105+00 DETOUR
INSTALL TEMPORARY
QUAD. 48" X 85' C.M. CULVERT PIPE
(60°RT. FWD. SKEW)
Q2 = 356 CFS

DETOUR STA. 111+00.57=
HWY. 9 STA. 110+75.65
END DETOUR

SITE 1 DETOUR HWY. 9

STA. 102+27.77 BEGIN SUPERELEVATION
STA. 105+27.77 MAX. SUPERELEVATION (0.095'/')
STA. 106+49.49 MAX. SUPERELEVATION (0.095'/')
STA. 109+49.49 END SUPERELEVATION

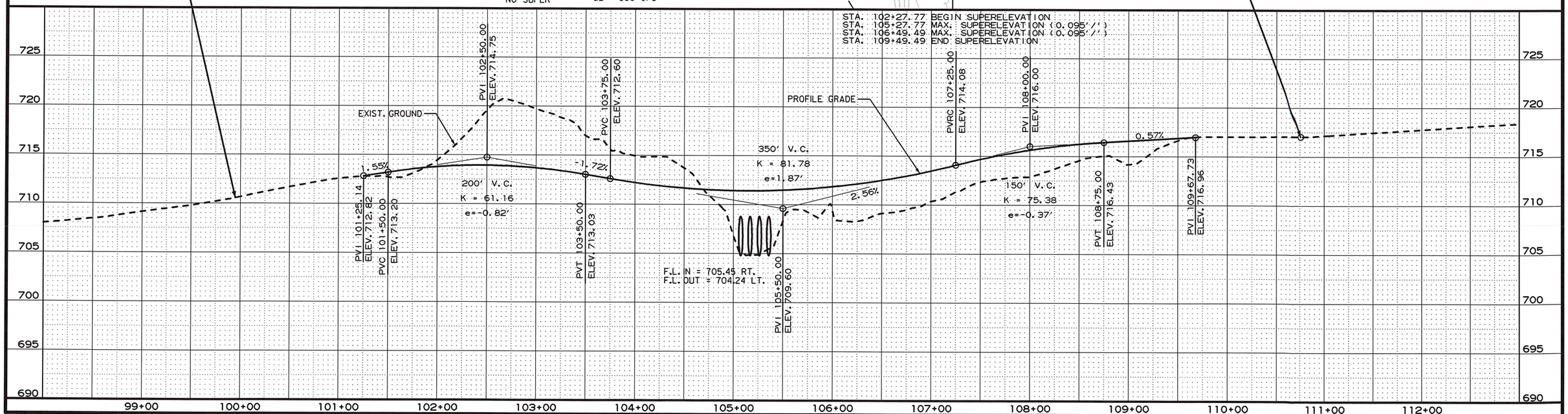

USER: qp5181
DESIGN FILE: G:\18105601_050347hwy9\TRANSP\dgn\p&p\r050347 Site 1detour pp01.dgn
PLOTTED: 11/30/2020 12:23
SCALE: 1:100
MODEL: PLAN AND PROFILE SHEETS

G:\18105601_050347hwy9\TRANSP\dgn\p&p\r050347 Site 1detour pp01.dgn
11/30/2020 12:23

For R/W Data, See Roadway Plans.

DATE REVISED	DATE FILMED	DATE REVISED	DATE FILMED	FED.RD. DIST.NO.	STATE	FED.AID PROJ.NO.	SHEET NO.	TOTAL SHEETS
				6	ARK.			
				JOB NO.		050347	73	121
				07454		LAYOUT		60922

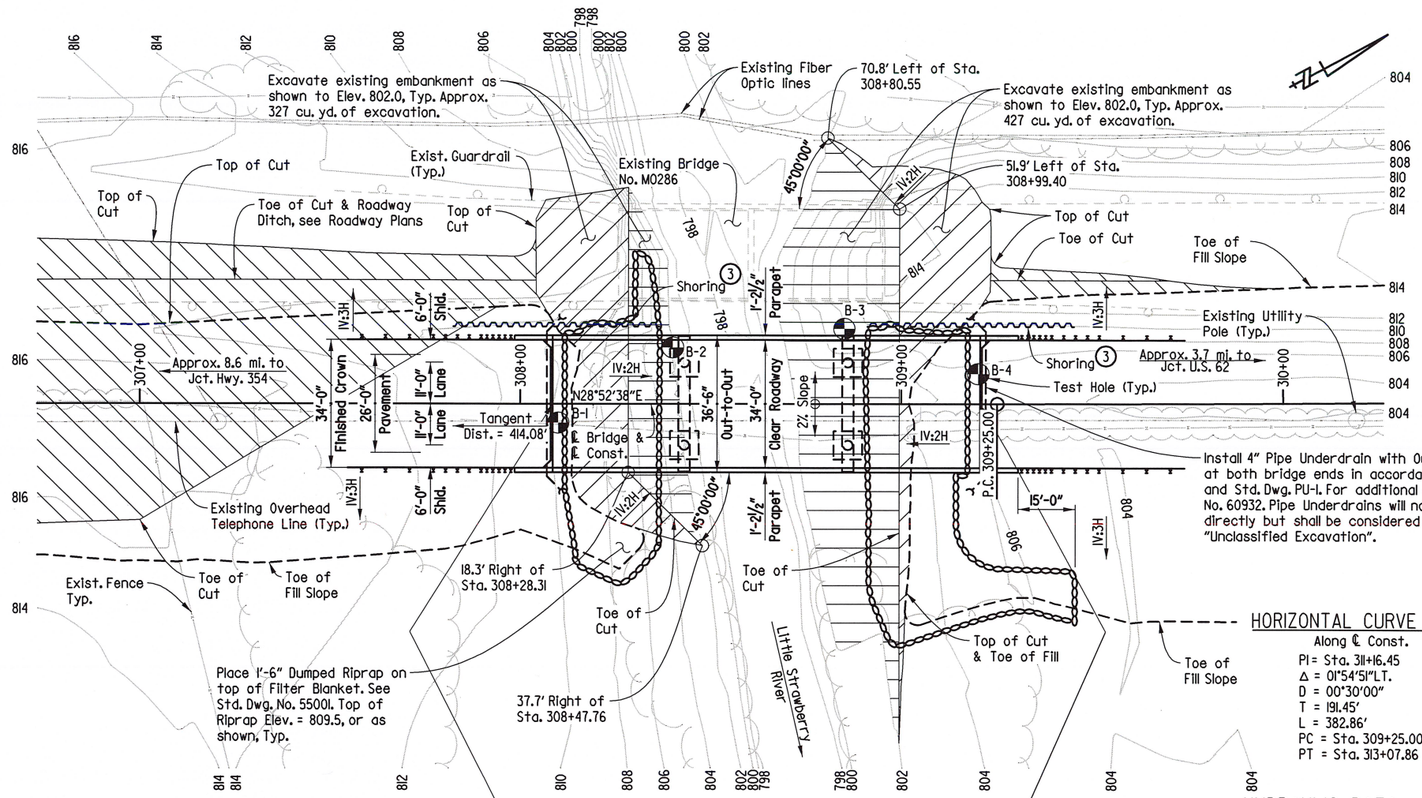

PLAN

HORIZONTAL CURVE DATA

Along ℄ Const.

PI = Sta. 311+16.45
Δ = 01°54'51"LT.
D = 00°30'00"
T = 191.45'
L = 382.86'
PC = Sta. 309+25.00
PT = Sta. 313+07.86

Note: Use Type Special Approach Slabs and Type Special Approach Gutters at both ends of bridge. See Dwg. Nos. 60935 & 60935A, respectively.

Note: Stations shown are along ℄ Construction. Elevations shown are theoretical working point elevations at ℄ Bridge. Any vertical dimension referenced to ℄ Deck is based on theoretical working point elevation at ℄ Bridge. See "Rounding Detail" on Std. Dwg. No. 55007.

HYDRAULIC DATA

FLOOD DESCRIPTION	FREQUENCY	DISCHARGE	(1) NATURAL W.S. ELEVATION	W.S. ELEVATION WITH BACKWATER
	YEARS	CFS	FEET	FEET
DESIGN	50	5,431	807.2	809.4
BASE	100	6,748	808.5	810.5
EXTREME	500	10,321	809.8	814.8
OVERTOPPING	>500	---	---	---

(1) Unconstricted water surface elevation without structure or roadway approaches.
Q100 yr. backwater elevation for existing structure = 813.0 feet
(2) Proposed Low Bridge Chord Elev. = 812.10 feet at Station 308+10.83
Drainage Area = 5.10 square miles
Historical H.W. Elev. = N/A

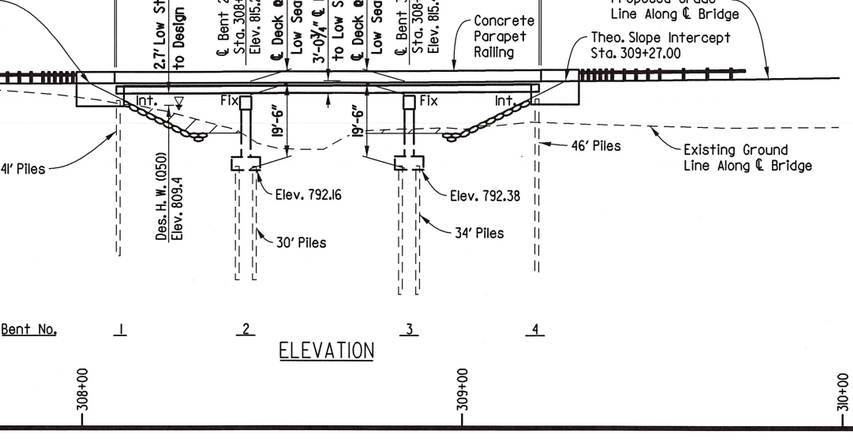

ELEVATION

(3) Shoring will be required to retain the roadway embankment during construction. See SP Job No. 050347 "Shoring" for details.

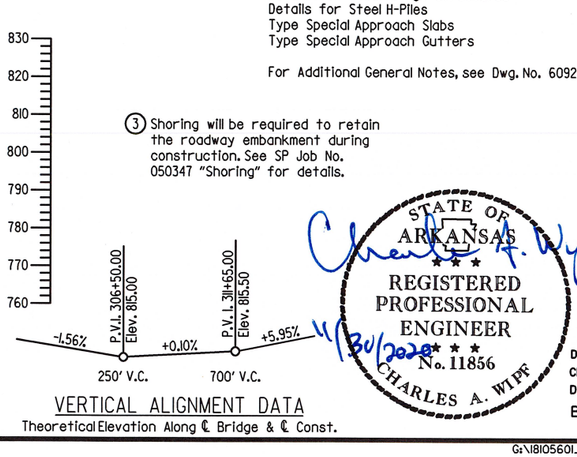

VERTICAL ALIGNMENT DATA

Theoretical Elevation Along ℄ Bridge & ℄ Const.

GENERAL NOTES

BENCH MARK: Vertical Control Data are shown on the Survey Control Data Sheets.

CONSTRUCTION SPECIFICATIONS: Arkansas State Highway and Transportation Department Standard Specifications for Highway Construction (2014 edition) with applicable Supplemental Specifications and Special Provisions. Section and Subsection refer to the Standard Construction Specifications unless otherwise noted in the Plans.

DESIGN SPECIFICATIONS: AASHTO LRFD Bridge Design Specifications Seventh Edition (2014) with 2015 interim revisions.

LIVE LOADING: HL-93

SEISMIC ZONE: 2 S_{DI}: 0.176 SITE CLASS: C

SEISMIC OPERATIONAL CLASSIFICATION: Essential

MATERIALS AND STRENGTHS:

Class S(AE) Concrete (superstructure)	f'c = 4,000 psi
Class S Concrete (substructure)	f'c = 3,500 psi
Reinforcing Steel (AASHTO M 31 or M 322 Type A)	fy = 60,000 psi
Structural Steel (ASTM A709, Gr. 50)	Fy = 50,000 psi
Structural Steel (ASTM A709, Gr. 50W)	Fy = 50,000 psi
Structural Steel (ASTM A709, Gr. 36)	Fy = 36,000 psi

BORING LOGS: Boring logs may be obtained from the Construction Contract Procurement Section of the Program Management Division.

STEEL PILING: All piling shall be HP 12x53 (Gr. 50) and shall be driven with an approved air, steam, or diesel hammer to a minimum safe bearing capacity of 97 tons per pile into the material designated as Sandstone on the boring legend. Minimum penetration shall be 15' below bottom of cap. Piling in end bents shall be driven after embankment to bottom of cap is in place. Lengths shown are for estimating quantities and for use in determining payment for cut-off and build-up in accordance with Section 805. The Contractor shall use approved steel H-Pile driving points on all piles.

PREBORING: Preboring is required for piling at Bents 1 and 4. Preboring at Bent 1 shall be to a minimum depth of 5' into material designated as Shale on the boring legend or to a depth of 15' below the bottom of the cap, whichever is lower. Preboring at Bent 4 shall be through layer AC on the boring legend or to a minimum depth of 15' below the bottom of the cap, whichever is lower. Prebored holes shall have a diameter of 6" greater than the diagonal of the pile for a depth of 10' below the bottom of the cap. The size and depth of the remaining preboring shall be determined in the field by the Engineer. After driving is completed, the prebored holes shall be backfilled with Class S Concrete to within 10' of the bottom of the cap, and the remaining 10' shall be backfilled with sand or pea gravel. The Contractor shall be responsible for keeping prebored holes free of debris prior to driving piles and backfilling which may require the use of temporary casings or other approved methods. Any related cost for backfilling and temporary casing will not be paid for directly, but shall be considered subsidiary to the item "Preboring".

PILE FOOTINGS: The top of the footings at Bents 2 & 3 shall be set a minimum of 2' below natural ground or at the elevation shown on the plans, whichever is lower. Foundations for footings shall be prepared in accordance with Subsection 801.04. Foundation piles shall not be driven until after excavation to bottom of footing is complete. Excavations shall be backfilled and compacted to the level of the existing or finished ground in accordance with Subsection 801.08.

BRIDGE DECK: The concrete bridge deck shall be given a tine finish as specified for final finishing in Subsection 802.19 for Class 5 Tined Bridge Roadway Surface Finish.

PROTECTIVE SURFACE TREATMENT: Class 2 Protective Surface Treatment shall be applied to the roadway surface and roadway face and top of concrete parapet rails in accordance with Section 803.

DETAIL DRAWINGS:

	DRAWING NUMBER
End Bents	60924-60925
Intermediate Bents	60926-60927
Elastomeric Bearings	60928
111'-0" Integral Continuous W-Beam Unit	60929-60934
General Notes for Steel Bridge Structures	55006
Details for Steel Bridge Structures	55007
Details for Steel H-Piles	55020
Type Special Approach Slabs	60935
Type Special Approach Gutters	60935A

For Additional General Notes, see Dwg. No. 60923.

STATE OF ARKANSAS
REGISTERED PROFESSIONAL ENGINEER
No. 11856
CHARLES A. WIPF
11/30/2020

SHEET 1 OF 2
LAYOUT OF BRIDGE
HIGHWAY 9 OVER
LITTLE STRAWBERRY RIVER
HWY. 9 STRS. & APPRS. (S)
FULTON COUNTY

ROUTE 9 SEC. 14

ARKANSAS STATE HIGHWAY COMMISSION

LITTLE ROCK, ARK.

DRAWN BY: LDG	DATE: 10-17-18	FILENAME: b050347x3_11.dgn	
CHECKED BY: CAW	DATE: 02-18-19	SCALE: 1" = 20'	
DESIGNED BY: LDG	DATE: 10-15-18		

BRIDGE NO. 07454 DRAWING NO. 60922

USER: cw584 DESIGN FILE: G:\18105601_050347hwy9\TRANSP\dgn\bridge\b050347x3_11.dgn PLOTTED: 11/13/2020 17:03 SCALE: 1:40

G:\18105601_050347hwy9\TRANSP\dgn\bridge\b050347x3_11.dgn 11/13/2020 17:03

DATE REVISED	DATE FILMED	DATE REVISED	DATE FILMED	FED.RD. DIST.NO.	STATE	FED.AID PROJ.NO.	SHEET NO.	TOTAL SHEETS
				6	ARK.			
				JOB NO.		050347	74	121
				(1) 07454		LAYOUT		60923

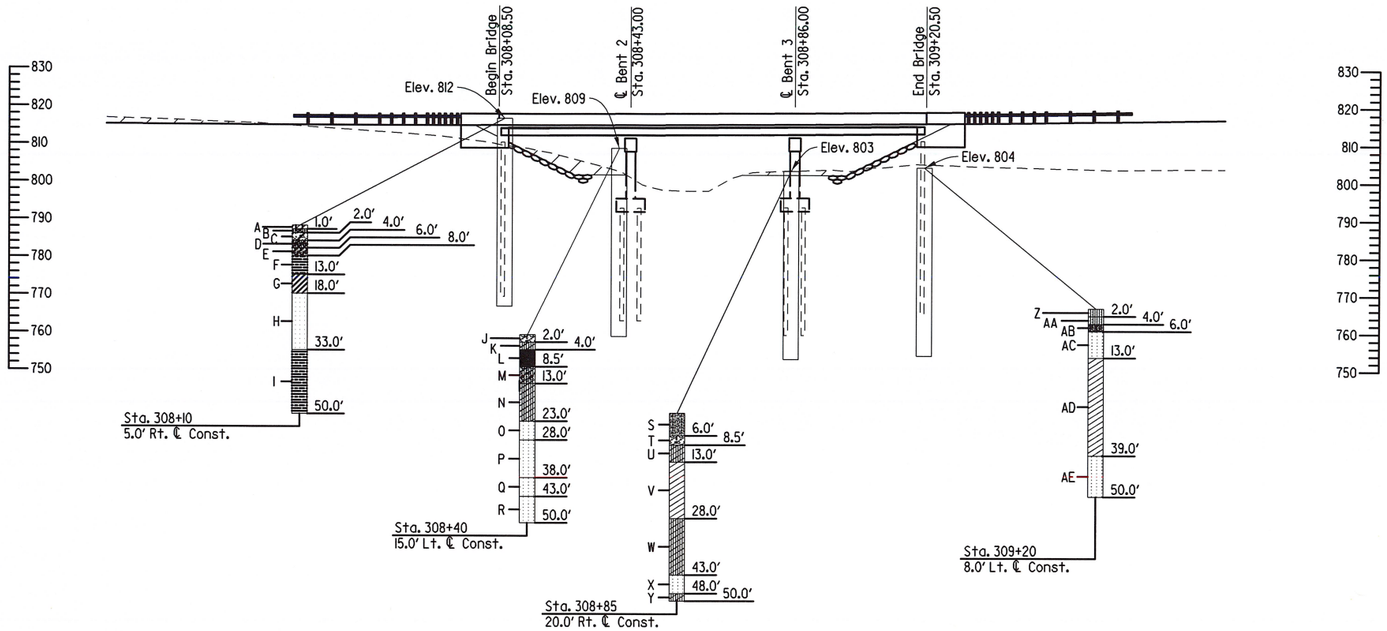

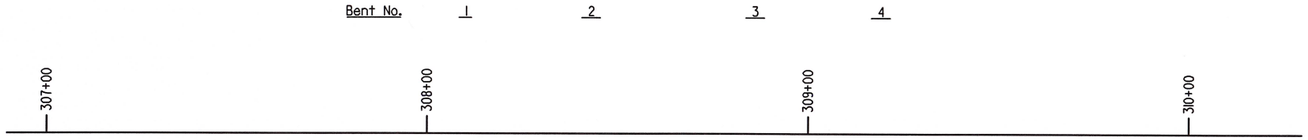

ELEVATION OF SOIL BORINGS

"N" VALUES

Sta. 308+10 - 5.0′ Right ℄ Const.
0.5 -1.5,N=8
2.5 -3.5,N=5
4.5 -5.5,N=22
6.5 -7.5,N=31
9.0 -10.0,N=46
14.0 -15.0,N=46
19.0 -20.0,N=29
24.0 -25.0,N=34
29.0 -30.0,N=36
34.0 -35.0,N=31
39.0 -40.0,N=31
44.0 -45.0,N=50/5″
49.0 -50.0,N=31

Sta. 308+40 - 15.0′ Left ℄ Const.
0.5 -1.5,N=16
2.5 -3.5,N=18
4.5 -5.5,N=41
6.5 -7.5,N=42
9.0 -10.0,N=41
14.0 -15.0,N=35
19.0 -20.0,N=50/8″
24.0 -25.0,N=50/11″
29.0 -30.0,N=50/11″
34.0 -35.0,N=50/1″
39.0 -40.0,N=50
44.0 -45.0,N=50/10″
49.0 -50.0,N=50/1″

Sta. 308+85 - 20.0′ Right ℄ Const.
0.5 -1.5,N=3
2.5 -3.5,N=3
4.5 -5.5,N=14
6.5 -7.5,N=50/9″
9.0 -10.0,N=37
14.0 -15.0,N=31
19.0 -20.0,N=20
24.0 -25.0,N=19
29.0 -30.0,N=22
39.0 -40.0,N=25
44.0 -45.0,N=37
49.0 -50.0,N=25

Sta. 309+20 - 8.0′ Left ℄ Const.
0.5 -1.5,N=5
2.5 -3.5,N=0/WOH
4.5 -5.5,N=18
6.5 -7.5,N=30
9.0 -10.0,N=28
14.0 -15.0,N=15
19.0 -20.0,N=13
24.0 -25.0,N=50
29.0 -30.0,N=14
34.0 -35.0,N=25
39.0 -40.0,N=50
44.0 -45.0,N=25
49.0 -50.0,N=25

GENERAL NOTES (CONT'D.)

EXISTING BRIDGE: Existing Bridge No. M0286 (Log Mile 6.29) is 26.2′ wide (24.3′ clear roadway) and 65.0′ long and consists of steel I-beam spans (2 spans total) supported by reinforced concrete abutments on spread footings and a reinforced concrete column intermediate bent on a spread footing. Plans of the existing structure, if available, may be obtained upon request to the Construction Contract Procurement Section of the Program Management Division.

REMOVAL AND SALVAGE: After the new bridge is open to traffic, Existing Bridge No. M0286 shall be removed, including existing riprap, in accordance with Section 205. Removal of existing riprap will not be paid for directly but shall be considered subsidiary to the item "Removal of Existing Bridge Structure (Site No._)". All material from the existing bridge shall become the property of the Contractor except the following which shall remain the property of the State:

Guardrail Beams and Posts from the Bridge and Approaches

The Contractor shall notify the Department prior to removal to determine the specific pieces deemed salvageable. The Contractor shall provide temporary storage and on site loading onto ARDOT equipment for removal of salvage items from the site. This work shall be considered incidental to the item "Removal of Existing Bridge Structure".

MAINTENANCE OF TRAFFIC: See Roadway Plans.

BORING LEGEND

A. Soft brown clayey Silt, sandy w/ trace organics - fill
B. Firm tan silty Clay w/ occasional Sandstone fragments - fill
C. Soft tan and reddish tan fine sandy Clay w/ occasional Sandstone fragments
D. Stiff tan and reddish tan silty Clay w/ Sandstone fragments and occasional ferrous stains
E. Very stiff light gray, yellowish tan and tan Clay w/ Sandstone fragments and occasional ferrous nodules and stains (completely weathered Shale)
F. Low hardness light gray and light tan highly weathered Shale, steeply bedded w/ occasional weathered fine-grained Sandstone partings and ferrous stains and concretions
G. Very stiff light tan, maroon and light gray Clay w/ ferrous concretions and nodules (completely weathered Shale)
H. Friable reddish tan, light gray and tan highly weathered fine-grained Sandstone, weakly cemented w/ close completely weathered Shale seams and layers and ferrous concretions and stains
I. Low hardness maroon and light gray highly weathered Shale, near vertical dip w/ close highly weathered fine-grained Sandstone seams and layers
J. Medium dense reddish brown and red clayey fine to coarse Gravel
K. Stiff yellowish red and tan silty Clay w/ fine Sand pockets and ferrous stains
L. Very stiff yellowish red, tan, and white fine sandy Clay w/ fine Sand pockets
M. Very stiff reddish brown and tan silty Clay, sandy w/ Sandstone fragments
N. Very stiff white, pale, red, and tan silty Clay
O. Friable yellowish red highly weathered fine-grained Sandstone, weakly cemented w/ close silty Clay partings and seams
P. Moderately hard light gray, and brown weathered fine-grained Sandstone w/ very close silty Clay seams
Q. Friable light yellowish red and tan highly weathered fine-grained Sandstone, weakly cemented w/ very close silty Clay seams
R. Moderately hard light gray weathered fine-grained Sandstone w/ silty Clay seams
S. Very loose brown fine to medium Sand, slightly silty w/ a little fine to coarse Gravel
T. Dense reddish brown clayey fine to coarse Gravel, sandy
U. Very stiff reddish yellow, tan, white, and brown silty Clay w/ fine Sand pockets and ferrous stains
V. Stiff reddish tan and brown Clay w/ fine Sand pockets and occasional Sandstone fragments
W. Stiff to very stiff yellowish red and tan silty Clay w/ fine Sand pockets
X. Friable dark brown highly weathered fine-grained Sandstone, weakly cemented w/ very close Clay seams and layers
Y. Very stiff reddish yellow and tan silty Clay w/ fine Sand pockets (completely weathered Shale)
Z. Loose brown and tan silty fine Sand, slightly clayey - fill
AA. Very loose silty fine Sand
AB. Medium dense brown and tan silty fine Sand w/ some fine to coarse gravel (completely weathered Sandstone)
AC. Friable reddish tan highly weathered fine-grained Sandstone, weakly cemented w/ close Clay seams and laminations
AD. Stiff light tan, maroon and light gray Clay w/ ferrous concretions and stains (completely weathered Shale)
AE. Friable tan and reddish tan highly weathered fine-grained Sandstone, weakly cemented w/ close completely weathered Shale seams and layers

STATE OF ARKANSAS
REGISTERED PROFESSIONAL ENGINEER
No. 11856
CHARLES A. WIPF
11/13/2020

SHEET 2 OF 2
LAYOUT OF BRIDGE
HIGHWAY 9 OVER
LITTLE STRAWBERRY RIVER
HWY. 9 STRS. & APPRS. (S)
FULTON COUNTY
ROUTE 9 SEC. 14

ARKANSAS STATE HIGHWAY COMMISSION
LITTLE ROCK, ARK.

DRAWN BY: LDG DATE: 12-11-18
CHECKED BY: CAW DATE: 02-18-19
DESIGNED BY: LDG DATE: 10/15/18
FILENAME: b050347x3_12.dgn
SCALE: 1″ = 20′

BRIDGE NO. 07454 DRAWING NO. 60923

USER: cw584
DESIGN FILE: G:\181056O1_050347hwy9\TRANSP\dgn\bridge\b050347x3_12.dgn
PLOTTED: 11/13/2020 17:03 SCALE: 1:40

DATE REVISED	DATE FILMED	DATE REVISED	DATE FILMED	FED.RD. DIST.NO.	STATE	FED.AID PROJ.NO.	SHEET NO.	TOTAL SHEETS
				6	ARK.			
				JOB NO.		050347	75	121
				(1) 07454		END BENTS		60924

See wing details on Dwg. No. 60933 for reinforcing not shown and additional details.

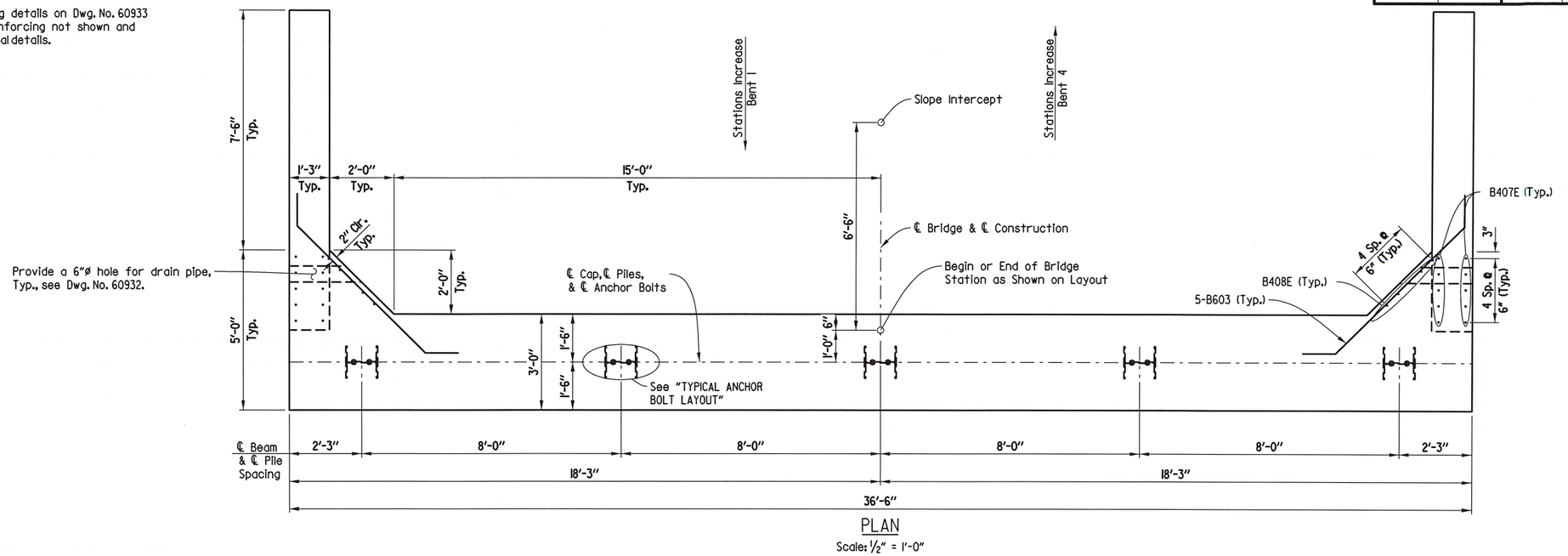

PLAN

Scale: 1/2" = 1'-0"

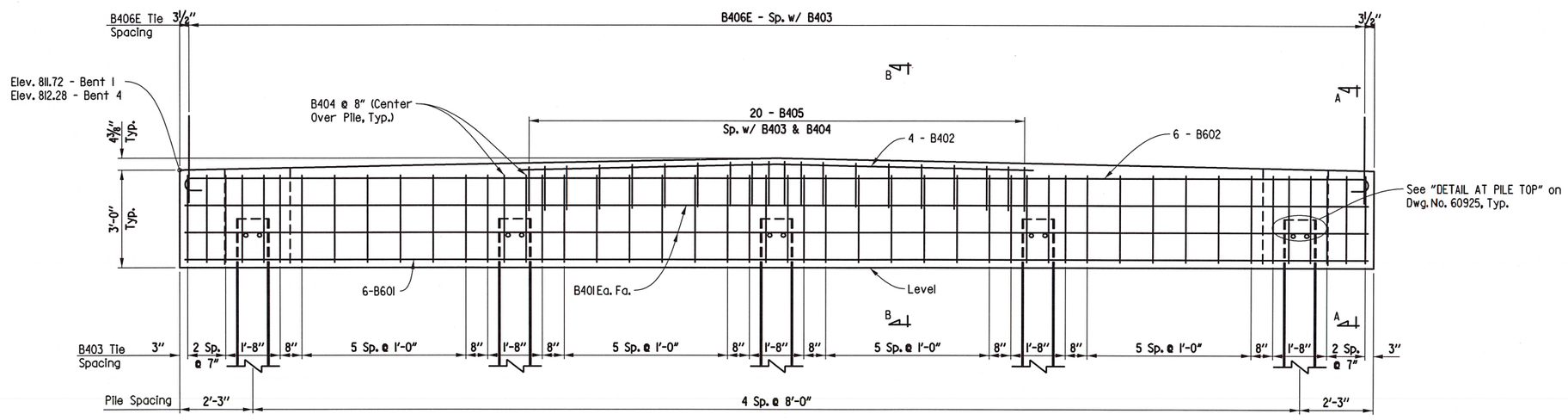

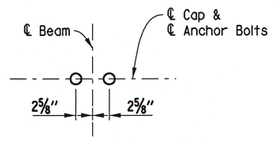

TYPICAL ANCHOR BOLT LAYOUT

Scale: 1" = 1'-0"

ELEVATION

(Looking Back Bent 1, Looking Ahead Bent 4)

Scale: 1/2" = 1'-0"

Notes:

For "SECTION A-A", "SECTION B-B", and Bar List, See Dwg. No. 60925.

For General Notes, see Std. Dwg. No. 55006.

For details of steel piling, see Std. Dwg. No. 55020.

Bars B407E and B408E shall have a 2'-10" embedment into the end bent cap.

Granular Backfill and Pipe Underdrain required behind Cap. See Dwg. No. 60932.

STATE OF ARKANSAS
REGISTERED PROFESSIONAL ENGINEER
CHARLES A. WIPF
No. 11856
11/30/2020

SHEET 1 OF 2
DETAILS OF BENTS 1 & 4

ROUTE SEC.

ARKANSAS STATE HIGHWAY COMMISSION

LITTLE ROCK, ARK.

DRAWN BY: LDG DATE: 09-10-19 FILENAME: b050347x3_bll.dgn
CHECKED BY: CAW DATE: 06-09-20 SCALE: SEE DETAILS
DESIGNED BY: LDG DATE: 04-17-19

BRIDGE NO. 07454 DRAWING NO. 60924

USER: cw584
DESIGN FILE: G:\18105601_050347hwy9\TRANSP\dgn\bridge\b050347x3_bll.dgn
PLOTTED: 11/13/2020 17:03 SCALE: 1:4

G:\18105601_050347hwy9\TRANSP\dgn\bridge\b050347x3_bll.dgn 11/13/2020 17:03

DATE REVISED	DATE FILMED	DATE REVISED	DATE FILMED	FED.RD. DIST.NO.	STATE	FED.AID PROJ.NO.	SHEET NO.	TOTAL SHEETS
				6	ARK.			
				JOB NO.		050347	76	121
				(1) 07454		END BENTS		60925

BENDING DIAGRAM

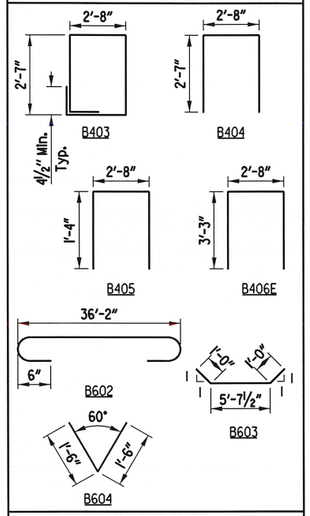

BAR LIST
(Per Bent)

Mark	Number Required	Length	Pin Diameter
B401	4	36'-2"	Str.
B402	4	15'-9"	Str.
B403	38	10'-10"	2"
B404	10	7'-8"	2"
B405	20	5'-2"	2"
B406E	38	9'-0"	2"
B407E	20	5'-9"	Str.
B408E	10	4'-6"	Str.
B601	6	36'-2"	Str.
B602	6	37'-6"	4½"
B603	10	7'-8"	4½"
B604	10	2'-10"	4½"

Note:
Dimensions of bars are out-to-out.
Bar designations ending with an "E" indicate epoxy-coated bars.

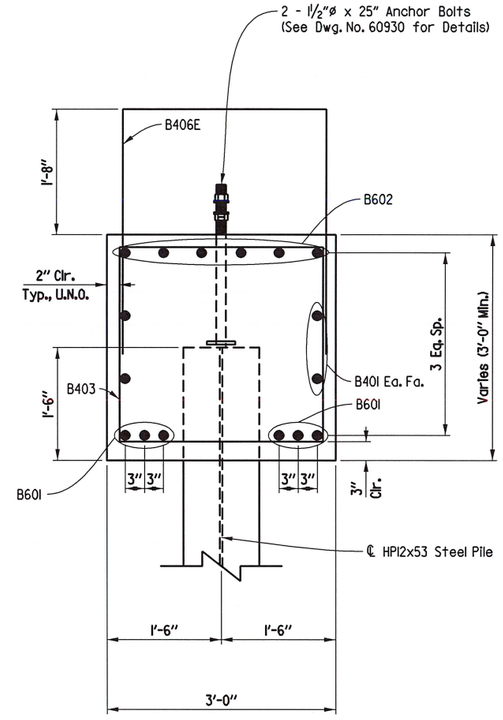

SECTION A-A
Scale: 1" = 1'-0"

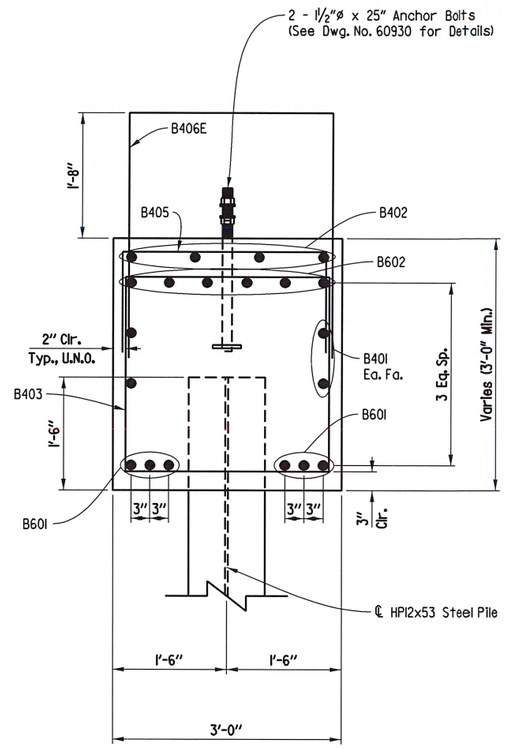

SECTION B-B
Scale: 1" = 1'-0"

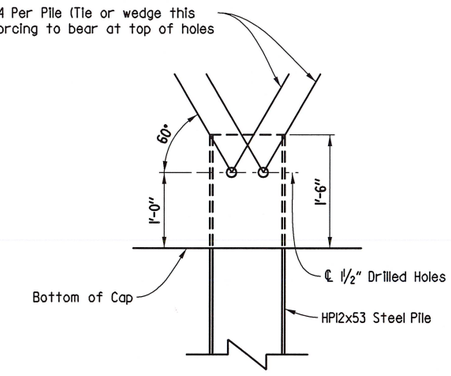

DETAIL AT PILE TOP
Scale: 1" = 1'-0"

Note: Drilled holes will not be paid for directly but shall be considered incidental to the item "Steel Piling (HP12x53)".

STATE OF ARKANSAS
REGISTERED PROFESSIONAL ENGINEER
No. 11856
CHARLES A. WIPF
11/23/2020

SHEET 2 OF 2

DETAILS OF BENTS 1 & 4

ROUTE SEC.

ARKANSAS STATE HIGHWAY COMMISSION

LITTLE ROCK, ARK.

DRAWN BY: LDG DATE: 09-10-19 FILENAME: b050347x3_bl2.dgn
CHECKED BY: CAW DATE: 06-09-20 SCALE: SEE DETAILS
DESIGNED BY: LDG DATE: 04-17-19

BRIDGE NO. 07454 DRAWING NO. 60925

USER: cw584
DESIGN FILE: G:\I810560I_050347hwy9\TRANSP\dgn\bridge\b050347x3_bl2.dgn
PLOTTED: 11/13/2020 17:03 SCALE: 1:2

For "SECTION B-B", "SECTION C-C", "VIEW D-D", and Bar List, see Dwg. No. 60927

For General Notes, See Std. Dwg. No. 55006.

DATE REVISED	DATE FILMED	DATE REVISED	DATE FILMED	FED.RD. DIST.NO.	STATE	FED.AID PROJ.NO.	SHEET NO.	TOTAL SHEETS
				6	ARK.			
				JOB NO.		050347	77	121
				(1)	07454	INT. BENTS		60926

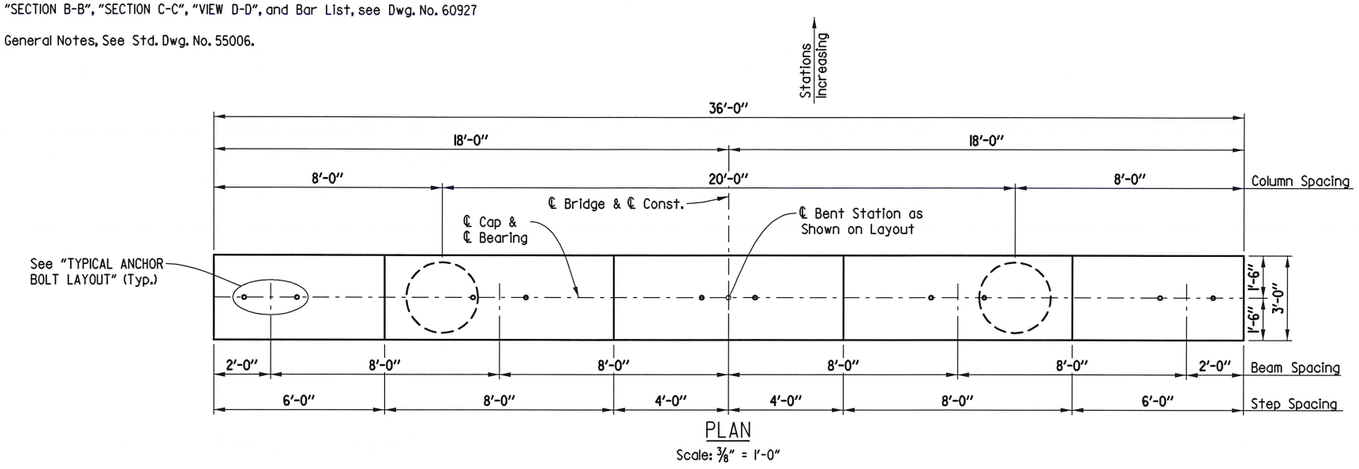

PLAN

Scale: 3/8" = 1'-0"

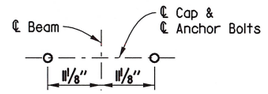

TYPICAL ANCHOR BOLT LAYOUT

Scale: 3/4" = 1'-0"

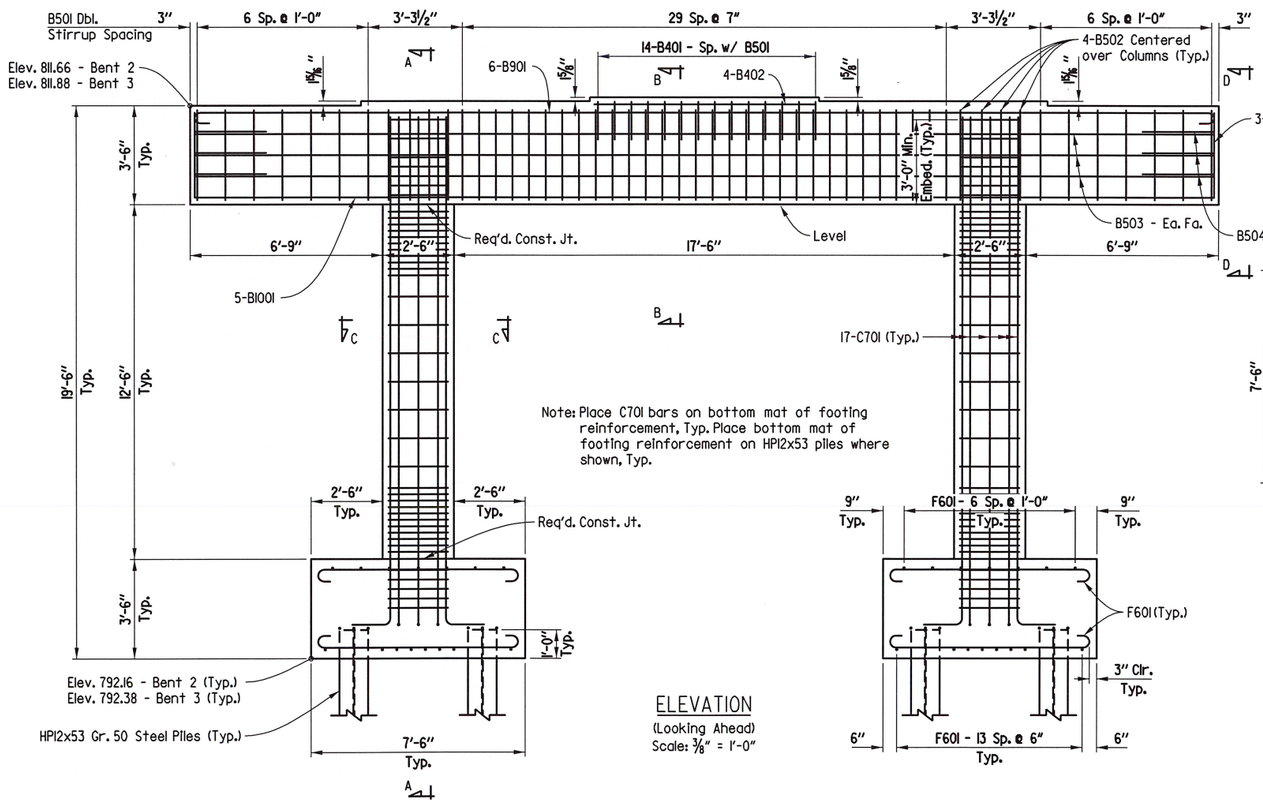

ELEVATION

(Looking Ahead)

Scale: 3/8" = 1'-0"

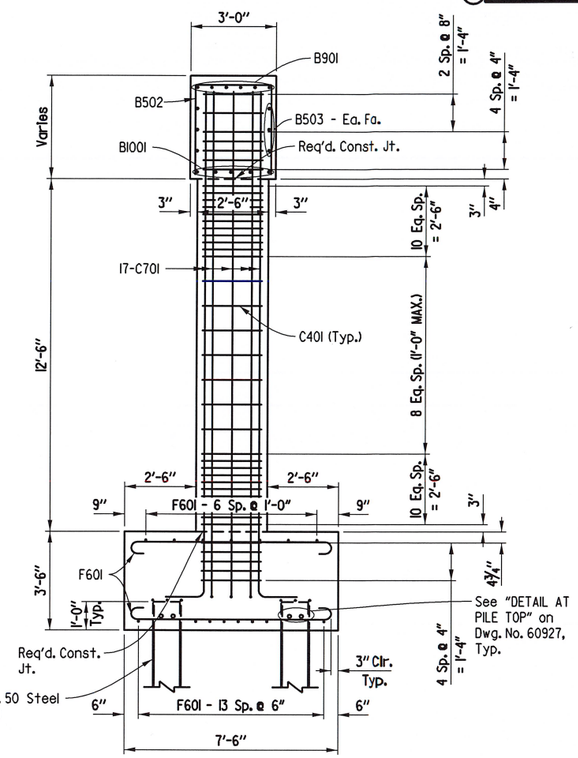

SECTION A-A

Scale: 3/8" = 1'-0"

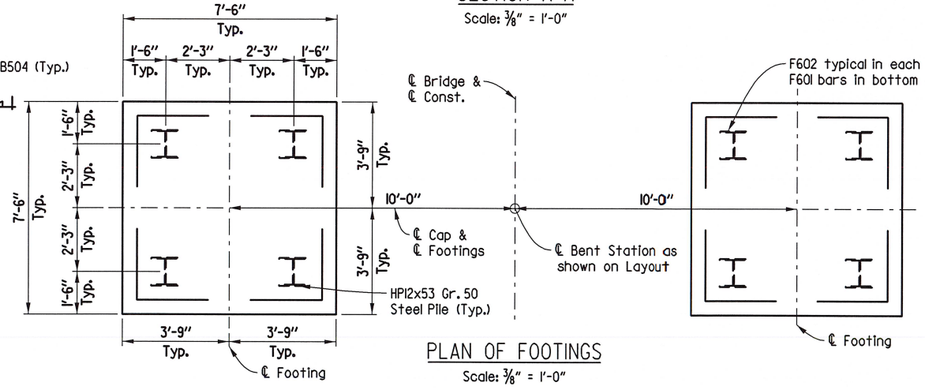

PLAN OF FOOTINGS

Scale: 3/8" = 1'-0"

STATE OF ARKANSAS
REGISTERED PROFESSIONAL ENGINEER
No. 11856
CHARLES A. WIPF
11/30/2020

SHEET 1 OF 2

DETAILS OF BENTS 2 & 3

ROUTE SEC.

ARKANSAS STATE HIGHWAY COMMISSION

LITTLE ROCK, ARK.

DRAWN BY: LDG DATE: 09-10-19 FILENAME: b050347x3_b21.dgn

CHECKED BY: CAW DATE: 02-18-19 SCALE: SEE DETAILS

DESIGNED BY: LDG DATE: 05-02-19

BRIDGE NO. 07454 DRAWING NO. 60926

USER: cw584

DESIGN FILE: G:\18105601_050347hwy9\TRANSP\dgn\bridge\b050347x3_b21.dgn

PLOTTED: 11/13/2020 17:03 SCALE: 1=5.3333

DATE REVISED	DATE FILMED	DATE REVISED	DATE FILMED	FED.RD. DIST.NO.	STATE	FED.AID PROJ.NO.	SHEET NO.	TOTAL SHEETS
				6	ARK.			
				JOB NO.		050347	78	121
				1	07454	INT. BENTS		60927

BENDING DIAGRAM

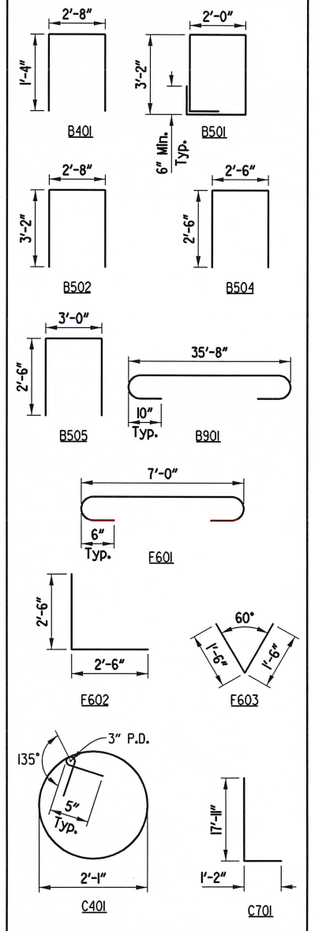

BAR LIST
(Per Bent)

Mark	Number Required	Length	Pin Diameter
B401	14	5'-2"	2"
B402	4	7'-8"	Str.
B501	88	10'-10"	2½"
B502	8	8'-10"	2½"
B503	6	35'-8"	Str.
B504	6	7'-4"	2½"
B505	6	7'-10"	2½"
B901	6	38'-2"	9"
B1001	5	35'-8"	Str.
F601	84	8'-4"	4½"
F602	8	4'-11"	4½"
F603	16	2'-10"	4½"
C401	78	7'-8"	3"
C701	34	18'-11"	5¼"

Note:
Dimensions of bars are out-to-out.

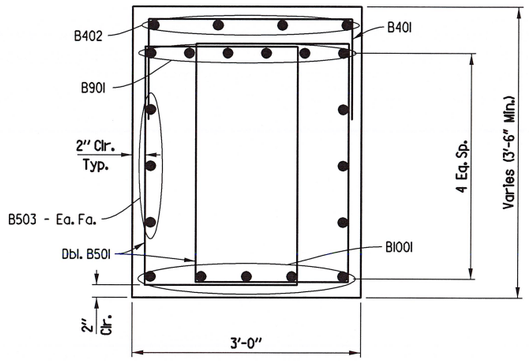

SECTION B-B
Scale: 1" = 1'-0"

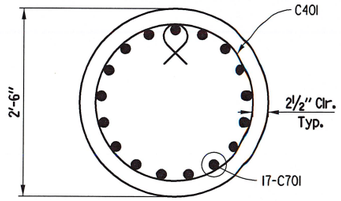

SECTION C-C
Scale: 1" = 1'-0"

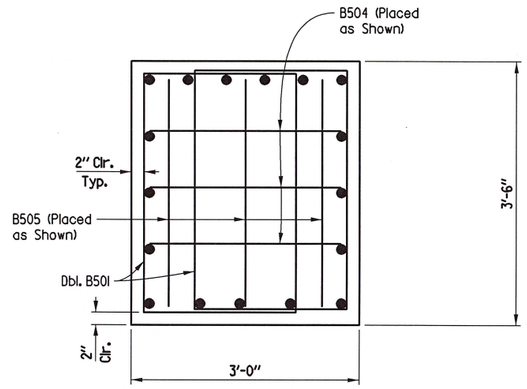

VIEW D-D
(Typ. Both Ends of Cap)
Scale: 1" = 1'-0"

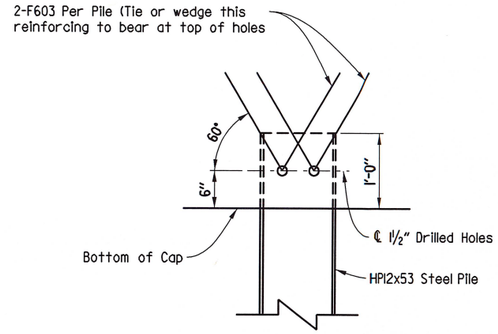

DETAIL AT PILE TOP
Scale: 1" = 1'-0"

Note: Drilled holes will not be paid for directly but shall be considered incidental to the item "Steel Piling (HP12x53)".

STATE OF ARKANSAS
REGISTERED PROFESSIONAL ENGINEER
No. 11856
CHARLES A. WIPF
11/30/2020

SHEET 2 OF 2
DETAILS OF BENTS 2 & 3
ROUTE SEC.
ARKANSAS STATE HIGHWAY COMMISSION
LITTLE ROCK, ARK.

DRAWN BY: LDG DATE: 09-10-19 FILENAME: b050347x3_b22.dgn
CHECKED BY: CAW DATE: 06-09-20 SCALE: SEE DETAILS
DESIGNED BY: LDG DATE: 05-02-19

BRIDGE NO. 07454 DRAWING NO. 60927

USER: cw584
DESIGN FILE: G:\18105601_050347hwy9\TRANSP\dgn\bridge\b050347x3_b22.dgn
PLOTTED: 11/13/2020 17:03 SCALE: 1:2

DATE REVISED	DATE FILMED	DATE REVISED	DATE FILMED	FED.RD. DIST.NO.	STATE	FED.AID PROJ.NO.	SHEET NO.	TOTAL SHEETS
				6	ARK.			
				JOB NO.		050347	79	121
				(1) 07454		BEARING DETAILS		60928

TABLE OF FABRICATOR VARIABLES

BRIDGE NO.	BENT NO.	BEARING TYPE	NO. OF BEARINGS EACH BENT	③ MAXIMUM DESIGN LOAD (KIPS)	G	H	ELASTOMERIC PAD A	B	N	Ti	Te	NO. & THICKNESS OF STEEL LAMINAE	T	EXTERNAL LOAD PLATE C	D	E	F	J	K	M	Ta	Tb	ANCHOR BOLT ø X L	GRADE	PIPE SLEEVE SIZE (ø X L)	SHEET METAL SLEEVE SIZE (ø X L)	STEEL WASHER SIZE (O.D.)
07454	2	Fix.	5	139	8⅝"	5⅞"	13"	13"	6	7/16"	¼"	7 @ 12 Ga.	3⅜"	14"	30½"	2¼"	2¼"	3⅜"	½"	11⅛"	2.02"	1.98"	1½" X 26"	55	1½" X 6⅛"	3" X 7"	3"
	3	Fix.	5	139	8⅝"	5⅞"	13"	13"	6	7/16"	¼"	7 @ 12 Ga.	3⅜"	14"	30½"	2¼"	2¼"	3⅜"	½"	11⅛"	2.05"	1.95"	1½" X 26"	55	1½" X 6⅛"	3" X 7"	3"

① Care shall be taken to ensure that the External Load plate is in full and complete contact with the Beam or Girder Flange before welding begins.

② Center line of Beam or Girder shall be aligned with center line of Elastometric pad.

③ Maximum Design Load = Service I Limit State

Note:
The direction of bevel of the external load plate may not be accurately depicted with respect to Ta and Tb values shown in "TABLE OF FABRICATOR VARIABLES".

Unless otherwise approved by the Engineer, welding of the external load plate at expansion bearings to the beam or girder will be allowed only when: 1) the approximate average air temperature during the 24 hour period immediately preceding welding is between 40°F and 80°F; and 2) the slots in the external load plate are positioned to center on the anchor bolts; and 3) no horizontal deformation of the elastomeric pad is evident. If welding at other temperatures is required, the Engineer will provide adjustment data.

GENERAL NOTES

Elastomeric bearings shall conform to Section 808 and shall be paid for at the unit price bid for "Elastomeric Bearings".

External load plates and shear blocks shall conform to ASTM A709, Gr. 50W. Pipe sleeves shall be ASTM A500, Grade B, and shall be galvanized to conform to AASHTO M 232, Class C or ASTM B695, Class 50.

External load plates and shear blocks shall be completely fabricated (including bevel, bolt holes and all shop welding) and shall be cleaned before vulcanizing to the elastomeric bearing. Surfaces in contact with the elastomeric bearing shall be cleaned in accordance with Subsection 808.03. Other surfaces shall be blast cleaned in accordance with Subsection 807.84(b) for painted steel and 807.84(e) for unpainted Grade 50W steel.

Anchor Bolts, Washers and Nuts shall conform to Subsection 807.07. The anchor bolt grade of steel shall be as specified in the "Table of Fabricator Variables". Indentations shall be circular with rounded bottoms and staggered as shown in the details.

Pipe Sleeves, Anchor bolts, Washers, and Nuts shall be paid for at the unit price bid for "Structural Steel in Beam Spans, (ASTM A709, Gr. 50W)". External load plates will not be measured or paid for separately, but will be considered incidental to the unit price bid for "Elastomeric Bearings".

Bearings shall be seated in accordance with Subsection 808.08. This work and materials are considered subsidiary to the item "Elastomeric Bearings" and will not be paid for directly.

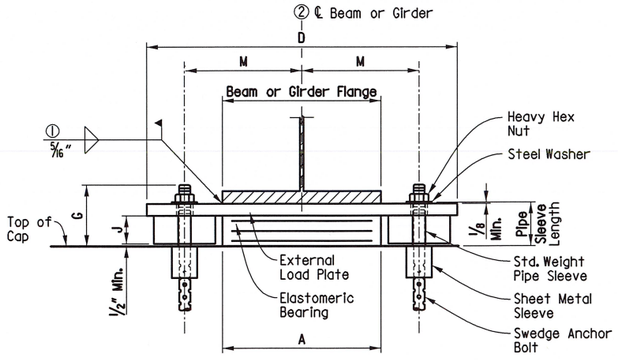

FRONT VIEW
No Scale

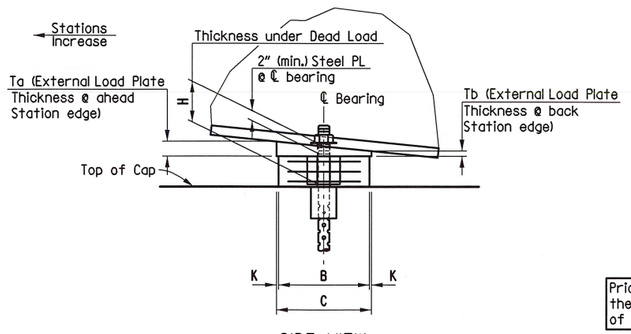

SIDE VIEW
No Scale

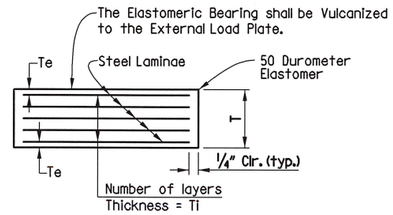

Te = thickness of Elastomer cover on top and bottom of pad
Ti = thickness of Elastomer between Steel Laminae
N = number of Elastomer layers of thickness Ti

ELASTOMERIC BEARING
No Scale

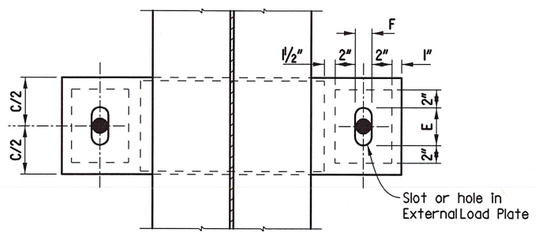

PLAN VIEW
No Scale

Prior to erection of the Beams or Girders, the Contractor shall verify the orientation of the bearings with respect to Ta and Tb

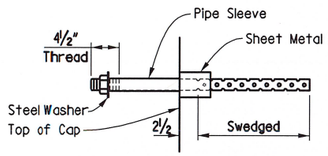

ANCHOR BOLT DETAIL
No Scale

Anchor Bolts may be cast in place or drilled and grouted into place. If Anchor Bolts are to be cast in place, the galvanized Sheet Metal Sleeves will not be required.

If Anchor Bolts are to be drilled and grouted in place, the galvanized Sheet Metal Sleeves shall be cast in place as shown. Sleeves shall be dry packed with styrofoam, urethane foam or approved equal prior to pouring of concrete. After pouring of the cap and prior to erection of structural steel, the dry pack shall be removed and holes for the anchor bolts shall be accurately drilled into the concrete. Bolts placed in drilled holes shall be accurately set and fixed using QPL approved epoxy or non-shrink grout that completely fills the holes. Galvanized sheet metal sleeves shall meet the requirements of ASTM 653, CS Type B or approved equivalent, be of minimum 16 gauge thickness, and be galvanized according to ASTM B695, Class 50. Galvanized sheet metal sleeves will not be paid for directly, but will be considered subsidiary to the items "Structural Steel in Beam Spans, (ASTM A709, Gr. 50W)".

STATE OF ARKANSAS
REGISTERED PROFESSIONAL ENGINEER
No. 11856
CHARLES A. WIPF
11/30/2020

DETAILS OF ELASTOMERIC BEARINGS

ROUTE SEC.

ARKANSAS STATE HIGHWAY COMMISSION

LITTLE ROCK, ARK.

DRAWN BY: LDG DATE: 01-02-19
CHECKED BY: CAW DATE: 06-09-20
DESIGNED BY: LDG DATE: 04-11-19
FILENAME: b050347x3_el.dgn
SCALE: SEE DETAILS

BRIDGE NO. 07454 DRAWING NO. 60928

USER: cw584
DESIGN FILE: G:\1810560l_050347hwy9\TRANSP\dgn\bridge\b050347x3_el.dgn
PLOTTED: 11/13/2020 17:03
SCALE: 1=6

G:\1810560l_050347hwy9\TRANSP\dgn\bridge\b050347x3_el.dgn 11/13/2020 17:03

Note: Class 2 Protective Surface Treatment shall be applied to the roadway surface and roadway face and top of parapet rail.

Note: At Contractor's option, in lieu of providing bar S503E, one #5 bar top and bottom may be substituted for each bar. Payment for reinforcing will be based on the weight of bar S503E. Bars in top and bottom shall be Epoxy Coated.

SLAB REINFORCING:

Transverse:
S501E @ 1'-0" o.c. in top and bottom
S503E @ 1'-0" o.c. bent up over beams
(Alternate w/ S501E Bars)
S601E @ 1'-0" o.c. in top at overhangs

Longitudinal:
S401E spa. as shown in top
S502E spa. as shown in bottom
S602E & S603E spa. as shown in top over int. supports, see "REINFORCING PLAN AND POURING SEQUENCE" on Dwg. No. 60932

DATE REVISED	DATE FILMED	DATE REVISED	DATE FILMED	FED.RD. DIST.NO.	STATE	FED.AID PROJ.NO.	SHEET NO.	TOTAL SHEETS
				6	ARK.			
				JOB NO.		050347	80	121
				(1) 07454		SPAN DETAILS		60929

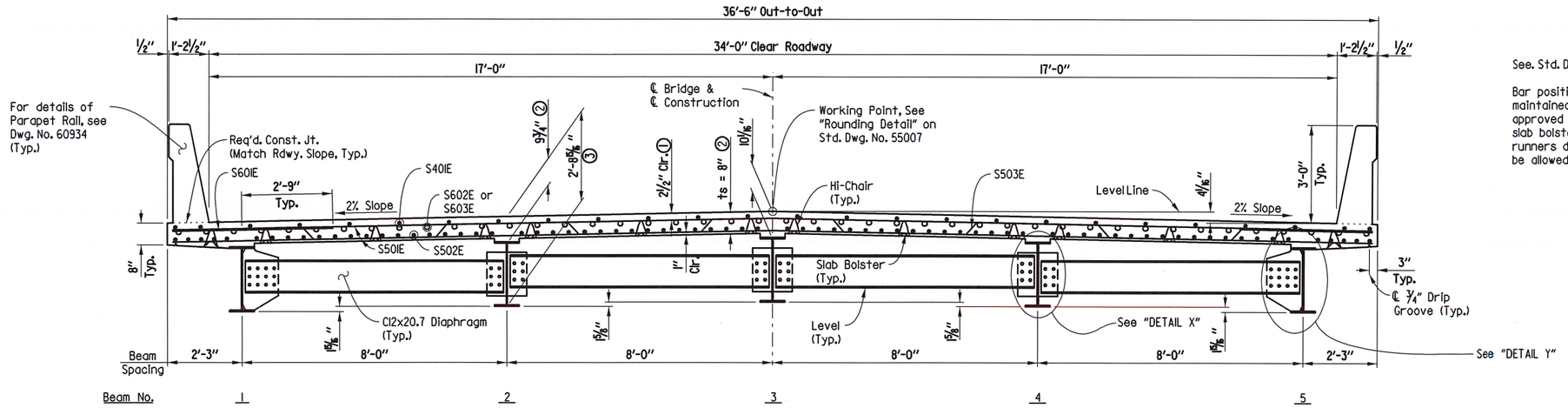

TYPICAL ROADWAY SECTION
(Looking Ahead)
Scale: 1/2" = 1'-0"

See Std. Dwg. No. 55007 for additional information.

Bar positions or clearances from the forms shall be maintained by means of stays, ties, hangers, or other approved devices per Subsection 804.06. Placement of slab bolsters or high-chairs with full-length lower runners directly on removable deck forms will not be allowed.

Note: The superstructure details shown are for use when removable deck forming is used and are the basis for measurement of Class S(AE) Concrete. See Std. Dwg. No. 55005 for allowable modifications and for tolerances when permanent steel bridge deck forms are used.

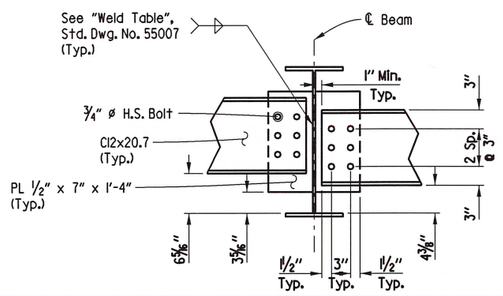

DETAIL X
Scale: 1" = 1'-0"

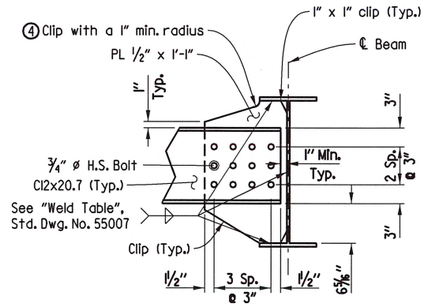

Note: Stop welds 1/4" to 1" from end of plate, (Typ.)

DETAIL Y
Scale: 1" = 1'-0"

① Tolerances: Minus = 1/4"
Plus = Equal to amount of slab thickening used to meet slab thickness tolerance

② See "Adjustment for Slab Thickness Tolerance" Std. Dwg. No. 55007.

③ Measured at ℄ Bearing and ℄ Beam, Typ.

④ If permanent steel bridge deck forms are used, the Fabricator shall clip plate as necessary to accomodate the deck form supports.

STATE OF ARKANSAS
REGISTERED PROFESSIONAL ENGINEER
No. 11856
CHARLES A. WIPF
11/3/2020

SHEET 1 OF 6
DETAILS OF 111'-0" INTEGRAL CONTINUOUS W-BEAM UNIT

ROUTE SEC.

ARKANSAS STATE HIGHWAY COMMISSION
LITTLE ROCK, ARK.

DRAWN BY:	LDG	DATE:	10-17-18	FILENAME:	b050347x3_sl.dgn
CHECKED BY:	CAW	DATE:	02-18-19	SCALE:	SEE DETAILS
DESIGNED BY:	LDG	DATE:	10-15-18		

BRIDGE NO. 07454 DRAWING NO. 60929

USER: cw584
DESIGN FILE: G:\18105601_050347hwy9\TRANSP\dgn\bridge\b050347x3_sl.dgn
PLOTTED: 11/13/2020 17:03 SCALE: 1:4

DATE REVISED	DATE FILMED	DATE REVISED	DATE FILMED	FED.RD. DIST.NO.	STATE	FED.AID PROJ.NO.	SHEET NO.	TOTAL SHEETS
				6	ARK.			
				JOB NO.		050347	81	121
				(1) 07454		SPAN DETAILS		60930

(1) See End Bent Details on Dwg. Nos. 60924 & 60925 for reinforcing and additional details.

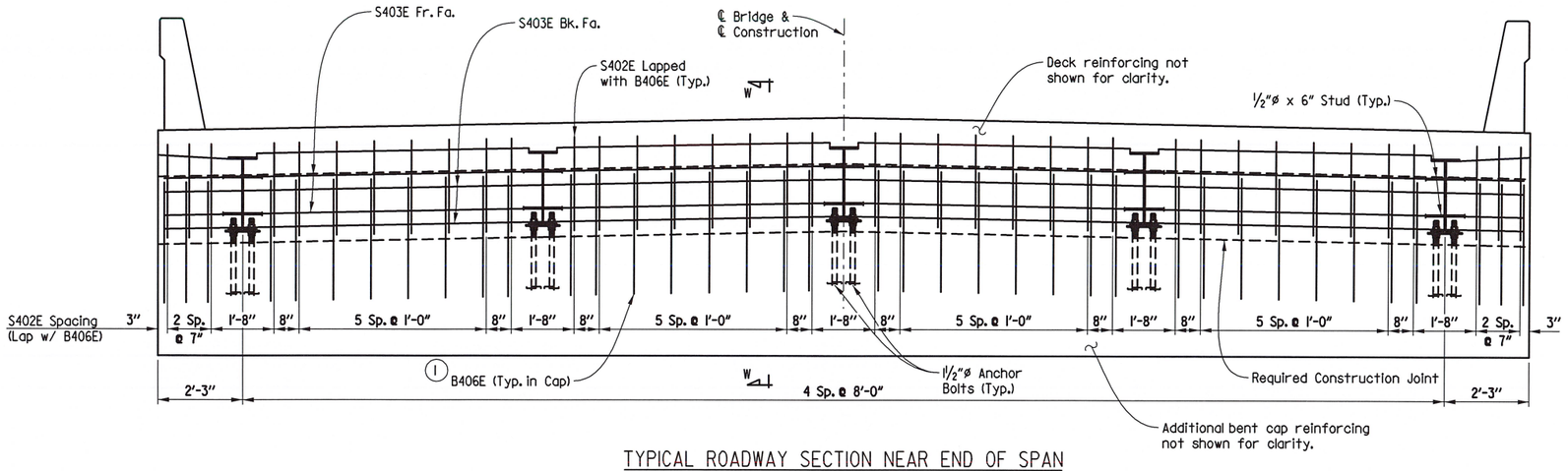

TYPICAL ROADWAY SECTION NEAR END OF SPAN

(Looking Ahead - Bent 4
Bent 1 Similar)
Scale: ½" = 1'-0"

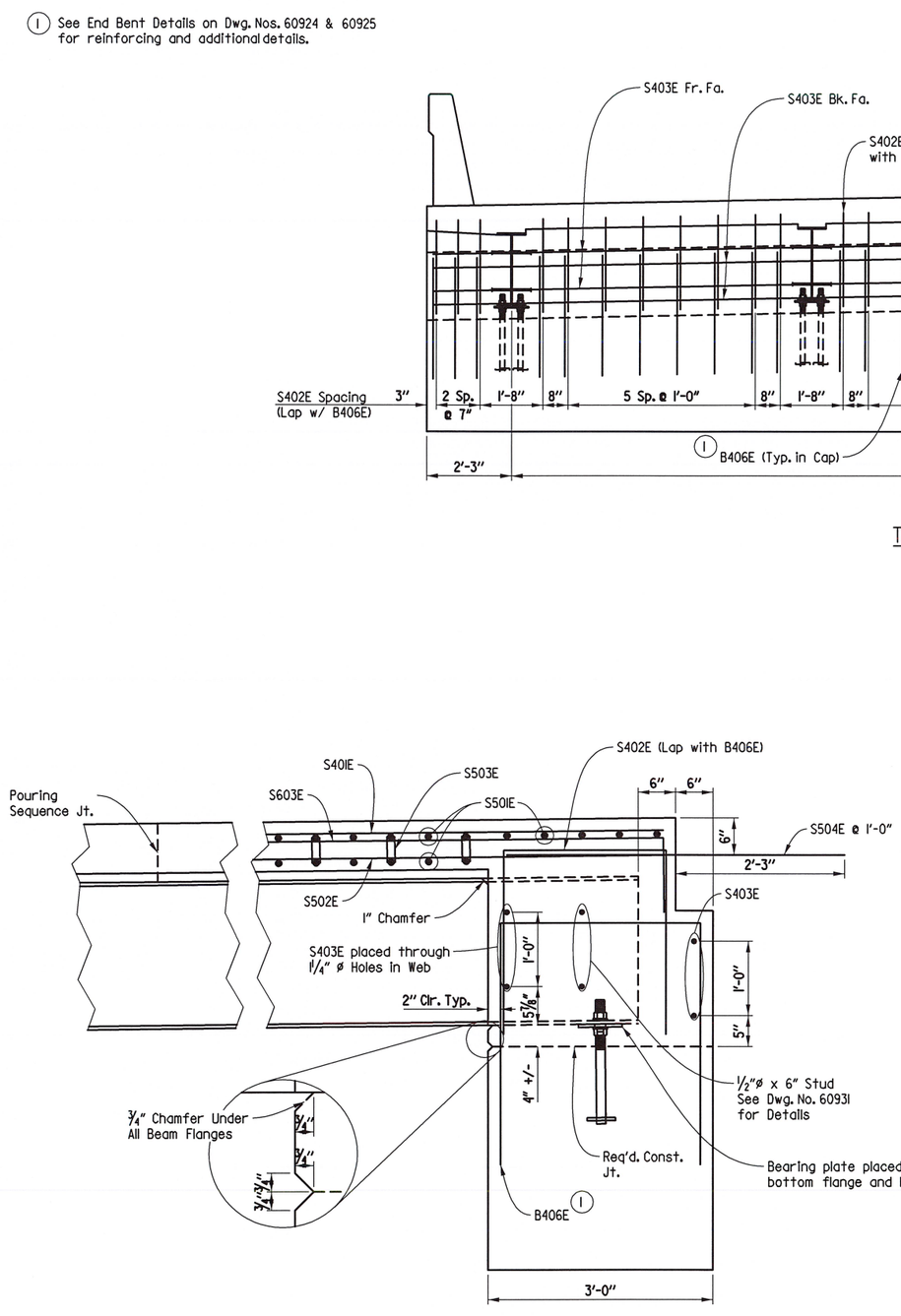

SECTION W-W

(Parallel to ℄ Beam)
Scale: 1" = 1'-0"

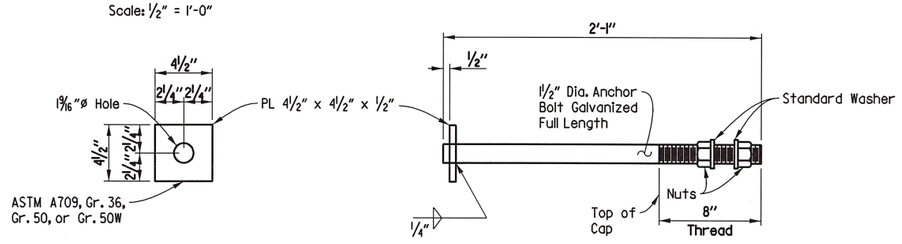

ANCHOR BOLT DETAIL

Scale: 2" = 1'-0"

ALTERNATE ANCHOR BOLT DETAIL

Scale: 2" = 1'-0"

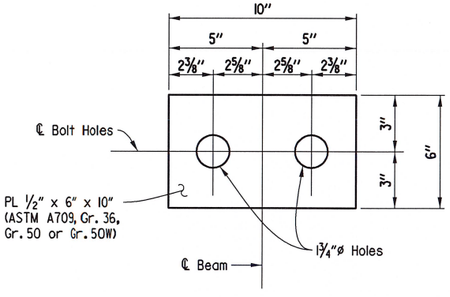

BEARING PLATE DETAIL

Scale: 3" = 1'-0"

Anchor bolts shall comply with AASHTO M 314, Grade 55, with Supplementary Requirement S1, and galvanized according to Subsection 807.07. Nuts and Washers for bolts shall be as specified in Subsection 807.07.

Use lower nut and washer to adjust to grade. Snug tight top nut and washer after grade is adjusted.

Bolts, nuts, and washers shall be paid for at the unit price bid for "Structural Steel in Beam Spans (A709, Gr. 50W)".

STATE OF ARKANSAS
REGISTERED PROFESSIONAL ENGINEER
No. 11856
CHARLES A. WIPF
11/13/2020

SHEET 2 OF 6

DETAILS OF 111'-0" INTEGRAL CONTINUOUS W-BEAM UNIT

ROUTE SEC.

ARKANSAS STATE HIGHWAY COMMISSION

LITTLE ROCK, ARK.

DRAWN BY: LDG DATE: 09-12-19
CHECKED BY: CAW DATE: 07-18-19
DESIGNED BY: LDG DATE: 04-11-19
FILENAME: b050347x3_s2.dgn
SCALE: SEE DETAILS

BRIDGE NO. 07454 DRAWING NO. 60930

USER: cw584
DESIGN FILE: G:\181056O1_050347hwy9\TRANSP\dgn\bridge\b050347x3_s2.dgn
PLOTTED: 11/13/2020 17:03
SCALE: 1:4

DATE REVISED	DATE FILMED	DATE REVISED	DATE FILMED	FED.RD. DIST.NO.	STATE	FED.AID PROJ.NO.	SHEET NO.	TOTAL SHEETS
				6	ARK.			
				JOB NO.		050347	82	121

(1) 07454 SPAN DETAILS 60931

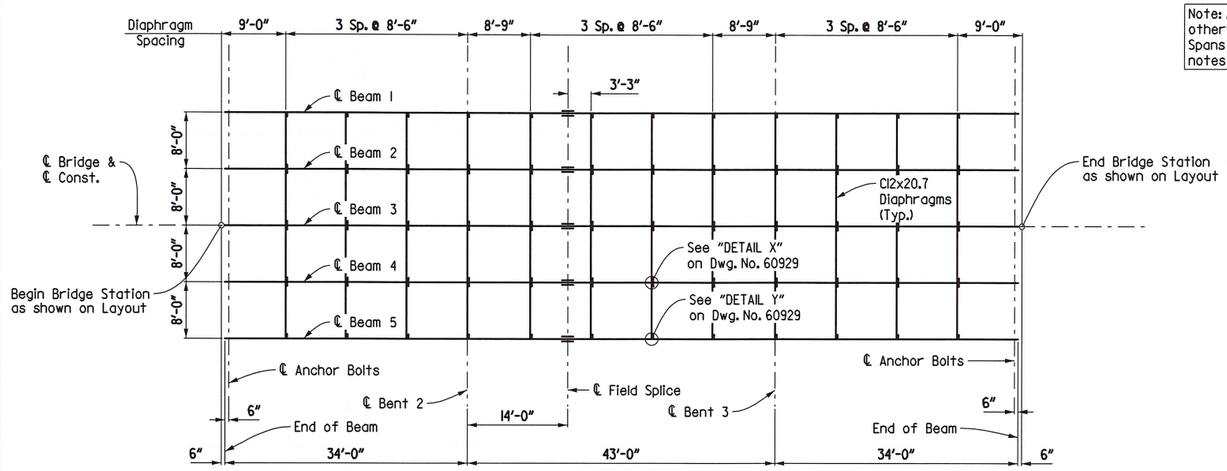

FRAMING PLAN

Scale: 3/32 " = 1'-0"

Note: All structural steel shall be ASTM A709, Gr. 50W unless otherwise noted and shall be paid for as "Structural Steel In Beam Spans (A709, Gr. 50W)". See Std. Dwg. Nos. 55006 and 55007 for additional notes and details.

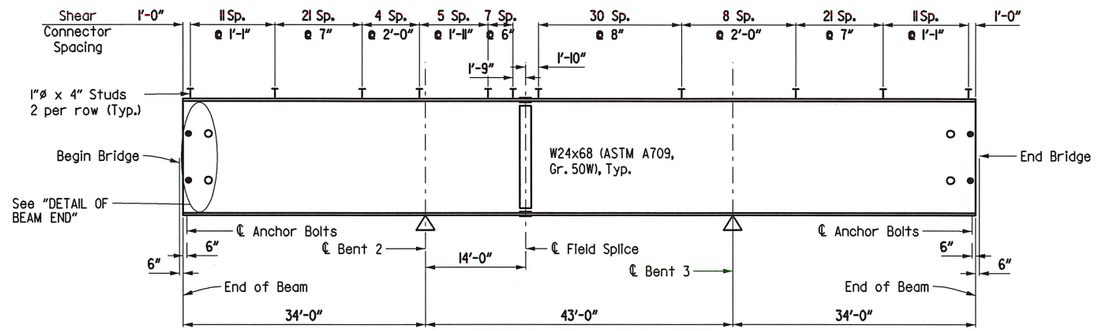

TYPICAL BEAM ELEVATION

NO SCALE

Note: For Shear Connector details, see Std. Dwg. No. 55007

TABLE OF DEAD LOAD DEFLECTIONS - INCHES

Camber for Dead Load Deflection plus Vertical curve ±1/4" tolerance.
Deflections shown are off a chord from ℄ Brng. to ℄ Brng. Vertical curve corrections not included. Negative sign (-) indicates upward deflection.

Span	Point of Deflection	Structural Steel		Structural Steel + Slab		Structural Steel + Slab + Parapet	
		Bm. No. 2-4	Bm. No. 1&5	Bm. No. 2-4	Bm. No. 1&5	Bm. No. 2-4	Bm. No. 1&5
1	0	0.000	0.000	0.000	0.000	0.000	0.000
	0.1	0.008	0.007	0.086	0.066	0.087	0.067
	0.2	0.015	0.013	0.158	0.121	0.160	0.123
	0.3	0.019	0.017	0.206	0.158	0.210	0.162
	0.4	0.021	0.019	0.226	0.173	0.230	0.178
	0.5	0.020	0.018	0.216	0.165	0.220	0.170
	0.6	0.017	0.015	0.180	0.138	0.183	0.142
	0.7	0.012	0.011	0.126	0.096	0.128	0.098
	0.8	0.006	0.006	0.065	0.051	0.065	0.051
	0.9	0.002	0.001	0.017	0.012	0.016	0.011
2	0	0.000	0.000	0.000	0.000	0.000	0.000
	0.1	0.004	0.004	0.047	0.036	0.052	0.041
	0.2	0.013	0.012	0.138	0.106	0.150	0.119
	0.3	0.021	0.019	0.230	0.176	0.248	0.196
	0.4	0.027	0.025	0.296	0.227	0.319	0.252
	0.5	0.029	0.027	0.320	0.246	0.344	0.272
	0.6	0.027	0.025	0.296	0.227	0.319	0.252
	0.7	0.021	0.019	0.230	0.176	0.248	0.196
	0.8	0.013	0.012	0.138	0.106	0.150	0.119
	0.9	0.004	0.004	0.047	0.036	0.052	0.041
3	0	0.000	0.000	0.000	0.000	0.000	0.000
	0.1	0.002	0.001	0.017	0.012	0.016	0.011
	0.2	0.006	0.006	0.065	0.051	0.065	0.051
	0.3	0.012	0.011	0.126	0.096	0.128	0.098
	0.4	0.017	0.015	0.180	0.138	0.183	0.142
	0.5	0.020	0.018	0.216	0.165	0.220	0.170
	0.6	0.021	0.019	0.226	0.173	0.230	0.178
	0.7	0.019	0.017	0.206	0.158	0.210	0.162
	0.8	0.015	0.013	0.158	0.121	0.160	0.123
	0.9	0.008	0.007	0.086	0.066	0.087	0.067
	0	0.000	0.000	0.000	0.000	0.000	0.000

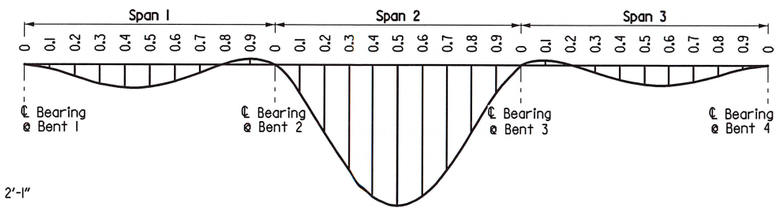

DEAD LOAD DEFLECTION DIAGRAM

No Scale

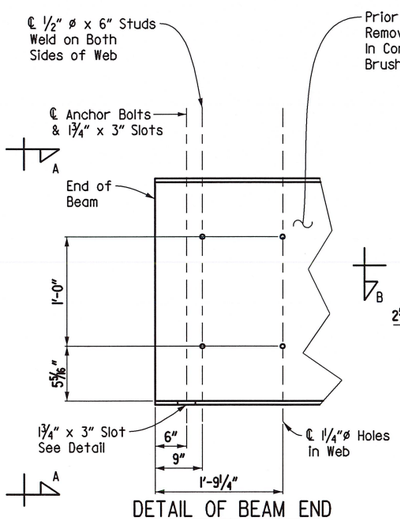

DETAIL OF BEAM END

No Scale

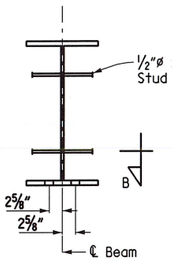

VIEW A-A

No Scale

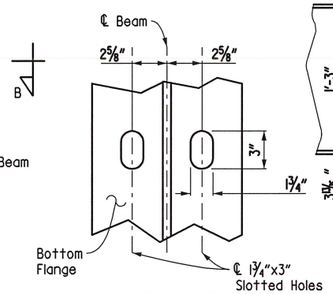

VIEW B-B

No Scale

Note: Bolted field splices shown may be eliminated or shop welded splices may be substituted with approval of the Engineer. Payment will be made on the basis of the plan quantities. See Bolted Field Splice Details.

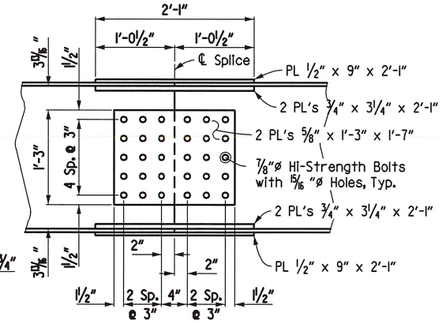

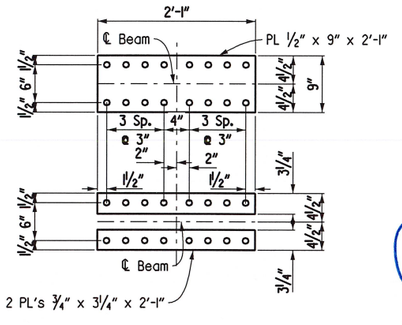

DETAILS OF FIELD SPLICE

Scale: 1" = 1'-0"

STATE OF ARKANSAS
REGISTERED PROFESSIONAL ENGINEER
No. 11856
CHARLES A. WIPF

11/30/2020

SHEET 3 OF 6

DETAILS OF 111'-0" INTEGRAL CONTINUOUS W-BEAM UNIT

ROUTE SEC.

ARKANSAS STATE HIGHWAY COMMISSION

LITTLE ROCK, ARK.

DRAWN BY: LDG DATE: 05-09-20 FILENAME: b050347x3_s3.dgn
CHECKED BY: CAW DATE: 06-09-20 SCALE: SEE DETAILS
DESIGNED BY: LDG DATE: 04-09-19

BRIDGE NO. 07454 DRAWING NO. 60931

USER: cw584
DESIGN FILE: G:\180560l_050347hwy9\TRANSP\dgn\bridge\b050347x3_s3.dgn
PLOTTED: 11/13/2020 17:03
SCALE: 1:21.3333

DATE REVISED	DATE FILMED	DATE REVISED	DATE FILMED	FED.RD. DIST.NO.	STATE	FED.AID PROJ.NO.	SHEET NO.	TOTAL SHEETS
				6	ARK.			
				JOB NO.		050347	83	121
				(I) 07454		SPAN DETAILS		60932

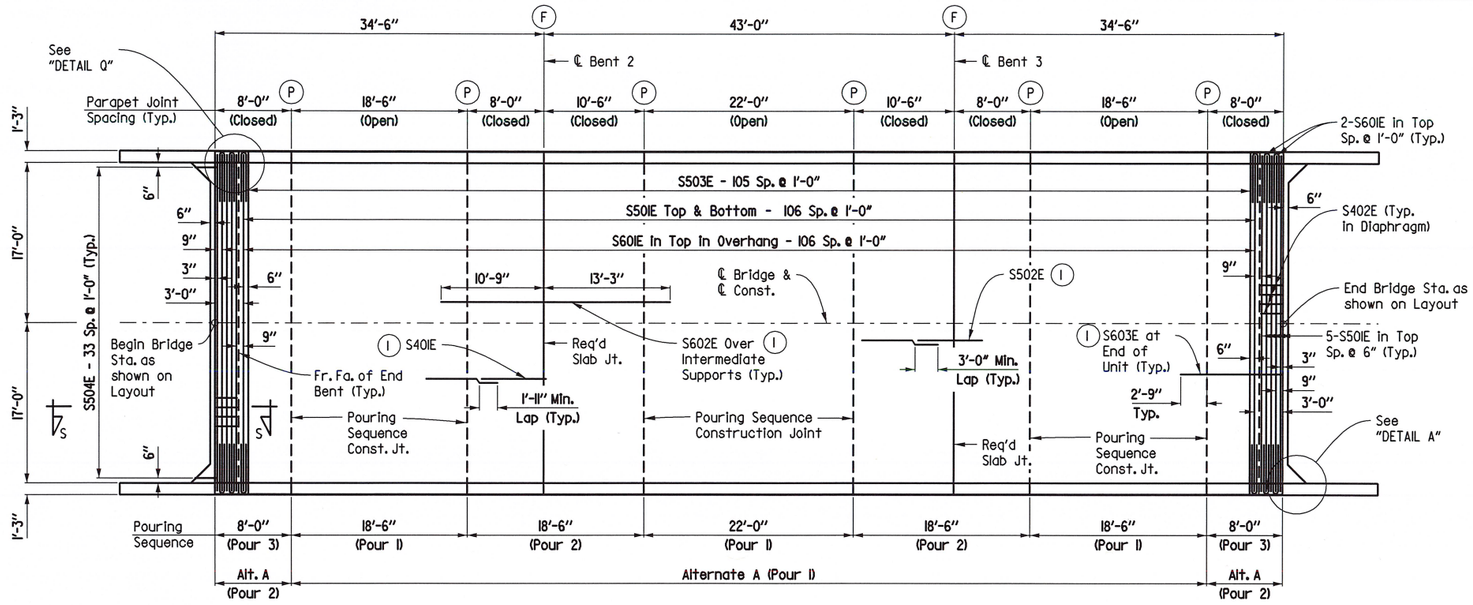

REINFORCING PLAN AND POURING SEQUENCE

Scale: 1/8" = 1'-0"

BAR LIST			
Mark	Number Required	Length	Pin Diameter
S401E	78	38'-6"	Str.
S402E	76	7'-0"	2"
S403E	8	36'-2"	Str.
S501E	224	35'-8"	Str.
S502E	222	39'-3"	Str.
S503E	106	37'-0"	3"
S504E	68	4'-6"	Str.
S601E	222	9'-10"	5¼"
S602E	88	24'-0"	Str.
S603E	88	11'-6"	4½"
P401E	424	5'-11"	2½"
P402E	48	5'-1"	2½"
P403E	424	3'-6"	3¾"
P404E	64	7'-8"	Str.
P405E	32	18'-2"	Str.
P406E	32	10'-2"	Str.
P407E	32	21'-8"	Str.
R401E	56	5'-11"	2½"
R402E	32	4'-0"	Str.
R403E	32	9'-9"	Str.
R404E	56	3'-9"	3¾"
R601E	24	8'-10"	Str.
R602E	12	5'-0"	Str.
R603E	24	9'-0"	4½"
W401E	72	5'-9"	Str.
W501E	32	7'-6"	3¾"
W601E	16	7'-8"	4½"
W701E	88	11'-10"	Str.

BENDING DIAGRAM

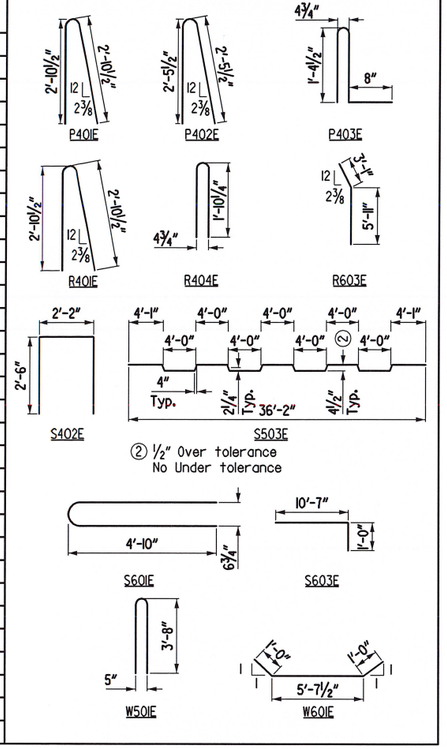

② ½" Over tolerance
No Under tolerance

Note:
Dimensions of bars are out-to-out.
Bar designations ending with an "E" indicate epoxy-coated bars.

Notes:
For additional details of pipe underdrain see Std. Dwg. PU-1 and Section 611 of the Standard Specifications. Pipe underdrains will not be measured or paid for separately, but will be considered subsidiary to the unit price bid for "Unclassified Excavation".

1" Polystyrene Foam Board, Filter Fabric, and Granular Material shall not be paid for directly, but shall be considered subsidiary to the various bid items.

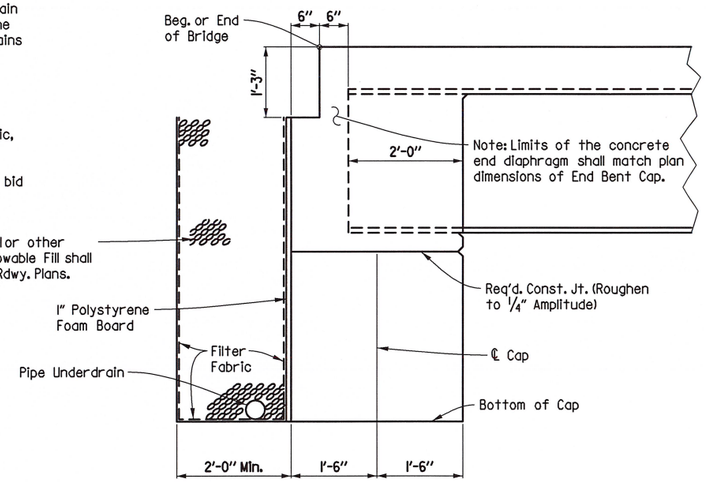

SECTION AT END BENT (NORMAL TO CAP)

Scale: ¾" = 1'-0"

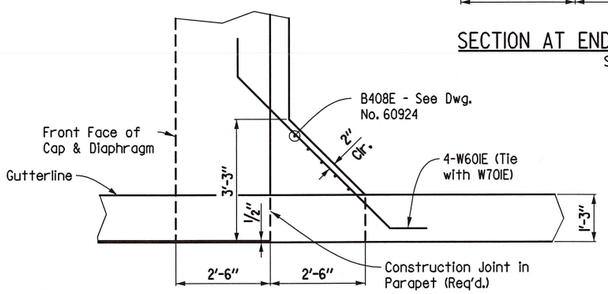

DETAIL A

Scale: ½" = 1'-0"

Note:
Parapet rail spacing and joint depth shown are typical for both sides of roadway. For Parapet reinforcing details, see Dwg. No. 60934.

Rails and wings are included in span construction and are included in span quantities.

Required slab joints and pouring sequence joints shall align with parapet open joints at the gutterline.

For "Transverse Slab Joint Detail" and Longitudinal Construction Joint", See Std. Dwg. No. 55007.

For "VIEW R-R" and "VIEW S-S", see Dwg. No. 60933.

(P) Partial depth parapet joint at this location.

(F) Full depth parapet joint at this location.

(I) Place as shown in "TYPICAL ROADWAY SECTION", see Dwg. No. 60929.

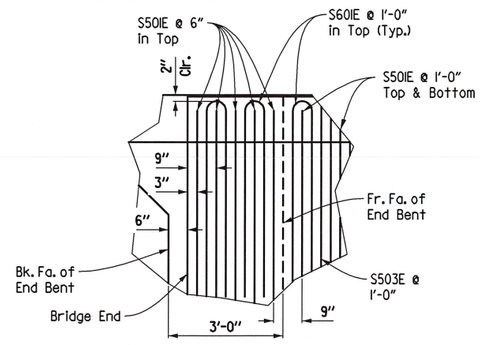

DETAIL Q

Scale: ½" = 1'-0"

Pouring Sequence Notes:

Pours with the same number may be place simultaneously or separately. All Pours (1) must be placed before Pours (2) can be placed. Pours (2) must be placed before Pours (3) can be placed. 48 hours shall elapse between the end of a pour and the start of the next pour. 72 hours shall elapse between adjacent pours.

A minimum of 72 hours shall elapse between completion of the slab and the pouring of the bridge railing. Any railing pours made before the entire slab unit has been place must be approved by the Engineer. The Contractor must obtain approval from the Engineer for any deviations from the pouring sequences shown.

Concrete in bridge superstructure shall be place, consolidated, and screeded off for the entire pour before any concrete has taken its initial set. This may require the use of a retarding agent.

Concrete diaphragms shall be poured monolithically with the slab.

STATE OF ARKANSAS
REGISTERED PROFESSIONAL ENGINEER
No. 11856
CHARLES A. WIPF

11/3/2020

SHEET 4 OF 6

DETAILS OF 111'-0" INTEGRAL CONTINUOUS W-BEAM UNIT

ROUTE SEC.

ARKANSAS STATE HIGHWAY COMMISSION

LITTLE ROCK, ARK.

DRAWN BY: LDG DATE: 09-12-19 FILENAME: b050347x3_s4.dgn
CHECKED BY: CAW DATE: 06-09-20 SCALE: SEE DETAILS
DESIGNED BY: LDG DATE: 04-11-19

BRIDGE NO. 07454 DRAWING NO. 60932

USER: cw584
DESIGN FILE: G:\18105601_050347hwy9\TRANSP\dgn\bridge\b050347x3_s4.dgn SCALE: 1:16
PLOTTED: 11/13/2020 17:03

DATE REVISED	DATE FILMED	DATE REVISED	DATE FILMED	FED.RD. DIST.NO.	STATE	FED.AID PROJ.NO.	SHEET NO.	TOTAL SHEETS
				6	ARK.			
				JOB NO.		050347	84	121

(1) 07454 SPAN DETAILS 60933

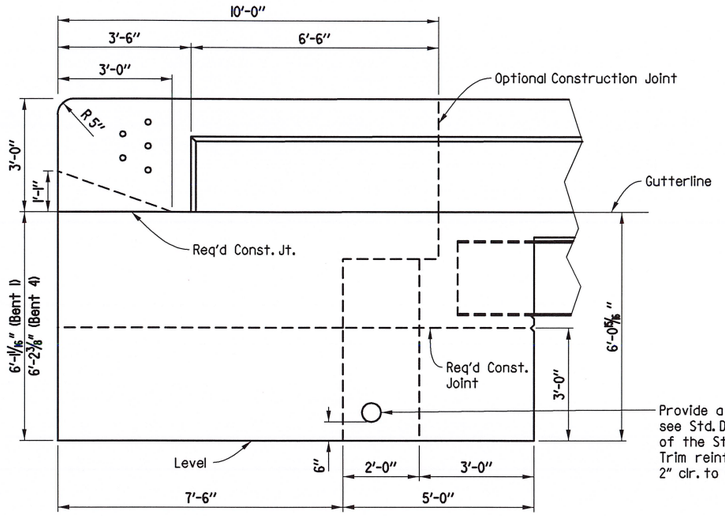

VIEW R-R
Scale: 1/2" = 1'-0"

(1) See End Bent Details on Dwg. Nos. 60924 & 60925 for reinforcing and additional details.

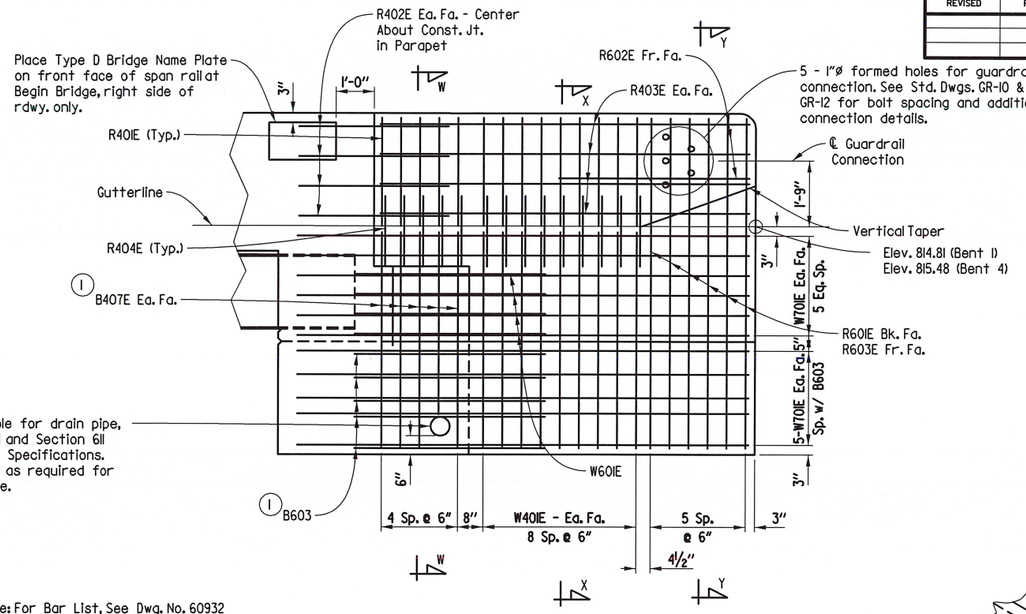

VIEW S-S
Scale: 1/2" = 1'-0"

Note: For Bar List, See Dwg. No. 60932

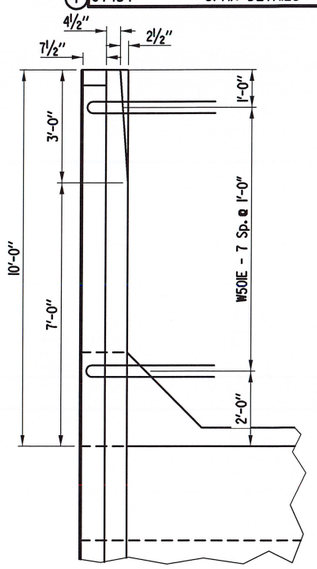

PLAN OF RAIL
Scale: 1/2" = 1'-0"

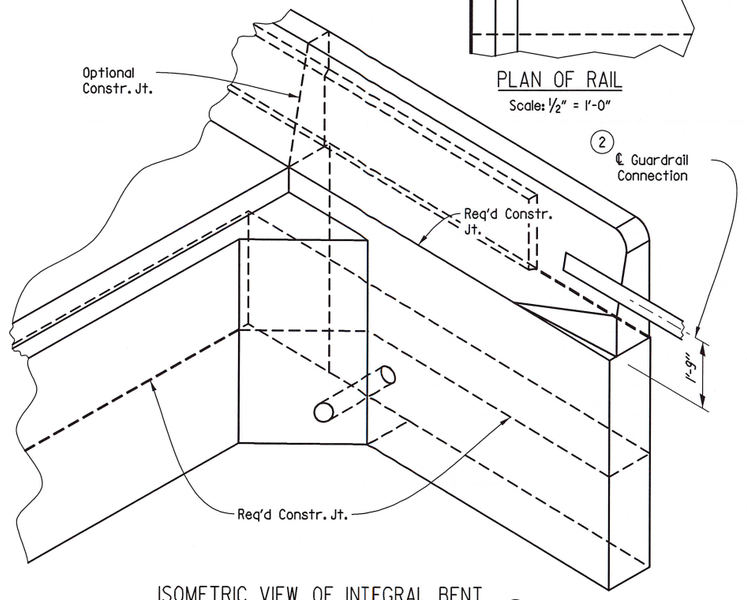

ISOMETRIC VIEW OF INTEGRAL BENT
No Scale

(2) Connector Plate as required. See Roadway Plans for location of guardrail.

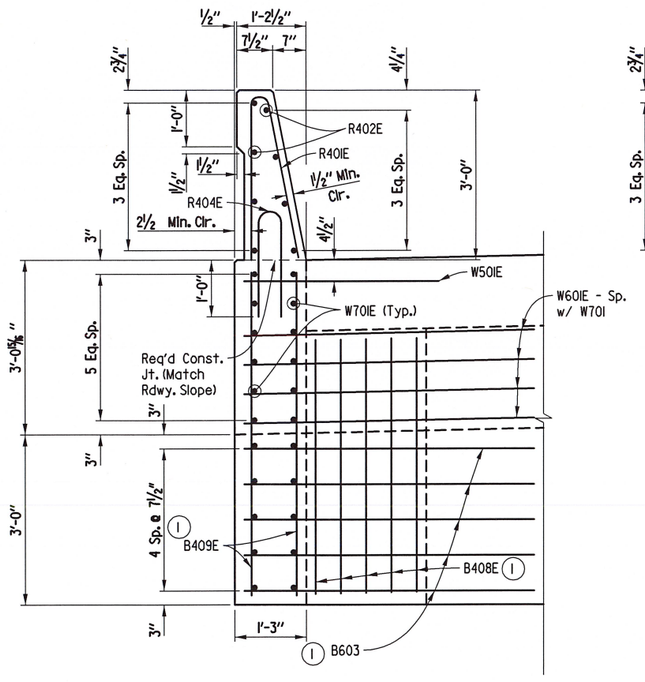

SECTION W-W
Scale: 3/4" = 1'-0"

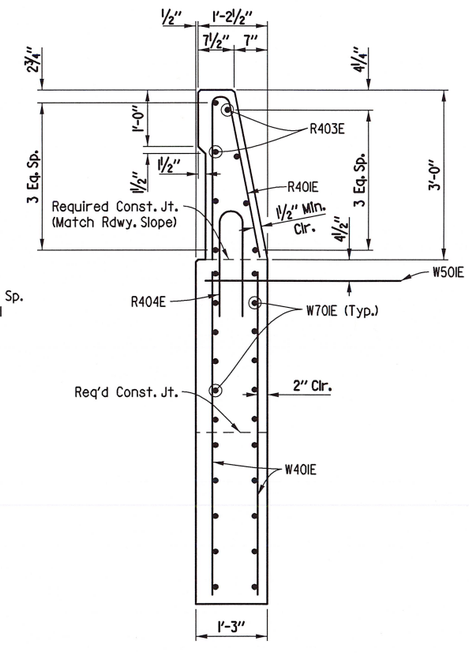

SECTION X-X
Scale: 3/4" = 1'-0"

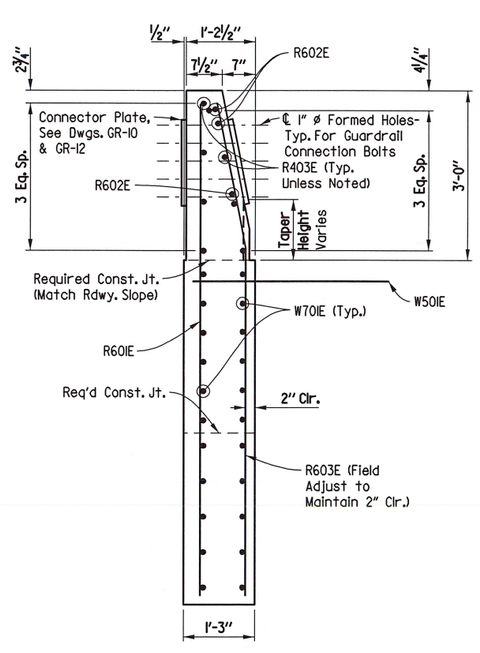

SECTION Y-Y
Scale: 3/4" = 1'-0"

STATE OF ARKANSAS
REGISTERED PROFESSIONAL ENGINEER
No. 11856
CHARLES A. WIPF
4/30/2020

SHEET 5 OF 6

DETAILS OF 111'-0" INTEGRAL CONTINUOUS W-BEAM UNIT

ROUTE SEC.

ARKANSAS STATE HIGHWAY COMMISSION

LITTLE ROCK, ARK.

DRAWN BY: LDG DATE: 09-12-19 FILENAME: b050347x3_s5.dgn
CHECKED BY: CAW DATE: 06-04-20 SCALE: SEE DETAILS
DESIGNED BY: LDG DATE: 04-17-19

BRIDGE NO. 07454 DRAWING NO. 60933

USER: cw584
DESIGN FILE: G:\1810560l_050347hwy9\TRANSP\dgn\bridge\b050347x3_s5.dgn
PLOTTED: 11/13/2020 17:03 SCALE: 1:4

G:\1810560l_050347hwy9\TRANSP\dgn\bridge\b050347x3_s5.dgn 11/13/2020 17:03

DATE REVISED	DATE FILMED	DATE REVISED	DATE FILMED	FED.RD. DIST.NO.	STATE	FED.AID PROJ.NO.	SHEET NO.	TOTAL SHEETS
				6	ARK.			
				JOB NO.		050347	85	121
				(1) 07454		SPAN DETAILS		60934

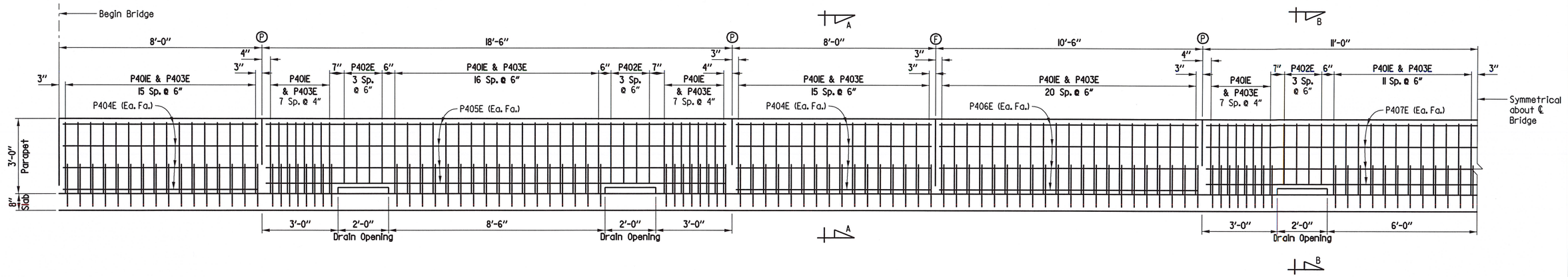

ELEVATION - CONCRETE PARAPET RAIL

(Left Parapet Shown, Right Parapet Similar)
Scale: 1/2" = 1'-0"

Ⓟ Partial depth parapet joints (1/4" to 1" max.) shall be stopped 1'-2" from top of slab.

Ⓕ Full depth parapet joints (1/4" to 1" max.) shall be stopped 4" from top of slab.

Note:
For additional parapet details, see Dwg. No. 60932.

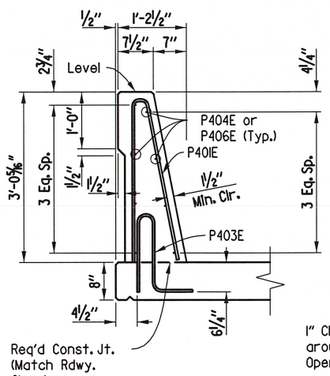

SECTION A-A
Scale: 3/4" = 1'-0"

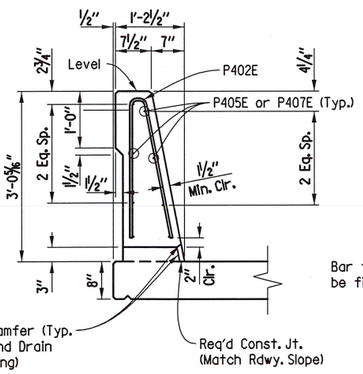

SECTION B-B
Scale: 3/4" = 1'-0"

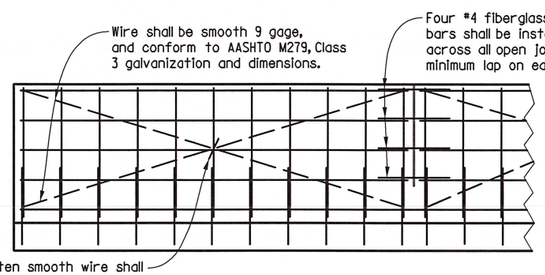

All panels shall be braced as required to prevent racking. All open joints shall be sawed as soon as practical to a minimum width of 1/4". To control cracking before sawing, all joints must be grooved before the concrete is set. Sawing of the joints must be controlled so it will follow the grooved joint.

All smooth wire bracing shall be placed on the inside faces of the reinforcing



For actual placement of reinforcing steel, see parapet details.

The extruded parapet shall conform to the horizontal and vertical lines shown on the plans or as directed by the Engineer and shall present a smooth, uniform appearance and texture.

Unless otherwise noted, exposed surfaces may be given a light brush finish or a Class 3 Textured Coating Finish in place of Class 2 Rubbed Finish.

DETAILS OF OPTIONAL SLIP FORMING OF CONCRETE PARAPET RAIL
No Scale

STATE OF ARKANSAS
REGISTERED PROFESSIONAL ENGINEER
No. 11856
CHARLES A. WIPF
11/30/2020

SHEET 6 OF 6

DETAILS OF 111'-0" INTEGRAL CONTINUOUS W-BEAM UNIT

ROUTE SEC.

ARKANSAS STATE HIGHWAY COMMISSION
LITTLE ROCK, ARK.

DRAWN BY: LDG DATE: 09-13-19
CHECKED BY: CAW DATE: 06-09-20
DESIGNED BY: LDG DATE: 06-27-19
FILENAME: b050347x3_s6.dgn
SCALE: SEE DETAILS

BRIDGE NO. 07454 DRAWING NO. 60934

USER: cw584
DESIGN FILE: G:\18105601_050347hwy9\TRANSP\dgn\bridge\b050347x3_s6.dgn
PLOTTED: 11/13/2020 17:03 SCALE: 1:4

DATE REVISED	DATE FILMED	DATE REVISED	DATE FILMED	FED.RD. DIST.NO.	STATE	FED.AID PROJ.NO.	SHEET NO.	TOTAL SHEETS
				6	ARK.			
				JOB NO.		050347	86	121
				(1) 07454		APPROACH SLAB		60935

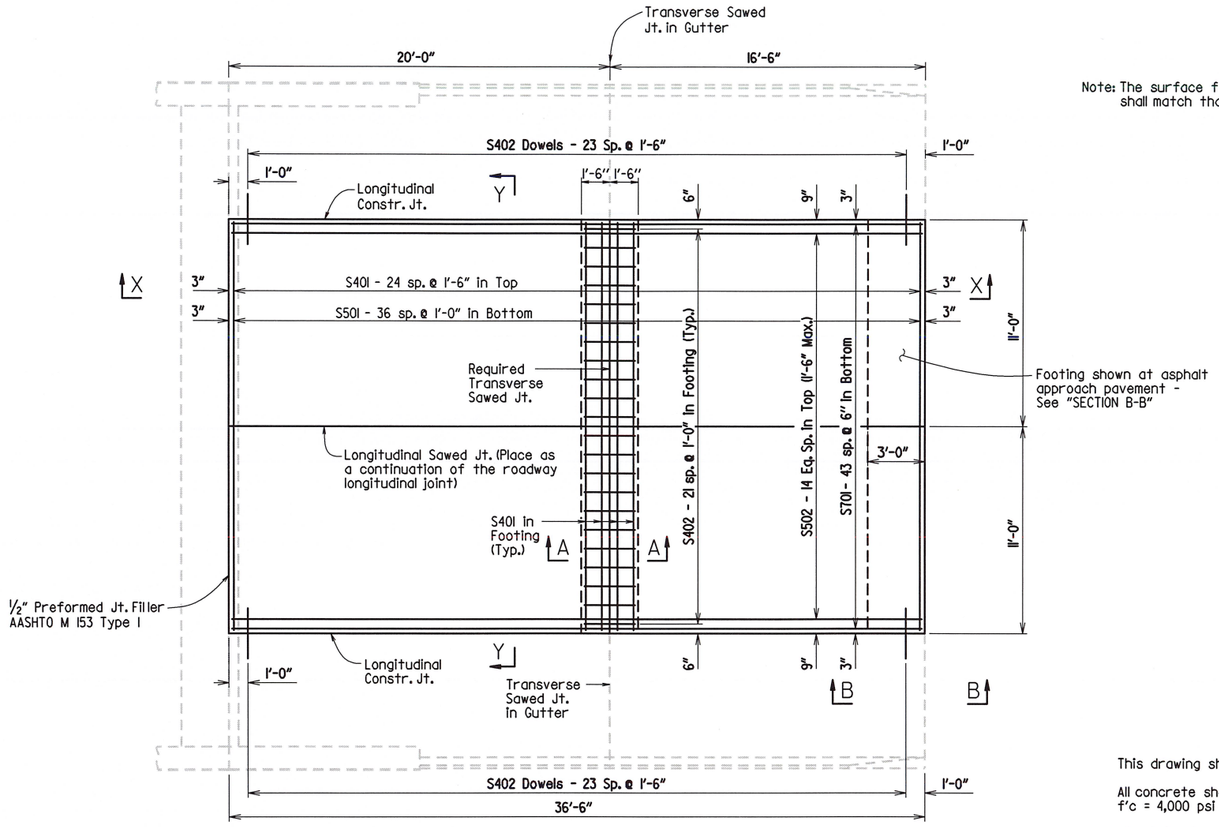

PLAN - SKEWED APPROACH SLAB WITH APPROACH GUTTERS

(Bent 4 Shown, Bent 1 Similar)
Scale: 1/4" = 1'-0"

Note: The surface finish for Approach Slabs shall match that used on the bridge deck.

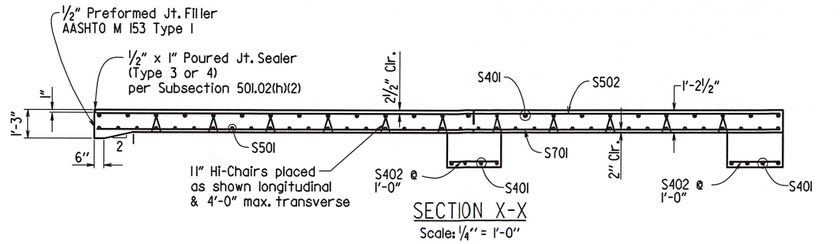

SECTION X-X

Scale: 1/4" = 1'-0"

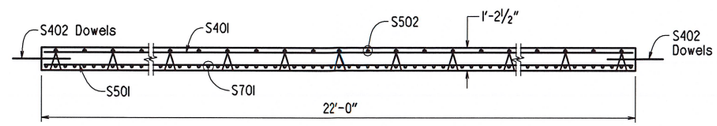

SECTION Y-Y

No Scale

GENERAL NOTES

This drawing shall be used for Approach Slabs in Seismic Performance Zone 1.

All concrete shall be Class S (AE) with a minimum 28 day compressive strength f'c = 4,000 psi and shall be poured in the dry.

All reinforcing steel shall be Grade 60 (yield strength = 60,000 psi) conforming to AASHTO M 31 or M 322, Type A, with mill test reports.

Approach Slabs will be measured and paid for in accordance with Section 504.

BAR LIST FOR ONE TYPE SPECIAL APPROACH SLAB

Mark	No. Req'd.	Length
S401	33	21'-8"
S402	92	2'-8"
S501	37	21'-8"
S502	15	36'-2"
S701	44	36'-2"

QUANTITIES FOR ONE TYPE SPECIAL APPROACH SLAB

(For Information Only)

Reinforcing Steel (Lbs.)	Concrete (Cu. Yds.)
5,296	44.92

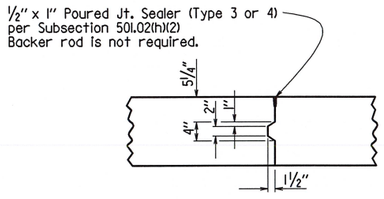

DETAILS OF LONGITUDINAL CONSTRUCTION JOINT

Scale: 3/4" = 1'-0"

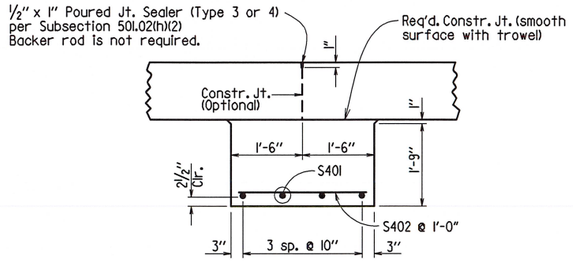

SECTION A-A

No Scale

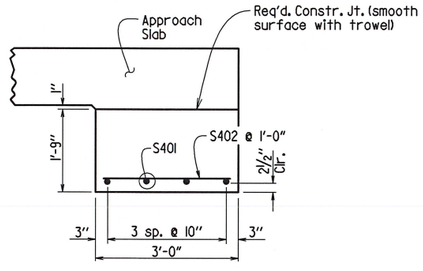

SECTION B-B

(At Asphalt Approach Pavement)
No Scale

STATE OF ARKANSAS
REGISTERED PROFESSIONAL ENGINEER
No. 11856
CHARLES A. WIPF
11/30/2020

DETAILS FOR TYPE SPECIAL APPROACH SLABS

ROUTE 9 SEC. 14

ARKANSAS STATE HIGHWAY COMMISSION

LITTLE ROCK, ARK.

DRAWN BY: LDG DATE: 06-17-20
CHECKED BY: MLC DATE: 06-18-20
DESIGNED BY: LDG DATE: 06-17-20
FILENAME: b050347x3_al.dgn
SCALE: SEE DETAILS

BRIDGE NO. 07454 DRAWING NO. 60935

USER: cw584
DESIGN FILE: G:\181056O1_050347hwy9\TRANSP\dgn\bridge\b050347x3_al.dgn
PLOTTED: 11/13/2020 17:03
SCALE: 1:8

DATE REVISED	DATE FILMED	DATE REVISED	DATE FILMED	FED.RD. DIST.NO.	STATE	FED.AID PROJ.NO.	SHEET NO.	TOTAL SHEETS
				6	ARK.			
				JOB NO.		050347	87	121
				① 07454		APPROACH GUTTER		60935A

① Construct gutter curb with height-transition as shown if drop inlet is not placed at end of gutter.

Construct gutter curb full height (no height-transition) if drop inlet is placed at end of gutter. Curb height transition placed on drop inlet. See drop inlet details.

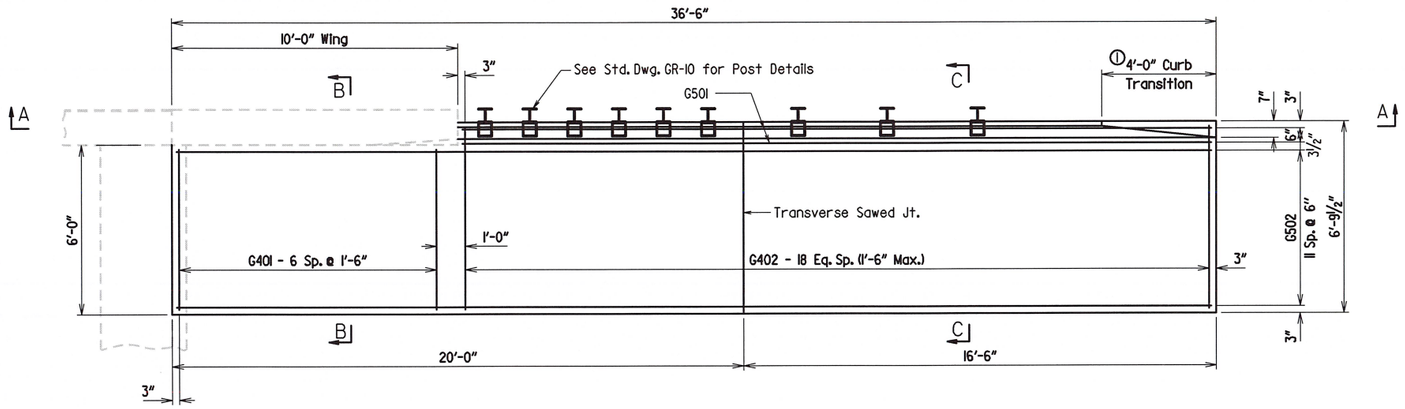

PLAN OF APPROACH GUTTER

(Bent 4 Left Side Shown, Bent 1 Similar)
Scale: ⅜" = 1'-0"

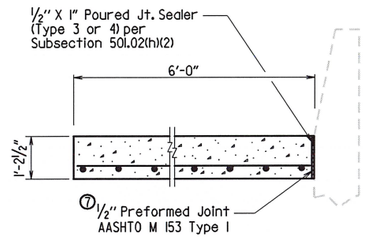

SECTION B-B
No Scale

BAR LIST FOR ONE TYPE SPECIAL GUTTER

Mark	No. Req'd.	Length
G401	7	5'-8"
G402	19	6'-5"
G501	2	26'-2"
G502	12	36'-2"

QUANTITIES FOR ONE TYPE SPECIAL GUTTER

(For Information Only)

Reinforcing Steel (Lbs.)	Concrete (Cu. Yds.)
615	10.86

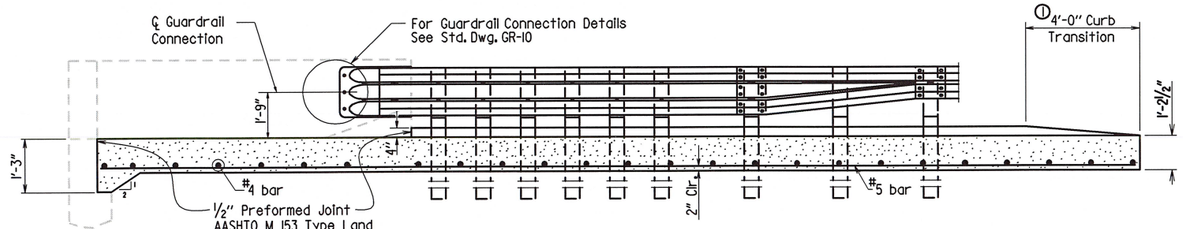

SECTION A-A
No Scale

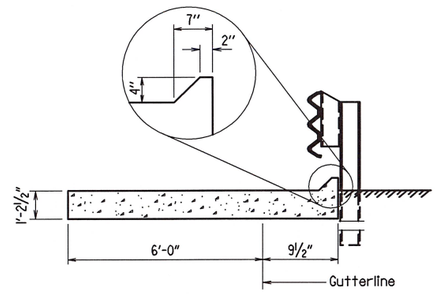

SECTION C-C
No Scale

GENERAL NOTES

All concrete shall be Class S or Class S(AE) or mixture used for Portland Cement Concrete Pavement and shall be poured in the dry.

All reinforcing steel shall be Grade 60 (yield strength = 60,000 psi) conforming to AASHTO M 31 or M 322, Type A, with mill test reports.

Approach Gutters will be measured and paid for in accordance with Section 504.

STATE OF ARKANSAS
REGISTERED PROFESSIONAL ENGINEER
No. 11856
CHARLES A. WIPF
11/30/2020

DETAILS FOR TYPE SPECIAL APPROACH GUTTERS

ROUTE 9 SEC. 14

ARKANSAS STATE HIGHWAY COMMISSION

LITTLE ROCK, ARK.

DRAWN BY: LDG DATE: 06-17-20 FILENAME: b050347x3_gl.dgn
CHECKED BY: MLC DATE: 06-18-20 SCALE: SEE DETAILS
DESIGNED BY: LDG DATE: 06-17-20

BRIDGE NO. 07454 DRAWING NO. 60935A

USER: cw584
DESIGN FILE: G:\I810560I_050347hwy9\TRANSP\dgn\bridge\b050347x3_gl.dgn
PLOTTED: 11/13/2020 17:03 SCALE: 1:5.3333

DATE REVISED	DATE FILMED	DATE REVISED	DATE FILMED	FED.RD. DIST.NO.	STATE	FED.AID PROJ.NO.	SHEET NO.	TOTAL SHEETS
				6	ARK.			
				JOB NO.		050347	88	121
				(2)	CROSS SECTIONS			

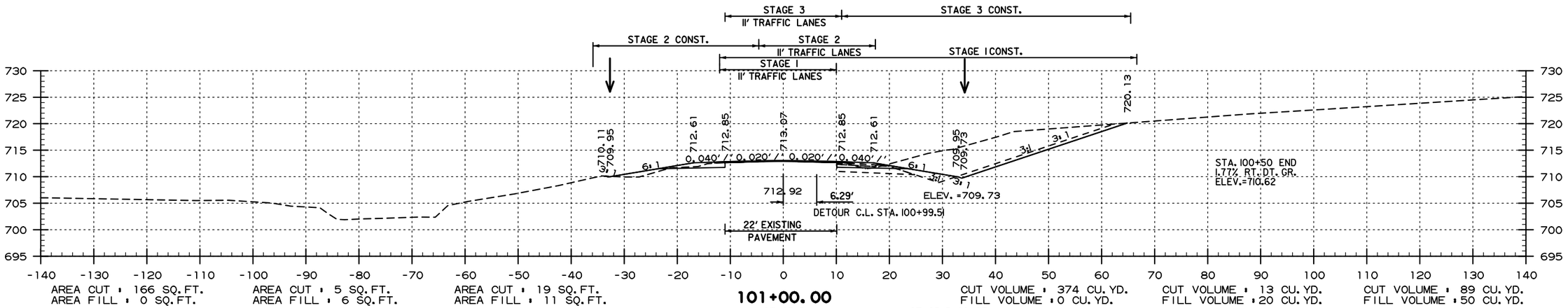

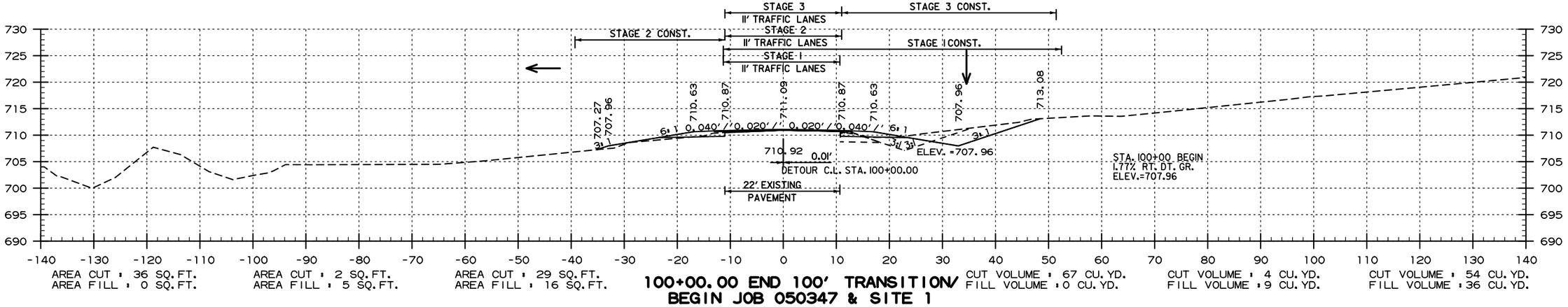

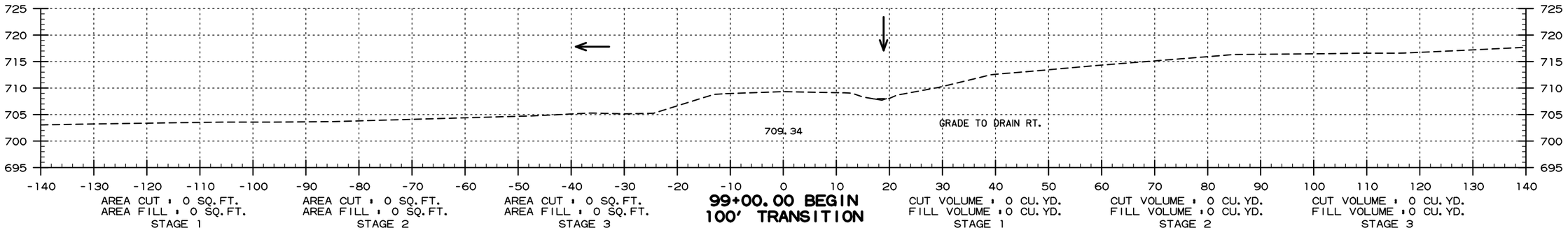

SITE 1- HWY. 9
STA. 99+00 TO STA. 101+00

USER: qp5181
DESIGN FILE: G:\18105601_050347hwy9\TRANSP\dgn\xsect\050347_HWY 9 XSEC.dgn
PLOTTED: 11/30/2020 12:23
SCALE: 1:20

DATE REVISED	DATE FILMED	DATE REVISED	DATE FILMED

FED.RD. DIST.NO.	STATE	FED.AID PROJ.NO.	SHEET NO.	TOTAL SHEETS
6	ARK.			
JOB NO.		050347	89	121

(2) CROSS SECTIONS

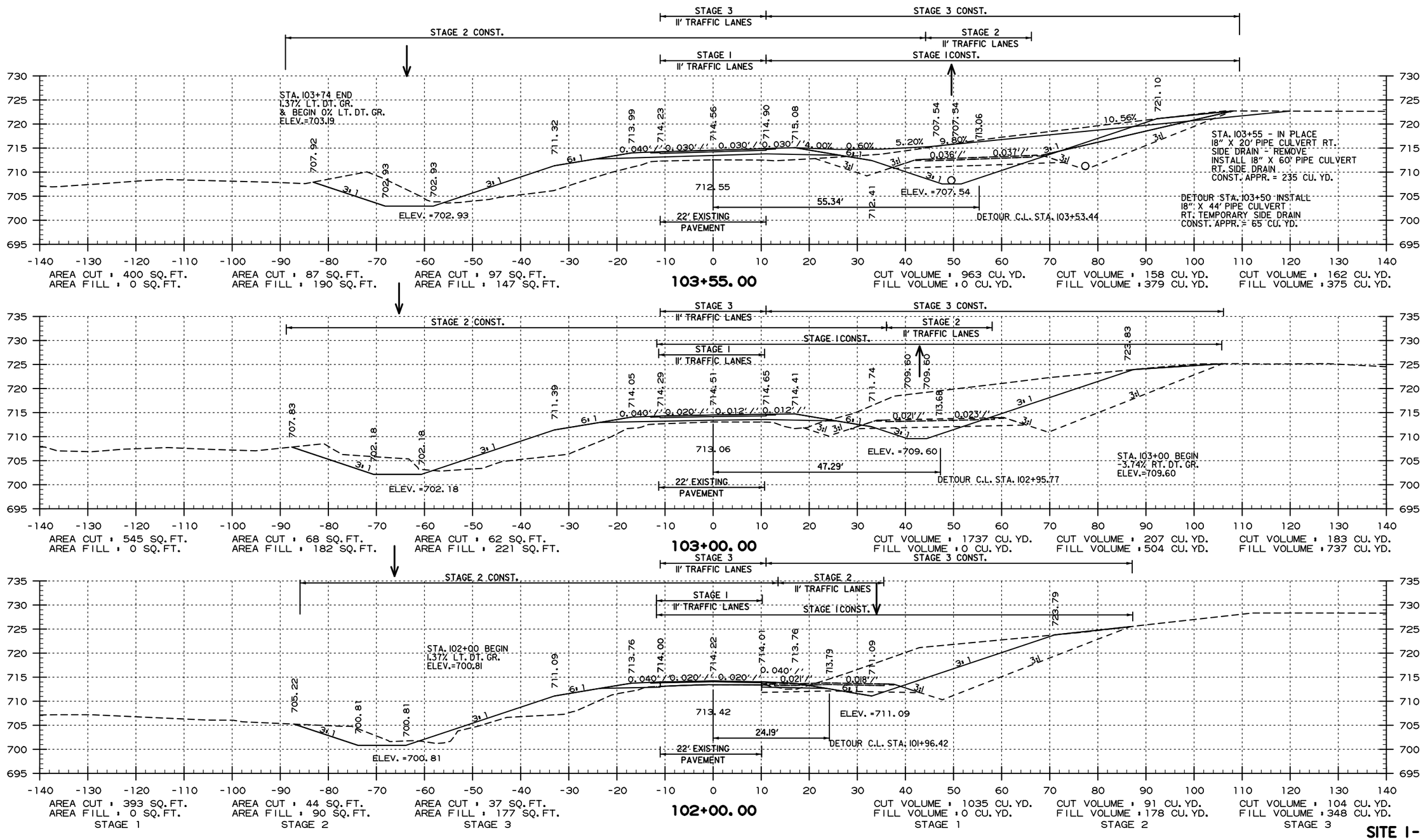

SITE 1 - HWY. 9

STA. 102+00 TO STA. 103+55

USER: qp5181
DESIGN FILE: G:\181056O1_050347hwy9\TRANSP\dgn\xsect\050347_HWY 9 XSEC.dgn
PLOTTED: 11/30/2020 12:23
SCALE: h20

DATE REVISED	DATE FILMED	DATE REVISED	DATE FILMED	FED.RD. DIST.NO.	STATE	FED.AID PROJ.NO.	SHEET NO.	TOTAL SHEETS
				6	ARK.			
				JOB NO.		050347	90	121

(2) CROSS SECTIONS

STA. 104+45 END
0% LT. DT. GR.
& BEGIN 2.12% LT. DT. GR.
ELEV.=703.19

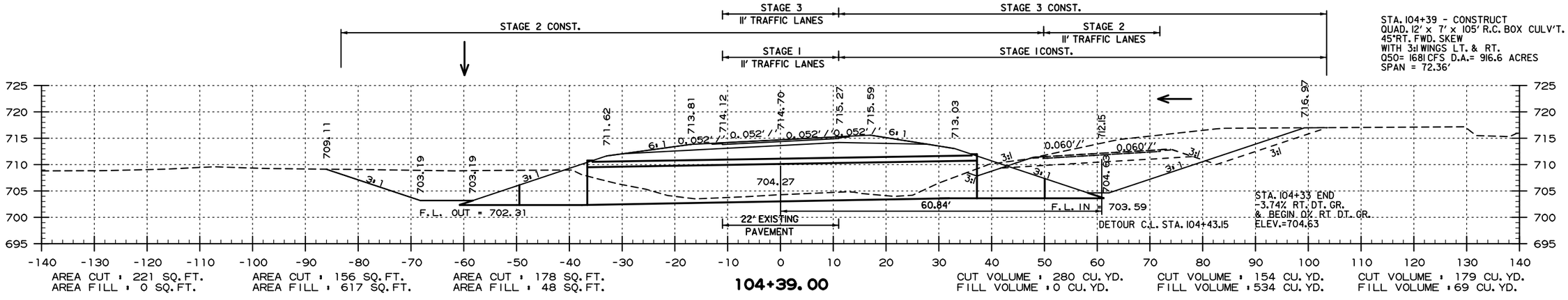

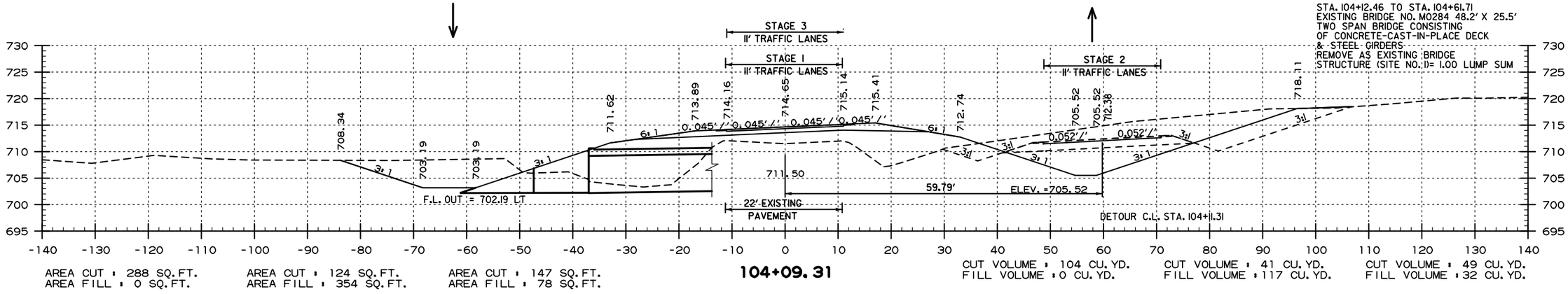

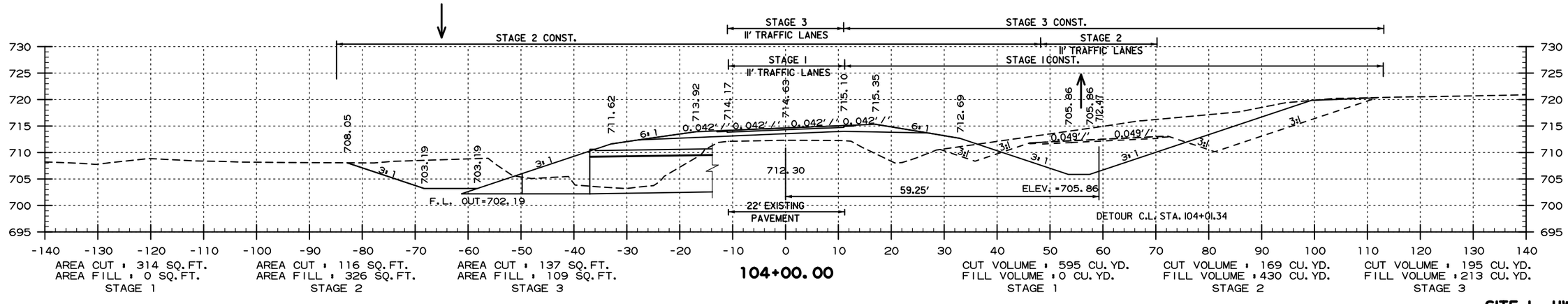

SITE 1 - HWY. 9
STA. 104+00 TO STA. 104+39

USER: qp5181
DESIGN FILE: G:\1810560I_050347hwy9\TRANSP\dgn\xsect\050347_HWY 9 XSEC.dgn
PLOTTED: 11/30/2020 12:23
SCALE: 1:20

DATE REVISED	DATE FILMED	DATE REVISED	DATE FILMED

FED.RD. DIST.NO.	STATE	FED.AID PROJ.NO.	SHEET NO.	TOTAL SHEETS
6	ARK.			
JOB NO.		050347	91	121

(2) CROSS SECTIONS

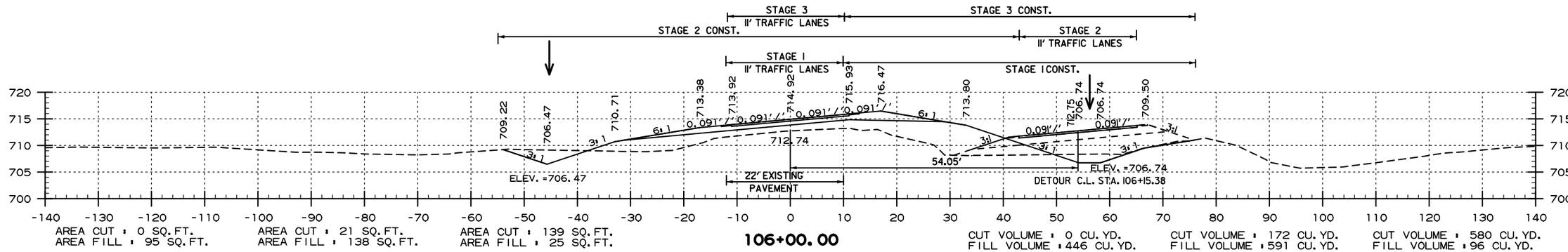

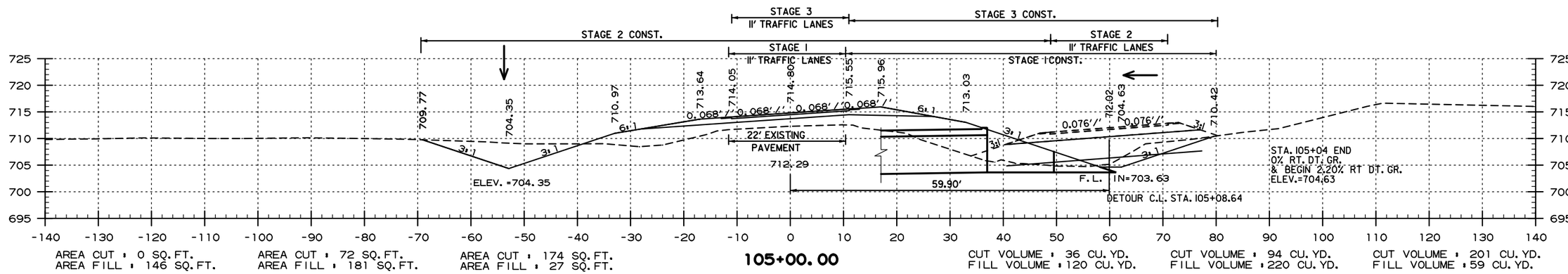

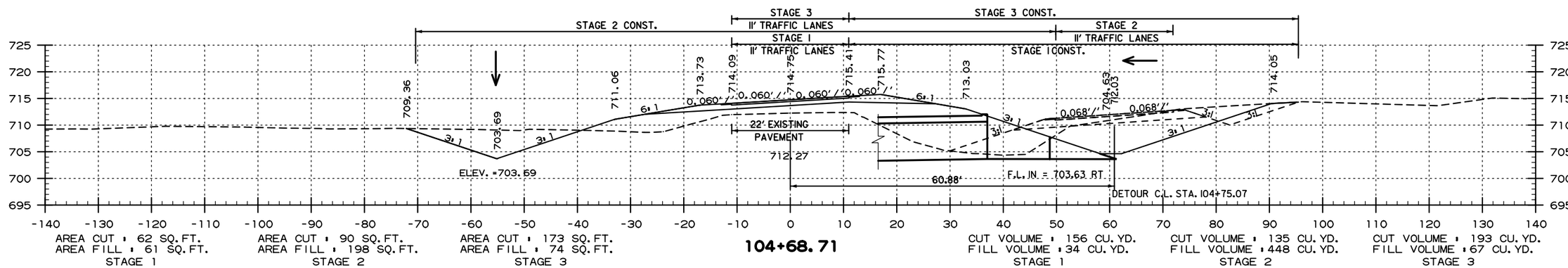

SITE 1- HWY. 9

STA. 104+39 TO STA. 106+00

USER: dp5181
DESIGN FILE: G:\181056O1_050347hwy9\TRANSP\dgn\xsect\050347_HWY 9 XSEC.dgn
PLOTTED: 11/30/2020 12:23
SCALE: 1:20

DATE REVISED	DATE FILMED	DATE REVISED	DATE FILMED	FED.RD. DIST.NO.	STATE	FED.AID PROJ.NO.	SHEET NO.	TOTAL SHEETS
				6	ARK.			
				JOB NO.		050347	92	121

(2) CROSS SECTIONS

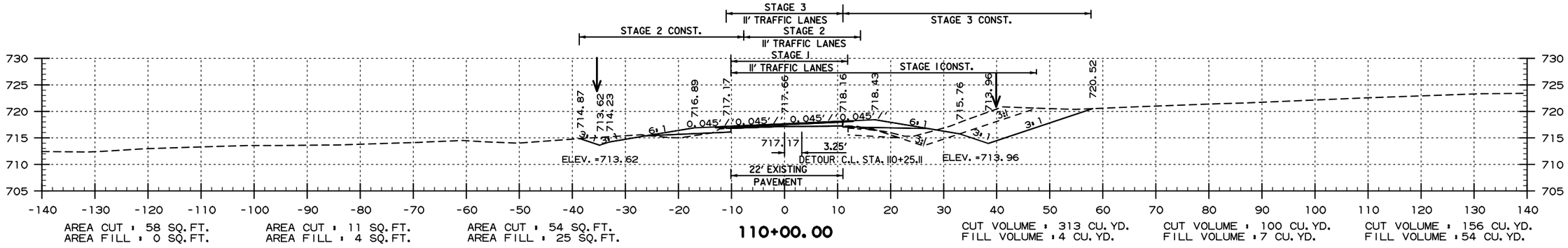

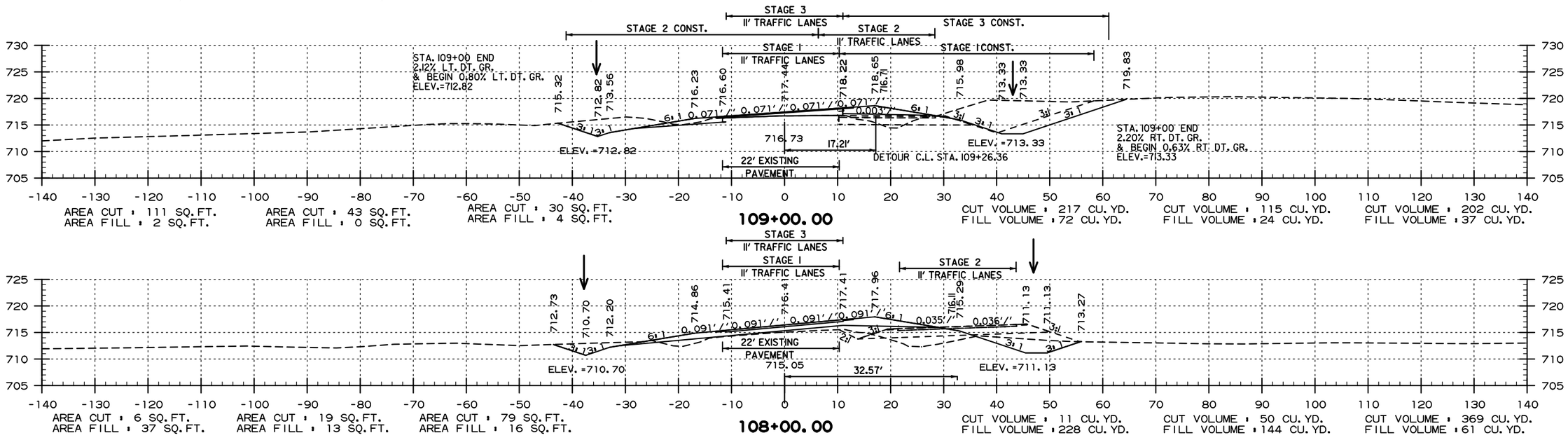

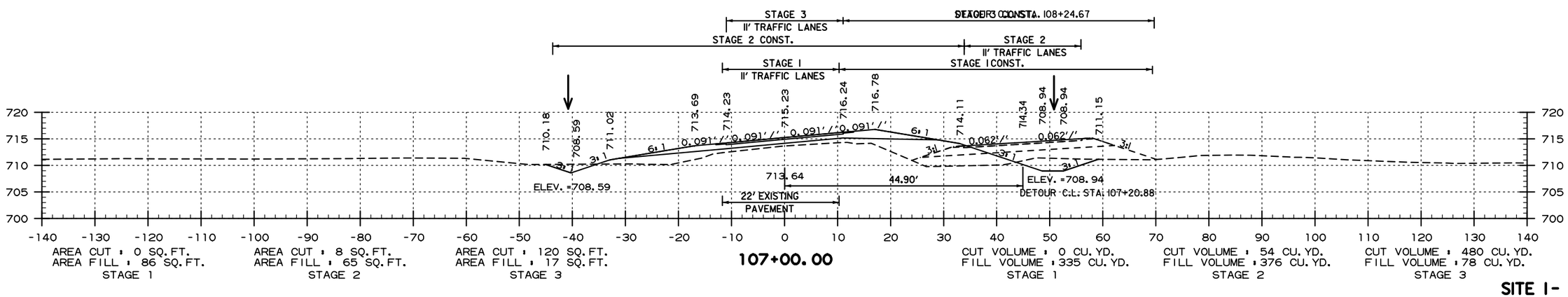

SITE 1- HWY. 9

STA. 107+00 TO STA. 110+00

USER: ap518l
DESIGN FILE: G:\1810560l_050347hwy9\TRANSP\dgn\xsect\050347_HWY 9 XSEC.dgn
PLOTTED: 11/30/2020 12:23
SCALE: 1:20

DATE REVISED	DATE FILMED	DATE REVISED	DATE FILMED	FED.RD. DIST.NO.	STATE	FED.AID PROJ.NO.	SHEET NO.	TOTAL SHEETS
				6	ARK.			
				JOB NO.		050347	93	121
				(2)	CROSS SECTIONS			

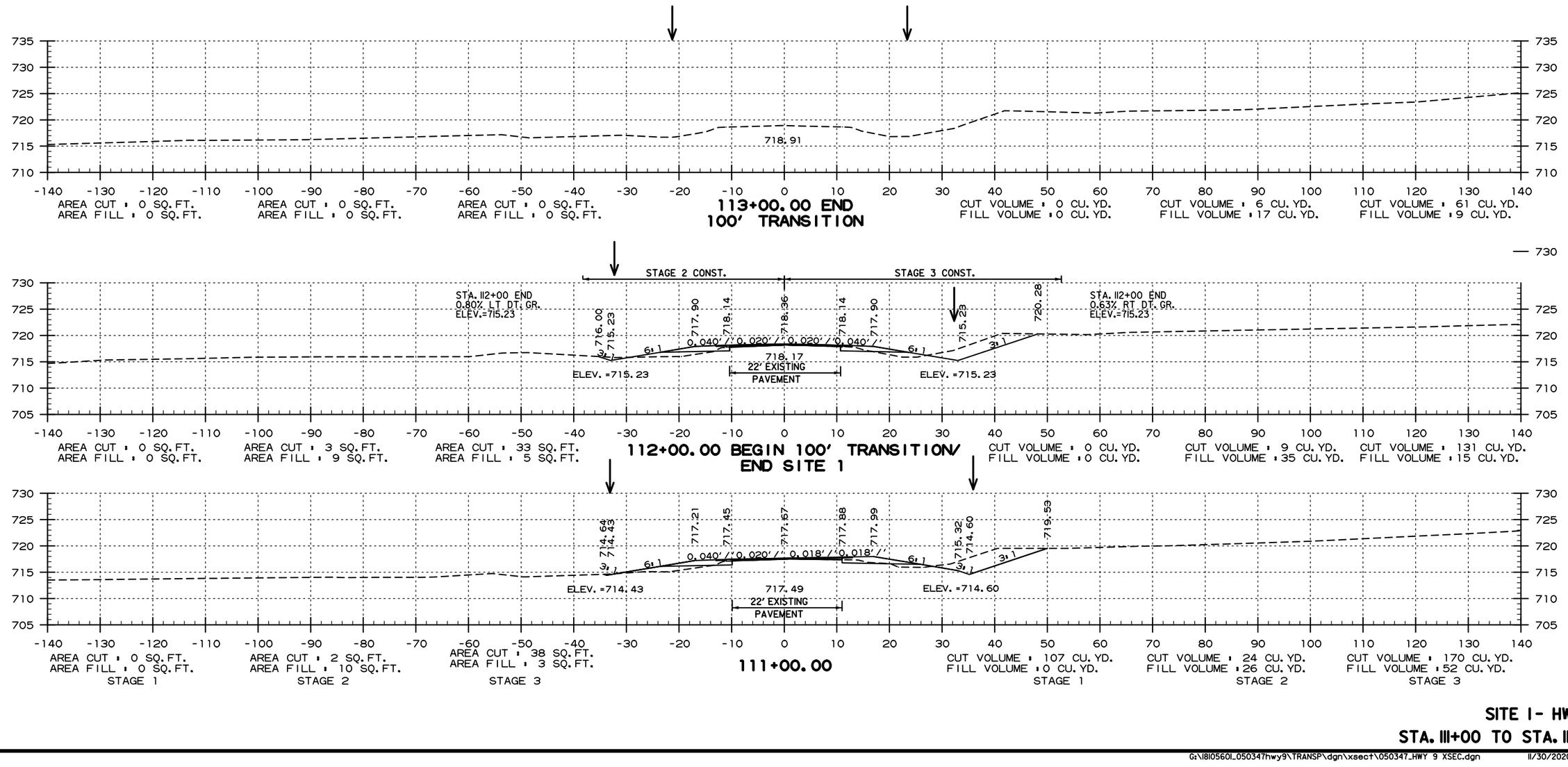

SITE 1- HWY. 9

STA. 111+00 TO STA. 113+00

USER: ap5181
DESIGN FILE: G:\181056l_050347hwy9\TRANSP\dgn\xsect\050347_HWY 9 XSEC.dgn
PLOTTED: 11/30/2020 12:24
SCALE: 1:20

DATE REVISED	DATE FILMED	DATE REVISED	DATE FILMED	FED.RD. DIST.NO.	STATE	FED.AID PROJ.NO.	SHEET NO.	TOTAL SHEETS
				6	ARK.			
				JOB NO.		050347	94	121

(2) CROSS SECTIONS

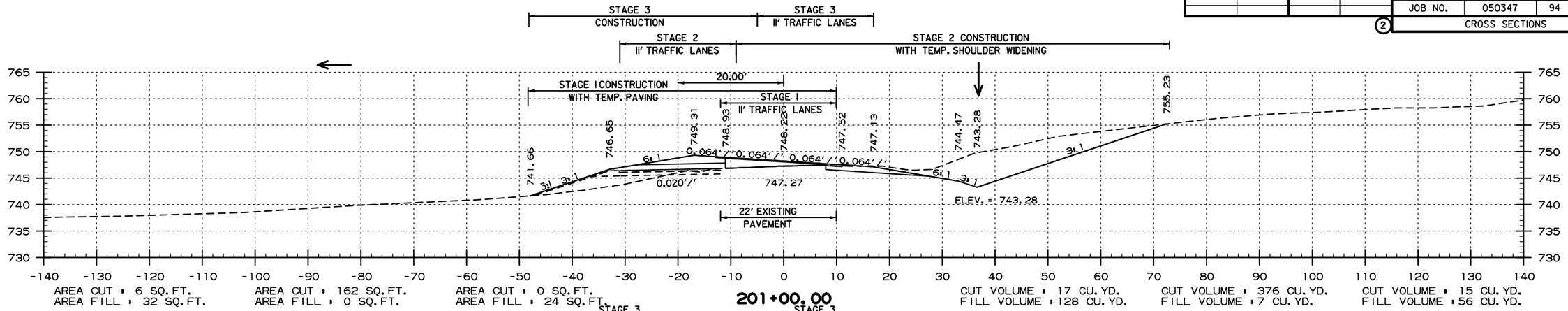

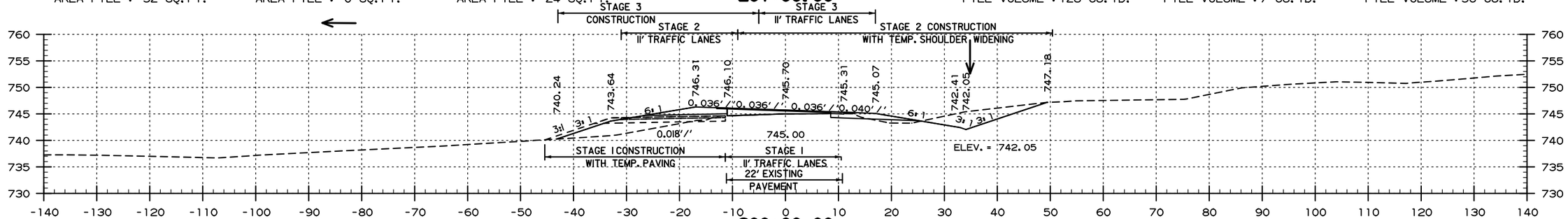

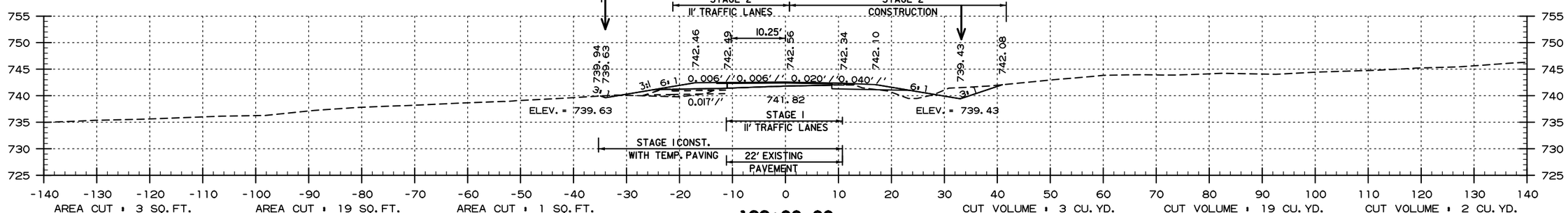

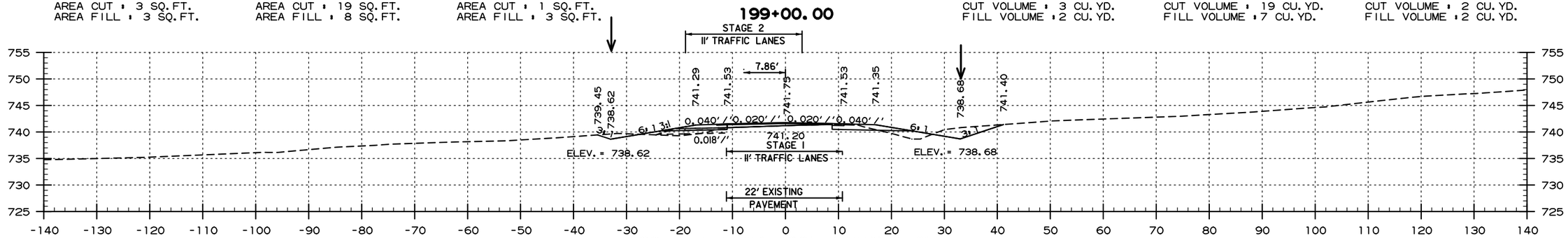

SITE 2 - HWY. 9
STA. 198+76 TO STA. 201+00

USER: qp5181
DESIGN FILE: G:\1810560I_050347hwy9\TRANSP\dgn\xsect\050347_HWY 9 XSEC.dgn
PLOTTED: 11/30/2020 12:24
SCALE: 1:20

G:\1810560I_050347hwy9\TRANSP\dgn\xsect\050347_HWY 9 XSEC.dgn 11/30/2020 12:24

DATE REVISED	DATE FILMED	DATE REVISED	DATE FILMED	FED.RD. DIST.NO.	STATE	FED.AID PROJ.NO.	SHEET NO.	TOTAL SHEETS
				6	ARK.			
				JOB NO.		050347	95	121

(2) CROSS SECTIONS

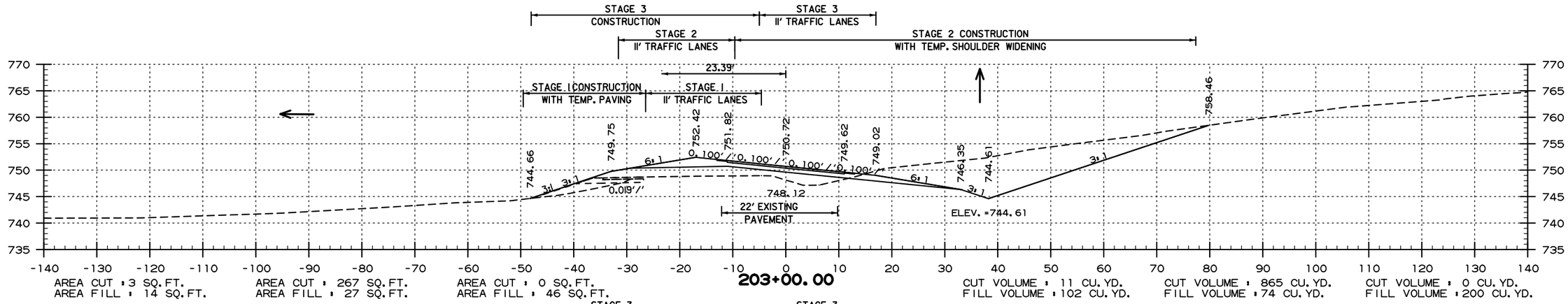

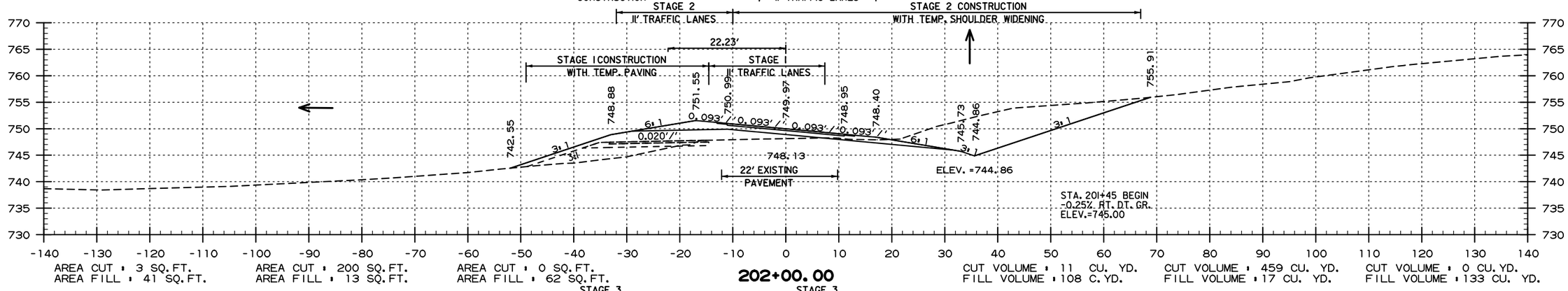

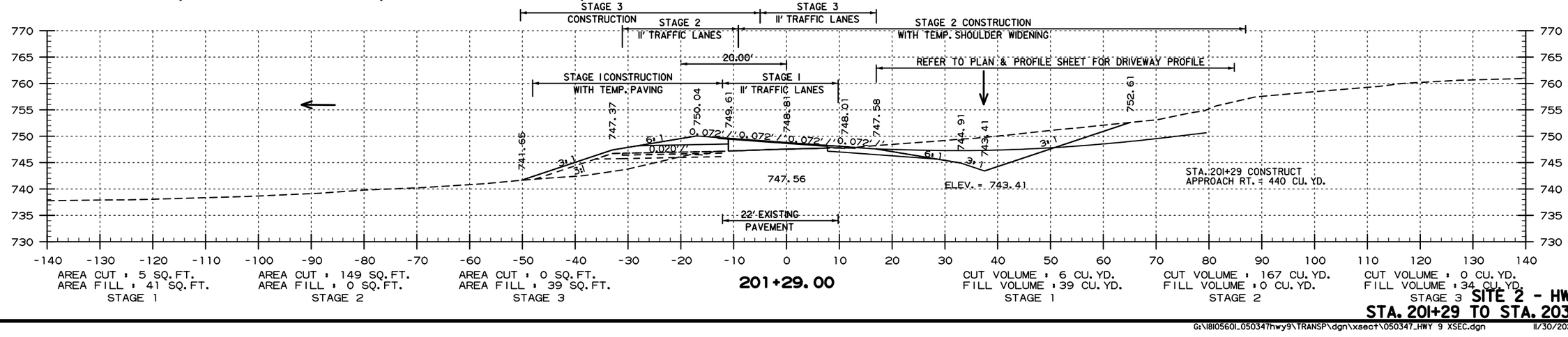

SITE 2 - HWY. 9
STA. 201+29 TO STA. 203+00

USER: qp518l
DESIGN FILE: G:\18l0560l_050347hwy9\TRANSP\dgn\xsect\050347_HWY 9 XSEC.dgn
PLOTTED: 11/30/2020 12:24
SCALE: 1:20

G:\18l0560l_050347hwy9\TRANSP\dgn\xsect\050347_HWY 9 XSEC.dgn 11/30/2020 12:24

DATE REVISED	DATE FILMED	DATE REVISED	DATE FILMED

FED.RD. DIST.NO.	STATE	FED.AID PROJ.NO.	SHEET NO.	TOTAL SHEETS
6	ARK.			
JOB NO.		050347	96	121
(2) CROSS SECTIONS				

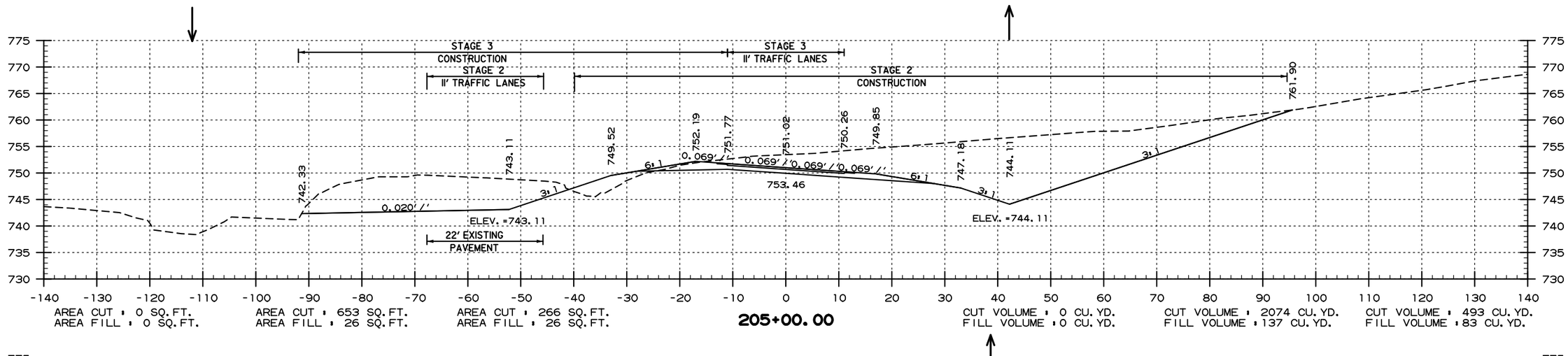

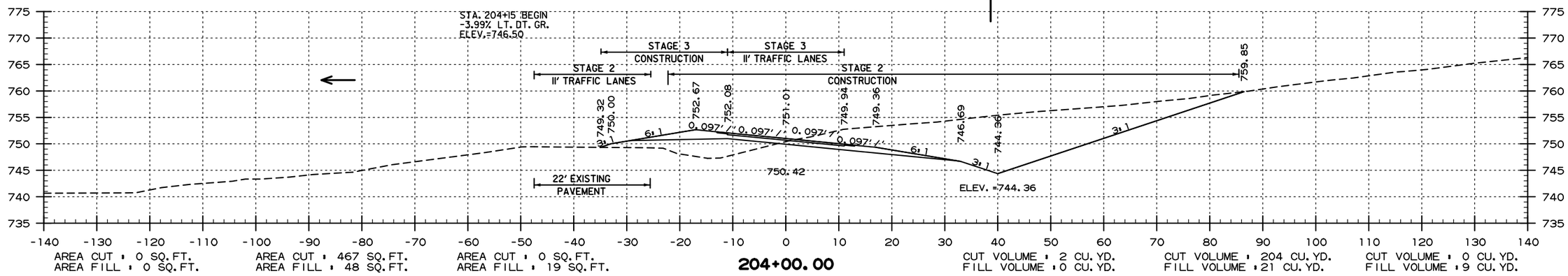

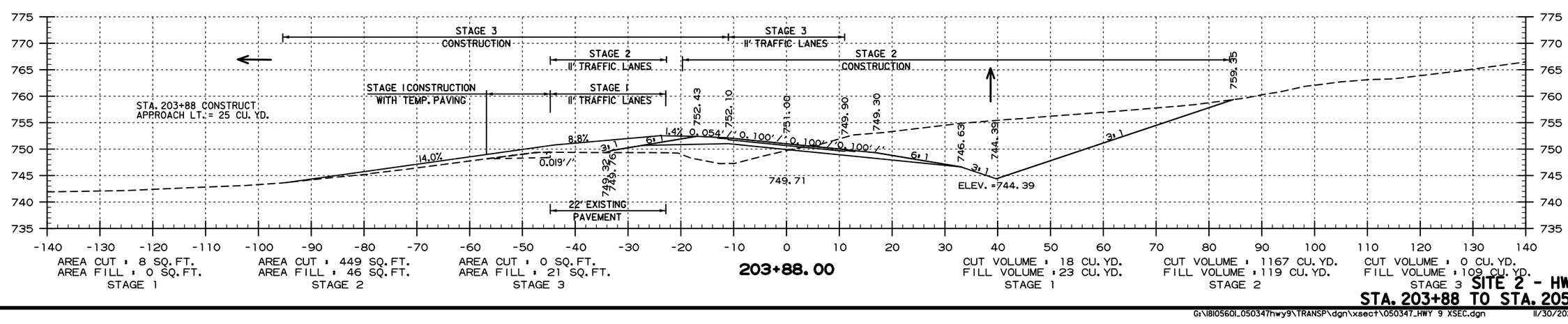

SITE 2 - HWY. 9
STA. 203+88 TO STA. 205+00

USER: qp5181
DESIGN FILE: G:\181056O1_050347hwy9\TRANSP\dgn\xsect\050347_HWY 9 XSEC.dgn
PLOTTED: 11/30/2020 12:24
SCALE: 1:20

G:\181056O1_050347hwy9\TRANSP\dgn\xsect\050347_HWY 9 XSEC.dgn 11/30/2020 12:24

DATE REVISED	DATE FILMED	DATE REVISED	DATE FILMED	FED.RD. DIST.NO.	STATE	FED.AID PROJ.NO.	SHEET NO.	TOTAL SHEETS
				6	ARK.			
				JOB NO.		050347	97	121
				(2)	CROSS SECTIONS			

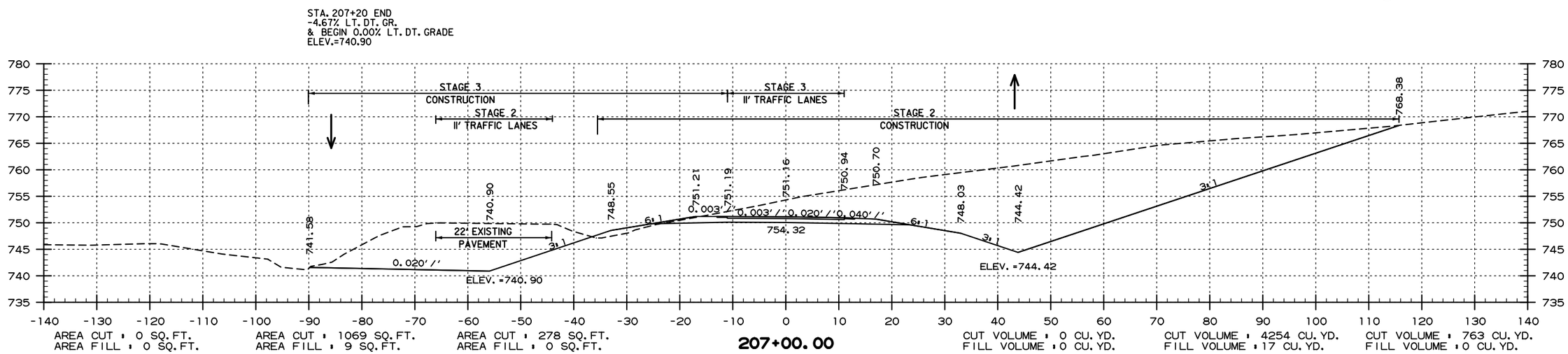

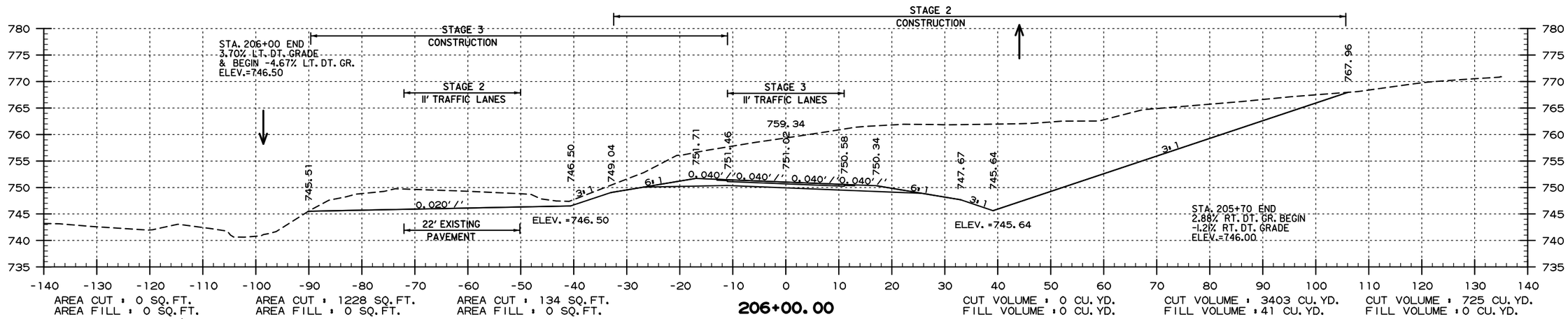

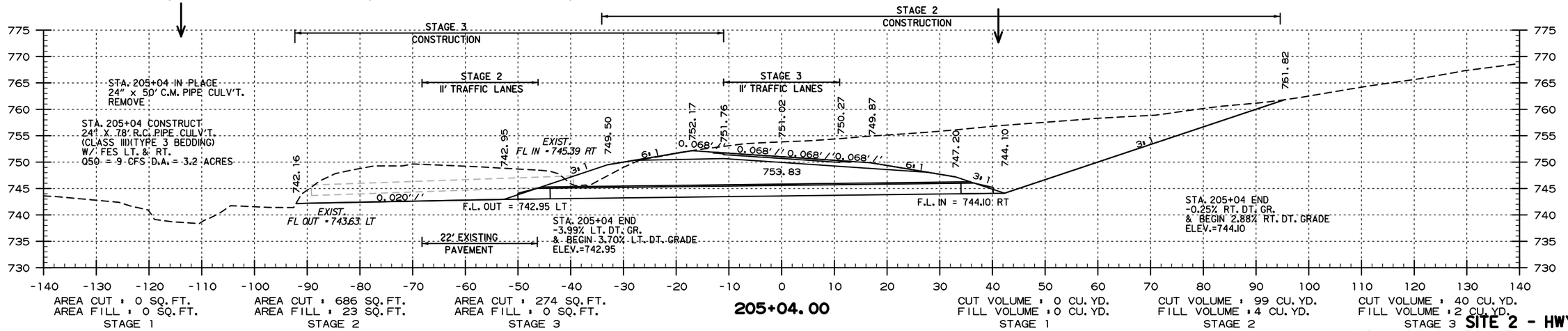

SITE 2 - HWY. 9
STA. 205+04 TO STA. 207+00

USER: dp5181
DESIGN FILE: G:\181056O1_050347hwy9\TRANSP\dgn\xsect\050347_HWY 9 XSEC.dgn
PLOTTED: 11/30/2020 12:24
SCALE: 1:20

G:\181056O1_050347hwy9\TRANSP\dgn\xsect\050347_HWY 9 XSEC.dgn 11/30/2020 12:24

DATE REVISED	DATE FILMED	DATE REVISED	DATE FILMED

FED.RD. DIST.NO.	STATE	FED.AID PROJ.NO.	SHEET NO.	TOTAL SHEETS
6	ARK.			
JOB NO.		050347	98	121

(2) CROSS SECTIONS

SITE 2 - HWY. 9
STA. 207+65 TO STA. 208+15

USER: qp5181
DESIGN FILE: G:\1810560I_050347hwy9\TRANSP\dgn\xsect\050347_HWY 9 XSEC.dgn
PLOTTED: 11/30/2020 12:24
SCALE: 1:20

G:\1810560I_050347hwy9\TRANSP\dgn\xsect\050347_HWY 9 XSEC.dgn 11/30/2020 12:24

DATE REVISED	DATE FILMED	DATE REVISED	DATE FILMED	FED.RD. DIST.NO.	STATE	FED.AID PROJ.NO.	SHEET NO.	TOTAL SHEETS
				6	ARK.			
				JOB NO.		050347	99	121
				(2)	CROSS SECTIONS			

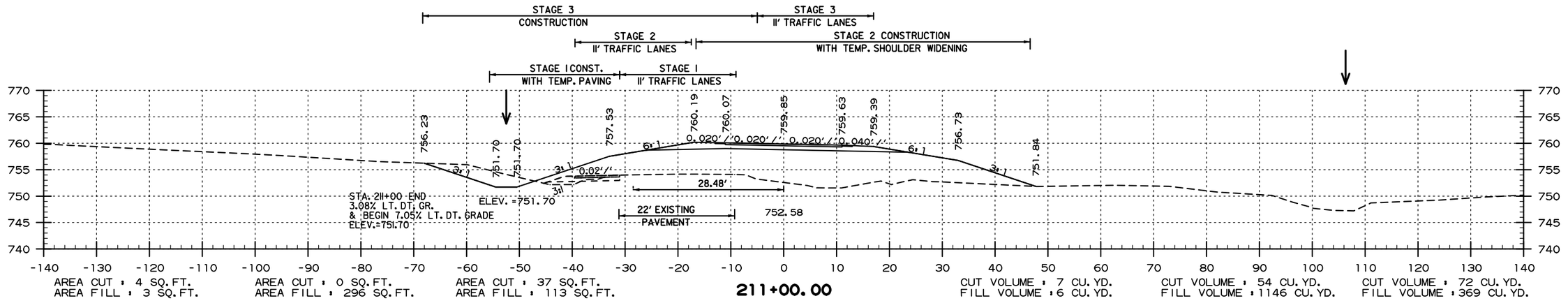

USER: ap5181
DESIGN FILE: G:\181056O1_050347hwy9\TRANSP\dgn\xsect\050347_HWY 9 XSEC.dgn
PLOTTED: 11/30/2020 12:24
SCALE: 1:20

SITE 2 - HWY. 9
STA. 209+00 TO STA. 211+00

G:\181056O1_050347hwy9\TRANSP\dgn\xsect\050347_HWY 9 XSEC.dgn 11/30/2020 12:24

DATE REVISED	DATE FILMED	DATE REVISED	DATE FILMED	FED.RD. DIST.NO.	STATE	FED.AID PROJ.NO.	SHEET NO.	TOTAL SHEETS
				6	ARK.			
				JOB NO.		050347	100	121

(2) CROSS SECTIONS

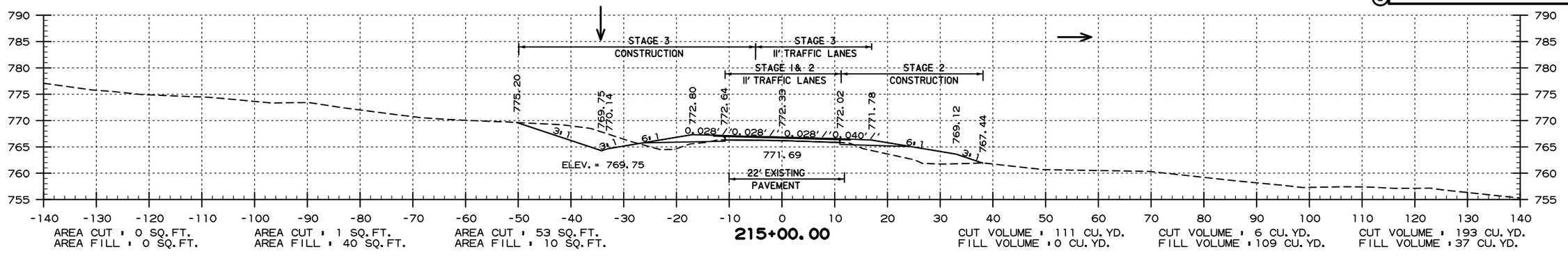

AREA CUT = 0 SQ.FT. AREA FILL = 0 SQ.FT.
AREA CUT = 1 SQ.FT. AREA FILL = 40 SQ.FT.
AREA CUT = 53 SQ.FT. AREA FILL = 10 SQ.FT.

215+00.00

CUT VOLUME = 111 CU.YD. FILL VOLUME = 0 CU.YD.
CUT VOLUME = 6 CU.YD. FILL VOLUME = 109 CU.YD.
CUT VOLUME = 193 CU.YD. FILL VOLUME = 37 CU.YD.

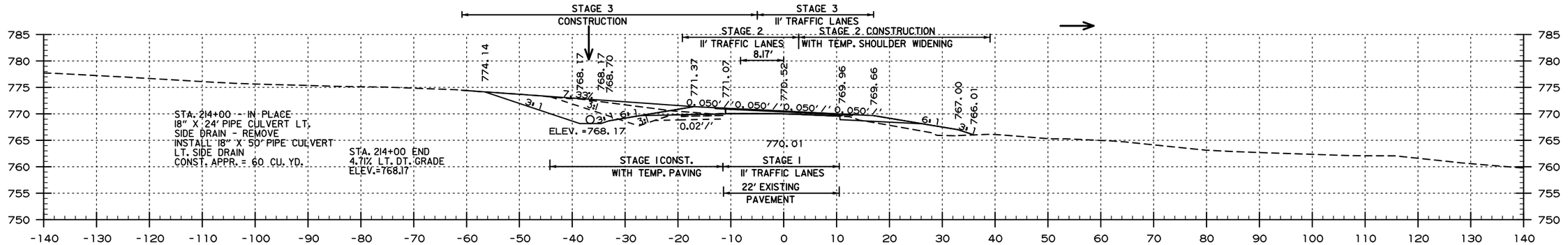

AREA CUT = 60 SQ.FT. AREA FILL = 0 SQ.FT.
AREA CUT = 2 SQ.FT. AREA FILL = 19 SQ.FT.
AREA CUT = 51 SQ.FT. AREA FILL = 10 SQ.FT.

214+00.00

CUT VOLUME = 320 CU.YD. FILL VOLUME = 4 CU.YD.
CUT VOLUME = 4 CU.YD. FILL VOLUME = 222 CU.YD.
CUT VOLUME = 143 CU.YD. FILL VOLUME = 106 CU.YD.

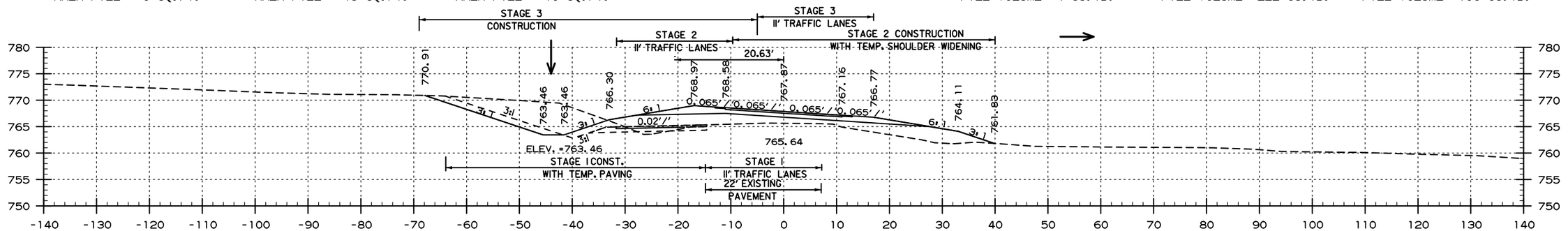

AREA CUT = 113 SQ.FT. AREA FILL = 2 SQ.FT.
AREA CUT = 0 SQ.FT. AREA FILL = 101 SQ.FT.
AREA CUT = 26 SQ.FT. AREA FILL = 47 SQ.FT.

213+00.00

CUT VOLUME = 335 CU.YD. FILL VOLUME = 17 CU.YD.
CUT VOLUME = 0 CU.YD. FILL VOLUME = 574 CU.YD.
CUT VOLUME = 48 CU.YD. FILL VOLUME = 361 CU.YD.

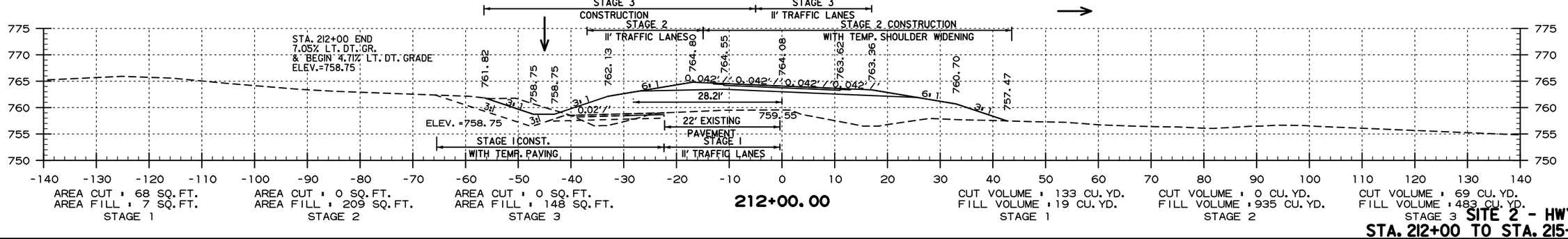

AREA CUT = 68 SQ.FT. AREA FILL = 7 SQ.FT. STAGE 1
AREA CUT = 0 SQ.FT. AREA FILL = 209 SQ.FT. STAGE 2
AREA CUT = 0 SQ.FT. AREA FILL = 148 SQ.FT. STAGE 3

212+00.00

CUT VOLUME = 133 CU.YD. FILL VOLUME = 19 CU.YD. STAGE 1
CUT VOLUME = 0 CU.YD. FILL VOLUME = 935 CU.YD. STAGE 2
CUT VOLUME = 69 CU.YD. FILL VOLUME = 483 CU.YD. STAGE 3

SITE 2 - HWY. 9
STA. 212+00 TO STA. 215+00

USER: ap5181
DESIGN FILE: G:\1810560_050347hwy9\TRANSP\dgn\xsect\050347_HWY 9 XSEC.dgn
PLOTTED: 11/30/2020 12:24
SCALE: 1:20

G:\1810560_050347hwy9\TRANSP\dgn\xsect\050347_HWY 9 XSEC.dgn 11/30/2020 12:24

DATE REVISED	DATE FILMED	DATE REVISED	DATE FILMED	FED.RD. DIST.NO.	STATE	FED.AID PROJ.NO.	SHEET NO.	TOTAL SHEETS
				6	ARK.			
				JOB NO.		050347	101	121
				(2)	CROSS SECTIONS			

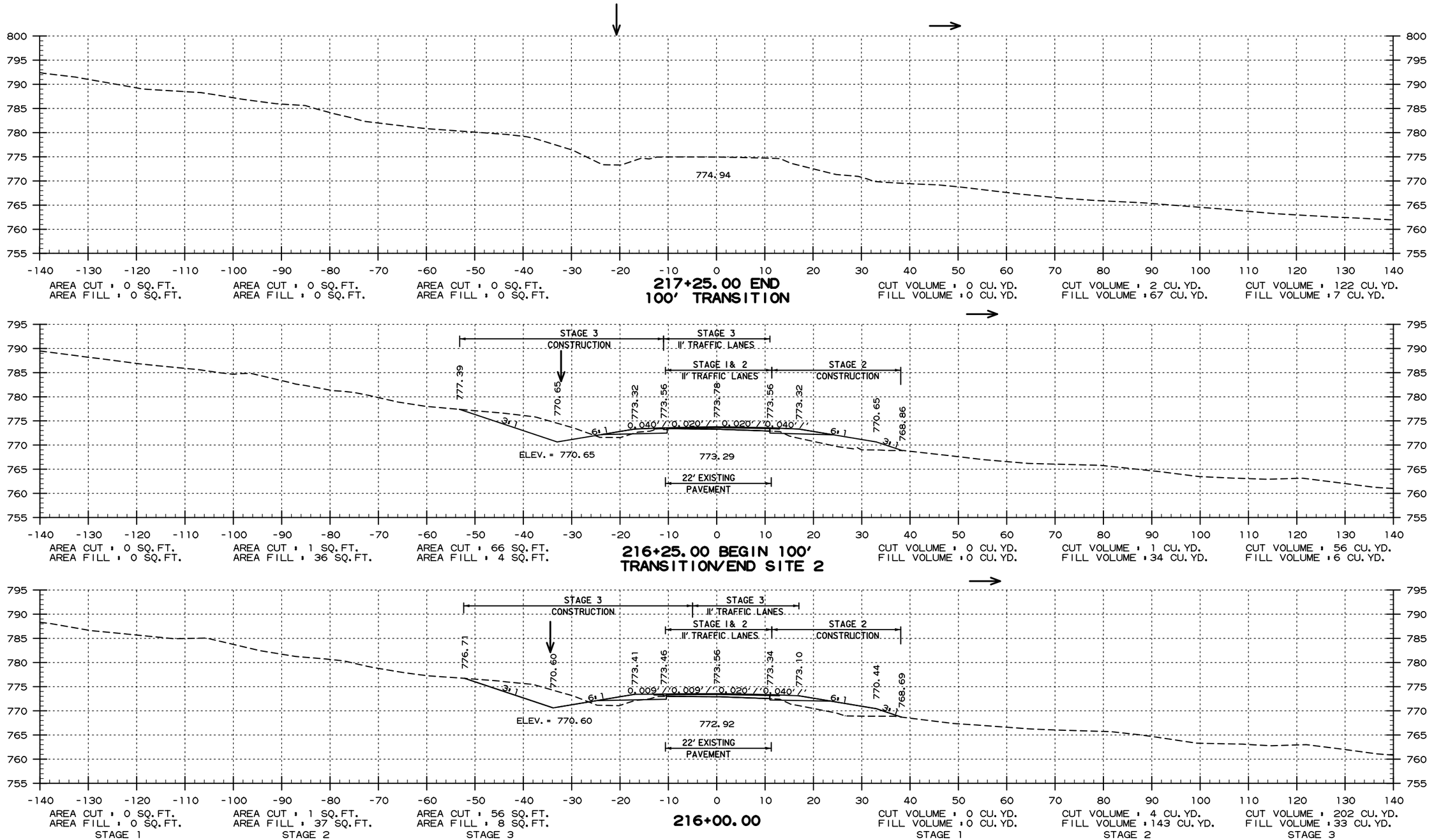

SITE 2 - HWY. 9
STA. 216+00 TO STA. 217+25

USER: ap518l
DESIGN FILE: G:\181056O1_050347hwy9\TRANSP\dgn\xsect\050347_HWY 9 XSEC.dgn
PLOTTED: 11/30/2020 12:24
SCALE: 1:20

G:\181056O1_050347hwy9\TRANSP\dgn\xsect\050347_HWY 9 XSEC.dgn 11/30/2020 12:24

DATE REVISED	DATE FILMED	DATE REVISED	DATE FILMED	FED.RD. DIST.NO.	STATE	FED.AID PROJ.NO.	SHEET NO.	TOTAL SHEETS
				6	ARK.			
				JOB NO.		050347	102	121

(2) CROSS SECTIONS

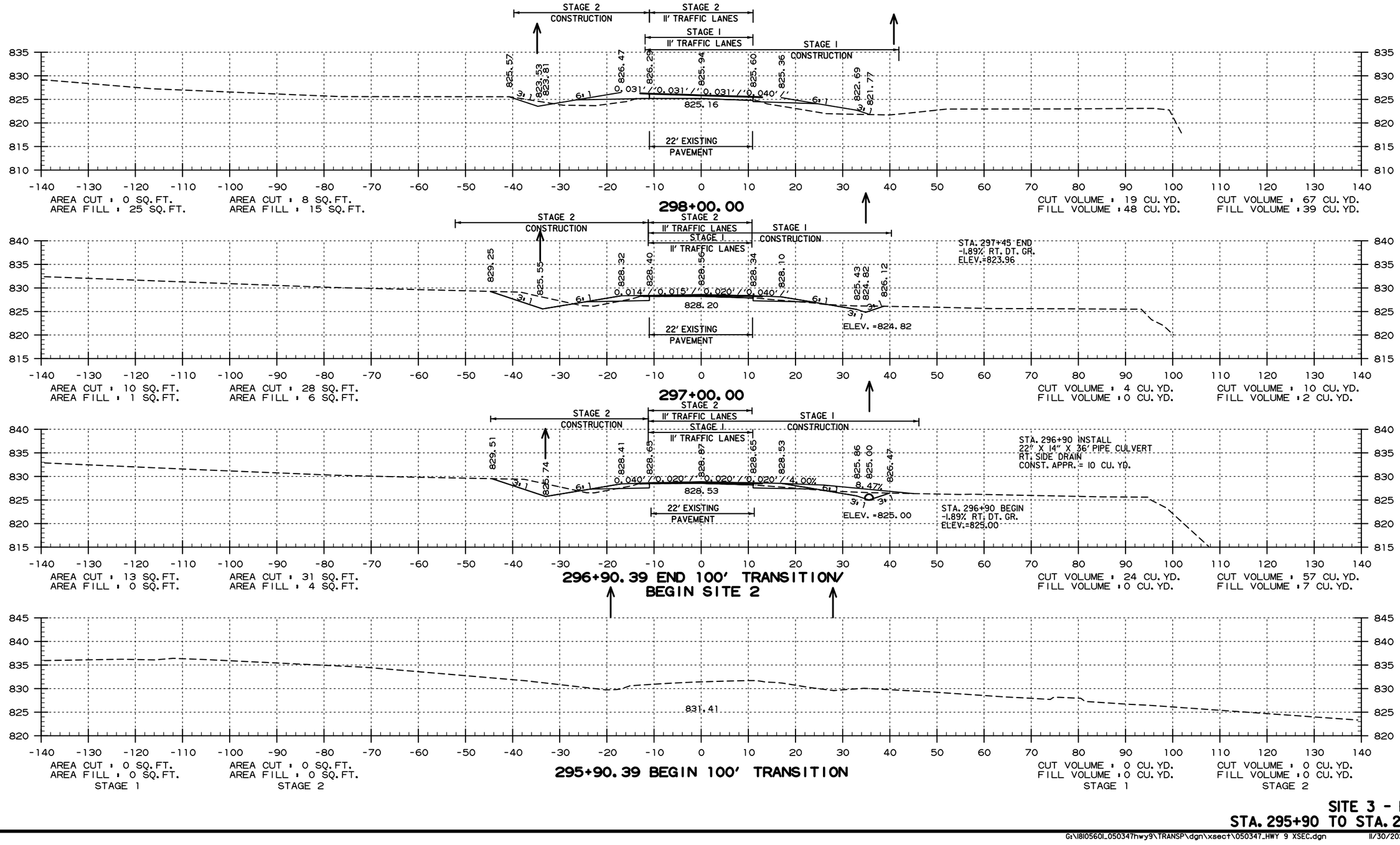

SITE 3 - HWY. 9
STA. 295+90 TO STA. 298+00

USER: qp518l
DESIGN FILE: G:\18105601_050347hwy9\TRANSP\dgn\xsect\050347_HWY 9 XSEC.dgn
PLOTTED: 11/30/2020 12:24
SCALE: 1:20

G:\18105601_050347hwy9\TRANSP\dgn\xsect\050347_HWY 9 XSEC.dgn 11/30/2020 12:24

DATE REVISED	DATE FILMED	DATE REVISED	DATE FILMED	FED.RD. DIST.NO.	STATE	FED.AID PROJ.NO.	SHEET NO.	TOTAL SHEETS
				6	ARK.			
				JOB NO.		050347	103	121

(2) CROSS SECTIONS

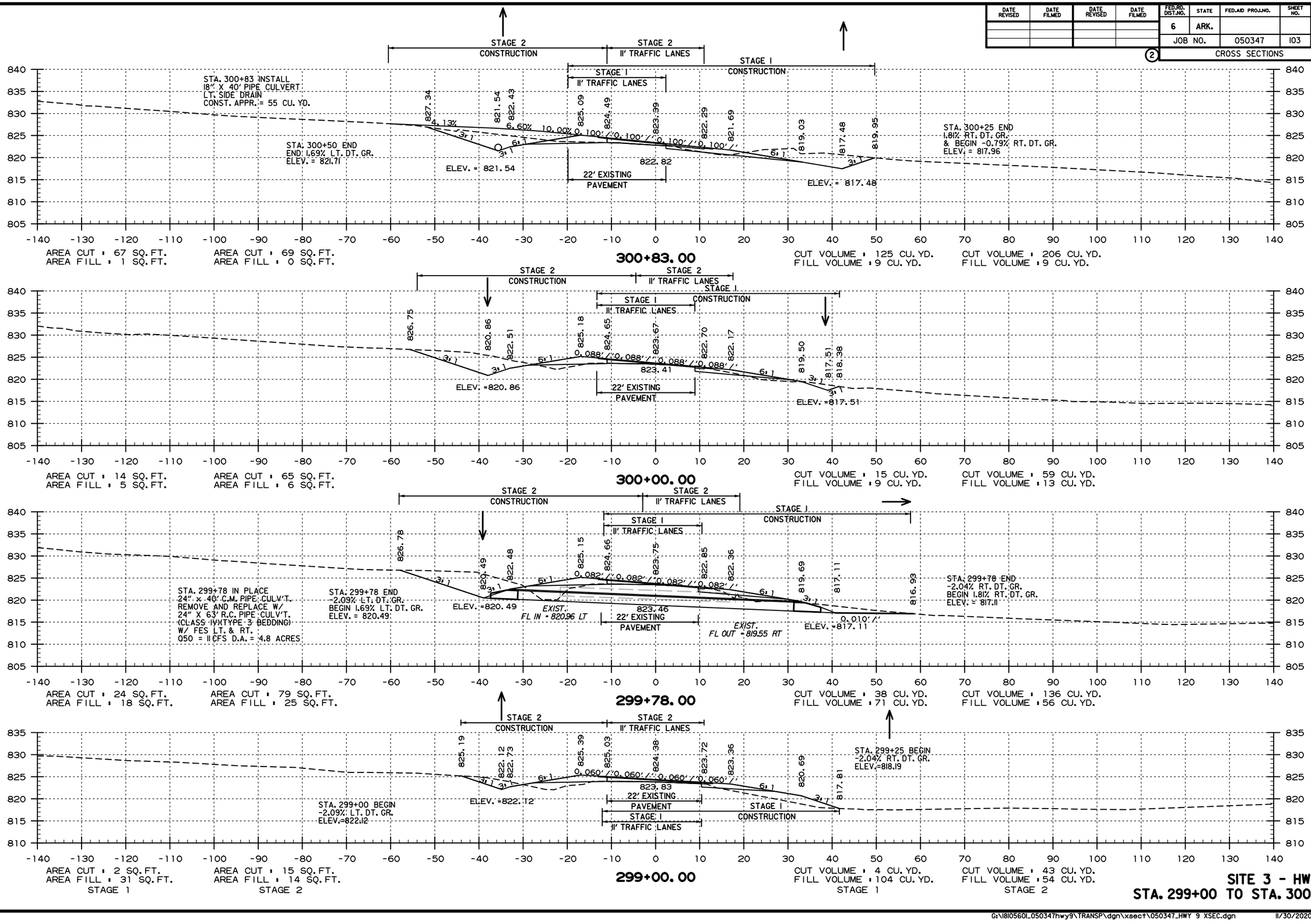

SITE 3 - HWY. 9
STA. 299+00 TO STA. 300+00

USER: qp5181
DESIGN FILE: G:\1810560I_050347hwy9\TRANSP\dgn\xsect\050347_HWY 9 XSEC.dgn
PLOTTED: 11/30/2020 12:24
SCALE: 1:20

G:\1810560I_050347hwy9\TRANSP\dgn\xsect\050347_HWY 9 XSEC.dgn 11/30/2020 12:24

DATE REVISED	DATE FILMED	DATE REVISED	DATE FILMED	FED.RD. DIST.NO.	STATE	FED.AID PROJ.NO.	SHEET NO.	TOTAL SHEETS
				6	ARK.			
				JOB NO.		050347	104	121

2 CROSS SECTIONS

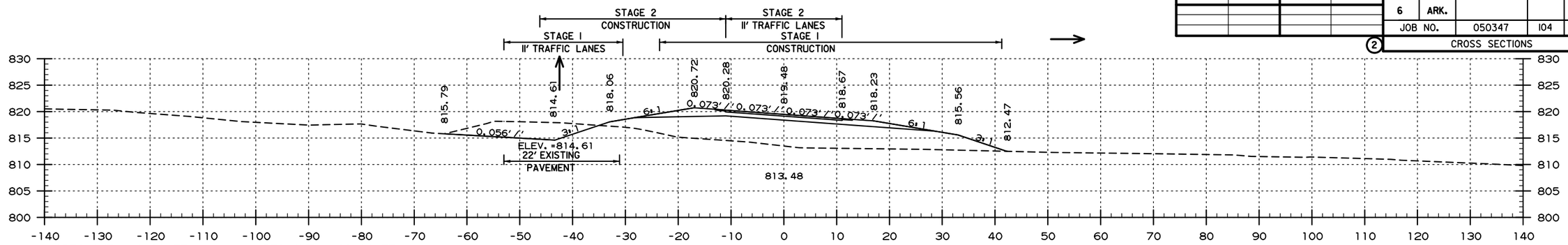

AREA CUT : 0 SQ.FT.
AREA FILL : 260 SQ.FT.

AREA CUT : 63 SQ.FT.
AREA FILL : 13 SQ.FT.

304+00.00

CUT VOLUME : 9 CU.YD.
FILL VOLUME : 713 CU.YD.

CUT VOLUME : 167 CU.YD.
FILL VOLUME : 102 CU.YD.

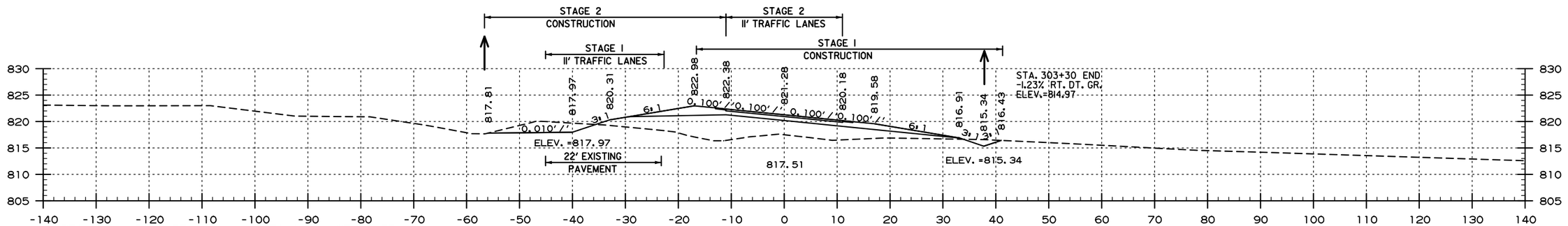

AREA CUT : 5 SQ.FT.
AREA FILL : 125 SQ.FT.

AREA CUT : 27 SQ.FT.
AREA FILL : 42 SQ.FT.

303+00

CUT VOLUME : 41 CU.YD.
FILL VOLUME : 320 CU.YD.

CUT VOLUME : 69 CU.YD.
FILL VOLUME : 115 CU.YD.

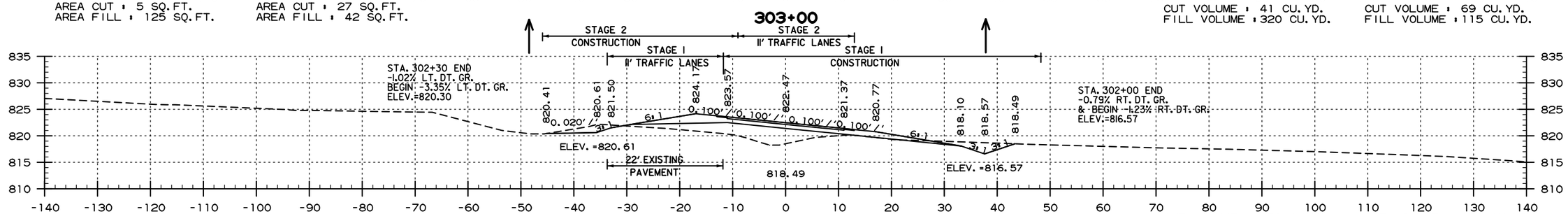

AREA CUT : 17 SQ.FT.
AREA FILL : 48 SQ.FT.

AREA CUT : 10 SQ.FT.
AREA FILL : 20 SQ.FT.

302+00.00

CUT VOLUME : 159 CU.YD.
FILL VOLUME : 93 CU.YD.

CUT VOLUME : 120 CU.YD.
FILL VOLUME : 37 CU.YD.

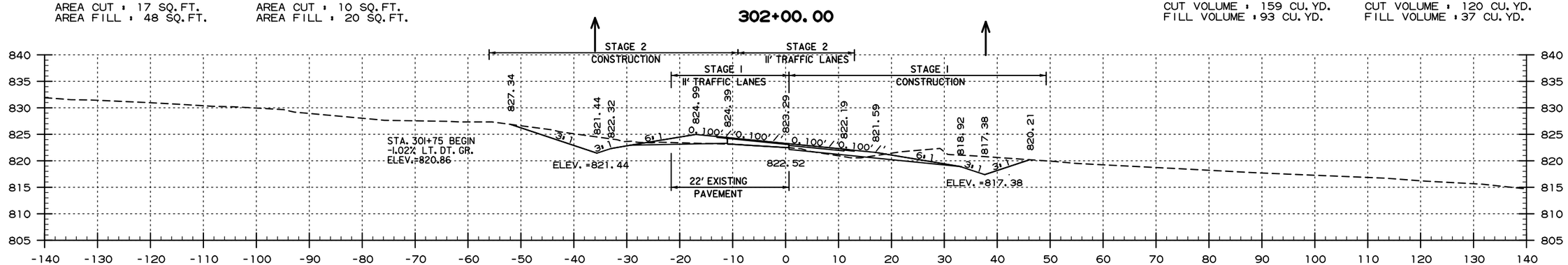

AREA CUT : 69 SQ.FT.
AREA FILL : 2 SQ.FT.
STAGE 1

AREA CUT : 55 SQ.FT.
AREA FILL : 0 SQ.FT.
STAGE 2

301+00.00

CUT VOLUME : 43 CU.YD.
FILL VOLUME : 1 CU.YD.
STAGE 1

CUT VOLUME : 39 CU.YD.
FILL VOLUME : 0 CU.YD.
STAGE 2

SITE 3 - HWY. 9
STA. 300+83 TO STA. 303+00

USER: ap5181
DESIGN FILE: G:\18105601_050347hwy9\TRANSP\dgn\xsect\050347_HWY 9 XSEC.dgn
PLOTTED: 11/30/2020 12:24
SCALE: 1:20

G:\18105601_050347hwy9\TRANSP\dgn\xsect\050347_HWY 9 XSEC.dgn 11/30/2020 12:24

DATE REVISED	DATE FILMED	DATE REVISED	DATE FILMED	FED.RD. DIST.NO.	STATE	FED.AID PROJ.NO.	SHEET NO.	TOTAL SHEETS
				6	ARK.			
				JOB NO.		050347	105	121

(2) CROSS SECTIONS

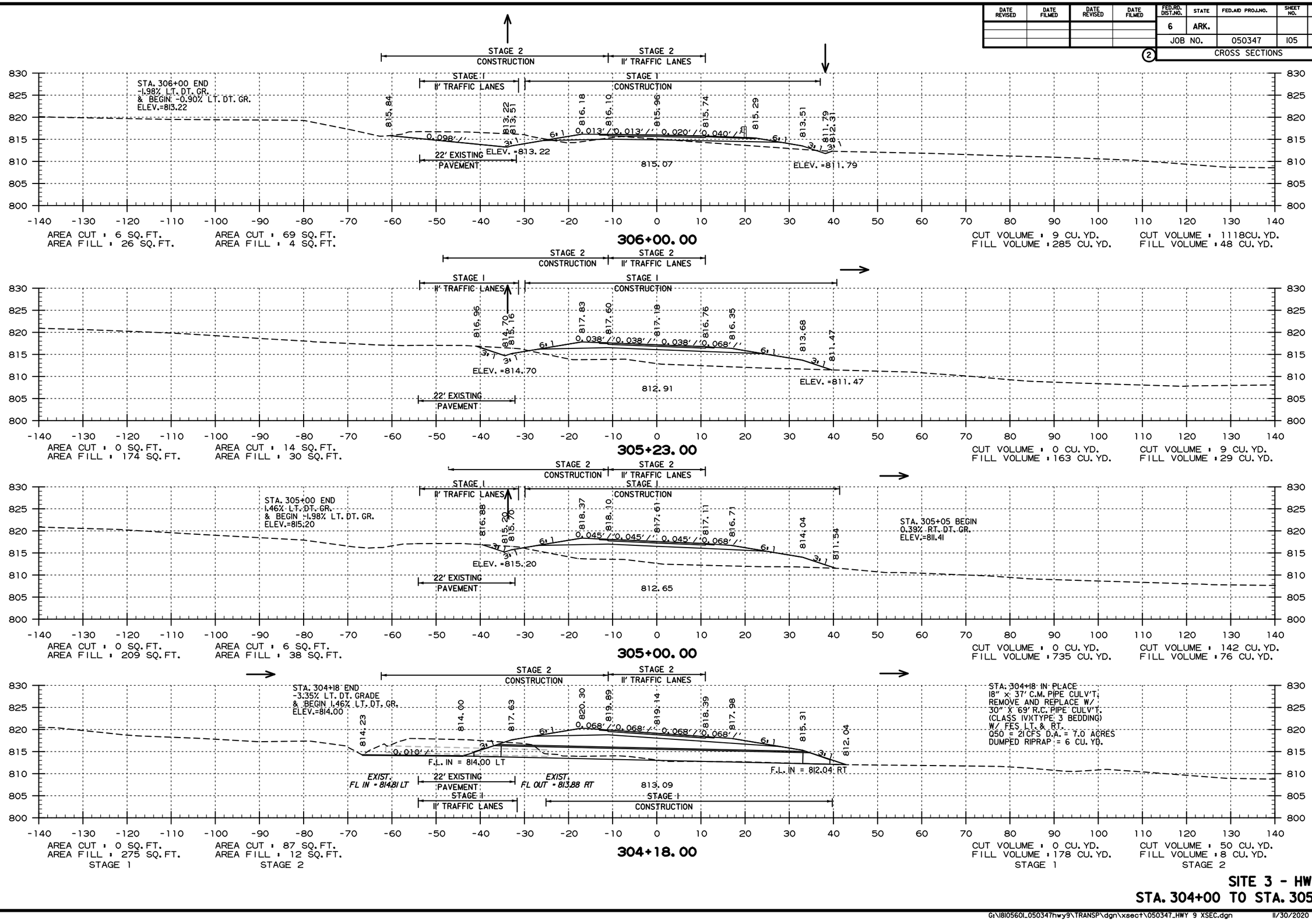

SITE 3 - HWY. 9
STA. 304+00 TO STA. 305+23

USER: ap5181
DESIGN FILE: G:\1810560I_050347hwy9\TRANSP\dgn\xsect\050347_HWY 9 XSEC.dgn
PLOTTED: 11/30/2020 12:24
SCALE: 1:20

G:\1810560I_050347hwy9\TRANSP\dgn\xsect\050347_HWY 9 XSEC.dgn 11/30/2020 12:24

DATE REVISED	DATE FILMED	DATE REVISED	DATE FILMED	FED.RD. DIST.NO.	STATE	FED.AID PROJ.NO.	SHEET NO.	TOTAL SHEETS
				6	ARK.			
				JOB NO.		050347	106	121

(2) CROSS SECTIONS

NOTE: SEE BRIDGE LAYOUTS FOR IMPROVEMENTS BETWEEN STA. 308+28.31 TO STA. 308+99.40

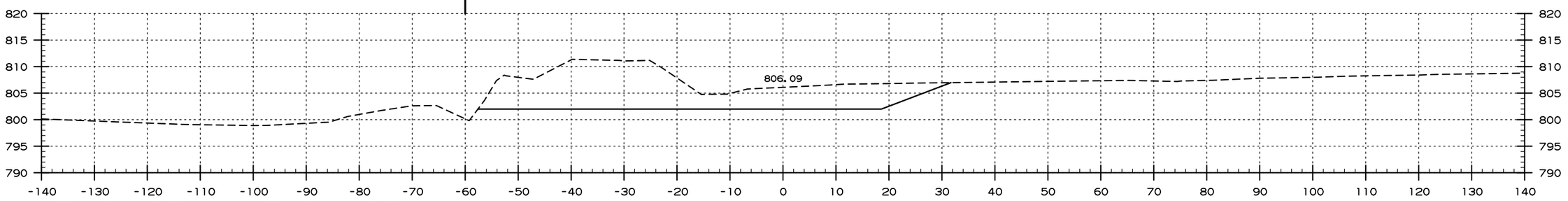

AREA CUT : 0 SQ.FT.
AREA FILL : 0 SQ.FT.

AREA CUT : 466 SQ.FT.
AREA FILL : 0 SQ.FT.

308+28.31 TOE OF SLOPE

CUT VOLUME : 0 CU.YD.
FILL VOLUME : 76 CU.YD.

CUT VOLUME : 193 CU.YD.
FILL VOLUME : 16 CU.YD.

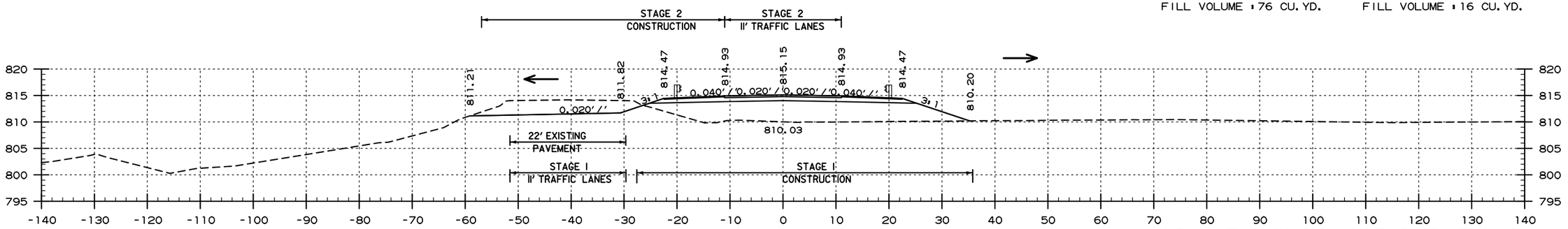

AREA CUT : 0 SQ.FT.
AREA FILL : 208 SQ.FT.

AREA CUT : 59 SQ.FT.
AREA FILL : 44 SQ.FT.

308+08.50 BRIDGE END

CUT VOLUME : 0 CU.YD.
FILL VOLUME : 55 CU.YD.

CUT VOLUME : 20 CU.YD.
FILL VOLUME : 13 CU.YD.

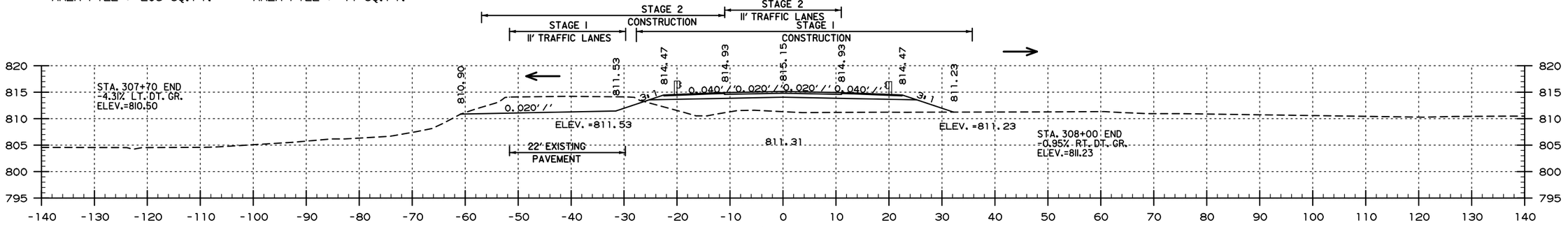

AREA CUT : 0 SQ.FT.
AREA FILL : 144 SQ.FT.

AREA CUT : 68 SQ.FT.
AREA FILL : 37 SQ.FT.

308+00.00

CUT VOLUME : 320 CU.YD.
FILL VOLUME : 267 CU.YD.

CUT VOLUME : 267 CU.YD.
FILL VOLUME : 69 CU.YD.

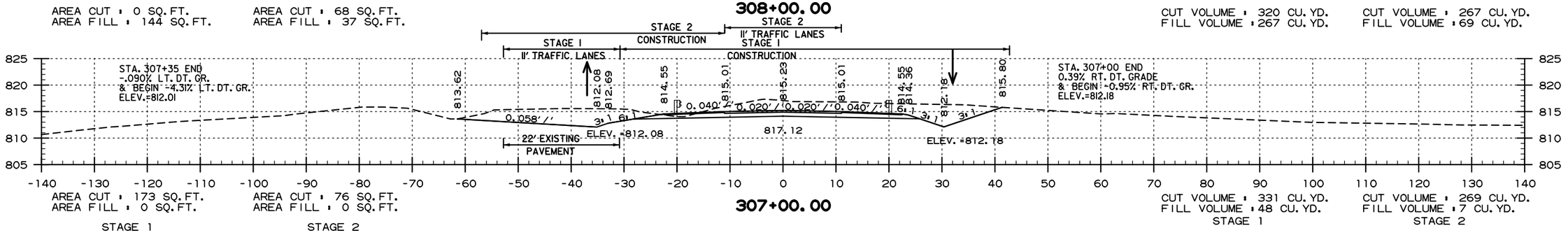

AREA CUT : 173 SQ.FT.
AREA FILL : 0 SQ.FT.
STAGE 1

AREA CUT : 76 SQ.FT.
AREA FILL : 0 SQ.FT.
STAGE 2

307+00.00

CUT VOLUME : 331 CU.YD.
FILL VOLUME : 48 CU.YD.
STAGE 1

CUT VOLUME : 269 CU.YD.
FILL VOLUME : 7 CU.YD.
STAGE 2

SITE 3 - HWY. 9
STA. 306+00 TO STA. 308+09

USER: ap5181
DESIGN FILE: G:\18105601_050347hwy9\TRANSP\dgn\xsect\050347_HWY 9 XSEC.dgn
PLOTTED: 11/30/2020 12:24
SCALE: 1:20

G:\18105601_050347hwy9\TRANSP\dgn\xsect\050347_HWY 9 XSEC.dgn 11/30/2020 12:24

DATE REVISED	DATE FILMED	DATE REVISED	DATE FILMED

FED.RD. DIST.NO.	STATE	FED.AID PROJ.NO.	SHEET NO.	TOTAL SHEETS
6	ARK.			
JOB NO.		050347	107	121

(2) CROSS SECTIONS

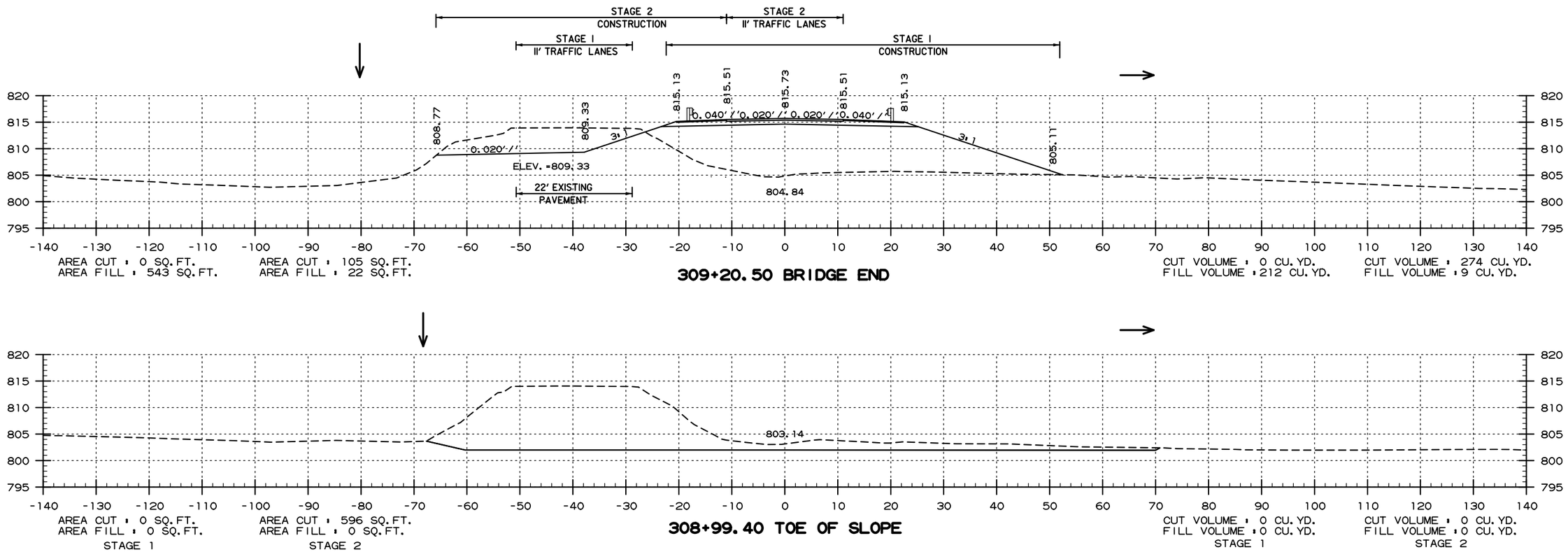

SITE 3 - HWY. 9
STA. 308+28 TO STA. 309+21

USER: dp5181
DESIGN FILE: G:\181056O1_050347hwy9\TRANSP\dgn\xsect\050347_HWY 9 XSEC.dgn
PLOTTED: 11/30/2020 12:24
SCALE: 1:20

G:\181056O1_050347hwy9\TRANSP\dgn\xsect\050347_HWY 9 XSEC.dgn 11/30/2020 12:24

DATE REVISED	DATE FILMED	DATE REVISED	DATE FILMED	FED.RD. DIST.NO.	STATE	FED.AID PROJ.NO.	SHEET NO.	TOTAL SHEETS
				6	ARK.			
				JOB NO.		050347	108	121

(2) CROSS SECTIONS

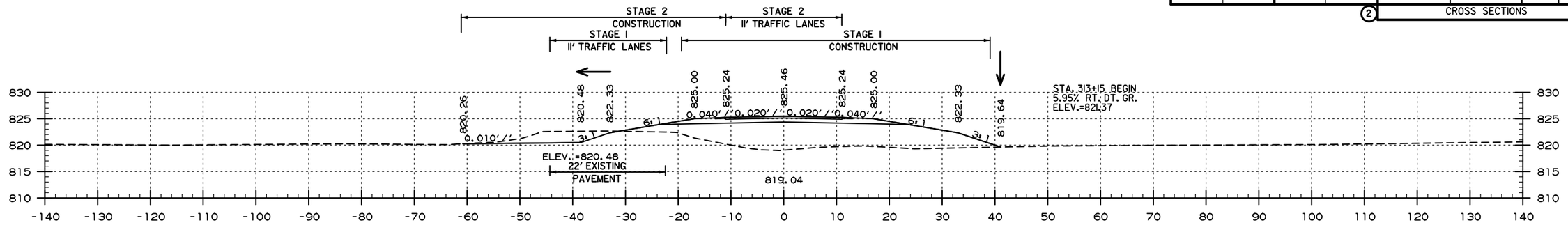

AREA CUT = 0 SQ.FT. AREA FILL = 229 SQ.FT.
AREA CUT = 32 SQ.FT. AREA FILL = 16 SQ.FT.

313+00.00

CUT VOLUME = 0 CU.YD. FILL VOLUME = 1606 CU.YD.
CUT VOLUME = 104 CU.YD. FILL VOLUME = 113 CU.YD.

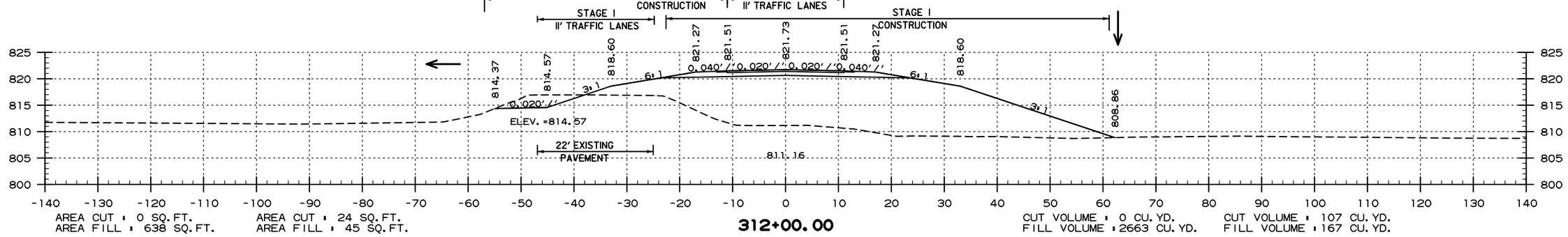

AREA CUT = 0 SQ.FT. AREA FILL = 638 SQ.FT.
AREA CUT = 24 SQ.FT. AREA FILL = 45 SQ.FT.

312+00.00

CUT VOLUME = 0 CU.YD. FILL VOLUME = 2663 CU.YD.
CUT VOLUME = 107 CU.YD. FILL VOLUME = 167 CU.YD.

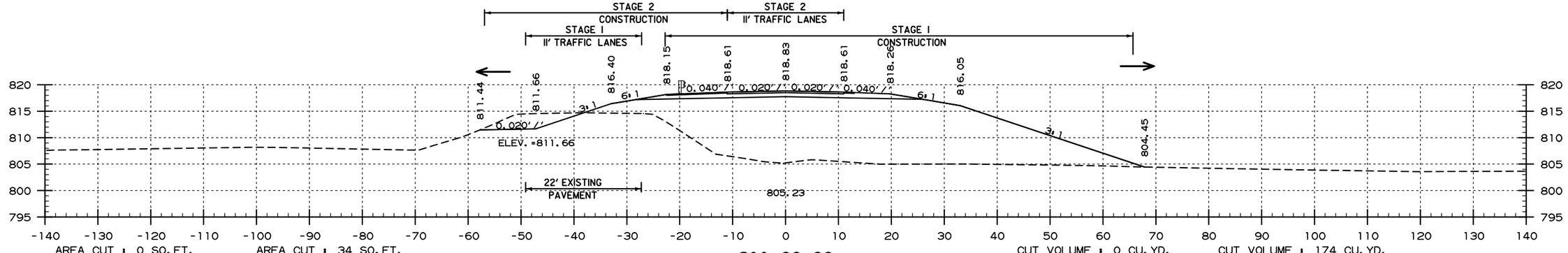

AREA CUT = 0 SQ.FT. AREA FILL = 800 SQ.FT.
AREA CUT = 34 SQ.FT. AREA FILL = 45 SQ.FT.

311+00.00

CUT VOLUME = 0 CU.YD. FILL VOLUME = 2769 CU.YD.
CUT VOLUME = 174 CU.YD. FILL VOLUME = 137 CU.YD.

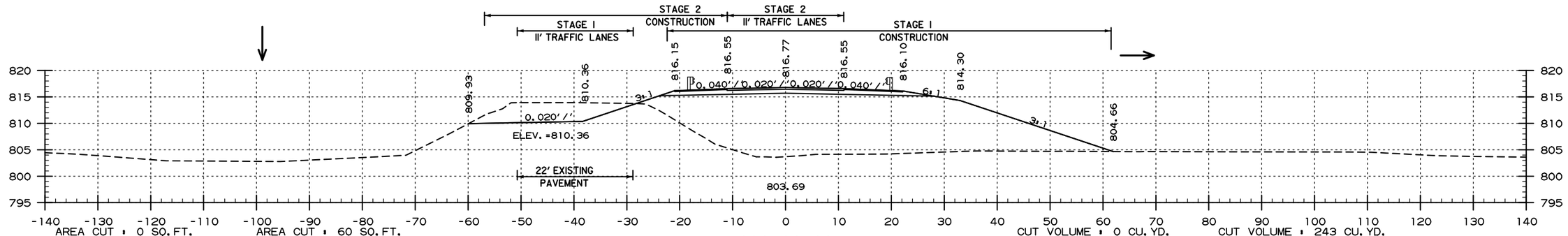

AREA CUT = 0 SQ.FT. AREA FILL = 695 SQ.FT. STAGE 1
AREA CUT = 60 SQ.FT. AREA FILL = 29 SQ.FT. STAGE 2

310+00.00

CUT VOLUME = 0 CU.YD. FILL VOLUME = 1823 CU.YD. STAGE 1
CUT VOLUME = 243 CU.YD. FILL VOLUME = 75 CU.YD. STAGE 2

SITE 3 - HWY. 9
STA. 310+00 TO STA. 313+00

USER: qp5181
DESIGN FILE: G:\1810560I_050347hwy9\TRANSP\dgn\xsect\050347_HWY 9 XSEC.dgn
PLOTTED: 11/30/2020 12:24
SCALE: 1:20

G:\1810560I_050347hwy9\TRANSP\dgn\xsect\050347_HWY 9 XSEC.dgn 11/30/2020 12:24

DATE REVISED	DATE FILMED	DATE REVISED	DATE FILMED

FED.RD. DIST.NO.	STATE	FED.AID PROJ.NO.	SHEET NO.	TOTAL SHEETS
6	ARK.			
JOB NO.		050347	109	121

(2) CROSS SECTIONS

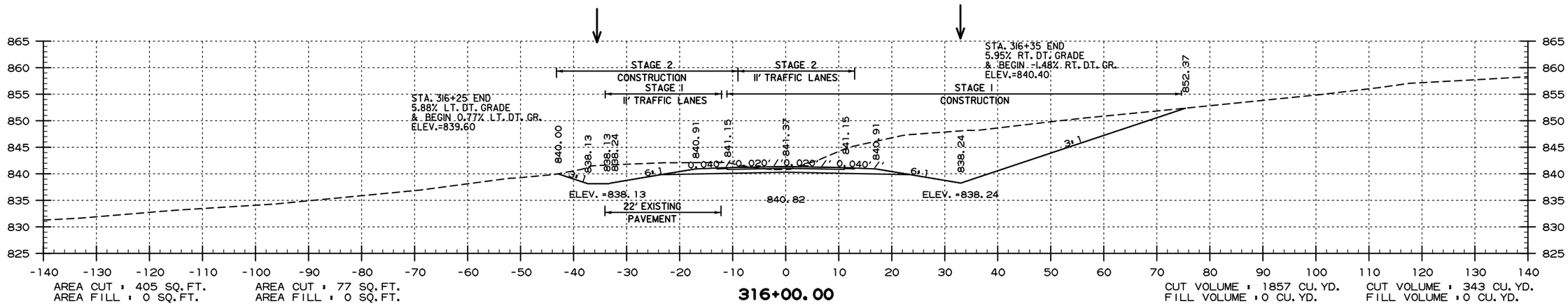

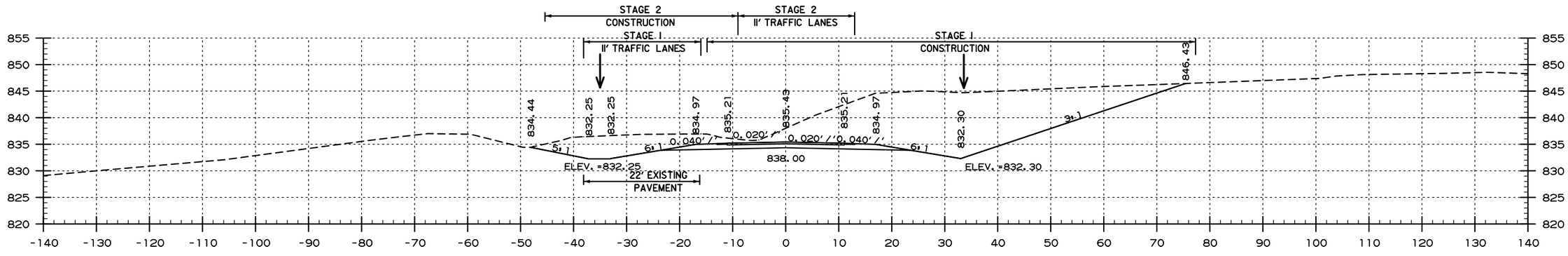

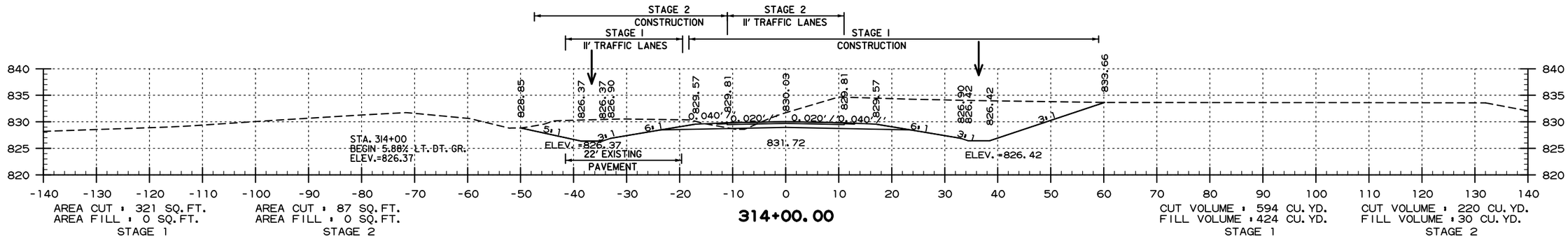

SITE 3 - HWY. 9
STA. 314+00 TO STA. 316+00

USER: qp5181
DESIGN FILE: G:\18105601_050347hwy9\TRANSP\dgn\xsect\050347_HWY 9 XSEC.dgn
PLOTTED: 11/30/2020 12:24
SCALE: 1:20

DATE REVISED	DATE FILMED	DATE REVISED	DATE FILMED

FED.RD. DIST.NO.	STATE	FED.AID PROJ.NO.	SHEET NO.	TOTAL SHEETS
6	ARK.			
JOB NO.		050347	110	121
(2)	CROSS SECTIONS			

SITE 3 - HWY. 9
STA. 316+56 TO STA. 318+00

USER: ap5181
DESIGN FILE: G:\1810560L.050347hwy9\TRANSP\dgn\xsect\050347_HWY 9 XSEC.dgn
PLOTTED: 11/30/2020 12:24
SCALE: 1:20

G:\1810560L_050347hwy9\TRANSP\dgn\xsect\050347_HWY 9 XSEC.dgn 11/30/2020 12:24

DATE REVISED	DATE FILMED	DATE REVISED	DATE FILMED	FED.RD. DIST.NO.	STATE	FED.AID PROJ.NO.	SHEET NO.	TOTAL SHEETS
				6	ARK.			
				JOB NO.		050347	III	121
				(2)	CROSS SECTIONS			

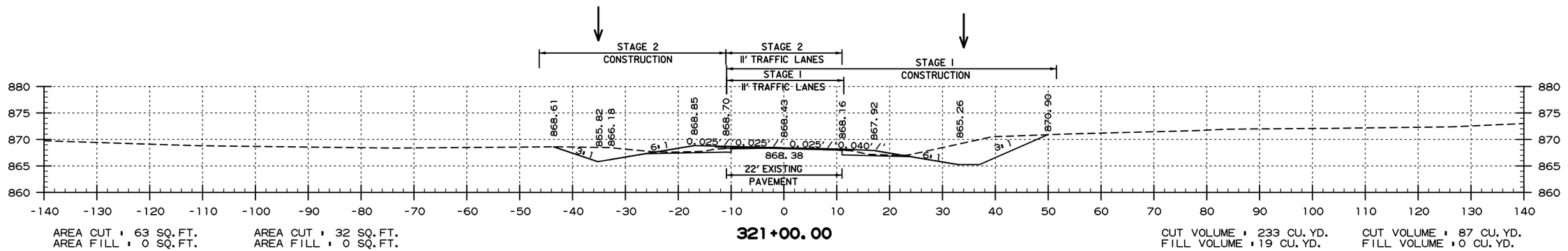

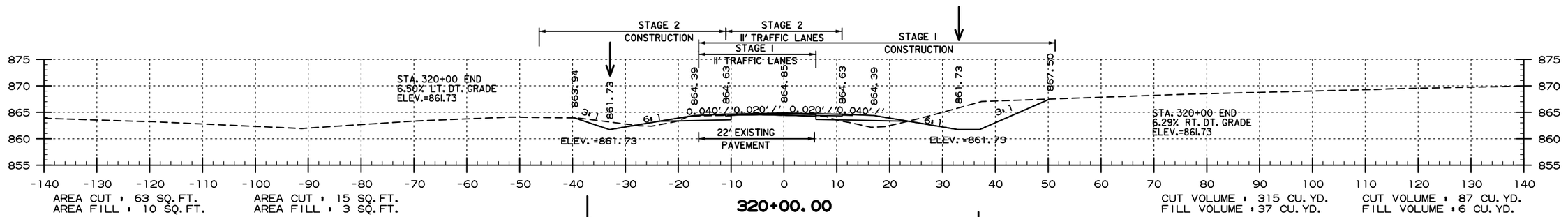

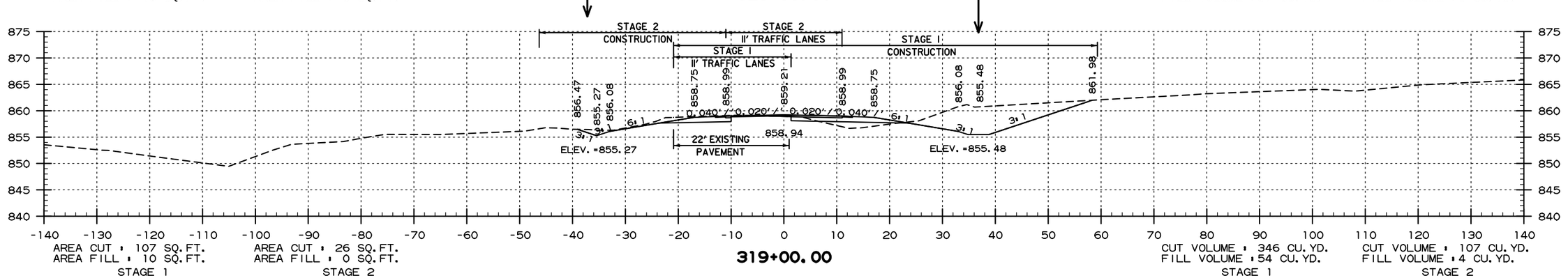

SITE 3 - HWY. 9
STA. 319+00 TO STA. 321+45

USER: ap518l
DESIGN FILE: G:\18105601_050347hwy9\TRANSP\dgn\xsect\050347_HWY 9 XSEC.dgn
PLOTTED: 11/30/2020 12:24
SCALE: 1:20

G:\18105601_050347hwy9\TRANSP\dgn\xsect\050347_HWY 9 XSEC.dgn 11/30/2020 12:24

DATE REVISED	DATE FILMED	DATE REVISED	DATE FILMED

FED.RD. DIST.NO.	STATE	FED.AID PROJ.NO.	SHEET NO.	TOTAL SHEETS
6	ARK.			
JOB NO.		050347	112	121

(2)

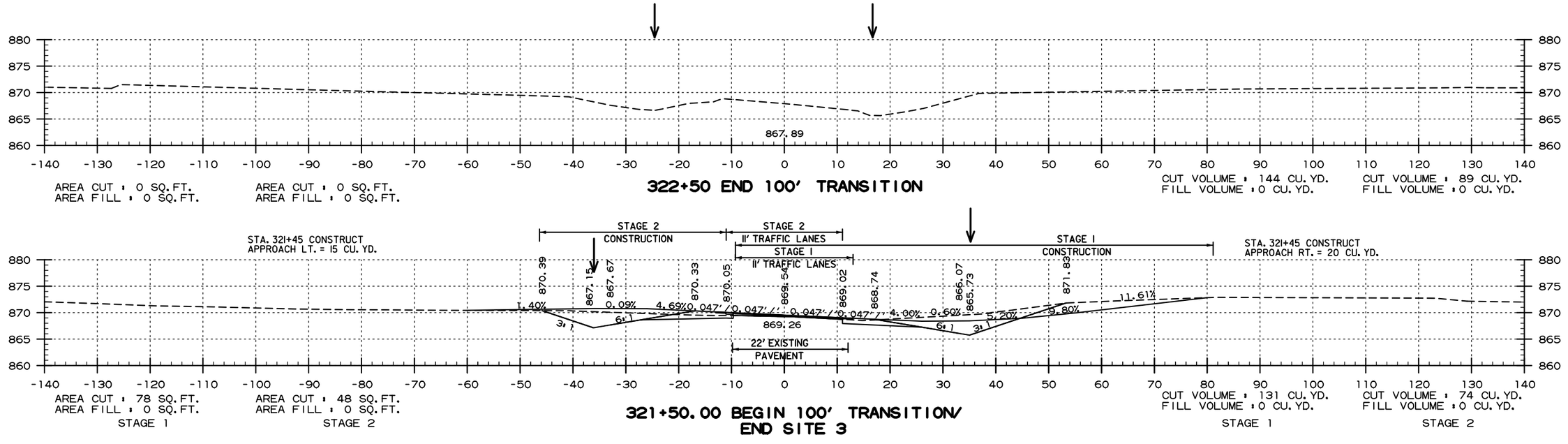

SITE 3 - HWY. 9
STA. 321+50 TO STA. 322+50

USER: qp5181
DESIGN FILE: G:\1810560I_050347hwy9\TRANSP\dgn\xsect\050347_HWY 9 XSEC.dgn
PLOTTED: 11/30/2020 12:24
SCALE: 1:20

DATE REVISED	DATE FILMED	DATE REVISED	DATE FILMED	FED.RD. DIST.NO.	STATE	FED.AID PROJ.NO.	SHEET NO.	TOTAL SHEETS
				6	ARK.			
				JOB NO.		050347	113	121

(2) CROSS SECTIONS

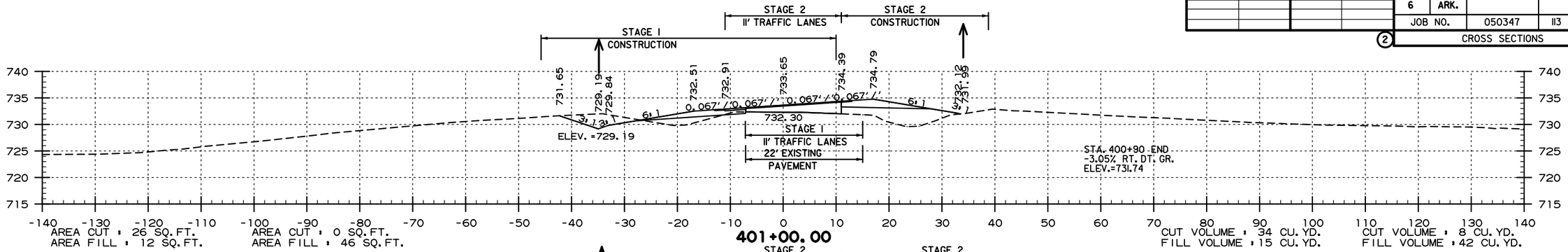

401+00.00

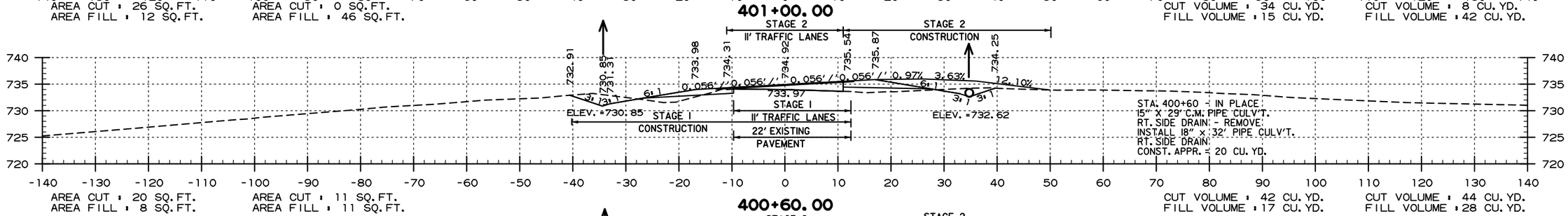

400+60.00

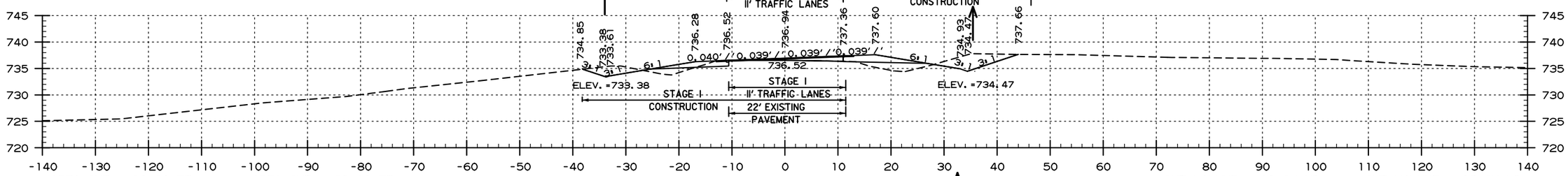

400+00.00

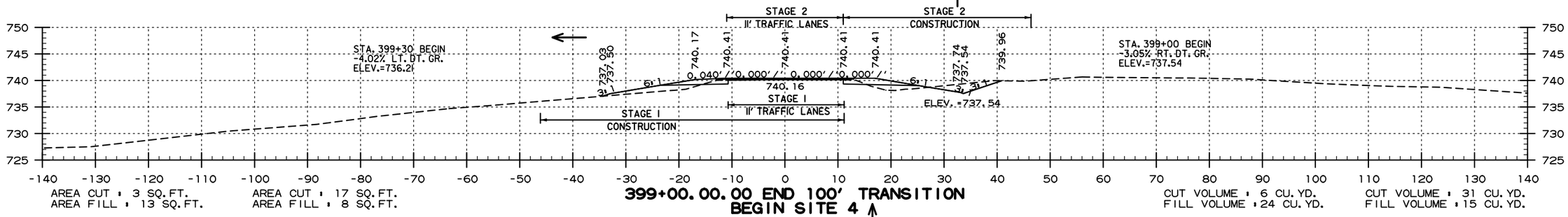

399+00.00. 00 END 100' TRANSITION
BEGIN SITE 4

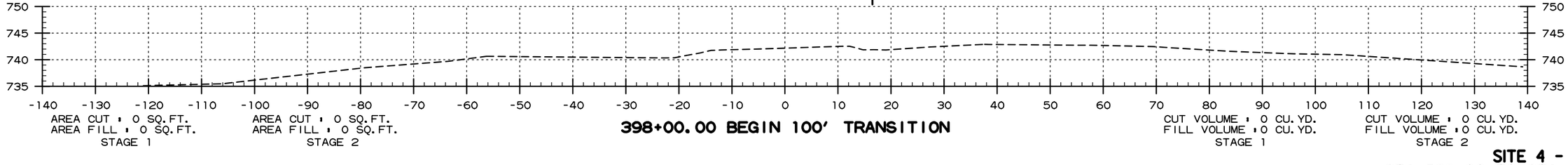

398+00.00 BEGIN 100' TRANSITION

SITE 4 - HWY. 9
STA. 398+00 TO STA. 401+00

USER: ap5181
DESIGN FILE: G:\181056\01_050347hwy9\TRANSP\dgn\xsect\050347_HWY 9 XSEC.dgn
PLOTTED: 11/30/2020 12:24
SCALE: 1:20

G:\181056\01_050347hwy9\TRANSP\dgn\xsect\050347_HWY 9 XSEC.dgn 11/30/2020 12:24

DATE REVISED	DATE FILMED	DATE REVISED	DATE FILMED	FED.RD. DIST.NO.	STATE	FED.AID PROJ.NO.	SHEET NO.	TOTAL SHEETS
				6	ARK.			
				JOB NO.		050347	114	121

(2) CROSS SECTIONS

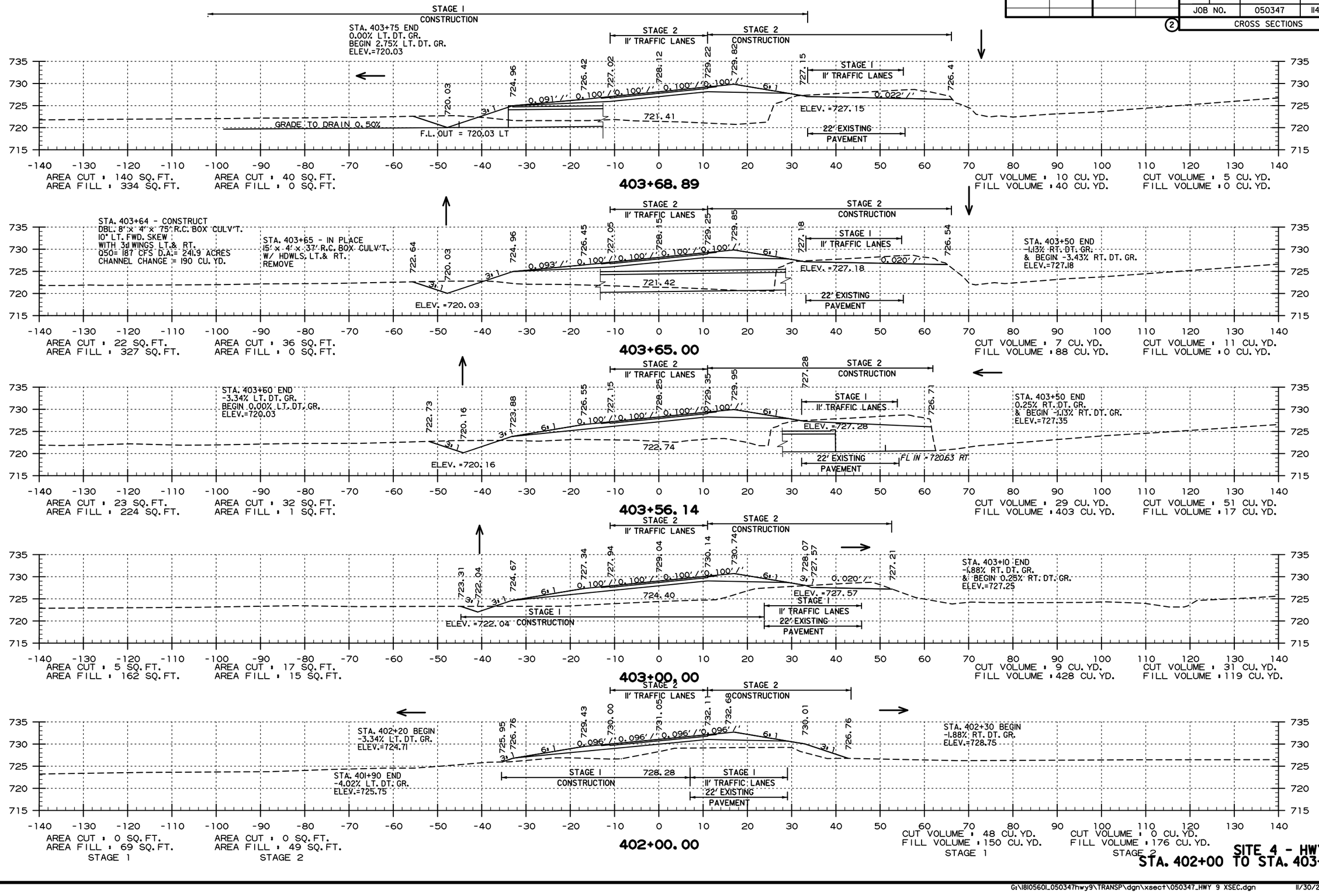

SITE 4 - HWY. 9
STA. 402+00 TO STA. 403+68

USER: qp518I
DESIGN FILE: G:\I8I0560I_050347hwy9\TRANSP\dgn\xsect\050347_HWY 9 XSEC.dgn
PLOTTED: II/30/2020 I2:24
SCALE: I:20

G:\I8I0560I_050347hwy9\TRANSP\dgn\xsect\050347_HWY 9 XSEC.dgn II/30/2020 I2:24

DATE REVISED	DATE FILMED	DATE REVISED	DATE FILMED	FED.RD. DIST.NO.	STATE	FED.AID PROJ.NO.	SHEET NO.	TOTAL SHEETS
				6	ARK.			
				JOB NO.		050347	115	121
				(2)	CROSS SECTIONS			

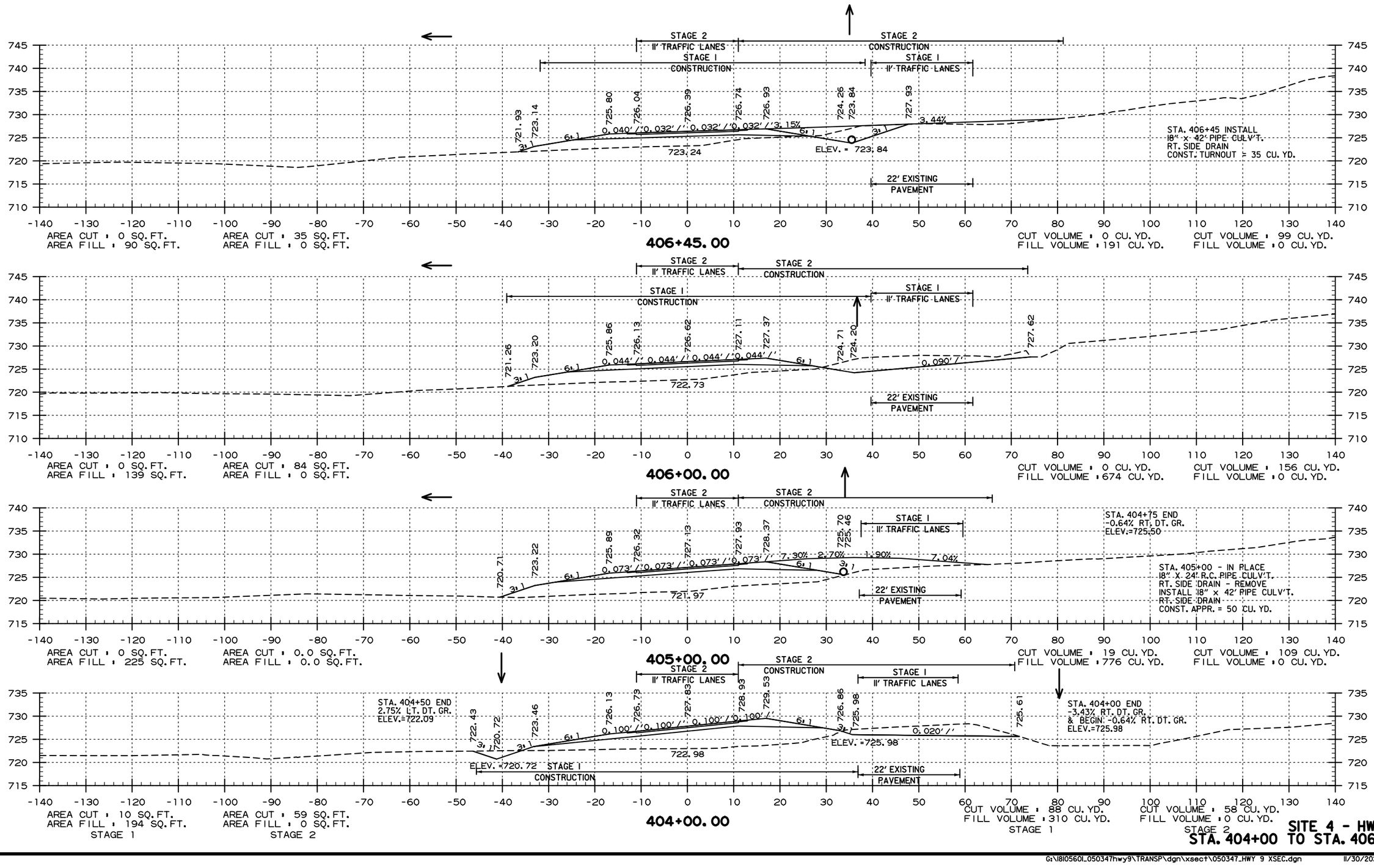

SITE 4 - HWY. 9
STA. 404+00 TO STA. 406+45

USER: ap5181
DESIGN FILE: G:\1810560_050347hwy9\TRANSP\dgn\xsect\050347_HWY 9 XSEC.dgn
PLOTTED: 11/30/2020 12:24
SCALE: 1:20

G:\1810560_050347hwy9\TRANSP\dgn\xsect\050347_HWY 9 XSEC.dgn 11/30/2020 12:24

DATE REVISED	DATE FILMED	DATE REVISED	DATE FILMED

FED.RD. DIST.NO.	STATE	FED.AID PROJ.NO.	SHEET NO.	TOTAL SHEETS
6	ARK.			
JOB NO.		050347	116	121

(2) CROSS SECTIONS

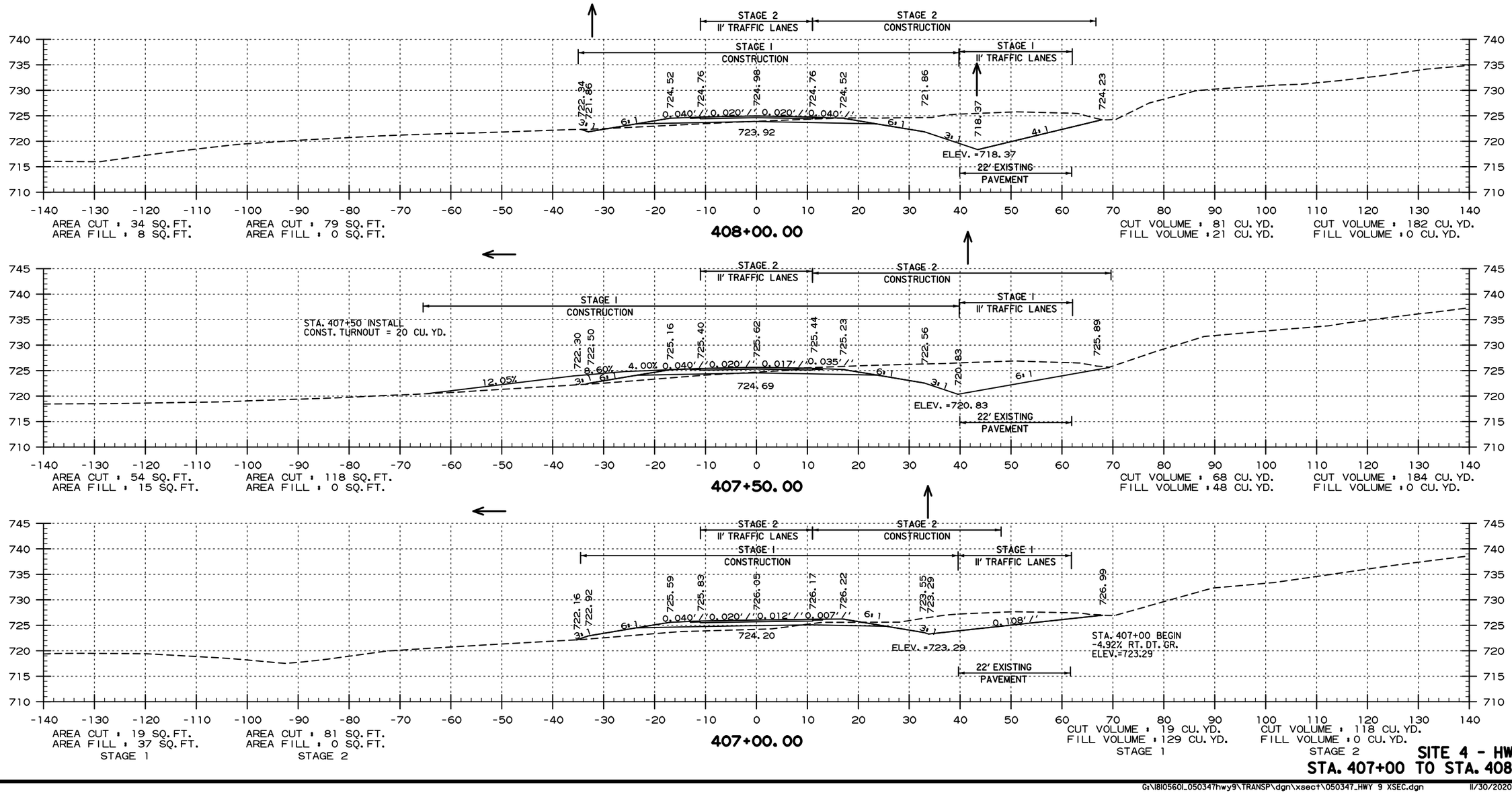

SITE 4 - HWY. 9
STA. 407+00 TO STA. 408+00

USER: qp5181
DESIGN FILE: G:\181056O1_050347hwy9\TRANSP\dgn\xsect\050347_HWY 9 XSEC.dgn
PLOTTED: 11/30/2020 12:24
SCALE: 1:20

G:\181056O1_050347hwy9\TRANSP\dgn\xsect\050347_HWY 9 XSEC.dgn 11/30/2020 12:24

DATE REVISED	DATE FILMED	DATE REVISED	DATE FILMED	FED.RD. DIST.NO.	STATE	FED.AID PROJ.NO.	SHEET NO.	TOTAL SHEETS
				6	ARK.			
				JOB NO.		050347	117	121

(2) CROSS SECTIONS

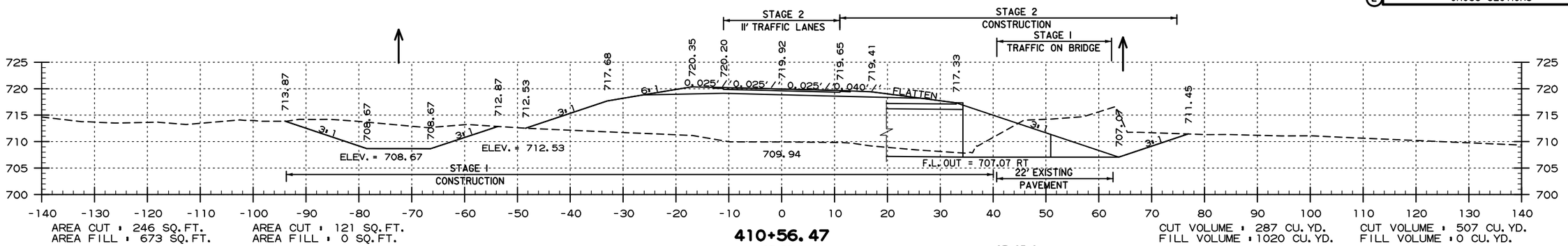

AREA CUT = 246 SQ.FT.
AREA FILL = 673 SQ.FT.

AREA CUT = 121 SQ.FT.
AREA FILL = 0 SQ.FT.

410+56.47

CUT VOLUME = 287 CU.YD.
FILL VOLUME = 1020 CU.YD.

CUT VOLUME = 507 CU.YD.
FILL VOLUME = 0 CU.YD.

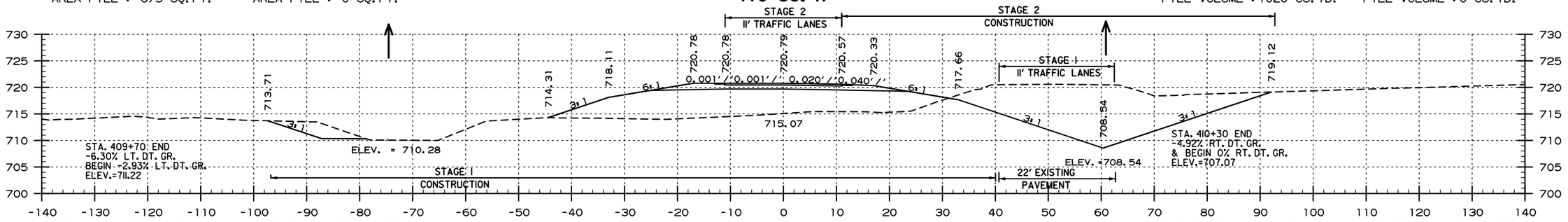

AREA CUT = 28 SQ.FT.
AREA FILL = 302 SQ.FT.

AREA CUT = 364 SQ.FT.
AREA FILL = 0 SQ.FT.

410+00.00

CUT VOLUME = 137 CU.YD.
FILL VOLUME = 559 CU.YD.

CUT VOLUME = 1130 CU.YD.
FILL VOLUME = 0 CU.YD.

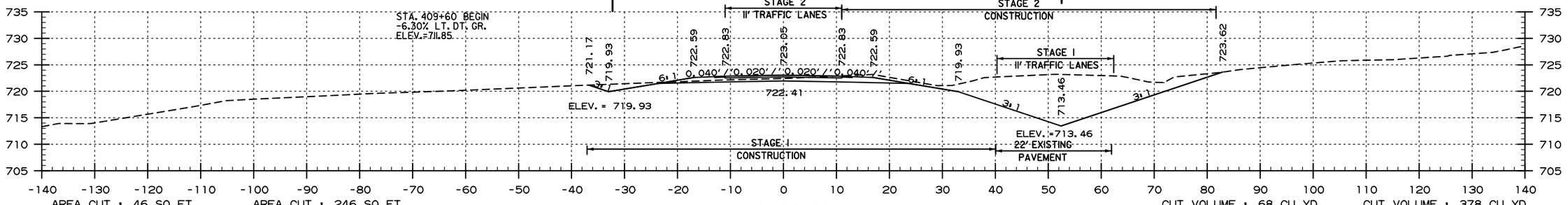

AREA CUT = 46 SQ.FT.
AREA FILL = 0 SQ.FT.

AREA CUT = 246 SQ.FT.
AREA FILL = 0 SQ.FT.

409+00.00

CUT VOLUME = 68 CU.YD.
FILL VOLUME = 0 CU.YD.

CUT VOLUME = 378 CU.YD.
FILL VOLUME = 0 CU.YD.

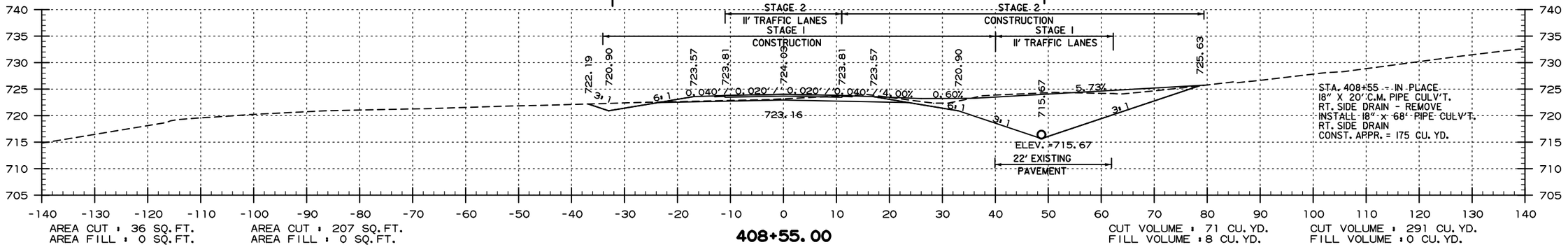

AREA CUT = 36 SQ.FT.
AREA FILL = 0 SQ.FT.
STAGE 1

AREA CUT = 207 SQ.FT.
AREA FILL = 0 SQ.FT.
STAGE 2

408+55.00

CUT VOLUME = 71 CU.YD.
FILL VOLUME = 8 CU.YD.
STAGE 1

CUT VOLUME = 291 CU.YD.
FILL VOLUME = 0 CU.YD.
STAGE 2

SITE 4 - HWY. 9
STA. 408+55 TO STA. 410+56

USER: qp5181
DESIGN FILE: G:\1810560I_050347hwy9\TRANSP\dgn\xsect\050347_HWY 9 XSEC.dgn
PLOTTED: 11/30/2020 12:24
SCALE: 1:20

G:\1810560I_050347hwy9\TRANSP\dgn\xsect\050347_HWY 9 XSEC.dgn 11/30/2020 12:24

DATE REVISED	DATE FILMED	DATE REVISED	DATE FILMED	FED.RD. DIST.NO.	STATE	FED.AID PROJ.NO.	SHEET NO.	TOTAL SHEETS
				6	ARK.			
				JOB NO.		050347	118	121

(2) CROSS SECTIONS

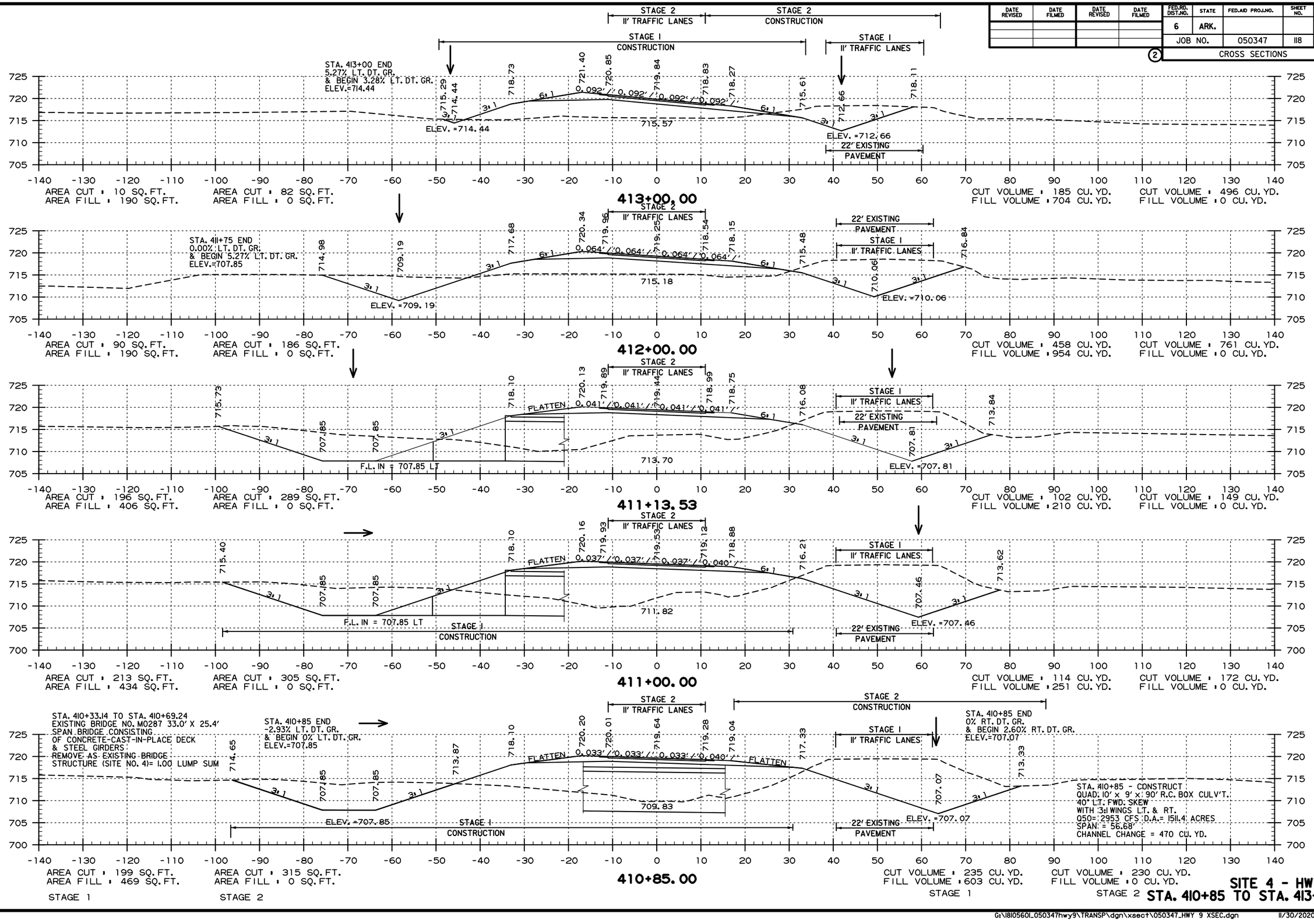

USER: qp5181
DESIGN FILE: G:\1810560_050347hwy9\TRANSP\dgn\xsect\050347_HWY 9 XSEC.dgn
PLOTTED: 11/30/2020 12:24
SCALE: 1:20

G:\1810560_050347hwy9\TRANSP\dgn\xsect\050347_HWY 9 XSEC.dgn 11/30/2020 12:24

DATE REVISED	DATE FILMED	DATE REVISED	DATE FILMED	FED.RD. DIST.NO.	STATE	FED.AID PROJ.NO.	SHEET NO.	TOTAL SHEETS
				6	ARK.			
				JOB NO.		050347	119	121

(2) CROSS SECTIONS

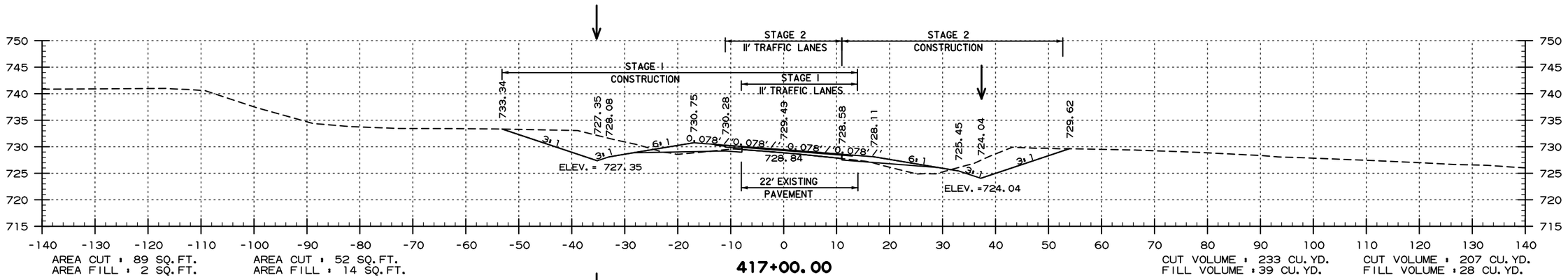

417+00.00

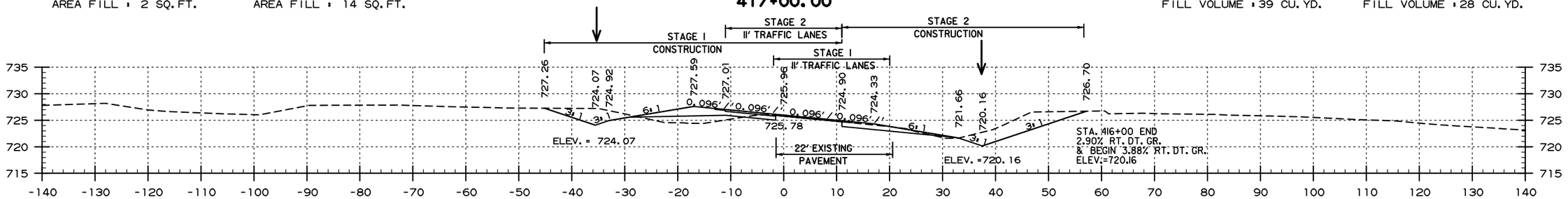

416+00.00

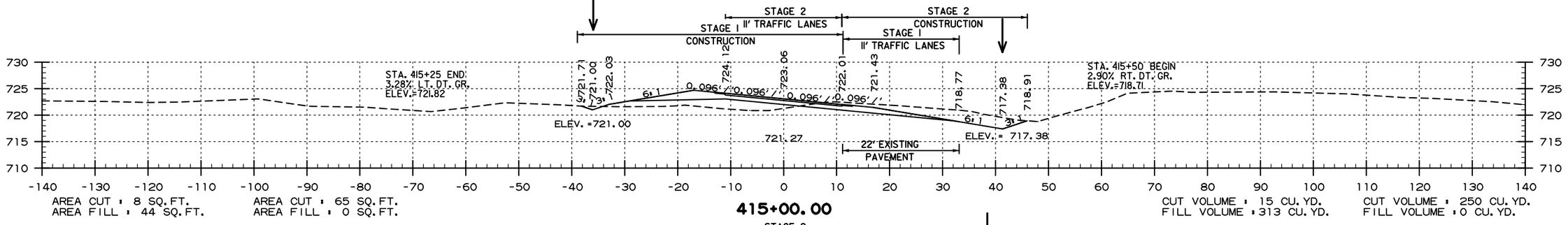

415+00.00

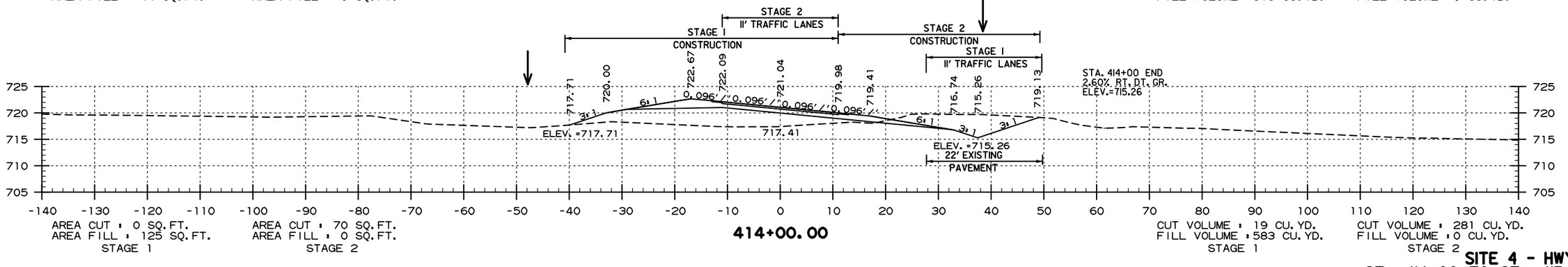

414+00.00

SITE 4 - HWY. 9
STA. 414+00 TO STA. 417+00

USER: qp5181
DESIGN FILE: G:\1810560I_050347hwy9\TRANSP\dgn\xsect\050347_HWY 9 XSEC.dgn
PLOTTED: 11/30/2020 12:24
SCALE: 1:20

DATE REVISED	DATE FILMED	DATE REVISED	DATE FILMED	FED.RD. DIST.NO.	STATE	FED.AID PROJ.NO.	SHEET NO.	TOTAL SHEETS
				6	ARK.			
				JOB NO.		050347	I20	I21
				(2)	CROSS SECTIONS			

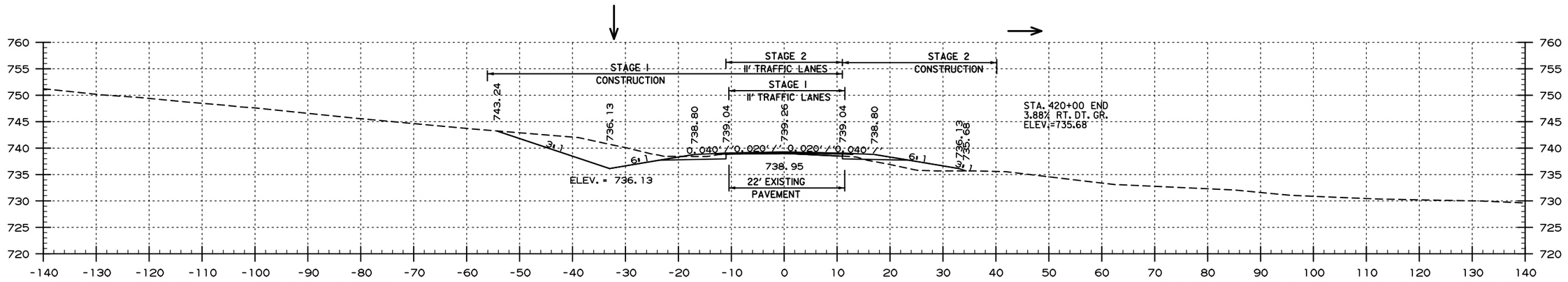

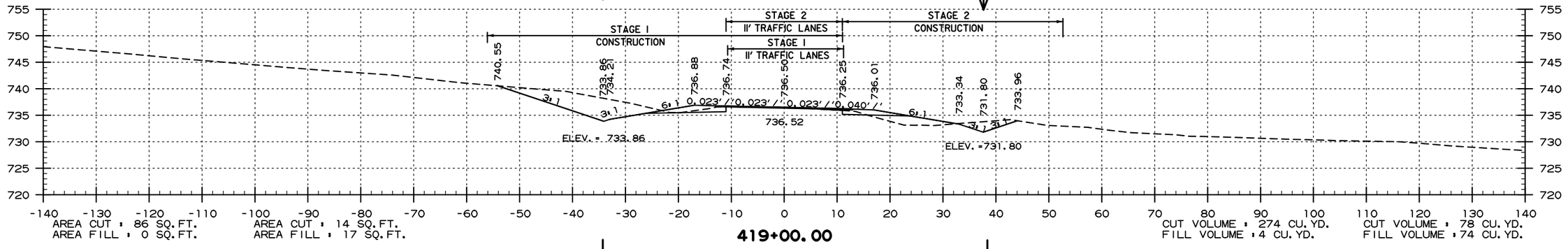

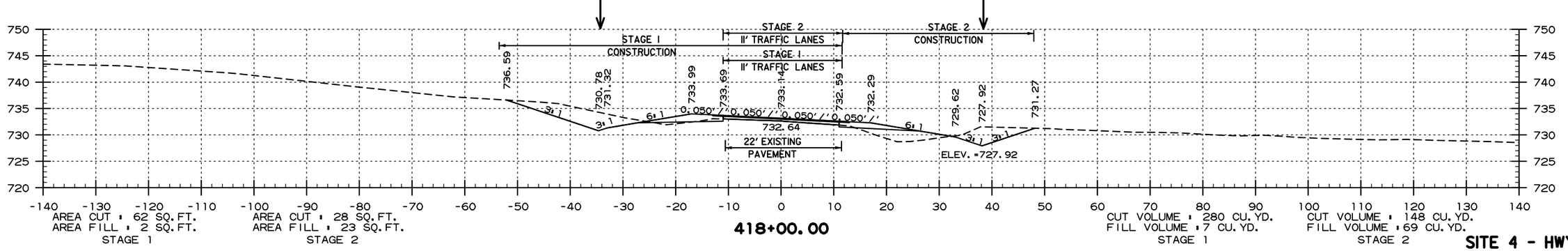

SITE 4 - HWY. 9
STA. 418+00 TO STA. 420+00

USER: qp5181
DESIGN FILE: G:\1810560I_050347hwy9\TRANSP\dgn\xsect\050347_HWY 9 XSEC.dgn
PLOTTED: 11/30/2020 12:24
SCALE: 1:20

G:\1810560I_050347hwy9\TRANSP\dgn\xsect\050347_HWY 9 XSEC.dgn 11/30/2020 12:24

DATE REVISED	DATE FILMED	DATE REVISED	DATE FILMED

FED.RD. DIST.NO.	STATE	FED.AID PROJ.NO.	SHEET NO.	TOTAL SHEETS
6	ARK.			
JOB NO.		050347	121	121

2 CROSS SECTIONS

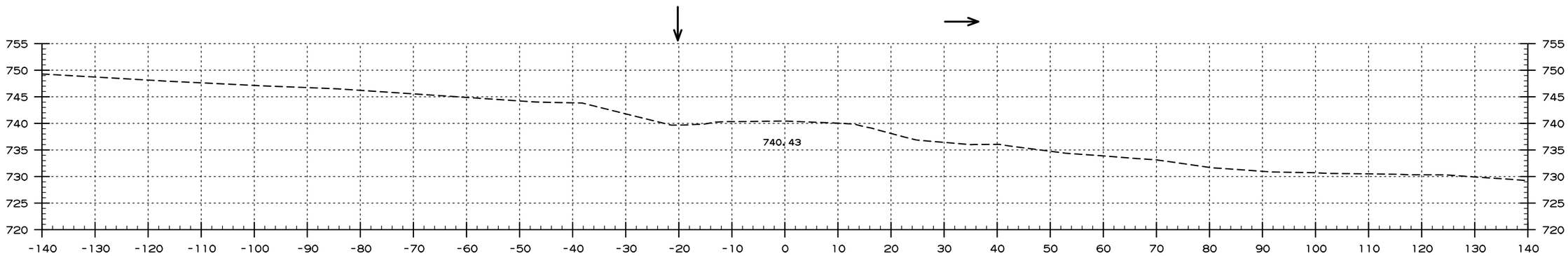

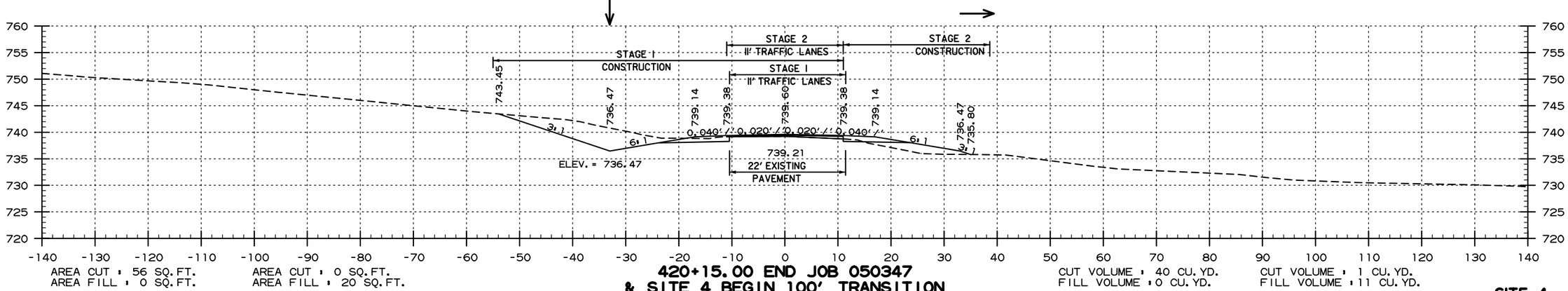

SITE 4 - HWY. 9
STA. 420+15 TO STA. 421+15

USER: qp5181
DESIGN FILE: G:\1810560_050347hwy9\TRANSP\dgn\xsect\050347_HWY 9 XSEC.dgn
PLOTTED: 11/30/2020 12:24
SCALE: h20

G:\1810560_050347hwy9\TRANSP\dgn\xsect\050347_HWY 9 XSEC.dgn 11/30/2020 12:24

DATE REVISED	DATE FILMED	DATE REVISED	DATE FILMED	FED. ROAD DIST. NO.	STATE	FED. AID PROJ. NO.	SHEET NO.	TOTAL SHEETS
				6	ARK.			
				JOB NO.				

1 EMBANKMENT & BACKFILL 55000

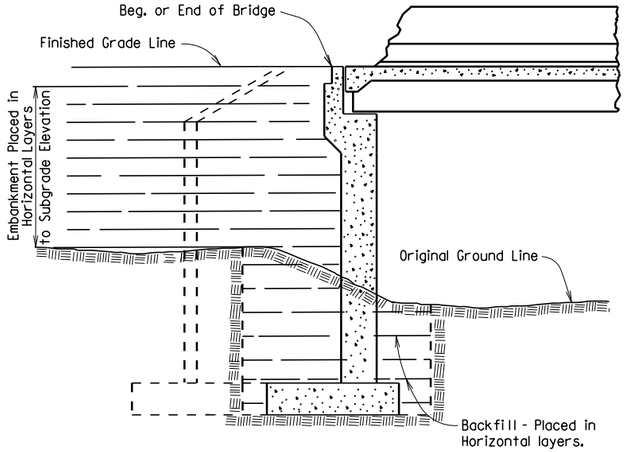

EMBANKMENT CONSTRUCTION AND FOOTING BACKFILL AT VERTICAL WALL ABUTMENTS

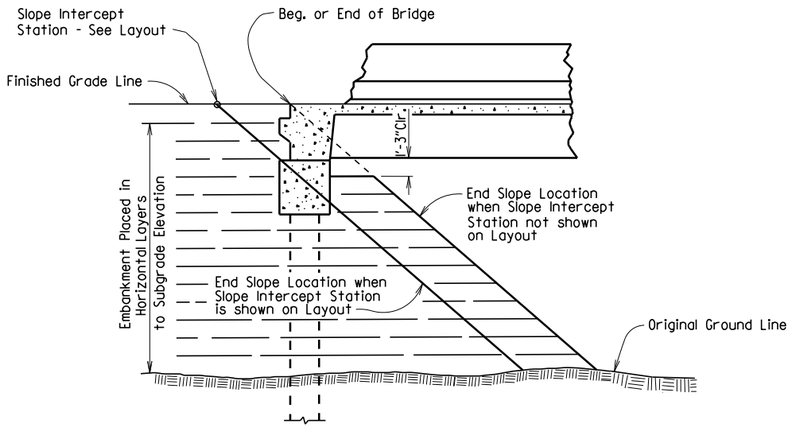

EMBANKMENT CONSTRUCTION AT SPILL-THROUGH PILE END BENTS

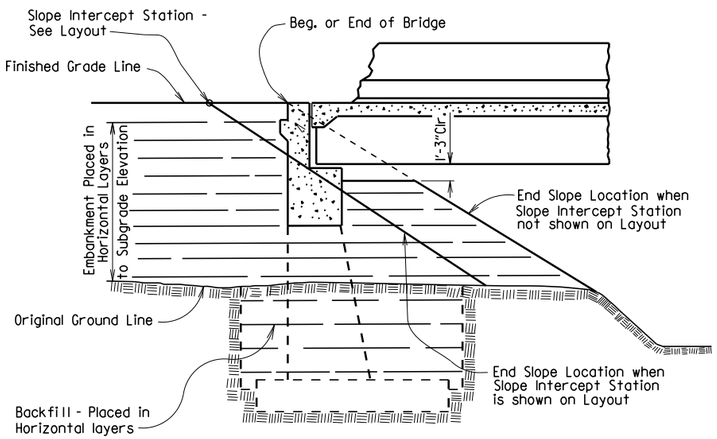

EMBANKMENT CONSTRUCTION AND FOOTING BACKFILL AT SPILL-THROUGH END BENTS

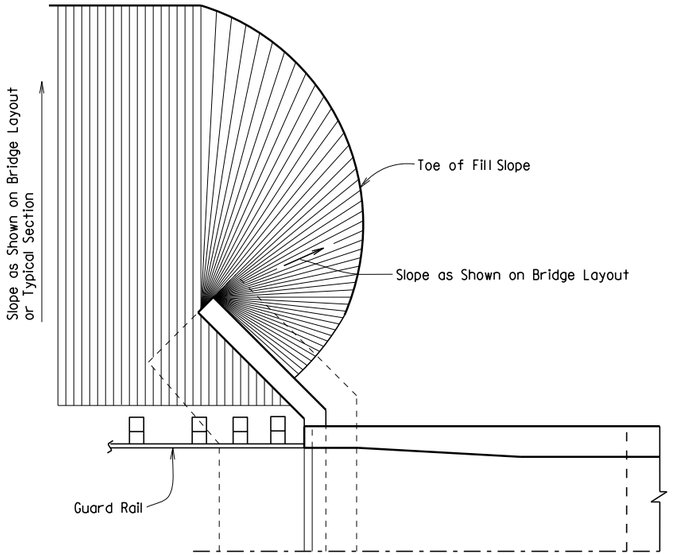

VERTICAL WALL ABUTMENTS

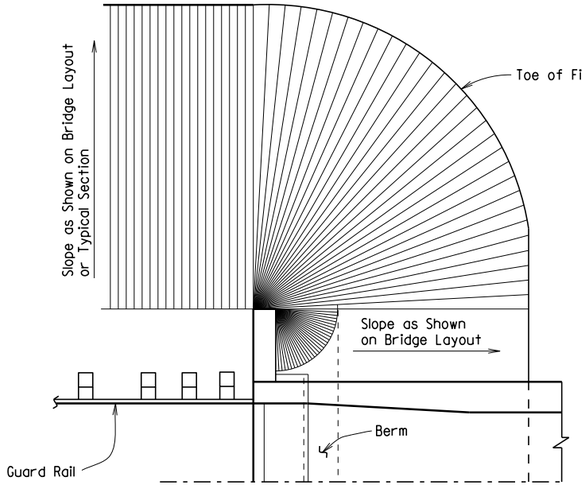

SPILL-THROUGH END BENTS WITH STUB WING

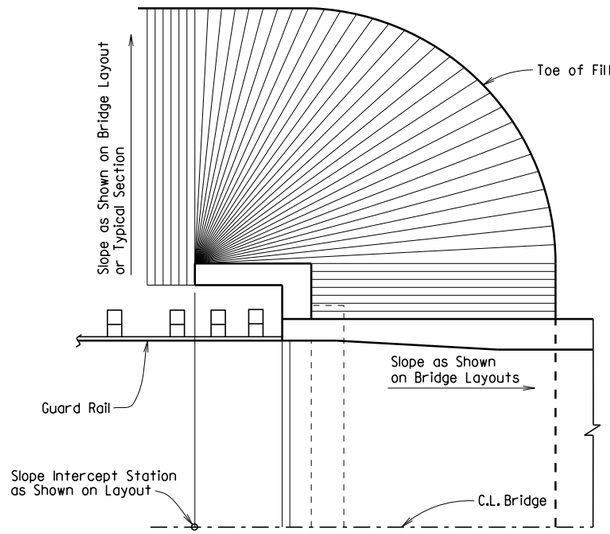

SPILL-THROUGH END BENTS WITH TURNBACK WING

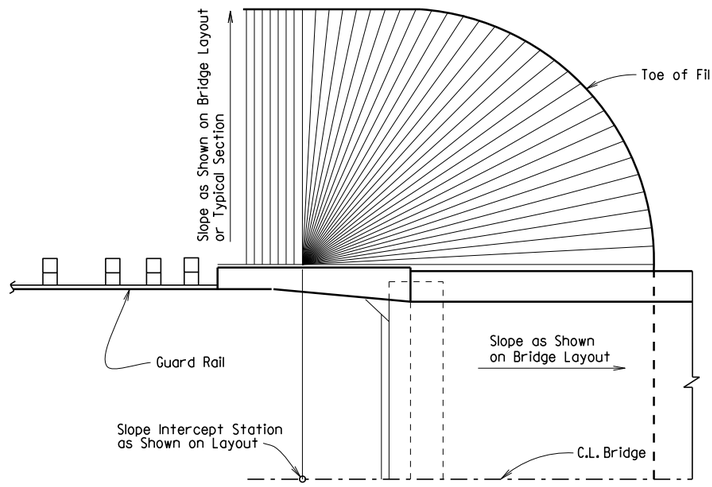

SPILL-THROUGH END BENTS WITH TRANSITION WING

METHOD OF DETERMINING FILL SLOPE LOCATION AT BRIDGE ENDS

GENERAL NOTES

The Bridge End Embankment shall be defined as a section of embankment, not less than 20 feet long adjacent to the bridge end, together with the side slopes and slopes under the bridge end including around the end of wingwalls. Embankment adjacent to structures shall be constructed in 6 inch horizontal layers (loose measure) and compacted by the use of mechanical equipment to the satisfaction of the Engineer. Refer to Subsections 210.09, 210.10 and 801.08 for construction requirements.

STANDARD DETAILS FOR EMBANKMENT CONSTRUCTION AND BACKFILL AT BRIDGE ENDS

ARKANSAS STATE HIGHWAY COMMISSION

LITTLE ROCK, ARK.

DRAWN BY: KDH DATE: 2-27-2014 FILENAME: b55000.dgn

CHECKED BY: BEF DATE: 2-27-2014 SCALE: NO SCALE

DESIGNED BY: STD. DATE: -

DRAWING NO. 55000

DATE REVISED	DATE FILMED	DATE REVISED	DATE FILMED	FED. ROAD DIST. NO.	STATE	FED. AID PROJ. NO.	SHEET NO.	TOTAL SHEETS
				6	ARK.			
				JOB NO.				

(1) RIPRAP & EXCAV. 55001

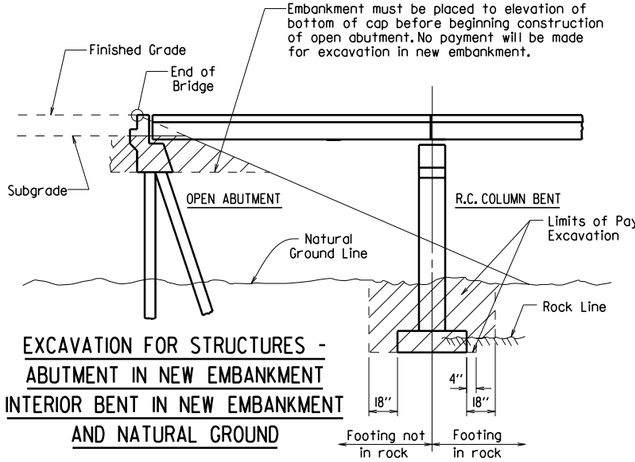

EXCAVATION FOR STRUCTURES - ABUTMENT IN NEW EMBANKMENT INTERIOR BENT IN NEW EMBANKMENT AND NATURAL GROUND

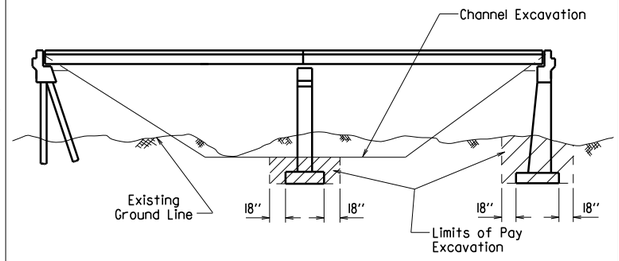

EXCAVATION FOR STRUCTURES - BRIDGE LOCATION WITH DESIGNATED CHANNEL CHANGE

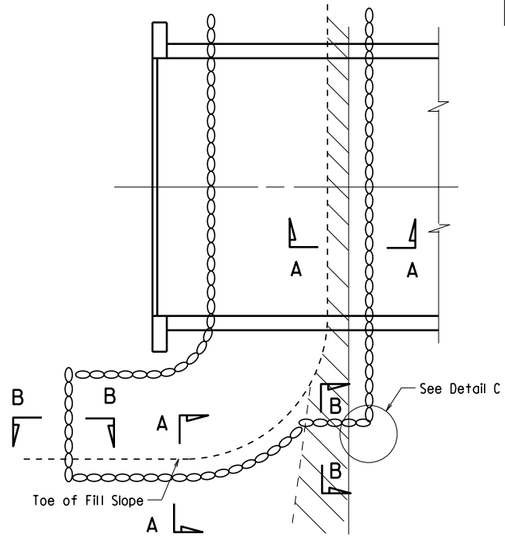

PLAN OF DUMPED RIPRAP

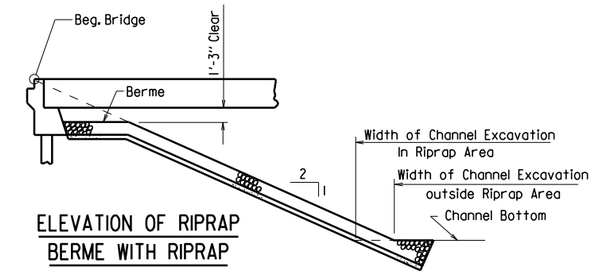

ELEVATION OF RIPRAP BERME WITH RIPRAP

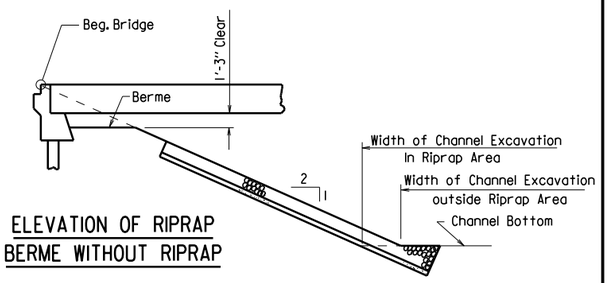

ELEVATION OF RIPRAP BERME WITHOUT RIPRAP

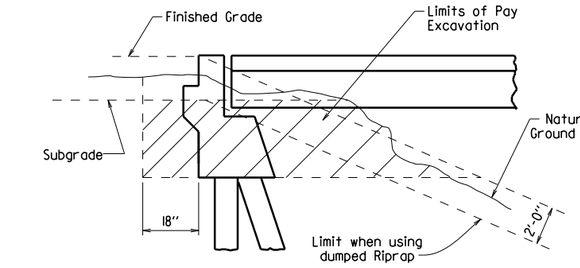

EXCAVATION FOR STRUCTURES - ABUTMENT IN NATURAL GROUND

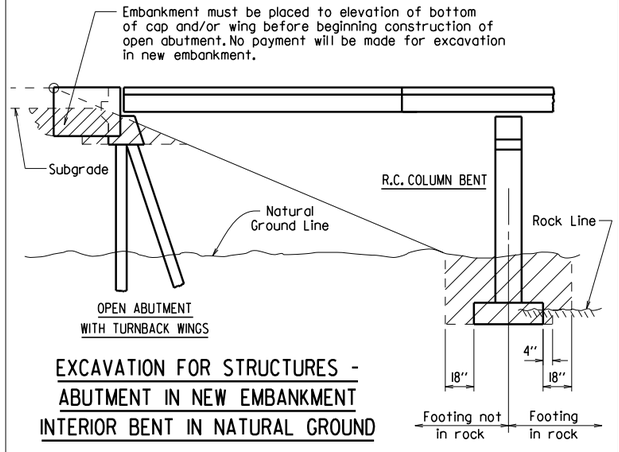

EXCAVATION FOR STRUCTURES - ABUTMENT IN NEW EMBANKMENT INTERIOR BENT IN NATURAL GROUND

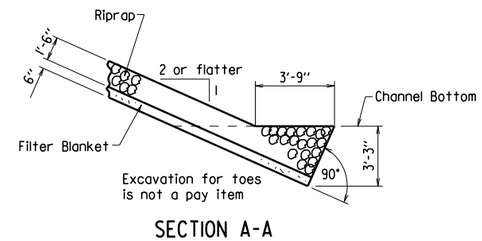

SECTION A-A

(Toe Excavation in Soil)

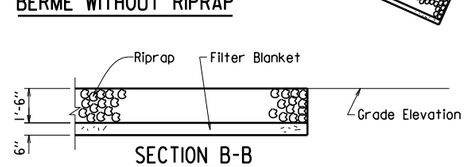

SECTION B-B

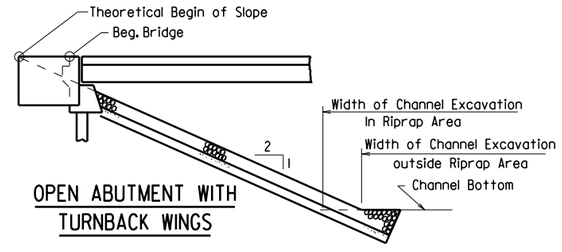

OPEN ABUTMENT WITH TURNBACK WINGS

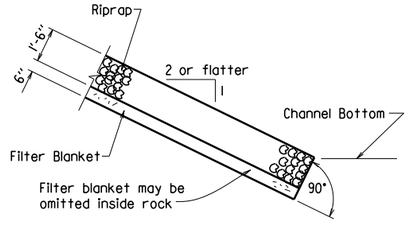

SECTION A-A

(Toe Excavation in Rock)

Note : Use this type of toe when rock is encountered which is in a stable condition.

Note : In lieu of an aggregate filter blanket, a synthetic fiber geotextile fabric complying with the requirements of Subsection 816.02(e) may be used.

Note : Details for computing excavation for structures are included for information as to how plan quantities were calculated and for use when adjusting quantities when changing footing elevation.

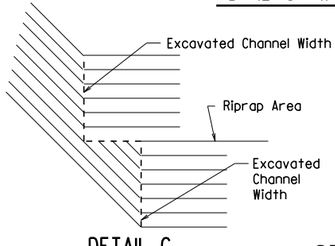

DETAIL C

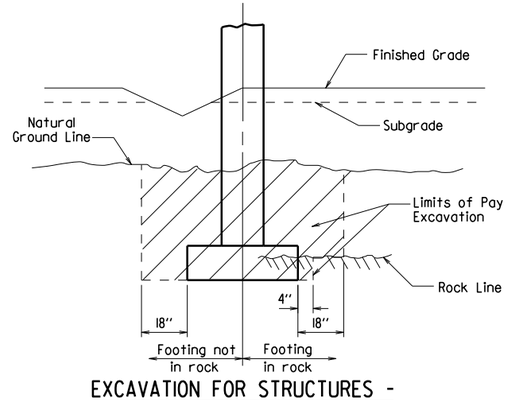

EXCAVATION FOR STRUCTURES - BENT IN ROADWAY FILL SECTION AND NATURAL GROUND

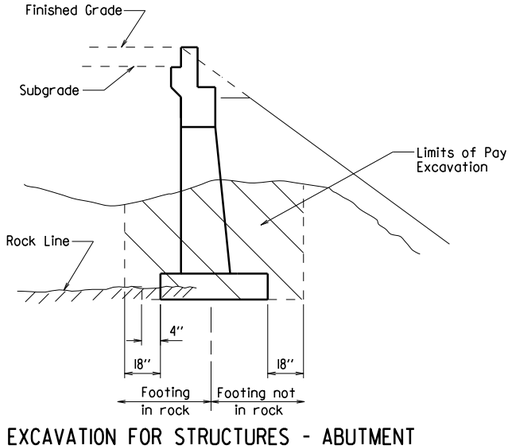

EXCAVATION FOR STRUCTURES - ABUTMENT IN NATURAL GROUND AND NEW EMBANKMENT

STANDARD DETAILS FOR DUMPED RIPRAP AND FILTER BLANKET AND COMPUTING EXCAVATION FOR STRUCTURES

ARKANSAS STATE HIGHWAY COMMISSION

LITTLE ROCK, ARK.

DRAWN BY: KDH DATE: 2-27-2014 FILENAME: b55001.dgn

CHECKED BY: BEF DATE: 2-27-2014 SCALE: NO SCALE

DESIGNED BY: STD. DATE:

DRAWING NO. 55001

DATE REVISED	DATE FILMED	DATE REVISED	DATE FILMED	FED. ROAD DIST. NO.	STATE	FED. AID PROJ. NO.	SHEET NO.	TOTAL SHEETS
3/24/16				6	ARK.			
				JOB NO.				

(1) BRIDGE DECK FORMS 55005

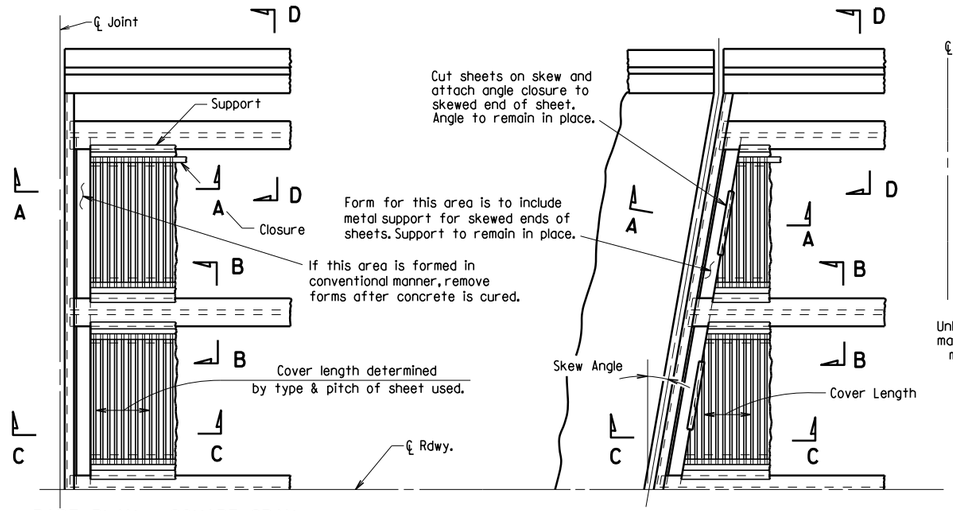

PART PLAN - SQUARE SPAN

3/8" = 1'-0"

PART PLAN - SKEWED SPAN

3/8" = 1'-0"

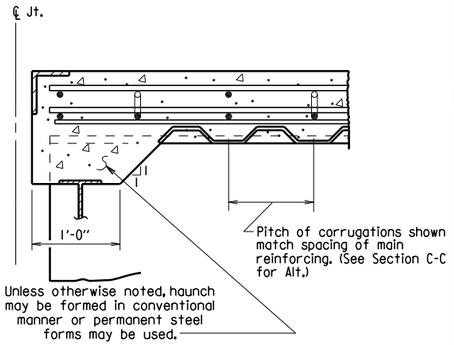

SECTION A-A

N.T.S.
(Angle at end of span)

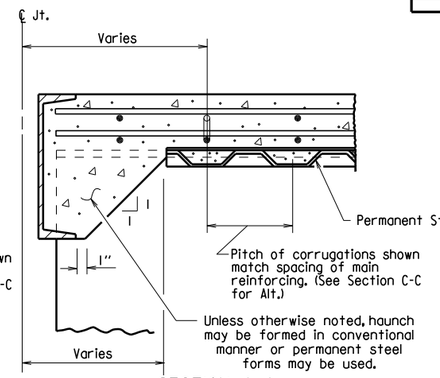

SECTION A-A

N.T.S.
(Channel at end of span)

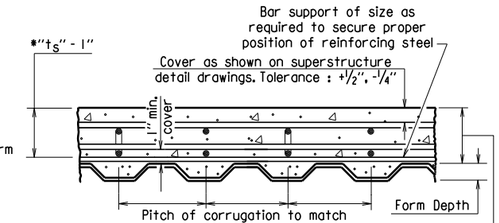

SECTION C-C

1" = 1'-0"

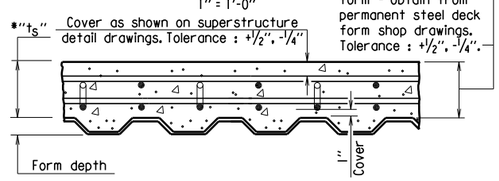

SECTION C-C - ALTERNATE

1" = 1'-0"
(Applicable when corrugations do not match spacing of main reinforcement)

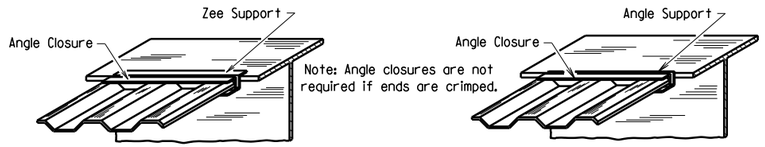

SKETCH OF PERMISSIBLE SUPPORTS

N.T.S.

*t_s = slab thickness as shown on superstructure detail drawings.

GENERAL NOTES

Permanent steel deck forms may be used at the Contractor's option and shall be at no additional cost to the Department. Such use may result in changes to the dead load deflection of the girder. Any cost for adjustments due to a change in the dead load deflection will be borne by the Contractor. Payment for deck concrete and structural steel will not be increased due to use of permanent steel deck forms.

Permanent steel deck forms shall conform to Subsection 802.14(b). Detailed plans, including detailed calculations and manufacturer's technical brochure, shall be submitted to and approved by the Engineer before work of forming the bridge deck is started.

Welding of form supports to the tension flange of steel girders will be permitted only in areas where shear connectors are used. When welding is not allowed, the method of fastening Z or ∠ supports to the flange must be approved by the Engineer.

Form sheets shall be fastened to supporting members and to each other with galvanized metal screws sufficient in size and number to provide a secure attachment. Alternate methods of attachment must be approved by the Engineer.

When the pitch of form corrugations match the reinforcing spacing, transversely align form sheets across the bridge to maintain the correct orientation of continuous reinforcing bars in the corrugations.

Bar support rods, when used, shall be sized and spaced to adequately support the bottom reinforcing mat at the required position.

High chairs shall be sized to support the top mat of reinforcing at the proper position. High chairs shall be placed at locations shown on the detail drawings.

Specifications: Arkansas State Highway and Transportation Department Standard Specifications for Highway Construction (2014 Edition), with applicable Supplemental Specifications and Special Provisions.

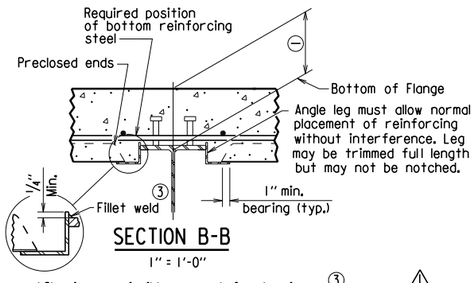

SECTION B-B

1" = 1'-0"
(Showing permissible support for tension flange where shear connectors are used, and for all compression flanges)

(3) ⚠ Minimum weld: 1/8" x 1" @ 18". More weld may be required; maximum length per weld = 1 1/2" (typ.)

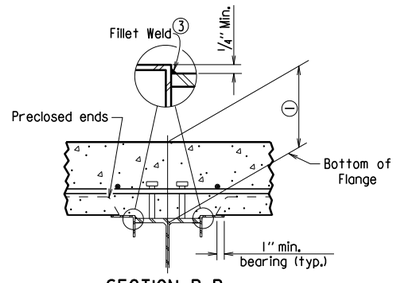

SECTION B-B

1" = 1'-0"
(Showing permissible support for tension flange where shear connectors are used and for all compression flanges)

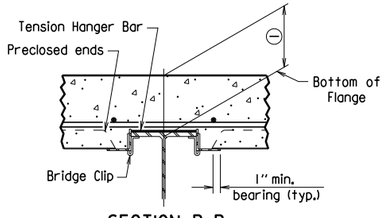

SECTION B-B

1" = 1'-0"
(Showing permissible support for tension flange where shear connectors are not used)

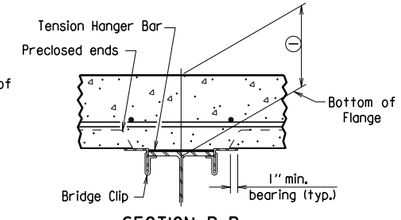

SECTION B-B

1" = 1'-0"
(Showing permissible support for tension flange where shear connectors are not used)

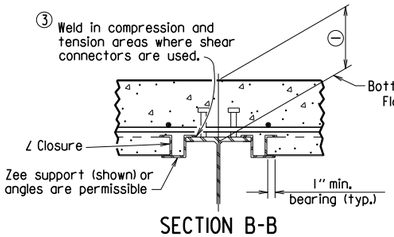

SECTION B-B

1" = 1'-0"
(Showing ∠ Closure)

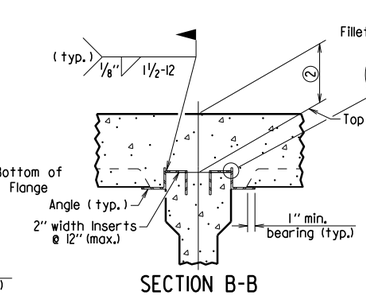

SECTION B-B (FOR CONCRETE GIRDERS)

1" = 1'-0"
(Showing support by Insert cast in girder)

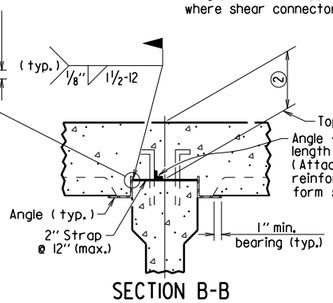

SECTION B-B (FOR CONCRETE GIRDERS)

1" = 1'-0"
(Showing support by Strap)

(1) Distance from top of slab to bottom of top flange as measured at centerline girder and as shown on superstructure detail drawings. This dimension may vary within the following limits to maintain the grade and slab thickness tolerances : Minimum - occurs when either the top flange or the support angle leg contacts the bottom reinforcing steel; Maximum = t_S + 1 3/4" + flange thickness. See Section C-C for slab thickness tolerance between adjacent girder flanges.

(2) Distance from top of slab to top of girder as measured at centerline girder and as shown on superstructure detail drawings. This dimension may vary within the following limits to maintain the grade and slab thickness tolerances : Minimum - occurs when either the top of girder or the support angle leg contacts the bottom reinforcing steel; Maximum - value shown on the superstructure detail drawings when removable forms are used. See Section C-C for slab thickness tolerance between adjacent girder flanges.

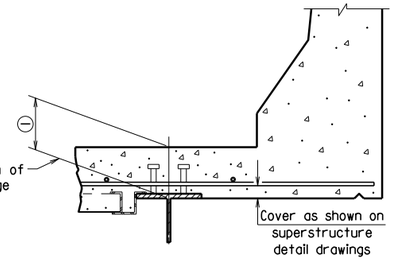

SECTION D-D

1" = 1'-0"
Note: Only Bottom Reinforcing is shown.

⚠ Revised weld dimension by KWY, Ck'd. by BEF, 3/24/16.

STANDARD DETAILS FOR PERMANENT STEEL BRIDGE DECK FORMS FOR STEEL & CONCRETE GIRDER SPANS

ARKANSAS STATE HIGHWAY COMMISSION

LITTLE ROCK, ARK.

DRAWN BY: KDH DATE: 2-27-2014 FILENAME: b55005.dgn
CHECKED BY: BEF DATE: 2-27-2014 SCALE: NONE
DESIGNED BY: STD. DATE: —

DRAWING NO. 55005

DATE REVISED	DATE FILMED	DATE REVISED	DATE FILMED	FED. ROAD DIST. NO.	STATE	FED. AID PROJ. NO.	SHEET NO.	TOTAL SHEETS
				6	ARK.			
				JOB NO.				
						GENERAL NOTES		55006

GENERAL NOTES

These GENERAL NOTES are applicable unless otherwise shown in the Plan Details, Special Provisions, or Supplemental Specifications.

CONSTRUCTION SPECIFICATIONS: Arkansas State Highway and Transportation Department Standard Specifications for Highway Construction (2014 Edition) with applicable Supplemental Specifications and Special Provisions. Section and Subsection refer to the Standard Specifications.

DESIGN SPECIFICATIONS: See Bridge Layout(s).

SUPERSTRUCTURE NOTES:

MATERIALS AND STRENGTHS:

Class S(AE) Concrete	f'c =	4,000 psi
Reinforcing Steel (Gr. 60, AASHTO M 31 or M 322, Type A)	fy =	60,000 psi
Structural Steel (AASHTO M 270, Gr. 36)	Fy =	36,000 psi
Structural Steel (AASHTO M 270, Gr. 50)	Fy =	50,000 psi
Structural Steel (AASHTO M 270, Gr. 50W)	Fy =	50,000 psi
Structural Steel (AASHTO M 270, Gr. HPS70W)	Fy =	70,000 psi

See Plan Details for Grade(s) of Structural Steel required.

CONCRETE:

All concrete shall be Class S(AE) with a minimum 28 day compressive strength f'c = 4,000 psi. Concrete shall be poured in the dry and all exposed corners shall be chamfered ¾" unless otherwise noted.

The superstructure details shown are for use when removable deck forming is used and are the basis for measurement of Class S(AE) Concrete. See Standard Drawing No. 55005 for allowable modifications and for tolerances when Permanent Steel Bridge Deck Forms are used.

Use of a longitudinal screed is not permitted on any span of a bridge deck with horizontal curvature.

The concrete deck (roadway surface) shall be given a tine finish in accordance with Subsection 802.19 for Class 5 Tined Bridge Roadway Surface Finish. Sidewalks shall receive a broomed finish as specified for final finishing in Subsection 802.19 for Class 6 Broomed Finish. Movement of the finishing machine across new concrete shall be on planks placed on the surface and shall be prohibited for 72 hours after finishing the pour. Sufficient concrete must be placed ahead of the strike-off to fully load the beam or girder. When permitted, the use of a longitudinal strike-off will require that a vertical camber adjustment be made in the strike-off to account for the future dead load deflection due to any railings, median barrier, and sidewalks.

REINFORCING STEEL:

All reinforcing steel shall be Grade 60 conforming to AASHTO M 31 or M 322, Type A, with mill test reports and shall be epoxy coated. The reinforcing steel is to be accurately located in the forms and firmly held in place by steel wire supports, sufficient in number and size to prevent displacement during the course of construction. The wire supports will not be paid for directly, but will be considered subsidiary to the item "Epoxy Coated Reinforcing Steel (Grade 60)".

STRUCTURAL STEEL (COMMON TO W-BEAMS AND PLATE GIRDERS):

Structural steel shall be AASHTO M 270 with grade and payment as specified in the plans. Grade 50W steel shall not be painted and all exposed surfaces shall be cleaned in accordance with Subsection 807.84(e). Grade 36 and Grade 50 steel shall be painted unless otherwise noted and all exposed surfaces shall be cleaned in accordance with Subsection 807.84. Structural steel completely embedded in concrete may be AASHTO M 270, Gr. 36, Gr. 50 or Gr. 50W unless otherwise noted.

Drawings show general features of design only. Shop drawings shall be made in accordance with the specifications, submitted and approval secured before fabrication is begun.

Requests for substitution of structural steel shapes shown with shapes of greater size must be submitted by the Contractor to the Engineer for approval. Steels of equal or greater strengths will be accepted only when shown on the approved shop drawings. Payment will be based on the basis of shapes and materials shown in the plans, and no additional compensation will be made for any adjustments due to substitutions.

All welding that is to be done during fabrication of structural steel, including temporary welds, shall be detailed on the shop drawings and submitted for approval. If additional welds are required, whether permanent or temporary, a formal request with detailed drawings shall be submitted to the Engineer for approval; however, additional welds used for attaching falsework support devices or screed rail supports to the structural steel that do not exceed the limitations of Subsection 802.13 will not require approval prior to construction. All welding shall conform to Subsection 807.26.

Unless otherwise noted, field connections shall be bolted with ¾" ø high-strength bolts using 15/16 " ø open holes. Holes for ¾" ø high-strength bolts may be 15/16 " ø if a washer is supplied for use under both the nut and head of the bolt. The use of oversized holes will not be allowed on main members unless otherwise noted. Bolts shall be placed with heads on the outside face of the exterior beam or girder webs and on the bottom of the beam or girder flanges.

All stud shear connectors shall be granular flux filled, solid fluxed, or equal and shall be automatically end welded in accordance with recommendations of the Manufacturer.

When painting is required, all structural steel except galvanized steel and steel completely encased in concrete shall be painted in accordance with Subsection 807.75. The color of paint shall be as specified in the plans.

STRUCTURAL STEEL (W-BEAMS):

All beams and field splice plates, and all diaphragms and connection plates attached to horizontally curved beams are considered main load carrying members and shall meet the Longitudinal Charpy V-Notch Test specified in Subsection 807.05. This work and material will not be paid for directly, but shall be considered subsidiary to the item "Structural Steel in Beam Spans (M 270, Gr. ___)".

All beams in continuous units and simple spans with field splices shall be blocked in their true position in the shop in groups as specified in Subsection 807.54(b)(2) with the webs horizontal. The camber, length of sections, distance between bearings, and openings of joints shall be measured and this information shall become part of the permanent records. The component parts shall be match marked in this assembly and these marks shall be shown on the erection diagram.

All beams in simple spans without field splices shall be blocked in their true position with webs horizontal. The camber, distance between bearings, and openings of joints shall be measured and this information shall become part of the permanent records.

Flange field splice plates shall be cut and fabricated so that the primary direction of rolling is parallel to the direction of the main tensile and/or compressive stresses.

All beam dimensions are based on a temperature of 60 degrees F. A tolerance of 1/4" +/- is allowed for camber.

Bent plate diaphragms for horizontally curved beams shall be cut and fabricated so that the primary direction of rolling is parallel to the direction of the main tensile and/or compressive stresses. Bent plate diaphragms for straight beams may be cut and fabricated in accordance with Subsection 807.35 or as required for horizontally curved beams.

Unless otherwise noted, diaphragms shall be installed as beams are erected. All bolts in diaphragms and field splices shall be installed and tightened in accordance with Subsection 807.71 prior to pouring the concrete deck.

STRUCTURAL STEEL (PLATE GIRDERS):

All references to cross-frames shall include "X" or "K" types.

All girder web and flange plates, all field splice plates, and all diaphragms, cross-frames and connection plates attached to horizontally curved girders are considered main load carrying members and shall meet the Longitudinal Charpy V-Notch Test specified in Subsection 807.05. This work and material will not be paid for directly, but shall be considered subsidiary to the item "Structural Steel in Plate Girder Spans (M 270, Gr. ___)".

All girders in continuous units and simple spans with field splices shall be assembled in the shop as specified in Subsection 807.54(b)(2) and blocked in their true position with webs horizontal. The camber, length of sections, distance between bearings, and openings of joints shall be measured and this information shall become part of the permanent records. The component parts shall be match marked in this assembly and these marks shall be shown on the erection diagram.

All girders in simple spans without field splices shall be blocked in their true position with webs horizontal. The camber, distance between bearings, and openings of joints shall be measured and this information shall become part of the permanent records.

Web and flange plates for main members and flange splice plates for main members shall be cut and fabricated so that the primary direction of rolling is parallel to the direction of the main tensile and/or compressive stresses.

Girder webs may be made by shop splicing with minimum lengths of 25 feet for sections. Flange plates longer than 50 feet may be made by shop splicing with minimum lengths of 25 feet for sections. No additional payment will be made for shop welded splices.

All girder dimensions are based on a temperature of 60 degrees F. A tolerance of 1/4" +/- is allowed for camber.

Groove welds in web and flange plates shall be Quality Control (Q.C.) tested by nondestructive testing, as required in Subsection 807.23(b). Fillet welds at flange to web plate connections shall be Q.C. tested by the magnetic particle method. All Q.C. testing shall be considered subsidiary to the item "Structural Steel in Plate Girder Spans (M 270, Gr. ___)".

Bent plate diaphragms for horizontally curved girders shall be cut and fabricated so that the primary direction of rolling is parallel to the direction of the main tensile and/or compressive stresses. Bent plate diaphragms for straight girders may be cut and fabricated in accordance with Subsection 807.35 or as required for horizontally curved girders.

Unless otherwise noted, cross-frames and diaphragms shall be installed as girders are erected. All bolts in cross-frames, diaphragms, and field splices shall be installed and tightened in accordance with Subsection 807.71 prior to pouring the concrete deck.

SUBSTRUCTURE NOTES:

CONCRETE:

Unless otherwise noted, concrete in caps, columns and footings (except seal footings) shall be Class "S" with a minimum 28 day compressive strength f'c = 3,500 psi and shall be poured in the dry. Seal Concrete for footings shall have a minimum 28 day compressive strength f'c = 2,100 psi.

Concrete in drilled shafts shall be Class "S" as modified by Job SP "Drilled Shaft Foundations".

All exposed corners shall be chamfered ¾" unless otherwise noted.

REINFORCING STEEL:

All reinforcing steel shall be Grade 60 (yield strength = 60,000 psi) conforming to AASHTO M 31 or M 322, Type A, with mill test reports.

Top reinforcing bars in cap shall be properly placed to avoid interference with anchor bolts or sheet metal sleeves.

STRUCTURAL STEEL:

Structural steel in end bents shall be AASHTO M 270 with grade and payment as specified in the plans.

FOR ADDITIONAL INFORMATION AND NOTES, SEE LAYOUT(S) AND PLAN DETAILS.

STANDARD GENERAL NOTES FOR STEEL BRIDGE STRUCTURES

ARKANSAS STATE HIGHWAY COMMISSION

LITTLE ROCK, ARK.

DRAWN BY: A.M.S. DATE: 9-2-2015 FILENAME: b55006.dgn

CHECKED BY: B.E.F. DATE: 9-2-2015 SCALE: NO SCALE

DESIGNED BY: STD. DATE:

DRAWING NO. 55006

PRINT DATE: 2/11/2020

DATE REVISED	DATE FILMED	DATE REVISED	DATE FILMED	FED. ROAD DIST. NO.	STATE	FED. AID PROJ. NO.	SHEET NO.	TOTAL SHEETS
				6	ARK.			
				JOB NO.				

① STEEL BRIDGE STRUCTURES 55007

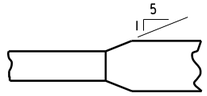

FLANGE SPLICE

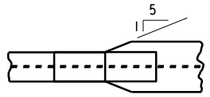

FLANGE SPLICE AT UNEQUAL BOTTOM FLANGE WIDTHS

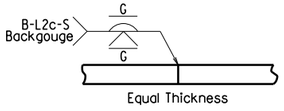

WEB & FLANGE SPLICE

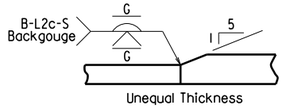

FLANGE SPLICE

(Use when Base Metal Thickness is Equal to or Less than 2")

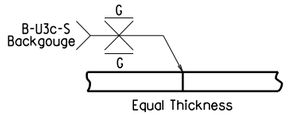

WEB & FLANGE SPLICE

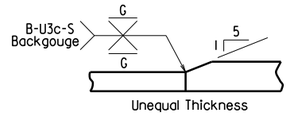

FLANGE SPLICE

(Use when Base Metal Thickness is Greater than 2")

DETAILS OF WELDED SPLICES FOR PLATE GIRDERS

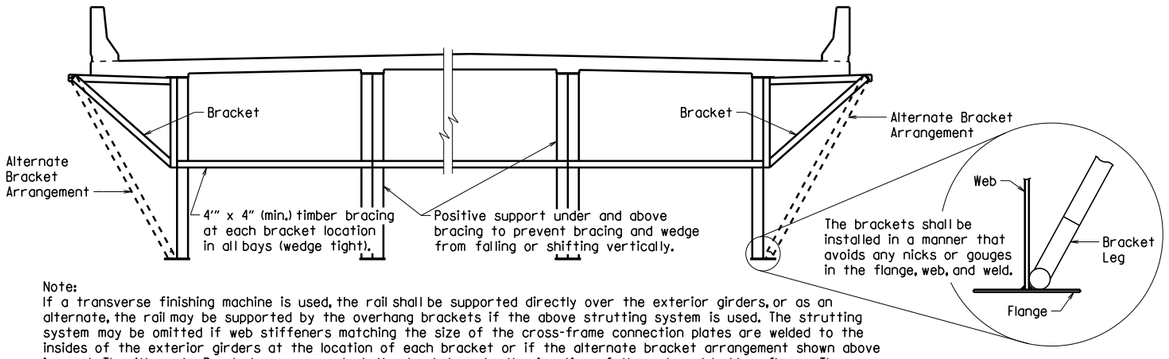

Note:
If a transverse finishing machine is used, the rail shall be supported directly over the exterior girders, or as an alternate, the rail may be supported by the overhang brackets if the above strutting system is used. The strutting system may be omitted if web stiffeners matching the size of the cross-frame connection plates are welded to the insides of the exterior girders at the location of each bracket or if the alternate bracket arrangement shown above is used. The Alternate Bracket arrangement shall extend down to the junction of the web and bottom flange. The stiffener shall conform to the details for cross frame connection plates shown on the plans. No direct payment will be made for brackets, timber bracing, supports, or welded stiffeners. Payment shall be subsidiary to "Structural Steel in Plate Girder Spans (____)".

SCREED RAIL SUPPORT FOR PLATE GIRDERS

(USE WHEN WEB DEPTHS ARE 48" OR GREATER)

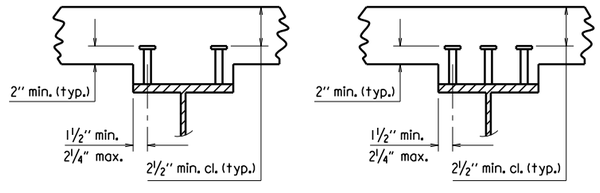

Stud Shear Connectors shall be automatically end welded to the beam or girder flange in accordance with the recommendations of the Manufacturer. See plan details for number and size.

SHEAR CONNECTOR DETAIL

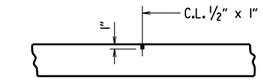

Use Type 3 or 4 Joint Sealer. See Subsections 501.02(h) and 501.05(j). Backer Rod filler will not be required. Joint Sealer shall be measured and paid for as Class S(AE) Concrete-Bridge. Slab Joints shall extend to the outside edge of the deck slab and shall align with open joints at the front face of the parapet. Slab joints shall be installed before the parapet railing is poured. If slab joints are to be sawed, they shall be sawed as soon as the concrete has sufficiently set to allow sawing of the joint without damage to the slab. Slab joints shall be placed at all pouring sequence construction joints and required slab joint locations. The joint sealer shall extend across the deck from gutterline to gutterline.

ADDITIONAL NOTES IF SIDEWALKS OR RAISED MEDIANS ARE REQUIRED:
Slab Joints shall be installed before the sidewalk or raised median is poured. After installation of the joint in the sidewalk or raised median and prior to pouring the parapet rail, the joint sealer shall be placed extending across the deck slab from gutterline to gutterline and acrosss the top of the sidwalk or raised median to the edge of the slab. No joint sealer shall be placed on the deck slab under the sidewalk or raised median.

TRANSVERSE SLAB JOINT DETAIL

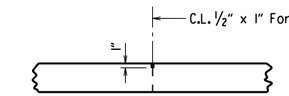

Use ½" x 1" Type 3 or 4 Joint Sealer. See Subsections 501.02(h) and 501.05(j). Backer Rod filler will not be required. Joint sealer shall be measured and paid for as Class S(AE) Concrete-Bridge. This joint shall be formed. Seal color shall be gray or other color similar to concrete.

LONGITUDINAL CONSTRUCTION JOINT

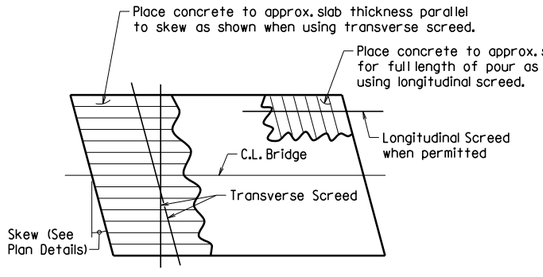

Note: At the Contractor's option, the transverse screed may be placed parallel to the skew or perpendicular to C.L. Bridge.

CONCRETE PLACEMENT PROCEDURE FOR BRIDGES WITH SKEW

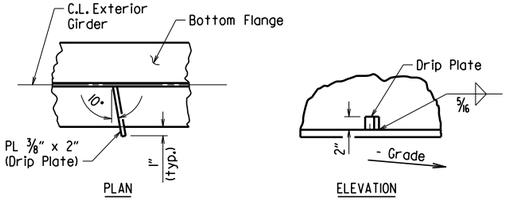

Drip Plate to be welded to the outer side of the bottom flange of the exterior girders.

Locate drip plate 5'-0" from C.L. Bearing on high side of each Bent, unless otherwise noted in the plans.

BOTTOM FLANGE DRIP PLATE

(USE WHEN WEB DEPTHS ARE 54" OR GREATER AND UNIT OR SPAN IS NOT IN LEVEL GRADE)

t_s = slab thickness. See "Typical Roadway Section" in the plans.

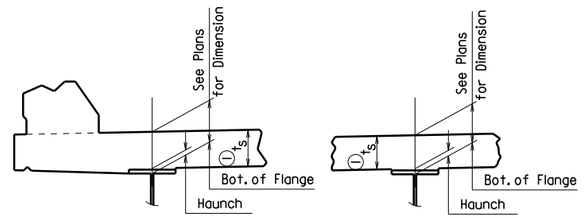

EXTERIOR BEAM OR GIRDER

INTERIOR BEAM OR GIRDER

① Tolerance when removable deck forming is used is + ½", - ¼". Haunch forming is required and shall be adjusted to maintain slab thickness tolerance.

NOTES:
Haunch dimension may vary within the following limits to maintain the grade and slab thickness tolerance: Minimum occurs when top flange contacts bottom reinforcing steel; Maximum = top flange thickness plus 1¾" unless otherwise noted in the plans. No increase in concrete and structural steel quantities will be made to maintain tolerances.

Tolerances shown are applicable only when removable deck forming is used. See Std. Dwg. No. 55005 for tolerances when permanent steel deck forms are used. Payment for concrete shall be based on removable deck forming.

ADJUSTMENT FOR SLAB THICKNESS TOLERANCE

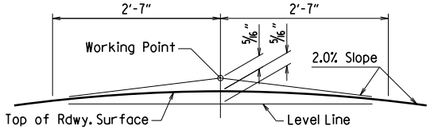

NOTE: Working Point matches Theoretical Roadway Grade.

ROUNDING DETAIL

BRIDGES IN NORMAL CROWN

WELD TABLE

Material Thickness of Thicker Part Joined (Inches)	Minimum Size of Fillet Weld (Inches)	Single Pass Weld Must Be Used
To ¾" Inclusive	¼"	
Over ¾"	5/16"	

NOTE: When a fillet weld size, as shown on the plans, is larger than the minimum, the first pass shall be that specified for minimum size of fillet weld.

SECTION AND SUBSECTION REFER TO THE ARKANSAS STATE HIGHWAY AND TRANSPORTATION DEPARTMENT STANDARD SPECIFICATIONS FOR HIGHWAY CONSTRUCTION (2014 EDITION).

THESE DETAILS ARE APPLICABLE UNLESS OTHERWISE SHOWN IN THE PLAN DETAILS, SPECIAL PROVISIONS, OR SUPPLEMENTAL SPECIFICATIONS.

STANDARD DETAILS FOR STEEL BRIDGE STRUCTURES

ARKANSAS STATE HIGHWAY COMMISSION

LITTLE ROCK, ARK.

DRAWN BY: JYP DATE: 2/11/2016 FILENAME: b55007.dgn
CHECKED BY: AMS DATE: 2/11/2016 SCALE: No Scale
DESIGNED BY: STD. DATE: —

DRAWING NO. 55007

DATE REVISED	DATE FILMED	DATE REVISED	DATE FILMED	FED. ROAD DIST. NO.	STATE	FED. AID PROJ. NO.	SHEET NO.	TOTAL SHEETS
12-1-14		1-15-19		6	ARK.			
1-14-15				JOB NO.				
1-17-17								

(1) TYPE D NAME PLATE 55010

The name of the bridge as shown on the plans shall be placed on Lines 1 - 3 using 1/8" raised letters and numerals 3/8" high.

	Example 1	Example 2	Example 3	Example 4
Line 1	Red River	Southern	Saline	
Line 2	Relief	Railroad	River	Highway 5
Line 3		Overpass	Relief	

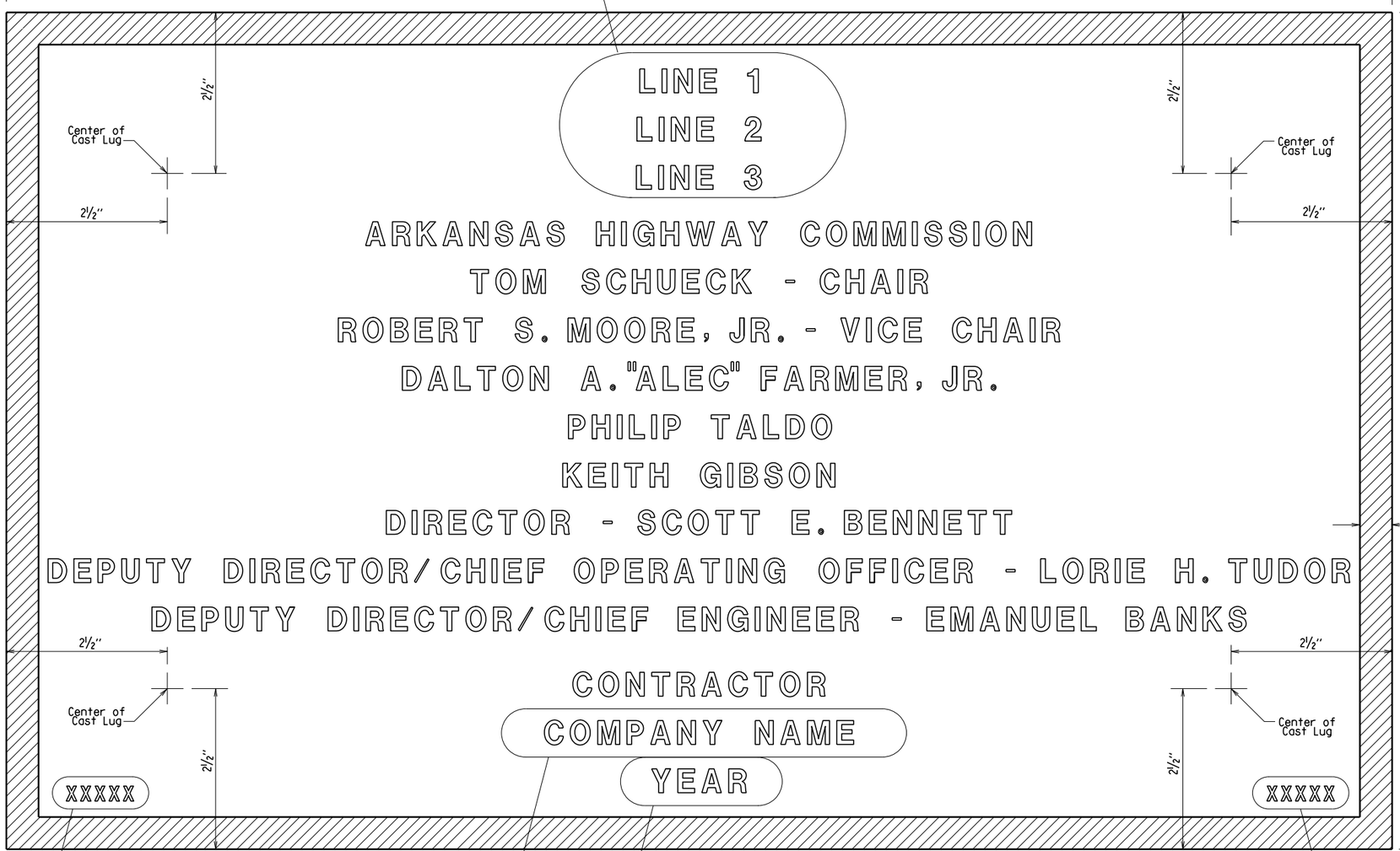

Place the design live loading here using 1/8" raised letters and numerals 1/4" high. Examples : HS 20
HL-93

Place the Year in which Contract was awarded here using 1/8" raised numerals 3/8" high. Example : 2001

Place the name of the company awarded the construction contract here using 1/8" raised letters and numerals 3/8" high. Example : ABCD CONSTRUCTION, INC.

Place the Bridge number here using 1/8" raised letters and numerals 1/4" high. Examples : A1234
05432

TYPICAL BRIDGE NAME PLATE

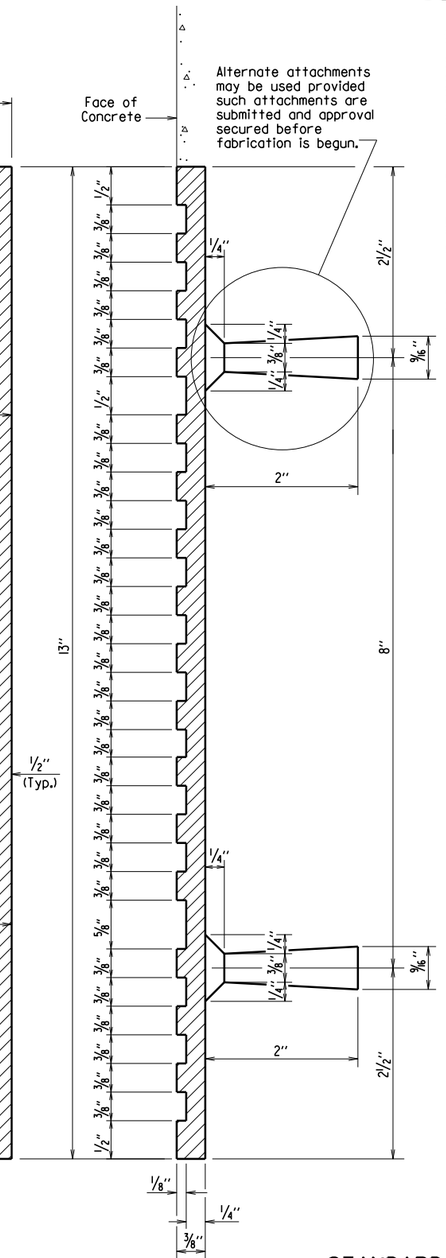

GENERAL NOTES

Specifications: Arkansas State Highway and Transportation Department Standard Specifications for Highway Construction, (2014 Edition) with applicable Supplemental Specifications and Special Provisions.

Name plates shall be cast bronze and shall meet the material requirements as specified in Section 812.

Body of plate shall be 1/4" thick and shall include four tapering cone lugs 3/8" to 7/16" x 2" long. The border and all lettering shall be raised 1/8" above the face of plate and shall be polished.

All lettering shall be plain gothic, square cut and not tapered.

The number of plates required and the location and name on the plate for each bridge shall be as designated on the plans.

(4) Revised Chair and Vice Chair
Added New Commissioner
1-15-19 CGP Checked By: CRE

(3) Added New Commissioner
1-17-17 KDH Checked By: CRE

(2) Revised Chair and Vice Chair
Added New Commissioner
1-14-15 KDH Checked By: CRE

(1) Revised Deputy Director/
Chief Engineer
Added Deputy Director/
Chief Operating Officer
12-1-14 KDH Checked By: CRE

STANDARD DETAILS FOR TYPE D BRIDGE NAME PLATE

ARKANSAS STATE HIGHWAY COMMISSION
LITTLE ROCK, ARK.

DRAWN BY: KDH DATE: 2-27-2014
CHECKED BY: BEF DATE: 2-27-2014
DESIGNED BY: STD. DATE: —
FILENAME: b55010.dgn
SCALE: NO SCALE

DRAWING NO. 55010

DATE REVISED	DATE FILMED	DATE REVISED	DATE FILMED	FED. ROAD DIST. NO.	STATE	FED. AID PROJ. NO.	SHEET NO.	TOTAL SHEETS
3/24/16				6	ARK.			
				JOB NO.				
						STEEL H-PILES		55020

(1)

GENERAL NOTES FOR STEEL H-PILES:

Steel H-Piles shall conform to AASHTO M 270, Grade 36 or greater.

See Bridge Layout and Bent Details for pile size, estimated length, spacing, pile anchorage (if required) and for driving information.

Steel H-Piles that extend above the ground and are not protected by pile encasement shall be painted in accordance with Subsection 805.02.

Brackets, lugs, cap plates, pile tips, driving points, pile painting, splicing and welding shall not be paid for directly, but shall be considered subsidiary to the item "Steel Piling".

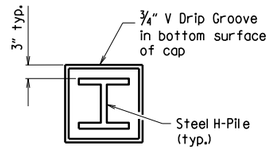

VIEW X-X

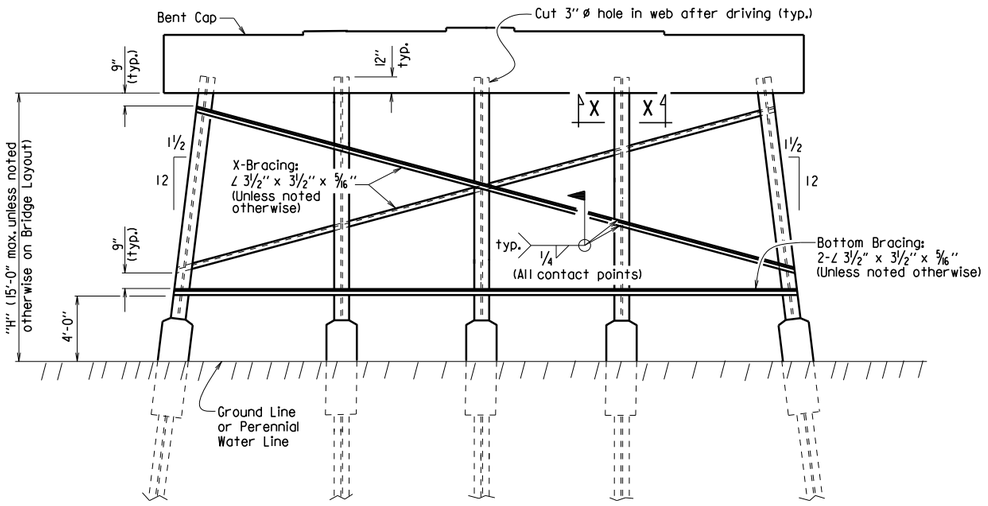

Notes:
All bracing shall be cut and welded in the field. Each brace shall be furnished in one piece. Payment shall be made under Item 807.

Unless noted otherwise, omit X-Bracing when "H" is less than 8 feet.

Omit X-Bracing and Bottom Bracing when "H" is 5 feet or less.

When required on the Bridge Layout sheet, pile encasements shall be constructed. See Notes and Details for H-Pile Encasements.

Omit all bracing (and V-groove in cap) when pile encasement is extended to bottom of bent cap.

TYPICAL DETAILS OF H-PILE TRESTLE INTERMEDIATE BENT

(Shown with Partial Height Encasement)

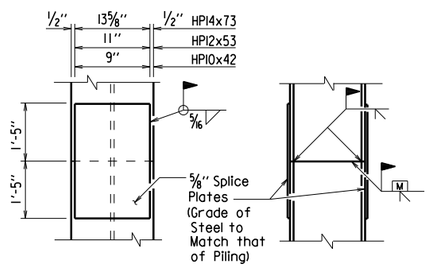

The Contractor may for his own convenience and at his own expense provide as many as three splices per pile. Minimum spacing between splices shall be 5 feet.

TYPICAL SPLICE DETAILS

⚠ H-pile splicers manufactured by Associated Pile and Fitting Corporation, LB Foster Piling, Skyline Steel or equivalent may be used in lieu of the "Typical Splice Details" shown. H-pile splicers shall match the same grade of steel specified for the piling and shall be welded to the pile with a 5/16" fillet weld around the entire perimeter of the splice. Flanges shall be welded with a complete penetration groove weld complying with AASHTO/AWS Joint Designation B-U4a or B-U4b. All welding shall conform to Subsection 807.26 of the AHTD Standard Specifcations for Highway Construction (2014 Edition).

Notes:
Steel pile tip reinforcing not required when approved H-Pile driving points are used.

Steel pile tip reinforcing shall not be paid for directly, but shall be considered subsidiary to the item "Steel Piling".

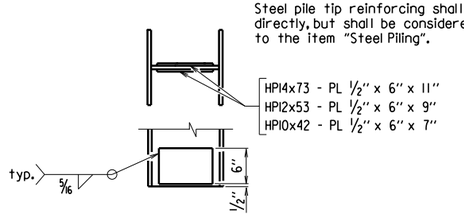

REINFORCING DETAIL FOR STEEL H-PILE TIP

GENERAL NOTES FOR H-PILE ENCASEMENTS:

⚠ See Bridge Layout for additional notes, any pile encasement restrictions and required location of pile encasements.

All concrete shall be Class S with a minimum 28-day compressive strength, f'c = 3,500 psi. If concrete cannot be placed in the dry, Seal Concrete may be used from top to bottom of encasement.

Reinforcing steel shall be Grade 60 conforming to AASHTO M 31 or M 322, Type A.

Welded Wire Fabric shall conform to AASHTO M 55 or M 221. Galvanized Corrugated Steel Pipe shall conform to AASHTO M 36 and M 218.

Concrete, welded wire fabric or reinforcing steel and galvanized pipe shall not be paid for directly, but shall be considered subsidiary to the item "Pile Encasement".

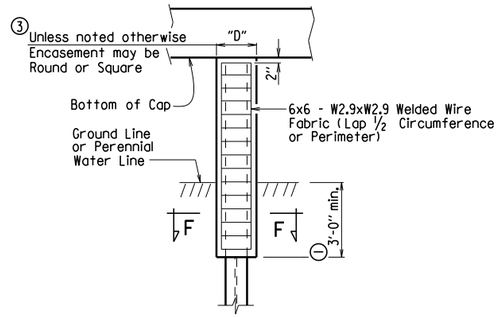

PILE ENCASEMENT DETAIL FOR STEEL H-PILES

(4) (Shown with Encasement to Bottom of Cap)

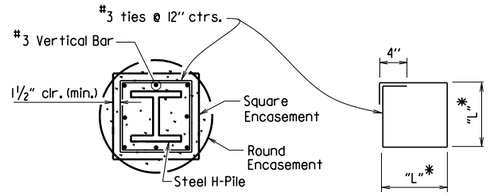

SECTION F-F

*Measured out-to-out of bar.

TABLE OF VARIABLES FOR PILE ENCASEMENT

Pile Size	"D" Square Encsmt.	"D" Round Encsmt.	"L"*
HP10x42	1'-7"	2'-0"	1'-4"
HP12x53	1'-8"	2'-2"	1'-5"
HP14x73	1'-11"	2'-6"	1'-8"

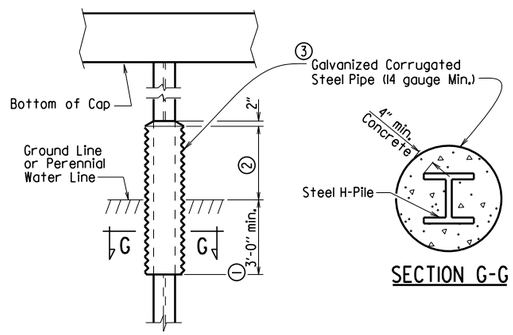

SECTION G-G

(1) Unless otherwise noted on Bridge Layout.

(2) 3'-0" minimum or as shown on Bridge Layout.

(3) Encasement dimensions shall be sized to maintain a minimum concrete cover of 4" from the H-Pile. Reinforcement shall be sized to provide a minimum concrete cover of 1 1/2" and a minimum clearance of 1 1/4" from the pile.

(4) Alternate pile encasement, when not extended to bottom of cap, shall have 2" concrete taper for water runoff as shown in the Partial Height Encasement detail.

ALTERNATE PILE ENCASEMENT DETAIL FOR STEEL H-PILES

(Shown with Partial Height Encasement)

⚠ Added alternate method of splicing H-piles and revised pile encasement note.
3/24/2016 AMS

This document was originally issued and sealed by Charles R. Ellis, PE No. 9235, on March 24, 2016. This copy is not a signed and sealed document.

STATE OF ARKANSAS
REGISTERED PROFESSIONAL ENGINEER
No. 9235
CHARLES R. ELLIS

BRIDGE ENGINEER

STANDARD DETAILS FOR STEEL H-PILES AND PILE ENCASEMENTS

ARKANSAS STATE HIGHWAY COMMISSION

LITTLE ROCK, ARK.

DRAWN BY: A.M.S. DATE: 2/27/2014 FILENAME: b55020.dgn
CHECKED BY: B.E.F. DATE: 2/27/2014 SCALE: NO SCALE
DESIGNED BY: STD. DATE: —

DRAWING NO. 55020

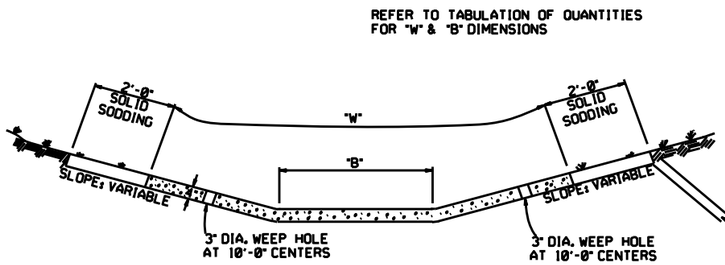

TYPE A

EXCAVATE TO NEAT LINES TO CONSTRUCT DITCH PAVING AND SOLID SODDING.

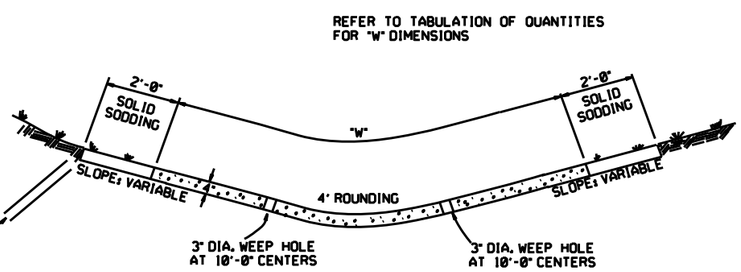

TYPE B

THE STEEL AND ADDITIONAL CONCRETE FOR THE WALLS SHALL NOT BE PAID FOR DIRECTLY, BUT SHALL BE CONSIDERED TO BE INCLUDED IN THE PRICE BID FOR "CONCRETE DITCH PAVING."

TOE WALL DEPTH MAY BE ALTERED TO 1'-0" WHEN DIRECTED BY THE ENGINEER IN ROCK EXCAVATION

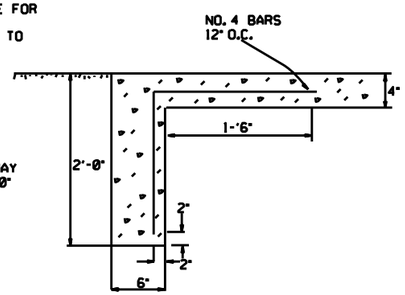

TOE WALL DETAIL FOR CONCRETE DITCH PAVING

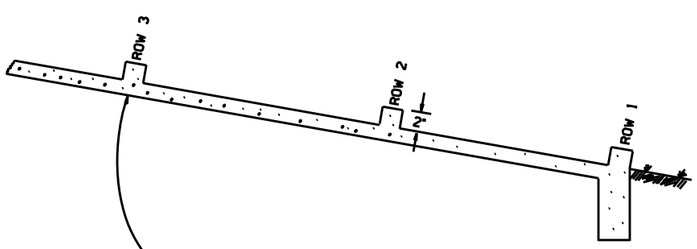

NUMBER OF ELEMENTS PER ROW VARIES WITH WIDTH OF PAVING SPECIFIED

ENERGY DISSIPATORS TO BE USED FOR THE ENTIRE LENGTH OF DITCH WHEN SLOPE OF DITCH PAVING EXCEEDS 7%. THE DISSIPATORS WILL NOT BE PAID FOR DIRECTLY, BUT SHALL BE CONSIDERED TO BE INCLUDED IN THE PRICE BID FOR CONCRETE DITCH PAVING.

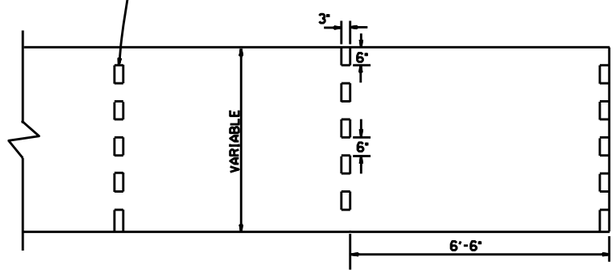

ENERGY DISSIPATORS
(NO SCALE)

GENERAL NOTES:

THE FULL WIDTH OF EACH SECTION SHALL BE POURED MONOLITHICALLY.

TOE WALLS TO BE CONSTRUCTED FULL WIDTH AT EACH END OF DITCH PAVING, AND POURED MONOLITHICALLY.

SOLID SOD ALONG DITCH PAVING TO BE PLACED WITHIN 14 DAYS OF DITCH PAVING CONSTRUCTION.

1" WIDE TRANSVERSE EXPANSION JOINTS SHALL BE PLACED IN CONCRETE DITCH PAVING AT 45° INTERVALS. THE SPACE SHALL BE FILLED WITH APPROVED JOINT FILLER COMPLYING WITH AASHTO M213.

DATE	REVISION	DATE FILM'D
12-8-16	CORRECTED ENERGY DISSIPATOR DRAWING AND NOTE	
11-17-10	ADDED GENERAL NOTE	
6-2-94	ADDED GENERAL NOTE ABOUT SOLID SODDING	
11-30-8	ELIMINATED MIN. ROWS OF ELEMENTS	111-30-89
7-15-88	REVISED DISSIPATOR NOTE	653-7-15-88
4-3-87	REVISED ENERGY DISSIPATOR	671-4-3-87
1-9-87	MODIFIED NOTE ON ENERGY DISS.	532-1-9-87
11-3-86	ADDED NOTE TO ENERGY DISS.	599-12-1-86
11-1-84	ENERGY DISSIPATOR DETAILS ADDED	508-11-1-84
11-1-84	EXCAVATION DETAILS ADDED TYPED A & B	
10-2-72	REVISED AND REDRAWN	508-10-2-72

ARKANSAS STATE HIGHWAY COMMISSION

CONCRETE DITCH PAVING

STANDARD DRAWING CDP-1

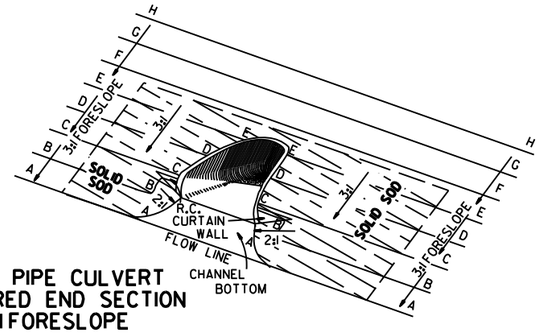

TYPICAL PIPE CULVERT
WITH FLARED END SECTION
& 3:1 FORESLOPE

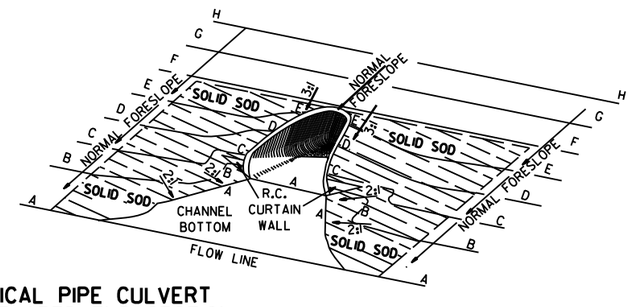

TYPICAL PIPE CULVERT
WITH FLARED END SECTION
& FLATTENED ADJACENT SLOPES

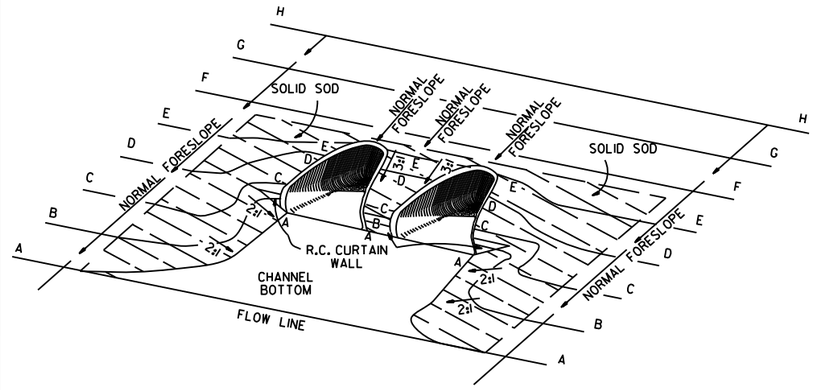

TYPICAL MULTIPLE PIPE CULVERT
WITH FLARED END SECTIONS
& FLATTENED ADJACENT SLOPES

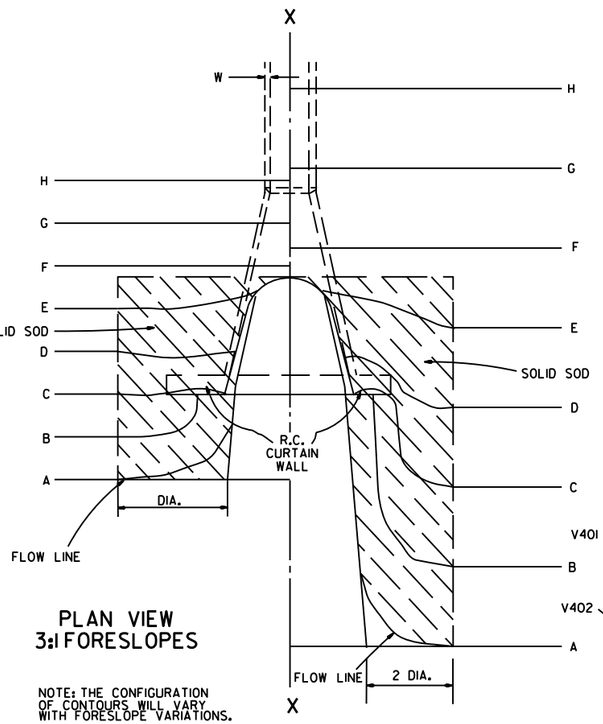

PLAN VIEW
3:1 FORESLOPES

NOTE: THE CONFIGURATION OF CONTOURS WILL VARY WITH FORESLOPE VARIATIONS.

PLAN VIEW
FLATTENED FORESLOPES

R.C. CURTAIN WALL
DIMENSIONS & QUANTITIES

PIPE DIA.	H_1	L_1	L	L (DBL.) / 2	SINGLE R.C.P.C. CONC.	SINGLE R.C.P.C. REINF. STEEL	DOUBLE R.C.P.C. CONC.	DOUBLE R.C.P.C. REINF. STEEL
					CU. YDS.	LBS.	CU. YDS.	LBS.
18"	1'-11½"	3'-5"	8'-0"	6'-3"	0.31	27.7	0.45	39.5
24"	1'-0½"	4'-6"	9'-6"	7'-6"	0.37	33.4	0.53	48.0
30"	1'-3½"	5'-7"	11'-0"	9'-0"	0.45	39.0	0.67	59.0
36"	1'-7"	6'-8"	13'-0"	10'-6"	0.58	52.6	0.83	73.9
42"	2'-1½"	7'-3"	15'-6"	12'-0"	0.82	77.1	1.10	100.7
48"	2'-5"	7'-10"	17'-0"	13'-0"	0.98	94.9	1.27	120.4
54"	2'-9½"	8'-5"	18'-6"	14'-0"	1.16	115.8	1.47	143.7
60"	3'-4"	9'-0"	20'-6"	15'-6"	1.47	149.7	1.84	180.3
72"	4'-5"	10'-2"	25'-6"	18'-6"	2.31	232.6	2.73	271.0

NOTE: QUANTITIES SHOWN ARE FOR ONE (1) CURTAIN WALL.

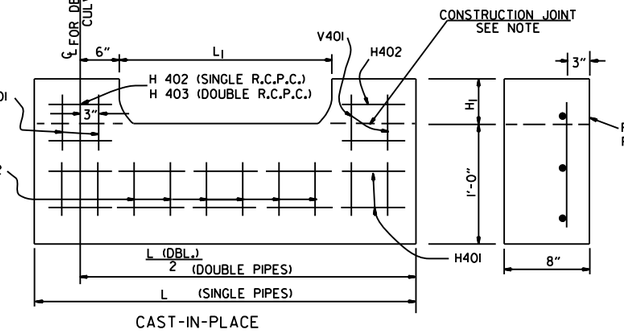

CAST-IN-PLACE

NOTE: THE PORTION OF THE R.C. CURTAIN WALL BENEATH THE FLARED END SECTION (LOWER 1'-0") SHALL BE PLACED MONOLITHICALLY. THE FLARED END SECTION SHALL THEN BE SET IN PLACE & THE REMAINING PORTIONS OF THE R.C. CURTAIN WALL PLACED.

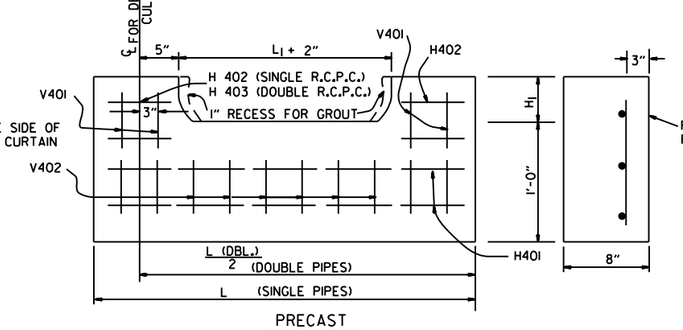

PRECAST

NOTE: THE PRECAST CURTAIN WALL WILL BE SET AND BACKFILLED WITH COMPACTED MATERIAL. THE FLARED END SECTION SHALL THEN BE SET IN PLACE AND THE 1" RECESS FILLED WITH GROUT. WHERE "L" EXCEEDS 11' THE CURTAIN WALL MAY BE CAST IN TWO (2) OR MORE SECTIONS. THE METHOD OF JOINING THE SECTIONS FOR INSTALLATION SHALL BE APPROVED BY THE ENGINEER.

R.C. CURTAIN WALL DETAILS

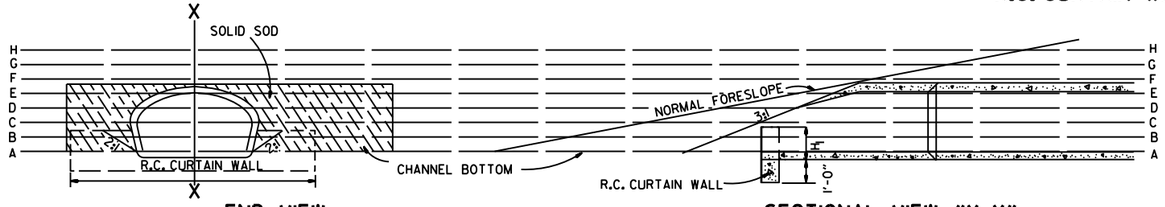

END VIEW

SECTIONAL VIEW "X-X"

REINFORCING STEEL SCHEDULE

PIPE DIA.	SINGLE R.C. PIPE CULVERT H401 L	H401 NO.	H402 L	H402 NO.	V401 L	V401 NO.	V402 L	V402 NO.	DOUBLE R.C. PIPE CULVERT H401 L	H401 NO.	H402 L	H402 NO.	H403 L	H403 NO.	V401 L	V401 NO.	V402 L	V402 NO.
18"	7'-8"	2	1'-11½"	4	1'-7½"	8	8"	8	12'-2"	2	1'-11½"	4	8"	2	1'-7½"	10	8"	14
24"	9'-2"	2	2'-2"	4	1'-8½"	10	8"	9	14'-8"	2	2'-2"	4	8"	2	1'-8½"	12	8"	18
30"	10'-8"	2	2'-4½"	4	1'-11½"	10	8"	12	17'-8"	2	2'-4½"	4	8"	2	1'-11½"	14	8"	22
36"	12'-8"	2	2'-10"	6	2'-3"	12	8"	14	20'-8"	2	2'-10"	6	8"	3	2'-3"	14	8"	28
42"	15'-2"	2	3'-9½"	8	2'-9½"	16	8"	15	23'-8"	2	3'-9½"	8	8"	4	2'-9½"	18	8"	30
48"	16'-8"	2	4'-3"	10	3'-1"	18	8"	16	25'-8"	2	4'-3"	10	8"	5	3'-1"	20	8"	32
54"	18'-2"	2	4'-8½"	12	3'-5½"	20	8"	17	27'-8"	2	4'-9"	12	8"	6	3'-5½"	22	8"	34
60"	20'-2"	2	5'-5"	14	4'-0"	24	8"	18	30'-8"	2	5'-5"	14	8"	7	4'-0"	26	8"	36
72"	25'-2"	2	7'-4"	18	5'-1"	30	8"	20	36'-8"	2	7'-4"	18	8"	9	5'-1"	33	8"	40

ALL REINFORCING STEEL #4 BARS @ 6" O.C.

SOLID SODDING

PIPE DIA.	SINGLE R.C.P.C. 3:1	4:1	6:1	DOUBLE R.C.P.C. 3:1	4:1	6:1
	SQ. YDS.			SQ. YDS.		
18"	5	7	12	6	8	13
24"	8	12	19	9	13	20
30"	13	18	29	14	19	30
36"	17	26	41	18	28	43
42"	23	35	55	25	37	57
48"	29	46	68	31	48	70
54"	35	57	85	37	59	87
60"	45	62	104	48	65	107
72"	64	92	156	67	95	159

NOTE: QUANTITIES SHOWN ABOVE ARE FOR ONE (1) END OF F.E.S.

GENERAL NOTES

1. A CAST-IN-PLACE OR PRECAST CURTAIN WALL MAY BE USED. PAYMENT FOR THE CURTAIN WALL SHALL BE CONSIDERED TO BE INCLUDED IN THE UNIT PRICE BID EACH FOR FLARED END SECTIONS OF THE SEVERAL SIZES, WHICH PRICE SHALL BE FULL COMPENSATION FOR FURNISHING ALL MATERIALS INCLUDING REINFORCING STEEL AND CONCRETE: FOR FORMS, MIXING AND PLACING; FOR EXCAVATION AND BACKFILL, AND FOR ALL LABOR, TOOLS, EQUIPMENT AND INCIDENTALS NECESSARY TO COMPLETE THE WORK.
2. ALL EXPOSED EDGES SHALL BE CHAMFERED ¾".
3. CONCRETE FOR CURTAIN WALL SHALL MEET THE REQUIREMENTS FOR CLASS A OR S CONCRETE AS PROVIDED IN SECTION 802 OF THE STANDARD SPECIFICATIONS OR FOR PAVING CONCRETE AS PROVIDED IN SECTION 501 OF THE STANDARD SPECIFICATIONS.
4. WELDED WIRE MESH 3 x 3 W10 x W10 MAY BE USED IN LIEU OF REINFORCING BARS.

DATE	REVISION	FILMED
10-18-96	ADDED NOTE TO SOLID SODDING	
10-12-95	CORRECTED SPELLING	
11- 3-94	ADDED GENERAL NOTE NO. 4	
8-15-91	REV. CURTAIN WALL QUANT. STEEL SCH. & SOLID SOD QUANT.	
3-2-81	ALLOW PRECAST IN 2 OR MORE PIECES CHAMFER EDGES	
5-15-80	ADDED PRECAST WALL & GENERAL NOTES	
10-2-72	REVISED AND REDRAWN	

ARKANSAS STATE HIGHWAY COMMISSION

FLARED END SECTION

STANDARD DRAWING FES-1

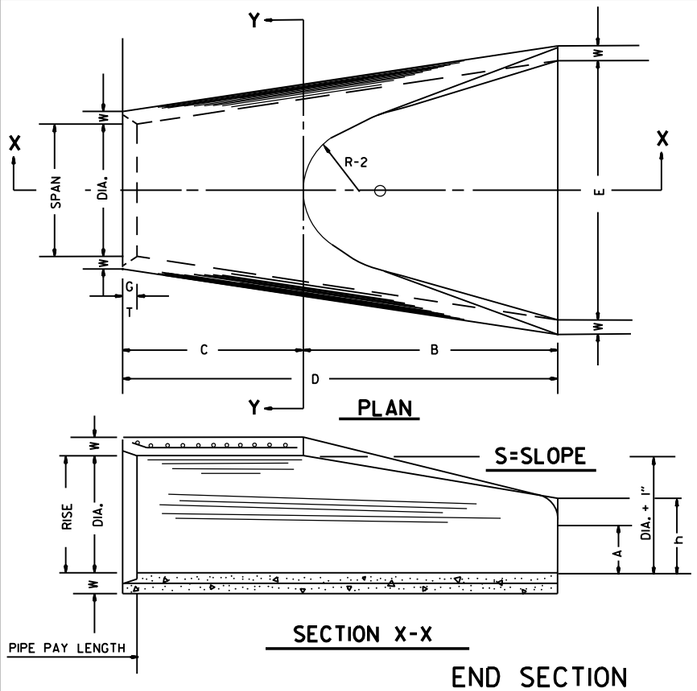

TABLE OF DIMENSIONS

DIA.	WALL	A	B	C	D	E	S	DIA. + 1"	P	R-1	R-2	G-T	WT.	h
18"	2½"	9"	2'-3"	3'-10"	6'-1"	3'-0"	3:1	19"	29"	15½"	12"	2"	1000	1'-0½"
24"	3"	9½"	3'-7½"	2'-6"	6'-1½"	4'-0"	3:1	25"	33 3/16"	16 15/16"	14"	2½"	1600	1'-1½"
30"	3½"	1'-0"	4'-6"	1'-7 3/4"	6'-1 3/4"	5'-0"	3:1	31"	37"	18½"	15"	3¼"	1940	1'-4 5/8"
36"	4"	1'-3"	5'-3"	2'-10 3/4"	8'-1 3/4"	6'-0"	3:1	37"	47 13/16"	24 5/16"	20"	3½"	4100	1'-8"
42"	4½"	1'-9"	5'-3"	2'-11"	8'-2"	6'-6"	3:1	43"	53⅞"	27½"	22"	3½"	5380	2'-2½"
48"	5"	2'-0"	6'-0"	2'-2"	8'-2"	7'-0"	3:1	49"	56½"	28½"	22"	3½"	6550	2'-6"
54"	5½"	2'-4"	6'-6"	1'-10"	8'-4"	7'-6"	3:1	55"	65½"	33⅛"	24"	4"	8750	2'-10½"
60"	6"	2'-10"	6'-6"	1'-10"	8'-4"	8'-0"	3:1	61"	72½"	36 11/16"	24"	4"	9270	3'-5"
72"	7"	3'-10"	6'-6"	1'-10"	8'-4"	9'-0"	3:1	73"	77 13/16"	38 15/16"	24"	5"	13250	4'-6"

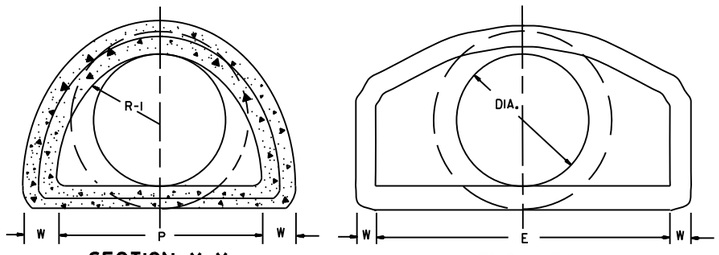

NOTE: TONGUE END ON UPSTREAM SECTION
GROOVE END ON DOWNSTREAM SECTION

ARCH PIPE

EQUIV. DIA.	• SPAN AASHTO M 206	• SPAN AHD NOMINAL	• RISE AASHTO M 206	• RISE AHD NOMINAL	W	A	B	C	D	E	P	R2	G-T	S
	INCHES													
15	18	18	11	11	2"	4"	2'-0"	4'-0"	6'-0"	3'-0"	29"	12"	1½"	2½:1
18	22	22	13½	14	2½"	5"	2'-0"	4'-1"	6'-1"	3'-6"	32⅛"	13"	2½"	2½:1
21	26	26	15½	16	2¾"	7"	2'-3"	3'-10"	6'-1"	4'-0"	34⅛"	14"	2½"	2½:1
24	28½	29	18	18	3"	9"	2'-3"	3'-10"	6'-1"	5'-0"	36 11/16"	15"	2½"	2½:1
30	36¼	36	22½	23	3½"	10"	3'-1"	3'-0½"	6'-1½"	6'-0"	47 11/16"	20"	3"	2½:1
36	43¾	44	26⅜	27	4"	10½"	4'-0"	2'-11½"	6'-1½"	6'-6"	54 5/16"	22"	3½"	2½:1
42	51⅛	51	31 5/16	31	4½"	11½"	4'-7"	1-10¼"	6'-5¼"	7'-2"	59½"	23"	3¾"	2½:1
48	58½	59	36	36	5"	1'-3"	5'-3"	2'-10¾"	8'-1¾"	7'-10"	70 5/16"	24"	4¼"	2½:1
54	65	65	40	40	5½"	1'-7"	5'-3"	2'-11"	8'-2"	8'-6"	72 1/16"	24"	4¾"	2¼:1
60	73	73	45	45	6"	1'-10"	5'-6"	2'-8"	8'-2"	9'-0"	77 1/16"	24"	5"	2¼:1

• THE MEASURED SPAN AND RISE SHALL NOT VARY MORE THAN ± 2 PER CENT FROM THE VALUES SPECIFIED BY AASHTO M 206.

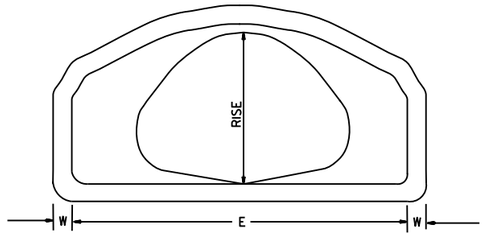

END VIEW
CONCRETE ARCH PIPE

END SECTION FOR REINFORCED CONCRETE PIPE CULVERTS

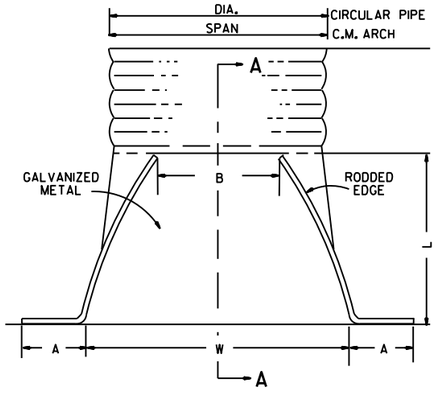

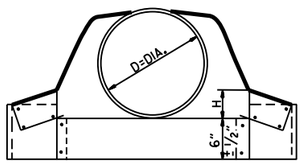

CIRCULAR PIPE

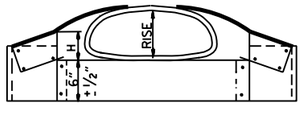

C.M. ARCH PIPE

CIRCULAR PIPE

D. DIA.	GAUGE	A 1" ±	B. MAX.	H 1" ±	L 1½" ±	W 2" ±	S
		INCHES					
12	16	6	6	6	21	24	2½:1
15	16	7	8	6	26	30	2½:1
18	16	8	10	6	31	36	2½:1
21	16	9	12	6	36	42	2½:1
24	16	10	13	6	41	48	2½:1
30	14	12	16	8	51	60	2½:1
36	14	14	19	9	60	72	2½:1
42	12	16	22	11	69	84	2½:1
48	12	18	27	12	78	90	2½:1
54	12	18	30	12	84	102	2:1
60	12	18	33	12	87	114	1¾:1
66	12	18	36	12	87	120	1½:1
72	12	18	39	12	87	126	1 1/3:1

C.M. ARCH PIPE

EQUIV. DIA.	SPAN	RISE	A 1" ±	B MAX.	H 1" ±	L 1½" ±	W 2" ±	S	GAUGE
	INCHES								
15"	17	13	7	9	6	19	30	2½:1	16
18"	21	15	7	10	6	23	36	2½:1	16
21"	24	18	8	12	6	28	42	2½:1	16
24"	28	20	9	14	6	32	48	2½:1	16
30"	35	24	10	16	6	39	60	2½:1	14
36"	42	29	12	18	8	46	75	2½:1	14
42"	49	33	13	21	9	53	85	2½:1	12
48"	57	38	18	26	12	63	90	2½:1	12
54"	64	43	18	30	12	70	102	2¼:1	12
60"	71	47	18	33	12	77	114	2¼:1	12

NOTE: ALTERNATE CONNECTIONS TO THE PIPE CULVERTS, IN ACCORDANCE WITH MANUFACTURER'S STANDARD PRACTICES, MAY BE MADE SUBJECT TO THE APPROVAL OF THE ENGINEER.

END SECTIONS FOR CORRUGATED METAL PIPE CULVERTS

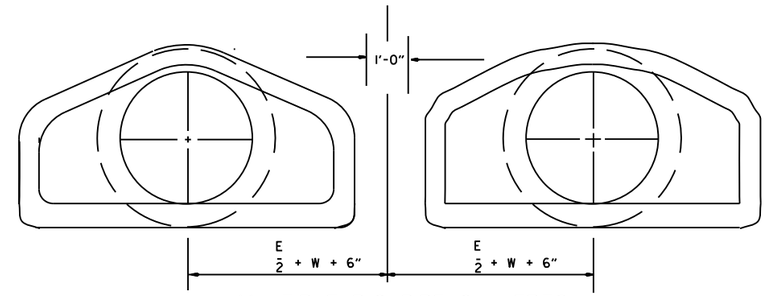

MULTIPLE R.C. PIPE CULVERTS

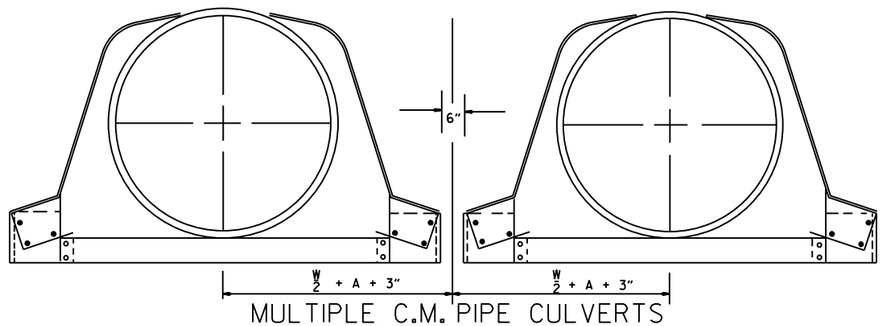

MULTIPLE C.M. PIPE CULVERTS

DATE	REVISION	FILMED
10-18-96	REVISED ASTM REF. TO AASHTO	
5-15-80	REVISED DISTANCE BETWEEN MULTIPLE R.C.P. F.E.S.	664-5-15-80
7-14-78	C.M. ARCH SIZES TO CONFORM WITH AASHTO SIZES	752-7-14-78
8-22-75	ADDED MULTIPLE PIPE CULVERTS	517-8-22-75
12-5-74	REMOVED NOTE RE REINF. FOR R.C. F.E.S.	500-12-5-74
5-24-73	CMP END SECTION, SHOW PIPE PAY LENGTH	627-5-24-73
10-2-72	REVISED AND REDRAWN	760-10-2-72

ARKANSAS STATE HIGHWAY COMMISSION

FLARED END SECTION

STANDARD DRAWING FES-2

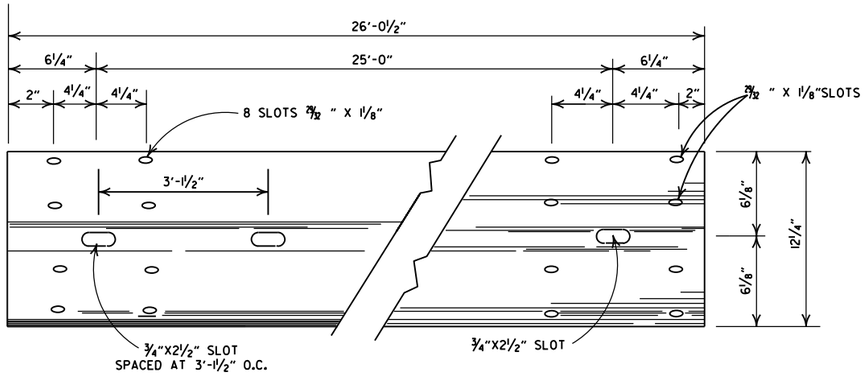

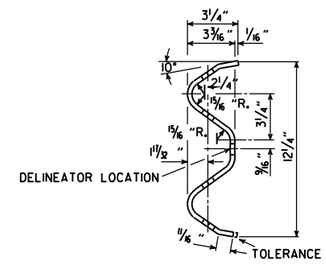

DETAILS OF W-BEAM GUARDRAIL

RAIL SECTION OF CLOSELY SIMILAR DIMENSIONS AND COMPARABLE STRENGTH MAY BE SUBSTITUTED IF APPROVED BY THE ENGINEER.

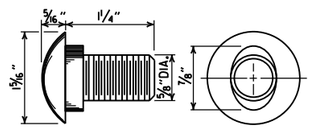

SPLICE BOLT
POST BOLT - SAME EXCEPT LENGTH

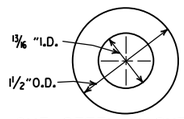

CUT STEEL WASHER

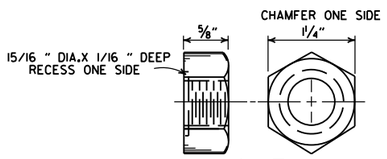

NUT

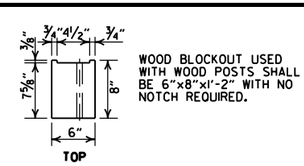

WOOD BLOCKOUT USED WITH WOOD POSTS SHALL BE 6"x8"x1'-2" WITH NO NOTCH REQUIRED.

WOOD BLOCKOUT (W-BEAM)

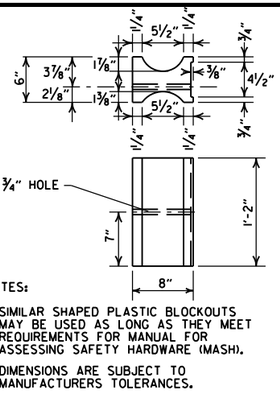

NOTES:

1. SIMILAR SHAPED PLASTIC BLOCKOUTS MAY BE USED AS LONG AS THEY MEET REQUIREMENTS FOR MANUAL FOR ASSESSING SAFETY HARDWARE (MASH).
2. DIMENSIONS ARE SUBJECT TO MANUFACTURERS TOLERANCES.

PLASTIC BLOCKOUT (W-BEAM)

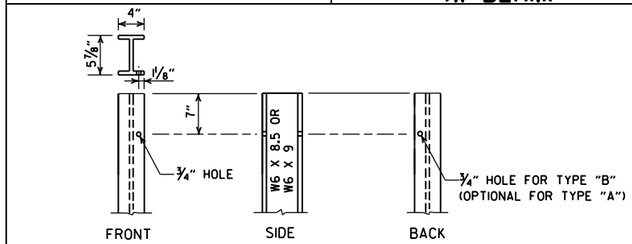

STEEL POST

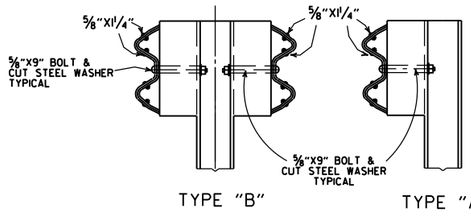

DETAILS OF STEEL LINE POST CONNECTIONS (W-BEAM)

-GENERAL NOTES-

ALL BOLTS SHALL BE SUFFICIENT LENGTH TO EXTEND THROUGH THE FULL THICKNESS OF THE NUT AND NO MORE THAN ¾" BEYOND IT.

WHERE W-BEAM GUARDRAIL CONTINUES, THE INTERMEDIATE SECTIONS SHALL HAVE A POST SPACING OF 6'-3" UNLESS OTHERWISE NOTED.

W-BEAM GUARDRAIL REPRESENTING INTERMEDIATE SECTIONS WILL BE MEASURED ALONG THE ROADWAY FACE FROM CENTERLINE OF POST TO CENTERLINE OF POST.

USE W-BEAM GUARDRAIL COMPONENTS OF SAME MATERIAL FOR ENTIRE JOB. FOR EXTENSIONS OR MODIFICATION OF EXISTING GUARDRAIL, W-BEAM GUARDRAIL COMPONENTS OF THE SAME TYPE AS THOSE EXISTING SHALL BE USED.

ANY BACKFILLING UNDER OR AROUND POST SHALL BE DAMP SAND THOROUGHLY TAMPED IN PLACE.

WOOD POSTS & WOOD BLOCKS SHALL BE EITHER DENSE NO. 1 STRUCTURAL OR BETTER 9.7 f (1400 f) OR NO. 1 1350 f SOUTHERN PINE.

CONTRACTOR SHALL HAVE THE OPTION OF USING WOOD BLOCKOUTS FOR W-BEAM GUARDRAIL OR PLASTIC BLOCKOUTS, AS LONG AS BLOCKOUT USED MEETS REQUIREMENTS FOR MANUAL FOR ASSESSING SAFETY HARDWARE (MASH) FOR W-BEAM GUARDRAIL.

DELINEATORS SHALL BE MOUNTED AT 37.5' SPACING ON THE FRONT FACE OF THE GUARDRAIL. SPACING MAY BE REDUCED IN CURVES, AS DIRECTED BY THE ENGINEER. COLOR SHALL BE IN ACCORDANCE WITH THE MANUAL ON UNIFORM TRAFFIC CONTROL DEVICES. PAYMENT FOR DELINEATORS SHALL BE CONSIDERED INCLUDED IN THE PRICE BID PER LIN. FT. FOR GUARDRAIL.

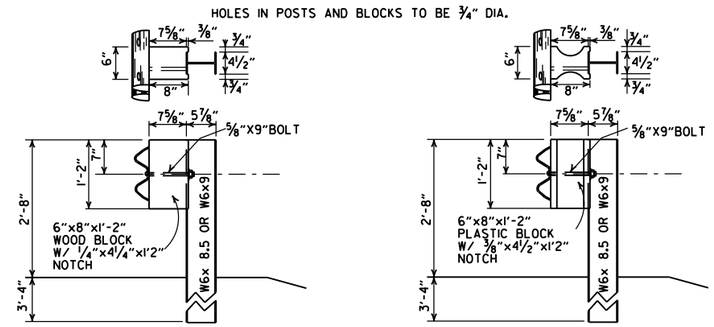

WOOD BLOCKOUT CONNECTIONS

PLASTIC BLOCKOUT CONNECTIONS

DETAILS OF STEEL LINE POST CONNECTIONS (W-BEAM)

POSTS AND BLOCKS TO BE ROUGH SAWN 6"X8" WITH A TOLERANCE OF + OR - ¼".

WOOD BLOCKOUT CONNECTIONS

PLASTIC BLOCKOUT CONNECTIONS

DETAILS OF WOOD LINE POST CONNECTIONS (W-BEAM)

DATE	REVISION	FILMED
05-19-22	REVISED GENERAL NOTES, ADDED DELINEATOR LOCATION.	
11-07-19	RENUMBERED AND RENAMED	
11-16-17	REVISED GENERAL NOTES AND RAISED GUARDRAIL HEIGHT 3"	
07-14-10	RAISED HEIGHT OF GUARDRAIL 1"	
10-15-09	ADDED REFERENCE TO MASH	
04-10-03	REVISED GENERAL NOTES	
08-22-02	REVISED DIMENSION ON WOOD & PLASTIC BLOCKOUT CONNECTIONS & STEEL POST	
11-16-01	REVISED WOOD BLOCKOUT & DETAILS OF WOOD LINE POST CONNECTIONS	
03-30-00	REMOVED GUARDRAIL AT BRIDGE ENDS	
01-12-00	ADDED PLASTIC BLOCKOUT	
08-12-98	REV. BLOCKOUTS TO WOOD, DELETED CONC. POST & REV. GENERAL NOTE, DELETED DET. OF GUARDRAIL REPLACE. BEHIND CURB & DET. OF POST PLACE. IN SOLID ROCK, & ADDED DETAILS OF STEEL LINE POST CONN. REMOVED BACK-UP PLATE, REVISED HOLES IN STEEL POLES	
04-03-97	REMOVED "LAP IN DIRECTION OF TRAFFIC" NOTE & PLACED ARROWS ON WASHERS	
10-18-96	REVISED WOOD POST NOTE	
06-02-94	ADDED ALT. STEEL POST SIZE	
08-05-93	REVISED STEEL POST SIZE	8-5-93
10-01-92	REDRAWN & REVISED	10-1-92
08-15-91	REVISED WASHER NOTE	8-15-91
08-02-90	REV. GEN. NOTE & DEPTH OF ANC. POST IN ROCK	8-2-90
07-15-88	REVISED SECTION 3 & GENERAL NOTES	
03-04-88	REV. ANCHOR POST, ELEV. NOTES & POST IN ROCK	780-3-4-88
10-30-87	REVISED WOOD LINE POST DETAIL	546-10-30-87
10-09-87	REDRAWN & REVISED	802-10-9-87

ARKANSAS STATE HIGHWAY COMMISSION

GUARDRAIL DETAILS

STANDARD DRAWING GR-6

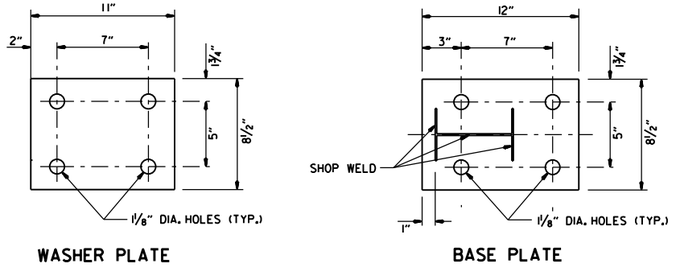

WASHER PLATE

BASE PLATE

Note: Bolts, nuts, washers and plates shall be galvanized in accordance with Section 807 of the Standard Specifications.

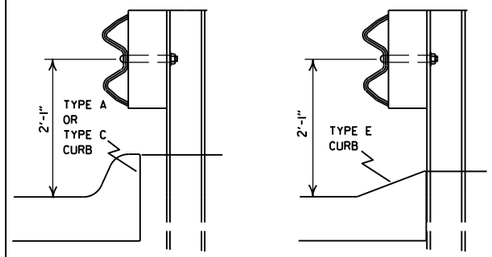

DETAIL OF GUARDRAIL PLACEMENT BEHIND CURB (W-BEAM)

FOR DESIGN SPEEDS OF 50 MPH OR LESS ALL CURB FACES, AS SHOWN ON STD. DRWG. CG-1, MAY BE USED. FOR DESIGN SPEEDS OF 55 MPH OR MORE TYPE "E" CURB FACE SHALL BE USED.

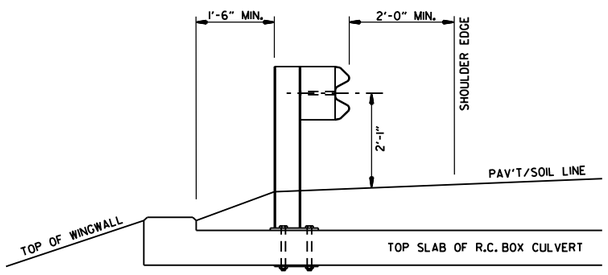

SECTION A-A

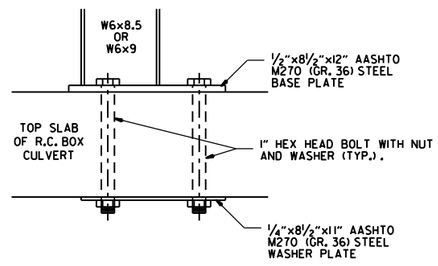

DETAIL OF CONNECTION

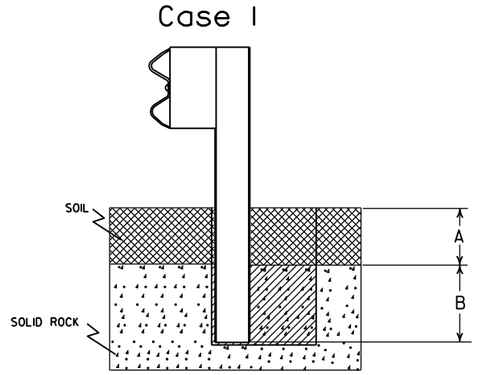

Plan View Steel Posts

Either hole configuration acceptable

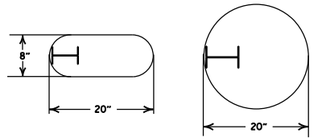

Plan View Wood Posts

Either hole configuration acceptable

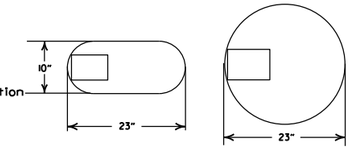

Notes: For overlying soil depths (A) ranging from 0 to 18", the depth of required drilling (B) is equal to 24".

Zone A:
Backfill according to Section 617.03(a).

Zone B:
Backfill hole in 6" lifts with material meeting the requirements of Section 802.02(c) - Alternate gradation. Compact to 95% maximum dry density per ASTM D-698.

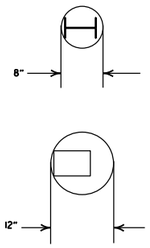

Notes: For overlying soil depths (A) ranging from 18" to 44", the depth of required drilling (B) is equal to either 12" or 44" minus the depth of soil whichever is less.

Zone A & B:
Backfill according to Section 617.03(a).

DETAIL OF POST PLACEMENT IN SOLID ROCK (W-BEAM)

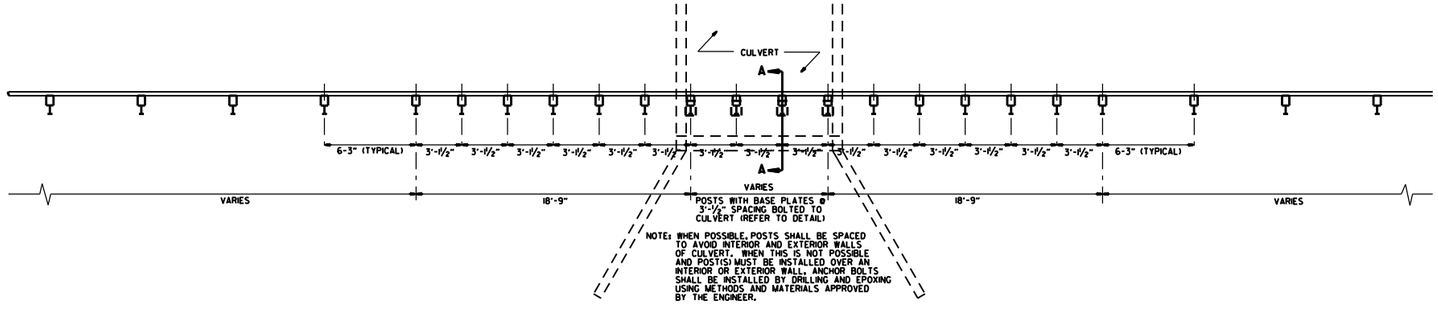

PLAN LAYOUT OF TYPE A GUARDRAIL AT LOW-FILL CULVERTS

NOTE: THIS DETAIL IS TO BE USED ONLY WHEN THE COVER OVER THE CULVERT DOES NOT PERMIT FULL EMBEDMENT OF GUARDRAIL POSTS AS SHOWN ON STD. DWG. GR-6.

DATE	REVISION	FILMED
11-07-19	RENUMBERED, RENAMED, REVISED REFERENCE	
11-16-17	REVISED GUARDRAIL HEIGHT	
07-14-10	RAISED HEIGHT OF GUARDRAIL 1"	
04-12-07	REVISED DETAIL OF GUARDRAIL PLACEMENT BEHIND CURB	
11-10-05	ADDED GUARDRAIL PLACEMENT BEHIND CURB; REVISED DETAIL OF CONNECTION	
11-18-04	REVISED POST PLACEMENT IN ROCK & CULVERT CONNECTION DETAILS. ADDED DETAIL FOR GUARDRAIL PLACEMENT AT LOW-FILL CULVERTS	
03-30-00	REMOVED CONCRETE INSERT ANCHOR	
08-12-98	CHANGED STEEL SPACER BLOCK TO WOOD BLOCKOUT, ADDED DET. OF GUARDRAIL CONNECTION TO R.C. BOX CULV'T., DELETED DET. OF STEEL LINE POST CONN. & ADDED DET. OF GUARDRAIL PLACE. BEHIND CURB & DET. OF POSTPLACE. IN SOLID ROCK	
04-03-96	PLACED ARROWS AT CUT STEEL WASHERS	4-3-96
10-18-96	REV. ASTM REF. TO AASHTO	
11-22-95	ADDED OPTIONAL HOLES	
06-02-94	REVISED ALTERNATE POST SIZE	
08-05-93	REVISED STEEL POST SIZE	
10-01-92	REDRAWN & REVISED	10-1-92
08-02-90	DEL. WASHER ON ANCHOR ASSEMBLY	8-2-90
07-15-88	CONFORMED TO 1988 SPECS	
03-04-88	REVISED ANCHOR NOTE	
10-30-87	REVISED ANCHOR ASSEMBLY	712-10-30-87
10-30-87	REVISED PLACEMENT BEHIND CURB	547-10-30-87
10-09-87	REDRAWN & REVISED	803-10-9-87

ARKANSAS STATE HIGHWAY COMMISSION

GUARDRAIL DETAILS

STANDARD DRAWING GR-7

NOTE: GUARDRAIL WITH GUARDRAIL TERMINAL (TYPE 1) TO BE INSTALLED ONLY AT LOCATIONS SHOWN ON PLANS.

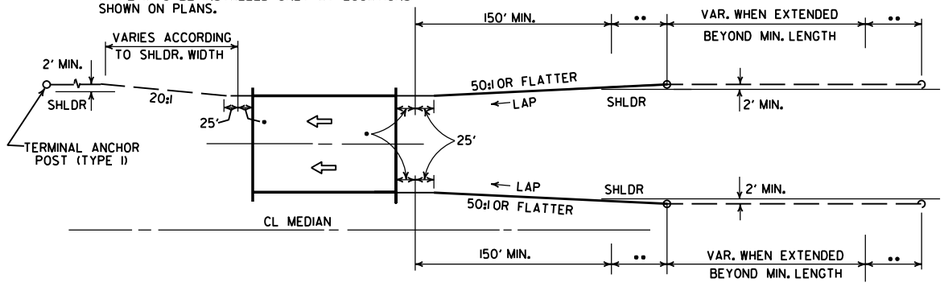

ONE-WAY TRAFFIC

••• LAP OF GUARDRAIL SHALL BE AS SHOWN FOR A DISTANCE OF UP TO 200'. CHANGE TO LAP IN DIRECTION OF TRAVEL.

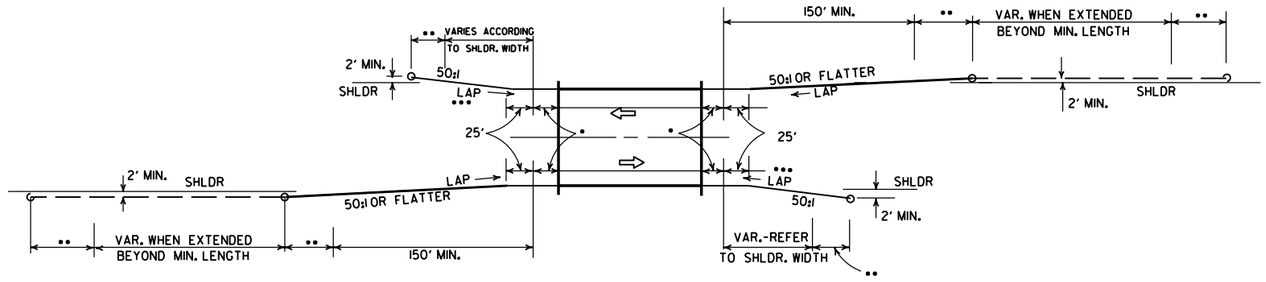

TWO-WAY TRAFFIC

METHODS OF INSTALLATION OF GUARDRAIL AT LESS THAN FULL SHOULDER WIDTH BRIDGES USING GUARDRAIL TERMINAL (TYPE 2)

••• LAP OF GUARDRAIL SHALL BE AS SHOWN FOR A DISTANCE OF UP TO 200'. CHANGE TO LAP IN DIRECTION OF TRAVEL.

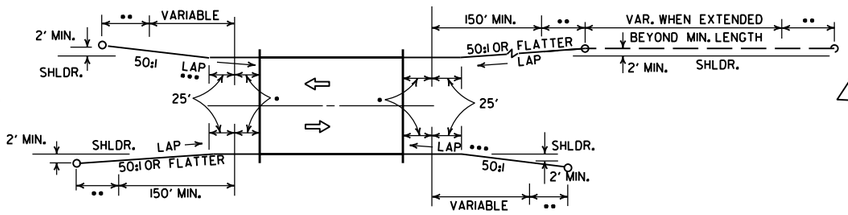

TWO-WAY TRAFFIC

NOTE: GUARDRAIL WITH GUARDRAIL TERMINAL (TYPE 1) TO BE INSTALLED ONLY AT LOCATIONS SHOWN ON PLANS.

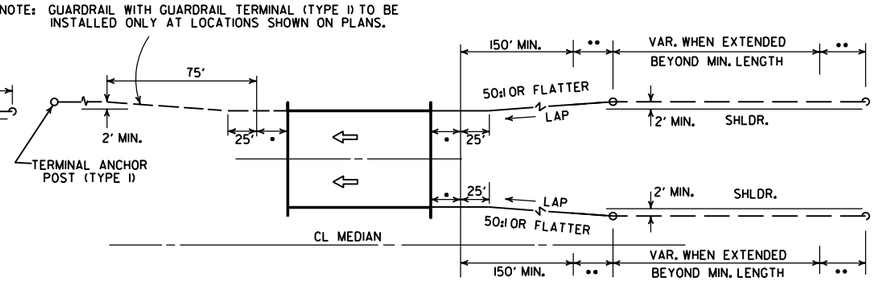

ONE-WAY TRAFFIC

METHOD OF INSTALLATION OF GUARDRAIL AT FULL SHOULDER WIDTH BRIDGES USING GUARDRAIL TERMINAL (TYPE 2)

••• LAP OF GUARDRAIL SHALL BE AS SHOWN FOR A DISTANCE OF UP TO 200'. CHANGE TO LAP IN DIRECTION OF TRAVEL.

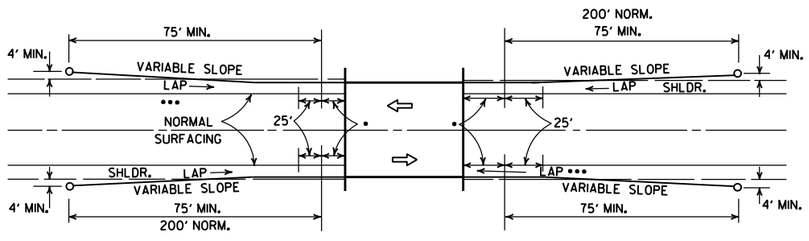

METHOD OF INSTALLATION OF GUARDRAIL USING GUARDRAIL TERMINAL (TYPE 1) (FULL SHOULDER WIDTH OR LESS BRIDGES)

LEGEND

- • THRIE BEAM GUARDRAIL TERMINAL
- •• GUARDRAIL TERMINAL (TYPE 2)

DATE	REVISION	DATE FILM
11-07-19	RENUMBERED AND RENAMED	
4-17-08	REVISED LAYOUTS	
11-10-05	REMOVED GUARDRAIL NOTES AND DETAILS	
11-16-01	DELETED NOTE-METHOD OF INSTALLATION OF GUARDRAIL USING GUARDRAIL TERM. (TY. 1)	
1-12-00	ADDED CONSTRUCTION NOTE	1-12-00
6-26-97	REVISED LAYOUT	
10-1-92	REDRAWN & REVISED	10-1-92
	ADDED NOTE	
10-9-87	REDRAWN & REVISED	

ARKANSAS STATE HIGHWAY COMMISSION

GUARDRAIL DETAILS

STANDARD DRAWING GR-8

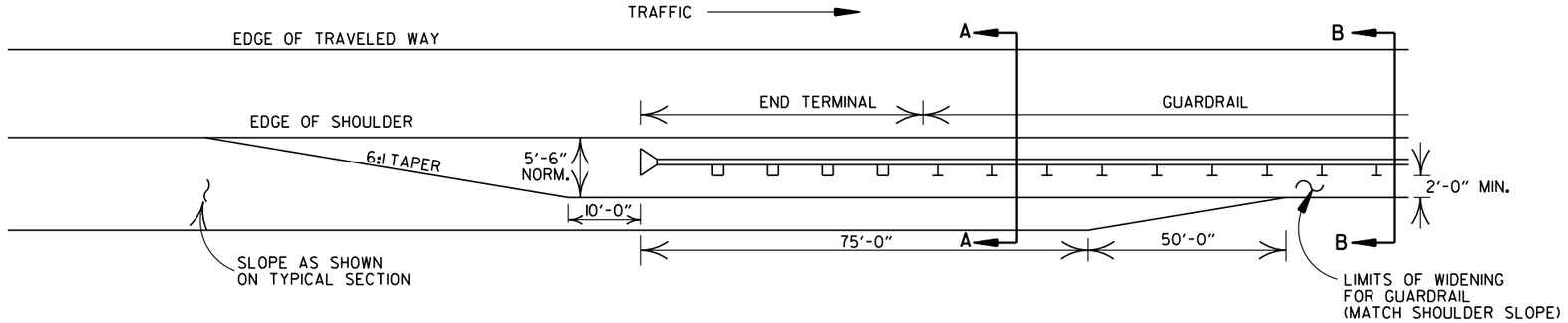

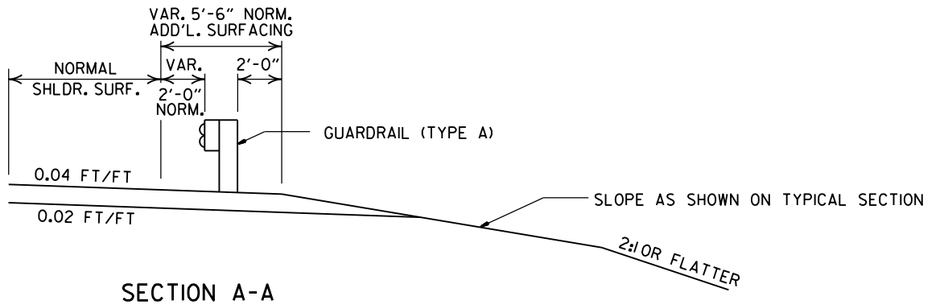

SECTION A-A

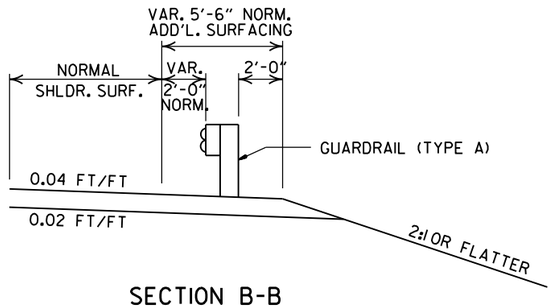

SECTION B-B

DETAILS OF WIDENING FOR GUARDRAIL

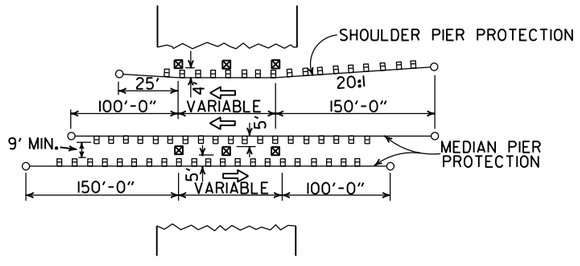

METHOD OF INSTALLATION OF GUARDRAIL AT FIXED OBSTACLE

NOTE: NORMAL SECTION TO BE WIDENED APPROX. 5'-6" EACH SIDE TO SUPPORT GUARDRAIL.

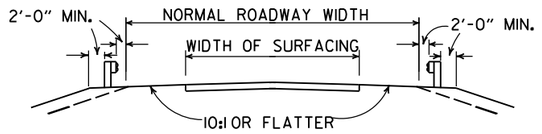

SECTION ON TANGENT

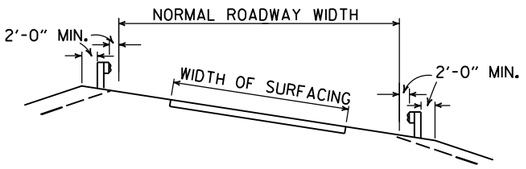

SECTION ON CURVE

DETAILS SHOWING POSITION OF GUARDRAIL ON HIGHWAY

DATE	REVISION	DATE FILM
11-07-19	RENUMBERED AND RENAMED	
4-17-08	MINOR REVISION	
11-10-05	DRAWN	

ARKANSAS STATE HIGHWAY COMMISSION

GUARDRAIL DETAILS

STANDARD DRAWING GR-9

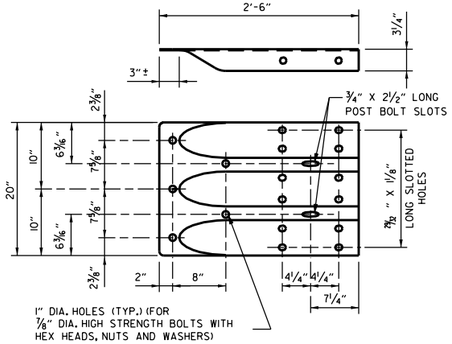

SPECIAL END SHOE

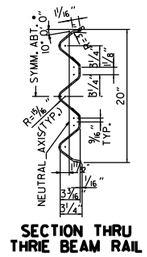

SECTION THRU THRIE BEAM RAIL

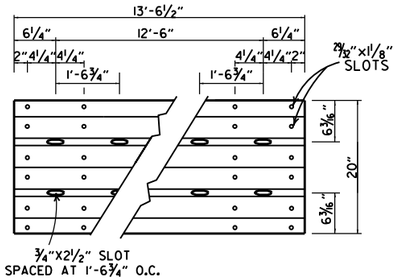

THRIE BEAM RAIL

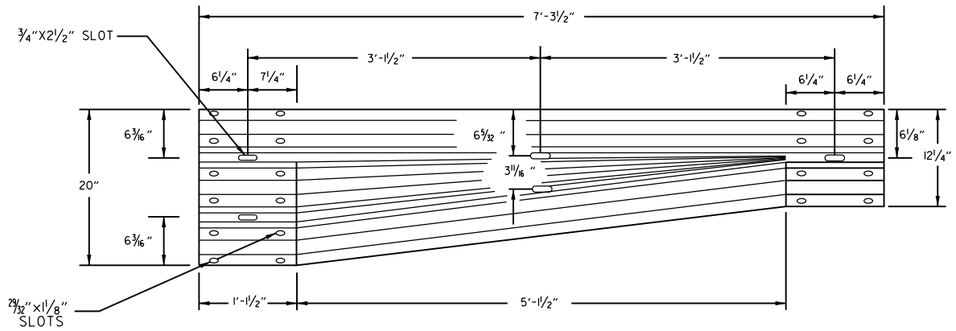

TRANSITION SECTION

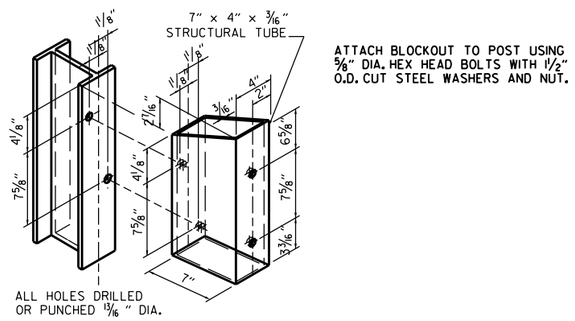

STRUCTURAL STEEL TUBING BLOCKOUT DETAIL

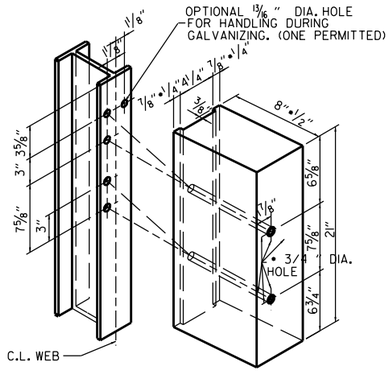

ALL HOLES 13/16" DIAMETER EXCEPT AS NOTED

HOLE PUNCHING DETAIL FOR STEEL POST & WOOD OR PLASTIC BLOCKOUTS

NOTE: BLOCKS SHALL BE THE SAME TYPE THROUGHOUT THE PROJECT LIMITS.

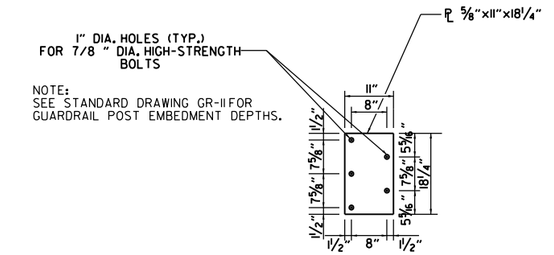

CONNECTOR PLATE

CONNECTOR PLATE SHALL BE AASHTO M270, GR. 36 AND SHALL BE GALVANIZED AFTER FABRICATION. GALVANIZING SHALL CONFORM TO SUBSECTION 807.19 OF THE STANDARD SPECIFICATIONS. CONNECTOR PLATE TO BE BOLTED TO SPECIAL END SHOE USING ⅞" DIA. HIGH STRENGTH BOLTS, WITH THE HEADS PLACED ON THE TRAFFIC FACE. WASHERS SHALL BE USED UNDER THE HEAD AND NUT. BOLTS, NUTS AND WASHERS SHALL BE GALVANIZED AND SHALL CONFORM TO SUBSECTION 807.06.

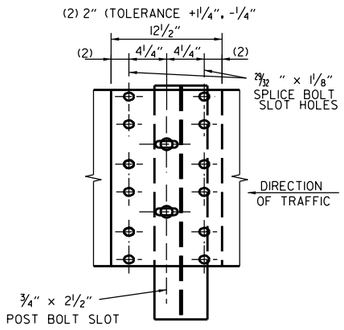

THRIE BEAM RAIL SPLICE AT POST

GENERAL NOTES:

THE THRIE BEAM RAIL, SPECIAL END SHOE, AND THE TRANSITION SECTION SHALL BE MADE OF STEEL AND SHALL BE 12 GAGE. ZINC COATING SHALL BE TYPE 1.

RAIL POSTS SHALL BE SET PERPENDICULAR TO THE ROADWAY PROFILE GRADE AND VERTICALLY IN CROSS SECTION.

ALL BOLTS SHALL BE SUFFICIENT LENGTH TO EXTEND THROUGH THE FULL THICKNESS OF THE NUT AND NO MORE THAN 3"4" BEYOND IT.

ALL LAP SPLICES, INCLUDING SPECIAL END SHOES, SHALL BE MADE IN THE DIRECTION SHOWN ON STANDARD DRAWINGS GR-8 & GR-13.

REFER TO STD. DRWG. GR-11 FOR POST DETAILS.

USE THRIE BEAM GUARDRAIL COMPONENTS OF SAME MATERIAL FOR ENTIRE JOB.

THRIE BEAM POSTS SHALL BE SAME MATERIAL AS W-BEAM POSTS FOR ENTIRE JOB.

WOOD POSTS & WOOD BLOCKS SHALL BE EITHER DENSE NO. 1 STRUCTURAL OR BETTER 9.7 f (1400 f) OR NO. 1 1350 f SOUTHERN PINE.

DATE	REVISION	FILMED
11-07-19	RENAMED AND REVISED REFERENCES	
11-16-17	REVISED TRANSITION SECTION, GUARD RAIL HEIGHT, AND GENERAL NOTES; MOVED THRIE BEAM GUARD RAIL CONNECTIONS AT BRIDGES ENDS TO STD. DRWG. GR-12	
07-14-10	RAISED HEIGHT OF W-BEAM 1"	
11-29-07	ADDED PLASTIC BLOCKOUTS	
11-10-05	ADDED NOTE FOR ATTACHING STEEL BLOCKOUT	
11-18-04	REVISED GENERAL NOTES	
10-9-03	REVISED GENERAL NOTES	
04-10-03	REVISED GENERAL NOTES	
08-22-02	REVISED NOTE (2)	
06-29-00	MOVED DIMENSION LINES	
05-18-00	ADDED NOTE	
03-30-00	DRAWN & ISSUED	

ARKANSAS STATE HIGHWAY COMMISSION

GUARDRAIL DETAILS

STANDARD DRAWING GR-10

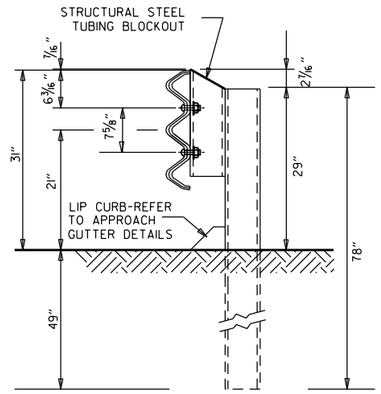

THRIE BEAM RAIL WITH STEEL TUBING BLOCKOUT
AND STEEL POST
POSTS 1-7

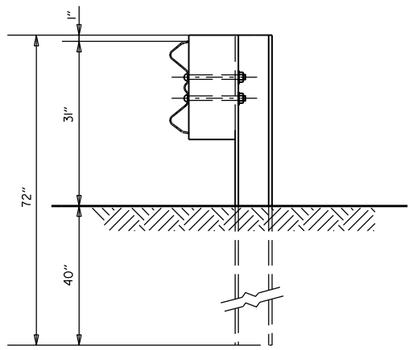

W-BEAM TO THRIE BEAM TRANSITION RAIL
WITH WOOD OR PLASTIC BLOCKOUT AND STEEL POST
POST 8

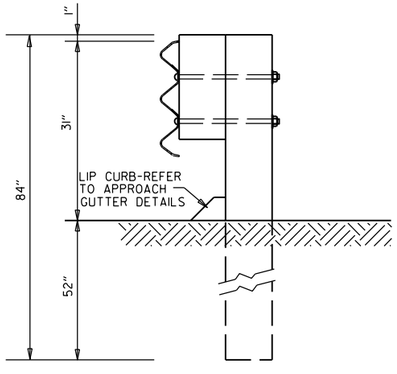

THRIE BEAM RAIL
WITH WOOD OR PLASTIC
BLOCKOUTS & WOOD POSTS
POSTS 1-6

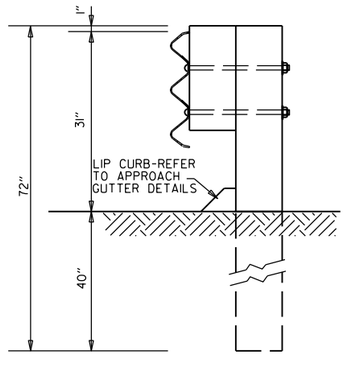

THRIE BEAM RAIL
WITH WOOD OR PLASTIC
BLOCKOUT & WOOD POST
POST 7

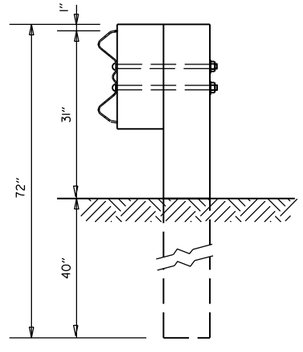

W-BEAM TO THRIE BEAM
TRANSITION RAIL WITH WOOD OR
PLASTIC BLOCKOUT & WOOD POST
POST 8

GENERAL NOTES:

RAIL POSTS SHALL BE SET PERPENDICULAR TO THE ROADWAY PROFILE GRADE AND VERTICALLY IN CROSS SECTION.

WOOD POSTS & WOOD BLOCKS SHALL BE EITHER DENSE NO. 1STRUCTURAL OR BETTER 9.7f (1400 f) OR NO.1 1350 f SOUTHERN PINE.

DATE	REVISION	FILMED
11-07-19	RENAMED	
11-16-17	REVISED GUARDRAIL HEIGHT, CHANGED STD. DWG. NUMBER FROM GR-10A TO GR-11	
07-14-10	REVISED POST 8 DIMENSIONS	
11-29-07	ADDED PLASTIC BLOCKOUTS	
08-22-02	REVISED LIP CURB NOTE	
03-30-00	DRAWN & ISSUED	

ARKANSAS STATE HIGHWAY COMMISSION

GUARDRAIL DETAILS

STANDARD DRAWING GR-11

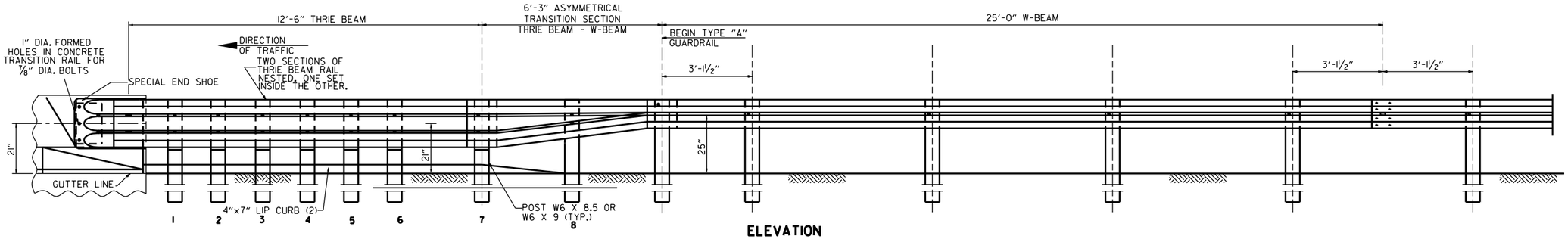

ELEVATION

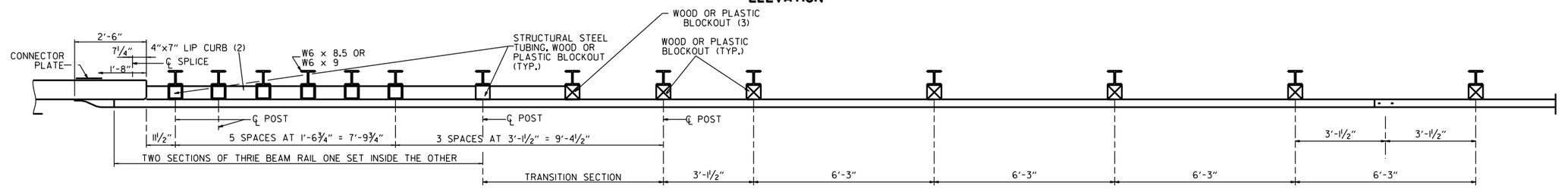

PLAN

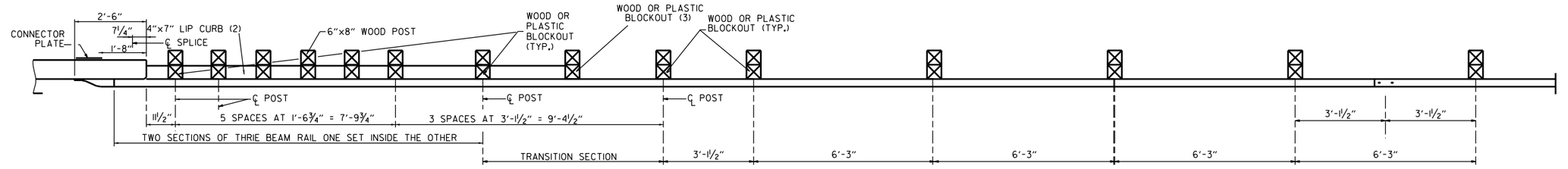

PLAN

(1) VERIFY BOLT SPACING FROM RAIL TRANSITION PRODUCER.
(2) REFER TO APPROACH GUTTER DETAILS.
(3) LENGTH OF BLOCKOUT ON POST 8 TO BE MODIFIED TO FIT RAIL WIDTH.

THRIE BEAM GUARDRAIL CONNECTION AT BRIDGE ENDS

GENERAL NOTES:

THE THRIE BEAM RAIL, SPECIAL END SHOE, AND THE TRANSITION SECTION SHALL BE MADE OF STEEL AND SHALL BE 12 GAGE. ZINC COATING SHALL BE TYPE I.

RAIL POSTS SHALL BE SET PERPENDICULAR TO THE ROADWAY PROFILE GRADE AND VERTICALLY IN CROSS SECTION.

ALL BOLTS SHALL BE SUFFICIENT LENGTH TO EXTEND THROUGH THE FULL THICKNESS OF THE NUT AND NO MORE THAN 3/4" BEYOND IT.

ALL LAP SPLICES, INCLUDING SPECIAL END SHOES, SHALL BE MADE IN THE DIRECTION SHOWN ON STANDARD DRAWINGS GR-8 & GR-13.

REFER TO STD. DRWG. GR-11 FOR POST DETAILS.

USE THRIE BEAM GUARDRAIL COMPONENTS OF SAME MATERIAL FOR ENTIRE JOB.

THRIE BEAM POSTS SHALL BE SAME MATERIAL AS W-BEAM POSTS FOR ENTIRE JOB.

POSTS SHALL NOT BE PLACED AT SPLICE LOCATIONS ALONG W-BEAM RAILS.

WOOD POSTS & WOOD BLOCKS SHALL BE EITHER DENSE NO. 1 STRUCTURAL OR BETTER 9.7f (1400 f) OR NO. 1 1350 f SOUTHERN PINE.

DATE	REVISION	FILMED
05-14-20	REVISED NOTES	
11-07-19	RENAMED & REVISED REFERENCES	
11-16-17	RE-DRAWN FROM STD. DWG. GR-10 & ISSUED	

ARKANSAS STATE HIGHWAY COMMISSION

GUARDRAIL DETAILS

STANDARD DRAWING GR-12

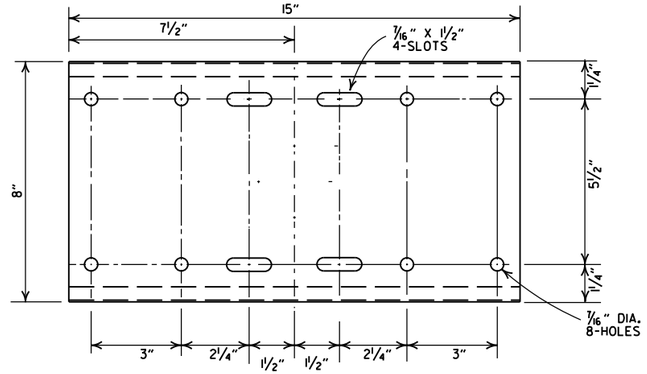

SHELF

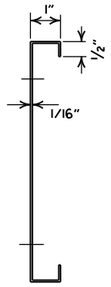

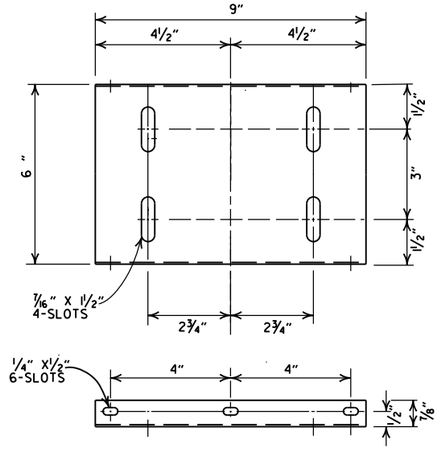

PLATFORM

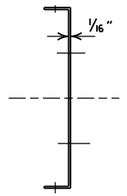

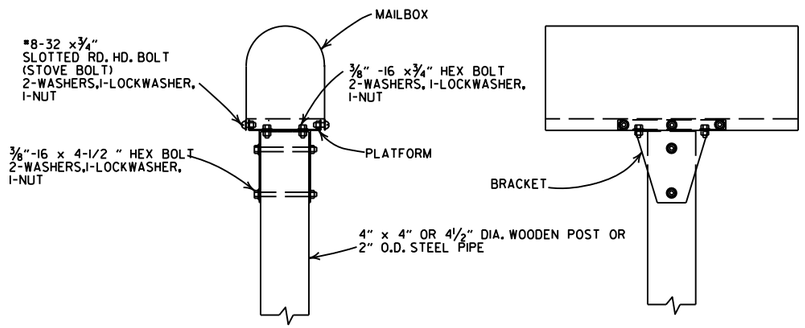

SINGLE INSTALLATION

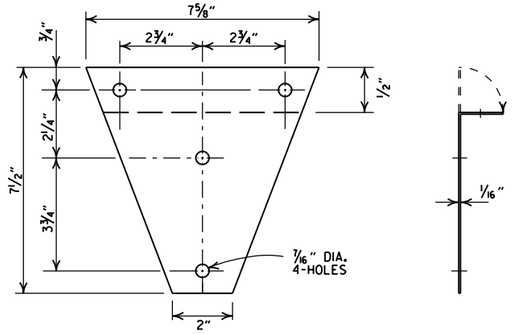

BRACKET

GENERAL NOTES

1. MAILBOX POSTS MAY BE WOOD OR METAL. WOOD POSTS SHALL BE PRESSURE TREATED FOR GROUND CONTACT IN ACCORDANCE WITH SECTION 637.02 OF THE STANDARD SPECIFICATIONS.
2. ANTI-TWIST PLATES SHALL BE USED ONLY ON METAL POSTS.
3. MAILBOX SHELF, BRACKET & PLATFORM SHALL BE GALVANIZED OR PAINTED STEEL, HOWEVER TREATED WOOD MAY BE USED WITH WOODEN POSTS. THE WOODEN SHELF, BRACKET & PLATFORM SHALL BE A MINIMUM OF ¾" THICK AND SHALL BE ASSEMBLED WITH BOLTS OF THE APPROPRIATE LENGTH WITH SIX 8 X¾" FLATHEAD WOOD SCREWS USED TO ATTACH THE MAILBOX TO THE PLATFORM.
4. THE MAILBOX SHELF AND PLATFORM THAT IS SHOWN IS FOR STANDARD SIZE MAILBOXES. THE SHELF AND PLATFORM SIZE SHALL BE MODIFIED TO FIT MAILBOXES OF A DIFFERENT SIZE.
5. METAL PIPE FOR MAILBOX SUPPORT SHALL BE 2" OUTSIDE DIAMETER STEEL WITH A WALL THICKNESS OF 0.145" AND A WEIGHT OF 2.72 LBS PER FT. OUTSIDE DIAMETER AND WEIGHT SHALL HAVE A TOLERANCE OF +/- 5% ACCORDING TO AASHTO M 181.
6. MAILBOX SUPPORT SYSTEM DIFFERING FROM THOSE SHOWN MAY BE USED, PROVIDED THEY ARE ON THE ARDOT QUALIFIED PRODUCTS LIST FOR MAILBOX SUPPORTS.

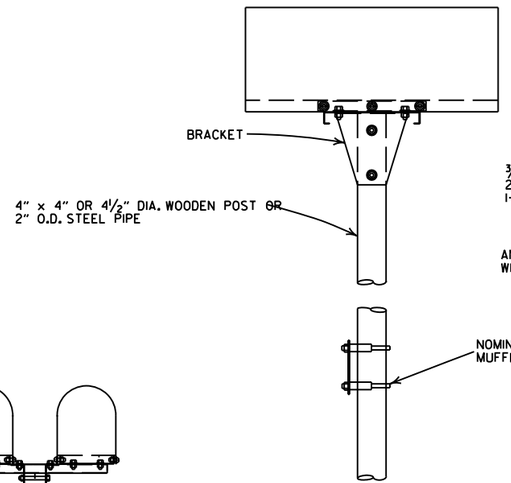

DOUBLE INSTALLATION

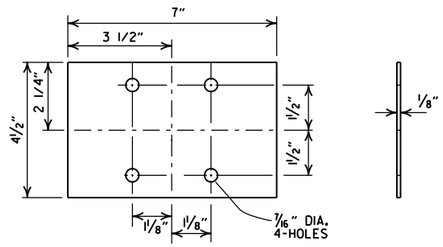

ANTI-TWIST PLATE

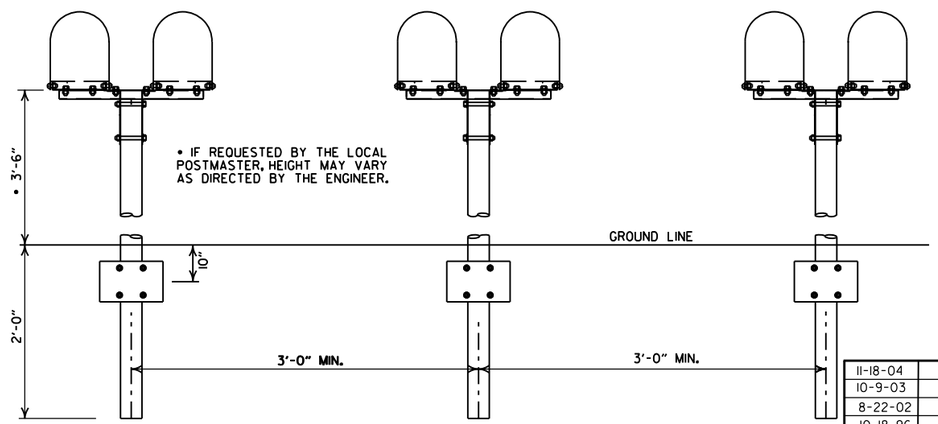

SPACING FOR MULTIPLE POST INSTALLATION

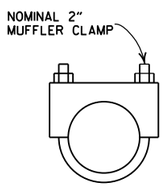

CLAMP

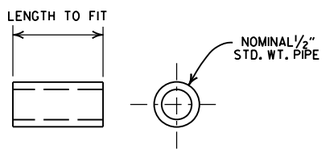

SPACER

DATE	FILMED	REVISION
11-18-04		REVISED NOTES
10-9-03		REVISED NOTE 6
8-22-02		REVISED NOTE 6
10-18-96		CORRECTED AASHTO
10-1-92		CORRECTED SPELLING
9-26-91		NEW PHONE NUMBER
8-15-91		ADDED NOTE
11-30-89		ADJUSTED HEIGHT & ADDED NOTE
2-16-89		DELETED SLOTS FROM SHELF & PLTF
11-17-88	10-1-92	ADJUSTED DIMENSIONS OF STEEL POSTS
7-15-88	20-7-15-88	ISSUED

ARKANSAS STATE HIGHWAY COMMISSION

MAILBOX DETAILS

STANDARD DRAWING MB-1

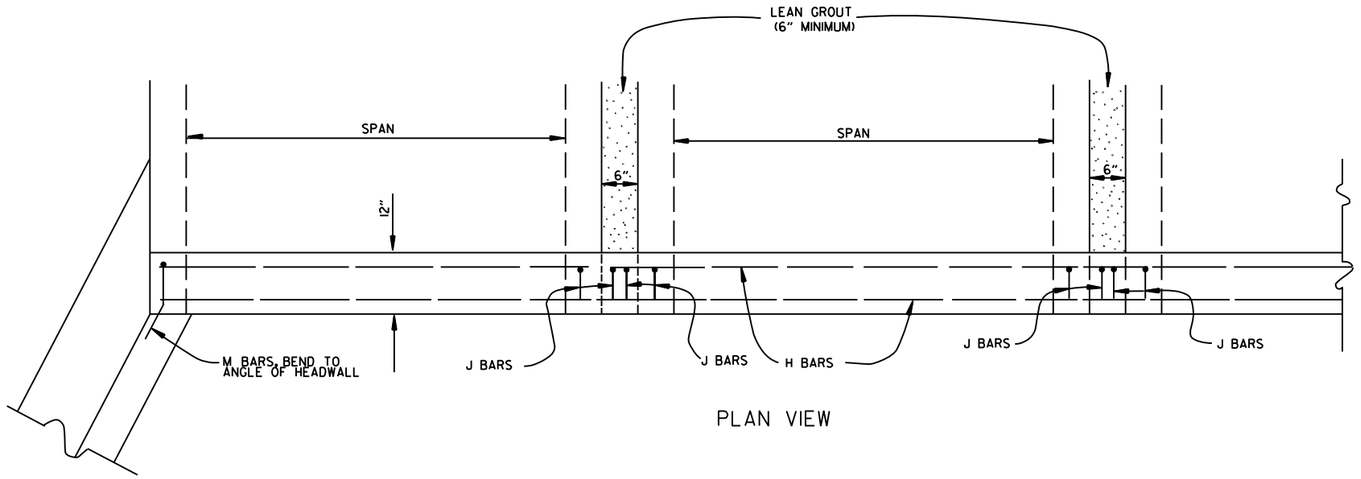

PLAN VIEW

BAR LIST

BAR	NO.	SIZE	LENGTH	BAR BENDING DIAGRAM
H	2	#4	•	
I	•	#4	•	
J	•	#4	1'-5"	
L	•	#4	3'-2"	
M	•	#4	1'-8"	

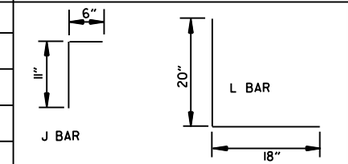

• NOTE: LENGTH AND NUMBER OF BARS VARIES WITH SIZE OF CULVERT

GENERAL NOTES

WINGS, CURTAIN WALLS AND APRONS SHALL BE TIED TO THE PRECAST CULVERT SECTION BY CASTING BARS IN CULVERT END SECTIONS AS SHOWN OR BY DOWELING AND GROUTING. J BARS AND M BARS SHALL BE EMBEDDED A MINIMUM OF 10" IN PRECAST BOX.

WINGS, FOOTINGS, APRONS AND CURTAIN WALLS SHALL BE CONSTRUCTED IN ACCORDANCE WITH THE APPLICABLE WING DRAWING. STEEL AND CONCRETE QUANTITIES WILL BE ADJUSTED TO FIT THE IN-PLACE WIDTH & HEIGHT OF THE PRECAST CONCRETE BOX CULVERTS.

ALL EXPOSED CORNERS TO HAVE ¾" CHAMFERS.

WINGWALLS AND FOOTINGS MAY BE ADJUSTED IN THE FIELD AS DIRECTED BY THE ENGINEER.

ALL CONCRETE, REINFORCING STEEL, LEAN GROUT, MEMBRANE WATERPROOFING, DRAINAGE FILL MATERIAL, GEOTEXTILE FILTER FABRIC, LABOR, MATERIALS AND EQUIPMENT REQUIRED FOR INSTALLING PRECAST BOX CULVERTS WILL NOT BE PAID FOR DIRECTLY BUT WILL BE CONSIDERED TO BE INCLUDED IN THE PRICE BID FOR THE ITEMS AS SPECIFIED IN SECTION 607 OF THE STANDARD SPECIFICATIONS.

LEAN GROUT SHALL CONSIST OF A SAND CEMENT MIXTURE MEETING THE FOLLOWING REQUIREMENTS:
PORTLAND CEMENT SHALL BE TYPE I AND SHALL MEET THE REQUIREMENTS OF AASHTO M 85.
SAND SHALL MEET THE REQUIREMENTS OF FINE AGGREGATE AS SPECIFIED IN SECTION 802.02 OF THE STANDARD SPECIFICATIONS.
THE SAND CEMENT MIXTURE SHALL CONSIST OF NOT LESS THAN 1.5 SACKS OF PORTLAND CEMENT PER TON OF MATERIAL MIXTURE.
THE MIXTURE SHALL CONTAIN SUFFICIENT WATER TO HYDRATE THE CEMENTS. THE SAND CEMENT MIXTURE SHALL BE PLACED IN MAXIMUM 8 INCH THICK LIFTS, LOOSE MEASURE, AND THOROUGHLY RODDED AND TAMPED AROUND BOX TO THOROUGHLY FILL ALL VOIDS.

MEMBRANE WATERPROOFING CONFORMING TO THE REQUIREMENTS OF SECTION 815 OF THE STANDARD SPECIFICATIONS SHALL BE APPLIED TO ALL BOX CULVERT JOINTS.

THE MEMBRANE WATERPROOFING WILL BE REQUIRED ON THE TOP EXTERNAL JOINT AND SHALL EXTEND 1 FOOT DOWN THE SIDES OF THE CULVERT.

IN OUTER BARRELS, ONE WEEP HOLE IS REQUIRED IN EXTERIOR WALLS OF EACH PRECAST CULVERT SECTION. WEEP HOLES SHALL HAVE A MAXIMUM HORIZONTAL SPACING OF 10'-0" IN THE ASSEMBLED CULVERT AND SHALL BE SPACED TO CLEAR ALL REINFORCING STEEL. THE DRAIN OPENING SHALL BE 4" DIAMETER AND SHALL BE PLACED 12" ABOVE THE TOP OF THE BOTTOM SLAB.

DRAINAGE FILL MATERIAL WITH GEOTEXTILE FABRIC IS REQUIRED AT THE EXTERIOR WALLS OF THE ASSEMBLED CULVERT, SEE DETAILS ON THIS DRAWING.

MINIMUM WIDTH SHALL BE 12" (6" ON EACH SIDE OF JOINT). ON MULTIPLE BARREL CULVERTS, MEMBRANE WATERPROOFING SHALL BE APPLIED TO EACH BARREL AS DESCRIBED ABOVE.

WITH THE APPROVAL OF THE ENGINEER, THE CONTRACTOR WILL BE ALLOWED TO SUBSTITUTE, AT NO ADDITIONAL COST TO THE DEPARTMENT, FLOWABLE SELECT MATERIAL CONFORMING TO SECTION 206 OF THE STANDARD SPECIFICATIONS IN LIEU OF LEAN GROUT.

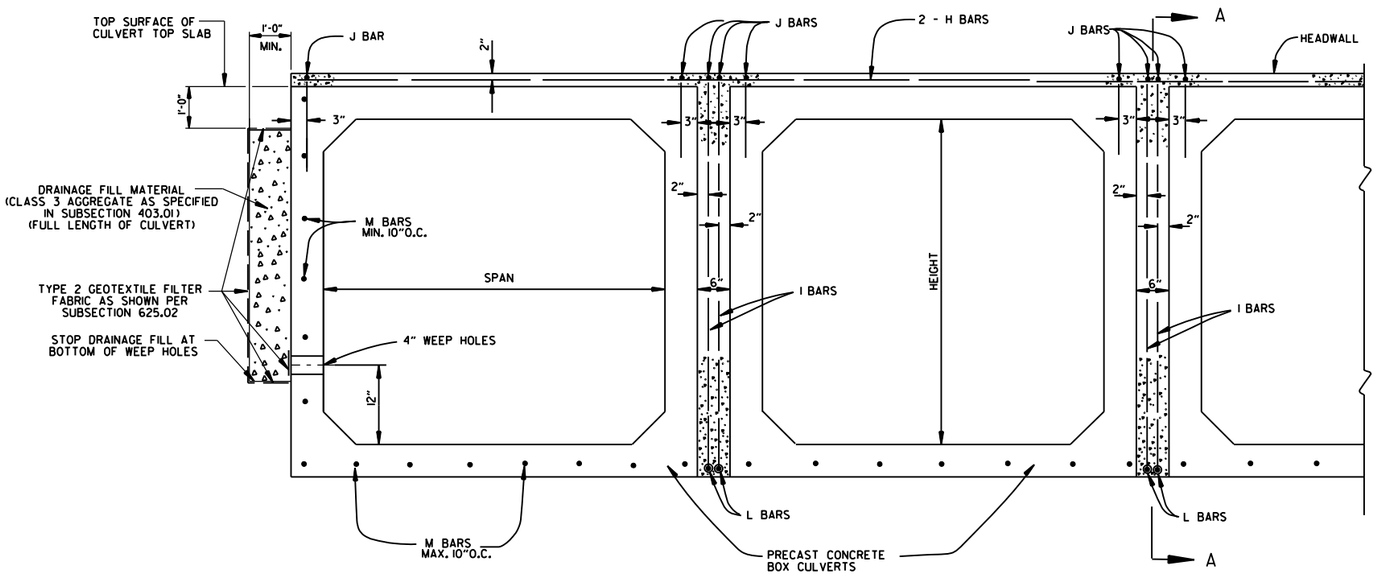

END VIEW

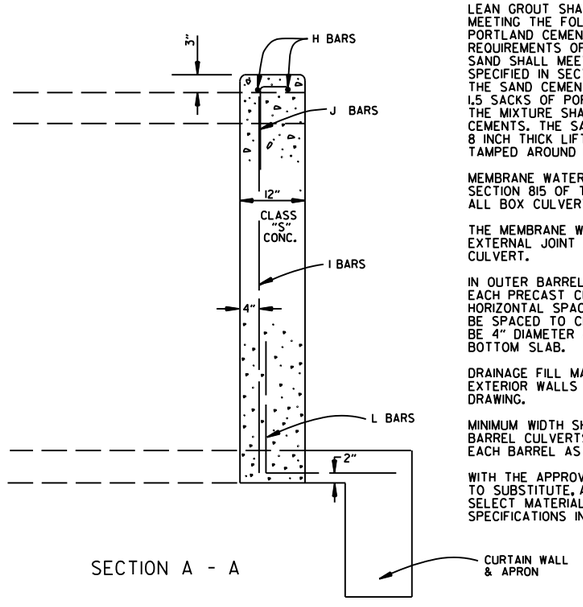

SECTION A - A

DATE	REVISION	DATE FILMED
1-28-15	REVISED GEOTEXTILE FABRIC PLACEMENT	
12-15-11	ADDED NOTE & DTLS FOR WEEP HOLE AND DRAINAGE FILL	
10-15-09	ADDED GENERAL NOTE	
11-10-05	REVISED SPACING OF "M" BARS	
4-10-03	REVISED GENERAL NOTES	
10-18-96	CORRECTED AASHTO REF.	
10-1-92	ADDED NOTE FOR MEMBRANE WATERPROOFING	
8-15-91	ADDED NOTE FOR LEAN GROUT	
11- 8-90	REVISED FOR 1991 SPECS	
11-30-89	ISSUED; JABE	

ARKANSAS STATE HIGHWAY COMMISSION

PRECAST CONCRETE BOX CULVERTS

STANDARD DRAWING PBC-1

REINFORCED CONCRETE ARCH PIPE DIMENSIONS

EQUIV. DIA.	SPAN		RISE	
	AASHTO M 206	ARDOT NOMINAL	AASHTO M 206	ARDOT NOMINAL
INCHES	INCHES			
15	18	18	11	11
18	22	22	13½	14
21	26	26	15½	16
24	28½	29	18	18
30	36¼	36	22½	23
36	43⅜	44	26⅝	27
42	51⅛	51	31⅜	31
48	58½	59	36	36
54	65	65	40	40
60	73	73	45	45
72	88	88	54	54
84	102	102	62	62
90	115	115	72	72
96	122	122	77½	77
108	138	138	87⅛	87
120	154	154	96⅞	97
132	168¾	169	106½	107

THE MEASURED SPAN AND RISE SHALL NOT VARY MORE THAN ± 2 PERCENT FROM THE VALUES SPECIFIED BY AASHTO M206.

REINFORCED CONCRETE HORIZONTAL ELLIPTICAL PIPE DIMENSIONS

EQUIV. DIA.	AASHTO M 207	
	SPAN	RISE
INCHES	INCHES	
18	23	14
24	30	19
27	34	22
30	38	24
33	42	27
36	45	29
39	49	32
42	53	34
48	60	38
54	68	43
60	76	48
66	83	53
72	91	58
78	98	63
84	106	68

THE MEASURED SPAN AND RISE SHALL NOT VARY MORE THAN ± 2 PERCENT FROM THE VALUES SPECIFIED BY AASHTO M207.

CONSTRUCTION SEQUENCE

1. PLACE STRUCTURAL BEDDING MATERIAL TO GRADE. DO NOT COMPACT.
2. INSTALL PIPE TO GRADE.
3. COMPACT STRUCTURAL BEDDING OUTSIDE THE MIDDLE THIRD OF THE PIPE.
4. PLACE AND COMPACT THE HAUNCH AREA UP TO THE MIDDLE OF THE PIPE.
5. COMPLETE BACKFILL ACCORDING TO SUBSECTION 606.03.(f)(1).

NOTE: HAUNCH AND STRUCTURAL BEDDING MATERIAL WILL NOT BE PAID FOR SEPARATELY, BUT COMPENSATION WILL BE CONSIDERED TO BE INCLUDED IN THE PRICE BID PER LINEAR FOOT OF CONCRETE PIPE.

- LEGEND -

D_1 = NORMAL INSIDE DIAMETER OF PIPE
D_O = OUTSIDE DIAMETER OF PIPE
H = FILL COVER HEIGHT OVER PIPE (FEET)
MIN. = MINIMUM
= UNDISTURBED SOIL

INSTALLATION TYPE	MATERIAL REQUIREMENTS FOR HAUNCH AND STRUCTURAL BEDDING
TYPE 1	AGGREGATE BASE COURSE (CLASS 5 OR CLASS 7)
TYPE 2	SELECTED MATERIALS (CLASS SM-1, SM-2, OR SM-4) OR TYPE 1 INSTALLATION MATERIAL*
TYPE 3**	AASHTO CLASSIFICATION A-1 THRU A-6 SOIL OR TYPE 1 OR 2 INSTALLATION MATERIAL

* SM-3 WILL NOT BE ALLOWED.

** MATERIALS SHALL NOT INCLUDE ORGANIC MATERIALS OR STONES LARGER THAN 3 INCHES.

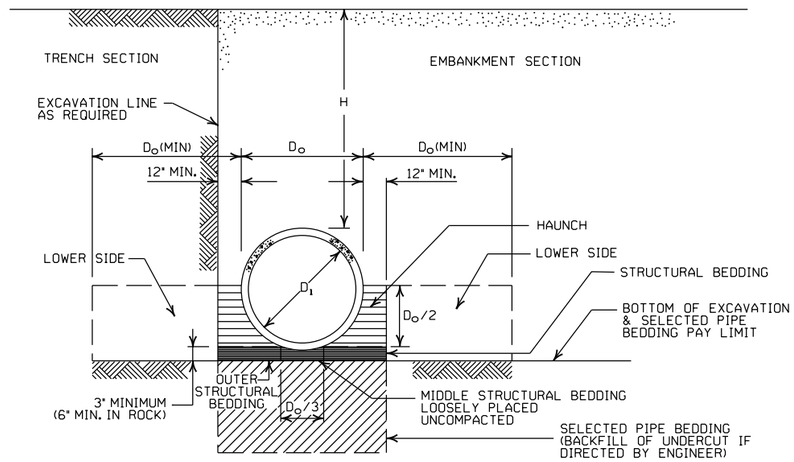

EMBANKMENT AND TRENCH INSTALLATIONS

1. MATERIAL IN THE HAUNCH AND OUTER STRUCTURAL BEDDING SHALL BE COMPACTED TO 95% OF THE MAXIMUM DENSITY ACCORDING TO THE TYPE OR CLASS OF MATERIAL USED.
2. FOR TRENCHES WITH WALLS OF NATURAL SOIL, THE DENSITY OF THE SOIL IN THE LOWER SIDE ZONE SHALL BE AS FIRM AS THE 95% DENSITY REQUIRED FOR THE HAUNCH. IF THE EXISTING SOIL DOES NOT MEET THIS CRITERIA, IT SHALL BE REMOVED AND RECOMPACTED TO 95% OF THE MAXIMUM DENSITY ACCORDING TO THE TYPE OF MATERIAL USED.
3. FOR EMBANKMENTS, THE MATERIAL IN THE LOWER SIDE ZONE SHALL BE COMPACTED TO 95% OF THE MAXIMUM DENSITY ACCORDING TO THE TYPE OR CLASS OF MATERIAL USED.

GENERAL NOTES

1. CONCRETE PIPE CULVERT CONSTRUCTION SHALL CONFORM TO ARKANSAS DEPARTMENT OF TRANSPORTATION STANDARD SPECIFICATIONS FOR HIGHWAY CONSTRUCTION (CURRENT EDITION), WITH APPLICABLE SUPPLEMENTAL SPECIFICATIONS AND SPECIAL PROVISIONS. UNLESS OTHERWISE NOTED IN THE PLANS, SECTION AND SUBSECTION REFER TO THE STANDARD CONSTRUCTION SPECIFICATIONS.
2. CONCRETE PIPE CULVERT DESIGN SHALL CONFORM TO AASHTO LRFD BRIDGE DESIGN SPECIFICATIONS, FIFTH EDITION (2010) WITH 2010 INTERIMS.
3. ALL PIPE SHALL CONFORM TO SECTION 606. CIRCULAR R.C. PIPE CULVERTS SHALL CONFORM TO AASHTO M170, R.C. ARCH PIPE CULVERTS SHALL CONFORM TO AASHTO M206 AND HORIZONTAL ELLIPTICAL PIPE CULVERTS SHALL CONFORM TO AASHTO M207.
4. ALL PIPE SHALL BE PROTECTED DURING CONSTRUCTION BY A COVER SUFFICIENT TO PREVENT DAMAGE FROM PASSAGE OF EQUIPMENT.
5. THE MINIMUM TRENCH WIDTH SHALL BE THE OUTSIDE DIAMETER OF THE PIPE PLUS 24 INCHES. THE MAXIMUM ALLOWABLE TRENCH WIDTH SHALL BE THE MINIMUM WIDTH PRACTICABLE FOR WORKING CONDITIONS.
6. MULTIPLE PIPE CULVERTS SHALL BE INSTALLED WITH A MINIMUM CLEARANCE OF 24 INCHES BETWEEN STRINGS OF PIPE. REFER TO STD. DWG. FES-2 FOR MINIMUM CLEARANCE WHERE FLARED END SECTIONS ARE USED.
7. IMPERVIOUS MATERIAL SHOULD BE PLACED AS DIRECTED BY THE ENGINEER AT THE ENDS OF THE CULVERT TO PREVENT LOSS OF STRUCTURAL BEDDING WHEN PERVIOUS MATERIAL IS USED FOR STRUCTURAL BEDDING AND/OR BACKFILL.
8. NOT MORE THAN ONE LIFTING HOLE MAY BE PROVIDED IN CONCRETE PIPE TO FACILITATE HANDLING. HOLE MAY BE CAST IN PLACE, CUT INTO THE FRESH CONCRETE AFTER FORMS ARE REMOVED, OR DRILLED. THE HOLE SHALL NOT BE MORE THAN TWO INCHES IN DIAMETER OR TWO INCHES SQUARE. CUTTING OR DISPLACEMENT OF REINFORCEMENT WILL NOT BE PERMITTED. SPALLED AREAS AROUND THE HOLE SHALL BE REPAIRED IN A WORKMANLIKE MANNER. LIFTING HOLE SHALL BE FILLED WITH MORTAR, CONCRETE, OR OTHER METHOD AS APPROVED BY THE ENGINEER.
9. WHEN DIRECTED BY THE ENGINEER, UNSUITABLE MATERIAL THAT IS ENCOUNTERED AT THE BOTTOM OF THE EXCAVATED TRENCH (BELOW THE AREA IDENTIFIED AS "STRUCTURAL BEDDING" ABOVE) WILL BE EXCAVATED AND REPLACED WITH SELECTED PIPE BEDDING. THE QUANTITY OF MATERIAL REQUIRED TO BACKFILL THE UNDERCUT AREA UP TO THE SELECTED PIPE BEDDING PAY LIMIT DESIGNATED ABOVE WILL BE MEASURED AND PAID FOR AS "SELECTED PIPE BEDDING."
10. WHEN THE EXISTING MATERIAL EXCAVATED FOR THE PIPE TRENCH IS DETERMINED BY THE ENGINEER TO BE UNSUITABLE FOR BACKFILLING THE PIPE (ABOVE THE AREA IDENTIFIED ABOVE AS THE HAUNCH), BORROW MATERIAL OR MATERIAL FROM THE ROADWAY EXCAVATION WILL BE USED TO BACKFILL THE PIPE. IF SUITABLE MATERIAL IS NOT AVAILABLE, THE ENGINEER MAY AUTHORIZE THE USE OF "SELECTED PIPE BACKFILL."

MINIMUM HEIGHT OF FILL "H" OVER CIRCULAR R.C. PIPE CULVERTS

	CLASS OF PIPE			
	CLASS III		CLASS IV	CLASS V
INSTALLATION TYPE	TYPE 1 OR 2	TYPE 3	ALL	ALL
PIPE ID (IN.)	FEET			
12-15	2	2.5	2	1
18-24	2.5	3	2	1
27-33	3	4	2	1
36-42	3.5	5	2	1
48	4.5	5.5	2	1
54-60	5	7	2	1
66-78	6	8	2	1
84-108	7.5	8	2	1

NOTE: FOR MINIMUM COVER VALUES, "H" SHALL INCLUDE A MINIMUM OF 12" OF PAVEMENT AND/OR BASE.

MAXIMUM HEIGHT OF FILL "H" OVER CIRCULAR R.C. PIPE CULVERTS

INSTALLATION TYPE	CLASS OF PIPE		
	CLASS III	CLASS IV	CLASS V
	FEET		
TYPE 1	21	32	50
TYPE 2	16	25	39
TYPE 3	12	20	30

NOTE: IF FILL HEIGHT EXCEEDS 50 FEET, A SPECIAL DESIGN CONCRETE PIPE WILL BE REQUIRED USING TYPE 1 INSTALLATION.

MINIMUM HEIGHT OF FILL "H" OVER R.C. ARCH & HORIZONTAL ELLIPTICAL PIPE CULVERTS

INSTALLATION TYPE	CLASS OF PIPE	
	CLASS III	CLASS IV
	FEET	
TYPE 2 OR TYPE 3	2.5	1.5

NOTE: TYPE 1 INSTALLATION WILL NOT BE ALLOWED FOR ARCH & HORIZONTAL ELLIPTICAL PIPE CULVERTS.

NOTE: FOR MINIMUM COVER VALUES, "H" SHALL INCLUDE A MINIMUM OF 12" OF PAVEMENT AND/OR BASE.

MAXIMUM HEIGHT OF FILL "H" OVER R.C. ARCH & HORIZONTAL ELLIPTICAL PIPE CULVERTS

INSTALLATION TYPE	CLASS OF PIPE	
	CLASS III	CLASS IV
	FEET	
TYPE 2	13	21
TYPE 3	10	16

NOTE: TYPE 1 INSTALLATION WILL NOT BE ALLOWED FOR ARCH & HORIZONTAL ELLIPTICAL PIPE CULVERTS.

DATE	REVISION	DATE FILMED
2-27-14	REVISED GENERAL NOTE 1.	
12-15-11	REVISED FOR LRFD DESIGN SPECIFICATIONS	
5-18-00	REVISED TYPE 3 BEDDING & ADDED NOTE	
3-30-00	REVISED INSTALLATIONS	
11-06-97	ISSUED	

ARKANSAS STATE HIGHWAY COMMISSION

CONCRETE PIPE CULVERT FILL HEIGHTS & BEDDING

STANDARD DRAWING PCC-1

CORRUGATED STEEL PIPE (ROUND)

PIPE DIAMETER (INCHES)	① MINUMUM COVER TOP OF PIPE TO TOP OF GROUND "H" (FEET)	MAX. FILL HEIGHT "H" ABOVE TOP OF PIPE (FEET)				
		METAL THICKNESS (INCHES)				
		0.064	0.079	0.109	0.138	0.168
2⅔ INCH BY ½ INCH CORRUGATION RIVETED, WELDED, OR HELICAL LOCK-SEAM						
12	1	84	91			
15	1	67	73			
18	1	56	61			
24	1	42	46	59		
30	2	34	36	47		
36	2		30	39	41	
42	2		43	67	70	73
48	2		37	58	61	64
② 3 INCH BY 1 INCH OR 5 INCH BY 1 INCH CORRUGATION RIVETED, WELDED, BOLTED, OR HELICAL LOCK-SEAM						
36	1	48	60	88	111	118
42	1	41	51	72	90	102
48	1	36	45	64	77	85
54	2	32	40	59	71	79
60	2	29	36	53	64	71
66	2	26	33	47	58	64
72	2	24	30	44	53	59
78	2		28	41	49	54
84	2		26	38	45	51
90	2		24	35	43	45
96	2		22	33	40	44
102	2			31	38	42
108	2			30	35	39
114	2			28	34	37
120	2			27	32	35

CORRUGATED ALUMINUM PIPE (ROUND)

PIPE DIAMETER (INCHES)	① MINUMUM COVER TOP OF PIPE TO TOP OF GROUND "H" (FEET)	MAX. FILL HEIGHT "H" ABOVE TOP OF PIPE (FEET)				
		METAL THICKNESS IN INCHES				
		0.060	0.075	0.105	0.135	0.164
		2 ⅔ INCH BY ½ INCH CORRUGATION RIVETED OR HELICAL LOCK-SEAM				
12	1	45	45			
18	2	30	30	52		
24	2	22	22	39	41	
30	2		18	31	32	34
36	2.5		15	26	27	28
42	2			43	43	44
48	2			40	41	43
54	2			35	37	38
60	2				33	34
66	2					31
72	2					29

CONSTRUCTION SEQUENCE

1. PLACE STRUCTURAL BEDDING MATERIAL TO GRADE. DO NOT COMPACT.
2. INSTALL PIPE TO GRADE.
3. COMPACT STRUCTURAL BEDDING OUTSIDE THE MIDDLE THIRD OF THE PIPE.
4. COMPLETE STRUCTURAL BACKFILL OPERATION BY WORKING FROM SIDE TO SIDE OF THE PIPE. THE SIDE TO SIDE STRUCTURAL BACKFILL DIFFERENTIAL SHALL NOT EXCEED 24 INCHES OR 1/3 THE SIZE OF THE PIPE, WHICHEVER IS LESS.

NOTE: STRUCTURAL BACKFILL AND STRUCTURAL BEDDING MATERIAL WILL NOT BE PAID FOR SEPARATELY, BUT COMPENSATION WILL BE CONSIDERED TO BE INCLUDED IN THE PRICE BID PER LINEAR FOOT OF METAL PIPE.

INSTALLATION TYPE	MATERIAL REQUIREMENTS FOR STRUCTURAL BACKFILL AND STRUCTURAL BEDDING
TYPE 1	AGGREGATE BASE COURSE (CLASS 4, 5, 6, OR 7)
TYPE 2	SELECTED MATERIALS (CLASS SM-1, SM-2, OR SM-4) OR TYPE 1 INSTALLATION MATERIAL ③

③ SM-3 WILL NOT BE ALLOWED.

EQUIVALENT METAL THICKNESSES AND GAUGES

METAL THICKNESS IN INCHES			GAUGE NUMBER
STEEL			
ZINC COATED	UNCOATED	ALUMINUM	
0.064	0.0598	0.060	16
0.079	0.0747	0.075	14
0.109	0.1046	0.105	12
0.138	0.1345	0.135	10
0.168	0.1644	0.164	8

CORRUGATED METAL PIPE ARCHES

EQUIV. DIA. (INCHES)	PIPE DIMENSION SPAN X RISE (INCHES)	MINUMUM CORNER RADIUS (INCHES)	STEEL				ALUMINUM			
			MIN. THICKNESS REQUIRED INCHES	① MIN. HEIGHT OF FILL, "H" (FT.)	MAX. HEIGHT OF FILL, "H" (FT.)		MIN. THICKNESS REQUIRED INCHES	① MIN. HEIGHT OF FILL, "H" (FT.)	MAX. HEIGHT OF FILL, "H" (FT.)	
				INSTALLATION	INSTALLATION			INSTALLATION	INSTALLATION	
				TYPE 1	TYPE 1			TYPE 1	TYPE 1	
			2 ⅔ INCH BY ½ INCH CORRUGATION RIVETED, WELDED, OR HELICAL LOCK-SEAM				2 ⅔ INCH BY ½ INCH CORRUGATION RIVETED OR HELICAL LOCK-SEAM			
15	17x13	3	0.064	2	15		0.060	2	15	
18	21x15	3	0.064	2	15		0.060	2	15	
21	24x18	3	0.064	2.25	15		0.060	2.25	15	
24	28x20	3	0.064	2.5	15		0.075	2.5	15	
30	35x24	3	0.079	3	12		0.075	3	12	
36	42x29	3½	0.079	3	12		0.105	3	12	
42	49x33	4	0.079	3	12		0.105	3	12	
48	57x38	5	0.109	3	13		0.135	3	13	
54	64x43	6	0.109	3	14		0.135	3	14	
60	71x47	7	0.138	3	15		0.164	3	15	
66	77x52	8	0.168	3	15					
72	83x57	9	0.168	3	15					
			② 3 INCH BY 1 INCH OR 5 INCH BY 1 INCH CORRUGATION RIVETED, WELDED, OR HELICAL LOCK-SEAM							
				INSTALLATION		INSTALLATION				
				TYPE 2	TYPE 1	TYPE 2	TYPE 1			
36	40x31	5	0.079	3	2	12	15			
42	46x36	6	0.079	3	2	13	15			
48	53x41	7	0.079	3	2	13	15			
54	60x46	8	0.079	3	2	13	15			
60	66x51	9	0.079	3	2	13	15			
66	73x55	12	0.079	3	2	15	15			
72	81x59	14	0.079	3	2	15	15			
78	87x63	14	0.079	3	2	15	15			
84	95x67	16	0.109	3	2	15	15			
90	103x71	16	0.109	3	2	15	15			
96	112x75	18	0.109	3	2	15	15			
102	117x79	18	0.109	3	2	15	15			
108	128x83	18	0.138	3	2	15	15			

① FOR MINIMUM COVER VALUES, "H" SHALL INCLUDE A MINIMUM 12" OF PAVEMENT AND/OR BASE.

② WHERE THE STANDARD 2 2/3"x ½" CORRUGATION AND GAUGE IS SPECIFIED FOR A GIVEN DIAMETER, A PIPE OF THE SAME DIAMETER WITH A 3" x 1" OR 5" x 1" CORRUGATION MAY BE SUBSTITUTED, PROVIDING IT IS GAUGED FOR A FILL HEIGHT CONDITION EQUAL TO OR GREATER THAN THE MAXIMUM FILL HEIGHT CONDITION FOR THE SPECIFIED GAUGE AND CORRUGATION.

- LEGEND -

D_o = OUTSIDE DIAMETER OF PIPE
MAX. = MAXIMUM
MIN. = MINIMUM
= STRUCTURAL BACKFILL MATERIAL
= UNDISTURBED SOIL
EQUIV. DIA. = EQUIVALENT DIAMETER
H = FILL COVER HEIGHT OVER PIPE (FEET)

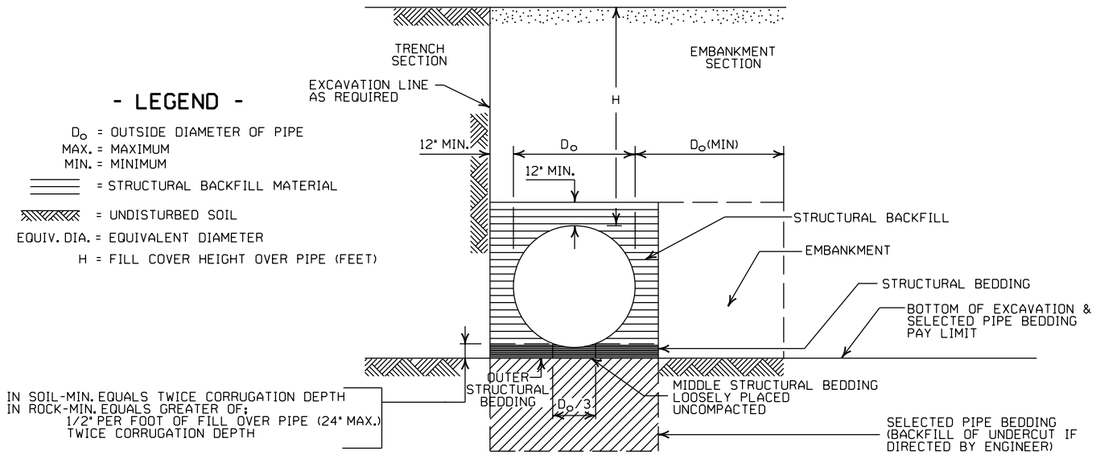

EMBANKMENT AND TRENCH INSTALLATIONS

1. STRUCTURAL BACKFILL, EMBANKMENT, AND OUTER STRUCTURAL BEDDING MATERIAL SHALL BE COMPACTED TO 95% OF THE MAXIMUM DENSITY ACCORDING TO THE TYPE OR CLASS OF MATERIAL USED.
2. INSTALLATION TYPE 1 OR 2 MAY BE USED FOR CORRUGATED STEEL OR ALUMINUM PIPE (ROUND).
3. INSTALALTION TYPE 1 SHALL BE USED FOR CORRUGATED STEEL OR ALUMINUM PIPE ARCHES WITH 2⅔" X ½" CORRUGATION.
4. INSTALLATION TYPE 1 OR 2 MAY BE USED FOR CORRUGATED STEEL OR ALUMINUM PIPE ARCHES WITH 3" X 1" OR 5" X 1" CORRUGATION.

GENERAL NOTES

1. METAL PIPE CULVERT CONSTRUCTION SHALL CONFORM TO ARKANSAS DEPARTMENT OF TRANSPORTATION STANDARD SPECIFICATIONS FOR HIGHWAY CONSTRUCTION (CURRENT EDITION), WITH APPLICABLE SUPPLEMENTAL SPECIFICATIONS AND SPECIAL PROVISIONS. UNLESS OTHERWISE NOTED IN THE PLANS, SECTION AND SUBSECTION REFER TO THE STANDARD CONSTRUCTION SPECIFICATIONS.
2. METAL PIPE CULVERT DESIGN SHALL CONFORM TO AASHTO LRFD BRIDGE DESIGN SPECIFICATIONS, FIFTH EDITION (2010) WITH 2010 INTERIMS.
3. METAL PIPE CULVERT MATERIALS AND INSTALLATIONS SHALL CONFORM TO SECTION 606 AND JOB SPECIAL PROVISION "METAL PIPE".
4. ALL PIPE SHALL BE PROTECTED DURING CONSTRUCTION BY A COVER SUFFICIENT TO PREVENT DAMAGE FROM PASSAGE OF EQUIPMENT.
5. THE MINIMUM TRENCH WIDTH SHALL BE THE OUTSIDE DIAMETER OF THE PIPE PLUS 24 INCHES. THE MAXIMUM ALLOWABLE TRENCH WIDTH SHALL BE THE MINIMUM WIDTH PRACTICABLE FOR WORKING CONDITIONS.
6. MULTIPLE PIPE CULVERTS SHALL BE INSTALLED WITH A MINIMUM CLEARANCE OF 24 INCHES BETWEEN STRINGS OF PIPE. REFER TO STD. DWG. FES-2 FOR MINIMUM CLEARANCE WHERE FLARED END SECTIONS ARE USED.
7. IMPERVIOUS MATERIAL SHOULD BE PLACED AS DIRECTED BY THE ENGINEER AT THE ENDS OF THE CULVERT TO PREVENT LOSS OF STRUCTURAL BEDDING WHEN PERVIOUS MATERIAL IS USED FOR STRUCTURAL BEDDING AND/OR BACKFILL.
8. WHEN DIRECTED BY THE ENGINEER, UNSUITABLE MATERIAL THAT IS ENCOUNTERED AT THE BOTTOM OF THE EXCAVATED TRENCH (BELOW THE AREA IDENTIFIED AS "STRUCTURAL BEDDING" ABOVE) WILL BE EXCAVATED AND REPLACED WITH SELECTED PIPE BEDDING. THE QUANTITY OF MATERIAL REQUIRED TO BACKFILL THE UNDERCUT AREA UP TO THE SELECTED PIPE BEDDING PAY LIMIT DESIGNATED ABOVE WILL BE MEASURED AND PAID FOR AS "SELECTED PIPE BEDDING."
9. WHEN THE EXISTING MATERIAL EXCAVATED FOR THE PIPE TRENCH IS DETERMINED BY THE ENGINEER TO BE UNSUITABLE FOR BACKFILLING THE PIPE (ABOVE THE AREA IDENTIFIED AS STRUCTURAL BACKFILL), BORROW MATERIAL OR MATERIAL FROM THE ROADWAY EXCAVATION WILL BE USED TO BACKFILL THE PIPE. IF SUITABLE MATERIAL IS NOT AVAILABLE, THE ENGINEER MAY AUTHORIZE THE USE OF "SELECTED PIPE BACKFILL."

DATE	REVISION	DATE FILMED
2-27-14	REVISED GENERAL NOTE 1.	
12-15-11	REVISED FOR LRFD DESIGN SPECS	
3-30-00	REVISED INSTALLATIONS	
11-06-97	ISSUED	

ARKANSAS STATE HIGHWAY COMMISSION

METAL PIPE CULVERT FILL HEIGHTS & BEDDING

STANDARD DRAWING PCM-1

INSTALLATION TYPE	•• MATERIAL REQUIREMENTS FOR STRUCTURAL BACKFILL AND STRUCTURAL BEDDING
TYPE 2	•SELECTED MATERIALS (CLASS SM-1, SM-2 OR SM-4)

• AGGREGATE BASE COURSE (CLASS 4, 5, 6, OR 7) MAY BE USED IN LIEU OF SELECTED MATERIAL.

SM3 WILL NOT BE ALLOWED.

•• STRUCTURAL BEDDING MATERIAL SHALL HAVE A MAXIMUM PARTICLE SIZE OF 1INCH. STRUCTURAL BACKFILL MATERIAL SHALL BE FREE OF ORGANIC MATERIAL, STONES LARGER THAN 1.50 INCH IN GREATEST DIMENSION, OR FROZEN LUMPS.

STRUCTURAL BACKFILL AND STRUCTURAL BEDDING MATERIAL WILL NOT BE PAID FOR SEPARATELY, BUT COMPENSATION WILL BE CONSIDERED TO BE INCLUDED IN THE PRICE BID PER LINEAR FOOT OF HDPE PIPE.

MULTIPLE INSTALLATION OF HIGH DENSITY POLYETHYLENE PIPES

PIPE DIAMETER	CLEAR DISTANCE BETWEEN PIPES
18"	1'-6"
24"	2'-0"
30"	2'-6"
36"	3'-0"
42"	3'-6"
48"	4'-0"

MINIMUM TRENCH WIDTH BASED ON FILL HEIGHT "H"

PIPE DIAMETER	TRENCH WIDTH (FEET)	
	"H" < 10'-0"	"H" >OR= 10'-0"
18"	4'-6"	4'-6"
24"	5'-0"	6'-0"
30"	5'-6"	7'-6"
36"	6'-0"	9'-0"
42"	7'-0"	10'-6"
48"	8'-0"	12'-0"

①NOTE:
18" MIN. (18" - 30" DIAMETERS)
24" MIN. (36" - 48" DIAMETERS)

MINIMUM COVER VALUES, "H" SHALL INCLUDE A MINIMUM 12" OF PAVEMENT AND/OR BASE.

MINIMUM COVER FOR CONSTRUCTION LOADS

PIPE DIAMETER	② MIN. COVER (FEET) FOR INDICATED CONSTRUCTION LOADS			
	18.0-50.0 (KIPS)	50.0-75.0 (KIPS)	75.0-110.0 (KIPS)	110.0-175.0 (KIPS)
36" OR LESS	2'-0"	2'-6"	3'-0"	3'-0"
42" OR GREATER	3'-0"	3'-0"	3'-6"	4'-0"

②MINIMUM COVER SHALL BE MEASURED FROM TOP OF PIPE TO TOP OF THE MAINTAINED CONSTRUCTION ROADWAY SURFACE. THE SURFACE SHALL BE MAINTAINED.

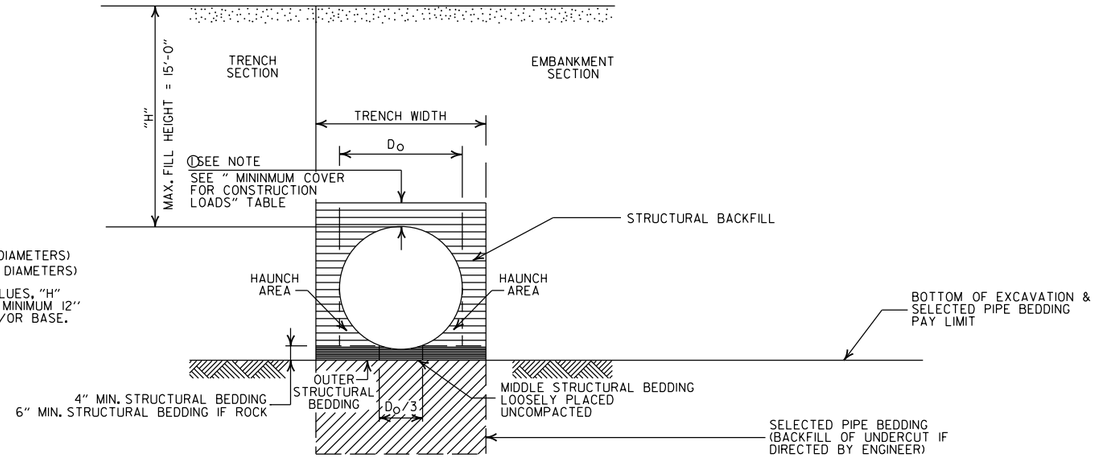

TYPE 2 EMBANKMENT AND TRENCH INSTALLATIONS

1. STRUCTURAL BACKFILL, EMBANKMENT, AND OUTER STRUCTURAL BEDDING MATERIAL SHALL BE COMPACTED TO 95% OF THE MAXIMUM DENSITY ACCORDING TO THE TYPE OR CLASS OF MATERIAL USED.

CONSTRUCTION SEQUENCE

1. PLACE STRUCTURAL BEDDING MATERIAL TO GRADE. DO NOT COMPACT.
2. INSTALL PIPE TO GRADE.
3. COMPACT STRUCTURAL BEDDING OUTSIDE THE MIDDLE THIRD OF THE PIPE.
4. THE STRUCTURAL BACKFILL SHALL BE PLACED AND COMPACTED IN LAYERS NOT EXCEEDING 8". THE LAYERS SHALL BE BROUGHT UP EVENLY AND SIMULTANEOUSLY TO THE ELEVATION OF THE MINIMUM COVER.
5. PIPE INSTALLATION MAY REQUIRE THE USE OF RESTRAINTS, WEIGHTING OR OTHER APPROVED METHODS IN ORDER TO HELP MAINTAIN GRADE AND ALIGNMENT.

GENERAL NOTES

1. PIPE SHALL CONFORM TO AASHTO M294, TYPE S. INSTALLATION SHALL CONFORM TO JOB SPECIAL PROVISION "PLASTIC PIPE" AND SECTION 606 OF THE STANDARD SPECIFICIATIONS FOR HIGHWAY CONSTRUCTION (CURRENT EDITION).
2. PLASTIC PIPE CULVERT DESIGN SHALL CONFORM TO AASHTO LRFD BRIDGE DESIGN SPECIFICATIONS, FIFTH EDITION (2010) WITH 2010 INTERIMS.
3. THE MAXIMUM ALLOWABLE TRENCH WIDTH SHALL BE THE MINIMUM WIDTH PLUS A SUFFICIENT WIDTH TO ENSURE WORKING ROOM TO PROPERLY AND SAFELY PLACE AND COMPACT HAUNCHING AND OTHER BACKFILL MATERIAL.
4. IMPERVIOUS MATERIAL SHOULD BE PLACED AS DIRECTED BY THE ENGINEER AT THE ENDS OF THE CULVERT TO PREVENT LOSS OF STRUCTURAL BEDDING WHEN PERVIOUS MATERIAL IS USED FOR STRUCTURAL BEDDING AND/OR BACKFILL.
5. WHEN DIRECTED BY THE ENGINEER, UNSUITABLE MATERIAL THAT IS ENCOUNTERED AT THE BOTTOM OF THE EXCAVATED TRENCH (BELOW THE AREA IDENTIFIED AS "STRUCTURAL BEDDING" ABOVE) WILL BE EXCAVATED AND REPLACED WITH SELECTED PIPE BEDDING. THE QUANTITY OF MATERIAL REQUIRED TO BACKFILL THE UNDERCUT AREA UP TO THE SELECTED PIPE BEDDING PAY LIMIT DESIGNATED ABOVE WILL BE MEASURED AND PAID FOR AS "SELECTED PIPE BEDDING."
6. WHEN THE EXISTING MATERIAL EXCAVATED FOR THE PIPE TRENCH IS DETERMINED BY THE ENGINEER TO BE UNSUITABLE FOR BACKFILLING THE PIPE (ABOVE THE AREA IDENTIFIED ABOVE AS STRUCTURAL BACKFILL), BORROW MATERIAL OR MATERIAL FROM THE ROADWAY EXCAVATION WILL BE USED TO BACKFILL THE PIPE. IF SUITABLE MATERIAL IS NOT AVAILABLE, THE ENGINEER MAY AUTHORIZE THE USE OF "SELECTED PIPE BACKFILL."
7. FOR PIPE TYPES THAT ARE NOT SMOOTH ON THE OUTSIDE (CORRUGATED OR PROFILE WALLS), BACKFILL GRADATIONS SHOULD BE SELECTED THAT WILL PERMIT THE FILLING OF THE CORRUGATION OR PROFILE VALLEY.
8. HIGH DENSITY POLYETHYLENE PIPES OF DIAMETERS OTHER THAN SHOWN WILL NOT BE ALLOWED.
9. JOINTS FOR HDPE PIPE SHALL MEET THE REQUIREMENTS FOR SOIL TIGHTNESS AS SPECIFIED IN AASHTO SECTION 26.4.2.4 AND 30.4.2 "AASHTO LRFD BRIDGE CONSTRUCTION SPECIFICATIONS." JOINTS SHALL BE INSTALLED PER MANUFACTURER'S RECOMMENDATIONS.

- LEGEND -

H = FILL HEIGHT (FT.)
D = OUTSIDE DIAMETER OF PIPE
MAX. = MAXIMUM
MIN. = MINIMUM

= STRUCTURAL BACKFILL MATERIAL

= UNDISTURBED SOIL

DATE	REVISION	DATE FILMED
2-27-14	REVISED GENERAL NOTE 1.	
12-15-11	REVISED GENERAL NOTES & MINIMUM COVER NOTE	
11-17-10	ISSUED	

ARKANSAS STATE HIGHWAY COMMISSION

PLASTIC PIPE CULVERT (HIGH DENSITY POLYETHYLENE)

STANDARD DRAWING PCP-1

INSTALLATION TYPE	•• MATERIAL REQUIREMENTS FOR STRUCTURAL BACKFILL AND STRUCTURAL BEDDING
TYPE 2	•SELECTED MATERIALS (CLASS SM-1, SM-2, OR SM-4)

• AGGREGATE BASE COURSE (CLASS 4, 5, 6, OR 7) MAY BE USED IN LIEU OF SELECTED MATERIAL.

SM3 WILL NOT BE ALLOWED.

•• STRUCTURAL BEDDING MATERIAL SHALL HAVE A MAXIMUM PARTICLE SIZE OF 1INCH. STRUCTURAL BACKFILL MATERIAL SHALL BE FREE OF ORGANIC MATERIAL, STONES LARGER THAN 1.50 INCH IN GREATEST DIMENSION, OR FROZEN LUMPS.

STRUCTURAL BACKFILL AND STRUCTURAL BEDDING MATERIAL WILL NOT BE PAID FOR SEPARATELY, BUT COMPENSATION WILL BE CONSIDERED TO BE INCLUDED IN THE PRICE BID PER LINEAR FOOT OF PVC PIPE.

MINIMUM TRENCH WIDTH BASED ON FILL HEIGHT "H"

PIPE DIAMETER	TRENCH WIDTH (FEET)	
	"H" < 10'-0"	"H" >OR= 10'-0"
18"	4'-6"	4'-6"
24"	5'-0"	6'-0"
30"	5'-6"	7'-6"
36"	6'-0"	9'-0"

MULTIPLE INSTALLATION OF PVC PIPES

PIPE DIAMETER	CLEAR DISTANCE BETWEEN PIPES
18"	1'-6"
24"	2'-0"
30"	2'-6"
36"	3'-0"

MAXIMUM FILL HEIGHT BASED ON STRUCTURAL BACKFILL

PIPE DIAMETER	"H"
18"	45'-0"
24"	45'-0"
30"	40'-0"
36"	40'-0"

① NOTE:
12" MIN. (18" - 36" DIAMETERS)
MINIMUM COVER VALUE, "H" SHALL INCLUDE A MINIMUM 12" OF PAVEMENT AND/OR BASE.

MINIMUM COVER FOR CONSTRUCTION LOADS

PIPE DIAMETER	② MIN. COVER (FEET) FOR INDICATED CONSTRUCTION LOADS			
	18.0-50.0 (KIPS)	50.0-75.0 (KIPS)	75.0-110.0 (KIPS)	110.0-175.0 (KIPS)
18" THRU 36"	2'-0"	2'-6"	3'-0"	3'-0"

②MINIMUM COVER SHALL BE MEASURED FROM TOP OF PIPE TO TOP OF THE MAINTAINED CONSTRUCTION ROADWAY SURFACE. THE SURFACE SHALL BE MAINTAINED.

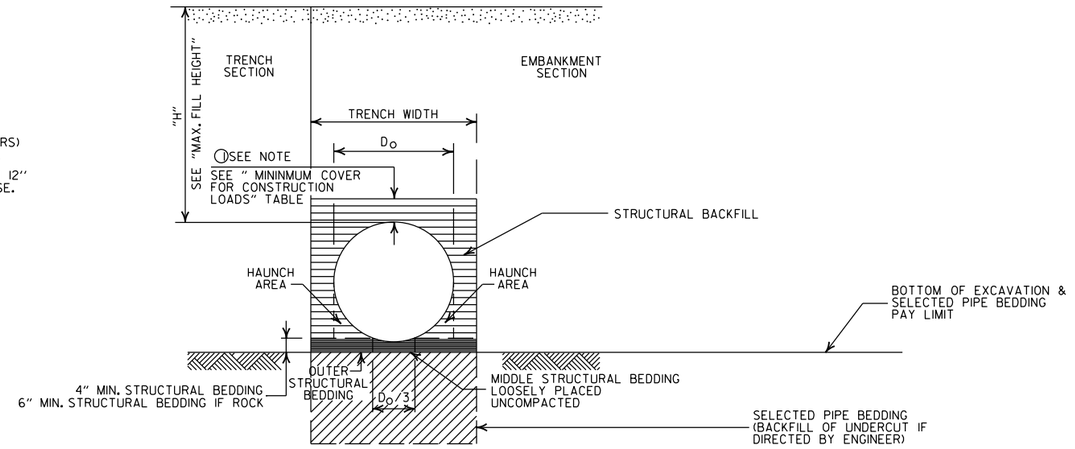

TYPE 2 EMBANKMENT AND TRENCH INSTALLATIONS

1. STRUCTURAL BACKFILL, EMBANKMENT, AND OUTER STRUCTURAL BEDDING MATERIAL SHALL BE COMPACTED TO 95% OF THE MAXIMUM DENSITY ACCORDING TO THE TYPE OR CLASS OF MATERIAL USED.

CONSTRUCTION SEQUENCE

1. PLACE STRUCTURAL BEDDING MATERIAL TO GRADE. DO NOT COMPACT.
2. INSTALL PIPE TO GRADE.
3. COMPACT STRUCTURAL BEDDING OUTSIDE THE MIDDLE THIRD OF THE PIPE.
4. THE STRUCTURAL BACKFILL SHALL BE PLACED AND COMPACTED IN LAYERS NOT EXCEEDING 8". THE LAYERS SHALL BE BROUGHT UP EVENLY AND SIMULTANEOUSLY TO THE ELEVATION OF THE MINIMUM COVER.
5. PIPE INSTALLATION MAY REQUIRE THE USE OF RESTRAINTS, WEIGHTING OR OTHER APPROVED METHODS IN ORDER TO HELP MAINTAIN GRADE AND ALIGNMENT.

GENERAL NOTES

1. PIPE SHALL CONFORM TO ASTM F949, CELL CLASS 12454. INSTALLATION SHALL CONFORM TO JOB SPECIAL PROVISION "PLASTIC PIPE" AND SECTION 606 OF THE STANDARD SPECIFICATIONS FOR HIGHWAY CONSTRUCTION (CURRENT EDITION).
2. PLASTIC PIPE CULVERT DESIGN SHALL CONFORM TO AASHTO LRFD BRIDGE DESIGN SPECIFICATIONS, FIFTH EDITION (2010) WITH 2010 INTERIMS.
3. THE MAXIMUM ALLOWABLE TRENCH WIDTH SHALL BE THE MINIMUM WIDTH PLUS A SUFFICIENT WIDTH TO ENSURE WORKING ROOM TO PROPERLY AND SAFELY PLACE AND COMPACT HAUNCHING AND OTHER BACKFILL MATERIAL.
4. IMPERVIOUS MATERIAL SHOULD BE PLACED AS DIRECTED BY THE ENGINEER AT THE ENDS OF THE CULVERT TO PREVENT LOSS OF STRUCTURAL BEDDING WHEN PERVIOUS MATERIAL IS USED FOR STRUCTURAL BEDDING AND/OR BACKFILL.
5. WHEN DIRECTED BY THE ENGINEER, UNSUITABLE MATERIAL THAT IS ENCOUNTERED AT THE BOTTOM OF THE EXCAVATED TRENCH (BELOW THE AREA IDENTIFIED AS "STRUCTURAL BEDDING" ABOVE) WILL BE EXCAVATED AND REPLACED WITH SELECTED PIPE BEDDING. THE QUANTITY OF MATERIAL REQUIRED TO BACKFILL THE UNDERCUT AREA UP TO THE SELECTED PIPE BEDDING PAY LIMIT DESIGNATED ABOVE WILL BE MEASURED AND PAID FOR AS "SELECTED PIPE BEDDING."
6. WHEN THE EXISTING MATERIAL EXCAVATED FOR THE PIPE TRENCH IS DETERMINED BY THE ENGINEER TO BE UNSUITABLE FOR BACKFILLING THE PIPE (ABOVE THE AREA IDENTIFIED ABOVE AS STRUCTURAL BACKFILL), BORROW MATERIAL OR MATERIAL FROM THE ROADWAY EXCAVATION WILL BE USED TO BACKFILL THE PIPE. IF SUITABLE MATERIAL IS NOT AVAILABLE, THE ENGINEER MAY AUTHORIZE THE USE OF "SELECTED PIPE BACKFILL."
7. FOR PIPE TYPES THAT ARE NOT SMOOTH ON THE OUTSIDE (CORRUGATED OR PROFILE WALLS), BACKFILL GRADATIONS SHOULD BE SELECTED THAT WILL PERMIT THE FILLING OF THE CORRUGATION OR PROFILE VALLEY.
8. PVC PIPES OF DIAMETERS OTHER THAN SHOWN WILL NOT BE ALLOWED.
9. JOINTS FOR PVC PIPE SHALL MEET THE REQUIREMENTS FOR SOIL TIGHTNESS AS SPECIFIED IN AASHTO SECTION 26.4.2.4 AND 30.4.2 "AASHTO LRFD BRIDGE CONSTRUCTION SPECIFICATIONS." JOINTS SHALL BE INSTALLED PER MANUFACTURER'S RECOMMENDATIONS.

- LEGEND -

H = FILL HEIGHT (FT.)
D_O = OUTSIDE DIAMETER OF PIPE
MAX. = MAXIMUM
MIN. = MINIMUM

= STRUCTURAL BACKFILL MATERIAL
= UNDISTURBED SOIL

DATE	REVISION	DATE FILMED
2-27-14	REVISED GENERAL NOTE 1.	
12-15-11	REV GENERAL NOTES & MINIMUM COVER NOTE; DELETED SM3 MATERIAL	
11-17-10	ISSUED	

ARKANSAS STATE HIGHWAY COMMISSION

PLASTIC PIPE CULVERT (PVC F949)

STANDARD DRAWING PCP-2

INSTALLATION TYPE	**MATERIAL REQUIREMENTS FOR STRUCTURAL BACKFILL AND STRUCTURAL BEDDING
TYPE 1	AGGREGATE BASE COURSE (CLASS 4, 5, 6, OR 7)
TYPE 2	*SELECTED MATERIALS (CLASS SM-1, SM-2 OR SM-4) OR TYPE 1 INSTALLATION MATERIAL

*SM3 WILL NOT BE ALLOWED.

** STRUCTURAL BEDDING MATERIAL SHALL HAVE A MAXIMUM PARTICLE SIZE OF 1INCH. STRUCTURAL BACKFILL MATERIAL SHALL BE FREE OF ORGANIC MATERIAL, STONES LARGER THAN 1.50 INCH IN GREATEST DIMENSION, OR FROZEN LUMPS.

STRUCTURAL BACKFILL AND STRUCTURAL BEDDING MATERIAL WILL NOT BE PAID FOR SEPARATELY, BUT COMPENSATION WILL BE CONSIDERED TO BE INCLUDED IN THE PRICE BID PER LINEAR FOOT OF POLYPROPYLENE PIPE.

MULTIPLE INSTALLATION OF POLYPROPYLENE PIPES

PIPE DIAMETER	CLEAR DISTANCE BETWEEN PIPES
18"	1'-6"
24"	2'-0"
30"	2'-6"
36"	3'-0"
42"	3'-6"
48"	4'-0"
60"	5'-0"

MINIMUM TRENCH WIDTH BASED ON FILL HEIGHT "H"

PIPE DIAMETER	TRENCH WIDTH (FEET)	
	"H" < 10'-0"	"H" >OR= 10'-0"
18"	4'-6"	4'-6"
24"	5'-0"	6'-0"
30"	5'-6"	7'-6"
36"	6'-0"	9'-0"
42"	7'-0"	10'-6"
48"	8'-0"	12'-0"
60"	10'-0"	15'-0"

①NOTE:
12" MIN. (18" - 42" DIAMETERS)
24" MIN. (60" DIAMETER)

MINIMUM COVER VALUES, "H" SHALL INCLUDE A MINIMUM 12" OF PAVEMENT AND/OR BASE.

MAXIMUM HEIGHT OF FILL "H"

PIPE DIAMETER	INSTALLATION TYPE	
	TYPE 1	TYPE 2
18"	18'	14'
24"	16'	12'
30"	18'	14'
36"	16'	12'
42"	18'	13'
48"	15'	11'
60"	17'	12'

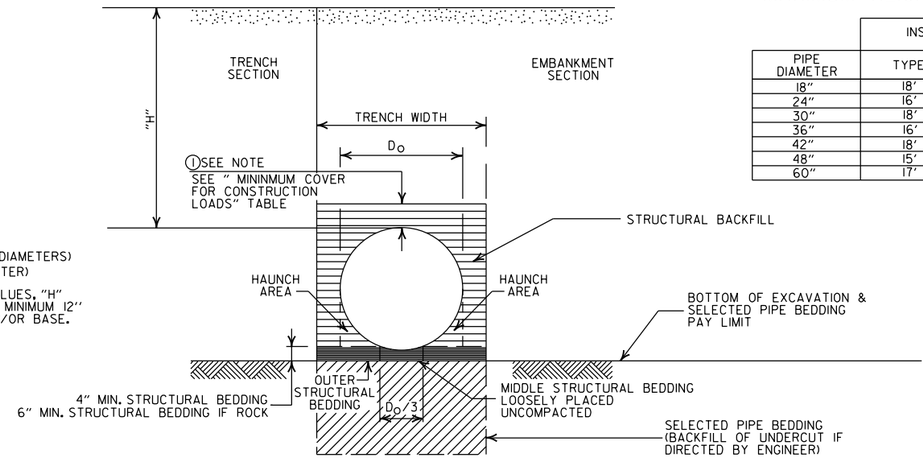

MINIMUM COVER FOR CONSTRUCTION LOADS

PIPE DIAMETER	② MIN. COVER (FEET) FOR INDICATED CONSTRUCTION LOADS			
	18.0-50.0 (KIPS)	50.0-75.0 (KIPS)	75.0-110.0 (KIPS)	110.0-150.0 (KIPS)
36" OR LESS	2'-0"	2'-6"	3'-0"	3'-0"
42" OR GREATER	3'-0"	3'-0"	3'-6"	4'-0"

②MINIMUM COVER SHALL BE MEASURED FROM TOP OF PIPE TO TOP OF THE MAINTAINED CONSTRUCTION ROADWAY SURFACE. THE SURFACE SHALL BE MAINTAINED.

EMBANKMENT AND TRENCH INSTALLATIONS

1. STRUCTURAL BACKFILL, EMBANKMENT, AND OUTER STRUCTURAL BEDDING MATERIAL SHALL BE COMPACTED TO 95% OF THE MAXIMUM DENSITY ACCORDING TO THE TYPE OR CLASS OF MATERIAL USED.

CONSTRUCTION SEQUENCE

1. PLACE STRUCTURAL BEDDING MATERIAL TO GRADE. DO NOT COMPACT.
2. INSTALL PIPE TO GRADE.
3. COMPACT STRUCTURAL BEDDING OUTSIDE THE MIDDLE THIRD OF THE PIPE.
4. THE STRUCTURAL BACKFILL SHALL BE PLACED AND COMPACTED IN LAYERS NOT EXCEEDING 8". THE LAYERS SHALL BE BROUGHT UP EVENLY AND SIMULTANEOUSLY TO THE ELEVATION OF THE MINIMUM COVER.
5. PIPE INSTALLATION MAY REQUIRE THE USE OF RESTRAINTS, WEIGHTING OR OTHER APPROVED METHODS IN ORDER TO HELP MAINTAIN GRADE AND ALIGNMENT.

GENERAL NOTES

1. PIPE SHALL CONFORM TO AASHTO M330, TYPE S, INSTALLATION SHALL CONFORM TO JOB SPECIAL PROVISION "PLASTIC PIPE" AND SECTION 606 OF THE STANDARD SPECIFICIATIONS FOR HIGHWAY CONSTRUCTION (CURRENT EDITION).
2. PLASTIC PIPE CULVERT DESIGN SHALL CONFORM TO AASHTO LRFD BRIDGE DESIGN SPECIFICATIONS, SIXTH EDITION (2012) WITH 2013 INTERIMS.
3. THE MAXIMUM ALLOWABLE TRENCH WIDTH SHALL BE THE MINIMUM WIDTH PLUS A SUFFICIENT WIDTH TO ENSURE WORKING ROOM TO PROPERLY AND SAFELY PLACE AND COMPACT HAUNCHING AND OTHER BACKFILL MATERIAL.
4. IMPERVIOUS MATERIAL SHOULD BE PLACED AS DIRECTED BY THE ENGINEER AT THE ENDS OF THE CULVERT TO PREVENT LOSS OF STRUCTURAL BEDDING WHEN PERVIOUS MATERIAL IS USED FOR STRUCTURAL BEDDING AND/OR BACKFILL.
5. WHEN DIRECTED BY THE ENGINEER, UNSUITABLE MATERIAL THAT IS ENCOUNTERED AT THE BOTTOM OF THE EXCAVATED TRENCH (BELOW THE AREA IDENTIFIED AS "STRUCTURAL BEDDING" ABOVE) WILL BE EXCAVATED AND REPLACED WITH SELECTED PIPE BEDDING. THE QUANTITY OF MATERIAL REQUIRED TO BACKFILL THE UNDERCUT AREA UP TO THE SELECTED PIPE BEDDING PAY LIMIT DESIGNATED ABOVE WILL BE MEASURED AND PAID FOR AS "SELECTED PIPE BEDDING."
6. WHEN THE EXISTING MATERIAL EXCAVATED FOR THE PIPE TRENCH IS DETERMINED BY THE ENGINEER TO BE UNSUITABLE FOR BACKFILLING THE PIPE (ABOVE THE AREA IDENTIFIED ABOVE AS STRUCTURAL BACKFILL), BORROW MATERIAL OR MATERIAL FROM THE ROADWAY EXCAVATION WILL BE USED TO BACKFILL THE PIPE. IF SUITABLE MATERIAL IS NOT AVAILABLE, THE ENGINEER MAY AUTHORIZE THE USE OF "SELECTED PIPE BACKFILL."
7. FOR PIPE TYPES THAT ARE NOT SMOOTH ON THE OUTSIDE (CORRUGATED OR PROFILE WALLS), BACKFILL GRADATIONS SHOULD BE SELECTED THAT WILL PERMIT THE FILLING OF THE CORRUGATION OR PROFILE VALLEY.
8. POLYPROPYLENE PIPES OF DIAMETERS OTHER THAN SHOWN WILL NOT BE ALLOWED.
9. JOINTS FOR POLYPROPYLENE PIPE SHALL MEET THE REQUIREMENTS FOR SOIL TIGHTNESS AS SPECIFIED IN SECTION 26.4.2.4 AND 30.4.2 OF THE AASHTO LRFD BRIDGE CONSTRUCTION SPECIFICATIONS 3RD EDITION (2010) WITH 2012 INTERIMS. JOINTS SHALL BE INSTALLED PER MANUFACTURER'S RECOMMENDATIONS.

- LEGEND -

H = FILL HEIGHT (FT.)
D_O = OUTSIDE DIAMETER OF PIPE
MAX. = MAXIMUM
MIN. = MINIMUM

= STRUCTURAL BACKFILL MATERIAL

= UNDISTURBED SOIL

DATE	REVISION	DATE FILMED
02-27-20	REVISED	
11-07-19	ISSUED	

ARKANSAS STATE HIGHWAY COMMISSION

PLASTIC PIPE CULVERT (POLYPROPYLENE)

STANDARD DRAWING PCP-3

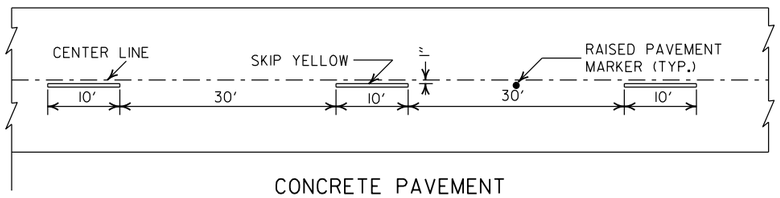

CONCRETE PAVEMENT

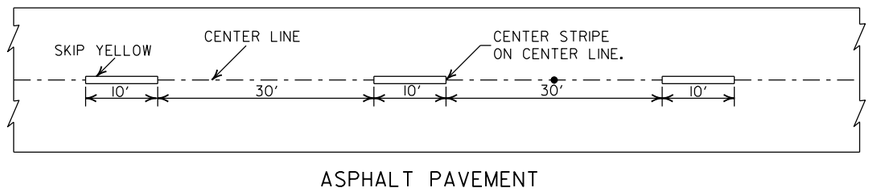

ASPHALT PAVEMENT

BROKEN LINE STRIPING

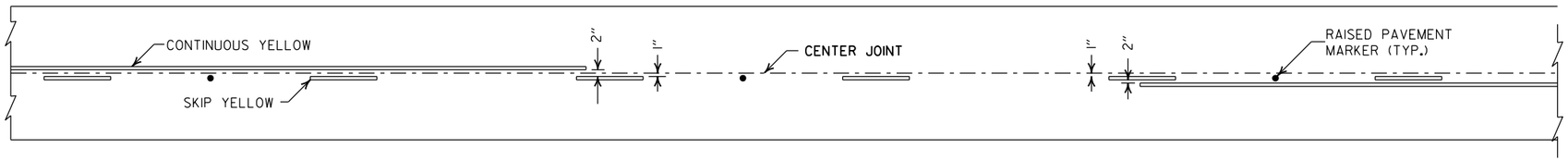

SOLID LINE STRIPING ON CONCRETE PAVEMENT

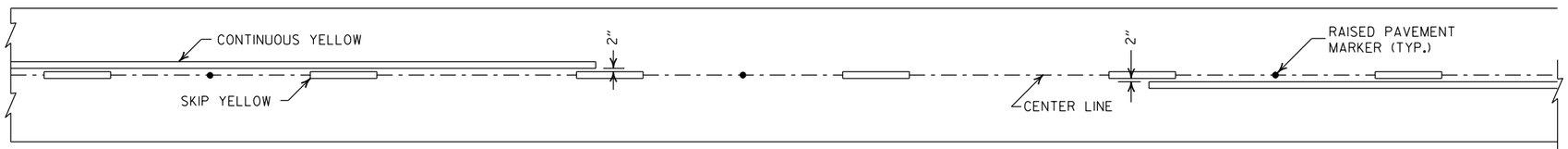

SOLID LINE STRIPING ON ASPHALT PAVEMENT

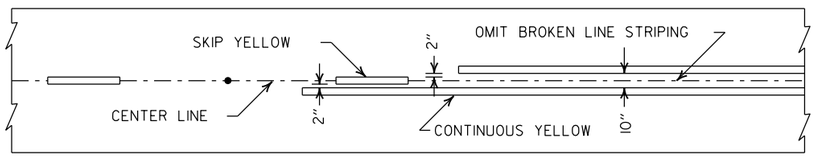

ASPHALT PAVEMENT

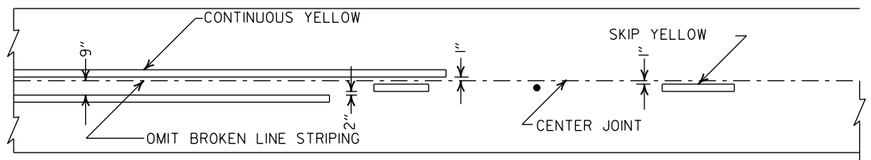

CONCRETE PAVEMENT

STRIPING AT ADJACENT NO PASSING LANES

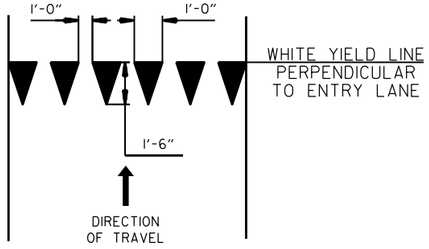

YIELD LINE DETAIL

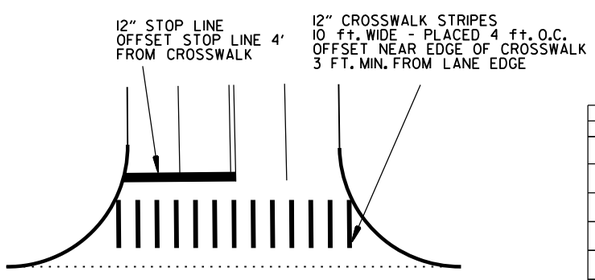

CROSSWALK AND STOP LINE DETAILS

NOTES:
1. REFER TO THE STRIPING DETAILS FOR PAVEMENT MARKING LINE WIDTHS.
2. THIS DRAWING SHALL BE USED IN CONJUNCTION WITH THE LATEST REVISED ADDITION OF THE "MANUAL ON UNIFORM TRAFFIC CONTROL DEVICES."
3. RAISED PAVEMENT MARKERS SHALL BE PLACED ON AN 80 FEET SPACING UNLESS OTHERWISE SHOWN IN THE PLANS.

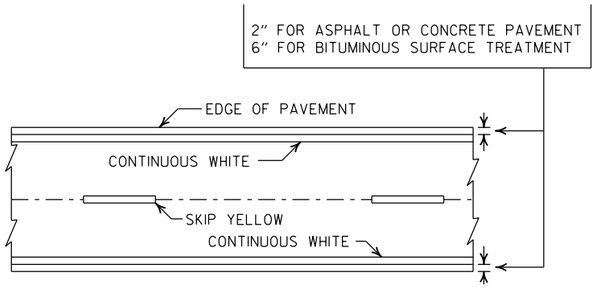

PAVEMENT EDGE LINE MARKING

NOTE:
THE RED LENS OF THE TYPE II R.P.M. SHALL FACE THE INCORRECT TRAFFIC MOVEMENT.

TYPE II
RED/CLEAR OR
YELLOW/YELLOW

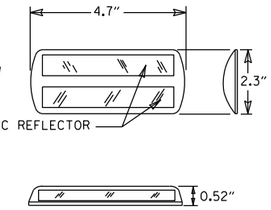

NOTE:
DIMENSIONS SHOWN FOR RAISED PAVEMENT MARKERS ARE TYPICAL. THE CONTRACTOR MAY SUBSTITUTE SIMILAR MARKERS WITH THE APPROVAL OF THE ENGINEER. REQUESTING APPROVAL FOR SIMILAR MARKERS MAY BE MADE BY REFERRING TO THE ARDOT QUALIFIED PRODUCTS LIST.

DETAIL OF STANDARD RAISED PAVEMENT MARKERS

DATE	REVISION	FILMED
2-27-20	REVISED STOP LINE DETAILS	
6-1-17	ADDED YIELD LINE DETAIL	
5-12-16	REVISED LINE WIDTHS, SPACING, & NOTES	
9-12-13	REVISED DETAIL OF STANDARD RAISED PAVEMENT MARKERS	
11-17-10	REVISED GENERAL NOTES & REMOVED PLOWABLE PVMT MRKRS	
11-18-04	REVISED NOTE 2 & GENERAL NOTES	
8-22-02	ADDED CROSSWALK & STOPBAR DTLS.	
7-02-98	ADDED DETAILS OF STD. RAISED PAV'T. MARKERS	
4-26-96	REV. NOTES 3&4; ADDED R.P.M.	
9-30-80	DRAWN	1-9-30-80

ARKANSAS STATE HIGHWAY COMMISSION

PAVEMENT MARKING DETAILS

STANDARD DRAWING PM-1

NOTE:

1. UNLESS OTHERWISE SPECIFIED ON THE PLANS, THE UNDERDRAIN COVER SHALL BE THOROUGHLY COMPACTED EARTH AND SHALL BE SUBSIDIARY TO PIPE UNDERDRAIN.

2. GRANULAR MATERIAL SHALL BE WRAPPED WITH GEOTEXTILE FABRIC. LAP FABRIC 12" OR THE WIDTH OF THE TRENCH AT THE TOP.

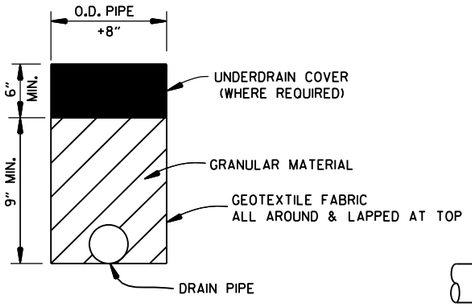

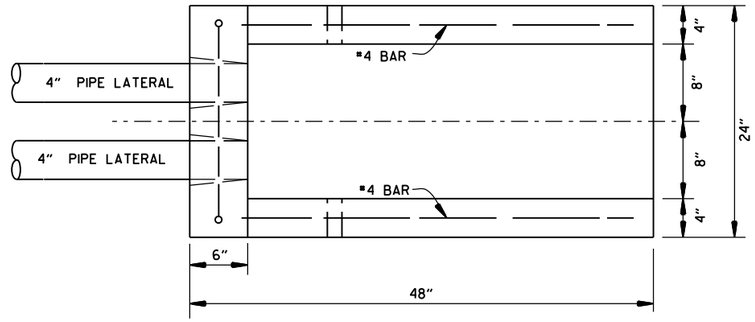

PLAN VIEW

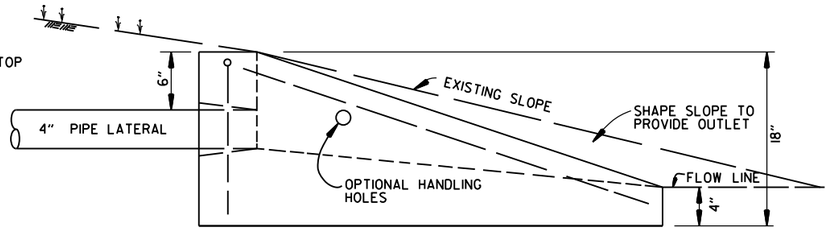

SIDE VIEW

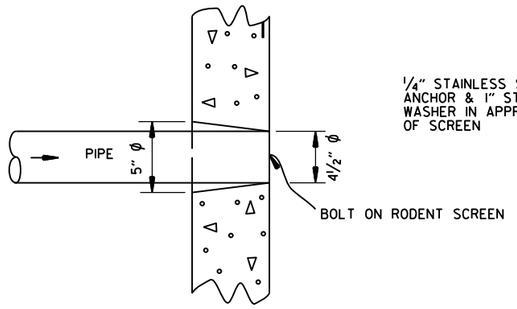

DETAIL OF HOLE
FOR 4" PIPE

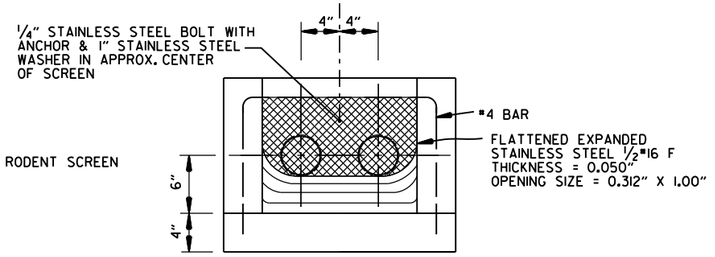

FRONT VIEW
(DETAIL OF RODENT SCREEN)

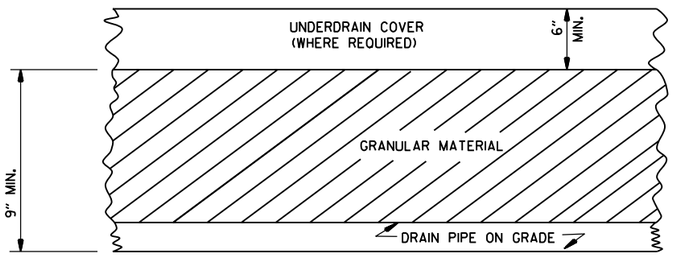

DETAILS OF PIPE UNDERDRAIN

NOTES FOR PIPE UNDERDRAINS

1. GEOTEXTILE FABRIC SHALL MEET THE REQUIREMENTS OF SECTION 625 FOR TYPE 1. PAYMENT FOR GEOTEXTILE FABRIC AND GRANULAR FILTER MATERIAL SHALL BE INCLUDED IN THE PRICE BID PER LIN. FT. FOR "4" PIPE UNDERDRAINS" IN ACCORDANCE WITH SECTION 611 OF THE STANDARD SPECIFICATIONS.

2. 4" NON-PERFORATED SCHEDULE 40 PVC PIPE LATERALS WITH OUTLET PROTECTORS SHALL BE INSTALLED AS SHOWN HEREON. LATERALS WILL BE MEASURED AND PAID FOR AS "4" PIPE UNDERDRAINS." UNDERDRAIN OUTLET PROTECTORS WILL BE MEASURED AND PAID FOR BY THE UNIT IN ACCORDANCE WITH SECTION 611 OF THE STANDARD SPECIFICATIONS.

3. EXISTING 4" PIPE UNDERDRAINS MAY BE CONNECTED TO PROPOSED DROP INLETS OR EXTENDED WHERE DIRECTED BY THE ENGINEER. PAYMENT FOR CONNECTING TO DROP INLETS SHALL BE CONSIDERED INCLUDED IN THE PRICE BID FOR "4" PIPE UNDERDRAINS."

4. THE LOCATION OF ALL LATERALS SHALL BE MARKED WITH 4" X 12" PERMANENT PAVEMENT MARKING TAPE (TYPE III WHITE) AT THE OUTSIDE EDGE OF THE SHOULDER, PLACED TRANSVERSE TO TRAFFIC. PAYMENT FOR THIS WORK SHALL BE INCLUDED IN THE PRICE BID FOR THE VARIOUS CONTRACT ITEMS.

5. PAYMENT FOR THE RODENT SCREEN SHALL BE INCLUDED IN THE PRICE BID PER EACH FOR "UNDERDRAIN OUTLET PROTECTORS."

6. ANY EXISTING UNDERDRAINS THAT INTERFERE WITH INSTALLATION OF THE NEW UNDERDRAIN SYSTEM SHALL BE REMOVED AND DISPOSED OF AS DIRECTED BY THE ENGINEER. PAYMENT WILL BE CONSIDERED INCLUDED IN THE PRICE BID FOR THE VARIOUS CONTRACT ITEMS. EXISTING UNDERDRAIN OUTLET PROTECTORS SHALL BE REMOVED UNDER THE ITEM "REMOVAL AND DISPOSAL OF UNDERDRAIN OUTLET PROTECTORS."

7. AT LOCATIONS WHERE A SINGLE LATERAL IS USED THE CONTRACTOR SHALL HAVE THE FOLLOWING OPTIONS: 1. INSTALL OUTLET PROTECTOR AS SHOWN ON STANDARD DRAWING PU-1 AND GROUT THE UNUSED HOLE OR 2. INSTALL AN OUTLET PROTECTOR WITH A SINGLE HOLE.

UNDERDRAIN OUTLET PROTECTORS

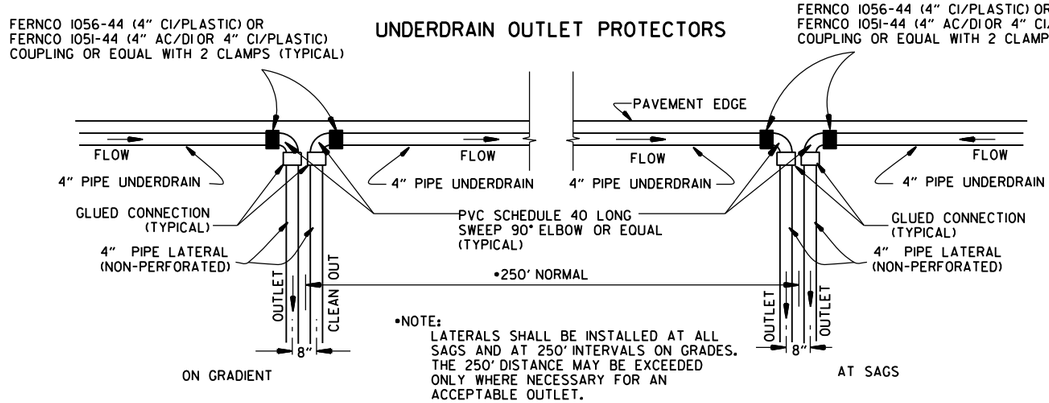

DETAIL OF PIPE UNDERDRAIN LATERALS
WHEN PLACED ALONG PAVEMENT EDGE

NOTE: PVC PIPE FOR LATERALS SHALL MEET THE REQUIREMENTS OF ASTM D 1785 (LATEST REVISION) FOR SCHEDULE 40 PIPE.

DATE	REVISION	DATE FILMED
12-8-16	ADDED NOTES FOR PIPE UNDERDRAINS, REVISED RODENT SCREEN DETAIL AND NOTES, REMOVED NOTE 1 FOR GRANULAR MATERIAL, ADDED NOTE FOR GEOTEXTILE FABRIC	
4-10-03	REVISED NOTE 3	
1-12-00	REVISED DETAIL OF UNDERDRAIN LATERALS	
11-18-98	REVISED NOTE	
10-18-96	REVISED MIN. DEPTH & GEOTEXTILE FABRIC	
4-26-96	ADDED LATERAL NOTE; 5½" TO 5"	
11-22-95	REVISED LATERALS	
7-20-95	REVISED LATERALS & ADDED NOTE	
11- 3-94	REVISED FOR DUAL LATERALS	11- 3-94
10- 1-92	SUBSTITUTED GEOTEXTILE	10- 1-92
8-15-91	ADDED POLYEDTHYLENE PIPE	8-15-91
11- 8-90	DELETED ALTERNATE NOTE	11- 8-90
1-25-90	ADDED 4" SNAP ADAPTER	1-25-90
11-30-89	DEL. (SUBGRADE); ADDED (WHERE REQUIRED)	11-30-89
7-15-88	ISSUED P.L.M.	647-7-15-88

ARKANSAS STATE HIGHWAY COMMISSION

DETAILS OF PIPE UNDERDRAIN

STANDARD DRAWING PU-1

STEEL FABRICATION: REINFORCING STEEL FABRICATION SHALL CONFORM TO THE DIMENSIONS LISTED IN THE TABLE BELOW:

BAR SIZE	PIN DIAMETER	HOOK EXTENSION "K"
3	2¼"	4"
4	3 "	4½"
5	3¾"	5"
6	4½"	6"
7	5¼"	7"
8	6"	8"

IF THE OVERALL HEIGHT OF THE HOOK (SEE DIAGRAM BELOW) FOR A "b", "b1", "b2" or "b3" BENT BAR IS GREATER THAN THE CORRESPONDING TOP OR BOTTOM SLAB THICKNESS, LESS 2¾ INCHES, EACH BENT BAR SHALL BE REPLACED WITH ONE HOOKED BAR AND ONE STRAIGHT BAR, USING LENGTHS AS SHOWN IN THE TABLE BELOW. THE TWO BARS SHALL BE THE SAME DIAMETER AS, AND PLACED AT THE SAME SPACING AS, THE "b", "b1", "b2" OR "b3" BENT BARS THEY REPLACE.

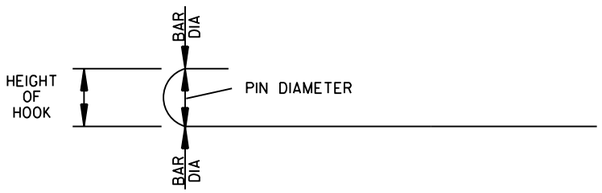

NOTE: DIMENSIONS OF BARS ARE MEASURED OUT TO OUT OF BARS.

OVERALL HEIGHT OF HOOKED BAR DIAGRAM

THE HOOKED BARS SHALL BE PLACED IN THE BOTTOM OF THE TOP SLAB AND THE TOP OF THE BOTTOM SLAB. THE STRAIGHT BARS SHALL BE PLACED IN THE TOP OF THE TOP SLAB AND THE BOTTOM OF THE BOTTOM SLAB. SEE TABLE BELOW FOR LENGTHS OF REPLACEMENT HOOKED AND STRAIGHT BARS.

FOR SKEWED CULVERTS, THE REPLACEMENT STRAIGHT BAR MAY HAVE TO BE CUT IN FIELD TO FIT.

REPLACEMENT BAR LENGTHS TABLE

BAR SIZE: "b", "b1", "b2" OR "b3"	LENGTH OF HOOKED BAR	LENGTH OF STRAIGHT BAR
#4	L + 1' - 0"	SEE "c" BAR LENGTH
#5	L + 1' - 2"	SEE "c" BAR LENGTH
#6	L + 1' - 4"	SEE "c" BAR LENGTH
#7	L + 1' - 8"	SEE "c" BAR LENGTH
#8	L + 1' - 10"	SEE "c" BAR LENGTH
#9	L + 2' - 6"	SEE "c" BAR LENGTH

L = "OW" - 3 INCHES

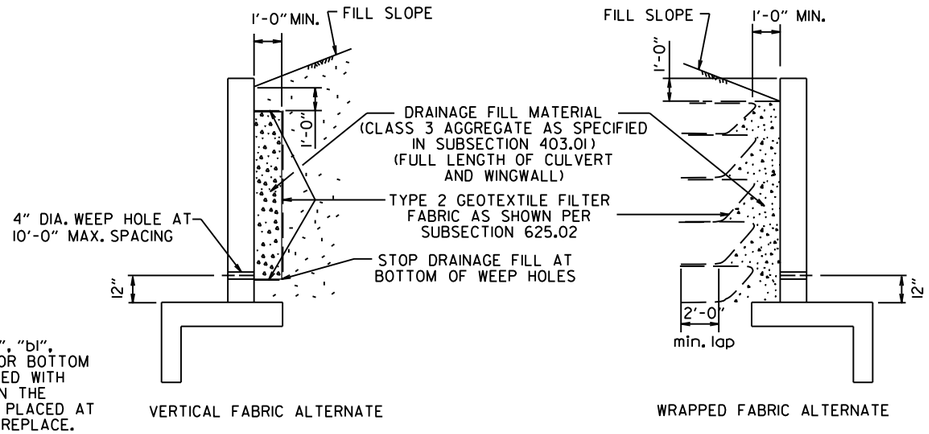

WINGWALL & CULVERT DRAINAGE DETAIL

REINFORCED CONCRETE BOX CULVERT GENERAL NOTES

CONCRETE SHALL BE CLASS S WITH A MINIMUM 28 DAY COMPRESSIVE STRENGTH OF 3500 PSI.

REINFORCING STEEL SHALL BE AASHTO M 31 OR M 53, GRADE 60.

CONSTRUCTION AND MATERIALS FOR WINGWALL & CULVERT DRAINAGE, INCLUDING WEEP HOLES AND GRANULAR MATERIAL, SHALL BE SUBSIDIARY TO THE BID ITEM, "CLASS S CONCRETE".

MEMBRANE WATERPROOFING SHALL CONFORM TO THE REQUIREMENTS OF SECTION 815 OF THE STANDARD SPECIFICATIONS.

MEMBRANE WATERPROOFING SHALL BE APPLIED TO ALL CONSTRUCTION JOINTS IN THE TOP SLAB AND THE SIDEWALLS OF R.C. BOX CULVERTS AS DIRECTED BY THE ENGINEER. NO PAYMENT SHALL BE MADE FOR THIS ITEM, BUT PAYMENT WILL BE CONSIDERED TO BE INCLUDED IN THE VARIOUS ITEMS BID FOR THE R.C. BOX CULVERT.

REINFORCING STEEL TOLERANCES: THE TOLERANCES FOR REINFORCING STEEL SHALL MEET THOSE LISTED IN "MANUAL OF STANDARD PRACTICE" PUBLISHED BY CONCRETE REINFORCING STEEL INSTITUTE (CRSI) EXCEPT THAT THE TOLERANCE FOR TRUSS BARS SUCH AS FIGURE 3 ON PAGE 7-4 OF THE CRSI MANUAL SHALL BE MINUS ZERO TO PLUS ½ INCH.

WEEP HOLES IN BOX CULVERT WALLS SHALL HAVE A MAXIMUM HORIZONTAL SPACING OF 10'-0" AND SHALL BE SPACED TO CLEAR ALL REINFORCING STEEL. THE DRAIN OPENING SHALL BE 4" DIAMETER AND SHALL BE PLACED 12" ABOVE THE TOP OF THE BOTTOM SLAB.

WEEP HOLES IN WINGWALLS SHALL HAVE A MAXIMUM HORIZONTAL SPACING OF 10'-0" AND SHALL BE SPACED TO CLEAR ALL REINFORCING STEEL. THERE SHALL BE A MINIMUM OF TWO (2) WEEP HOLES IN EACH WINGWALL. THE DRAIN OPENING SHALL BE 4" DIAMETER AND SHALL BE PLACED 12" ABOVE THE TOP OF THE WINGWALL FOOTING.

THE REQUIREMENTS SHOWN ON THIS DRAWING SHALL SUPERCEDE THE CORRESPONDING REQUIREMENTS ON ALL REINFORCED CONCRETE BOX CULVERT STANDARD DRAWINGS.

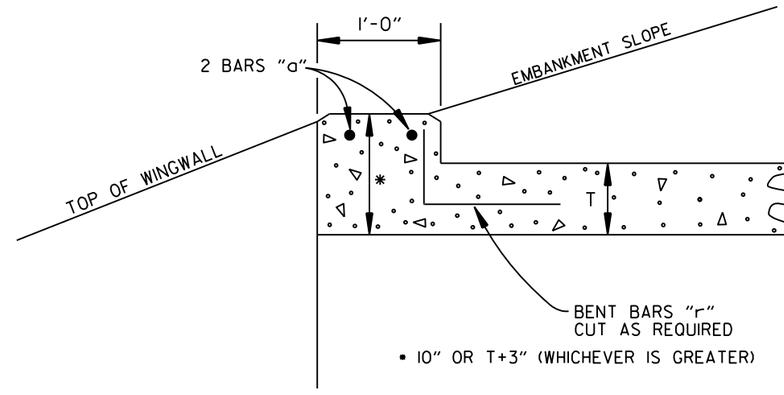

NOTE: FOR ALL SKEWED R.C. BOX CULVERTS THE LENGTH "K" OF THE MODIFIED HEADWALL SHALL BE EQUAL TO THE ROADWAY LENGTH "RL". THE ENDS OF THE HEADWALL SHALL BE CONSTRUCTED PARALLEL TO THE SKEW ANGLE OF THE BOX CULVERT.

R.C. BOX CULVERT HEADWALL MODIFICATIONS

DATE	REVISION	DATE FILMED
7/26/12	REV. DRAINAGE FILL MATERIAL & DETAIL	
12/15/11	REQUIRE WEEP HOLES IN BOX CULVERT WALLS	
5-25-06	REV. GEN. NOTES AND DETAILS FOR WEEP HOLES; BAR DIAGRAM	
11-16-01	ADDED WINGWALL DRAINAGE DETAIL/EDITED GEN. NOTES	
10-18-96	REV. ASTM REF. TO AASHTO & ADDED BAR DIAGRAM	
10-12-95	MOVED SOLID SODDING DETAIL TO RCB-2	
6-2-94	ADDED SOLID SODDING PLAN DETAIL	
8-5-93	REVISED PIN DIAMETER TO SPECS.	
8-15-91	DRAWN AND ISSUED	

ARKANSAS STATE HIGHWAY COMMISSION

REINFORCED CONCRETE BOX CULVERT DETAILS

STANDARD DRAWING RCB-1

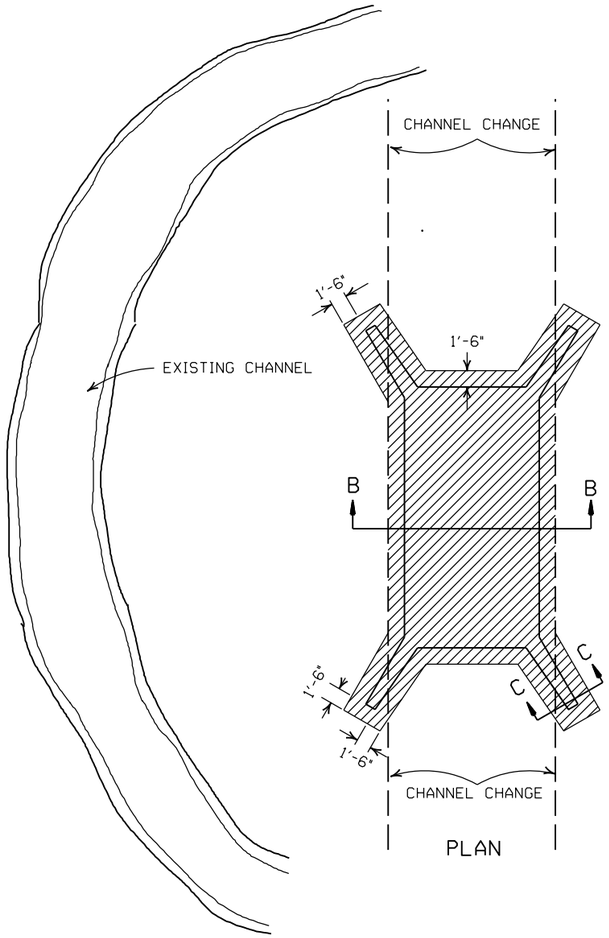

PLAN

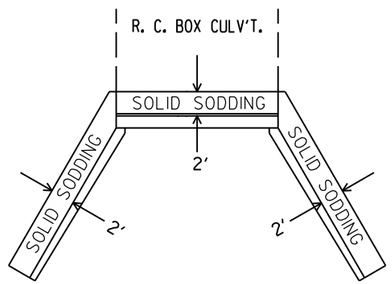

PLAN

PARTIAL SECTION SHOWING SOLID SODDING AT HEADWALLS AND WING WALLS

NOTE: LENGTH MEASURED ALONG THE CENTER OF 2' STRIP OF SOLID SODDING.

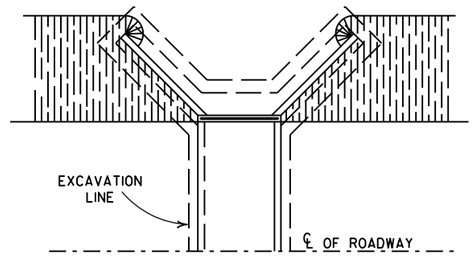

PLAN

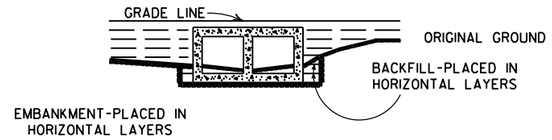

LONGITUDINAL SECTION

BACKFILL DETAILS FOR BOX CULVERT

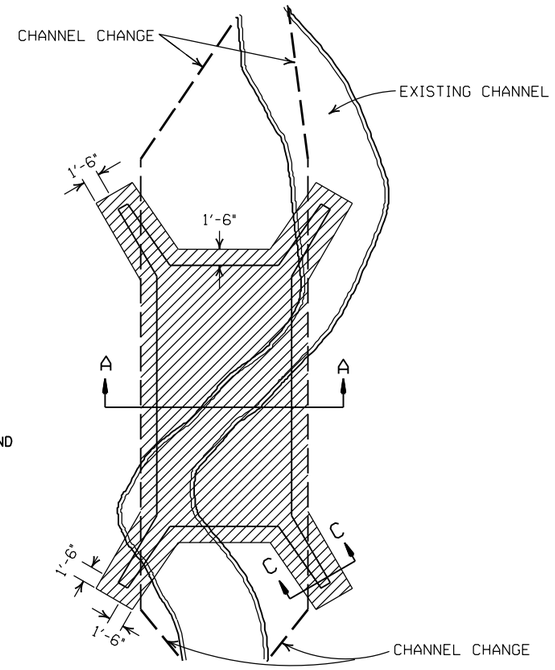

PLAN

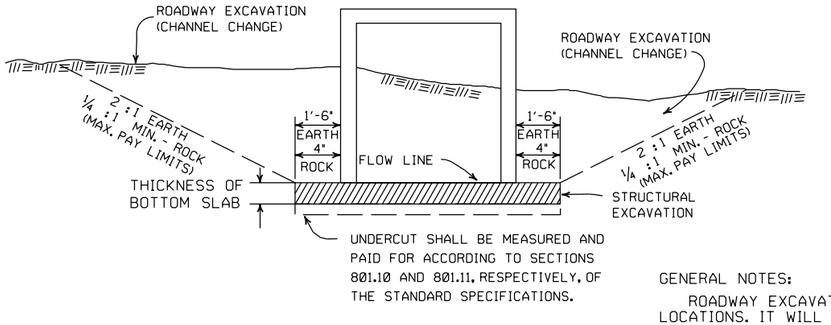

SECTION B-B

DETAILS FOR NEW CHANNELS

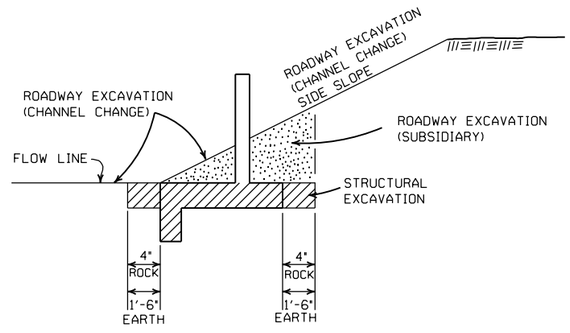

SECTION C-C

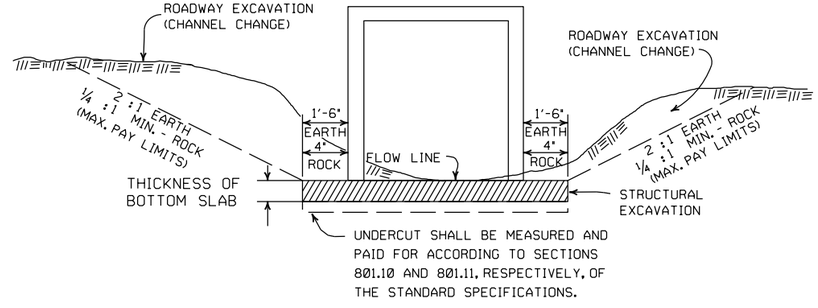

SECTION A-A

DETAILS THROUGH EXISTING CHANNELS

GENERAL NOTES:

ROADWAY EXCAVATION (CHANNEL CHANGE) WILL BE PAID FOR AT R.C. BOX CULVERT LOCATIONS. IT WILL BE PAID TO THE LIMITS ACTUALLY CUT AND WILL BE CONFINED TO THAT PORTION OF THE INDICATED AREA THAT IS ABOVE THE FLOW LINE. ROADWAY EXCAVATION (CHANNEL CHANGE) SHALL BE MEASURED BY CROSS SECTIONS AND VOLUMES COMPUTED BY AVERAGE END AREA METHOD. ALL CHANNEL CHANGES SHALL BE BROUGHT TO GRADE PRIOR TO MAKING ANY EXCAVATION FOR STRUCTURES.

EXCAVATION FOR STRUCTURES WILL BE PAID FOR AT ALL R.C. BOX CULVERT LOCATIONS. IT WILL BE PAID TO THE LIMITS SHOWN AND SHALL BE CONFINED TO THAT PORTION OF THE INDICATED AREA THAT IS BELOW THE CHANNEL FLOW LINE.

ROADWAY EXCAVATION SHOWN IN SECTION C-C ABOVE AS SUBSIDIARY WILL NOT BE MEASURED OR PAID FOR DIRECTLY, BUT PAYMENT WILL BE CONSIDERED TO BE INCLUDED IN THE VARIOUS ITEMS OF EXCAVATION.

DATE	REVISION	FILMED
11-20-03	REVISED SECTION A-A NOTE	
8-22-02	REVISED SECTION B-B NOTE	
10-12-95	COMBINED 1891B AND 1888A	
1-4-83	REVISED GENERAL NOTES	674-1-4-83
	AND ADDED MAXIMUM PAY	
	LIMIT NOTES.	
2-2-76	EXCAV. PAY LIMITS	917-2-2-76
10-2-72	REVISED AND REDRAWN	564-10-16-72

ARKANSAS STATE HIGHWAY COMMISSION

EXCAVATION PAY LIMITS, BACKFILL, & SOLID SODDING FOR BOX CULVERTS

STANDARD DRAWING RCB-2

SUPERELEVATION TABLE FOR TWO - WAY TRAFFIC

DEGREE OF CURVE	30 MPH			35 MPH			40 MPH			45 MPH			50 MPH			55 MPH			60 MPH			65 MPH			70 MPH			75 MPH		
	e	Ls (FT)		e	Ls (FT)		e	Ls (FT)		e	Ls (FT)		e	Ls (FT)		e	Ls (FT)		e	Ls (FT)		e	Ls (FT)		e	Ls (FT)		e	Ls (FT)	
		MINIMUM	DESIRABLE		MINIMUM	DESIRABLE		MINIMUM	DESIRABLE		MINIMUM	DESIRABLE		MINIMUM	DESIRABLE		MINIMUM	DESIRABLE		MINIMUM	DESIRABLE		MINIMUM	DESIRABLE		MINIMUM	DESIRABLE		MINIMUM	DESIRABLE
0° 15'	NC			NC			NC			NC			NC			NC			NC			NC			NC			NC		
0° 30'	NC			NC			NC			NC			NC			NC			RC	96		RC	96		RC	96		0.022	101	
0° 45'	NC			NC			NC			NC			RC	96		RC	96		0.024	106		0.026	110		0.030	120		0.032	125	
1° 00'	NC			NC			NC			RC	90		0.022	101		0.026	110		0.030	120		0.034	130		0.038	139	300	0.042	149	300
1° 15'	NC			NC			RC	84		0.022	95		0.028	115		0.032	125		0.038	139		0.042	149		0.046	158		0.052	173	
1° 30'	NC			RC	78		0.022	88		0.028	108		0.032	125		0.038	139		0.044	154		0.050	168	300	0.056	182		0.062	197	
1° 45'	RC	72		RC	78		0.026	97		0.030	113		0.036	134		0.044	154		0.050	168	300	0.056	182		0.064	202		0.070	216	
2° 00'	RC	72		0.024	86		0.028	101		0.034	122		0.042	149		0.048	163		0.056	182		0.064	202		0.070	216		0.080	240	
2° 15'	RC	72		0.026	90		0.032	109		0.038	131		0.046	158		0.054	178	300	0.062	197		0.070	216		0.078	235	350	0.088	259	350
2° 30'	0.022	75		0.028	94		0.034	113		0.042	140		0.050	168		0.058	187		0.068	211		0.076	230		0.086	254		0.096	278	
2° 45'	0.024	79		0.030	98		0.038	122		0.046	149	200	0.054	178		0.064	202		0.072	221		0.082	245		0.092	269		0.100	288	400
3° 00'	0.026	83		0.034	105		0.040	126		0.050	158		0.058	187	250	0.068	211		0.078	235		0.088	259		0.098	283	400	D MAX = 2° 45'		
3° 15'	0.028	86		0.036	109		0.044	134		0.052	162		0.062	197		0.072	221		0.082	245		0.092	269		0.100	288				
3° 30'	0.030	90		0.038	113		0.046	139	200	0.056	171		0.066	206		0.076	230		0.086	254		0.096	278	350	D MAX = 3° 30'					
3° 45'	0.032	93		0.040	117		0.050	147		0.058	176		0.070	216		0.080	240		0.090	264		0.098	283							
4° 00'	0.034	97		0.042	121	200	0.052	151		0.062	185		0.072	221		0.084	250		0.094	274	350	0.100	288							
4° 15'	0.036	100		0.044	125		0.054	155		0.064	189		0.076	230		0.086	254	350	0.096	278		D MAX = 4° 15'								
4° 30'	0.036	100		0.046	129		0.056	160		0.068	198		0.078	235		0.090	264		0.098	283										
4° 45'	0.038	104	200	0.048	133		0.060	168		0.070	203		0.082	245		0.092	269		0.100	288										
5° 00'	0.040	108		0.050	137		0.062	172		0.072	207		0.084	250		0.094	274		D MAX = 5° 15'										
5° 30'	0.044	115		0.054	144		0.066	181		0.078	221	250	0.088	259		0.098	283												
6° 00'	0.046	119		0.058	152		0.070	189		0.082	230		0.092	269		0.100	288												
6° 30'	0.050	126		0.062	160		0.074	198		0.086	239		0.096	278	300	D MAX = 6° 30'													
7° 00'	0.052	130		0.064	164		0.078	206		0.090	248		0.098	283															
7° 30'	0.054	133		0.068	172		0.080	210		0.092	252		0.100	288															
8° 00'	0.058	140		0.070	176		0.084	219		0.094	257	300	D MAX = 8° 25'																
8° 30'	0.060	144		0.072	179		0.086	223	250	0.096	261																		
9° 00'	0.062	148		0.076	187		0.088	227		0.098	266																		
9° 30'	0.064	151		0.078	191		0.092	235		0.100	270																		
10° 00'	0.066	155		0.080	195		0.094	240		D MAX = 10° 30'																			
11° 00'	0.070	162		0.084	203		0.096	244																					
12° 00'	0.074	169		0.088	211	250	0.098	248																					
13° 00'	0.076	173		0.090	215		0.100	252	300	D MAX = 13° 45'																			
14° 00'	0.080	180		0.094	222																								
15° 00'	0.082	184		0.096	226																								
16° 00'	0.086	191		0.098	230																								
17° 00'	0.088	194		0.100	234																								
18° 00'	0.090	198	250	D MAX = 19° 30'																									
19° 00'	0.092	202																											
20° 00'	0.094	205																											
21° 00'	0.096	209																											
22° 00'	0.096	209																											
23° 00'	0.098	212																											
24° 00'	0.098	212																											
25° 00'	0.100	216																											
D MAX = 28° 30'																													

ABBREVIATIONS

NC - NORMAL CROWN
RC - REVERSE CROWN, SUPERELEVATION AT NORMAL CROWN SLOPE
e - RATE OF SUPERELEVATION (FT. PER FT.)
Ls - LENGTH OF SUPERELEVATION TRANSITION (FT.)
L - DISTANCE FROM BEGINNING OF SUPERELEVATION TRANSITION TO ANY POINT (FT.)
d - WIDTH OF PAVEMENT (FT.) OR WIDTH OF SUBGRADE (FT.)
C - NORMAL CROWN (FT.)

GENERAL NOTES

1. ON PAVEMENT WITH TWO-WAY TRAFFIC, THE SUPERELEVATION SHALL BE REVOLVED ON THE INSIDE PAVEMENT EDGE UNLESS OTHERWISE NOTED ON THE PLANS
2. SUPERELEVATION VALUES SHOWN ON THE CROSS SECTIONS ARE VALUES (+) OR (-) TO BE ADDED TO OR SUBTRACTED FROM THE POINT OF CONTROL.
3. LENGTHS FOR L MAY BE ROUNDED IN MULTIPLES OF 25 FT. OR 50 FT. TO PERMIT SIMPLER CALCULATIONS.
4. PAVEMENTS WIDER THAN 2 LANES SHALL HAVE ADDITIONAL TRANSITION LENGTHS AS FOLLOWS:

3 LANE UNDIVIDED - - - - - +20%
4 LANE UNDIVIDED - - - - - +50%
5 LANE UNDIVIDED - - - - - +80%
6 LANE UNDIVIDED - - - - - +100%

NOTE: MAINTAIN NORMAL CROWN ON INSIDE UNTIL SUPERELEVATION EXCEEDS 2C.

RATE OF SUPERELEVATION SHALL BE COMPUTED ON STRAIGHT LINE METHOD USING APPLICABLE Ls.

SUPERELEVATION FORMULA = $\frac{Lde}{Ls}$

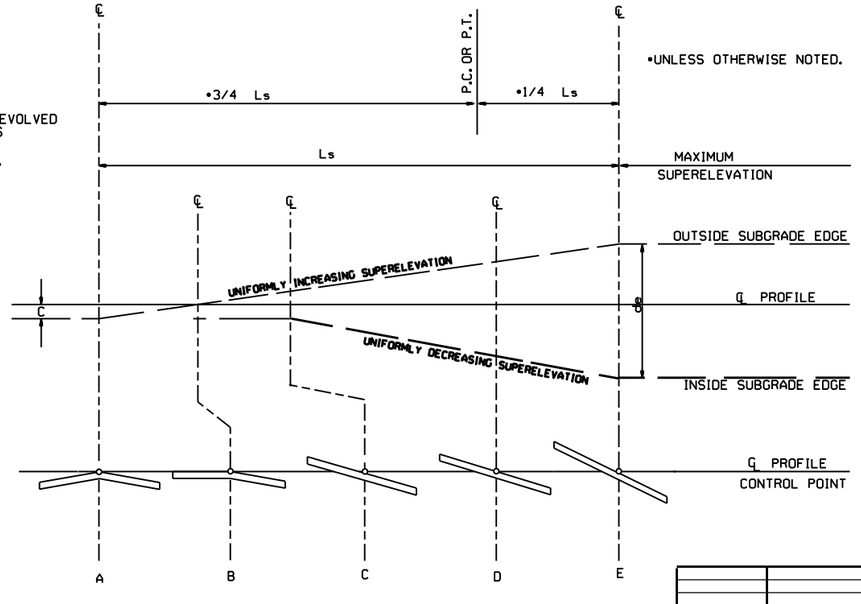

STANDARD METHOD WHEN SUPERELEVATION REVOLVES AROUND CENTER LINE

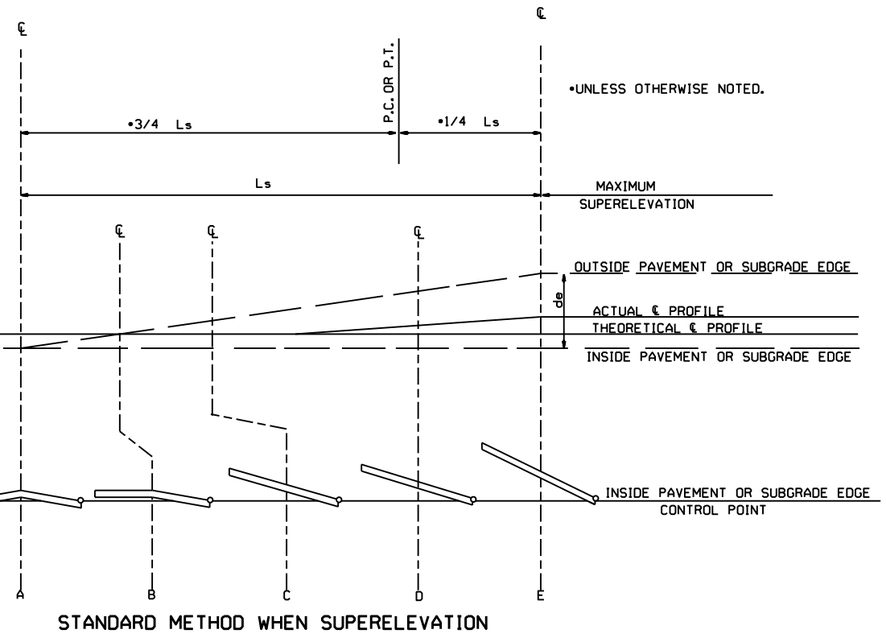

STANDARD METHOD WHEN SUPERELEVATION REVOLVES AROUND INNER SUBGRADE POINT OR INNER PAVEMENT EDGE

NOTE: MAINTAIN NORMAL CROWN ON INSIDE UNTIL SUPERELEVATION EXCEEDS 2C.

DATE	REVISION	DATE FILLMED
11-07-19	REVISED SUPERELEVATION TABLE	
10-18-96	ADDED FORMULA	
01-09-87	ISSUED	534-1-9-87

ARKANSAS STATE HIGHWAY COMMISSION

TABLES AND METHOD OF SUPERELEVATION FOR TWO-WAY TRAFFIC

STANDARD DRAWING SE-2

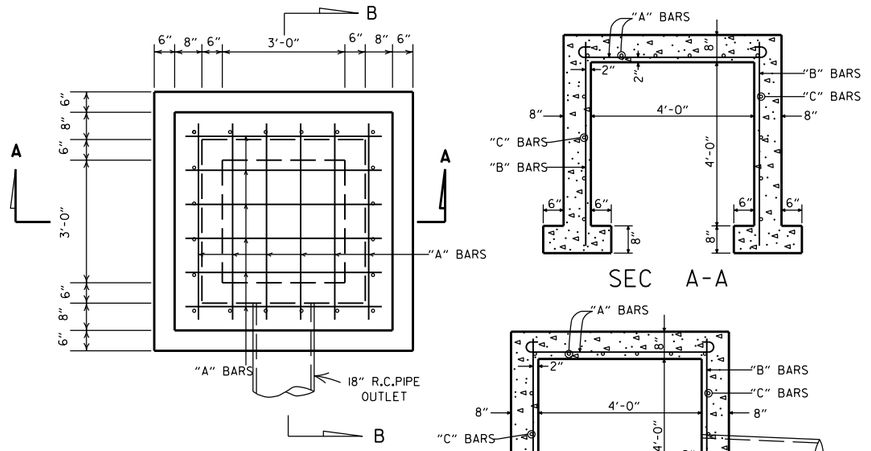

SEC A-A

SEC B-B

NOTE: MAX FILL HEIGHT ABOVE TOP OF BOX = 13'-0".

STEEL SCHEDULE

BARS	NUMBER	LENGTH	SPACING
"A"	12	6'-0"	10"
"B"	20	5'-0"	10 ½"
"C"	16	5'-0"	12"

ALL STEEL TO BE #4 BARS

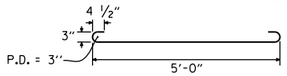

"A" BARS

QUANTITIES

CONCRETE 3.31 CU. YDS.
REINFORCING STEEL 168 LB.

GENERAL NOTE:

THE PAY ITEMS FOR REINFORCED CONCRETE SPRING BOXES SHALL BE FOR THE QUANTITIES OF CONCRETE OF THE CLASS SPECIFIED, REINFORCING STEEL, EXCAVATION FOR STRUCTURES AND 18" R.C. PIPE CULVERT.

REINFORCED CONCRETE SPRING BOX

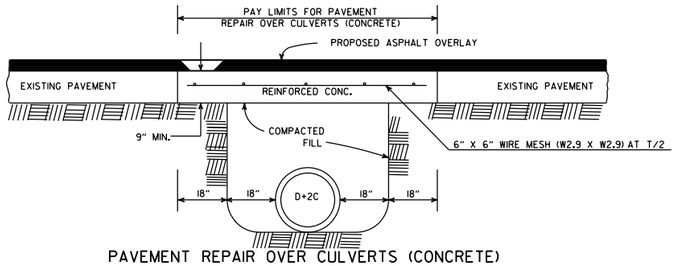

PAVEMENT REPAIR OVER CULVERTS (CONCRETE)

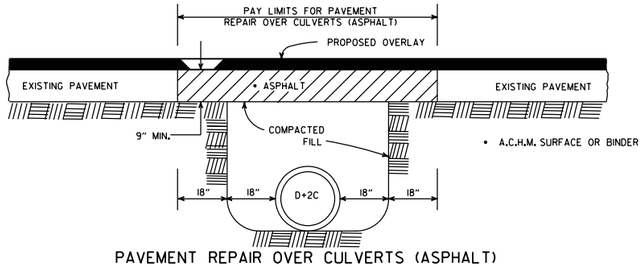

PAVEMENT REPAIR OVER CULVERTS (ASPHALT)

DETAIL SHOWING REPAIR OF EXISTING PAVEMENT AT CULVERT INSTALLATIONS

• A 2" MIN. HIGH CURB IS REQUIRED WHEN CONCRETE WALK IS ADJACENT TO THE HAND RAILING. PAYMENT FOR CURB SHALL BE CONSIDERED INCLUDED IN THE PRICE BID FOR CONCRETE WALKS.

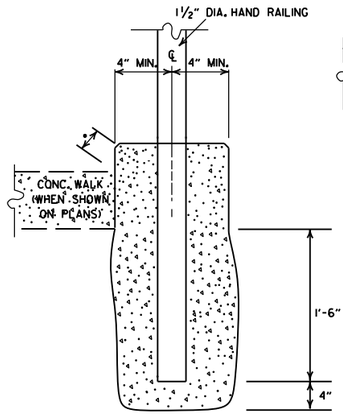

DETAIL OF HAND RAILING SET IN CONCRETE

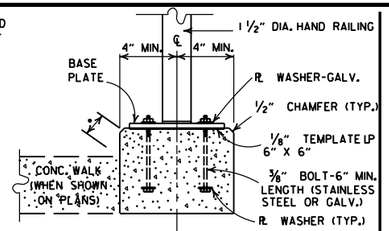

POST CONNECTION TO WALL

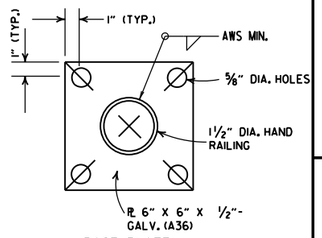

BASE PLATE

POST CONNECTION DETAILS

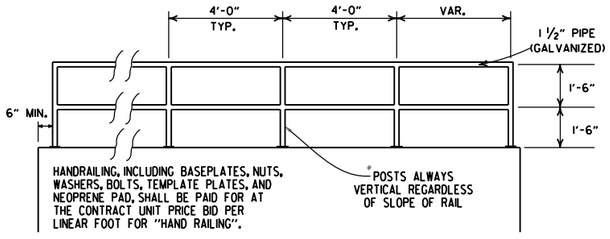

HAND RAILING SHALL CONFORM TO SECTION 633.

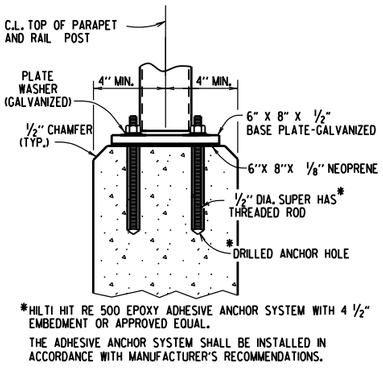

*HILTI HIT RE 500 EPOXY ADHESIVE ANCHOR SYSTEM WITH 4 ½" EMBEDMENT OR APPROVED EQUAL.

THE ADHESIVE ANCHOR SYSTEM SHALL BE INSTALLED IN ACCORDANCE WITH MANUFACTURER'S RECOMMENDATIONS.

POST CONNECTION TO WALL

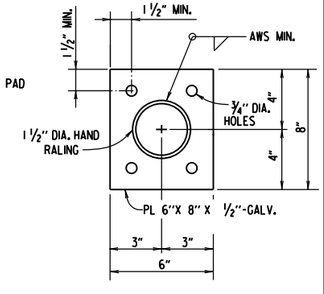

BASE PLATE

DETAILS OF ALTERNATE POST ANCHOR SYSTEM (EPOXY ADHESIVE ANCHORS)

HAND RAILING DETAILS

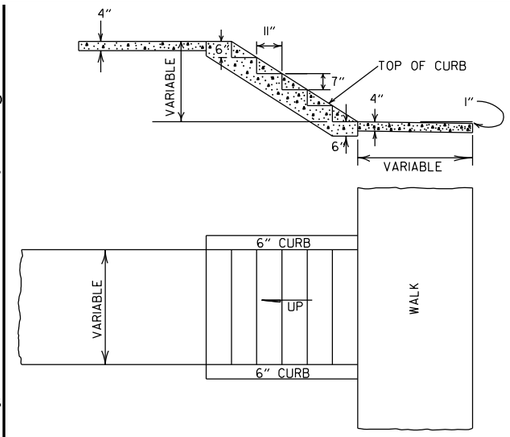

GENERAL NOTES

1. RISE AND TREAD DIMENSIONS OF STEPS MAY BE VARIED AS DIRECTED BY THE ENGINEER, HOWEVER, TREAD WIDTHS SHALL BE 11" MIN. ALL STEPS IN A FLIGHT SHALL HAVE CONSISTENT TREAD & RISER DIMENSIONS.
2. 1" TRANSVERSE EXPANSION JOINTS SHALL BE PLACED IN CONCRETE WALKS AT 45' INTERVALS.

DETAILS OF CONCRETE STEPS & WALKS

DATE	REVISION	DATE FILMED
10-25-18	REVISED DETAIL SHOWING REPAIR OF EXISTING PAVEMENT AT CULVERT INSTALLATIONS	
9-12-13	REVISED REINFORCED CONCRETE SPRING BOX	
7-26-12	REMOVED RETAINING WALL DETAILS & REVISED HAND RAILING DETAILS	
4-17-08	REV. JOINT & FOOTING STEP DETAILS	
11-29-07	REVISED RETAINING WALL DRAINAGE	
5-25-06	REVISED PVMT REPAIR OVER CULVERTS (CONC); REVISED REINFORCED CONC SPRING BOX	
10-9-03	REVISED PIPE RAILING DETAILS TO HAND RAILING DETAILS	
4-10-03	REVISED RETAINING WALL DRAWING	
8-22-02	ADDED HAND RAILING DETAIL	
11-16-01	REVISED PVMT REPAIR OVER CULVERTS (CONC); CORRECTED SPELLING IN GENERAL NOTES	
11-18-98	ADDED GENERAL NOTES TO CONCRETE STEPS & WALKS	
7-02-98	ENLARGED PIPE	
4-03-97	ADDED NOTE TO STEEL BAR SCHED.	
10-18-96	CORRECTED SPELLING	
4-26-94	ADD WEEP HOLE;REV. JOINT SPACING IN RET. WALL	
6-2-94	CHANGED CONST. TO CONTRACTION JOINT	
10-1-92	CHANGED MESH FABRIC TO WIRE MESH	10-1-92
8-15-91	DELETED HDWL MODIFICATION DETAIL	8-15-91
11-8-90	DELETED COLD MIX FROM CULV'T. REPAIR	11-8-90
11-30-89	REV. RETAINING WALL STEEL SCHEDULE	11-30-89
11-17-88	V. BARS BEHIND ARROW	665-11-17-88
7-15-88	REV. PAVEMENT REPAIR ADDED HDWL. MODS, DEL. PIPE UNDERDRAINS	649-7-15-88
11-1-84	REV. TRENCH FOR PIPE UNDERDRAIN	510-11-1-84
1-4-83	ELIMINATED CONC. CLASS & ADDED CHAMFER NOTE	682-1-4-83
3-2-81	SPELLING OF "UNDERDRAIN"	721-3-2-81
4-20-79	REV. UNDERDRAIN DET& PAVEMENT REPAIR	674-4-20-79
2-2-76	12"MIN. GRAN. MAT'L. OVER PIPE	919-2-2-76
4-10-75	REM. SPECS. FOR GRAN. MAT'L.	568-4-10-75-853
5-22-74	GRANULAR MAT'L. TO BE SB-3	567-5-22-74-740
10-2-72	REVISED AND REDRAWN	564-10-16-72

ARKANSAS STATE HIGHWAY COMMISSION

DETAILS OF SPECIAL ITEMS

STANDARD DRAWING SI - 1

R1-1



STANDARD 30"X30"
EXPRESSWAY 36"X36"
SPECIAL 48"X48"

R1-2

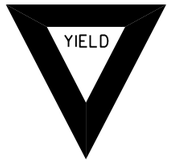

STD. 36"X36"X36"
EXPWY. 48"X48"X48"
FWY. 60"X60"X60"

R2-1



STD. 24"X30"
EXPWY. 36"X48"
FWY. 48"X60"

W3-5



STD. 36"X36"
EXPWY. 48"X48"
FWY. 48"X48"

W3-5a



STD. 36"X36"
EXPWY. 48"X48"
FWY. 48"X48"

R4-1



STD. 24"X30"
EXPWY. 36"X48"
FWY. 48"X60"

R4-2



STD. 24"X30"
EXPWY. 36"X48"
FWY. 48"X60"

R5-1



STD. 30"X30"
EXPWY. 36"X36"
SPECIAL 48"X48"

R11-2



48"X30"

R11-3A

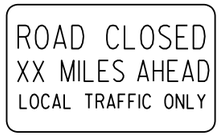

60"X30"

R11-4



60"X30"

W21-5a



STD. 36"X36"
FWY. 48"X48"

W1-1



STD. 36"X36"
FWY. 48"X48"

W1-2



STD. 36"X36"
FWY. 48"X48"

W1-3



STD. 48"X48"

W1-4



STD. 48"X48"

W1-6



STD. 48"X24"
SPECIAL 60"X30"

W1-8

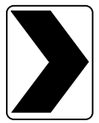

STD. 18"X24"
SPECIAL 24"X30"
EXPWY. 30"X36"
FWY. 36"X48"

W3-1



STD. 36"X36"
SPECIAL 48"X48"

W3-2



STD. 36"X36"
SPECIAL 48"X48"

W4-2

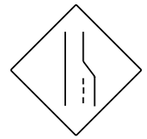

STD. 36"X36"
FWY. 48"X48"

W5-1



STD. 36"X36"
SPECIAL 48"X48"

W6-3



EXPWY. 36"X36"
SPECIAL 48"X48"

W8-7



EXPWY. 36"X36"
FWY. 48"X48"

W9-2



STD. 36"X36"
FWY. 48"X48"

W13-1



STD. 24"X24"

W20-1



STD. 48"X48"

W20-2



STD. 48"X48"

W20-3



STD. 48"X48"

W20-4



STD. 48"X48"

W20-5



STD. 48"X48"

W20-7a



STD. 36"X36"
FWY. 48"X48"

W21-2



STD. 30"X30"
SPECIAL 36"X36"

W21-5



STD. 30"X30"
SPECIAL 36"X36"

W24-1



STD. 36"X36"

W1-4b



STD. 48"X48"

R56-1



STD. 18"X18"

W8-11



STD. 36"X36"
FWY. 48"X48"

W8-9



STD. 36"X36"
FWY. 48"X48"

G20-1



60"X24"

G20-2

48"X24"

OM-3L OM-3R

12"X36"

M4-9

STD. 30"X24"
SPECIAL 48"X36"
SPECIAL 60"X48"

M4-10

48"X18"

R55-1

36"X60"

• USE 6" C LETTERS
•• USE 4" D LETTERS

ADVANCE DISTANCES
(XXXX)

500 FT	½ MILE
1000 FT	¾ MILE
1500 FT	1 MILE AHEAD

GENERAL NOTES:

1. ALL TRAFFIC CONTROL DEVICES USED ON ROAD CONSTRUCTION SHALL CONFORM TO THE MANUAL ON UNIFORM TRAFFIC CONTROL DEVICES, LATEST EDITION, AND TO THE STANDARD HIGHWAY SIGNS, LATEST EDITION, OR AS APPROVED BY THE FEDERAL HIGHWAY ADMINISTRATION.
2. TRAFFIC CONTROL DEVICES SHALL BE SET UP JUST BEFORE THE START OF CONSTRUCTION OPERATIONS AND SHALL BE PROPERLY MAINTAINED DURING THE TIME SUCH CONDITIONS EXIST. THEY SHALL REMAIN IN PLACE ONLY AS LONG AS NEEDED AND REMOVED THEREAFTER.
3. EXISTING SIGNS AND CONSTRUCTION SIGNS SHALL BE KEPT IN PROPER POSITION, AND BE CLEAN AND LEGIBLE AT ALL TIMES. SIGNS THAT DO NOT APPLY TO EXISTING CONDITIONS SHALL BE REMOVED. SIGNS THAT ARE DAMAGED, DEFACED, OR THAT ACCUMULATE DIRT DURING CONSTRUCTION SHALL BE CLEANED, REPAIRED, OR REPLACED.
- 4. SIGNS ARE USUALLY MOUNTED ON A SINGLE POST, ALTHOUGH THOSE WIDER THAN 36" OR LARGER THAN 10 SQ. FT. SHALL BE MOUNTED ON TWO POSTS OR ABOVE A TYPE III BARRICADE.
- 5. SIGN POSTS DIRECT BURIED IN SOIL SHALL BE 2 LB. MINIMUM CHANNEL POST OR 4"x4" WOOD POSTS. CHANNEL POSTS SHALL BE PAINTED GREEN. WOOD POSTS SHALL BE PAINTED WHITE. ALL POSTS SHALL BE NEATLY CONSTRUCTED, AND SHALL BE REPLUMBED, CLEANED, OR REPAIRED AS NEEDED FOR THE DURATION OF THE JOB. THERE SHALL NOT BE MORE THAN 2 POSTS IN A 7' PATH FOR WOOD OR CHANNEL POSTS. ANY CHANNEL POST SPLICE SHALL BE IN ACCORDANCE WITH STANDARD DRAWING TC-3.
6. POST MOUNTED SIGNS IN RURAL AREAS SHALL BE CONSTRUCTED WITH THE NEAR EDGE OF THE SIGN FROM 6 TO 12 FEET FROM THE PAVEMENT EDGE. SIGNS IN URBAN AREAS AND BARRICADE MOUNTED SIGNS SHALL BE MOUNTED A MINIMUM OF 2 FEET FROM THE PAVEMENT EDGE.
7. ALL POST AND BARRICADE MOUNTED SIGNS MOUNTED IN URBAN AREAS SHALL BE MOUNTED A MINIMUM DISTANCE OF 7' FROM THE BOTTOM OF THE SIGN TO THE ROADWAY SURFACE. ALL POST AND BARRICADE MOUNTED SIGNS MOUNTED IN RURAL AREAS SHALL BE MOUNTED A MINIMUM DISTANCE OF 7' FROM THE BOTTOM OF THE SIGN TO THE ROADWAY SURFACE, EXCEPT A MINIMUM OF 6' SHALL BE USED WHEN MOUNTING AN ADVISORY SIGN BELOW A WARNING SIGN. TEMPORARY SIGNS MAY BE MOUNTED ON PORTABLE SUPPORTS FOR INTERMEDIATE TERM STATIONARY WORK CONDITIONS. THE SIGNS MINIMUM MOUNTING HEIGHT SHALL BE 5'. RETROREFLECTIVE DEVICES SHALL BE USED. TEMPORARY SIGNS MAY BE MOUNTED ON PORTABLE SUPPORTS FOR SHORT-TERM, SHORT DURATION, AND MOBILE CONDITIONS. THEY SHALL BE NO LESS THAN ONE (1) FOOT ABOVE THE TRAVELED WAY. LONG-TERM STATIONARY SIGNS SHALL BE DIRECT BURIED IN SOIL, UNLESS CONDITIONS NECESSITATE THE USE OF PORTABLE SIGNS, OR AS APPROVED BY THE ENGINEER. CONCRETE PADS, CONCRETE OR ROCK BALLAST, OR OTHER SOLID MATERIALS SHALL NOT BE UTILIZED WITH PORTABLE SIGN SUPPORTS.
8. FLAGGERS SHALL USE REFLECTORIZED STOP-SLOW PADDLES. FLAGS MAY BE USED ONLY FOR EMERGENCY SITUATIONS.
9. MOST OF THE SIGNS SHOWN ARE ORIENTED TO THE RIGHT. HOWEVER, THIS DOES NOT PRECLUDE THE USE OF MIRROR IMAGES OF THESE SIGNS WHERE THE REVERSE ORIENTATION MIGHT BETTER CONVEY TO MOTORISTS THE PROPER DIRECTION OF MOVEMENT.
10. R55-1 SIGNS SHALL BE PLACED AT LEAST 1500' BUT NOT MORE THAN 1 MILE IN ADVANCE OF THE WORK ZONE. IF A SPEED LIMIT REDUCTION IS IN EFFECT, THE SIGN SHALL BE PLACED A MINIMUM OF 500' IN ADVANCE OF THE "REDUCED SPEED AHEAD" SIGN.

- NOTE: SUPPORTS FOR SIGNS, BARRICADES, AND VERTICAL PANELS THAT ARE DIFFERENT FROM THE REQUIREMENTS SHOWN IN NOTES 4 & 5, BUT MEET THE REQUIREMENTS OF MANUAL FOR ASSESSING SAFETY HARDWARE (MASH), WILL BE ACCEPTED. COMPLIANCE WITH THE REQUIREMENTS OF MANUAL FOR ASSESSING SAFETY HARDWARE (MASH) IS REQUIRED FOR ALL PROJECTS.

DATE	REVISION	FILMED
11-07-19	REVISED FOR MASH	
4-13-17	DELETED RSP-1 & ADDED W21-5a	
9-2-15	REVISED REDUCED SPEED LIMIT AHEAD SIGNS REVISED ROAD WORK NEXT XX MILES	
12-15-11	REVISED W24-1	
11-17-10	DELETED W8-9a & ADDED W8-9	
10-15-09	ADDED REFERENCE TO MASH & ADDED SIGN W24-1	
4-17-08	REVISED SIGN DESIGNATIONS	
11-18-04	REVISED NOTES	
10-9-03	REVISED NOTE 1	
11-16-01	REVISED NOTE 7	
9-28-00	REVISED NOTE	
11-18-98	ADDED NOTE	
6-26-97	REVISED NOTE 5	
4-03-97	REVISED NOTE 5	
10-18-96	ADDED CONTROLLED ACCESS HWY. SIGN & TO NOTE 7	
10-12-95	ADDED R55-1	
6-8-95	REVISED TO CORRECT SIGN ILLUSTRATIONS	6-8-95
2-2-95	REVISED PER PART VI, MUTCD SEPT. 3, 1993	
8-15-91	DRAWN AND PLACED IN USE	

ARKANSAS STATE HIGHWAY COMMISSION

STANDARD TRAFFIC CONTROLS FOR HIGHWAY CONSTRUCTION

STANDARD DRAWING TC-1

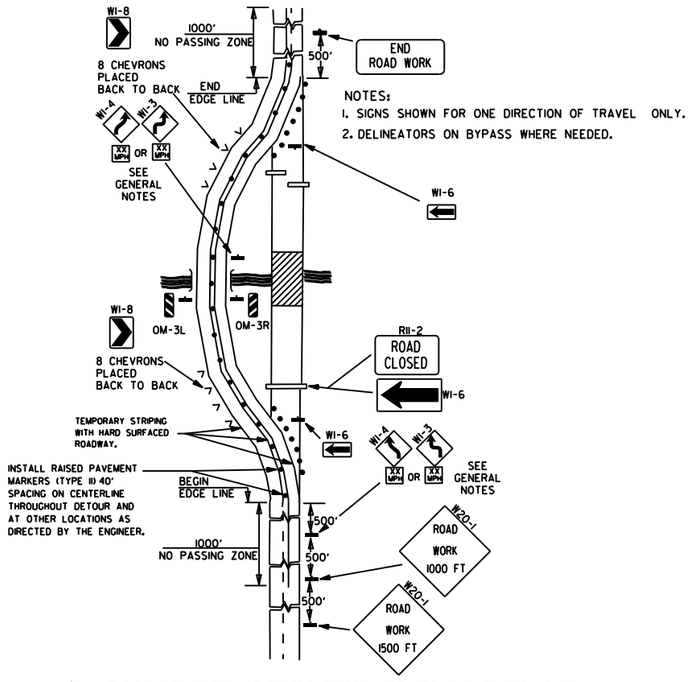

NOTES:
1. SIGNS SHOWN FOR ONE DIRECTION OF TRAVEL ONLY.
2. DELINEATORS ON BYPASS WHERE NEEDED.

(A) TYPICAL APPLICATION OF TRAFFIC CONTROL DEVICES ON A 2-LANE HIGHWAY WHERE THE ENTIRE ROADWAY IS CLOSED AND A BYPASS DETOUR IS PROVIDED.

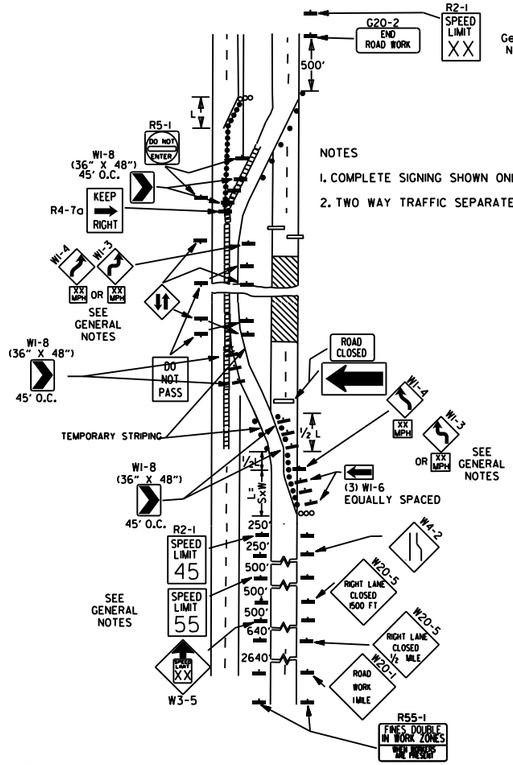

NOTES
1. COMPLETE SIGNING SHOWN ONLY IN CROSSOVER DIRECTION.
2. TWO WAY TRAFFIC SEPARATED WITH POSITIVE BARRIER.

(B) TYPICAL APPLICATION - 4-LANE DIVIDED ROADWAY WHERE ONE ROADWAY IS CLOSED.

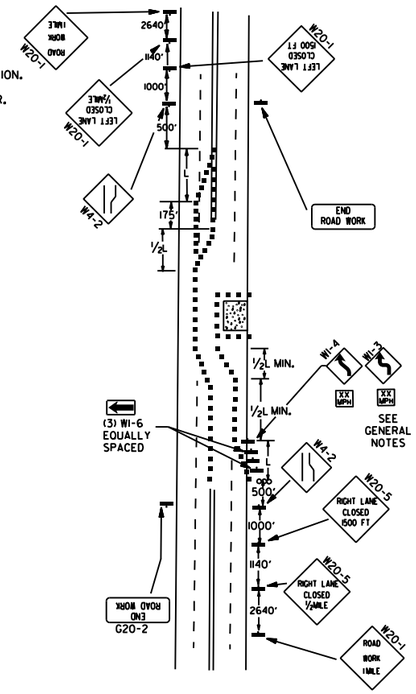

(C) TYPICAL APPLICATION - 4-LANE UNDIVIDED ROADWAY WHERE HALF OF THE ROADWAY IS CLOSED.

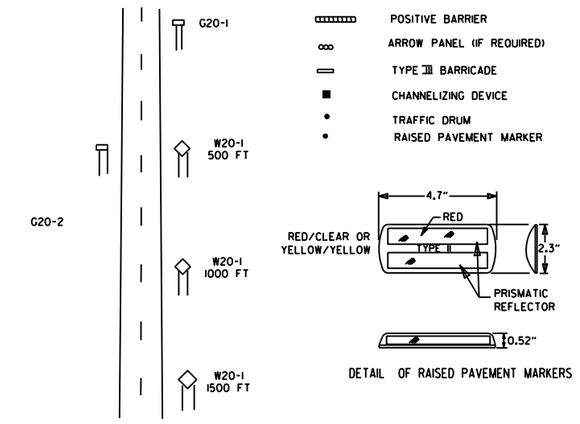

TYPICAL ADVANCE WARNING SIGN PLACEMENT

TAPER FORMULAE:

L=SXW FOR SPEEDS OF 45MPH OR MORE.

$L = \frac{WS^2}{60}$ FOR SPEEDS OF 40MPH OR LESS.

WHERE:

L= MINIMUM LENGTH OF TAPER.

S= NUMERICAL VALUE OF POSTED SPEED LIMIT PRIOR TO WORK OR 85TH PERCENTILE SPEED.

W= WIDTH OF OFFSET.

GENERAL NOTES:

1. THE MAINTENANCE DIVISION SHALL CONDUCT A BALL BANK STUDY TO DETERMINE THE ADVISORY SPEED LIMIT PRIOR TO OPENING TO TRAFFIC. THE ADVISORY SPEED WILL BE POSTED ON W1-3 OR W1-4 CURVE WARNING SIGNS. USE W1-4 WHEN SPEED IS GREATER THAN 30MPH AND W1-3 WHEN 30MPH OR LESS
2. WHEN THE EXISTING SPEED LIMIT IS 55MPH AND THE PLANS REQUIRE A SPEED LIMIT OF 45MPH, THE R2-1(55) SHALL BE OMITTED AND THE W3-5 SHALL BE INSTALLED AT THAT LOCATION. ADDITIONAL R2-145MPH SPEED LIMIT SIGNS SHALL BE INSTALLED AT A MAXIMUM OF 1MILE INTERVALS. AT THE END OF THE WORK AREA A R2-1(XX) SHALL BE INSTALLED TO MATCH ORIGINAL SPEED LIMIT.
3. WHEN THE EXISTING SPEED LIMIT IS 65MPH AND THE PLANS REQUIRE A SPEED LIMIT OF 55MPH, THE R2-1(45) SHALL BE OMITTED. ADDITIONAL R2-155MPH SPEED LIMIT SIGNS SHALL BE INSTALLED AT A MAXIMUM OF 1MILE INTERVALS. AT THE END OF THE WORK AREA A R2-1(XX) SHALL BE INSTALLED TO MATCH ORIGINAL SPEED LIMIT.
4. THE MAXIMUM SPACING BETWEEN CHANNELIZING DEVICES IN A TAPER SHOULD BE APPROXIMATELY EQUAL IN FEET TO THE SPEED LIMIT. BEYOND THE TAPER, MAXIMUM SPACING SHALL BE TWO TIMES THE SPEED LIMIT, OR AS DIRECTED BY THE ENGINEER.
5. WARNING LIGHTS AND/OR FLAGS MAY BE MOUNTED TO SIGNS OR CHANNELIZING DEVICES AT NIGHT AS NEEDED.
6. PAVEMENT MARKINGS NO LONGER APPLICABLE WHICH MIGHT CREATE CONFUSION IN THE MINDS OF VEHICLE OPERATORS SHALL BE REMOVED OR OBLITERATED AS SOON AS PRACTICABLE.
7. TRAILER MOUNTED DEVICES SUCH AS ARROW PANELS AND PORTABLE CHANGEABLE MESSAGE SIGNS SHALL BE DELINEATED BY AFFIXING CONSPICUITY MATERIAL IN A CONTINUOUS LINE ON THE FACE OF THE TRAILER. WHEN PLACED ON OR ADJACENT TO THE SHOULDER AND NOT BEHIND A POSITIVE BARRIER, THESE DEVICES SHALL BE DELINEATED BY PLACING FIVE (5) TRAFFIC DRUMS, EQUALLY SPACED ALONG THE TRAFFIC SIDE OF THE DEVICE.
8. DIMENSIONS SHOWN FOR RAISED PAVEMENT MARKERS ARE TYPICAL. THE CONTRACTOR MAY SUBSTITUTE SIMILAR MARKERS WITH THE APPROVAL OF THE ENGINEER. REQUESTING APPROVAL FOR SIMILAR MARKERS MAY BE MADE BY REFERRING TO THE ARDOT QUALIFIED PRODUCTS LIST.
9. ALL TRAILER MOUNTED DEVICES SUCH AS ARROW PANELS AND PORTABLE CHANGEABLE MESSAGE SIGNS SHALL MEET THE REQUIREMENTS OF THE MANUAL FOR ASSESSING SAFETY HARDWARE (MASH).

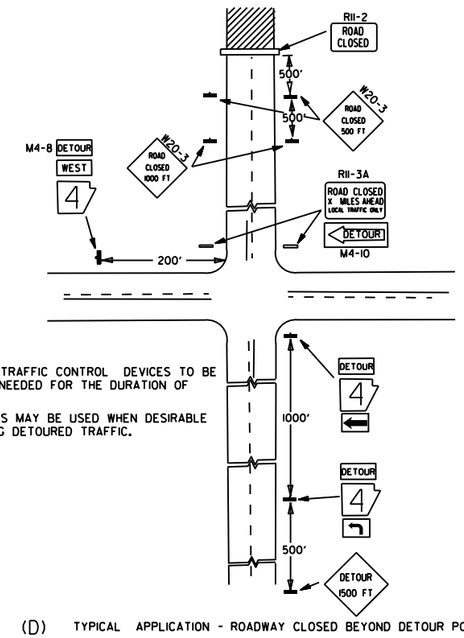

NOTES:
1. REGULATORY TRAFFIC CONTROL DEVICES TO BE MODIFIED AS NEEDED FOR THE DURATION OF THE DETOUR.
2. STREET NAMES MAY BE USED WHEN DESIRABLE FOR DIRECTING DETOURED TRAFFIC.

(D) TYPICAL APPLICATION - ROADWAY CLOSED BEYOND DETOUR POINT.

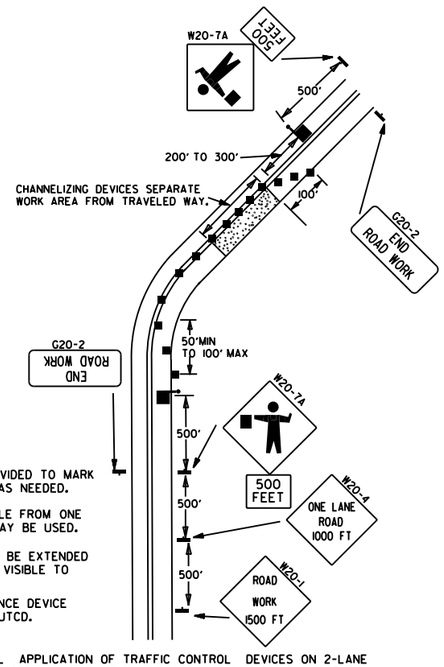

NOTES:
1. FLOOD LIGHTS SHOULD BE PROVIDED TO MARK FLAGGER STATIONS AT NIGHT AS NEEDED.
2. IF ENTIRE WORK AREA IS VISIBLE FROM ONE STATION, A SINGLE FLAGGER MAY BE USED.
3. CHANNELIZING DEVICES ARE TO BE EXTENDED TO A POINT WHERE THEY ARE VISIBLE TO APPROACHING TRAFFIC.
4. AUTOMATED FLAGGER ASSISTANCE DEVICE (AFAD) OPTIONAL. REFER TO MUTCD.

(E) TYPICAL APPLICATION OF TRAFFIC CONTROL DEVICES ON 2-LANE HIGHWAY WHERE ONE LANE IS CLOSED AND FLAGGING IS PROVIDED.

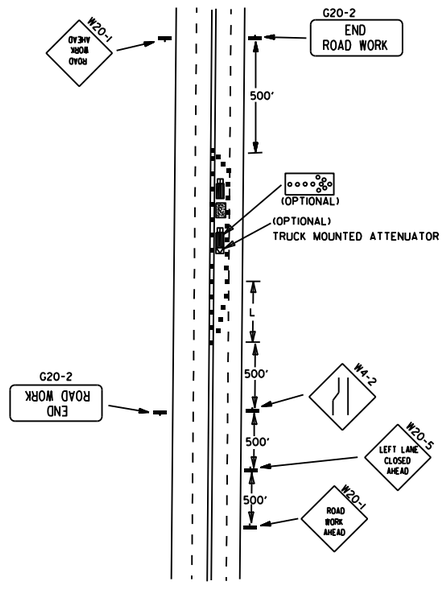

(F) TYPICAL APPLICATION - 4-LANE UNDIVIDED ROADWAY WITH INSIDE LANE CLOSED.

11-07-19	REVISED NOTE 1, ADDED NOTE 9	
9-2-15	REVISED NOTE 2, ADDED NOTE 8, REVISED DRAWING (A) & REPLACED R2-5A WITH W3-5	
9-12-13	REVISED DETAIL OF RAISED PAVEMENT MARKERS	
3-11-10	ADDED (AFAD)	
11-20-08	REVISED SIGN DESIGNATIONS	
11-18-04	ADDED GENERAL NOTE	
10-18-96	ADDED R55-1	
4-26-96	CORRECTED (a) BEHIND G20-2	
6-8-95	CORRECTED SIGN IDENT. ON W1-4A	6-8-95
2-2-95	REVISED PER PART VI, MUTCD, SEPT. 3, 1993	
8-15-91	DRAWN AND PLACED IN USE	
DATE	REVISION	FILMED

ARKANSAS STATE HIGHWAY COMMISSION

STANDARD TRAFFIC CONTROLS FOR HIGHWAY CONSTRUCTION

STANDARD DRAWING TC-2

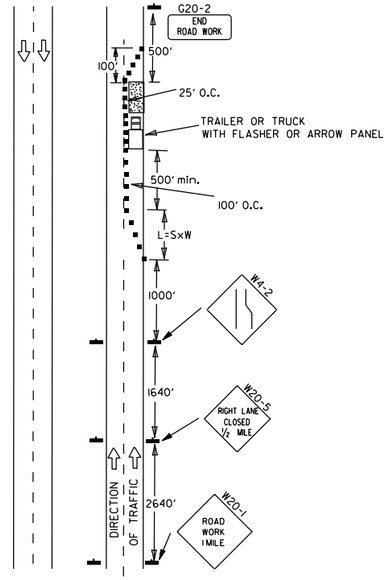

(A) TYPICAL APPLICATION - DAYTIME MAINTENANCE OPERATIONS OF SHORT DURATION ON A 4-LANE DIVIDED ROADWAY WHERE HALF OF THE ROADWAY IS CLOSED.

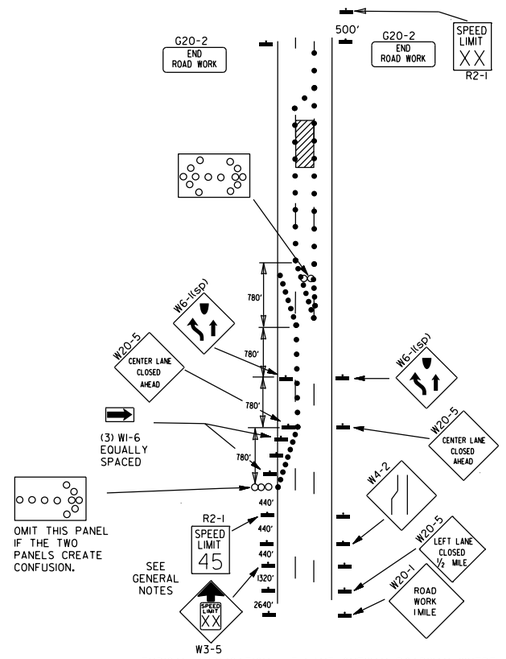

(B) TYPICAL APPLICATION - 3-LANE ONEWAY ROADWAY WHERE CENTER LANE IS CLOSED.

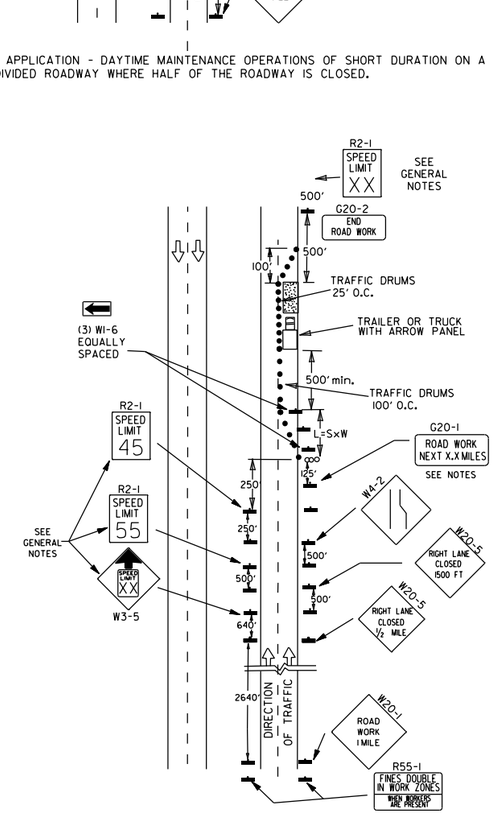

(C) TYPICAL APPLICATION - CONSTRUCTION OPERATIONS OF INTERMEDIATE TO LONG TERM DURATION ON A 4-LANE DIVIDED ROADWAY WHERE HALF OF THE ROADWAY IS CLOSED.

KEY:

ooo ARROW PANEL (IF REQUIRED)

■ CHANNELIZING DEVICE

● TRAFFIC DRUM

GENERAL NOTES:

1. A SPEED LIMIT REDUCTION MAY BE IMPLEMENTED ONLY WHEN DESIGNATED IN THE PLAN OR WHEN RECOMMENDED BY THE ROADWAY DESIGN DIVISION.
2. WHEN THE EXISTING SPEED LIMIT IS 55MPH AND THE PLANS REQUIRE A SPEED LIMIT OF 45MPH, THE R2-1(55) SHALL BE OMITTED AND THE W3-5 SHALL BE INSTALLED AT THAT LOCATION. ADDITIONAL R2-145MPH SPEED LIMIT SIGNS SHALL BE INSTALLED AT A MAXIMUM OF 1MILE INTERVALS. AT THE END OF THE WORK AREA A R2-1(XX) SHALL BE INSTALLED TO MATCH ORIGINAL SPEED LIMIT.
3. WHEN THE EXISTING SPEED LIMIT IS 65MPH AND THE PLANS REQUIRE A SPEED LIMIT OF 55MPH, THE R2-1(45) SHALL BE OMITTED. ADDITIONAL R2-155MPH SPEED LIMIT SIGNS SHALL BE INSTALLED AT A MAXIMUM OF 1MILE INTERVALS. AT THE END OF THE WORK AREA A R2-1(XX) SHALL BE INSTALLED TO MATCH ORIGINAL SPEED LIMIT.
4. THE MAXIMUM SPACING BETWEEN CHANNELIZING DEVICES IN A TAPER SHOULD BE APPROXIMATELY EQUAL IN FEET TO THE SPEED LIMIT. BEYOND THE TAPER, MAXIMUM SPACING SHALL BE TWO TIMES THE SPEED LIMIT OR AS DIRECTED BY THE ENGINEER.
5. WARNING LIGHTS AND/OR FLAGS MAY BE MOUNTED TO SIGNS OR CHANNELIZING DEVICES AT NIGHT AS NEEDED.
6. PAVEMENT MARKINGS NO LONGER APPLICABLE WHICH MIGHT CREATE CONFUSION IN THE MINDS OF VEHICLE OPERATORS SHALL BE REMOVED OR OBLITERATED AS SOON AS PRACTICABLE.
7. THE G20-1 SIGN WILL BE REQUIRED ON JOBS OF OVER TWO MILES IN LENGTH. WHEN THE LANE CLOSURE IS NOT AT THE BEGINNING OF THE PROJECT, THE G20-1 SIGN SHALL BE ERECTED 125' IN ADVANCE OF THE JOB LIMIT. ADDITIONAL W20-1 (1 MILE) SIGNS ARE NOT REQUIRED IN ADVANCE OF LANE CLOSURES THAT BEGIN INSIDE THE PROJECT LIMITS.
8. FLAGGERS SHALL USE STOP/SLOW PADDLES FOR CONTROLLING TRAFFIC THROUGH WORK ZONES. FLAGS MAY BE USED ONLY FOR EMERGENCY SITUATIONS.
9. ALL PLASTIC DRUMS AND CONES SHALL MEET THE REQUIREMENTS OF MANUAL FOR ASSESSING SAFETY HARDWARE (MASH).
10. TRAILER MOUNTED DEVICES SUCH AS ARROW PANELS AND PORTABLE CHANGEABLE MESSAGE SIGNS SHALL BE DELINEATED BY AFFIXING CONSPICUITY MATERIAL IN A CONTINUOUS LINE ON THE FACE OF THE TRAILER. WHEN PLACED ON OR ADJACENT TO THE SHOULDER AND NOT BEHIND A POSITIVE BARRIER, THESE DEVICES SHALL BE DELINEATED BY PLACING FIVE (5) TRAFFIC DRUMS, EQUALLY SPACED ALONG THE TRAFFIC SIDE OF THE DEVICE.
11. ALL TRAILER MOUNTED DEVICES SUCH AS ARROW PANELS AND PORTABLE CHANGEABLE MESSAGE SIGNS SHALL MEET THE REQUIREMENTS OF THE MANUAL FOR ASSESSING SAFETY HARDWARE (MASH).

CHANNELIZING DEVICES

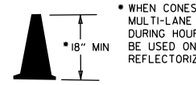

* WHEN CONES ARE USED ON FREEWAYS AND MULTI-LANE HIGHWAYS, THEY SHALL BE 28" MIN. DURING HOURS OF DARKNESS, 28" CONES SHALL BE USED ON ALL ROADWAYS, AND SHALL BE REFLECTORIZED IN ACCORDANCE WITH THE M.U.T.C.D.

CONES

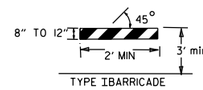

PLASTIC DRUM

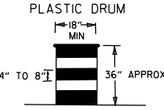

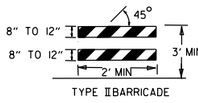

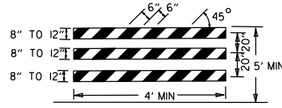

TYPE III BARRICADE

NOTE:
FOR ALL ROAD CLOSURES, THE TYPE III BARRICADES SHALL BE OF SUFFICIENT LENGTH TO EXTEND ACROSS ENTIRE ROADWAY.

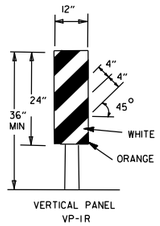

VERTICAL PANEL PLACEMENT

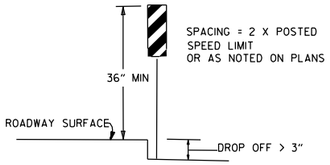

FLAG

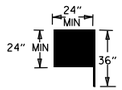

FLAG SHALL BE OF GOOD GRADE RED MATERIAL

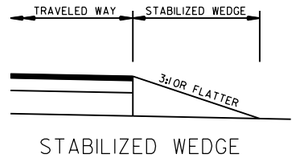

STABILIZED WEDGE

NOTE:
MATERIALS FOR THE STABILIZED WEDGE SHALL MEET THE REQUIREMENTS PROVIDED IN SECTION 603.02 OF THE STANDARD SPECIFICATIONS.

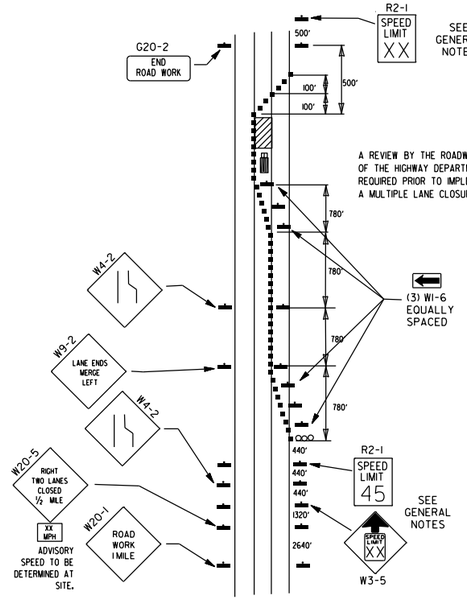

(D) TYPICAL APPLICATION - CLOSING MULTIPLE LANES OF A MULTILANE HIGHWAY.

TRAFFIC CONTROL DEVICES

NON-INTERSTATE

VERTICAL DIFFERENTIAL	LOCATION	TRAFFIC CONTROL ≤ 45 MPH	TRAFFIC CONTROL > 45 MPH
≤ 2"	CENTERLINE	W8-11 AND LANE STRIPING	W8-11 AND LANE STRIPING
> 2"	CENTERLINE	STANDARD LANE CLOSURE	STANDARD LANE CLOSURE
≤ 3"	EDGE OF TRAVELED LANE OR EDGE OF SHOULDER	W8-9, EDGE LINE STRIPING, AND VERTICAL PANELS	W8-9, EDGE LINE STRIPING, AND VERTICAL PANELS
> 3" ≤ 6"	EDGE OF TRAVELED LANE OR EDGE OF SHOULDER	W8-17, EDGE LINE STRIPING, AND VERTICAL PANELS	W8-17, EDGE LINE STRIPING, AND VERTICAL PANELS
> 6" ≤ 18"	EDGE OF TRAVELED LANE OR EDGE OF SHOULDER	W8-17, EDGE LINE STRIPING, AND TRAFFIC DRUMS(1)	W8-17, EDGE LINE STRIPING, AND TRAFFIC DRUMS(2)
> 18" ≤ 24"	EDGE OF TRAVELED LANE OR EDGE OF SHOULDER	W8-17, EDGE LINE STRIPING, AND TRAFFIC DRUMS(1)	A STABILIZED WEDGE, W8-17, EDGE LINE STRIPING AND TRAFFIC DRUMS(3)
> 24"	EDGE OF TRAVELED LANE OR EDGE OF SHOULDER	PRECAST CONCRETE BARRIER(4) & EDGE LINES	PRECAST CONCRETE BARRIER(4) & EDGE LINES

INTERSTATE

VERTICAL DIFFERENTIAL	LOCATION	TRAFFIC CONTROL
≤ 2"	CENTERLINE	W8-11 AND LANE STRIPING
≤ 2"	EDGE OF TRAVELED LANE OR EDGE OF SHOULDER	W8-9, EDGE LINE STRIPING, AND TRAFFIC DRUMS(2)
> 2" ≤ 6"	EDGE OF TRAVELED LANE OR EDGE OF SHOULDER	W8-17, EDGE LINE STRIPING, AND TRAFFIC DRUMS(2)
> 6"	EDGE OF TRAVELED LANE OR EDGE OF SHOULDER	PRECAST CONCRETE BARRIER & EDGE LINES

INTERSTATE AND NON-INTERSTATE

FORESLOPE	HEIGHT	TRAFFIC CONTROL
1:1	> 2 FT	PRECAST CONCRETE BARRIER
2:1	≤ 5 FT	TRAFFIC DRUMS
2:1	> 5 FT	PRECAST CONCRETE BARRIER
Flatter than 2:1	N/A	TRAFFIC DRUMS

GENERAL NOTES:

1. WHEN THE SHOULDER AREA IS USED AS PART OF THE TRAVELED LANE AND THERE IS INSUFFICIENT WIDTH TO PLACE TRAFFIC DRUMS ON THE REMAINING SHOULDER WIDTH, THEN VERTICAL PANELS SHALL BE USED.
2. WHEN THERE IS INSUFFICIENT WIDTH TO PLACE TRAFFIC DRUMS ON THE REMAINING SHOULDER WIDTH, A STABILIZED WEDGE SHALL BE USED.
3. PRECAST CONCRETE BARRIER WALL CAN BE USED IN LIEU OF A STABILIZED WEDGE, W8-17 SIGN, EDGE LINE STRIPING, AND TRAFFIC DRUMS, IF AND WHERE DIRECTED BY THE ENGINEER.
4. A STABILIZED WEDGE, W8-17 SIGN, EDGE LINE STRIPING, AND TRAFFIC DRUMS CAN BE USED IN LIEU OF PRECAST CONCRETE BARRIER WALL, IF AND WHERE DIRECTED BY THE ENGINEER.
5. W21-5, W21-5a, AND/OR W21-5b SIGNS SHALL BE USED WHERE THE ROADWAY IS UNOBSTRUCTED IF AND WHERE DIRECTED BY THE ENGINEER.

STOP SLOW PADDLE

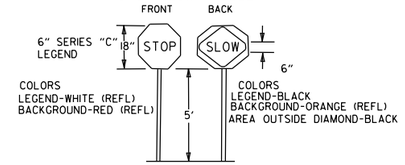

DETAIL OF SPLICES

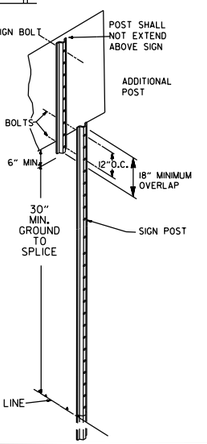

NOTES: USE SPLICES ONLY WHEN NECESSARY FOR INSTALLATION. TYPICAL INSTALLATION SHOULD HAVE NO SPLICES (SEE STD. DRAWING NO. SHS-21)

NORMAL INSTALLATIONS WILL REQUIRE 1/4" DIA. BOLTS TO MOUNT SIGNS TO POST AND 5/16" DIA. BOLTS TO ASSEMBLE THE VARIOUS POST SUPPORTS. EACH OF THESE BOLTS SHALL BE CARRIAGE BOLTS.

SIGN POSTS SHALL BE PAINTED GREEN; SIGNS SHALL NOT BE PAINTED, AND ALL SIGN POSTS SHALL BE PLUMB.

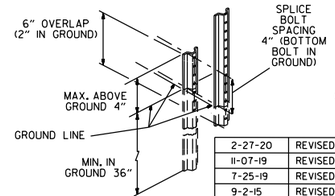

DATE	REVISION	FILMED
2-27-20	REVISED TRAFFIC CONTROL DEVICES DETAILS	
11-07-19	REVISED NOTE 9, ADDED NOTE 11	
7-25-19	REVISED TRAFFIC CONTROL DEVICES DETAILS	
9-2-15	REVISED NOTE 2 & REPLACED R2-5A WITH W3-5	
10-15-09	ADDED REFERENCE TO MASH	
11-20-08	REVISED SIGN DESIGNATIONS	
11-18-04	ADDED NOTE	
10-1-98	ADDED NOTE	
4-03-97	ADDED (SP) TO W6-1& REVISED TRAFFIC CONTROL DEVICES NOTE	
10-18-96	ADDED R55-1	
10-12-95	MOVED UPPER SPLICE	
6-8-95	REVISED SPLICE DETAIL, TEXT	6-8-95
2-2-95	REVISED PER PART VI, MUTCD, SEPT. 3, 1993	
8-15-91	DRAWN AND PLACED IN USE	

ARKANSAS STATE HIGHWAY COMMISSION

STANDARD TRAFFIC CONTROLS FOR HIGHWAY CONSTRUCTION

STANDARD DRAWING TC-3

REINFORCING BAR TABLE PER BARRIER UNIT

MARK	LOCATION	BAR SIZE	(NO. BARS)	SKETCH
H-1	HORIZONTAL IN BARRIER TIED INSIDE V-1 BARS	#5	(6)	19'-3"
H-2	CENTERED ABOVE DRAIN SLOTS LONG. & TRANSVERSELY	#5	(6)	6'-6"
H-3	TIED ABOVE H-1 BARS TO SUPPORT H-2, TIED TO V-1	#4	(2)	1'-6"
S-1	OVER LIFT HOLES	#4	(2)	2'-5", LIFTING HOLE, 90°, 3 3/8" R
S-2	HORIZ. AROUND SLOTS BETWEEN V-1'S @ DRAIN SLOTS	#4	(2)	1 1/2" R, SLOTS, 7", 1'-6", 1" MIN. CLEAR TO BAR; 5'-1" BAR W/(4) 1 1/2" R BENDS & MIN. 1'-0" OVERLAP
V-1	VERTICAL IN BARRIER(3) EACH END & (2) AT EACH DRAIN SLOTS	#5	(16)	TOTAL LENGTH 4'-9"; 2 3/16" R; 12°; 1 1/2"; 9"; 2'-1 3/8"; 4 3/8"

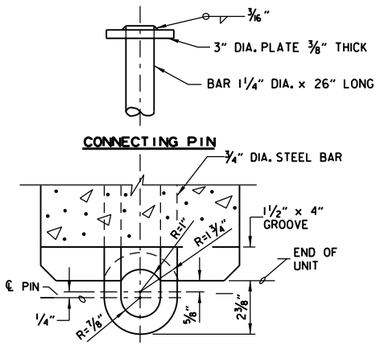

SECTION E-E

CONNECTION DETAILS

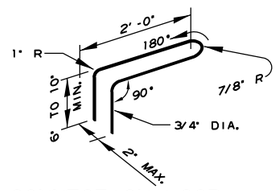

CONNECTION LOOP

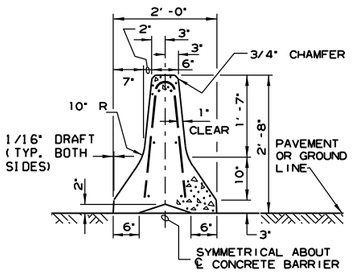

SECTION A-A

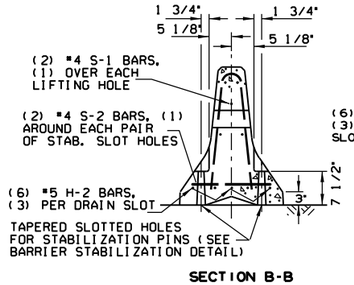

SECTION B-B

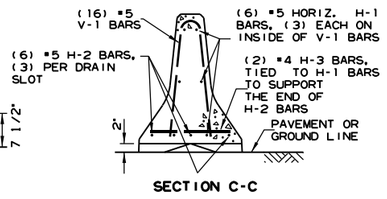

SECTION C-C

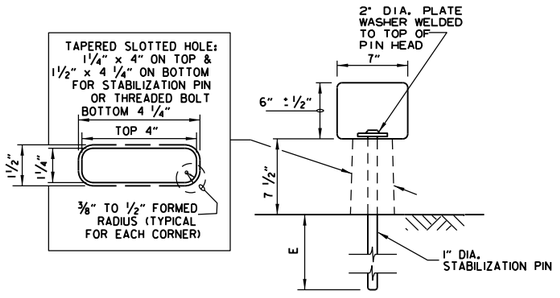

BARRIER STABILIZATION DETAIL

ROADWAY SECTION

(E) 4" - CONCRETE PAVEMENT
8" - ASPHALT PAVEMENT
12" - SHOULDER AREAS

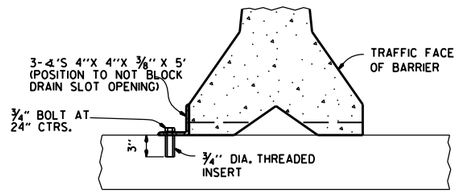

NOTE: " THREADED INSERTS SHALL BE CAST IN PLACE FOR ALL NEW BRIDGE DECKS AND DRILLED AND GROUTED FOR EXISTING BRIDGE DECKS. INSERTS SHALL HAVE A MINIMUM ULTIMATE LOAD CAPACITY OF 8000 LBS. IN TENSION. AFTER REMOVAL OF BARRIER, BOLTS, AND ANGLES, THE INSERTS SHALL BE FILLED WITH APPROVED NON-SHRINK EPOXY.

BARRIER STABILIZATION DETAIL

BRIDGE DECKS

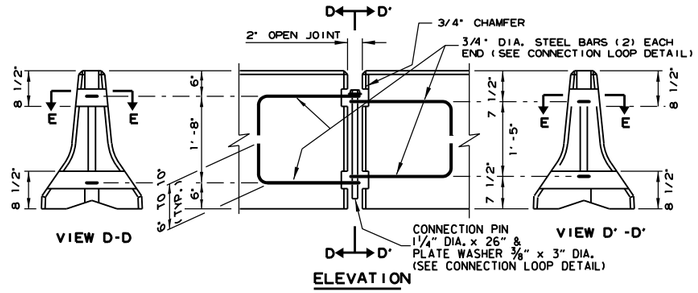

ELEVATION

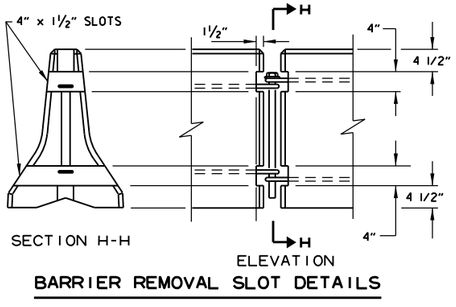

BARRIER REMOVAL SLOT DETAILS

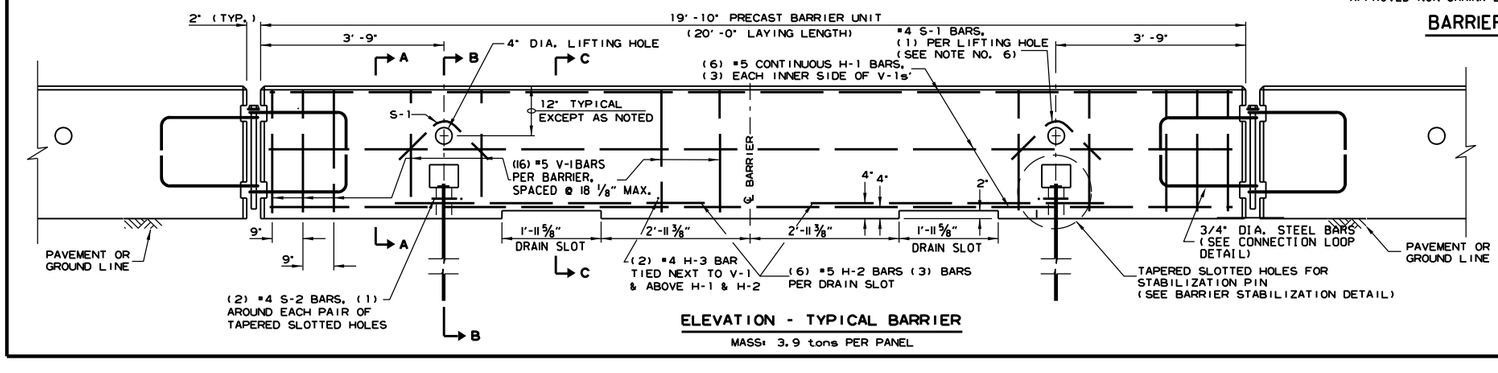

ELEVATION - TYPICAL BARRIER

MASS: 3.9 tons PER PANEL

GENERAL NOTES

(1) THE CONTRACTOR SHALL FURNISH THE PRECAST CONCRETE BARRIER UNITS AND SHALL BE RESPONSIBLE FOR THE MANUFACTURE, SHIPMENT, STORAGE, PLACEMENT AND REMOVAL. AT THE COMPLETION OF THE PROJECT, THE PRECAST UNITS WILL REMAIN THE PROPERTY OF THE CONTRACTOR.

(2) MATERIALS SHALL MEET THE FOLLOWING MINIMUM REQUIREMENTS:
CONCRETE: 2500 PSI COMPRESSIVE STRENGTH AT 28 DAYS.
REINFORCING STEEL: AASHTO M 31 OR M 53, GRADE 60
STRUCTURAL STEEL: AASHTO-M270 GRADE 36 SHALL BE USED FOR THE CONNECTION PIN, CONNECTION LOOPS, AND STABILIZATION PINS. A ONE PIECE PIN WITH A 3" ROUNDED TOP MAY BE USED IN PLACE OF THE DETAILED CONNECTION PIN.
DELINEATORS: DELINEATORS SHALL BE MOUNTED AT 10' SPACING ON TOP OF PRECAST BARRIER.

IN APPLICATIONS WHERE BARRIER WALL IS WITHIN 6 FEET OF A TRAFFIC LANE, ADDITIONAL DELINEATORS SHALL BE PLACED ON THE BARRIER AT 10' SPACING APPROXIMATELY ONE (1) FOOT FROM THE TOP OF THE BARRIER. DELINEATORS SHALL BE ON THE ARDOT QUALIFIED PRODUCTS LIST FOR CONSTRUCTION CONCRETE BARRIER MARKERS.
DELINEATOR COLOR SHALL BE IN ACCORDANCE WITH THE MANUAL ON UNIFORM TRAFFIC CONTROL DEVICES.
PAYMENT FOR DELINEATORS SHALL BE CONSIDERED INCLUDED IN THE PRICE BID PER LIN. FT. FOR "FURNISHING AND INSTALLING PRECAST CONCRETE BARRIER". THE CONTRACTOR SHALL CERTIFY TO THE ENGINEER THAT THE MATERIAL AND THE DESIGN USED IN THE PRECAST BARRIER UNITS MEETS THE REQUIREMENTS AS SHOWN ON THIS STANDARD DRAWING.

(3) OTHER PRECAST CONCRETE BARRIERS THAT HAVE BEEN CRASH TESTED AND APPROVED BY THE FEDERAL HIGHWAY ADMINISTRATION TO MEET THE REQUIREMENTS OF MANUAL FOR ASSESSING SAFETY HARDWARE (MASH) WILL BE ACCEPTED IN LIEU OF THE BARRIER SHOWN. DRAIN SLOTS SHALL BE PROVIDED AS NEEDED OR AS DIRECTED BY THE ENGINEER. THE CONTRACTOR SHALL FURNISH A CERTIFICATION OF MANUAL FOR ASSESSING SAFETY HARDWARE (MASH) COMPLIANCE FOR ANY OTHER TYPES OF PRECAST BARRIER TO BE USED. THE CERTIFICATION SHALL STATE THAT THE PRECAST CONCRETE BARRIER MEETS THE REQUIREMENTS OF MANUAL FOR ASSESSING SAFETY HARDWARE (MASH). MIXING OF SHAPES WILL NOT BE ALLOWED IN A CONTINUOUS LINE OF UNITS.

(4) DOWEL HOLES IN PAVEMENT OR BRIDGE SLABS THAT ARE TO REMAIN IN PLACE SHALL BE FILLED. HOLES IN CONCRETE PAVEMENT AND BRIDGE SLABS SHALL BE FILLED WITH AN APPROVED NON-SHRINK EPOXY GROUT. HOLES IN ASPHALT PAVEMENT SHALL BE FILLED WITH AN APPROVED ASPHALT JOINT FILLER. PAYMENT FOR DRILLING AND FILLING HOLES TO BE INCLUDED IN THE PRICE FOR VARIOUS BARRIER ITEMS.

(5) ATTACH UNITS TO ROADWAY SURFACE WITH STABILIZATION PINS AND TO DECK SLABS USING BOLTS WHEN REQUIRED.

(6) A 4" WHITE PVC SLEEVE MAY BE USED TO FORM THE LIFTING HOLE AND IF USED THE SLEEVE IS TO BE LEFT IN PLACE.

DATE	REVISION	FILMED
11-07-19	REVISED NOTE 3	
2-27-14	REVISED BARRIER STABILIZATION DETAIL	
10-15-09	ADDED REFERENCE TO WASH	
8-5-09	REV. NOTE 3 CONCERNING DRAIN SLOTS	
11-29-07	REVISED NOTE 3	
5-25-06	DELETED GENERAL NOTE 7	
11-18-04	REVISED BARRIER STABILIZATION DETAIL BRIDGE DECKS	
4-10-03	REVISED GENERAL NOTE 2	
8-22-02	ISSUED NEW DRAWING	

ARKANSAS STATE HIGHWAY COMMISSION

STANDARD TRAFFIC CONTROLS FOR HIGHWAY CONSTRUCTION - TEMPORARY PRECAST BARRIER

STANDARD DRAWING TC-4

Ⓐ 4 feet or greater preferred. If less than 4 feet, Precast Units shall be connected to slab (SEE BARRIER STABILIZATION DETAIL-BRIDGE DECKS STD. DRWG. TC-4)

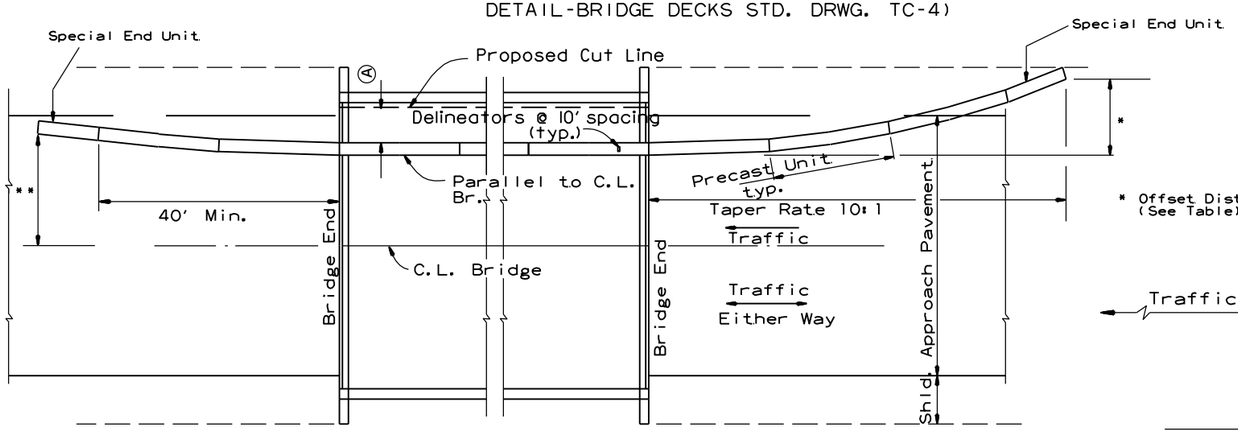

* Offset Distance (See Table)

BARRIER PLACEMENT ALONG BRIDGE WITH OFFSET

No Scale

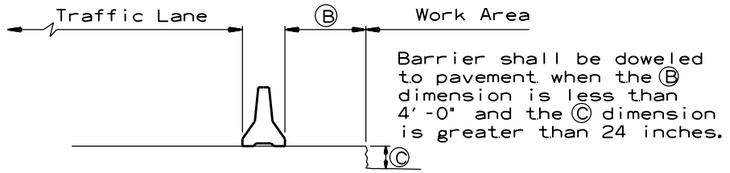

Barrier shall be doweled to pavement when the Ⓑ dimension is less than 4'-0" and the Ⓒ dimension is greater than 24 inches.

SECTION J-J

No Scale

** Offset Distance for Two Way Traffic Only

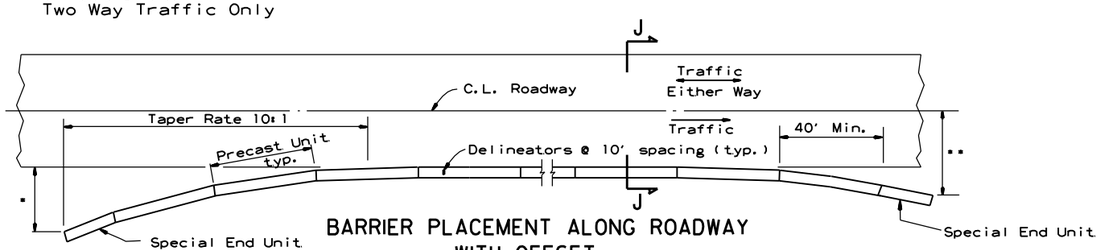

BARRIER PLACEMENT ALONG ROADWAY WITH OFFSET

No Scale

* Offset Distance (See Table)

** Offset Distance For Two Way Traffic Only

Offset Distance Table

Speed (MPH)	Offset Distance (FT.)
≤ 45	12
> 45	18

If offset distance is not attainable, then see "Barrier Placement With Attenuator" Detail shown below.

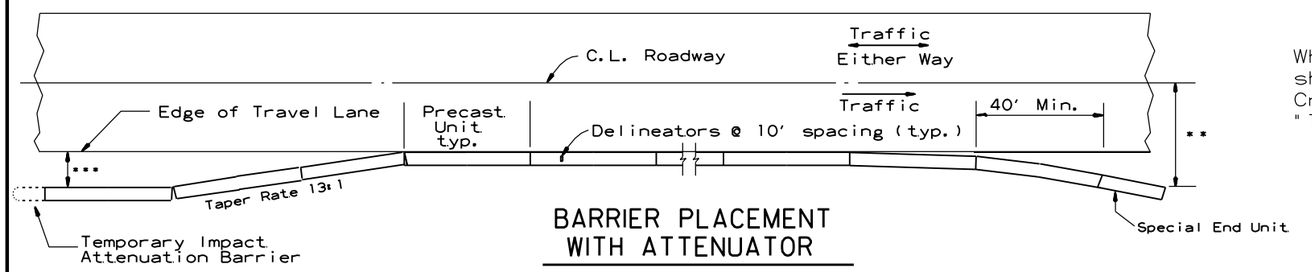

BARRIER PLACEMENT WITH ATTENUATOR

No Scale

** Offset Distance For Two Way Traffic Only

*** Min. 3'-0" From Edge of Travel Lane to Nearest Edge of Attenuator

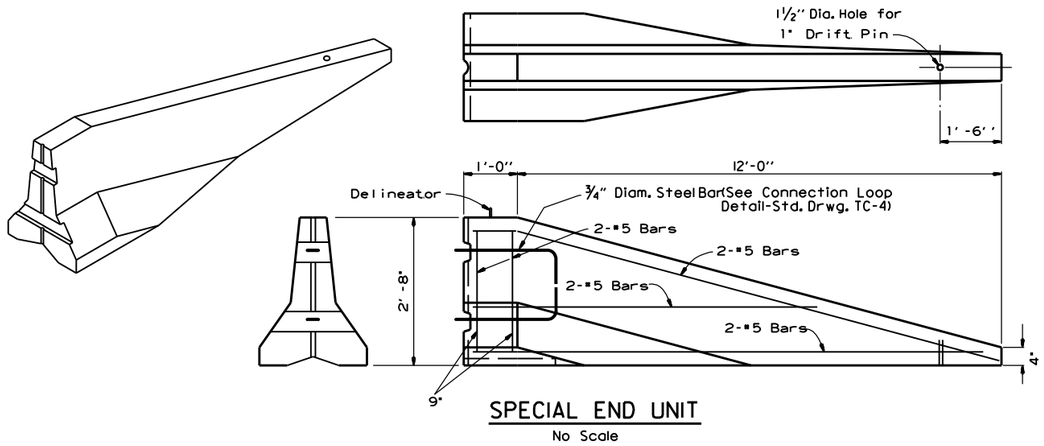

SPECIAL END UNIT

No Scale

General Notes

When shown on the Plans, the ends of the Temporary Precast Concrete Barrier shall be protected with a Manual For Assessing Safety Hardware (MASH) approved Crash Cushion. Payment for Crash Cushions shall be made under the item of "Temporary Impact Attenuation Barrier."

DATE	REVISION	FILMED
11-07-19	REVISED NOTE	
10-15-09	ADDED REFERENCE TO MASH	
5-25-06	REVISED BARRIER PLACEMENT	
8-22-02	ISSUED NEW DRAWING	

ARKANSAS STATE HIGHWAY COMMISSION

STANDARD TRAFFIC CONTROLS FOR HIGHWAY CONSTRUCTION - TEMPORARY PRECAST BARRIER

STANDARD DRAWING TC-5

GENERAL NOTES

INSTALL A MINIMUM OF 2 UPSLOPE STAKES AND 4 DOWNSLOPE STAKES AT AN ANGLE TO WEDGE WATTLE TO BOTTOM OF DITCH.

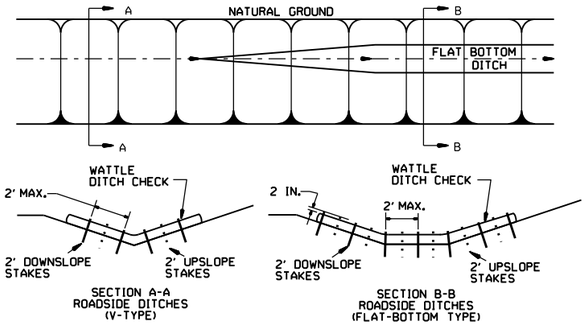

WATTLE DITCH CHECK (E-1)

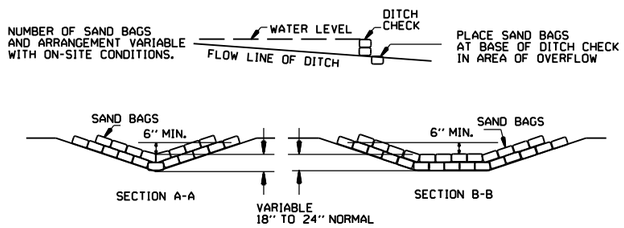

SAND BAG DITCH CHECK (E-5)

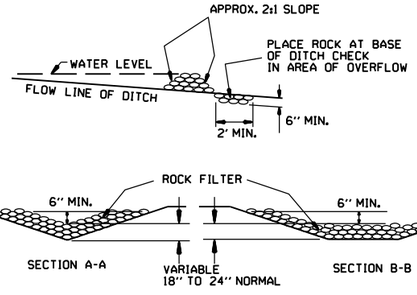

ROCK DITCH CHECK (E-6)

GENERAL NOTES

GEOTEXTILE FABRIC (TYPE 4) IN ACCORDANCE WITH SECTION 625

GEOTEXTILE FABRIC SHALL BE SPLICED TOGETHER WITH A SEWN SEAM ONLY AT A SUPPORT POST OR TWO SECTIONS OF FENCE MAY BE OVERLAPPED INSTEAD. PAYMENT OF ADDITIONAL MATERIAL FOR OVERLAP WILL NOT BE MADE.

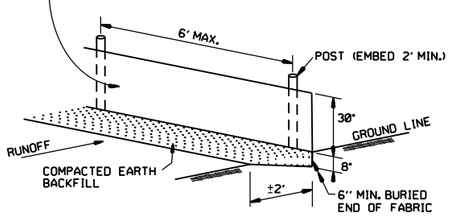

SILT FENCE (E-11)

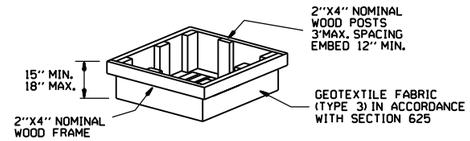

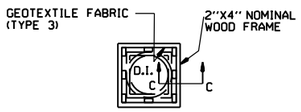

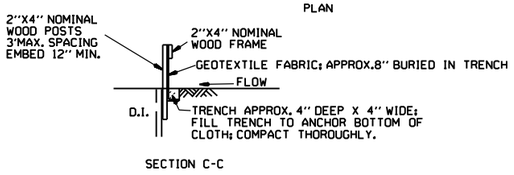

DROP INLET SILT FENCE (E-7)

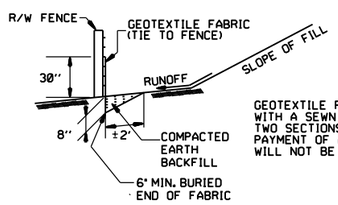

GENERAL NOTES

GEOTEXTILE FABRIC SHALL BE SPLICED TOGETHER WITH A SEWN SEAM ONLY AT A SUPPORT POST, OR TWO SECTIONS OF FENCE MAY BE OVERLAPPED INSTEAD. PAYMENT OF ADDITIONAL MATERIAL FOR OVERLAP WILL NOT BE MADE.

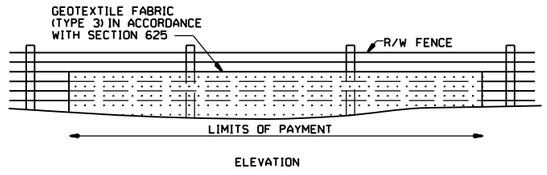

SILT FENCE ON R/W FENCE (E-4)

GENERAL NOTES

1. STRAW BALES SHALL BE INSTALLED SO THAT THE BINDINGS ARE ORIENTED AROUND THE SIDES RATHER THAN ALONG THE TOPS AND BOTTOMS OF THE BALES. THE BALES SHALL BE A MINIMUM OF 30 INCHES IN LENGTH.

2. NO GAPS SHALL BE LEFT BETWEEN BALES.

3. BALED STRAW FILTER BARRIERS COMPLETED AND ACCEPTED WILL BE MEASURED BY THE BALE IN PLACE AS AUTHORIZED BY THE ENGINEER AND WILL BE PAID FOR AT THE CONTRACT UNIT PRICE BID PER BALE FOR BALED STRAW DITCH CHECKS.

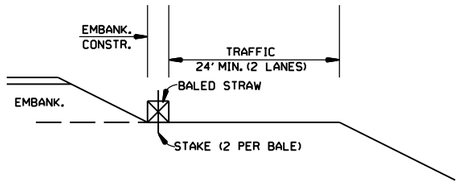

BALED STRAW FILTER BARRIER (E-2)

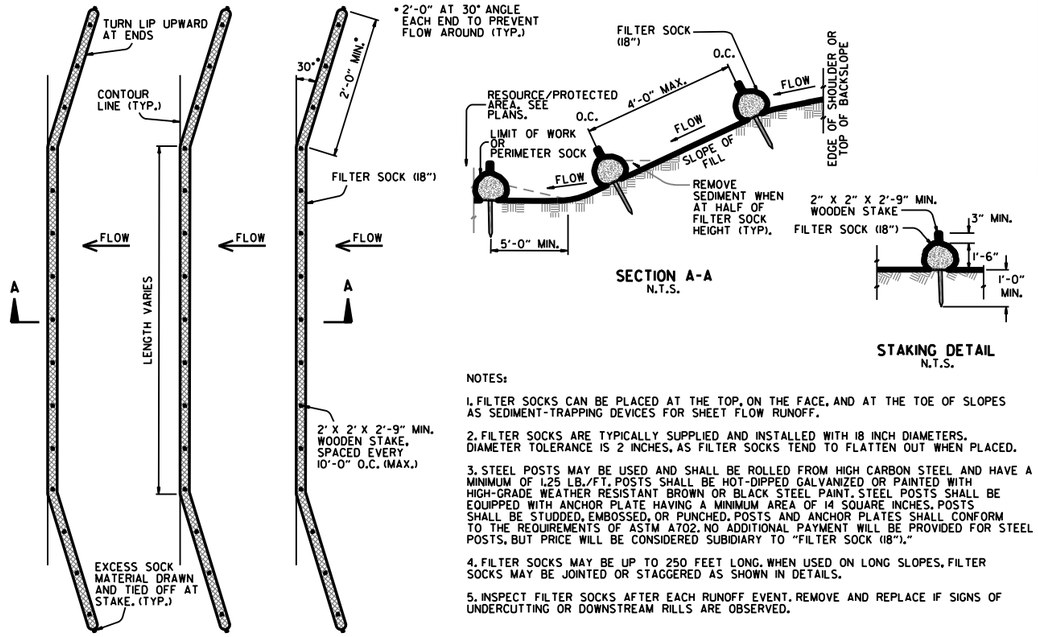

NOTES:

1. FILTER SOCKS CAN BE PLACED AT THE TOP, ON THE FACE, AND AT THE TOE OF SLOPES AS SEDIMENT-TRAPPING DEVICES FOR SHEET FLOW RUNOFF.

2. FILTER SOCKS ARE TYPICALLY SUPPLIED AND INSTALLED WITH 18 INCH DIAMETERS. DIAMETER TOLERANCE IS 2 INCHES, AS FILTER SOCKS TEND TO FLATTEN OUT WHEN PLACED.

3. STEEL POSTS MAY BE USED AND SHALL BE ROLLED FROM HIGH CARBON STEEL AND HAVE A MINIMUM OF 1.25 LB./FT. POSTS SHALL BE HOT-DIPPED GALVANIZED OR PAINTED WITH HIGH-GRADE WEATHER RESISTANT BROWN OR BLACK STEEL PAINT. STEEL POSTS SHALL BE EQUIPPED WITH ANCHOR PLATE HAVING A MINIMUM AREA OF 14 SQUARE INCHES. POSTS SHALL BE STUDDED, EMBOSSED, OR PUNCHED. POSTS AND ANCHOR PLATES SHALL CONFORM TO THE REQUIREMENTS OF ASTM A702. NO ADDITIONAL PAYMENT WILL BE PROVIDED FOR STEEL POSTS, BUT PRICE WILL BE CONSIDERED SUBIDIARY TO "FILTER SOCK (18")."

4. FILTER SOCKS MAY BE UP TO 250 FEET LONG. WHEN USED ON LONG SLOPES, FILTER SOCKS MAY BE JOINTED OR STAGGERED AS SHOWN IN DETAILS.

5. INSPECT FILTER SOCKS AFTER EACH RUNOFF EVENT. REMOVE AND REPLACE IF SIGNS OF UNDERCUTTING OR DOWNSTREAM RILLS ARE OBSERVED.

FILTER SOCK ALONG SLOPE (E-3)

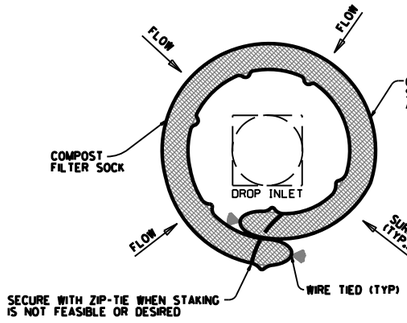

DROP INLET PLAN VIEW
N.T.S.

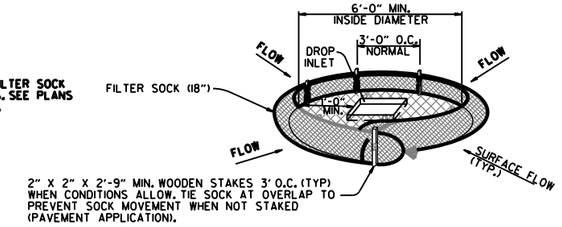

DROP INLET PERSPECTIVE VIEW
N.T.S.

NOTES:

1. OVERLAP ENDS OF SOCK (1' MIN. 3' MAX.).

2. USE 18" DIA. SOCK IN NON-TRAFFIC AREAS OR AREAS WHERE SAFETY IS NOT A CONCERN.

COMPOST FILTER SOCK DROP INLET PROTECTION (E-13)

DATE	REVISION	FILMED
11-16-17	ADDED FILTER SOCK E-3 AND E-13	
12-15-11	DELETED BALED STRAW DITCH CHECK & ADDED WATTLE DITCH CHECK	
11-18-98	ADDED NOTES	
07-02-98	ADDED BALED STRAW FILTER BARRIER (E-2)	
07-20-95	REVISED SILT FENCE E-4 AND E-11	7-20-95
07-15-94	REV. E-4 & E-11 MIN. 13" BURIED END OF FABRIC	
06-02-94	REVISED E-1,4,7 & 11; DELETED E-2 & 3	6-2-94
04-01-93	REDRAWN	
10-01-92	REDRAWN	
08-02-76	ISSUED R.D.M.	298-7-28-76

ARKANSAS STATE HIGHWAY COMMISSION

TEMPORARY EROSION CONTROL DEVICES

STANDARD DRAWING TEC-1

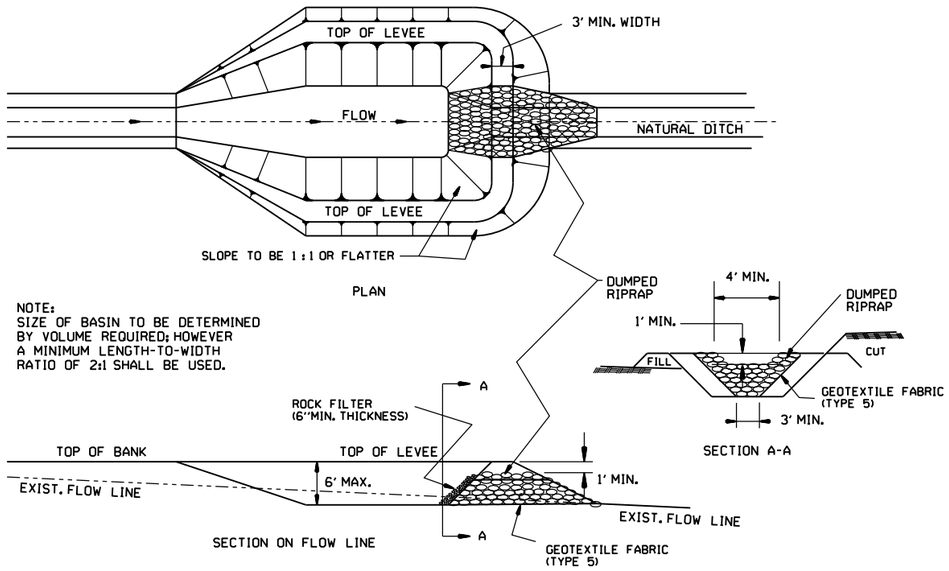

SEDIMENT BASIN WITH RIPRAP OUTLET (E-9)

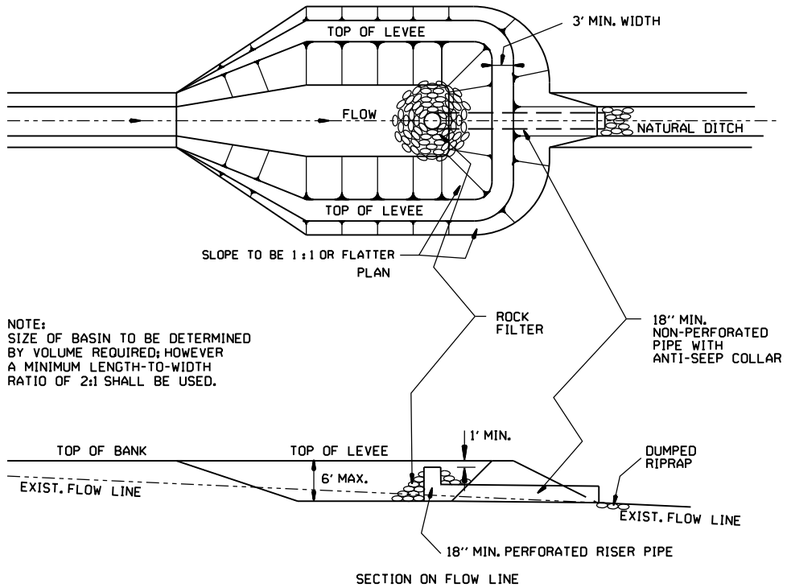

SEDIMENT BASIN WITH PIPE OUTLET (E-10)

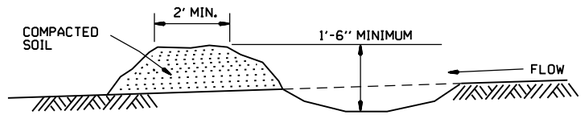

DIVERSION DITCH (E-8)

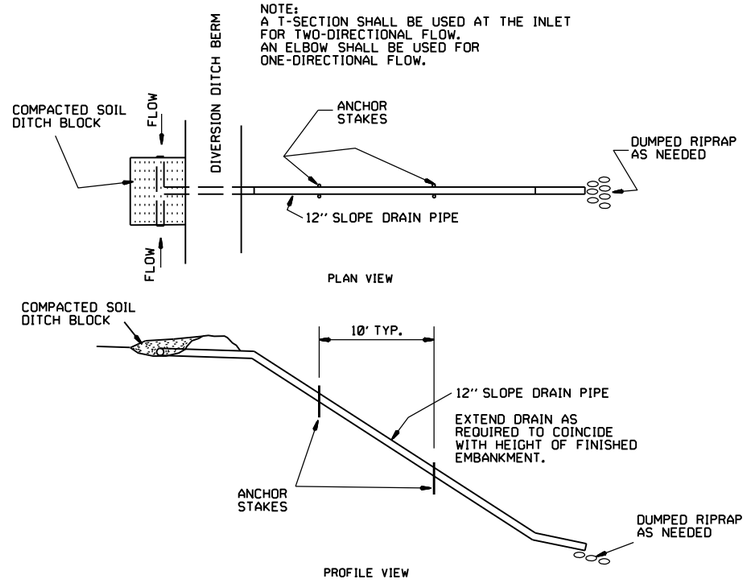

SLOPE DRAIN (E-12)

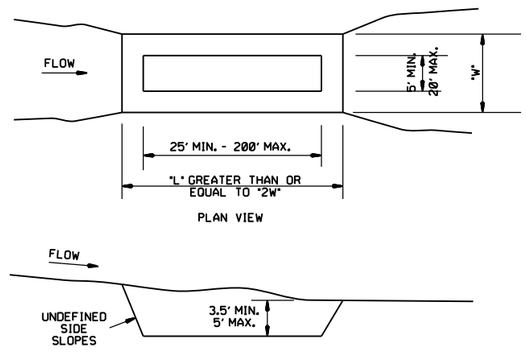

SEDIMENT BASIN (E-14)

DATE	REVISION	FILMED
6-2-94	Revised E-8 & E-12; Added E-14 & Deleted E-13	
4-1-93	ISSUED	

ARKANSAS STATE HIGHWAY COMMISSION

TEMPORARY EROSION CONTROL DEVICES

STANDARD DRAWING TEC-2

CLEARING AND GRUBBING

CONSTRUCTION SEQUENCE

1. PLACE PERIMETER CONTROLS (I.E. SILT FENCES , DIVERSION DITCHES, SEDIMENT BASINS, ETC.)
2. PERFORM CLEARING AND GRUBBING OPERATION.

EXCAVATION

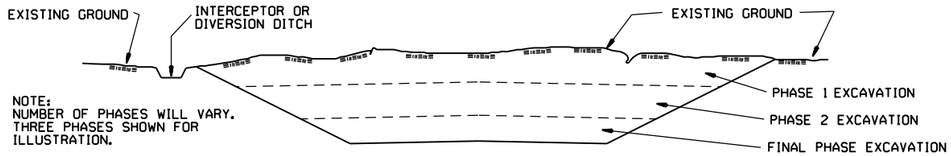

GENERAL NOTE

ALL CUT SLOPES SHALL BE DRESSED, PREPARED, SEEDED, AND MULCHED AS THE WORK PROGRESSES. SLOPES SHALL BE EXCAVATED AND STABILIZED IN EQUAL INCREMENTS NOT TO EXCEED 25 FEET, MEASURED VERTICALLY.

CONSTRUCTION SEQUENCE

1. EXCAVATE AND STABILIZE INTERCEPTOR AND/OR DIVERSION DITCHES.
2. PERFORM PHASE 1 EXCAVATION. PLACE PERMANENT OR TEMPORARY SEEDING.
3. PERFORM PHASE 2 EXCAVATION. PLACE PERMANENT OR TEMPORARY SEEDING.
4. PERFORM FINAL PHASE OF EXCAVATION. PLACE PERMANENT OR TEMPORARY SEEDING. STABILIZE DITCHES. CONSTRUCT DITCH CHECKS, DIVERSION DITCHES, SEDIMENT BASINS, OR OTHER EROSION CONTROL DEVICES AS REQUIRED.

EMBANKMENT

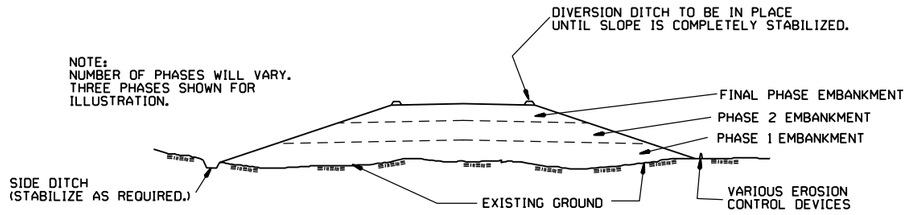

GENERAL NOTE

ALL EMBANKMENT SLOPES SHALL BE DRESSED, PREPARED, SEEDED, AND MULCHED AS THE WORK PROGRESSES. SLOPES SHALL BE CONSTRUCTED AND STABILIZED IN EQUAL INCREMENTS NOT TO EXCEED 25 FEET, MEASURED VERTICALLY.

CONSTRUCTION SEQUENCE

1. CONSTRUCT DIVERSION DITCHES, DITCH CHECKS, SEDIMENT BASINS, SILT FENCES, OR OTHER EROSION CONTROL DEVICES AS SPECIFIED.
2. PLACE PHASE 1 EMBANKMENT WITH PERMANENT OR TEMPORARY SEEDING. PROVIDE DIVERSION DITCHES AND SLOPE DRAINS IF EMBANKMENT CONSTRUCTION IS TO BE TEMPORARILY ABANDONED FOR A PERIOD OF GREATER THAN 21 DAYS.
3. PLACE PHASE 2 EMBANKMENT WITH PERMANENT OR TEMPORARY SEEDING. PROVIDE DIVERSION DITCHES AND SLOPE DRAINS IF EMBANKMENT CONSTRUCTION IS TO BE TEMPORARILY ABANDONED FOR A PERIOD OF GREATER THAN 21 DAYS.
4. PLACE FINAL PHASE OF EMBANKMENT WITH PERMANENT OR TEMPORARY SEEDING. PLACE DIVERSION DITCHES AND SLOPE DRAINS AND MAINTAIN UNTIL ENTIRE SLOPE IS STABILIZED.

11-03-94	CORRECTED SPELLING	
6-2-94	Drawn & Issued	6-2-94
DATE	REVISION	FILMED

ARKANSAS STATE HIGHWAY COMMISSION

TEMPORARY EROSION CONTROL DEVICES

STANDARD DRAWING TEC-3

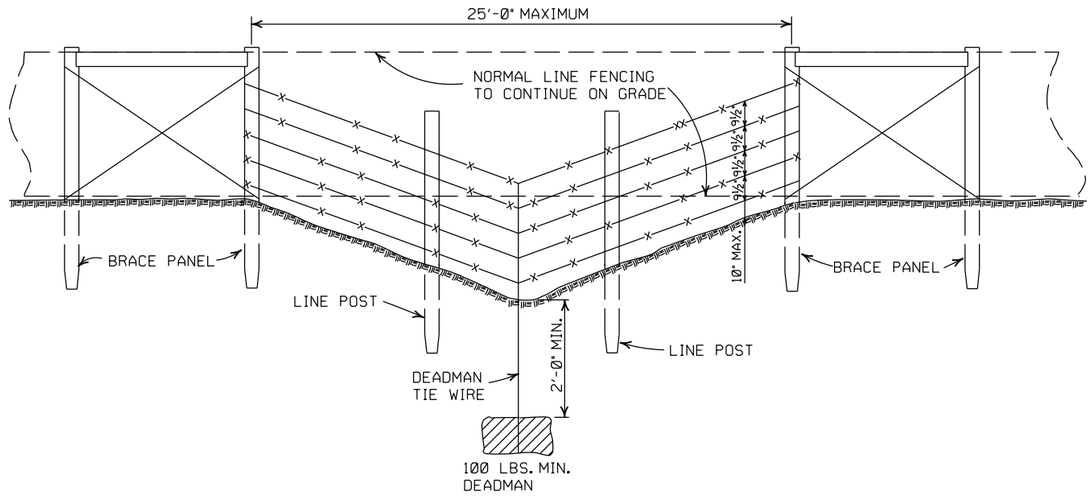

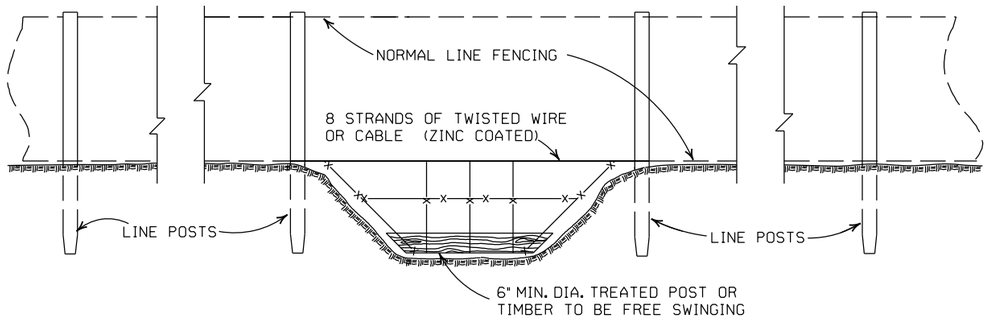

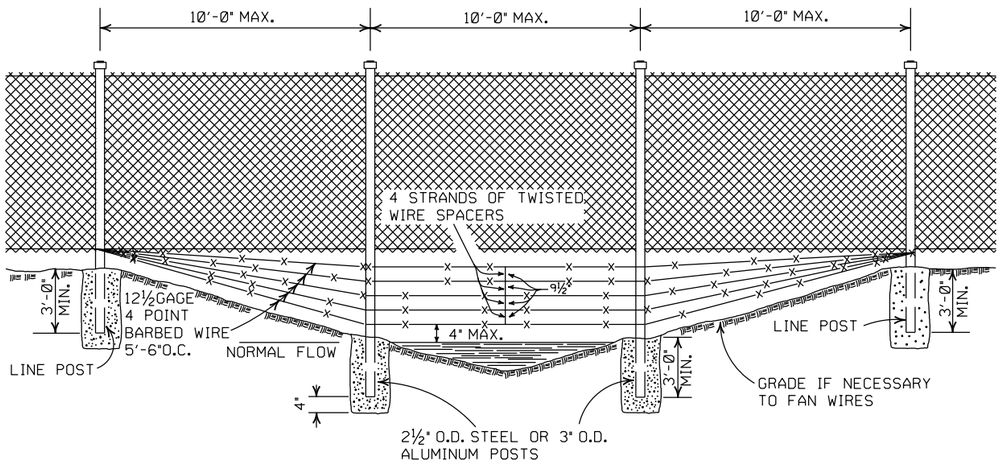

GENERAL NOTES:

THESE INSTALLATIONS TO BE USED WHERE NORMAL FENCING INSTALLATION WOULD CAUSE THE COLLECTING OF DRIFT IN THE CHANNEL OR THE DEPRESSION WILL NOT PERMIT NORMAL INSTALLATION. INSTALLATIONS WILL BE MADE ONLY WHERE DIRECTED BY THE ENGINEER.

WHEN A FENCE LINE APPROACHES A DITCH, GULLY OR DEPRESSION, THE LAST POST ON LEVEL GROUND SHALL BE PLACED CLOSE ENOUGH TO THE EDGE OF THE DROP OFF THAT THE FENCE MAY BE STRUNG TO THE POST IN THE DEPRESSION WITHOUT TOUCHING THE GROUND.

IN TERRAIN OF SUCH EXTREME IRREGULARITY THAT MINOR GRADING WILL NOT BE FEASIBLE, THE NORMAL FENCE SHALL CONTINUE ON GRADE AND THE GULLIES OR DEPRESSIONS TREATED BY AUXILIARY FENCES AS SHOWN.

PAYMENT FOR THE TYPE INSTALLATION USED WILL NOT BE MADE DIRECTLY BUT WILL BE INCLUDED IN THE CONTRACT UNIT PRICE BID FOR WIRE FENCE OR CHAIN LINK FENCE.

DATE	REVISION	FILMED
4-20-79	REVISED TOP RAIL & TENSION WIRE	696-4-20-79
10-2-72	REVISED AND REDRAWN	529-10-2-72

ARKANSAS STATE HIGHWAY COMMISSION

WIRE FENCE WATER GAPS

STANDARD DRAWING WF-2

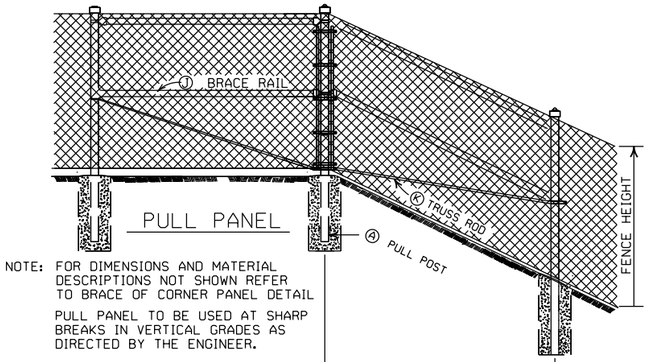

PULL PANEL

NOTE: FOR DIMENSIONS AND MATERIAL DESCRIPTIONS NOT SHOWN REFER TO BRACE OF CORNER PANEL DETAIL

PULL PANEL TO BE USED AT SHARP BREAKS IN VERTICAL GRADES AS DIRECTED BY THE ENGINEER.

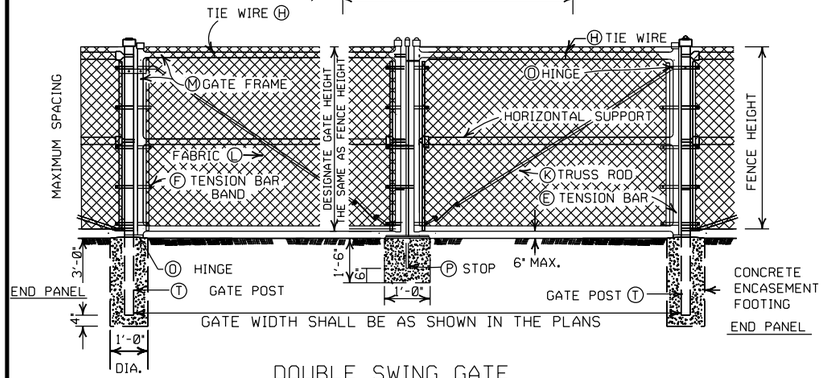

DOUBLE SWING GATE

POST SPACING DETAIL

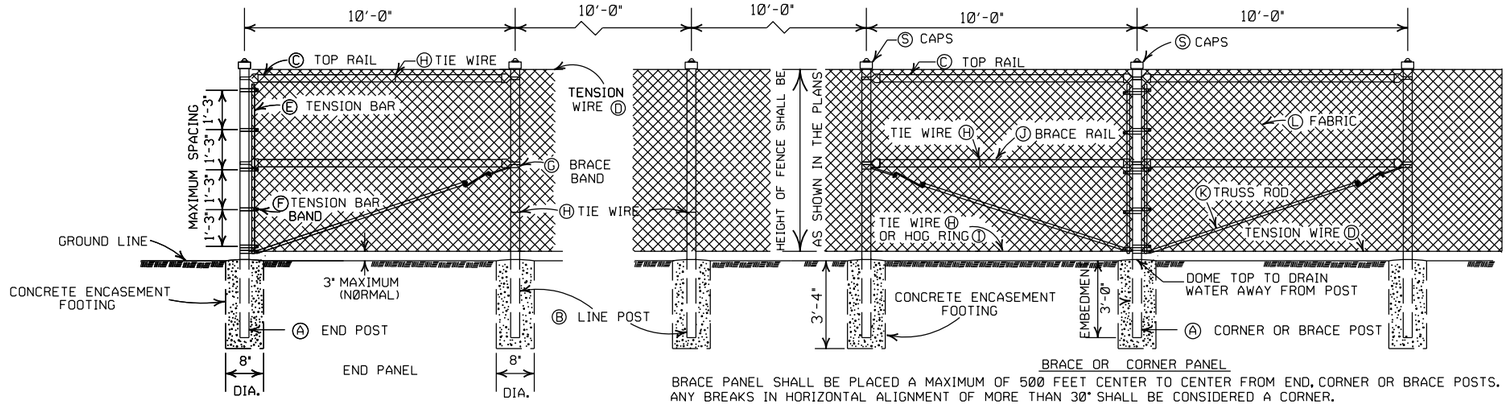

BRACE OR CORNER PANEL

BRACE PANEL SHALL BE PLACED A MAXIMUM OF 500 FEET CENTER TO CENTER FROM END, CORNER OR BRACE POSTS. ANY BREAKS IN HORIZONTAL ALIGNMENT OF MORE THAN 30° SHALL BE CONSIDERED A CORNER.

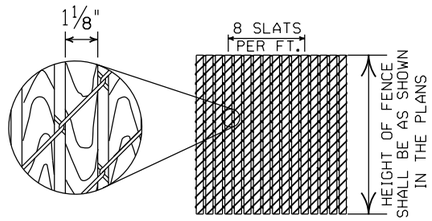

1⅛" X ¼" REDWOOD SLATS(LENGTH TO MATCH HEIGHT OF FENCE)

DETAIL OF REDWOOD SLAT INSTALLATION

(WHERE APPLICABLE)

GENERAL NOTES:

(C) CHAIN LINK FENCE BEING PLACED ON PRIVATE PROPERTY SHALL INCLUDE A TOP RAIL. ALL LABOR, MATERIALS, EQUIPMENT, TOOLS, AND INCIDENTALS NECESSARY TO COMPLETE THE WORK WILL BE PAID FOR AT THE CONTRACT UNIT PRICE BID PER LIN. FT. OF CHAIN LINK FENCE.

(D) TENSION WIRE: SHALL BE SECURED TO ALL TERMINAL, PULL, BRACE OR CORNER POSTS WITH TENSION BAR BANDS.

(J) BRACE RAIL: BRACE RAILS SHALL BE PROVIDED AT ALL TERMINAL, PULL, BRACE OR CORNER POSTS HALFWAY BETWEEN THE TOP RAIL AND GROUND LEVEL WHEN TOPRAIL IS SPECIFIED AND TWELVE INCHES (12") DOWN FROM TOP OF FABRIC WHEN TOP TENSION WIRE IS SPECIFIED. BRACE RAIL SHALL EXTEND FROM SUCH POST TO THE FIRST ADJACENT LINE POST.

(L) FABRIC: SHALL CONFORM TO THE SPECIFICATIONS.

(M) GATE FRAMES: SHALL BE CONSTRUCTED OF TUBULAR MEMBERS ASSEMBLED BY USE OF HEAVY PRESSED STEEL, MALLEABLE FITTINGS OR BY WELDING. ALL GATES SHALL HAVE ONE HORIZONTAL SUPPORT EXTENDING THE WIDTH OF THE GATE AT THE MIDPOINTS OF VERTICAL FRAME MEMBERS. THE COMPLETE FRAME SHALL BE RIGID AND HAVE AMPLE STRENGTH TO BE FREE FROM SAG AND TWIST.

(O) HINGES: SHALL BE OF HEAVY PATTERN, OF ADEQUATE STRENGTH FOR GATE, AND WITH LARGE BEARING SURFACES FOR CLAMPING IN POSITION. THE HINGE SHALL BE OF THE PROPER TYPE TO ALLOW FOR THE DESIGNATED DEGREE OF SWING. THE HINGE SHALL NOT TWIST OR TURN UNDER THE ACTION OF THE GATE. THE GATES SHALL BE CAPABLE OF BEING OPENED AND CLOSED EASILY BY ONE PERSON.

(P) LATCHES AND STOPS: SHALL BE PROVIDED FOR ALL GATES. GATES SHALL HAVE A DROP BAR LATCH. LATCHES SHALL BE ARRANGED FOR LOCKING. THE STOP FOR DROP BAR LATCHES SHALL BE SET IN CONCRETE AND ENGAGE THE PLUNGER OF THE BAR LATCH.

(S) CAPS: ALL POSTS, EXCEPT ROLL FORMED POSTS AND "T" POSTS SHALL BE CAPPED OVER THE EXTERIOR OF THE POST, AND SHALL CONFORM TO ASTM F626.

CONCRETE REQUIRED FOR THE EMBEDMENT OF ALL POSTS SHALL NOT BE PAID FOR DIRECTLY BUT SHALL BE INCLUDED IN THE CONTRACT UNIT PRICE BID FOR CHAIN LINK FENCE.

POSTS SHALL BE SPACED EQUIDISTANT ON A MAXIMUM OF 10' CENTERS.

EXCAVATION FOR POSTS: IN OTHER THAN ROCK SHALL BE OF THE DIMENSIONS INDICATED. IF ROCK IS ENCOUNTERED BEFORE REACHING THE REQUIRED DEPTH, THE EXCAVATION SHALL BE CONTINUED TO THE DEPTH INDICATED OR 1'-6" INTO THE ROCK, WHICHEVER IS LESS, AND SHALL BE A MINIMUM OF 8 INCHES IN DIAMETER.

HEIGHT OF FENCE FABRIC	(A) END, PULL, CORNER OR BRACE POST	(B) LINE POSTS SIZE	(B) LINE POSTS TIE SPACING	(C) TOP RAIL SIZE	(C) TOP RAIL TIE SPACING	(C) TOP RAIL MIN. LENGTH	(D) TENSION WIRE SIZE	(D) TENSION WIRE TIE SPACING	(E) TENSION BAR SIZE	(E) TENSION BAR LENGTH	(F) TENSION BAR BAND SIZE	(F) TENSION BAR BAND BOLT SIZE	(F) TENSION BAR BAND SPACING	(G) BRACE BAND SIZE	(G) BRACE BAND BOLT SIZE
6' AND LESS	2½" O.D.	2" O.D.	1 TIE EVERY 1'-2" OF FABRIC HEIGHT	1⅝" O.D.	1 TIE EVERY 2'-0"	10'-0"	7 GAUGE COIL SPRING WIRE	1 TIE EVERY 1'-0"	MIN. OF ⅜" X ¾"	MIN. OF 2" LESS THAN FABRIC HEIGHT	MIN. OF ¾" X 0.074	⅝" X 1¼"	1 BAND AT TOP AND BOTTOM 15" MAX. INTERVAL BETWEEN BANDS	MIN. OF ¾" X 0.105	⅝" X 1¼"
OVER 6' TO 12' INCL.	3 " O.D.	2½" O.D.													

HEIGHT OF FENCE FABRIC	(H) TIE WIRE	(I) HOG RING	(J) BRACE RAIL SIZE	(J) BRACE RAIL TIE SPACING	(K) TRUSS ROD	(L) FABRIC SIZE	(L) FABRIC MESH	(L) FABRIC SELVAGE	(M) GATE FRAME SIZE	(M) GATE FRAME TIE SPACING	(N) HORIZONTAL SUPPORT SIZE	(N) HORIZONTAL SUPPORT TIE SPACING	(O) HINGE TYPE 180° SWING	(T) GATE POST GATE WIDTH 12' AND LESS	(T) GATE POST GATE WIDTH OVER 12' TO 24' INCL.
6' AND LESS	MIN. OF 12 GA. STEEL OR 9 GA. ALUM.	SAME GAUGE AS FABRIC	1⅝" O.D.	1 TIE EVERY 2'-0"	MIN. OF ⅝" ROUND WITH TIGHTNERS AND FITTINGS	9 GA.	2"	KNUCK -ING AND/OR TWIST -ING	2" O.D.	1 TIE EVERY 1'-0"	2" O.D.	1 TIE EVERY 1'-0"	OFFSET	3" O.D.	4" O.D.
OVER 6' TO 12' INCL.														4" O.D.	

NOTE: POST SIZES SHOWN ARE FOR STEEL. WHERE ALUMINUM IS PROVIDED, LINE POSTS SHALL HAVE AN OUT SIDE DIAMETER OF 2½" FOR FENCE HEIGHT OF 6' AND LESS, AN OUTSIDE DIAMETER OF 3" FOR FENCE HEIGHT OF 6' TO 12'. END, PULL, CORNER OR BRACE POSTS SHALL HAVE AN OUTSIDE DIAMETER OF 3" FOR FENCE HEIGHT OF 6' AND LESS; AN OUTSIDE DIAMETER OF 3½" FOR FENCE HEIGHTS OF 6' TO 12'. GATE POSTS WHERE GATE WIDTH IS 12' AND LESS SHALL HAVE AN OUTSIDE DIAMETER OF 3½" FOR FENCE HEIGHT OF 6' AND LESS. ALUMINUM TENSION WIRE SHALL BE 0.192" IN DIAMETER. MINIMUM THICKNESS OF MATERIAL FROM WHICH EXPANSION SLEEVES SHALL BE MADE WILL BE 0.078". POSTS AND RAILS MAY HAVE ANY CROSS-SECTIONAL SHAPE THAT WILL MEET THE SPECIFICATIONS.

OTHER DETAILS APPLY TO BOTH STEEL AND ALUMINUM FENCE.

ALL MISCELLANEOUS FITTINGS AND HARDWARE SHALL MEET THE REQUIREMENTS AND PRODUCTION TOLERANCES AS SET FORTH IN THE SPECIFICATIONS. 9 GAUGE ALUMINUM WIRE SHALL BE ACCEPTABLE FOR TIEING FABRIC TO TUBULAR AND ROLL FORMED MEMBERS OF STEEL FENCE.

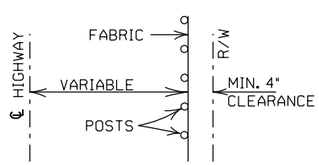

INSTALLATION MAY BE MODIFIED AS SHOWN IN THE PLANS

TYPICAL INSTALLATION DIAGRAM

POSTS AND RAILS

SIZE O.D.	GRADE 1 AND ALUMINUM ALLOY O.D. INCHES	WALL THICKNESS	LBS. PER LINEAR FT. STEEL	LBS. PER LINEAR FT. ALUMINUM	GRADE 2 O.D. INCHES	WALL THICKNESS	LBS. PER LINEAR FT.
1⅝	1.660	0.140	2.27	0.786	1.660	0.111	1.84
2	1.900	0.145	2.72	0.940	1.900	0.120	2.28
2½	2.375	0.154	3.65	1.264	2.375	0.130	3.11
3	2.875	0.203	5.79	2.004	2.875	0.160	4.64
3½	3.500	0.216	7.58	2.621	3.500	0.160	5.71
4	4.000	0.226	9.11	3.151	4.000	0.160	6.56

TOLERANCES ON DIMENSIONS AND WEIGHTS ACCORDING TO AASHTO M 181

DATE	REVISION	FILMED
11-17-10	REVISED TRUSS ROD	
12-10-09	REVISED POSTS & RAILS TABLE	
5-21-09	ADDED TABLE & GEN. NOTE (C)	
8-22-02	REVISED NOTES, REMOVED TABLE, & REMOVED FENCE ALTERNATE	
4-3-97	REVISED BRACE RAIL NOTE	
10-18-96	REVISED AASHTO & ASTM REF.	
11-3-94	REVISED NOTE (L)	
10-1-92	DELETED ALTERNATE POST	10-1-92
8-15-91	DELETED ROLL FORMED POST DETAIL & ADDED NOTE	8-15-91 8-15-91
11-30-89	DELETED CLASS CONCRETE	11-30-89
11-17-88	REVISED O.D. SIZES	668-11-17-88
10-30-87	GENERAL REVISIONS	548-10-30-87
4-20-79	REVISED TOP RAIL & TENSION WIRE	695-4-20-79
10-2-72	REVISED AND REDRAWN	530-10-2-72

ARKANSAS STATE HIGHWAY COMMISSION

CHAIN LINK FENCE

STANDARD DRAWING WF-3

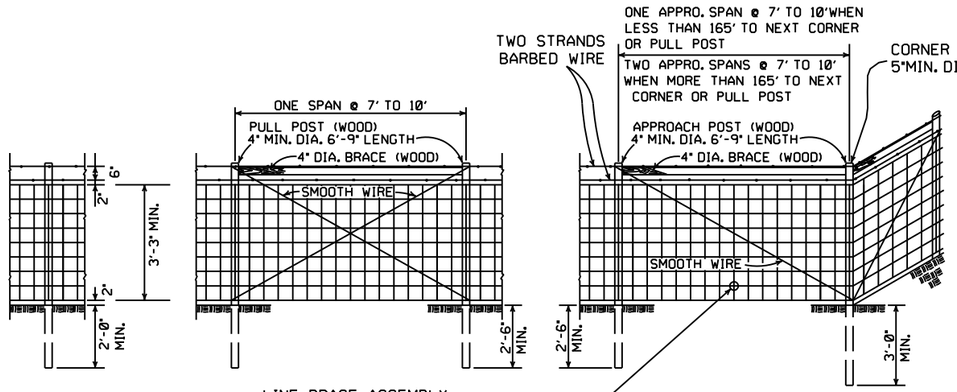

TYPE C FENCE (WOOD POSTS)

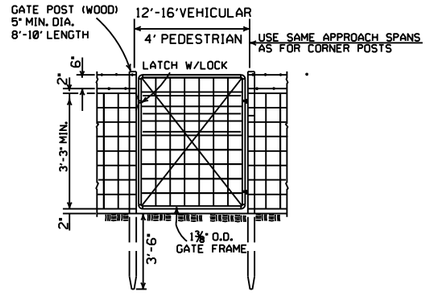

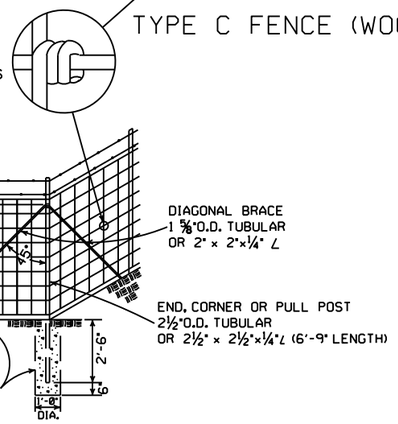

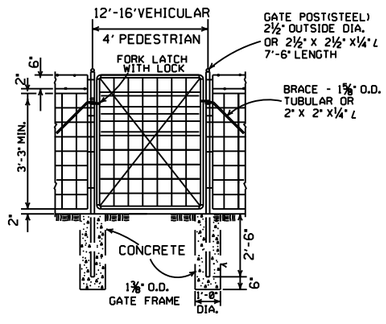

NOTE: STEEL LINE POSTS SHALL BE 6'-6" MINIMUM LENGTH.

TYPE C FENCE (STEEL POSTS)

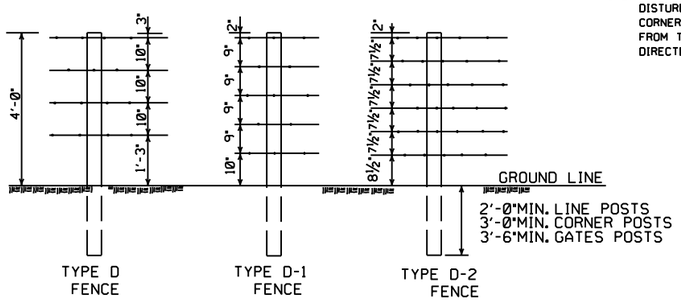

NOTE: SPACING AND SIZE (EXCEPT LENGTH) OF POSTS, APPROACH SPANS, PULL POST ASSEMBLIES, AND CORNER BRACING FOR TYPE D FENCE SHALL CONFORM TO TYPE C FENCE. USE GALVANIZED STAPLES ON WOOD POSTS AND APPROVED FASTENERS ON STEEL POSTS.

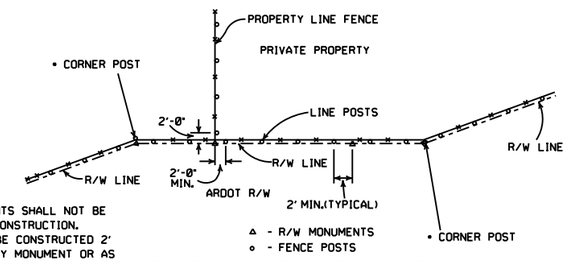

• NOTE: RIGHT-OF-WAY MONUMENTS SHALL NOT BE DISTURBED BY FENCE CONSTRUCTION. CORNER POSTS SHALL BE CONSTRUCTED 2' FROM THE RIGHT-OF-WAY MONUMENT OR AS DIRECTED BY THE ENGINEER.

RIGHT-OF-WAY FENCE LOCATION

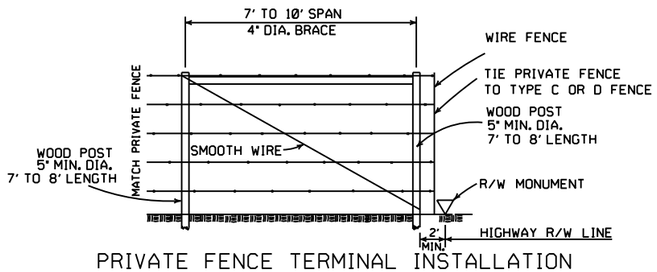

PRIVATE FENCE TERMINAL INSTALLATION

WHERE EXISTING FENCE CONSISTS OF STEEL POSTS, USE END POST ASSEMBLY AS SHOWN IN TYPE C FENCE OR OTHER END POST ASSEMBLY AS APPROVED BY THE ENGINEER.

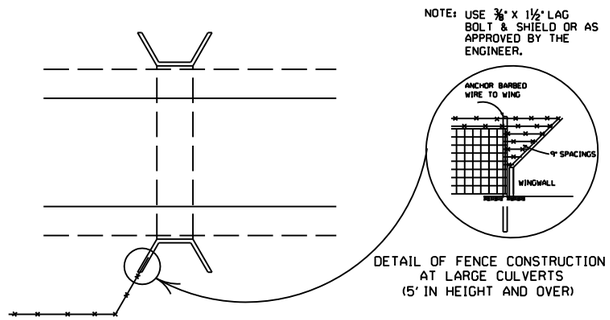

DETAIL OF FENCE CONSTRUCTION AT LARGE CULVERTS (5' IN HEIGHT AND OVER)

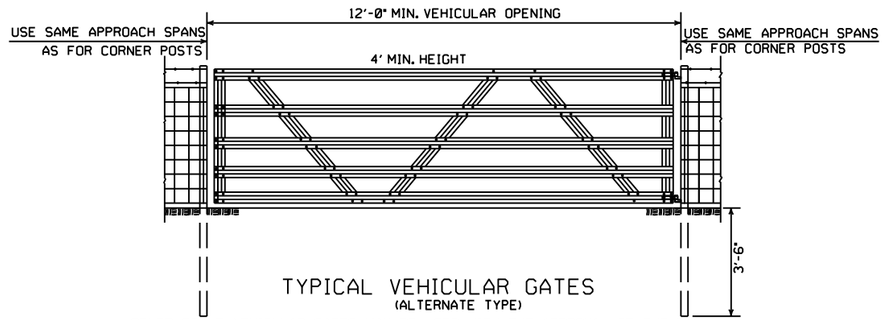

TYPICAL VEHICULAR GATES

(ALTERNATE TYPE)

OTHER STYLE VEHICULAR GATES MAY BE USED WITH THE APPROVAL OF THE ENGINEER. THE METHOD OF SECURING GATE (LATCH AND/OR LOCK)SHALL MEET THE APPROVAL OF THE ENGINEER.

GENERAL NOTES:

STEEL LINE POSTS SHALL BE PAINTED OR GALVANIZED. TUBULAR END, CORNER, PULL, OR DIAGONAL BRACES MUST CONFORM TO THE DIMENSIONS AND WEIGHTS SPECIFIED ON STANDARD DRAWING WF-3 (CHAIN LINK). APPROVED ALTERNATES ARE ACCEPTABLE.
AN ACCEPTABLE TOLERANCE IN LENGTH OF TUBULAR OR WOODEN POSTS SHALL BE - 1" TO +2".
TUBULAR POSTS MUST BE PAINTED OR GALVANIZED.

THE CONTRACTOR SHALL FURNISH AT LEAST 25% OF TIMBER LINE POSTS OF 7 FOOT LENGTHS IN ORDER TO PROVIDE SUFFICIENT SET IN SOFT GROUND OR SMALL DEPRESSIONS.

DRIVEWAY GATES, EITHER SINGLE 12' TO 16' OR DOUBLE 6' TO 8' OPENING OF THE SAME TYPE AS THE PEDESTRIAN GATE, SHALL BE INSTALLED ON THE RIGHT SIDE OF EACH THROUGH LANE ROAD AT LARGE CULVERTS OR BRIDGE CROSS FENCE, FOR USE OF MAINTENANCE EQUIPMENT. LOCATION OF GATES TO BE SHOWN ON PLANS OR AS DESIGNATED BY THE ENGINEER.

AT STREAM CROSSINGS, THE FENCE SHALL NOT BE CONSTRUCTED ACROSS LARGE STREAMS. WHERE CLEARANCE IS SUFFICIENT FROM THE TOP OF THE BANK TO THE BRIDGE STRUCTURE A CROSS CONNECTION SHALL BE CONSTRUCTED BETWEEN THE FENCE ON EACH SIDE OF THE ROAD. WHERE THE CLEARANCE IS NOT SUFFICIENT, THE FENCE SHALL BE TERMINATED WITH CROSS CONNECTIONS AND END POSTS ADJACENT TO BRIDGE ABUTMENTS OR CULVERT WINGWALLS.

SPLICE FOR BARBED WIRE BETWEEN PULL POST ASSEMBLY SHALL BE BY THE "EYE METHOD" AS DESCRIBED AS FOLLOWS: THE ENDS OF THE BARBED WIRE SHALL BE BENT TO FORM A LOOP. THE LOOPS SHALL BE CONNECTED. AFTER THE LOOPS ARE CONNECTED THE ENDS OF THE WIRE SHALL BE WRAPPED AROUND THE PROJECTING WIRES A MINIMUM OF 4 TIMES FOR EACH WIRE LOOP.

SPLICE FOR WOVEN WIRE BETWEEN PULL POST SHALL BE BY THE "WESTERN UNION METHOD" AS DESCRIBED AS FOLLOWS: THE VERTICAL WIRES FOR EACH END OF THE FENCE FABRIC SHALL BE PLACED SIDE BY SIDE AND THE PROJECTING HORIZONTAL WIRES SHALL BE WRAPPED A MINIMUM OF 4 TIMES AROUND THE HORIZONTAL WIRES OF THE FIRST WEB.

STAPLE AT LEAST TOP, BOTTOM AND ALTERNATE WIRES OF WOVEN FABRIC FOR WOOD LINE POSTS.

DATE	REVISION	FILMED
8-22-02	REVISED GENERAL NOTES	
10-18-96	REVISED AASHTO	
11-22-95	REVISED R-O-W LOCATION DETAIL	
6-2-94	REVISED BARB WIRE AND ADDED CORNER POST NOTES	6-2-94
8-5-93	REVISED R/W INSTALLATION FENCE	8-5-93
10-1-92	ADDED STAPLE NOTE	10-1-92
8-15-91	ADDED TYPE D-2 FENCE	8-15-91
11-30-89	DELETED CLASS CONCRETE	11-30-89
7-15-88	ADDED SPLICE NOTE	700-7-15-88
10-30-87	GENERAL REVISIONS	549-10-30-87
11-1-84	MAX. POST SPACING MIN. WIRE GAUGE	507-11-1-84
1-4-83	MIN. DIA. LINE POST	648-1-4-83
3-2-81	TOLERANCE FOR POST LENGTH	722-3-2-81
12-1-72	ADDED D-1 & FENCE INSTALLATION	564-12-1-72
10-2-72	REVISED AND REDRAWN	540-10-2-72

ARKANSAS STATE HIGHWAY COMMISSION

WIRE FENCE TYPE C AND D

STANDARD DRAWING WF-4