DATE REVISED	DATE REVISED	FED. RD. DIST. NO.	STATE	JOB NO.	SHEET NO.	TOTAL SHEETS
		6	ARK.	012326	1	838
		HWY. 412-HWY. 112 (SPRINGDALE BYPASS)(F)				
②						

PROJECT LOCATION

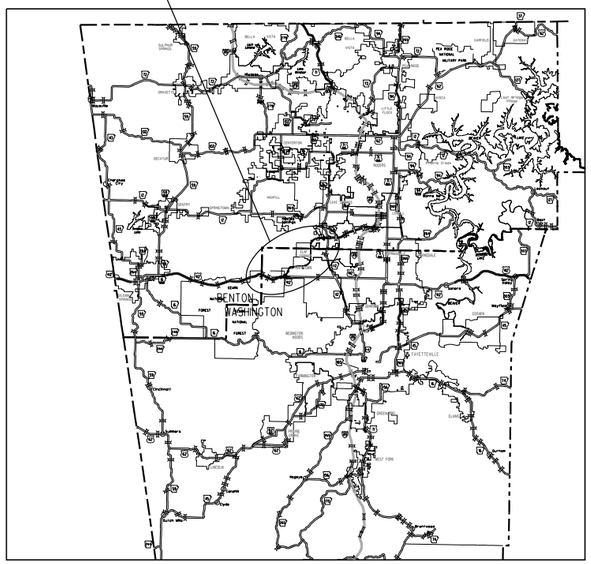

VICINITY MAP

"A FULLY CONTROLLED ACCESS FACILITY"
ARKANSAS DEPARTMENT OF TRANSPORTATION
CONSTRUCTION PLANS FOR STATE HIGHWAY

HWY. 412 - HWY. 112
(SPRINGDALE BYPASS) (F)

WASHINGTON & BENTON COUNTIES

ROUTE 612 SECTIONS 1 & 2

JOB 012326

FED. AID PROJ. ACSTPF-0472(10)

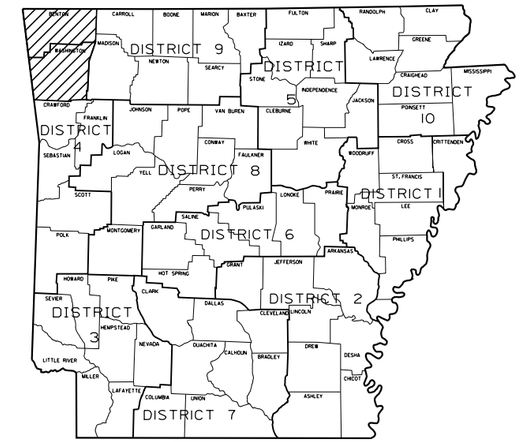

ARKANSAS HIGHWAY DISTRICTS 4 & 9

NOT TO SCALE

FOR BRIDGE DATA AND STRUCTURES OVER 20'-0" SPAN SEE SHEET NO. 2.

STA. 148+68.03
BEGIN JOB 012326

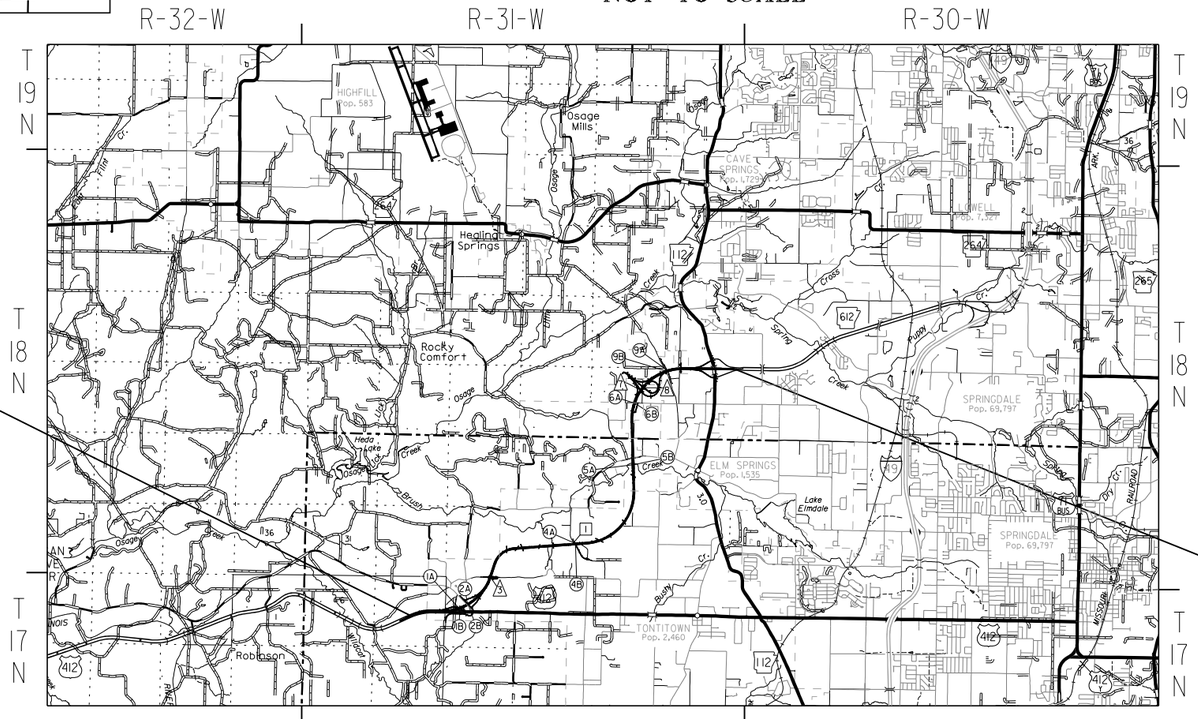

STA. 514+00.00
END JOB 012326

· DESIGN TRAFFIC DATA ·

DESIGN YEAR	2043
2023 ADT	30,500
2043 ADT	74,000
2043 DHV	8,140
DIRECTIONAL DISTRIBUTION	60%
TRUCKS	12%
DESIGN SPEED	70 MPH

PROJECT COORDINATES

	BEGIN	MID-POINT	END
LATITUDE	N 36°10'36"	N 36°11'40"	N 36°13'37"
LONGITUDE	W 94°18'29"	W 94°15'18"	W 94°13'32"
STATION	148+68.03	331+34.02	514+00.00

LENGTH COMPUTED ALONG C.L. MEDIAN

GROSS LENGTH OF PROJECT	36531.97 FEET OR	6.919 MILES
NET LENGTH OF ROADWAY	34327.25 FEET OR	6.501 MILES
NET LENGTH OF BRIDGES	2204.72 FEET OR	0.418 MILES
NET LENGTH OF PROJECT	36531.97 FEET OR	6.919 MILES

CERTIFICATE OF AUTHORIZATION
GARVER LLC
No. 766
ARKANSAS ENGINEER

STATE OF ARKANSAS
LICENSED PROFESSIONAL ENGINEER
No. 13422
JOHN F. CANTABERY

DIGITALLY SIGNED 8/10/2023

JATurner 8/10/2023 1:42:13 PM
WORKSPACE: AHTD
L:\20\T\01\7660 - ARDOT 012326 Hwy 412 - Hwy 112\Drawings\r012326_TL_01.dgn
REVISED DATE:

DATE REVISED	DATE REVISED
2	

FED. RD. DIST. NO.	STATE	JOB NO.	SHEET NO.	TOTAL SHEETS
6	ARK.	012326	2	838

BRIDGE DATA AND
STRUCTURES OVER 20'-0" SPAN

STATE OF ARKANSAS
LICENSED PROFESSIONAL ENGINEER
No. 13436
SHAUN A. ROBERSON

DIGITALLY SIGNED 7/28/2023

BRIDGE DATA

(1A) STA. 183+57.52 BRIDGE END
BRIDGE NO. A7612 OVER W. INTERCHANGE RAMP 4
302'-0" CONT. PLATE GIRDER UNIT (85'-132'-85')
40'-0" CLEAR ROADWAY
45°53'37" RT. FORWARD SKEW
305'-0" BRIDGE LENGTH
STA. 186+66.07 BRIDGE END

(1B) STA. 184+52.68 BRIDGE END
BRIDGE NO. B7612 OVER W. INTERCHANGE RAMP 4
288'-0" CONT. PLATE GIRDER UNIT (82'-124'-82')
40'-0" CLEAR ROADWAY
44°27'58" RT. FORWARD SKEW
290'-11 3/16" BRIDGE LENGTH
STA. 187+40.30 BRIDGE END

(2A) STA. 191+27.39 BRIDGE END
BRIDGE NO. A7613 OVER HIGHWAY 68
227'-0" CONT. W-BEAM UNIT (64'-99'-64')
40'-0" CLEAR ROADWAY
14°53'28" RT. FORWARD SKEW
229'-2 11/16 " BRIDGE LENGTH
STA. 193+59.29 BRIDGE END

(2B) STA. 191+46.91 BRIDGE END
BRIDGE NO. B7613 OVER HIGHWAY 68
234'-0" CONT. W-BEAM UNIT (66'-102'-66')
40'-0" CLEAR ROADWAY
14°35'54" RT. FORWARD SKEW
236'-2 11/16 " BRIDGE LENGTH
STA. 193+80.44 BRIDGE END

(4A) STA. 293+72.27 BRIDGE END
BRIDGE NO. A7615 OVER JAVELLO RD.
270'-0" CONT. PRESTRESSED
CONCRETE GIRDER UNIT (85'-100'-85')
40'-0" CLEAR ROADWAY
23°12'26" RT. FORWARD SKEW
272'-4 1/4" BRIDGE LENGTH
STA. 296+44.63 BRIDGE END

(4B) STA. 294+10.00 BRIDGE END
BRIDGE NO. B7615 OVER JAVELLO RD.
270'-0" CONT. PRESTRESSED
CONCRETE GIRDER UNIT (85'-100'-85')
40'-0" CLEAR ROADWAY
23°12'26" RT. FORWARD SKEW
272'-4 1/4" BRIDGE LENGTH
STA. 296+82.36 BRIDGE END

(5A) STA. 378+21.91 BRIDGE END
BRIDGE NO. A7616 OVER BRUSH CREEK
965'-0" CONT. PRESTRESSED
CONCRETE GIRDER UNITS (3 @ 80'-80'-80', 80'-95'-70')
40'-0" CLEAR ROADWAY
967'-2 1/8" BRIDGE LENGTH
STA. 387+89.09 BRIDGE END

(5B) STA. 378+21.91 BRIDGE END
BRIDGE NO. B7616 OVER BRUSH CREEK
965'-0" CONT. PRESTRESSED
CONCRETE GIRDER UNITS (3 @ 80'-80'-80', 80'-95'-70')
40'-0" CLEAR ROADWAY
967'-2 1/8" BRIDGE LENGTH
STA. 387+89.09 BRIDGE END

(6A) STA. 426+83.03 BRIDGE END
BRIDGE NO. A7617 OVER MARCHANT RD.
215'-0" CONT. PRESTRESSED
CONCRETE GIRDER UNIT (70'-75'-70')
48'-0" CLEAR ROADWAY
18°11'17" RT. FORWARD SKEW
217'-3 3/8" BRIDGE LENGTH
STA. 428+97.83 BRIDGE END

(6B) STA. 427+09.38 BRIDGE END
BRIDGE NO. B7617 OVER MARCHANT RD.
215'-0" CONT. PRESTRESSED
CONCRETE GIRDER UNIT (70'-75'-70')
40'-0" CLEAR ROADWAY
18°11'17" RT. FORWARD SKEW
217'-3 3/8" BRIDGE LENGTH
STA. 429+29.20 BRIDGE END

(9A) STA. 462+53.02 BRIDGE END
BRIDGE NO. A7620 OVER ROBBINS RD.
215'-0" CONT. PRESTRESSED
CONCRETE GIRDER UNIT (70'-75'-70')
40'-0" CLEAR ROADWAY
10°07'03" RT. FORWARD SKEW
217'-2 9/16" BRIDGE LENGTH
STA. 464+67.76 BRIDGE END

(9B) STA. 462+69.01 BRIDGE END
BRIDGE NO. B7620 OVER ROBBINS RD.
215'-0" CONT. PRESTRESSED
CONCRETE GIRDER UNIT (70'-75'-70')
48'-0" CLEAR ROADWAY
10°21'26" RT. FORWARD SKEW
217'-2 9/16" BRIDGE LENGTH
STA. 464+88.75 BRIDGE END

BRIDGE DATA (OVERPASSES)

△3 STA. 18+92.86 BRIDGE END
BRIDGE NO. 07614 LIBERTY RD.
212'-0" CONT. PLATE GIRDER UNIT (106'-106')
28'-0" CLEAR ROADWAY
17°49'48" LT. FORWARD SKEW
214'-3 1/4" BRIDGE LENGTH
STA. 21+07.13 BRIDGE END

△7 STA. 428+55.93 BRIDGE END
BRIDGE NO. 07618 XNA ACCESS RD. RAMP 2
219'-0" PLATE GIRDER UNIT (104'-115')
25'-0" CLEAR ROADWAY
19°00'00" RT. FORWARD SKEW
221'-3 1/2" BRIDGE LENGTH
STA. 430+77.22 BRIDGE END

△8 STA. 470+38.82 BRIDGE END
BRIDGE NO. 07619 XNA ACCESS RD. RAMP 1
210'-0" CONT. PLATE GIRDER UNIT (110'-100')
25'-0" CLEAR ROADWAY
212'-2" BRIDGE LENGTH
STA. 472+50.99 BRIDGE END

STRUCTURES OVER 20'-0" SPAN

[1] STA. 18+38 JAVELLO RD. CONSTRUCT
SEXT. 6' X 3' X 46' R.C. BOX CULVERT
30° RT. FWD. SKEW
WITH 3:1 WINGS LT. & RT.
Q10 = 508 CFS D.A. = 271.2 ACRES
SPAN = 40'-4"

HBVinson 7/27/2023 1:36:49 PM
WORKSPACE: AHTD
L:\2017\170176\60 - ARDOT 012326 Hwy 412 - Hwy 112\Drawings\r012326_CO_ALL_01.dgn
REVISED DATE:

DATE REVISED	DATE REVISED	FED. RD. DIST. NO.	STATE	JOB NO.	SHEET NO.	TOTAL SHEETS
10-02-2023		6	ARK.	012326	3	838
②		INDEX OF SHEETS				

INDEX OF SHEETS

SHEET NO.	TITLE	BRIDGE NO.	DRWG.NO.
1	TITLE SHEET		
2	BRIDGE DATA AND STRUCTURES OVER 20'-0" SPAN		
3 - 4	INDEX OF SHEETS		
5	STANDARD DRAWINGS		
6	GOVERNING SPECIFICATIONS AND GENERAL NOTES		
7 - 30	TYPICAL SECTIONS OF IMPROVEMENT		
31 - 56	SPECIAL DETAILS		
57 - 92	TEMPORARY EROSION CONTROL DETAILS		
93 - 107	MAINTENANCE OF TRAFFIC DETAILS		
108 - 115	PERMANENT PAVEMENT MARKING DETAILS		
116 - 118	SIGN QUANTITIES		
119 - 144	SIGN PLACEMENT SHEETS		
145 - 154	SIGN DETAIL SHEETS		
155	ITS NOTES		
156	ITS SYSTEM MAP		
157	ITS QUANTITES		
158	ITS PLAN SHEET (LM 0.64)		
159	ITS ELEVATION SHEET (LM 0.64)		
160	ITS PLAN SHEET STA 11+17		
161	ITS PLAN SHEET STA 219+37		
162	ITS PLAN SHEET STA 293+90		
163	ITS PLAN SHEET STA 386+25		
164	ITS PLAN SHEET STA 441+25		
165	ITS PLAN SHEET STA 499+25		
166	ITS PLAN SHEET (LM 1.81)		
167	ITS ELEVATION SHEET (LM 1.81)		
168	ITS PLAN SHEET (LM 3.74)		
169	ITS PLAN SHEET (LM 4.11)		
170	ITS VOLTAGE DROP CALCULATICNS		
171	ITS POWER RANKINGS		
172	ITS WIRING DIAGRAM		
173	ITS BLOCK DIAGRAM		
173A	ITS DETAIL		
174	ITS TEE-MOUNT STANDARD DETAIL		
175	ITS TEE-MOUNT STANDARD DETAIL		
176	ITS TILT TOWER STANDARD DETAIL		
177	ITS TILT TOWER STANDARD DETAIL		
178 - 179	SOIL BORING LOG		
180 - 199	QUANTITIES		
200	SCHEDULE OF BRIDGE QUANTITIES (SHEET 1 OF 8)	A&B7612, A&B7613	66104
201	SCHEDULE OF BRIDGE QUANTITIES (SHEET 2 OF 8)	A&B7612, A&B7613	66105
202	SCHEDULE OF BRIDGE QUANTITIES (SHEET 3 OF 8)	07614, A&B7615	66106
203	SCHEDULE OF BRIDGE QUANTITIES (SHEET 4 OF 8)	07614, A&B7615	66107
204	SCHEDULE OF BRIDGE QUANTITIES (SHEET 5 OF 8)	A&B7616	66108
205	SCHEDULE OF BRIDGE QUANTITIES (SHEET 6 OF 8)	A&B7616	66109
206	SCHEDULE OF BRIDGE QUANTITIES (SHEET 7 OF 8)	A&B7612, A&B7613, 07614, A&B7615, A&B7616, A&B7617 07618, 07619, A&B7620	66110
207	SCHEDULE OF BRIDGE QUANTITIES (SHEET 8 OF 8)	A&B7612, A&B7613, 07614 A&B7615, A&B7616, A&B7617 07618, 07619, A&B7620	66111
208 - 209	SUMMARY OF QUANTITIES AND REVISIONS		
210 - 227	SURVEY CONTROL DETAILS		
228 - 269	PLAN AND PROFILE - C.L. MEDIAN		
270	INTERCHANGE LAYOUT - HWY.412B		
271 - 272	PLAN AND PROFILE - HWY. 412B RAMP 1		
273 - 274	PLAN AND PROFILE - HWY. 412B RAMP 2		
275 - 276	PLAN AND PROFILE - HWY. 412B RAMP 3		
277 - 278	PLAN AND PROFILE - HWY. 412B RAMP 4		
279	INTERCHANGE LAYOUT - XNA ACCESS RD.		
280	PLAN - XNA ACCESS RD.		
281 - 283	PLAN AND PROFILE - XNA ACCESS RD. RAMP 1		
284 - 287	PLAN AND PROFILE - XNA ACCESS RD. RAMP 2		
288 - 289	PLAN AND PROFILE - XNA ACCESS RD. RAMP 3		
290	PLAN AND PROFILE - XNA ACCESS RD. RAMP 4		
291	INTERCHANGE LAYOUT - HWY. 112		
292 - 293	PLAN AND PROFILE - HWY. 112 RAMP 1		
294 - 295	PLAN AND PROFILE - HWY. 112 RAMP 4		
296 - 297	PLAN AND PROFILE - HWY. 412B		
298 - 299	PLAN AND PROFILE - HWY. 68		
300 - 301	PLAN AND PROFILE - MUSTEEN RD.		
302	PLAN AND PROFILE - LIBERTY AVE.		
303	PLAN AND PROFILE - LIBERTY AVE. ACCESS		
304 - 305	PLAN AND PROFILE - JAVELLO RD.		
306	PLAN AND PROFILE - MARCHANT RD.		
307	PLAN AND PROFILE - MARCHANT RD. ACCESS		
308	PLAN AND PROFILE - BRUSH CREEK RD.		
309	PLAN AND PROFILE - ROBBINS RD.		
310	PLAN AND PROFILE - LIBERTY AVE. DETOUR		
311	PLAN AND PROFILE - TEMPORARY CROSSOVER 1		
312	PLAN AND PROFILE - TEMPORARY CROSSOVER 2		
313 - 314	CULVERT DIAGRAMS		
315	SUMMARY OF TRAFFIC SIGNAL QJANTITIES		
316	TRAFFIC SIGNAL NOTES		
317	TRAFFIC SIGNAL STREET NAMES SIGNS		
318	GROUNDING ARRAY DETAILS		
319 - 322	SIGNALIZATION PLAN SHEET		
323	LAYOUT OF BRIDGE A, HWY 612. OVER. W. INTERCHANGE RAMP 4 (SHEET 1 OF 2)	A7612	66112
324	LAYOUT OF BRIDGE A, HWY 612. OVER. W. INTERCHANGE RAMP 4 (SHEET 2 OF 2)	A&B7612	66113
325	DETAILS OF END BENT 1 BRIDGE A (SHEET 1 OF 3)	A7612	66114
326	DETAILS OF END BENT 1 BRIDGE A (SHEET 2 OF 3)	A7612	66115
327	DETAILS OF END BENT 1 BRIDGE A (SHEET 3 OF 3)	A7612	66116
328	COMMON DETAILS OF END BENTS	A&B7612	66117
329	DETAILS OF BENT 2 BRIDGE A	A7612	66118
330	DETAILS OF BENT 3 BRIDGE A	A7612	66119
331	COMMON DETAILS OF BENTS 2 & 3	A&B7612	66120
332	DETAILS OF END BENT 4 BRIDGE A (SHEET 1 OF 3)	A7612	66121
333	DETAILS OF END BENT 4 BRIDGE A (SHEET 2 OF 3)	A7612	66122
334	DETAILS OF END BENT 4 BRIDGE A (SHEET 3 OF 3)	A7612	66123
335	DETAILS OF 302'-0" CONTINUOUS PLATE GIRDER UNIT BRIDGE A (SHEET 1 OF 5)	A7612	66124
336	DETAILS OF 302'-0" CONTINUOUS PLATE GIRDER UNIT BRIDGE A (SHEET 2 OF 5)	A7612	66125
337	DETAILS OF 302'-0" CONTINUOUS PLATE GIRDER UNIT BRIDGE A (SHEET 3 OF 5)	A7612	66126
338	DETAILS OF 302'-0" CONTINUOUS PLATE GIRDER UNIT BRIDGE A (SHEET 4 OF 5)	A7612	66127
339	DETAILS OF 302'-0" CONTINUOUS PLATE GIRDER UNIT BRIDGE A (SHEET 5 OF 5)	A7612	66128
340	COMMON DETAILS OF CONTINUOUS PLATE GIRDER UNITS	A&B7612	66129
341	DETAILS FOR MODIFIED BRIDGE TRAFFIC RAIL TYPE SSTR42	A&B7612	66130

STATE OF ARKANSAS
LICENSED PROFESSIONAL ENGINEER
No.13436
SHAUN A. ROBERSON

DIGITALLY SIGNED 10/02/2023

INDEX OF SHEETS - CONTINUED

SHEET NO.	TITLE	BRIDGE NO.	DRWG.NO.
342	LAYOUT OF BRIDGE B, HWY 612. OVER. W. INTERCHANGE RAMP 4	B7612	66131
343	DETAILS OF END BENT 1 BRIDGE B (SHEET 1 OF 3)	B7612	66132
344	DETAILS OF END BENT 1 BRIDGE B (SHEET 2 OF 3)	B7612	66133
345	DETAILS OF END BENT 1 BRIDGE B (SHEET 3 OF 3)	B7612	66134
346	DETAILS OF BENT 2 BRIDGE B	B7612	66135
347	DETAILS OF BENT 3 BRIDGE B	B7612	66136
348	DETAILS OF END BENT 4 BRIDGE B (SHEET 1 OF 3)	B7612	66137
349	DETAILS OF END BENT 4 BRIDGE B (SHEET 2 OF 3)	B7612	66138
350	DETAILS OF END BENT 4 BRIDGE B (SHEET 3 OF 3)	B7612	66139
351	DETAILS OF 288'-0" CONTINUOUS PLATE GIRDER UNIT BRIDGE B (SHEET 1 OF 5)	B7612	66140
352	DETAILS OF 288'-0" CONTINUOUS PLATE GIRDER UNIT BRIDGE B (SHEET 2 OF 5)	B7612	66141
353	DETAILS OF 288'-0" CONTINUOUS PLATE GIRDER UNIT BRIDGE B (SHEET 3 OF 5)	B7612	66142
354	DETAILS OF 288'-0" CONTINUOUS PLATE GIRDER UNIT BRIDGE B (SHEET 4 OF 5)	B7612	66143
355	DETAILS OF 288'-0" CONTINUOUS PLATE GIRDER UNIT BRIDGE B (SHEET 5 OF 5)	B7612	66144
356	DETAILS OF POURED SILICONE JOINT	A&B7612	66145
357	DETAILS OF ELASTOMERIC BEARINGS	A&B7612	66146
358	LAYOUT OF BRIDGE A, HWY. 612 OVER HWY. 68 (SHEET 1 OF 2)	A7613	66147
359	LAYOUT OF BRIDGE A, HWY. 612 OVER HWY. 68 (SHEET 2 OF 2)	A7613	66148
360	DETAILS OF END BENT 1 (SHEET 1 OF 3) BRIDGE A	A7613	66149
361	DETAILS OF END BENT 1 (SHEET 2 OF 3) BRIDGE A	A7613	66150
362	DETAILS OF END BENT 1 (SHEET 3 OF 3) BRIDGE A	A7613	66151
363	COMMON DETAILS OF END BENTS BRIDGE A	A7613	66152
364	DETAILS OF BENT 2 BRIDGE A	A7613	66153
365	DETAILS OF BENT 3 BRIDGE A	A7613	66154
366	COMMON DETAILS OF BENTS 2 & 3	A&B7613	66155
367	DETAILS OF END BENT 4 BRIDGE A (SHEET 1 OF 3)	A7613	66156
368	DETAILS OF END BENT 4 BRIDGE A (SHEET 2 OF 3)	A7613	66157
369	DETAILS OF END BENT 4 BRIDGE A (SHEET 3 OF 3)	A7613	66158
370	DETAILS OF 227'-0" CONTINUOUS W-BEAM UNIT BRIDGE A (SHEET 1 OF 4)	A7613	66159
371	DETAILS OF 227'-0" CONTINUOUS W-BEAM UNIT BRIDGE A (SHEET 2 OF 4)	A7613	66160
372	DETAILS OF 227'-0" CONTINUOUS W-BEAM UNIT BRIDGE A (SHEET 3 OF 4)	A7613	66161
373	DETAILS OF 227'-0" CONTINUOUS W-BEAM UNIT BRIDGE A (SHEET 4 OF 4)	A7613	66162
374	COMMON DETAILS OF CONTINUOUS COMPOSITE W-BEAM UNITS	A&B7613	66163
375	LAYOUT OF BRIDGE B, HWY 612. OVER HWY. 68	B7613	66164
376	DETAILS OF END BENT 1 BRIDGE B (SHEET 1 OF 3)	B7613	66165
377	DETAILS OF END BENT 1 BRIDGE B (SHEET 2 OF 3)	B7613	66166
378	DETAILS OF END BENT 1 BRIDGE B (SHEET 3 OF 3)	B7613	66167
379	COMMON DETAILS OF END BENTS BRIDGE B	B7613	66168
380	DETAILS OF BENT 2 BRIDGE B	B7613	66169
381	DETAILS OF BENT 3 BRIDGE B	B7613	66170
382	DETAILS OF END BENT 4 BRIDGE B (SHEET 1 OF 3)	B7613	66171
383	DETAILS OF END BENT 4 BRIDGE B (SHEET 2 OF 3)	B7613	66172
384	DETAILS OF END BENT 4 BRIDGE B (SHEET 3 OF 3)	B7613	66173
385	DETAILS OF 234'-0" CONTINUOUS W-BEAM UNIT BRIDGE B (SHEET 1 OF 4)	B7613	66174
386	DETAILS OF 234'-0" CONTINUOUS W-BEAM UNIT BRIDGE B (SHEET 2 OF 4)	B7613	66175
387	DETAILS OF 234'-0" CONTINUOUS W-BEAM UNIT BRIDGE B (SHEET 3 OF 4)	B7613	66176
388	DETAILS OF 234'-0" CONTINUOUS W-BEAM UNIT BRIDGE B (SHEET 4 OF 4)	B7613	66177
389	DETAILS OF POURED SILICONE JOINT	A&B7613	66178
390	DETAILS FOR MODIFIED BRIDGE TRAFFIC RAIL TYPE SSTR42	A&B7613	66179
391	DETAILS OF ELASTOMERIC BEARINGS	A&B7613	66180
392	LAYOUT OF BRIDGE COUNTY ROAD 904 (LIBERTY ROAD) OVER HIGHWAY 612 (SHEET 1 OF 3)	07614	66181
393	LAYOUT OF BRIDGE COUNTY ROAD 904 (LIBERTY ROAD) OVER HIGHWAY 612 (SHEET 2 OF 3)	07614	66182
394	LAYOUT OF BRIDGE COUNTY ROAD 904 (LIBERTY ROAD) OVER HIGHWAY 612 (SHEET 3 OF 3)	07614	66183
395	DETAILS OF END BENTS (SHEET 1 OF 5)	07614	66184
396	DETAILS OF END BENTS (SHEET 2 OF 5)	07614	66185
397	DETAILS OF END BENTS (SHEET 3 OF 5)	07614	66186
398	DETAILS OF END BENTS (SHEET 4 OF 5)	07614	66187
399	DETAILS OF END BENTS (SHEET 5 OF 5)	07614	66188
400	DETAILS OF INTERMEDIATE BENT (SHEET 1 OF 2)	07614	66189
401	DETAILS OF INTERMEDIATE BENT (SHEET 2 OF 2)	07614	66190
402	DETAILS OF ELASTOMERIC BEARINGS	07614	66191
403	DETAILS OF 212'-0" CONTINOUOS PLATE GIRDER UNIT (SHEET 1 OF 5)	07614	66192
404	DETAILS OF 212'-0" CONTINOUOS PLATE GIRDER UNIT (SHEET 2 OF 5)	07614	66193
405	DETAILS OF 212'-0" CONTINOUOS PLATE GIRDER UNIT (SHEET 3 OF 5)	07614	66194
406	DETAILS OF 212'-0" CONTINOUOS PLATE GIRDER UNIT (SHEET 4 OF 5)	07614	66195
407	DETAILS OF 212'-0" CONTINOUOS PLATE GIRDER UNIT (SHEET 5 OF 5)	07614	66196
408	LAYOUT OF BRIDGES HIGHWAY 612 OVER COUNTY ROAD 946 (JAVELLO ROAD) (SHEET 1 OF 3)	A7615	66197
409	LAYOUT OF BRIDGES HIGHWAY 612 OVER COUNTY ROAD 946 (JAVELLO ROAD) (SHEET 2 OF 3)	B7615	66198
410	LAYOUT OF BRIDGES HIGHWAY 612 OVER COUNTY ROAD 946 (JAVELLO ROAD) (SHEET 3 OF 3)	A&B7615	66199
411	DETAILS OF END BENTS (SHEET 1 OF 4)	A&B7615	66200
412	DETAILS OF END BENTS (SHEET 2 OF 4)	A&B7615	66201
413	DETAILS OF END BENTS (SHEET 3 OF 4)	A&B7615	66202
414	DETAILS OF END BENTS (SHEET 4 OF 4)	A&B7615	66203
415	DETAILS OF INTERMEDIATE BENTS (SHEET 1 OF 3)	A7615	66204
416	DETAILS OF INTERMEDIATE BENTS (SHEET 2 OF 3)	B7615	66205
417	DETAILS OF INTERMEDIATE BENTS (SHEET 3 OF 3)	A&B7615	66206
418	DETAILS OF ELASTOMERIC BEARINGS	A&B7615	66207
419	DETAILS OF 270'-0" CONTINUOUS PRESTRESSED CONCRETE GIRDER UNIT (SHEET 1 OF 9)	A&B7615	66208
420	DETAILS OF 270'-0" CONTINUOUS PRESTRESSED CONCRETE GIRDER UNIT (SHEET 2 OF 9)	A&B7615	66209
421	DETAILS OF 270'-0" CONTINUOUS PRESTRESSED CONCRETE GIRDER UNIT (SHEET 3 OF 9)	A&B7615	66210
422	DETAILS OF 270'-0" CONTINUOUS PRESTRESSED CONCRETE GIRDER UNIT (SHEET 4 OF 9)	A&B7615	66211
423	DETAILS OF 270'-0" CONTINUOUS PRESTRESSED CONCRETE GIRDER UNIT (SHEET 5 OF 9)	A&B7615	66212
424	DETAILS OF 270'-0" CONTINUOUS PRESTRESSED CONCRETE GIRDER UNIT (SHEET 6 OF 9)	A&B7615	66213
425	DETAILS OF 270'-0" CONTINUOUS PRESTRESSED CONCRETE GIRDER UNIT (SHEET 7 OF 9)	A&B7615	66214
426	DETAILS OF 270'-0" CONTINUOUS PRESTRESSED CONCRETE GIRDER UNIT (SHEET 8 OF 9)	A&B7615	66215
427	DETAILS OF 270'-0" CONTINUOUS PRESTRESSED CONCRETE GIRDER UNIT (SHEET 9 OF 9)	A&B7615	66216

HBVinson 10/2/2023 1:42:18 PM
WORKSPACE: AHTD
L:\20\T\T01T660 - ARDOT 012326 Hwy 412 - Hwy 112\Drawings\r012326_IDX_OLDGN
REVISED DATE:

DATE REVISED	DATE REVISED	FED. RD. DIST. NO.	STATE	JOB NO.	SHEET NO.	TOTAL SHEETS
		6	ARK.	012326	4	838
		INDEX OF SHEETS				
2						

STATE OF ARKANSAS
LICENSED PROFESSIONAL ENGINEER
No.13436
SHAUN A. ROBERSON

DIGITALLY SIGNED 7/28/2023

INDEX OF SHEETS - CONTINUED

SHEET NO.	TITLE	BRIDGE NO.	DRWG.NO.
428	LAYOUT OF BRIDGES HIGHWAY 612 OVER BRUSH CREEK (SHEET 1 OF 8)	A7616	66217
429	LAYOUT OF BRIDGES HIGHWAY 612 OVER BRUSH CREEK (SHEET 2 OF 8)	A7616	66218
430	LAYOUT OF BRIDGES HIGHWAY 612 OVER BRUSH CREEK (SHEET 3 OF 8)	A7616	66219
431	LAYOUT OF BRIDGES HIGHWAY 612 OVER BRUSH CREEK (SHEET 4 OF 8)	B7616	66220
432	LAYOUT OF BRIDGES HIGHWAY 612 OVER BRUSH CREEK (SHEET 5 OF 8)	B7616	66221
433	LAYOUT OF BRIDGES HIGHWAY 612 OVER BRUSH CREEK (SHEET 6 OF 8)	B7616	66222
434	LAYOUT OF BRIDGES HIGHWAY 612 OVER BRUSH CREEK (SHEET 7 OF 8)	A&B7616	66223
435	LAYOUT OF BRIDGES HIGHWAY 612 OVER BRUSH CREEK (SHEET 8 OF 8)	A&B7616	66224
436	DETAILS OF END BENTS (SHEET 1 OF 4)	A&B7616	66225
437	DETAILS OF END BENTS (SHEET 2 OF 4)	A&B7616	66226
438	DETAILS OF END BENTS (SHEET 3 OF 4)	A&B7616	66227
439	DETAILS OF END BENTS (SHEET 4 OF 4)	A&B7616	66228
440	DETAILS OF INTERMEDIATE BENTS (SHEET 1 OF 3)	A7616	66229
441	DETAILS OF INTERMEDIATE BENTS (SHEET 2 OF 3)	B7616	66230
442	DETAILS OF INTERMEDIATE BENTS (SHEET 3 OF 3)	A&B7616	66231
443	DETAILS OF ELASTOMERIC BEARINGS (SHEET 1 OF 2)	A&B7616	66232
444	DETAILS OF ELASTOMERIC BEARINGS (SHEET 2 OF 2)	A&B7616	66233
445	DETAILS OF 240'-0" CONTINUOUS PRESTRESSED CONCRETE GIRDER UNIT (SHEET 1 OF 6)	A&B7616	66234
446	DETAILS OF 240'-0" CONTINUOUS PRESTRESSED CONCRETE GIRDER UNIT (SHEET 2 OF 6)	A&B7616	66235
447	DETAILS OF 240'-0" CONTINUOUS PRESTRESSED CONCRETE GIRDER UNIT (SHEET 3 OF 6)	A&B7616	66236
448	DETAILS OF 240'-0" CONTINUOUS PRESTRESSED CONCRETE GIRDER UNIT (SHEET 4 OF 6)	A&B7616	66237
449	DETAILS OF 240'-0" CONTINUOUS PRESTRESSED CONCRETE GIRDER UNIT (SHEET 5 OF 6)	A&B7616	66238
450	DETAILS OF 240'-0" CONTINUOUS PRESTRESSED CONCRETE GIRDER UNIT (SHEET 6 OF 6)	A&B7616	66239
451	DETAILS OF 245'-0" CONTINUOUS PRESTRESSED CONCRETE GIRDER UNIT (SHEET 1 OF 7)	A&B7616	66240
452	DETAILS OF 245'-0" CONTINUOUS PRESTRESSED CONCRETE GIRDER UNIT (SHEET 2 OF 7)	A&B7616	66241
453	DETAILS OF 245'-0" CONTINUOUS PRESTRESSED CONCRETE GIRDER UNIT (SHEET 3 OF 7)	A&B7616	66242
454	DETAILS OF 245'-0" CONTINUOUS PRESTRESSED CONCRETE GIRDER UNIT (SHEET 4 OF 7)	A&B7616	66243
455	DETAILS OF 245'-0" CONTINUOUS PRESTRESSED CONCRETE GIRDER UNIT (SHEET 5 OF 7)	A&B7616	66244
456	DETAILS OF 245'-0" CONTINUOUS PRESTRESSED CONCRETE GIRDER UNIT (SHEET 6 OF 7)	A&B7616	66245
457	DETAILS OF 245'-0" CONTINUOUS PRESTRESSED CONCRETE GIRDER UNIT (SHEET 7 OF 7)	A&B7616	66246
458	COMMON SUPERSTRUCTURE DETAILS (SHEET 1 OF 2)	A&B7616	66247
459	COMMON SUPERSTRUCTURE DETAILS (SHEET 2 OF 2)	A&B7616	66248
460	LAYOUT OF BRIDGES HIGHWAY 612 OVER MARCHANT ROAD (SHEET 1 OF 5)	A7617	66249
461	LAYOUT OF BRIDGES HIGHWAY 612 OVER MARCHANT ROAD (SHEET 2 OF 5)	B7617	66250
462	LAYOUT OF BRIDGES HIGHWAY 612 OVER MARCHANT ROAD (SHEET 3 OF 5)	A&B7617	66251
463	LAYOUT OF BRIDGES HIGHWAY 612 OVER MARCHANT ROAD (SHEET 4 OF 5)	A&B7617	66252
464	LAYOUT OF BRIDGES HIGHWAY 612 OVER MARCHANT ROAD (SHEET 5 OF 5)	A&B7617	66253
465	DETAILS OF END BENTS (SHEET 1 OF 6)	A7617	66254
466	DETAILS OF END BENTS (SHEET 2 OF 6)	A7617	66255
467	DETAILS OF END BENTS (SHEET 3 OF 6)	B7617	66256
468	DETAILS OF END BENTS (SHEET 4 OF 6)	B7617	66257
469	DETAILS OF END BENTS (SHEET 5 OF 6)	A&B7617	66258
470	DETAILS OF END BENTS (SHEET 6 OF 6)	A&B7617	66259
471	DETAILS OF INTERMEDIATE BENTS (SHEET 1 OF 3)	A7617	66260
472	DETAILS OF INTERMEDIATE BENTS (SHEET 2 OF 3)	B7617	66261
473	DETAILS OF INTERMEDIATE BENTS (SHEET 3 OF 3)	A&B7617	66262
474	DETAILS OF ELASTOMERIC BEARINGS	A&B7617	66263
475	DETAILS OF 215'-0" CONTINUOUS PRESTRESSED CONCRETE GIRDER UNIT BRIDGE A (SHEET 1 OF 6)	A7617	66264
476	DETAILS OF 215'-0" CONTINUOUS PRESTRESSED CONCRETE GIRDER UNIT BRIDGE A (SHEET 2 OF 6)	A7617	66265
477	DETAILS OF 215'-0" CONTINUOUS PRESTRESSED CONCRETE GIRDER UNIT BRIDGE A (SHEET 3 OF 6)	A7617	66266
478	DETAILS OF 215'-0" CONTINUOUS PRESTRESSED CONCRETE GIRDER UNIT BRIDGE A (SHEET 4 OF 6)	A7617	66267
479	DETAILS OF 215'-0" CONTINUOUS PRESTRESSED CONCRETE GIRDER UNIT BRIDGE A (SHEET 5 OF 6)	A7617	66268
480	DETAILS OF 215'-0" CONTINUOUS PRESTRESSED CONCRETE GIRDER UNIT BRIDGE A (SHEET 6 OF 6)	A7617	66269
481	DETAILS OF 215'-0" CONTINUOUS PRESTRESSED CONCRETE GIRDER UNIT BRIDGE B (SHEET 1 OF 6)	B7617	66270
482	DETAILS OF 215'-0" CONTINUOUS PRESTRESSED CONCRETE GIRDER UNIT BRIDGE B (SHEET 2 OF 6)	B7617	66271
483	DETAILS OF 215'-0" CONTINUOUS PRESTRESSED CONCRETE GIRDER UNIT BRIDGE B (SHEET 3 OF 6)	B7617	66272
484	DETAILS OF 215'-0" CONTINUOUS PRESTRESSED CONCRETE GIRDER UNIT BRIDGE B (SHEET 4 OF 6)	B7617	66273
485	DETAILS OF 215'-0" CONTINUOUS PRESTRESSED CONCRETE GIRDER UNIT BRIDGE B (SHEET 5 OF 6)	B7617	66274
486	DETAILS OF 215'-0" CONTINUOUS PRESTRESSED CONCRETE GIRDER UNIT BRIDGE B (SHEET 6 OF 6)	B7617	66275
487	COMMON SUPERSTRUCTURE DETAILS (SHEET 1 OF 3)	A&B7617	66276
488	COMMON SUPERSTRUCTURE DETAILS (SHEET 2 OF 3)	A&B7617	66277
489	COMMON SUPERSTRUCTURE DETAILS (SHEET 3 OF 3)	A&B7617	66278
490	LAYOUT OF BRIDGE XNA ACCESS RD. RAMP 2 OVER HWY. 612 (SHEET 1 OF 2)	07618	66279
491	LAYOUT OF BRIDGE XNA ACCESS RD. RAMP 2 OVER HWY. 612 (SHEET 2 OF 2)	07618	66280
492	DETAILS OF END BENTS (SHEET 1 OF 4)	07618	66281
493	DETAILS OF END BENTS (SHEET 2 OF 4)	07618	66282
494	DETAILS OF END BENTS (SHEET 3 OF 4)	07618	66283
495	DETAILS OF END BENTS (SHEET 4 OF 4)	07618	66284
496	DETAILS OF INTERMEDIATE BENT (SHEET 1 OF 2)	07618	66285
497	DETAILS OF INTERMEDIATE BENT (SHEET 2 OF 2)	07618	66286
498	DETAILS OF ELASTOMERIC BEARINGS	07618 & 07619	66287
499	DETAILS OF 219'-0" CONTINUOUS PLATE GIRDER UNIT (SHEET 1 OF 4)	07618	66288
500	DETAILS OF 219'-0" CONTINUOUS PLATE GIRDER UNIT (SHEET 2 OF 4)	07618	66289
501	DETAILS OF 219'-0" CONTINUOUS PLATE GIRDER UNIT (SHEET 3 OF 4)	07618	66290
502	DETAILS OF 219'-0" CONTINUOUS PLATE GIRDER UNIT (SHEET 4 OF 4)	07618	66291
503	LAYOUT OF BRIDGE XNA ACCESS RD. RAMP 1 OVER HWY. 612 (SHEET 1 OF 2)	07619	66292
504	LAYOUT OF BRIDGE XNA ACCESS RD. RAMP 1 OVER HWY. 612 (SHEET 2 OF 2)	07619	66293
505	DETAILS OF END BENTS (SHEET 1 OF 3)	07619	66294
506	DETAILS OF END BENTS (SHEET 2 OF 3)	07619	66295
507	DETAILS OF END BENTS (SHEET 3 OF 3)	07619	66296
508	DETAILS OF INTERMEDIATE BENT (SHEET 1 OF 2)	07619	66297
509	DETAILS OF INTERMEDIATE BENT (SHEET 2 OF 2)	07619	66298
510	DETAILS OF 210'-0" CONTINUOUS PLATE GIRDER UNIT (SHEET 1 OF 5)	07619	66299
511	DETAILS OF 210'-0" CONTINUOUS PLATE GIRDER UNIT (SHEET 2 OF 5)	07619	66300
512	DETAILS OF 210'-0" CONTINUOUS PLATE GIRDER UNIT (SHEET 3 OF 5)	07619	66301
513	DETAILS OF 210'-0" CONTINUOUS PLATE GIRDER UNIT (SHEET 4 OF 5)	07619	66302
514	DETAILS OF 210'-0" CONTINUOUS PLATE GIRDER UNIT (SHEET 5 OF 5)	07619	66303

INDEX OF SHEETS - CONTINUED

SHEET NO.	TITLE	BRIDGE NO.	DRWG.NO.
515	LAYOUT OF BRIDGES U.S. HIGHWAY 412 OVER ROBBINS ROAD (SHEET 1 OF 5)	A7620	66304
516	LAYOUT OF BRIDGES U.S. HIGHWAY 412 OVER ROBBINS ROAD (SHEET 2 OF 5)	B7620	66305
517	LAYOUT OF BRIDGES U.S. HIGHWAY 412 OVER ROBBINS ROAD (SHEET 3 OF 5)	A&B7620	66306
518	LAYOUT OF BRIDGES U.S. HIGHWAY 412 OVER ROBBINS ROAD (SHEET 4 OF 5)	A&B7620	66307
519	LAYOUT OF BRIDGES U.S. HIGHWAY 412 OVER ROBBINS ROAD (SHEET 5 OF 5)	A&B7620	66308
520	DETAILS OF END BENTS (SHEET 1 OF 6)	A7620	66309
521	DETAILS OF END BENTS (SHEET 2 OF 6)	A7620	66310
522	DETAILS OF END BENTS (SHEET 3 OF 6)	B7620	66311
523	DETAILS OF END BENTS (SHEET 4 OF 6)	B7620	66312
524	DETAILS OF END BENTS (SHEET 5 OF 6)	A&B7620	66313
525	DETAILS OF END BENTS (SHEET 6 OF 6)	A&B7620	66314
526	DETAILS OF INTERMEDIATE BENTS (SHEET 1 OF 3)	A7620	66315
527	DETAILS OF INTERMEDIATE BENTS (SHEET 2 OF 3)	B7620	66316
528	DETAILS OF INTERMEDIATE BENTS (SHEET 3 OF 3)	A&B7620	66317
529	DETAILS OF ELASTOMERIC BEARINGS	A&B7620	66318
530	DETAILS OF 215'-0" CONTINUOUS PRESTRESSED CONCRETE GIRDER UNIT BRIDGE A (SHEET 1 OF 6)	A7620	66319
531	DETAILS OF 215'-0" CONTINUOUS PRESTRESSED CONCRETE GIRDER UNIT BRIDGE A (SHEET 2 OF 6)	A7620	66320
532	DETAILS OF 215'-0" CONTINUOUS PRESTRESSED CONCRETE GIRDER UNIT BRIDGE A (SHEET 3 OF 6)	A7620	66321
533	DETAILS OF 215'-0" CONTINUOUS PRESTRESSED CONCRETE GIRDER UNIT BRIDGE A (SHEET 4 OF 6)	A7620	66322
534	DETAILS OF 215'-0" CONTINUOUS PRESTRESSED CONCRETE GIRDER UNIT BRIDGE A (SHEET 5 OF 6)	A7620	66323
535	DETAILS OF 215'-0" CONTINUOUS PRESTRESSED CONCRETE GIRDER UNIT BRIDGE A (SHEET 6 OF 6)	A7620	66324
536	DETAILS OF 215'-0" CONTINUOUS PRESTRESSED CONCRETE GIRDER UNIT BRIDGE B (SHEET 1 OF 6)	B7620	66325
537	DETAILS OF 215'-0" CONTINUOUS PRESTRESSED CONCRETE GIRDER UNIT BRIDGE B (SHEET 2 OF 6)	B7620	66326
538	DETAILS OF 215'-0" CONTINUOUS PRESTRESSED CONCRETE GIRDER UNIT BRIDGE B (SHEET 3 OF 6)	B7620	66327
539	DETAILS OF 215'-0" CONTINUOUS PRESTRESSED CONCRETE GIRDER UNIT BRIDGE B (SHEET 4 OF 6)	B7620	66328
540	DETAILS OF 215'-0" CONTINUOUS PRESTRESSED CONCRETE GIRDER UNIT BRIDGE B (SHEET 5 OF 6)	B7620	66329
541	DETAILS OF 215'-0" CONTINUOUS PRESTRESSED CONCRETE GIRDER UNIT BRIDGE B (SHEET 6 OF 6)	B7620	66330
542	COMMON SUPERSTRUCTURE DETAILS (SHEET 1 OF 3)	A&B7620	66331
543	COMMON SUPERSTRUCTURE DETAILS (SHEET 2 OF 3)	A&B7620	66332
544	COMMON SUPERSTRUCTURE DETAILS (SHEET 3 OF 3)	A&B7620	66333
545	SUPPLEMENTAL DETAILS OF CONCRETE RIPRAP	A7612,07614,07618,07619	66334
546	DETAILS OF TYPE SPECIAL APPROACH SLABS	A&B7612,A&B7613,07614,A&B7615A&B7616,A&B7617,07618,07619,A&B7620	66334A
547	DETAILS OF RETAINING WALL NO. 1	A7614	66335
548	DETAILS OF RETAINING WALL NOS. 2 & 3 (SHEET 1 OF 2)	07614	66336
549	DETAILS OF RETAINING WALL NOS. 2 & 3 (SHEET 2 OF 2)	07614	66337
550	DETAILS OF RETAINING WALL NOS. 4-7 (SHEET 1 OF 4)	07618	66338
551	DETAILS OF RETAINING WALL NOS. 4-7 (SHEET 2 OF 4)	07618	66339
552	DETAILS OF RETAINING WALL NOS. 4-7 (SHEET 3 OF 4)	07619	66340
553	DETAILS OF RETAINING WALL NOS. 4-7 (SHEET 4 OF 4)	07619	66341
554	COMMON DETAILS OF RETAINING WALLS (SHEET 1 OF 3)	A7612, 07614, 07618, 07619	66342
555	COMMON DETAILS OF RETAINING WALLS (SHEET 2 OF 3)	A7612, 07614, 07618, 07619	66343
556	COMMON DETAILS OF RETAINING WALLS (SHEET 3 OF 3)	A7612, 07614, 07618, 07619	66344
557	DETAILS OF 86' TO 100' STEEL OVERHEAD SIGN STRUCTURE (SHEET 1 OF 6)	OH-412-72-002, OH-612-72-001	66345
558	DETAILS OF 86' TO 100' STEEL OVERHEAD SIGN STRUCTURE (SHEET 2 OF 6)	OH-412-72-002, OH-612-72-002	66346
559	DETAILS OF 86' TO 100' STEEL OVERHEAD SIGN STRUCTURE (SHEET 3 OF 6)	OH-412-72-002, OH-612-72-003	66347
560	DETAILS OF 86' TO 100' STEEL OVERHEAD SIGN STRUCTURE (SHEET 4 OF 6)	OH-412-72-002, OH-612-72-004	66348
561	DETAILS OF 86' TO 100' STEEL OVERHEAD SIGN STRUCTURE (SHEET 5 OF 6)	OH-412-72-002, OH-612-72-005	66349
562	DETAILS OF 86' TO 100' STEEL OVERHEAD SIGN STRUCTURE (SHEET 6 OF 6)	OH-412-72-002, OH-612-72-006	66350
563	DETAILS OF 35' STEEL CANTILEVER SIGN STRUCTURE (SHEET 1 OF 6)	OC-612-04-002, OC-612-04-003, OC-612-04-004	66351
564	DETAILS OF 35' STEEL CANTILEVER SIGN STRUCTURE (SHEET 2 OF 6)	OC-612-04-002, OC-612-04-003, OC-612-04-005	66352
565	DETAILS OF 35' STEEL CANTILEVER SIGN STRUCTURE (SHEET 3 OF 6)	OC-612-04-002, OC-612-04-003, OC-612-04-006	66353
566	DETAILS OF 35' STEEL CANTILEVER SIGN STRUCTURE (SHEET 4 OF 6)	OC-612-04-002, OC-612-04-003, OC-612-04-007	66354
567	DETAILS OF 35' STEEL CANTILEVER SIGN STRUCTURE (SHEET 5 OF 6)	OC-612-04-002, OC-612-04-003, OC-612-04-008	66355
568	DETAILS OF 35' STEEL CANTILEVER SIGN STRUCTURE (SHEET 6 OF 6)	OC-612-04-002, OC-612-04-003, OC-612-04-009	66356
569	DETAILS OF STEEL TEE MOUNT SIGN STRUCTURE (SHEET 1 OF 5)	TM-412-72-001, TM-612-04-005	66357
570	DETAILS OF STEEL TEE MOUNT SIGN STRUCTURE (SHEET 2 OF 5)	TM-412-72-001, TM-612-04-006	66358
571	DETAILS OF STEEL TEE MOUNT SIGN STRUCTURE (SHEET 3 OF 5)	TM-412-72-001, TM-612-04-007	66359
572	DETAILS OF STEEL TEE MOUNT SIGN STRUCTURE (SHEET 4 OF 5)	TM-412-72-001, TM-612-04-008	66360
573	DETAILS OF STEEL TEE MOUNT SIGN STRUCTURE (SHEET 5 OF 5)	TM-412-72-001, TM-612-04-009	66361
574 - 838	CROSS SECTIONS		

NOTE: CROSS SECTIONS NOT NORMALLY INCLUDED IN PLANS SOLD TO PROSPECTIVE BIDDERS, BUT MAY BE HAD UPON REQUEST.

WBCallaway 7/28/2023 9:09:06 AM
WORKSPACE: AHTD
L:\201\701\7660 - ARDOT 012326 Hwy 412 - Hwy 112\Drawings\r012326_IDX_OLDDN
REVISED DATE:

DATE REVISED	DATE REVISED	FED. RD. DIST. NO.	STATE	JOB NO.	SHEET NO.	TOTAL SHEETS
		6	ARK.	012326	5	838
		STANDARD DRAWINGS				
2						



DIGITALLY SIGNED 8/10/2023

BRIDGE STANDARD DRAWINGS

DRWG.NO.	TITLE	DATE
55001	STANDARD DETAILS FOR DUMPED RIPRAP AND FILTER BLANKET AND COMPUTING EXCAVATION FOR STRUCTURES	02-27-14
55002	STANDARD DETAILS FOR CONCRETE RIPRAP	02-27-14
55005	STANDARD DETAILS FOR PERMANENT STEEL BRIDGE DECK FORMS FOR STEEL & CONCRETE GIRDER SPANS	03-24-16
55006	STANDARD GENERAL NOTES FOR STEEL BRIDGE STRUCTURES	09-02-15
55007	STANDARD DETAILS FOR STEEL BRIDGE STRUCTURES	02-11-16
55008	STANDARD DETAILS FOR POURED SILICONE JOINTS	02-11-16
55009	STANDARD DETAILS FOR NEOPRENE STRIP SEAL JOINTS	02-11-16
55010	STANDARD DETAILS FOR TYPE D BRIDGE NAME PLATE	04-14-23
55020	STANDARD DETAILS FOR STEEL H-PILES AND PILE ENCASEMENTS	03-24-16
55040C1	STANDARD DETAILS FOR TYPE C1 APPROACH SLAB	02-27-14
55030F	STANDARD DETAILS FOR TYPE F APPROACH GUTTERS	04-08-21
55070	STANDARD DETAILS FOR BRIDGE TRAFFIC RAIL TYPE SSTR36	09-27-22
55071	STANDARD DETAILS FOR BRIDGE TRAFFIC RAIL TYPE SSTR42	07-06-22

ROADWAY STANDARD DRAWINGS

DRWG.NO.	TITLE	DATE
CDP-1	CONCRETE DITCH PAVING	12-08-16
CPTJ-6A	TRANSVERSE & LONGITUDINAL JOINTS FOR CONCRETE PAVEMENT (NON-REINFORCED)	11-07-19
DR-1	DETAILS OF DRIVEWAYS & ISLANDS	05-19-22
DR-2	DETAILS OF DRIVEWAYS & STREET TURNOUTS	05-19-22
FES-1	FLARED END SECTION	10-18-96
FES-2	FLARED END SECTION	10-18-96
FPC-9	DETAILS OF DROP INLETS & JUNCTION BOXES	11-16-01
FPC-9D	DETAILS OF DROP INLETS	08-22-02
FPC-9N	DETAILS OF DROP INLETS AND SPILLWAY OUTLET	07-02-98
GR-5	GUARDRAIL DETAILS (TYPE C) STREET/ROAD BARRICADE CR TEMPORARY INSTALLLATION	11-07-19
GR-6	GUARDRAIL DETAILS	05-19-22
GR-7	GUARDRAIL DETAILS	11-07-19
GR-8	GUARDRAIL DETAILS	11-07-19
GR-9	GUARDRAIL DETAILS	11-07-19
GR-10	GUARDRAIL DETAILS	11-07-19
GR-11	GUARDRAIL DETAILS	11-07-19
GR-12	GUARDRAIL DETAILS	05-14-20
GRT-1	GUARDRAIL DETAILS	11-07-19
MB-1	MAILBOX DETAILS	11-18-04
PBC-1	PRECAST CONCRETE BOX CULVERTS	01-28-15
PCC-1	CONCRETE PIPE CULVERT FILL HEIGHTS & BEDDING	02-27-14
PCM-1	METAL PIPE CULVERT FILL HEIGHTS & BEDDING	02-27-14
PCP-1	PLASTIC PIPE CULVERT (HIGH DENSITY POLYETHYLENE)	02-27-14
PCP-2	PLASTIC PIPE CULVERT (PVC F949)	02-27-14
PCP-3	PLASTIC PIPE CULVERT (POLYPROPYLENE)	02-27-20
PM-1	PAVEMENT MARKING DETAILS	02-27-20
PM-2	PERMANENT PAVEMENT MARKING ON ACCESS CONTROLLED ROADWAYS	05-14-20
PU-1	DETAILS OF PIPE UNDERDRAIN	12-08-16
RCB-1	REINFORCED CONCRETE BOX CULVERT DETAILS	07-26-12
RCB-2	EXCAVATION PAY LIMITS, BACKFILL, & SOLID SODDING FOR BOX CULVERTS	11-20-03
SD-4	LOOP DETECTOR INSTALLATION	11-07-19
SD-5	CONTROLLER CABINET UTILITY DRAWER	09-12-13
SD-6	HEAVY DUTY PULL BOX	11-16-17
SD-8	SIGNAL HEAD PLACEMENT	12-08-16
SD-9	SERVICE POINT	11-07-19
SD-11	STEEL POLE WITH MAST ARM	11-16-17
SD-12	SERVICE POINT INSTALLATION WITH SUPPLEMENTAL GROUNDING ARRAY	11-07-19
SE-1	TABLES AND METHOD OF SUPERELEVATION FOR ONE-WAY TRAFFIC	11-07-19
SE-2	TABLES AND METHOD OF SUPERELEVATION FOR TWO-WAY TRAFFIC	11-07-19
SHS-1	STANDARD HIGHWAY SIGNS AND SUPPORT ASSEMBLIES	09-12-13
SHS-2	U-CHANNEL POST ASSEMBLIES	07-25-19
SHS-3	DETAIL OF BREAKAWAY SIGN SUPPORTS FOR GUIDE SIGNS	05-19-22
SHS-4	DETAIL OF BREAKAWAY SIGN SUPPORTS FOR STANDARD SIGNS	09-12-13
SHS-5	DETAILS OF GUIDE SIGN PANELS	09-12-13
SHS-6	MOUNTING DETAILS FOR DEMOUNTABLE LEGEND ON GUIDE SIGNS	09-12-13
SHS-7	DETAIL OF OMNI-DIRECTIONAL BREAKAWAY SIGN SUPPORTS	09-12-13
SHS-8	TYPICAL EXIT RAMP SIGN AND DELINEATOR DETAILS	11-16-17
SI-1	DETAILS OF SPECIAL ITEMS	10-25-18
TC-1	STANDARD TRAFFIC CONTROLS FOR HIGHWAY CONSTRUCTION	11-07-19
TC-2	STANDARD TRAFFIC CONTROLS FOR HIGHWAY CONSTRUCTION	05-20-21
TC-3	STANDARD TRAFFIC CONTROLS FOR HIGHWAY CONSTRUCTION	08-12-21
TC-4	STANDARD TRAFFIC CONTROLS FOR HIGHWAY CONSTRUCTION-TEMPORARY PRECAST BARRIER	11-07-19
TC-5	STANDARD TRAFFIC CONTROLS FOR HIGHWAY CONSTRUCTION-TEMPORARY PRECAST BARRIER	11-07-19
TEC-1	TEMPORARY EROSION CONTROL DEVICES	11-16-17
TEC-2	TEMPORARY EROSION CONTROL DEVICES	06-02-94
TEC-3	TEMPORARY EROSION CONTROL DEVICES	11-03-94
TEC-4	TEMPORARY EROSION CONTROL DEVICES	07-26-12
TR-1A	DETAILS OF STANDARD TURNOUT FOR ENTRANCE & EXIT RAMPS (NON-REINFORCED)	08-22-02
WF-2	WIRE FENCE WATER GAPS	04-20-79
WF-4	WIRE FENCE TYPE C AND D	08-22-02

JATurner 8/10/2023 14:42:27 PM
WORKSPACE: AHTD
L:\2017\70176660 - ARDOT 012326 Hwy 412 - Hwy 112\Drawings\r012326_IDX.DLDGN
REVISED DATE:

DATE REVISED	DATE REVISED	FED. RD. DIST. NO.	STATE	JOB NO.	SHEET NO.	TOTAL SHEETS
10-02-2023	10-30-2023	6	ARK.	012326	6	838
10-23-2023		GOVERNING SPECIFICATIONS AND GENERAL NOTES				
2 10-26-2023						

STATE OF ARKANSAS
LICENSED PROFESSIONAL ENGINEER
No. 13436
SHAUN A. ROBERSON

DIGITALLY SIGNED 10/30/2023

GOVERNING SPECIFICATIONS

ARKANSAS STATE HIGHWAY COMMISSION STANDARD SPECIFICATIONS FOR HIGHWAY CONSTRUCTION, EDITION OF 2014, AND THE FOLLOWING SPECIAL PROVISIONS AND SUPPLEMENTAL SPECIFICATIONS:

NUMBER	TITLE
ERRATA_____	ERRATA FOR THE BOOK OF STANDARD SPECIFICATIONS
FHWA-1273__	REQUIRED CONTRACT PROVISIONS FEDERAL-AID CONSTRUCTION CONTRACTS
FHWA-1273__	SUPPLEMENT - EQUAL EMPLOYMENT OPPORTUNITY - NOTICE TO CONTRACTORS
FHWA-1273__	SUPPLEMENT - SPECIFIC EQUAL EMPLOYMENT OPPORTUNITY RESPONSIBILITIES (23 U.S.C. 140)
FHWA-1273__	SUPPLEMENT - EQUAL EMPLOYMENT OPPORTUNITY - GOALS AND TIMETABLES
FHWA-1273__	SUPPLEMENT - EQUAL EMPLOYMENT OPPORTUNITY - FEDERAL STANDARDS
FHWA-1273__	SUPPLEMENT - TRAINING PROGRAM - JOB 012326
FHWA-1273__	SUPPLEMENT - POSTERS AND NOTICES REQUIRED FOR FEDERAL-AID PROJECTS
FHWA-1273__	SUPPLEMENT - WAGE RATE DETERMINATION
100-3_____	CONTRACTOR'S LICENSE
100-4_____	DEPARTMENT NAME CHANGE
102-2_____	ISSUANCE OF PROPOSALS
105-4_____	MAINTENANCE DURING CONSTRUCTION
107-2_____	RESTRAINING CONDITIONS
108-1_____	LIQUIDATED DAMAGES
108-2_____	WORK ALLOWED PRIOR TO ISSUANCE OF WORK ORDER
110-1_____	PROTECTION OF WATER QUALITY AND WETLANDS
210-1_____	UNCLASSIFIED EXCAVATION
303-1_____	AGGREGATE BASE COURSE
306-1_____	QUALITY CONTROL AND ACCEPTANCE
307-1_____	CEMENT
308-1_____	CEMENT
400-1_____	TACK COATS
400-4_____	DESIGN AND QUALITY CONTROL OF ASPHALT MIXTURES
400-5_____	PERCENT AIR VOIDS FOR ACHM MIX DESIGNS
400-6_____	LIQUID ANTI-STRIP ADDITIVE
400-7_____	TRACKLESS TACK
404-3_____	DESIGN OF ASPHALT MIXTURES
409-2_____	ASPHALT LABORATORY FACILITY
410-1_____	CONSTRUCTION REQUIREMENTS AND ACCEPTANCE OF ASPHALT CONCRETE PLANT MIX COURSES
410-2_____	DEVICES FOR MEASURING DENSITY FOR ROLLING PATTERNS
410-4_____	EVALUATION OF ACHM SUBLOT REPLACEMENT MATERIAL
416-1_____	RECYCLED ASPHALT PAVEMENT
501-2_____	CEMENT
600-2_____	INCIDENTAL CONSTRUCTION
603-1_____	LANE CLOSURE NOTIFICATION
604-1_____	RETROREFLECTIVE SHEETING FOR TRAFFIC CONTROL DEVICES IN CONSTRUCTION ZONES
604-3_____	TRAFFIC CONTROL DEVICES IN CONSTRUCTION ZONES (MASH)
605-1_____	CONCRETE DITCH PAVING
606-1_____	PIPE CULVERTS FOR SIDE DRAINS
617-1_____	GUARDRAIL TERMINAL (TYPE 2)
617-2_____	GUARDRAIL DELINEATORS
620-1_____	MULCH COVER
632-1_____	CONCRETE ISLAND
700-2_____	TRAFFIC CONTROL FACILITIES
723-1_____	GENERAL REQUIREMENTS FOR SIGNS
730-1_____	BREAKAWAY SIGN SUPPORT
800-1_____	STRUCTURES
802-3_____	CONCRETE FOR STRUCTURES
802-4_____	CEMENT
804-2_____	REINFORCING STEEL FOR STRUCTURES
807-2_____	STEEL STRUCTURES
808-1_____	INSTALLATION OF ELASTOMERIC BEARINGS
808-2_____	ELASTOMERIC BEARINGS
JOB 012326__	ACTUATED CONTROLLER
JOB 012326__	BIDDING REQUIREMENTS AND CONDITIONS
JOB 012326__	BROADBAND INTERNET SERVICE FOR ASPHALT CONCRETE PLANT
JOB 012326__	BROADBAND INTERNET SERVICE FOR FIELD OFFICE
JOB 012326__	BUY AMERICA - CONSTRUCTION MATERIALS
JOB 012326__	CABINET DRAWER ASSEMBLY
JOB 012326__	CARGO PREFERENCE ACT REQUIREMENTS
JOB 012326__	CAVE DISCOVERY
JOB 012326__	CEMENT STABILIZED CRUSHED STONE BASE COURSE
JOB 012326__	CLASS C FLY ASH IN PORTLAND CEMENT CONCRETE PAVEMENT AND CLASS S(AE) CONCRETE
JOB 012326__	COLD MILLING -- COUNTY PROPERTY
JOB 012326__	CONCRETE BRIDGE DECK CURING AND SURFACE TREATMENT RESTRICTIONS
JOB 012326__	CONCRETE DITCH PAVING
JOB 012326__	CONSTRUCTION DELAY DUE TO ARCHEOLOGICAL MITIGATION
JOB 012326__	CONSTRUCTION IN SPECIAL FLOOD HAZARD AREAS
JOB 012326__	CONSTRUCTION PROJECT INFORMATION SIGN
JOB 012326__	CONTACT INFORMATION FOR MOTORIST DAMAGE CLAIMS
JOB 012326__	CONTRACTOR PROVIDED CULTURAL RESOURCES CLEARANCE FOR OFF-SITE LOCATIONS
JOB 012326__	CONTRA-COSTA ENERGY DISSIPATOR
JOB 012326__	COORDINATION OF WORK
JOB 012326__	DELAY IN RIGHT OF WAY OCCUPANCY
JOB 012326__	DESIGN AND QUALITY CONTROL OF ASPHALT MIXTURES
JOB 012326__	DESIGN OF ASPHALT MIXTURES - AGGREGATES
JOB 012326__	DIRECT TENSION INDICATORS FOR HIGH STRENGTH BOLT ASSEMBLIES
JOB 012326__	DISADVANTAGED BUSINESS ENTERPRISE BIDDER'S RESPONSIBILITIES
JOB 012326__	DRILLED SHAFT FOUNDATIONS FOR STEEL SIGN STRUCTURES
JOB 012326__	ELECTRICAL CONDUCTORS FOR LUMINAIRES
JOB 012326__	ELECTRICAL CONDUCTORS-IN-CONDUIT (ITS)
JOB 012326__	ELECTRICAL CONDUCTORS-IN-CONDUIT (TRAFFIC SIGNAL)
JOB 012326__	ENHANCED THERMOPLASTIC PAVEMENT MARKING
JOB 012326__	EXCAVATION AND EMBANKMENT
JOB 012326__	EXPLORATORY HOLES
JOB 012326__	EXTENSION FOR PIPE CULVERTS
JOB 012326__	FLEXIBLE BEGINNING OF WORK - CALENDAR DAY CONTRACT
JOB 012326__	GOALS FOR DISADVANTAGED BUSINESS ENTERPRISE PARTICIPATION

GOVERNING SPECIFICATIONS

NUMBER	TITLE
JOB 012326__	GEOTEXTILE FABRIC
JOB 012326__	HYBRID VIDEO/RADAR DETECTION SYSTEM
JOB 012326__	INTELLIGENT TRANSPORTATION SYSTEM CABINET
JOB 012326__	LED LUMINAIRE ASSEMBLY (BUG U0 TYPE)
JOB 012326__	LED TRAFFIC SIGNAL HEAD
JOB 012326__	LIQUIDATED DAMAGES PROCEDURE FOR BID LETTINGS
JOB 012326__	LONGITUDINAL JOINT DENSITIES FOR ACHM SURFACE COURSES
JOB 012326__	LONGITUDINAL TINING
JOB 012326__	LOUVERS FOR SIGNAL HEADS
JOB 012326__	MAINTENANCE OF TRAFFIC
JOB 012326__	MANDATORY ELECTRONIC CONTRACT
JOB 012326__	MANDATORY ELECTRONIC DOCUMENT SUBMITTAL
JOB 012326__	NONDESTRUCTIVE TESTING OF DRILLED SHAFTS FOR STEEL SIGN STRUCTURES
JOB 012326__	OFF-SITE RESTRAINING CONDITIONS FOR INDIANA AND NORTHERN LONG-EARED BATS
JOB 012326__	OMNI-DIRECTIONAL BREAKAWAY SIGN SUPPORT
JOB 012326__	OVERHEAD DYNAMIC MESSAGE SIGN ASSEMBLY
JOB 012326__	PAN-TILT-ZOOM CAMERA SYSTEM
JOB 012326__	PARTNERING REQUIREMENTS
JOB 012326__	PCC PAVEMENT SURFACE SMOOTHNESS (IRI)
JOB 012326__	PERCENT WITHIN LIMITS/PAVEMENT SMOOTHNESS (IRI)
JOB 012326__	PLASTIC PIPE
JOB 012326__	PORTABLE CONSTRUCTION LIGHTING
JOB 012326__	PRE-BID ON SITE INVESTIGATION OF SOIL CONDITIONS
JOB 012326__	PRICE ADJUSTMENT FOR ASPHALT BINDER
JOB 012326__	PRICE ADJUSTMENT FOR FUEL
JOB 012326__	PROHIBITION OF CERTAIN TELECOMMUNICATIONS AND VIDEO SURVEILLANCE SERVICES OR EQUIPMENT
JOB 012326__	PROSECUTION AND PROGRESS WITH BID SCHEDULE
JOB 012326__	RADAR VEHICLE DETECTION SYSTEM
JOB 012326__	REACTIVE AGGREGATE TESTING
JOB 012326__	REMOVING AND REPLACING TOPSOIL
JOB 012326__	RETAINING WALLS
JOB 012326__	RETROREFLECTIVE BACKPLATES
JOB 012326__	RIPRAP BASIN
JOB 012326__	ROCK FILL
JOB 012326__	SECTION 404 INDIVIDUAL PERMIT REQUIREMENTS
JOB 012326__	SEQUENCE OF CONSTRUCTION
JOB 012326__	SERVICE POINT ASSEMBLY (ITS DEVICES)
JOB 012326__	SERVICE POINT ASSEMBLY (TRAFFIC CONTROL DEVICES)
JOB 012326__	SHORING FOR CULVERTS
JOB 012326__	SITE USE (A+C METHOD) -- CALENDAR DAY CONTRACT
JOB 012326__	SOIL STABILIZATION
JOB 012326__	STEEL SIGN STRUCTURES
JOB 012326__	STORM WATER POLLUTION PREVENTION PLAN
JOB 012326__	STREET NAME SIGN (MAST ARM MOUNTED)
JOB 012326__	SUBMISSION OF ASPHALT CONCRETE HOT MIX ACCEPTANCE TEST RESULTS
JOB 012326__	TESTING AND INTEGRATION
JOB 012326__	TEXTURED COATING FINISH
JOB 012326__	TILT TOWER
JOB 012326__	TOTAL SOLAR ECLIPSE
JOB 012326__	TRAFFIC CONTROL DEVICES IN CONSTRUCTION ZONES LEFT IN PLACE
JOB 012326__	UTILITY ADJUSTMENTS
JOB 012326__	VALUE ENGINEERING
JOB 012326__	WARM MIX ASPHALT
JOB 012326__	WATER POLLUTION CONTROL
JOB 012326__	WIRE ROPE SAFETY FENCE (WRSF) SPECIFICATIONS

GENERAL NOTES

1. GRADE LINE DENOTES FINISHED GRADE WHERE SHOWN ON PLANS.
2. ALL PIPE LINES, POWER, TELEPHONE, AND TELEGRAPH LINES TO BE MOVED OR LOWERED BY THE RESPECTIVE OWNERS AS PER AGREEMENT WITH SUCH OWNERS.
3. ANY EQUIPMENT OR APPURTENANCE THAT INTERFERES WITH THE PROPOSED CONSTRUCTION AND WHICH MAY BE THE PROPERTY OF UTILITY SERVICE ORGANIZATIONS SHALL BE MOVED BY THE OWNERS UNLESS OTHERWISE PROVIDED.
4. THE CONTRACTOR SHALL BE RESPONSIBLE FOR MAINTAINING U. S. MAILBOXES WITHIN THE PROJECT LIMITS IN SUCH A MANNER THAT THE PUBLIC MAY RECEIVE CONTINUED MAIL SERVICE. PAYMENT WILL BE CONSIDERED INCLUDED IN THE PRICE BID FOR THE VARIOUS BID ITEMS.
5. ALL LAND MONUMENTS LOCATED WITHIN THE CONSTRUCTION AREA SHALL BE PROTECTED IN ACCORDANCE WITH SECTION 107.12 OF THE STANDARD SPECIFICATIONS.
6. ALL TREES THAT DO NOT DIRECTLY INTERFERE WITH THE PROPOSED CONSTRUCTION SHALL BE SPARED AS DIRECTED BY THE ENGINEER. CARE AND DISCRETION SHALL BE USED TO ENSURE THAT ALL TREES NOT TO BE REMOVED SHALL BE HARMED AS LITTLE AS POSSIBLE DURING THE CONSTRUCTION OPERATIONS.
7. THE CONTRACTOR SHALL BE RESPONSIBLE FOR PROVIDING A FENCE TO CONTROL LIVESTOCK IN AREAS WHERE PASTURES ARE SEVERED. WIRE FENCE MAY BE CONSTRUCTED INITIALLY, OR IN LIEU THEREOF, THE CONTRACTOR AT HIS OWN EXPENSE, MAY ELECT TO PROVIDE TEMPORARY FENCING SUITABLE TO CONTAIN LIVESTOCK.
8. THE SEQUENCE AS SHOWN ON THE MAINTENANCE OF TRAFFIC PLANS IS A GENERAL OUTLINE FOR THE CONSTRUCTION OF THIS PROJECT, AND IN NO WAY IS IT INTENDED TO COVER EVERY ITEM IN THE PROJECT. ITEMS NOT CRITICAL TO THE CONSTRUCTION SEQUENCE MAY BE CONSTRUCTED IN ANY STAGE AS APPROVED BY THE RESIDENT ENGINEER.
9. ALL FLEXIBLE BASE AND ASPHALTIC PAVEMENTS REMOVED SHALL BE PAID FOR UNDER THE ITEM NO. 210 - UNCLASSIFIED EXCAVATION.
10. THE EXISTING ASPHALT PAVEMENT TO BE REMOVED FROM THE REMAINING PAVEMENT SHALL BE SEPARATED BY SAWING ALONG A NEAT LINE. AFTER SAWING, THE PAVEMENT TO BE REMOVED SHALL BE CAREFULLY REMOVED IN A MANNER THAT WILL NOT DAMAGE THE PAVEMENT THAT IS TO REMAIN. ANY DAMAGE OF THE ASPHALT PAVEMENT THAT IS TO REMAIN IN PLACE SHALL BE REPAIRED AT THE CONTRACTOR'S EXPENSE.
11. THIS PROJECT IS COVERED UNDER A SECTION 404 NATIONWIDE 14 PERMIT. REFER TO SECTION 110 OF THE STANDARD SPECIFICATIONS, EDITION OF 2014, FOR PERMIT REQUIREMENTS.

EPSherrill 10/30/2023 10:05:57 AM
WORKSPACE: AHTD
L:\201\T017660 - ARDOT 012326 Hwy 412 - Hwy 112\Drawings\r012326_IDX_01.DGN
REVISED DATE:

DATE REVISED	DATE REVISED	FED. RD. DIST. NO.	STATE	JOB NO.	SHEET NO.	TOTAL SHEETS
		6	ARK.	012326	7	838
		TYPICAL SECTIONS OF IMPROVEMENT				

(2)

STATE OF ARKANSAS
LICENSED PROFESSIONAL ENGINEER
No. 13436
SHAUN A. ROBERSON
DIGITALLY SIGNED 7/28/2023

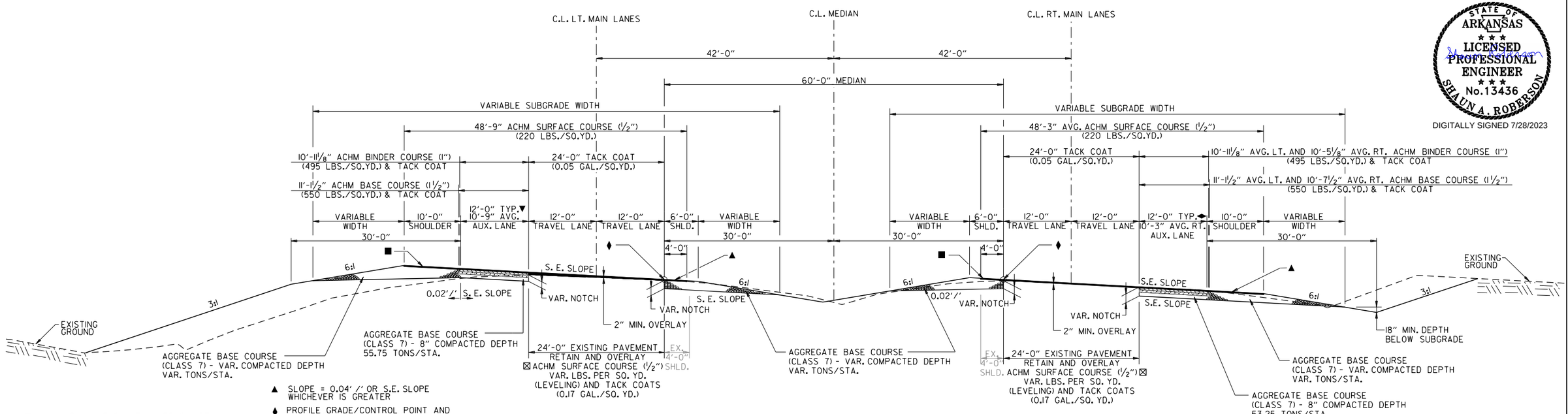

▼ AUXILIARY LANE ON LT. LANES 0' WIDE FROM STA. 170+68.03 TO STA. 172+00.00

● FROM STA. 170+68.03 TO STA. 172+00.00 LEFT LANES NOTCH AND WIDEN SECTION CONTINUES INTO GORE AREA OF RAMP 4

NOTE: NORMAL CROWN FROM 145+68.03 TO 146+73.33

▲ SLOPE = 0.04'/' OR S.E. SLOPE WHICHEVER IS GREATER

♦ PROFILE GRADE/CONTROL POINT AND POINT OF SUPERELEVATION ROTATION; CONTROL POINT FROM STA. 145+68.03 TO STA. 169+23.05 PROFILE GRADE FROM STA. 170+68.03 TO STA. 172+00

■ ON ALL SUPERELEVATED CURVES AND THROUGH SUPERELEVATION TRANSITIONS, THE ALGEBRAIC DIFFERENCE BETWEEN PAVEMENT SLOPE AND SHOULDER SLOPE SHALL NOT EXCEED 0.08'/'.

▼ TRANSITION AUXILIARY LANE ON LT. LANES FROM 0' AT STA. 145+68.03 TO 12' AT STA. 148+68.03.

◆ TRANSITION AUXILIARY LANE ON RT. LANES FROM 0' AT STA. 154+53.19 TO 12' AT STA. 157+53.19.

☒ TO BE USED IF AND WHERE DIRECTED BY THE ENGINEER

TYPICAL SUPERELEVATED NOTCH & WIDEN SECTION

MAIN LANES
W/ AUXILIARY LANE
STA. 145+68.03 TO 158+68.03 LT. LANES
STA. 154+53.19 TO 169+23.05 RT. LANES
STA. 170+68.03 TO 172+00.00 LT. LANES ●

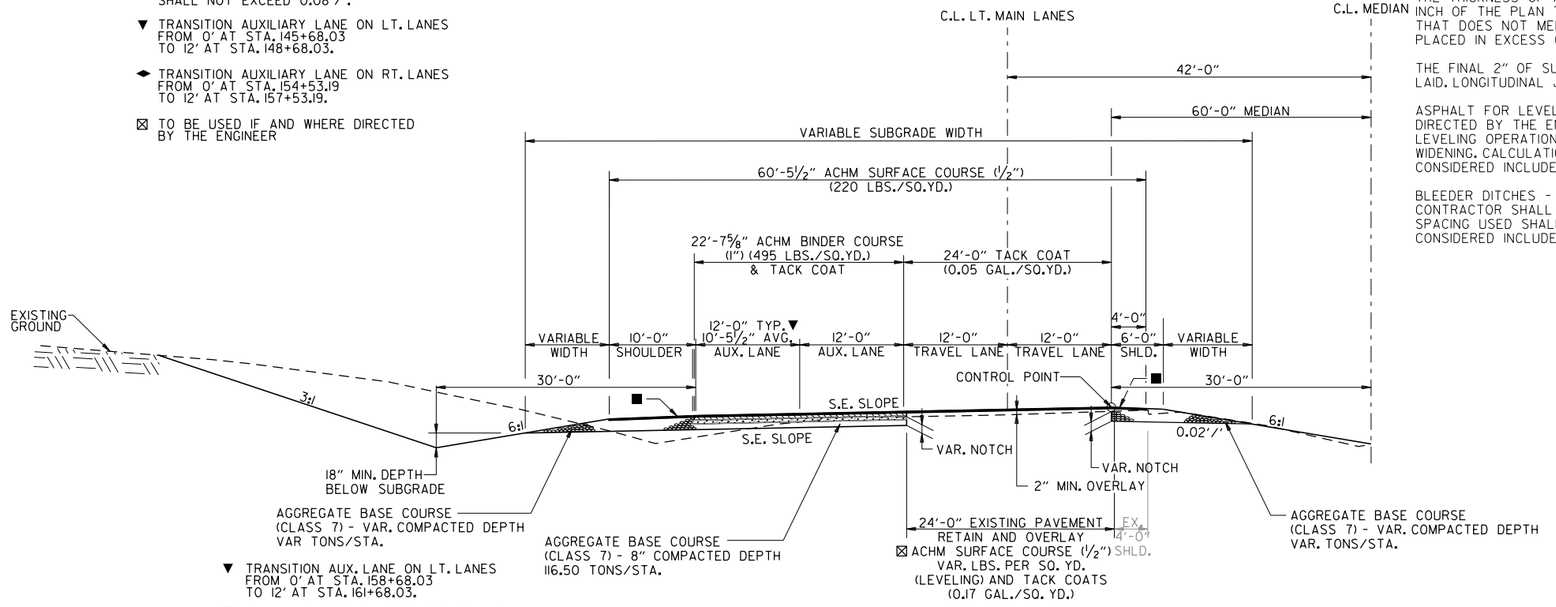

▼ TRANSITION AUX. LANE ON LT. LANES FROM 0' AT STA. 158+68.03 TO 12' AT STA. 161+68.03.

■ ON ALL SUPERELEVATED CURVES AND THROUGH SUPERELEVATION TRANSITIONS, THE ALGEBRAIC DIFFERENCE BETWEEN PAVEMENT SLOPE AND SHOULDER SLOPE SHALL NOT EXCEED 0.08'/'.

☒ TO BE USED IF AND WHERE DIRECTED BY THE ENGINEER

TYPICAL SUPERELEVATED NOTCH & WIDEN SECTION

MAIN LANES
W/ 2 AUXILIARY LANES
STA. 158+68.03 TO 169+23.05 LT. LANES

NOTES:

REFER TO CROSS SECTIONS FOR DEVIATION FROM THE NORMAL SLOPES. NO CHANGES SHALL BE MADE FROM THE PLANNED SLOPES WITHOUT THE APPROVAL OF THE ENGINEER.

THE THICKNESS OF AGGREGATE BASE COURSE SHALL BE WITHIN PLUS OR MINUS ONE INCH OF THE PLAN THICKNESS SHOWN. THE CONTRACTOR WILL CORRECT ANY DEFICIENT THICKNESS THAT DOES NOT MEET THE TOLERANCE INDICATED. PAYMENT WILL NOT BE MADE FOR MATERIAL PLACED IN EXCESS OF THE TOLERANCE INDICATED.

THE FINAL 2" OF SURFACE COURSE IS TO BE PLACED AFTER ALL OTHER COURSES HAVE BEEN LAID. LONGITUDINAL JOINTS SHALL BE AT THE LANE LINES.

ASPHALT FOR LEVELING OF EXISTING PAVEMENT SHALL BE PLACED ONLY IF AND WHERE DIRECTED BY THE ENGINEER. CALCULATIONS FOR THE AMOUNT OF LEVELING AND/OR LEVELING OPERATIONS SHALL BE PERFORMED BEFORE CONSTRUCTING NOTCH AND WIDENING. CALCULATIONS WILL NOT BE PAID FOR DIRECTLY, BUT PAYMENT WILL BE CONSIDERED INCLUDED IN THE VARIOUS PAY ITEMS.

BLEEDER DITCHES - PRIOR TO AND DURING PLACEMENT OF PAVEMENT AT THE NOTCH, THE CONTRACTOR SHALL PROVIDE POSITIVE DRAINAGE AT ALL TIMES. THE METHOD(S) AND SPACING USED SHALL BE APPROVED BY THE ENGINEER. PAYMENT FOR THIS WORK SHALL BE CONSIDERED INCLUDED IN THE PRICE BID FOR THE VARIOUS CONTRACT ITEMS.

HBVinson
7/27/2023 1:37:00 PM
WORKSPACE: AHTD
L:\2017\170766O - ARDOT 012326 Hwy 412 - Hwy 112\Drawings\r012326_TS_ALL_01.dgn
REVISED DATE:

DATE REVISED	DATE REVISED	FED. RD. DIST. NO.	STATE	JOB NO.	SHEET NO.	TOTAL SHEETS
		6	ARK.	012326	8	838
②		TYPICAL SECTIONS OF IMPROVEMENT				

STATE OF ARKANSAS
LICENSED PROFESSIONAL ENGINEER
No. 13436
SHAUNA A. ROBERSON
DIGITALLY SIGNED 7/28/2023

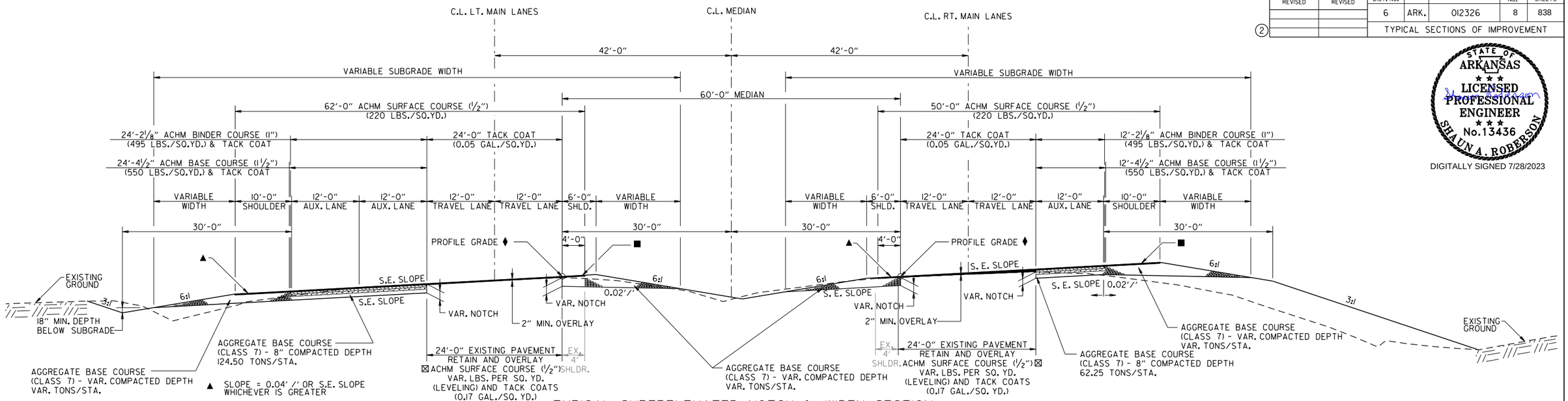

▲ SLOPE = 0.04' /' OR S.E. SLOPE WHICHEVER IS GREATER

♦ POINT OF SUPERELEVATION ROTATION

■ ON ALL SUPERELEVATED CURVES AND THROUGH SUPERELEVATION TRANSITIONS, THE ALGEBRAIC DIFFERENCE BETWEEN PAVEMENT SLOPE AND SHOULDER SLOPE SHALL NOT EXCEED 0.08'/'.

☒ TO BE USED IF AND WHERE DIRECTED BY THE ENGINEER

TYPICAL SUPERELEVATED NOTCH & WIDEN SECTION

MAIN LANES
W/ AUXILIARY LANE
STA. 169+23.05 TO 170+68.03 LT. LANES
STA. 169+23.05 TO 170+00.00 RT. LANES

NOTES:

REFER TO CROSS SECTIONS FOR DEVIATION FROM THE NORMAL SLOPES. NO CHANGES SHALL BE MADE FROM THE PLANNED SLOPES WITHOUT THE APPROVAL OF THE ENGINEER.

THE THICKNESS OF AGGREGATE BASE COURSE SHALL BE WITHIN PLUS OR MINUS ONE INCH OF THE PLAN THICKNESS SHOWN. THE CONTRACTOR WILL CORRECT ANY DEFICIENT THICKNESS THAT DOES NOT MEET THE TOLERANCE INDICATED. PAYMENT WILL NOT BE MADE FOR MATERIAL PLACED IN EXCESS OF THE TOLERANCE INDICATED.

THE FINAL 2" OF SURFACE COURSE IS TO BE PLACED AFTER ALL OTHER COURSES HAVE BEEN LAID. LONGITUDINAL JOINTS SHALL BE AT THE LANE LINES.

ASPHALT FOR LEVELING OF EXISTING PAVEMENT SHALL BE PLACED ONLY IF AND WHERE DIRECTED BY THE ENGINEER. CALCULATIONS FOR THE AMOUNT OF LEVELING AND/OR LEVELING OPERATIONS SHALL BE PERFORMED BEFORE CONSTRUCTING NOTCH AND WIDENING. CALCULATIONS WILL NOT BE PAID FOR DIRECTLY BUT PAYMENT WILL BE CONSIDERED INCLUDED IN THE VARIOUS PAY ITEMS.

BLEEDER DITCHES - PRIOR TO AND DURING PLACEMENT OF PAVEMENT AT THE NOTCH, THE CONTRACTOR SHALL PROVIDE POSITIVE DRAINAGE AT ALL TIMES. THE METHOD(S) AND SPACING USED SHALL BE APPROVED BY THE ENGINEER. PAYMENT FOR THIS WORK SHALL BE CONSIDERED INCLUDED IN THE PRICE BID FOR THE VARIOUS CONTRACT ITEMS.

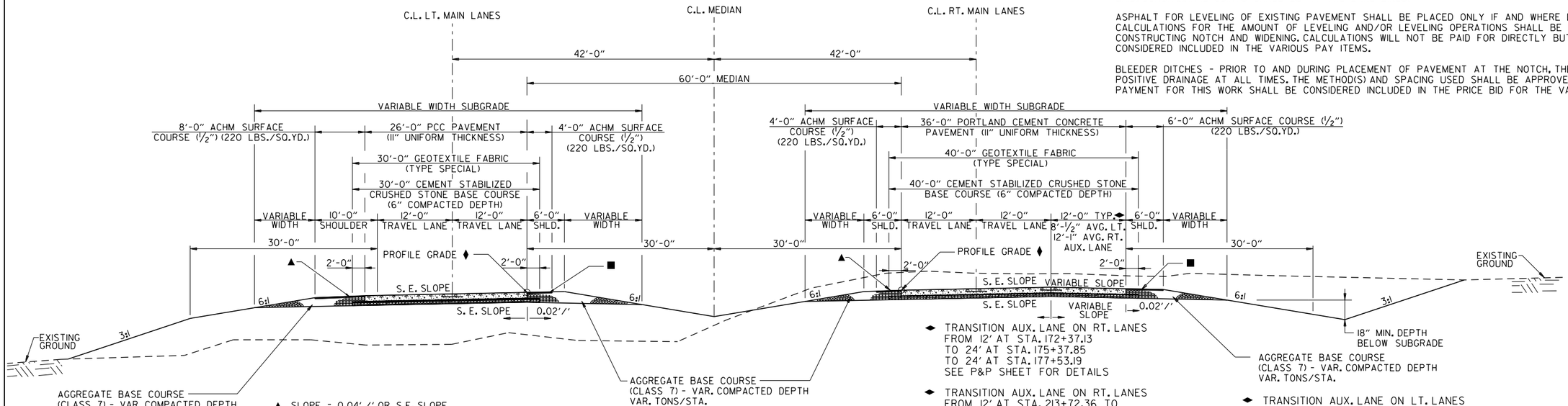

▲ SLOPE = 0.04' /' OR S.E. SLOPE WHICHEVER IS GREATER

♦ POINT OF SUPERELEVATION ROTATION

■ ON ALL SUPERELEVATED CURVES AND THROUGH SUPERELEVATION TRANSITIONS, THE ALGEBRAIC DIFFERENCE BETWEEN PAVEMENT SLOPE AND SHOULDER SLOPE SHALL NOT EXCEED 0.08'/'.

NOTE:

PROFILE GRADE SHOWN ON PLAN AND PROFILE SHEETS IS 18" ABOVE SUBGRADE. USE 1:1200 TRANSITION IN SUBGRADE TO MEET PAVEMENT GRADES AT BRIDGE APPROACH SLABS AND CROSSING ROADS. PAYMENT FOR TRANSITION IN SUBGRADE TO BE INCLUDED IN THE VARIOUS CONTRACT ITEMS.

TYPICAL SUPERELEVATED SECTION ALTERNATIVE I

MAIN LANES
W/ AUXILIARY LANE

STA. 170+00.00 TO STA. 177+53.19 RT. LANES
STA. 172+00.00 TO STA. 177+53.19 LT. LANES
STA. 206+72.36 TO STA. 216+72.36 RT. LANES
STA. 421+14.82 TO STA. 431+14.82 LT. LANES
STA. 435+99.37 TO STA. 447+96.54 RT. LANES
STA. 449+41.15 TO STA. 460+96.66 LT. LANES
STA. 460+84.47 TO STA. 478+40.00 RT. LANES
STA. 474+53.69 TO STA. 478+40.00 LT. LANES

◆ TRANSITION AUX. LANE ON RT. LANES FROM 12' AT STA. 172+37.13 TO 24' AT STA. 175+37.85 TO 24' AT STA. 177+53.19 SEE P&P SHEET FOR DETAILS

◆ TRANSITION AUX. LANE ON RT. LANES FROM 12' AT STA. 213+72.36 TO 0' AT STA. 216+72.36.

◆ TRANSITION AUX. LANE ON LT. LANES FROM 0' AT STA. 421+14.82 TO 12' AT STA. 424+14.82.

◆ TRANSITION AUX. LANE ON RT. LANES FROM 0' AT STA. 435+99.37 TO 12' AT STA. 438+49.37.

◆ TRANSITION AUX. LANE ON LT. LANES FROM 0' AT STA. 474+53.69 TO 12' AT STA. 477+53.69.

◆ TRANSITION AUX. LANE ON LT. LANES FROM 12' AT STA. 458+46.80 TO 0' AT STA. 460+96.66

SEE BRIDGE PLANS FOR:
LT. LANES
STA. 426+48.43 TO STA. 429+32.43
STA. 462+18.42 TO STA. 465+02.36
RT. LANES
STA. 426+74.02 TO STA. 429+64.67
STA. 462+33.60 TO STA. 465+24.16

TYPICAL SECTIONS OF IMPROVEMENT

HBVinson 7/27/2023 1:37:01 PM
WORKSPACE: AHTD
L:\2017\170176\60 - ARDOT 02326 Hwy 412 - Hwy 112\Drawings\r02326_TS_ALL_01.dgn
REVISED DATE:

DATE REVISED	DATE REVISED	FED. RD. DIST. NO.	STATE	JOB NO.	SHEET NO.	TOTAL SHEETS
		6	ARK.	012326	9	838
		TYPICAL SECTIONS OF IMPROVEMENT				
②						

STATE OF ARKANSAS
LICENSED PROFESSIONAL ENGINEER
No.13436
SHAUN A. ROBERSON
DIGITALLY SIGNED 7/28/2023

NOTES:

REFER TO CROSS SECTIONS FOR DEVIATION FROM THE NORMAL SLOPES. NO CHANGES SHALL BE MADE FROM THE PLANNED SLOPES WITHOUT THE APPROVAL OF THE ENGINEER.

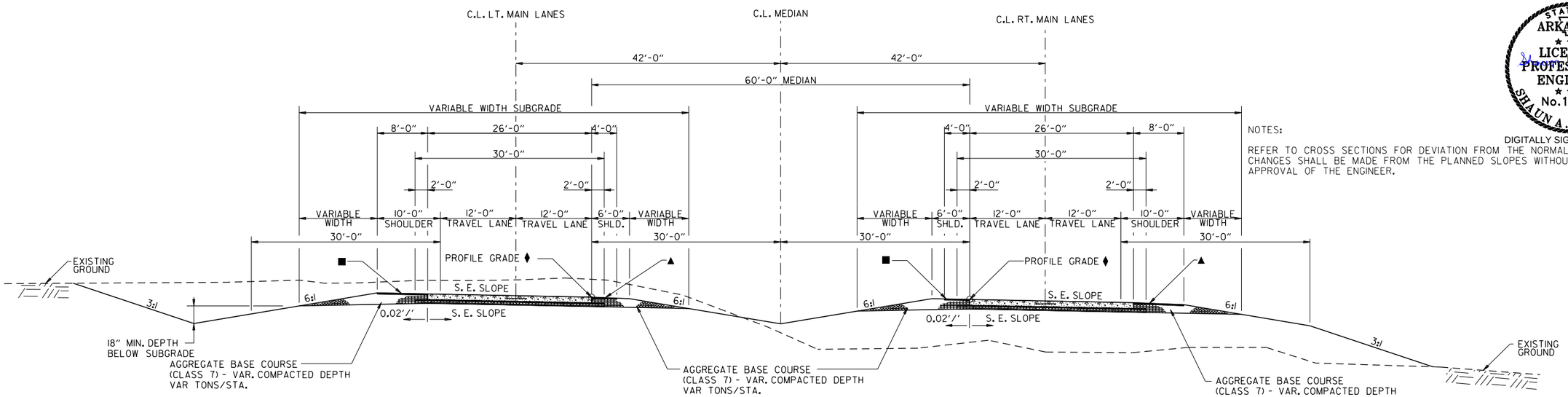

▲ SLOPE = 0.04'/' OR S.E. SLOPE WHICHEVER IS GREATER

♦ POINT OF SUPERELEVATION ROTATION

■ ON ALL SUPERELEVATED CURVES AND THROUGH SUPERELEVATION TRANSITIONS, THE ALGEBRAIC DIFFERENCE BETWEEN PAVEMENT SLOPE AND SHOULDER SLOPE SHALL NOT EXCEED 0.08'/'.

TYPICAL SUPERELEVATED SECTION ALTERNATIVE I

MAIN LANES

STA. 177+53.19 TO STA. 206+72.36
STA. 216+72.36 TO STA. 222+98.54
STA. 226+69.81 TO STA. 252+75.46
STA. 301+33.58 TO STA. 364+82.77
STA. 411+61.02 TO STA. 421+14.82
STA. 431+14.82 TO STA. 435+99.37
STA. 447+96.54 TO STA. 449+41.15

SEE BRIDGE PLANS FOR:
LT. LANES
STA. 183+22.52 TO STA. 187+01.07
STA. 190+92.39 TO STA. 193+94.29
RT. LANES
STA. 184+17.68 TO STA. 187+75.30
STA. 191+11.91 TO STA. 194+15.44

NOTE:

PROFILE GRADE SHOWN ON PLAN AND PROFILE SHEETS IS 18" ABOVE SUBGRADE. USE 1:200 TRANSITION IN SUBGRADE TO MEET PAVEMENT GRADES AT BRIDGE APPROACH SLABS AND CROSSING ROADS. PAYMENT FOR TRANSITION IN SUBGRADE TO BE INCLUDED IN THE VARIOUS CONTRACT ITEMS.

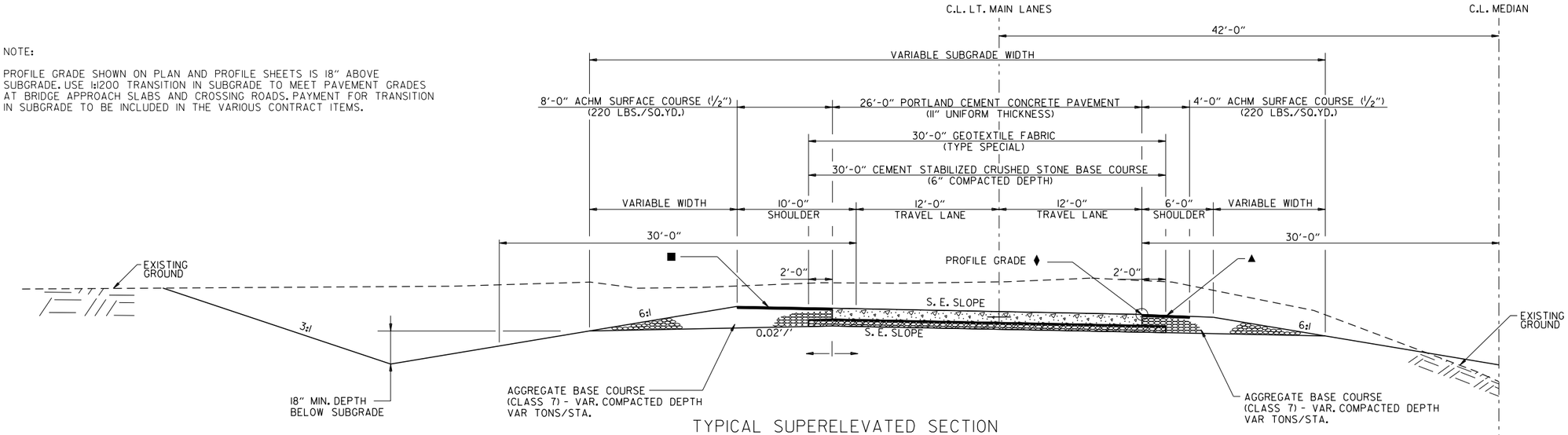

TYPICAL SUPERELEVATED SECTION ALTERNATIVE I

MAIN LANES

(ENLARGED TO SHOW PAVEMENT DETAILS)

HBVinson
7/27/2023 1:37:01PM
WORKSPACE: AHTD
L:\201\1701\660 - ARDOT 012326 Hwy 412 - Hwy 112\Drawings\r012326_TS_ALL_01.dgn
REVISED DATE:

DATE REVISED	DATE REVISED	FED. RD. DIST. NO.	STATE	JOB NO.	SHEET NO.	TOTAL SHEETS
		6	ARK.	012326	10	838
		TYPICAL SECTIONS OF IMPROVEMENT				
2						

STATE OF ARKANSAS
LICENSED PROFESSIONAL ENGINEER
No. 13436
SHAUNA. ROBERSON
DIGITALLY SIGNED 7/28/2023

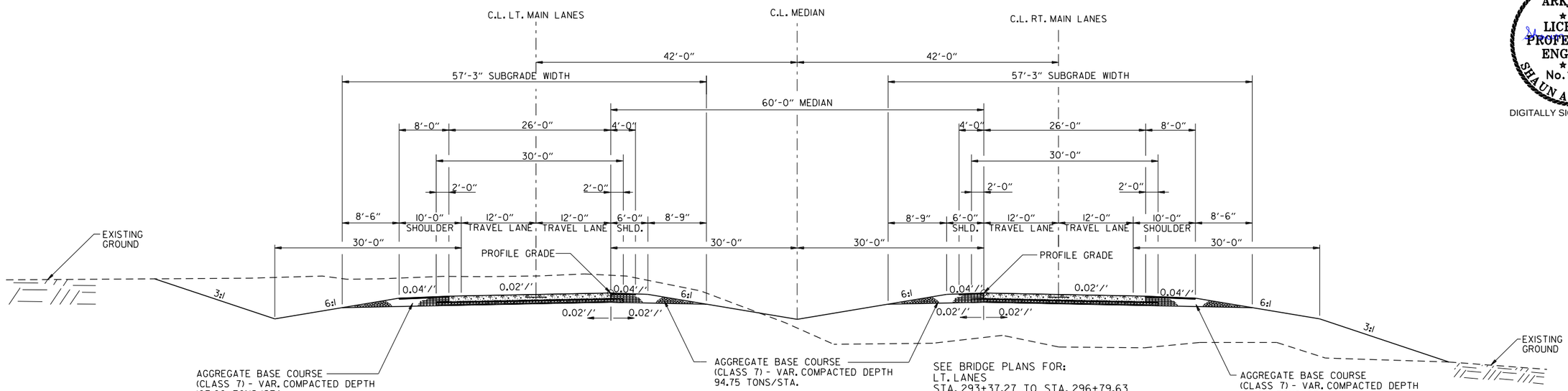

TYPICAL SECTION ALTERNATIVE I

MAIN LANES

STA. 222+98.54 TO STA. 226+69.81
STA. 252+75.46 TO STA. 301+33.58
STA. 364+82.77 TO STA. 411+61.02
STA. 484+53.69 TO STA. 514+00.00

SEE BRIDGE PLANS FOR:
LT. LANES
STA. 293+37.27 TO STA. 296+79.63
STA. 377+86.91 TO 388+24.09
RT. LANES
STA. 293+75.00 TO STA. 297+17.36
STA. 377+86.91 TO STA. 388+24.09

NOTES:

REFER TO CROSS SECTIONS FOR DEVIATION FROM THE NORMAL SLOPES. NO CHANGES SHALL BE MADE FROM THE PLANNED SLOPES WITHOUT THE APPROVAL OF THE ENGINEER.

NOTE:

PROFILE GRADE SHOWN ON PLAN AND PROFILE SHEETS IS 18" ABOVE SUBGRADE. USE 1:1200 TRANSITION IN SUBGRADE TO MEET PAVEMENT GRADES AT BRIDGE APPROACH SLABS AND TIES TO EACH END OF JOB. PAYMENT FOR TRANSITION IN SUBGRADE TO BE INCLUDED IN THE VARIOUS CONTRACT ITEMS.

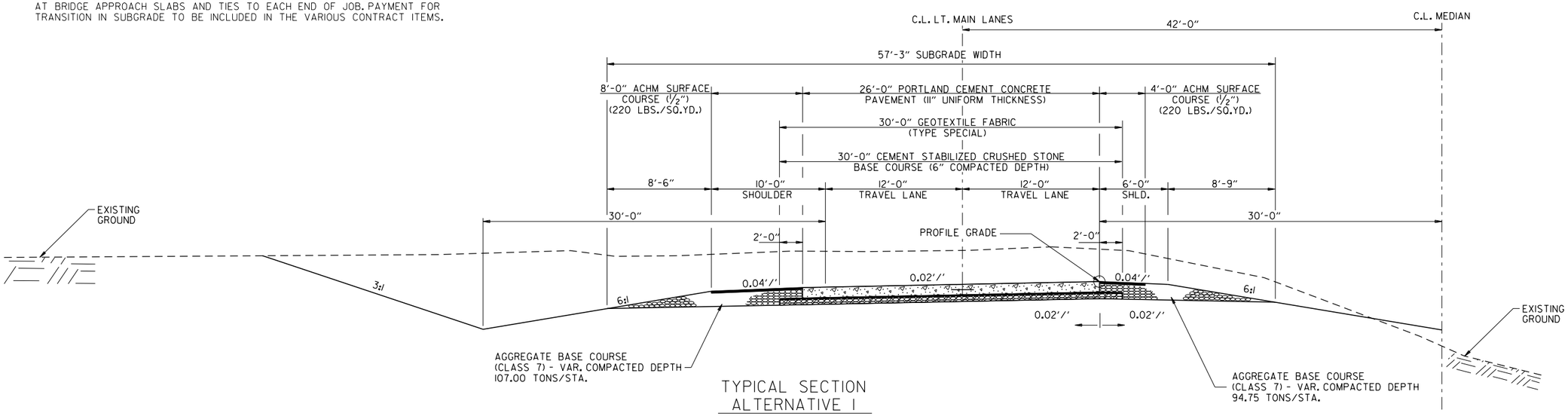

TYPICAL SECTION ALTERNATIVE I

MAIN LANES
(ENLARGED TO SHOW PAVEMENT DETAILS)

HBVinson 7/27/2023 1:37:01 PM
WORKSPACE: AHTD
L:\2017\17017660 - ARDOT 012326 Hwy 412 - Hwy 412\Drawings\r012326_TS_ALL_01.dgn
REVISED DATE:

DATE REVISED	DATE REVISED	FED. RD. DIST. NO.	STATE	JOB NO.	SHEET NO.	TOTAL SHEETS
		6	ARK.	012326	11	838
		TYPICAL SECTIONS OF IMPROVEMENT				
2						

STATE OF ARKANSAS
LICENSED PROFESSIONAL ENGINEER
No.13436
SHAUN A. ROBERSON
DIGITALLY SIGNED 7/28/2023

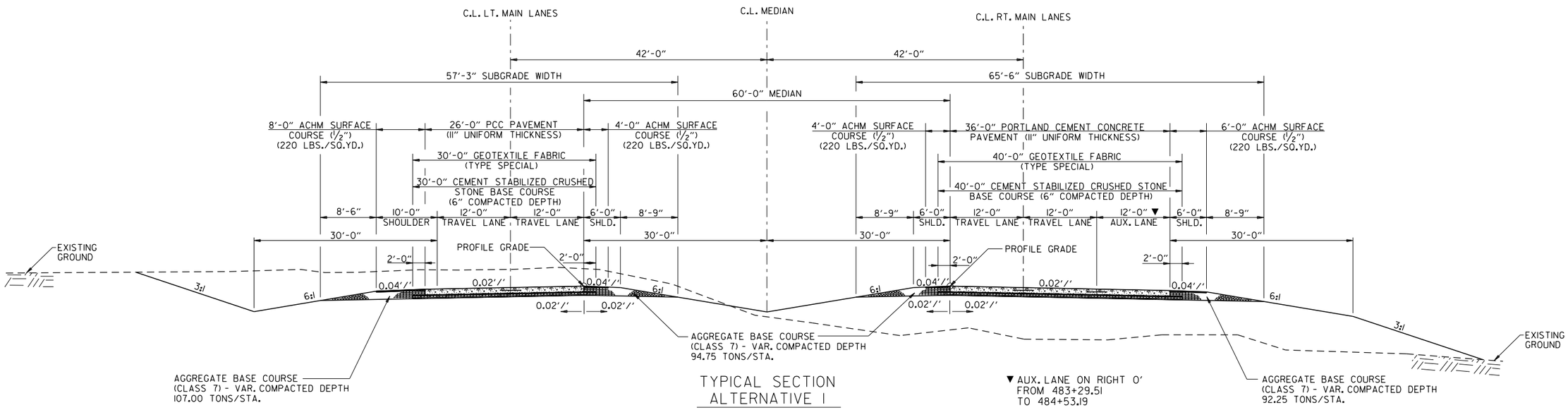

TYPICAL SECTION ALTERNATIVE I

MAIN LANES
W/ AUXILIARY LANE

STA. 478+40.00 TO STA. 483+29.51 RT. LANES
STA. 478+40.00 TO STA. 484+53.69 LT. LANES

▼ AUX. LANE ON RIGHT 0' FROM 483+29.51 TO 484+53.19

NOTES:

REFER TO CROSS SECTIONS FOR DEVIATION FROM THE NORMAL SLOPES. NO CHANGES SHALL BE MADE FROM THE PLANNED SLOPES WITHOUT THE APPROVAL OF THE ENGINEER.

NOTE:

PROFILE GRADE SHOWN ON PLAN AND PROFILE SHEETS IS 18" ABOVE SUBGRADE. USE 1:1200 TRANSITION IN SUBGRADE TO MEET PAVEMENT GRADES AT BRIDGE APPROACH SLABS. PAYMENT FOR TRANSITION IN SUBGRADE TO BE INCLUDED IN THE VARIOUS CONTRACT ITEMS.

HBVinson 7/27/2023 1:37:02 PM
WORKSPACE: AHTD
L:\20\7\0\7660 - ARDOT 012326 Hwy 412 - Hwy 112\Drawings\r012326_TS_ALL_01.dgn
REVISED DATE:

DATE REVISED	DATE REVISED	FED. RD. DIST. NO.	STATE	JOB NO.	SHEET NO.	TOTAL SHEETS
		6	ARK.	012326	12	838
2		TYPICAL SECTIONS OF IMPROVEMENT				

STATE OF ARKANSAS
LICENSED PROFESSIONAL ENGINEER
No.13436
SHAUN A. ROBERSON
DIGITALLY SIGNED 7/28/2023

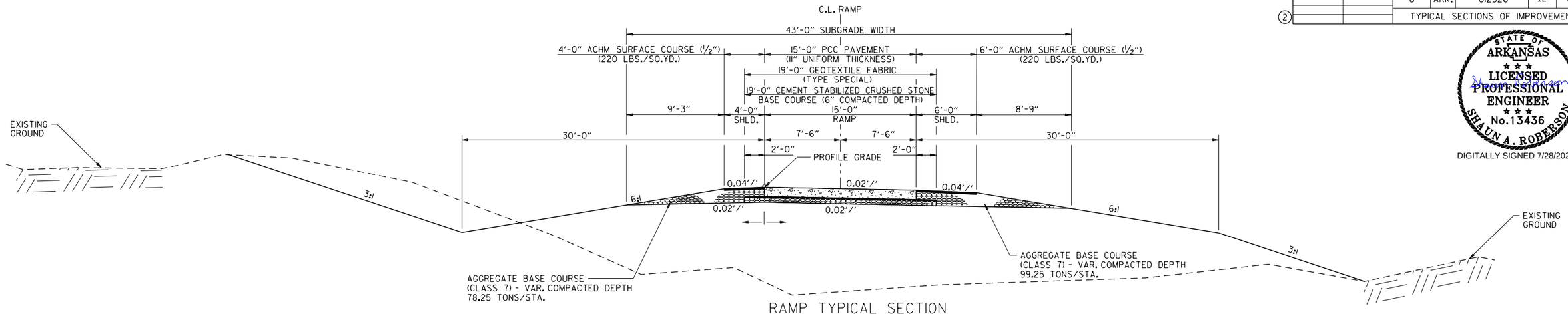

RAMP TYPICAL SECTION
ALTERNATIVE I

(SHOWN IN THE DIRECTION OF TRAFFIC)

HWY. 412B RAMP 2 STA. 192+42.58 TO STA. 194+08.59
HWY. 412B RAMP 3 STA. 192+33.34 TO STA. 193+15.21

XNA ACCESS RD. RAMP 1 STA. 468+94.40 TO STA. 482+70.26
XNA ACCESS RD. RAMP 2 STA. 426+22.22 TO STA. 428+91.93
XNA ACCESS RD. RAMP 4 STA. 431+18.13 TO STA. 431+57.19

HWY. 112 RAMP 1 STA. 483+30.39 TO STA. 483+71.30
HWY. 112 RAMP 1 STA. 493+74.64 TO STA. 493+81.27
HWY. 112 RAMP 4 STA. 493+60.68 TO STA. 499+12.74

SEE BRIDGE PLANS FOR:
XNA ACCESS RD. RAMP 1
FOR STA. 470+03.82 TO STA. 472+85.99
XNA ACCESS RD. RAMP 2
FOR STA. 428+20.93 TO STA. 431+12.22

NOTE:

PROFILE GRADE SHOWN ON PLAN AND PROFILE SHEETS IS 18" ABOVE SUBGRADE. USE 1:200 TRANSITION IN SUBGRADE TO MEET PAVEMENT GRADES AT BRIDGE APPROACH SLABS AND CROSSING ROADS. PAYMENT FOR TRANSITION IN SUBGRADE TO BE INCLUDED IN THE VARIOUS CONTRACT ITEMS.

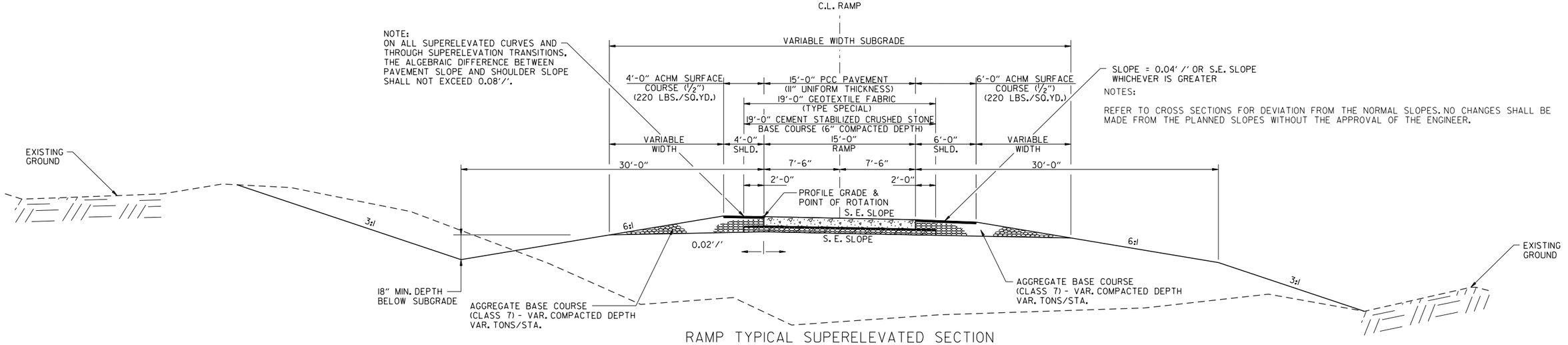

RAMP TYPICAL SUPERELEVATED SECTION
ALTERNATIVE I

(SHOWN IN THE DIRECTION OF TRAFFIC)

HWY. 412B RAMP 2 STA. 194+08.59 TO STA. 206+69.05
HWY. 412B RAMP 3 STA. 193+15.21 TO STA. 205+31.72

XNA ACCESS RD. RAMP 1 STA. 447+93.93 TO STA. 468+94.40
XNA ACCESS RD. RAMP 2 STA. 424+21.33 TO STA. 426+22.22
XNA ACCESS RD. RAMP 2 STA. 428+91.93 TO STA. 451+20.56
XNA ACCESS RD. RAMP 2 STA. 451+20.57 TO STA. 460+86.86
XNA ACCESS RD. RAMP 3 STA. 434+37.71 TO STA. 449+34.18
XNA ACCESS RD. RAMP 4 STA. 431+57.19 TO STA. 441+85.55

HWY. 112 RAMP 1 STA. 483+71.30 TO STA. 493+74.64
HWY. 112 RAMP 1 STA. 493+81.27 TO STA. 498+30.00
HWY. 112 RAMP 4 STA. 484+53.20 TO STA. 493+60.68

SEE BRIDGE PLANS FOR:
XNA ACCESS RD. RAMP 2
STA. 428+55.95 TO 430+77.20

TYPICAL SECTIONS OF IMPROVEMENT

HBVinson
7/27/2023 11:37:02 PM
WORKSPACE: AHTD
L:\2017\17017660 - ARDOT 012326 Hwy 412 - Hwy 112\Drawings\r012326_TS_ALL_01.dgn
REVISED DATE:

DATE REVISED	DATE REVISED	FED. RD. DIST. NO.	STATE	JOB NO.	SHEET NO.	TOTAL SHEETS
		6	ARK.	012326	13	838
		TYPICAL SECTIONS OF IMPROVEMENT				

(2)

STATE OF ARKANSAS
LICENSED PROFESSIONAL ENGINEER
No.13436
SHAUN A. ROBERSON
DIGITALLY SIGNED 7/28/2023

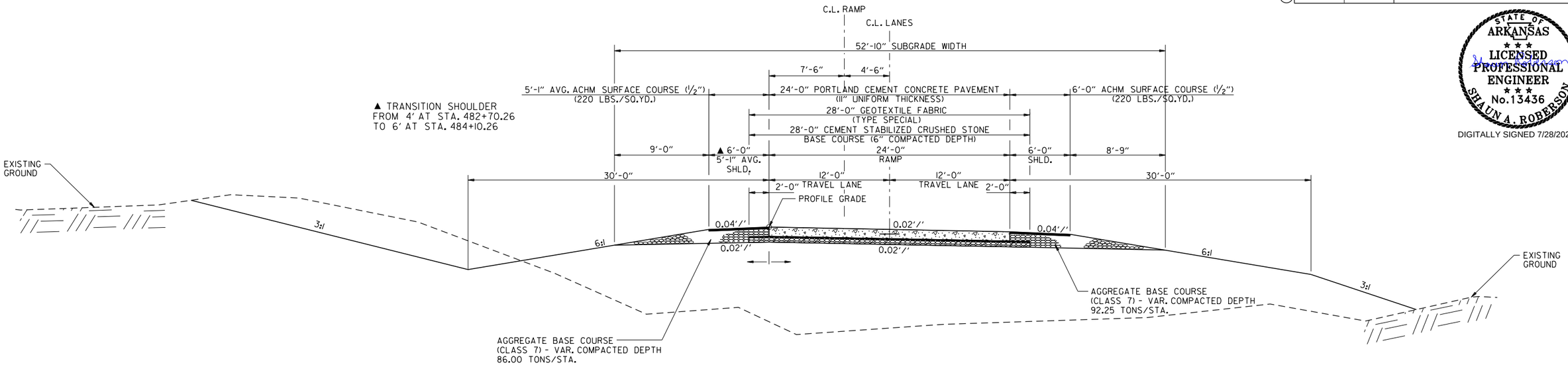

TWO LANE RAMP TYPICAL SECTION ALTERNATIVE I

(SHOWN IN THE DIRECTION OF TRAFFIC)

XNA ACCESS RD. RAMP 1 STA. 482+70.26 TO STA. 484+19.97

NOTE:

PROFILE GRADE SHOWN ON PLAN AND PROFILE SHEETS IS 18" ABOVE SUBGRADE. USE 1:1200 TRANSITION IN SUBGRADE TO MEET PAVEMENT GRADES AT CROSSING ROADS. PAYMENT FOR TRANSITION IN SUBGRADE TO BE INCLUDED IN THE VARIOUS CONTRACT ITEMS.

NOTES:

REFER TO CROSS SECTIONS FOR DEVIATION FROM THE NORMAL SLOPES. NO CHANGES SHALL BE MADE FROM THE PLANNED SLOPES WITHOUT THE APPROVAL OF THE ENGINEER.

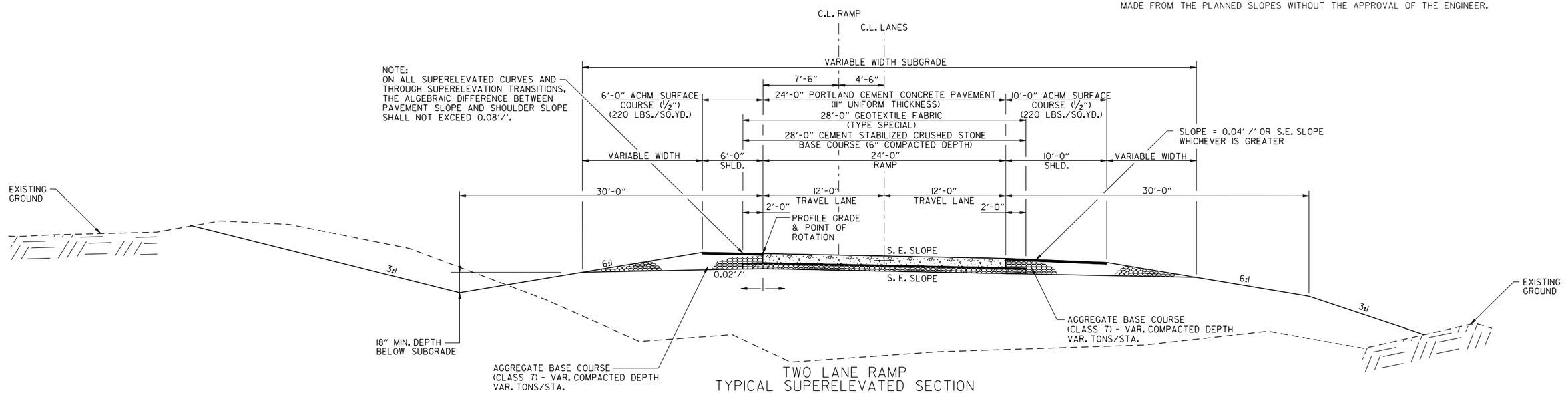

TWO LANE RAMP TYPICAL SUPERELEVATED SECTION ALTERNATIVE I

(SHOWN IN THE DIRECTION OF TRAFFIC)

XNA ACCESS RD. RAMP 2 STA. 416+52.40 TO STA. 424+21.33

HBVinson
7/27/2023 1:37:02 PM
WORKSPACE: AHTD
L:\20\T\01\7660 - ARDOT 012326 Hwy 412 - Hwy 112\Drawings\r012326_TS_ALL_01.dgn
REVISED DATE:

DATE REVISED	DATE REVISED	FED. RD. DIST. NO.	STATE	JOB NO.	SHEET NO.	TOTAL SHEETS
		6	ARK.	012326	14	838
		TYPICAL SECTIONS OF IMPROVEMENT				
②						

STATE OF ARKANSAS
LICENSED PROFESSIONAL ENGINEER
No.13436
SHAUNA A. ROBERSON
DIGITALLY SIGNED 7/28/2023

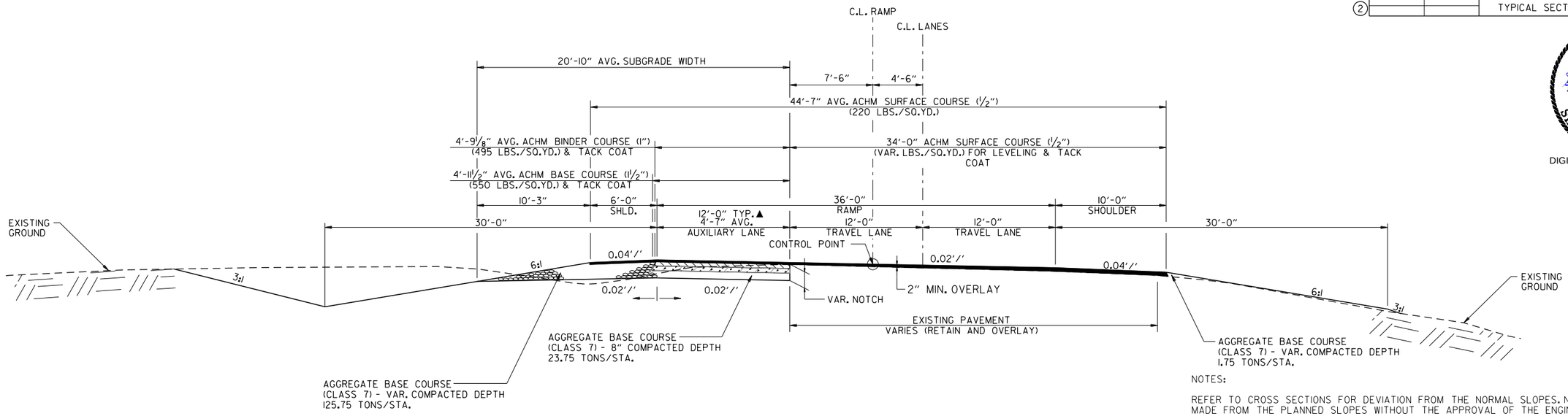

TWO LANE RAMP NOTCH AND WIDEN WITH AUXILIARY LANE TYPICAL SECTION

(SHOWN IN THE DIRECTION OF TRAFFIC)
HWY. 412B RAMP 1 STA. 187+50.00 TO STA. 194+50.62

▲ TURN LANE REMAINS 0' FROM 412B RAMP 1 STA. 187+50.00 TO 412B RAMP 1 STA. 191+07.43. TRANSITION TURN LANE FROM 0' AT 412B RAMP 1 STA. 191+07.43 TO 12' AT 412B RAMP 1 STA. 192+57.43

NOTES:

REFER TO CROSS SECTIONS FOR DEVIATION FROM THE NORMAL SLOPES. NO CHANGES SHALL BE MADE FROM THE PLANNED SLOPES WITHOUT THE APPROVAL OF THE ENGINEER.

THE THICKNESS OF AGGREGATE BASE COURSE SHALL BE WITHIN PLUS OR MINUS ONE INCH OF THE PLAN THICKNESS SHOWN. THE CONTRACTOR WILL CORRECT ANY DEFICIENT THICKNESS THAT DOES NOT MEET THE TOLERANCE INDICATED. PAYMENT WILL NOT BE MADE FOR MATERIAL PLACED IN EXCESS OF THE TOLERANCE INDICATED.

THE FINAL 2" OF SURFACE COURSE IS TO BE PLACED AFTER ALL OTHER COURSES HAVE BEEN LAID. LONGITUDINAL JOINTS SHALL BE AT THE LANE LINES.

ASPHALT FOR LEVELING OF EXISTING PAVEMENT SHALL BE PLACED ONLY IF AND WHERE DIRECTED BY THE ENGINEER. CALCULATIONS FOR THE AMOUNT OF LEVELING AND/OR LEVELING OPERATIONS SHALL BE PERFORMED BEFORE CONSTRUCTING NOTCH AND WIDENING. CALCULATIONS WILL NOT BE PAID FOR DIRECTLY BUT PAYMENT WILL BE CONSIDERED INCLUDED IN THE VARIOUS PAY ITEMS.

BLEEDER DITCHES - PRIOR TO AND DURING PLACEMENT OF PAVEMENT AT THE NOTCH, THE CONTRACTOR SHALL PROVIDE POSITIVE DRAINAGE AT ALL TIMES. THE METHOD(S) AND SPACING USED SHALL BE APPROVED BY THE ENGINEER. PAYMENT FOR THIS WORK SHALL BE CONSIDERED INCLUDED IN THE PRICE BID FOR THE VARIOUS CONTRACT ITEMS.

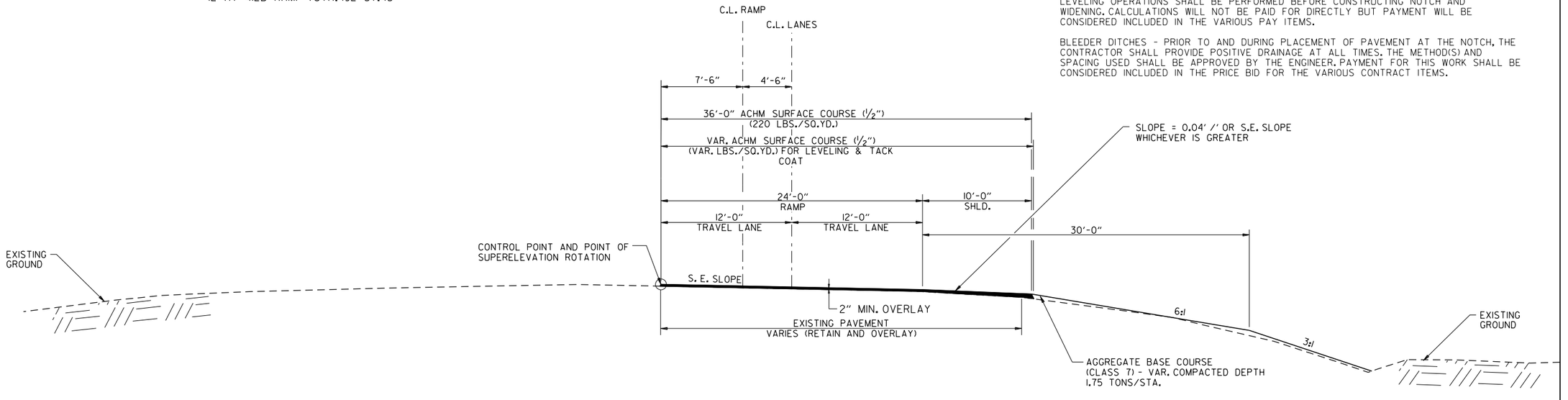

TWO LANE RAMP OVERLAY TYPICAL SECTION

(SHOWN IN THE DIRECTION OF TRAFFIC)
HWY. 412B RAMP 4 STA. 194+00.00 TO STA. 195+51.46

HBVinson
WORKSPACE: AHTD
L:\2017\170176\60 - ARDOT 012326 Hwy 412 - Hwy 112\Drawings\r012326_TS_ALL_01.dgn
7/27/2023 11:37:02 PM
REVISED DATE:

DATE REVISED	DATE REVISED	FED. RD. DIST. NO.	STATE	JOB NO.	SHEET NO.	TOTAL SHEETS
		6	ARK.	012326	15	838
		TYPICAL SECTIONS OF IMPROVEMENT				
2						

STATE OF ARKANSAS
LICENSED PROFESSIONAL ENGINEER
No.13436
SHAUNA A. ROBERSON
DIGITALLY SIGNED 7/28/2023

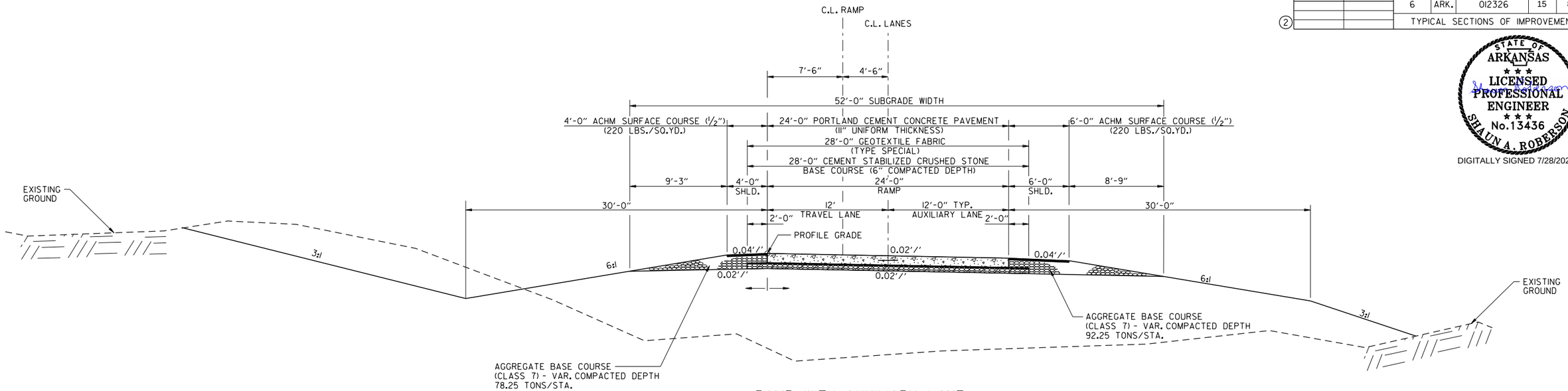

RAMP WITH AUXILIARY LANE
TYPICAL SECTION
ALTERNATIVE I

(SHOWN IN THE DIRECTION OF TRAFFIC)

HWY. 112 RAMP 1 STA. 501+38.11 TO STA. 501+41.07

NOTE:

PROFILE GRADE SHOWN ON PLAN AND PROFILE SHEETS IS 18" ABOVE SUBGRADE. USE 1:200 TRANSITION IN SUBGRADE TO MEET PAVEMENT GRADES AT CROSSING ROADS. PAYMENT FOR TRANSITION IN SUBGRADE TO BE INCLUDED IN THE VARIOUS CONTRACT ITEMS.

NOTES:

REFER TO CROSS SECTIONS FOR DEVIATION FROM THE NORMAL SLOPES. NO CHANGES SHALL BE MADE FROM THE PLANNED SLOPES WITHOUT THE APPROVAL OF THE ENGINEER.

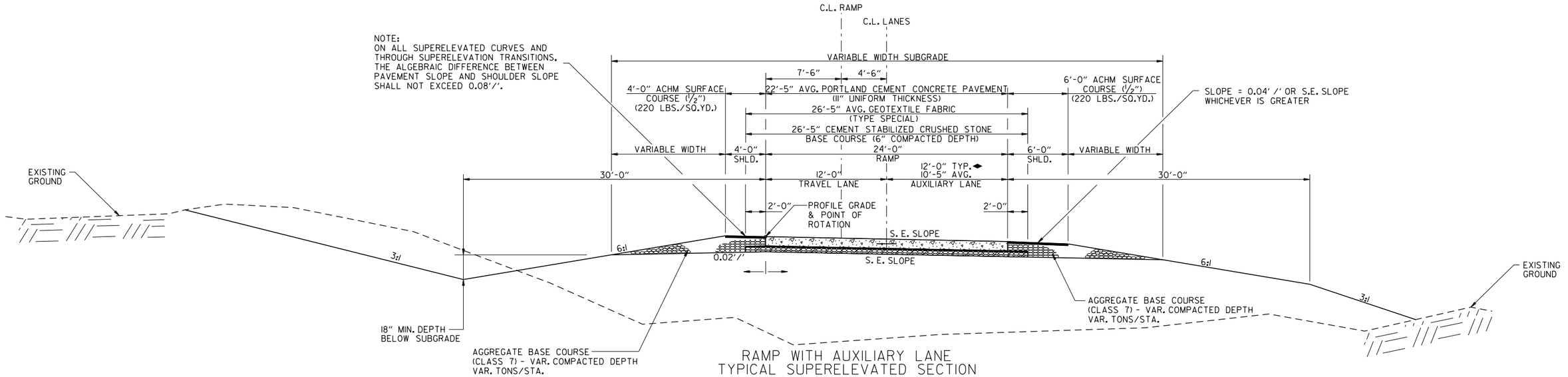

RAMP WITH AUXILIARY LANE
TYPICAL SUPERELEVATED SECTION
ALTERNATIVE I

(SHOWN IN THE DIRECTION OF TRAFFIC)

HWY. 112 RAMP 1 STA. 498+30.00 TO STA. 501+38.11

◆ TRANSITION TURN LANE FROM 0' AT 112 RAMP 1 STA. 498+30.00 TO 12' AT 112 RAMP 1 STA. 499+30.00

HBVinson 7/27/2023 11:37:03 PM
WORKSPACE: AHTD
L:\2017\17017660 - ARDOT 02326 Hwy 412 - Hwy 112\Drawings\r02326_TS_ALL_01.dgn
REVISED DATE:

DATE REVISED	DATE REVISED	FED. RD. DIST. NO.	STATE	JOB NO.	SHEET NO.	TOTAL SHEETS
		6	ARK.	012326	16	838
		TYPICAL SECTIONS OF IMPROVEMENT				
2						

STATE OF ARKANSAS
LICENSED PROFESSIONAL ENGINEER
No. 13436
SHAUN A. ROBERSON
DIGITALLY SIGNED 7/28/2023

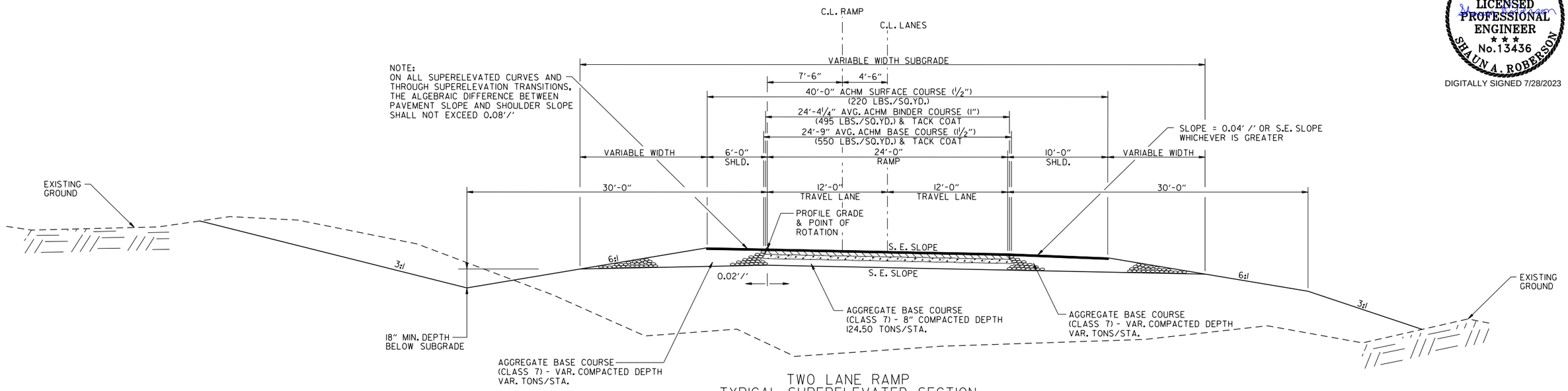

TWO LANE RAMP
TYPICAL SUPERELEVATED SECTION

(SHOWN IN THE DIRECTION OF TRAFFIC)

HWY. 412B RAMP 1 STA. 177+62.07 TO STA. 180+62.07
HWY. 412B RAMP 4 STA. 170+67.64 TO STA. 194+00.00

NOTES:

REFER TO CROSS SECTIONS FOR DEVIATION FROM THE NORMAL SLOPES. NO CHANGES SHALL BE MADE FROM THE PLANNED SLOPES WITHOUT THE APPROVAL OF THE ENGINEER.

THE THICKNESS OF AGGREGATE BASE COURSE SHALL BE WITHIN PLUS OR MINUS ONE INCH OF THE PLAN THICKNESS SHOWN. THE CONTRACTOR WILL CORRECT ANY DEFICIENT THICKNESS THAT DOES NOT MEET THE TOLERANCE INDICATED. PAYMENT WILL NOT BE MADE FOR MATERIAL PLACED IN EXCESS OF THE TOLERANCE INDICATED.

THE FINAL 2" OF SURFACE COURSE IS TO BE PLACED AFTER ALL OTHER COURSES HAVE BEEN LAID. LONGITUDINAL JOINTS SHALL BE AT THE LANE LINES.

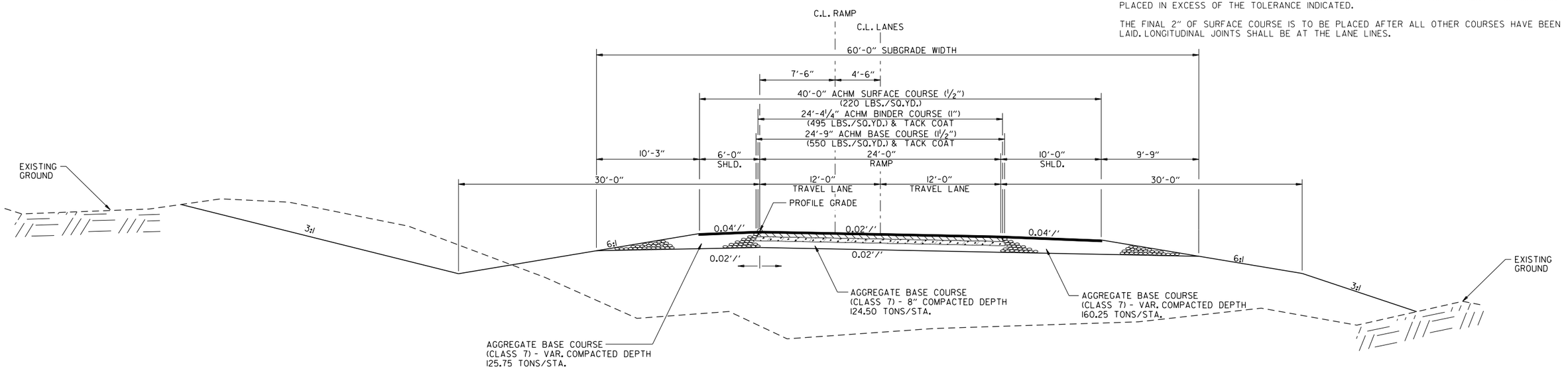

TWO LANE RAMP TYPICAL SECTION

(SHOWN IN THE DIRECTION OF TRAFFIC)

HWY. 412B RAMP 1 STA. 180+62.07 TO STA. 187+50.00

HBVinson 7/27/2023 1:37:03 PM
WORKSPACE: AHTD
L:\20\T\1701660 - ARDOT 012326 Hwy 412 - Hwy 112\Drawings\r012326_TS_ALL.dgn
REVISED DATE:

DATE REVISED	DATE REVISED	FED. RD. DIST. NO.	STATE	JOB NO.	SHEET NO.	TOTAL SHEETS
		6	ARK.	012326	17	838
②		TYPICAL SECTIONS OF IMPROVEMENT				

STATE OF ARKANSAS
LICENSED PROFESSIONAL ENGINEER
No. 13436
SHAUN A. ROBERSON
DIGITALLY SIGNED 7/28/2023

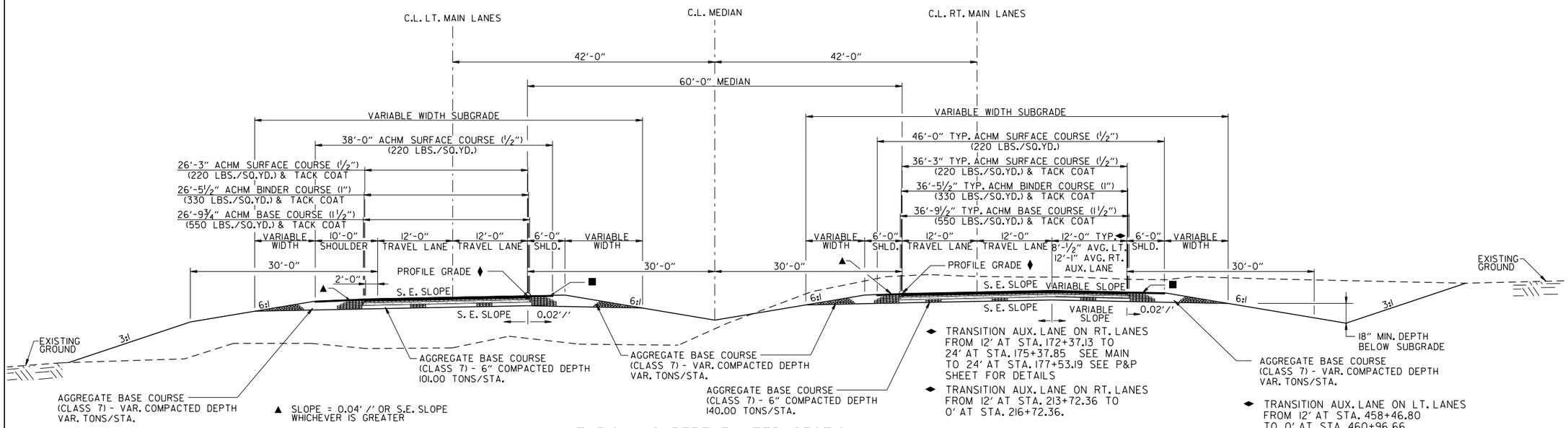

▲ SLOPE = 0.04'/' OR S.E. SLOPE WHICHEVER IS GREATER

♦ POINT OF SUPERELEVATION ROTATION

■ ON ALL SUPERELEVATED CURVES AND THROUGH SUPERELEVATION TRANSITIONS, THE ALGEBRAIC DIFFERENCE BETWEEN PAVEMENT SLOPE AND SHOULDER SLOPE SHALL NOT EXCEED 0.08'/'.

TYPICAL SUPERELEVATED SECTION ALTERNATIVE 2

MAIN LANES
W/ AUXILIARY LANE

STA. 170+00.00 TO STA. 177+53.19 RT. LANES
STA. 172+00.00 TO STA. 177+53.19 LT. LANES
STA. 206+72.36 TO STA. 216+72.36 RT. LANES
STA. 421+14.82 TO STA. 431+14.82 LT. LANES
STA. 435+99.37 TO STA. 447+96.54 RT. LANES
STA. 449+41.15 TO STA. 460+96.66 LT. LANES
STA. 460+84.47 TO STA. 478+40.00 RT. LANES
STA. 474+53.69 TO STA. 478+40.00 LT. LANES

◆ TRANSITION AUX. LANE ON RT. LANES FROM 12' AT STA. 172+37.13 TO 24' AT STA. 175+37.85 SEE MAIN TO 24' AT STA. 177+53.19 SEE P&P SHEET FOR DETAILS

◆ TRANSITION AUX. LANE ON RT. LANES FROM 12' AT STA. 213+72.36 TO 0' AT STA. 216+72.36.

◆ TRANSITION AUX. LANE ON LT. LANES FROM 0' AT STA. 421+14.82 TO 12' AT STA. 424+14.82.

◆ TRANSITION AUX. LANE ON RT. LANES FROM 0' AT STA. 435+99.37 TO 12' AT STA. 438+49.37.

◆ TRANSITION AUX. LANE ON LT. LANES FROM 0' AT STA. 474+53.69 TO 12' AT STA. 477+53.69.

◆ TRANSITION AUX. LANE ON LT. LANES FROM 12' AT STA. 458+46.80 TO 0' AT STA. 460+96.66

SEE BRIDGE PLANS FOR:
LT. LANES
STA. 426+48.43 TO STA. 429+32.43
STA. 462+18.42 TO STA. 465+02.36
RT. LANES
STA. 426+74.02 TO STA. 429+64.67
STA. 462+33.60 TO STA. 465+24.16

NOTES:

REFER TO CROSS SECTIONS FOR DEVIATION FROM THE NORMAL SLOPES. NO CHANGES SHALL BE MADE FROM THE PLANNED SLOPES WITHOUT THE APPROVAL OF THE ENGINEER.

THE THICKNESS OF AGGREGATE BASE COURSE SHALL BE WITHIN PLUS OR MINUS ONE INCH OF THE PLAN THICKNESS SHOWN. THE CONTRACTOR WILL CORRECT ANY DEFICIENT THICKNESS THAT DOES NOT MEET THE TOLERANCE INDICATED. PAYMENT WILL NOT BE MADE FOR MATERIAL PLACED IN EXCESS OF THE TOLERANCE INDICATED.

THE FINAL 2" OF SURFACE COURSE IS TO BE PLACED AFTER ALL OTHER COURSES HAVE BEEN LAID. LONGITUDINAL JOINTS SHALL BE AT THE LANE LINES.

ASPHALT FOR LEVELING OF EXISTING PAVEMENT SHALL BE PLACED ONLY IF AND WHERE DIRECTED BY THE ENGINEER. CALCULATIONS FOR THE AMOUNT OF LEVELING AND/OR LEVELING OPERATIONS SHALL BE PERFORMED BEFORE CONSTRUCTING NOTCH AND WIDENING. CALCULATIONS WILL NOT BE PAID FOR DIRECTLY BUT PAYMENT WILL BE CONSIDERED INCLUDED IN THE VARIOUS PAY ITEMS.

BLEEDER DITCHES - PRIOR TO AND DURING PLACEMENT OF PAVEMENT AT THE NOTCH, THE CONTRACTOR SHALL PROVIDE POSITIVE DRAINAGE AT ALL TIMES. THE METHOD(S) AND SPACING USED SHALL BE APPROVED BY THE ENGINEER. PAYMENT FOR THIS WORK SHALL BE CONSIDERED INCLUDED IN THE PRICE BID FOR THE VARIOUS CONTRACT ITEMS.

HBVinson
7/27/2023 1:37:03 PM
WORKSPACE: AHTD
L:\201\1701660 - ARDOT 012326 Hwy 412 - Hwy 112\Drawings\r012326_TS_ALL_01.dgn
REVISED DATE:

DATE REVISED	DATE REVISED	FED. RD. DIST. NO.	STATE	JOB NO.	SHEET NO.	TOTAL SHEETS
		6	ARK.	012326	18	838
		TYPICAL SECTIONS OF IMPROVEMENT				
②						

STATE OF ARKANSAS
LICENSED PROFESSIONAL ENGINEER
No. 13436
SHAUN A. ROBERSON
DIGITALLY SIGNED 7/28/2023

NOTES:

REFER TO CROSS SECTIONS FOR DEVIATION FROM THE NORMAL SLOPES. NO CHANGES SHALL BE MADE FROM THE PLANNED SLOPES WITHOUT THE APPROVAL OF THE ENGINEER.

THE THICKNESS OF AGGREGATE BASE COURSE SHALL BE WITHIN PLUS OR MINUS ONE INCH OF THE PLAN THICKNESS SHOWN. THE CONTRACTOR WILL CORRECT ANY DEFICIENT THICKNESS THAT DOES NOT MEET THE TOLERANCE INDICATED. PAYMENT WILL NOT BE MADE FOR MATERIAL PLACED IN EXCESS OF THE TOLERANCE INDICATED.

THE FINAL 2" OF SURFACE COURSE IS TO BE PLACED AFTER ALL OTHER COURSES HAVE BEEN LAID. LONGITUDINAL JOINTS SHALL BE AT THE LANE LINES.

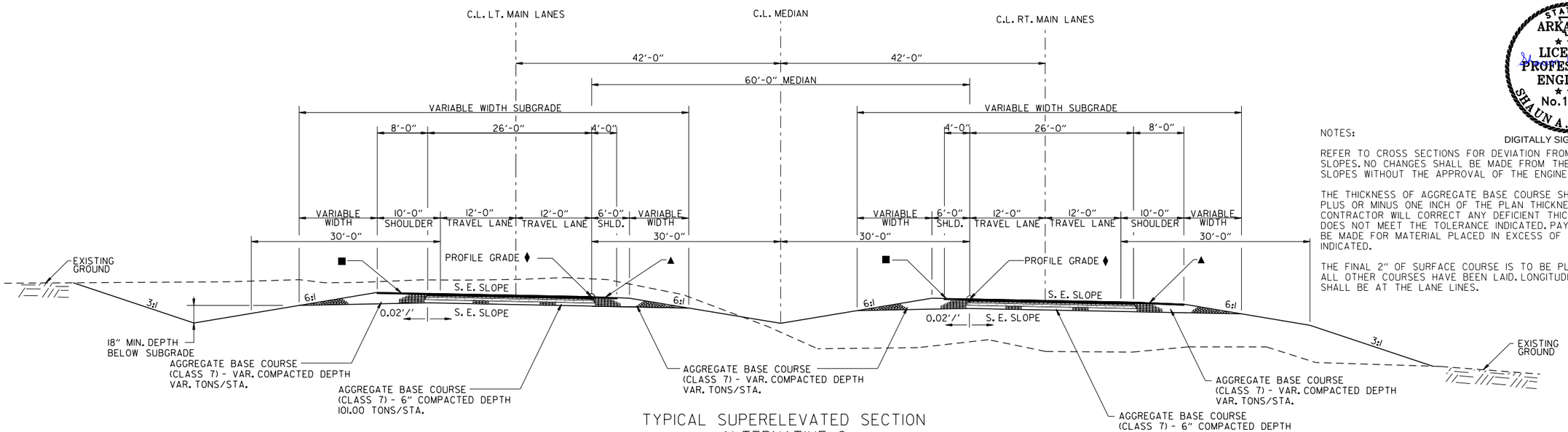

TYPICAL SUPERELEVATED SECTION ALTERNATIVE 2

MAIN LANES

STA. 177+53.19 TO STA. 206+72.36
STA. 216+72.36 TO STA. 222+98.54
STA. 226+69.81 TO STA. 252+75.46
STA. 301+33.58 TO STA. 364+82.77
STA. 411+61.02 TO STA. 421+14.82
STA. 431+14.82 TO STA. 435+99.37
STA. 447+96.54 TO STA. 449+41.15

SEE BRIDGE PLANS FOR:
LT. LANES
STA. 183+22.52 TO STA. 187+01.07
STA. 190+92.39 TO STA. 193+94.29
RT. LANES
STA. 184+17.68 TO STA. 187+75.30
STA. 191+11.91 TO STA. 194+15.44

▲ SLOPE = 0.04'/' OR S.E. SLOPE WHICHEVER IS GREATER

♦ POINT OF SUPERELEVATION ROTATION

■ ON ALL SUPERELEVATED CURVES AND THROUGH SUPERELEVATION TRANSITIONS, THE ALGEBRAIC DIFFERENCE BETWEEN PAVEMENT SLOPE AND SHOULDER SLOPE SHALL NOT EXCEED 0.08'/'.

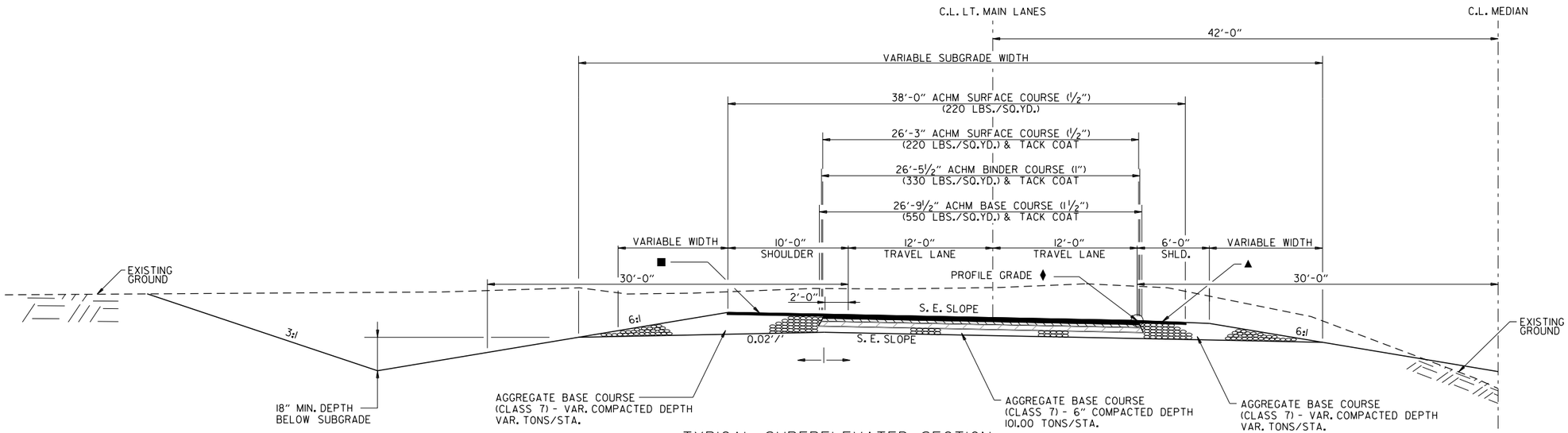

TYPICAL SUPERELEVATED SECTION ALTERNATIVE 2

MAIN LANES

(ENLARGED TO SHOW PAVEMENT DETAILS)

HBVinson 7/27/2023 11:37:03 PM
WORKSPACE: AHTD
L:\2017\170766O - ARDOT 012326 Hwy 412 - Hwy 112\Drawings\r012326_TS_ALL_01.dgn
REVISED DATE:

DATE REVISED	DATE REVISED	FED. RD. DIST. NO.	STATE	JOB NO.	SHEET NO.	TOTAL SHEETS
		6	ARK.	012326	19	838
		TYPICAL SECTIONS OF IMPROVEMENT				
2						

STATE OF ARKANSAS
LICENSED PROFESSIONAL ENGINEER
No. 13436
SHAUN A. ROBERSON
DIGITALLY SIGNED 7/28/2023

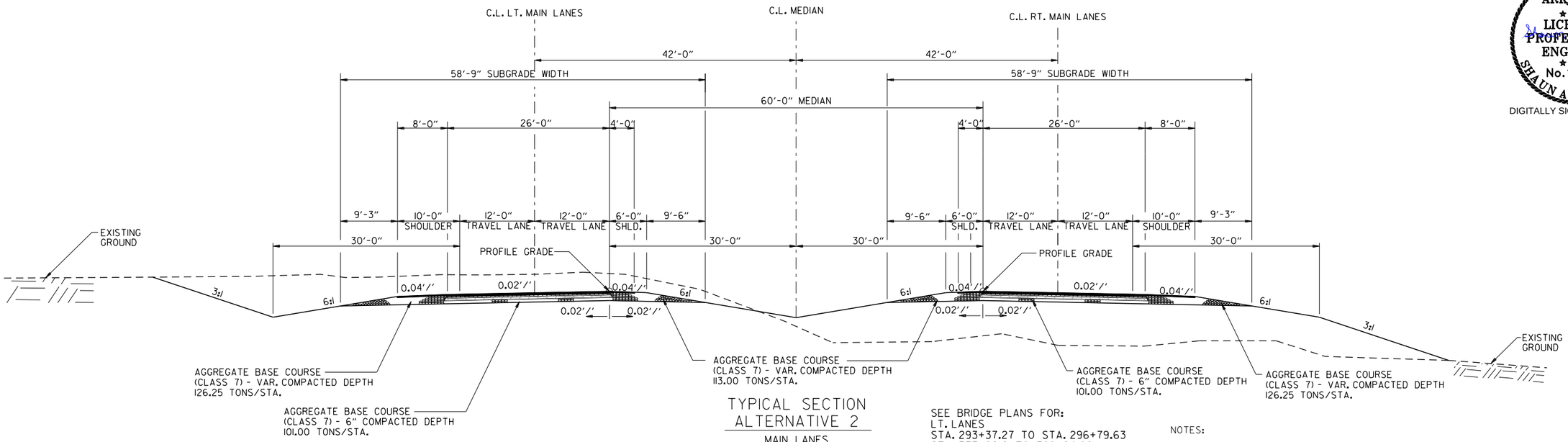

TYPICAL SECTION ALTERNATIVE 2

MAIN LANES

STA. 222+98.54 TO STA. 226+69.81
STA. 252+75.46 TO STA. 301+33.58
STA. 364+82.77 TO STA. 411+61.02
STA. 484+53.69 TO STA. 514+00.00

SEE BRIDGE PLANS FOR:
LT. LANES
STA. 293+37.27 TO STA. 296+79.63
STA. 377+86.91 TO 388+24.09
RT. LANES
STA. 293+75.00 TO STA. 297+17.36
STA. 377+86.91 TO STA. 388+24.09

NOTES:

REFER TO CROSS SECTIONS FOR DEVIATION FROM THE NORMAL SLOPES. NO CHANGES SHALL BE MADE FROM THE PLANNED SLOPES WITHOUT THE APPROVAL OF THE ENGINEER.

THE THICKNESS OF AGGREGATE BASE COURSE SHALL BE WITHIN PLUS OR MINUS ONE INCH OF THE PLAN THICKNESS SHOWN. THE CONTRACTOR WILL CORRECT ANY DEFICIENT THICKNESS THAT DOES NOT MEET THE TOLERANCE INDICATED. PAYMENT WILL NOT BE MADE FOR MATERIAL PLACED IN EXCESS OF THE TOLERANCE INDICATED.

THE FINAL 2" OF SURFACE COURSE IS TO BE PLACED AFTER ALL OTHER COURSES HAVE BEEN LAID. LONGITUDINAL JOINTS SHALL BE AT THE LANE LINES.

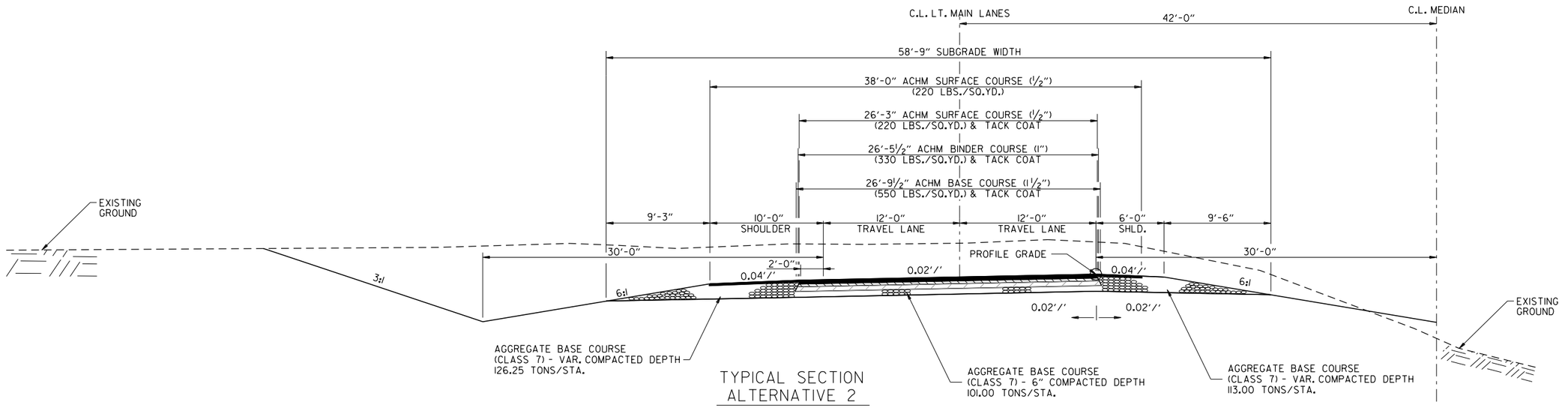

TYPICAL SECTION ALTERNATIVE 2

MAIN LANES
(ENLARGED TO SHOW PAVEMENT DETAILS)

HBVinson 7/27/2023 11:37:03 PM
WORKSPACE: AHTD
L:\2017\170176\60 - ARDOT 012326 Hwy 412 - Hwy 112\Drawings\r012326_TS_ALL_01.dgn
REVISED DATE:

DATE REVISED	DATE REVISED	FED. RD. DIST. NO.	STATE	JOB NO.	SHEET NO.	TOTAL SHEETS
		6	ARK.	012326	20	838
		TYPICAL SECTIONS OF IMPROVEMENT				
2						

STATE OF ARKANSAS
LICENSED PROFESSIONAL ENGINEER
No. 13436
SHAUN A. ROBERSON
DIGITALLY SIGNED 7/28/2023

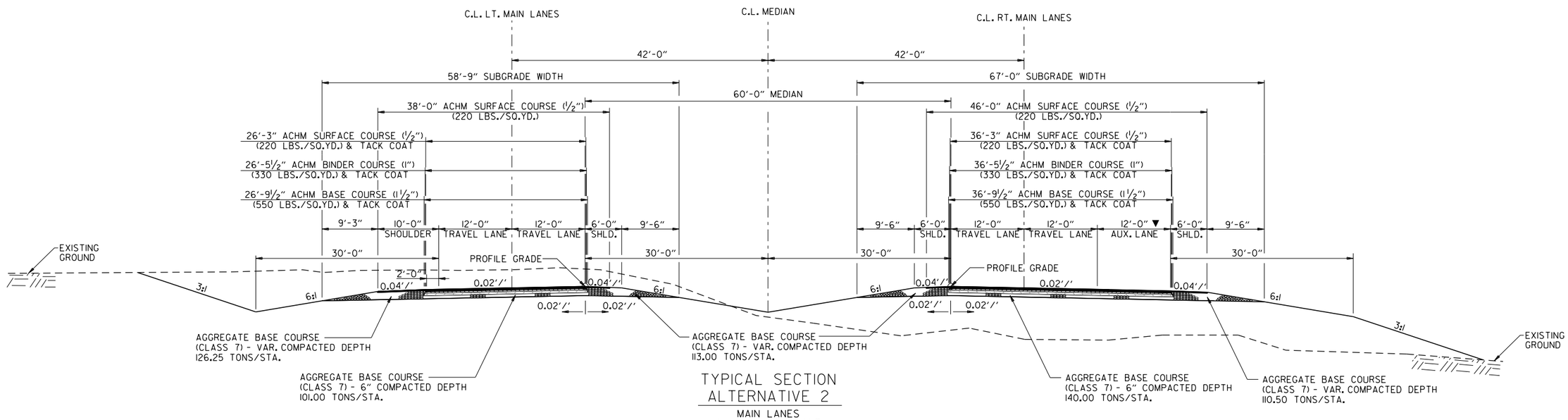

TYPICAL SECTION ALTERNATIVE 2

MAIN LANES
W/ AUXILIARY LANE

STA. 478+40.00 TO STA. 483+29.51 RT. LANES
STA. 478+40.00 TO STA. 484+53.69 LT. LANES

▼ AUX. LANE ON RIGHT 0'
FROM 483+29.51
TO 484+53.19

NOTES:

REFER TO CROSS SECTIONS FOR DEVIATION FROM THE NORMAL SLOPES. NO CHANGES SHALL BE MADE FROM THE PLANNED SLOPES WITHOUT THE APPROVAL OF THE ENGINEER.

THE THICKNESS OF AGGREGATE BASE COURSE SHALL BE WITHIN PLUS OR MINUS ONE INCH OF THE PLAN THICKNESS SHOWN. THE CONTRACTOR WILL CORRECT ANY DEFICIENT THICKNESS THAT DOES NOT MEET TOLERANCE INDICATED. PAYMENT WILL NOT BE MADE FOR MATERIAL PLACED IN EXCESS OF THE TOLERANCE INDICATED.

THE FINAL 2" OF SURFACE COURSE IS TO BE PLACED AFTER ALL OTHER COURSES HAVE BEEN LAID. LONGITUDINAL JOINTS SHALL BE AT LANE LINES.

TYPICAL SECTIONS OF IMPROVEMENT

HBVinson 7/27/2023 11:37:04 PM
WORKSPACE: AHTD
L:\2017\17017660 - ARDOT 012326 Hwy 412 - Hwy 112\Drawings\r012326_TS_ALL_01.dgn
REVISED DATE:

DATE REVISED	DATE REVISED	FED. RD. DIST. NO.	STATE	JOB NO.	SHEET NO.	TOTAL SHEETS
		6	ARK.	012326	21	838
②		TYPICAL SECTIONS OF IMPROVEMENT				

STATE OF ARKANSAS
LICENSED PROFESSIONAL ENGINEER
No.13436
SHAUNA. ROBERSON
DIGITALLY SIGNED 7/28/2023

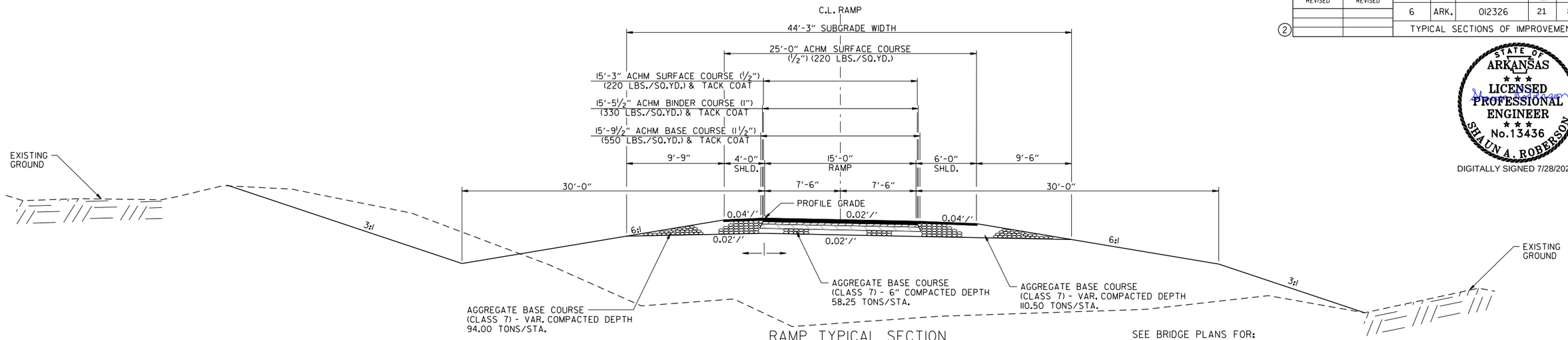

RAMP TYPICAL SECTION ALTERNATIVE 2

(SHOWN IN THE DIRECTION OF TRAFFIC)

HWY. 412B RAMP 2 STA. 192+42.58 TO STA. 194+08.59
HWY. 412B RAMP 3 STA. 192+33.34 TO STA. 193+15.21

XNA ACCESS RD. RAMP 1 STA. 468+94.40 TO STA. 482+70.26
XNA ACCESS RD. RAMP 2 STA. 426+22.22 TO STA. 428+91.93
XNA ACCESS RD. RAMP 4 STA. 431+18.13 TO STA. 431+57.19

HWY. 112 RAMP 1 STA. 483+30.39 TO STA. 483+71.30
HWY. 112 RAMP 1 STA. 493+74.64 TO STA. 493+81.27
HWY. 112 RAMP 4 STA. 493+60.68 TO STA. 499+12.74

SEE BRIDGE PLANS FOR:
XNA ACCESS RD. RAMP 1
FOR STA. 470+03.82 TO STA. 472+85.99
XNA ACCESS RD. RAMP 2
FOR STA. 428+20.93 TO STA. 431+12.22

NOTES:

REFER TO CROSS SECTIONS FOR DEVIATION FROM THE NORMAL SLOPES. NO CHANGES SHALL BE MADE FROM THE PLANNED SLOPES WITHOUT THE APPROVAL OF THE ENGINEER.

THE THICKNESS OF AGGREGATE BASE COURSE SHALL BE WITHIN PLUS OR MINUS ONE INCH OF THE PLAN THICKNESS SHOWN. THE CONTRACTOR WILL CORRECT ANY DEFICIENT THICKNESS THAT DOES NOT MEET TOLERANCE INDICATED. PAYMENT WILL NOT BE MADE FOR MATERIAL PLACED IN EXCESS OF THE TOLERANCE INDICATED.

THE FINAL 2" OF SURFACE COURSE IS TO BE PLACED AFTER ALL OTHER COURSES HAVE BEEN LAID. LONGITUDINAL JOINTS SHALL BE AT LANE LINES.

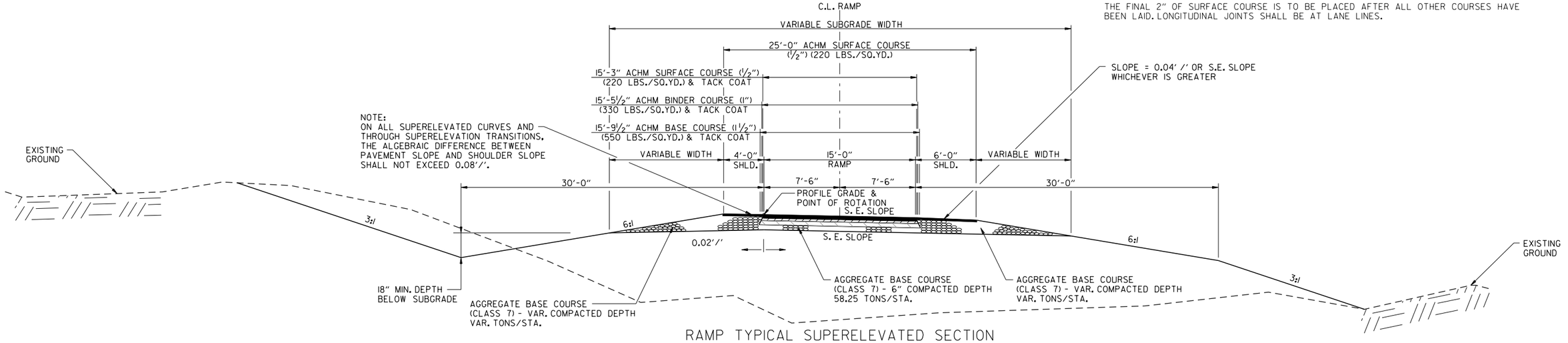

RAMP TYPICAL SUPERELEVATED SECTION ALTERNATIVE 2

(SHOWN IN THE DIRECTION OF TRAFFIC)

HWY. 412B RAMP 2 STA. 194+08.59 TO STA. 206+69.05
HWY. 412B RAMP 3 STA. 193+15.21 TO STA. 205+31.72

XNA ACCESS RD. RAMP 1 STA. 447+93.93 TO STA. 468+94.40
XNA ACCESS RD. RAMP 2 STA. 424+21.33 TO STA. 426+22.22
XNA ACCESS RD. RAMP 2 STA. 428+91.93 TO STA. 451+20.56
XNA ACCESS RD. RAMP 2 STA. 451+20.57 TO STA. 460+86.86
XNA ACCESS RD. RAMP 3 STA. 434+37.71 TO STA. 449+34.18
XNA ACCESS RD. RAMP 4 STA. 431+57.19 TO STA. 441+85.55

HWY. 112 RAMP 1 STA. 483+71.30 TO STA. 493+74.64
HWY. 112 RAMP 1 STA. 493+81.27 TO STA. 498+30.00
HWY. 112 RAMP 4 STA. 484+53.20 TO STA. 493+60.68

SEE BRIDGE PLANS FOR:
XNA ACCESS RD. RAMP 2
STA. 428+55.95 TO 430+77.20

HBVinson 7/27/2023 11:37:04 PM
WORKSPACE: AHTD
L:\2017\170176\60 - ARDOT 012326 Hwy 412 - Hwy 112\Drawings\r012326_TS_ALL_01.dgn
REVISED DATE:

DATE REVISED	DATE REVISED	FED. RD. DIST. NO.	STATE	JOB NO.	SHEET NO.	TOTAL SHEETS
		6	ARK.	012326	22	838
		TYPICAL SECTIONS OF IMPROVEMENT				

(2)

STATE OF ARKANSAS
LICENSED PROFESSIONAL ENGINEER
No.13436
SHAUN A. ROBERSON
DIGITALLY SIGNED 7/28/2023

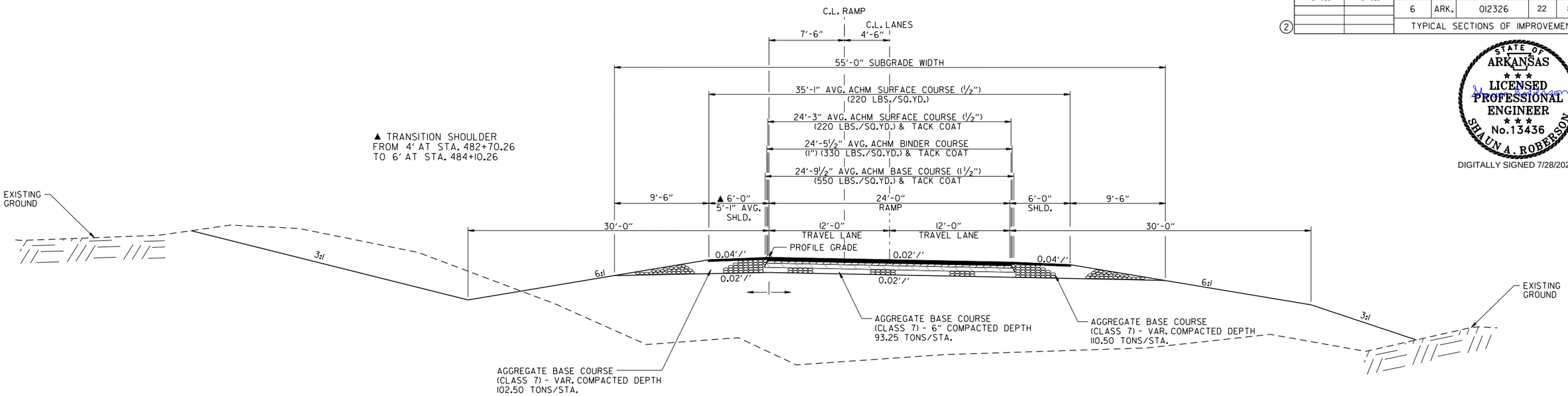

TWO LANE RAMP TYPICAL SECTION ALTERNATIVE 2

(SHOWN IN THE DIRECTION OF TRAFFIC)

XNA ACCESS RD. RAMP 1 STA. 482+70.26 TO STA. 484+19.97

NOTES:

REFER TO CROSS SECTIONS FOR DEVIATION FROM THE NORMAL SLOPES. NO CHANGES SHALL BE MADE FROM THE PLANNED SLOPES WITHOUT THE APPROVAL OF THE ENGINEER.

THE THICKNESS OF AGGREGATE BASE COURSE SHALL BE WITHIN PLUS OR MINUS ONE INCH OF THE PLAN THICKNESS SHOWN. THE CONTRACTOR WILL CORRECT ANY DEFICIENT THICKNESS THAT DOES NOT MEET TOLERANCE INDICATED. PAYMENT WILL NOT BE MADE FOR MATERIAL PLACED IN EXCESS OF THE TOLERANCE INDICATED.

THE FINAL 2" OF SURFACE COURSE IS TO BE PLACED AFTER ALL OTHER COURSES HAVE BEEN LAID. LONGITUDINAL JOINTS SHALL BE AT LANE LINES.

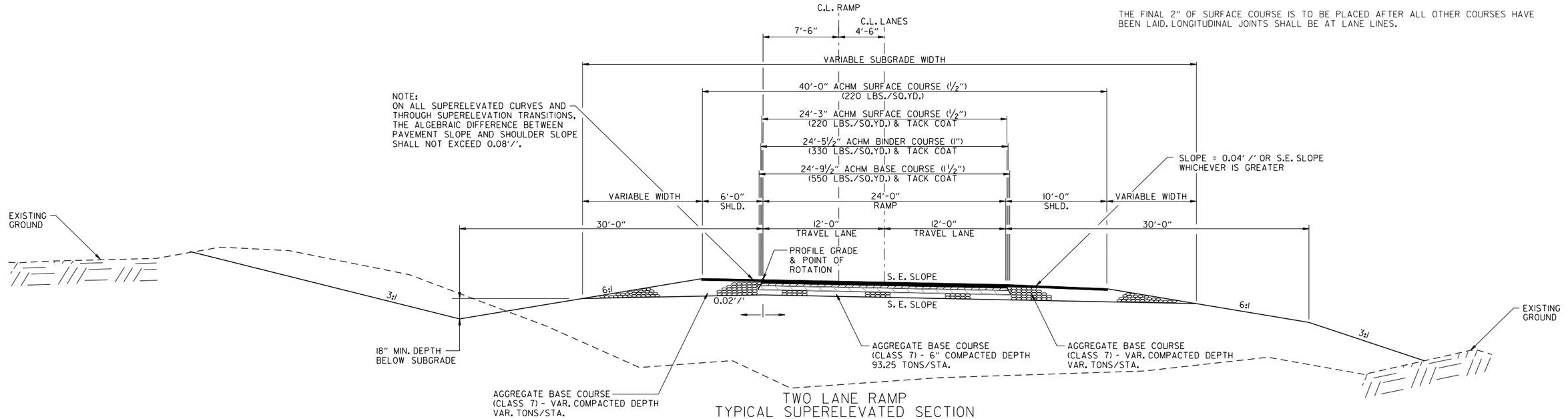

TWO LANE RAMP TYPICAL SUPERELEVATED SECTION ALTERNATIVE 2

(SHOWN IN THE DIRECTION OF TRAFFIC)

XNA ACCESS RD. RAMP 2 STA. 416+52.40 TO STA. 424+21.33

HBVinson 7/27/2023 11:37:04 PM
WORKSPACE: AHTD
L:\2017\170176\60 - ARDOT 012326 Hwy 412 - Hwy 112\Drawings\r012326_TS_ALL_01.dgn
REVISED DATE:

DATE REVISED	DATE REVISED	FED. RD. DIST. NO.	STATE	JOB NO.	SHEET NO.	TOTAL SHEETS
		6	ARK.	012326	23	838
②		TYPICAL SECTIONS OF IMPROVEMENT				

STATE OF ARKANSAS
LICENSED PROFESSIONAL ENGINEER
No.13436
SHAUNA. ROBERSON
DIGITALLY SIGNED 7/28/2023

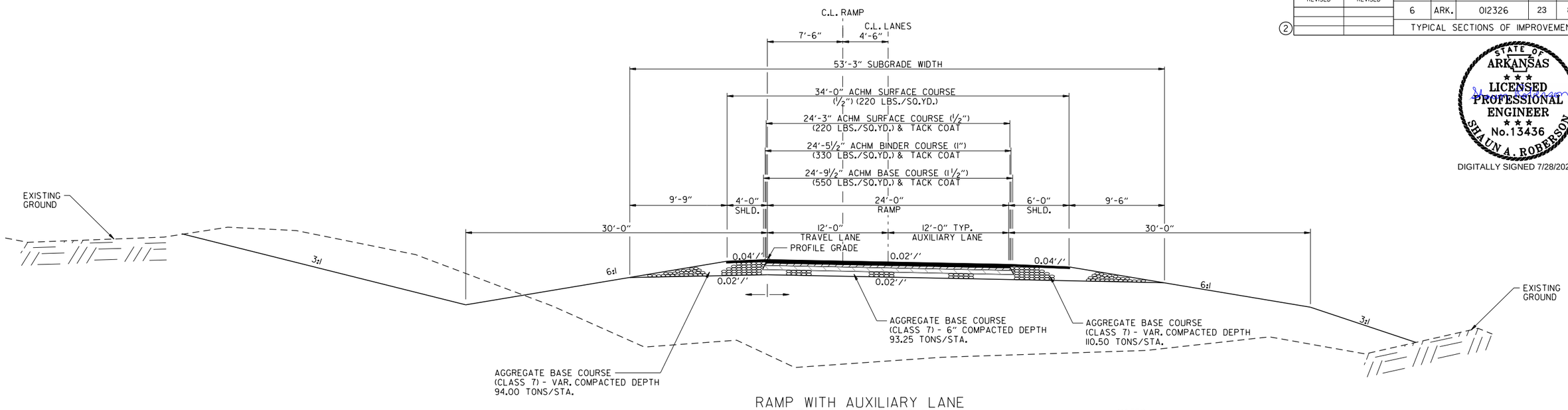

RAMP WITH AUXILIARY LANE
TYPICAL SECTION
ALTERNATIVE 2

(SHOWN IN THE DIRECTION OF TRAFFIC)

HWY. 112 RAMP 1 STA. 501+38.11 TO STA. 501+41.07

NOTES:

REFER TO CROSS SECTIONS FOR DEVIATION FROM THE NORMAL SLOPES. NO CHANGES SHALL BE MADE FROM THE PLANNED SLOPES WITHOUT THE APPROVAL OF THE ENGINEER.

THE THICKNESS OF AGGREGATE BASE COURSE SHALL BE WITHIN PLUS OR MINUS ONE INCH OF THE PLAN THICKNESS SHOWN. THE CONTRACTOR WILL CORRECT ANY DEFICIENT THICKNESS THAT DOES NOT MEET TOLERANCE INDICATED. PAYMENT WILL NOT BE MADE FOR MATERIAL PLACED IN EXCESS OF THE TOLERANCE INDICATED.

THE FINAL 2" OF SURFACE COURSE IS TO BE PLACED AFTER ALL OTHER COURSES HAVE BEEN LAID. LONGITUDINAL JOINTS SHALL BE AT LANE LINES.

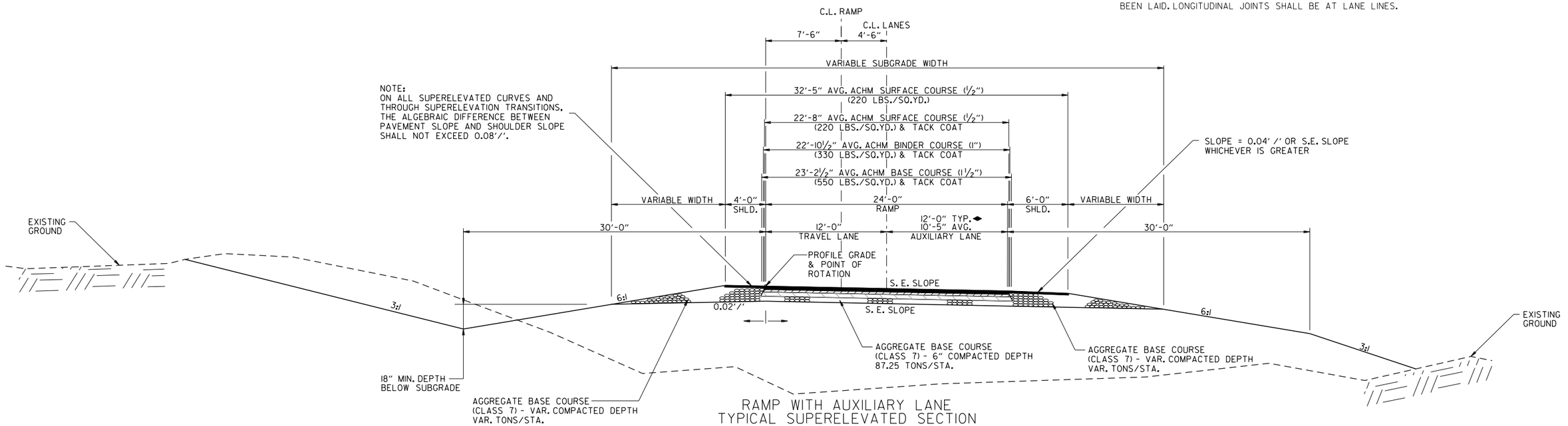

RAMP WITH AUXILIARY LANE
TYPICAL SUPERELEVATED SECTION
ALTERNATIVE 2

(SHOWN IN THE DIRECTION OF TRAFFIC)

HWY. 112 RAMP 1 STA. 498+30.00 TO STA. 501+38.11

◆ TRANSITION TURN LANE FROM 0' AT 112 RAMP 1 STA. 498+30.00 TO 12' AT 112 RAMP 1 STA. 499+30.00

TYPICAL SECTIONS OF IMPROVEMENT

HBVinson
WORKSPACE: AHTD
L:\2017\170176\660 - ARDOT 012326 Hwy 412 - Hwy 112\Drawings\r012326_TS_ALL_01.dgn
7/27/2023 11:37:04 PM
REVISED DATE:

DATE REVISED	DATE REVISED	FED. RD. DIST. NO.	STATE	JOB NO.	SHEET NO.	TOTAL SHEETS
		6	ARK.	012326	24	838
		TYPICAL SECTIONS OF IMPROVEMENT				
2						

STATE OF ARKANSAS
LICENSED PROFESSIONAL ENGINEER
No.13436
SHAUN A. ROBERSON

DIGITALLY SIGNED 7/28/2023

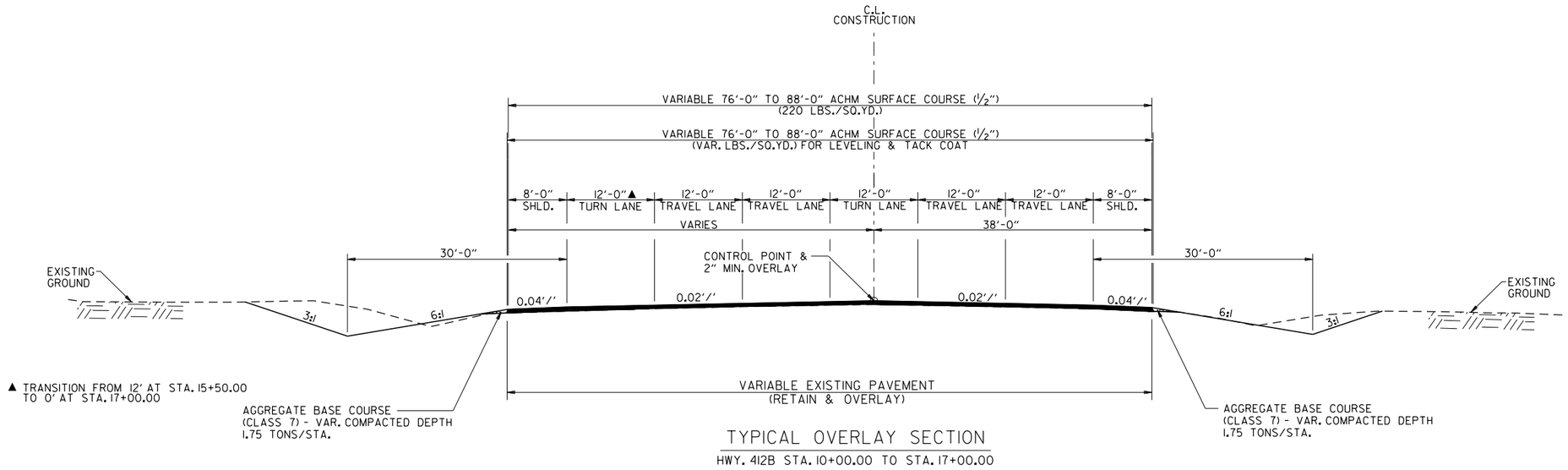

TYPICAL OVERLAY SECTION

HWY. 412B STA. 10+00.00 TO STA. 17+00.00

NOTES:

REFER TO CROSS SECTIONS FOR DEVIATION FROM THE NORMAL SLOPES. NO CHANGES SHALL BE MADE FROM THE PLANNED SLOPES WITHOUT THE APPROVAL OF THE ENGINEER

THE FINAL 2" OF SURFACE COURSE IS TO BE PLACED AFTER ALL OTHER COURSES HAVE BEEN LAID. LONGITUDINAL JOINTS SHALL BE AT THE LANE LINES.

ASPHALT FOR LEVELING OF EXISTING PAVEMENT SHALL BE PLACED ONLY IF AND WHERE DIRECTED BY THE ENGINEER. CALCULATIONS FOR THE AMOUNT OF LEVELING AND/OR LEVELING OPERATIONS SHALL BE PERFORMED BEFORE CONSTRUCTING NOTCH AND WIDENING. CALCULATIONS WILL NOT BE PAID FOR DIRECTLY BUT PAYMENT WILL BE CONSIDERED INCLUDED IN THE VARIOUS PAY ITEMS.

HBVinson 7/27/2023 1:37:05 PM
WORKSPACE: AHTD
L:\20171701660 - ARDOT 012326 Hwy 412 - Hwy 112\Drawings\r012326_TS_ALL_01.dgn
REVISED DATE:

DATE REVISED	DATE REVISED	FED. RD. DIST. NO.	STATE	JOB NO.	SHEET NO.	TOTAL SHEETS
		6	ARK.	012326	25	838
②		TYPICAL SECTIONS OF IMPROVEMENT				

STATE OF ARKANSAS
LICENSED PROFESSIONAL ENGINEER
No.13436
SHAUN A. ROBERSON
DIGITALLY SIGNED 7/28/2023

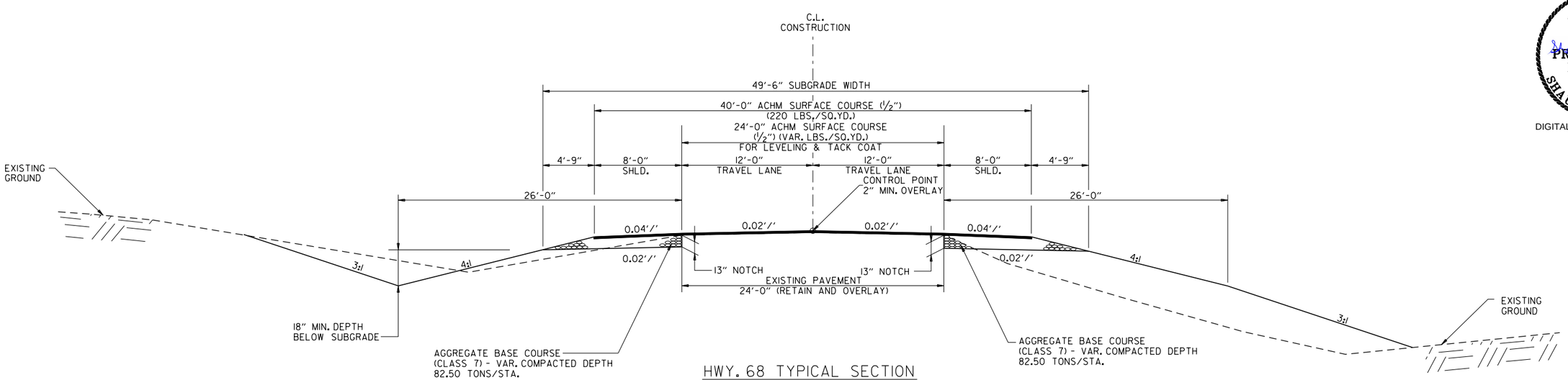

HWY. 68 TYPICAL SECTION
STA. 44+50.00 TO STA. 47+67.57

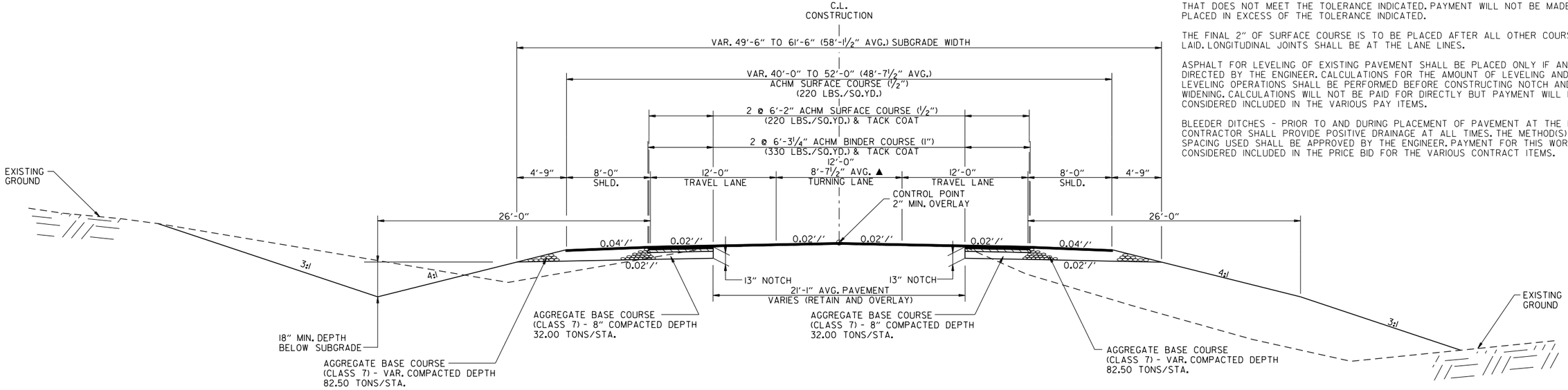

HWY. 68 TYPICAL SECTION
STA. 47+67.57 TO STA. 53+00.00

▲ TRANSITION FROM 0' AT STA. 47+67.57 TO 12' AT STA. 50+67.57

NOTES:

REFER TO CROSS SECTIONS FOR DEVIATION FROM THE NORMAL SLOPES. NO CHANGES SHALL BE MADE FROM THE PLANNED SLOPES WITHOUT THE APPROVAL OF THE ENGINEER.

THE THICKNESS OF AGGREGATE BASE COURSE SHALL BE WITHIN PLUS OR MINUS ONE INCH OF THE PLAN THICKNESS SHOWN. THE CONTRACTOR WILL CORRECT ANY DEFICIENT THICKNESS THAT DOES NOT MEET THE TOLERANCE INDICATED. PAYMENT WILL NOT BE MADE FOR MATERIAL PLACED IN EXCESS OF THE TOLERANCE INDICATED.

THE FINAL 2" OF SURFACE COURSE IS TO BE PLACED AFTER ALL OTHER COURSES HAVE BEEN LAID. LONGITUDINAL JOINTS SHALL BE AT THE LANE LINES.

ASPHALT FOR LEVELING OF EXISTING PAVEMENT SHALL BE PLACED ONLY IF AND WHERE DIRECTED BY THE ENGINEER. CALCULATIONS FOR THE AMOUNT OF LEVELING AND/OR LEVELING OPERATIONS SHALL BE PERFORMED BEFORE CONSTRUCTING NOTCH AND WIDENING. CALCULATIONS WILL NOT BE PAID FOR DIRECTLY BUT PAYMENT WILL BE CONSIDERED INCLUDED IN THE VARIOUS PAY ITEMS.

BLEEDER DITCHES - PRIOR TO AND DURING PLACEMENT OF PAVEMENT AT THE NOTCH, THE CONTRACTOR SHALL PROVIDE POSITIVE DRAINAGE AT ALL TIMES. THE METHOD(S) AND SPACING USED SHALL BE APPROVED BY THE ENGINEER. PAYMENT FOR THIS WORK SHALL BE CONSIDERED INCLUDED IN THE PRICE BID FOR THE VARIOUS CONTRACT ITEMS.

HBVinson
WORKSPACE: AHTD
L:\20\7\1701660 - ARDOT 012326 Hwy 412 - Hwy 412\Drawings\r012326_TS_ALL_01.dgn
7/27/2023 1:37:05 PM
REVISED DATE:

DATE REVISED	DATE REVISED	FED. RD. DIST. NO.	STATE	JOB NO.	SHEET NO.	TOTAL SHEETS
		6	ARK.	012326	26	838
		TYPICAL SECTIONS OF IMPROVEMENT				
2						

STATE OF ARKANSAS
LICENSED PROFESSIONAL ENGINEER
No.13436
SHAUNA. ROBERSON
DIGITALLY SIGNED 7/28/2023

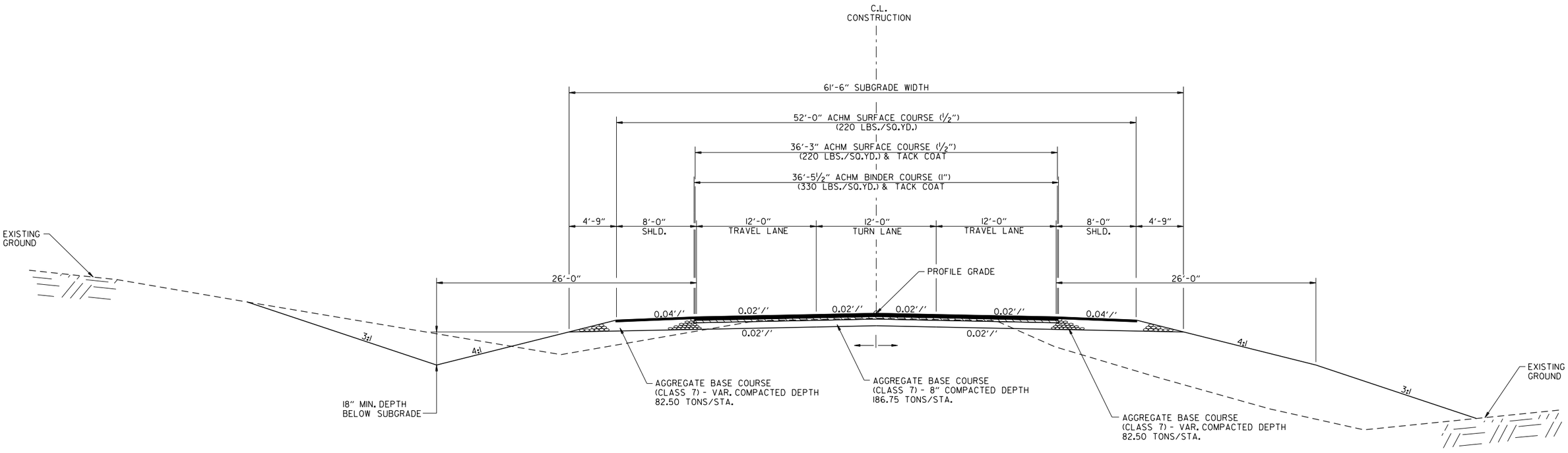

HWY. 68 TYPICAL SECTION

STA. 53+00.00 TO STA. 56+60.84

NOTES:

REFER TO CROSS SECTIONS FOR DEVIATION FROM THE NORMAL SLOPES. NO CHANGES SHALL BE MADE FROM THE PLANNED SLOPES WITHOUT THE APPROVAL OF THE ENGINEER.

THE THICKNESS OF AGGREGATE BASE COURSE SHALL BE WITHIN PLUS OR MINUS ONE INCH OF THE PLAN THICKNESS SHOWN. THE CONTRACTOR WILL CORRECT ANY DEFICIENT THICKNESS THAT DOES NOT MEET THE TOLERANCE INDICATED. PAYMENT WILL NOT BE MADE FOR MATERIAL PLACED IN EXCESS OF THE TOLERANCE INDICATED.

THE FINAL 2" OF SURFACE COURSE IS TO BE PLACED AFTER ALL OTHER COURSES HAVE BEEN LAID. LONGITUDINAL JOINTS SHALL BE AT THE LANE LINES.

HBVinson 7/27/2023 1:37:05 PM
WORKSPACE: AHTD
L:\2017\17017660 - ARDOT 012326 Hwy 412 - Hwy 112\Drawings\r012326_TS_ALL_01.dgn
REVISED DATE:

DATE REVISED	DATE REVISED	FED. RD. DIST. NO.	STATE	JOB NO.	SHEET NO.	TOTAL SHEETS
		6	ARK.	012326	27	838
		TYPICAL SECTIONS OF IMPROVEMENT				
2						

STATE OF ARKANSAS
LICENSED PROFESSIONAL ENGINEER
No.13436
SHAUN A. ROBERSON
DIGITALLY SIGNED 7/28/2023

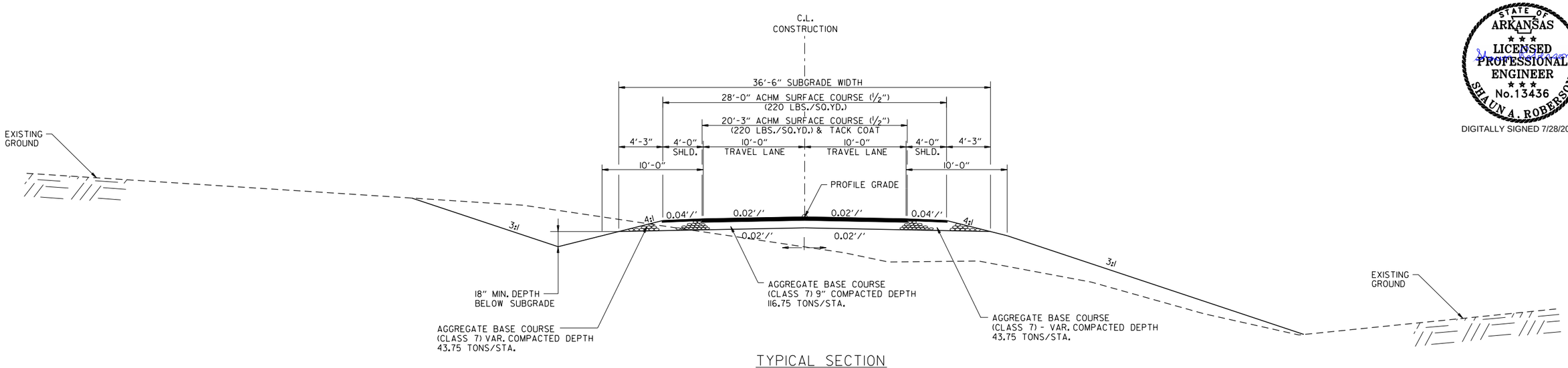

TYPICAL SECTION

MUSTEEN RD. (CO. RD. 855) - STA. 24+12.27 TO STA. 28+42.47
STA. 33+87.82 TO STA. 34+76.65
STA. 39+30.54 TO STA. 39+70.00
LIBERTY AVE. (CO. RD. 904) - STA. 15+50.00 TO STA. 25+50.00
JAVELLO RD. (CO. RD. 946) - STA. 18+00.00 TO STA. 27+96.65
STA. 35+41.17 TO STA. 37+00.00

SEE BRIDGE PLANS FOR:
LIBERTY AVE. (CO. RD. 904)
STA. 18+57.86 TO STA. 21+42.13

NOTES:

REFER TO CROSS SECTIONS FOR DEVIATION FROM THE NORMAL SLOPES. NO CHANGES SHALL BE MADE FROM THE PLANNED SLOPES WITHOUT THE APPROVAL OF THE ENGINEER.

THE THICKNESS OF AGGREGATE BASE COURSE SHALL BE WITHIN PLUS OR MINUS ONE INCH OF THE PLAN THICKNESS SHOWN. THE CONTRACTOR WILL CORRECT ANY DEFICIENT THICKNESS THAT DOES NOT MEET THE TOLERANCE INDICATED. PAYMENT WILL NOT BE MADE FOR MATERIAL PLACED IN EXCESS OF THE TOLERANCE INDICATED.

THE FINAL 2" OF SURFACE COURSE IS TO BE PLACED AFTER ALL OTHER COURSES HAVE BEEN LAID. LONGITUDINAL JOINTS SHALL BE AT THE LANE LINES.

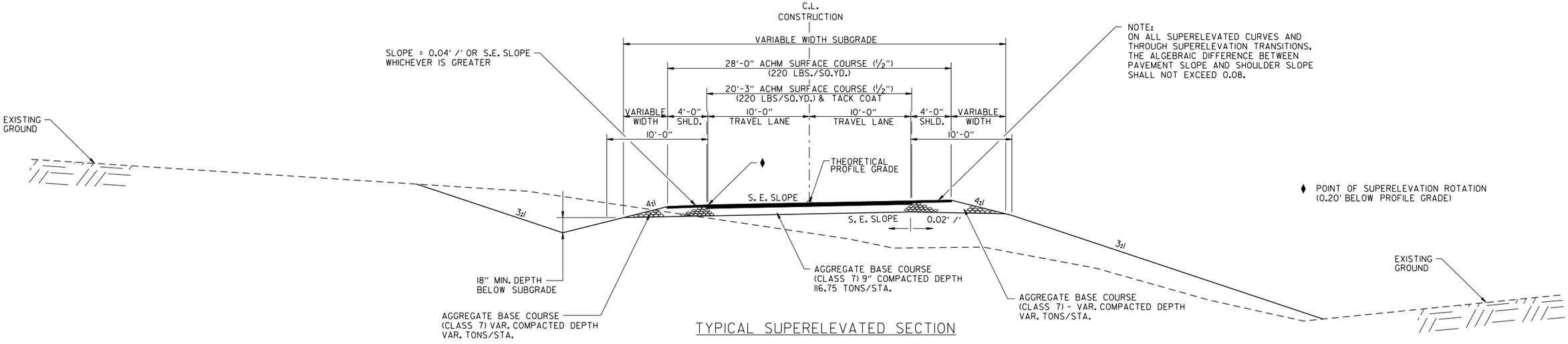

TYPICAL SUPERELEVATED SECTION

MUSTEEN RD. (CO. RD. 855) - STA. 15+26.86 TO STA. 24+12.27
STA. 28+42.47 TO STA. 33+87.82
STA. 34+76.65 TO STA. 39+30.54
JAVELLO RD. (CO. RD. 946) - STA. 27+96.65 TO STA. 35+41.17

HBVinson 7/27/2023 11:37:05 PM
WORKSPACE: AHTD
L:\2017\170176\60 - ARDOT 012326 Hwy 412 - Hwy 112\Drawings\r012326_TS_ALL_01.dgn
REVISED DATE:

DATE REVISED	DATE REVISED	FED. RD. DIST. NO.	STATE	JOB NO.	SHEET NO.	TOTAL SHEETS
		6	ARK.	012326	28	838
		TYPICAL SECTIONS OF IMPROVEMENT				
2						

STATE OF ARKANSAS
LICENSED PROFESSIONAL ENGINEER
No.13436
SHAUN A. ROBERSON

DIGITALLY SIGNED 7/28/2023

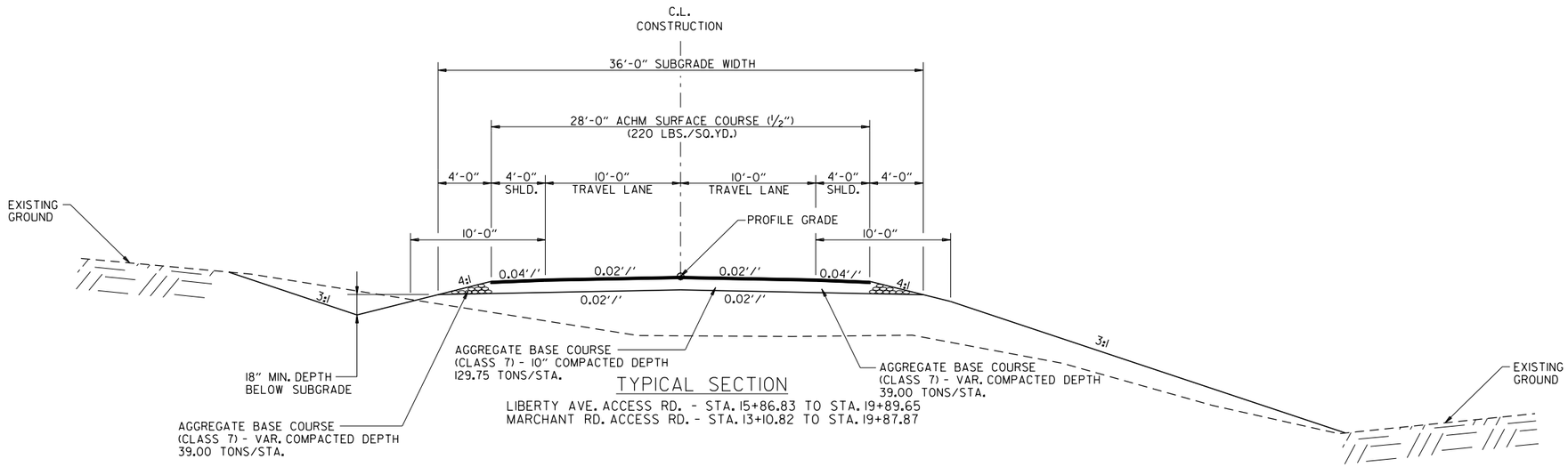

TYPICAL SECTION

LIBERTY AVE. ACCESS RD. - STA. 15+86.83 TO STA. 19+89.65
MARCHANT RD. ACCESS RD. - STA. 13+10.82 TO STA. 19+87.87

NOTES:

REFER TO CROSS SECTIONS FOR DEVIATION FROM THE NORMAL SLOPES. NO CHANGES SHALL BE MADE FROM THE PLANNED SLOPES WITHOUT THE APPROVAL OF THE ENGINEER.

THE THICKNESS OF AGGREGATE BASE COURSE SHALL BE WITHIN PLUS OR MINUS ONE INCH OF THE PLAN THICKNESS SHOWN. THE CONTRACTOR WILL CORRECT ANY DEFICIENT THICKNESS THAT DOES NOT MEET THE TOLERANCE INDICATED. PAYMENT WILL NOT BE MADE FOR MATERIAL PLACED IN EXCESS OF THE TOLERANCE INDICATED.

THE FINAL 2" OF SURFACE COURSE IS TO BE PLACED AFTER ALL OTHER COURSES HAVE BEEN LAID. LONGITUDINAL JOINTS SHALL BE AT THE LANE LINES.

HBVinson 7/27/2023 11:37:05 PM
WORKSPACE: AHTD
L:\2017\17017660 - ARDOT 012326 Hwy 412 - Hwy 112\Drawings\r012326_TS_ALL_01.dgn
REVISED DATE:

DATE REVISED	DATE REVISED	FED. RD. DIST. NO.	STATE	JOB NO.	SHEET NO.	TOTAL SHEETS
		6	ARK.	012326	29	838
		TYPICAL SECTIONS OF IMPROVEMENT				
2						

STATE OF ARKANSAS
LICENSED PROFESSIONAL ENGINEER
No.13436
SHAUNA A. ROBERSON
DIGITALLY SIGNED 7/28/2023

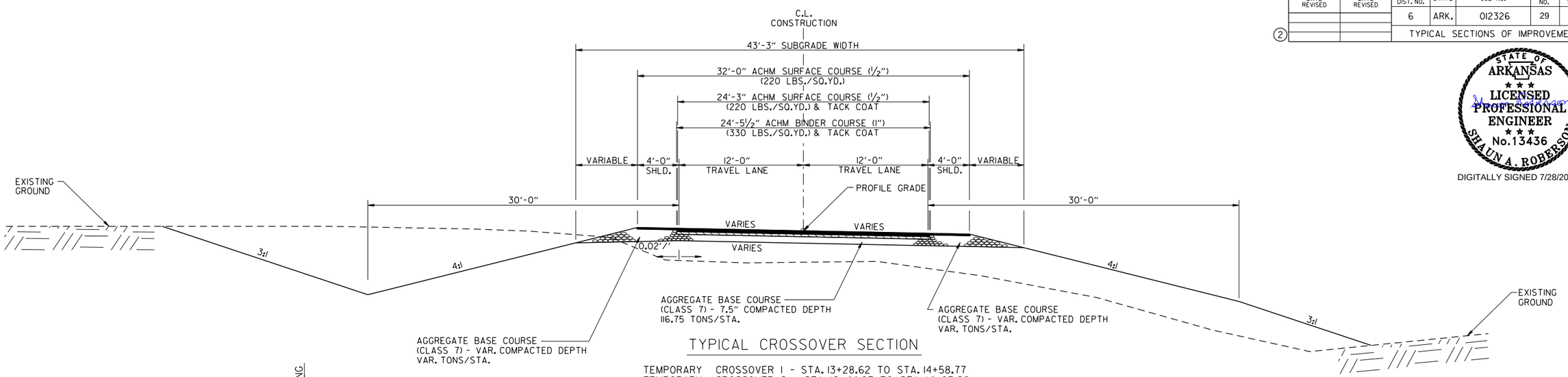

TYPICAL CROSSOVER SECTION

TEMPORARY CROSSOVER 1 - STA. 13+28.62 TO STA. 14+58.77
TEMPORARY CROSSOVER 2 - STA. 12+44.87 TO STA. 14+83.20

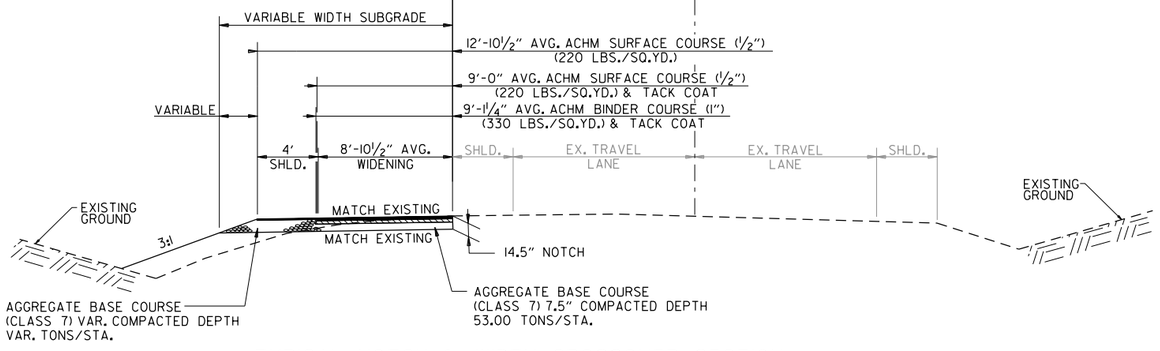

TYPICAL NOTCH & WIDEN CROSSOVER SECTION

TEMPORARY CROSSOVER 1 - STA. 10+00.00 TO STA. 13+28.62
STA. 14+58.77 TO STA. 16+14.64

TEMPORARY CROSSOVER 2 - STA. 10+00.00 TO STA. 12+44.87
STA. 14+83.20 TO STA. 18+06.52

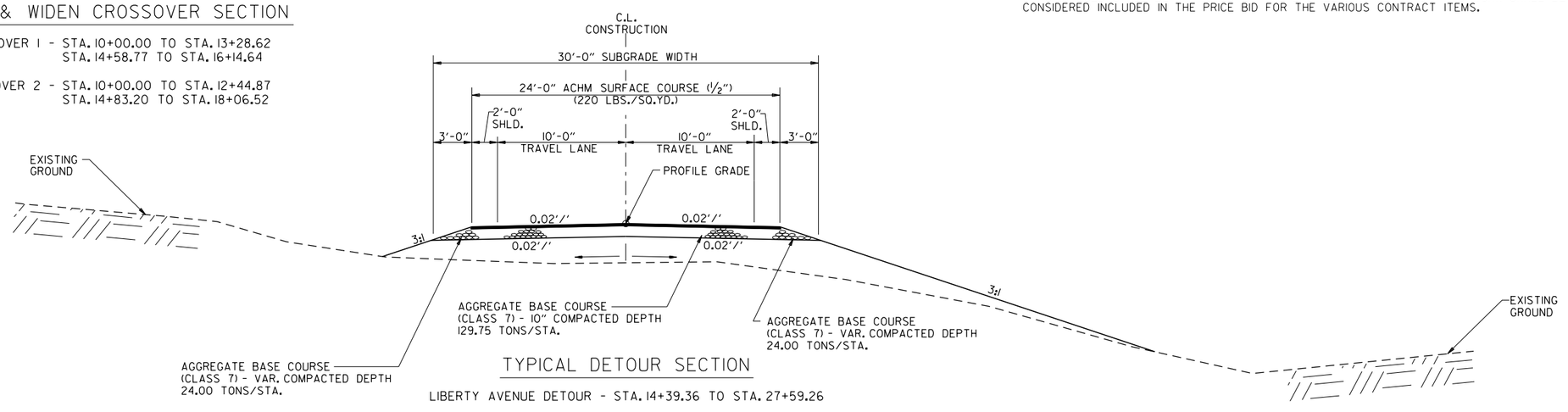

TYPICAL DETOUR SECTION

LIBERTY AVENUE DETOUR - STA. 14+39.36 TO STA. 27+59.26

NOTES:

REFER TO CROSS SECTIONS FOR DEVIATION FROM THE NORMAL SLOPES. NO CHANGES SHALL BE MADE FROM THE PLANNED SLOPES WITHOUT THE APPROVAL OF THE ENGINEER.

THE THICKNESS OF AGGREGATE BASE COURSE SHALL BE WITHIN PLUS OR MINUS ONE INCH OF THE PLAN THICKNESS SHOWN. THE CONTRACTOR WILL CORRECT ANY DEFICIENT THICKNESS THAT DOES NOT MEET THE TOLERANCE INDICATED. PAYMENT WILL NOT BE MADE FOR MATERIAL PLACED IN EXCESS OF THE TOLERANCE INDICATED.

THE FINAL 2" OF SURFACE COURSE IS TO BE PLACED AFTER ALL OTHER COURSES HAVE BEEN LAID. LONGITUDINAL JOINTS SHALL BE AT THE LANE LINES.

BLEEDER DITCHES - PRIOR TO AND DURING PLACEMENT OF PAVEMENT AT THE NOTCH, THE CONTRACTOR SHALL PROVIDE POSITIVE DRAINAGE AT ALL TIMES. THE METHOD(S) AND SPACING USED SHALL BE APPROVED BY THE ENGINEER. PAYMENT FOR THIS WORK SHALL BE CONSIDERED INCLUDED IN THE PRICE BID FOR THE VARIOUS CONTRACT ITEMS.

TYPICAL SECTIONS OF IMPROVEMENT

HBVinson
WORKSPACE: AHTD
L:\2017\17017660 - ARDOT 02326 Hwy 412 - Hwy 112\Drawings\r02326_TS_ALL_01.dgn
7/27/2023 11:37:05 PM
REVISED DATE:

DATE REVISED	DATE REVISED	FED. RD. DIST. NO.	STATE	JOB NO.	SHEET NO.	TOTAL SHEETS
		6	ARK.	012326	30	838
		TYPICAL SECTIONS OF IMPROVEMENT				

(2)

STATE OF ARKANSAS
LICENSED PROFESSIONAL ENGINEER
No.13436
SHAUNA A. ROBERSON
DIGITALLY SIGNED 7/28/2023

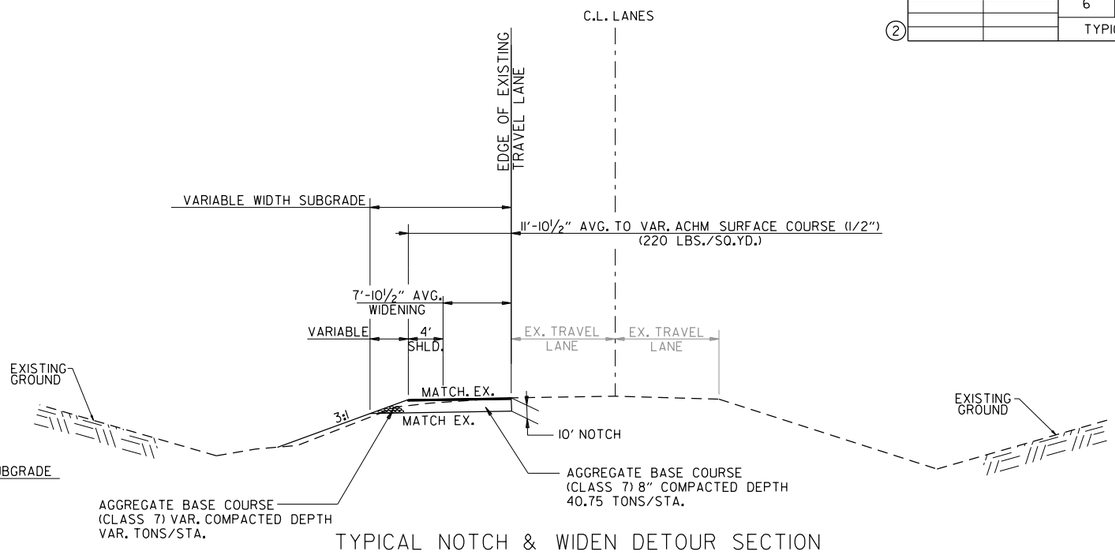

TYPICAL NOTCH & WIDEN DETOUR SECTION

LIBERTY AVE. - STA. 13+31.17 TO STA. 14+39.36
STA. 27+59.26 TO STA. 28+56.71

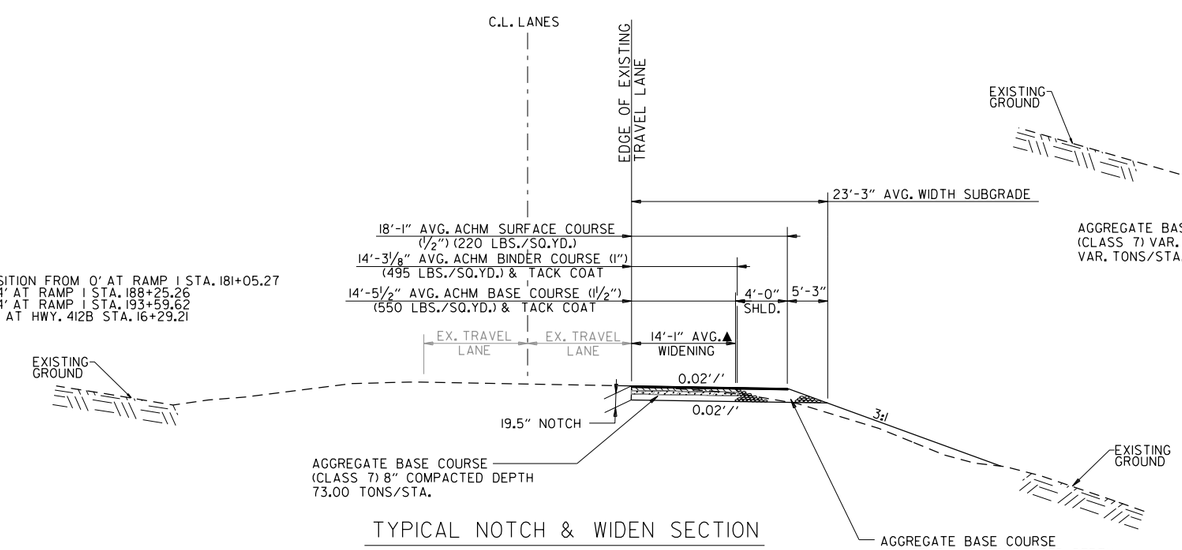

▲ TRANSITION FROM 0' AT RAMP 1 STA. 181+05.27
TO 24' AT RAMP 1 STA. 188+25.26
TO 24' AT RAMP 1 STA. 193+59.62
TO 0' AT HWY. 412B STA. 16+29.21

TYPICAL NOTCH & WIDEN SECTION

HWY. 412B RAMP 1 - STA. 180+05.27 TO STA. 194+50.62
HWY. 412B - STA. 10+00.00 TO STA. 16+22.28

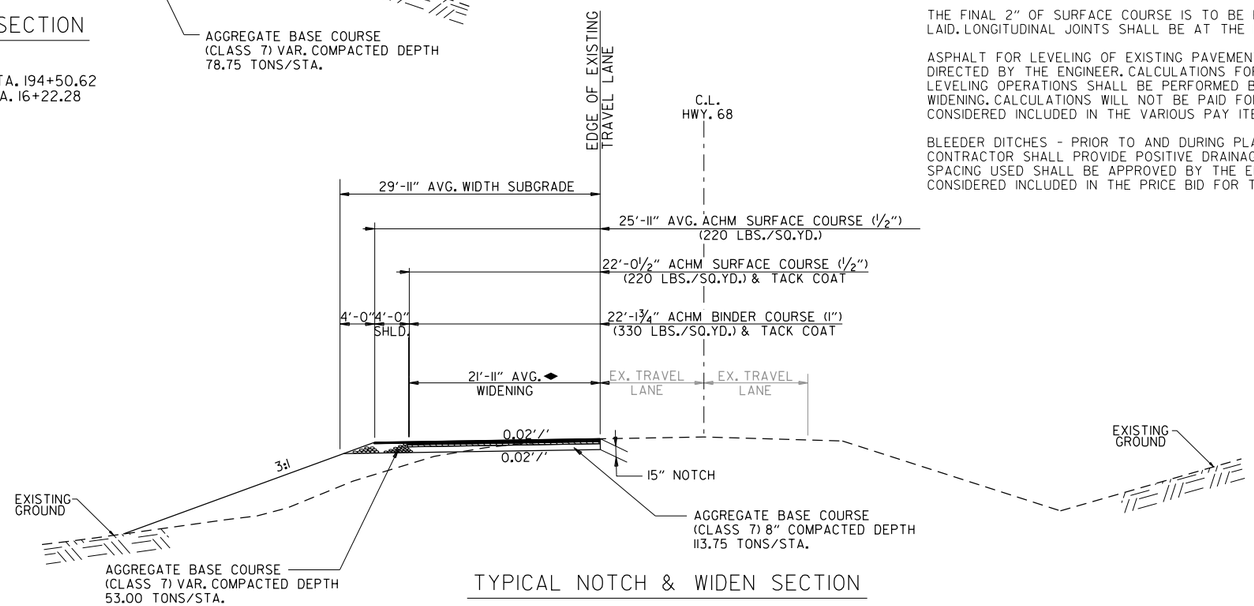

TYPICAL NOTCH & WIDEN SECTION

HWY. 68 TEMPORARY WIDENING - STA. 48+00.00 TO STA. 56+46.00

◆ TRANSITION FROM 0' AT STA. 48+00.00
TO 33' AT STA. 54+00.00
TO 34' AT STA. 54+80.00
TO 23.5' AT STA. 56+08.00
TO 0' AT STA. 56+46.00

NOTES:

REFER TO CROSS SECTIONS FOR DEVIATION FROM THE NORMAL SLOPES. NO CHANGES SHALL BE MADE FROM THE PLANNED SLOPES WITHOUT THE APPROVAL OF THE ENGINEER.

THE THICKNESS OF AGGREGATE BASE COURSE SHALL BE WITHIN PLUS OR MINUS ONE INCH OF THE PLAN THICKNESS SHOWN. THE CONTRACTOR WILL CORRECT ANY DEFICIENT THICKNESS THAT DOES NOT MEET THE TOLERANCE INDICATED. PAYMENT WILL NOT BE MADE FOR MATERIAL PLACED IN EXCESS OF THE TOLERANCE INDICATED.

THE FINAL 2" OF SURFACE COURSE IS TO BE PLACED AFTER ALL OTHER COURSES HAVE BEEN LAID. LONGITUDINAL JOINTS SHALL BE AT THE LANE LINES.

ASPHALT FOR LEVELING OF EXISTING PAVEMENT SHALL BE PLACED ONLY IF AND WHERE DIRECTED BY THE ENGINEER. CALCULATIONS FOR THE AMOUNT OF LEVELING AND/OR LEVELING OPERATIONS SHALL BE PERFORMED BEFORE CONSTRUCTING NOTCH AND WIDENING. CALCULATIONS WILL NOT BE PAID FOR DIRECTLY BUT PAYMENT WILL BE CONSIDERED INCLUDED IN THE VARIOUS PAY ITEMS.

BLEEDER DITCHES - PRIOR TO AND DURING PLACEMENT OF PAVEMENT AT THE NOTCH, THE CONTRACTOR SHALL PROVIDE POSITIVE DRAINAGE AT ALL TIMES. THE METHOD(S) AND SPACING USED SHALL BE APPROVED BY THE ENGINEER. PAYMENT FOR THIS WORK SHALL BE CONSIDERED INCLUDED IN THE PRICE BID FOR THE VARIOUS CONTRACT ITEMS.

HBVinson
7/27/2023 1:37:06 PM
WORKSPACE: AHTD
L:\2017\170766O - ARDOT 012326 Hwy 412 - Hwy 112\Drawings\r012326_TS_ALL_01.dgn
REVISED DATE:

DATE REVISED	DATE REVISED	FED. RD. DIST. NO.	STATE	JOB NO.	SHEET NO.	TOTAL SHEETS
		6	ARK.	012326	31	838
		SPECIAL DETAILS				
2						

STATE OF ARKANSAS
LICENSED PROFESSIONAL ENGINEER
No.13436
SHAUN A. ROBERSON
DIGITALLY SIGNED 7/28/2023

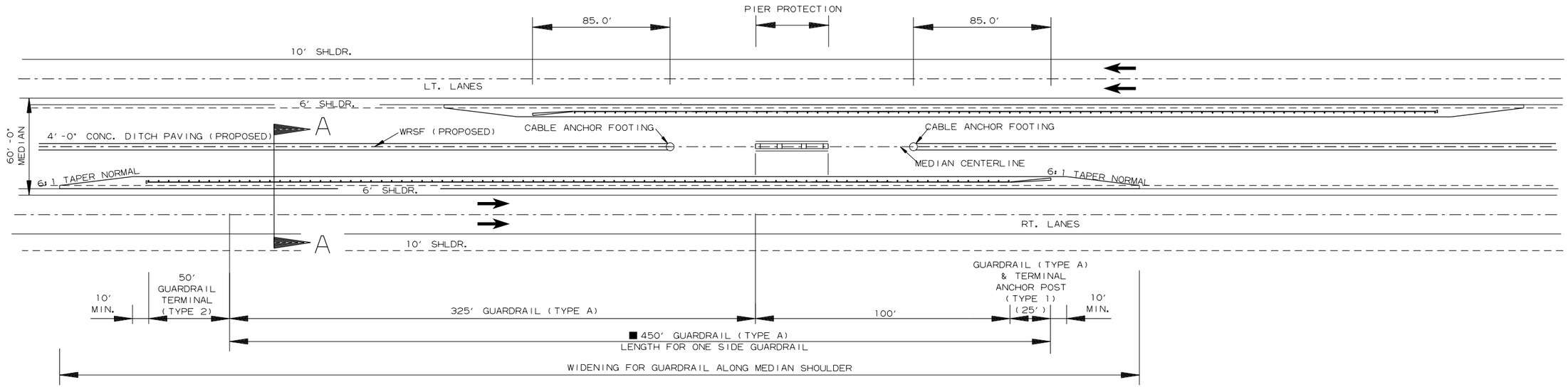

■ SEE PLAN AND PROFILE SHEET FOR XNA ACCESS RD. RAMP 1 AND 2.

DETAIL AT OVERPASSES

DIMENSIONS ARE TYPICAL BOTH DIRECTIONS

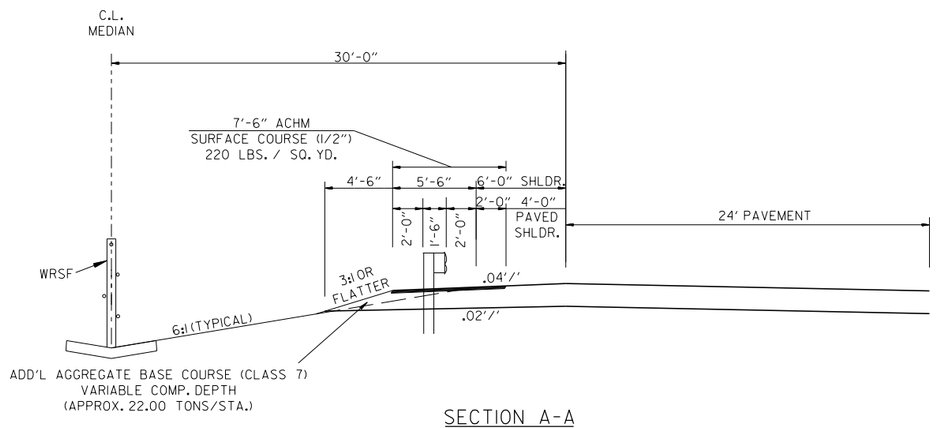

SECTION A-A

HBVinson
WORKSPACE: AHTD
L:\2017\17017660 - ARDOT 012326 Hwy 412 - Hwy 112\Drawings\r012326_SD_ALL_01.dgn
7/27/2023 1:37:11 PM
REVISED DATE:

DATE REVISED	DATE REVISED	FED. RD. DIST. NO.	STATE	JOB NO.	SHEET NO.	TOTAL SHEETS
		6	ARK.	012326	32	838
		SPECIAL DETAILS				
2						

STATE OF ARKANSAS
LICENSED PROFESSIONAL ENGINEER
No.13436
SHAUNA. ROBERSON

DIGITALLY SIGNED 7/28/2023

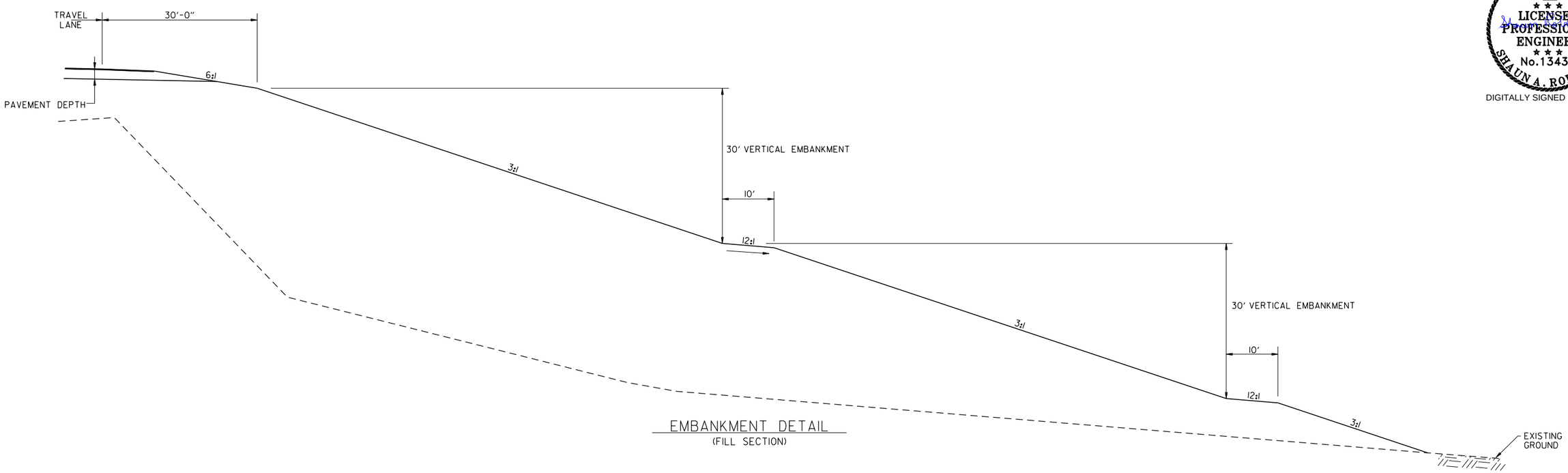

EMBANKMENT DETAIL
(FILL SECTION)

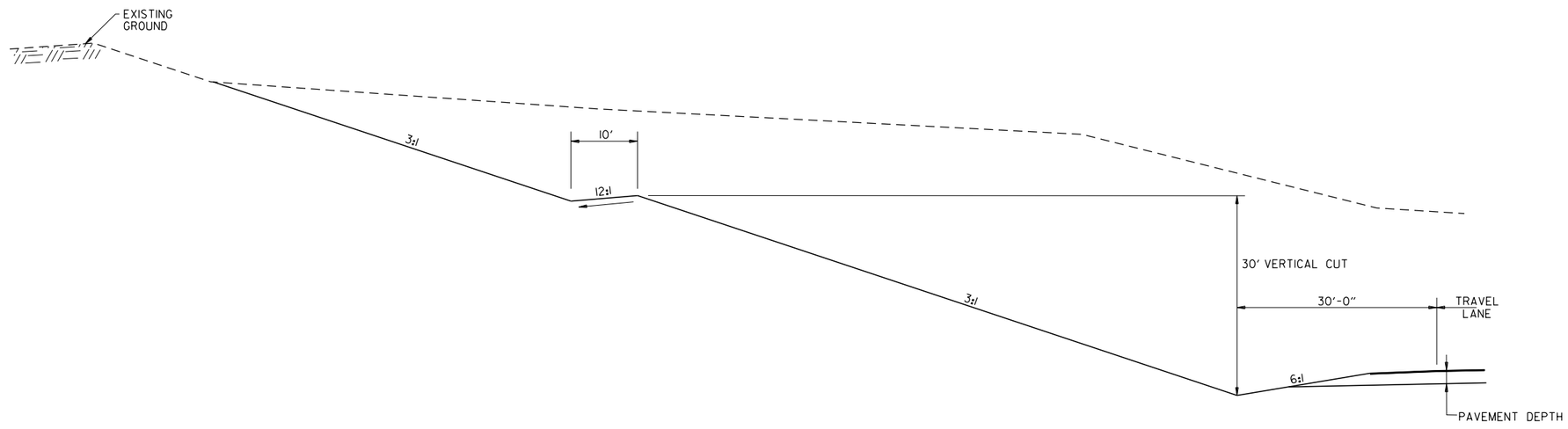

EMBANKMENT DETAIL
(CUT SECTION)

HBVinson
WORKSPACE: AHTD
L:\2017\17017660 - ARDOT 012326 Hwy 412 - Hwy 112\Drawings\r012326_SD_ALL_01.dgn
7/27/2023 11:37:11 PM
REVISED DATE:

DATE REVISED	DATE REVISED	FED. RD. DIST. NO.	STATE	JOB NO.	SHEET NO.	TOTAL SHEETS
		6	ARK.	012326	33	838
		SPECIAL DETAILS				

2

STATE OF ARKANSAS
LICENSED PROFESSIONAL ENGINEER
No. 13436
SHAUN A. ROBERSON

DIGITALLY SIGNED 7/28/2023

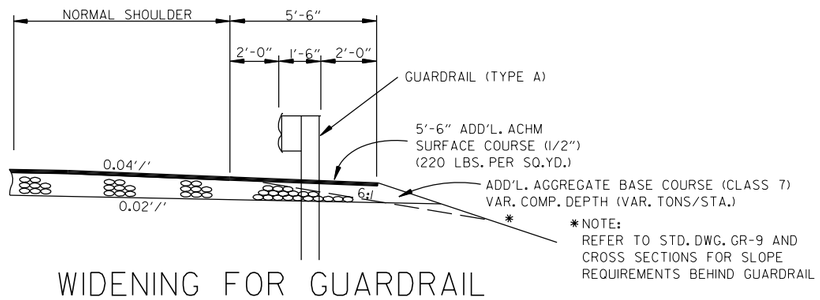

WIDENING FOR GUARDRAIL

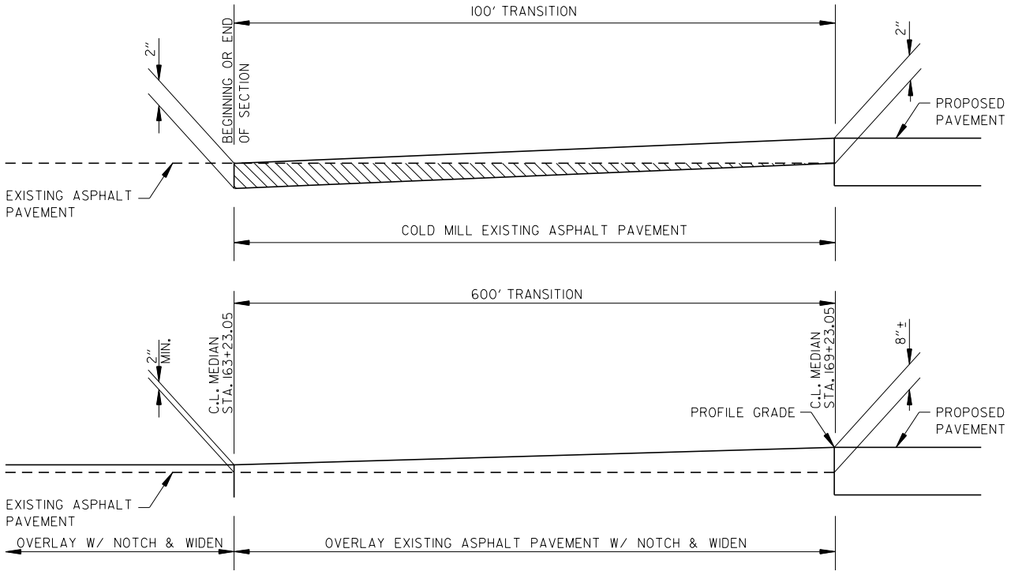

DETAILS FOR TRANSITIONS

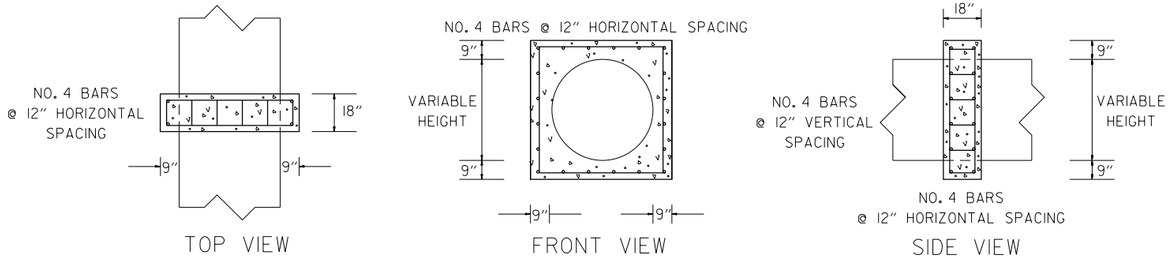

NOTE: PIPE COLLAR TO BE UTILIZED AS APPROVED BY THE ENGINEER.
MIN. 3" COVER

PIPE EXTENSION
REINFORCED CONCRETE COLLAR DETAIL

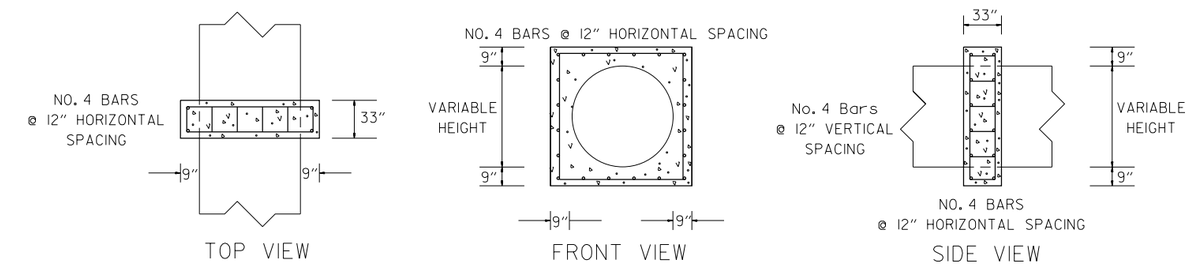

NOTE: PIPE COLLAR TO BE UTILIZED AS APPROVED BY THE ENGINEER.
MIN. 3" COVER

PIPE EXTENSION
REINFORCED CONCRETE COLLAR DETAIL
(TYPE SPECIAL)

C.L. MEDIAN STA. 169+05

SPECIAL DETAILS

HBVinson 7/27/2023 1:37:11 PM
WORKSPACE: AHTD
L:\2017\17017660 - ARDOT 012326 Hwy 412 - Hwy 112\Drawings\r012326_SD_ALL_01.dgn
REVISED DATE:

DATE REVISED	DATE REVISED	FED. RD. DIST. NO.	STATE	JOB NO.	SHEET NO.	TOTAL SHEETS
		6	ARK.	012326	34	838
2		SPECIAL DETAILS				

STATE OF ARKANSAS
LICENSED PROFESSIONAL ENGINEER
No.13436
SHAUNA. ROBERSON
DIGITALLY SIGNED 7/28/2023

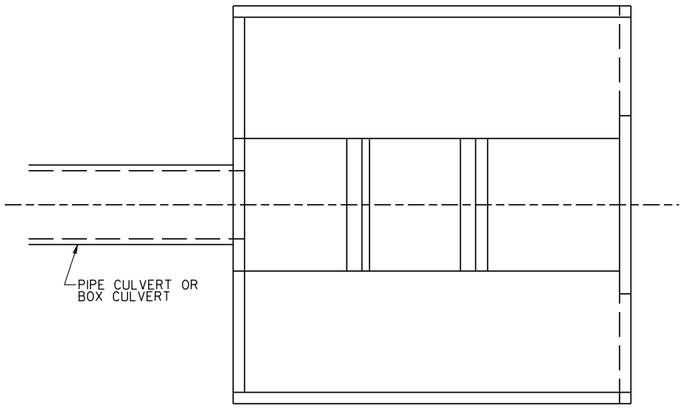

PLAN VIEW

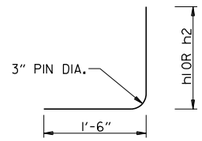

DIMENSIONS ARE
OUT TO OUT

DETAIL OF BENT BAR
(SEE NOTE #3)

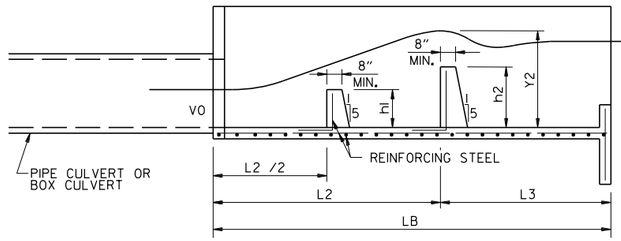

SECTION A-A

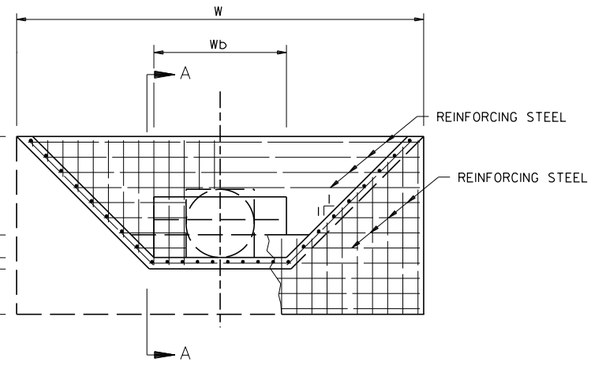

END VIEW (CUTAWAY)

CONTRA-COSTA ENERGY DISSIPATORS

CONTRA-COSTA ENERGY DISSIPATORS

STATION	CULVERT SIZE	Q (cfs)	D (ft.)	V0 (ft.)	Wb	h2	L2	h1	L3	Y2 (ft.)	h3	H1	LB	W
243+68	60"	166	5	30.09	5'-0"	4'-6"	16'-3"	2'-3"	26'-0"	9.45	1'-0"	9'-6"	42'-3"	24'-0"
323+24	42"	59	3.5	20.61	3'-6"	2'-6"	9'-3"	1'-3"	14'-9"	5.38	6"	5'-6"	24'-0"	14'-6"
421+31	36"	47	3	18.05	3'-0"	2'-6"	7'-9"	1'-3"	12'-6"	4.56	6"	4'-9"	20'-3"	12'-6"
MUSTEEN RD. 33+31	42"	52	3.5	15.36	3'-6"	2'-0"	7'-0"	1'-0"	11'-3"	4.06	6"	4'-3"	18'-3"	12'-0"

CONSTRUCTION NOTES:

1. ARKANSAS STATE HIGHWAY AND TRANSPORTATION DEPARTMENT STANDARD SPECIFICATIONS FOR HIGHWAY CONSTRUCTION AND APPLICABLE SPECIAL PROVISIONS WILL BE ADHERED TO.
2. CONCRETE THICKNESS IN ALL BASINS SHOULD BE A MINIMUM OF 6" IN ALL FLOOR SLABS. EXTERIOR WALLS, WINGWALLS, TOEWALLS, AND APRONS OTHERWISE SHOWN ON DETAILS.
3. ALL REINFORCING STEEL TO BE #4 BARS SPACED ON 8" CENTERS. THE SPACING SHOULD BEGIN AT 3" FROM EITHER SIDE (OR END) OF THE STRUCTURE. IF CONTINUOUS BARS CANNOT BE USED, A MINIMUM 1'-6" LAP LENGTH MUST BE PROVIDED AT THE BAR ENDS. ALL REINFORCING STEEL TO BE DEFORMED BARS OF INTERMEDIATE OR HARD GRADE. ALL REINFORCING STEEL SHOULD BE IN PLACE BEFORE THE CONCRETE IS PLACED. ALL BAFFEL ELEMENTS AND IMPACT WALLS IN THESE BASINS SHOULD HAVE SOME REINFORCEMENT SINCE THEY WILL BE SUBJECT TO IMPACT WITH LARGE DEBRIS AND A CONCENTRATED JET OF WATER TRAVELING AT A HIGH VELOCITY. (SEE DIAGRAM)
4. ALL CONCRETE TO BE CLASS S AND SHALL BE POURED IN THE DRY. ALL EXPOSED CORNERS TO HAVE ¾" CHAMFER. A MINIMUM OF 2" CONCRETE COVER SHALL BE PROVIDED FOR ALL REINFORCING STEEL. ALL CONCRETE CONSTRUCTION SHALL CONFORM TO SECTION 802 OF THE STANDARD SPECIFICATIONS.

HBVinson 7/27/2023 1:37:11 PM
WORKSPACE: AHTD
L:\2017\1701660 - ARDOT 012326 Hwy 412 - Hwy 112\Drawings\r012326_SD_ALL_01.dgn
REVISED DATE:

DATE REVISED	DATE REVISED	FED. RD. DIST. NO.	STATE	JOB NO.	SHEET NO.	TOTAL SHEETS
		6	ARK.	012326	35	838
(2)		SPECIAL DETAILS				

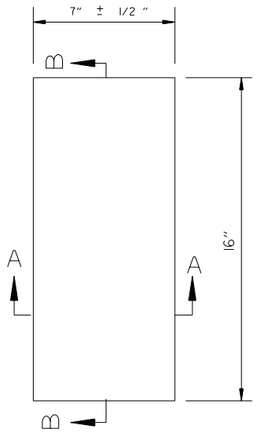

PLAN

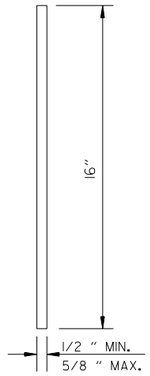

SECTION B-B

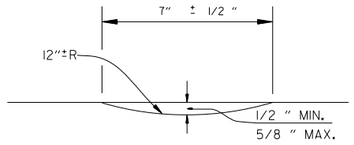

SECTION A-A

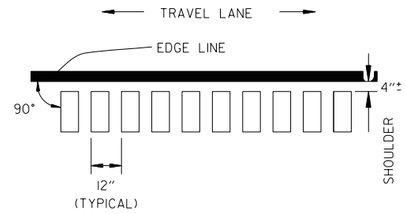

LOCATION PLAN OF RUMBLE STRIPS LEFT OR RIGHT SHOULDER

NOTES:

1. ALIGNMENT OF RUMBLE STRIPS SHALL GENERALLY BE STRAIGHT AND OFFSET APPROXIMATELY 4" FROM THE OUTER EDGE OF THE EDGE LINE. THIS OFFSET MAY BE ADJUSTED TO ACCOMODATE VARIATIONS IN THE EDGE LINE AS WELL AS TO AVOID EXISTING LONGITUDINAL JOINTS.
2. THE 1/2" DEPTH SHALL GENERALLY APPLY FOR THE ENTIRE 16" LENGTH. SOME VARIATION TO SUIT SHOULDER SLOPE BREAKS MAY BE NECESSARY.
3. ON CONCRETE SHOULDERS, RUMBLE STRIPS SHALL BE PLACED NO CLOSER THAN 1" TO A TRANSVERSE JOINT.
4. REFER TO SPECIAL PROVISION- "RUMBLE STRIPS" FOR ADDITIONAL INFORMATION.

DETAILS OF RUMBLE STRIPS

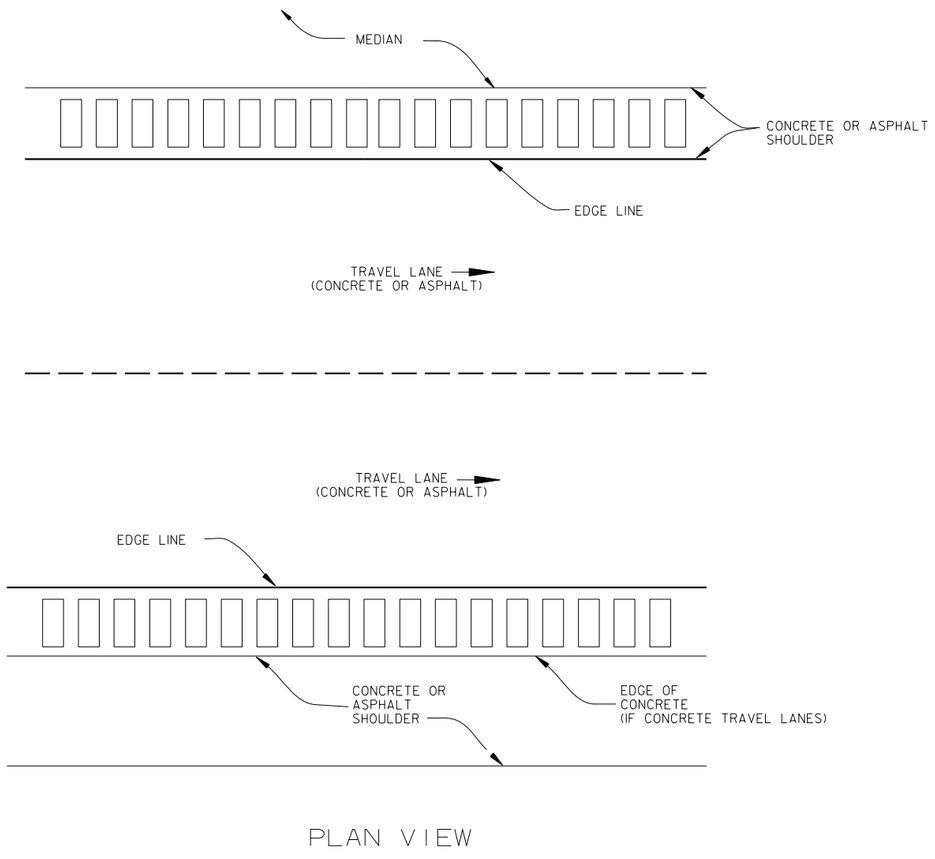

PLAN VIEW

STATE OF ARKANSAS
LICENSED PROFESSIONAL ENGINEER
No.13436
SHAUNA. ROBERSON
DIGITALLY SIGNED 7/28/2023

HBVinson
7/27/2023 1:37:12 PM
WORKSPACE: AHTD
L:\20\T\T01T660 - ARDOT 012326 Hwy 412 - Hwy 112\Drawings\r012326_SD_ALL_01.dgn
REVISED DATE:

DATE REVISED	DATE REVISED	FED. RD. DIST. NO.	STATE	JOB NO.	SHEET NO.	TOTAL SHEETS
		6	ARK.	012326	36	838
②		SPECIAL DETAILS				

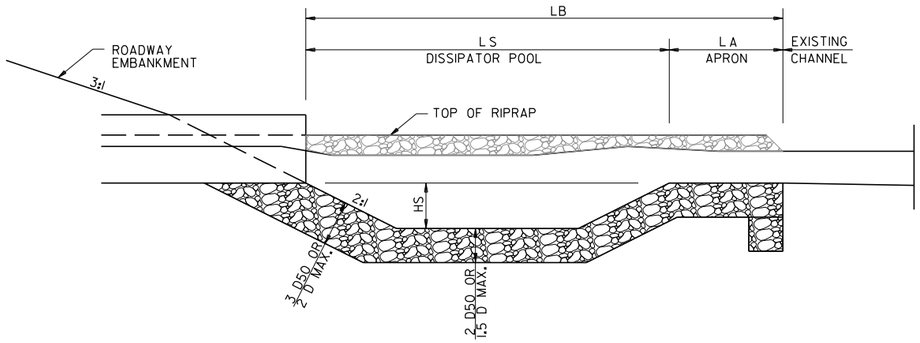

PROFILE OF RIPRAP BASIN

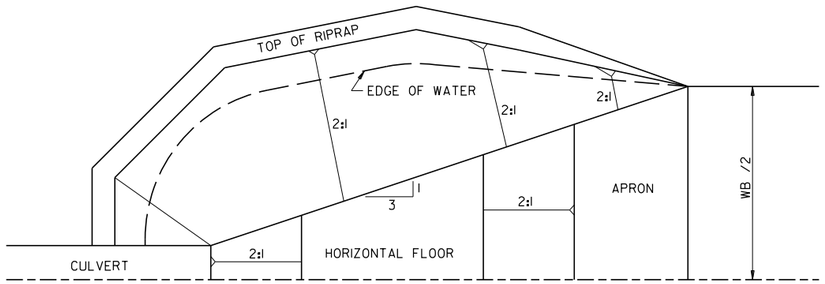

HALF PLAN OF RIPRAP BASIN



CONSTRUCTION PROJECT INFORMATION SIGN

STATE OF ARKANSAS
LICENSED PROFESSIONAL ENGINEER
No.13436
SHAUNA. ROBERSON
DIGITALLY SIGNED 7/28/2023

RIPRAP BASIN

STATION	ROCK SIZE		BASIN					APRON	POOL	
	D50 (ft.)	D MAX (ft.)	THICK (ft.)	D FLOW (f.p.s.)	VEL.	LB LENGTH (ft.)	WB WIDTH (ft.)	LA LENGTH (ft.)	LS LENGTH (ft.)	HS DEPTH (ft.)
169+05	0.7	1	1.4	1.711	15.16	27	24	9	18	1.7
201+66 & 201+73	0.3	1	0.58	2.324	15.25	16	15	4	12	0.7
251+60	0.6	1	1.12	1.52	13.64	18	15	6	12	1.2
255+54 & 255+62	1	1	1.5	1.67	20.56	35	28	12	23	2.4
268+44	1	1	1.5	1.827	18.55	30	25	10	20	2
278+90	1.3	2	2.5	5	19.88	37	33	12.5	24.5	2.5
313+88	1.1	1.5	2.2	3.09	24.7	41	35	14	27	2.8
337+01 & 337+09	1	1	1.5	1.938	18.45	32	26	11	21	2.1
357+77 & 357+85	0.9	1	1.5	1.579	20.03	36	28	12	24	2.4
373+10 & 373+20	0.7	1	1.4	1.757	19.66	25	22	8	17	1.7
473+95	0.6	1	1.2	1.474	18.02	21	18	7	14	1.4
MUSTEEN RD. 28+54	0.6	1	1.2	1.113	15.69	21	18	7	14	1.4
412 RAMP 3 199+00	0.4	1	0.7	0.865	13.47	12	11	4	8	0.9
JAVELLO RD. 27+24	0.5	2	1	1.881	4.8	20	17	7	13	1.3
JAVELLO RD. 34+70	0.7	1	1.4	1.379	16.03	23	19	8	15	1.6

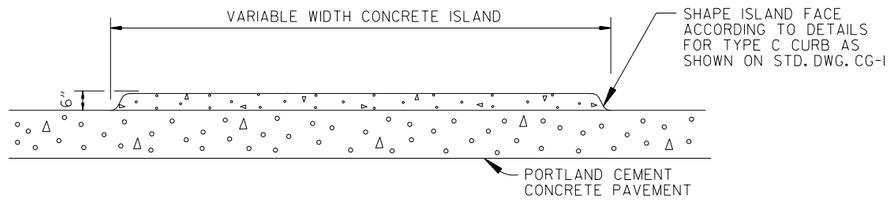

DETAILS OF ISLAND ON P.C. CONCRETE PAVEMENT

HBVinson 7/27/2023 1:37:13 PM
WORKSPACE: AHTD
L:\2017\170766O - ARDOT 012326 Hwy 412 - Hwy 112\Drawings\r012326_SD_ALL_01.dgn
REVISED DATE:

DATE REVISED	DATE REVISED	FED. RD. DIST. NO.	STATE	JOB NO.	SHEET NO.	TOTAL SHEETS
		6	ARK.	012326	37	838
		SPECIAL DETAILS				

(2)

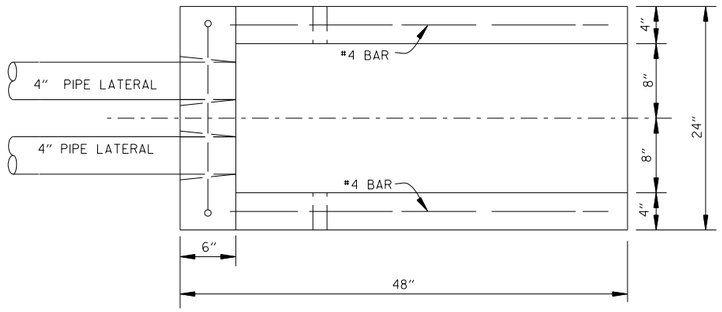

PLAN VIEW

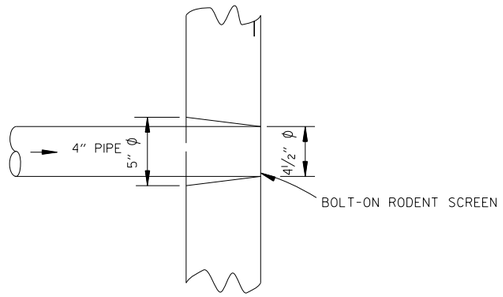

DETAIL OF HOLE FOR 4" PIPE

NOTES FOR PIPE UNDERDRAINS

1. PAYMENT FOR GEOTEXTILE FABRIC AND GRANULAR FILTER MATERIAL SHALL BE INCLUDED IN THE PRICE BID PER LIN. FT.(METER) FOR "4" PIPE UNDERDRAINS" IN ACCORDANCE WITH SECTION 611 OF THE STANDARD SPECIFICATIONS.

2. 4" NON-PERFORATED PVC PIPE LATERALS WITH OUTLET PROTECTORS SHALL BE INSTALLED AS SHOWN HEREON. LATERALS WILL BE MEASURED AND PAID FOR AS "4" PIPE UNDERDRAINS." UNDERDRAIN OUTLET PROTECTORS WILL BE MEASURED AND PAID FOR BY THE UNIT IN ACCORDANCE WITH SECTION 611 OF THE STANDARD SPECIFICATIONS.

3. 4" PIPE UNDERDRAINS SHALL BE PLACED ON THE LOW SIDE OF SUPERELEVATED ROADWAYS AS SHOWN ON THE TYPICAL SECTIONS. 4" PVC LATERAL PIPES SHALL BE CONNECTED TO MEDIAN DROP INLETS WHERE DIRECTED BY THE ENGINEER. PAYMENT FOR CONNECTING TO DROP INLETS WILL BE CONSIDERED INCLUDED IN THE PRICE BID FOR "4" PIPE UNDERDRAINS."

4. THE LOCATION OF ALL LATERALS SHALL BE IDENTIFIED BY FORMING A CLEARLY LEGIBLE MARK AT THE OUTSIDE EDGE OF THE SHOULDER WITH 4" X 12" PERMANENT PAVEMENT MARKING TAPE (TYPE III, WHITE) PLACED TRANSVERSE TO TRAFFIC. PAYMENT WILL BE CONSIDERED INCLUDED IN THE PRICE BID FOR THE VARIOUS CONTRACT ITEMS.

STATE OF ARKANSAS
LICENSED PROFESSIONAL ENGINEER
No. 13436
SHAUN A. ROBERSON
DIGITALLY SIGNED 7/28/2023

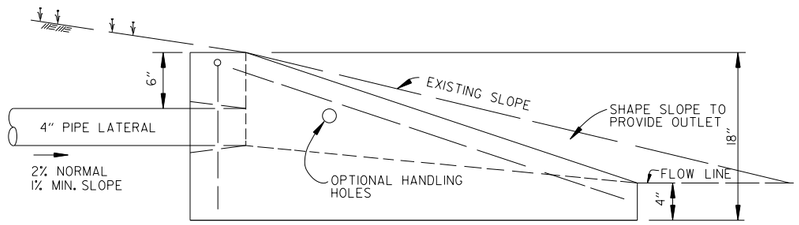

SIDE VIEW

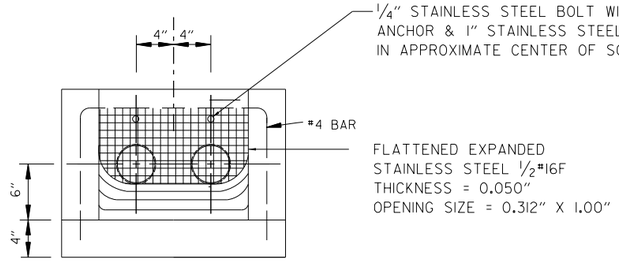

FRONT VIEW

UNDERDRAIN OUTLET PROTECTORS

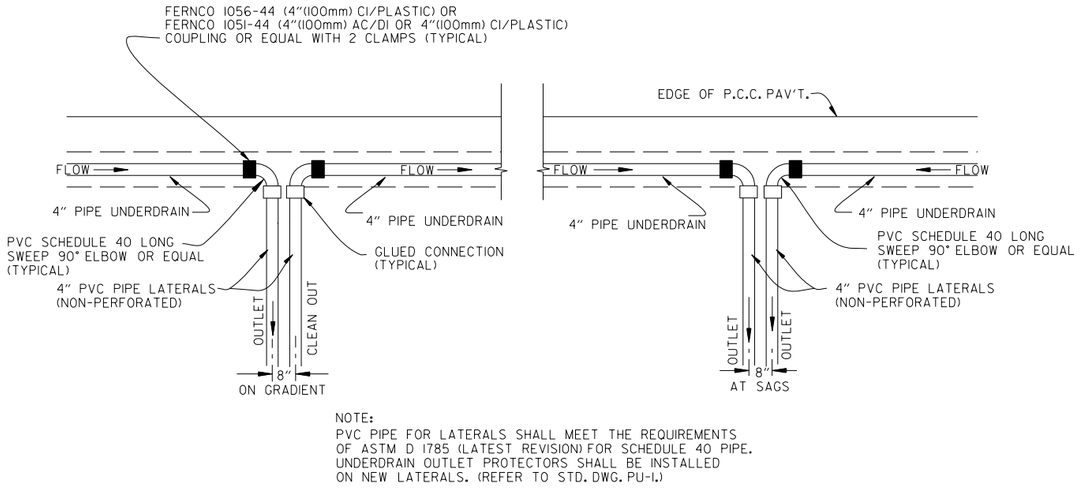

NOTE:
PVC PIPE FOR LATERALS SHALL MEET THE REQUIREMENTS OF ASTM D 1785 (LATEST REVISION) FOR SCHEDULE 40 PIPE. UNDERDRAIN OUTLET PROTECTORS SHALL BE INSTALLED ON NEW LATERALS. (REFER TO STD. DWG. PU-1.)

PLAN DETAIL OF PIPE UNDERDRAIN LATERALS

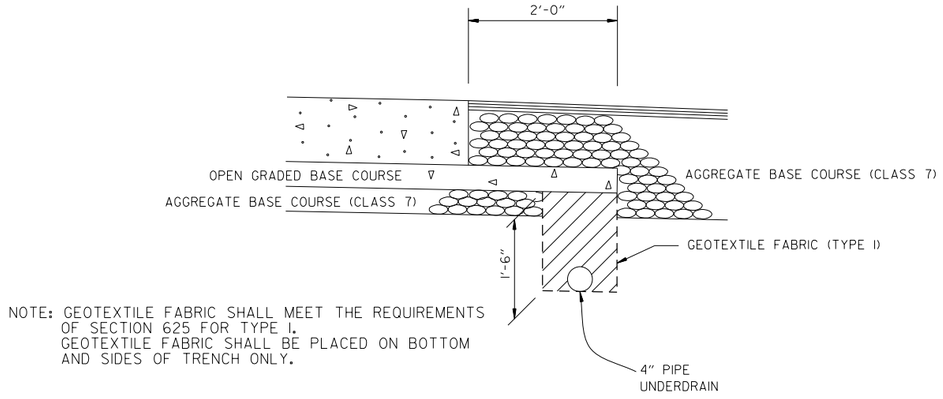

NOTE: GEOTEXTILE FABRIC SHALL MEET THE REQUIREMENTS OF SECTION 625 FOR TYPE I. GEOTEXTILE FABRIC SHALL BE PLACED ON BOTTOM AND SIDES OF TRENCH ONLY.

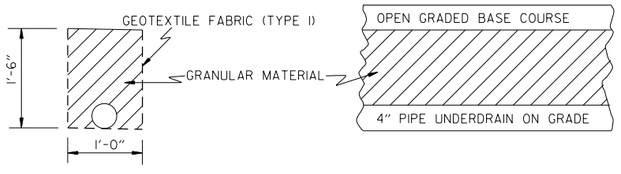

DETAILS OF PIPE UNDERDRAINS

HBVinson 7/27/2023 11:37:16 PM
WORKSPACE: AHTD
L:\2017\170176\60 - ARDOT 02326 Hwy 412 - Hwy 112\Drawings\r02326_SD_ALL_01.dgn
REVISED DATE:

DATE REVISED	DATE REVISED	FED. RD. DIST. NO.	STATE	JOB NO.	SHEET NO.	TOTAL SHEETS
		6	ARK.	012326	38	838
		SPECIAL DETAILS				
②						

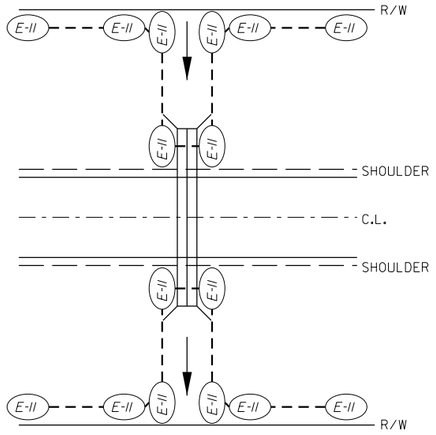

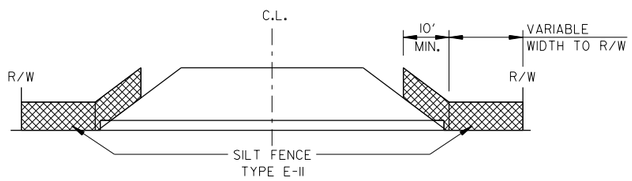

DETAILS OF SILT FENCE
AT R.C. BOX

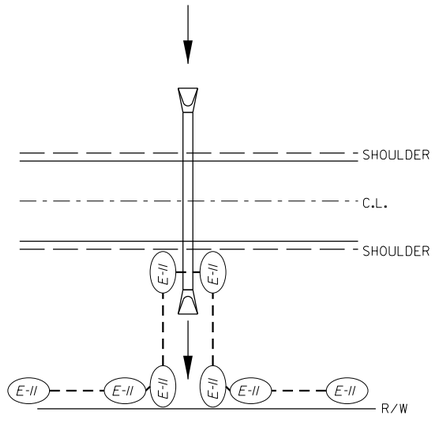

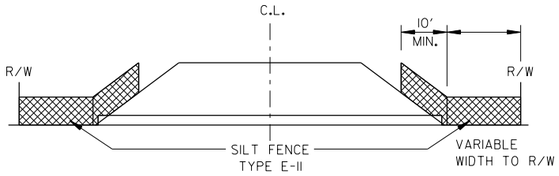

DETAILS OF SILT FENCE
AT CROSS DRAINS

STATE OF ARKANSAS
LICENSED PROFESSIONAL ENGINEER
No.13436
SHAUNA. ROBERSON

DIGITALLY SIGNED 7/28/2023

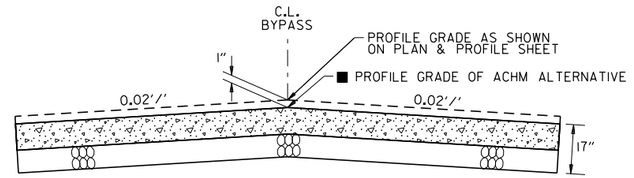

■ PROFILE GRADE FOR THE BYPASS ACHM ALTERNATIVE SECTION IS 1" LOWER THAN SHOWN ON THE PLAN AND PROFILE SHEETS.

PROFILE GRADE DETAIL
FOR BYPASS CONCRETE ALTERNATIVE

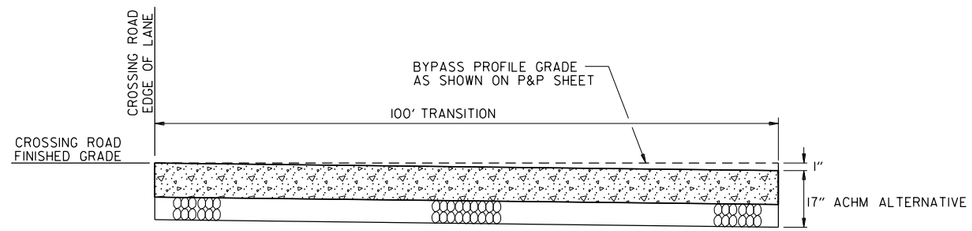

TRANSITION AT CROSSING ROADS DETAIL
FOR BYPASS CONCRETE ALTERNATIVE

NOTE:
PROFILE GRADE SHOWN ON PLAN AND PROFILE SHEETS IS 18" ABOVE SUBGRADE. USE 1" PER 100' TRANSITION IN SUBGRADE TO MEET PAVEMENT GRADES AT CROSSING ROADS. TRANSITION IN SUBGRADE TO BE INCLUDED IN SUBGRADE PREPARATION.

HBVinson 7/27/2023 1:37:16 PM
WORKSPACE: AHTD
L:\2017\17017660 - ARDOT 012326 Hwy 412 - Hwy 112\Drawings\r012326_SD_ALL_01.dgn
REVISED DATE:

DATE REVISED	DATE REVISED	FED. RD. DIST. NO.	STATE	JOB NO.	SHEET NO.	TOTAL SHEETS
		6	ARK.	012326	39	838
		SPECIAL DETAILS				
②						

STATE OF ARKANSAS
LICENSED PROFESSIONAL ENGINEER
No.13436
SHAUNA. ROBERSON
DIGITALLY SIGNED 7/28/2023

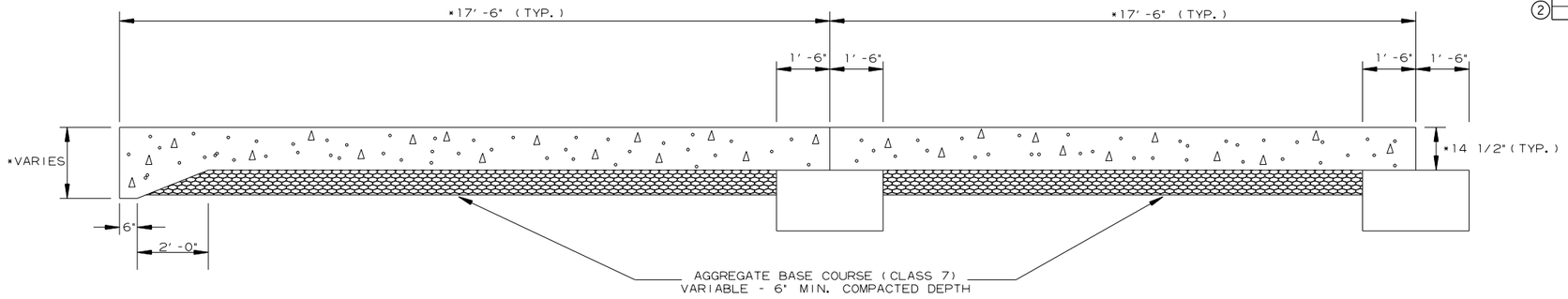

* SEE APPROACH SLAB DETAILS IN BRIDGE DRAWINGS

SECTION OF APPROACH SLAB (FOR CONCRETE PAVEMENT)

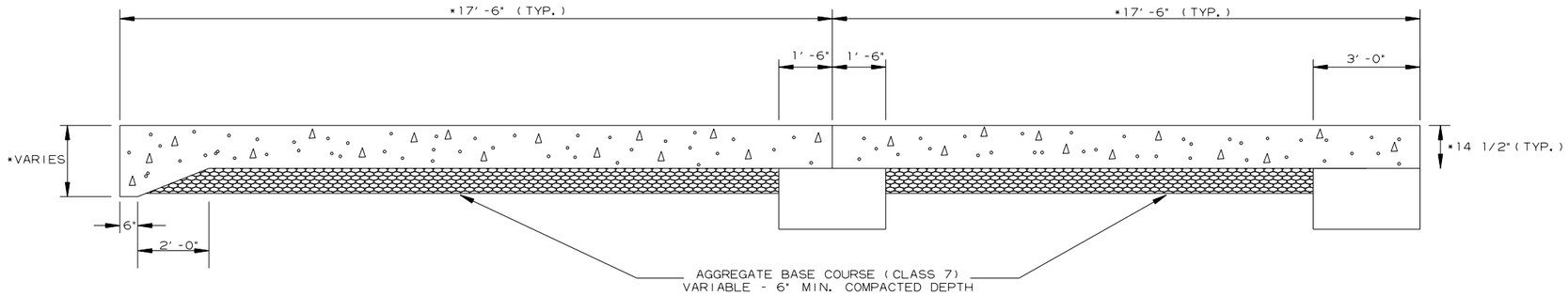

* SEE APPROACH SLAB DETAILS IN BRIDGE DRAWINGS

SECTION OF APPROACH SLAB (FOR ASPHALT PAVEMENT)

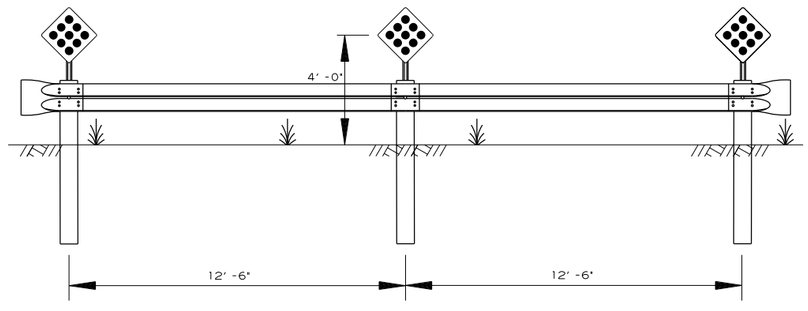

ROAD CLOSED DETAIL

TO BE USED WHERE EXISTING ROADS WILL BE PERMANENTLY CLOSED. SEE PLAN SHEETS FOR LOCATIONS SEE STD. DWG. GR-5 FOR MORE DETAILS.

CONSTRUCT
25 LIN. FT. TYPE "C" GUARDRAIL
WITH 3 RED DIAMOND REFLECTORS
MOUNTED ON U-CHANNEL POSTS
DIRECTLY BEHIND THE GUARDRAIL
AT A HEIGHT OF 4'-0".

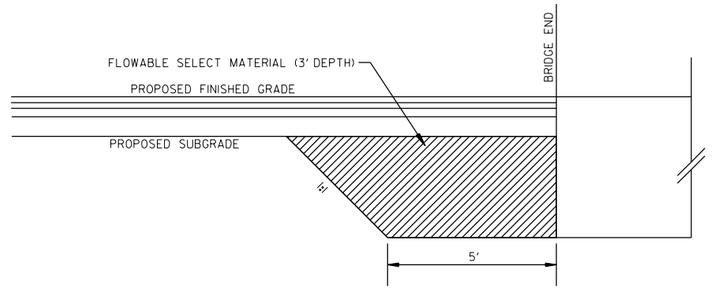

FLOWABLE SELECT MATERIAL AT PROPOSED BRIDGE ENDS

NOTE: EXCAVATION FOR PLACING FLOWABLE SELECT MATERIAL WILL NOT BE PAID FOR DIRECTLY BUT PAYMENT SHALL BE CONSIDERED TO BE INCLUDED IN THE VARIOUS BID ITEMS.

HBVinson 7/27/2023 11:37:16 PM
WORKSPACE: AHTD
L:\2017\1701660 - ARDOT 012326 Hwy 412 - Hwy 112\Drawings\r012326_SD_ALL_01.dgn
REVISED DATE:

DATE REVISED	DATE REVISED	FED. RD. DIST. NO.	STATE	JOB NO.	SHEET NO.	TOTAL SHEETS
		6	ARK.	012326	40	838
		SPECIAL DETAILS				
2						

STATE OF ARKANSAS
LICENSED PROFESSIONAL ENGINEER
No.13436
SHAUNA. ROBERSON
DIGITALLY SIGNED 7/28/2023

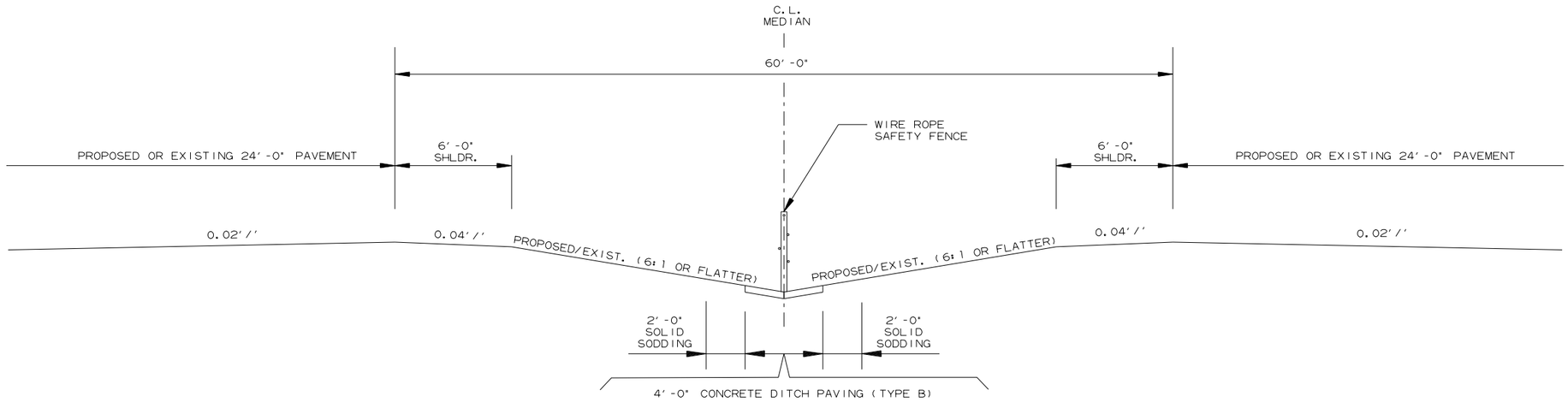

PROPOSED TYPICAL SECTION
WRSF IN BOTTOM OF DITCH

NOTE: SEE PLAN AND PROFILE SHEETS FOR FOR LOCATIONS OF WRSF

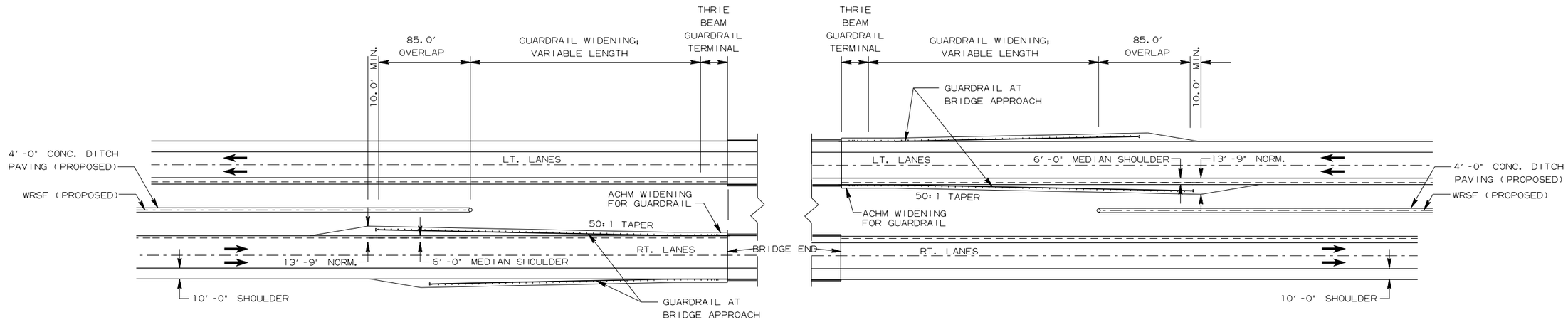

DETAIL OF WIRE ROPE SAFETY FENCE AT EXISTING BRIDGE ENDS
WRSF IN C.L. MEDIAN

SPECIAL DETAILS

HBVinson 7/27/2023 11:37:17 PM
WORKSPACE: AHTD
L:\2017\170176\60 - ARDOT 012326 Hwy 412 - Hwy 112\Drawings\r012326_SD_ALL_01.dgn
REVISED DATE:

DATE REVISED	DATE REVISED	FED. RD. DIST. NO.	STATE	JOB NO.	SHEET NO.	TOTAL SHEETS
		6	ARK.	012326	41	838
		SPECIAL DETAILS				

(2)

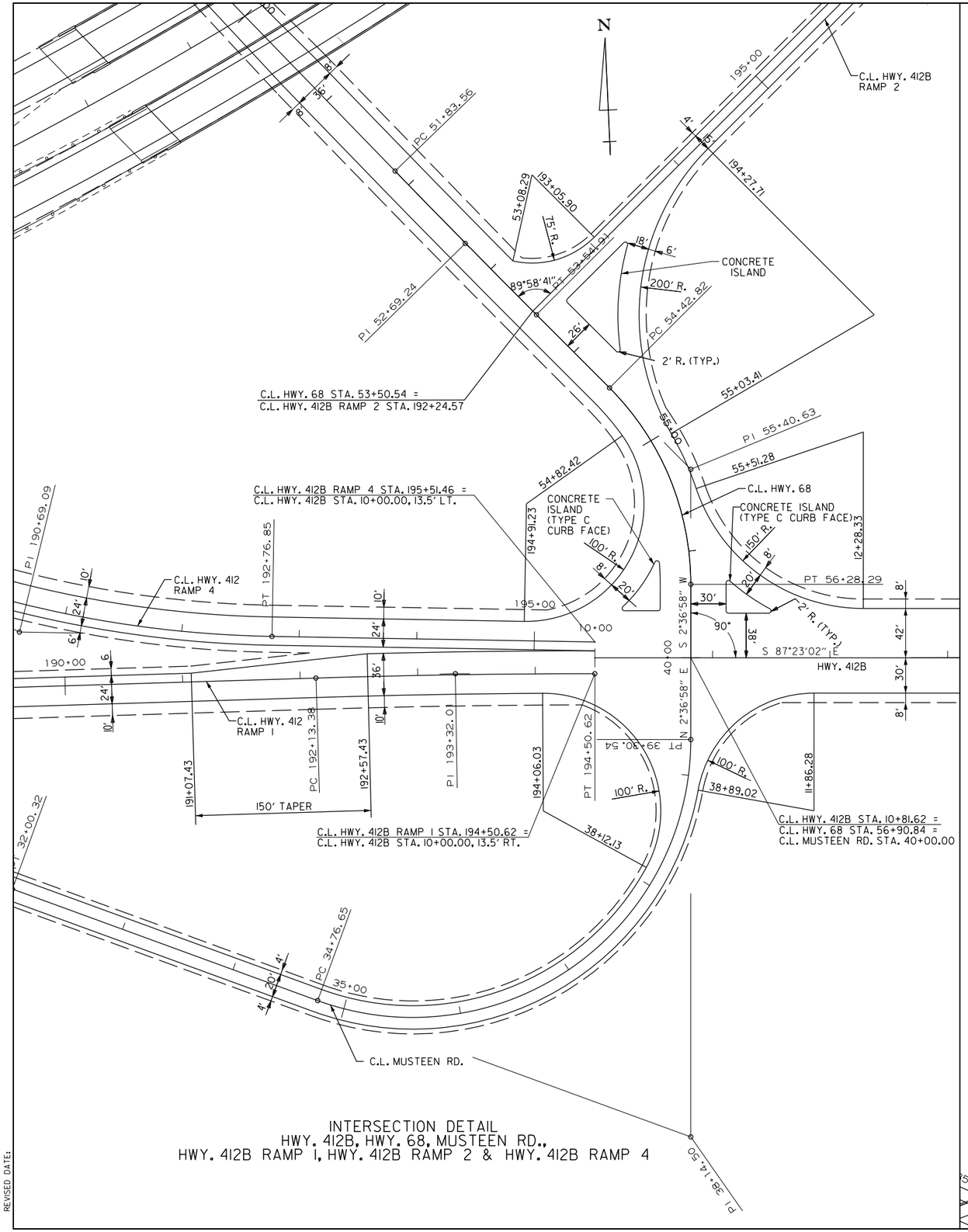

INTERSECTION DETAIL
HWY. 68, HWY. 412B, MUSTEEN RD.,
HWY. 412B RAMP 1, HWY. 412B RAMP 2 & HWY. 412B RAMP 4

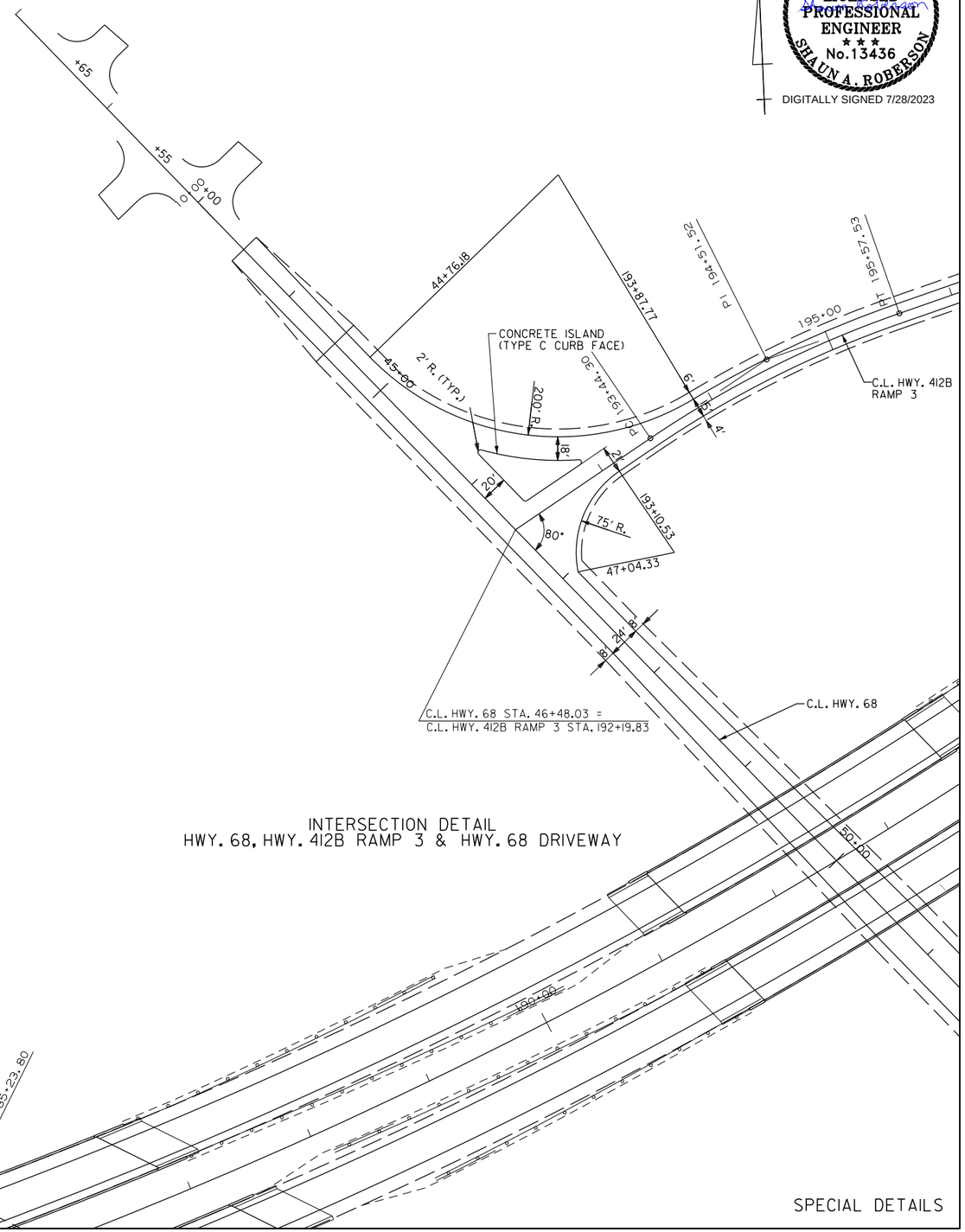

INTERSECTION DETAIL
HWY. 68, HWY. 412B RAMP 3 & HWY. 68 DRIVEWAY

SPECIAL DETAILS

HBVinson
7/27/2023 1:37:19 PM
WORKSPACE: AHTD
L:\201\T01\7660 - ARDOT 012326 Hwy 412 - Hwy 112\Drawings\r012326_SD_ID_01.dgn
REVISED DATE:

DATE REVISED	DATE REVISED	FED. RD. DIST. NO.	STATE	JOB NO.	SHEET NO.	TOTAL SHEETS
		6	ARK.	012326	42	838
		SPECIAL DETAILS				

STATE OF ARKANSAS
LICENSED PROFESSIONAL ENGINEER
No.13436
SHAUN A. ROBERSON
DIGITALLY SIGNED 7/28/2023

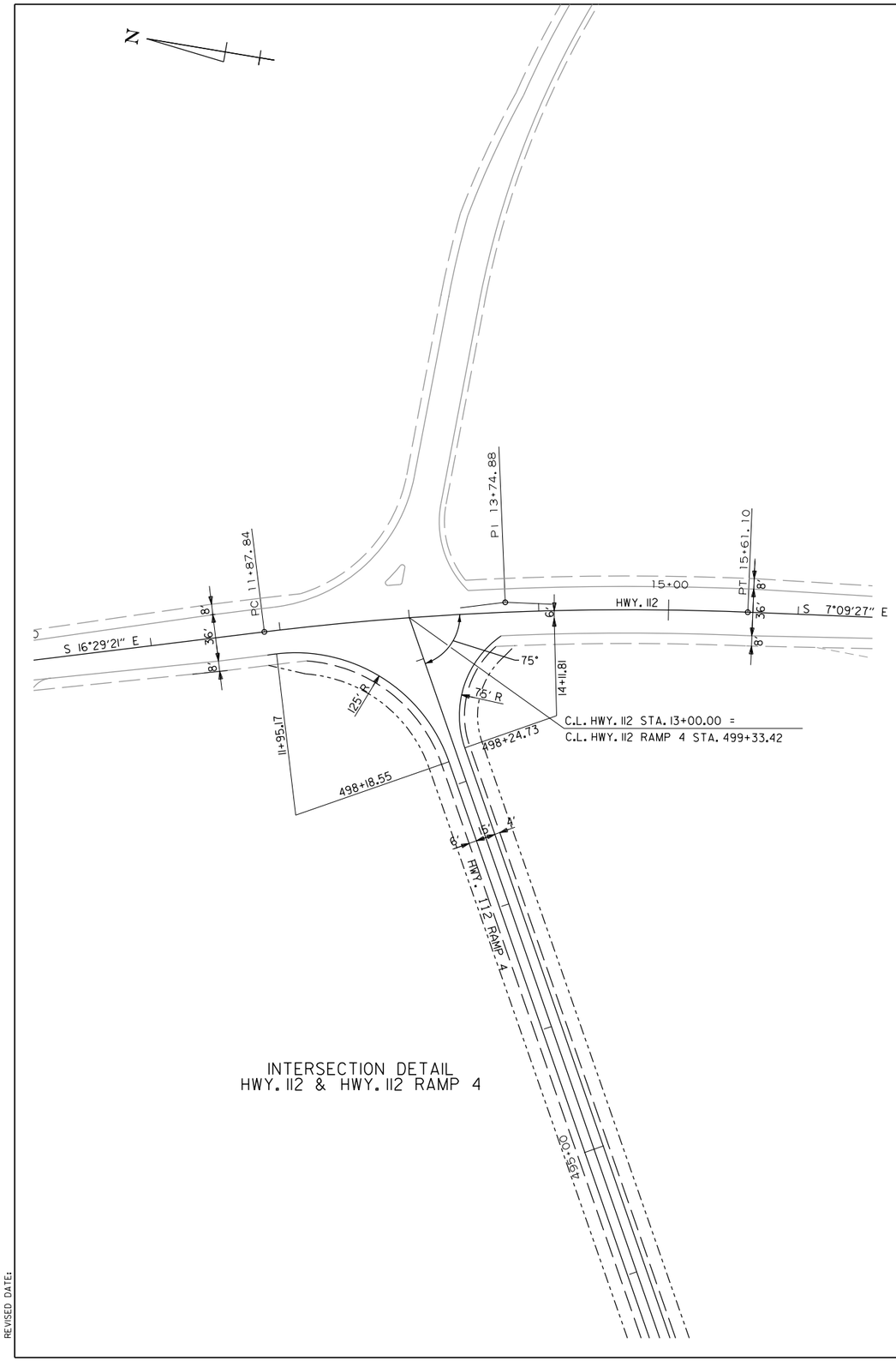

INTERSECTION DETAIL
HWY. 112 & HWY. 112 RAMP 4

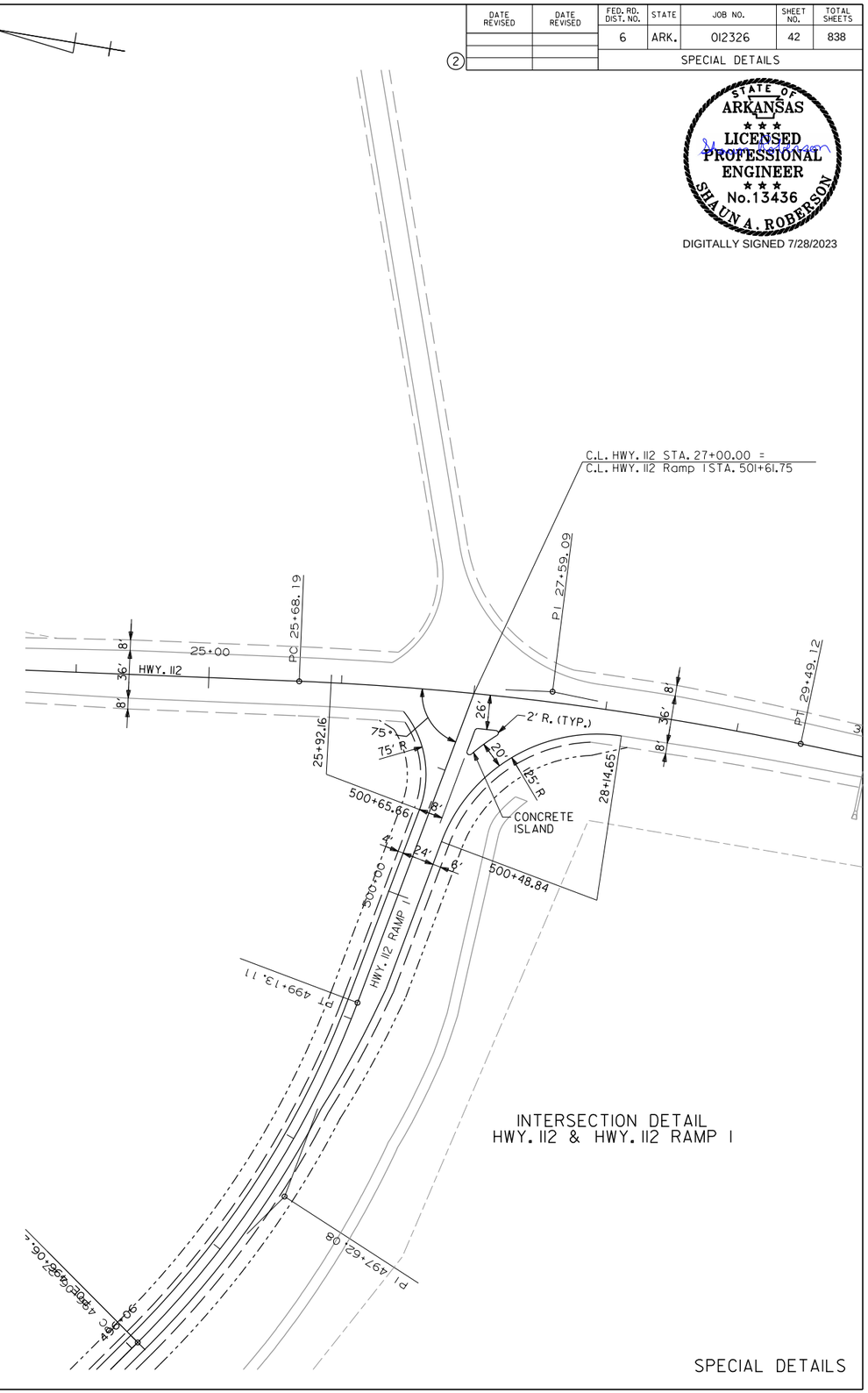

INTERSECTION DETAIL
HWY. 112 & HWY. 112 RAMP 1

SPECIAL DETAILS

HBVinson 7/27/2023 1:37:21 PM
WORKSPACE: AHTD
L:\20I7\I70I660 - ARDOT 012326 Hwy 412 - Hwy 112\Drawings\r012326_SD_ID_02.dgn
REVISED DATE:

DATE REVISED	DATE REVISED	FED. RD. DIST. NO.	STATE	JOB NO.	SHEET NO.	TOTAL SHEETS
		6	ARK.	012326	43	838
		SPECIAL DETAILS				
2						

STATE OF ARKANSAS
LICENSED PROFESSIONAL ENGINEER
No. 13436
SHAUN A. ROBERSON
DIGITALLY SIGNED 7/28/2023

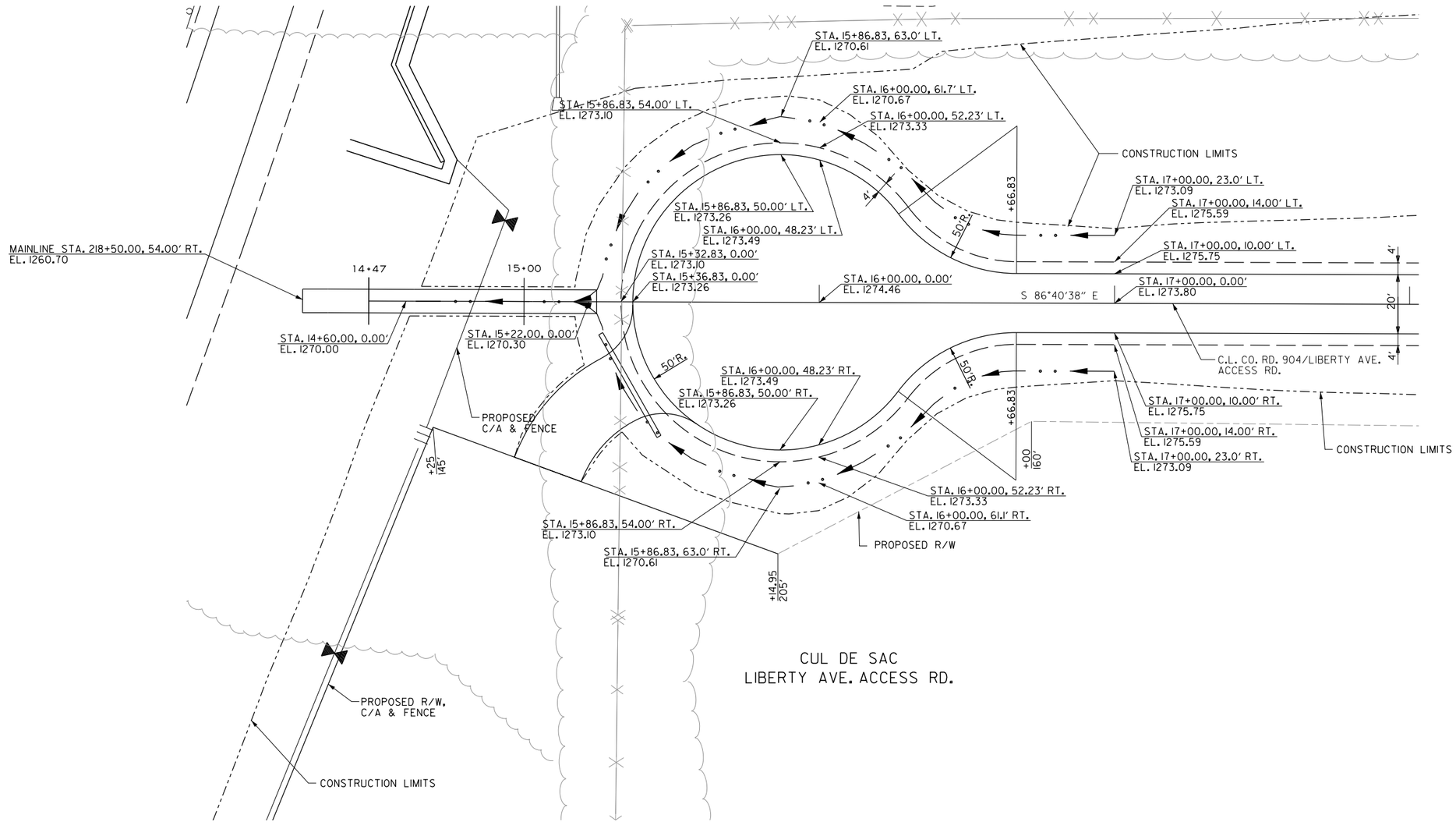

HBVinson
WORKSPACE: AHTD
L:\20\7\1701660 - ARDOT 012326 Hwy 412 - Hwy 112\Drawings\r012326_SD_LIB_CDS.dgn
7/27/2023 1:37:39 PM
REVISED DATE:

DATE REVISED	DATE REVISED	FED. RD. DIST. NO.	STATE	JOB NO.	SHEET NO.	TOTAL SHEETS
		6	ARK.	012326	44	838
		SPECIAL DETAILS				

②

STATE OF ARKANSAS
LICENSED PROFESSIONAL ENGINEER
No.13436
SHAUN A. ROBERSON

DIGITALLY SIGNED 7/28/2023

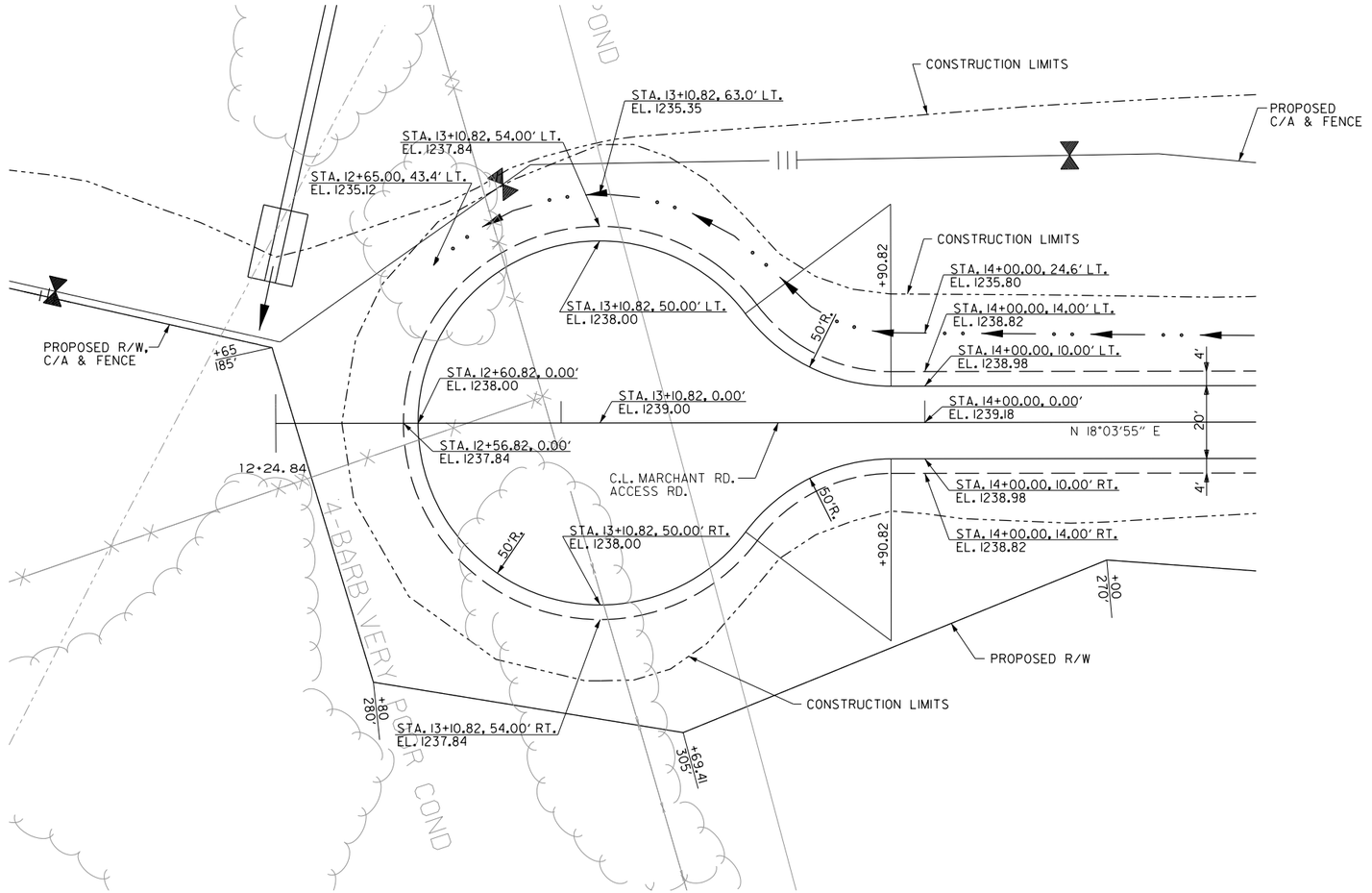

CUL DE SAC
MARCHANT RD. ACCESS RD.

HBVinson 7/27/2023 1:37:41PM
WORKSPACE: AHTD
L:\20IT\170I7660 - ARDOT 012326 Hwy 412 - Hwy 112\Drawings\r012326_SD_MAR_CDS.dgn
REVISED DATE:

DATE REVISED	DATE REVISED	FED. RD. DIST. NO.	STATE	JOB NO.	SHEET NO.	TOTAL SHEETS
		6	ARK.	012326	45	838
		SPECIAL DETAILS				
2						

STATE OF ARKANSAS
LICENSED PROFESSIONAL ENGINEER
No. 13436
SHAUN A. ROBERSON
DIGITALLY SIGNED 7/28/2023

N

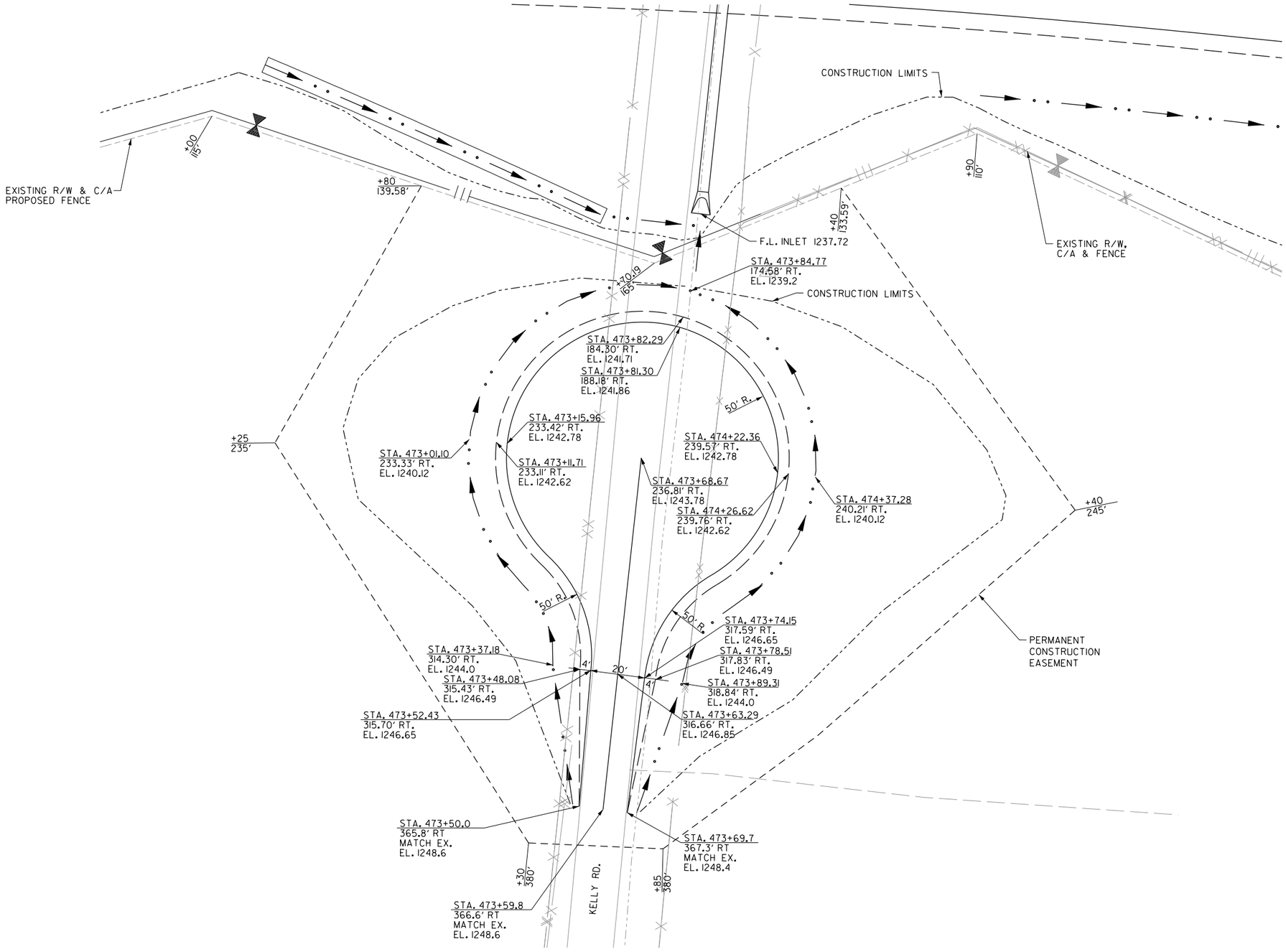

CUL DE SAC
KELLY RD. SOUTH

SPECIAL DETAILS

HBVinson 7/27/2023 11:37:42 PM
WORKSPACE: AHTD
L:\2017\170176\60 - ARDOT 012326 Hwy 412 - Hwy 412\Drawings\r012326_SD_KLR_CDS.dgn
REVISED DATE:

DATE REVISED	DATE REVISED	FED. RD. DIST. NO.	STATE	JOB NO.	SHEET NO.	TOTAL SHEETS
		6	ARK.	012326	46	838
		SPECIAL DETAILS				
②						

STATE OF ARKANSAS
LICENSED PROFESSIONAL ENGINEER
No.13436
SHAUN A. ROBERSON
DIGITALLY SIGNED 7/28/2023

N

STA. 473+99.7
419.3' LT.
MATCH EX.
EL. 1230

+90
435'

STA. 474+08.7
418.6' LT.
MATCH EX.
EL. 1229

+30
435'

STA. 474+17.7
417.9' LT.
MATCH EX.
EL. 1228

STA. 473+96.56
369.39' LT.
EL. 1233.16

STA. 473+92.92
369.67' LT.
EL. 1233.00

STA. 474+05.65
368.64' LT.
EL. 1233.36

STA. 473+83.73
370.40' LT.
EL. 1230.50

STA. 474+14.76
367.92' LT.
EL. 1233.16

STA. 473+55.06
337.44' LT.
EL. 1230.92

+60
370'

STA. 473+56.17
327.51' LT.
EL. 1233.42

4'

20'

4'

+70
365'

STA. 474+18.39
367.78' LT.
EL. 1233.00

+90
345'

STA. 473+56.61
323.54' LT.
EL. 1233.58

30' R.

PERMANENT
CONTRUCTION
EASEMENT

STA. 473+15.78
278.16' LT.
EL. 1234.00

STA. 473+12.07
278.52' LT.
EL. 1233.84

STA. 473+02.97
279.43' LT.
EL. 1231.34

50' R.

STA. 474+58.4
295.2' LT.
EL. 1226.5

STA. 474+08.80
270.27' LT.
EL. 1234.00

STA. 474+12.52
270.01' LT.
EL. 1233.84

STA. 474+38.07
268.30' LT.
EL. 1227.0

+60
285'

STA. 473+62.24
273.91' LT.
EL. 1235.00

155°

STA. 473+99.48
270.95' LT.
EL. 1234.20

STA. 472+79.75
253.00' LT.
MATCH EX.
EL. 1237.43

+80
245'

STA. 474+06.9
205.8' LT.
EL. 1227.3

+93.62
213.16'

STA. 473+40.41
213.92' LT.
EL. 1231.34

STA. 473+58.52
224.07' LT.
EL. 1234.00

+35
200'

+90
177.36'

STA. 473+58.22
220.08' LT.
EL. 1233.84

CONSTRUCTION LIMITS

EXISTING R/W & C/A
PROPOSED FENCE

+51.65
165'

F.L. OUTLET 1228.41

+75
165.61'

STA. 473+95 CONSTRUCT
48" X 304' R.C. PIPE CULVERT
03° LT. FWD. SKEW
(CLASS V) TYPE 3 BEDDING
WITH FES RT. & RIPRAP BASIN LT.
Q50 = 83 CFS DA = 14.9 ACRES

KELLY RD.

+60
110'

EXISTING R/W,
C/A & FENCE

CUL DE SAC
KELLY RD. NORTH

SPECIAL DETAILS

HBVinson
WORKSPACE: AHTD
L:\2017\170766O - ARDOT 012326 Hwy 412 - Hwy 112\Drawings\r012326_SD_KLR_CDS_2.dgn
REVISED DATE:
7/27/2023 1:37:43 PM

DATE REVISED	DATE REVISED	FED. RD. DIST. NO.	STATE	JOB NO.	SHEET NO.	TOTAL SHEETS
		6	ARK.	012326	47	838
		SPECIAL DETAILS				

2:1 Slope	20'-0"	10'-0"	10'-0"	10'-0"	10'-0"	10'-0"	10'-0"	
3:1 Slope	30'-0"	15'-0"	15'-0"	15'-0"	15'-0"	15'-0"	15'-0"	
4:1 Slope	40'-0"	20'-0"	20'-0"	20'-0"	20'-0"	20'-0"	20'-0"	

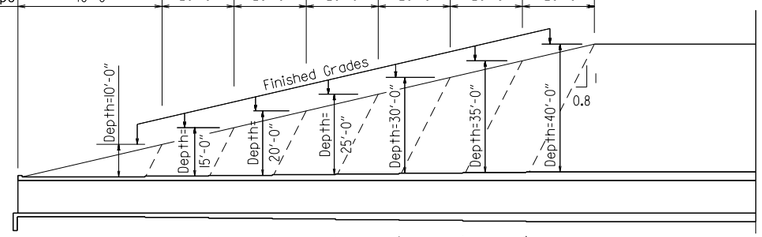

Slope Section Length @ 2:1 Slope	A=12'-0"	B=6'-0"	C=6'-0"	D=6'-0"	E=6'-0"	F=6'-0"	G=6'-0"	Mid-Section Length - Varies
Slope Section Length @ 3:1 Slope	A=22'-0"	B=11'-0"	C=11'-0"	D=11'-0"	E=11'-0"	F=11'-0"	G=11'-0"	Mid-Section Length - Varies
Slope Section Length @ 4:1 Slope	A=32'-0"	B=16'-0"	C=16'-0"	D=16'-0"	E=16'-0"	F=16'-0"	G=16'-0"	Mid-Section Length - Varies

LONGITUDINAL SECTION LENGTH SCHEDULE FOR VARYING FILL DEPTHS OVER 10'

Lengths for Non-Skewed Boxes

Note: For fill depths 10' and under, use Mid-Section full length of box culvert.

* LL = Skewed End Section Length - See "Skewed End Section Details" Length LL varies with skew angle, overall box width and fill depth and may eliminate the need for some slope section lengths as shown.

Section Length	*LL		C	D	E	F	G	Mid-Section Length - Varies	
Section Length	*LL	B	C	D	E	F	G	Mid-Section Length - Varies	
Section Length	*LL	A	B	C	D	E	F	G	Mid-Section Length - Varies
		Depth 10'-0"	Depth 15'-0"	Depth 20'-0"	Depth 25'-0"	Depth 30'-0"	Depth 35'-0"	Depth 40'-0"	

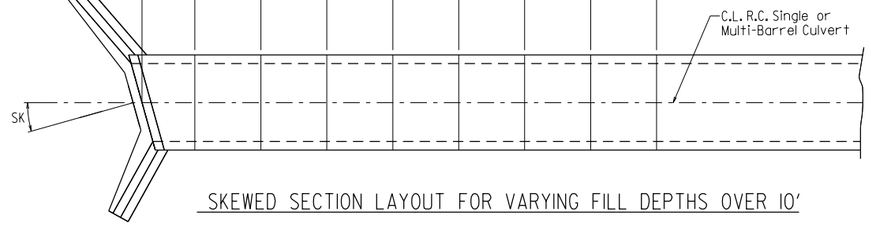

SKEWED SECTION LAYOUT FOR VARYING FILL DEPTHS OVER 10'

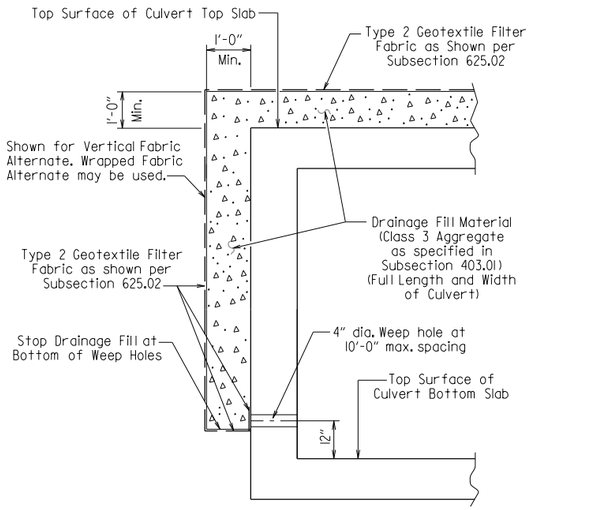

CULVERT DRAINAGE DETAIL FOR ROCK FILL

This detail shall be used when rock fill is specified for embankment construction.

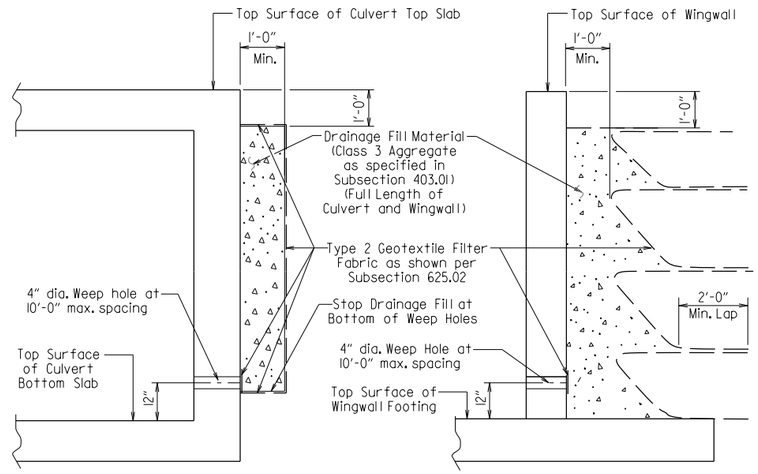

For Details of Excavation and Pay Limits, see Standard Drawing RCB-2.

VERTICAL FABRIC ALTERNATE
(Shown for Culvert, Similar for Wingwall)

WRAPPED FABRIC ALTERNATE
(Shown for Wingwall, Similar for Culvert)

WINGWALL & CULVERT DRAINAGE DETAIL

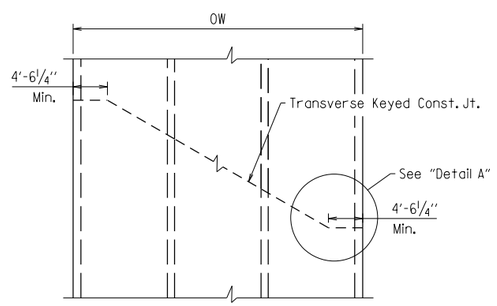

SKEWED TRANSVERSE JOINT DETAIL

This detail shall be used to construct a skewed transverse joint only for Multi-Barrel Culverts and only when required by the Maintenance of Traffic Plans. Otherwise, transverse joints should be made normal to the centerline of the barrel.

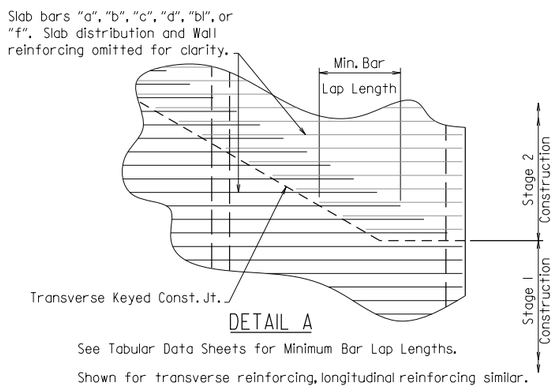

DETAIL A

See Tabular Data Sheets for Minimum Bar Lap Lengths.

Shown for transverse reinforcing, longitudinal reinforcing similar.

GENERAL NOTES:

CONSTRUCTION SPECIFICATIONS: Arkansas State Highway and Transportation Department Standard Specifications for Highway Construction (2014 edition) with applicable Supplemental Specifications and Special Provisions. Section and Subsection refer to the Standard Construction Specifications unless otherwise noted in the Plans.

DESIGN SPECIFICATIONS: AASHTO LRFD Bridge Design Specifications, Fifth Edition (2010) with 2010 interim revisions.

LIVE LOADING: HL-93

All concrete shall be Class S with a minimum 28-day compressive strength of 3,500 psi and shall be poured in the dry. All exposed corners to have ¾" chamfers.

Reinforcing Steel shall be Grade 60 (yield strength = 60,000 psi) conforming to AASHTO M31 or M322, Type A, with mill test reports.

Reinforcing Steel Tolerances: The tolerances for reinforcing steel shall meet those listed in 'Manual of Standard Practice' published by Concrete Reinforcing Steel Institute (CRSI) except that the tolerance for truss bars such as Figure 3 on page 7-4 of the CRSI Manual shall be minus zero to plus 1/2 inch.

Excavation and backfilling shall be in accordance with the requirements of Section 801.

Membrane Waterproofing shall conform to the requirements of Section 815. Membrane Waterproofing shall be Type C and as directed by the Engineer applied to all construction joints in the top slab and the sidewalls of R.C. Box culverts and to the construction joint between wingwalls and R.C. Box culvert walls.

Weep Holes in box culvert walls shall have a maximum horizontal spacing of 10'-0" and shall be spaced to clear all reinforcing steel. The drain opening shall be 4" diameter and shall be placed 12" above the top of the bottom slab.

Weep Holes in wingwalls shall have a maximum horizontal spacing of 10'-0" and shall be spaced to clear all reinforcing steel. There shall be a minimum of two (2) weep holes in each wingwall. The drain opening shall be 4" diameter and shall be placed 12" above the top of the wingwall footing.

The barrel components of the culvert may be constructed using continuous pours. For longer culvert construction, the Contractor may use multiple pours with transverse construction joints spaced a minimum of 50 feet apart unless superseded by stage construction or site constraints as approved by the Engineer. Construction joints between footings and walls shall be made only where shown in the Plans. Joints shall be keyed and shall be normal to the centerline of barrel except as noted. Reinforcing shall be continuous through joints unless noted otherwise. Reinforcing through stage construction joints shall provide the minimum bar lap length shown on the Tabular Data Sheets. All longitudinal construction joints shall be submitted to the Engineer for approval.

Membrane Waterproofing, Weep Holes, Geotextile Filter Fabric, and Drainage Fill Material will not be paid for directly but shall be considered subsidiary to Class S Concrete.

When the top slab of the box culvert serves as finished roadway surface, curing and finishing shall be in accordance with subsections 802.17 and 802.20 for bridge roadway surface and a tine finish shall be applied in accordance with subsection 802.19 for Class 5 Tined Bridge Roadway Surface Finish. Curing and finishing shall not be paid for directly, but shall be considered incidental to the item "Class S Concrete-Roadway". Class 1 Protective Surface Treatment shall be applied to the roadway surface and this work shall be paid for under the unit price bid for "Class 1 Protective Surface Treatment".

When precast reinforced concrete box culverts are substituted for cast in place box culverts, they shall be manufactured according to ASTM C 1577 and meet the requirements of Section 607. When the top slab of the box culvert serves as the finished roadway surface, a precast reinforced concrete box culvert substitution is not allowed.

STATE OF ARKANSAS
LICENSED PROFESSIONAL ENGINEER
No.13436
SHAUN A. ROBERSON
DIGITALLY SIGNED 7/28/2023

SHEET 1 OF 4

GENERAL DETAILS OF R.C. BOX CULVERT

GENERAL NOTES &
LONGITUDINAL SECTION LENGTH SCHEDULE

SPECIAL DETAILS

LRFD

HBVinson 7/27/2023 1:37:50 PM
WORKSPACE: AHTD
L:\20\7\7017660 - ARDOT 012326 Hwy 412 - Hwy 412\Drawings\r012326_SD_01.dgn
REVISED DATE:
v 1.17

DATE REVISED	DATE REVISED	FED. RD. DIST. NO.	STATE	JOB NO.	SHEET NO.	TOTAL SHEETS
		6	ARK.	012326	48	838
1		SPECIAL DETAILS				

Note: When top slab of culvert serves as finished roadway surface, see General Notes on Sheet 1 of 4.

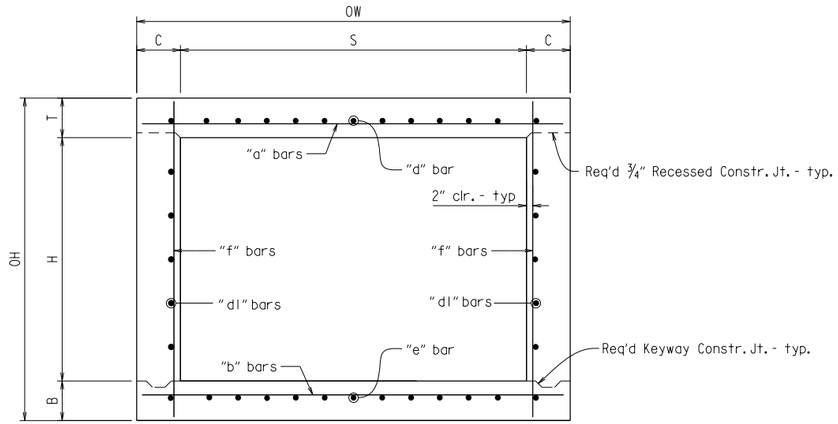

TYPICAL SECTION M-M

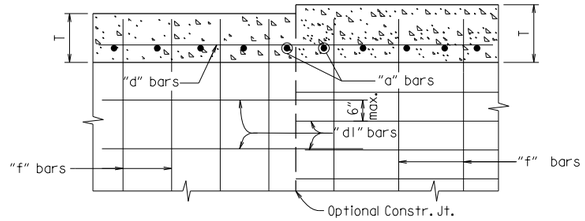

Longitudinal Bar Spacing at individual sections shall be maintained, which may result in noncontact bar laps.

LONGITUDINAL LAP DETAIL AT CHANGE IN SECTIONS

TOP SLAB SHOWN, BOTTOM SLAB SIMILAR

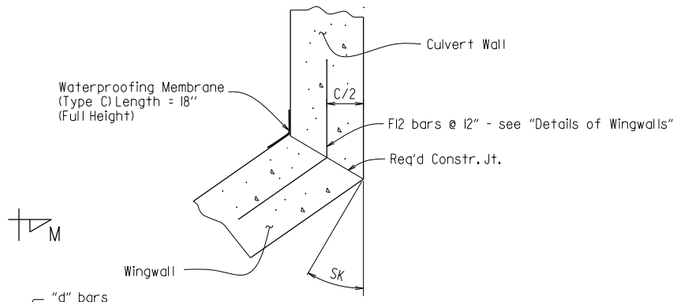

WINGWALL ATTACHMENT

See "Details of Wingwalls" for additional information and wingwall details.

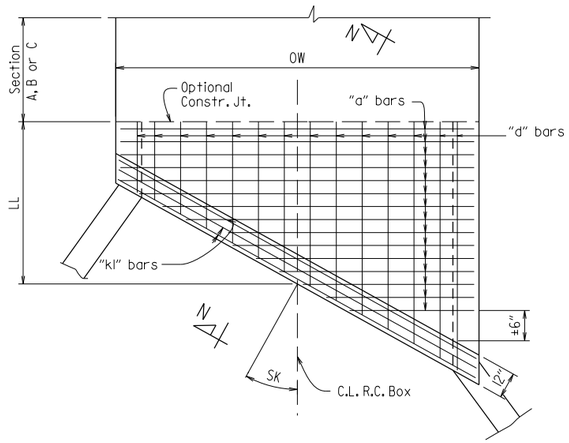

TOP SLAB REINFORCEMENT

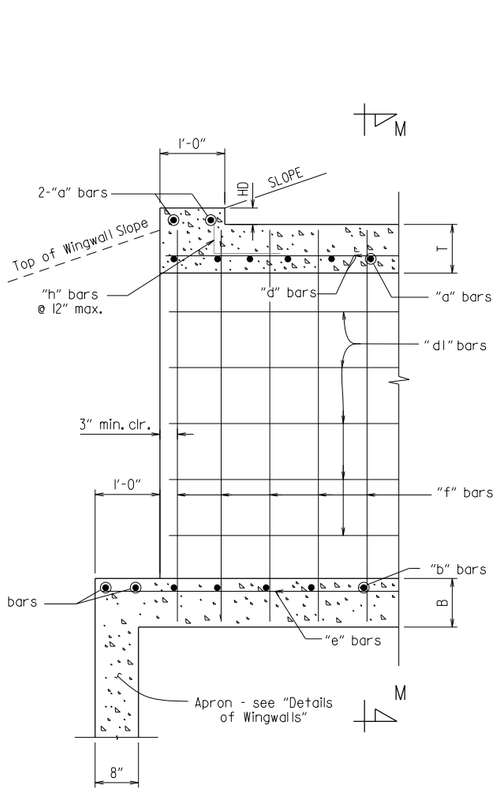

PART LONGITUDINAL SECTION

(Non-Skewed Ends)

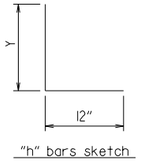

"h" bars sketch

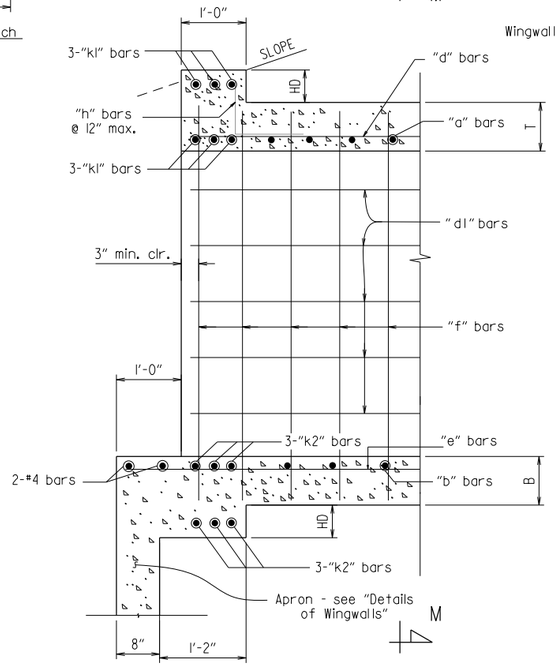

PART LONGITUDINAL SECTION N-N

(Skewed Ends)

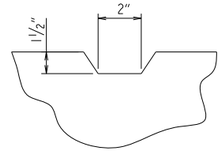

TYPICAL KEYWAY DETAIL

(All Construction Joints)

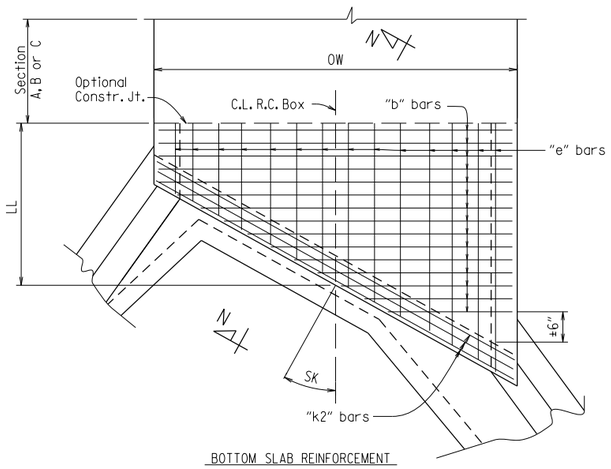

BOTTOM SLAB REINFORCEMENT

SKEWED END SECTION DETAILS

SHEET 2 OF 4
GENERAL DETAILS OF R.C. BOX CULVERT

DETAILS OF SINGLE BARREL
R.C. BOX CULVERT

SPECIAL DETAILS

STATE OF ARKANSAS
LICENSED PROFESSIONAL ENGINEER
No.13436
SHAUNA. ROBERSON
DIGITALLY SIGNED 7/28/2023

HBVinson
7/27/2023 11:37:55 PM
WORKSPACE: AHTD
L:\2017\170760 - ARDOT 012326 Hwy 412 - Hwy 112\Drawings\r012326_SD.dgn
REVISED DATE:
V 11.17

DATE REVISED	DATE REVISED	FED. RD. DIST. NO.	STATE	JOB NO.	SHEET NO.	TOTAL SHEETS
		6	ARK.	012326	49	838
①		SPECIAL DETAILS				

① 2" clr. for fill depth (D) greater than 2 ft.
2½" clr. for fill depth (D) equal to or less than 2 ft.

Note: When top slab of culvert serves as finished roadway surface, see General Notes on Sheet 1 of 4.

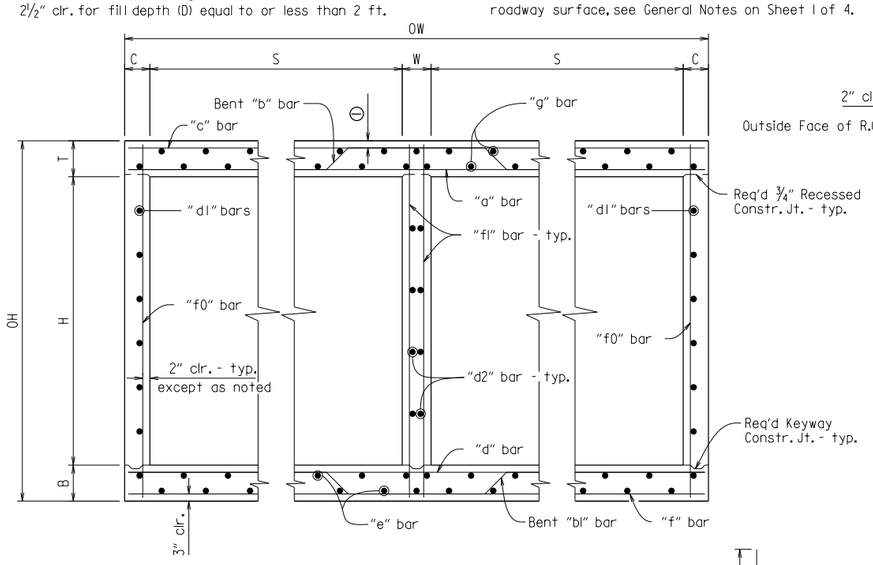

TYPICAL SECTION M-M

Top Slab
Straight "c" bars shall alternate with Bent "b" bars in top.
Straight "a" bars shall alternate with Bent "b" bars in bottom.

Bottom Slab
Straight "d" bars shall alternate with Bent "bl" bars in top.
Straight "f" bars shall alternate with Bent "bl" bars in bottom.

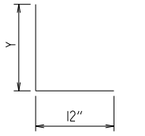

"h" bars sketch

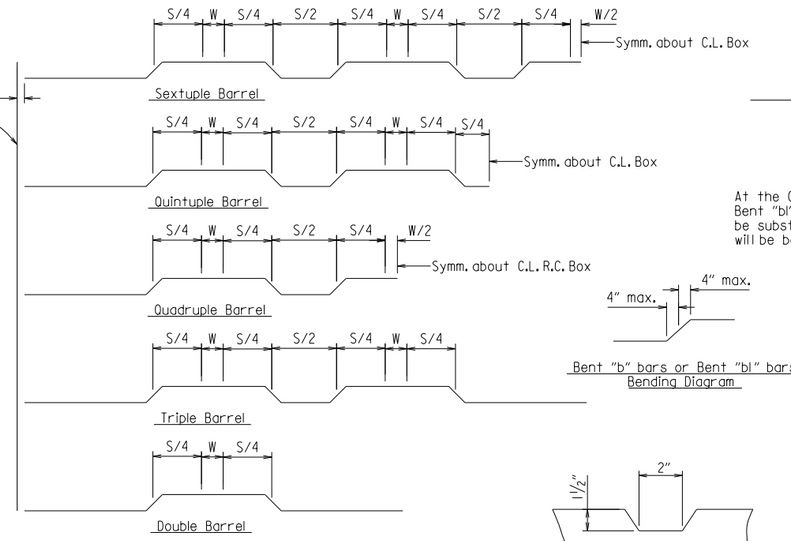

Bent "b" bars or Bent "bl" bars sketch

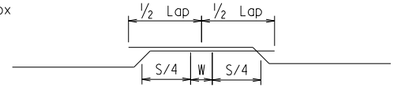

Lap Detail
For Bent "b" bars and Bent "bl" bars

At the Contractor's option in lieu of providing Bent "b" or Bent "bl" bars, one bar top and bottom of equivalent size may be substituted for each bent bar. Payment for the reinforcing will be based on the weight of the "b" or "bl" bar.

Bent "b" bars or Bent "bl" bars Bending Diagram

TYPICAL KEYWAY DETAIL

(All Construction Joints)

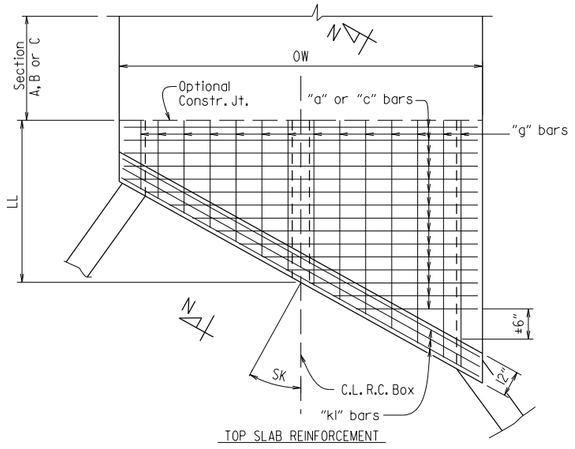

TOP SLAB REINFORCEMENT
Straight "c" bars in top.
Straight "a" bars in bottom.

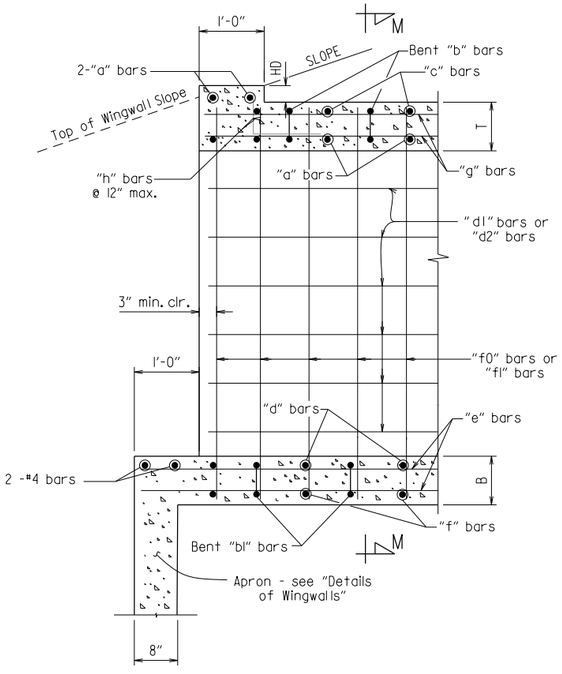

PART LONGITUDINAL SECTION

(Non-Skewed Ends)

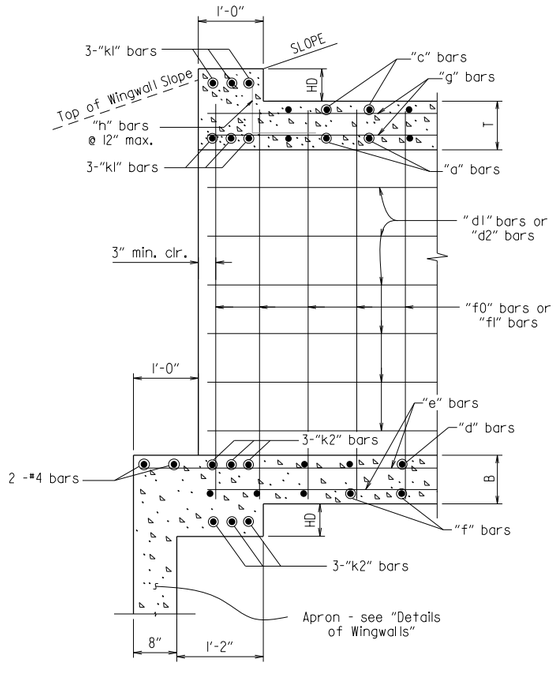

PART LONGITUDINAL SECTION N-N

(Skewed Ends)

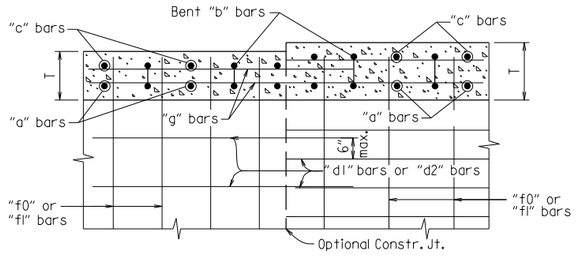

Longitudinal Bar Spacing at individual sections shall be maintained, which may result in noncontact bar laps.

LONGITUDINAL LAP DETAIL AT CHANGE IN SECTIONS

TOP SLAB SHOWN, BOTTOM SLAB SIMILAR

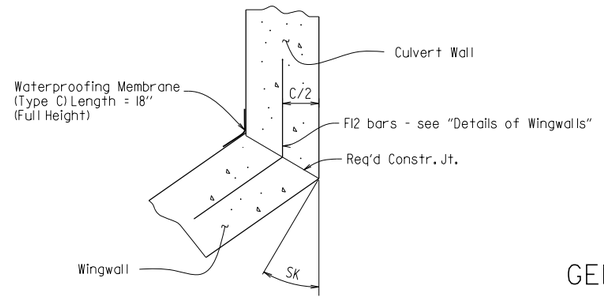

WINGWALL ATTACHMENT

See "Details of Wingwalls" for additional information and wingwall details.

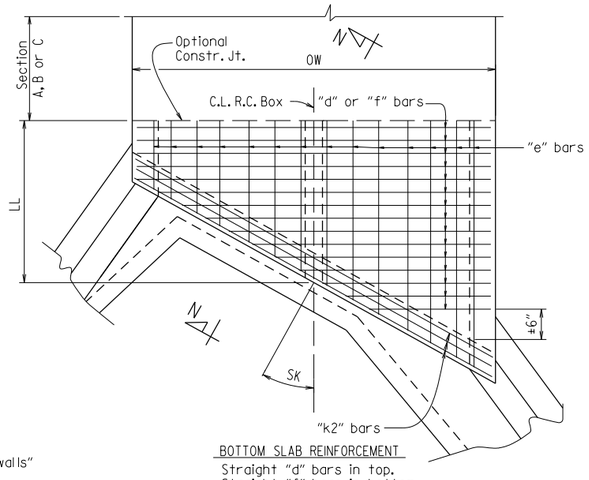

BOTTOM SLAB REINFORCEMENT
Straight "d" bars in top.
Straight "f" bars in bottom.

SKEWED END SECTION DETAILS

STATE OF ARKANSAS
LICENSED PROFESSIONAL ENGINEER
No.13436
SHAUNA ROBERSON
DIGITALLY SIGNED 7/28/2023

SHEET 3 OF 4
GENERAL DETAILS OF R.C. BOX CULVERT

DETAILS OF MULTI-BARREL
R.C. BOX CULVERT

SPECIAL DETAILS

LRFD

HBVinson 7/27/2023 11:37:55 PM
WORKSPACE: AHTD
L:\20\7\0\0f660 - ARDOT 012326 Hwy 412 - Hwy 112\Drawings\r012326_SD_01.dgn
REVISED DATE:
V 1.17

DATE REVISED	DATE REVISED	FED. RD. DIST. NO.	STATE	JOB NO.	SHEET NO.	TOTAL SHEETS
		6	ARK.	012326	50	838
1		SPECIAL DETAILS				

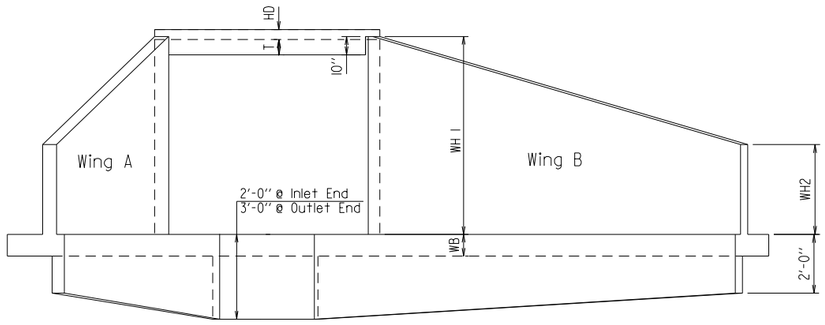

END ELEVATION

Flared Wingwalls Shown

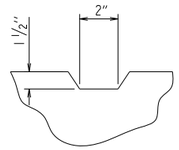

TYPICAL KEYWAY DETAIL

All Construction Joints

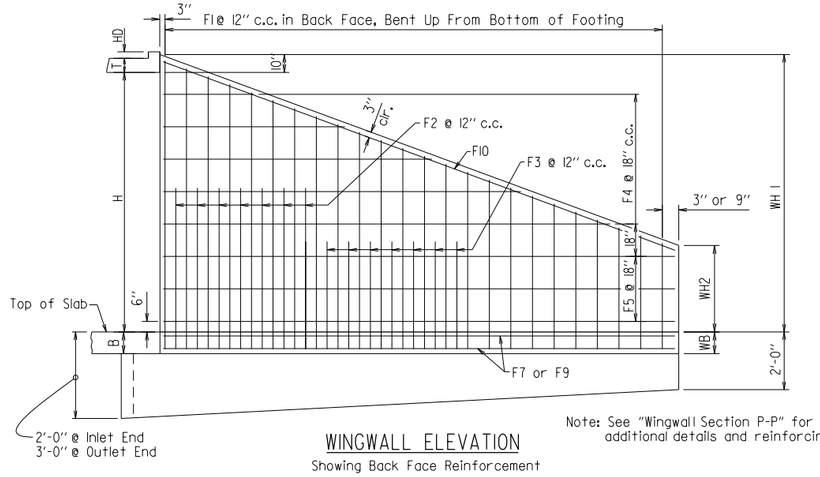

WINGWALL ELEVATION

Showing Back Face Reinforcement

Note: See "Wingwall Section P-P" for additional details and reinforcing.

PART PLAN - FLARED WINGWALLS

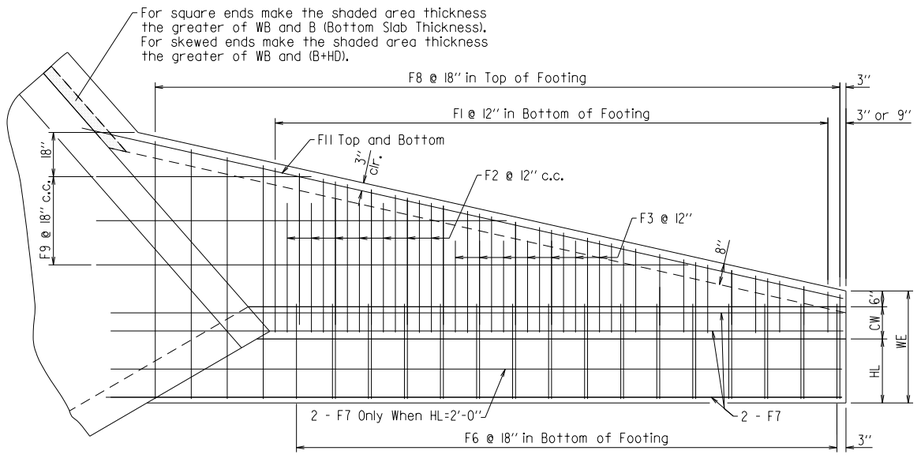

PLAN - FLARED WINGWALLS

Showing Footing Reinforcement

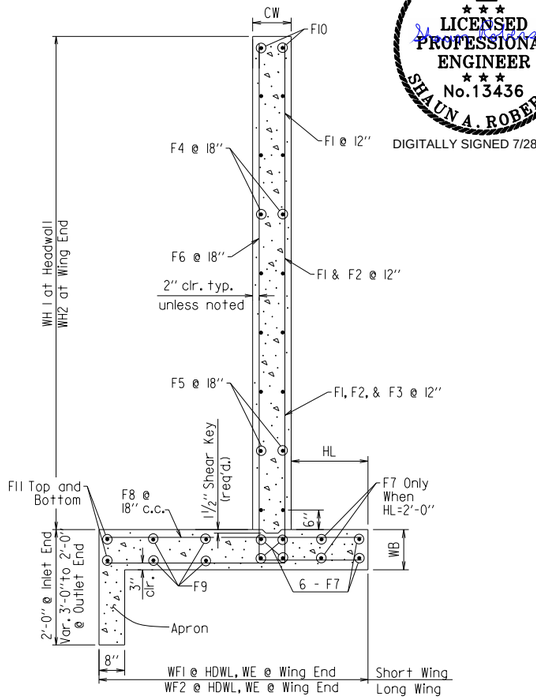

WINGWALL SECTION P-P

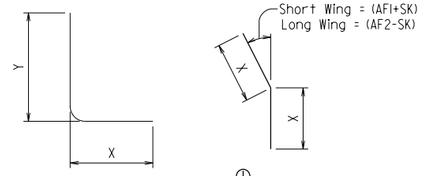

F1, F2, F3, & F6 BARS

①F12 BAR

①F12 is a straight bar for parallel wingwalls

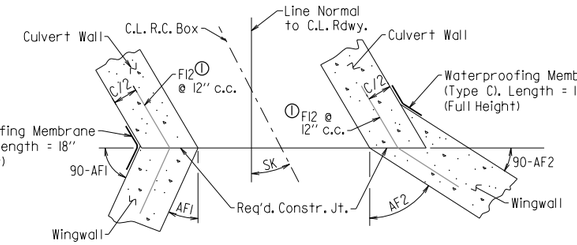

CONSTRUCTION JOINTS

Flared Wingwalls Shown

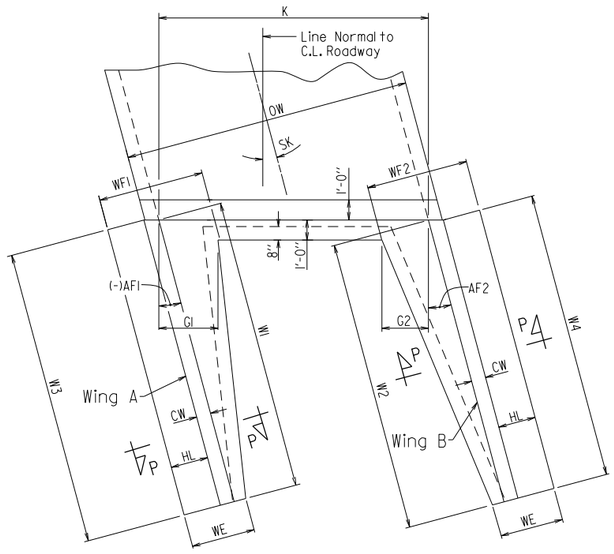

PART PLAN - PARALLEL WINGWALLS

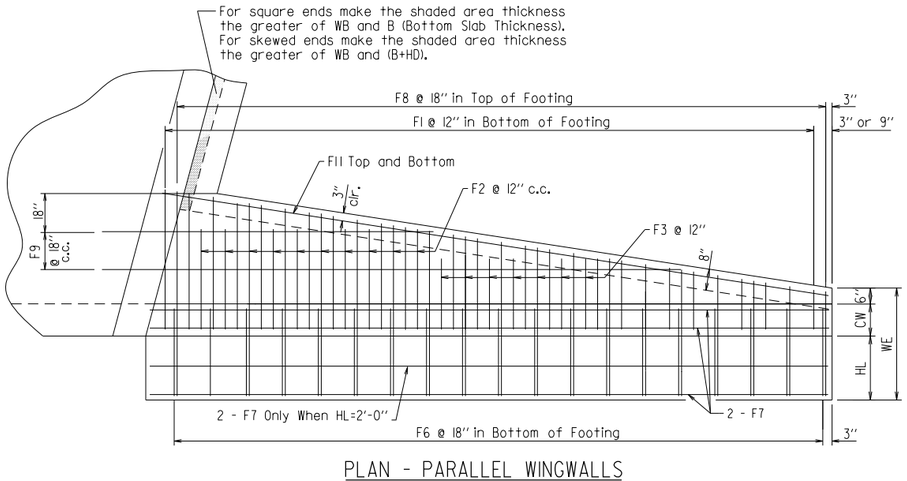

PLAN - PARALLEL WINGWALLS

Showing Footing Reinforcement

SHEET 4 OF 4

GENERAL DETAILS OF R.C. BOX CULVERT

DETAILS OF WINGWALLS

SPECIAL DETAILS

STATE OF ARKANSAS
LICENSED PROFESSIONAL ENGINEER
No.13436
SHAUNA ROBERSON
DIGITALLY SIGNED 7/28/2023

HBVinson 7/27/2023 1:37:56 PM
WORKSPACE: AHTD
L:\2017\17017660 - ARDOT 012326 Hwy 412 - Hwy 112\Drawings\r012326_SD_01.dgn
REVISED DATE:
V 1.17

INLET WINGWALL TABLE

OVER ALL WIDTH	CLEAR HEIGHT	FOOTING THK.	WING WALL THK.	BOX SKEW (DEG.)	SLOPE	HDWL LENGTH	HEEL	WALL HEIGHT		WINGWALL ANGLE (DEGREE)		FOOTING WIDTH AT WALL END	WIDTH OF WING FOOTINGS AT HDWL		FOOTING DIMENSION PARALLEL WITH HDWL		LENGTH OF WINGWALLS		LENGTH OF FOOTING HEEL	
								AT HDWL	AT WING END	WING A	WING B		WING A	WING B	WING A	WING B	WING A	WING B	WING A	WING B
OW	H	WB	CW	SK	SL	K	HL	WH1	WH2	AF1	AF2	WE	WF1	WF2	G1	G2	W1	W2	W3	W4
10'-8"	9'-0"	0'-10"	0'-9"	0	3:1	9'-2 1/2"	2'-0"	9'-10"	3'-0"	30	30	3'-3"	4'-10"	4'-10"	1'-10"	1'-10"	23'-6"	23'-6"	26'-10 1/8"	26'-10 1/8"

CLASS "S" CONCRETE (Includes aprcn)	REINFORCING STEEL (Includes apron and laps if required)
INLET	INLET
CU.YD	LBS.
16.18	1586

WING	F1 BAR SIZE	F1 MAX. SPACING	F1 NO. REQ'D	F1 LENGTHS VARY			F2 BAR SIZE	F2 SPACING	F2 NO. REQ'D	F2 LENGTHS		F3 BAR SIZE	F3 SPACING	F3 NO. REQ'D	F3 LENGTHS		F4 BAR SIZE	F4 SPACING	F4 NO. REQ'D	F4 LENGTHS VARY	
WING A	4	12	24	L	Min	4'-2"	4	12	11	L	6'-3"	-	-	-	L	-	4	18	8	Min	5'-7"
					Max	12'-5"														Max	21'-0"
				X	Min	0'-10"				X	1'-9"				X	-					
					Max	2'-5"															
				Y	Min	3'-5"				Y	4'-7"				Y	-					
					Max	10'-1"															
WING B	4	12	24	L	Min	4'-2"	4	12	11	L	6'-3"	-	-	-	L	-	4	18	8	Min	5'-7"
					Max	12'-5"														Max	21'-0"
				X	Min	0'-10"				X	1'-9"				X	-					
					Max	2'-5"															
				Y	Min	3'-5"				Y	4'-7"				Y	-					
					Max	10'-1"															

WING	F5 BAR SIZE	F5 SPACING	F5 NO. REQ'D	F5 LENGTHS	F6 BAR SIZE	F6 SPACING	F6 NO. REQ'D	F6 LENGTHS VARY			F7 BAR SIZE	F7 NO. REQ'D	F7 LENGTHS	F8 BAR SIZE	F8 SPACING	F8 NO. REQ'D	F8 LENGTHS VARY		F9 BAR SIZE	F9 SPACING	F9 NO. REQ'D	F9 LENGTHS		F10 BAR SIZE	F10 NO. REQ'D	F10 LENGTHS	F11 BAR SIZE	F11 NO. REQ'D	F11 LENGTHS	F12 BAR SIZE	F12 SPACING	F12 NO. REQ'D	F12 LENGTHS		REINF. STEEL QTY. PER WING (LBS)
WING A	4	18	4	23'-2"	4	18	16	L	Min	5'-11"	4	8	27'-8"	6	18	16	Min	2'-9"	4	18	2	Min	24'-3"	4	2	24'-0"	4	2	25'-8"	6	12	9	L	3'-4"	793
									Max	12'-5"							Max	4'-3"				Max	24'-3"											
								X	Min	2'-5"							Min					Min	24'-3"										X	1'-8"
									Max	2'-5"							Max					Max	24'-3"											
								Y	Min	3'-7"							Min					Min	24'-3"											
									Max	10'-1"							Max					Max	24'-3"											
WING B	4	18	4	23'-2"	4	18	16	L	Min	5'-11"	4	8	27'-8"	6	18	16	Min	2'-9"	4	18	2	Min	24'-3"	4	2	24'-0"	4	2	25'-8"	6	12	9	L	3'-4"	793
									Max	12'-5"							Max	4'-3"				Max	24'-3"											
								X	Min	2'-5"							Min					Min	24'-3"										X	1'-8"
									Max	2'-5"							Max					Max	24'-3"											
								Y	Min	3'-7"							Min					Min	24'-3"											
									Max	10'-1"							Max					Max	24'-3"											

This drawing to be used in conjunction with
SHEET 1 OF 4, "GENERAL DETAILS OF R.C. BOX CULVERT", 'GENERAL NOTES & LONGITUDINAL SECTION LENGTH SCHEDULE',
SHEET 3 OF 4, "GENERAL DETAILS OF R.C. BOX CULVERT", 'DETAILS OF MULTI-BARREL R.C. BOX CULVERT',
SHEET 4 OF 4, "GENERAL DETAILS OF R.C. BOX CULVERT", 'DETAILS OF WINGWALLS', and
STANDARD DRAWING RCB-2.
For additional information and outlet sections, see Sheet 2 of 2.

DATE REVISED	DATE REVISED	FED. RD. DIST. NO.	STATE	JOB NO.	SHEET NO.	TOTAL SHEETS
		6	ARK.	012326	51	838
		SPECIAL DETAILS				

MID-SECTION

BAR LAP TABLE

# of Long. Laps Req'd.	SL = Section Length
0	< 40.0 ft
1	>40.0 ft - 78.0 ft
2	>78.0 ft - 116.0 ft
3	>116.0 ft - 154.0 ft
4	>154.0 ft - 192.0 ft
5	>192.0 ft - 230.0 ft
6	>230.0 ft - 268.0 ft
7	>268.0 ft - 306.0 ft
8	>306.0 ft -344.0 ft

Min. Bar Lap Length	
#4	1'-9"
#5	2'-2"
#6	2'-7"
#7	3'-6"
#8	4'-7"

Bar Pin Dia. Table	
#4	3"
#5	3 3/4"
#6	4 1/2"
#7	5 1/4"
#8	6"

STATE OF ARKANSAS
LICENSED PROFESSIONAL ENGINEER
No.13436
SHAUNA A. ROBERSON
DIGITALLY SIGNED 7/28/2023

TABULAR DATA BY: WBC DATE: 2/13/2023
CHECKED BY: AEW DATE: 2/15/2023

(1) Any Bar Lap Required for the Skewed End Section shall be considered subsidiary to the item "Reinforcing Steel - Roadway (Grade 60)."

INLET SKEWED END SECTION

| SKEW (DEGREE) | SLOPE | DESIGN FILL DEPTH (FT.) | CLEAR SPAN (FT.) | CLEAR HEIGHT (FT.) | SECTION LENGTH | TOP SLAB THK. | HDWL DEPTH | BOTTOM SLAB THK. | SIDE WALL THK. | INTERIOR WALL THK. | OVER ALL WIDTH | OVER ALL HEIGHT | TOP SLAB REINFORCING STEEL "a" SIZE | "a" SPACING | "a" LENGTHS VARY | "a" NO. REQ'D | TOP SLAB REINFORCING STEEL "c" SIZE | "c" SPACING | "c" LENGTHS VARY | "c" NO. REQ'D | BOTTOM SLAB REINFORCING STEEL "d" SIZE | "d" SPACING | "d" LENGTHS VARY | "d" NO. REQ'D | BOTTOM SLAB REINFORCING STEEL "f" SIZE | "f" SPACING | "f" LENGTHS VARY | "f" NO. REQ'D | SIDE WALL REINFORCING STEEL "f0" SIZE | "f0" SPACING | "f0" NO. REQ'D | "f0" LENGTH | INTERIOR WALL REINFORCING STEEL "f1" SIZE | "f1" SPACING | "f1" NO. REQ'D | "f1" LENGTH | TOP SLAB DISTRIBUTION REINFORCING STEEL "g" SIZE | "g" SPACING | "g" NO. REQ'D | "g" LENGTHS VARY | BOTTOM SLAB DISTRIBUTION REINFORCING STEEL "e" SIZE | "e" SPACING | "e" NO. REQ'D | "e" LENGTHS VARY | SIDE WALL DISTRIBUTION REINFORCING STEEL "d1" SIZE | "d1" SPACING | "d1" NO. REQ'D | "d1" LENGTH | INTERIOR WALL DISTRIBUTION REINFORCING STEEL "d2" SIZE | "d2" SPACING | "d2" NO. REQ'D | "d2" LENGTH |
|---|---|---|---|---|---|---|---|---|---|---|---|---|---|---|---|---|---|---

DATE REVISED	DATE REVISED	FED. RD. DIST. NO.	STATE	JOB NO.	SHEET NO.	TOTAL SHEETS
		6	ARK.	012326	52	838
		SPECIAL DETAILS				

STATE OF ARKANSAS
LICENSED PROFESSIONAL ENGINEER
No.13436
SHAUNA A. ROBERSON
DIGITALLY SIGNED 7/28/2023

TABULAR DATA BY: WBC DATE: 2/13/2023
CHECKED BY: AEW DATE: 2/15/2023

OUTLET WINGWALL TABLE

OVER ALL WIDTH	CLEAR HEIGHT	FOOTING THK.	WING WALL THK.	BOX SKEW (DEG.)	SLOPE	HDWL LENGTH	HEEL	WALL HEIGHT AT HDWL	WALL HEIGHT AT WING END	WINGWALL ANGLE (DEGREE) WING A	WINGWALL ANGLE (DEGREE) WING B	FOOTING WIDTH AT WALL END	WIDTH OF WING FOOTINGS AT HDWL WING A	WIDTH OF WING FOOTINGS AT HDWL WING B	FOOTING DIMENSION PARALLEL WITH HDWL WING A	FOOTING DIMENSION PARALLEL WITH HDWL WING B	LENGTH OF WINGWALLS WING A	LENGTH OF WINGWALLS WING B	LENGTH OF FOOTING HEEL WING A	LENGTH OF FOOTING HEEL WING B
OW	H	WB	CW	SK	SL	K	HL	WH1	WH2	AF1	AF2	WE	WF1	WF2	G1	G2	W1	W2	W3	W4
10'-8"	9'-0"	0'-10"	0'-9"	0	3:1	9'-2 1/2"	2'-0"	9'-10"	3'-0"	30	30	3'-3"	4'-10"	4'-10"	1'-10"	1'-10"	23'-6"	23'-6"	26'-10 1/8"	26'-10 1/8"

CLASS "S" CONCRETE (Includes aprcn)	REINFORCING STEEL (Includes apron and laps if required)
OUTLET	OUTLET
CU.YD	LBS.
16.90	1586

WING	F1 BAR SIZE	F1 MAX. SPACING	F1 NO. REQ'D	F1 LENGTHS VARY			F2 BAR SIZE	F2 SPACING	F2 NO. REQ'D	F2 LENGTHS			F3 BAR SIZE	F3 SPACING	F3 NO. REQ'D	F3 LENGTHS			F4 BAR SIZE	F4 SPACING	F4 NO. REQ'D	F4 LENGTHS VARY
WING A	4	12	24	L	Min	4'-2"	4	12	11	L	6'-3"		-	-	-	L	-		4	18	8	Min
					Max	12'-5"																5'-7"
				X	Min	0'-10"				X	1'-9"					X	-					Max
					Max	2'-5"																21'-0"
				Y	Min	3'-5"				Y	4'-7"					Y	-					
					Max	10'-1"																
WING B	4	12	24	L	Min	4'-2"	4	12	11	L	6'-3"		-	-	-	L	-		4	18	8	Min
					Max	12'-5"																5'-7"
				X	Min	0'-10"				X	1'-9"					X	-					Max
					Max	2'-5"																21'-0"
				Y	Min	3'-5"				Y	4'-7"					Y	-					
					Max	10'-1"																

WING	F5 BAR SIZE	F5 SPACING	F5 NO. REQ'D	F5 LENGTHS	F6 BAR SIZE	F6 SPACING	F6 NO. REQ'D	F6 LENGTHS VARY			F7 BAR SIZE	F7 NO. REQ'D	F7 LENGTHS	F8 BAR SIZE	F8 SPACING	F8 NO. REQ'D	F8 LENGTHS VARY			F9 BAR SIZE	F9 SPACING	F9 NO. REQ'D	F9 LENGTHS
WING A	4	18	4	23'-2"	4	18	16	L	Min	5'-11"	4	8	27'-8"	6	18	16	Min			4	18	2	Min
									Max	12'-5"							2'-9"						24'-3"
								X	Min	2'-5"							Max						Max
									Max	2'-5"							4'-3"						24'-3"
								Y	Min	3'-7"													
									Max	10'-1"													
WING B	4	18	4	23'-2"	4	18	16	L	Min	5'-11"	4	8	27'-8"	6	18	16	Min			4	18	2	Min
									Max	12'-5"							2'-9"						24'-3"
								X	Min	2'-5"							Max						Max
									Max	2'-5"							4'-3"						24'-3"
								Y	Min	3'-7"													
									Max	10'-1"													

WING	F10 BAR SIZE	F10 NO. REQ'D	F10 LENGTHS	F11 BAR SIZE	F11 NO. REQ'D	F11 LENGTHS	F12 BAR SIZE	F12 SPACING	F12 NO. REQ'D	F12 LENGTHS		REINF. STEEL QTY. PER WING (LBS)
WING A	4	2	24'-0"	4	2	25'-8"	6	12	9	L	3'-4"	793
										X	1'-8"	
WING B	4	2	24'-0"	4	2	25'-8"	6	12	9	L	3'-4"	793
										X	1'-8"	

Min. Bar Lap Length	
#4	1'-9"
#5	2'-2"
#6	2'-7"
#7	3'-6"
#8	4'-7"

Bar Pin Dia. Table	
#4	3"
#5	3 3/4"
#6	4 1/2"
#7	5 1/4"
#8	6"

(1) Any Bar Lap Required for the Skewed End Section shall be considered subsidiary to the item "Reinforcing Steel - Roadway (Grade 60)."

OUTLET SKEWED END SECTION

SKEW (DEGREE)	SLOPE	DESIGN FILL DEPTH (FT.)	CLEAR SPAN (FT.)	CLEAR HEIGHT (FT.)	SECTION LENGTH	TOP SLAB THK.	HDWL DEPTH	BOTTOM SLAB THK.	SIDE WALL THK.	INTERIOR WALL THK.	OVER ALL WIDTH	OVER ALL HEIGHT	TOP SLAB REINF. STEEL "a" SIZE	"a" SPACING	"a" LENGTHS VARY	"a" NO. REQ'D	TOP SLAB REINF. STEEL "c" SIZE	"c" SPACING	"c" LENGTHS VARY	"c" NO. REQ'D	BOTTOM SLAB REINF. STEEL "d" SIZE	"d" SPACING	"d" LENGTHS VARY	"d" NO. REQ'D	BOTTOM SLAB REINF. STEEL "f" SIZE	"f" SPACING	"f" LENGTHS VARY	"f" NO. REQ'D
SK	SL	D	S	H	LL	T	HD	B	C	W	OW	OH																
															Max				Max				Max				Max	
															Min				Min				Min				Min	

SIDE WALL REINFORCING STEEL "f0" SIZE	SPACING	NO. REQ'D	LENGTH	INTERIOR WALL REINFORCING STEEL "f1" SIZE	SPACING	NO. REQ'D	LENGTH	TOP SLAB DISTRIBUTION REINFORCING STEEL "g" SIZE	SPACING	NO. REQ'D	LENGTHS VARY	BOTTOM SLAB DISTRIBUTION REINFORCING STEEL "e" SIZE	SPACING	NO. REQ'D	LENGTHS VARY	SIDE WALL DISTRIBUTION REINFORCING STEEL "d1" SIZE	SPACING	NO. REQ'D	LENGTH	INTERIOR WALL DISTRIBUTION REINFORCING STEEL "d2" SIZE	SPACING	NO. REQ'D	LENGTH
											Max				Max				LONG				
											Min				Min				SHORT				

CLASS "S" CONCRETE (Includes HDWL) CU. YDS.	REINFORCING STEEL (GR 60) (Includes HDWL) LBS.

"k1" HDWL BARS SIZE	LENGTH	NO. REQ'D

"k2" HDWL BARS SIZE	LENGTH	NO. REQ'D

"h" HDWL BARS SIZE	LENGTH	Y	NO. REQ'D

OUTLET SLOPE SECTION(S)

R.C. BOX SECTION	DESIGN FILL DEPTH (FT.) D	CLEAR SPAN (FT.) S	CLEAR HEIGHT (FT.) H	TOP SLAB THK. T	BOTTOM SLAB THK. B	SIDE WALL THK. C	INTERIOR WALL THK. W	OVER ALL WIDTH OW	OVER ALL HEIGHT OH	SECTION LENGTH (FT.) SL	TOP SLAB REINF. STEEL LENGTH = OW - 4" + BENDS "a" SIZE	"a" L	Bent "b" SIZE	Bent "b" L	"c" SIZE	"c" L	"c" SPACING	"c" NO. REQ'D	BOTTOM SLAB REINF. STEEL LENGTH = OW - 4" + BENDS "d" SIZE	"d" L	Bent "b1" SIZE	Bent "b1" L	"f" SIZE	"f" L	"f" SPACING	"f" NO. REQ'D
A	10	9	9	9	10.5	8.5	8	20'-1"	10'-7 1/2"	29	4	19'-9"	6	19'-11"	5	19'-9"	13	26	4	19'-9"	5	19'-0"	4	19'-9"	9	38
B	15	9	9	11.5	13.0	10.5	8	20'-5"	11'-0 1/2"	11	4	20'-1"	8	20'-5"	7	20'-1"	14	9	4	20'-1"	7	20'-5"	5	20'-1"	9	14
C	20	9	9	14	15.5	11.5	8	20'-7"	11'-5 1/2"	11	4	20'-3"	8	20'-8"	8	20'-3"	14	9	4	20'-3"	7	20'-9"	7	20'-3"	11	12
D	25	9	9	16.5	18	12.5	8	20'-9"	11'-10 1/2"	11	4	20'-5"	8	21'-0"	8	20'-5"	14	9	4	20'-5"	7	21'-0"	7	20'-5"	11	12
E	30	9	9	19	20	14	8	21'-0"	12'-3"	11	4	20'-8"	8	21'-5"	8	20'-8"	14	9	4	22'-0"	8	21'-5"	6	20'-8"	9	14
F	35	9	9	21	22.5	16	8	21'-4"	12'-7 1/2"	15	4	21'-0"	8	21'-10"	8	21'-0"	13	13	4	21'-0"	8	21'-10"	8	21'-0"	13	13

SIDE WALL REINFORCING STEEL "f0" LENGTH = OH - 4" SIZE	SPACING	NO. REQ'D	LENGTH	INTERIOR WALL REINFORCING STEEL "f1" LENGTH = OH - 4" SIZE	SPACING	NO. REQ'D	LENGTH	TOP SLAB DISTRIBUTION REINF. STEEL "g" LENGTH = SL SIZE	SPACING	NO. REQ'D	BOTTOM SLAB DISTRIBUTION REINF. STEEL "e" LENGTH = SL SIZE	SPACING	NO. REQ'D	SIDE WALL DISTRIBUTION REINF. STEEL "d1" LENGTH = SL SIZE	SPACING	NO. REQ'D	INTERIOR WALL DISTRIBUTION REINF. STEEL "d2" LENGTH = SL SIZE	SPACING	NO. REQ'D
7	8	86	10'-4"	4	12	58	10'-4"	4	12	39	4	10	47	4	12	18	4	12	18
7	8	32	10'-8"	4	12	22	10'-8"	4	9	51	4	8.5	55	4	10	22	4	12	18
8	9	28	11'-2"	4	12	22	11'-2"	5	12	39	5	11	43	4	9	24	4	12	18
7	6	44	11'-6"	4	12	22	11'-6"	4	6.5	71	4	6	75	4	8.5	26	4	12	18
6	4	66	11'-11"	4	12	22	11'-11"	5	9	51	4	5.5	83	5	12	18	4	12	18
6	4	90	12'-4"	4	12	30	12'-4"	5	8	59	5	7.5	63	4	6.5	34	4	12	18

CLASS "S" CONCRETE CU. YDS.	REINFORCING STEEL (GR. 60) LBS.
55.38	8287
25.84	4263
30.09	4848
34.39	5172
38.81	5850
59.63	8236
TOTAL	
244.13	36657

HDWL DEPTH HD	ADDITIONAL REINF. FOR HDWL LBS.	"h" HDWL BARS SIZE	Y	LENGTH	NO. REQ'D
3"	26	4	0'-8"	1'-8"	22

The required number of bars and lengths shown are for estimating purpose only. The actual number and length required shall be determined in field.

Unless otherwise noted, all dimensions are in inches.

SHEET 2 OF 2

DETAILS OF R.C. BOX CULVERT

DOUBLE BARREL BOX CULVERT
STA. 278+90

SPECIAL DETAILS

HBVinson 7/27/2023 11:38:16 PM
WORKSPACE: AHTD
L:\2017\170176\60 - ARDOT 012326 Hwy 412 - Hwy 112\Drawings\r012326_SD_LRFD_01.dgn
REVISED DATE:
V 1.1.17

DATE REVISED	DATE REVISED	FED. RD. DIST. NO.	STATE	JOB NO.	SHEET NO.	TOTAL SHEETS
		6	ARK.	012326	53	838
		SPECIAL DETAILS				

INLET WINGWALL TABLE

OVER ALL WIDTH	CLEAR HEIGHT	FOOTING THK.	WING WALL THK.	BOX SKEW (DEG.)	SLOPE	HDWL LENGTH	HEEL	WALL HEIGHT		WINGWALL ANGLE (DEGREE)		FOOTING WIDTH AT WALL END	WIDTH OF WING FOOTINGS AT HDWL		FOOTING DIMENSION PARALLEL WITH HDWL		LENGTH OF WINGWALLS		LENGTH OF FOOTING HEEL	
								AT HDWL	AT WING END	WING A	WING B		WING A	WING B	WING A	WING B	WING A	WING B	WING A	WING B
OW	H	WB	CW	SK	SL	K	HL	WH1	WH2	AF1	AF2	WE	WF1	WF2	G1	G2	W1	W2	W3	W4
17'-10"	7'-0"	0'-9"	0'-8"	45	3:1	23'-6 7/8"	2'-0"	7'-10"	2'-4"	0	60	3'-2"	3'-5 3/4"	4'-2 1/4"	0'-9 3/4"	1'-3 5/8"	16'-6"	33'-0"	18'-4 1/8"	40'-8 3/8"

CLASS "S" CONCRETE (Includes apron)	REINFORCING STEEL (Includes apron and laps if required)
INLET	INLET
CU.YD	LBS.
14.17	1435

WING	F1 BAR SIZE	F1 MAX. SPACING	F1 NO. REQ'D	F1 LENGTHS VARY			F2 BAR SIZE	F2 SPACING	F2 NO. REQ'D	F2 LENGTHS			F3 BAR SIZE	F3 SPACING	F3 NO. REQ'D	F3 LENGTHS			F4 BAR SIZE	F4 SPACING	F4 NO. REQ'D	F4 LENGTHS VARY
WING A	4	12	17	L	Min	3'-4"	4	12	3	L	3'-5"		-	-	-	L	-		4	18	6	Min
					Max	9'-0"																3'-4"
				X	Min	0'-9"				X	1'-0"					X	-					Max
					Max	1'-1"																12'-4"
				Y	Min	2'-8"				Y	2'-6"					Y	-					
					Max	8'-0"																
WING B	4	12	33	L	Min	3'-4"	4	12	6	L	4'-0"		-	-	-	L	-		4	18	6	Min
					Max	9'-8"																6'-10"
				X	Min	0'-9"				X	1'-7"					X	-					Max
					Max	1'-9"																24'-10"
				Y	Min	2'-8"				Y	2'-6"					Y	-					
					Max	8'-0"																

WING	F5 BAR SIZE	F5 SPACING	F5 NO. REQ'D	F5 LENGTHS	F6 BAR SIZE	F6 SPACING	F6 NO. REQ'D	F6 LENGTHS VARY			F7 BAR SIZE	F7 NO. REQ'D	F7 LENGTHS	F8 BAR SIZE	F8 SPACING	F8 NO. REQ'D	F8 LENGTHS VARY		F9 BAR SIZE	F9 SPACING	F9 NO. REQ'D	F9 LENGTHS		F10 BAR SIZE	F10 NO. REQ'D	F10 LENGTHS	F11 BAR SIZE	F11 NO. REQ'D	F11 LENGTHS	F12 BAR SIZE	F12 SPACING	F12 NO. REQ'D	F12 LENGTHS		REINF. STEEL QTY PER WING (LBS)
WING A					4	18	11	L	Min	5'-3"	4	8	19'-2"	6	18	11	Min		-	-	-	-		4	2	16'-11"	4	2	17'-4"	6	12	7	L	3'-4"	455
									Max	10'-3"							2'-8"																	
								X	Min	2'-4"							Max					-										X	1'-8"	
									Max	2'-4"												Max											
								Y	Min	3'-0"							3'-0"					-											
									Max	8'-0"																							
WING B					4	18	22	L	Min	5'-1"	4	8	41'-6"	6	18	23	Min		4	18	2	Min		4	2	33'-0"	4	2	36'-7"	6	12	7	L	3'-4"	980
									Max	10'-3"							2'-8"					52'-2"											
								X	Min	2'-4"							Max					Max									X	1'-8"	
									Max	2'-4"												52'-2"											
								Y	Min	2'-10"							3'-8"																
									Max	8'-0"																							

MID-SECTION

BAR LAP TABLE

# of Long. Laps Req'd.	SL = Section Length
0	< 40.0 ft
1	>40.0 ft - 78.0 ft
2	>78.0 ft - 116.0 ft
3	>116.0 ft - 154.0 ft
4	>154.0 ft - 192.0 ft
5	>192.0 ft - 230.0 ft
6	>230.0 ft - 268.0 ft
7	>268.0 ft - 306.0 ft
8	>306.0 ft -344.0 ft

Min. Bar Lap Length	
#4	1'-9"
#5	2'-2"
#6	2'-7"
#7	3'-6"
#8	4'-7"

Bar Pin Dia. Table	
#4	3"
#5	3 3/4"
#6	4 1/2"
#7	5 1/4"
#8	6"

This drawing to be used in conjunction with SHEET 1 OF 4, "GENERAL DETAILS OF R.C. BOX CULVERT", 'GENERAL NOTES & LONGITUDINAL SECTION LENGTH SCHEDULE', SHEET 3 OF 4, "GENERAL DETAILS OF R.C. BOX CULVERT", 'DETAILS OF MULTI-BARREL R.C. BOX CULVERT', SHEET 4 OF 4, "GENERAL DETAILS OF R.C. BOX CULVERT", 'DETAILS OF WINGWALLS', and STANDARD DRAWING RCB-2.

For additional information and outlet sections, see Sheet 2 of 2.

STATE OF ARKANSAS
LICENSED PROFESSIONAL ENGINEER
No.13436
SHAUNA A. ROBERSON
DIGITALLY SIGNED 7/28/2023

TABULAR DATA BY: WBC DATE: 02/13/2023
CHECKED BY: AEW DATE: 02/15/2023

INLET SKEWED END SECTION

SKEW (DEGREE)	SLOPE	DESIGN FILL DEPTH (FT.)	CLEAR SPAN (FT.)	CLEAR HEIGHT (FT.)	SECTION LENGTH	TOP SLAB THK.	HDWL DEPTH	BOTTOM SLAB THK.	SIDE WALL THK.	INTERIOR WALL THK.	OVER ALL WIDTH	OVER ALL HEIGHT
SK	SL	D	S	H	LL	T	HD	B	C	W	OW	OH
45	3:1	10	8	7	10'-11"	8	3	9.5	7	8	17'-10"	8'-5 1/2"

TOP SLAB REINFORCING STEEL	"a" SIZE	"a" SPACING	"a" LENGTHS VARY	"a" NO. REQ'D	"c" SIZE	"c" SPACING	"c" LENGTHS VARY	"c" NO. REQ'D
	4	5.5	Max	34	6	6.5	Max	29
			17'-6"				17'-6"	
			Min				Min	
			2'-2"				2'-2"	
			17'-6"	5			17'-6"	4

BOTTOM SLAB REINFORCING STEEL	"d" SIZE	"d" SPACING	"d" LENGTHS VARY	"d" NO. REQ'D	"f" SIZE	"f" SPACING	"f" LENGTHS VARY	"f" NO. REQ'D
	4	4	Max	47	4	7	Max	27
			17'-6"				17'-6"	
			Min				Min	
			2'-2"				2'-2"	
			17'-6"	6			17'-6"	4

SIDE WALL REINFORCING STEEL "f0" SIZE	"f0" SPACING	"f0" NO. REQ'D	"f0" LENGTH
6	7.5	36	8'-2"

INTERIOR WALL REINFORCING STEEL "f1" SIZE	"f1" SPACING	"f1" NO. REQ'D	"f1" LENGTH
4	12	22	8'-2"

TOP SLAB DISTRIBUTION REINFORCING STEEL "g" SIZE	"g" SPACING	"g" NO. REQ'D	"g" LENGTHS VARY
4	12	35	Max
			19'-8"
			Min
			1'-10"

BOTTOM SLAB DISTRIBUTION REINFORCING STEEL "e" SIZE	"e" SPACING	"e" NO. REQ'D	"e" LENGTHS VARY
4	11	39	Max
			19'-8"
			Min
			1'-10"

SIDE WALL DISTRIBUTION REINFORCING STEEL "d1" SIZE	"d1" SPACING	"d1" NO. REQ'D	"d1" LENGTH
4	12	7	LONG
			19'-3"
		7	SHORT
			2'-3"

INTERIOR WALL DISTRIBUTION REINFORCING STEEL "d2" SIZE	"d2" SPACING	"d2" NO. REQ'D	"d2" LENGTH
4	12	14	10'-9"

CLASS "S" CONCRETE (Includes HDWL) CU. YDS.	REINFORCING STEEL (GR 60) (Includes HDWL) LBS.
16.21	3053

"k1" HDWL BARS SIZE	"k1" HDWL BARS LENGTH	"k1" HDWL BARS NO. REQ'D	"k2" HDWL BARS SIZE	"k2" HDWL BARS LENGTH	"k2" HDWL BARS NO. REQ'D
5	24'-11"	6	5	24'-11"	6

"h" HDWL BARS SIZE	"h" HDWL BARS LENGTH	"h" HDWL BARS Y	"h" HDWL BARS NO. REQ'D
4	1'-7"	0'-7"	27

Any Bar Lap Required for the Skewed End Section shall be considered subsidiary to the item "Reinforcing Steel - Roadway (Grade 60)."

INLET SLOPE SECTION(S)

R.C. BOX SECTION	DESIGN FILL DEPTH (FT.) D	CLEAR SPAN (FT.) S	CLEAR HEIGHT (FT.) H	TOP SLAB THK. T	BOTTOM SLAB THK. B	SIDE WALL THK. C	INTERIOR WALL THK. W	OVER ALL WIDTH OW	OVER ALL HEIGHT OH	SECTION LENGTH (FT.) SL
A	10	8	7	8	9.5	7	8	17'-10"	8'-5 1/2"	28.08
B	15	8	7	10.5	11.5	8.5	8	18'-1"	8'-10"	33
C	20	8	7	12.5	13.5	9	8	18'-2"	9'-2"	20
D	25	8	7	14.5	16	10	8	18'-4"	9'-6 1/2"	20
E	30	8	7	16.5	17.5	11	8	18'-6"	9'-10"	20
F	35	8	7	18.5	19.5	12	8	18'-8"	10'-2"	20

TOP SLAB REINFORCING STEEL LENGTH = OW - 4" + BENDS	"a" SIZE	"a" L	Bent "b" SIZE	Bent "b" L	"c" SIZE	"c" L	SPACING	NO. REQ'D
	4	17'-6"	6	17'-8"	6	17'-6"	13	25
	4	17'-9"	8	18'-0"	4	17'-9"	13	30
	4	17'-10"	8	18'-3"	7	17'-10"	14	17
	4	18'-0"	8	18'-6"	8	18'-0"	13	18
	4	18'-2"	8	18'-9"	8	18'-2"	13	18
	4	18'-4"	8	19'-0"	8	18'-4"	13	18

BOTTOM SLAB REINFORCING STEEL LENGTH = OW - 4" + BENDS	"d" SIZE	"d" L	Bent "b1" SIZE	Bent "b1" L	"f" SIZE	"f" L	SPACING	NO. REQ'D
	4	17'-6"	4	17'-8"	4	17'-6"	8	42
	4	17'-9"	8	18'-0"	4	17'-9"	9	44
	4	17'-10"	7	18'-3"	7	17'-10"	10	24
	4	18'-0"	7	18'-6"	6	18'-0"	11	21
	4	18'-2"	8	18'-9"	8	18'-2"	12	20
	4	18'-4"	8	19'-0"	8	18'-4"	12	20

SIDE WALL REINFORCING STEEL "f0" LENGTH = OH - 4" SIZE	SPACING	NO. REQ'D	LENGTH
6	7.5	88	8'-2"
5	5	158	8'-6"
6	6	80	8'-10"
8	9	52	9'-2"
8	9	52	9'-6"
8	8.5	56	9'-10"

INTERIOR WALL REINFORCING STEEL "f1" LENGTH = OH - 4" SIZE	SPACING	NO. REQ'D	LENGTH
4	12	56	8'-2"
4	12	66	8'-6"
4	12	40	8'-10"
4	12	40	9'-2"
4	12	40	9'-6"
4	12	40	9'-10"

TOP SLAB DISTRIBUTION REINF. STEEL "g" LENGTH = SL SIZE	SPACING	NO. REQ'D
4	12	35
4	10	43
4	8.5	51
4	7.5	55
4	6.5	63
4	6	67
4	5.5	75

BOTTOM SLAB DISTRIBUTION REINF. STEEL "e" LENGTH = SL SIZE	SPACING	NO. REQ'D
4	11	39
4	9	47
4	8	51
4	6.5	63
4	6	67
4	5.5	75
4	9	20

SIDE WALL DISTRIBUTION REINF. STEEL "d1" LENGTH = SL SIZE	SPACING	NO. REQ'D
4	12	14
4	12	14
4	12	14
4	12	14
4	12	14
4	12	14
4	10	18
4	11	16
4	12	14
4	12	14
4	12	14
4	12	14

INTERIOR WALL DISTRIBUTION REINF. STEEL "d2" LENGTH = SL SIZE	SPACING	NO. REQ'D
4	12	14
4	12	14
4	12	14
4	12	14
4	12	14
4	12	14
4	12	14
4	12	14
4	12	14
4	12	14
4	12	14
4	12	14

CLASS "S" CONCRETE CU. YDS.	REINFORCING STEEL (GR. 60) LBS.
40.39	6595
58.34	9863
40.39	6907
46.62	7399
51.79	8218
57.61	8607
TOTAL	
295.15	47589

HDWL DEPTH HD	ADDITIONAL REINF. FOR HDWL LBS.	"h" HDWL BARS SIZE	"h" HDWL BARS Y	"h" HDWL BARS LENGTH	"h" HDWL BARS NO. REQ'D

Design Fill Depth	Range of Actual Fill Depth
2	0.0 ft - 2.0 ft
5	>2.0 ft - 5.0 ft
10	>5.0 ft - 10.0 ft
15	>10.0 ft - 15.0 ft
20	>15.0 ft - 20.0 ft
25	>20.0 ft - 25.0 ft
30	>25.0 ft - 30.0 ft
35	>30.0 ft - 35.0 ft
40	>35.0 ft - 40.0 ft

Data shown for Mid-Section, Slope Section(s), and Skewed End Section is based on the design fill depth shown in the table, see PLAN AND PROFILE SHEETS for actual fill depth.

MID-SECTION

R.C. BOX SECTION	DESIGN FILL DEPTH (FT.) D	CLEAR SPAN (FT.) S	CLEAR HEIGHT (FT.) H	TOP SLAB THK. T	BOTTOM SLAB THK. B	SIDE WALL THK. C	INTERIOR WALL THK. W	OVER ALL WIDTH OW	OVER ALL HEIGHT OH	SECTION LENGTH (FT.) SL
G	40	8	7	20.5	21.5	13.0	8	18'-10"	10'-6"	349

TOP SLAB REINFORCING STEEL LENGTH = OW - 4" + BENDS	"a" SIZE	"a" L	Bent "b" SIZE	Bent "b" L	"c" SIZE	"c" L	SPACING	NO. REQ'D
	4	18'-6"	8	19'-4"	8	18'-6"	15	279

BOTTOM SLAB REINFORCING STEEL LENGTH = OW - 4" + BENDS	"d" SIZE	"d" L	Bent "b1" SIZE	Bent "b1" L	"f" SIZE	"f" L	SPACING	NO. REQ'D
	4	18'-6"	8	19'-4"	8	18'-6"	13	322

SIDE WALL REINFORCING STEEL "f0" LENGTH = OH - 4" SIZE	SPACING	NO. REQ'D	LENGTH
8	8	1046	10'-2"

INTERIOR WALL REINFORCING STEEL "f1" LENGTH = OH - 4" SIZE	SPACING	NO. REQ'D	LENGTH
4	12	698	10'-2"

TOP SLAB DISTRIBUTION REINF. STEEL "g" LENGTH = SL SIZE	SPACING	NO. REQ'D
5	8	51

BOTTOM SLAB DISTRIBUTION REINF. STEEL "e" LENGTH = SL SIZE	SPACING	NO. REQ'D
5	8	51

SIDE WALL DISTRIBUTION STEEL "d1" LENGTH = SL SIZE	SPACING	NO. REQ'D
4	8.5	20

INTERIOR WALL DISTRIBUTION STEEL "d2" LENGTH = SL SIZE	SPACING	NO. REQ'D
4	12	14

CLASS "S" CONCRETE CU. YDS.	REINFORCING STEEL (GR. 60) LBS.
1108.40	146394

SHEET 1 OF 2
DETAILS OF R.C. BOX CULVERT
DOUBLE BARREL BOX CULVERT
STA. 313+88

SPECIAL DETAILS

HBVinson 7/27/2023 11:38:40 PM
WORKSPACE: AHTD
L:\2017\170766O - ARDOT 012326 Hwy 412 - Hwy 112\Drawings\r012326_SD_LRFD_02.dgn
REVISED DATE:
V 1.17

DATE REVISED	DATE REVISED	FED. RD. DIST. NO.	STATE	JOB NO.	SHEET NO.	TOTAL SHEETS
		6	ARK.	012326	54	838
①		SPECIAL DETAILS				

OUTLET WINGWALL TABLE

OVER ALL WIDTH	CLEAR HEIGHT	FOOTING THK.	WING WALL THK.	BOX SKEW (DEG.)	SLOPE	HDWL LENGTH	HEEL	WALL HEIGHT AT HDWL	WALL HEIGHT AT WING END	WINGWALL ANGLE (DEGREE) WING A	WINGWALL ANGLE (DEGREE) WING B	FOOTING WIDTH AT WALL END	WIDTH OF WING FOOTINGS AT HDWL WING A	WIDTH OF WING FOOTINGS AT HDWL WING B	FOOTING DIMENSION PARALLEL WITH HDWL WING A	FOOTING DIMENSION PARALLEL WITH HDWL WING B	LENGTH OF WINGWALLS WING A	LENGTH OF WINGWALLS WING B	LENGTH OF FOOTING HEEL WING A	LENGTH OF FOOTING HEEL WING B
OW	H	WB	CW	SK	SL	K	HL	WH1	WH2	AF1	AF2	WE	WF1	WF2	G1	G2	W1	W2	W3	W4
17'-10"	7'-3"	0'-9"	0'-8"	45	3:1	23'-6 7/8"	2'-0"	7'-10"	2'-4"	0	60	3'-2"	3'-5 3/4"	4'-2 1/4"	0'-9 3/4"	1'-3 5/8"	16'-6"	33'-0"	18'-4 1/8"	40'-8 3/8"

CLASS "S" CONCRETE (Includes apron)	REINFORCING STEEL (Includes apron and laps if required)
OUTLET	OUTLET
CU.YD	LBS.
15.31	1435

WING	F1 BAR SIZE	F1 MAX. SPACING	F1 NO. REQ'D	F1 LENGTHS VARY			F2 BAR SIZE	F2 SPACING	F2 NO. REQ'D	F2 LENGTHS			F3 BAR SIZE	F3 SPACING	F3 NO. REQ'D	F3 LENGTHS			F4 BAR SIZE	F4 SPACING	F4 NO. REQ'D	F4 LENGTHS VARY
WING A	4	12	17	L	Min	3'-4"	4	12	3	L	3'-5"		-	-	-	L	-		4	18	6	Min
					Max	9'-0"																3'-4"
				X	Min	0'-9"				X	1'-0"					X	-					Max
					Max	1'-1"																12'-4"
				Y	Min	2'-8"				Y	2'-6"					Y	-					
					Max	8'-0"																
WING B	4	12	33	L	Min	3'-4"	4	12	6	L	4'-0"		-	-	-	L	-		4	18	6	Min
					Max	9'-8"																6'-10"
				X	Min	0'-9"				X	1'-7"					X	-					Max
					Max	1'-9"																24'-10"
				Y	Min	2'-8"				Y	2'-6"					Y	-					
					Max	8'-0"																

WING	F5 BAR SIZE	F5 SPACING	F5 NO. REQ'D	F5 LENGTHS	F6 BAR SIZE	F6 SPACING	F6 NO. REQ'D	F6 LENGTHS VARY			F7 BAR SIZE	F7 NO. REQ'D	F7 LENGTHS	F8 BAR SIZE	F8 SPACING	F8 NO. REQ'D	F8 LENGTHS VARY		F9 BAR SIZE	F9 SPACING	F9 NO. REQ'D	F9 LENGTHS		F10 BAR SIZE	F10 NO. REQ'D	F10 LENGTHS	F11 BAR SIZE	F11 NO. REQ'D	F11 LENGTHS	F12 BAR SIZE	F12 SPACING	F12 NO. REQ'D	F12 LENGTHS		REINF. STEEL QTY PER WING (LBS)
WING A	4	18	6	Min	4	18	11	X	Min	2'-4"	4	8	19'-2"	6	18	11	Min		-	-	-	Min		4	2	16'-11"	4	2	17'-4"	6	12	7	L	3'-4"	455
				3'-4"					Max	2'-4"							2'-8"					-												
				Max	4	18	4	X	Min	2'-4"				4	18	4	Max		-	-	-	Max											X	1'-8"
				12'-4"					Max	2'-4"							3'-0"					-											
								Y	Min	3'-0"																								
									Max	8'-0"																								
WING B	4	18	6	Min	4	18	22	X	Min	2'-4"	4	8	41'-6"	6	18	23	Min		4	18	2	Min		4	2	33'-0"	4	2	36'-7"	6	12	7	L	3'-4"	980
				6'-10"					Max	2'-4"							2'-8"					52'-2"											
				Max	4	18	4	X	Min	2'-4"				4	18	4	Max		4	18	2	Max										X	1'-8"
				24'-10"					Max	2'-10"							3'-8"					52'-2"											
								Y	Min	8'-0"																								
									Max																								

Min. Bar Lap Length	
#4	1'-9"
#5	2'-2"
#6	2'-7"
#7	3'-6"
#8	4'-7"

Bar Pin Dia. Table	
#4	3"
#5	3 3/4"
#6	4 1/2"
#7	5 1/4"
#8	6"

① Any Bar Lap Required for the Skewed End Section shall be considered subsidiary to the item "Reinforcing Steel - Roadway (Grade 60)."

STATE OF ARKANSAS
LICENSED PROFESSIONAL ENGINEER
No.13436
SHAUN A. ROBERSON
DIGITALLY SIGNED 7/28/2023

TABULAR DATA BY: WBC DATE: 2/13/2023
CHECKED BY: AEW DATE: 02/15/2023

OUTLET SKEWED END SECTION

| SKEW (DEGREE) | SLOPE | DESIGN FILL DEPTH (FT.) | CLEAR SPAN (FT.) | CLEAR HEIGHT (FT.) | SECTION LENGTH | TOP SLAB THK. | HDWL DEPTH | BOTTOM SLAB THK. | SIDE WALL THK. | INTERIOR WALL THK. | OVER ALL WIDTH | OVER ALL HEIGHT | TOP SLAB REINFORCING STEEL "a" SIZE | "a" SPACING | "a" LENGTHS VARY | "a" NO. REQ'D | TOP SLAB REINFORCING STEEL "c" SIZE | "c" SPACING | "c" LENGTHS VARY | "c" NO. REQ'D | BOTTOM SLAB REINFORCING STEEL "d" SIZE | "d" SPACING | "d" LENGTHS VARY | "d" NO. REQ'D | BOTTOM SLAB REINFORCING STEEL "f" SIZE | "f" SPACING | "f" LENGTHS VARY | "f" NO. REQ'D | SIDE WALL REINFORCING STEEL "f0" SIZE | "f0" SPACING | "f0" NO. REQ'D | "f0" LENGTH | INTERIOR WALL REINFORCING STEEL "f1" SIZE | "f1" SPACING | "f1" NO. REQ'D | "f1" LENGTH | TOP SLAB DISTRIBUTION REINFORCING STEEL "g" SIZE | "g" SPACING | "g" NO. REQ'D | "g" LENGTHS VARY | BOTTOM SLAB DISTRIBUTION REINFORCING STEEL "e" SIZE | "e" SPACING | "e" NO. REQ'D | "e" LENGTHS VARY | SIDE WALL DISTRIBUTION REINFORCING STEEL "d1" SIZE | "d1" SPACING | "d1" NO. REQ'D | "d1" LENGTH | INTERIOR WALL DISTRIBUTION REINFORCING STEEL "d2" SIZE | "d2" SPACING | "d2" NO. REQ'D | "d2" LENGTH | CLASS "S" CONCRETE (Includes HDWL) | REINFORCING STEEL (GR 60) (Includes HDWL) |
|---|---|---|---|---|---|---|---|---|---|---|---|---|---|---|---|---|---|---

DATE REVISED	DATE REVISED	FED. RD. DIST. NO.	STATE	JOB NO.	SHEET NO.	TOTAL SHEETS
		6	ARK.	012326	55	838
①		SPECIAL DETAILS				

INLET WINGWALL TABLE

OVER ALL WIDTH	CLEAR HEIGHT	FOOTING THK.	WING WALL THK.	BOX SKEW (DEG.)	SLOPE	HDWL LENGTH	HEEL	WALL HEIGHT AT HDWL	WALL HEIGHT AT WING END	WINGWALL ANGLE (DEGREE) WING A	WINGWALL ANGLE (DEGREE) WING B	FOOTING WIDTH AT WALL END	WIDTH OF WING FOOTINGS AT HDWL WING A	WIDTH OF WING FOOTINGS AT HDWL WING B	FOOTING DIMENSION PARALLEL WITH HDWL WING A	FOOTING DIMENSION PARALLEL WITH HDWL WING B	LENGTH OF WINGWALLS WING A	LENGTH OF WINGWALLS WING B	LENGTH OF FOOTING HEEL WING A	LENGTH OF FOOTING HEEL WING B
OW	H	WB	CW	SK	SL	K	HL	WH1	WH2	AF1	AF2	WE	WF1	WF2	G1	G2	W1	W2	W3	W4
40'-4"	3'-0"	0'-9"	0'-8"	30	3:1	45'-5"	1'-0"	3'-10"	1'-0"	0	60	2'-2"	2'-2"	2'-3"	0'-6"	-0'--6 -7/8"	8'-6"	17'-0"	10'-4 5/8"	18'-10 5/8"

CLASS "S" CONCRETE (Includes apron)	REINFORCING STEEL (Includes apron and laps if required)
INLET	INLET
CU.YD	LBS.
6.51	495

WING	F1 BAR SIZE	F1 MAX. SPACING	F1 NO. REQ'D	F1 LENGTHS VARY			F2 BAR SIZE	F2 SPACING	F2 NO. REQ'D	F2 LENGTHS		F3 BAR SIZE	F3 SPACING	F3 NO. REQ'D	F3 LENGTHS		F4 BAR SIZE	F4 SPACING	F4 NO. REQ'D	F4 LENGTHS VARY
WING A	4	12	9	L	Min	2'-0"	-	-	-	L	-	-	-	-	L	-	4	18	2	Min
					Max	4'-8"														4'-10"
				X	Min	0'-9"				X	-				X	-				Max
					Max	0'-9"														4'-10"
				Y	Min	1'-4"				Y	-				Y	-				
					Max	4'-0"														
WING B	4	12	17	L	Min	2'-0"	-	-	-	L	-	-	-	-	L	-	4	18	2	Min
					Max	4'-9"														9'-10"
				X	Min	0'-9"				X	-				X	-				Max
					Max	0'-10"														9'-10"
				Y	Min	1'-4"				Y	-				Y	-				
					Max	4'-0"														

WING	F5 BAR SIZE	F5 SPACING	F5 NO. REQ'D	F5 LENGTHS	F6 BAR SIZE	F6 SPACING	F6 NO. REQ'D	F6 LENGTHS VARY			F7 BAR SIZE	F7 NO. REQ'D	F7 LENGTHS	F8 BAR SIZE	F8 SPACING	F8 NO. REQ'D	F8 LENGTHS VARY			F9 BAR SIZE	F9 SPACING	F9 NO. REQ'D	F9 LENGTHS			F10 BAR SIZE	F10 NO. REQ'D	F10 LENGTHS	F11 BAR SIZE	F11 NO. REQ'D	F11 LENGTHS	F12 BAR SIZE	F12 SPACING	F12 NO. REQ'D	F12 LENGTHS			REINF. STEEL QTY. PER WING (LBS)
WING A	4	18	2	8'-2"	4	18	6	L	Min	2'-9"	4	6	11'-3"	6	18	6	Min		1'-8"	-	-	-	Min		-	4	2	8'-6"	4	2	9'-4"	6	12	3	L	3'-4"		186
									Max	5'-3"							Max		-				Max		-											X	1'-8"	
								X	Min	1'-4"							Min		1'-8"																		
									Max	1'-4"							Max		-																		
								Y	Min	1'-6"																												
									Max	4'-0"																												
WING B	4	18	2	16'-8"	4	18	12	L	Min	2'-7"	4	6	19'-9"	6	18	11	Min		1'-8"	-	-	-	Min		-	4	2	16'-9"	4	2	18'-10"	6	12	3	L	3'-4"		309
									Max	5'-3"							Max		-				Max		-											X	1'-8"	
								X	Min	1'-4"							Min		1'-8"																		
									Max	1'-4"							Max		-																		
								Y	Min	1'-4"																												
									Max	4'-0"																												

Min. Bar Lap Length	
#4	1'-9"
#5	2'-2"
#6	2'-7"
#7	3'-6"
#8	4'-7"

Bar Pin Dia. Table	
#4	3"
#5	3 3/4"
#6	4 1/2"
#7	5 1/4"
#8	6"

MID-SECTION

BAR LAP TABLE

# of Long. Laps Req'd.	SL = Section Length
0	< 40.0 ft
1	>40.0 ft - 78.0 ft
2	>78.0 ft - 116.0 ft
3	>116.0 ft - 154.0 ft
4	>154.0 ft - 192.0 ft
5	>192.0 ft - 230.0 ft
6	>230.0 ft - 268.0 ft
7	>268.0 ft - 306.0 ft
8	>306.0 ft -344.0 ft



DIGITALLY SIGNED 7/28/2023

TABULAR DATA BY: VD DATE: 4/05/2023
CHECKED BY: AEW DATE: 4/06/2023

This drawing to be used in conjunction with
SHEET 1 OF 4, "GENERAL DETAILS OF R.C. BOX CULVERT", 'GENERAL NOTES & LONGITUDINAL SECTION LENGTH SCHEDULE',
SHEET 3 OF 4, "GENERAL DETAILS OF R.C. BOX CULVERT", 'DETAILS OF MULTI-BARREL R.C. BOX CULVERT',
SHEET 4 OF 4, "GENERAL DETAILS OF R.C. BOX CULVERT", 'DETAILS OF WINGWALLS', and
STANDARD DRAWING RCB-2.
For additional information and outlet sections, see Sheet 2 of 2.

INLET SKEWED END SECTION

SKEW (DEGREE)	SLOPE	DESIGN FILL DEPTH (FT.)	CLEAR SPAN (FT.)	CLEAR HEIGHT (FT.)	SECTION LENGTH	TOP SLAB THK.	HDWL DEPTH	BOTTOM SLAB THK.	SIDE WALL THK.	INTERIOR WALL THK.	OVER ALL WIDTH	OVER ALL HEIGHT
SK	SL	D	S	H	LL	T	HD	B	C	W	OW	OH
30	3:1	2	6	3	13'-8"	10	3	10	6	8	40'-4"	4'-8"

TOP SLAB REINFORCING STEEL "a" SIZE	"a" SPACING	"a" LENGTHS VARY	"a" NO. REQ'D	"c" SIZE	"c" SPACING	"c" LENGTHS VARY	"c" NO. REQ'D
4	5.5	Max 40'-0"	47	7	7	Max 40'-0"	37
		Min 3'-0"				Min 3'-0"	
		40'-0"	5			40'-0"	4

BOTTOM SLAB REINFORCING STEEL "d" SIZE	"d" SPACING	"d" LENGTHS VARY	"d" NO. REQ'D	"f" SIZE	"f" SPACING	"f" LENGTHS VARY	"f" NO. REQ'D
4	12	Max 40'-0"	22	4	12	Max 40'-0"	22
		Min 3'-0"				Min 3'-0"	
		40'-0"	2			40'-0"	2

SIDE WALL REINFORCING STEEL "f0" SIZE	"f0" SPACING	"f0" NO. REQ'D	"f0" LENGTH
4	9	37	4'-4"

INTERIOR WALL REINFORCING STEEL "f1" SIZE	"f1" SPACING	"f1" NO. REQ'D	"f1" LENGTH
4	12	150	4'-4"

TOP SLAB DISTRIBUTION REINFORCING STEEL "g" SIZE	"g" SPACING	"g" NO. REQ'D	"g" LENGTHS VARY
4	11	95	Max 25'-1"
			Min 1'-10"

BOTTOM SLAB DISTRIBUTION REINFORCING STEEL "e" SIZE	"e" SPACING	"e" NO. REQ'D	"e" LENGTHS VARY
4	11	95	Max 25'-1"
			Min 1'-10"

SIDE WALL DISTRIBUTION REINFORCING STEEL "d1" SIZE	"d1" SPACING	"d1" NO. REQ'D	"d1" LENGTH
4	12	3	LONG 24'-11"
		3	SHORT 2'-0"

INTERIOR WALL DISTRIBUTION REINFORCING STEEL "d2" SIZE	"d2" SPACING	"d2" NO. REQ'D	"d2" LENGTHS VARY
4	12	6	LONG 21'-3"
		18	MID 17'-4"
		6	SHORT 5'-9"

CLASS "S" CONCRETE (Includes HDWL)	① REINFORCING STEEL (GR 60) (Includes HDWL)
CU. YDS.	LBS.
41.47	6561

① Any Bar Lap Required for the Skewed End Section shall be considered subsidiary to the item "Reinforcing Steel - Roadway (Grade 60)."

"k1" HDWL BARS SIZE	"k1" HDWL BARS LENGTH	"k1" HDWL BARS NO. REQ'D	"k2" HDWL BARS SIZE	"k2" HDWL BARS LENGTH	"k2" HDWL BARS NO. REQ'D	"h" HDWL BARS SIZE	"h" HDWL BARS LENGTH	"h" HDWL BARS Y	"h" HDWL BARS NO. REQ'D
4	24'-0"	12	4	24'-0"	12	4	1'-9"	0'-9"	48

INLET SLOPE SECTION(S)

R.C. BOX SECTION	DESIGN FILL DEPTH (FT.)	CLEAR SPAN (FT.)	CLEAR HEIGHT (FT.)	TOP SLAB THK.	BOTTOM SLAB THK	SIDE WALL THK	INTERIOR WALL THK.	OVER ALL WIDTH	OVER ALL HEIGHT	SECTION LENGTH (FT.)
	D	S	H	T	B	C	W	OW	OH	SL

TOP SLAB REINFORCING STEEL LENGTH = OW - 4" + BENDS "a" SIZE	"a" L	Bent "b" SIZE	Bent "b" L	"c" SIZE	"c" L	"c" SPACING	"c" NO. REQ'D

BOTTOM SLAB REINFORCING STEEL LENGTH = OW - 4" + BENDS "d" SIZE	"d" L	Bent "b1" SIZE	Bent "b1" L	"f" SIZE	"f" L	"f" SPACING	"f" NO. REQ'D

SIDE WALL REINFORCING STEEL "f0" LENGTH = OH - 4" SIZE	"f0" SPACING	"f0" NO. REQ'D	"f0" LENGTH

INTERIOR WALL REINFORCING STEEL "f1" LENGTH = OH - 4" SIZE	"f1" SPACING	"f1" NO. REQ'D	"f1" LENGTH

TOP SLAB DISTRIBUTION REINF. STEEL "g" LENGTH = SL SIZE	"g" SPACING	"g" NO. REQ'D

BOTTOM SLAB DISTRIBUTION REINF. STEEL "e" LENGTH = SL SIZE	"e" SPACING	"e" NO. REQ'D

SIDE WALL DISTRIBUTION REINF. STEEL "d1" LENGTH = SL SIZE	"d1" SPACING	"d1" NO. REQ'D

INTERIOR WALL DISTRIBUTION REINF. STEEL "d2" LENGTH = SL SIZE	"d2" SPACING	"d2" NO. REQ'D

HDWL DEPTH HD	ADDITIONAL REINF. FOR HDWL LBS.	"h" HDWL BARS SIZE	"h" HDWL BARS Y	"h" HDWL BARS LENGTH	"h" HDWL BARS NO. REQ'D

CLASS "S" CONCRETE CU. YDS.	REINFORCING STEEL (GR. 60) LBS.
TOTAL	

Design Fill Depth	Range of Actual Fill Depth
2	0.0 ft - 2.0 ft
5	>2.0 ft - 5.0 ft
10	>5.0 ft - 10.0 ft
15	>10.0 ft - 15.0 ft
20	>15.0 ft - 20.0 ft
25	>20.0 ft - 25.0 ft
30	>25.0 ft - 30.0 ft
35	>30.0 ft - 35.0 ft
40	>35.0 ft - 40.0 ft

Data shown for Mid-Section, Slope Section(s), and Skewed End Section is based on the design fill depth shown in the table, see PLAN AND PROFILE SHEETS for actual fill depth.

MID-SECTION

R.C. BOX SECTION	DESIGN FILL DEPTH (FT.)	CLEAR SPAN (FT.)	CLEAR HEIGHT (FT.)	TOP SLAB THK.	BOTTOM SLAB THK	SIDE WALL THK.	INTERIOR WALL THK.	OVER ALL WIDTH	OVER ALL HEIGHT	SECTION LENGTH (FT.)
	D	S	H	T	B	C	W	OW	OH	SL
A	2	6	3	10	10	6	8	40'-4"	4'-8"	18.68

TOP SLAB REINFORCING STEEL LENGTH = OW - 4" + BENDS "a" SIZE	"a" L	Bent "b" SIZE	Bent "b" L	"c" SIZE	"c" L	"c" SPACING	"c" NO. REQ'D
4	40'-0"	8	41'-3"	8	40'-0"	18	12

BOTTOM SLAB REINFORCING STEEL LENGTH = OW - 4" + BENDS "d" SIZE	"d" L	Bent "b1" SIZE	Bent "b1" L	"f" SIZE	"f" L	"f" SPACING	"f" NO. REQ'D
4	40'-0"	4	41'-1"	4	40'-0"	24	9

SIDE WALL REINFORCING STEEL "f0" LENGTH = OH - 4" SIZE	"f0" SPACING	"f0" NO. REQ'D	"f0" LENGTH
4	9	48	4'-4"

INTERIOR WALL REINFORCING STEEL "f1" LENGTH = OH - 4" SIZE	"f1" SPACING	"f1" NO. REQ'D	"f1" LENGTH
4	12	180	4'-4"

TOP SLAB DISTRIBUTION REINF. STEEL "g" LENGTH = SL SIZE	"g" SPACING	"g" NO. REQ'D
4	11	95

BOTTOM SLAB DISTRIBUTION REINF. STEEL "e" LENGTH = SL SIZE	"e" SPACING	"e" NO. REQ'D
4	11	95

SIDE WALL DISTRIBUTION REINF. STEEL "d1" LENGTH = SL SIZE	"d1" SPACING	"d1" NO. REQ'D
4	12	6

INTERIOR WALL DISTRIBUTION REINF. STEEL "d2" LENGTH = SL SIZE	"d2" SPACING	"d2" NO. REQ'D
4	12	30

CLASS "S" CONCRETE CU. YDS.	REINFORCING STEEL (GR. 60) LBS.
55.50	7647

SHEET 1 OF 2
DETAILS OF R.C. BOX CULVERT
SEXTUPLE BARREL BOX CULVERT
JAVELLO RD. STA. 18+38

SPECIAL DETAILS

HBVinson 7/27/2023 1:39:21 PM
WORKSPACE: AHTD
L:\2017\170176\60 - ARDOT 012326 Hwy 412 - Hwy 112\Drawings\r012326_SD_LRFD_03.dgn
REVISED DATE:
V 1.1.17

DATE REVISED	DATE REVISED	FED. RD. DIST. NO.	STATE	JOB NO.	SHEET NO.	TOTAL SHEETS
		6	ARK.	012326	56	838
①		SPECIAL DETAILS				

STATE OF ARKANSAS
LICENSED PROFESSIONAL ENGINEER
No.13436
SHAUNA A. ROBERSON
DIGITALLY SIGNED 7/28/2023

TABULAR DATA BY: VD DATE: 4/05/2023
CHECKED BY: AEW DATE: 4/06/2023

OUTLET WINGWALL TABLE

OVER ALL WIDTH	CLEAR HEIGHT	FOOTING THK.	WING WALL THK.	BOX SKEW (DEG.)	SLOPE	HDWL LENGTH	HEEL	WALL HEIGHT AT HDWL	WALL HEIGHT AT WING END	WINGWALL ANGLE (DEGREE) WING A	WINGWALL ANGLE (DEGREE) WING B	FOOTING WIDTH AT WALL END	WIDTH OF WING FOOTINGS AT HDWL WING A	WIDTH OF WING FOOTINGS AT HDWL WING B	FOOTING DIMENSION PARALLEL WITH HDWL WING A	FOOTING DIMENSION PARALLEL WITH HDWL WING B	LENGTH OF WINGWALLS WING A	LENGTH OF WINGWALLS WING B	LENGTH OF FOOTING HEEL WING A	LENGTH OF FOOTING HEEL WING B
OW	H	WB	CW	SK	SL	K	HL	WH1	WH2	AF1	AF2	WE	WF1	WF2	G1	G2	W1	W2	W3	W4
40'-4"	3'-0"	0'-9"	0'-8"	30	3:1	45'-5"	1'-0"	3'-10"	1'-0"	0	60	2'-2"	2'-2"	2'-3"	0'-6"	-0'--6 -7/8"	8'-6"	17'-0"	10'-4 5/8"	18'-10 5/8"

CLASS "S" CONCRETE (Includes apron)	REINFORCING STEEL (Includes apron and laps if required)
OUTLET	OUTLET
CU.YD	LBS.
7.92	495

WING	F1 BAR SIZE	F1 MAX. SPACING	F1 NO. REQ'D	F1 LENGTHS VARY		F1 LENGTHS	F2 BAR SIZE	F2 SPACING	F2 NO. REQ'D	F2 LENGTHS	F3 BAR SIZE	F3 SPACING	F3 NO. REQ'D	F3 LENGTHS	F4 BAR SIZE	F4 SPACING	F4 NO. REQ'D	F4 LENGTHS VARY	F5 BAR SIZE	F5 SPACING	F5 NO. REQ'D	F5 LENGTHS
WING A	4	12	9	L	Min	2'-0"				L -				L -	4	18	2	Min	4	18	2	8'-2"
					Max	4'-8"												4'-10"				
				X	Min	0'-9"	-	-	-	X -	-	-	-	X -				Max				
					Max	0'-9"												4'-10"				
				Y	Min	1'-4"				Y -				Y -								
					Max	4'-0"																
WING B	4	12	17	L	Min	2'-0"				L -				L -	4	18	2	Min	4	18	2	16'-8"
					Max	4'-9"												9'-10"				
				X	Min	0'-9"	-	-	-	X -	-	-	-	X -				Max				
					Max	0'-10"												9'-10"				
				Y	Min	1'-4"				Y -				Y -								
					Max	4'-0"																

WING	F6 BAR SIZE	F6 SPACING	F6 NO. REQ'D	F6 LENGTHS VARY		F6 LENGTHS	F7 BAR SIZE	F7 NO. REQ'D	F7 LENGTHS	F8 BAR SIZE	F8 SPACING	F8 NO. REQ'D	F8 LENGTHS VARY	F9 BAR SIZE	F9 SPACING	F9 NO. REQ'D	F9 LENGTHS	F10 BAR SIZE	F10 NO. REQ'D	F10 LENGTHS	F11 BAR SIZE	F11 NO. REQ'D	F11 LENGTHS	F12 BAR SIZE	F12 SPACING	F12 NO. REQ'D	F12 LENGTHS		REINF. STEEL QTY. PER WING (LBS)
WING A	4	18	6	L	Min	2'-9"	4	6	11'-3"	6	18	6	Min	-	-	-	Min	4	2	8'-6"	4	2	9'-4"	6	12	3	L	3'-4"	186
					Max	5'-3"							1'-8"				-												
				X	Min	1'-4"							Max				Max										X	1'-8"	
					Max	4'-10"							1'-8"				-												
				Y	Min	1'-6"																							
					Max	4'-0"																							
WING B	4	18	12	L	Min	2'-7"	4	6	19'-9"	6	18	11	Min	-	-	-	Min	4	2	16'-9"	4	2	18'-10"	6	12	3	L	3'-4"	309
					Max	5'-3"							1'-8"				-												
				X	Min	1'-4"							Max				Max										X	1'-8"	
					Max	4'-0"							1'-9"				-												
				Y	Min	1'-4"																							
					Max	4'-0"																							

Min. Bar Lap Length	
#4	1'-9"
#5	2'-2"
#6	2'-7"
#7	3'-6"
#8	4'-7"

Bar Pin Dia. Table	
#4	3"
#5	3 3/4"
#6	4 1/2"
#7	5 1/4"
#8	6"

① Any Bar Lap Required for the Skewed End Section shall be considered subsidiary to the item "Reinforcing Steel - Roadway (Grade 60)."

OUTLET SKEWED END SECTION

SKEW (DEGREE)	SLOPE	DESIGN FILL DEPTH (FT.)	CLEAR SPAN (FT.)	CLEAR HEIGHT (FT.)	SECTION LENGTH	TOP SLAB THK.	HDWL DEPTH	BOTTOM SLAB THK.	SIDE WALL THK.	INTERIOR WALL THK.	OVER ALL WIDTH	OVER ALL HEIGHT	TOP SLAB REINFORCING STEEL "a" SIZE	"a" SPACING	"a" LENGTHS VARY	"a" NO. REQ'D	"c" SIZE	"c" SPACING	"c" LENGTHS VARY	"c" NO. REQ'D	BOTTOM SLAB REINFORCING STEEL "d" SIZE	"d" SPACING	"d" LENGTHS VARY	"d" NO. REQ'D	"f" SIZE	"f" SPACING	"f" LENGTHS VARY	"f" NO. REQ'D
SK	SL	D	S	H	LL	T	HD	B	C	W	OW	OH																
30	3:1	2	6	3	13'-8"	10	3	10	6	8	40'-4"	4'-8"	4	5.5	Max		7	7	Max		4	12	Max		4	12	Max	
															40'-0"	47			40'-0"	37			40'-0"	22			40'-0"	22
															Min				Min				Min				Min	
															3'-0"				3'-0"				3'-0"				3'-0"	
															40'-0"	5			40'-0"	4			40'-0"	2			40'-0"	2

SIDE WALL REINFORCING STEEL "f0" SIZE	"f0" SPACING	"f0" NO. REQ'D	"f0" LENGTH	INTERIOR WALL REINFORCING STEEL "f1" SIZE	"f1" SPACING	"f1" NO. REQ'D	"f1" LENGTH	TOP SLAB DISTRIBUTION REINFORCING STEEL "g" SIZE	"g" SPACING	"g" NO. REQ'D	"g" LENGTHS VARY	BOTTOM SLAB DISTRIBUTION REINFORCING STEEL "e" SIZE	"e" SPACING	"e" NO. REQ'D	"e" LENGTHS VARY	SIDE WALL DISTRIBUTION REINFORCING STEEL "d1" SIZE	"d1" SPACING	"d1" NO. REQ'D	"d1" LENGTH	INTERIOR WALL DISTRIBUTION REINFORCING STEEL "d2" SIZE	"d2" SPACING	"d2" NO. REQ'D	"d2" LENGTHS VARY
											Max				Max								Max
											25'-1"				25'-1"			3	LONG			6	LONG
											Min				Min				24'-11"				21'-3"
											1'-10"				1'-10"								
4	9	37	4'-4"	4	12	150	4'-4"	4	11	95		4	11	95		4	12	3	SHORT	4	12	18	MID
																			2'-0"				17'-4"
																						6	SHORT
																							5'-9"

CLASS "S" CONCRETE (Includes HDWL) CU. YDS.	① REINFORCING STEEL (GR 60) (Includes HDWL) LBS.
41.47	6561

"k1" HDWL BARS SIZE	LENGTH	NO. REQ'D
4	24'-0"	12

"k2" HDWL BARS SIZE	LENGTH	NO. REQ'D
4	24'-0"	12

"h" HDWL BARS SIZE	LENGTH	Y	NO. REQ'D
4	1'-9"	0'-9"	48

OUTLET SLOPE SECTION(S)

R.C. BOX SECTION	DESIGN FILL DEPTH (FT.) D	CLEAR SPAN (FT.) S	CLEAR HEIGHT (FT.) H	TOP SLAB THK. T	BOTTOM SLAB THK B	SIDE WALL THK C	INTERIOR WALL THK. W	OVER ALL WIDTH OW	OVER ALL HEIGHT OH	SECTION LENGTH (FT.) SL	TOP SLAB REINFORCING STEEL LENGTH = OW - 4" + BENDS "a" SIZE	"a" L	Bent "b" SIZE	Bent "b" L	"c" SIZE	"c" L	"c" SPACING	"c" NO. REQ'D	BOTTOM SLAB REINFORCING STEEL LENGTH = OW - 4" + BENDS "d" SIZE	"d" L	Bent "b1" SIZE	Bent "b1" L	"f" SIZE	"f" L	"f" SPACING	"f" NO. REQ'D

SIDE WALL REINFORCING STEEL "f0" LENGTH = OH - 4" SIZE	SPACING	NO. REQ'D	LENGTH	INTERIOR WALL REINFORCING STEEL "f1" LENGTH = OH - 4" SIZE	SPACING	NO. REQ'D	LENGTH	TOP SLAB DISTRIBUTION REINF. STEEL "g" LENGTH = SL SIZE	SPACING	NO. REQ'D	BOTTOM SLAB DISTRIBUTION REINF. STEEL "e" LENGTH = SL SIZE	SPACING	NO. REQ'D	SIDE WALL DISTRIBUTION REINF. STEEL "d1" LENGTH = SL SIZE	SPACING	NO. REQ'D	INTERIOR WALL DISTRIBUTION REINF. STEEL "d2" LENGTH = SL SIZE	SPACING	NO. REQ'D

HDWL DEPTH HD	ADDITIONAL REINF. FOR HDWL LBS.	"h" HDWL BARS SIZE	Y	LENGTH	NO. REQ'D

CLASS "S" CONCRETE CU. YDS.	REINFORCING STEEL (GR 60) LBS.
TOTAL	

The required number of bars and lengths shown are for estimating purpose only.
The actual number and length required shall be determined in field.

Unless otherwise noted, all dimensions are in inches.

SHEET 2 OF 2
DETAILS OF R.C. BOX CULVERT
SEXTUPLE BARREL BOX CULVERT
JAVELLO RD. STA. 18+38

SPECIAL DETAILS

LRFD

HBVinson 7/27/2023 1:39:38 PM
WORKSPACE: AHTD
L:\20IT\170I7660 - ARDOT 012326 Hwy 412 - Hwy 112\Drawings\r012326_SD_LRFD_03.dgn
REVISED DATE:
V 1.17

DATE REVISED	DATE REVISED	FED. RD. DIST. NO.	STATE	JOB NO.	SHEET NO.	TOTAL SHEETS
		6	ARK.	012326	57	838
		TEMPORARY EROSION CONTROL DETAILS				

2

STATE OF ARKANSAS
LICENSED PROFESSIONAL ENGINEER
No. 13436
SHAUN A. ROBERSON

DIGITALLY SIGNED 7/28/2023

MEDIAN

SILT FENCE	E-11	LIN. FT.
STA. 144+65 TO 150+00	LT.	655
DROP INLET SILT FENCE	E-7	LIN. FT.
STA. 146+65	MEDIAN	20

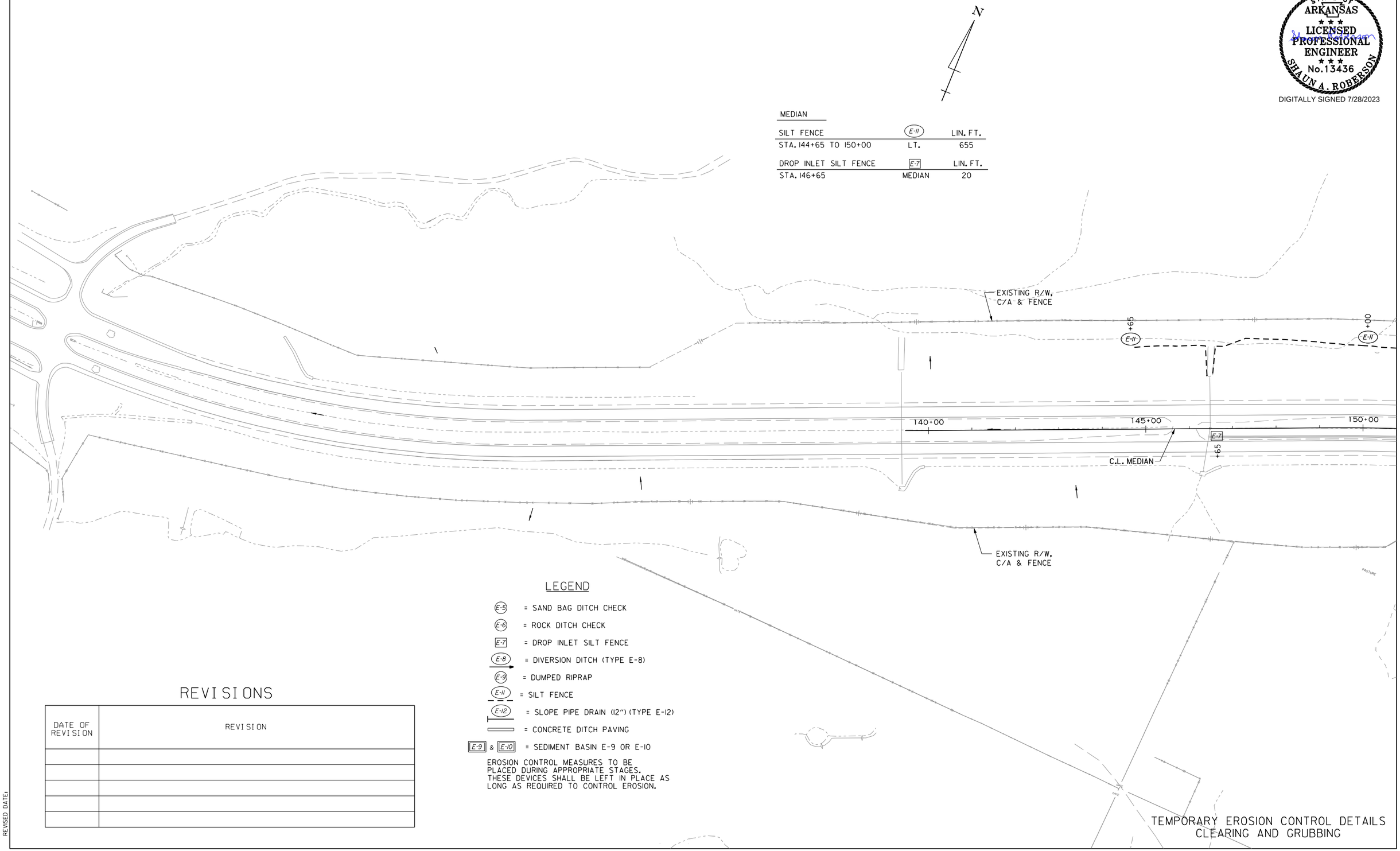

LEGEND

- E-5 = SAND BAG DITCH CHECK
- E-6 = ROCK DITCH CHECK
- E-7 = DROP INLET SILT FENCE
- E-8 = DIVERSION DITCH (TYPE E-8)
- E-9 = DUMPED RIPRAP
- E-11 = SILT FENCE
- E-12 = SLOPE PIPE DRAIN (12") (TYPE E-12)
- = CONCRETE DITCH PAVING
- E-9 & E-10 = SEDIMENT BASIN E-9 OR E-10

EROSION CONTROL MEASURES TO BE PLACED DURING APPROPRIATE STAGES. THESE DEVICES SHALL BE LEFT IN PLACE AS LONG AS REQUIRED TO CONTROL EROSION.

REVISIONS

DATE OF REVISION	REVISION

TEMPORARY EROSION CONTROL DETAILS
CLEARING AND GRUBBING

HBVinson 7/27/2023 1:40:11 PM
WORKSPACE: AHTD
L:\2017\17017660 - ARDOT 012326 Hwy 412 - Hwy 112\Drawings\r012326_EC_CG_01.dgn
REVISED DATE:

DATE REVISED	DATE REVISED	FED. RD. DIST. NO.	STATE	JOB NO.	SHEET NO.	TOTAL SHEETS
		6	ARK.	012326	58	838
		TEMPORARY EROSION CONTROL DETAILS				

2

STATE OF ARKANSAS
LICENSED PROFESSIONAL ENGINEER
No. 13436
SHAUN A. ROBERSON

DIGITALLY SIGNED 7/28/2023

LEGEND

- E-5 = SAND BAG DITCH CHECK
- E-6 = ROCK DITCH CHECK
- E-7 = DROP INLET SILT FENCE
- E-8 = DIVERSION DITCH (TYPE E-8)
- E-9 = DUMPED RIPRAP
- E-11 = SILT FENCE
- E-12 = SLOPE PIPE DRAIN (12") (TYPE E-12)
- = CONCRETE DITCH PAVING
- E-9 & E-10 = SEDIMENT BASIN E-9 OR E-10

EROSION CONTROL MEASURES TO BE PLACED DURING APPROPRIATE STAGES. THESE DEVICES SHALL BE LEFT IN PLACE AS LONG AS REQUIRED TO CONTROL EROSION.

MEDIAN

SILT FENCE	E-11	LIN. FT.
STA. 150+00 TO 153+95	LT.	415
STA. 156+85 TO 160+95	RT.	480
STA. 158+90 TO 160+55	LT.	190
STA. 165+80 TO 167+30	RT.	190
STA. 167+65 TO 171+20	RT.	370
STA. 169+35 TO 170+60	LT.	145

SAND BAG DITCH CHECK	E-5	INSTALLATION
STA. 154+75 TO 179+60	MEDIAN	19

ROCK DITCH CHECK	E-6	INSTALLATION
STA. 157+85 TO 180+55	MEDIAN	19

DROP INLET SILT FENCE	E-7	LIN. FT.
STA. 157+50	MEDIAN	20

HWY. 412B RAMP 4

SILT FENCE	E-11	LIN. FT.
STA. 170+80 TO 173+45	LT.	255

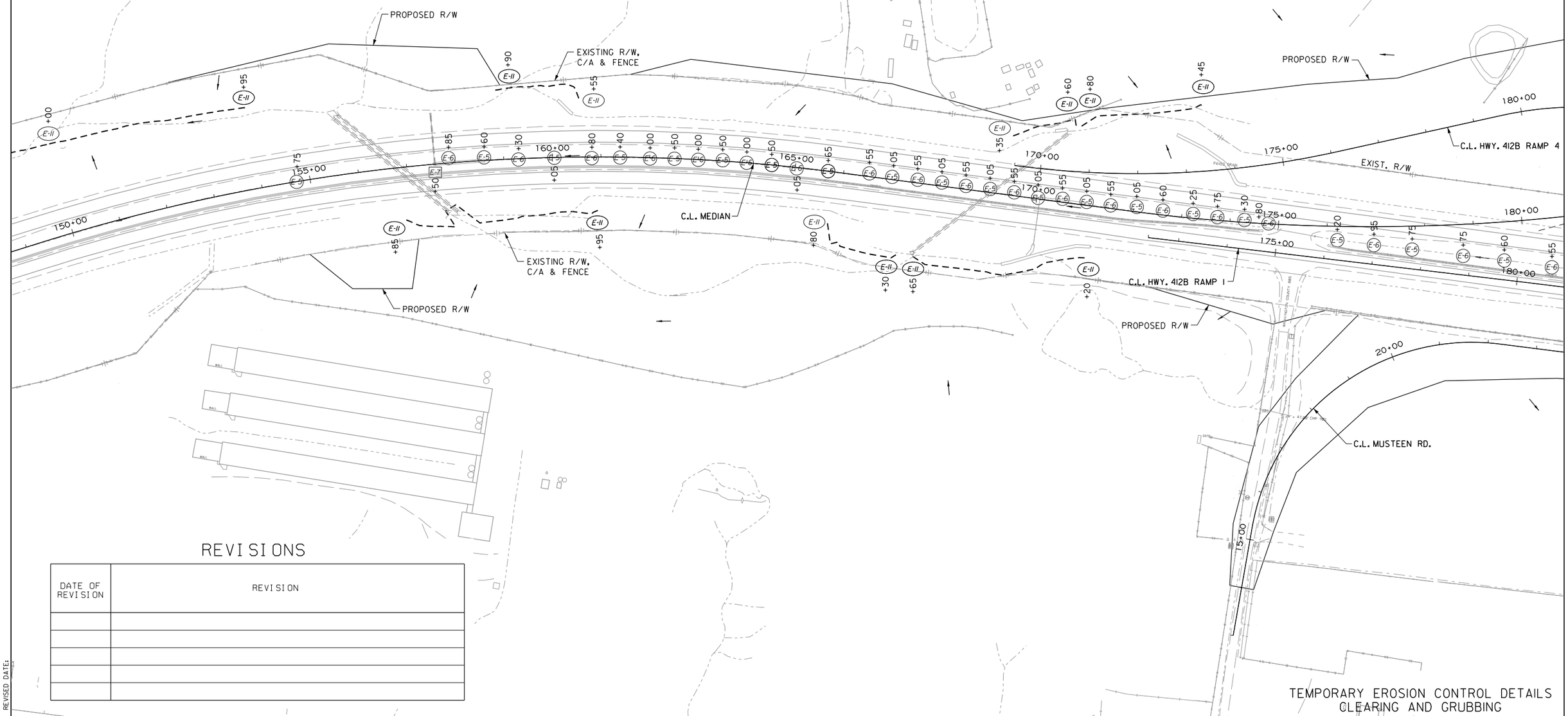

REVISIONS

DATE OF REVISION	REVISION

TEMPORARY EROSION CONTROL DETAILS
CLEARING AND GRUBBING

HBVinson 7/27/2023 1:40:12 PM
WORKSPACE: AHTD
L:\2017\17017660 - ARDOT 012326 Hwy 412 - Hwy 112\Drawings\r012326_EC_CG_02.dgn
REVISED DATE:

DATE REVISED	DATE REVISED	FED. RD. DIST. NO.	STATE	JOB NO.	SHEET NO.	TOTAL SHEETS
		6	ARK.	012326	59	838
		TEMPORARY EROSION CONTROL DETAILS				
2						

STATE OF ARKANSAS
LICENSED PROFESSIONAL ENGINEER
No. 13436
SHAUN A. ROBERSON
DIGITALLY SIGNED 7/28/2023

MEDIAN

SILT FENCE	E-11	LIN. FT.
STA. 185+55 TO 186+70	LT.	125
STA. 186+75 TO 191+65	LT.	485

SAND BAG DITCH CHECK	E-5	INSTALLATION
STA. 182+05	RT.	1

ROCK DITCH CHECK	E-6	INSTALLATION
STA. 180+55	RT.	1

HWY. 412B RAMP 3

SILT FENCE	E-11	LIN. FT.
STA. 202+00 TO 210+60	LT.	845

HWY. 412B RAMP 2

SILT FENCE	E-11	LIN. FT.
STA. 196+80 TO 201+45	RT.	490
STA. 201+70 TO 209+00	RT.	730

SEDIMENT BASIN	E-9	CU. YD.
STA. 202+15	RT.	1387

MUSTEEN RD.

SILT FENCE	E-11	LIN. FT.
STA. 26+10 TO 28+75	RT.	280
STA. 29+00 TO 33+90	RT.	400
STA. 33+05 TO 37+45	RT.	495

EXIST. R/W
C.L. MEDIAN
C.L. HWY. 412B RAMP 4
C.L. HWY. 412B RAMP 1
C.L. HWY. 412B RAMP 2
C.L. HWY. 412B RAMP 3
C.L. HWY. 68
C.L. MUSTEEN RD.
PROPOSED R/W, C/A & FENCE
PERMANENT CONSTRUCTION EASEMENT
EXISTING R/W, C/A & FENCE
T.C.E.

LEGEND

- E-5 = SAND BAG DITCH CHECK
- E-6 = ROCK DITCH CHECK
- E-7 = DROP INLET SILT FENCE
- E-8 = DIVERSION DITCH (TYPE E-8)
- E-9 = DUMPED RIPRAP
- E-11 = SILT FENCE
- E-12 = SLOPE PIPE DRAIN (12") (TYPE E-12)
- = CONCRETE DITCH PAVING
- E-9 & E-10 = SEDIMENT BASIN E-9 OR E-10

EROSION CONTROL MEASURES TO BE PLACED DURING APPROPRIATE STAGES. THESE DEVICES SHALL BE LEFT IN PLACE AS LONG AS REQUIRED TO CONTROL EROSION.

REVISIONS

DATE OF REVISION	REVISION

TEMPORARY EROSION CONTROL DETAILS
CLEARING AND GRUBBING

HBVinson
WORKSPACE: AHTD
L:\20IT\1701660 - ARDOT 012326 Hwy 412 - Hwy 112\Drawings\r012326_EC_CG_03.dgn
7/27/2023 1:40:14 PM
REVISED DATE:

DATE REVISED	DATE REVISED	FED. RD. DIST. NO.	STATE	JOB NO.	SHEET NO.	TOTAL SHEETS
		6	ARK.	012326	60	838
2		TEMPORARY EROSION CONTROL DETAILS				

LIBERTY AVE.

SILT FENCE	E-11	LIN. FT.
STA. 13+70 TO 25+50	RT.	1200
STA. 16+45 TO 18+70	LT.	235
STA. 21+55 TO 24+75	LT.	320

STATE OF ARKANSAS
LICENSED PROFESSIONAL ENGINEER
No. 13436
SHAUNA. ROBERSON
DIGITALLY SIGNED 7/28/2023

N

T.C.E.

C.L. LIBERTY AVE.

PROPOSED R/W

PROPOSED R/W, C/A & FENCE

C.L. MEDIAN

EXIST. R/W

PROPOSED R/W

PROPOSED R/W, C/A & FENCE

+70 E-11 | 15+00 | +45 E-11 | +70 E-11 | +60 E-11 | 210+00 | 210+00 | 215+00 | 220+00 | 225+00 | 230+00 | 235+00 | 240+00 | +60 E-11 | 25+00 | +75 E-11 | +50 E-11 | 145'

REVISIONS

DATE OF REVISION	REVISION

LEGEND

- E-5 = SAND BAG DITCH CHECK
- E-6 = ROCK DITCH CHECK
- E-7 = DROP INLET SILT FENCE
- E-8 = DIVERSION DITCH (TYPE E-8)
- E-9 = DUMPED RIPRAP
- E-11 = SILT FENCE
- E-12 = SLOPE PIPE DRAIN (12") (TYPE E-12)
- = CONCRETE DITCH PAVING
- E-9 & E-10 = SEDIMENT BASIN E-9 OR E-10

EROSION CONTROL MEASURES TO BE PLACED DURING APPROPRIATE STAGES. THESE DEVICES SHALL BE LEFT IN PLACE AS LONG AS REQUIRED TO CONTROL EROSION.

TEMPORARY EROSION CONTROL DETAILS
CLEARING AND GRUBBING

HBVinson
WORKSPACE: AHTD
L:\20\T\1701660 - ARDOT 012326 Hwy 412 - Hwy 112\Drawings\r012326_EC_CG_04.dgn
7/27/2023 1:40:15 PM
REVISED DATE:

DATE REVISED	DATE REVISED	FED. RD. DIST. NO.	STATE	JOB NO.	SHEET NO.	TOTAL SHEETS
		6	ARK.	012326	61	838
		TEMPORARY EROSION CONTROL DETAILS				
2						

MEDIAN

SILT FENCE	E-11	LIN. FT.
STA. 243+00 TO 243+85	RT.	120
STA. 244+40 TO 244+75	LT.	45
STA. 244+95 TO 245+45	LT.	225
STA. 254+10 TO 254+40	LT.	60
STA. 254+85 TO 256+85	LT.	315
STA. 256+20 TO 257+50	RT.	205
STA. 267+25 TO 269+05	RT.	225
STA. 269+30 TO 270+10	LT.	155

SEDIMENT BASIN	E-9	CU. YD.
STA. 254+60	LT.	1387
STA. 269+30	LT.	1507

SEDIMENT BASIN	E-10	CU. YD.
STA. 244+80	LT.	4053

STATE OF ARKANSAS
LICENSED PROFESSIONAL ENGINEER
No.13436
SHAUN A. ROBERSON

DIGITALLY SIGNED 7/28/2023

N

PROPOSED R/W, C/A & FENCE

C.L. MEDIAN

245+00 250+00 255+00 260+00 265+00 270+00 240+00

T.C.E.

POND

OPEN STORAGE

REVISIONS

DATE OF REVISION	REVISION

LEGEND

- E-5 = SAND BAG DITCH CHECK
- E-6 = ROCK DITCH CHECK
- E-7 = DROP INLET SILT FENCE
- E-8 = DIVERSION DITCH (TYPE E-8)
- E-9 = DUMPED RIPRAP
- E-11 = SILT FENCE
- E-12 = SLOPE PIPE DRAIN (12") (TYPE E-12)
- = CONCRETE DITCH PAVING
- E-9 & E-10 = SEDIMENT BASIN E-9 OR E-10

EROSION CONTROL MEASURES TO BE PLACED DURING APPROPRIATE STAGES. THESE DEVICES SHALL BE LEFT IN PLACE AS LONG AS REQUIRED TO CONTROL EROSION.

TEMPORARY EROSION CONTROL DETAILS
CLEARING AND GRUBBING

HBVinson
WORKSPACE: AHTD
L:\201\1701660 - ARDOT 012326 Hwy 412 - Hwy 112\Drawings\r012326_EC_C6_05.dgn
7/27/2023 1:40:16 PM
REVISED DATE:

DATE REVISED	DATE REVISED	FED. RD. DIST. NO.	STATE	JOB NO.	SHEET NO.	TOTAL SHEETS
		6	ARK.	012326	62	838
		TEMPORARY EROSION CONTROL DETAILS				

STATE OF ARKANSAS
LICENSED PROFESSIONAL ENGINEER
No.13436
SHAUN A. ROBERSON
DIGITALLY SIGNED 7/28/2023

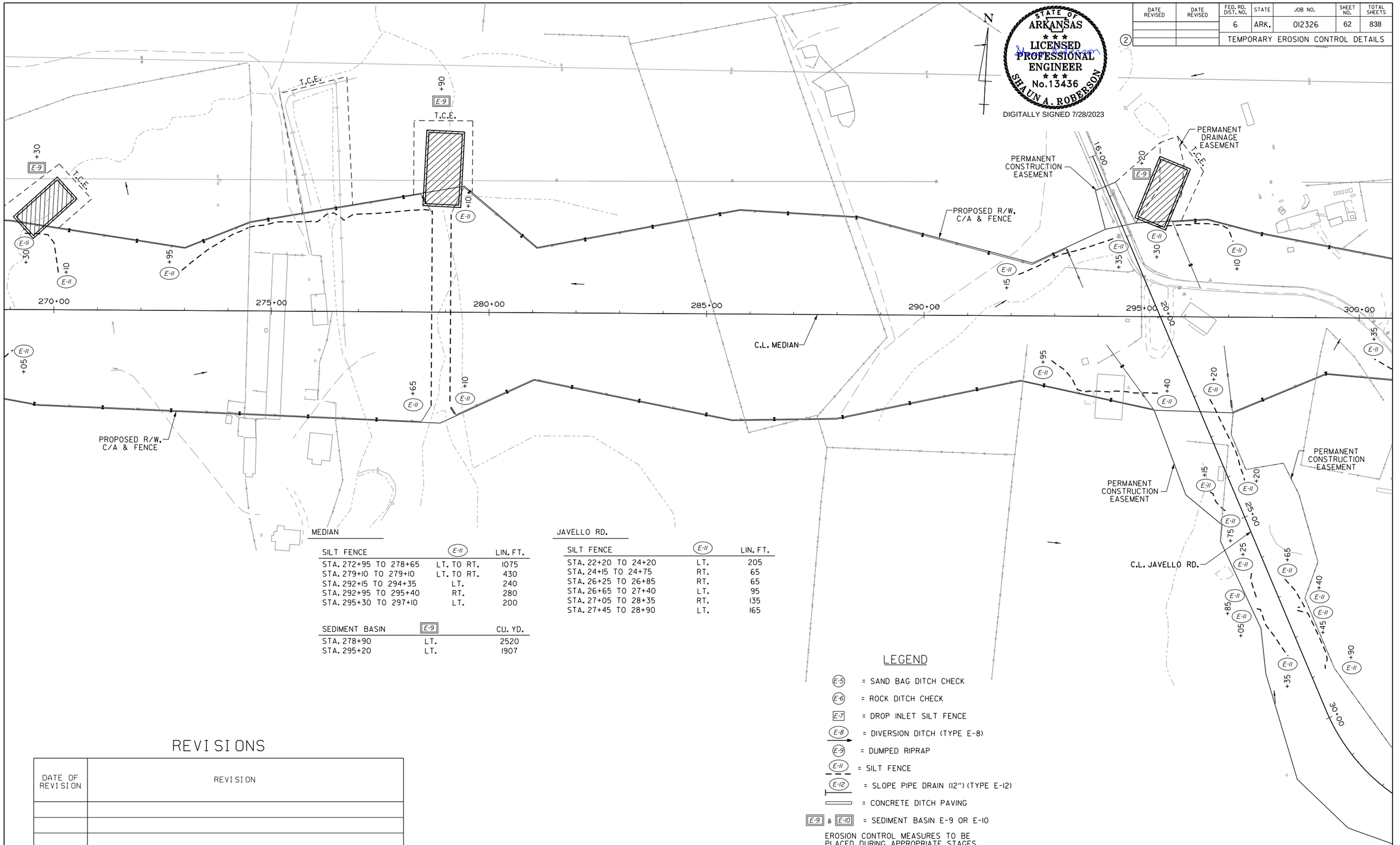

MEDIAN

SILT FENCE	E-11	LIN. FT.
STA. 272+95 TO 278+65	LT. TO RT.	1075
STA. 279+10 TO 279+10	LT. TO RT.	430
STA. 292+15 TO 294+35	LT.	240
STA. 292+95 TO 295+40	RT.	280
STA. 295+30 TO 297+10	LT.	200

SEDIMENT BASIN	E-9	CU. YD.
STA. 278+90	LT.	2520
STA. 295+20	LT.	1907

JAVELLO RD.

SILT FENCE	E-11	LIN. FT.
STA. 22+20 TO 24+20	LT.	205
STA. 24+15 TO 24+75	RT.	65
STA. 26+25 TO 26+85	RT.	65
STA. 26+65 TO 27+40	LT.	95
STA. 27+05 TO 28+35	RT.	135
STA. 27+45 TO 28+90	LT.	165

LEGEND

- E-5 = SAND BAG DITCH CHECK
- E-6 = ROCK DITCH CHECK
- E-7 = DROP INLET SILT FENCE
- E-8 = DIVERSION DITCH (TYPE E-8)
- E-9 = DUMPED RIPRAP
- E-11 = SILT FENCE
- E-12 = SLOPE PIPE DRAIN (12") (TYPE E-12)
- = CONCRETE DITCH PAVING
- E-9 & E-10 = SEDIMENT BASIN E-9 OR E-10

EROSION CONTROL MEASURES TO BE PLACED DURING APPROPRIATE STAGES. THESE DEVICES SHALL BE LEFT IN PLACE AS LONG AS REQUIRED TO CONTROL EROSION.

REVISIONS

DATE OF REVISION	REVISION

TEMPORARY EROSION CONTROL DETAILS
CLEARING AND GRUBBING

HBVinson 7/27/2023 1:40:17 PM
WORKSPACE: AHTD
L:\2017\17017660 - ARDOT 012326 Hwy 412 - Hwy 112\Drawings\r012326_EC_CG_06.dgn
REVISED DATE:

DATE REVISED	DATE REVISED	FED. RD. DIST. NO.	STATE	JOB NO.	SHEET NO.	TOTAL SHEETS
		6	ARK.	012326	63	838
		TEMPORARY EROSION CONTROL DETAILS				

2

STATE OF ARKANSAS
LICENSED PROFESSIONAL ENGINEER
No. 13436
SHAUN A. ROBERSON
DIGITALLY SIGNED 7/28/2023

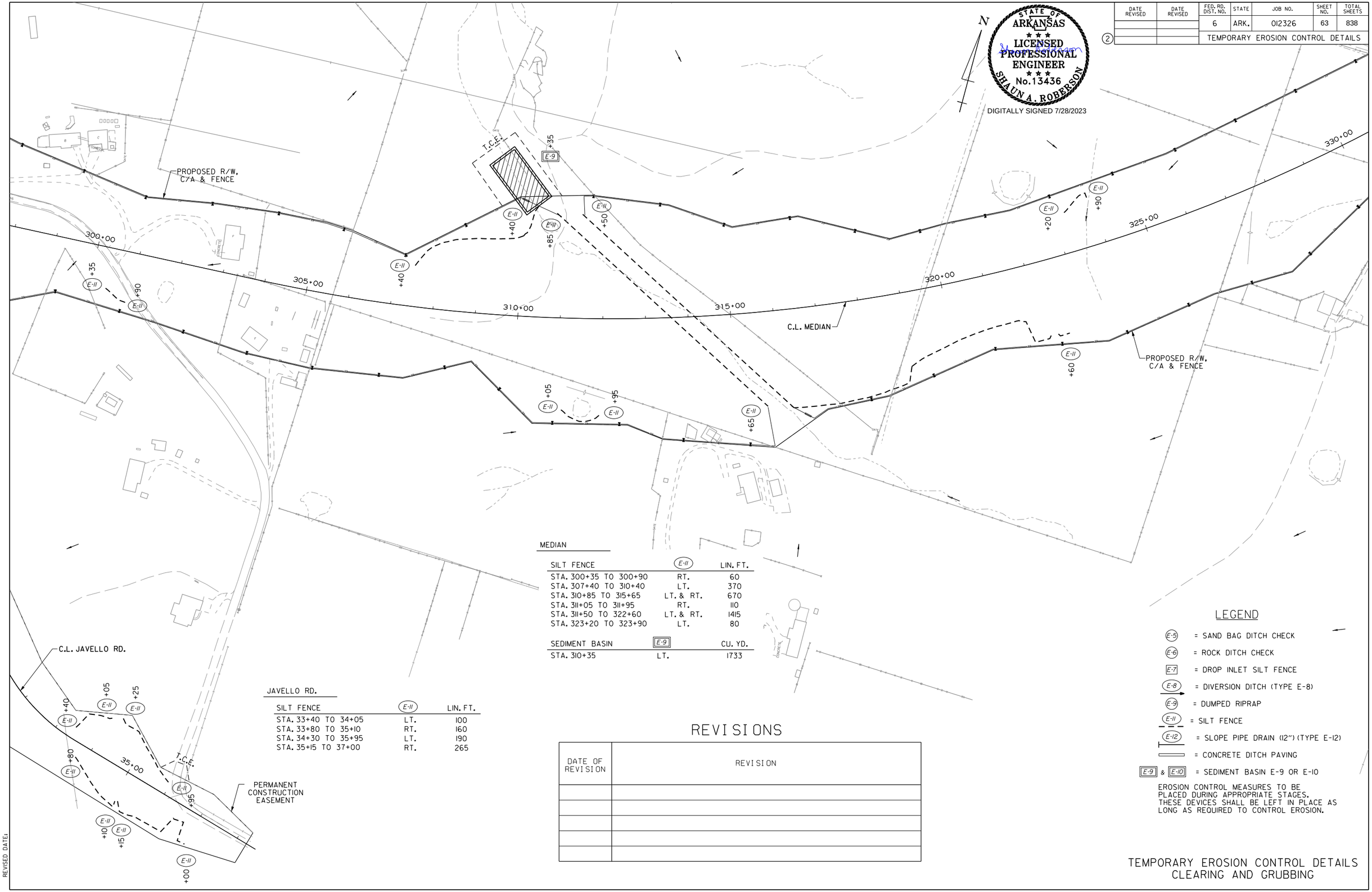

MEDIAN

SILT FENCE	E-11	LIN. FT.
STA. 300+35 TO 300+90	RT.	60
STA. 307+40 TO 310+40	LT.	370
STA. 310+85 TO 315+65	LT. & RT.	670
STA. 311+05 TO 311+95	RT.	110
STA. 311+50 TO 322+60	LT. & RT.	1415
STA. 323+20 TO 323+90	LT.	80

SEDIMENT BASIN	E-9	CU. YD.
STA. 310+35	LT.	1733

JAVELLO RD.

SILT FENCE	E-11	LIN. FT.
STA. 33+40 TO 34+05	LT.	100
STA. 33+80 TO 35+10	RT.	160
STA. 34+30 TO 35+95	LT.	190
STA. 35+15 TO 37+00	RT.	265

REVISIONS

DATE OF REVISION	REVISION

LEGEND

- E-5 = SAND BAG DITCH CHECK
- E-6 = ROCK DITCH CHECK
- E-7 = DROP INLET SILT FENCE
- E-8 = DIVERSION DITCH (TYPE E-8)
- E-9 = DUMPED RIPRAP
- E-11 = SILT FENCE
- E-12 = SLOPE PIPE DRAIN (12") (TYPE E-12)
- = CONCRETE DITCH PAVING
- E-9 & E-10 = SEDIMENT BASIN E-9 OR E-10

EROSION CONTROL MEASURES TO BE PLACED DURING APPROPRIATE STAGES. THESE DEVICES SHALL BE LEFT IN PLACE AS LONG AS REQUIRED TO CONTROL EROSION.

TEMPORARY EROSION CONTROL DETAILS
CLEARING AND GRUBBING

HBVinson 7/27/2023 1:40:18 PM
WORKSPACE: AHTD
L:\2017\7017660 - ARDOT 012326 Hwy 412 - Hwy 112\Drawings\r012326_EC_CG_07.dgn
REVISED DATE:

DATE REVISED	DATE REVISED	FED. RD. DIST. NO.	STATE	JOB NO.	SHEET NO.	TOTAL SHEETS
		6	ARK.	012326	64	838
		TEMPORARY EROSION CONTROL DETAILS				
2						

MEDIAN

SILT FENCE	E-11	LIN. FT.
STA. 334+05 TO 337+70	LT.	390
STA. 334+25 TO 336+40	RT.	265
STA. 336+50 TO 340+50	RT.	440
STA. 338+10 TO 340+70	LT.	300
STA. 357+55 TO 358+00	LT.	60
STA. 357+55 TO 358+95	RT.	170
STA. 358+45 TO 358+00	LT.	105

SEDIMENT BASIN	E-9	CU. YD.
STA. 358+25	LT.	1773

STATE OF ARKANSAS
LICENSED PROFESSIONAL ENGINEER
No. 13436
SHAUN A. ROBERSON
DIGITALLY SIGNED 7/28/2023

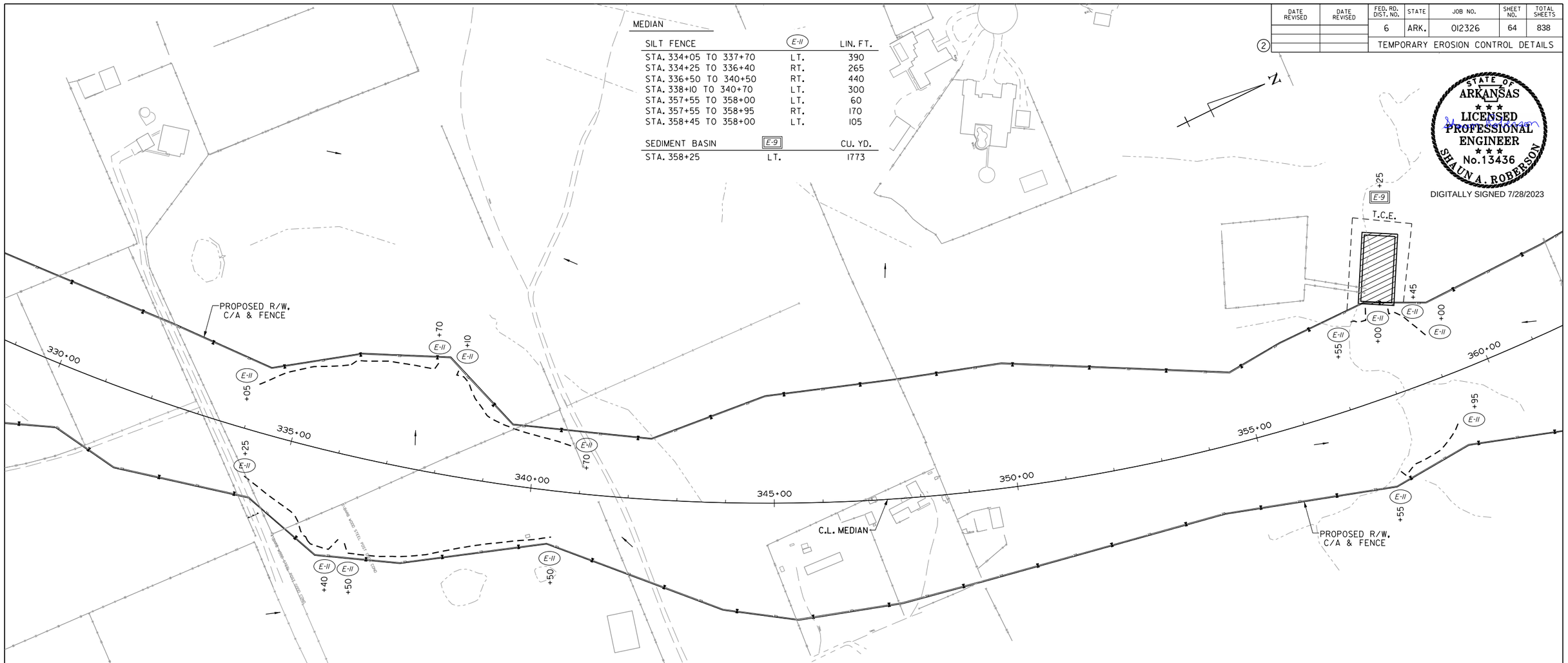

LEGEND

- E-5 = SAND BAG DITCH CHECK
- E-6 = ROCK DITCH CHECK
- E-7 = DROP INLET SILT FENCE
- E-8 = DIVERSION DITCH (TYPE E-8)
- E-9 = DUMPED RIPRAP
- E-11 = SILT FENCE
- E-12 = SLOPE PIPE DRAIN (12") (TYPE E-12)
- = CONCRETE DITCH PAVING
- E-9 & E-10 = SEDIMENT BASIN E-9 OR E-10

EROSION CONTROL MEASURES TO BE PLACED DURING APPROPRIATE STAGES. THESE DEVICES SHALL BE LEFT IN PLACE AS LONG AS REQUIRED TO CONTROL EROSION.

REVISIONS

DATE OF REVISION	REVISION

TEMPORARY EROSION CONTROL DETAILS
CLEARING AND GRUBBING

HBVinson 7/27/2023 11:40:19 PM
WORKSPACE: AHTD
L:\2017\1701660 - ARDOT 012326 Hwy 412 - Hwy 112\Drawings\r012326_EC_CG_08.dgn
REVISED DATE:

DATE REVISED	DATE REVISED	FED. RD. DIST. NO.	STATE	JOB NO.	SHEET NO.	TOTAL SHEETS
		6	ARK.	012326	65	838
		TEMPORARY EROSION CONTROL DETAILS				

STATE OF ARKANSAS
LICENSED PROFESSIONAL ENGINEER
No.13436
SHAUN A. ROBERSON
DIGITALLY SIGNED 7/28/2023

MEDIAN

SILT FENCE	(E-11)	LIN. FT.
STA. 374+65 TO 375+00	LT. TO RT.	1650
STA. 386+95 TO 386+45	LT.	55
STA. 386+05 TO 386+55	LT.	55

SEDIMENT BASIN	[E-9]	CU. YD.
STA. 374+55	LT.	1467
STA. 384+90	LT.	1787

BRUSH CRK. RD.

SILT FENCE	(E-11)	LIN. FT.
STA. 19+15 TO 21+50	LT.	280

APPROXIMATE 100 YEAR FLOOD PLAIN LIMITS
BRUSH CREEK
T.C.E.
PROPOSED R/W, C/A & FENCE
C.L. MEDIAN
C.L. BRUSH CRK. RD.
360+00 365+00 370+00 375+00 380+00 385+00 390+00
15+00 20+00 25+00

REVISIONS

DATE OF REVISION	REVISION

LEGEND

- (E-5) = SAND BAG DITCH CHECK
- (E-6) = ROCK DITCH CHECK
- [E-7] = DROP INLET SILT FENCE
- (E-8) = DIVERSION DITCH (TYPE E-8)
- (E-9) = DUMPED RIPRAP
- (E-11) = SILT FENCE
- (E-12) = SLOPE PIPE DRAIN (12") (TYPE E-12)
- = CONCRETE DITCH PAVING
- [E-9] & [E-10] = SEDIMENT BASIN E-9 OR E-10

EROSION CONTROL MEASURES TO BE PLACED DURING APPROPRIATE STAGES. THESE DEVICES SHALL BE LEFT IN PLACE AS LONG AS REQUIRED TO CONTROL EROSION.

TEMPORARY EROSION CONTROL DETAILS
CLEARING AND GRUBBING

HBVinson 7/27/2023 1:40:20 PM
WORKSPACE: AHTD
L:\2017\170760 - ARDOT 012326 Hwy 412 - Hwy 112\Drawings\r012326_EC_CG_09.dgn
REVISED DATE:

DATE REVISED	DATE REVISED	FED. RD. DIST. NO.	STATE	JOB NO.	SHEET NO.	TOTAL SHEETS
		6	ARK.	012326	66	838
		TEMPORARY EROSION CONTROL DETAILS				

(2)

STATE OF ARKANSAS
LICENSED PROFESSIONAL ENGINEER
No.13436
SHAUNA. ROBERSON
DIGITALLY SIGNED 7/28/2023

N

APPROXIMATE 100 YEAR FLOOD PLAIN LIMITS

PROPOSED R/W, C/A & FENCE

C.L. MEDIAN

390+00 395+00 400+00 405+00 410+00 415+00 420+00

PROPOSED R/W, C/A & FENCE

E-11 +88

E-11 +60

E-11 +75

MEDIAN

SILT FENCE	E-11	LIN. FT.
STA. 416+80 TO 420+60	RT.	380

LEGEND

- E-5 = SAND BAG DITCH CHECK
- E-6 = ROCK DITCH CHECK
- E-7 = DROP INLET SILT FENCE
- E-8 = DIVERSION DITCH (TYPE E-8)
- E-9 = DUMPED RIPRAP
- E-11 = SILT FENCE
- E-12 = SLOPE PIPE DRAIN (12") (TYPE E-12)
- = CONCRETE DITCH PAVING
- E-9 & E-10 = SEDIMENT BASIN E-9 OR E-10

EROSION CONTROL MEASURES TO BE PLACED DURING APPROPRIATE STAGES. THESE DEVICES SHALL BE LEFT IN PLACE AS LONG AS REQUIRED TO CONTROL EROSION.

REVISIONS

DATE OF REVISION	REVISION

HBVinson 7/27/2023 1:40:21 PM
WORKSPACE: AHTD
L:\2017\17017660 - ARDOT 012326 Hwy 412 - Hwy 112\Drawings\r-012326_EC_CG_10.dgn
REVISED DATE:

TEMPORARY EROSION CONTROL DETAILS
CLEARING AND GRUBBING

DATE REVISED	DATE REVISED	FED. RD. DIST. NO.	STATE	JOB NO.	SHEET NO.	TOTAL SHEETS
		6	ARK.	012326	67	838

TEMPORARY EROSION CONTROL DETAILS

STATE OF ARKANSAS
LICENSED PROFESSIONAL ENGINEER
No. 13436
SHAUN A. ROBERSON
DIGITALLY SIGNED 7/28/2023

REVISIONS

DATE OF REVISION	REVISION

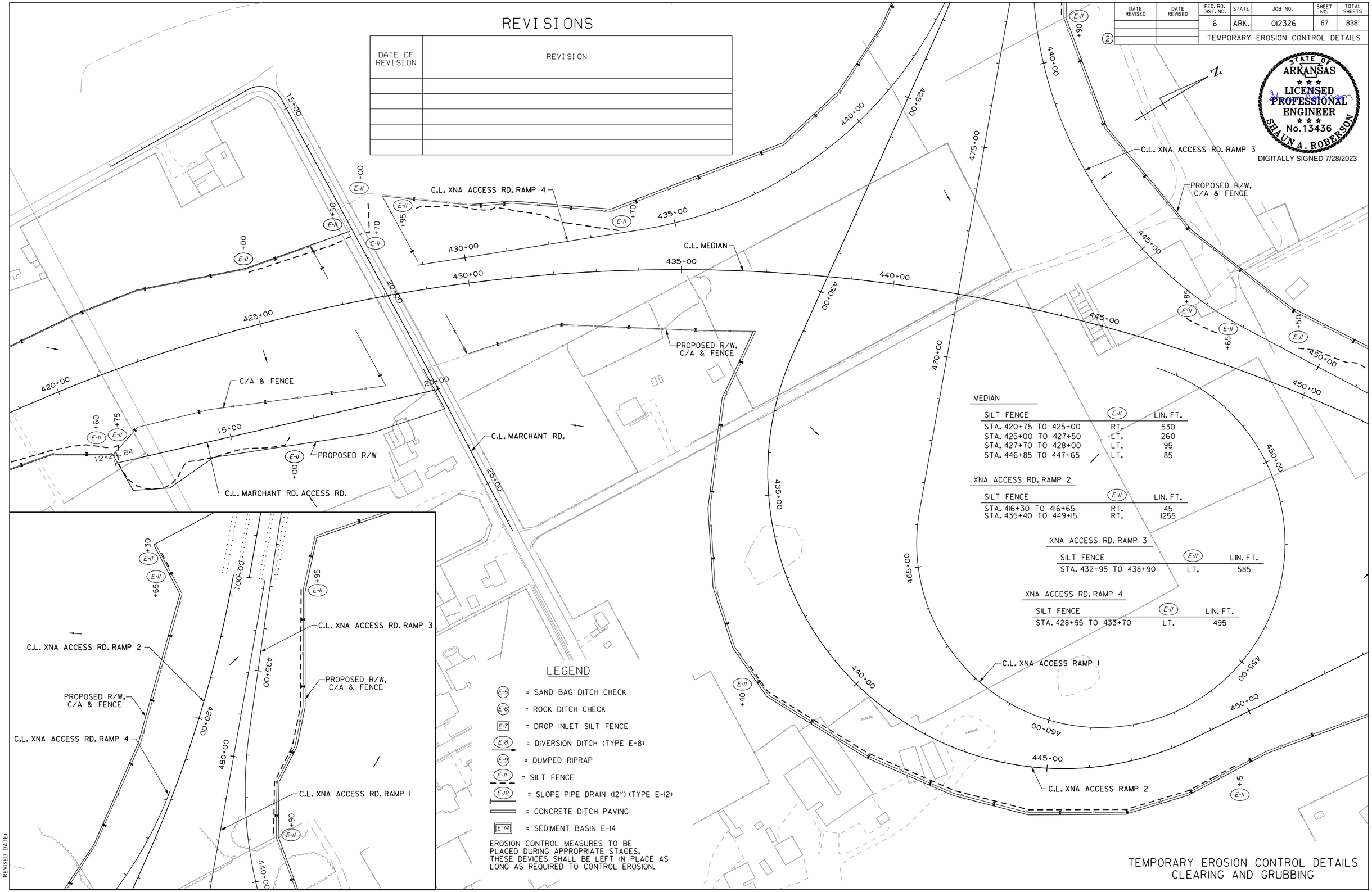

MEDIAN

SILT FENCE	E-11	LIN. FT.
STA. 420+75 TO 425+00	RT.	530
STA. 425+00 TO 427+50	LT.	260
STA. 427+70 TO 428+00	LT.	95
STA. 446+85 TO 447+65	LT.	85

XNA ACCESS RD. RAMP 2

SILT FENCE	E-11	LIN. FT.
STA. 416+30 TO 416+65	RT.	45
STA. 435+40 TO 449+15	RT.	1255

XNA ACCESS RD. RAMP 3

SILT FENCE	E-11	LIN. FT.
STA. 432+95 TO 438+90	LT.	585

XNA ACCESS RD. RAMP 4

SILT FENCE	E-11	LIN. FT.
STA. 428+95 TO 433+70	LT.	495

LEGEND

- E-5 = SAND BAG DITCH CHECK
- E-6 = ROCK DITCH CHECK
- E-7 = DROP INLET SILT FENCE
- E-8 = DIVERSION DITCH (TYPE E-8)
- E-9 = DUMPED RIPRAP
- E-11 = SILT FENCE
- E-12 = SLOPE PIPE DRAIN (12") (TYPE E-12)
- = CONCRETE DITCH PAVING
- E-14 = SEDIMENT BASIN E-14

EROSION CONTROL MEASURES TO BE PLACED DURING APPROPRIATE STAGES. THESE DEVICES SHALL BE LEFT IN PLACE AS LONG AS REQUIRED TO CONTROL EROSION.

TEMPORARY EROSION CONTROL DETAILS
CLEARING AND GRUBBING

HBVinson 7/27/2023 1:40:22 PM
WORKSPACE: AHTD
L:\2017\17017660 - ARDOT 012326 Hwy 412 - Hwy 112\Drawings\r012326_EC_CG_11.dgn
REVISED DATE:

DATE REVISED	DATE REVISED	FED. RD. DIST. NO.	STATE	JOB NO.	SHEET NO.	TOTAL SHEETS
		6	ARK.	012326	68	838
		TEMPORARY EROSION CONTROL DETAILS				
2						

STATE OF ARKANSAS
LICENSED PROFESSIONAL ENGINEER
No.13436
SHAUNA. ROBERSON
DIGITALLY SIGNED 7/28/2023

MEDIAN

SILT FENCE	E-11	LIN. FT.
STA. 449+50 TO 458+45	LT.	950
STA. 458+50 TO 461+00	LT.	280
STA. 469+95 TO 473+95	LT.	430
STA. 474+00 TO 474+95	RT.	105
STA. 479+15 TO 475+70	LT.	195
STA. 479+60 TO 480+55	LT.	120

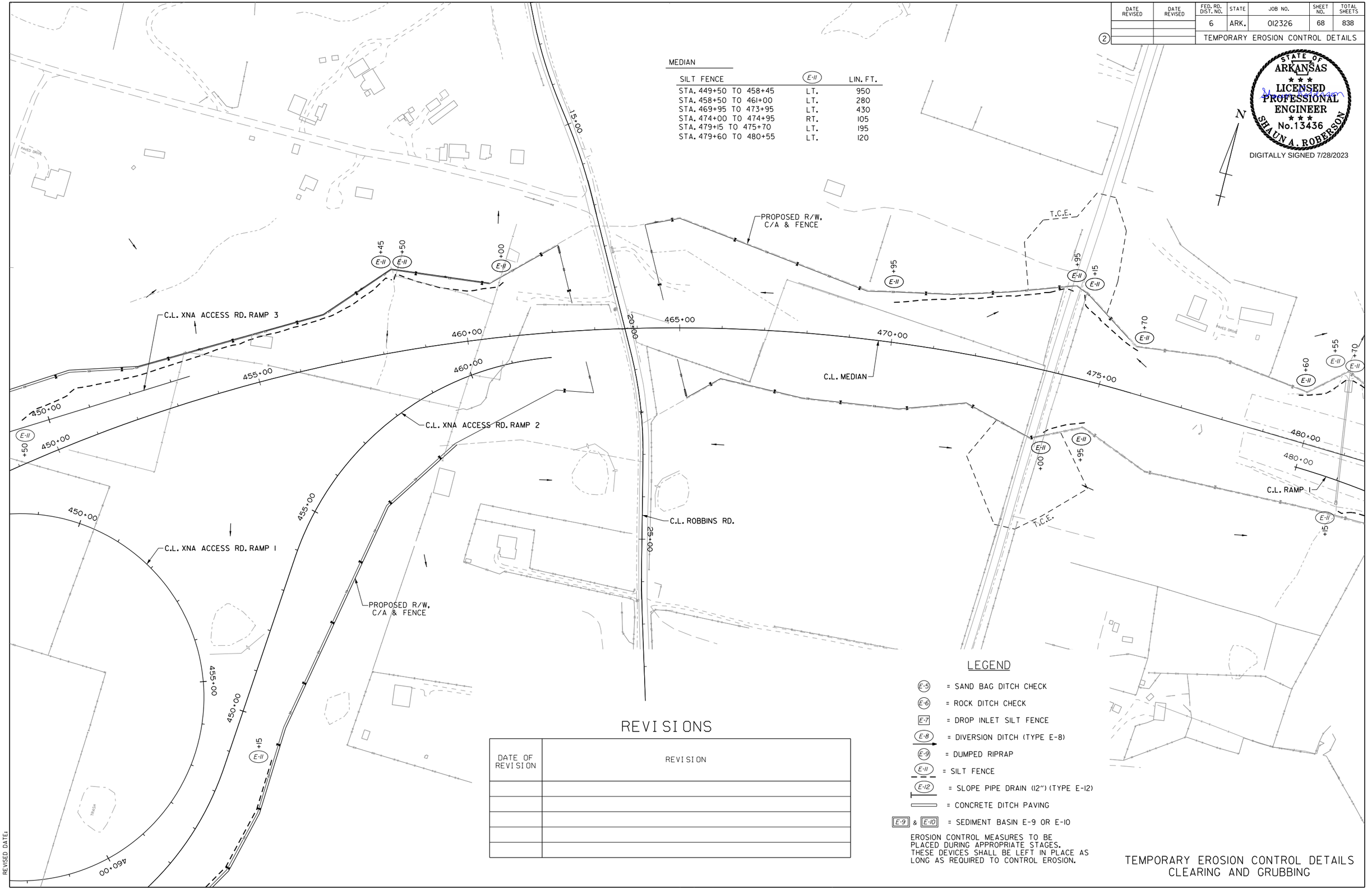

REVISIONS

DATE OF REVISION	REVISION

LEGEND

- E-5 = SAND BAG DITCH CHECK
- E-6 = ROCK DITCH CHECK
- E-7 = DROP INLET SILT FENCE
- E-8 = DIVERSION DITCH (TYPE E-8)
- E-9 = DUMPED RIPRAP
- E-11 = SILT FENCE
- E-12 = SLOPE PIPE DRAIN (12") (TYPE E-12)
- = CONCRETE DITCH PAVING
- E-9 & E-10 = SEDIMENT BASIN E-9 OR E-10

EROSION CONTROL MEASURES TO BE PLACED DURING APPROPRIATE STAGES. THESE DEVICES SHALL BE LEFT IN PLACE AS LONG AS REQUIRED TO CONTROL EROSION.

TEMPORARY EROSION CONTROL DETAILS CLEARING AND GRUBBING

HBVinson
7/27/2023 1:40:24 PM
WORKSPACE: AHTD
L:\20IT\170I7660 - ARDOT 012326 Hwy 412 - Hwy 112\Drawings\r012326_EC_CG_12.dgn
REVISED DATE:

DATE REVISED	DATE REVISED	FED. RD. DIST. NO.	STATE	JOB NO.	SHEET NO.	TOTAL SHEETS
		6	ARK.	012326	69	838
		TEMPORARY EROSION CONTROL DETAILS				
2						

STATE OF ARKANSAS
LICENSED PROFESSIONAL ENGINEER
No.13436
SHAUN A. ROBERSON
DIGITALLY SIGNED 7/28/2023

MEDIAN

SILT FENCE	(E-11)	LIN. FT.
STA. 480+70 TO 482+15	LT.	160
STA. 493+15 TO 495+70	LT.	280
STA. 493+70 TO 495+00	RT.	140
STA. 495+80 TO 497+55	LT.	200

SAND BAG DITCH CHECK	(E-5)	INSTALLATION
STA. 480+00 TO 510+00	LT.	9
STA. 480+00 TO 510+00	MEDIAN	14
STA. 480+00 TO 510+00	RT.	20

ROCK DITCH CHECK	(E-6)	INSTALLATION
STA. 480+00 TO 510+00	LT.	3
STA. 480+00 TO 510+00	RT.	3

DROP INLET SILT FENCE	[E-7]	LIN FT.
STA. 482+00	MEDIAN	20
STA. 490+00	MEDIAN	20
STA. 495+00	MEDIAN	20
STA. 505+00	MEDIAN	20

DIVERSION DITCH	(E-8)	LIN. FT.
STA. 507+00 TO 510+00	LT.	300
STA. 508+00 TO 510+00	RT.	200

SLOPE DRAIN	(E-12)	LIN. FT.
STA. 507+00	LT.	85
STA. 508+00	RT.	80

DUMPED RIPRAP	(E-9)	CU. YD.
STA. 507+00	LT.	2
STA. 508+00	RT.	2

HWY. 112 RAMP 4

SILT FENCE	(E-11)	LIN. FT.
STA. 490+40 TO 496+20	RT.	600
STA. 496+25 TO 498+35	RT.	240
STA. 497+55 TO 498+50	LT.	140

SAND BAG DITCH CHECK	(E-5)	INSTALLATION
STA. 484+00 TO 499+00	LT.	11
STA. 484+00 TO 499+00	RT.	1

ROCK DITCH CHECK	(E-6)	INSTALLATION
STA. 484+00 TO 499+00	LT.	3

DIVERSION DITCH	(E-8)	LIN. FT.
STA. 495+00 TO 497+00	LT.	200

DUMPED RIPRAP	(E-9)	CU. YD.
STA. 497+00	LT.	2

SLOPE DRAIN	(E-12)	LIN. FT.
STA. 497+00	LT.	110

HWY. 112

SILT FENCE	(E-11)	LIN. FT.
STA. 14+40 TO 18+95	RT.	490
STA. 20+95 TO 25+80	RT.	505

HWY. 112 RAMP 1

SILT FENCE	(E-11)	LIN. FT.
STA. 481+20 TO 482+95	RT.	180
STA. 494+55 TO 500+00	LT.	535

SAND BAG DITCH CHECK	(E-5)	INSTALLATION
STA. 483+00 TO 501+00	LT.	5
STA. 483+00 TO 501+00	RT.	16

ROCK DITCH CHECK	(E-6)	INSTALLATION
STA. 483+00 TO 501+00	RT.	3

HWY. 112 RAMP 1

DIVERSION DITCH	(E-8)	LIN. FT.
STA. 494+00 TO 496+50	LT.	250

SLOPE DRAIN	(E-12)	LIN. FT.
STA. 494+00	LT.	80

DUMPED RIPRAP	(E-9)	CU. YD.
STA. 494+00	LT.	2

EXISTING R/W, C/A & FENCE

C.L. HWY. 112 RAMP 4

C.L. MEDIAN

EXISTING R/W, C/A & FENCE

C.L. HWY. 112 RAMP 1

C.L. HWY. 112

EXISTING R/W, C/A & FENCE

480+00 485+00 490+00 495+00 500+00 505+00 510+00

LEGEND

- (E-5) = SAND BAG DITCH CHECK
- (E-6) = ROCK DITCH CHECK
- [E-7] = DROP INLET SILT FENCE
- (E-8) = DIVERSION DITCH (TYPE E-8)
- (E-9) = DUMPED RIPRAP
- (E-11) = SILT FENCE
- (E-12) = SLOPE PIPE DRAIN (12") (TYPE E-12)
- = CONCRETE DITCH PAVING
- [E-9] & [E-10] = SEDIMENT BASIN E-9 OR E-10

EROSION CONTROL MEASURES TO BE PLACED DURING APPROPRIATE STAGES. THESE DEVICES SHALL BE LEFT IN PLACE AS LONG AS REQUIRED TO CONTROL EROSION.

REVISIONS

DATE OF REVISION	REVISION

HBVinson 7/27/2023 1:40:27 PM
WORKSPACE: AHTD
L:\2017\17017660 - ARDOT 012326 Hwy 412 - Hwy 112\Drawings\r012326_EC_CG_13.dgn
REVISED DATE:

TEMPORARY EROSION CONTROL DETAILS CLEARING AND GRUBBING

REVISIONS

DATE OF REVISION	REVISION

MEDIAN

SILT FENCE	E-11	LIN. FT.
STA. 509+10 TO 513+65	RT.	485
STA. 516+55 TO 518+15	LT.	170
SAND BAG DITCH CHECK	E-5	INSTALLATION
STA. 514+00 TO 529+00	MEDIAN	24
ROCK DITCH CHECK	E-6	INSTALLATION
STA. 521+30	LT.	1
DROP INLET SILT FENCE	E-7	LIN FT.
STA. 512+00	MEDIAN	20
STA. 520+00	MEDIAN	20
STA. 530+00	MEDIAN	20
STA. 534+00	MEDIAN	20

DATE REVISED	DATE REVISED	FED. RD. DIST. NO.	STATE	JOB NO.	SHEET NO.	TOTAL SHEETS
		6	ARK.	012326	70	838
		TEMPORARY EROSION CONTROL DETAILS				
2						

STATE OF ARKANSAS
LICENSED PROFESSIONAL ENGINEER
No.13436
SHAUNA A. ROBERSON

DIGITALLY SIGNED 7/28/2023

N

EXISTING R/W

C.L. GRIMSLEY RD.

EXISTING R/W, C/A & FENCE

C.L. MEDIAN

PROPOSED R/W, C/A & FENCE

510+00 515+00 520+00 525+00 530+00 535+00 540+00

WEST WILLOW ROAD

GRIMSLEY ROAD

PARKING

SIGN

LEGEND

- E-5 = SAND BAG DITCH CHECK
- E-6 = ROCK DITCH CHECK
- E-7 = DROP INLET SILT FENCE
- E-8 = DIVERSION DITCH (TYPE E-8)
- E-9 = DUMPED RIPRAP
- E-11 = SILT FENCE
- E-12 = SLOPE PIPE DRAIN (12") (TYPE E-12)
- = CONCRETE DITCH PAVING
- E-9 & E-10 = SEDIMENT BASIN E-9 OR E-10

EROSION CONTROL MEASURES TO BE PLACED DURING APPROPRIATE STAGES. THESE DEVICES SHALL BE LEFT IN PLACE AS LONG AS REQUIRED TO CONTROL EROSION.

TEMPORARY EROSION CONTROL DETAILS
CLEARING AND GRUBBING

HBVinson
WORKSPACE: AHTD
L:\2017\17017660 - ARDOT 012326 Hwy 412 - Hwy 412\Drawings\r012326_EC_CG_14.dgn
7/27/2023 1:40:28 PM
REVISED DATE:

DATE REVISED	DATE REVISED	FED. RD. DIST. NO.	STATE	JOB NO.	SHEET NO.	TOTAL SHEETS
		6	ARK.	012326	71	838
		TEMPORARY EROSION CONTROL DETAILS				

(2)

LEGEND

- (E-5) = SAND BAG DITCH CHECK
- (E-6) = ROCK DITCH CHECK
- [E-7] = DROP INLET SILT FENCE
- (E-8) = DIVERSION DITCH (TYPE E-8)
- (E-9) = DUMPED RIPRAP
- (E-11) = SILT FENCE
- (E-12) = SLOPE PIPE DRAIN (12") (TYPE E-12)
- = CONCRETE DITCH PAVING
- [E-9] & [E-10] = SEDIMENT BASIN E-9 OR E-10

EROSION CONTROL MEASURES TO BE PLACED DURING APPROPRIATE STAGES. THESE DEVICES SHALL BE LEFT IN PLACE AS LONG AS REQUIRED TO CONTROL EROSION.

MEDIAN

SAND BAG DITCH CHECK	(E-5)	INSTALLATION
STA. 155+60 TO 167+35	LT.	11

ROCK DITCH CHECK	(E-6)	INSTALLATION
STA. 154+75 TO 169+10	LT.	9

HWY. 412B RAMP 4

SAND BAG DITCH CHECK	(E-5)	INSTALLATION
STA. 173+40 TO 179+05	LT.	12
STA. 175+90 TO 176+90	RT.	3

ROCK DITCH CHECK	(E-6)	INSTALLATION
STA. 178+90	RT.	1

DROP INLET SILT FENCE	[E-7]	LIN. FT.
STA. 152+60	MEDIAN	20

DIVERSION DITCH	(E-8)	LIN. FT.
STA. 173+05 TO 177+00	LT.	395

DUMPED RIP RAP	(E-9)	CU. YD.
STA. 172+00	LT.	2

SLOPE DRAIN	(E-12)	LIN. FT.
STA. 171+75	LT.	110

N

STATE OF ARKANSAS
LICENSED PROFESSIONAL ENGINEER
No. 13436
SHAUNA A. ROBERSON
DIGITALLY SIGNED 7/28/2023

PROPOSED R/W, C/A & FENCE
CONSTRUCTION LIMITS
EXISTING R/W, C/A & FENCE
C.L. MEDIAN
C.L. TEMPORARY CROSSOVER 2
EXISTING R/W, C/A & FENCE
PROPOSED R/W, C/A & FENCE
T.C.E.
C.L. HWY. 412B RAMP 4
HWY. 412B C.L. RAMP 1
CONSTRUCTION LIMITS
TEMPORARY CONSTRUCTION EASEMENT
C.L. MUSTEEN RD.
PROPOSED R/W

MUSTEEN RD.

SAND BAG DITCH CHECK	(E-5)	INSTALLATION
STA. 18+70	LT.	1
STA. 19+95	RT.	1
STA. 23+15	RT.	1

ROCK DITCH CHECK	(E-6)	INSTALLATION
STA. 16+70	RT.	1
STA. 21+50	RT.	1

HWY. 412B RAMP 1

SILT FENCE	(E-11)	LIN. FT.
STA. 176+15 TO 180+00	LT.	385

REVISIONS

DATE OF REVISION	REVISION

TEMPORARY EROSION CONTROL DETAILS
STAGE 1

HBVinson 7/27/2023 1:40:29 PM
WORKSPACE: AHTD
L:\2017\1701660 - ARDOT 012326 Hwy 412 - Hwy 112\Drawings\r012326_EC_ST01_02.dgn
REVISED DATE:

DATE REVISED	DATE REVISED	FED. RD. DIST. NO.	STATE	JOB NO.	SHEET NO.	TOTAL SHEETS
		6	ARK.	012326	72	838
		TEMPORARY EROSION CONTROL DETAILS				

STATE OF ARKANSAS
LICENSED PROFESSIONAL ENGINEER
No.13436
SHAUNA. ROBERSON
DIGITALLY SIGNED 7/28/2023

HWY. 412B RAMP 4

SILT FENCE	(E-11)	LIN. FT.
STA. 191+00 TO 194+90	LT.	390

SAND BAG DITCH CHECK	(E-5)	INSTALLATION
STA. 182+20 TO 188+70	RT.	5
STA. 180+45 TO 188+30	LT.	3

ROCK DITCH CHECK	(E-6)	INSTALLATION
STA. 181+80 TO 189+55	LT.	3
STA. 184+00	RT.	1

HWY. 412B RAMP 1

SILT FENCE	(E-11)	LIN. FT.
STA. 180+00 TO 194+85	LT.	1510

HWY. 68

SAND BAG DITCH CHECK	(E-5)	INSTALLATION
STA. 51+00 TO 52+15	LT.	2

ROCK DITCH CHECK	(E-6)	INSTALLATION
STA. 51+65 TO 52+65	LT.	2

HWY. 412B

SAND BAG DITCH CHECK	(E-5)	INSTALLATION
STA. 13+90 TO 19+09	LT.	4

ROCK DITCH CHECK	(E-6)	INSTALLATION
STA. 15+45 TO 19+85	LT.	4

MUSTEEN RD.

SILT FENCE	(E-11)	LIN. FT.
STA. 26+50 TO 28+00	LT.	150
STA. 29+00 TO 33+50	LT.	480

SAND BAG DITCH CHECK	(E-5)	INSTALLATION
STA. 33+90 TO 37+90	RT.	6

ROCK DITCH CHECK	(E-6)	INSTALLATION
STA. 37+90	LT.	1

LEGEND

- (E-5) = SAND BAG DITCH CHECK
- (E-6) = ROCK DITCH CHECK
- E-7 = DROP INLET SILT FENCE
- (E-8) = DIVERSION DITCH (TYPE E-8)
- (E-9) = DUMPED RIPRAP
- (E-11) = SILT FENCE
- (E-12) = SLOPE PIPE DRAIN (12") (TYPE E-12)
- = CONCRETE DITCH PAVING
- E-9 & E-10 = SEDIMENT BASIN E-9 OR E-10

EROSION CONTROL MEASURES TO BE PLACED DURING APPROPRIATE STAGES. THESE DEVICES SHALL BE LEFT IN PLACE AS LONG AS REQUIRED TO CONTROL EROSION.

REVISIONS

DATE OF REVISION	REVISION

HBVinson 7/27/2023 1:40:32 PM
WORKSPACE: AHTD
L:\2017\1701660 - AROOT 012326 Hwy 412 - Hwy 112\Drawings\r012326_EC_ST01_03.dgn
REVISED DATE:

TEMPORARY EROSION CONTROL DETAILS
STAGE 1

DATE REVISED	DATE REVISED	FED. RD. DIST. NO.	STATE	JOB NO.	SHEET NO.	TOTAL SHEETS
		6	ARK.	012326	73	838
		TEMPORARY EROSION CONTROL DETAILS				
2						

STATE OF ARKANSAS
LICENSED PROFESSIONAL ENGINEER
No.13436
SHAUN A. ROBERSON
DIGITALLY SIGNED 7/28/2023

LEGEND

- E-5 = SAND BAG DITCH CHECK
- E-6 = ROCK DITCH CHECK
- E-7 = DROP INLET SILT FENCE
- E-8 = DIVERSION DITCH (TYPE E-8)
- E-9 = DUMPED RIPRAP
- E-11 = SILT FENCE
- E-12 = SLOPE PIPE DRAIN (12") (TYPE E-12)
- = CONCRETE DITCH PAVING
- E-9 & E-10 = SEDIMENT BASIN E-9 OR E-10

EROSION CONTROL MEASURES TO BE PLACED DURING APPROPRIATE STAGES. THESE DEVICES SHALL BE LEFT IN PLACE AS LONG AS REQUIRED TO CONTROL EROSION.

LIBERTY AVE.

SILT FENCE (E-11)		LIN. FT.
STA. 18+10 TO 23+25	RT.	520
SAND BAG DITCH CHECK (E-5)		INSTALLATION
STA. 23+25 TO 179+05	RT.	3
ROCK DITCH CHECK (E-6)		INSTALLATION
STA. 25+70 TO 25+95	RT.	2

T.C.E.
C.L. LIBERTY AVE.
PROPOSED R/W
C.L. LIBERTY AVE. DETOUR
C.L. HWY. 412B RAMP 3
C.L. MEDIAN
PROPOSED R/W, C/A & FENCE
PROPOSED R/W
PROPOSED R/W, C/A & FENCE
210+00
215+00
220+00
225+00
230+00
235+00
240+00
15+00
20+00
25+00

REVISIONS

DATE OF REVISION	REVISION

TEMPORARY EROSION CONTROL DETAILS
STAGE I

HBVinson
7/27/2023 1:40:33 PM
WORKSPACE: AHTD
L:\20\T\T01T660 - ARDOT 012326 Hwy 412 - Hwy 112\Drawings\r012326_EC_STG1_04.dgn
REVISED DATE:

DATE REVISED	DATE REVISED	FED. RD. DIST. NO.	STATE	JOB NO.	SHEET NO.	TOTAL SHEETS
		6	ARK.	012326	74	838
		TEMPORARY EROSION CONTROL DETAILS				

STATE OF ARKANSAS
LICENSED PROFESSIONAL ENGINEER
No. 13436
SHAUN A. ROBERSON
DIGITALLY SIGNED 7/28/2023

LEGEND

- E-5 = SAND BAG DITCH CHECK
- E-6 = ROCK DITCH CHECK
- E-7 = DROP INLET SILT FENCE
- E-8 = DIVERSION DITCH (TYPE E-8)
- E-9 = DUMPED RIPRAP
- E-11 = SILT FENCE
- E-12 = SLOPE PIPE DRAIN (12") (TYPE E-12)
- = CONCRETE DITCH PAVING
- E-9 & E-10 = SEDIMENT BASIN E-9 OR E-10

EROSION CONTROL MEASURES TO BE PLACED DURING APPROPRIATE STAGES. THESE DEVICES SHALL BE LEFT IN PLACE AS LONG AS REQUIRED TO CONTROL EROSION.

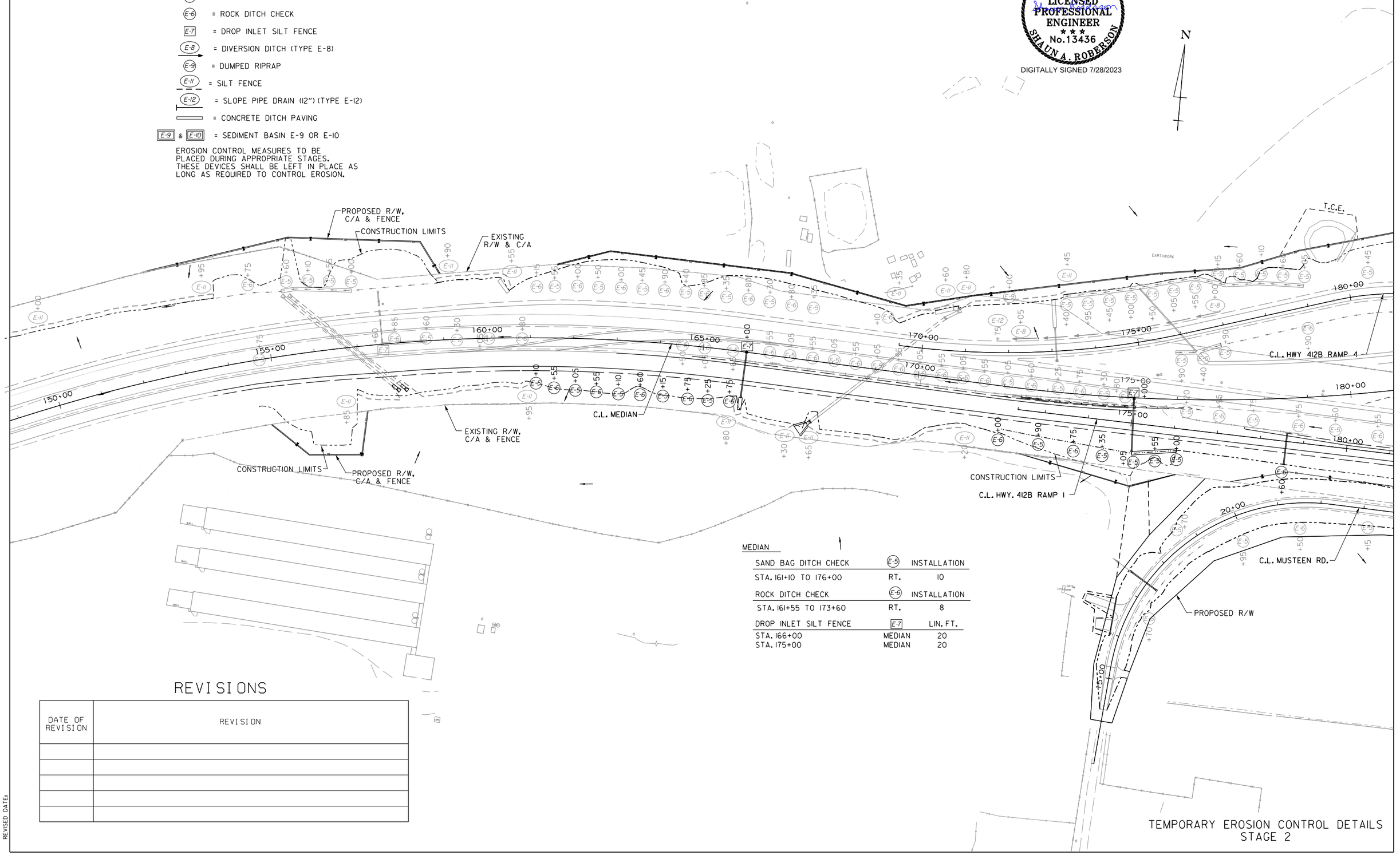

MEDIAN

SAND BAG DITCH CHECK	E-5	INSTALLATION
STA. 161+10 TO 176+00	RT.	10
ROCK DITCH CHECK	E-6	INSTALLATION
STA. 161+55 TO 173+60	RT.	8
DROP INLET SILT FENCE	E-7	LIN. FT.
STA. 166+00	MEDIAN	20
STA. 175+00	MEDIAN	20

REVISIONS

DATE OF REVISION	REVISION

TEMPORARY EROSION CONTROL DETAILS
STAGE 2

HBVinson 7/27/2023 1:40:34 PM
WORKSPACE: AHTD
L:\2017\17017660 - ARDOT 012326 Hwy 412 - Hwy 112\Drawings\r012326_EC_STG2_02.dgn
REVISED DATE:

DATE REVISED	DATE REVISED	FED. RD. DIST. NO.	STATE	JOB NO.	SHEET NO.	TOTAL SHEETS
		6	ARK.	012326	75	838
		TEMPORARY EROSION CONTROL DETAILS				

HWY. 68

SAND BAG DITCH CHECK	E-5	INSTALLATION
STA. 42+80 TO 55+80	LT.	7
STA. 42+70 TO 54+30	RT.	9
ROCK DITCH CHECK	**E-6**	**INSTALLATION**
STA. 43+55 TO 51+75	RT.	5
STA. 43+60 TO 48+55	LT.	3

HWY. 412B RAMP 3

SAND BAG DITCH CHECK	E-5	INSTALLATION
STA. 192+20 TO 196+95	RT.	3
STA. 193+90 TO 201+95	LT.	10
ROCK DITCH CHECK	**E-6**	**INSTALLATION**
STA. 193+20 TO 195+25	LT.	2
STA. 194+20 TO 198+40	RT.	4

DIVERSION DITCH	E-8	LIN. FT.
STA. 200+00 TO 203+00	LT.	300
SLOPE DRAIN	**E-12**	**LIN. FT.**
STA. 199+65	LT.	70
DUMPED RIPRAP	**E-9**	**CU. YD.**
STA. 200+00	LT.	2

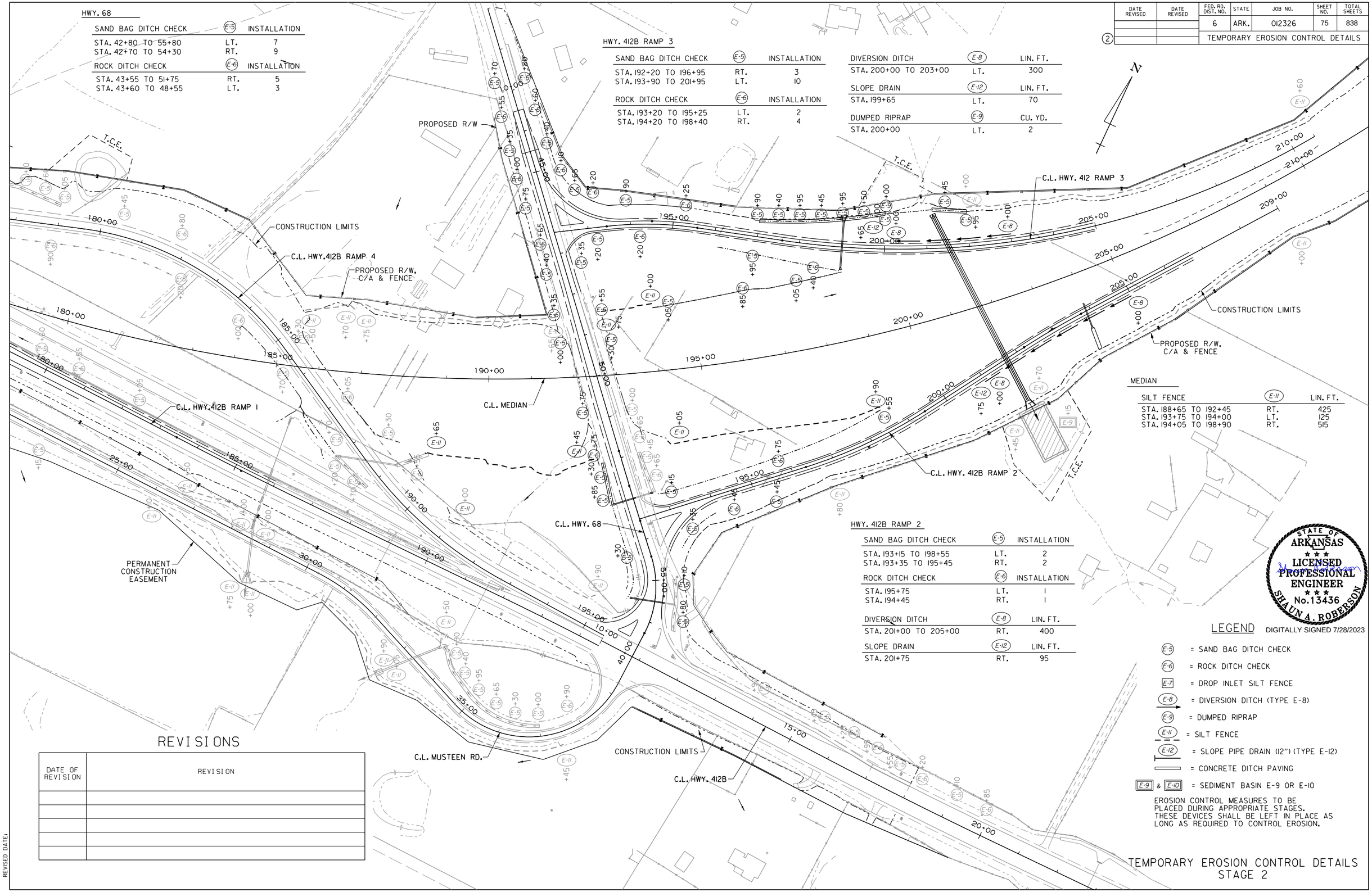

MEDIAN

SILT FENCE	E-11	LIN. FT.
STA. 188+65 TO 192+45	RT.	425
STA. 193+75 TO 194+00	LT.	125
STA. 194+05 TO 198+90	RT.	515

HWY. 412B RAMP 2

SAND BAG DITCH CHECK	E-5	INSTALLATION
STA. 193+15 TO 198+55	LT.	2
STA. 193+35 TO 195+45	RT.	2
ROCK DITCH CHECK	**E-6**	**INSTALLATION**
STA. 195+75	LT.	1
STA. 194+45	RT.	1
DIVERSION DITCH	**E-8**	**LIN. FT.**
STA. 201+00 TO 205+00	RT.	400
SLOPE DRAIN	**E-12**	**LIN. FT.**
STA. 201+75	RT.	95

STATE OF ARKANSAS
LICENSED PROFESSIONAL ENGINEER
No. 13436
SHAUN A. ROBERSON

DIGITALLY SIGNED 7/28/2023

LEGEND

- E-5 = SAND BAG DITCH CHECK
- E-6 = ROCK DITCH CHECK
- E-7 = DROP INLET SILT FENCE
- E-8 = DIVERSION DITCH (TYPE E-8)
- E-9 = DUMPED RIPRAP
- E-11 = SILT FENCE
- E-12 = SLOPE PIPE DRAIN (12") (TYPE E-12)
- = CONCRETE DITCH PAVING
- E-9 & E-10 = SEDIMENT BASIN E-9 OR E-10

EROSION CONTROL MEASURES TO BE PLACED DURING APPROPRIATE STAGES. THESE DEVICES SHALL BE LEFT IN PLACE AS LONG AS REQUIRED TO CONTROL EROSION.

REVISIONS

DATE OF REVISION	REVISION

TEMPORARY EROSION CONTROL DETAILS STAGE 2

HBVinson 7/27/2023 1:40:35 PM
WORKSPACE: AHTD
L:\2017\17017660 - ARDOT 012326 Hwy 412 - Hwy 112\Drawings\r012326_EC_STG2_03.dgn
REVISED DATE:

DATE REVISED	DATE REVISED	FED. RD. DIST. NO.	STATE	JOB NO.	SHEET NO.	TOTAL SHEETS
		6	ARK.	012326	76	838
		TEMPORARY EROSION CONTROL DETAILS				
		②				

STATE OF ARKANSAS
LICENSED PROFESSIONAL ENGINEER
No.13436
SHAUN A. ROBERSON

DIGITALLY SIGNED 7/28/2023

T.C.E.

C.L. LIBERTY AVE. DETOUR

C.L. LIBERTY AVE.

PROPOSED R/W

PROPOSED R/W, C/A & FENCE

C.L. HWY. 412B RAMP 3

C.L. MEDIAN

210+00 215+00 220+00 225+00 230+00 235+00 240+00

E-II +60 +70 +45 +75 +50 +25 +95

E-I +70

E-5 +65 +85 +10

E-6

E-8 20.00

E-9 15.00 14.00

E-7

E-12

LIBERTY AVE.

SAND BAG DITCH CHECK	E-5	INSTALLATION
STA. 18+65	RT.	1
STA. 22+10	RT.	1
ROCK DITCH CHECK	E-6	INSTALLATION
STA. 18+85	LT.	1

REVISIONS

DATE OF REVISION	REVISION

LEGEND

- E-5 = SAND BAG DITCH CHECK
- E-6 = ROCK DITCH CHECK
- E-7 = DROP INLET SILT FENCE
- E-8 = DIVERSION DITCH (TYPE E-8)
- E-9 = DUMPED RIPRAP
- E-11 = SILT FENCE
- E-12 = SLOPE PIPE DRAIN (12") (TYPE E-12)
- = CONCRETE DITCH PAVING
- E-9 & E-10 = SEDIMENT BASIN E-9 OR E-10

EROSION CONTROL MEASURES TO BE PLACED DURING APPROPRIATE STAGES. THESE DEVICES SHALL BE LEFT IN PLACE AS LONG AS REQUIRED TO CONTROL EROSION.

TEMPORARY EROSION CONTROL DETAILS
STAGE 2

HBVinson
WORKSPACE: AHTD
L:\2017\170T660 - ARDOT 012326 Hwy 412 - Hwy 112\Drawings\r012326_EC_ST02_04.dgn
REVISED DATE: 7/27/2023 11:40:36 PM

DATE REVISED	DATE REVISED	FED. RD. DIST. NO.	STATE	JOB NO.	SHEET NO.	TOTAL SHEETS
		6	ARK.	012326	77	838
		TEMPORARY EROSION CONTROL DETAILS				

STATE OF ARKANSAS
LICENSED PROFESSIONAL ENGINEER
No.13436
SHAUN A. ROBERSON
DIGITALLY SIGNED 7/28/2023

N

T.C.E.

PROPOSED R/W. C/A & FENCE

PERMANENT CONSTRUCTION EASEMENT

PERMANENT DRAINAGE EASEMENT

C.L. MEDIAN

C.L. JAVELLO RD.

270+00 275+00 280+00 285+00 290+00 295+00 300+00

JAVELLO RD.

SAND BAG DITCH CHECK	(E-5) INSTALLATION	
STA. 20+80 TO 32+05	RT.	11
STA. 20+80 TO 31+40	LT.	8
ROCK DITCH CHECK	(E-6) INSTALLATION	
STA. 19+75 TO 25+70	LT.	4
STA. 19+85 TO 25+00	RT.	3

LEGEND

- (E-5) = SAND BAG DITCH CHECK
- (E-6) = ROCK DITCH CHECK
- [E-7] = DROP INLET SILT FENCE
- (E-8) = DIVERSION DITCH (TYPE E-8)
- (E-9) = DUMPED RIPRAP
- (E-11) = SILT FENCE
- (E-12) = SLOPE PIPE DRAIN (12") (TYPE E-12)
- = CONCRETE DITCH PAVING
- [E-9] & [E-10] = SEDIMENT BASIN E-9 OR E-10

EROSION CONTROL MEASURES TO BE PLACED DURING APPROPRIATE STAGES. THESE DEVICES SHALL BE LEFT IN PLACE AS LONG AS REQUIRED TO CONTROL EROSION.

REVISIONS

DATE OF REVISION	REVISION

TEMPORARY EROSION CONTROL DETAILS
STAGE 2

HBVinson 7/27/2023 1:40:38 PM
WORKSPACE: AHTD
L:\20\7\0\7660 - ARDOT 012326 Hwy 412 - Hwy 112\Drawings\r012326_EC_STG2_06.dgn
REVISED DATE:

DATE REVISED	DATE REVISED	FED. RD. DIST. NO.	STATE	JOB NO.	SHEET NO.	TOTAL SHEETS
		6	ARK.	012326	78	838
		TEMPORARY EROSION CONTROL DETAILS				
2						

STATE OF ARKANSAS
LICENSED PROFESSIONAL ENGINEER
No.13436
SHAUN A. ROBERSON
DIGITALLY SIGNED 7/28/2023

N

PROPOSED R/W, C/A & FENCE

TEMPORARY CONSTRUCTION EASEMENT

300+00 305+00 310+00 315+00 320+00 325+00 330+00

C.L. MEDIAN

PROPOSED R/W, C/A & FENCE

PERMANENT CONSTRUCTION EASEMENT

C.L. JAVELLO RD.

JAVELLO RD.

SAND BAG DITCH CHECK	(E-5)	INSTALLATION
STA. 32+00	LT.	1
STA. 32+55	RT.	1

ROCK DITCH CHECK	(E-6)	INSTALLATION
STA. 36+90	LT.	1

REVISIONS

DATE OF REVISION	REVISION

LEGEND

- (E-5) = SAND BAG DITCH CHECK
- (E-6) = ROCK DITCH CHECK
- [E-7] = DROP INLET SILT FENCE
- (E-8) = DIVERSION DITCH (TYPE E-8)
- (E-9) = DUMPED RIPRAP
- (E-11) = SILT FENCE
- (E-12) = SLOPE PIPE DRAIN (12") (TYPE E-12)
- = CONCRETE DITCH PAVING
- [E-9] & [E-10] = SEDIMENT BASIN E-9 OR E-10

EROSION CONTROL MEASURES TO BE PLACED DURING APPROPRIATE STAGES. THESE DEVICES SHALL BE LEFT IN PLACE AS LONG AS REQUIRED TO CONTROL EROSION.

TEMPORARY EROSION CONTROL DETAILS STAGE 2

HBVinson 7/27/2023 1:40:39 PM
WORKSPACE: AHTD
L:\20T\170T660 - ARDOT 012326 Hwy 412 - Hwy 112\Drawings\r012326_EC_ST02_07.dgn
REVISED DATE:

DATE REVISED	DATE REVISED	FED. RD. DIST. NO.	STATE	JOB NO.	SHEET NO.	TOTAL SHEETS
		6	ARK.	012326	79	838
		TEMPORARY EROSION CONTROL DETAILS				
2						

STATE OF ARKANSAS
LICENSED PROFESSIONAL ENGINEER
No.13436
SHAUNA. ROBERSON
DIGITALLY SIGNED 7/28/2023

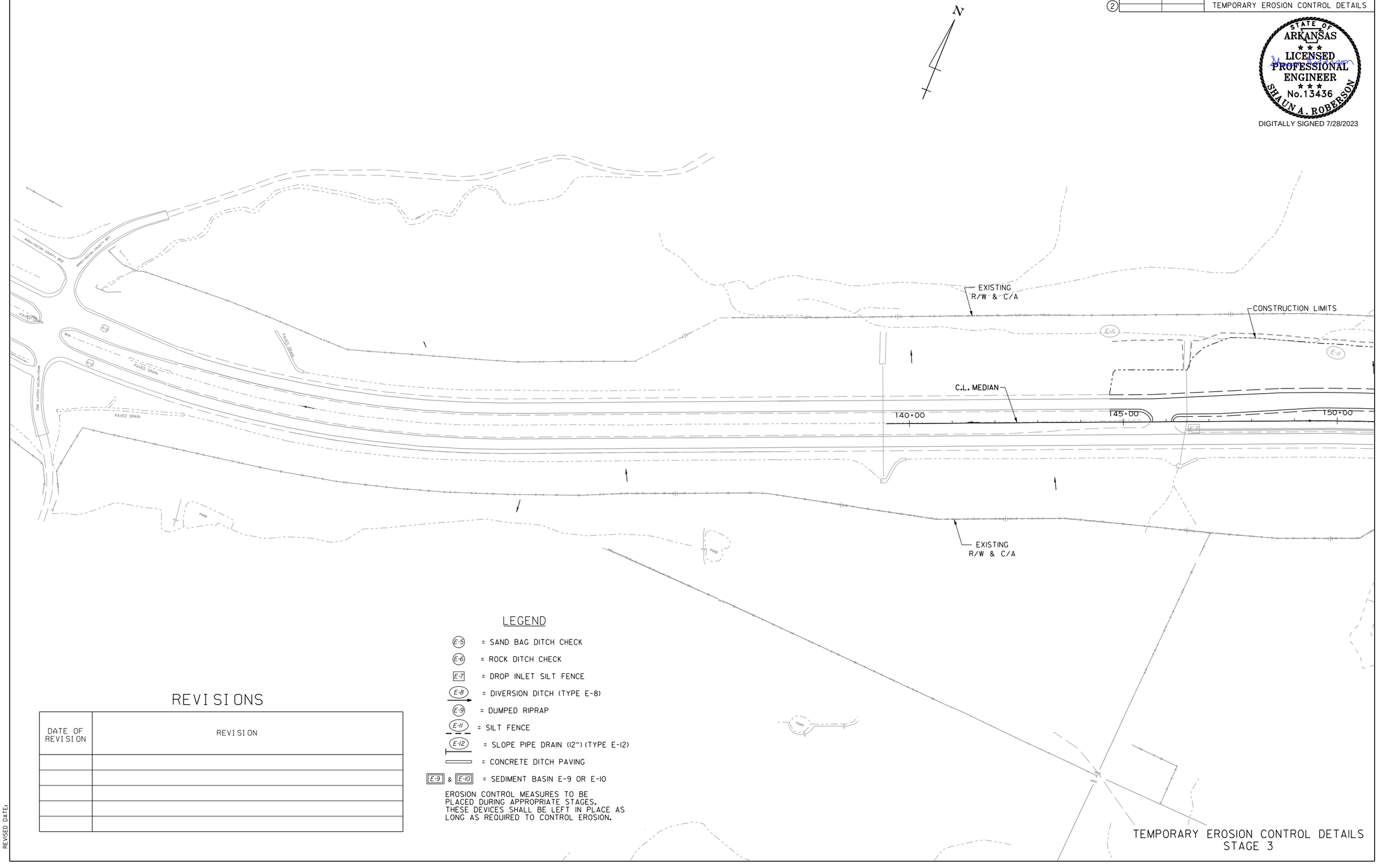

LEGEND

- E-5 = SAND BAG DITCH CHECK
- E-6 = ROCK DITCH CHECK
- E-7 = DROP INLET SILT FENCE
- E-8 = DIVERSION DITCH (TYPE E-8)
- E-9 = DUMPED RIPRAP
- E-11 = SILT FENCE
- E-12 = SLOPE PIPE DRAIN (12") (TYPE E-12)
- = CONCRETE DITCH PAVING
- E-9 & E-10 = SEDIMENT BASIN E-9 OR E-10

EROSION CONTROL MEASURES TO BE PLACED DURING APPROPRIATE STAGES. THESE DEVICES SHALL BE LEFT IN PLACE AS LONG AS REQUIRED TO CONTROL EROSION.

REVISIONS

DATE OF REVISION	REVISION

TEMPORARY EROSION CONTROL DETAILS
STAGE 3

HBVinson 7/27/2023 1:40:41PM
WORKSPACE: AHTD
L:\2017\17017660 - ARDOT 012326 Hwy 412 - Hwy 112\Drawings\r012326_EC_STG3_01.dgn
REVISED DATE:

DATE REVISED	DATE REVISED	FED. RD. DIST. NO.	STATE	JOB NO.	SHEET NO.	TOTAL SHEETS
		6	ARK.	012326	80	838
		TEMPORARY EROSION CONTROL DETAILS				

LEGEND

- E-5 = SAND BAG DITCH CHECK
- E-6 = ROCK DITCH CHECK
- E-7 = DROP INLET SILT FENCE
- E-8 = DIVERSION DITCH (TYPE E-8)
- E-9 = DUMPED RIPRAP
- E-11 = SILT FENCE
- E-12 = SLOPE PIPE DRAIN (12") (TYPE E-12)
- = CONCRETE DITCH PAVING
- E-9 & E-10 = SEDIMENT BASIN E-9 OR E-10

EROSION CONTROL MEASURES TO BE PLACED DURING APPROPRIATE STAGES. THESE DEVICES SHALL BE LEFT IN PLACE AS LONG AS REQUIRED TO CONTROL EROSION.

MEDIAN

SAND BAG DITCH CHECK	(E-5)	INSTALLATION
STA. 157+85 TO 178+40	MEDIAN	27
STA. 176+90 TO 179+95	LT.	7

STATE OF ARKANSAS
LICENSED PROFESSIONAL ENGINEER
No. 13436
SHAUNA A. ROBERSON
DIGITALLY SIGNED 7/28/2023

N

PROPOSED R/W, C/A & FENCE
CONSTRUCTION LIMITS
EXISTING R/W, C/A & FENCE
C.L. MEDIAN
T.C.E.
C.L. HWY. 412B RAMP 4
C.L. HWY. 412B RAMP 1
C.L. MUSTEEN RD.
PROPOSED R/W
150+00
155+00
160+00
165+00
170+00
175+00
180+00
20+00

REVISIONS

DATE OF REVISION	REVISION

TEMPORARY EROSION CONTROL DETAILS
STAGE 3

HBVinson 7/27/2023 1:40:42 PM
WORKSPACE: AHTD
L:\2017\1701660 - ARDOT 012326 Hwy 412 - Hwy 112\Drawings\r012326_EC_ST03_02.dgn
REVISED DATE:

DATE REVISED	DATE REVISED	FED. RD. DIST. NO.	STATE	JOB NO.	SHEET NO.	TOTAL SHEETS
		6	ARK.	012326	81	838
		TEMPORARY EROSION CONTROL DETAILS				
2						

STATE OF ARKANSAS
LICENSED PROFESSIONAL ENGINEER
No.13436
SHAUN A. ROBERSON
DIGITALLY SIGNED 7/28/2023

N

PROPOSED R/W
T.C.E.
CONSTRUCTION LIMITS
C.L. HWY. 412B RAMP 4
PROPOSED R/W, C/A & FENCE
C.L. HWY. 412B RAMP 3
CONSTRUCTION LIMITS
PROPOSED R/W, C/A & FENCE
C.L. MEDIAN
C.L. HWY. 68
C.L. HWY. 412B RAMP 2
C.L. HWY. 412B RAMP 1
PERMANENT CONSTRUCTION EASEMENT
C.L. MUSTEEN RD.
CONSTRUCTION LIMITS
C.L. HWY. 412B
EAVES DRAIN
POND

MEDIAN

SILT FENCE	(E-11)	LIN. FT.
STA. 182+20 TO 186+20	RT.	425
SAND BAG DITCH CHECK	(E-5)	INSTALLATION
STA. 180+45 TO 183+00	LT.	6
STA. 181+10 TO 210+00	MEDIAN	18
DROP INLET SILT FENCE	[E-7]	LIN. FT.
STA. 187+50	MEDIAN	20
STA. 194+00	MEDIAN	20
STA. 204+00	MEDIAN	20
DIVERSION DITCH	(E-8)	LIN. FT.
STA. 186+40 TO 191+15	LT.	475
STA. 193+60 TO 201+00	LT.	740
SLOPE DRAIN	(E-12)	LIN. FT.
STA. 186+15	LT.	70
STA. 200+00	LT.	70

HWY. 412B

SAND BAG DITCH CHECK	(E-5)	INSTALLATION
STA. 14+95 TO 19+90	RT.	4
ROCK DITCH CHECK	(E-6)	INSTALLATION
STA. 11+90 TO 19+15	RT.	4

HWY. 68

SAND BAG DITCH CHECK	(E-5)	INSTALLATION
STA. 51+15	LT.	1
ROCK DITCH CHECK	(E-6)	INSTALLATION
STA. 49+80	RT.	1

LEGEND

- (E-5) = SAND BAG DITCH CHECK
- (E-6) = ROCK DITCH CHECK
- [E-7] = DROP INLET SILT FENCE
- (E-8) = DIVERSION DITCH (TYPE E-8)
- (E-9) = DUMPED RIPRAP
- (E-11) = SILT FENCE
- (E-12) = SLOPE PIPE DRAIN (12") (TYPE E-12)
- = CONCRETE DITCH PAVING
- [E-9] & [E-10] = SEDIMENT BASIN E-9 OR E-10

EROSION CONTROL MEASURES TO BE PLACED DURING APPROPRIATE STAGES. THESE DEVICES SHALL BE LEFT IN PLACE AS LONG AS REQUIRED TO CONTROL EROSION.

REVISIONS

DATE OF REVISION	REVISION

TEMPORARY EROSION CONTROL DETAILS
STAGE 3

HBVinson 7/27/2023 1:40:44 PM
WORKSPACE: AHTD
L:\2017\17017660 - ARDOT 012326 Hwy 412 - Hwy 112\Drawings\r012326_EC_ST03_03.dgn
REVISED DATE:

DATE REVISED	DATE REVISED	FED. RD. DIST. NO.	STATE	JOB NO.	SHEET NO.	TOTAL SHEETS
		6	ARK.	012326	82	838
		TEMPORARY EROSION CONTROL DETAILS				

(2)

STATE OF ARKANSAS
LICENSED PROFESSIONAL ENGINEER
No.13436
SHAUNA. ROBERSON
DIGITALLY SIGNED 7/28/2023

MEDIAN

SAND BAG DITCH CHECK	(E-5)	INSTALLATION
STA. 210+00 TO 240+00	LT.	15
STA. 212+05 TO 240+00	MEDIAN	23
STA. 210+00 TO 240+00	RT.	19

ROCK DITCH CHECK	(E-6)	INSTALLATION
STA. 210+00 TO 240+00	RT.	7
STA. 210+00 TO 240+00	LT.	7

DROP INLET SILT FENCE	[E-7]	LIN. FT.
STA. 211+00	MEDIAN	20
STA. 221+00	MEDIAN	20
STA. 231+00	MEDIAN	20

DIVERSION DITCH	(E-8)	LIN. FT.
STA. 237+00 TO 239+00	RT.	200

SLOPE DRAIN	(E-12)	LIN. FT.
STA. 239+30 RT.	RT.	95

T.C.E.

PROPOSED R/W

C.L. LIBERTY AVE.

PROPOSED R/W, C/A & FENCE

CONSTRUCTION LIMITS

C.L. MEDIAN

CONSTRUCTION LIMITS

PROPOSED R/W, C/A & FENCE

PROPOSED R/W

C.L. LIBERTY AVE. ACCESS RD.

T.C.E.

LIBERTY AVE.

SILT FENCE	(E-11)	LIN. FT.
STA. 16+45 TO 18+70	LT.	235
STA. 16+60 TO 18+40	RT.	180
STA. 21+20 TO 24+80	RT.	365
STA. 21+60 TO 24+60	LT.	315

SAND BAG DITCH CHECK	(E-5)	INSTALLATION
STA. 18+55 TO 23+70	RT.	4

ROCK DITCH CHECK	(E-6)	INSTALLATION
STA. 23+65	RT.	1

LEGEND

- (E-5) = SAND BAG DITCH CHECK
- (E-6) = ROCK DITCH CHECK
- [E-7] = DROP INLET SILT FENCE
- (E-8) = DIVERSION DITCH (TYPE E-8)
- (E-9) = DUMPED RIPRAP
- (E-11) = SILT FENCE
- (E-12) = SLOPE PIPE DRAIN (12") (TYPE E-12)
- = CONCRETE DITCH PAVING
- [E-9] & [E-10] = SEDIMENT BASIN E-9 OR E-10

EROSION CONTROL MEASURES TO BE PLACED DURING APPROPRIATE STAGES. THESE DEVICES SHALL BE LEFT IN PLACE AS LONG AS REQUIRED TO CONTROL EROSION.

REVISIONS

DATE OF REVISION	REVISION

TEMPORARY EROSION CONTROL DETAILS
STAGE 3

HBVinson 7/27/2023 1:40:47 PM
WORKSPACE: AHTD
L:\2017\17017660 - ARDOT 012326 Hwy 412 - Hwy 112\Drawings\r012326_EC_ST03_04.dgn
REVISED DATE:

DATE REVISED	DATE REVISED	FED. RD. DIST. NO.	STATE	JOB NO.	SHEET NO.	TOTAL SHEETS
		6	ARK.	012326	83	838
		TEMPORARY EROSION CONTROL DETAILS				
2						

STATE OF ARKANSAS
LICENSED PROFESSIONAL ENGINEER
No.13436
SHAUNA. ROBERSON
DIGITALLY SIGNED 7/28/2023

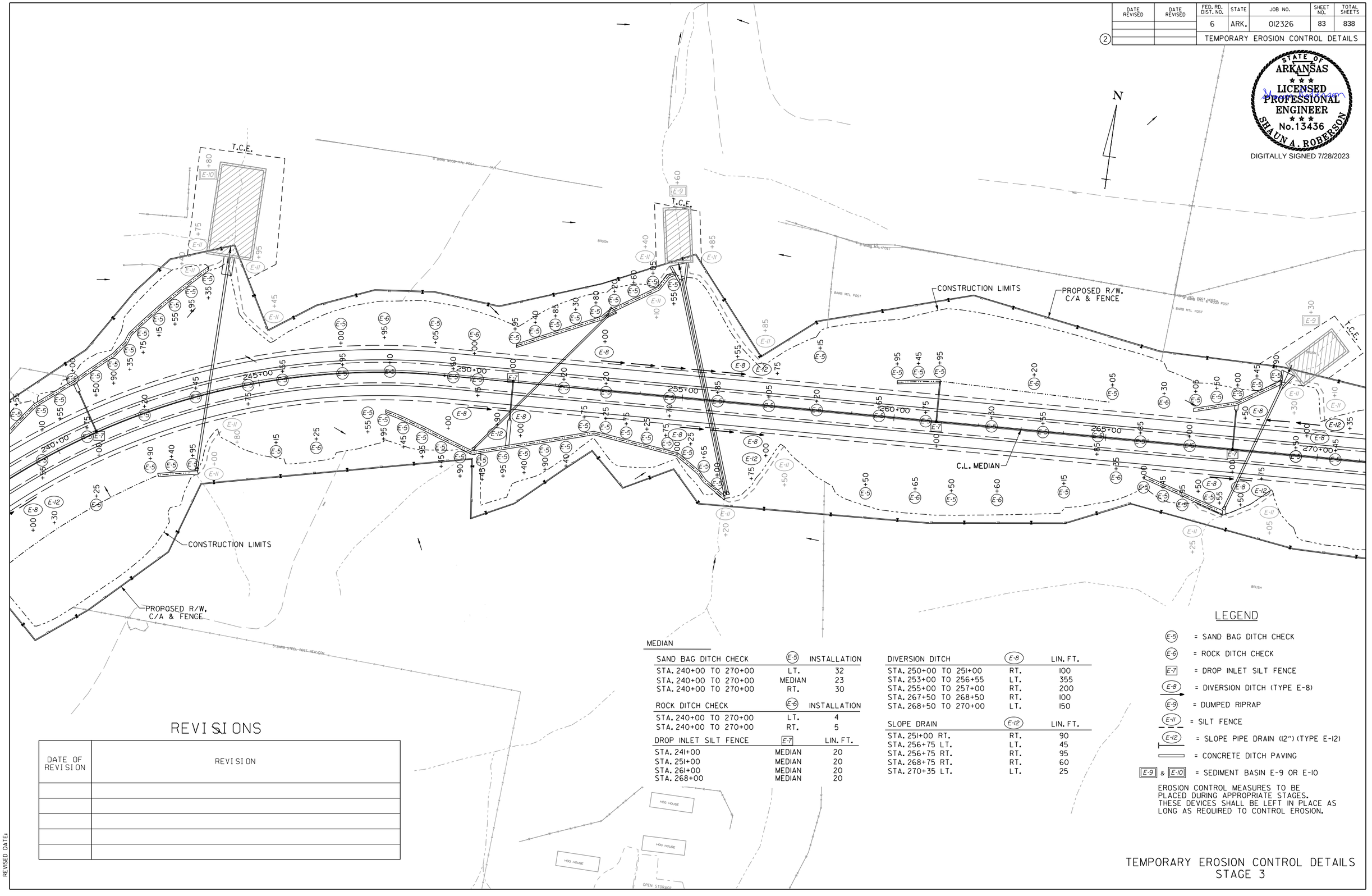

MEDIAN

SAND BAG DITCH CHECK	E-5	INSTALLATION
STA. 240+00 TO 270+00	LT.	32
STA. 240+00 TO 270+00	MEDIAN	23
STA. 240+00 TO 270+00	RT.	30

ROCK DITCH CHECK	E-6	INSTALLATION
STA. 240+00 TO 270+00	LT.	4
STA. 240+00 TO 270+00	RT.	5

DROP INLET SILT FENCE	E-7	LIN. FT.
STA. 241+00	MEDIAN	20
STA. 251+00	MEDIAN	20
STA. 261+00	MEDIAN	20
STA. 268+00	MEDIAN	20

DIVERSION DITCH	E-8	LIN. FT.
STA. 250+00 TO 251+00	RT.	100
STA. 253+00 TO 256+55	LT.	355
STA. 255+00 TO 257+00	RT.	200
STA. 267+50 TO 268+50	RT.	100
STA. 268+50 TO 270+00	LT.	150

SLOPE DRAIN	E-12	LIN. FT.
STA. 251+00 RT.	RT.	90
STA. 256+75 LT.	LT.	45
STA. 256+75 RT.	RT.	95
STA. 268+75 RT.	RT.	60
STA. 270+35 LT.	LT.	25

LEGEND

- E-5 = SAND BAG DITCH CHECK
- E-6 = ROCK DITCH CHECK
- E-7 = DROP INLET SILT FENCE
- E-8 = DIVERSION DITCH (TYPE E-8)
- E-9 = DUMPED RIPRAP
- E-11 = SILT FENCE
- E-12 = SLOPE PIPE DRAIN (12") (TYPE E-12)
- = CONCRETE DITCH PAVING
- E-9 & E-10 = SEDIMENT BASIN E-9 OR E-10

EROSION CONTROL MEASURES TO BE PLACED DURING APPROPRIATE STAGES. THESE DEVICES SHALL BE LEFT IN PLACE AS LONG AS REQUIRED TO CONTROL EROSION.

REVISIONS

DATE OF REVISION	REVISION

TEMPORARY EROSION CONTROL DETAILS
STAGE 3

HBVinson 7/27/2023 1:40:48 PM
WORKSPACE: AHTD
L:\2017\17017660 - ARDOT 012326 Hwy 412 - Hwy 112\Drawings\r012326_EC_STG3_05.dgn
REVISED DATE:

DATE REVISED	DATE REVISED	FED. RD. DIST. NO.	STATE	JOB NO.	SHEET NO.	TOTAL SHEETS
		6	ARK.	012326	84	838
		TEMPORARY EROSION CONTROL DETAILS				

STATE OF ARKANSAS
LICENSED PROFESSIONAL ENGINEER
No.13436
SHAUNA ROBERSON
DIGITALLY SIGNED 7/28/2023

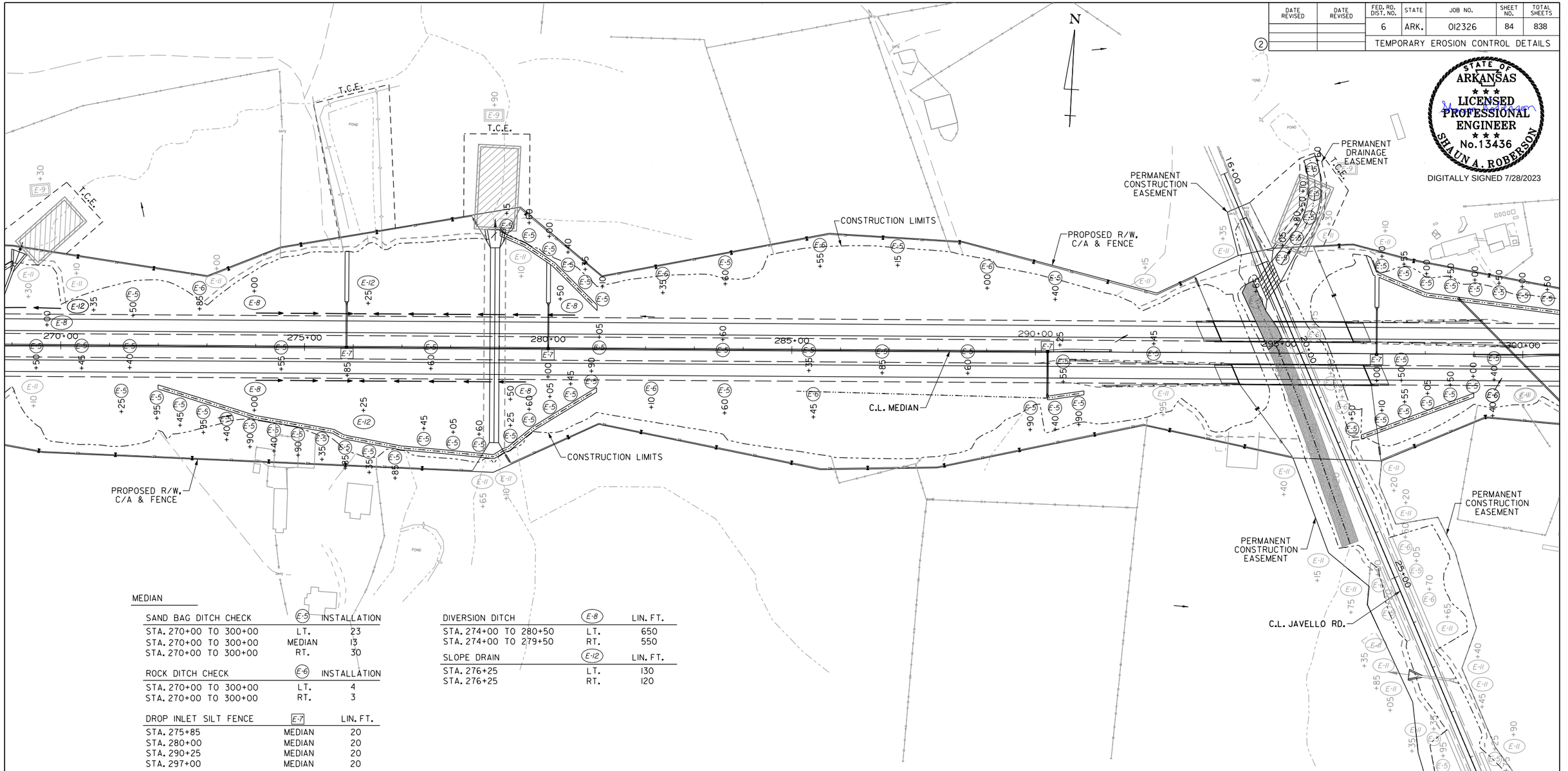

MEDIAN

SAND BAG DITCH CHECK (E-5)		INSTALLATION
STA. 270+00 TO 300+00	LT.	23
STA. 270+00 TO 300+00	MEDIAN	13
STA. 270+00 TO 300+00	RT.	30

ROCK DITCH CHECK (E-6)		INSTALLATION
STA. 270+00 TO 300+00	LT.	4
STA. 270+00 TO 300+00	RT.	3

DROP INLET SILT FENCE (E-7)		LIN. FT.
STA. 275+85	MEDIAN	20
STA. 280+00	MEDIAN	20
STA. 290+25	MEDIAN	20
STA. 297+00	MEDIAN	20

DIVERSION DITCH (E-8)		LIN. FT.
STA. 274+00 TO 280+50	LT.	650
STA. 274+00 TO 279+50	RT.	550

SLOPE DRAIN (E-12)		LIN. FT.
STA. 276+25	LT.	130
STA. 276+25	RT.	120

REVISIONS

DATE OF REVISION	REVISION

LEGEND

- (E-5) = SAND BAG DITCH CHECK
- (E-6) = ROCK DITCH CHECK
- [E-7] = DROP INLET SILT FENCE
- (E-8) = DIVERSION DITCH (TYPE E-8)
- (E-9) = DUMPED RIPRAP
- (E-11) = SILT FENCE
- (E-12) = SLOPE PIPE DRAIN (12") (TYPE E-12)
- = CONCRETE DITCH PAVING
- [E-9] & [E-10] = SEDIMENT BASIN E-9 OR E-10

EROSION CONTROL MEASURES TO BE PLACED DURING APPROPRIATE STAGES. THESE DEVICES SHALL BE LEFT IN PLACE AS LONG AS REQUIRED TO CONTROL EROSION.

TEMPORARY EROSION CONTROL DETAILS
STAGE 3

HBVinson 7/27/2023 1:40:50 PM
WORKSPACE: AHTD
L:\20\7\01\7660 - ARDOT 012326 Hwy 412 - Hwy 112\Drawings\r012326_EC_STG3_06.dgn
REVISED DATE:

DATE REVISED	DATE REVISED	FED. RD. DIST. NO.	STATE	JOB NO.	SHEET NO.	TOTAL SHEETS
		6	ARK.	012326	85	838
		TEMPORARY EROSION CONTROL DETAILS				

STATE OF ARKANSAS
LICENSED PROFESSIONAL ENGINEER
No. 13436
SHAUN A. ROBERSON
DIGITALLY SIGNED 7/28/2023

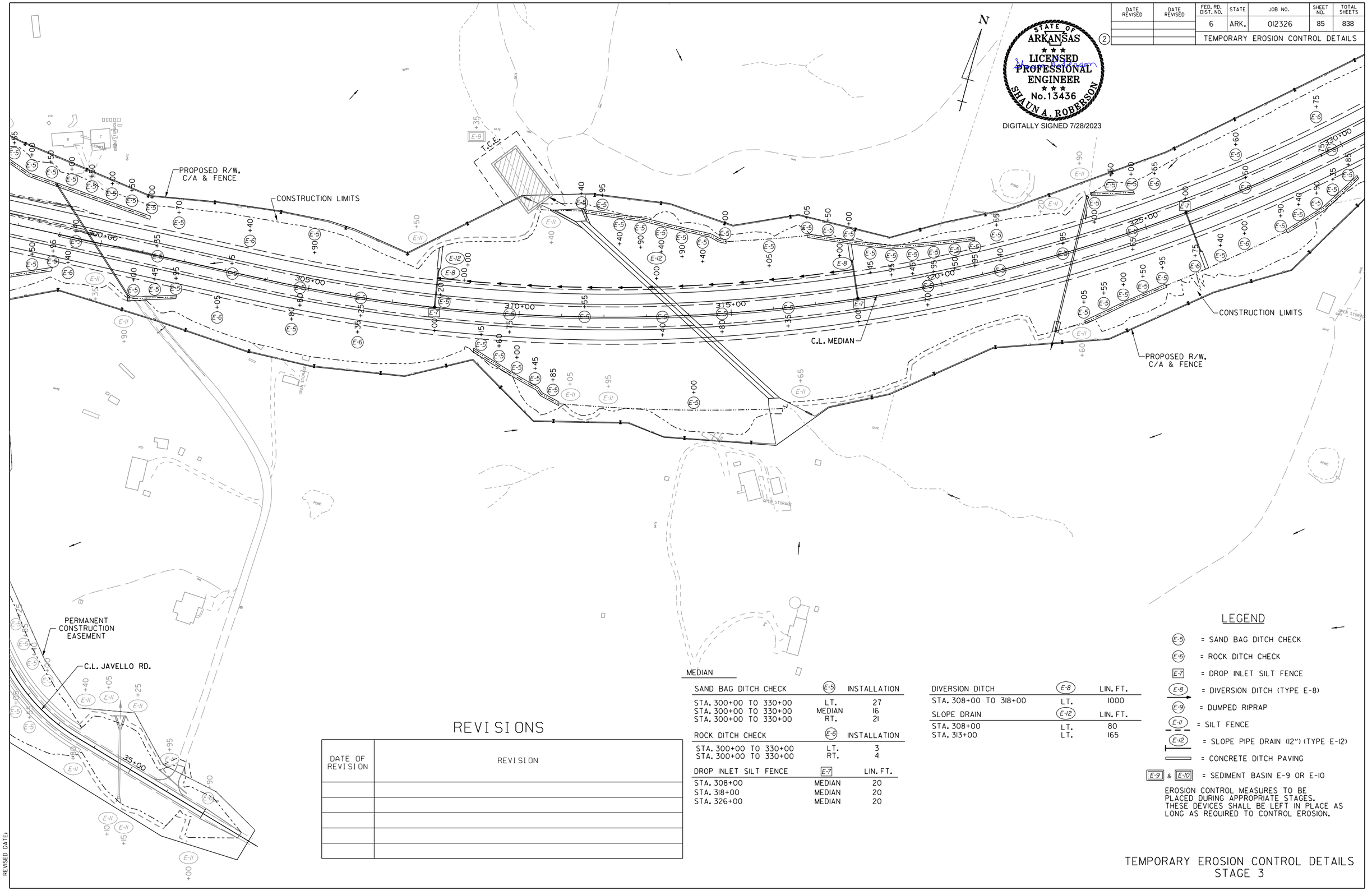

MEDIAN

SAND BAG DITCH CHECK (E-5)		INSTALLATION
STA. 300+00 TO 330+00	LT.	27
STA. 300+00 TO 330+00	MEDIAN	16
STA. 300+00 TO 330+00	RT.	21

ROCK DITCH CHECK (E-6)		INSTALLATION
STA. 300+00 TO 330+00	LT.	3
STA. 300+00 TO 330+00	RT.	4

DROP INLET SILT FENCE [E-7]		LIN. FT.
STA. 308+00	MEDIAN	20
STA. 318+00	MEDIAN	20
STA. 326+00	MEDIAN	20

DIVERSION DITCH (E-8)		LIN. FT.
STA. 308+00 TO 318+00	LT.	1000

SLOPE DRAIN (E-12)		LIN. FT.
STA. 308+00	LT.	80
STA. 313+00	LT.	165

LEGEND

- (E-5) = SAND BAG DITCH CHECK
- (E-6) = ROCK DITCH CHECK
- [E-7] = DROP INLET SILT FENCE
- (E-8) = DIVERSION DITCH (TYPE E-8)
- (E-9) = DUMPED RIPRAP
- (E-11) = SILT FENCE
- (E-12) = SLOPE PIPE DRAIN (12") (TYPE E-12)
- = CONCRETE DITCH PAVING
- [E-9] & [E-10] = SEDIMENT BASIN E-9 OR E-10

EROSION CONTROL MEASURES TO BE PLACED DURING APPROPRIATE STAGES. THESE DEVICES SHALL BE LEFT IN PLACE AS LONG AS REQUIRED TO CONTROL EROSION.

REVISIONS

DATE OF REVISION	REVISION

TEMPORARY EROSION CONTROL DETAILS
STAGE 3

HBVinson 7/27/2023 1:40:52 PM
WORKSPACE: AHTD
L:\20\7\0\7660 - ARDOT 012326 Hwy 412 - Hwy 112\Drawings\r012326_EC_STG3_07.dgn
REVISED DATE:

DATE REVISED	DATE REVISED	FED. RD. DIST. NO.	STATE	JOB NO.	SHEET NO.	TOTAL SHEETS
		6	ARK.	012326	86	838
		TEMPORARY EROSION CONTROL DETAILS				

STATE OF ARKANSAS
LICENSED PROFESSIONAL ENGINEER
No. 13436
SHAUN A. ROBERSON
DIGITALLY SIGNED 7/28/2023

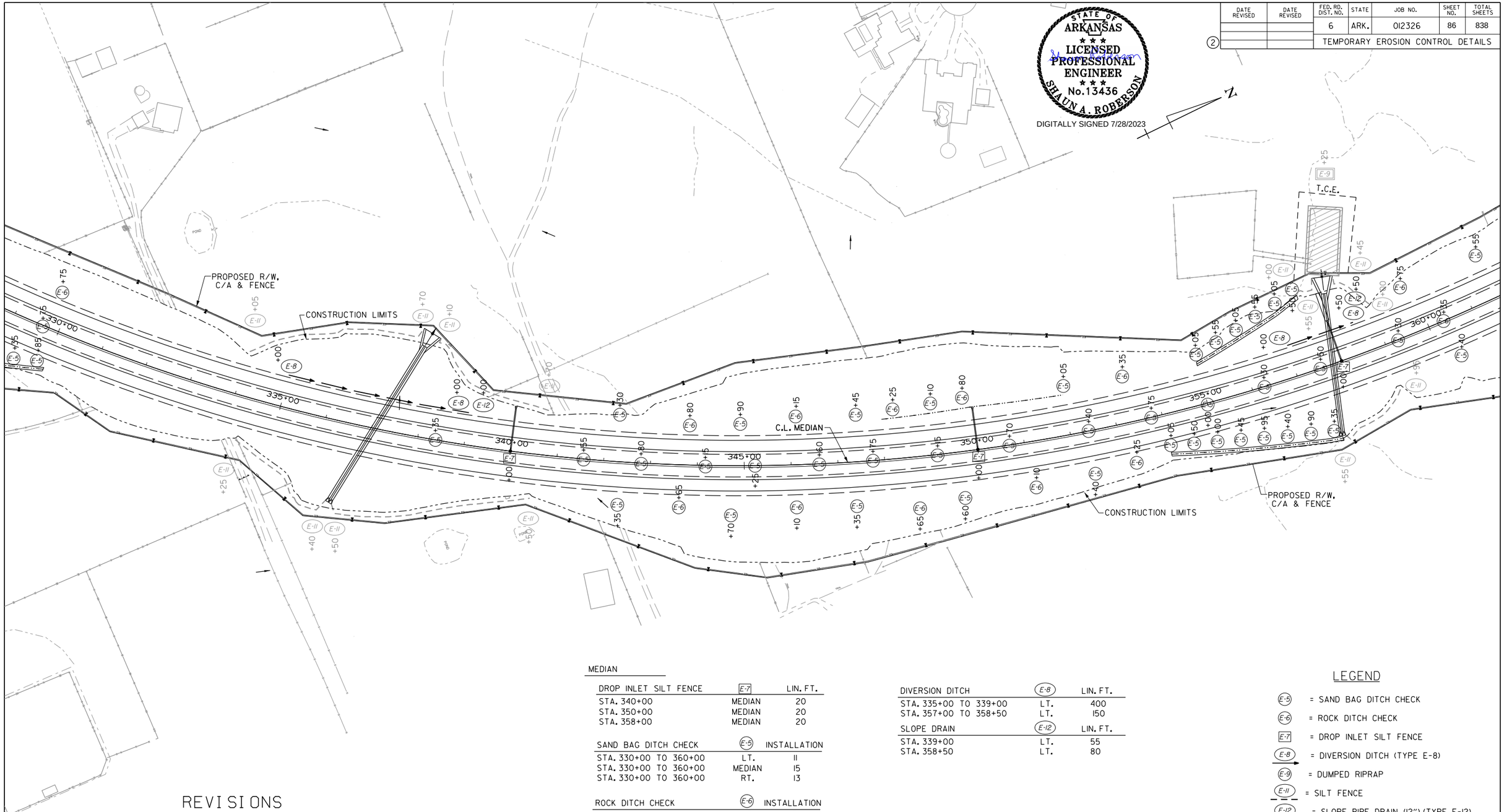

MEDIAN

DROP INLET SILT FENCE	E-7	LIN. FT.
STA. 340+00	MEDIAN	20
STA. 350+00	MEDIAN	20
STA. 358+00	MEDIAN	20

SAND BAG DITCH CHECK	E-5	INSTALLATION
STA. 330+00 TO 360+00	LT.	11
STA. 330+00 TO 360+00	MEDIAN	15
STA. 330+00 TO 360+00	RT.	13

ROCK DITCH CHECK	E-6	INSTALLATION
STA. 330+00 TO 360+00	LT.	6
STA. 330+00 TO 360+00	RT.	5

DIVERSION DITCH	E-8	LIN. FT.
STA. 335+00 TO 339+00	LT.	400
STA. 357+00 TO 358+50	LT.	150

SLOPE DRAIN	E-12	LIN. FT.
STA. 339+00	LT.	55
STA. 358+50	LT.	80

LEGEND

- E-5 = SAND BAG DITCH CHECK
- E-6 = ROCK DITCH CHECK
- E-7 = DROP INLET SILT FENCE
- E-8 = DIVERSION DITCH (TYPE E-8)
- E-9 = DUMPED RIPRAP
- E-11 = SILT FENCE
- E-12 = SLOPE PIPE DRAIN (12") (TYPE E-12)
- = CONCRETE DITCH PAVING
- E-9 & E-10 = SEDIMENT BASIN E-9 OR E-10

EROSION CONTROL MEASURES TO BE PLACED DURING APPROPRIATE STAGES. THESE DEVICES SHALL BE LEFT IN PLACE AS LONG AS REQUIRED TO CONTROL EROSION.

REVISIONS

DATE OF REVISION	REVISION

TEMPORARY EROSION CONTROL DETAILS
STAGE 3

HBVinson 7/27/2023 1:40:53 PM
WORKSPACE: AHTD
L:\2017\17017660 - ARDOT 012326 Hwy 412 - Hwy 112\Drawings\r012326_EC_STG3_08.dgn
REVISED DATE:

DATE REVISED	DATE REVISED	FED. RD. DIST. NO.	STATE	JOB NO.	SHEET NO.	TOTAL SHEETS
		6	ARK.	012326	87	838

TEMPORARY EROSION CONTROL DETAILS

MEDIAN

SAND BAG DITCH CHECK	E-5	INSTALLATION
STA. 360+00 TO 390+00	LT.	14
STA. 360+00 TO 390+00	MEDIAN	15
STA. 360+00 TO 390+00	RT.	14

ROCK DITCH CHECK	E-6	INSTALLATION
STA. 360+00 TO 390+00	LT.	4
STA. 360+00 TO 390+00	RT.	4

DROP INLET SILT FENCE	E-7	LIN. FT.
STA. 368+00	MEDIAN	20
STA. 389+00	MEDIAN	20

DIVERSION DITCH	E-8	LIN. FT.
STA. 372+00 TO 380+45	LT.	845
STA. 372+00 TO 380+45	RT.	845

SLOPE DRAIN	E-12	LIN. FT.
STA. 377+00	LT.	80
STA. 377+00	RT.	75
STA. 380+45	LT.	120
STA. 380+45	RT.	100

STATE OF ARKANSAS
LICENSED PROFESSIONAL ENGINEER
No. 13436
SHAUN A. ROBERSON
DIGITALLY SIGNED 7/28/2023

N

BRUSH CREEK

T.C.E.

PROPOSED R/W, C/A & FENCE

CONSTRUCTION LIMITS

APPROXIMATE 100 YEAR FLOOD PLAIN LIMITS

C.L. MEDIAN

C.L. BRUSH CRK. RD.

15.00

25.00

360+00 365+00 370+00 375+00 380+00 385+00 390+00

REVISIONS

DATE OF REVISION	REVISION

LEGEND

- E-5 = SAND BAG DITCH CHECK
- E-6 = ROCK DITCH CHECK
- E-7 = DROP INLET SILT FENCE
- E-8 = DIVERSION DITCH (TYPE E-8)
- E-9 = DUMPED RIPRAP
- E-11 = SILT FENCE
- E-12 = SLOPE PIPE DRAIN (12") (TYPE E-12)
- = CONCRETE DITCH PAVING
- E-9 & E-10 = SEDIMENT BASIN E-9 OR E-10

EROSION CONTROL MEASURES TO BE PLACED DURING APPROPRIATE STAGES. THESE DEVICES SHALL BE LEFT IN PLACE AS LONG AS REQUIRED TO CONTROL EROSION.

TEMPORARY EROSION CONTROL DETAILS
STAGE 3

HBVinson
7/27/2023 1:40:56 PM
WORKSPACE: AHTD
L:\2017\170176\60 - ARDOT 012326 Hwy 412 - Hwy 112\Drawings\r012326_EC_STG3_09.dgn
REVISED DATE:

DATE REVISED	DATE REVISED	FED. RD. DIST. NO.	STATE	JOB NO.	SHEET NO.	TOTAL SHEETS
		6	ARK.	012326	88	838
		TEMPORARY EROSION CONTROL DETAILS				

(2)

MEDIAN

SAND BAG DITCH CHECK (E-5)		INSTALLATION
STA. 390+00 TO 420+00	LT.	27
STA. 390+00 TO 420+00	MEDIAN	33
STA. 390+00 TO 420+00	RT.	20

ROCK DITCH CHECK (E-6)		INSTALLATION
STA. 390+00 TO 420+00	LT.	13
STA. 390+00 TO 420+00	RT.	12

DROP INLET SILT FENCE (E-7)		LIN. FT.
STA. 399+00	MEDIAN	20
STA. 409+00	MEDIAN	20
STA. 419+00	MEDIAN	20

STATE OF ARKANSAS
LICENSED PROFESSIONAL ENGINEER
No.13436
SHAUN A. ROBERSON
DIGITALLY SIGNED 7/28/2023

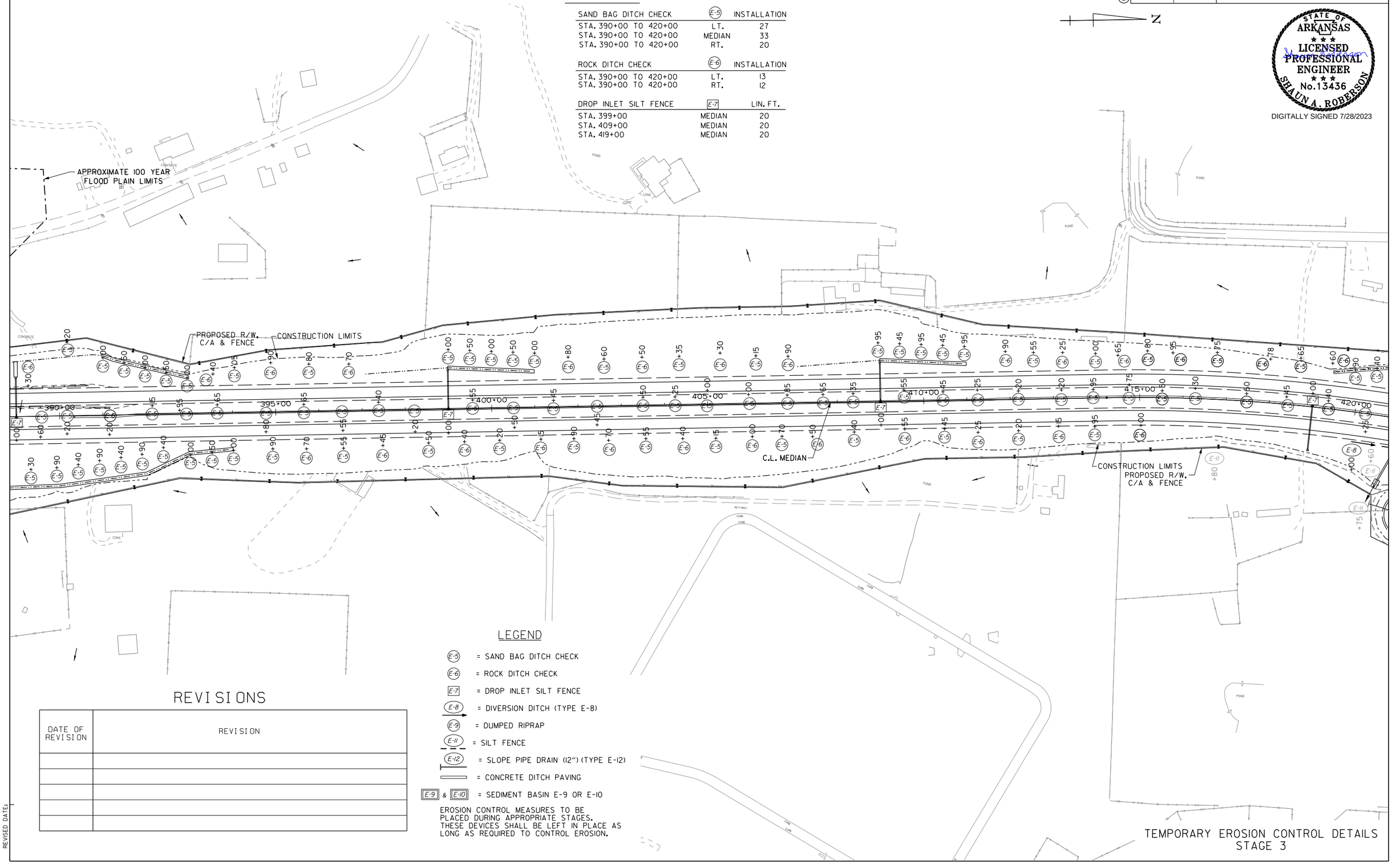

REVISIONS

DATE OF REVISION	REVISION

LEGEND

- (E-5) = SAND BAG DITCH CHECK
- (E-6) = ROCK DITCH CHECK
- [E-7] = DROP INLET SILT FENCE
- (E-8) = DIVERSION DITCH (TYPE E-8)
- (E-9) = DUMPED RIPRAP
- (E-11) = SILT FENCE
- (E-12) = SLOPE PIPE DRAIN (12") (TYPE E-12)
- = CONCRETE DITCH PAVING
- [E-9] & [E-10] = SEDIMENT BASIN E-9 OR E-10

EROSION CONTROL MEASURES TO BE PLACED DURING APPROPRIATE STAGES. THESE DEVICES SHALL BE LEFT IN PLACE AS LONG AS REQUIRED TO CONTROL EROSION.

TEMPORARY EROSION CONTROL DETAILS
STAGE 3

HBVinson 7/27/2023 1:40:56 PM
WORKSPACE: AHTD
L:\2017\17017660 - ARDOT 012326 Hwy 412 - Hwy 112\Drawings\r012326_EC_STG3_10.dgn
REVISED DATE:

DATE REVISED	DATE REVISED	FED. RD. DIST. NO.	STATE	JOB NO.	SHEET NO.	TOTAL SHEETS
		6	ARK.	012326	89	838
		TEMPORARY EROSION CONTROL DETAILS				

2

REVISIONS

DATE OF REVISION	REVISION

STATE OF ARKANSAS
LICENSED PROFESSIONAL ENGINEER
No.13436
SHAUNA ROBERSON
DIGITALLY SIGNED 7/28/2023

MEDIAN

SILT FENCE	E-11	LIN. FT.
STA. 439+65 TO 441+05	RT.	140
STA. 441+15 TO 441+75	RT.	60

ROCK DITCH CHECK	E-6	INSTALLATION
STA. 420+00 TO 450+00	LT.	5
STA. 420+00 TO 450+00	RT.	4

SAND BAG DITCH CHECK	E-5	INSTALLATION
STA. 420+00 TO 450+00	LT.	11
STA. 420+00 TO 450+00	MEDIAN	10
STA. 420+00 TO 450+00	RT.	10

DROP INLET SILT FENCE	E-7	LIN. FT.
STA. 430+00	MEDIAN	20
STA. 441+80	MEDIAN	20

MARCHANT RD.

SAND BAG DITCH CHECK	E-5	INSTALLATION
STA. 19+55	RT.	1

ROCK DITCH CHECK	E-6	INSTALLATION
STA. 21+00	RT.	1

XNA ACCESS RD. RAMP 4

SAND BAG DITCH CHECK	E-5	INSTALLATION
STA. 435+00 TO 442+00	RT.	4
STA. 435+00 TO 442+00	LT.	4

ROCK DITCH CHECK	E-6	INSTALLATION
STA. 435+00 TO 442+00	RT.	3
STA. 435+00 TO 442+00	LT.	1

MARCHANT ACCESS RD.

SAND BAG DITCH CHECK	E-5	INSTALLATION
STA. 13+00 TO 20+00	RT.	5
STA. 13+00 TO 20+00	LT.	2

ROCK DITCH CHECK	E-6	INSTALLATION
STA. 17+20	RT.	1
STA. 18+50	LT.	1

XNA ACCESS RD. RAMP 3

SAND BAG DITCH CHECK	E-5	INSTALLATION
STA. 434+00 TO 445+00	RT.	4
STA. 434+00 TO 445+00	LT.	4

ROCK DITCH CHECK	E-6	INSTALLATION
STA. 434+00 TO 445+00	RT.	3
STA. 434+00 TO 445+00	LT.	3

LEGEND

- E-5 = SAND BAG DITCH CHECK
- E-6 = ROCK DITCH CHECK
- E-7 = DROP INLET SILT FENCE
- E-8 = DIVERSION DITCH (TYPE E-8)
- E-9 = DUMPED RIPRAP
- E-11 = SILT FENCE
- E-12 = SLOPE PIPE DRAIN (12") (TYPE E-12)
- = CONCRETE DITCH PAVING
- E-9 & E-10 = SEDIMENT BASIN E-9 OR E-10

EROSION CONTROL MEASURES TO BE PLACED DURING APPROPRIATE STAGES. THESE DEVICES SHALL BE LEFT IN PLACE AS LONG AS REQUIRED TO CONTROL EROSION.

MEDIAN

DIVERSION DITCH	E-8	LIN. FT.
STA. 420+00 TO 427+10	RT.	710

SLOPE DRAIN	E-12	LIN. FT.
STA. 426+85	RT.	150

DUMPED RIPRAP	E-9	CU. YD.
STA. 426+85	RT.	2

XNA ACCESS RD. RAMP 1

SILT FENCE	E-11	LIN. FT.
STA. 461+95 TO 470+40	RT.	765
STA. 460+95 TO 467+50	LT.	880
STA. 472+60 TO 477+05	LT.	455
STA. 472+90 TO 477+00	RT.	420

SAND BAG DITCH CHECK	E-5	INSTALLATION
STA. 453+45 TO 484+00	RT.	10
STA. 452+20 TO 484+00	LT.	13

ROCK DITCH CHECK	E-6	INSTALLATION
STA. 452+45 TO 455+70	RT.	3
STA. 452+65 TO 468+60	LT.	8

XNA ACCESS RD. RAMP 2

SILT FENCE	E-11	LIN. FT.
STA. 423+75 TO 427+90	LT. & RT.	940
STA. 430+35 TO 435+60	RT.	465
STA. 440+05 TO 443+70	LT.	320

SAND BAG DITCH CHECK	E-5	INSTALLATION
STA. 432+00 TO 440+00	RT.	10
STA. 416+00 TO 420+00	RT.	2

ROCK DITCH CHECK	E-6	INSTALLATION
STA. 432+00 TO 440+00	RT.	2
STA. 416+00 TO 420+00	RT.	1

XNA ACCESS RD. RAMP 1

SEDIMENT BASIN	E-14	CU. YDS.
STA. 453+75	LT.	589
STA. 457+50	RT.	927
STA. 463+75	LT.	181
STA. 464+30	RT.	1175
STA. 464+90	LT.	889

TEMPORARY EROSION CONTROL DETAILS
STAGE 3

HBVinson 7/27/2023 1:40:57 PM
WORKSPACE: AHTD
L:\20FY\701660 - ARDOT 012326 Hwy 412 - Hwy 112\Drawings\r012326_EC_STG3_ILdgn
REVISED DATE:

REVISIONS

DATE OF REVISION	REVISION

DATE REVISED	DATE REVISED	FED. RD. DIST. NO.	STATE	JOB NO.	SHEET NO.	TOTAL SHEETS
		6	ARK.	012326	90	838
		TEMPORARY EROSION CONTROL DETAILS				
2						

STATE OF ARKANSAS
LICENSED PROFESSIONAL ENGINEER
No.13436
SHAUNA ROBERSON
DIGITALLY SIGNED 7/28/2023

MEDIAN

SAND BAG DITCH CHECK	E-5	INSTALLATION
STA. 450+00 TO 480+00	LT.	16
STA. 450+00 TO 480+00	MEDIAN	5
STA. 450+00 TO 480+00	RT.	23

ROCK DITCH CHECK	E-6	INSTALLATION
STA. 450+00 TO 480+00	LT.	3
STA. 450+00 TO 480+00	RT.	8

DROP INLET SILT FENCE	E-7	LIN. FT.
STA. 451+00	MEDIAN	20
STA. 462+00	MEDIAN	20
STA. 472+00	MEDIAN	20

C.L. XNA ACCESS RD. RAMP 3

CONSTRUCTION LIMITS

C.L. XNA ACCESS RD. RAMP 1

C.L. XNA ACCESS RD. RAMP 2

PROPOSED R/W, C/A & FENCE

C.L. ROBBINS RD.

C.L. MEDIAN

PERMANENT CONSTRUCTION EASEMENT

PROPOSED R/W, C/A & FENCE CONSTRUCTION LIMITS

PERMANENT CONSTRUCTION EASEMENT

XNA ACCESS RD. RAMP 2

SAND BAG DITCH CHECK	E-5	INSTALLATION
STA. 450+35 TO 458+20	RT.	7
STA. 451+60 TO 457+35	LT.	5

ROCK DITCH CHECK	E-6	INSTALLATION
STA. 449+80 TO 458+70	RT.	8
STA. 450+75 TO 455+55	LT.	5

LEGEND

- E-5 = SAND BAG DITCH CHECK
- E-6 = ROCK DITCH CHECK
- E-7 = DROP INLET SILT FENCE
- E-8 = DIVERSION DITCH (TYPE E-8)
- E-9 = DUMPED RIPRAP
- E-11 = SILT FENCE
- E-12 = SLOPE PIPE DRAIN (12") (TYPE E-12)
- = CONCRETE DITCH PAVING
- E-9 & E-10 = SEDIMENT BASIN E-9 OR E-10

EROSION CONTROL MEASURES TO BE PLACED DURING APPROPRIATE STAGES. THESE DEVICES SHALL BE LEFT IN PLACE AS LONG AS REQUIRED TO CONTROL EROSION.

TEMPORARY EROSION CONTROL DETAILS
STAGE 3

HBVinson
WORKSPACE: AHTD
L:\20T\T0170660 - ARDOT 012326 Hwy 412 - Hwy 112\Drawings\r012326_EC_STG3_12.dgn
7/27/2023 1:41:00 PM
REVISED DATE:

DATE REVISED	DATE REVISED	FED. RD. DIST. NO.	STATE	JOB NO.	SHEET NO.	TOTAL SHEETS
		6	ARK.	012326	91	838
		TEMPORARY EROSION CONTROL DETAILS				

(2)

LEGEND

- E-5 = SAND BAG DITCH CHECK
- E-6 = ROCK DITCH CHECK
- E-7 = DROP INLET SILT FENCE
- E-8 = DIVERSION DITCH (TYPE E-8)
- E-9 = DUMPED RIPRAP
- E-11 = SILT FENCE
- E-12 = SLOPE PIPE DRAIN (12") (TYPE E-12)
- = CONCRETE DITCH PAVING
- E-9 & E-10 = SEDIMENT BASIN E-9 OR E-10

EROSION CONTROL MEASURES TO BE PLACED DURING APPROPRIATE STAGES. THESE DEVICES SHALL BE LEFT IN PLACE AS LONG AS REQUIRED TO CONTROL EROSION.

STATE OF ARKANSAS
LICENSED PROFESSIONAL ENGINEER
No.13436
SHAUN A. ROBERSON
DIGITALLY SIGNED 7/28/2023

N

EXISTING R/W, C/A & FENCE

C.L. HWY. 112 RAMP 4

C.L. MEDIAN

CONSTRUCTION LIMITS

PROPOSED R/W, C/A & FENCE

C.L. HWY. 112 RAMP 1

C.L. HWY. 112

480+00 485+00 490+00 495+00 500+00 505+00 510+00

10+00 15+00 25+00 30+00

REVISIONS

DATE OF REVISION	REVISION

TEMPORARY EROSION CONTROL DETAILS
STAGE 3

HBVinson
7/27/2023 1:41:02 PM
WORKSPACE: AHTD
L:\2017\170176660 - ARDOT 012326 Hwy 412 - Hwy 112\Drawings\r012326_EC_STG3_13.dgn
REVISED DATE:

REVISIONS

DATE OF REVISION	REVISION

DATE REVISED	DATE REVISED	FED. RD. DIST. NO.	STATE	JOB NO.	SHEET NO.	TOTAL SHEETS
		6	ARK.	012326	92	838
		TEMPORARY EROSION CONTROL DETAILS				
2						

STATE OF ARKANSAS
LICENSED PROFESSIONAL ENGINEER
No.13436
SHAUNA. ROBERSON
DIGITALLY SIGNED 7/28/2023

N

EXIST. R/W
C.L. GRIMSLEY RD.
EXIST. R/W, C/A & FENCE
C.L. MEDIAN
EXIST. R/W, C/A & FENCE
EXIST. R/W

510+00 515+00 520+00 525+00 530+00 535+00 540+00

LEGEND

- (E-5) = SAND BAG DITCH CHECK
- (E-6) = ROCK DITCH CHECK
- [E-7] = DROP INLET SILT FENCE
- (E-8) = DIVERSION DITCH (TYPE E-8)
- (E-9) = DUMPED RIPRAP
- (E-11) = SILT FENCE
- (E-12) = SLOPE PIPE DRAIN (12") (TYPE E-12)
- = CONCRETE DITCH PAVING
- [E-9] & [E-10] = SEDIMENT BASIN E-9 OR E-10

EROSION CONTROL MEASURES TO BE PLACED DURING APPROPRIATE STAGES. THESE DEVICES SHALL BE LEFT IN PLACE AS LONG AS REQUIRED TO CONTROL EROSION.

TEMPORARY EROSION CONTROL DETAILS
STAGE 3

HBVinson
WORKSPACE: AHTD
L:\2017\1701660 - ARDOT 012326 Hwy 412 - Hwy 112\Drawings\r012326_EC_STG3_14.dgn
7/27/2023 1:4:03 PM
REVISED DATE:

DATE REVISED	DATE REVISED	FED. RD. DIST. NO.	STATE	JOB NO.	SHEET NO.	TOTAL SHEETS
		6	ARK.	012326	93	838
		MAINTENANCE OF TRAFFIC DETAILS				

STATE OF ARKANSAS
LICENSED PROFESSIONAL ENGINEER
No.13436
SHAUN A. ROBERSON
DIGITALLY SIGNED 7/28/2023

N

1" =400'

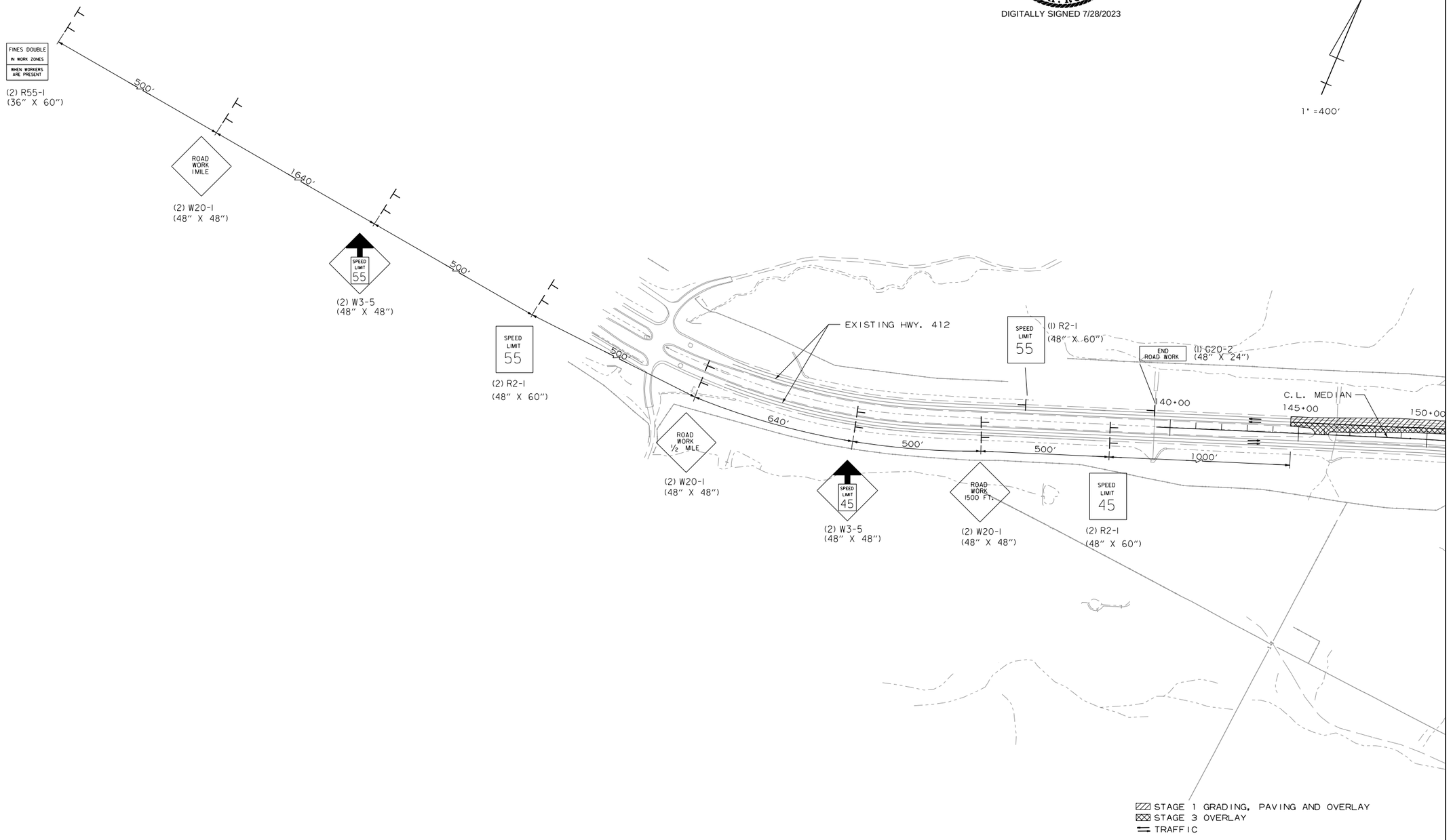

MAINTENANCE OF TRAFFIC DETAILS
HWY. 412B INTERCHANGE - ALL STAGES

HBVinson
WORKSPACE: AHTD
L:\201\1701\660 - ARDOT 012326 Hwy 412 - Hwy 112\Drawings\r012326_MOT_IL_WT1_ALT2_ST123.dgn
7/27/2023 1:41:04 PM
REVISED DATE:

DATE REVISED	DATE REVISED	FED. RD. DIST. NO.	STATE	JOB NO.	SHEET NO.	TOTAL SHEETS
		6	ARK.	012326	94	838
		MAINTENANCE OF TRAFFIC DETAILS				

STAGE 1
CONSTRUCTION SEQUENCE NOTES

1. MAINTAIN TRAFFIC ON EXISTING HWY. 412
2. CONSTRUCT TEMPORARY CROSSOVER 1 AND HWY 412B WIDENING
3. DURING NOTCH AND WIDEN OPERATIONS ON HWY. 412, THE NOTCH SHALL BE SHOULDERED UP AT ALL TIMES.

STATE OF ARKANSAS
LICENSED PROFESSIONAL ENGINEER
No.13436
SHAUN A. ROBERSON
DIGITALLY SIGNED 7/28/2023

(2)

N

1" = 400'

150+00
155+00
160+00
165+00
170+00
175+00
180+00
185+00
190+00
195+00
200+00
205+00
210+00
10+00
15+00
20+00
25+00

ROAD WORK AHEAD
(2) W20-1 (48" X 48")

500'

SHOULDER WORK
(2) W2I-5 (30" X 30")

500'

SHOULDER CLOSED
(2) RSP-1 (48" X 30")

END ROAD WORK
(I) G20-2 (48" X 24")

ROAD WORK AHEAD
(I) W20-1 (48" X 48")

500'

MUSTEEN RD.

HWY. 68

BEGIN TEMP. CROSSOVER 1 STA. 10+00.00, 12' RT. =
C.L. MEDIAN STA. 183+30.62, 146.89' RT.

12 TRAFFIC DRUMS @ 50' O.C.
TEMP. CROSSOVER 1
STA. 9+50 TO STA. 15+00

HWY. 412B RAMP 1 STA. 181+05.27, 16.56' RT.

PC 10+00.60
PI 11+74.16
PRC 13+47.36

C.L. TEMPORARY CROSSOVER 1
P.I. 11+74.16
Δ = 10°25'14.7" RT.
D = 3°00'00"
T = 174.16'
L = 347.36

44 TRAFFIC DRUMS @ 50' O.C.
RAMP 1 STA. 179+50 TO
HWY 412B STA. 17+00

TEMPORARY CROSSOVER 1

10 TRAFFIC DRUMS @ 50' O.C.
RAMP 1 STA. 187+00 TO
RAMP 1 STA. 191+50

RAMP 1 STA. 188+25.26, 40.01' RT.
PT 15+54.73

HWY 412B TEMPORARY WIDENING

PT 17+60.48
RAMP 1 STA. 193+59.62, 41.03' RT.

END TEMP. CROSSOVER 1 STA. 17+60.48, 12' LT. =
C.L. MEDIAN STA. 189+65.73, 469.45' RT.

ROAD WORK AHEAD
(I) W20-1 (48" X 48")

END ROAD WORK
(I) G20-2 (48" X 24")

HWY. 412B

HWY. 412B STA. 16+29.21, 30.05' RT.

C.L. TEMPORARY CROSSOVER 1
P.I. 15+54.73
Δ = 12°23'37.0" LT.
D = 3°00'00"
T = 207.37'
L = 413.12

C.L. MEDIAN

SPEED LIMIT 45
(I) R2-1 (48" X 60")

ROAD WORK 1000 FT.
(I) W20-1 (48" X 48")

ROAD WORK 500 FT.
(I) W20-1 (48" X 48")

ROAD WORK 1500 FT.
(I) W20-1 (48" X 48")

SPEED LIMIT 45
(I) W3-5 (48" X 48")

FINES DOUBLE IN WORK ZONES WHEN WORKERS ARE PRESENT
(I) R55-1 (36" X 60")

500'
250' 250' 250' 250' 250'

END ROAD WORK
(I) G20-2 (48" X 24")

SPEED LIMIT 55
(I) R2-1 (48" X 60")

EXISTING HWY. 412

STAGE 1A GRADING AND PAVING
STAGE 1B GRADING AND PAVING
TRAFFIC

MAINTENANCE OF TRAFFIC DETAILS
HWY. 412B INTERCHANGE - STAGE IA AND IB

WBCalloway 7/31/2023 8:42:43 AM
WORKSPACE: AHTD
L:\2017\1701660 - ARDOT 012326 Hwy 412 - Hwy 112\Drawings\r012326_MOT_07_WTI_ALT2_STPHI.dgn
REVISED DATE:

DATE REVISED	DATE REVISED	FED. RD. DIST. NO.	STATE	JOB NO.	SHEET NO.	TOTAL SHEETS
		6	ARK.	012326	95	838
		MAINTENANCE OF TRAFFIC DETAILS				

STATE OF ARKANSAS
LICENSED PROFESSIONAL ENGINEER
No.13436
SHAUN A. ROBERSON
DIGITALLY SIGNED 7/28/2023

STAGE 1

CONSTRUCTION SEQUENCE NOTES

1. MAINTAIN TRAFFIC ON EXISTING HWY. 412 AND MUSTEEN RD. WEST BOUND TRAFFIC TO USE EXISTING HWY. 412 RT. LANES AND TEMPORARY CROSSOVER 1 TO AVOID HWY. 412B RAMP 4 AND HWY. 412B CONSTRUCTION.
2. CONSTRUCT MUSTEEN RD UNDER TRAFFIC.
3. CONSTRUCT HWY. 412B RAMP 4.
4. NOTCH AND WIDEN EXISTING HWY. 412 FOR HWY. 412B RAMP 4 ACCEL LANE AND TAPER. OVERLAY EXISTING LT. LANE OF LT. MAIN LANES FROM STA. 144+68.03 TO STA. 161+68.03 UNDER TRAFFIC.
5. OVERLAY LEFT LANES OF HWY. 412B, LEAVING 48' OF EXISTING 412 B OPEN TO TRAFFIC.
6. CONSTRUCT TEMPORARY CROSSOVER 2.
7. DURING NOTCH AND WIDEN OPERATIONS ON HWY. 412, THE NOTCH SHALL BE SHOULDERED UP AT ALL TIMES.

N

1" =400'

C.L. TEMPORARY CROSSOVER 2
P.I. 15+30.99
Δ = 17°28'25.6" RT.
D = 3°00'00"
T = 293.51
L = 582.46

BEGIN TEMP. CROSSOVER 2 STA. 10+00.00, 12' LT. = C.L. MEDIAN STA. 159+08.77, 29.82' RT.

56 TRAFFIC DRUMS @ 50' O.C.
STA. 145+50 TO STA. 173+00

TEMPORARY CROSSOVER 2

10 TRAFFIC DRUMS @ 50' O.C.
STA. 163+00 TO STA. 167+50

END TEMP. CROSSOVER 1 STA. 18+19.94, 12' RT. = C.L. MEDIAN STA. 167+23.91, 29.65' LT.

ROAD CLOSED
(2) RII-2 (48" X 30")
(48') BARR. TYP. III LT.

9 TRAFFIC DRUMS @ 50' O.C.
STA. 158+50 TO STA. 162+50

HWY. 412B RAMP 4

(2) W6-2 (36" X 36")

C.L. TEMPORARY CROSSOVER 2
P.I. 11+18.90
Δ = 7°07'28.4" LT.
D = 3°00'00"
T = 118.90'
L = 237.49

ROAD CLOSED
(1) RII-2 (48" X 30")
(16') BARR. TYP. II RT.

(2) WI-4bR (48" X 48")

29 TRAFFIC DRUMS @ 50' O.C.
STA. 10+00 TO STA. 15+00

10 TRAFFIC DRUMS @ 50' O.C.
STA. 10+00 TO STA. 15+00

4" CONTINUOUS YELLOW

4" CONTINUOUS WHITE

4" SKIP WHITE

MUSTEEN RD.

END ROAD WORK
(1) G20-2 (48" X 24")

ROAD WORK 500 FT.
(1) W20-1 (48" X 48")

ROAD WORK 1000 FT.
(1) W20-1 (48" X 48")

ROAD WORK 1500 FT.
(1) W20-1 (48" X 48")

(4) WI-8 (18" X 24")

(1) WI-4bR (48" X 48")

(2) W6-3 (48" X 48")

35 TRAFFIC DRUMS @ 50' O.C.
RAMP 4 STA. 193+00 TO HWY. 412B STA. 23+00.

4 TRAFFIC DRUMS @ 50' O.C.
HWY 412B STA. 10+00 TO 11+50

ROAD WORK 1500 FT.
(1) W20-1 (48" X 48")

ROAD WORK 1000 FT.
(1) W20-1 (48" X 48")

ROAD WORK 500 FT.
(1) W20-1 (48" X 48")

END ROAD WORK
(1) G20-2 (48" X 24")

TEMPORARY CROSSOVER 1

HWY. 68

HWY 68 STA. 48+00.00, 12.77' LT.

20 TRAFFIC DRUMS @ 50' O.C.
HWY 68 STA. 48+00 TO STA. 56+50

HWY 68 STA. 54+00.00, 46.00' LT.

HWY 68 STA. 54+80.00, 49.60' LT.

HWY 68 WIDENING

HWY 68 STA. 56+08.00, 99.44' LT.

HWY 68 STA. 56+46.00, 127.53' LT.

(1) WI-4bL (48" X 48")

ROAD CLOSED
(2) RII-2 (48" X 30")
(40') BARR. TYP. III RT.

C.L. HWY. 412B

4" CONTINUOUS WHITE

4" SKIP WHITE

(3) WI-6 (48" X 24")

4" DOUBLE YELLOW

END ROAD WORK

SPEED LIMIT 45

RETAIN FROM PREVIOUS STAGE

ROAD WORK 500 FT.

ROAD WORK 1000 FT.

ROAD WORK 1500 FT.

SPEED LIMIT 45

FINES DOUBLE IN WORK ZONES WHEN WORKERS ARE PRESENT

SPEED LIMIT 55

C.L. MEDIAN

STAGE 1 OVERLAY
STAGE 1C GRADING AND PAVING
STAGE 1D GRADING AND PAVING
TRAFFIC
EXISTING HWY. 412

MAINTENANCE OF TRAFFIC DETAILS
HWY. 412B INTERCHANGE - STAGE IC AND ID

WBCallaway 7/31/2023 8:42:44 AM
WORKSPACE: AHTD
L:\201\T01\660 - ARDOT 012326 Hwy 412 - Hwy 112\Drawings\r012326_MOT_08_WTI_ALT2_STIPH2.dgn
REVISED DATE:

DATE REVISED	DATE REVISED	FED. RD. DIST. NO.	STATE	JOB NO.	SHEET NO.	TOTAL SHEETS
		6	ARK.	012326	96	838
		MAINTENANCE OF TRAFFIC DETAILS				

STATE OF ARKANSAS
LICENSED PROFESSIONAL ENGINEER
No.13436
SHAUN A. ROBERSON
DIGITALLY SIGNED 7/28/2023

STAGE 2

CONSTRUCTION SEQUENCE NOTES

1. HWY. 412 EAST BOUND TO USE THE RT. MAIN LANES, TEMPORARY CROSSOVER 2, EXISTING LT. MAIN LANES, TEMPORARY CROSSOVER 1, AND RT. LANES OF HWY. 412B.
2. MOVE WEST BOUND HWY. 412 TRAFFIC TO USE LEFT LANES OF HWY 412B AND HWY. 412B RAMP 4.
3. MOVE MUSTEEN RD. TRAFFIC TO PROPOSED MUSTEEN RD.
4. CONSTRUCT RT. LANE OF RT. MAIN LANES FROM BEGINNING OF JOB TO STA. 163+00 UNDER TRAFFIC. CONSTRUCT RT. LANES FROM STA. 163+00 TO HWY. 412B RAMP 1.
5. CONSTRUCT HWY. 412B RAMP 1 TO STA. 186+00. CONSTRUCT HWY. 412B RAMP 2 TO RADIUS RETURN, HWY. 412B RAMP 3, AND THE MIDDLE LANES OF HWY. 412B.
6. MOVE HWY. 68 TRAFFIC TO HWY. 68 WIDENING AND CONSTRUCT HWY. 68 OVERLAY UNDER TRAFFIC.
7. DURING NOTCH AND WIDEN OPERATIONS ON HWY. 412, THE NOTCH SHALL BE SHOULDERED UP AT ALL TIMES.

N

1" = 400'

150+00 155+00 160+00 165+00 170+00 175+00 180+00 185+00 190+00 195+00

(4) WI-8 (18" X 24")

TEMPORARY CROSSOVER 2

UNEVEN LANES (I) W8-II (48" X 48")

(2) WI-4bL (48" X 48")

4" CONTINUOUS WHITE

4" SKIP WHITE

4" CONTINUOUS YELLOW

(4) WI-8 (18" X 24")

23 TRAFFIC DRUMS @ 50' O.C. STA. 153+00 TO STA. 165+00

ROAD CLOSED (I) RII-2 (48" X 30") (I) WI-6 (48" X 24") (24') BARR. TYP. III RT.

PRECAST CONCRETE BARRIER STA. 161+65 TO STA. 173+40

HWY. 412B RAMP 4

ROAD CLOSED (I) RII-2 (48" X 30") (24') BARR. TYP. III RT.

ROAD CLOSED (I) RII-2 (48" X 30") (I) WI-6 (48" X 24") (16') BARR. TYP. III LT.

RAMP 1

MUSTEEN RD.

5 TRAFFIC DRUMS @ 50' O.C. STA. 13+25 TO STA. 15+25

(2) WI-4bR (48" X 48")

4" CONTINUOUS YELLOW

4" CONTINUOUS WHITE

(4) WI-8 (18" X 24")

TEMPORARY CROSSOVER 1

4" SKIP WHITE

ROAD WORK 1500 FT.

RETAIN FROM PREVIOUS STAGE

ROAD WORK 1000 FT.

RETAIN FROM PREVIOUS STAGE

ROAD WORK 500 FT.

RETAIN FROM PREVIOUS STAGE

END ROAD WORK

RETAIN FROM PREVIOUS STAGE

10 VERTICAL PANELS @ 50' O.C. STA. 43+25 TO STA. 47+75

9 TRAFFIC DRUMS @ 50' O.C. STA. 43+50 TO STA. 47+50

ROAD CLOSED (I) RII-2 (48" X 30") (24') BARR. TYP. III LT.

21 TRAFFIC DRUMS @ 50' O.C. STA. 48+25 TO STA. 56+50

HWY. 412B RAMP 3

C.L. MEDIAN

C.L. HWY. 68

ROAD CLOSED (2) RII-2 (48" X 30") (2) WI-6 (48" X 24") (48') BARR. TYP. III LT.

4" CONTINUOUS WHITE

HWY. 412B RAMP 2

ROAD CLOSED (I) RII-2 (48" X 30") (16') BARR. TYP. III RT.

HWY. 68 WIDENING

STOP (I) RI-I (30" X 30")

4" DOUBLE YELLOW

23 TRAFFIC DRUMS @ 50' O.C. RAMP 1 STA. 192+00 TO HWY 412B STA. 19+00

SPEED LIMIT 45

ROAD WORK 1000 FT.

RETAIN FROM PREVIOUS STAGE

ROAD WORK 500 FT.

RETAIN FROM PREVIOUS STAGE

SPEED LIMIT 45

ROAD WORK 1500 FT.

RETAIN FROM PREVIOUS STAGE

FINES DOUBLE IN WORK ZONES WHEN WORKERS ARE PRESENT

RETAIN FROM PREVIOUS STAGE

27 TRAFFIC DRUMS @ 50' O.C. RAMP 1 STA. 189+50 TO HWY 412B STA. 19+00

4" CONTINUOUS WHITE

HWY. 412B

4" SKIP WHITE

4" CONTINUOUS YELLOW

UNEVEN LANES (I) W8-II (48" X 48")

END ROAD WORK

RETAIN FROM PREVIOUS STAGE

SPEED LIMIT 55

RETAIN FROM PREVIOUS STAGE

STAGE 2 OVERLAY

STAGE 2 GRADING AND PAVING

TRAFFIC

EXISTING HWY. 412

HWY. 68 INTERSECTION MOT

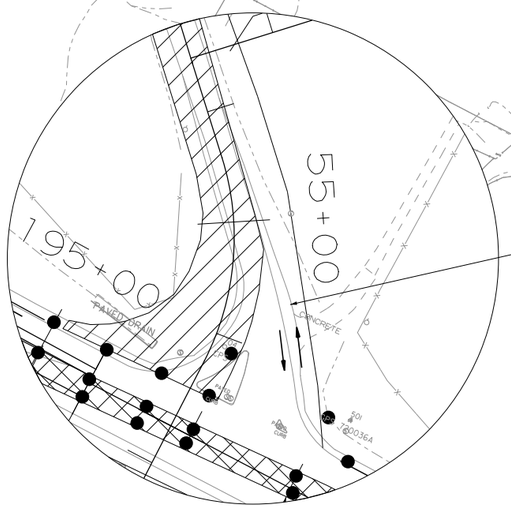

MAINTENANCE OF TRAFFIC DETAILS
HWY. 412B INTERCHANGE - STAGE 2

WBCalloway 7/31/2023 8:42:45 AM
WORKSPACE: AHTD
L:\201\1701\660 - ARDOT 012326 Hwy 412 - Hwy 112\Drawings\r012326_MOT_09_WTI_ALT2_ST2.dgn
REVISED DATE:

DATE REVISED	DATE REVISED	FED. RD. DIST. NO.	STATE	JOB NO.	SHEET NO.	TOTAL SHEETS
		6	ARK.	012326	97	838
		MAINTENANCE OF TRAFFIC DETAILS				
2						

STATE OF ARKANSAS
LICENSED PROFESSIONAL ENGINEER
No.13436
SHAUN A. ROBERSON
DIGITALLY SIGNED 7/28/2023

STAGE 3

CONSTRUCTION SEQUENCE NOTES

1. HWY 412 EASTBOUND TRAFFIC TO USE RT. MAIN LANES, HWY. 412B RAMP 1, AND MIDDLE LANES OF HWY 412 B. WESTBOUND TRAFFIC TO USE LT. LANES OF HWY 412 B, HWY. 412B RAMP 4, HWY. 412B RAMP 4 WIDENING AND OUTSIDE LANE OF LT. MAIN LANES.
2. OVERLAY INSIDE LANES OF THE MAIN LANES UNDER TRAFFIC. CONSTRUCT THE MAIN LANES FROM STA. 172+00
3. OVERLAY THE REMAINDER OF HWY. 412B RAMP 1 AND HWY. 412B UNDER TRAFFIC.
4. CONSTRUCT THE REMAINDER OF HWY. 412B RAMP 2.
5. REMOVE CROSSOVERS.
6. DURING NOTCH AND WIDEN OPERATIONS ON HWY. 412, THE NOTCH SHALL BE SHOULDERED UP AT ALL TIMES.

N

1" =400'

54 TRAFFIC DRUMS @ 50' O.C.
STA. 145+50 TO STA. 172+00

22 TRAFFIC DRUMS @ 50' O.C.
STA. 153+00 TO STA. 163+50

10 TRAFFIC DRUMS @ 50' O.C.
STA. 174+00 TO STA. 178+50

33 TRAFFIC DRUMS @ 50' O.C.
RAMP 1 STA. 185+50 TO HWY 412B STA. 18+00

18 TRAFFIC DRUMS @ 50' O.C.
RAMP14 STA. 185+50 TO STA. 193+00

12 TRAFFIC DRUMS @ 50' O.C.
STA. 52+75 TO STA. 56+50

UNEVEN LANES (I) W8-11 (48" X 48")

ROAD WORK 1500 FT.
RETAIN FROM PREVIOUS STAGE

ROAD WORK 1000 FT.
RETAIN FROM PREVIOUS STAGE

ROAD WORK 500 FT.
RETAIN FROM PREVIOUS STAGE

END ROAD WORK
RETAIN FROM PREVIOUS STAGE

ROAD CLOSED
RETAIN FROM PREVIOUS STAGE

ROAD CLOSED
HWY. 412B RAMP 1

ROAD CLOSED
(I) RII-2 (48" X 30")
(I) WI-6 (48" X 24")
(24') BARR. TYP. IIILT.

ROAD CLOSED
RETAIN FROM PREVIOUS STAGE

ROAD CLOSED
(I) RII-2 (48" X 30")
(16') BARR. TYP. IIILT.

MUSTEEN RD.

HWY. 412B RAMP 4

HWY. 412B RAMP 3

HWY. 68

HWY. 412B RAMP 2

HWY. 412B

C.L. MEDIAN

4" CONTINUOUS WHITE
4" SKIP WHITE
4" CONTINUOUS WHITE
4" DOUBLE YELLOW

SPEED LIMIT 45
SPEED LIMIT 55
FINES DOUBLE IN WORK ZONES WHEN WORKERS ARE PRESENT

STAGE 3 OVERLAY
STAGE 3 GRADING AND PAVING
TRAFFIC
EXISTING HWY. 412

MAINTENANCE OF TRAFFIC DETAILS
HWY. 412B INTERCHANGE - STAGE 3

WBCalloway 7/31/2023 8:42:46 AM
WORKSPACE: AHTD
L:\2017\1701660 - ARDOT 012326 Hwy 412 - Hwy 412\Drawings\r012326_MOT_IO_WTI_ALT2_ST3.dgn
REVISED DATE:

DATE REVISED	DATE REVISED	FED. RD. DIST. NO.	STATE	JOB NO.	SHEET NO.	TOTAL SHEETS
		6	ARK.	012326	98	838
		MAINTENANCE OF TRAFFIC DETAILS				

2

STATE OF ARKANSAS
LICENSED PROFESSIONAL ENGINEER
No. 13436
SHAUN A. ROBERSON
DIGITALLY SIGNED 7/28/2023



MAINTENANCE OF TRAFFIC DETAILS
XNA ACCESS RD.
INTERCHANGE - STAGE 3

HBVinson 7/27/2023 1:41:26 PM
WORKSPACE: AHTD
L:\2017\17017660 - ARDOT 012326 Hwy 412 - Hwy 112\Drawings\r012326_MOT_XNA-MEDIAN_INTERCHANGE.dgn
REVISED DATE:

DATE REVISED	DATE REVISED	FED. RD. DIST. NO.	STATE	JOB NO.	SHEET NO.	TOTAL SHEETS
		6	ARK.	012326	99	838
		MAINTENANCE OF TRAFFIC DETAILS				
2						

STATE OF ARKANSAS
LICENSED PROFESSIONAL ENGINEER
No.13436
SHAUNA. ROBERSON
DIGITALLY SIGNED 7/28/2023

STAGE 3

CONSTRUCTION SEQUENCE NOTES

1. MAINTAIN TRAFFIC ON HWY. 112, EXISTING RAMPS AND HWY. 612.
2. CONSTRUCT MAIN LANES & RAMPS
3. CONSTRUCT WRSF TO GRIMSLEY RD. BRIDGE.
4. ONCE PROPOSED HWY. 612 IS READY TO BE OPEN TO TRAFFIC, REMOVE THE EXISTING P.C.C.B. FROM THE WESTBOUND LANES

(I) W20-1 (48" X 48") ROAD WORK 1500 FT.
(I) W3-5 (48" X 48") SPEED LIMIT 45
(I) W20-1 (48" X 48") ROAD WORK 1000 FT.
(I) R2-1 (48" X 60") SPEED LIMIT 45
(I) W20-1 ROAD WORK 500 FT.
250′ 250′ 250′ 250′ 500′
END ROAD WORK (I) G20-2 (48" X 24")
500′
10+00
15 TRAFFIC DRUMS @ 50′ O.C.
ROAD CLOSED (I) R11-2 (48" X 30")
(16') BARR. TYP. III RT.
15+00
N
1" = 300′

470+00 475+00 480+00 485+00 490+00 495+00 500+00 505+00 510+00 515+00

HWY. 112 RAMP 4
C.L. MEDIAN
HWY. 112
C.L. MEDIAN
HWY. 112 RAMP 1
53′ P.C.C.B. TAPER WITH SPECIAL END UNIT
60′ P.C.C.B. TAPER
60′ P.C.C.B. TAPER
25+00
80′ P.C.C.B. TAPER
33′ P.C.C.B. TAPER WITH SPECIAL END UNIT
60+00
ROAD CLOSED (I) R11-2 (48" X 30") (16') BARR. TYP. III RT.
STAGE 3 GRADING AND PAVING
(I) W20-1 (48" X 48") ROAD WORK 500 FT.
(I) R2-1 (48" X 60") SPEED LIMIT 45
(I) W20-1 (48" X 48") ROAD WORK 1000 FT.
(I) W3-5 (48" X 48") SPEED LIMIT 45
(I) W20-1 (48" X 48") ROAD WORK 1500 FT.
500′ 250′ 250′ 250′ 250′
END ROAD WORK (I) G20-2 (48" X 24")
500′

MAINTENANCE OF TRAFFIC DETAILS HWY. 112 INTERCHANGE - STAGE 3

HBVinson
WORKSPACE: AHTD
L:\2017\17017660 - ARDOT 012326 Hwy 412 - Hwy 112\Drawings\r012326_MOT_12_HWY_112_ST3_01.dgn
7/27/2023 1:41:31 PM
REVISED DATE:

DATE REVISED	DATE REVISED	FED. RD. DIST. NO.	STATE	JOB NO.	SHEET NO.	TOTAL SHEETS
		6	ARK.	012326	100	838
		MAINTENANCE OF TRAFFIC DETAILS				
2						

STATE OF ARKANSAS
LICENSED PROFESSIONAL ENGINEER
No.13436
SHAUNA. ROBERSON
DIGITALLY SIGNED 7/28/2023

N

1" = 300'

STAGE 3

CONSTRUCTION SEQUENCE NOTES

1. INSTALL AND MAINTAIN CHANNELIZING DEVICES AND ADVANCED WARNING.
2. CONSTRUCT GUARDRAIL, SIGN STRUCTURES, AND WRSF IN MEDIAN OF MAIN LANES.
3. ONCE PROPOSED HWY. 612 IS READY TO BE OPEN TO TRAFFIC, REMOVE THE EXISTING P.C.C.B. FROM THE WESTBOUND LANES

12 TRAFFIC DRUMS @ 50' O.C.
C.L. MEDIAN STA. 516+00 TO STA. 523+00

EXISTING P.C.C.B. TO REMAIN FOR STAGE 3 CONSTRUCTION AND REMOVED IN FINAL ITEMS

515+00 520+00 525+00 530+00 535+00 540+00 545+00 550+00 555+00

38 TRAFFIC DRUMS @ 50' O.C.
C.L. MEDIAN STA. 517+00 TO STA. 537+00

LEFT SHOULDER CLOSED

(2) W21-5A (48" X 48")

MAINTENANCE OF TRAFFIC DETAILS
HWY. 112 INTERCHANGE - STAGE 3

HBVinson
WORKSPACE: AHTD
L:\2017\170176660 - ARDOT 012326 Hwy 412 - Hwy 112\Drawings\r012326_MOT_13_HWY_112_ST3_02.dgn
7/27/2023 1:41:34 PM
REVISED DATE:

DATE REVISED	DATE REVISED	FED. RD. DIST. NO.	STATE	JOB NO.	SHEET NO.	TOTAL SHEETS
		6	ARK.	012326	101	838
		MAINTENANCE OF TRAFFIC DETAILS				

STAGE 1

CONSTRUCTION SEQUENCE NOTES

1. MAINTAIN TRAFFIC ON LIBERTY AVENUE.
2. CONSTRUCT LIBERTY AVENUE DETOUR.

STATE OF ARKANSAS LICENSED PROFESSIONAL ENGINEER No. 13436 SHAUN A. ROBERSON

DIGITALLY SIGNED 7/28/2023

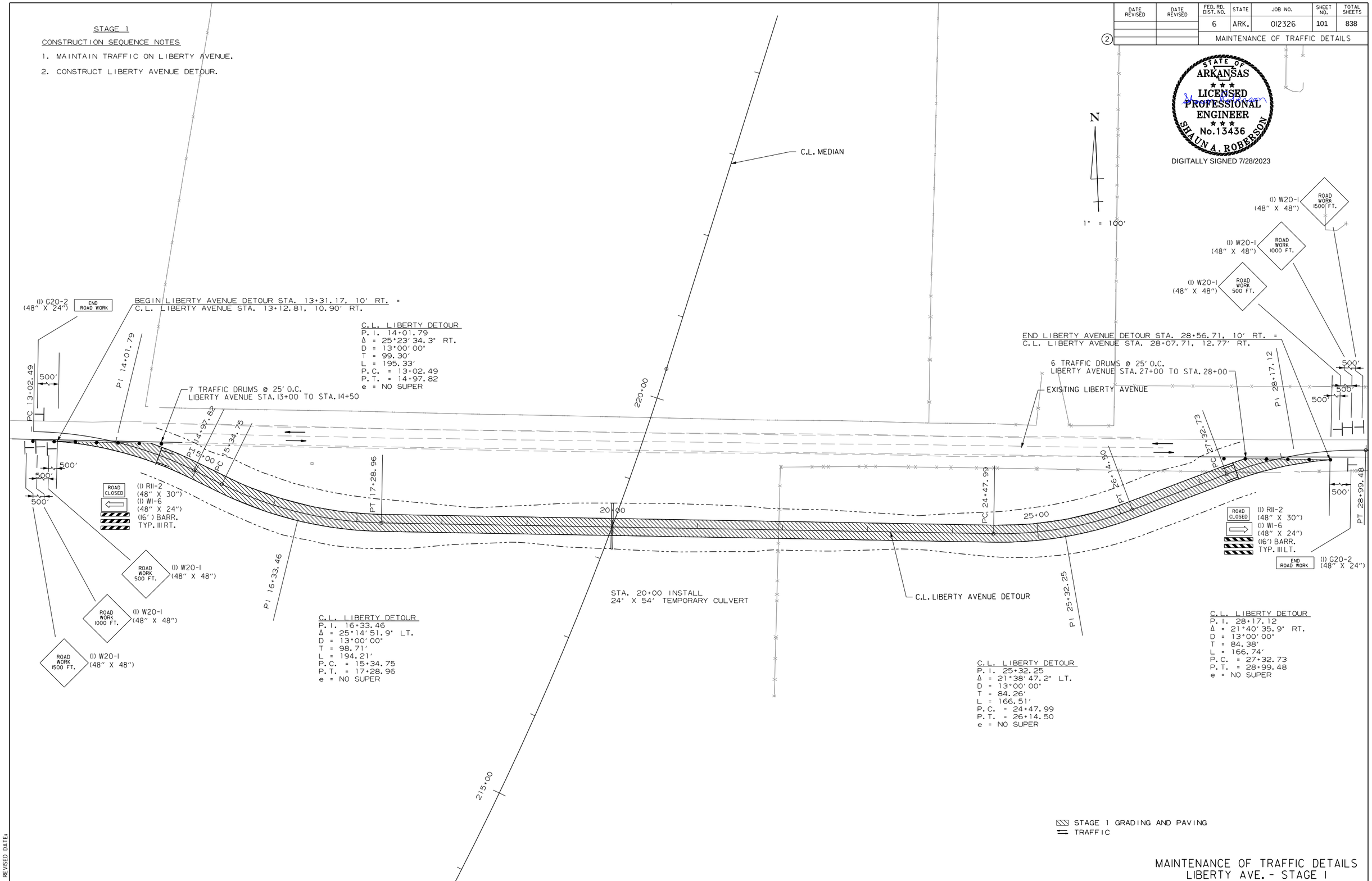

MAINTENANCE OF TRAFFIC DETAILS
LIBERTY AVE. - STAGE 1

HBVinson 7/27/2023 1:41:47 PM
WORKSPACE: AHTD
L:\2017\17017660 - ARDOT 012326 Hwy 412 - Hwy 112\Drawings\r012326_MOT_04_LIB_ST1.dgn
REVISED DATE:

DATE REVISED	DATE REVISED	FED. RD. DIST. NO.	STATE	JOB NO.	SHEET NO.	TOTAL SHEETS
		6	ARK.	012326	102	838
		MAINTENANCE OF TRAFFIC DETAILS				

(2)

STAGE 2

CONSTRUCTION SEQUENCE NOTES

1. MAINTAIN TRAFFIC ON LIBERTY AVENUE DETOUR.
2. CONSTRUCT LIBERTY AVENUE OVERPASS.

STATE OF ARKANSAS
LICENSED PROFESSIONAL ENGINEER
No.13436
SHAUN A. ROBERSON
DIGITALLY SIGNED 7/28/2023

N

1" =200'

C.L. MEDIAN MAIN LANES

C.L. LIBERTY AVENUE

C.L. LIBERTY AVENUE DETOUR

END ROAD WORK
RETAIN FROM PREVIOUS STAGE

7 TRAFFIC DRUMS @ 25' O.C.
LIBERTY AVENUE STA. 13+00 TO STA. 14+50

ROAD CLOSED
(1) R11-2 (48" X 30")
(1) W1-6 (48" X 24")
(16') BARR. TYP. III LT.

500'

15+00

220.00

20+00

25+00

215+00

4" DOUBLE YELLOW

4" CONTINUOUS WHITE

(1) W1-4aR (48" X 48")
25 M.P.H.
(1) W13-1 (18" X 18")

(8) W1-8 (18" X 24") PLACED BACK TO BACK

ROAD WORK 1000 FT.
RETAIN FROM PREVIOUS STAGE

ROAD WORK 1500 FT.
RETAIN FROM PREVIOUS STAGE

(1) W1-4aL (48" X 48")
25 M.P.H.
(1) W13-1 (18" X 18")

RETAIN FROM PREVIOUS STAGE

ROAD CLOSED
(1) R11-2 (48" X 30")
(1) W1-6 (48" X 24")
(16') BARR. TYP. III RT.

6 TRAFFIC DRUMS @ 20' O.C.
LIBERTY AVENUE STA. 27+00 TO 28+25

END ROAD WORK
RETAIN FROM PREVIOUS STAGE

STAGE 2 GRADING AND PAVING
TRAFFIC

MAINTENANCE OF TRAFFIC DETAILS
LIBERTY AVE. - STAGE 2

HBVinson 7/27/2023 1:41:49 PM
WORKSPACE: AHTD
L:\20\T\T01\660 - ARDOT 012326 Hwy 412 - Hwy 112\Drawings\r012326.MOT.05.LIB.ST2.dgn
REVISED DATE:

DATE REVISED	DATE REVISED	FED. RD. DIST. NO.	STATE	JOB NO.	SHEET NO.	TOTAL SHEETS
		6	ARK.	012326	103	838
②		MAINTENANCE OF TRAFFIC DETAILS				

STAGE 3

CONSTRUCTION SEQUENCE NOTES

1. MOVE TRAFFIC TO LIBERTY AVENUE.
2. CONSTRUCT MAIN LANES AND ERADICATE LIBERTY AVENUE DETOUR.
3. CONSTRUCT LIBERTY AVENUE ACCESS RD.

STATE OF ARKANSAS
LICENSED PROFESSIONAL ENGINEER
No. 13436
SHAUN A. ROBERSON
DIGITALLY SIGNED 7/28/2023

N

1" = 200'

C.L. MEDIAN

END ROAD WORK
RETAIN FROM PREVIOUS STAGE

7 TRAFFIC DRUMS @ 25' O.C.
LIBERTY AVENUE STA. 13+00 TO STA. 14+50

15+00

500'

ROAD CLOSED
(I) RII-2 (48" X 30")
(I) WI-6 (48" X 24")
(16') BARR. TYP. III RT.

ROAD WORK 500 FT.
(I) W20-1 (48" X 48")

ROAD WORK 1000 FT.
RETAIN FROM PREVIOUS STAGE

ROAD WORK 1500 FT.
RETAIN FROM PREVIOUS STAGE

C.L. LIBERTY AVENUE DETOUR

20+00

220+00

215+00

C.L. LIBERTY AVENUE

15 TRAFFIC DRUMS @ 25' O.C.
LIBERTY AVENUE STA. 24+50 TO STA. 28+00

25+00

27+04

ROAD CLOSED
(I) RII-2 (48" X 30")
(16') BARR. TYP. III RT.

ROAD CLOSED
(I) RII-2 (48" X 30")
(I) WI-6 (48" X 24")
(16') BARR. TYP. III LT.

END ROAD WORK
RETAIN FROM PREVIOUS STAGE

C.L. LIBERTY AVENUE ACCESS RD.

STAGE 3 DEMOLITION
STAGE 3 GRADING AND PAVING
TRAFFIC

MAINTENANCE OF TRAFFIC DETAILS
LIBERTY AVE. - STAGE 3

HBVinson 7/27/2023 11:42:08 PM
WORKSPACE: AHTD
L:\2017\17017660 - ARDOT 012326 Hwy 412 - Hwy 112\Drawings\r012326.MOT_06.LIB.ST3.dgn
REVISED DATE:

DATE REVISED	DATE REVISED	FED. RD. DIST. NO.	STATE	JOB NO.	SHEET NO.	TOTAL SHEETS
		6	ARK.	012326	104	838
		MAINTENANCE OF TRAFFIC DETAILS				
2						

STATE OF ARKANSAS
LICENSED PROFESSIONAL ENGINEER
No.13436
SHAUN A. ROBERSON

DIGITALLY SIGNED 8/09/2023

N

1" = 200'

END ROAD WORK
(I) G20-2
(48" X 24")

5 TRAFFIC DRUMS @ 25' O.C.
STA. 18+50 TO STA. 19+50

C.L. JAVELLO RD.

C.L. MEDIAN

ROAD CLOSED
(I) RII-2
(48" X 30")
(16') BARR. TYP. III LT.

EXISTING JAVELLO RD.

ROAD CLOSED
(I) RII-2
(48" X 30")
(16') BARR. TYP. III LT.

290+00
295+00
300+00
305+00
310+00
315+00
16+00
20+00
25+00
30+00
35+00
38+50

STAGE 2

CONSTRUCTION SEQUENCE NOTES

1. DETOUR TRAFFIC AS NEEDED. CONSTRUCT PROPOSED JAVELLO 35+00 TO 37+00 AND APPROACH RETURN STATION 36+00 LT.

2. OPEN TRAFFIC TO EXISTING JAVELLO ROAD. CONSTRUCT PROPOSED JAVELLO RD. FROM 19+50 TO 35+00.

STAGE 2 GRADING
TRAFFIC

MAINTENANCE OF TRAFFIC DETAILS
JAVELLO RD. - STAGE 2

JATurner 8/9/2023 7:45:51 AM
WORKSPACE: AHTD
L:\20IT\I70I660 - ARDOT 012326 Hwy 412 - Hwy 112\Drawings\r012326.MOT_02_JAV_ST2.dgn
REVISED DATE:

DATE REVISED	DATE REVISED	FED. RD. DIST. NO.	STATE	JOB NO.	SHEET NO.	TOTAL SHEETS
		6	ARK.	012326	105	838
		MAINTENANCE OF TRAFFIC DETAILS				

STATE OF ARKANSAS
LICENSED PROFESSIONAL ENGINEER
No.13436
SHAUN A. ROBERSON
DIGITALLY SIGNED 8/09/2023

N

1" = 200'

(1) RII-2 (48"X30") ROAD CLOSED

(16') BARR. TYP. III RT.

(1) RII-2 (48"X30") ROAD CLOSED

(16') BARR. TYP. III RT.

ROAD CLOSED (1) RII-2 (48" X 30")

(16') BARR. TYP. III RT.

16+00
25+00
30+00
35+00
290+00
295+00
300+00
305+00
310+00
315+00

C.L. JAVELLO RD.

C.L. MEDIAN

5 TRAFFIC DRUMS @ 25' O.C.
STA. 18+50 TO STA. 19+50

END ROAD WORK (1) G20-2 (48" X 24")

STAGE 3

CONSTRUCTION SEQUENCE NOTES

1. CLOSE EXISTING JAVELLO RD. AND DETOUR TRAFFIC.
2. CONSTRUCT JAVELLO RD. STA. 18+00 TO 19+50 AND BOX CULVERT AT STA. 18+38.
3. SWITCH TRAFFIC TO COMPLETED JAVELLO RD.

STAGE 3 GRADING AND PAVING
TRAFFIC

MAINTENANCE OF TRAFFIC DETAILS
JAVELLO RD. - STAGE 3

JATurner 8/9/2023 7:46:04 AM
WORKSPACE: AHTD
L:\20IT\I70I660 - ARDOT 012326 Hwy 412 - Hwy 112\Drawings\r012326.MOT_03.JAV.ST3.dgn
REVISED DATE:

DATE REVISED	DATE REVISED	FED. RD. DIST. NO.	STATE	JOB NO.	SHEET NO.	TOTAL SHEETS
		6	ARK.	012326	106	838
2		MAINTENANCE OF TRAFFIC DETAILS				

STATE OF ARKANSAS
LICENSED PROFESSIONAL ENGINEER
No.13436
SHAUNA. ROBERSON
DIGITALLY SIGNED 7/28/2023

1 — ROAD CLOSED — (1) R11-2 (48" X 30") — (16') BARR. TYP. III LT.
(STAGE 2)

2 — ROAD CLOSED — (1) R11-2 (48" X 30") — (16') BARR. TYP. III LT.
(STAGE 3)

3 — ROAD CLOSED AHEAD — (1) W20-3 (48" X 48")

4 — ROAD CLOSED 0.5 MILES AHEAD LOCAL TRAFFIC ONLY — (1) R11-3A (60" X 30")

5 — DETOUR — (1) M4-10R (48" X 18") — JAVELLO RD. — (1) W16-8P (48" X 15")

6 — DETOUR — (1) M4-10L (48" X 18") — JAVELLO RD. — (1) W16-8P (48" X 15")

7 — END DETOUR — (1) M4-8A (48" X 24")

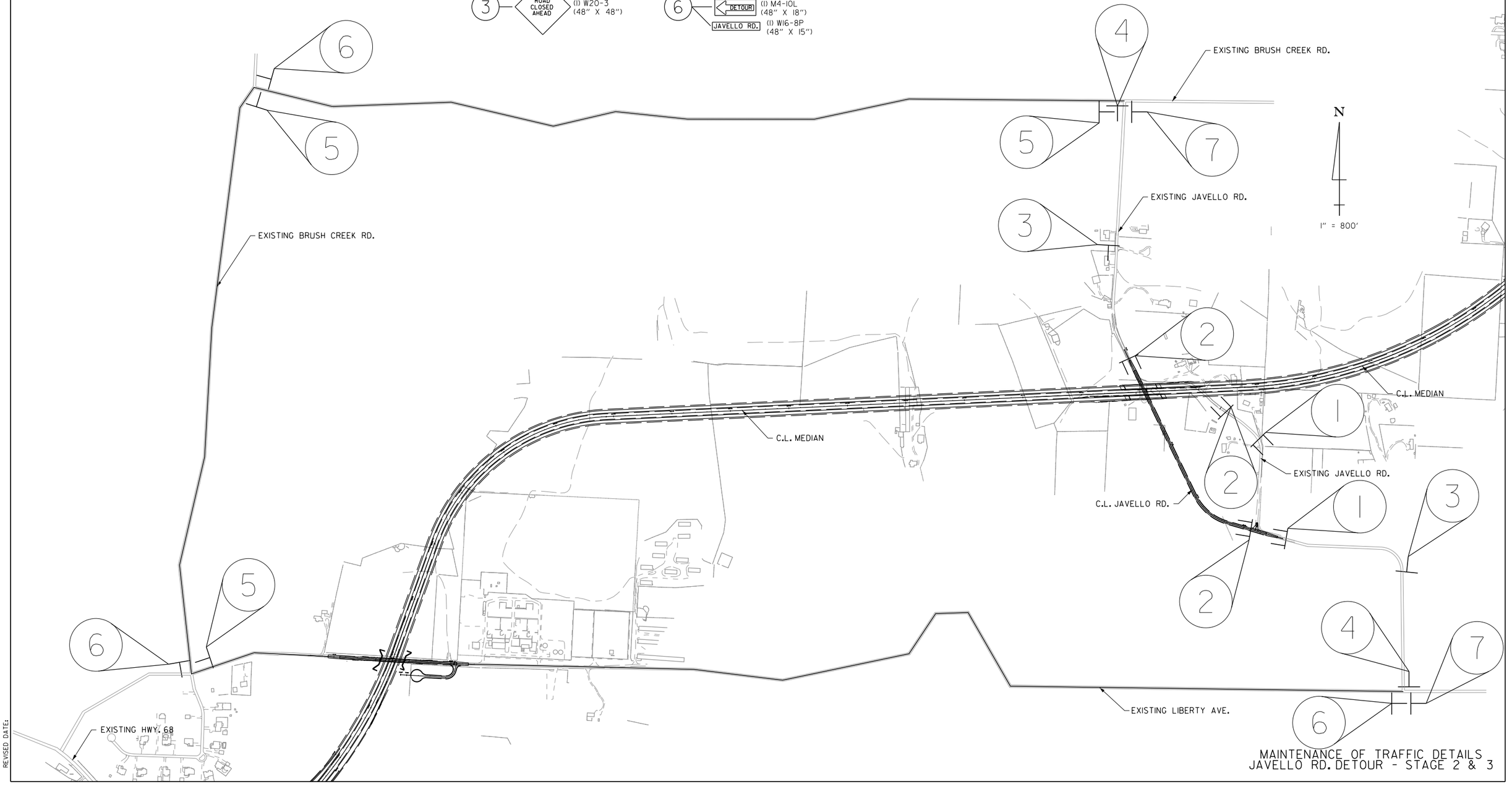

MAINTENANCE OF TRAFFIC DETAILS
JAVELLO RD. DETOUR - STAGE 2 & 3

HBVinson 7/27/2023 1:42:18 PM
WORKSPACE: AHTD
L:\20I7\I70I660 - ARDOT 012326 Hwy 412 - Hwy II2\Drawings\r012326_MOT_03_JAV_D.dgn
REVISED DATE:

DATE REVISED	DATE REVISED	FED. RD. DIST. NO.	STATE	JOB NO.	SHEET NO.	TOTAL SHEETS
		6	ARK.	012326	107	838
		MAINTENANCE OF TRAFFIC DETAILS				
②						

STATE OF ARKANSAS
LICENSED PROFESSIONAL ENGINEER
No.13436
SHAUNA. ROBERSON
DIGITALLY SIGNED 7/28/2023

N

1" = 300'

6" CONTINUOUS WHITE ENHANCED THERMOPLASTIC

1113' P.C.C.B. W/ SPECIAL END UNIT

200' P.C.C.B. TAPER

C.L. XNA ACCESS RD. RAMP 4

1240' P.C.C.B. TAPER W/ T.I.A.B.

C.L. MEDIAN

C.L. XNA ACCESS RD. RAMP 2

433' P.C.C.B. TAPER W/ SPECIAL END UNIT

6" CONTINUOUS WHITE ENHANCED THERMOPLASTIC

33' P.C.C.B. TAPER W/ SPECIAL END UNIT

C.L. XNA ACCESS RD. RAMP 1

6" CONTINUOUS WHITE ENHANCED THERMOPLASTIC

920' P.C.C.B. W/ T.I.A.B.

280' P.C.C.B. W/ T.I.A.B.

MAINTENANCE OF TRAFFIC DETAILS
XNA INTERCHANGE -
DEVICES LEFT IN PLACE

HBVinson
WORKSPACE: AHTD
L:\20\T\T01\660 - ARDOT 012326 Hwy 412 - Hwy 112\Drawings\r-012326_MOT_XNA-MEDIAN_INTERCHANGE_DEVICES LIP.dgn
REVISED DATE:
7/27/2023 1:42:19 PM

DATE REVISED	DATE REVISED	FED. RD. DIST. NO.	STATE	JOB NO.	SHEET NO.	TOTAL SHEETS
10/26/2023		6	ARK.	012326	108	838
②		PERMANENT PAVEMENT MARKING DETAILS				

STATE OF ARKANSAS
LICENSED PROFESSIONAL ENGINEER
No. 13436
SHAUN A. ROBERSON
DIGITALLY SIGNED 10/26/2023

6" WHITE ENHANCED THERMOPLASTIC PAVEMENT MARKING

STA.	STA.	LOCATION	LIN. FT.
144+68	540+00	MAIN LANES LT.	9890
144+68	169+46	MAIN LANES LT.	2509
146+30	147+25	MAIN LANES LT.	95
153+53	527+95	MAIN LANES RT.	9360
153+53	172+37	MAIN LANES RT.	1864
165+99	175+37	MAIN LANES RT.	944
170+70	203+29	MAIN LANES LT.	3214
179+08	206+70	MAIN LANES RT.	2802
209+00	460+82	MAIN LANES RT.	25153
210+58	483+09	MAIN LANES LT.	27306
461+94	481+85	MAIN LANES RT.	1967
484+56	514+42	MAIN LANES RT.	2987
484+96	517+93	MAIN LANES RT.	3297
519+40	527+95	MAIN LANES RT.	856
520+63	540+00	MAIN LANES LT.	1937
10+00	10+42	HWY. 412B RT.	42
172+37	194+07	HWY. 412B RAMP 1RT.	2169
175+50	194+50	HWY. 412B RAMP 1RT.	480
192+57	194+51	HWY. 412B RAMP 1LT.	193
192+34	209+00	HWY. 412B RAMP 2 RT.	1737
192+20	210+58	HWY. 412B RAMP 3 LT.	1935
169+46	194+91	HWY. 412B RAMP 4 LT.	2545
169+46	195+51	HWY. 412B RAMP 4 RT.	650
481+86	501+62	HWY. 112 RAMP 1RT.	2033
499+30	501+01	HWY. 112 RAMP 1RT.	348
516+04 (HWY. 612)	519+40 (HWY. 612)	HWY. 112 EXIST. EB ENTRANCE RAMP	338
515+03 (HWY. 612)	520+63 (HWY. 612)	HWY. 112 EXIST. WB EXIT RAMP	562
483+00	499+33	HWY. 112 RAMP 4 LT.	1675

6" YELLOW ENHANCED THERMOPLASTIC PAVEMENT MARKING

STA.	STA.	LOCATION	LIN. FT.
144+68	540+00	MAIN LANES LT.	39574
153+53	527+95	MAIN LANES RT.	37432
178+22	194+50	HWY. 412B RAMP 1LT.	1633
192+43	206+67	HWY. 412B RAMP 2 LT.	1435
192+41	204+35	HWY. 412B RAMP 3 RT.	1213
170+70	195+51	HWY. 412B RAMP 4 LT.	2482
484+01	501+31	HWY. 112 RAMP 1LT.	1743
516+01 (HWY. 612)	517+94 (HWY. 612)	HWY. 112 EXIST. EB ENTRANCE RAMP	195
515+01 (HWY. 612)	515+38 (HWY. 612)	HWY. 112 EXIST. WB EXIT RAMP	37
484+55	498+97	HWY. 112 RAMP 4 RT.	1470

12" WHITE THERMOPLASTIC PAVEMENT MARKING

STA.	STA.	LOCATION	LIN. FT.
10+42		HWY. 412B RT.	44
11+30		HWY. 412B LT.	36
56+31		HWY. 68 RT.	24
192+37		HWY. 412B RAMP 3 LT.	55
501+16		HWY. 112 RAMP 1 RT.	32

6" WHITE THERMOPLASTIC PAVEMENT MARKING

STA.	STA.	LOCATION	LIN. FT.
11+50	18+00	HWY. 412B LT.	170
11+30	12+63	HWY. 412B LT.	133
11+50	18+00	HWY. 412B RT.	170
11+84	15+50	HWY. 412B LT.	366
11+86	15+63	HWY. 412B RT.	377
12+28	18+00	HWY. 412B LT.	572
16+19	17+27	HWY. 412B RT.	108
17+82	18+00	HWY. 412B RT.	18
43+50	44+76	HWY. 68 LT.	126
43+50	56+60	HWY. 68 RT.	1350
47+04	53+08	HWY. 68 LT.	604
50+50	53+10	HWY. 68 RT.	260
54+75	56+31	HWY. 68 RT.	152
55+03	56+49	HWY. 68 LT.	238
7+50	11+98	HWY. 112 LT.	448
7+50	11+95	HWY. 112 RT.	445
13+46	26+37	HWY. 112 LT.	1293
13+70	26+48	HWY. 112 RT.	1278
13+70	15+61	HWY. 112 LT.	191
24+40	26+37	HWY. 112 RT.	197
27+94	32+50	HWY. 112 LT.	458
28+15	32+50	HWY. 112 RT.	434

6" YELLOW THERMOPLASTIC PAVEMENT MARKING

STA.	STA.	LOCATION	LIN. FT.
10+00	10+42	HWY. 412B LT.	84
11+30	18+00	HWY. 412B RT.	998
13+38	18+00	HWY. 412B LT.	582
43+50	53+10	HWY. 68 C.L.	4972
53+50	56+30	HWY. 68 C.L.	1676
54+43	56+00	HWY. 68 LT.	644
7+50	11+96	HWY. 112 C.L.	3182
18+00	26+37	HWY. 112 C.L.	5068
27+94	32+50	HWY. 112 C.L.	3252

8" WHITE THERMOPLASTIC PAVEMENT MARKING

STA.	STA.	LOCATION	LIN. FT.
10+03	10+64	HWY. 412B LT.	68
10+76	11+39	HWY. 412B C.L. (DOTTED)	33
11+00	11+84	HWY. 412B LT.	90
45+58	46+44	HWY. 68 LT.	90
53+58	54+47	HWY. 68 LT.	94
55+75	56+49	HWY. 68 RT.	70
55+75	56+61	HWY. 68 RT.	101
56+07	56+50	HWY. 68 LT.	45
56+07	56+60	HWY. 68 LT.	103
192+43	193+46	HWY. 412B RAMP 2 RT.	139
192+53	193+46	HWY. 412B RAMP 2 RT.	94
192+20	193+14	HWY. 412B RAMP 3 LT.	131
192+39	193+14	HWY. 412B RAMP 3 LT.	74
27+63	27+98	HWY. 112 RT.	36
498+84	499+14	HWY. 112 RAMP 4 RT.	30
498+84	499+25	HWY. 112 RAMP 4 RT.	53

8" YELLOW THERMOPLASTIC PAVEMENT MARKING

STA.	STA.	LOCATION	EA.
47+87	50+40	HWY. 68 C.L.	160
53+52	54+71	HWY. 68 C.L.	147
8+50	11+98	HWY. 112 C.L.	170
27+94	31+50	HWY. 112 C.L.	178

6" WHITE REFLECTORIZED PAINT PAVEMENT MARKING

STA.	STA.	LOCATION	LIN. FT.
14+27	15+86	MUSTEEN RD. LT.	161
14+27	39+70	MUSTEEN RD. RT.	2854
16+91	39+70	MUSTEEN RD. LT.	2855
14+50	26+50	LIBERTY AVE. LT.	1200
14+50	24+85	LIBERTY AVE. RT.	1035
25+89	26+50	LIBERTY AVE. RT.	61
16+67	19+73	LIBERTY FRONTAGE RD. LT.	328
16+67	20+00	LIBERTY FRONTAGE RD. RT.	360
17+00	35+51	JAVELLO RD. LT.	1843
17+00	38+00	JAVELLO RD. RT.	2108
36+49	38+00	JAVELLO RD. LT.	151
13+91	19+72	MARCHANT FRONTAGE RD. LT.	616
13+91	19+98	MARCHANT FRONTAGE RD. RT.	622
473+60	473+63	KELLEY RD. C.L.	100
474+06	474+09	KELLEY RD. C.L.	100

6" YELLOW REFLECTORIZED PAINT PAVEMENT MARKING

STA.	STA.	LOCATION	LIN. FT.
14+27	39+53	MUSTEEN RD. C.L.	5052
14+50	26+50	LIBERTY AVE. C.L.	2400
16+67	19+74	LIBERTY FRONTAGE RD. C.L.	614
17+00	38+00	JAVELLO RD. C.L.	4200
14+00	19+84	MARCHANT FRONTAGE RD. C.L.	1169
473+60	473+63	KELLEY RD. C.L.	100
474+06	474+09	KELLEY RD. C.L.	100

10" WHITE REFLECTORIZED PAINT PAVEMENT MARKING

STA.	STA.	LOCATION	LIN. FT.
10+25	10+56	HWY. 412B LT.	32
11+14	11+49	HWY. 412B LT.	40
45+87	46+38	HWY. 68 LT.	52
53+66	54+26	HWY. 68 LT.	64
56+08	56+49	HWY. 68 RT.	39
56+08	56+51	HWY. 68 RT.	57
56+26	56+49	HWY. 68 LT.	41
56+26	56+53	HWY. 68 LT.	32
192+51	193+20	HWY. 412B RAMP 2 RT.	71
192+54	193+20	HWY. 412B RAMP 2 RT.	95
192+29	192+90	HWY. 412B RAMP 3 LT.	80
192+39	192+90	HWY. 412B RAMP 3 LT.	55
27+04	27+20	HWY. 112 RT.	16
501+18	501+36	HWY. 112 RAMP 1RT.	22
501+18	501+42	HWY. 112 RAMP 1RT.	29

12" WHITE REFLECTORIZED PAINT PAVEMENT MARKING

STA.	STA.	LOCATION	LIN. FT.
39+53		MUSTEEN RD. RT.	28
19+74		LIBERTY FRONTAGE RD. RT.	14
19+84		MARCHANT FRONTAGE RD. RT.	18

12" WHITE ENHANCED THERMOPLASTIC PAVEMENT MARKING

STA.	STA.	LOCATION	LIN. FT.
145+91	169+46	MAIN LANES LT. (DOTTED)	597
154+63	165+98	MAIN LANES RT. (DOTTED)	282
158+75	169+46	MAIN LANES LT. (DOTTED)	273
169+46	170+70	MAIN LANES LT.	124
175+38	179+08	MAIN LANES RT.	375
203+29	207+09	MAIN LANES LT.	375
206+70	207+50	MAIN LANES RT.	80
207+10	209+56	MAIN LANES LT. (DOTTED)	63
207+50	216+52	MAIN LANES RT. (DOTTED)	231
460+82	461+45	MAIN LANES RT.	62
461+45	481+21	MAIN LANES RT. (DOTTED)	493
474+93	483+95	MAIN LANES LT. (DOTTED)	228
481+21	484+96	MAIN LANES RT.	375
483+96	484+56	MAIN LANES LT.	60
514+42	518+17	MAIN LANES LT.	375
517+93	518+53	MAIN LANES RT.	60
518+18	520+13	MAIN LANES LT. (DOTTED)	51
518+53	527+80	MAIN LANES RT. (DOTTED)	234
175+42	178+22	HWY. 412B RAMP 1LT.	280
206+67	207+48	HWY. 412B RAMP 2 LT.	80
204+35	207+14	HWY. 412B RAMP 3 RT.	280
169+46	170+70	HWY. 412B RAMP 4 RT.	124
481+21	484+01	HWY. 112 RAMP 1LT.	280
517+93 (HWY. 612)	518+44 (HWY. 612)	HWY. 112 EXIST. EB ENTRANCE RAMP	50
515+39 (HWY. 612)	518+17 (HWY. 612)	HWY. 112 EXIST. WB EXIT RAMP	280
484+05	484+55	HWY. 112 RAMP 4 RT.	51

THERMOPLASTIC PAVEMENT MARKING (WORDS)

STA.	LOCATION	EACH
146+80	MAIN LINES LT.	1
10+07	HWY. 412B LT.	1
12+09	HWY. 412B C.L.	1
12+20	HWY. 412B LT.	1
13+20	HWY. 412B LT.	1
14+20	HWY. 412B LT.	1
15+20	HWY. 412B LT.	1
45+64	HWY. 68 LT.	1
51+30	HWY. 68 C.L.	1
52+30	HWY. 68 C.L.	1
55+49	HWY. 68 C.L.	1
56+11	HWY. 68 LT.	1
14+63	HWY. 112 C.L.	1
25+43	HWY. 112 C.L.	1
193+13	HWY. 412B RAMP 1LT.	1
194+21	HWY. 412B RAMP 1LT.	1
193+40	HWY. 412B RAMP 2 C.L.	1
500+09	HWY. 112 RAMP 1C.L.	2
501+51	HWY. 112 RAMP 1RT.	1

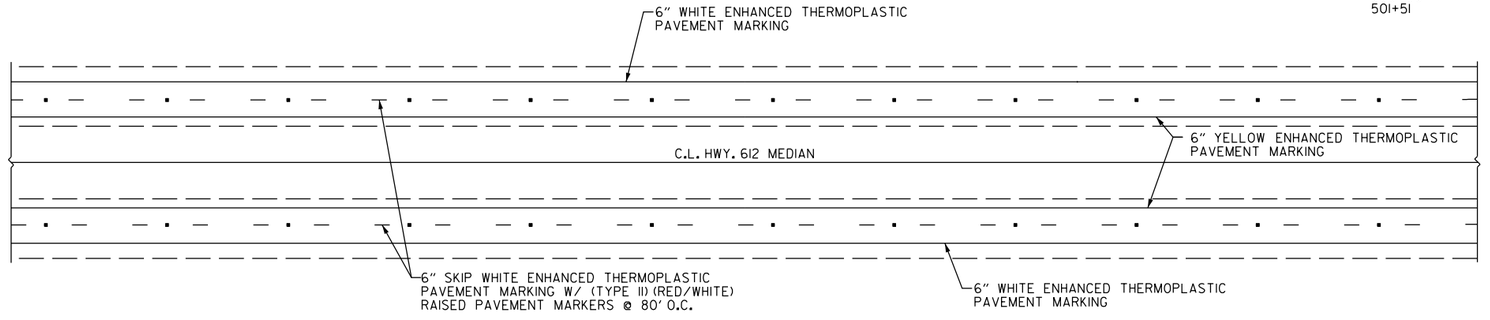

TYPICAL PERMANENT PAVEMENT MARKING LAYOUT - 4 LANE DIVIDED HIGHWAY

PERMANENT PAVEMENT MARKING DETAILS

WBCalloway 10/25/2023 6:56:17 PM
WORKSPACE: AHTD
L:\2017\170176\660 - ARDOT 012326 Hwy 412 - Hwy 112\Drawings\r012326_PM_612_01.DGN
REVISED DATE:

DATE REVISED	DATE REVISED	FED. RD. DIST. NO.	STATE	JOB NO.	SHEET NO.	TOTAL SHEETS
		6	ARK.	012326	109	838
		PERMANENT PAVEMENT MARKING DETAILS				
2						

STATE OF ARKANSAS
LICENSED PROFESSIONAL ENGINEER
No.13436
SHAUN A. ROBERSON
DIGITALLY SIGNED 7/28/2023

N

1" = 200'

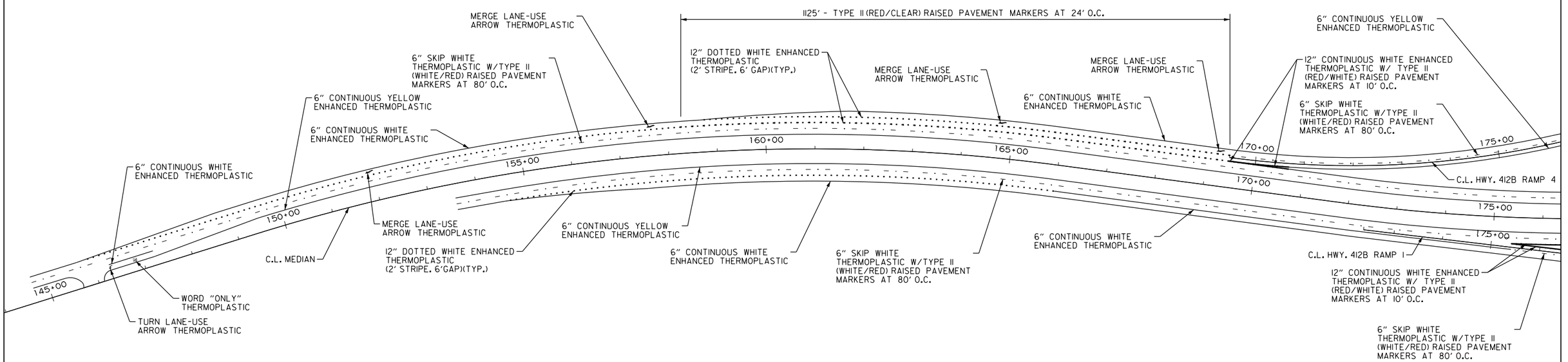

THERMOPLASTIC PAVEMENT MARKING (ARROWS)

STA.	LOCATION	EACH
146+30	MAIN LANES LT.	1
151+84	MAIN LANES LT.	1
157+59	MAIN LANES LT.	1
164+69	MAIN LANES LT.	1
169+18	MAIN LANES LT.	1
193+67	HWY. 412B RAMP 1 LT.	1
190+88	HWY. 412B RAMP 3 LT.	1
190+90	HWY. 412B RAMP 3 RT.	1
10+17	HWY. 412B C.L.	1
11+55	HWY. 412B C.L.	1
11+66	HWY. 412B LT.	1
12+55	HWY. 412B C.L.	1
12+66	HWY. 412B LT.	1
13+66	HWY. 412B LT.	1
14+66	HWY. 412B LT.	1
50+84	HWY. 68 C.L.	1
51+84	HWY. 68 C.L.	1
52+84	HWY. 68 C.L.	1
55+06	HWY. 68 C.L.	1
55+87	HWY. 68 RT.	1
56+04	HWY. 68 RT.	1
56+06	HWY. 68 C.L.	1
499+63	HWY. 112 C.L.	2
500+63	HWY. 112 C.L.	2
499+55	HWY. 112 RAMP 1 RT.	1
499+55	HWY. 112 RAMP 1 C.L.	1
500+55	HWY. 112 RAMP 1 RT.	1
500+55	HWY. 112 RAMP 1 C.L.	1

RAISED PAVEMENT MARKERS TYPE II (WHITE/RED)

STA.	STA.	LOCATION	EA.
144+68	540+00	MAIN LANES LT.	495
153+53	527+95	MAIN LANES RT.	468
158+29	170+67	MAIN LANES LT.	164
175+37	179+03	MAIN LANES RT.	64
203+33	207+10	MAIN LANES LT.	57
206+70	212+00	MAIN LANES RT.	57
479+39	484+56	MAIN LANES LT.	52
481+21	484+92	MAIN LANES RT.	60
514+47	518+18	MAIN LANES LT.	60
517+92	523+09	MAIN LANES RT.	52
10+00	10+42	HWY. 412B RT.	1
11+30	18+00	HWY. 412B LT.	9
11+50	18+00	HWY. 412B RT.	8
177+71	193+91	HWY. 412B RAMP 1 LT.	27
178+54		HWY. 412B RAMP 1 C.L. (ARROW)	38
204+03		HWY. 412B RAMP 3 C.L. (ARROW)	19
204+34	205+25	HWY. 412B RAMP 3 RT.	10
171+15	195+15	HWY. 412B RAMP 4 LT.	31
483+41	484+02	HWY. 112 RAMP 1 LT.	7
484+36		HWY. 112 RAMP 1 C.L. (ARROW)	19
515+05 (HWY. 612)		HWY. 112 EXIST. WB EXIT RAMP C.L. (ARROW)	19
515+38 (HWY. 612)	515+98 (HWY. 612)	HWY. 112 EXIST. WB EXIT RAMP RT.	7

PERMANENT PAVEMENT MARKING DETAILS

HBVinson
7/27/2023 11:42:36 PM
WORKSPACE: AHTD
L:\2017\170176\60 - ARDOT 012326 Hwy 412 - Hwy 112\Drawings\r012326_PM_MNL_01.dgn
REVISED DATE:

DATE REVISED	DATE REVISED	FED. RD. DIST. NO.	STATE	JOB NO.	SHEET NO.	TOTAL SHEETS
		6	ARK.	012326	110	838
		PERMANENT PAVEMENT MARKING DETAILS				
2						

STATE OF ARKANSAS
LICENSED PROFESSIONAL ENGINEER
No.13436
SHAUNA. ROBERSON
DIGITALLY SIGNED 7/28/2023

N

1" = 200' SCALE

C.L. HWY. 68
10+00
45+00
WORD "YIELD" THERMOPLASTIC AND WHITE YIELD LINE
TURN LANE USE ARROW THERMOPLASTIC
6" CONTINUOUS WHITE ENHANCED THERMOPLASTIC
STANDARD TYPE II R.P.M DIRECTIONAL ARROWS
205+00
195+00
C.L. HWY. 412B RAMP 3
200+00
6" CONTINOUS YELLOW ENHANCED THERMOPLASTIC
10" WHITE REFLECTORIZED PAINT PAVEMENT MARKING ON ISLAND (TYP.)
12" WHITE STOP LINE THERMOPLASTIC
6" CONTINUOUS WHITE THERMOPLASTIC
6" DOUBLE YELLOW THERMOPLASTIC W/TPYE II (YELLOW/YELLOW) RAISED PAVEMENMT MARKERS AT 80' O.C.
8" YELLOW - 45°DIAGONAL THERMOPLASTIC
175+00
C.L. HWY. 412B RAMP 4
180+00
6" CONTINUOUS WHITE ENHANCED THERMOPLASTIC
6" SKIP WHITE THERMOPLASTIC W/TYPE II (WHITE/RED) RAISED PAVEMENT MARKERS AT 80' O.C.
6" CONTINUOUS YELLOW ENHANCED THERMOPLASTIC
185+00
190+00
C.L. MEDIAN
50+00
12" CONTINUOUS WHITE ENHANCED THERMOPLASTIC W/ TYPE II (RED/WHITE) RAISED PAVEMENT MARKERS AT 10' O.C.
STANDARD TYPE II R.P.M DIRECTIONAL ARROWS
C.L. HWY. 412B RAMP 1
20+00
6" CONTINUOUS WHITE ENHANCED THERMOPLASTIC
6" SKIP WHITE THERMOPLASTIC W/TYPE II (WHITE/RED) RAISED PAVEMENT MARKERS AT 80' O.C.
6" CONTINUOUS WHITE THERMOPLASTIC
TURN LANE USE THERMOPLASTIC
WORD "ONLY" THERMOPLASTIC
6" CONTINUOUS YELLOW ENHANCED THERMOPLASTIC
6" CONTINUOUS WHITE ENHANCED THERMOPLASTIC
10" WHITE REFLECTORIZED PAINT PAVEMENT MARKING ON ISLAND (TYP.)
8" YELLOW - 45°DIAGONAL THERMOPLASTIC
6" DOUBLE YELLOW THERMOPLASTIC W/TYPE II (YELLOW/YELLOW) RAISED PAVEMENMT MARKERS AT 80' O.C.
WORD "YIELD" THERMOPLASTIC AND WHITE YIELD LINE
C.L. HWY. 412B RAMP 2
6" SKIP WHITE THERMOPLASTIC W/TYPE II (WHITE/RED) RAISED PAVEMENT MARKERS AT 80' O.C.
C.L. MUSTEEN RD.
15+00
25+00
30+00
35+00
6" DOUBLE YELLOW REFLECTORIZED PAINT W/TYPE II (YELLOW/YELLOW) RAISED PAVEMENMT MARKERS AT 80' O.C.
6" CONTINUOUS WHITE REFLECTORIZED PAINT
WORD "ONLY" THERMOPLASTIC
TURN LANE-USE ARROW THERMOPLASTIC
12" WHITE STOP LINE THERMOPLASTIC
WORD "YIELD" THERMOPLASTIC AND WHITE YIELD LINE
6" WHITE - 45° DIAGONAL REFLECTORIZED PAINT
40+00
12" WHITE STOP LINE REFLECTORIZED PAINT
8" DOTTED WHITE THERMOPLASTIC (2' STRIPE, 6' GAP)(TYP.)
6" SKIP YELLOW WITH 4" YELLOW THERMOPLASTIC
C.L. HWY. 412B

PERMANENT PAVEMENT MARKING DETAILS

HBVinson 7/27/2023 1:42:39 PM
WORKSPACE: AHTD
L:\20f7\170f660 - ARDOT 012326 Hwy 412 - Hwy 112\Drawings\r012326_PM_MNL_02.dgn
REVISED DATE:

DATE REVISED	DATE REVISED	FED. RD. DIST. NO.	STATE	JOB NO.	SHEET NO.	TOTAL SHEETS
		6	ARK.	012326	111	838
		PERMANENT PAVEMENT MARKING DETAILS				
2						

STATE OF ARKANSAS
LICENSED PROFESSIONAL ENGINEER
No.13436
SHAUNA. ROBERSON
DIGITALLY SIGNED 7/28/2023

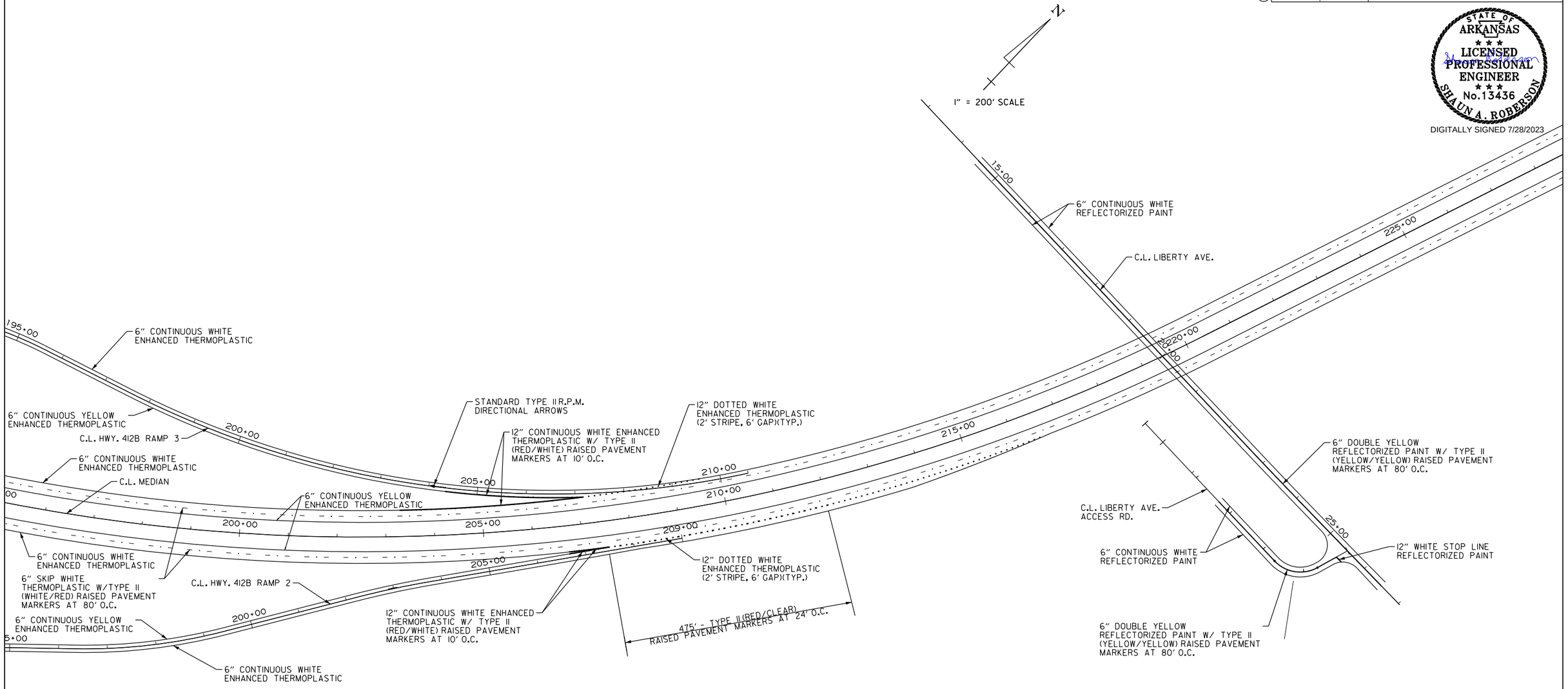

HBVinson
WORKSPACE: AHTD
L:\2017\17017660 - ARDOT 012326 Hwy 412 - Hwy 112\Drawings\r-012326_PM_MNL_03.dgn
7/27/2023 1:42:40 PM
REVISED DATE:

PERMANENT PAVEMENT MARKING DETAILS

DATE REVISED	DATE REVISED	FED. RD. DIST. NO.	STATE	JOB NO.	SHEET NO.	TOTAL SHEETS
		6	ARK.	012326	112	838
		PERMANENT PAVEMENT MARKING DETAILS				

STATE OF ARKANSAS
LICENSED PROFESSIONAL ENGINEER
No.13436
SHAUN A. ROBERSON
DIGITALLY SIGNED 7/28/2023

1" = 200' SCALE

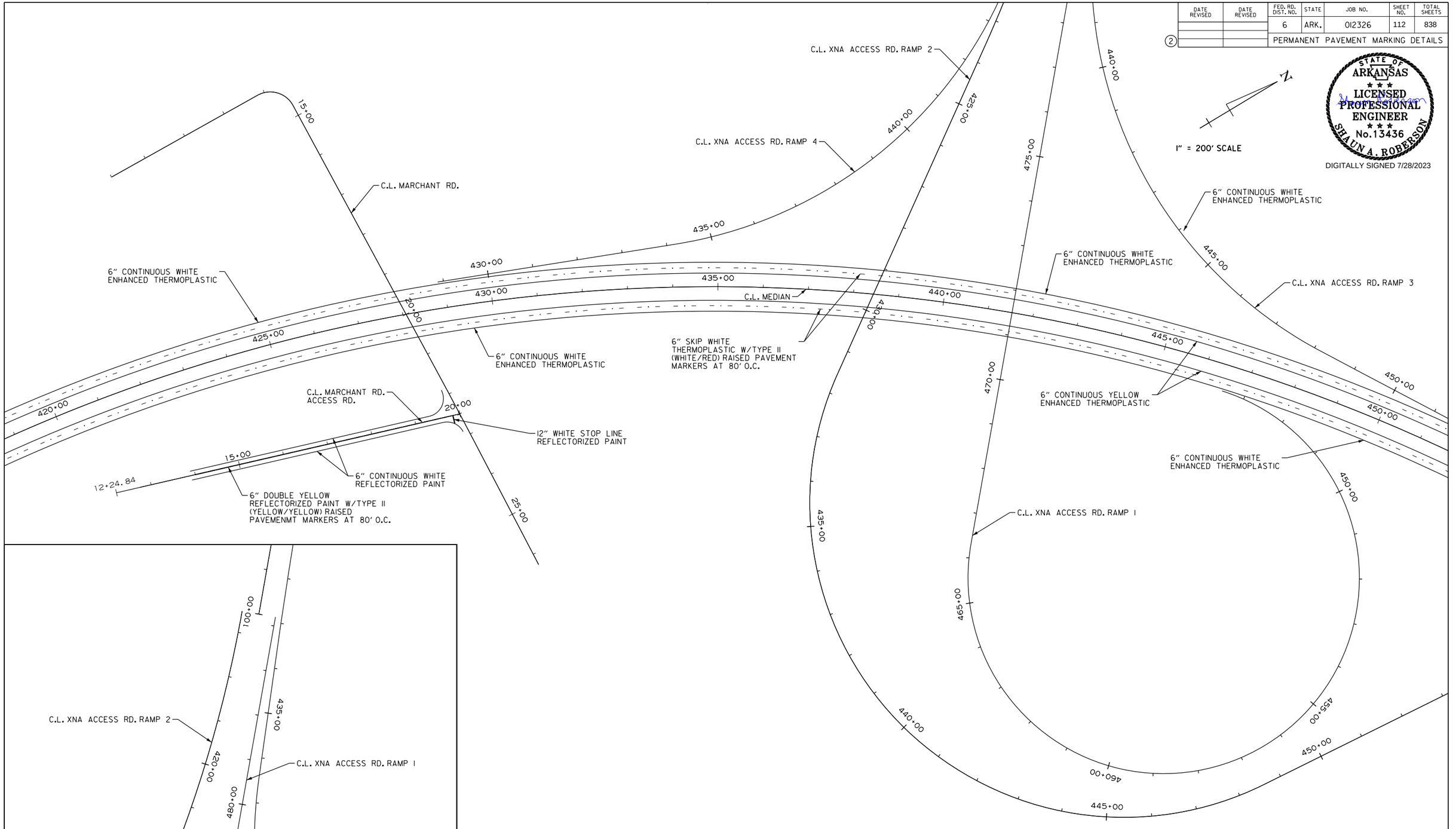

HBVinson
7/27/2023 11:42:43 PM
WORKSPACE: AHTD
L:\2017\17017660 - ARDOT 012326 Hwy 412 - Hwy 112\Drawings\r012326_PM_MNL_04.dgn
REVISED DATE:

PERMANENT PAVEMENT MARKING DETAILS

DATE REVISED	DATE REVISED	FED. RD. DIST. NO.	STATE	JOB NO.	SHEET NO.	TOTAL SHEETS
		6	ARK.	012326	113	838
		PERMANENT PAVEMENT MARKING DETAILS				

(2)

N

1" = 200' SCALE

STATE OF ARKANSAS
LICENSED PROFESSIONAL ENGINEER
No.13436
SHAUN A. ROBERSON

DIGITALLY SIGNED 7/28/2023

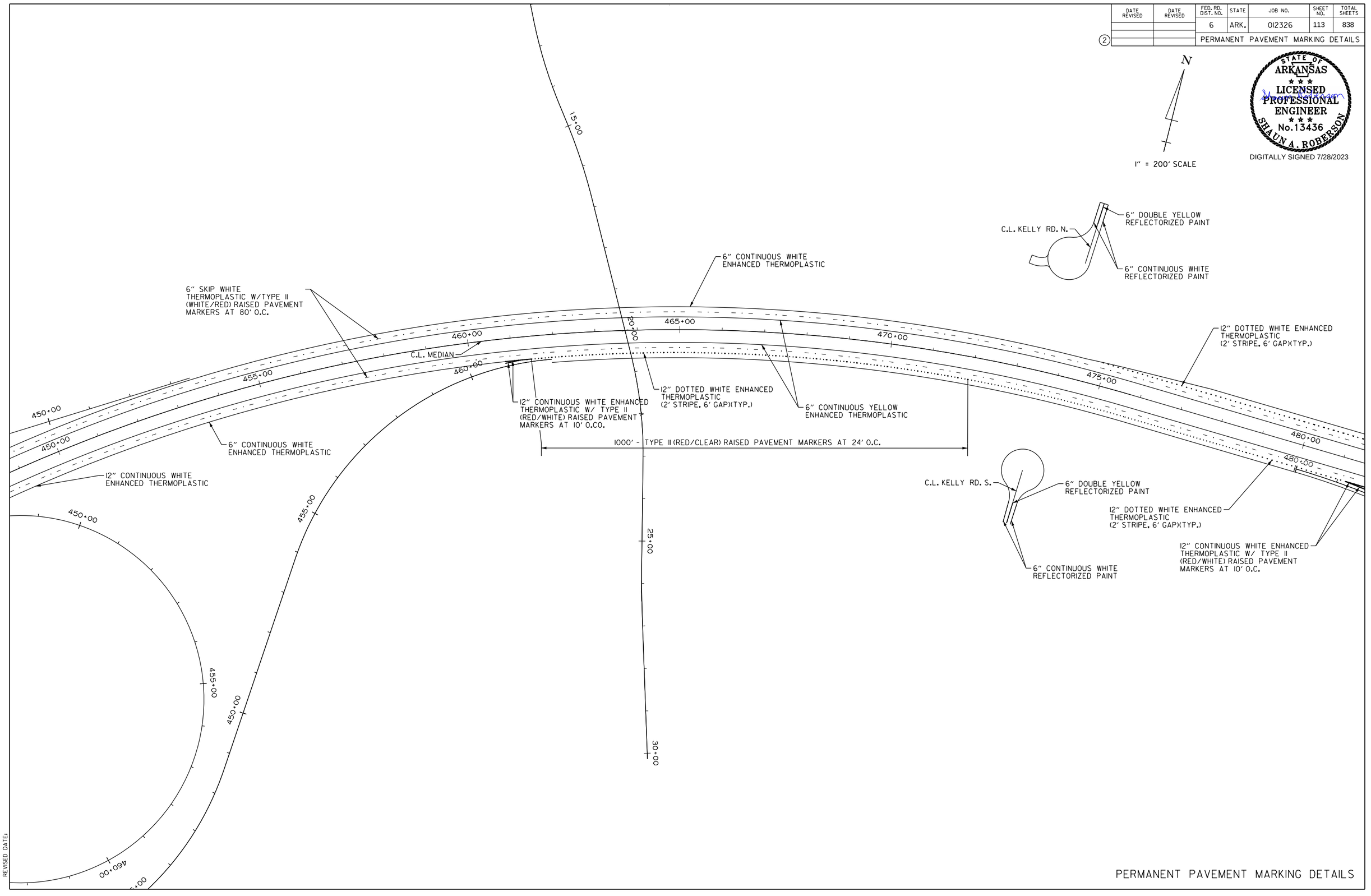

HBVinson
7/27/2023 1:42:46 PM
WORKSPACE: AHTD
L:\201\T01\660 - ARDOT 012326 Hwy 412 - Hwy 112\Drawings\r012326_PM_MNL_05.dgn
REVISED DATE:

PERMANENT PAVEMENT MARKING DETAILS

DATE REVISED	DATE REVISED	FED. RD. DIST. NO.	STATE	JOB NO.	SHEET NO.	TOTAL SHEETS
		6	ARK.	012326	114	838

2

PERMANENT PAVEMENT MARKING DETAILS

STATE OF ARKANSAS
LICENSED PROFESSIONAL ENGINEER
No. 13436
SHAUN A. ROBERSON
DIGITALLY SIGNED 7/28/2023

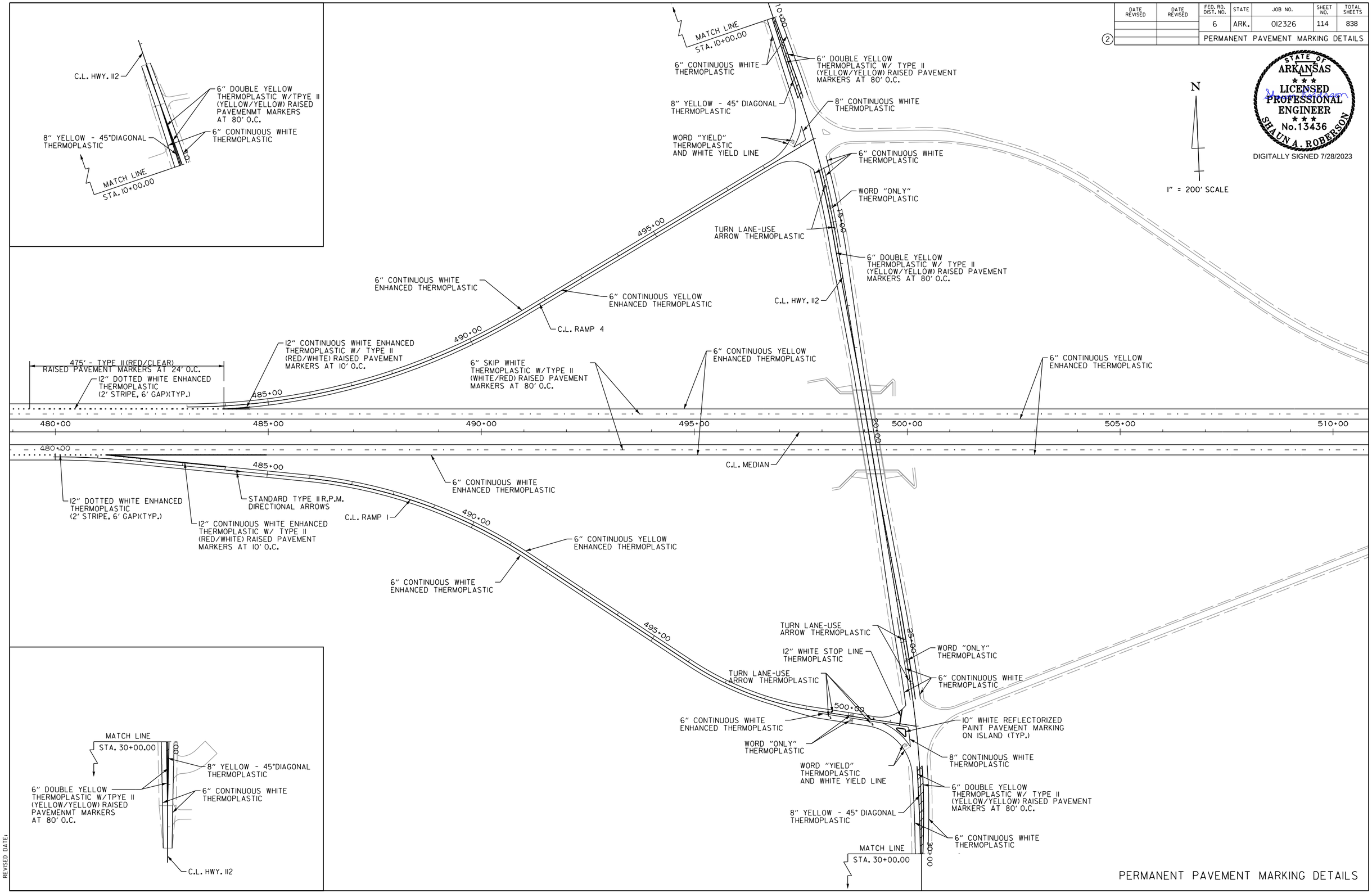

PERMANENT PAVEMENT MARKING DETAILS

HBVinson 7/27/2023 1:42:47 PM
WORKSPACE: AHTD
L:\2017\1701660 - ARDOT 012326 Hwy 412 - Hwy 112\Drawings\r012326_PM_MNL_06.dgn
REVISED DATE:

DATE REVISED	DATE REVISED	FED. RD. DIST. NO.	STATE	JOB NO.	SHEET NO.	TOTAL SHEETS
		6	ARK.	012326	115	838
		PERMANENT PAVEMENT MARKING DETAILS				
2						

STATE OF ARKANSAS
LICENSED PROFESSIONAL ENGINEER
No.13436
SHAUN A. ROBERSON
DIGITALLY SIGNED 7/28/2023

N

1" = 200' SCALE

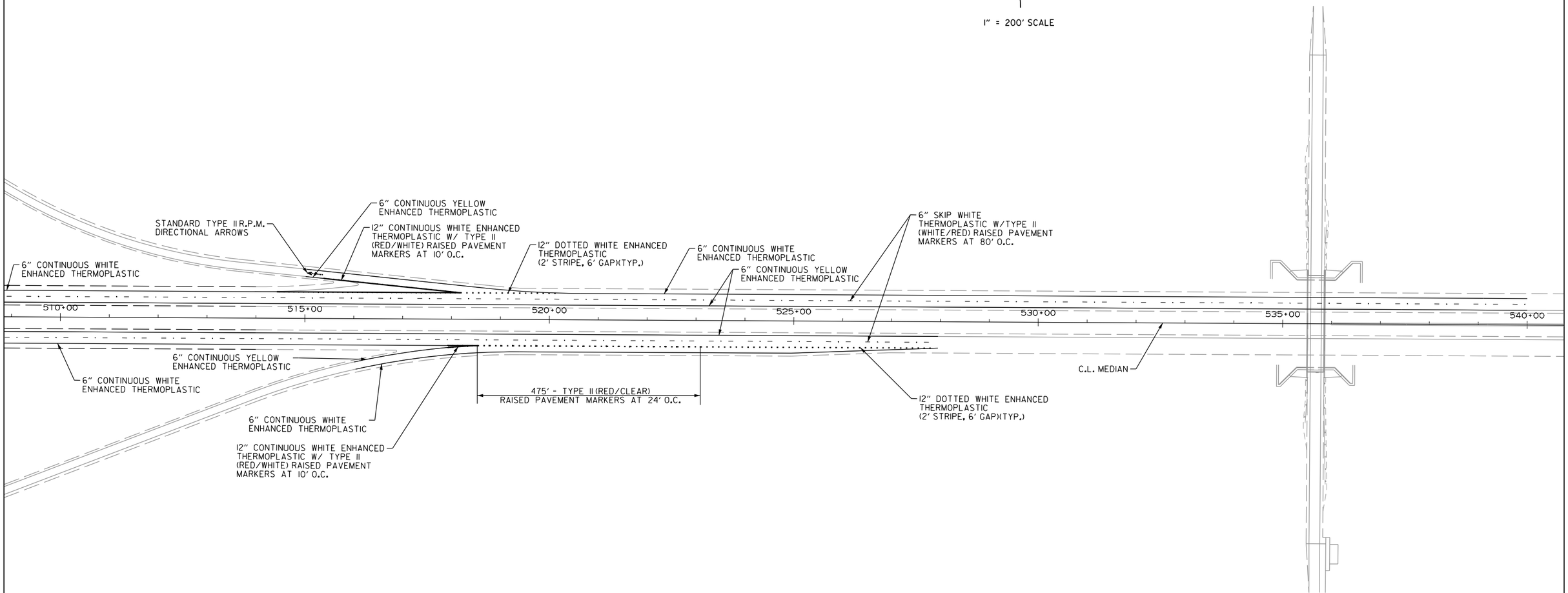

PERMANENT PAVEMENT MARKING DETAILS

HBVinson 7/27/2023 1:42:48 PM
WORKSPACE: AHTD
L:\2017\17017660 - ARDOT 012326 Hwy 412 - Hwy 112\Drawings\r012326_PM_MNL_07.dgn
REVISED DATE:

DATE REVISED	DATE REVISED	FED. RD. DIST. NO.	STATE	JOB NO.	SHEET NO.	TOTAL SHEETS
		6	ARK.	012326	116	838
②		SIGN QUANTITIES				

STANDARD SIGN QUANTITIES
SQUARE TUBE POSTS (BOX 1of 2)

SIGN NO./LOCATION	STANDARD ROADSIDE SIGNS TO BE MOUNTED	OMNI-DIRECTIONAL POST ASSEMBLIES					
		G-1	G-2	G2-1	G2-3	G2-4	G2-5
		EACH	EACH	EACH	EACH	EACH	EACH
SS-412-72-STA147+00WB	R5-1	1					
SS-412-72-STA165+00WB	W4-2			1			
SS-412-72-STA169+00WB	W9-1R			1			
SS-412-72-STA175+00WB	W4-1			1			
SS-412-72-STA179+50EB	W8-13			1			
SS-MUS-72-STA14+00NB	W1-2R, W13-1	1					
SS-MUS-72-STA16+00NB	W1-8, W1-8	1					
SS-MUS-72-STA17+00NB	W1-8, W1-8	1					
SS-MUS-72-STA18+00NB	W1-8, W1-8	1					
SS-MUS-72-STA19+00NB	W1-8, W1-8	1					
SS-MUS-72-STA20+00NB	W1-8, W1-8	1					
SS-MUS-72-STA21+00NB	W1-8, W1-8	1					
SS-MUS-72-STA22+00NB	W1-8, W1-8	1					
SS-MUS-72-STA23+50WB	W1-2L, W13-1	1					
SS-RMP1-72-STA181+00EB	W3-5			1			
SS-RMP1-72-STA181+00EB	W3-5			1			
SS-RMP1-72-STA185+00EB	R2-1			1			
SS-RMP1-72-STA185+00EB	R2-1			1			
SS-RMP1-72-STA188+00EB	W3-3			1			
SS-RMP1-72-STA188+00EB	W3-3			1			
SS-RMP4-72-STA190+00WB	R2-1			1			
SS-612-72-STA184+33EB	OM3-L	1					
SS-612-72-STA184+73EB	OM3-R	1					
SS-612-72-STA186+47WB	OM3-R	1					
SS-612-72-STA186+83WB	OM3-L	1					
SS-612-72-STA191+45EB	OM3-L	1					
SS-612-72-STA191+56EB	OM3-R	1					
SS-612-72-STA193+60WB	OM3-R	1					
SS-612-72-STA193+60WB	OM3-L	1					
SS-068-72-STA45+50WB	R1-2, R5-1				1		
SS-068-72-STA47+00WB	R5-1, R6-1L, R6-1R	1					
SS-068-72-STA49+00EB	M3-2, M1-5, M5-1L; M4-5, M1-4, M6-3			1			
GM-068-72-STA52+00EB	D1-2		1				
SS-RMP3-72-STA192+50WB	R1-1, R5-1, R6-1L, R6-1R				1		
SS-RMP3-72-STA195+00WB	R5-1a			1			
GM-RMP3-72-STA195+00WB	R5-1a, D1-1				1		
SS-MUS-72-STA33+00EB	W1-2L, W13-1	1					
SS-MUS-72-STA35+00EB	W1-8, W1-8	1					
SS-MUS-72-STA36+00EB	W3-3	1					
SS-MUS-72-STA37+00EB	W1-8, W1-8	1					
SS-MUS-72-STA38+00EB	W1-8, W1-8	1					
SS-RMP1-72-STA192+00EB	M4-5, M3-2, M1-5, M5-1L; M3-2, M1-4, M6-3			1			
GM-RMP1-72-STA194+50EB	D1-1		1				
SS-RMP4-72-STA192+00WB	M3-4, M1-4	1					
SS-412-72-STA195+40WB	R1-2, R5-1				1		
GM-412-72-STA14+00WB	D1-1		1				
SS-412-72-STA15+00EB	M3-2, M1-5	1					
GM-412-72-STA17+00WB	M3-4, M1-4, M6-3; M4-5, M3-2, M1-5, M5-1R; D1-2						1
SS-412-72-STA18+00EB	R2-1			1			
SS-412-72-STA19+00WB	W3-3			1			
GM-068-72-STA54+75EB	M3-2, M1-4, M6-1L; M3-4, M1-4, M6-1R; D1-2						1
SS-068-72-STA54+90WB	M3-2, M1-5, M6-2R; D1-1					1	
SS-068-72-STA56+00WB	R1-2, R5-1				1		
SS-RMP2-72-STA193+50EB	R1-2, R5-1				1		
SS-RMP3-72-STA197+00WB	W3-1			1			
SS-612-72-STA199+50WB	W8-13			1			
SS-612-72-STA202+00EB	W4-1			1			
SS-904-72-STA16+00EB	W8-13	1					
SS-904-72-STA18+95EB	OM3-R	1					
SS-904-72-STA21+10WB	OM3-R	1					
SS-904-72-STA24+00WB	W8-13	1					
SS-LIB-72-STA19+75NB	R1-1	1					
SS-612-72-STA222+00EB	M3-2, M1-5	1					
SS-412-72-STA226+00EB	R2-1			1			
SS-612-72-STA288+00EB	W8-13			1			
SS-612-72-STA294+02EB	OM3-L	1					
SS-612-72-STA294+20EB	OM3-R	1					
SS-612-72-STA296+35WB	OM3-R	1					
SUBTOTALS		35	3	21	6	1	2

STANDARD SIGN QUANTITIES
SQUARE TUBE POSTS (BOX 2 of 2)

SIGN NO./LOCATION	STANDARD ROADSIDE SIGNS TO BE MOUNTED	OMNI-DIRECTIONAL POST ASSEMBLIES					
		G-1	G-2	G2-1	G2-3	G2-4	G2-5
		EACH	EACH	EACH	EACH	EACH	EACH
SS-612-72-STA296+52WB	OM3-L	1					
SS-612-72-STA302+75WB	W8-13			1			
SS-612-72-STA372+00EB	W8-13			1			
SS-612-72-STA378+23EB	OM3-L	1					
SS-612-72-STA378+23EB	OM3-R	1					
SS-612-72-STA387+88WB	OM3-R	1					
SS-612-72-STA387+88WB	OM3-L	1					
SS-612-72-STA394+00WB	W8-13			1			
GM-612-04-STA401+00EB	I-2 (Benton Co)		1				
GM-612-04-STA401+00WB	I-2 (Washington Co)		1				
SS-612-72-STA421+00EB	W8-13			1			
SS-612-04-STA427+05EB	OM3-L	1					
SS-612-04-STA427+16EB	OM3-R	1					
SS-612-04-STA428+90WB	OM3-R	1					
SS-612-04-STA429+05WB	OM3-L	1					
SS-CUL-04-STA19+16WB	W14-2	1					
SS-CUL-04-STA19+80EB	R1-1	1					
SS-612-72-STA435+00WB	W8-13			1			
SS-612-04-STA458+00EB	W8-13			1			
SS-612-04-STA462+66EB	OM3-L	1					
SS-612-04-STA462+77EB	OM3-R	1					
SS-612-04-STA464+63WB	OM3-R	1					
SS-612-04-STA464+71WB	OM3-L	1					
SS-612-04-STA471+00WB	W8-13			1			
SS-612-04-STA489+00WB	W4-1			1			
SS-RMP1-04-STA496+00EB	W3-1			1			
SS-RMP1-04-STA498+00EB	M3-1, M1-5, M5-1L ; M3-3, M1-5, M5-1R			1			
SS-RMP1-04-STA499+50EB	R5-1a			1			
GM-RMP1-04-STA499+50EB	R5-1a, D1-2				1		
SS-RMP1-04-STA501+05EB	R5-1, R6-1L, R6-1R	1					
SS-RMP1-04-STA501+30EB	R1-1, R5-1, R6-1L, R6-1R					1	
SS-RMP1-04-STA501+35EB	R1-2, R5-1				1		
GM-112-04-STA17+00NB	D1-2		1				
SS-112-04-STA14+00NB	M3-4, M1-5, M6-1L ; M3-1, M1-5, M6-3			1			
SS-112-04-STA12+00SB	M3-3, M1-5, M6-3 ; M3-4, M1-5, M6-1R			1			
GM-112-04-STA10+00SB	D1-2		1				
SS-612-04-STA514+00EB	W4-1			1			
SUBTOTALS		16	4	14	2	1	0
TOTALS		51	7	35	8	2	2

STATE OF ARKANSAS
LICENSED PROFESSIONAL ENGINEER
No.8141
NICCI D. TINER

DIGITALLY SIGNED 7/28/2023

HBVinson
WORKSPACE: AHTD
L:\2017\170766O - ARDOT 012326 Hwy 412 - Hwy 112\Drawings\r012326_SIGNS_QUANS_0.dgn
7/27/2023 14:42:55 PM
REVISED DATE:

DATE REVISED	DATE REVISED	FED. RD. DIST. NO.	STATE	JOB NO.	SHEET NO.	TOTAL SHEETS
		6	ARK.	012326	117	838
		SIGN QUANTITIES				
②						

STATE OF ARKANSAS
LICENSED PROFESSIONAL ENGINEER
No.8141
NICCI D. TINER

DIGITALLY SIGNED 7/28/2023

STANDARD ROADSIDE SIGN
SHEET ALUMINUM 0.100" THICKNESS (5 SF OR LESS)

SIGN NO.	SIZE OF SIGN	UNIT AREA (SQ. FT.)	QUANTITY REQUIRED	TOTAL SIGN AREA (SQ. FT.)	LEGEND/BACKGROUND
M1-4	30" x 24"	5.00	7	35.00	BLACK/WHITE
M1-5	30" x 24"	5.00	11	55.00	BLACK/WHITE
M3-1	24" x 12"	2.00	2	4.00	BLACK/WHITE
M3-2	24" x 12"	2.00	8	16.00	BLACK/WHITE
M3-3	24" x 12"	2.00	2	4.00	BLACK/WHITE
M3-4	24" x 12"	2.00	3	6.00	BLACK/WHITE
M4-5	24" x 12"	2.00	3	6.00	BLACK/WHITE
M5-1L	21" x 15"	2.19	3	6.56	BLACK/WHITE
M5-1R	21" x 15"	2.19	2	4.38	BLACK/WHITE
M6-1L	21" x 15"	2.19	2	4.38	BLACK/WHITE
M6-1R	21" x 15"	2.19	2	4.38	BLACK/WHITE
M6-2R	21" x 15"	2.19	1	2.19	BLACK/WHITE
M6-3	21" x 15"	2.19	5	10.94	BLACK/WHITE
R6-1L	36" x 12"	3.00	4	12.00	BLACK/WHITE
R6-1R	36" x 12"	3.00	4	12.00	BLACK/WHITE
OM3-L	12" x 36"	3.00	12	36.00	BLACK/YELLOW
OM3-R	12" x 36"	3.00	14	42.00	BLACK/YELLOW
W1-8L	24" x 30"	5.00	6	30.00	BLACK/YELLOW
W1-8R	24" x 30"	5.00	14	70.00	BLACK/YELLOW
W13-1P	18" x 18"	2.25	3	6.75	BLACK/YELLOW
TOTAL 0.100" THICKNESS				**367.56**	

STANDARD ROADSIDE SIGNS
SHEET ALUMINUM 0.125" THICKNESS (GREATER THAN 5 SF)

SIGN NO.	SIZE OF SIGN	UNIT AREA (SQ. FT.)	QUANTITY REQUIRED	TOTAL SIGN AREA (SQ. FT.)	LEGEND/BACKGROUND
R1-1	36" x 36"	7.46	3	22.38	WHITE/RED
R1-1	48" x 48"	13.25	2	26.50	WHITE/RED
R1-2	48" x 48" x 48"	6.93	5	34.65	RED/WHITE
R2-1	36" x 48"	12	5	60.00	BLACK/WHITE
R5-1	36" x 36"	9	10	90.00	RED/WHITE
R5-1a	42" x 30"	8.75	4	35.00	WHITE/RED
W1-2L	36" x 36"	9	2	18.00	BLACK/YELLOW
W1-2R	36" x 36"	9	1	9.00	BLACK/YELLOW
W3-1	48" x 48"	16	2	32.00	BLACK/YELLOW
W3-3	36" x 36"	9	1	9.00	BLACK/YELLOW
W3-3	48" x 48"	16	3	48.00	BLACK/YELLOW
W3-5	48" x 48"	16	2	32.00	BLACK/YELLOW
W4-1R	48" x 48"	16	4	64.00	BLACK/YELLOW
W4-2R	48" x 48"	16	1	16.00	BLACK/YELLOW
W8-13	36" x 36"	9	2	18.00	BLACK/YELLOW
W8-13	48" x 48"	16	10	160.00	BLACK/YELLOW
W9-1R	48" x 48"	16	1	16.00	BLACK/YELLOW
W13-3	48" x 60"	20	3	60.00	BLACK/YELLOW
W14-2	30" x 30"	6.25	1	6.25	BLACK/YELLOW
D1-2	84" x 30"	17.5	1	17.50	WHITE/GREEN
D1-1	72" x 18"	9	1	9.00	WHITE/GREEN
D1-2	84" x 30"	17.5	1	17.50	WHITE/GREEN
D1-2	72" x 30"	15	1	15.00	WHITE/GREEN
D1-2	78" x 30"	16.25	1	16.25	WHITE/GREEN
D1-1	78" x 12"	6.5	1	6.50	WHITE/GREEN
D1-1	78" x 12"	6.5	1	6.50	WHITE/GREEN
D1-1	66" x 18"	8.25	1	8.25	WHITE/GREEN
D1-2	84" x 30"	17.5	1	17.50	WHITE/GREEN
D1-2	84" x 30"	17.5	1	17.50	WHITE/GREEN
I-2	90" x 24"	15	1	15.00	WHITE/GREEN
I-2	72" x 24"	12	1	12.00	WHITE/GREEN
TOTAL 0.125" THICKNESS				**915.28**	

SIGN NO./LOCATION	STRUCTURE TYPE	SIGN				BREAKAWAY SIGN SUPPORT										EXIT NUMBER PANEL			
	TYPE	STANDARD SIGN	GUIDE SIGN			STEEL SECT. A-572		SIGN POST LENGTH		STUB POST		FOOTINGS			SIGN POST AND STUB	LEGEND	TYPE		
			LENGTH	HEIGHT	AREA			H-1	H-2	H-1	H-2	DIA.	DEPTH	EMBED.			A	B	C
	G-2	SQ. FT.	FT.	FT.	SQ. FT.	BEAM	LBS	LIN FT		LIN FT		LIN FT			POUND		SQ. FT.		
GM-412-72-STA150+00EB	1		14.50	10.00	145.00	W8	18	17	19.175	3.66	3.66	1.5	5	3.33	783.04	1	17.5		
GM-612-72-STA234+00WB	1		14.50	10.00	145.00	W8	18	17	19.175	3.66	3.66	1.5	5	3.33	783.04	1	17.5		
GM-612-72-STA258+00WB	1		14.50	10.00	145.00	W8	18	17	19.175	3.66	3.66	1.5	5	3.33	783.04	1	17.5		
GM-612-04-STA426+75EB	1		17.00	12.50	212.50	W8	18	18.25	20.8	3.66	3.66	1.5	5	3.33	834.79	9	17.5		
GM-612-04-STA455+00EB	1		17.00	12.50	212.50	W8	18	18.25	20.8	3.66	3.66	1.5	5	3.33	834.79	9	17.5		
GM-612-04-STA545+00WB	1		17.00	12.50	212.50	W8	18	18.25	20.8	3.66	3.66	1.5	5	3.33	834.79	9	17.5		
GM-412-72-STA178+25EB	1		6.00	5.50	33.00	W6	9	12.5	12.5	3.66	3.66	1.5	5	3.33	290.93				
GM-612-72-STA204+25WB	1		6.00	5.50	33.00	W6	9	12.5	12.5	3.66	3.66	1.5	5	3.33	290.93				
GM-612-04-STA484+00EB	1		6.00	5.50	33.00	W6	9	12.5	12.5	3.66	3.66	1.5	5	3.33	290.93				
GM-612-04-STA515+40WB	1		6.00	5.50	33.00	W6	9	12.5	12.5	3.66	3.66	1.5	5	3.33	290.93				
TOTALS:	**10**				**1204.5**										**6017.20**		**105.00**	**0.00**	**0.00**

HBVinson 7/27/2023 1:43:12 PM
WORKSPACE: AHTD
L:\20\T\70\T660 - ARDOT 012326 Hwy 412 - Hwy 112\Drawings\r012326_SIGNS_QUANS_02.dgn
REVISED DATE:

DATE REVISED	DATE REVISED	FED. RD. DIST. NO.	STATE	JOB NO.	SHEET NO.	TOTAL SHEETS
		6	ARK.	012326	118	838
		SIGN QUANTITIES				
②						

STATE OF ARKANSAS
LICENSED PROFESSIONAL ENGINEER
No.8141
NICCI D. TINER

DIGITALLY SIGNED 7/28/2023

SIGN NO./ LOCATION	STRUCTURE TYPE			SIGN				EXIT NUMBER PANEL				GUARDRAIL				
				STANDARD SIGN	GUIDE SIGN LENGTH	GUIDE SIGN HEIGHT			TYPE A	TYPE B	TYPE C	TYPE A	TERM. ANCHOR TYPE 1	GUARDRAIL TERM. TYPE 2	AGG. BASE CR (CL. 7)	ACHM SURF. CR. 220 LBS/SY PG
	OH	BM	CL	SQ. FT.	LIN. FT.		SQ. FT.	LEGEND	SQ. FT.			LIN. FT.	EACH	EACH	TON	TON
OH-412-72-002	1											SEE ROADWAY PLANS FOR GUARDRAIL DETAILS				
OH-412-72-STA175+35EB-A					18	12.5	225									
OH-412-72-STA175+35EB-B					17.5	11	192.5	1	17.50							
OH-612-72-001	1			20								SEE ROADWAY PLANS FOR GUARDRAIL DETAILS				
OH-612-72-STA207+15WB-A					19.5	11	214.5									
OH-612-72-STA207+15WB-B					15.5	11	170.5	1	17.50							
OH-RMP2-04-001	1															
FUTURE PROJECT					0	0	0									
FUTURE PROJECT					0	0	0									
OC-612-04-002			1									SEE ROADWAY PLANS FOR GUARDRAIL DETAILS				
OH-612-04-STA465+50EB					17	13	221	9	17.50							
OC-612-04-003			1	20								SEE ROADWAY PLANS FOR GUARDRAIL DETAILS				
OC-612-04-STA481+00EB					17	13.5	229.5	9	17.50							
OC-612-04-004			1	20								SEE ROADWAY PLANS FOR GUARDRAIL DETAILS				
OC-612-04-STA518+25WB					17	13.5	229.5	9	17.50							
TOTALS	**3**	**0**	**3**	**60**			**1482.50**		**87.50**	**0.00**	**0.00**					

SIGNING SUMMARY OF QUANTITIES

ITEM NUMBER	ITEM	UNIT	ESTIMATED QUANTITY
SP	STEEL OVERHEAD SIGN STRUCTURE (OH-412-72-002)	EACH	1
SP	STEEL OVERHEAD SIGN STRUCTURE (OH-612-72-001)	EACH	1
SP	STEEL OVERHEAD SIGN STRUCTURE (OH-RMP2-04-001)	EACH	1
SP	STEEL CANTILEVER SIGN STRUCTURE (OC-612-04-002)	EACH	1
SP	STEEL CANTILEVER SIGN STRUCTURE (OC-612-04-003)	EACH	1
SP	STEEL CANTILEVER SIGN STRUCTURE (OC-612-04-004)	EACH	1
SP,SS, & 725	GUIDE SIGN - ROADSIDE MOUNTED (DEMOUNTABLE LEGEND)	SQ. FT.	1205
SP,SS, & 725	GUIDE SIGN - OVERHEAD MOUNTED (DEMOUNTABLE LEGEND)	SQ. FT.	1570
SP,SS, & 726	STANDARD SIGN	SQ. FT.	1283
SP & 727	EXIT NUMBER PANEL (TYPE A)	SQ. FT.	105
SS & 730	BREAKAWAY SIGN SUPPORT (TYPE G-2)	POUND	6017
SP	OMNI-DIRECTIONAL BREAKAWAY SIGN SUPPORTS (TYPE G-1)	EACH	51
SP	OMNI-DIRECTIONAL BREAKAWAY SIGN SUPPORTS (TYPE G-2)	EACH	7
SP	OMNI-DIRECTIONAL BREAKAWAY SIGN SUPPORTS (TYPE G2-1)	EACH	35
SP	OMNI-DIRECTIONAL BREAKAWAY SIGN SUPPORTS (TYPE G2-3)	EACH	8
SP	OMNI-DIRECTIONAL BREAKAWAY SIGN SUPPORTS (TYPE G2-4)	EACH	2
SP	OMNI-DIRECTIONAL BREAKAWAY SIGN SUPPORTS (TYPE G2-5)	EACH	2

WBCallaway 7/31/2023 8:42:49 AM
WORKSPACE: AHTD
L:\201\T017660 - ARDOT 012326 Hwy 412 - Hwy 112\Drawings\r012326_SIGNS_QUANS_03.dgn
REVISED DATE:

DATE REVISED	DATE REVISED	FED. RD. DIST. NO.	STATE	JOB NO.	SHEET NO.	TOTAL SHEETS
		6	ARK.	012326	119	838
		SIGN PLACEMENT SHEET				

2

STATE OF ARKANSAS
LICENSED PROFESSIONAL ENGINEER
No.8141
NICCI D. TINER

DIGITALLY SIGNED 7/28/2023

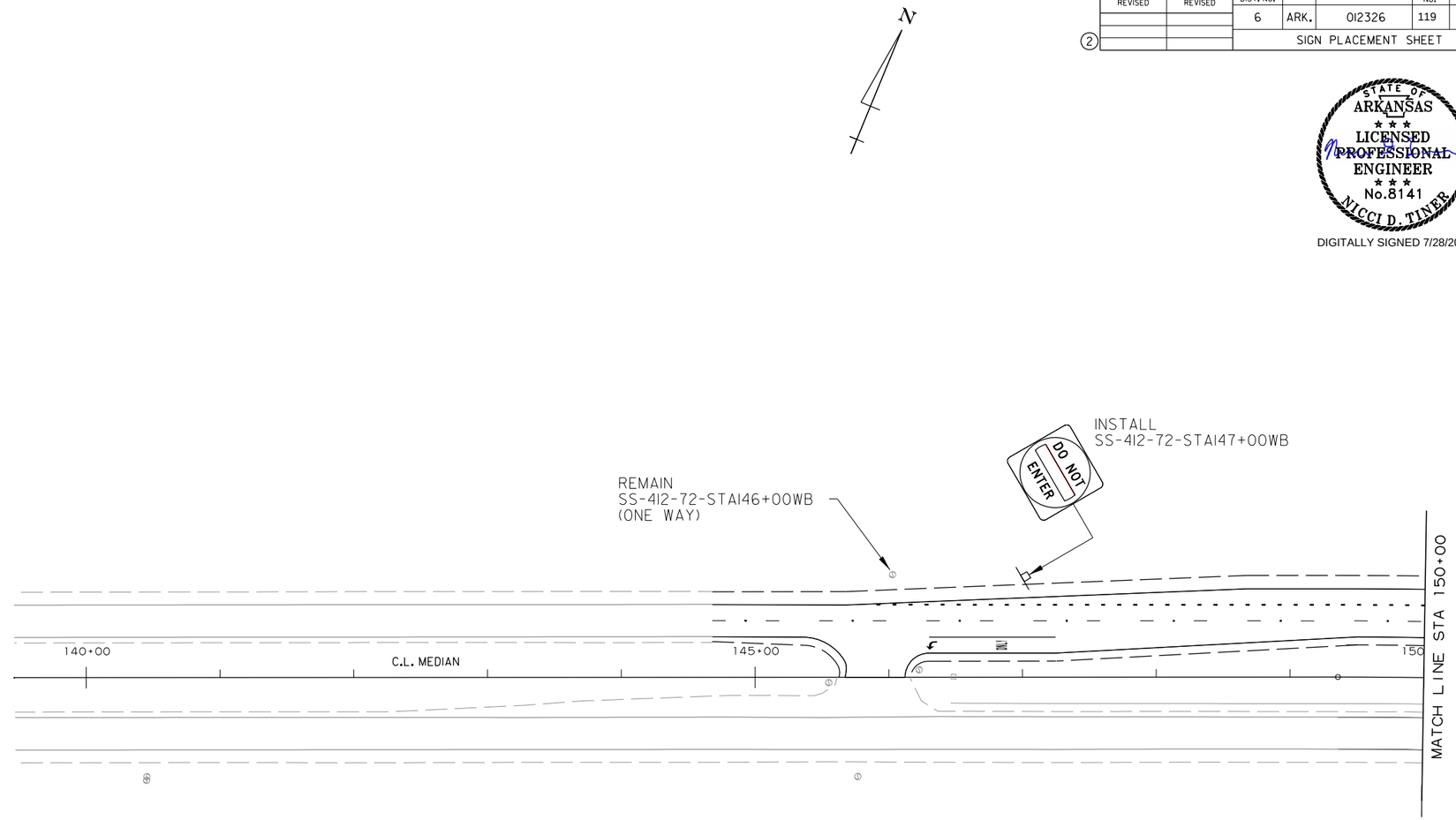

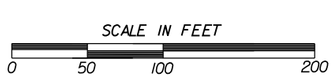

SIGN PLACEMENT SHEET

HBVinson 7/27/2023 1:43:47 PM
WORKSPACE: AHTD
L:\2017\17017660 - ARDOT 012326 Hwy 412 - Hwy 112\Drawings\r012326_SIGNS_01.dgn
REVISED DATE:

DATE REVISED	DATE REVISED	FED. RD. DIST. NO.	STATE	JOB NO.	SHEET NO.	TOTAL SHEETS
		6	ARK.	012326	120	838
		SIGN PLACEMENT SHEET				
2						

N

STATE OF
ARKANSAS
LICENSED
PROFESSIONAL
ENGINEER
No.8141
NICCI D. TINER

DIGITALLY SIGNED 7/28/2023

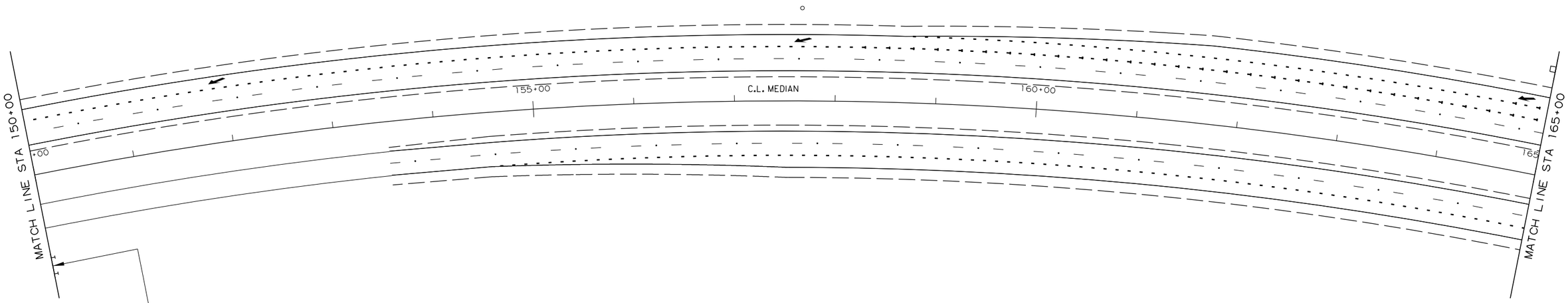

INSTALL
GM-412-72-STA150+00EB

SCALE IN FEET
0 50 100 200

SIGN PLACEMENT SHEET

HBVinson 7/27/2023 1:43:48 PM
WORKSPACE: AHTD
L:\2017\017660 - ARDOT 012326 Hwy 412 - Hwy 112\Drawings\r-012326_SIGNS_02.dgn
REVISED DATE:

DATE REVISED	DATE REVISED	FED. RD. DIST. NO.	STATE	JOB NO.	SHEET NO.	TOTAL SHEETS
		6	ARK.	012326	121	838
②		SIGN PLACEMENT SHEET				

STATE OF ARKANSAS
LICENSED PROFESSIONAL ENGINEER
No.8141
NICCI D. TINER
DIGITALLY SIGNED 7/28/2023

N

INSTALL
SS-412-72-STAI65+00WB

INSTALL
SS-412-72-STAI69+00WB

INSTALL
SS-412-72-STAI75+00WB

MATCH LINE STA 165+00

MATCH LINE STA 179+00

MATCH LINE STA 180+00

C.L. HWY. 412B RAMP 4

C.L. HWY. 412B RAMP 1

C.L. MEDIAN

C.L. MEDIAN

170+00

175+00

180

INSTALL
OH-412-72-002

TO EAST
INTERSTATE 49
612
Bentonville

EXIT 1
412 EAST
Springdale

INSTALL
OH-412-72-STAI75+35EB-A

INSTALL
OH-412-72-STAI75+35EB-B

MATCH LINE STA 22+50

20+00

EXIT 1

BRIDGE ICES BEFORE ROAD

INSTALL
SS-412-72-STAI79+50EB

INSTALL
GM-412-72-STAI78+25EB

C.L. MUSTEEN RD

INSTALL
SS-MUS-72-STAI6+00NB
SS-MUS-72-STAI7+00NB
SS-MUS-72-STAI8+00NB
SS-MUS-72-STAI9+00NB
SS-MUS-72-STA20+00NB
SS-MUS-72-STA21+00NB
SS-MUS-72-STA22+00NB

MATCH LINE STA 15+75

15+00

INSTALL
SS-MUS-72-STAI4+00NB

C.L. MUSTEEN RD

XX MPH

SCALE IN FEET
0 50 100 200

HBVinson 7/27/2023 14:53:53 PM
WORKSPACE: AHTD
L:\2017\17017660 - ARDOT 012326 Hwy 412 - Hwy 112\Drawings\r012326_SIGNS_03.dgn
REVISED DATE:

DATE REVISED	DATE REVISED	FED. RD. DIST. NO.	STATE	JOB NO.	SHEET NO.	TOTAL SHEETS
		6	ARK.	012326	122	838
		SIGN PLACEMENT SHEET				

2

STATE OF ARKANSAS
LICENSED PROFESSIONAL ENGINEER
No.8141
NICCI D. TINER
DIGITALLY SIGNED 7/28/2023

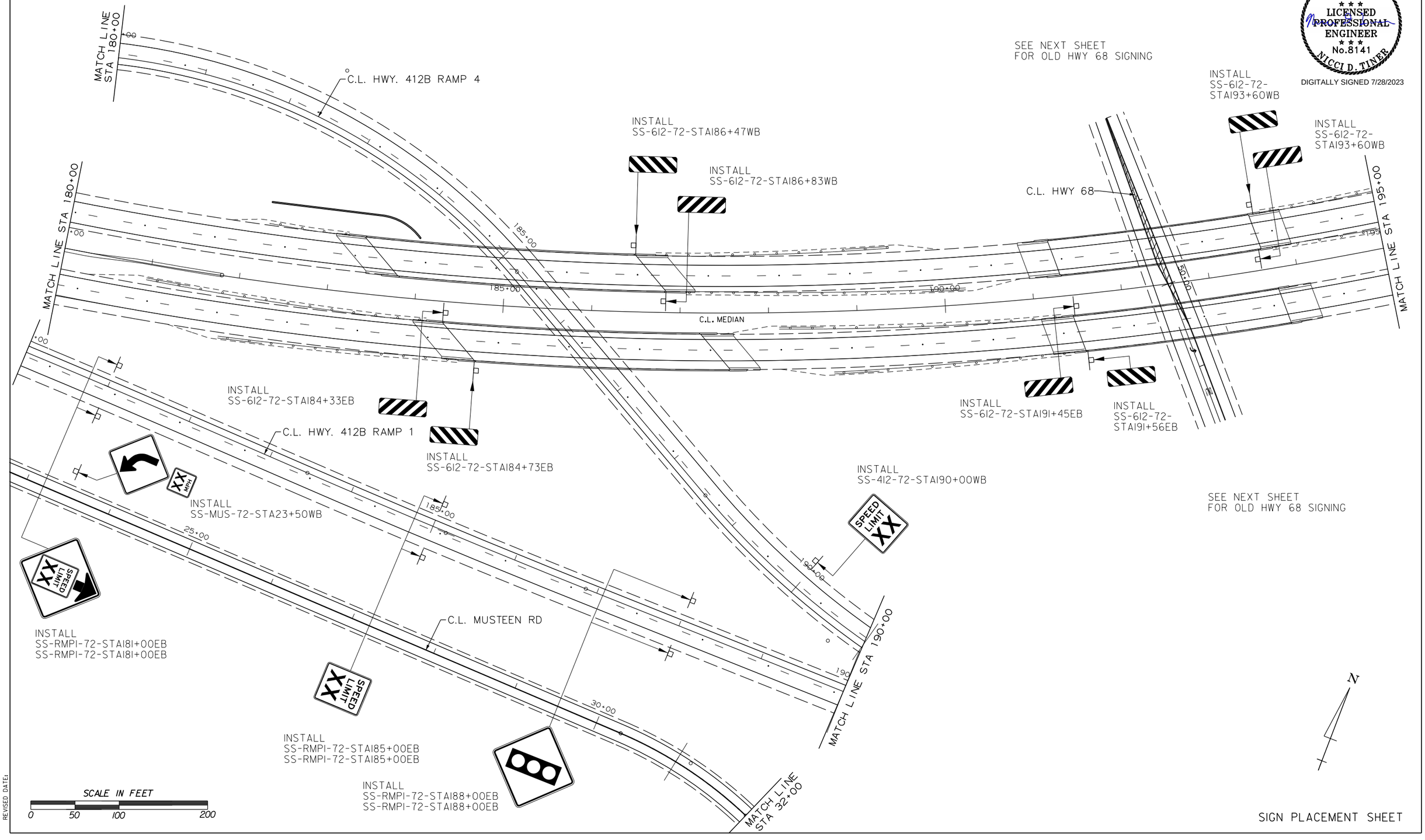

SIGN PLACEMENT SHEET

HBVinson 7/27/2023 1:43:54 PM
WORKSPACE: AHTD
L:\2017\17017660 - ARDOT 012326 Hwy 412 - Hwy 112\Drawings\r012326_SIGNS_04.dgn
REVISED DATE:

DATE REVISED	DATE REVISED	FED. RD. DIST. NO.	STATE	JOB NO.	SHEET NO.	TOTAL SHEETS
		6	ARK.	012326	123	838
		SIGN PLACEMENT SHEET				
2						

STATE OF ARKANSAS
LICENSED PROFESSIONAL ENGINEER
No.8141
NICCI D. TINER
DIGITALLY SIGNED 7/28/2023

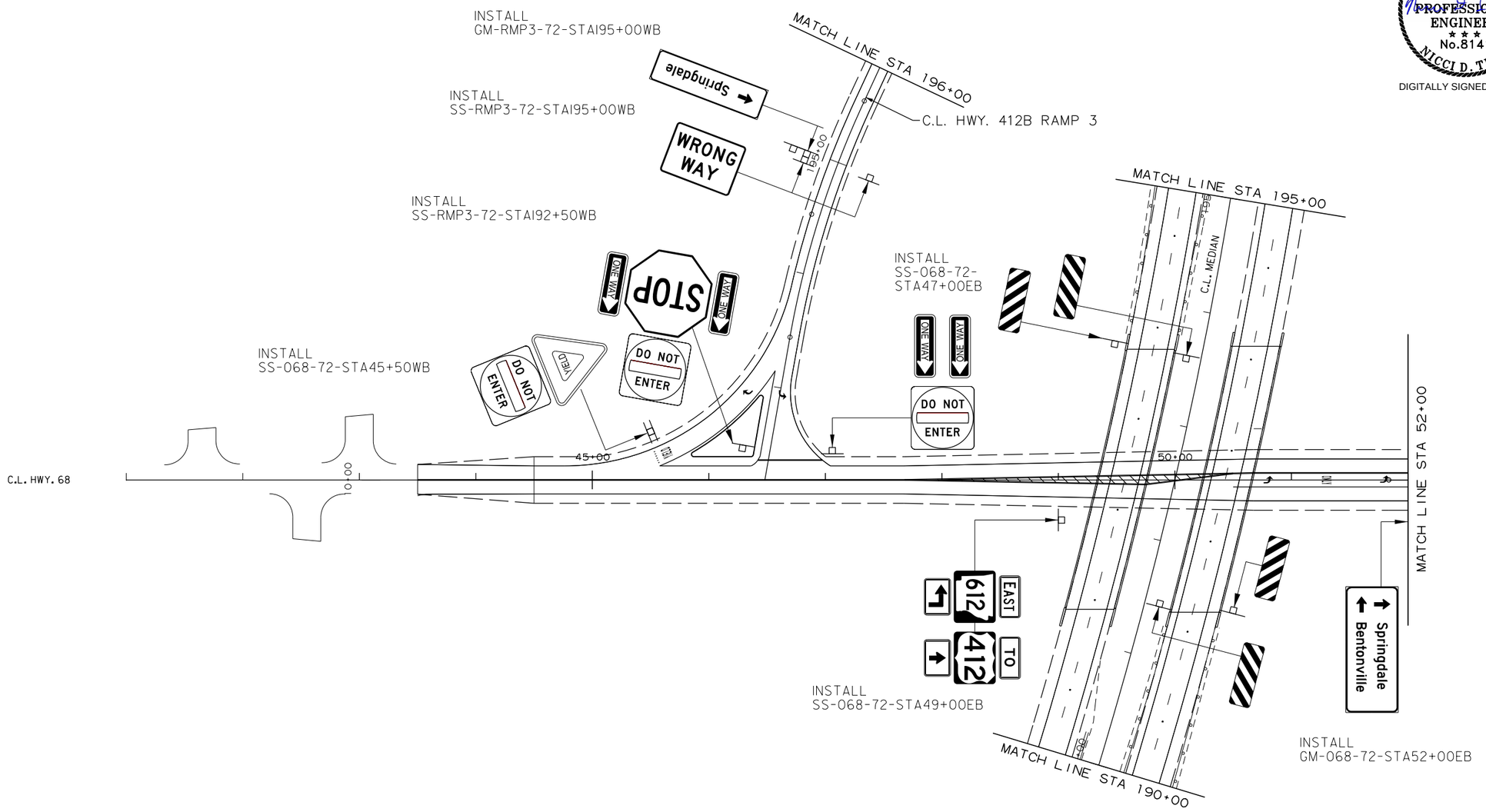

SCALE IN FEET
0 50 100 200

HBVinson
7/27/2023 1:43:55 PM
WORKSPACE: AHTD
L:\20\7\170\7660 - ARDOT 012326 Hwy 412 - Hwy 112\Drawings\r012326_SIGNS_05.dgn
REVISED DATE:

SIGN PLACEMENT SHEET

DATE REVISED	DATE REVISED	FED. RD. DIST. NO.	STATE	JOB NO.	SHEET NO.	TOTAL SHEETS
		6	ARK.	012326	124	838
		SIGN PLACEMENT SHEET				
2						

STATE OF ARKANSAS
LICENSED PROFESSIONAL ENGINEER
No.8141
NICCI D. TINER
DIGITALLY SIGNED 7/28/2023

MATCH LINE STA 195+00
C.L. HWY. 412B RAMP 2
MATCH LINE STA 52+00
C.L. HWY 68
INSTALL SS-RMP2-72-STA193+50EB
INSTALL GM-068-72-STA54+75EB
INSTALL SS-068-72-STA54+90WB
INSTALL GM-412-72-STA14+00WB
INSTALL GM-412-72-STA17+00WB
INSTALL SS-412-72-STA19+00WB
INSTALL SS-068-72-STA56+00WB
INSTALL SS-RMP4-72-STA192+00WB
INSTALL SS-412-72-STA195+40WB
C.L. HWY. 412B RAMP 4
MATCH LINE STA 190+00
C.L. HWY. 412B RAMP 1
C.L. HWY 412B
INSTALL SS-412-72-STA15+00EB
INSTALL SS-412-72-STA18+00EB
INSTALL SS-RMP1-72-STA192+00EB
INSTALL GM-RMP1-72-STA194+50EB
MATCH LINE STA 32+00
C.L. MUSTEEN RD
INSTALL SS-MUS-72-STA38+00EB
INSTALL SS-MUS-72-STA37+00EB
INSTALL SS-MUS-72-STA33+00EB
INSTALL SS-MUS-72-STA35+00EB
INSTALL SS-MUS-72-STA36+00EB

SCALE IN FEET
0 50 100 200

N

SIGN PLACEMENT SHEET

HBVinson
7/27/2023 1:43:56 PM
WORKSPACE: AHTD
L:\20\T\01\7660 - ARDOT 012326 Hwy 412 - Hwy 112\Drawings\r012326_SIGNS_06.dgn
REVISED DATE:

DATE REVISED	DATE REVISED	FED. RD. DIST. NO.	STATE	JOB NO.	SHEET NO.	TOTAL SHEETS
		6	ARK.	012326	125	838
②		SIGN PLACEMENT SHEET				

STATE OF ARKANSAS
LICENSED PROFESSIONAL ENGINEER
No.8141
NICCI D. TINER
DIGITALLY SIGNED 7/28/2023

N

INSTALL
SS-RMP3-72-STA197+00WB

MATCH LINE STA 196+00

C.L. HWY. 412B RAMP 3

200+00

INSTALL
SS-612-72-STA199+50WB

BRIDGE ICES BEFORE ROAD

MATCH LINE STA 195+00

200+00

C.L. MEDIAN

INSTALL
SS-612-72-STA207+15WB-A

INSTALL
SS-612-72-STA207+15WB-B

EXIT 1

INSTALL
GM-612-72-STA204+25WB

205+00

INSTALL
0H-612-72-001

RAMP XX MPH

INSTALL
SS-612-72-STA207+15WB

MATCH LINE STA 210+00

209+00

205+00

MATCH LINE STA 195+00

200+00

C.L. HWY. 412B RAMP 2

INSTALL
SS-612-72-STA202+00EB

SCALE IN FEET
0 50 100 200

SIGN PLACEMENT SHEET

HBVinson
WORKSPACE: AHTD
L:\201\1701660 - ARDOT 012326 Hwy 412 - Hwy 112\Drawings\r012326_SIGNS_07.dgn
REVISED DATE: 7/27/2023 1:43:57 PM

DATE REVISED	DATE REVISED	FED. RD. DIST. NO.	STATE	JOB NO.	SHEET NO.	TOTAL SHEETS
		6	ARK.	012326	126	838
		SIGN PLACEMENT SHEET				
2						

STATE OF ARKANSAS
LICENSED PROFESSIONAL ENGINEER
No.8141
NICCI D. TINER

DIGITALLY SIGNED 7/28/2023

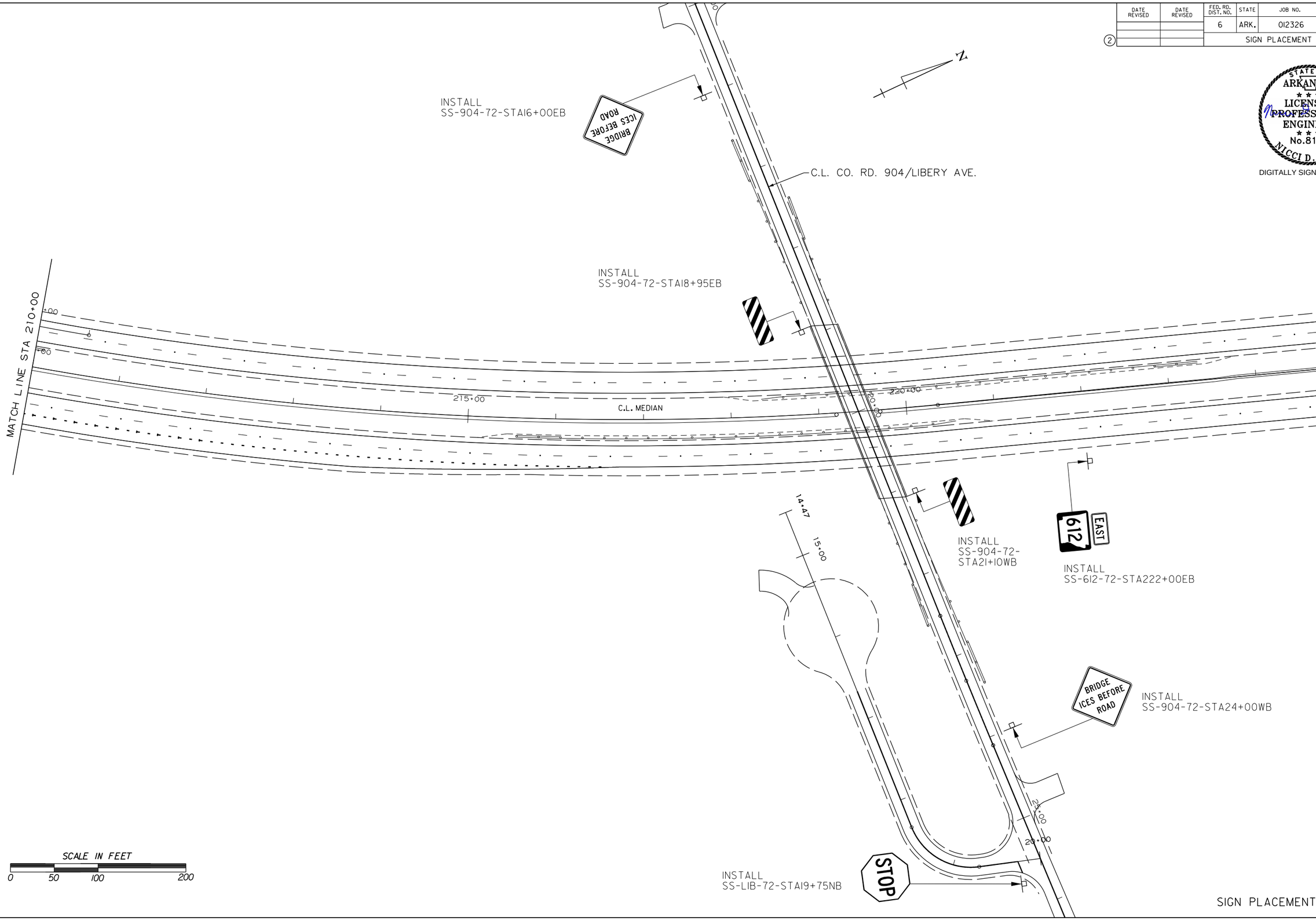

SIGN PLACEMENT SHEET

HBVinson
WORKSPACE: AHTD
L:\2017\17017660 - ARDOT 012326 Hwy 412 - Hwy 112\Drawings\r012326_SIGNS_08.dgn
7/27/2023 1:43:58 PM
REVISED DATE:

DATE REVISED	DATE REVISED	FED. RD. DIST. NO.	STATE	JOB NO.	SHEET NO.	TOTAL SHEETS
		6	ARK.	012326	127	838
		SIGN PLACEMENT SHEET				
2						

STATE OF ARKANSAS
LICENSED PROFESSIONAL ENGINEER
No.8141
NICCI D. TINER
DIGITALLY SIGNED 7/28/2023

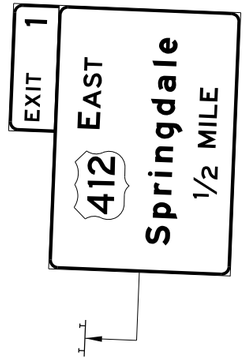

INSTALL
GM-612-72-STA234+00WB

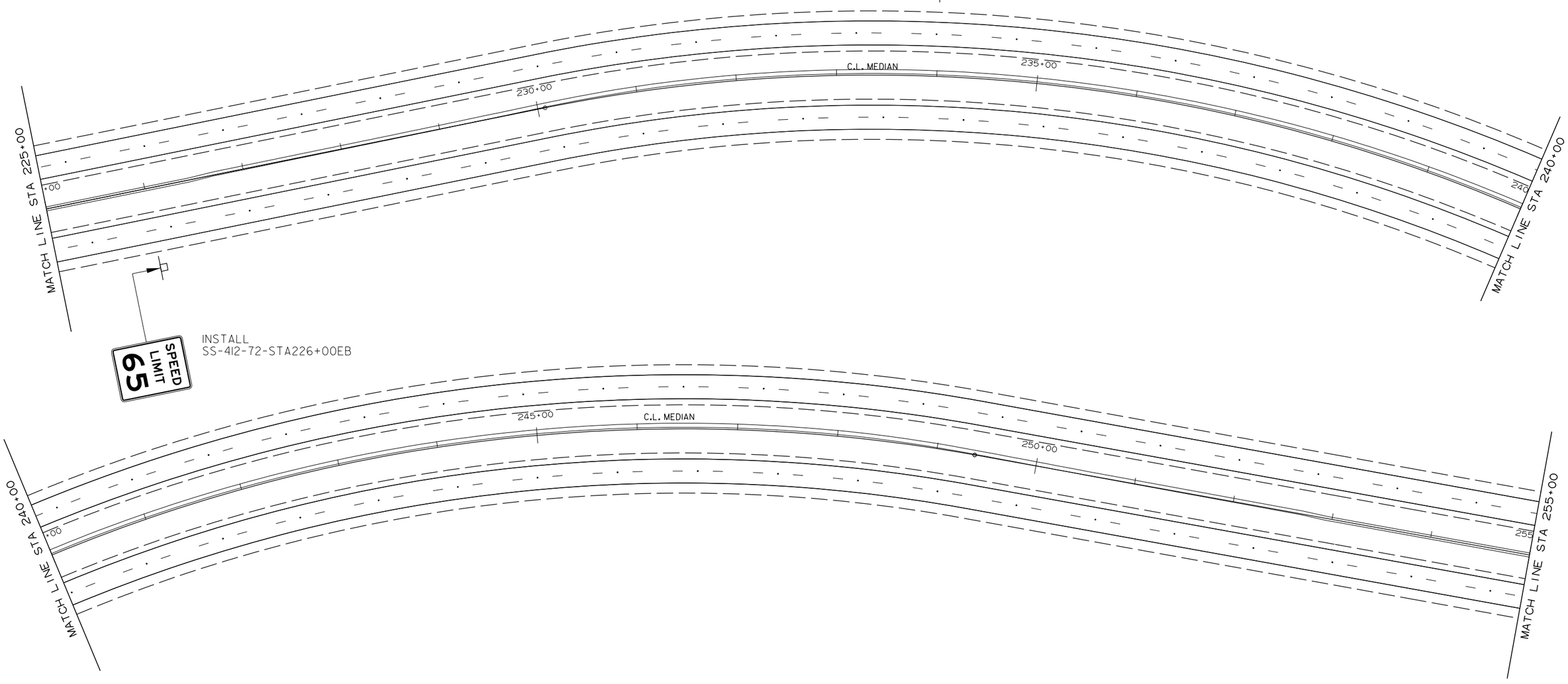

INSTALL
SS-412-72-STA226+00EB

SCALE IN FEET
0 50 100 200

SIGN PLACEMENT SHEET

HBVinson 7/27/2023 14:43:59 PM
WORKSPACE: AHTD
L:\2017\170176\60 - ARDOT 012326 Hwy 412 - Hwy 112\Drawings\r012326_SIGNS_09.dgn
REVISED DATE:

DATE REVISED	DATE REVISED	FED. RD. DIST. NO.	STATE	JOB NO.	SHEET NO.	TOTAL SHEETS
		6	ARK.	012326	128	838
2		SIGN PLACEMENT SHEET				

STATE OF ARKANSAS
LICENSED PROFESSIONAL ENGINEER
No.8141
NICCI D. TINER

DIGITALLY SIGNED 7/28/2023

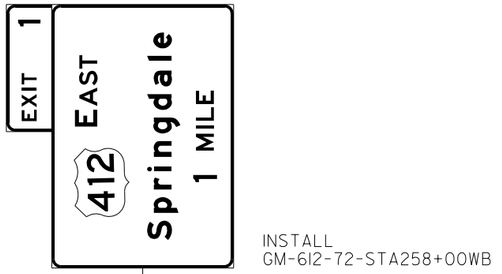

INSTALL
GM-612-72-STA258+00WB

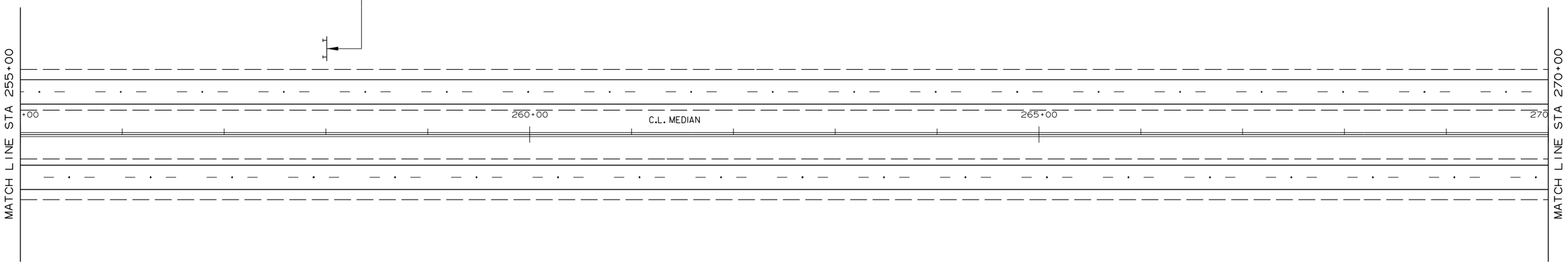

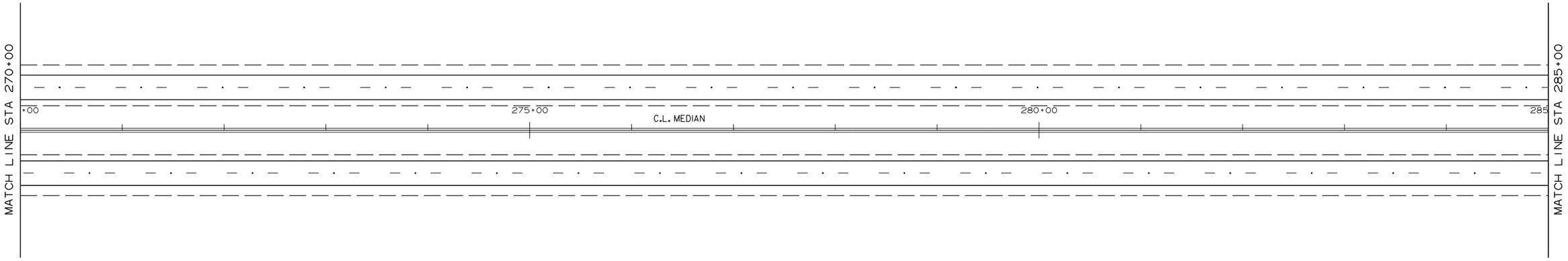

SCALE IN FEET
0 50 100 200

SIGN PLACEMENT SHEET

HBVinson 7/27/2023 1:43:59 PM
WORKSPACE: AHTD
L:\2017\170176660 - ARDOT 012326 Hwy 412 - Hwy 112\Drawings\r012326_SIGNS_10.dgn
REVISED DATE:

DATE REVISED	DATE REVISED	FED. RD. DIST. NO.	STATE	JOB NO.	SHEET NO.	TOTAL SHEETS
		6	ARK.	012326	129	838
②		SIGN PLACEMENT SHEET				

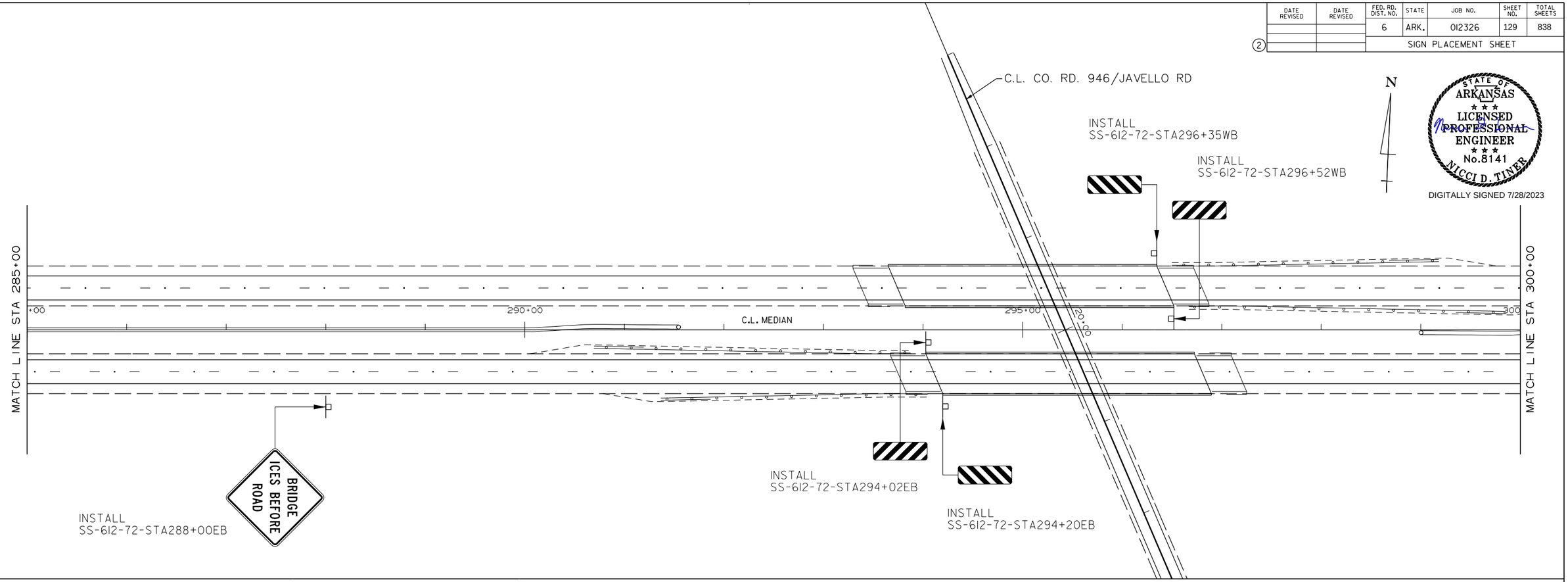

STATE OF ARKANSAS
LICENSED PROFESSIONAL ENGINEER
No.8141
NICCI D. TINER
DIGITALLY SIGNED 7/28/2023

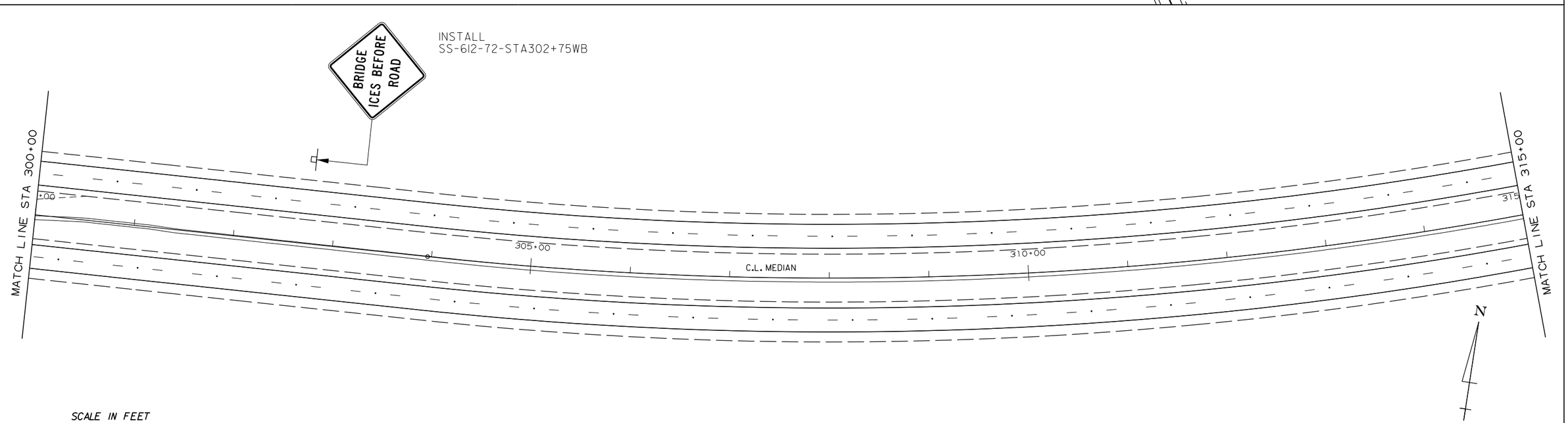

SIGN PLACEMENT SHEET

HBVinson
7/27/2023 1:44:00 PM
WORKSPACE: AHTD
L:\20\1701\7660 - ARDOT 012326 Hwy 412 - Hwy 112\Drawings\r012326_SIGNS_1L.dgn
REVISED DATE:

DATE REVISED	DATE REVISED	FED. RD. DIST. NO.	STATE	JOB NO.	SHEET NO.	TOTAL SHEETS
		6	ARK.	012326	130	838
		SIGN PLACEMENT SHEET				
2						

STATE OF ARKANSAS
LICENSED PROFESSIONAL ENGINEER
No.8141
NICCI D. TINER
DIGITALLY SIGNED 7/28/2023

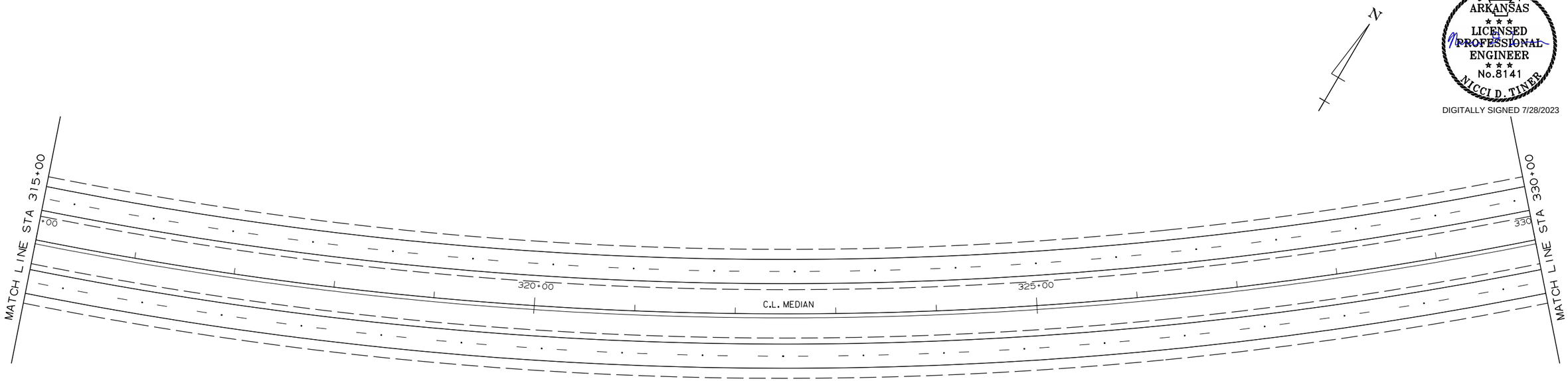

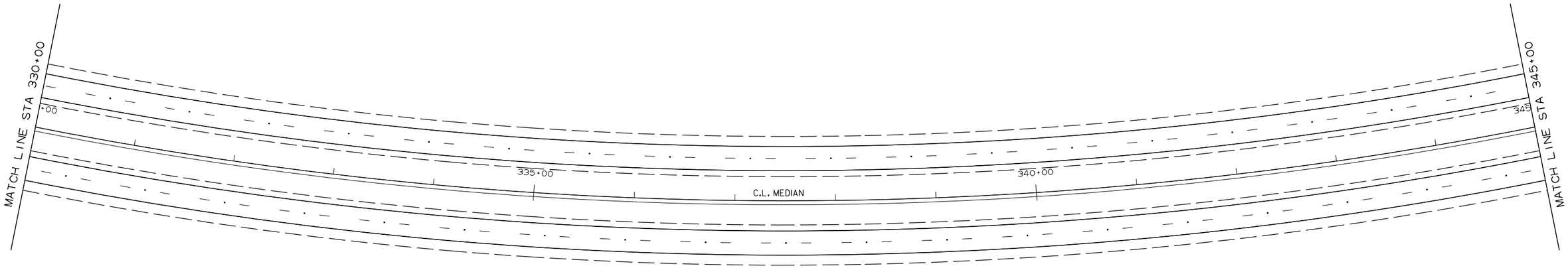

SCALE IN FEET
0 50 100 200

SIGN PLACEMENT SHEET

HBVinson 7/27/2023 1:44:01 PM
WORKSPACE: AHTD
L:\2017\17017660 - ARDOT 012326 Hwy 412 - Hwy 112\Drawings\r012326_SIGNS_12.dgn
REVISED DATE:

DATE REVISED	DATE REVISED	FED. RD. DIST. NO.	STATE	JOB NO.	SHEET NO.	TOTAL SHEETS
		6	ARK.	012326	131	838
		SIGN PLACEMENT SHEET				
2						

STATE OF
ARKANSAS
LICENSED
PROFESSIONAL
ENGINEER
No.8141
NICCI D. TINER

DIGITALLY SIGNED 7/28/2023

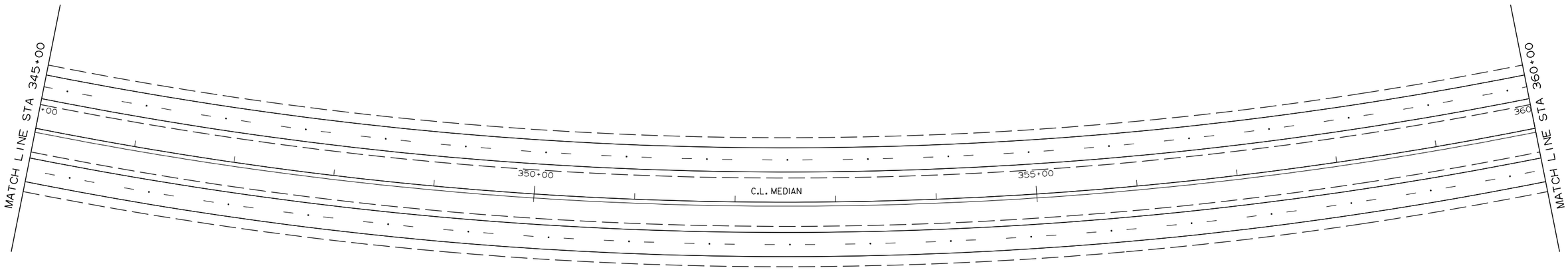

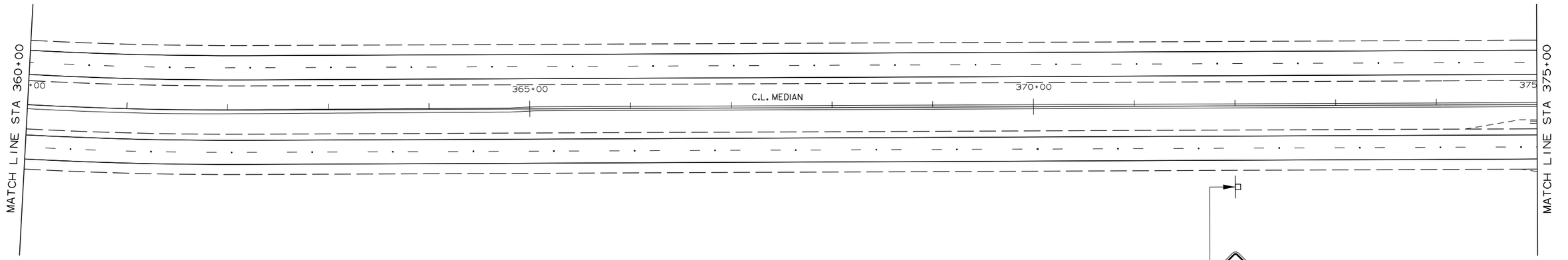

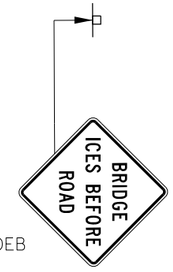

INSTALL
SS-612-72-STA372+00EB



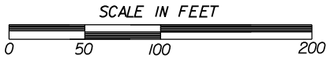

SIGN PLACEMENT SHEET

HBVinson 7/27/2023 11:44:02 PM
WORKSPACE: AHTD
L:\2017\17017660 - ARDOT 012326 Hwy 412 - Hwy 112\Drawings\r012326_SIGNS_13.dgn
REVISED DATE:

DATE REVISED	DATE REVISED	FED. RD. DIST. NO.	STATE	JOB NO.	SHEET NO.	TOTAL SHEETS
		6	ARK.	012326	132	838
②		SIGN PLACEMENT SHEET				

STATE OF ARKANSAS
LICENSED PROFESSIONAL ENGINEER
No.8141
NICCI D. TINER
DIGITALLY SIGNED 7/28/2023

N

MATCH LINE STA 375+00

+00 380+00 385+00 390

C.L. MEDIAN

C.L. BRUSH CREEK RD.

MATCH LINE STA 390+00

INSTALL
SS-612-72-STA387+88WB

INSTALL
SS-612-72-STA387+88WB

INSTALL
SS-612-72-STA378+23EB

INSTALL
SS-612-72-STA378+23EB

BRIDGE ICES BEFORE ROAD

INSTALL
SS-612-72-STA394+00WB

Washington Co

INSTALL
GM-612-72-STA401+00WB

MATCH LINE STA 390+00

+00 395+00 400+00 405

C.L. MEDIAN

MATCH LINE STA 405+00

Benton Co

INSTALL
GM-612-04-STA401+00EB

SCALE IN FEET
0 50 100 200

SIGN PLACEMENT SHEET

HBVinson 7/27/2023 1:44:05 PM
WORKSPACE: AHTD
L:\2017\1701660 - ARDOT 012326 Hwy 412 - Hwy 112\Drawings\r012326_SIGNS_14.dgn
REVISED DATE:

DATE REVISED	DATE REVISED	FED. RD. DIST. NO.	STATE	JOB NO.	SHEET NO.	TOTAL SHEETS
		6	ARK.	012326	133	838
②		SIGN PLACEMENT SHEET				

N

STATE OF ARKANSAS
LICENSED PROFESSIONAL ENGINEER
No.8141
NICCI D. TINER
DIGITALLY SIGNED 7/28/2023

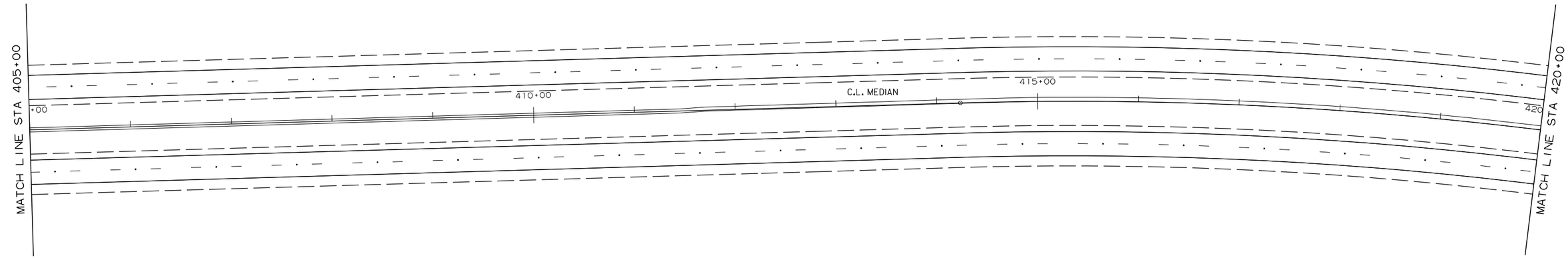

SCALE IN FEET
0 50 100 200

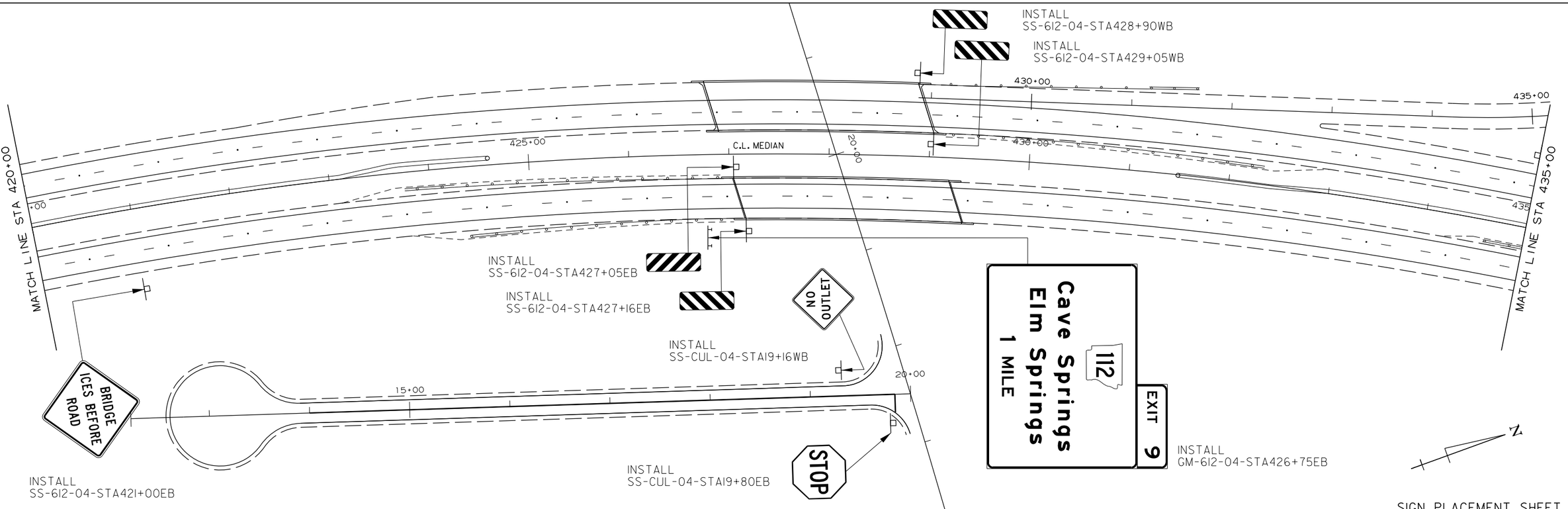

SIGN PLACEMENT SHEET

HBVinson 7/27/2023 14406 PM
WORKSPACE: AHTD
L:\2017\17017660 - ARDOT 012326 Hwy 412 - Hwy 112\Drawings\r012326_SIGNS_15.dgn
REVISED DATE:

DATE REVISED	DATE REVISED	FED. RD. DIST. NO.	STATE	JOB NO.	SHEET NO.	TOTAL SHEETS
		6	ARK.	012326	134	838
		SIGN PLACEMENT SHEET				
2						

STATE OF ARKANSAS
LICENSED PROFESSIONAL ENGINEER
No.8141
NICCI D. TINER
DIGITALLY SIGNED 7/28/2023

INSTALL
SS-612-04-STA435+00WB



SCALE IN FEET
0 50 100 200

SIGN PLACEMENT SHEET

HBVinson 7/27/2023 1:44:07 PM
WORKSPACE: AHTD
L:\2017\1701660 - ARDOT 012326 Hwy 412 - Hwy 112\Drawings\r012326_SIGNS_16.dgn
REVISED DATE:

DATE REVISED	DATE REVISED	FED. RD. DIST. NO.	STATE	JOB NO.	SHEET NO.	TOTAL SHEETS
		6	ARK.	012326	135	838
		SIGN PLACEMENT SHEET				
2						

STATE OF ARKANSAS
LICENSED PROFESSIONAL ENGINEER
No.8141
NICCI D. TINER

DIGITALLY SIGNED 7/28/2023

N

SCALE IN FEET
0 50 100 200

MATCH LINE STA 443+00

C.L. XNA ACCESS RD. RAMP 3

440+00

C.L. XNA ACCESS RD. RAMP 1

475+00

MATCH LINE STA 480+00

MATCH LINE STA 420+00

C.L. XNA ACCESS RD. RAMP 2

425+00

C.L. XNA ACCESS RD. RAMP 4

440+00

MATCH LINE STA 443+00

C.L. MEDIAN

470+00

MATCH LINE STA 467+00

430+00

MATCH LINE STA 434+00

TO EAST
INTERSTATE 49
612
Bentonville

612 WEST
Springdale
EXIT ONLY

SIGNS TO BE INSTALLED AT A LATER DATE

INSTALL
OH-RMP2-04-001

RAMP
XX
MPH

BRIDGE ICES BEFORE ROAD

MATCH LINE STA 435+00

SIGN PLACEMENT SHEET

HBVinson 7/27/2023 14:44:07 PM
WORKSPACE: AHTD
L:\2017\17017660 - ARDOT 012326 Hwy 412 - Hwy 112\Drawings\r012326_SIGNS_17.dgn
REVISED DATE:

DATE REVISED	DATE REVISED	FED. RD. DIST. NO.	STATE	JOB NO.	SHEET NO.	TOTAL SHEETS
		6	ARK.	012326	136	838
		SIGN PLACEMENT SHEET				
2						

STATE OF ARKANSAS
LICENSED PROFESSIONAL ENGINEER
No.8141
NICCI D. TINER

DIGITALLY SIGNED 7/28/2023

N

INSTALL
SS-612-04-STA464+63WB

INSTALL
SS-612-04-STA464+71WB

MATCH LINE STA 450+00

455+00

460+00

C.L. MEDIAN

20+00

MATCH LINE STA 465+00

INSTALL
SS-612-04-STA462+66EB

INSTALL
SS-612-04-STA462+77EB

INSTALL
GM-612-04-STA455+00EB

Cave Springs
Elm Springs
1/2 MILE
112
EXIT 9

BRIDGE
ICES BEFORE
ROAD

INSTALL
SS-612-04-STA458+00EB

C.L. ROBBINS RD/CO. RD 71

25+00

SCALE IN FEET
0 50 100 200

HBVinson
WORKSPACE: AHTD
L:\20IT\170I660 - ARDOT 012326 Hwy 412 - Hwy 112\Drawings\r012326_SIGNS_18.dgn
REVISED DATE:
7/27/2023 1:44:10 PM

SIGN PLACEMENT SHEET

DATE REVISED	DATE REVISED	FED. RD. DIST. NO.	STATE	JOB NO.	SHEET NO.	TOTAL SHEETS
		6	ARK.	012326	137	838
		SIGN PLACEMENT SHEET				

(2)

STATE OF ARKANSAS
LICENSED PROFESSIONAL ENGINEER
No.8141
NICCI D. TINER

DIGITALLY SIGNED 7/28/2023

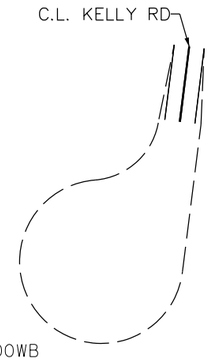



INSTALL
SS-612-04-STA471+00WB



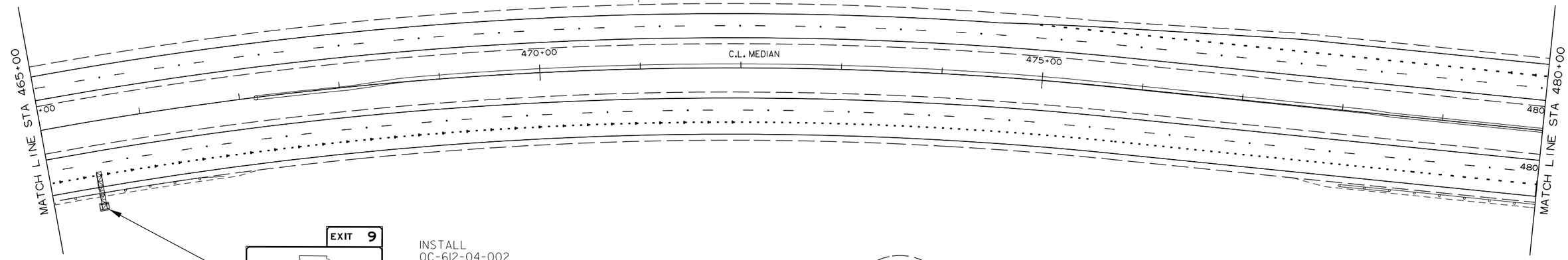

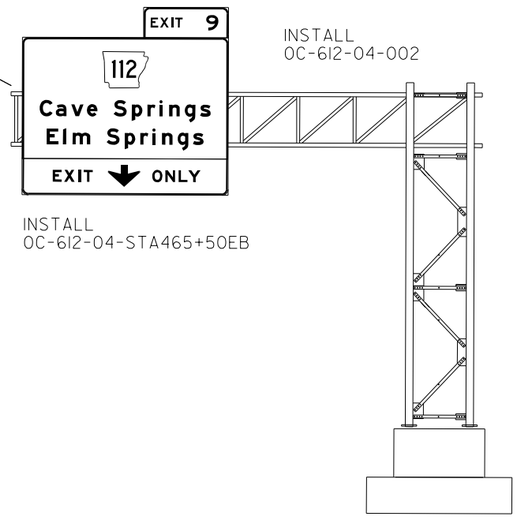

INSTALL
OC-612-04-002

INSTALL
OC-612-04-STA465+50EB

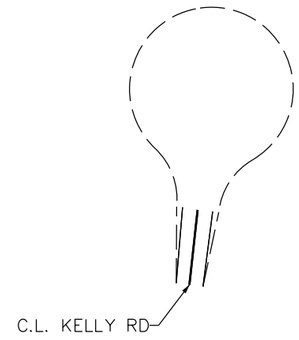

SCALE IN FEET
0 50 100 200

SIGN PLACEMENT SHEET

HBVinson
7/27/2023 1:44:11 PM
WORKSPACE: AHTD
L:\2017\170176\60 - ARDOT 012326 Hwy 412 - Hwy 112\Drawings\r012326_SIGNS_19.dgn
REVISED DATE:

DATE REVISED	DATE REVISED	FED. RD. DIST. NO.	STATE	JOB NO.	SHEET NO.	TOTAL SHEETS
		6	ARK.	012326	138	838
		SIGN PLACEMENT SHEET				
②						

STATE OF ARKANSAS
LICENSED PROFESSIONAL ENGINEER
No.8141
NICCI D. TINER
DIGITALLY SIGNED 7/28/2023

N

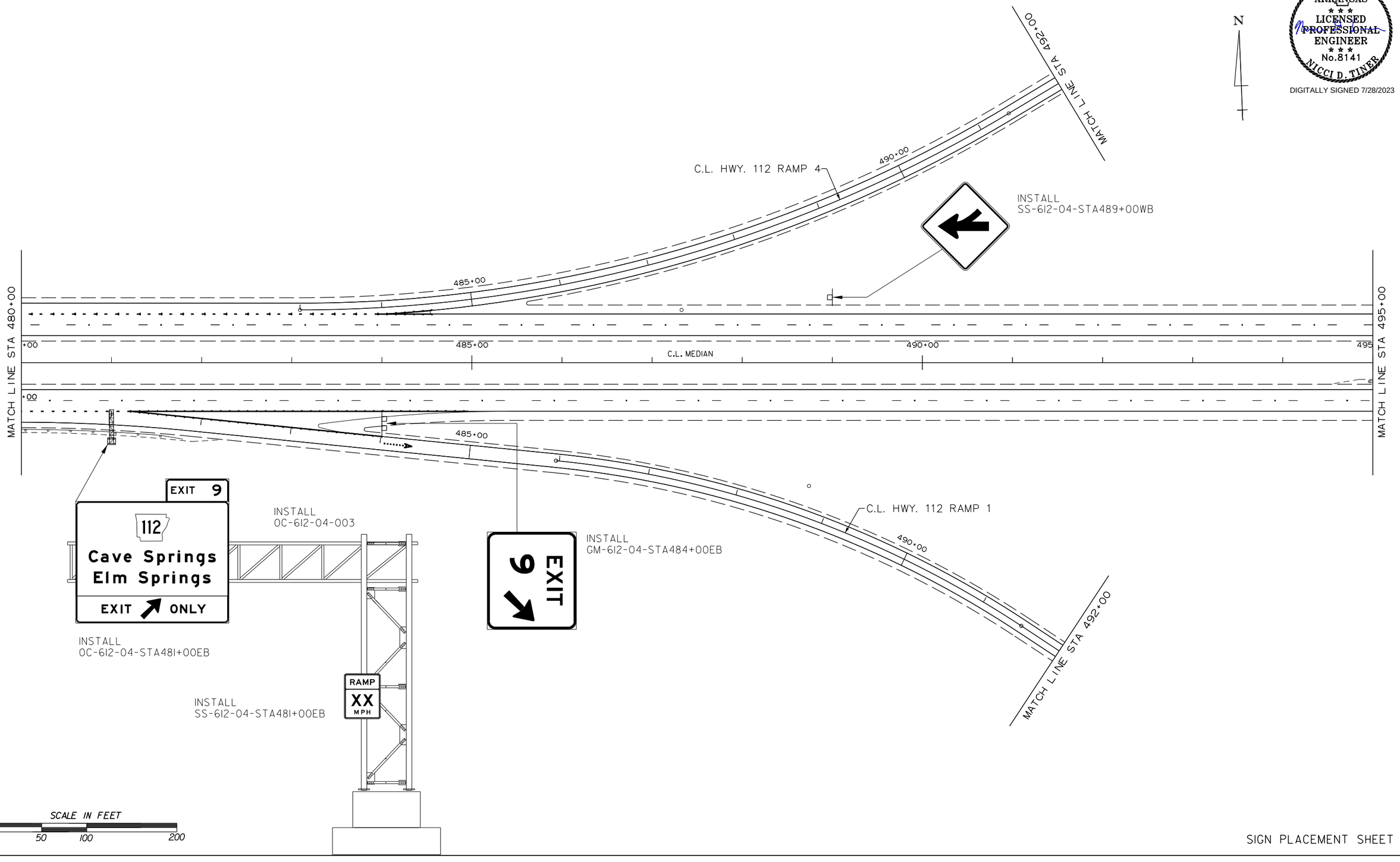

SCALE IN FEET
0 50 100 200

HBVinson 7/27/2023 11:44:11 PM
WORKSPACE: AHTD
L:\2017\17017660 - ARDOT 012326 Hwy 412 - Hwy 112\Drawings\r012326_SIGNS_20.dgn
REVISED DATE:

DATE REVISED	DATE REVISED	FED. RD. DIST. NO.	STATE	JOB NO.	SHEET NO.	TOTAL SHEETS
		6	ARK.	012326	139	838
2		SIGN PLACEMENT SHEET				

N

STATE OF ARKANSAS
LICENSED PROFESSIONAL ENGINEER
No.8141
NICCI D. TINER

DIGITALLY SIGNED 7/28/2023

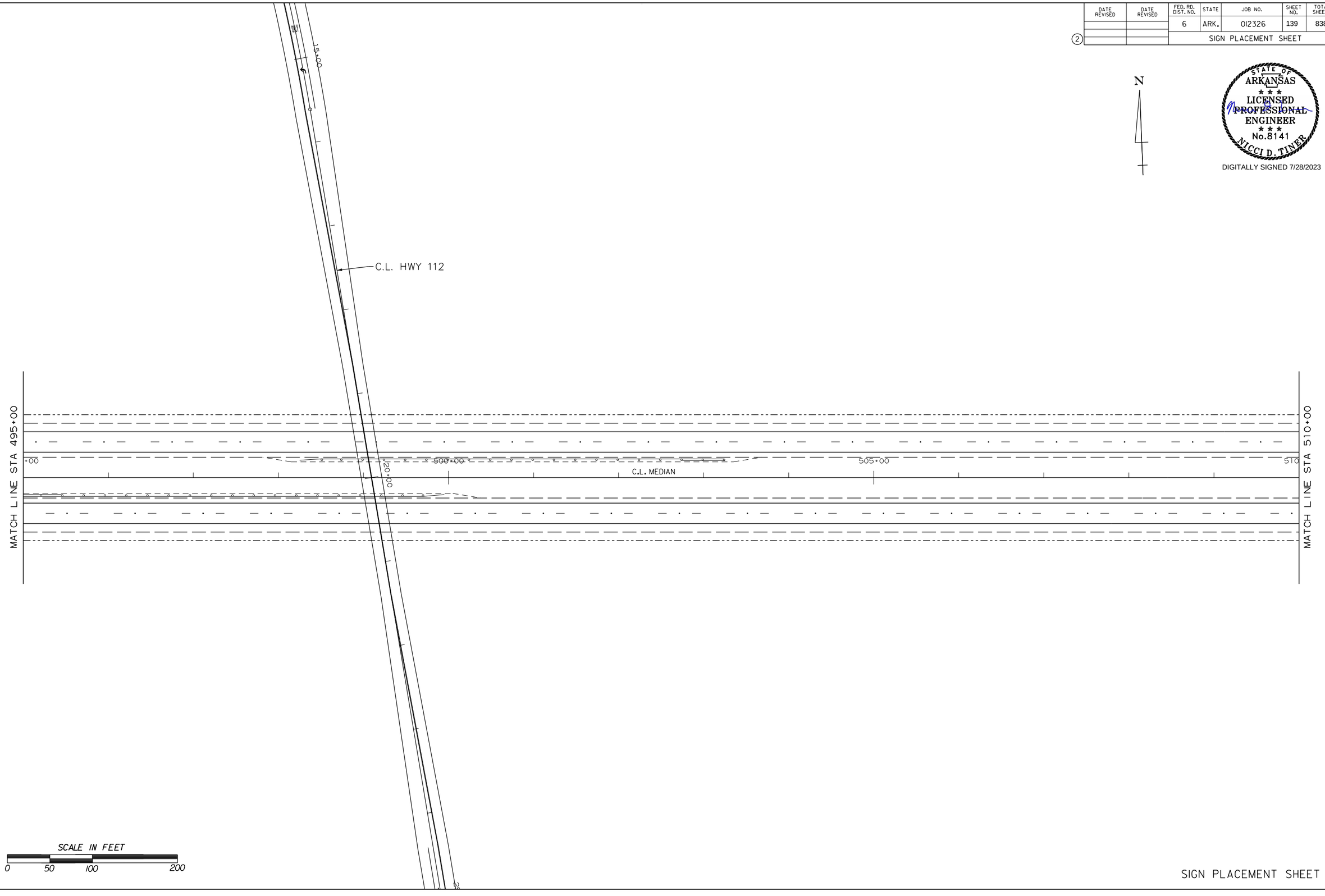

SCALE IN FEET
0 50 100 200

SIGN PLACEMENT SHEET

HBVinson 7/27/2023 1:44:15 PM
WORKSPACE: AHTD
L:\20IT\170I660 - ARDOT 012326 Hwy 412 - Hwy 112\Drawings\r-012326_SIGNS_21.dgn
REVISED DATE:

DATE REVISED	DATE REVISED	FED. RD. DIST. NO.	STATE	JOB NO.	SHEET NO.	TOTAL SHEETS
		6	ARK.	012326	140	838
		SIGN PLACEMENT SHEET				
2						

STATE OF ARKANSAS
LICENSED PROFESSIONAL ENGINEER
No.8141
NICCI D. TINER

DIGITALLY SIGNED 7/28/2023

N

MATCH LINE STA 492+00

C.L. HWY. 112 RAMP 1

495+00

C.L. HWY 112

25+00

INSTALL
SS-RMPI-04-STA501+05WB

INSTALL
SS-RMPI-04-STA499+50EB

WRONG WAY

ONE WAY

DO NOT ENTER

ONE WAY

500+00

INSTALL
SS-RMPI-04-STA496+00EB

INSTALL
SS-RMPI-04-STA501+30EB

112 NORTH

112 SOUTH

STOP

ONE WAY

DO NOT ENTER

ONE WAY

INSTALL
SS-RMPI-04-STA498+00EB

Cave Springs
Elm Springs

YIELD

DO NOT ENTER

INSTALL
GM-RMPI-04-STA499+50EB

INSTALL
SS-RMPI-04-STA501+35EB

30+00

SCALE IN FEET
0 50 100 200

SIGN PLACEMENT SHEET

HBVinson
WORKSPACE: AHTD
L:\2017\17017660 - ARDOT 012326 Hwy 412 - Hwy 112\Drawings\r012326_SIGNS_22.dgn
7/27/2023 11:44:17 PM
REVISED DATE:

DATE REVISED	DATE REVISED	FED. RD. DIST. NO.	STATE	JOB NO.	SHEET NO.	TOTAL SHEETS
		6	ARK.	012326	141	838
		SIGN PLACEMENT SHEET				
2						

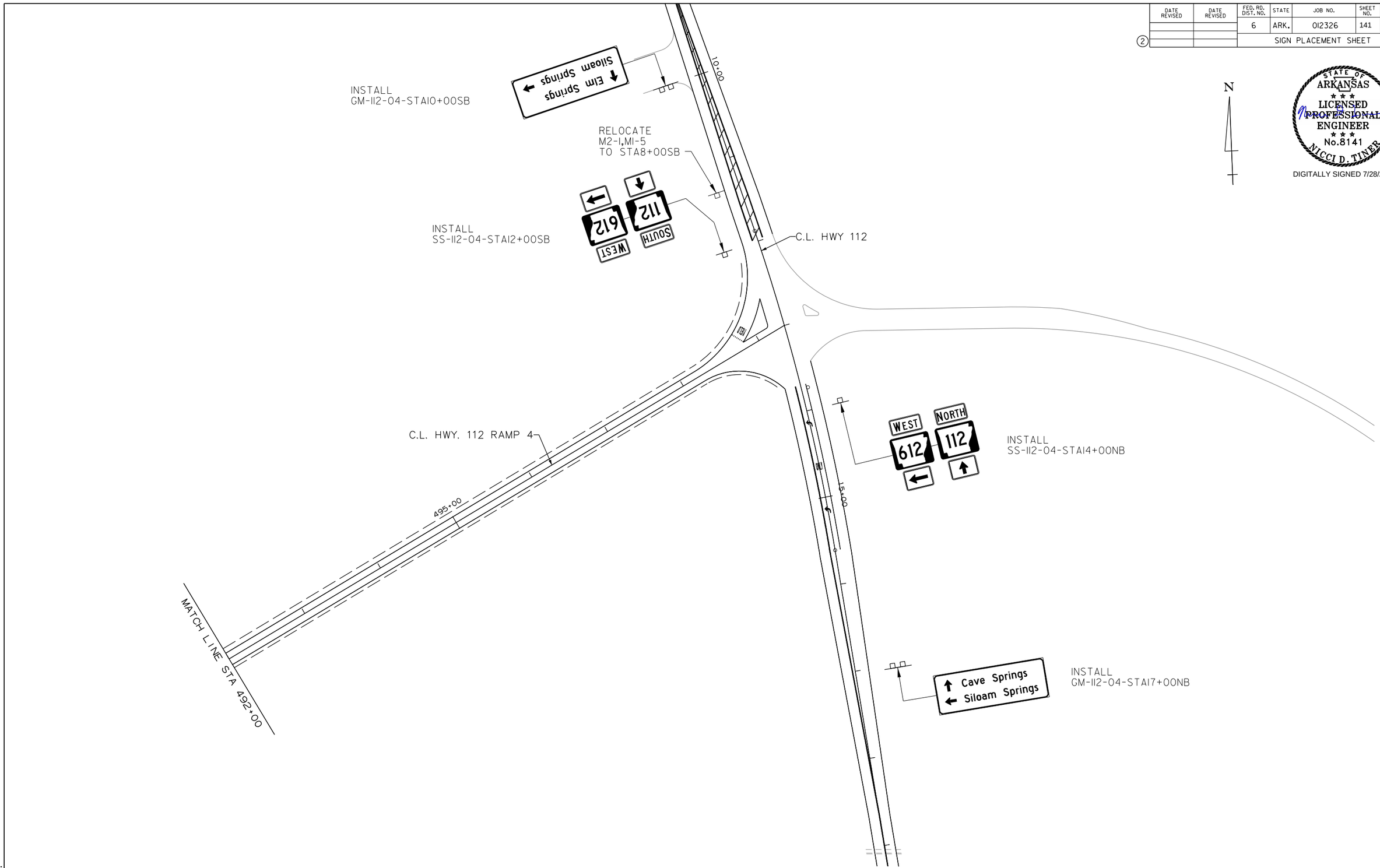

STATE OF ARKANSAS
LICENSED PROFESSIONAL ENGINEER
No.8141
NICCI D. TINER

DIGITALLY SIGNED 7/28/2023

HBVinson 7/27/2023 1:44:18 PM
WORKSPACE: AHTD
L:\20\7\701\7660 - ARDOT 012326 Hwy 412 - Hwy 112\Drawings\r012326_SIGNS_23.dgn
REVISED DATE:

DATE REVISED	DATE REVISED	FED. RD. DIST. NO.	STATE	JOB NO.	SHEET NO.	TOTAL SHEETS
		6	ARK.	012326	142	838
		SIGN PLACEMENT SHEET				
2						

STATE OF ARKANSAS
LICENSED PROFESSIONAL ENGINEER
No.8141
NICCI D. TINER

DIGITALLY SIGNED 7/28/2023

N

INSTALL
OC-612-04-004

EXIT 9
112
Elm Springs
Cave Springs

INSTALL
OC-612-04-STA518+25WB

INSTALL
GM-612-04-STA515+40WB

INSTALL
SS-612-04-STA518+25WB

RAMP
XX
MPH

EXIT 9

REMOVE
GM-612-04-STA520+50WB

MATCH LINE STA 510+00

+00

515+00

520+00

525

C.L. MEDIAN

MATCH LINE STA 525+00

INSTALL
SS-612-04-STA514+00EB

SCALE IN FEET
0 50 100 200

SIGN PLACEMENT SHEET

HBVinson 7/27/2023 1:44:19 PM
WORKSPACE: AHTD
L:\2017\17017660 - ARDOT 012326 Hwy 412 - Hwy 112\Drawings\r012326_SIGNS_24.dgn
REVISED DATE:

DATE REVISED	DATE REVISED	FED. RD. DIST. NO.	STATE	JOB NO.	SHEET NO.	TOTAL SHEETS
		6	ARK.	012326	143	838
2		SIGN PLACEMENT SHEET				

N

STATE OF ARKANSAS
LICENSED PROFESSIONAL ENGINEER
No.8141
NICCI D. TINER

DIGITALLY SIGNED 7/28/2023

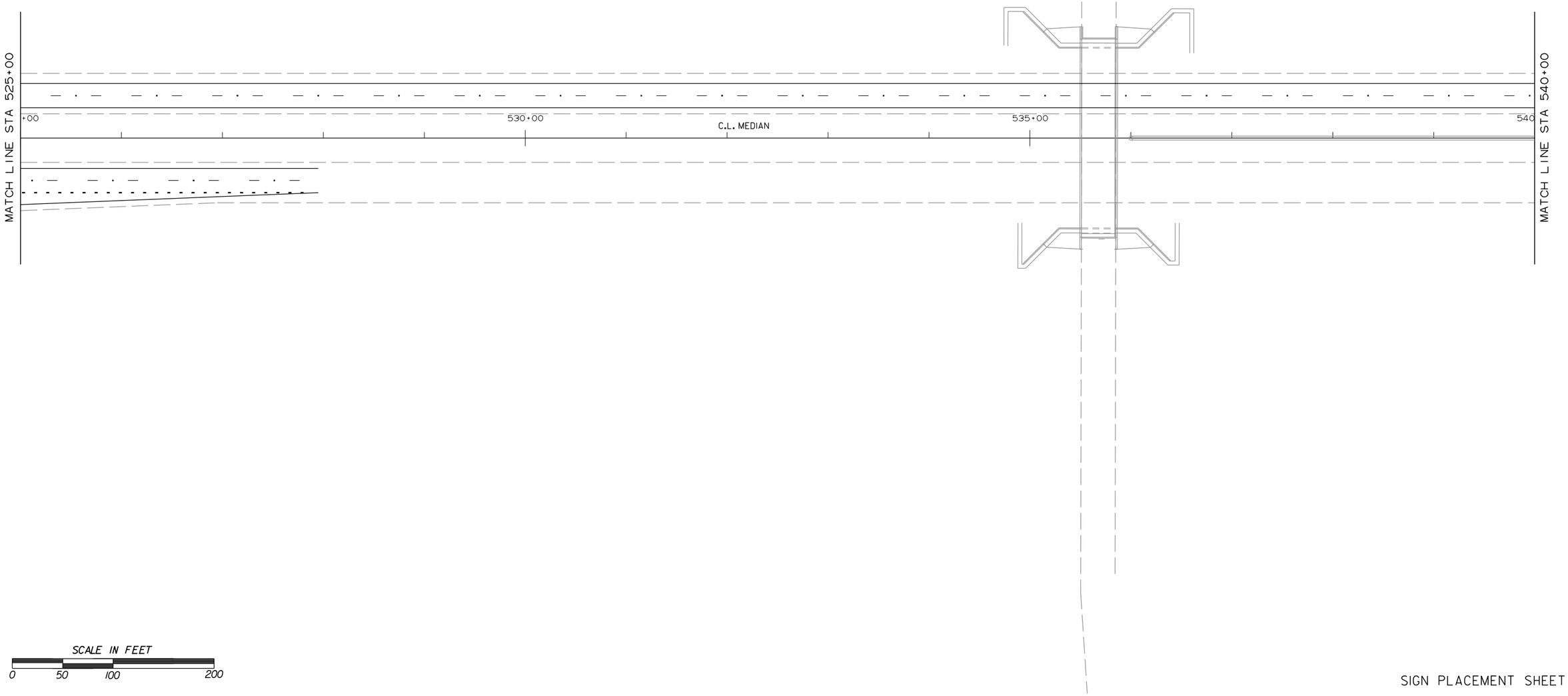

SCALE IN FEET
0 50 100 200

SIGN PLACEMENT SHEET

HBVinson
7/27/2023 1:44:20 PM
WORKSPACE: AHTD
L:\2017\170766O - ARDOT 012326 Hwy 412 - Hwy 112\Drawings\r012326_SIGNS_25.dgn
REVISED DATE:

DATE REVISED	DATE REVISED	FED. RD. DIST. NO.	STATE	JOB NO.	SHEET NO.	TOTAL SHEETS
		6	ARK.	012326	144	838
		SIGN PLACEMENT SHEET				
2						

N

STATE OF ARKANSAS
LICENSED PROFESSIONAL ENGINEER
No.8141
NICCI D. TINER
DIGITALLY SIGNED 7/28/2023

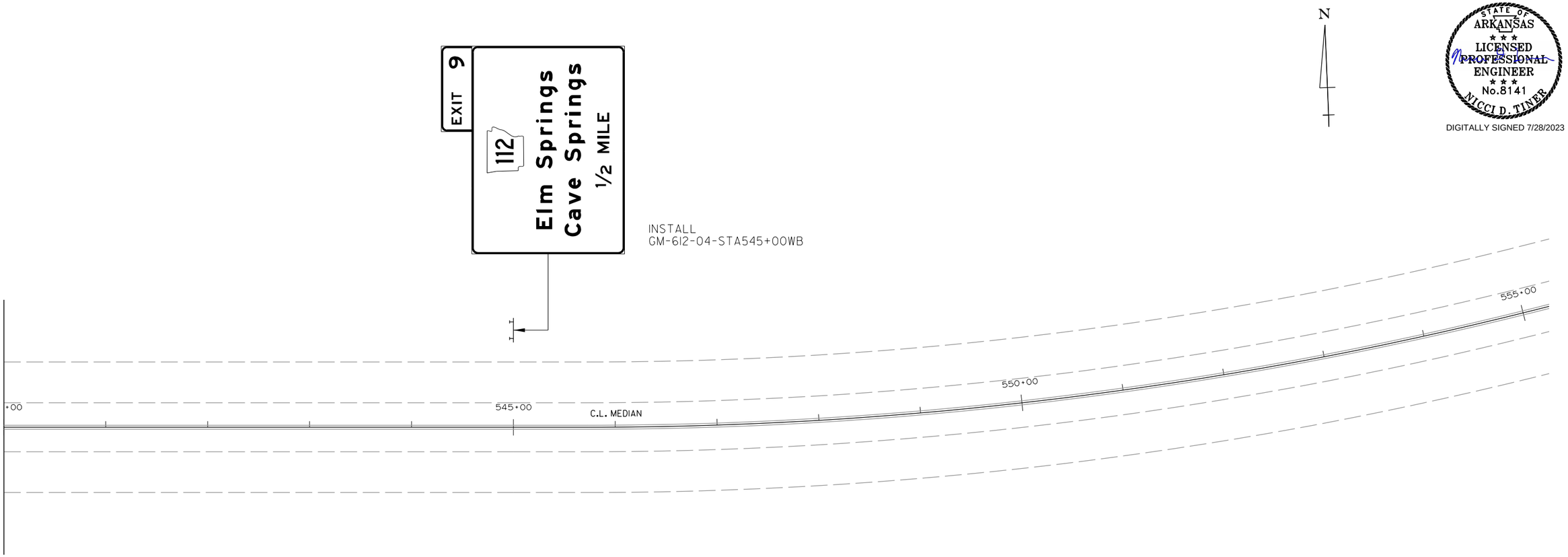

SCALE IN FEET
0 50 100 200

SIGN PLACEMENT SHEET

HBVinson 7/27/2023 1:44:20 PM
WORKSPACE: AHTD
L:\2017\17017660 - ARDOT 012326 Hwy 412 - Hwy 112\Drawings\r012326_SIGNS_26.dgn
REVISED DATE:

DATE REVISED	DATE REVISED	FED. RD. DIST. NO.	STATE	JOB NO.	SHEET NO.	TOTAL SHEETS
		6	ARK.	012326	145	838
		SIGN DETAIL SHEET				

2

STATE OF ARKANSAS
LICENSED PROFESSIONAL ENGINEER
No.8141
NICCI D. TINER

DIGITALLY SIGNED 7/28/2023

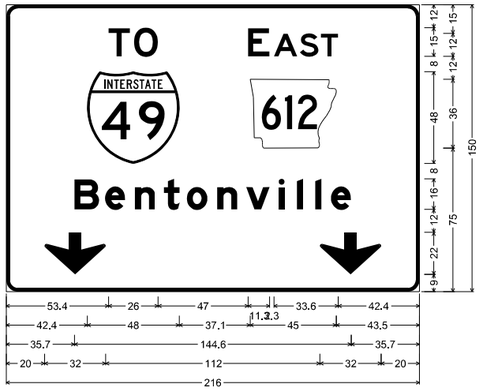

6.0" Radius, 2.0" Border, White on Green;
"TO", E 2K; "E AST", E 2K; "Bentonville", E Mod 2K;
Down Arrow 22.0" 270°; Down Arrow 22.0" 270°;

OH-412-72-STA175+35EB-A

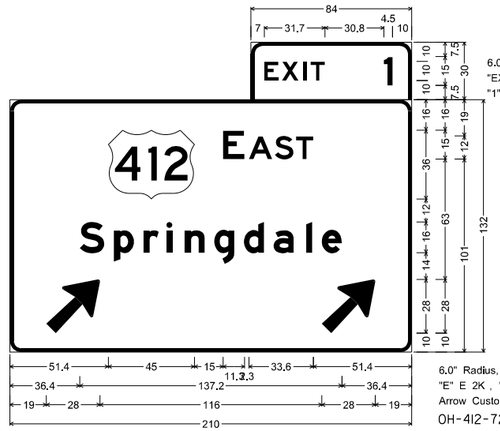

6.0" Radius, 2.0" Border, White on Green;
"EXIT", E 2K specified length;
"1", E 2K;

6.0" Radius, 2.0" Border, White on Green;
"E" E 2K , "AST" E 2K; "Springdale", E Mod 2K;
Arrow Custom - 35.7" 45°; Arrow Custom - 35.6" 45°;

OH-412-72-STA175+35EB-B

NOTES:
THE CONTRACTOR WILL VERIFY SIGN PLACEMENT AND MAKE ANY ADJUSTMENTS NECESSARY TO ALIGN SIGNS OVER INTENDED LANES.

SINCE THE CONTRACTOR WILL BE REQUIRED TO INSTALL OVERHEAD SIGNS ON STRUCTURES WHICH ARE LOCATED OVER THE ROADWAYS WHICH ARE CURRENTLY OPEN TO TRAFFIC, IT WILL BE THE RESPONSIBILITY OF THE CONTRACTOR TO PROVIDE LANE CLOSURE AS A PART OF TRAFFIC CONTROL. PAYMENT FOR PROVIDING LANE CLOSURES WILL BE PAID SUBSIDIARY TO PAY ITEM "MAINTENANCE OF TRAFFIC". ALL MAINTENANCE OF TRAFFIC WORK MUST CONFORM WITH THE MUTCD.

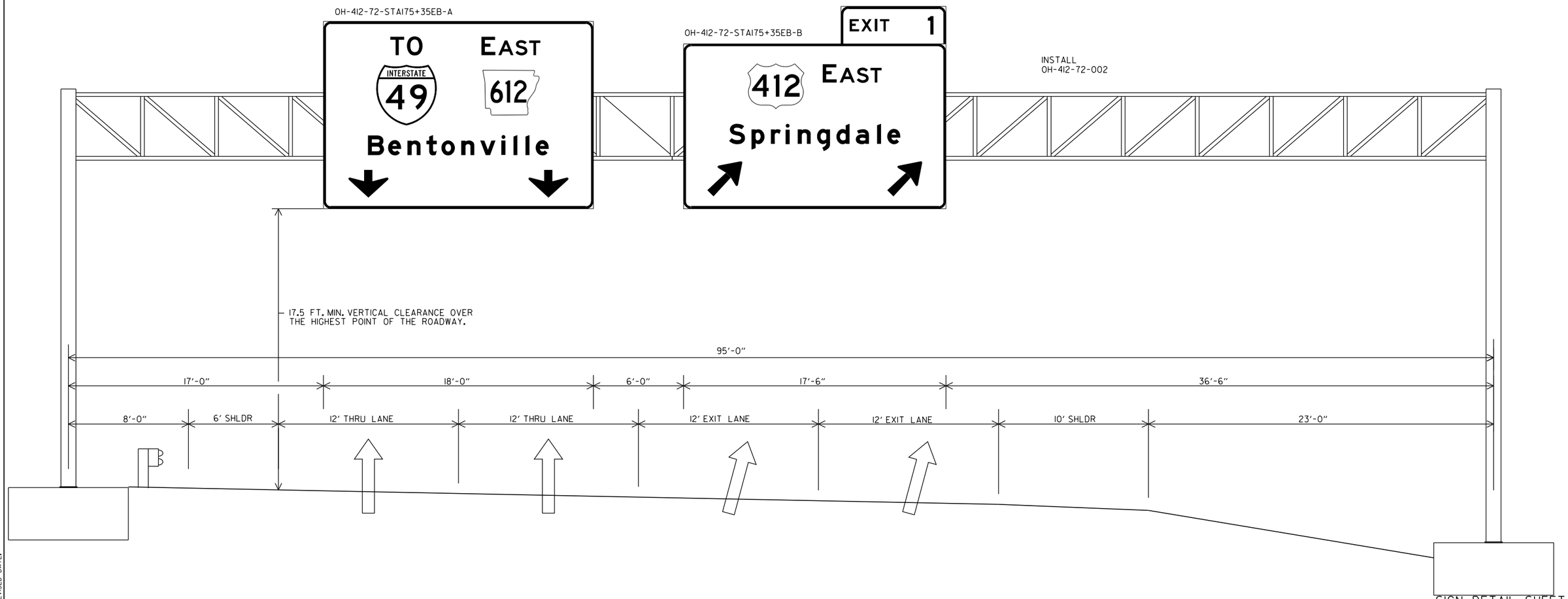

HBVinson 7/27/2023 1:44:21PM
WORKSPACE: AHTD
L:\2017\17017660 - ARDOT 012326 Hwy 412 - Hwy 112\Drawings\r012326_SIGNS_DETAIL_01.dgn
REVISED DATE:

DATE REVISED	DATE REVISED	FED. RD. DIST. NO.	STATE	JOB NO.	SHEET NO.	TOTAL SHEETS
		6	ARK.	012326	146	838
		SIGN DETAIL SHEET				

(2)

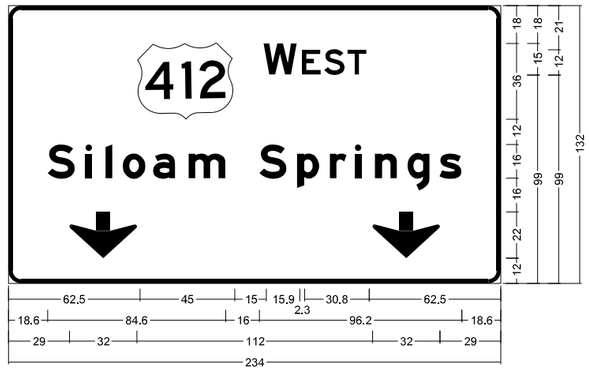

6.0" Radius, 2.0" Border, White on Green;
"W" E 2K , "EST" E 2K; "Siloam Springs" , E Mod 2K;
Down Arrow 22.0" 270°; Down Arrow 22.0" 270°;
OH-612-72-STA207+15WB-A

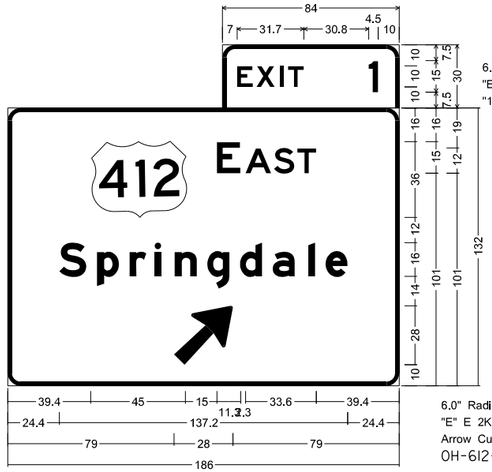

6.0" Radius, 2.0" Border, White on Green;
"EXIT", E 2K specified length;
"1", E 2K;

6.0" Radius, 2.0" Border, White on Green;
"E" E 2K , "AST" E 2K; "Springdale", E Mod 2K;
Arrow Custom - 35.6" 45°;
OH-612-72-STA207+15WB-B

NOTES:
THE CONTRACTOR WILL VERIFY SIGN PLACEMENT AND MAKE ANY ADJUSTMENTS NECESSARY TO ALIGN SIGNS OVER INTENDED LANES.

STATE OF ARKANSAS
LICENSED PROFESSIONAL ENGINEER
No.8141
NICCI D. TINER
DIGITALLY SIGNED 7/28/2023

OH-612-72-STA207+15WB-A

OH-612-72-STA207+15WB-B

INSTALL
OH-612-72-001

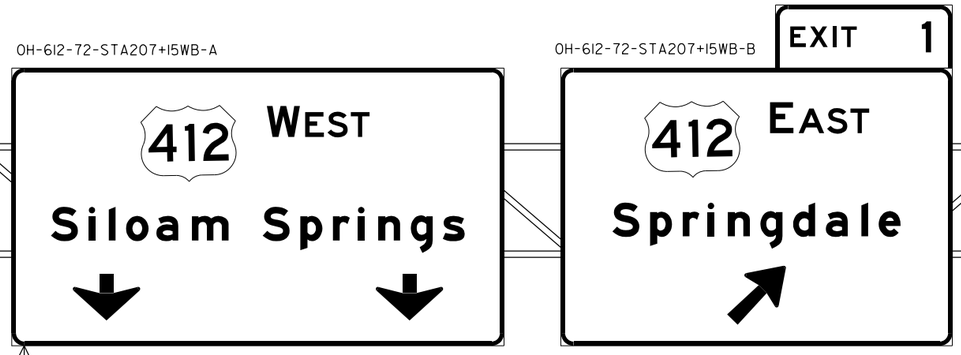

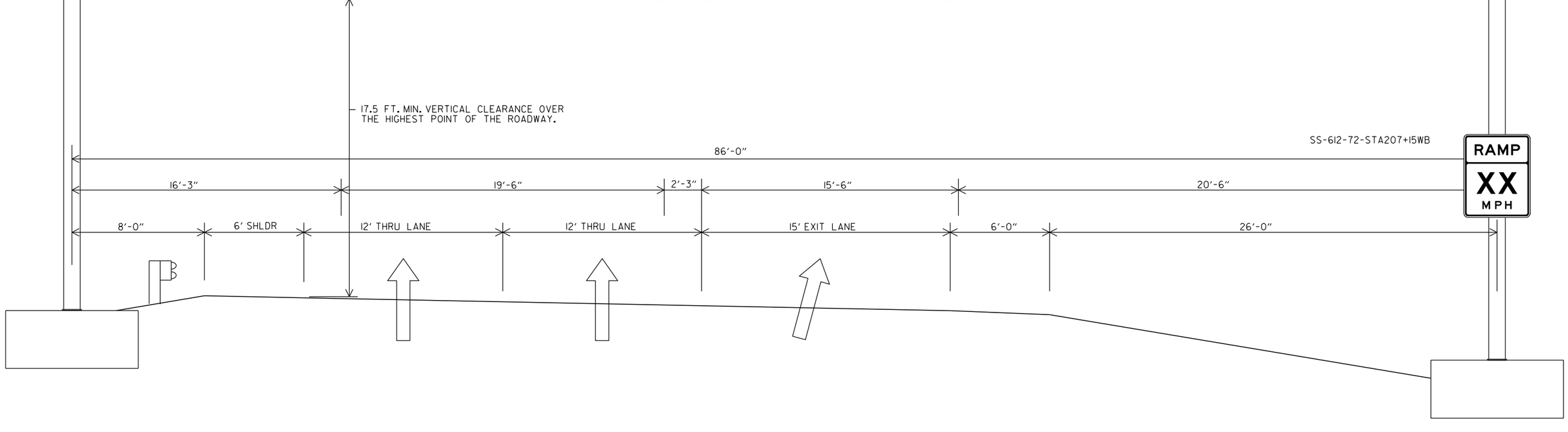

SIGN DETAIL SHEET

HBVinson 7/27/2023 1:44:21 PM
WORKSPACE: AHTD
L:\2017\17017660 - ARDOT 012326 Hwy 412 - Hwy 112\Drawings\r012326_SIGNS_DETAIL_02.dgn
REVISED DATE:

DATE REVISED	DATE REVISED	FED. RD. DIST. NO.	STATE	JOB NO.	SHEET NO.	TOTAL SHEETS
		6	ARK.	012326	147	838
		SIGN DETAIL SHEET				
2						

STATE OF ARKANSAS
LICENSED PROFESSIONAL ENGINEER
No.8141
NICCI D. TINER

DIGITALLY SIGNED 7/28/2023

NOTES:
THE CONTRACTOR WILL VERIFY SIGN PLACEMENT AND MAKE ANY ADJUSTMENTS NECESSARY TO ALIGN SIGNS OVER INTENDED LANES.

SIGNS TO BE INSTALLED AS PART OF XNA ACCESS PROJECT

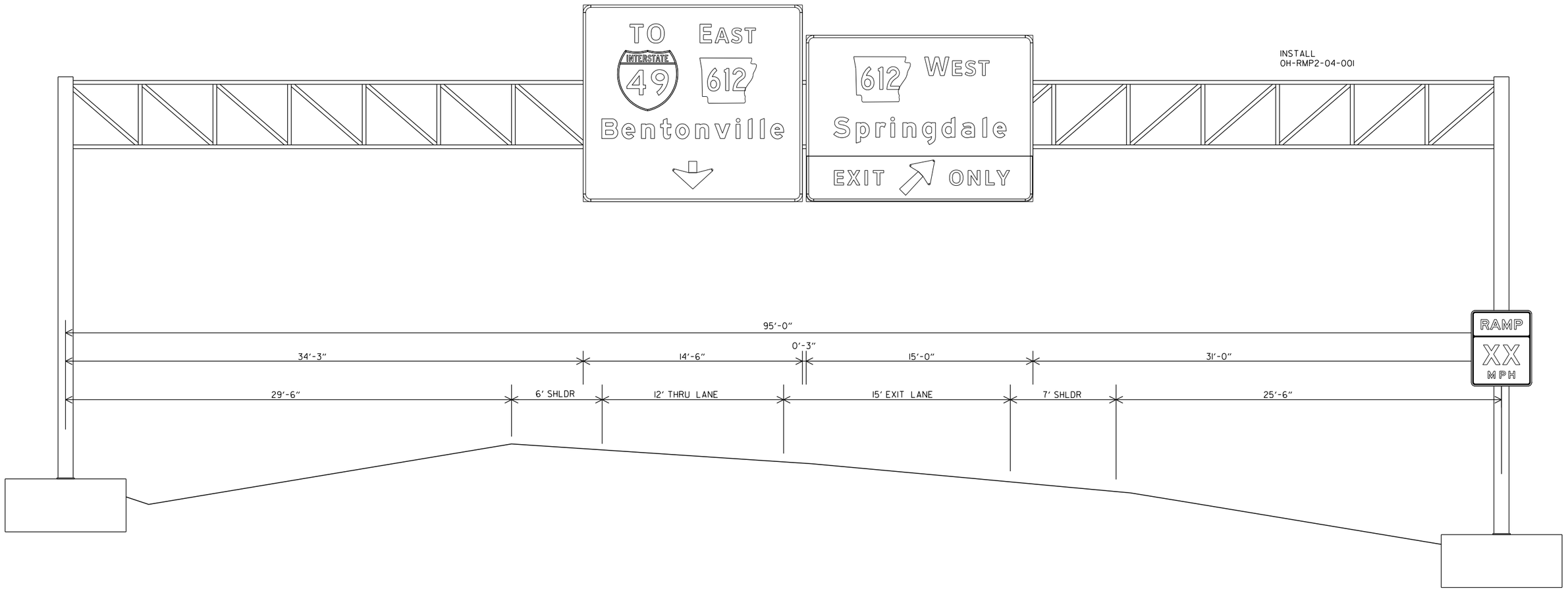

SIGN DETAIL SHEET

HBVinson
WORKSPACE: AHTD
L:\201\1701\7660 - ARDOT 012326 Hwy 412 - Hwy 112\Drawings\r012326_SIGNS_DETAIL_03.dgn
REVISED DATE:
7/27/2023 1:44:22 PM

DATE REVISED	DATE REVISED	FED. RD. DIST. NO.	STATE	JOB NO.	SHEET NO.	TOTAL SHEETS
		6	ARK.	012326	148	838
②		SIGN DETAIL SHEET				

STATE OF ARKANSAS
LICENSED PROFESSIONAL ENGINEER
No.8141
NICCI D. TINER
DIGITALLY SIGNED 7/28/2023

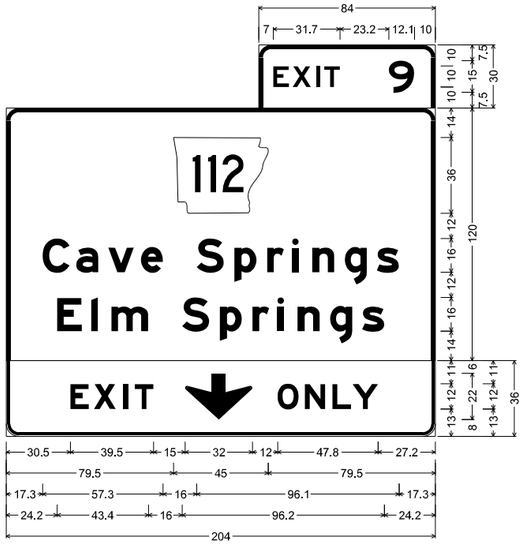

6.0" Radius, 2.0" Border, White on Green;
"Cave Springs", E Mod 2K; "Elm Springs", E Mod 2K;

E11-1_174x36;
6.0" Radius, 1.5" Border, 0.5" Indent, Black on Yellow;
"EXIT", E Mod 2K specified length; Down Arrow 22.0" 270°;
"ONLY", E Mod 2K specified length;
OC-612-04-STA465+50EB

NOTES:
THE CONTRACTOR WILL VERIFY SIGN PLACEMENT AND MAKE ANY ADJUSTMENTS NECESSARY TO ALIGN SIGNS OVER INTENDED LANES.

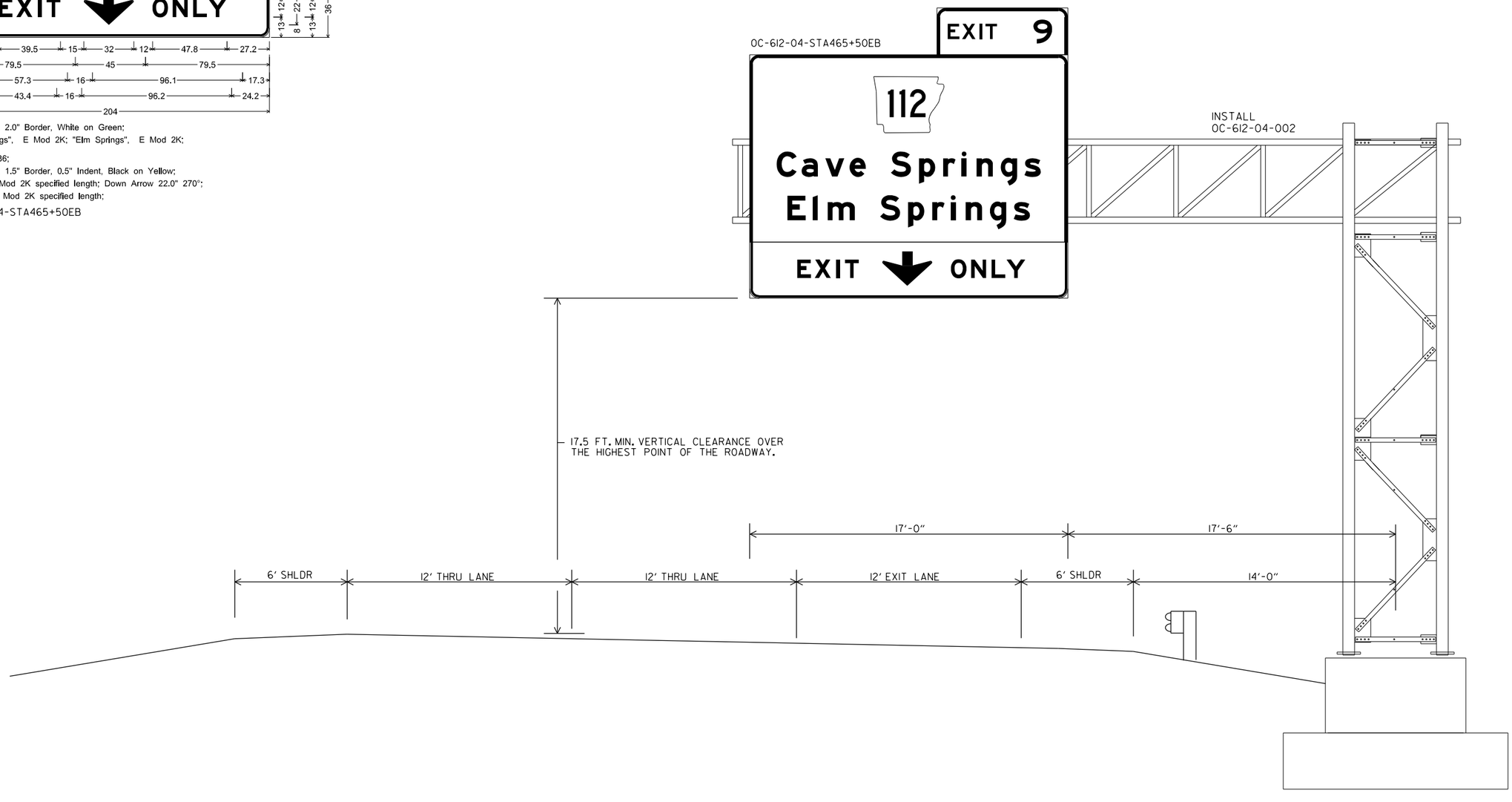

HBVinson 7/27/2023 1:44:23 PM
WORKSPACE: AHTD
L:\20\T\T01T660 - ARDOT 012326 Hwy 412 - Hwy 112\Drawings\r012326_SIGNS_DETAIL_04.dgn
REVISED DATE:

DATE REVISED	DATE REVISED	FED. RD. DIST. NO.	STATE	JOB NO.	SHEET NO.	TOTAL SHEETS
		6	ARK.	012326	149	838
		SIGN DETAIL SHEET				

(2)

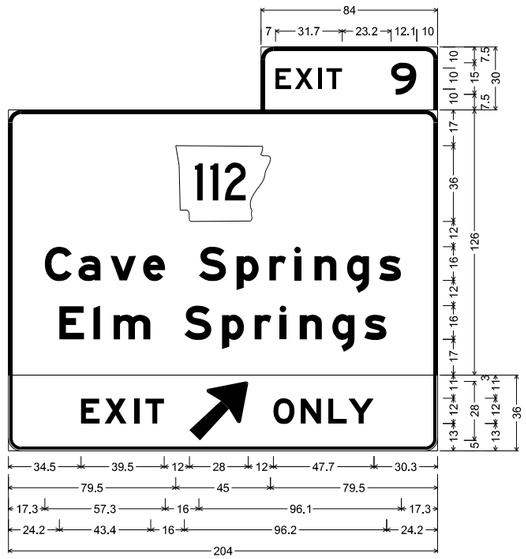

6.0" Radius, 2.0" Border, White on Green;
"Cave Springs", E Mod 2K; "Elm Springs", E Mod 2K;

E11-1d_174x36;
6.0" Radius, 1.5" Border, 0.5" Indent, Black on Yellow;
"EXIT", E Mod 2K specified length; Arrow Custom - 35.6" 45";
"ONLY", E Mod 2K specified length;

OC-612-04-STA481+00EB

STATE OF ARKANSAS
LICENSED PROFESSIONAL ENGINEER
No.8141
NICCI D. TINER

DIGITALLY SIGNED 7/28/2023

NOTES:
THE CONTRACTOR WILL VERIFY SIGN PLACEMENT AND MAKE ANY ADJUSTMENTS NECESSARY TO ALIGN SIGNS OVER INTENDED LANES.

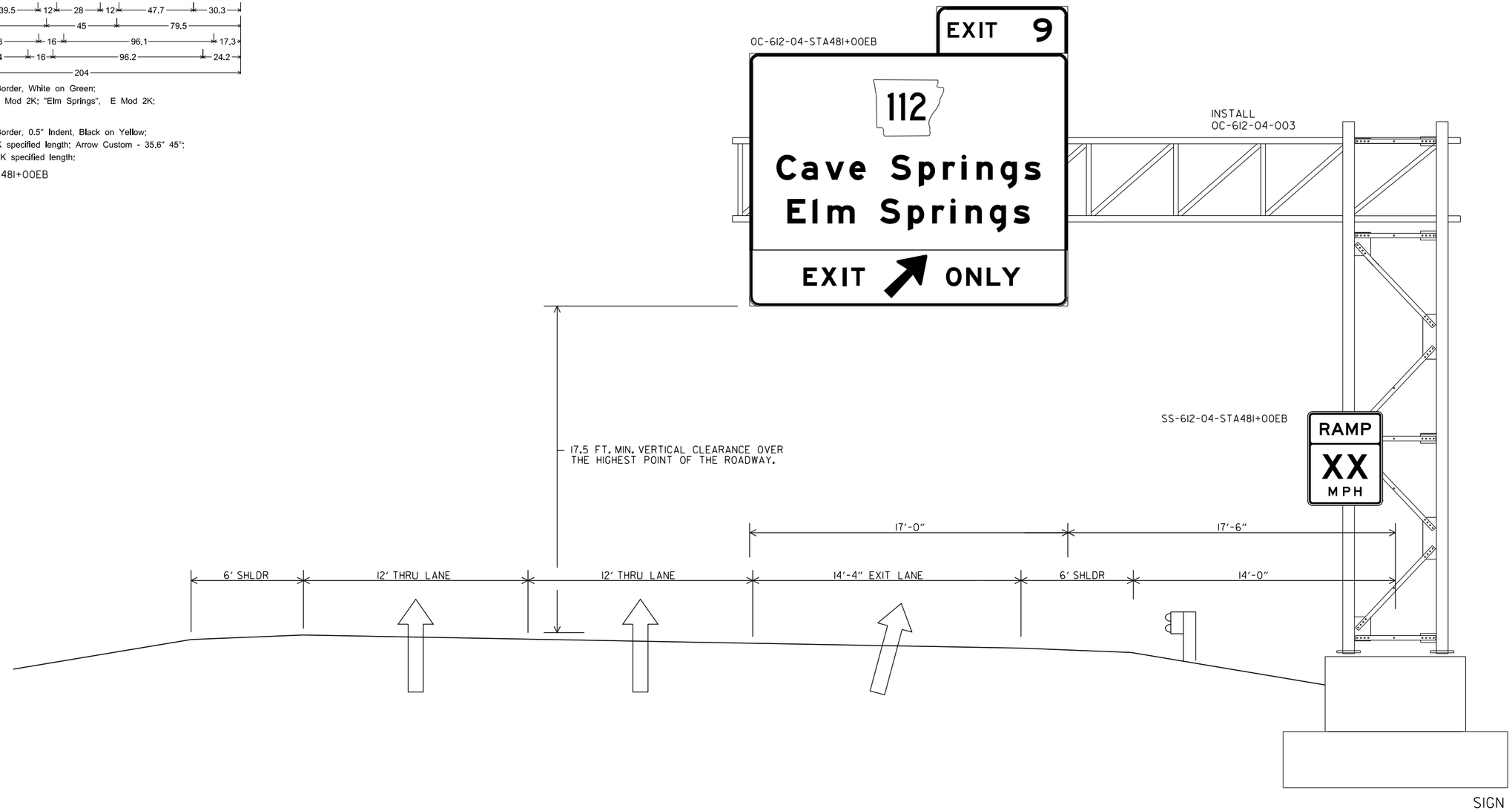

HBVinson 7/27/2023 1:44:24 PM
WORKSPACE: AHTD
L:\20\T\T01\T660 - ARDOT 012326 Hwy 412 - Hwy 112\Drawings\r012326_SIGNS_DETAIL_05.dgn
REVISED DATE:

DATE REVISED	DATE REVISED	FED. RD. DIST. NO.	STATE	JOB NO.	SHEET NO.	TOTAL SHEETS
		6	ARK.	012326	150	838
		SIGN DETAIL SHEET				

(2)

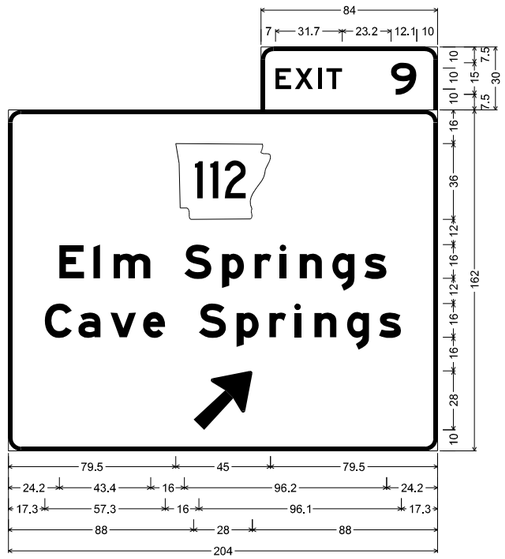

6.0" Radius, 2.0" Border, White on Green;
"Elm Springs", E Mod 2K; "Cave Springs", E Mod 2K;
Arrow Custom - 35.6" 45°;

OC-612-04-STA518+25WB

NOTES:
THE CONTRACTOR WILL VERIFY SIGN PLACEMENT AND MAKE ANY ADJUSTMENTS NECESSARY TO ALIGN SIGNS OVER INTENDED LANES.

SINCE THE CONTRACTOR WILL BE REQUIRED TO INSTALL OVERHEAD SIGNS ON STRUCTURES WHICH ARE LOCATED OVER THE ROADWAYS WHICH ARE CURRENTLY OPEN TO TRAFFIC, IT WILL BE THE RESPONSIBILITY OF THE CONTRACTOR TO PROVIDE LANE CLOSURE AS A PART OF TRAFFIC CONTROL. PAYMENT FOR PROVIDING LANE CLOSURES WILL BE PAID SUBSIDIARY TO PAY ITEM "MAINTENANCE OF TRAFFIC". ALL MAINTENANCE OF TRAFFIC WORK MUST CONFORM WITH THE MUTCD.

STATE OF ARKANSAS
LICENSED PROFESSIONAL ENGINEER
No.8141
NICCI D. TINER

DIGITALLY SIGNED 7/28/2023

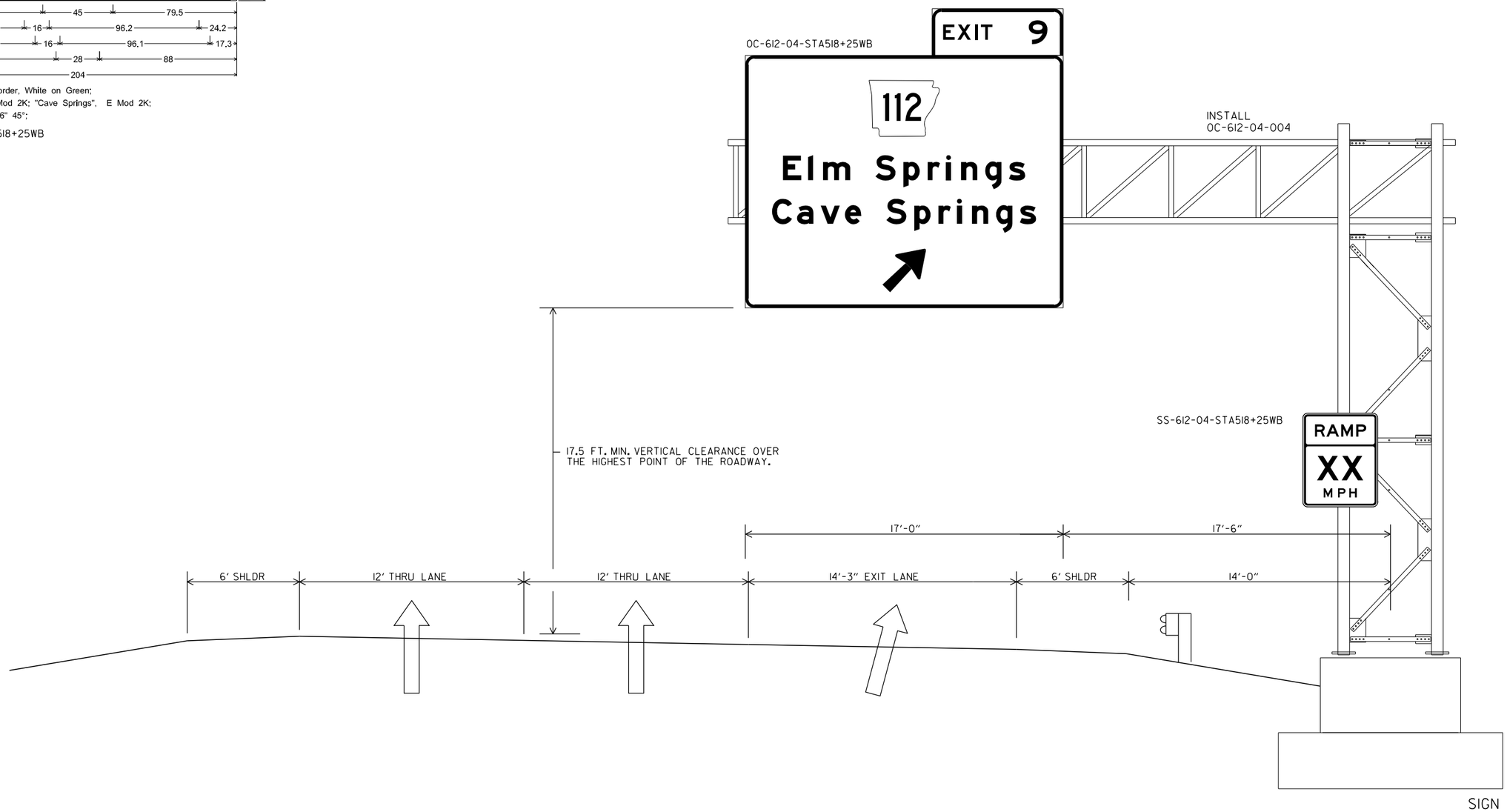

HBVinson
WORKSPACE: AHTD
L:\2017\7017660 - ARDOT 012326 Hwy 412 - Hwy 112\Drawings\r-012326_SIGNS_DETAIL_06.dgn
7/27/2023 1:44:24 PM
REVISED DATE:

DATE REVISED	DATE REVISED	FED. RD. DIST. NO.	STATE	JOB NO.	SHEET NO.	TOTAL SHEETS
		6	ARK.	012326	151	838
		SIGN DETAIL SHEET				

STATE OF ARKANSAS
LICENSED PROFESSIONAL ENGINEER
No.8141
NICCI D. TINER
DIGITALLY SIGNED 7/28/2023

M4-5 (24" X 12")
M3-2 (24" X 12")
MI-5 (30" X 24")
M5-IL (21" X 15")
M3-2 (24" X 12")
MI-4 (30" X 24")
M6-3 (21" X 15")

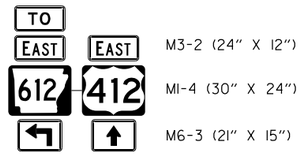

SS-RMPI-72-STAI92+00EB

M3-4 (24" X 12")
MI-4 (30" X 24")



SS-RMP4-72-STAI92+00WB

M3-2 (24" X 12")
MI-4 (30" X 24")



SS-4I2-72-STAI5+00EB

M4-5 (24" X 12")
M3-4 (24" X 12")
M3-2 (24" X 12")
MI-4 (30" X 24")
MI-5 (30" X 24")
M6-3 (21" X 15")
M5-IR (21" X 15")

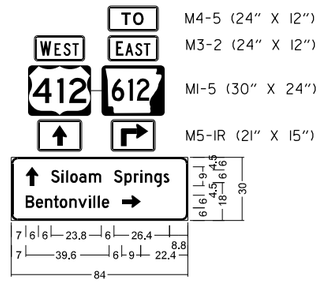

2.25" Radius, 0.75" Border, White on Green;
Standard Arrow Custom 9.0" X 6.0" 90°;
"Siloam Springs", D 2K;
"Bentonville", D 2K;
Standard Arrow Custom 9.0" X 6.0" 0°;
SS-4I2-72-STAI7+00WB

EAST
612
M3-2 (24" X 12")
MI-5 (30" X 24")
M6-2R (21" X 15")

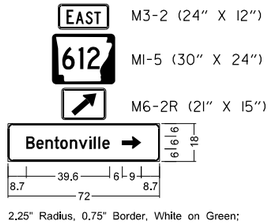

2.25" Radius, 0.75" Border, White on Green;
"Bentonville", D 2K;
Standard Arrow Custom 9.0" X 6.0" 0°;
SS-068-72-STA54+90WB

M3-2 (24" X 12")
MI-4 (30" X 24")
M6-1 (21" X 15")
M3-4 (24" X 12")
MI-4 (30" X 24")
M6-1 (21" X 15")

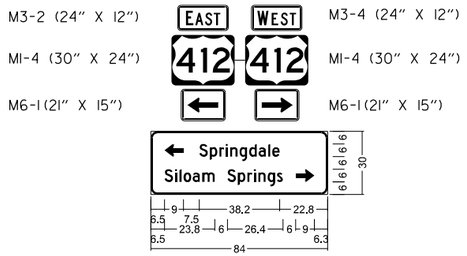

2.25" Radius, 0.75" Border, White on Green;
Standard Arrow Custom 9.0" X 6.0" 180°;
"Springdale", D 2K;
"Siloam Springs", D 2K;
Standard Arrow Custom 9.0" X 6.0" 0°;
GM-068-72-STA54+75EB

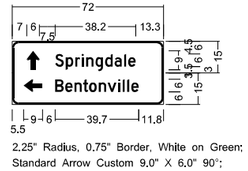

2.25" Radius, 0.75" Border, White on Green;
Standard Arrow Custom 9.0" X 6.0" 90°;
"Springdale", D 2K;
Standard Arrow Custom 9.0" X 6.0" 180°;
"Bentonville", D 2K;
GM-068-72-STA52+00EB

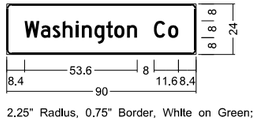

2.25" Radius, 0.75" Border, White on Green;
"Washington Co", D 2K;
GM-6I2-72-STA40I+00WB

M3-2 (24" X 12")
MI-5 (30" X 24")
M5-IL (21" X 15")
M4-5 (24" X 12")
MI-4 (30" X 24")
M6-3 (21" X 15")



SS-068-72-STA49+00EB

EAST
612
M3-2 (24" X 12")
MI-5 (30" X 24")

SS-6I2-72-STA222+00EB

M3-I (24" X 12")
MI-5 (30" X 24")
M5-IL (21" X 15")
M3-3 (24" X 12")
MI-5 (30" X 24")
M5-IR (21" X 15")

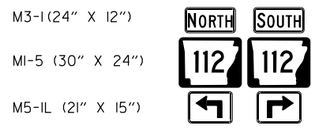

SS-RMPI-04-STA498+00EB

WRONG WAY
R5-Ia (42" X 30")
Cave Springs
Elm Springs
6 6 6.8
4.5 30
6.7
9 6 17.4 6 26.4 7.5
9.3 12.7 6 26.4 6 9 12.2
6.7
78

2.25" Radius, 0.75" Border, White on Green;
Standard Arrow Custom 9.0" X 6.0" 180°;
"Cave Springs", D 2K;
"Elm Springs", D 2K;
Standard Arrow Custom 9.0" X 6.0" 0°;
GM-RMPI-04-STA499+50EB

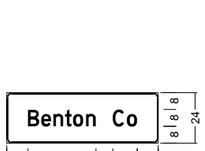

2.25" Radius, 0.75" Border, White on Green;
"Benton Co", D 2K;
GM-6I2-04-STA40I+00EB

Old HWY 68
6 9.7 12
3.1
7.4 11 6 15.8 6 9.4 6 9 7.4
78

1.5" Radius, 0.5" Border, White on Green;
"Old HWY 68", D 2K;
Standard Arrow Custom 9.0" X 6.0" 0°;
GM-4I2-72-STAI4+00WB

Old HWY 68
6 9.7 12
3.1
7.4 9 6 11 6 15.8 6 9.4 7.4
78

1.5" Radius, 0.5" Border, White on Green;
Standard Arrow Custom 9.0" X 6.0" 180°;
"Old HWY 68", D 2K;
GM-RMPI-72-STAI94+50EB

WRONG WAY
R5-Ia (42" X 30")
Springdale
6 6 6
18
6 9 6 38.2 6.8
66

2.3" Radius, 0.8" Border, White on Green;
Standard Arrow Custom 9.0" X 6.0" 180°;
"Springdale", D 2K;
GM-RMP3-72-STAI95+00WB

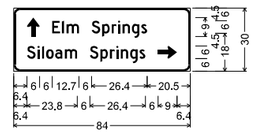

2.25" Radius, 0.75" Border, White on Green;
Standard Arrow Custom 9.0" X 6.0" 90°;
"Elm Springs", D 2K;
"Siloam Springs", D 2K;
Standard Arrow Custom 9.0" X 6.0" 0°;
GM-I12-04-STAI0+00SB

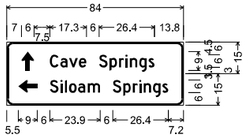

2.25" Radius, 0.75" Border, White on Green;
Standard Arrow Custom 9.0" X 6.0" 90°;
"Cave Springs", D 2K;
Standard Arrow Custom 9.0" X 6.0" 180°;
"Siloam Springs", D 2K;
GM-I12-04-STAI7+00NB

M3-3 (24" X 12")
MI-5 (30" X 24")
M6-3 (21" X 15")
SOUTH
WEST
112
612
M3-4 (24" X 12")
MI-5 (30" X 24")
M6-1 (21" X 15")

SS-I12-72-STAI2+00SB

M3-4 (24" X 12")
MI-5 (30" X 24")
M6-1 (21" X 15")
WEST
NORTH
612
112
M3-1 (24" X 12")
MI-5 (30" X 24")
M6-3 (21" X 15")

SS-I12-72-STAI4+00NB

HBVinson 7/27/2023 1:44:25 PM
WORKSPACE: AHTD
L:\2017\17017660 - ARDOT 012326 Hwy 412 - Hwy 112\Drawings\r012326_SIGNS_DETAIL_07.dgn
REVISED DATE:

DATE REVISED	DATE REVISED	FED. RD. DIST. NO.	STATE	JOB NO.	SHEET NO.	TOTAL SHEETS
		6	ARK.	012326	152	838
		SIGN DETAIL SHEET				
2						

STATE OF ARKANSAS
LICENSED PROFESSIONAL ENGINEER
No.8141
NICCI D. TINER

DIGITALLY SIGNED 7/28/2023



R1-1 (36" X 36")

SS-LIB-72-STA19+75NB
SS-CUL-04-STA19+80EB

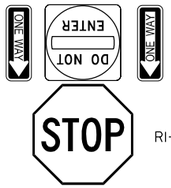

R6-1R (36" X 12")
R6-1L (36" X 12")
R5-1(36" X 36")

R1-1 (48" X 48")

SS-RMP3-72-STA192+50WB
SS-RMPI-04-STA501+30EB

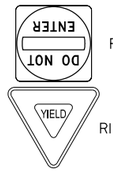

R5-1(36" X 36")

R1-2 (48" X 48" X 48")

SS-068-72-STA45+50WB
SS-068-72-STA56+00WB
SS-RMP2-72-STA193+50EB
SS-412-72-STA195+40WB
SS-RMPI-04-STA501+35EB



R2-1(36" X 48")

SS-RMP4-72-STA190+00WB
SS-RMPI-72-STA185+00EB(L)
SS-RMPI-72-STA185+00EB(R)



R2-1(36" X 48")

SS-612-72-STA226+00EB



R5-1 (36" X 36")

SS-412-72-STA147+00WB

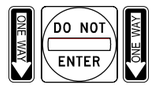

R6-1R (36" X 12")
R6-1L (36" X 12")
R5-1 (36" X 36")

SS-068-72-STA47+00EB
SS-RMPI-04-STA501+05WB



R5-1a (42" X 30")

SS-RMP3-72-STA195+00WB
SS-RMPI-04-STA499+50EB



R2-1(36" X 48")

SS-412-72-STA18+00EB



OM3-L (12" X 36")

SS-612-72-STA184+33EB
SS-612-72-STA186+83WB
SS-612-72-STA191+45EB
SS-612-72-STA193+60WB
SS-612-72-STA294+02EB
SS-612-72-STA296+52WB
SS-612-72-STA378+23EB
SS-612-72-STA387+88WB
SS-612-04-STA427+05EB
SS-612-04-STA429+05WB
SS-612-04-STA462+66EB
SS-612-04-STA464+71WB



OM3-R (12" X 36")

SS-612-72-STA184+73EB
SS-612-72-STA186+47WB
SS-612-72-STA191+56EB
SS-612-72-STA193+60WB
SS-904-72-STA18+95EB
SS-904-72-STA211+10WB
SS-612-72-STA294+02EB
SS-612-72-STA296+35WB
SS-612-72-STA378+23EB
SS-612-72-STA387+88WB
SS-612-04-STA427+16EB
SS-612-04-STA428+90WB
SS-612-04-STA462+77EB
SS-612-04-STA464+63WB

HBVinson 7/27/2023 11:44:28 PM
WORKSPACE: AHTD
L:\2017\170176660 - ARDOT 012326 Hwy 412 - Hwy 112\Drawings\r012326_SIGNS_DETAIL_08.dgn
REVISED DATE:

DATE REVISED	DATE REVISED	FED. RD. DIST. NO.	STATE	JOB NO.	SHEET NO.	TOTAL SHEETS
		6	ARK.	012326	153	838
		SIGN DETAIL SHEET				
2						

STATE OF ARKANSAS
LICENSED PROFESSIONAL ENGINEER
No.8141
NICCI D. TINER
DIGITALLY SIGNED 7/28/2023

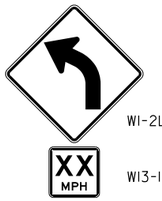

W1-2L (36" X 36")
W13-1P (18" X 18")

SS-MUS-72-STA23+50WB
SS-MUS-72-STA33+00EB

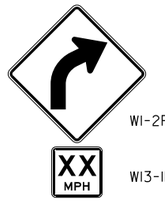

W1-2R (36" X 36")
W13-1P (18" X 18")

SS-MUS-72-STA14+00NB



W1-8 (24" X 30")
W1-8 (24" X 30")

SS-MUS-72-STA35+00EB
SS-MUS-72-STA37+00EB
SS-MUS-72-STA38+00EB



W1-8 (24" X 30")
W1-8 (24" X 30")

SS-MUS-72-STA16+00NB
SS-MUS-72-STA17+00NB
SS-MUS-72-STA18+00NB
SS-MUS-72-STA19+00NB
SS-MUS-72-STA20+00NB
SS-MUS-72-STA21+00NB
SS-MUS-72-STA22+00NB



W3-1 (48" X 48")

SS-RMP3-72-STA197+00WB
SS-RMPI-04-STA496+00EB

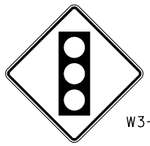

W3-3 (48" X 48")

SS-RMPI-72-STA188+00EB(L)
SS-RMPI-72-STA188+00EB(R)
SS-412-72-STA19+00WB



W3-3 (36" X 36")

SS-MUS-72-STA36+00EB



W4-1R (48" X 48")

SS-412-72-STA175+00WB
SS-612-72-STA202+00EB
SS-612-04-STA489+00WB
SS-612-04-STA514+00EB



W4-2R (48" X 48")

SS-412-72-STA165+00WB



W3-5 (48" X 48")

SS-RMPI-72-STA181+00EB(L)
SS-RMPI-72-STA181+00EB(R)



W8-13 (36" X 36")

SS-904-72-STA16+00EB
SS-904-72-STA24+00WB



W8-13 (48" X 48")

SS-412-72-STA179+50EB
SS-612-72-STA199+50WB
SS-612-72-STA288+00EB
SS-612-72-STA302+75WB
SS-612-72-STA372+00EB
SS-612-72-STA394+00WB
SS-612-04-STA421+00EB
SS-612-04-STA435+00WB
SS-612-04-STA458+00EB
SS-612-04-STA471+00WB



W9-1R (48" X 48")

SS-412-72-STA169+00WB

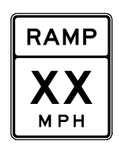

W13-3 (48" X 60")

SS-612-72-STA207+15WB
SS-612-04-STA481+00EB
SS-612-04-STA518+25WB



W14-2 (30" X 30")

SS-CUL-04-STA19+16EB

HBVinson
WORKSPACE: AHTD
L:\2017\17017660 - ARDOT 012326 Hwy 412 - Hwy 112\Drawings\r012326_SIGNS_DETAIL_09.dgn
7/27/2023 1:44:29 PM
REVISED DATE:

DATE REVISED	DATE REVISED	FED. RD. DIST. NO.	STATE	JOB NO.	SHEET NO.	TOTAL SHEETS
		6	ARK.	012326	154	838
		SIGN DETAIL SHEET				

STATE OF ARKANSAS
LICENSED PROFESSIONAL ENGINEER
No.8141
NICCI D. TINER
DIGITALLY SIGNED 7/28/2023

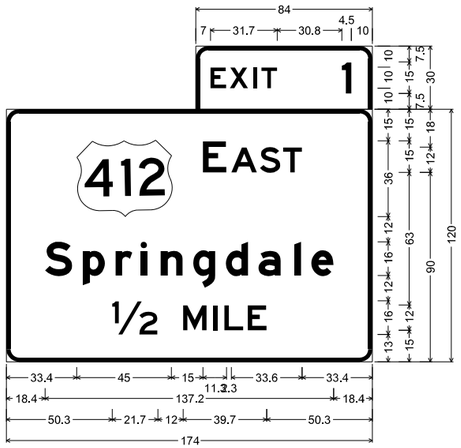

6.0" Radius, 2.0" Border, White on Green;
"E" E 2K; "AST", E 2K; "Springdale", E Mod 2K;
"½", E 2K; "MILE", E 2K;
6.0" Radius, 2.0" Border, White on Green;
"EXIT", E 2K specified length;
"1", E 2K;

GM-412-72-STA150+00EB
GM-612-72-STA234+00WB

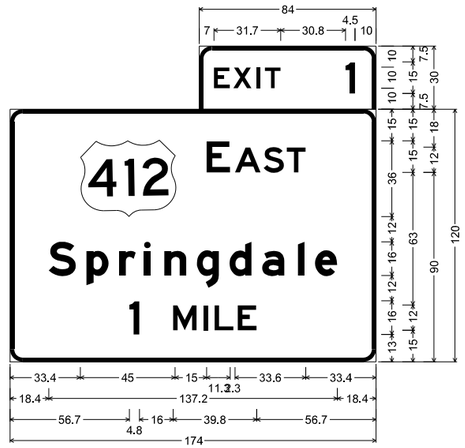

6.0" Radius, 2.0" Border, White on Green;
"E" E 2K; "AST" E 2K; "Springdale", E Mod 2K;
"1", E 2K; "MILE", E 2K;
6.0" Radius, 2.0" Border, White on Green;
"EXIT", E 2K specified length;
"1", E 2K;

GM-612-72-STA258+00WB

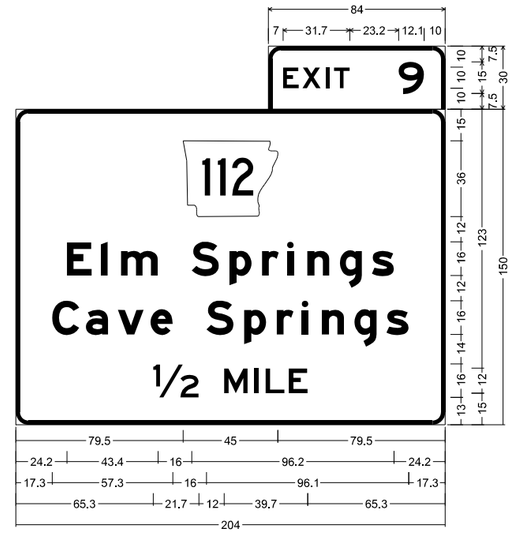

6.0" Radius, 2.0" Border, White on Green;
"Elm Springs", E Mod 2K; "Cave Springs", E Mod 2K; "½", E 2K;
"MILE", E 2K;
6.0" Radius, 2.0" Border, White on Green;
"EXIT", E 2K specified length;
"9", E 2K;

GM-612-04-STA545+00WB

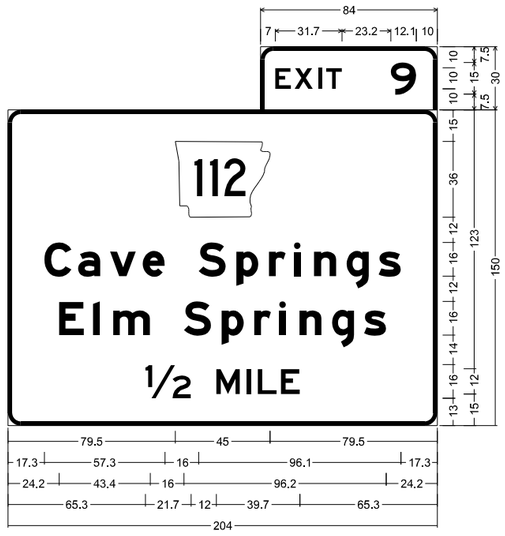

6.0" Radius, 2.0" Border, White on Green;
"Cave Springs", E Mod 2K; "Elm Springs", E Mod 2K; "½", E 2K;
"MILE", E 2K;
6.0" Radius, 2.0" Border, White on Green;
"EXIT", E 2K specified length;
"9", E 2K;

GM-612-04-STA455+00EB

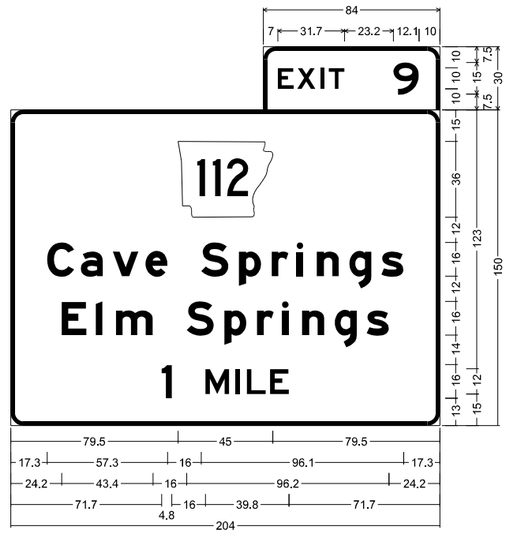

6.0" Radius, 2.0" Border, White on Green;
"Cave Springs", E Mod 2K; "Elm Springs", E Mod 2K; "1", E 2K;
"MILE", E 2K;
6.0" Radius, 2.0" Border, White on Green;
"EXIT", E 2K specified length;
"9", E 2K;

GM-612-04-STA426+75EB

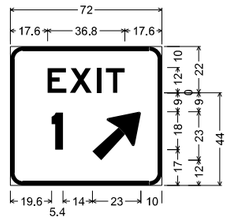

6.0" Radius, 2.0" Border, White on Green;
"EXIT", E 2K;
"1" E Mod 2K " ", E 2K;
Arrow Custom - 29.3" 45°;

SS-412-72-STA178+25EB
SS-612-72-STA204+25WB

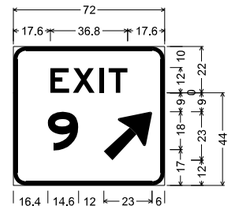

6.0" Radius, 2.0" Border, White on Green;
"EXIT", E 2K;
"9" E Mod 2K " ", E 2K;
Arrow Custom - 29.3" 45°;

SS-612-04-STA484+00EB
SS-612-04-STA515+40WB

HBVinson 7/27/2023 14:44:30 PM
WORKSPACE: AHTD
L:\2017\170176\60 - ARDOT 02326 Hwy 412 - Hwy 112\Drawings\r02326_SIGNS_DETAIL_10.dgn
REVISED DATE:

DATE REVISED	DATE REVISED	FED. RD. DIST. NO.	STATE	JOB NO.	SHEET NO.	TOTAL SHEETS
10-23-2023		6	ARK.	012326	155	838
(2)		ITS NOTES				

STATE OF ARKANSAS
LICENSED PROFESSIONAL ENGINEER
No.8141
NICCI D. TINER

DIGITALLY SIGNED 10/23/2023

NOTES:

1. ALL ELECTRICAL WORK SHALL BE PERFORMED IN ACCORDANCE WITH THE CURRENT EDITIONS OF THE NFPA 70 (CURRENT EDITION) NATIONAL ELECTRIC CODE, NFPA 101 (CURRENT EDITION) LIFE SAFETY CODE, STATE ELECTRICAL CODE AND LOCAL ELECTRICAL CODE.

2. PRIOR TO CONSTRUCTION, THE CONTRACTOR SHALL PROVIDE DOCUMENTATION TO PROJECT ENGINEER TO ENSURE ARKANSAS STATE CODES (§17-28-101 ET SEQ. AND §20-31-101 ET SEQ.) ARE MET. THE DOCUMENTATION SHALL INCLUDE:

   a. THE ELECTRICIANS' LICENSE INFORMATION AND EXPIRATION DATE.

   b. THE RATIO OF LICENSED-ELECTRICIAN-TO APPRENTICE-ELECTRICIANS.

   c. PRINTED SEARCH RESULT OF LICENSED ELECTRICIANS FROM ARKANSAS DEPARTMENT OF LABOR ELECTRICIAN LICENSEE DIRECTORY (https://www.ark.org/labor/electrician/search.php). ALL LICENSES SHALL BE VALID AND CURRENT.

3. EXTEND GREEN EQUIPMENT GROUNDING CONDUCTOR (E.G.C.) FROM GROUND BAR AT MAIN BREAKER TO CONTROL PANEL AND TO FIRST POLE. SOLIDLY BOND E.G.C. TO GROUND LUG OF CONTROL CABINET AND TO POLE GROUND. ENSURE THAT ONLY ONE NEUTRAL-TO-GROUND BOND EXISTS IN THE SYSTEM AND THAT IT IS AT THE MAIN BREAKER.

4. ALL PARTS OF THIS INSTALLATION SHALL BE IN ACCORDANCE WITH THE STANDARD SPECIFICATIONS FOR HIGHWAY CONSTRUCTION, STANDARD DRAWINGS AND WITH THE MANUAL ON UNIFORM TRAFFIC CONTROL DEVICES, CURRENT EDITION.

5. CONDUIT INSTALLED UNDER ROADWAY SURFACES SHALL BE INSTALLED BY PUSHING OR BORING METHOD OR AS DIRECTED BY THE ENGINEER. PVC OR HDPE CONDUIT SHALL BE USED AND SHALL BE UL LISTED. PVC CONDUIT SHALL BE MARKED "DIR. BORING" OR "DIRECTIONAL BORING" PER NEC. IF THE ENGINEER DETERMINES THIS IS NOT FEASIBLE, THEN A TRENCHING METHOD AS SHOWN IN THE STANDARD DRAWINGS MAY BE USED. THE ENGINEER SHALL GRANT A WRITTEN APPROVAL PRIOR TO USING THE TRENCHING METHOD.

6. CONTRACTOR SHALL NOTIFY ALL EXISTING UTILITY OWNERS BEFORE BEGINNING WORK ON THIS PROJECT.

7. CONTROLLER CABINET LAYOUT AND ORIENTATION SHALL CONFORM TO IMSA STANDARDS.

8. CONTRACTOR SHALL NOTIFY THE RESIDENT ENGINEER OR ASSIGNED DEPARTMENT PROJECT INSPECTOR EACH DAY PRIOR TO ITS RELATED WORK. NO WORK WILL BE ALLOWED OR APPROVED WITHOUT THIS PRIOR NOTIFICATION.

9. CONTRACTOR SHALL ATTACH A PERMANENT TAG OF RIGID PLASTIC OR NON-FERROUS METAL TO EACH CONDUIT AT PULL BOXES, POLE BASES, JUNCTION BOXES AND CONTROLLER CABINETS. TAGS SHALL BE EMBOSSED, STAMPED, OR ENGRAVED WITH LETTERS ¼" OR GREATER IN HEIGHT AND SECURED TO THE CONDUIT WITH NYLON OR PLASTIC TIES. EACH TAG SHALL INDICATE THE END LOCATION OF CONDUIT RUN. THE COST OF THE TAGS SHALL BE SUBSIDIARY TO THE CONDUIT PAY ITEM.

10. THE CONTRACTOR SHALL PERFORM ALL WORK POSSIBLE THAT WILL MINIMIZE THE TIME THAT THE ITS EQUIPMENT IS OUT OF OPERATION.

11. ALL NON-METALLIC CONDUIT RUNS SHALL HAVE BELL RING FITTINGS INSTALLED ON THE TERMINATING ENDS OF THE CONDUIT. THIS INCLUDES PULL BOXES, POLE BASES, AND TRAFFIC SIGNAL CABINETS.

12. THE CONTRACTOR SHALL PROVIDE THE IMEI NUMBER OF THE CELLULAR MODEM PRIOR TO DROPPING THE MODEM OFF TO BE CONFIGURED. REFER TO THE OVERHEAD DMS ASSEMBLY SPECIAL PROVISION FOR MORE DETAILS.

13. THE CONTRACTOR SHALL NOT ENGAGE IN EXCAVATION OR DEMOLITION ACTIVITIES WITHOUT HAVING FIRST NOTIFIED THE ARKANSAS ONE CALL CENTER IN ACCORDANCE WITH A.C.A. & 14-271 UNDERGROUND FACILITIES DAMAGE PREVENTION ACT. NOT ALL UTILITY COMPANIES ARE MEMBERS OF THE ARKANSAS ONE CALL SYSTEM. THE CONTRACTOR IS ADVISED TO CONTACT ALL NON-MEMBER UTILITIES AS WELL AS THE ONE CALL CENTER.

14. UNDERGROUND UTILITIES MAY EXIST WITHIN AND ADJACENT TO THE LIMITS OF CONSTRUCTION. SOME UTILITIES MAY HAVE BEEN RELOCATED SINCE THE TIME OF DESIGN AND THE CONTRACTOR'S NOTICE TO PROCEED. THE CONTRACTOR SHALL CONTACT THE UTILITY COMPANIES INVOLVED AND VERIFY THE LOCATIONS OF UNDERGROUND UTILITIES. THE CONTRACTOR SHALL MAINTAIN THE UTILITY LOCATION MARKINGS UNTIL IT IS NO LONGER NECESSARY.

15. ITS EQUIPMENT SHOWN ON THESE PLANS ARE IN APPROXIMATE LOCATIONS. ALL EQUIPMENT SHALL BE FIELD LOCATED BY THE CONTRACTOR WITH PROPOSED LOCATIONS APPROVED BY THE ENGINEER TO VERIFY PROPER PLACEMENT AND BEST SIGHT DISTANCE FOR EQUIPMENT, ADEQUATE ROADSIDE PROTECTION, ETC. THE CONTRACTOR SHALL INSTALL ALL EQUIPMENT, PULL BOXES, AND CONDUIT WITHIN PUBLIC RIGHT-OF-WAY.

16. FINAL LOCATIONS OF ALL OVERHEAD DMS ASSEMBLIES, AND THEIR RESPECTIVE STRUCTURES SHALL BE SUBMITTED TO THE ITS MANAGEMENT SECTION FOR REVIEW AND APPROVAL PRIOR TO CONSTRUCTION.

17. FIELD LOCATION ADJUSTMENTS MAY BE REQUIRED AT TIME OF EQUIPMENT INSTALLATION DUE TO POTENTIAL CONFLICTS OR OTHER FACTORS THAT WERE UNIDENTIFIABLE DURING THE PROJECT DESIGN PHASE. ANY REQUIRED ADJUSTMENTS SHALL BE APPROVED BY THE PROJECT ENGINEER.

18. SEE STANDARD DETAILS OF STEEL TEE MOUNT SIGN STRUCTURE SHEET 1 OF 5 FOR DETAILS AND NOTES ON OVERHEAD TEE MOUNT STRUCTURE AND STRUCTURAL REQUIREMENTS.

19. THE FOLLOWING REQUIREMENTS WILL NEED TO BE MET PRIOR TO ACCEPTANCE OF PAY ITEM OVERHEAD DMS ASSEMBLY:

   a. THE OVERHEAD DMS ASSEMBLY WILL NEED TO BE INSTALLED IN FULL WITH ALL ASSOCIATED EQUIPMENT AND PARTS LISTED WITHIN THE SPECIAL PROVISION.
   b. THE OVERHEAD DMS ASSEMBLY IS PERMANENTLY CONNECTED TO UTILITY POWER SERVICE POINT, POWERED ON, AND FUNCTIONING PROPERLY.
   c. THE OVERHEAD DMS ASSEMBLY IS TESTED, COMMISSIONED, AND APPROVED BY A MANUFACTURER REPRESENTATIVE. THE REPRESENTATIVE WILL NEED TO BE ON SITE AND PROVIDE A CERTIFIED DOCUMENT OF THE COMMISSIONED DMS.
   d. THE OVERHEAD DMS ASSEMBLY IS INSPECTED AND APPROVED BY ARDOT ITS MANAGEMENT INSPECTOR.
   e. UPON ARDOT ITS MANAGEMENT INSPECTOR APPROVAL, A THIRTY DAY PERFORMANCE TEST WILL COMMENCE. REFER TO SPS FOR MORE DETAILS ON THE THIRTY DAY PERFORMANCE TEST.

20. DMS SHALL BE COMMISSIONED AND PUT INTO OPERATION IN BATCHES NOT GREATER THAN FIVE OR AS DIRECTED AND APPROVED BY THE ENGINEER.

21. WHERE APPLICABLE, THE CONTRACTOR SHALL BE RESPONSIBLE FOR ENSURING THAT THE ITS LOCATIONS AND EQUIPMENT ARE INSTALLED AND OPERATIONAL PRIOR TO THE BEGINNING OF OTHER CONSTRUCTION PARTS OF THE PROJECT. LOCATIONS WHERE GUARDRAIL INSTALLATION IS REQUIRED, THE ITS EQUIPMENT SHALL BE INSTALLED AFTER THE REQUIRED GUARDRAIL IS IN PLACE. THE CONTRACTOR SHALL BE RESPONSIBLE FOR COORDINATING THE ITS WORK WITH THE DEPARTMENT'S ITS MANAGEMENT SECTION-MAINTENANCE DIVISION AND THE RESIDENT ENGINEER OFFICE.

22. FOR DYNAMIC MESSAGE SIGN CONNECTION TO STRUCTURE, SEE MANUFACTURER RECOMMENDATIONS.

    SEE SPECIAL PROVISION "OVERHEAD DYNAMIC MESSAGE SIGN ASSEMBLY" FOR ADDITIONAL DETAILS. DYNAMIC MESSAGE SIGN ASSEMBLIES ARE TO BE CENTERED ON THE TEE MOUNT STRUCTURE; PLACED AS SHOWN IN PLANS ON OVERHEAD SIGN STRUCTURE (OSS) AND AS DIRECTED BY THE ENGINEER.

23. IF THE SERVICE POINT IS MORE THAN 10 FEET FROM THE DMS CONTROLLER CABINET, THE CONTRACTOR SHALL PROVIDE AND INSTALL A SEPARATE TWO CIRCUIT EXTERNAL BREAKER (SECONDARY BREAKER) ON OR NEAR THE DMS CONTROLLER CABINET AND SHALL INSTALL CONDUIT, ELECTRICAL SERVICE WIRE WITH GROUND AS SPECIFIED ON THE PLANS, AND PERFORM WIRING TO TAP INTO ARDOT'S MAIN BREAKER AS PART OF THIS CONTRACT. CONDUIT IS PAID FOR AS A SEPARATE ITEM OF THIS CONTRACT. TWO CIRCUIT BREAKERS SHALL BE CONSIDERED SUBSIDIARY TO THE PAY ITEM SERVICE POINT ASSEMBLY.

24. MINIMUM OFFSET DISTANCE FROM EDGE OF GUARDRAIL TO ITS EQUIPMENT SHALL BE GREATER THAN 5'.

25. ROADWAY EDGE OF ABOVE GROUND ITS EQUIPMENT TO BE 30' MIN. FROM EDGE OF TRAVEL LANE. TO MAINTAIN CLEAR ZONE UNLESS PROTECTED BY GUARD RAIL, WIRE ROPE SAFETY FENCE SHALL BE USED AS APPROVED BY THE PROJECT ENGINEER.

26. ALL CONCRETE PULL BOXES SHALL BE TYPE 2 HD UNLESS OTHERWISE INDICATED. PULL BOX LIDS SHALL CLOSE FLUSH WITHOUT PINCHING ANY CONDUCTORS. CONDUIT LENGTHS IN PULL BOXES SHALL BE SET ACCORDINGLY. ANY CONDUCTORS THAT HAVE BEEN DAMAGED BY PINCHING SHALL BE COMPLETELY REPLACED AT THE CONTRACTOR'S EXPENSE.

27. COPPER GROUND RODS SHALL BE EXOTHERMICALLY WELDED.

28. CONTRACTOR SHALL USE TWO, 2-INCH CONDUITS FROM EACH TYPE 3 PULL BOX TO OVERHEAD TEE-MOUNT. TWO (2) FOR POWER WIRING AND TWO (2) FOR COMMUNICATION (SIGNAL) CABLING. REFER TO ITS TEE-MOUNT STANDARD DETAIL SHEET AND ITS DETAIL SHEET FOR ADDITIONAL INFO.

29. WHERE RIGID METAL CONDUIT (RMC) IS SHOWN ON PLANS (TYPICALLY EXISTING OSS) THE RMC SUPPORT FITTING(S) SHALL BE SPACED NO MORE THAN 20' MAXIMUM ON OSS.

30. ALL ABOVE GROUND CONDUIT SHALL BE RMC. NMC SHALL NOT BE ALLOWED ABOVEGROUND UNLESS SPECIFICALLY NOTED ON PLANS.

31. LIQUID-TIGHT FLEXIBLE METALLIC CONDUIT (LTC) AND ITS PROPER FITTINGS SHALL BE CONSIDERED SUBSIDIARY TO THE UNIT PRICE BID FOR OVERHEAD DMS ASSEMBLY, NO SEPARATE PAYMENT SHALL BE MADE.

32. COMMUNICATION / POWER CABLES USED FOR CCTV, RDS, AND CELLULAR MODEM FROM NETWORK SWITCH TO EQUIPMENT SHALL BE COST ABSORBED, NO SEPARATE PAYMENT SHALL BE MADE.

33. DMS (SIGNAL/COMM) FIBER OPTIC REQUIREMENTS:
    50/125 um MM GRADED INDEX, OM3 STANDARD COMPLIANT LASER OPTIMIZED, STANDARD AND PREFERRED FOR MOST SYSTEMS. FIBER OPTIC CABLE SHALL BE 6 STRAND CORNING/95-050-99-X. FIBER OPTIC CABLE DIAMETER SHALL BE 50/125 um 6 FIBER OD, 0.195" (4.0MM) W-1489-DX. ALL ENDS SHALL HAVE UNICAM LC CONNECTORS WITH TWO STRANDS FOR REDUNDANT TX/RX AND TWO UNUSED FIBERS.

34. CONDUIT FOR FIBER OPTIC CABLE SHALL UTILIZE MINIMUM 6" RADIUS BENDS. NO ELBOW JOINTS ALLOWED.

35. A TRACER WIRE SHALL BE INSTALLED IN CONDUIT THAT CARRIES FIBER OPTIC AND/OR COMMUNICATION CABLE, COST TO BE ABSORBED, NO SEPARATE PAYMENT SHALL BE MADE.

36. CONTRACTOR SHALL FIELD VERIFY CAMERA SITE LOCATION AND ORIENTATION FOR COMPLETE COVERAGE OF ROADWAY PRIOR TO INSTALLING CCTV OR RDS. BRACKETS, LOCATIONS AND ORIENTATIONS TO BE APPROVED BY THE ENGINEER.

37. CONTRACTOR/SUPPLIER TO SIZE STAINLESS STEEL BANDING TO FIT THE OVERHEAD SIGN STRUCTURE (OSS) SUPPORT. RADAR DETECTION SYSTEM (RDS) AND BANDING ARE CONSIDERED SUBSIDIARY TO SPECIAL PROVISION "RADAR VEHICLE DETECTION SYSTEM", NO SEPARATE PAYMENT SHALL BE MADE.

38. CONTRACTOR/SUPPLIER TO SIZE PROVIDE SQUARE TUBING OR STRUT TUBING TO MOUNT THE APPROVED RADAR DETECTION SYSTEM (RDS). BANDING AND SUPPORT POLE ARE CONSIDERED SUBSIDIARY TO SPECIAL PROVISION "RADAR VEHICLE DETECTION SYSTEM", NO SEPARATE PAYMENT SHALL BE MADE.

39. BEFORE FINAL ACCEPTANCE OF ITS ITEMS, THE CONTRACTOR SHALL PROVIDE TWO (2) SETS OF LEDGER SIZE (11"X17") AS BUILT ITS PLANS TO ARDOT ITS MANAGEMENT.

40. ALL CONDUIT SHALL BE TWO (2") INCH DIAMETER UNLESS SPECIFIED ON PLANS. ALL CONDUIT UNDER THE ROADWAY SHALL HAVE A MINIMUM DEPTH OF 24" FROM THE TOP OF THE CONDUIT TO THE FINISH GRADE. CONDUIT DEPTH MAY NEED TO INCREASE NEAR OTHER STRUCTURES.

41. ALL CABINETS SHALL BE INSTALLED DOWNSTREAM OF TRAFFIC. GROUND MOUNT CABINETS SHALL BE ORIENTED IN A WAY THAT THE BACK OF CABINET FACES THE TRAFFIC AND THE DOOR OPENS TOWARD THE DIRECTION OF TRAFFIC.

42. THE CONTRACTOR SHALL BE RESPONSIBLE FOR ALL COSTS OF REPAIR OR REPLACEMENT OF EXISTING UTILITIES DAMAGED DURING CONSTRUCTION.

43. ALL ELECTRICAL COMPONENTS SHALL BE UL LISTED.

44. SLACK CABLES IN PULL BOXES SHALL BE 3 FEET MINIMUM.

45. ALL STRUCTURES SHALL BE BONDED TO EQUIPMENT GROUND CONDUCTOR. REFER TO NEC ARTICLE 250.

EPSherrill 10/9/2023 2:32:43 PM
WORKSPACE: AHTD
L:\2017\170176\60 - ARDOT 012326 Hwy 412 - Hwy 112\Drawings\ITS\ITS_ONotes_HWY 412.dgn
REVISED DATE:

DATE REVISED	DATE REVISED	FED. RD. DIST. NO.	STATE	JOB NO.	SHEET NO.	TOTAL SHEETS
		6	ARK.	012326	156	838

ITS SYSTEM MAP

ITS SYSTEM MAP LEGEND:

SITE LOCATION NAME: X-XX_YY_ZZZ.ZZ (SITE R)
X-XX - ROUTE NAME
YY - DMS SERVING 1 DIRECTION
YY-YY - 2 DMS SERVING 2 DIRECTIONS
ZZZ.ZZ - LOG MILE
SITE R - SITE ID

ITS EQUIPMENT: X-XX (EQUIPMENT)
X-XX - ROUTE NAME
DMS AA - 1 DMS SERVING DIRECTION MOTORISTS
DMS AA-BB - 2 DMS SERVING BOTH DIRECTIONS FOR MOTORISTS
CCTV C - 1 CCTV VIEWING NORTH, EAST, SOUTH, OR WEST
RDS AA/BB - 1 RDS DETECTING EB AND WB TRAFFIC CONCURRENTLY
RDS AA-BB - 2 RDS DETECTING EB AND WB TRAFFIC SEPERATELY

STATE OF ARKANSAS
LICENSED PROFESSIONAL ENGINEER
No.8141
NICCI D. TINER
DIGITALLY SIGNED 7/28/2023

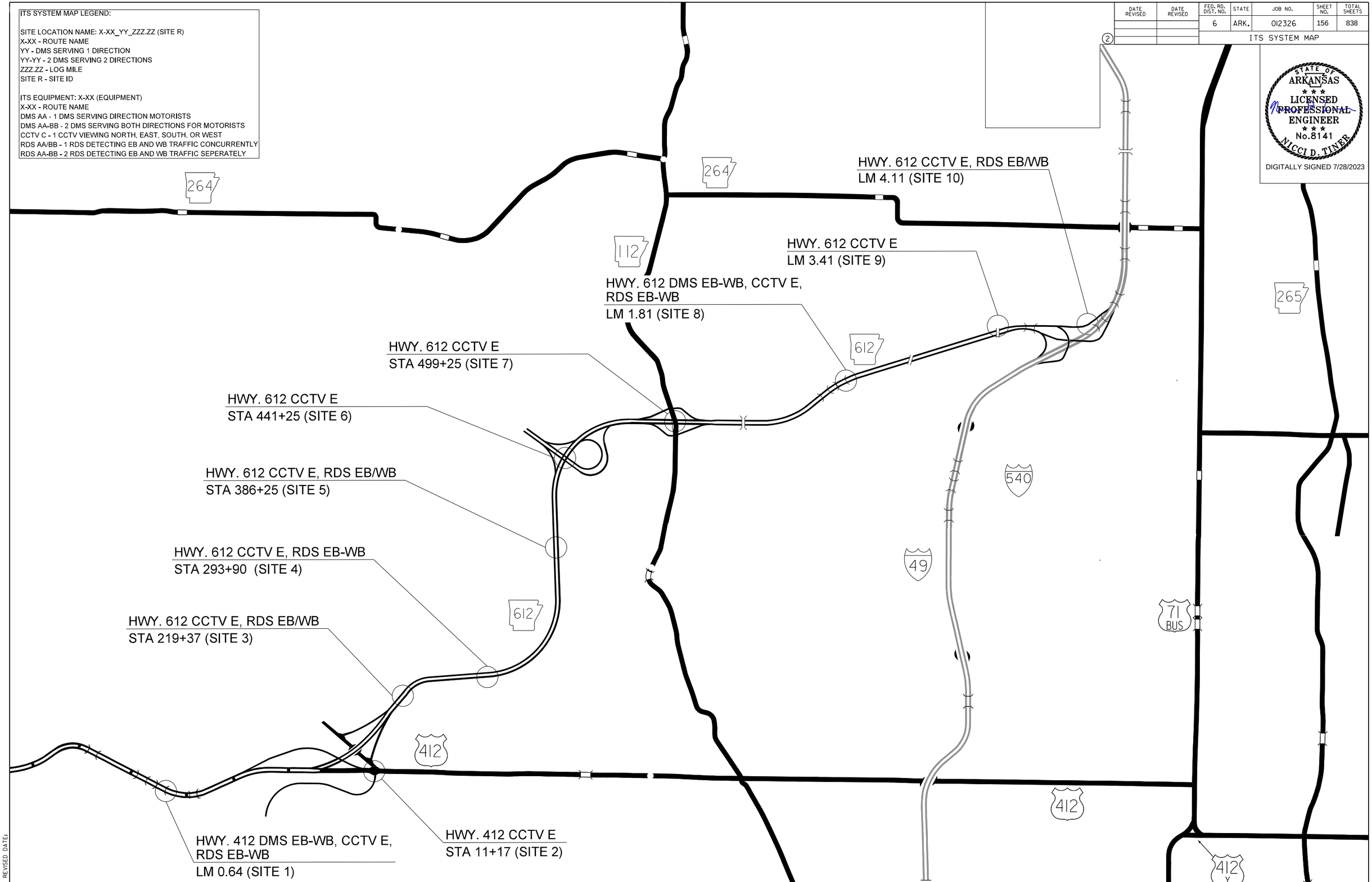

WBCallaway 7/28/2023 10:26:56 AM
WORKSPACE: AHTD
L:\2017\17017660 - ARDOT 012326 Hwy 412 - Hwy 112\Drawings\ITS\ITS_00SYS_MAP1.dgn
REVISED DATE:

DATE REVISED	DATE REVISED	FED. RD. DIST. NO.	STATE	JOB NO.	SHEET NO.	TOTAL SHEETS
10-02-2023		6	ARK.	012326	157	838
10-23-2023		ITS QUANTITIES				
(2)						

STATE OF ARKANSAS
LICENSED PROFESSIONAL ENGINEER
No.8141
NICCI D. TINER

DIGITALLY SIGNED 10/23/2023

SUMMARY OF ITS QUANTITIES

ITEM NUMBER	ITEM	(ITS LOCATION 1)	(ITS LOCATION 2)	(ITS LOCATION 3)	(ITS LOCATION 4)	(ITS LOCATION 5)	(ITS LOCATION 6)	(ITS LOCATION 7)	(ITS LOCATION 8)	(ITS LOCATION 9)	(ITS LOCATION 10)	QUANTITY	UNIT
SP	ETHERNET SWITCH, T100 HARDENED (8-PORT)	1	1	1	1	1	1	1	1	1	1	10	EACH
SP	POLE MOUNTED ITS CABINET			1	1	1		1			1	5	EACH
SP	CELLULAR MODEM	1	1	1	1	1	1	1	1	1	1	10	EACH
SP	PTZ CAMERA SYSTEM	1	1	1	1	1	1	1	1	1	1	10	EACH
SP	ELECTRICAL CONDUCTORS-IN-CONDUIT, COPPER (3C/6 A.W.G., E.G.C.)					359						359	LIN. FT.
SP	ELECTRICAL CONDUCTORS-IN-CONDUIT, COPPER (3C/8 A.W.G., E.G.C.)	187		52				194	189		133	755	LIN. FT.
SP	ELECTRICAL CONDUCTORS-IN-CONDUIT, COPPER (3C/000, A.W.G., #8 E.G.C.)								621			621	LIN. FT.
SP	ELECTRICAL CONDUCTORS-IN-CONDUIT, COPPER (3C/0, A.W.G., #8 E.G.C.)	435										435	LIN. FT.
SP	ELECTRICAL CONDUCTORS-IN-CONDUIT, COPPER (3C/3, A.W.G., #8 E.G.C.)				785							785	LIN. FT.
709	GALVANIZED STEEL CONDUIT (2")	14		14	14	14		14	14		14	98	LIN. FT.
710	NON-METALLIC CONDUIT (2")	578		52	785	359		194	762		133	2863	LIN. FT.
710	NON-METALLIC CONDUIT (3")	43							46			89	LIN. FT.
SS & 711	CONCRETE PULL BOX (TYPE 2 HD)	3		1	5	3		2	3		1	18	EACH
SS & 711	CONCRETE PULL BOX (TYPE 3 HD)	2							2			4	EACH
SP	TILT TOWER (40')			1	1	1	1	1		1	1	7	EACH
SP	SERVICE POINT ASSEMBLY (1 CIRCUIT)	1		1	1	1		1	1		1	7	EACH
SP	STEEL TEE MOUNT SIGN STRUCTURE (TM-412-72-001)	1										1	EACH
SP	STEEL TEE MOUNT SIGN STRUCTURE (TM-612-04-005)								1			1	EACH
SP	OVERHEAD DMS ASSEMBLY	2							2			4	EACH
SP	RADAR DETECTION SYSTEM	2		1	2	1		1	2		1	10	EACH

EPSherrill 10/19/2023 2:32:43 PM
WORKSPACE: AHTD
L:\2017\1701660 - ARDOT 012326 Hwy 412 - Hwy 112\Drawings\ITS\ITS_QTY.dgn
REVISED DATE:

DATE REVISED	DATE REVISED	FED. RD. DIST. NO.	STATE	JOB NO.	SHEET NO.	TOTAL SHEETS
10-02-2023		6	ARK.	012326	158	838
(2) 10-23-2023		ITS PLAN SHEET (LM 0.64)				

STATE OF ARKANSAS
LICENSED PROFESSIONAL ENGINEER
No.8141
NICCI D. TINER

DIGITALLY SIGNED 10/23/2023

SUMMARY OF CONDUIT AND CABLES

RUN NO.	TOTAL LENGTH (FT.)	CONDUIT		CONDUCTORS			COMM.		
		2" NON-METALLIC CONDUIT	3" NON-METALLIC CONDUIT	3C/#8 A.W.G. 1C/#8 E.G.C.	1C/#8 A.W.G. * / **	3C/0 A.W.G. 1C/#8 E.G.C.	F.O. CABLE*	RADAR CABLE***	CAT5E****
01-1	26	1				1			
01-2	73	1				1			
01-3	163	1				1			
01-4	153	1				1			
01-5	20	1	1	1		1	1	1	1
01-6	23	1	1	1	1		1	1	
01-7	34	2		1	1		1	1	
01-8	26	2		1			1	1	1
CABLING IN OH TEE STRUCTURE									
Column-1	26			1	1		1	1	1
Column-2	26			1			1	1	
LTC-F2	16						2		
LTC-P2	16			1					
LTC-PTZ1	18								1
LTC-PTZ2	18								
LTC-F1	16						2		
LTC-P1	16			1					
LTC-R1	21							1	
LTC-R2	21							1	
LTC-F12	13						1		
SUBTOTAL		578	43	187	83	435	232	197	90

* - QUANTITY SHOWN FOR BIDDING PURPOSES ONLY, SUBSIDIARY TO OVERHEAD DMS ASSEMBLY
** - A #8 E.G.C. IS PROVIDED WITH ELECTRICAL SERVICE WIRING, I.E. (3C/3 A.W.G., #8 E.G.C.) FOR GROUNDING, SEPARATE FROM THE 1C/#8 A.W.G.
*** - QUANTITY SHOWN FOR BIDDING PURPOSES ONLY, SUBSIDIARY TO RADAR DETECTION SYSTEM
**** - QUANTITY SHOWN FOR BIDDING PURPOSES ONLY, SUBSIDIARY TO PTZ CAMERA SYSTEM

ITS QUANTITIES

ITEM NUMBER	ITEM	QUANTITY	UNIT
SP	ETHERNET SWITCH, T100 HARDENED (8-PORT)	1	EACH
SP	CELLULAR MODEM	1	EACH
SP	PTZ CAMERA SYSTEM	1	EACH
SP	ELECTRICAL CONDUCTORS-IN-CONDUIT, COPPER (3C/8 A.W.G., E.G.C.)	187	LIN. FT.
SP	ELECTRICAL CONDUCTORS-IN-CONDUIT, COPPER (3C/0, A.W.G., #8 E.G.C.)	435	LIN. FT.
709	GALVANIZED STEEL CONDUIT (2")	14	LIN. FT.
710	NON-METALLIC CONDUIT (2")	578	LIN. FT.
710	NON-METALLIC CONDUIT (3")	43	LIN. FT.
SS & 711	CONCRETE PULL BOX (TYPE 2 HD)	3	EACH
SS & 711	CONCRETE PULL BOX (TYPE 3 HD)	2	EACH
SP	SERVICE POINT ASSEMBLY (1 CIRCUIT)	1	EACH
SP	STEEL TEE MOUNT SIGN STRUCTURE (TM-412-72-001)	1	EACH
SP	OVERHEAD DMS ASSEMBLY	2	EACH
SP	RADAR DETECTION SYSTEM	2	EACH



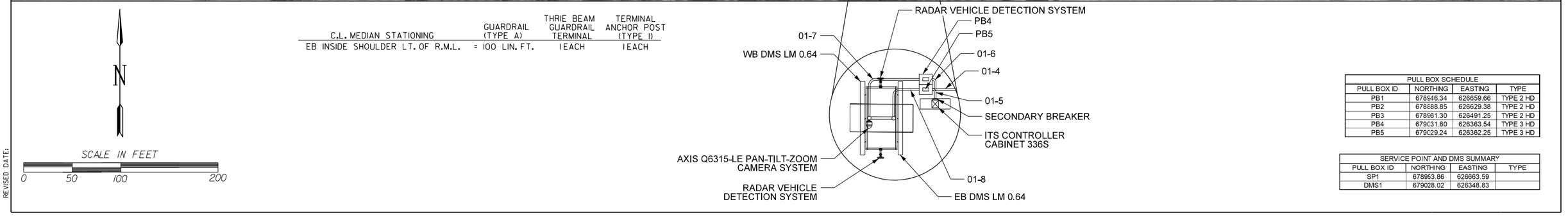

C.L. MEDIAN STATIONING	GUARDRAIL (TYPE A)	THRIE BEAM GUARDRAIL TERMINAL	TERMINAL ANCHOR POST (TYPE I)
EB INSIDE SHOULDER LT. OF R.M.L.	= 100 LIN. FT.	1 EACH	1 EACH

PULL BOX SCHEDULE			
PULL BOX ID	NORTHING	EASTING	TYPE
PB1	678946.34	626659.66	TYPE 2 HD
PB2	678888.85	626629.38	TYPE 2 HD
PB3	678961.30	626491.25	TYPE 2 HD
PB4	679031.60	626363.54	TYPE 3 HD
PB5	679029.24	626362.25	TYPE 3 HD

SERVICE POINT AND DMS SUMMARY			
PULL BOX ID	NORTHING	EASTING	TYPE
SP1	678953.86	626663.59	
DMS1	679028.02	626348.83	

EPSherrill 10/19/2023 2:32:48 PM
WORKSPACE: AHTD
L:\20IT\170I7660 - ARDOT 012326 Hwy 412 - Hwy 112\Drawings\ITS\ITS_ld.dgn
REVISED DATE:

DATE REVISED	DATE REVISED	FED. RD. DIST. NO.	STATE	JOB NO.	SHEET NO.	TOTAL SHEETS
10-02-2023		6	ARK.	012326	159	838
10-23-2023		ITS ELEVATION SHEET (LM 0.64)				
(2)						

STATE OF ARKANSAS
LICENSED PROFESSIONAL ENGINEER
No.8141
NICCI D. TINER

DIGITALLY SIGNED 10/23/2023

DMS-EB AND WB

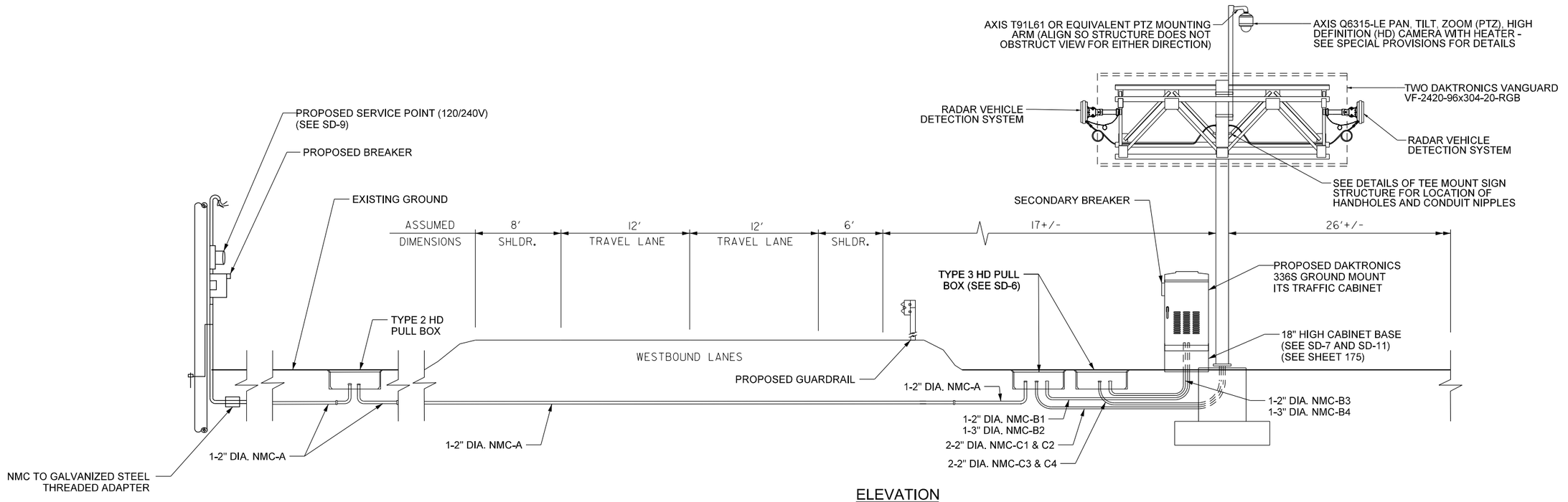

ELEVATION
SITE 1 (WB)

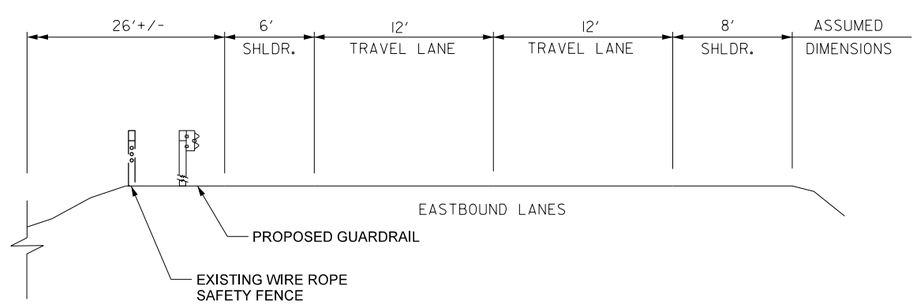

ELEVATION
SITE 1 (EB)

EPSherrill 10/19/2023 2:32:53 PM
WORKSPACE: AHTD
L:\20IT\I70I660 - ARDOT 012326 Hwy 412 - Hwy 112\Drawings\ITS\ITS_1b.dgn
REVISED DATE:

DATE REVISED	DATE REVISED	FED. RD. DIST. NO.	STATE	JOB NO.	SHEET NO.	TOTAL SHEETS
		6	ARK.	012326	160	838
		ITS PLAN SHEET (STA 11+17)				
2						

SUMMARY OF CONDUIT AND CABLES									
RUN NO.	TOTAL LENGTH (FT.)	CONDUIT		CONDUCTORS			COMM.		
		2" NON-METALLIC CONDUIT*	3" NON-METALLIC CONDUIT	3C/#8 A.W.G. 1C/#8 E.G.C.	1C/#8 A.W.G. *	3C/#6 A.W.G. 1C/#8 E.G.C.	F.O. CABLE*	RADAR CABLE*	CAT5E*
02-1	20								1
02-2	135								1
02-3	14								1
CABLING IN TRAFFIC SIGNAL POLE									
POLE-1	41								1
SUBTOTAL		0	0	0	0	0	0	0	210

* - QUANTITY SHOWN FOR BIDDING PURPOSES SUBSIDIARY TO PTZ CAMERA SYSTEM

ITS QUANTITIES

ITEM NUMBER	ITEM	QUANTITY	UNIT
SP	ETHERNET SWITCH, T100 HARDENED (8-PORT)	1	EACH
SP	CELLULAR MODEM	1	EACH
SP	PTZ CAMERA SYSTEM	1	EACH

NOTE: SEE SIGNAL SHEETS FOR PULL BOX AND CONDUIT QUANTITIES.

STATE OF ARKANSAS
LICENSED PROFESSIONAL ENGINEER
No.8141
NICCI D. TINER
DIGITALLY SIGNED 7/28/2023

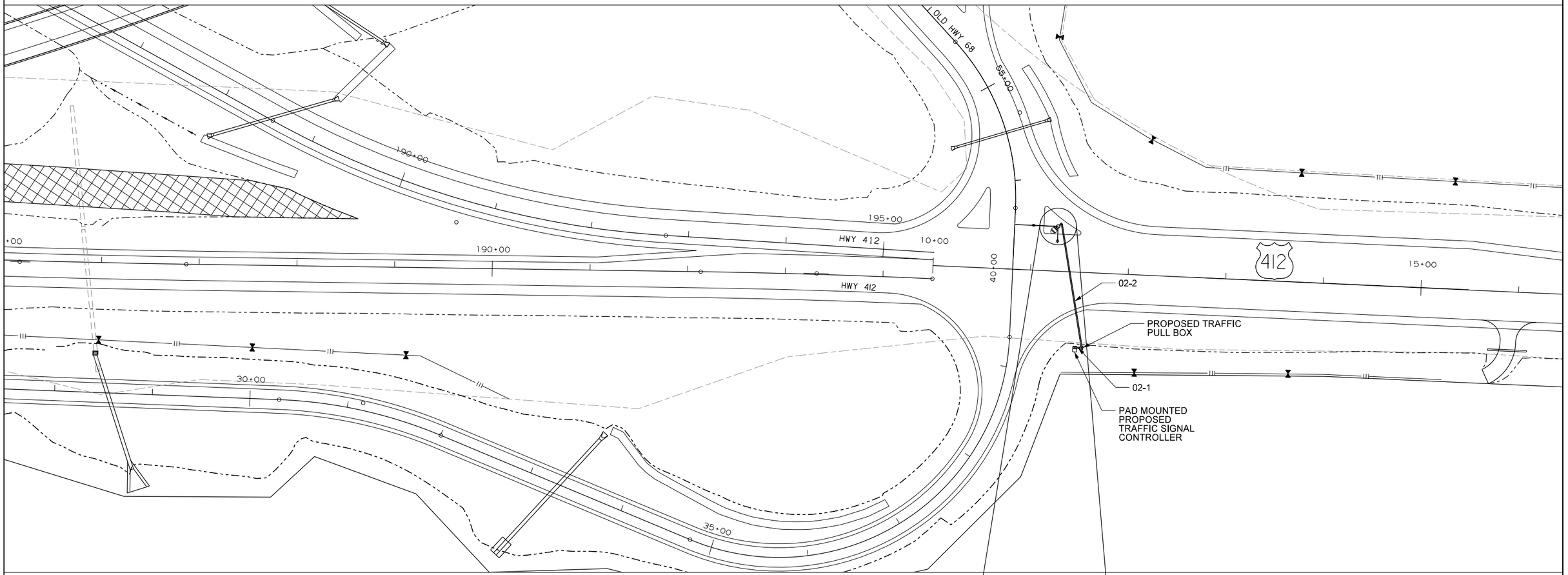

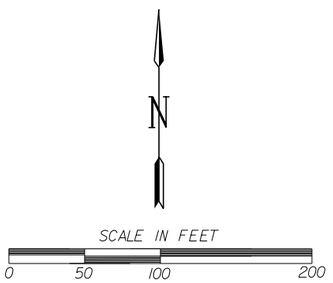

PULL BOX SCHEDULE			
PULL BOX ID	NORTHING	EASTING	TYPE
PB1	679323.67	635980.22	TYPE 2 HD

SERVICE POINT AND SIGNAL POLE SUMMARY			
PULL BOX ID	NORTHING	EASTING	TYPE
SP1	679331.06	635986.72	
SIGNAL POLE 1	679233.33	635898.11	

WBCalloway 7/28/2023 10:27:27 AM
WORKSPACE: AHTD
L:\20IT\IT01660 - ARDOT 012326 Hwy 412 - Hwy 112\Drawings\ITS\ITS_2a.dgn
REVISED DATE:

DATE REVISED	DATE REVISED	FED. RD. DIST. NO.	STATE	JOB NO.	SHEET NO.	TOTAL SHEETS
		6	ARK.	012326	161	838
2		ITS PLAN SHEET (STA 219+37)				

STATE OF ARKANSAS
LICENSED PROFESSIONAL ENGINEER
No.8141
NICCI D. TINER
DIGITALLY SIGNED 7/28/2023

PTZ CCTV

RADAR VEHICLE DETECTION SYSTEM

PROPOSED 40' TILT TOWER STA. 219+37

SUMMARY OF CONDUIT AND CABLES

RUN NO.	TOTAL LENGTH (FT.)	CONDUIT		CONDUCTORS			COMM.		
		2" NON-METALLIC CONDUIT	3" NON-METALLIC CONDUIT	3C/#8 A.W.G. 1C/#8 E.G.C.	1C/#8 A.W.G. *	3C/#6 A.W.G. 1C/#8 E.G.C.	F.O. CABLE*	RADAR CABLE*	CAT5E*
03-1	33	1		1					
03-2	19	1		1					
CABLING IN TILT TOWER									
Column-1	48							1	1
SUBTOTAL		52	0	52	0	0	0	48	48

* - QUANTITY SHOWN FOR BIDDING PURPOSES SUBSIDIARY TO PTZ CAMERA SYSTEM

PB1

POLE MOUNTED ITS CONTROLLER CABINET 336S

03-1

03-2

AXIS Q6315-LE PAN-TILT-ZOOM CAMERA SYSTEM

PROPOSED 40' TILT TOWER

RADAR VEHICLE DETECTION SYSTEM

PROPOSED SERVICE POINT

EXISTING OVERHEAD ELECTRIC POLE

03-1

215+00

HWY 612

612

CR 904

220+00

PT 220+36.04

225+00

HWY 612

POB-14+47.34

14+47

15.00

PC 22+50.90

PI 23+30.54

SCALE IN FEET

0 50 100 200

ITS QUANTITIES

ITEM NUMBER	ITEM	QUANTITY	UNIT
SP	ETHERNET SWITCH, T100 HARDENED (8-PORT)	1	EACH
SP	POLE MOUNTED ITS CABINET	1	EACH
SP	CELLULAR MODEM	1	EACH
SP	PTZ CAMERA SYSTEM	1	EACH
SP	ELECTRICAL CONDUCTORS-IN-CONDUIT, COPPER (3C/8 A.W.G., E.G.C.)	52	LIN. FT.
709	GALVANIZED STEEL CONDUIT (2")	14	LIN. FT.
710	NON-METALLIC CONDUIT (2")	52	LIN. FT.
SS & 711	CONCRETE PULL BOX (TYPE 2 HD)	1	EACH
SP	TILT TOWER (40')	1	EACH
SP	SERVICE POINT ASSEMBLY (1 CIRCUIT)	1	EACH
SP	RADAR DETECTION SYSTEM	1	EACH

PULL BOX SCHEDULE			
PULL BOX ID	NORTHING	EASTING	TYPE
PB1	681765.75	637136.39	TYPE 2 HD

SERVICE POINT AND TILT TOWER SUMMARY			
PULL BOX ID	NORTHING	EASTING	TYPE
SP1	681776.47	637126.49	
TILT TOWER 1	681759.84	637140.01	

WBCallaway 7/28/2023 10:28:00 AM
WORKSPACE: AHTD
L:\2017\17017660 - ARDOT 012326 Hwy 412 - Hwy 112\Drawings\ITS\ITS_3a.dgn
REVISED DATE:

DATE REVISED	DATE REVISED	FED. RD. DIST. NO.	STATE	JOB NO.	SHEET NO.	TOTAL SHEETS
		6	ARK.	012326	162	838
		ITS PLAN SHEET (STA 293+90)				

2

STATE OF ARKANSAS
LICENSED PROFESSIONAL ENGINEER
No.8141
NICCI D. TINER

DIGITALLY SIGNED 7/28/2023

ITS QUANTITIES

ITEM NUMBER	ITEM	QUANTITY	UNIT
SP	ETHERNET SWITCH, T100 HARDENED (8-PORT)	1	EACH
SP	POLE MOUNTED ITS CABINET	1	EACH
SP	CELLULAR MODEM	1	EACH
SP	PTZ CAMERA SYSTEM	1	EACH
SP	ELECTRICAL CONDUCTORS-IN-CONDUIT, COPPER (3C/3, A.W.G., #8 E.G.C.)	785	LIN. FT.
709	GALVANIZED STEEL CONDUIT (2")	14	LIN. FT.
710	NON-METALLIC CONDUIT (2")	785	LIN. FT.
SS & 711	CONCRETE PULL BOX (TYPE 2 HD)	5	EACH
SP	TILT TOWER (40')	1	EACH
SP	SERVICE POINT ASSEMBLY (1 CIRCUIT)	1	EACH
SP	RADAR DETECTION SYSTEM	2	EACH

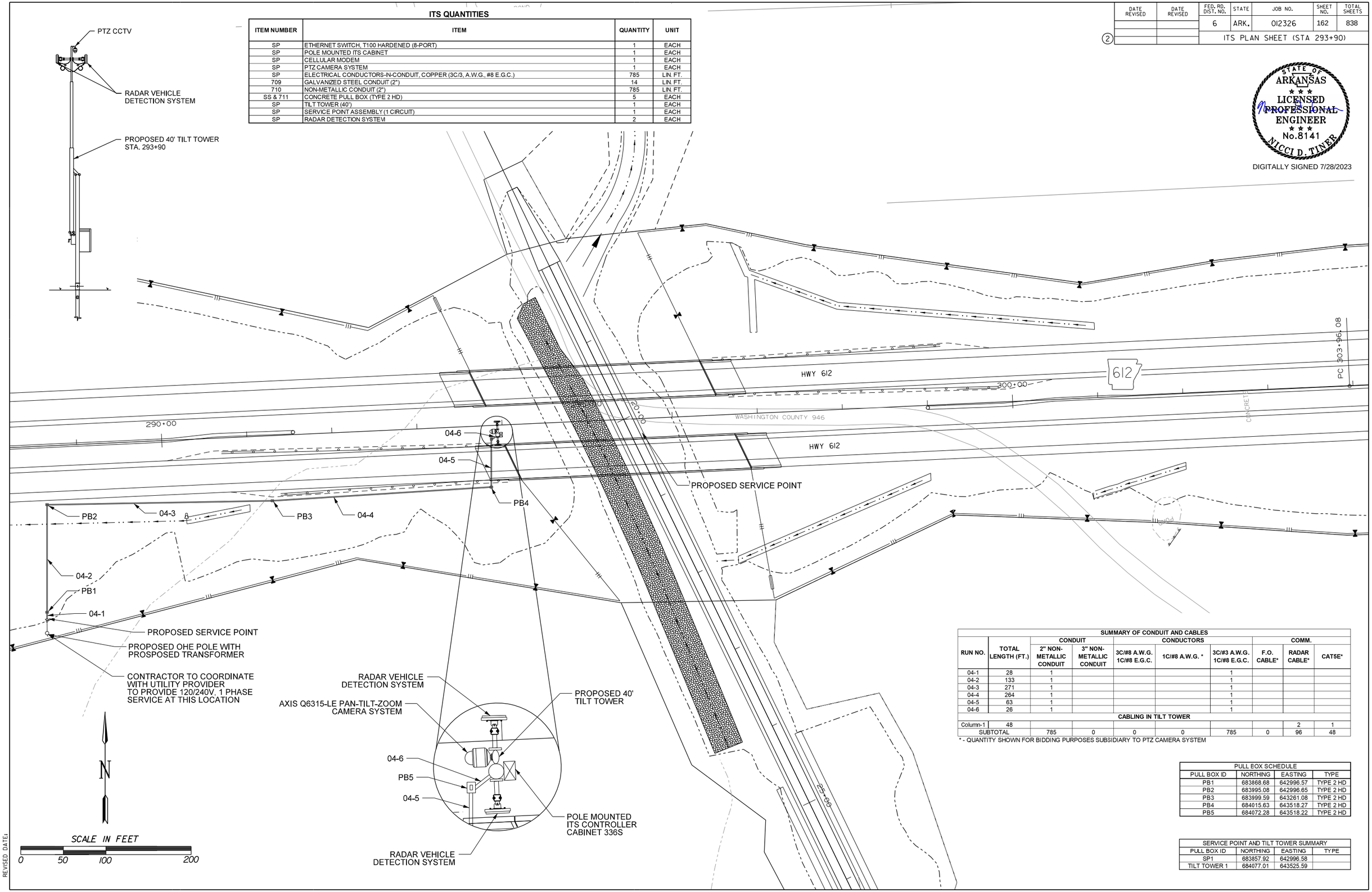

SUMMARY OF CONDUIT AND CABLES									
RUN NO.	TOTAL LENGTH (FT.)	CONDUIT		CONDUCTORS			COMM.		
		2" NON-METALLIC CONDUIT	3" NON-METALLIC CONDUIT	3C/#8 A.W.G. 1C/#8 E.G.C.	1C/#8 A.W.G. *	3C/#3 A.W.G. 1C/#8 E.G.C.	F.O. CABLE*	RADAR CABLE*	CAT5E*
04-1	28	1				1			
04-2	133	1				1			
04-3	271	1				1			
04-4	264	1				1			
04-5	63	1				1			
04-6	26	1				1			
CABLING IN TILT TOWER									
Column-1	48							2	1
SUBTOTAL		785	0	0	0	785	0	96	48

* - QUANTITY SHOWN FOR BIDDING PURPOSES SUBSIDIARY TO PTZ CAMERA SYSTEM

PULL BOX SCHEDULE			
PULL BOX ID	NORTHING	EASTING	TYPE
PB1	683868.68	642996.57	TYPE 2 HD
PB2	683995.08	642996.65	TYPE 2 HD
PB3	683999.59	643261.08	TYPE 2 HD
PB4	684015.63	643518.27	TYPE 2 HD
PB5	684072.28	643518.22	TYPE 2 HD

SERVICE POINT AND TILT TOWER SUMMARY			
PULL BOX ID	NORTHING	EASTING	TYPE
SP1	683857.92	642996.58	
TILT TOWER 1	684077.01	643525.59	

WBCallaway 7/28/2023 10:28:05 AM
WORKSPACE: AHTD
L:\2017\17017660 - ARDOT 012326 Hwy 412 - Hwy 112\Drawings\ITS\ITS_4a.dgn
REVISED DATE:

DATE REVISED	DATE REVISED	FED. RD. DIST. NO.	STATE	JOB NO.	SHEET NO.	TOTAL SHEETS
		6	ARK.	012326	163	838
(2)		ITS PLAN SHEET (STA 386+25)				

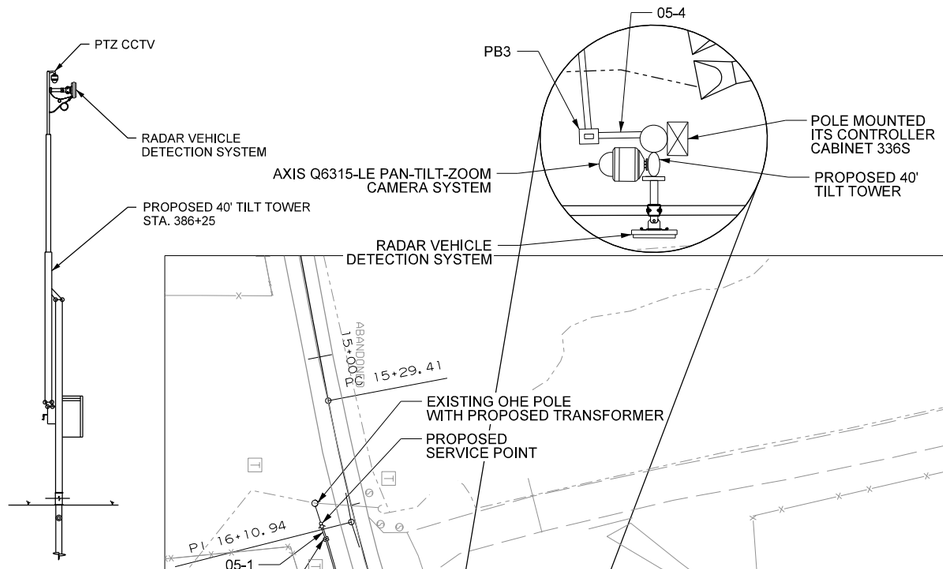

SUMMARY OF CONDUIT AND CABLES

RUN NO.	TOTAL LENGTH (FT.)	CONDUIT		CONDUCTORS			COMM.		
		2" NON-METALLIC CONDUIT	3" NON-METALLIC CONDUIT	3C/#8 A.W.G. 1C/#8 E.G.C.	1C/#8 A.W.G. *	3C/#6 A.W.G. 1C/#8 E.G.C.	F.O. CABLE*	RADAR CABLE*	CAT5E*
05-1	28	1				1			
05-2	160	1				1			
05-3	147	1				1			
05-4	24	1				1			
CABLING IN TILT TOWER									
Column-1	48							1	1
SUBTOTAL		359	0	0	0	359	0	48	48

* - QUANTITY SHOWN FOR BIDDING PURPOSES SUBSIDIARY TO PTZ CAMERA SYSTEM

STATE OF ARKANSAS
LICENSED PROFESSIONAL ENGINEER
No.8141
NICCI D. TINER

DIGITALLY SIGNED 7/28/2023

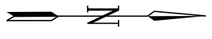

SCALE IN FEET
0 50 100 200

ITS QUANTITIES

ITEM NUMBER	ITEM	QUANTITY	UNIT
SP	ETHERNET SWITCH, T100 HARDENED (8-PORT)	1	EACH
SP	POLE MOUNTED ITS CABINET	1	EACH
SP	CELLULAR MODEM	1	EACH
SP	PTZ CAMERA SYSTEM	1	EACH
SP	ELECTRICAL CONDUCTORS-IN-CONDUIT, COPPER (3C/6 A.W.G., E.G.C.)	359	LIN. FT.
709	GALVANIZED STEEL CONDUIT (2")	14	LIN. FT.
710	NON-METALLIC CONDUIT (2")	359	LIN. FT.
SS & 711	CONCRETE PULL BOX (TYPE 2 HD)	3	EACH
SP	TILT TOWER (40')	1	EACH
SP	SERVICE POINT ASSEMBLY (1 CIRCUIT)	1	EACH
SP	RADAR DETECTION SYSTEM	1	EACH

PULL BOX SCHEDULE

PULL BOX ID	NORTHING	EASTING	TYPE
PB1	690219.46	648006.75	TYPE 2 HD
PB2	690261.84	648155.01	TYPE 2 HD
PB3	690274.24	648295.05	TYPE 2 HD
PB4	690447.81	648290.73	TYPE 2 HD

SERVICE POINT AND TILT TOWER SUMMARY

PULL BOX ID	NORTHING	EASTING	TYPE
SP1	690216.00	647996.52	
TILT TOWER 1	690458.17	648291.22	

WBCallaway 7/28/2023 10:28:09 AM
WORKSPACE: AHTD
L:\2017\17017660 - ARDOT 012326 Hwy 412 - Hwy 112\Drawings\ITS\ITS_Sa.dgn
REVISED DATE:

DATE REVISED	DATE REVISED	FED. RD. DIST. NO.	STATE	JOB NO.	SHEET NO.	TOTAL SHEETS
		6	ARK.	012326	164	838
		ITS PLAN SHEET (STA 441+25)				
(2)						

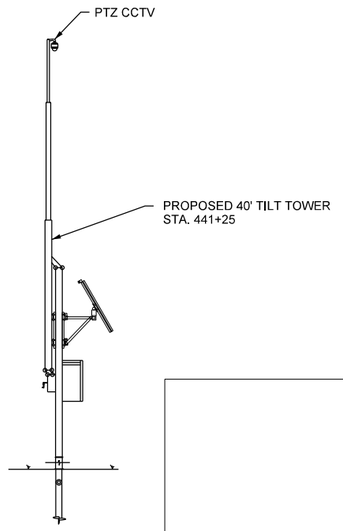

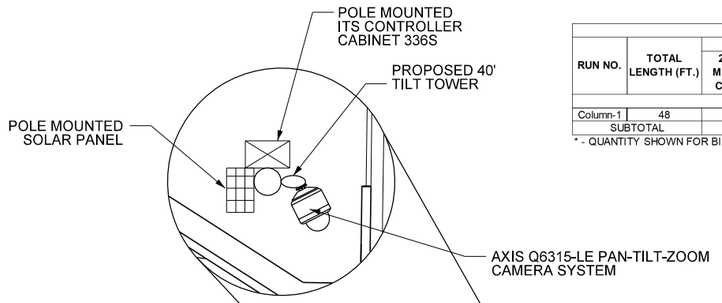

SUMMARY OF CONDUIT AND CABLES

RUN NO.	TOTAL LENGTH (FT.)	CONDUIT		CONDUCTORS			COMM.		
		2" NON-METALLIC CONDUIT	3" NON-METALLIC CONDUIT	3C/#8 A.W.G. 1C/#8 E.G.C.	1C/#8 A.W.G. *	3C/#4 A.W.G. 1C/#8 E.G.C.	F.O. CABLE*	RADAR CABLE*	CAT5E*
CABLING IN TILT TOWER									
Column-1	48								1
SUBTOTAL		0	0	0	0	0	0	0	48

* - QUANTITY SHOWN FOR BIDDING PURPOSES SUBSIDIARY TO PTZ CAMERA SYSTEM

ITS QUANTITIES

ITEM NUMBER	ITEM	QUANTITY	UNIT
SP	ETHERNET SWITCH T100 HARDENED (8-PORT)	1	EACH
SP	CELLULAR MODEM	1	EACH
SP	PTZ CAMERA SYSTEM	1	EACH
SP	TILT TOWER (40')	1	EACH

STATE OF ARKANSAS
LICENSED PROFESSIONAL ENGINEER
No.8141
NICCI D. TINER

DIGITALLY SIGNED 7/28/2023

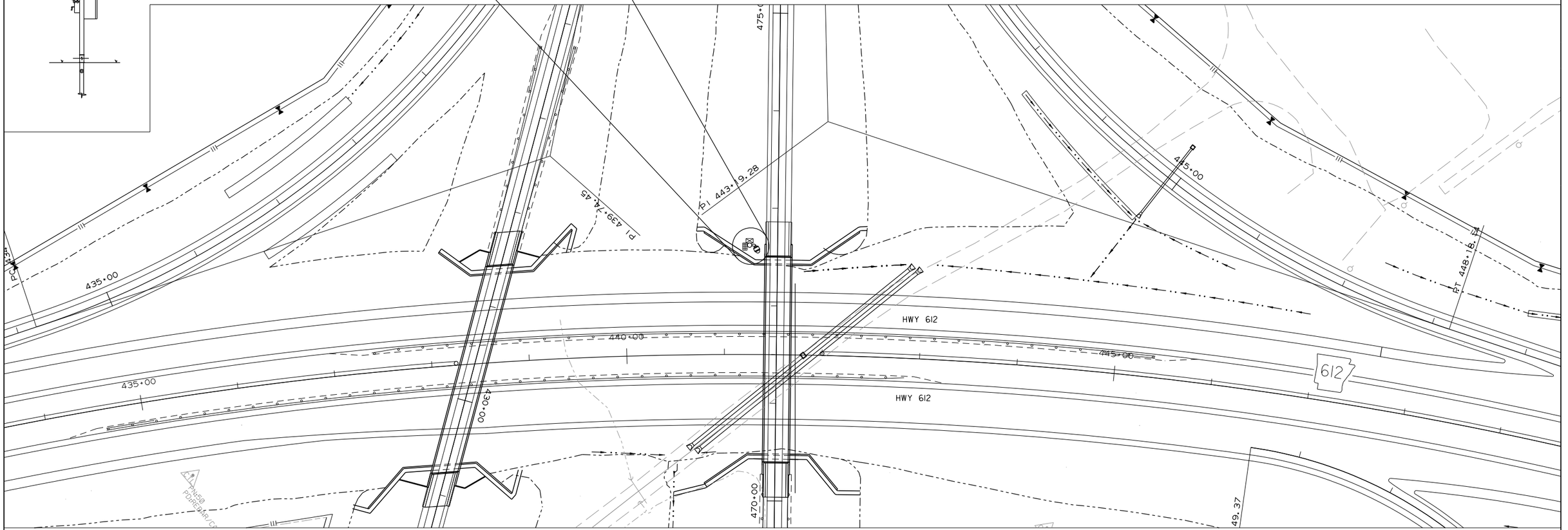

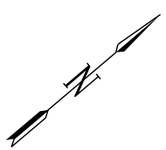

SCALE IN FEET
0 50 100 200

SERVICE POINT AND TILT TOWER SUMMARY			
PULL BOX ID	NORTHING	EASTING	TYPE
TILT TOWER 1	695637.03	649001.02	

WBCallaway 7/28/2023 10:28:3 AM
WORKSPACE: AHTD
L:\20\7\170\7660 - ARDOT 012326 Hwy 412 - Hwy 112\Drawings\ITS\ITS_6a.dgn
REVISED DATE:

DATE REVISED	DATE REVISED	FED. RD. DIST. NO.	STATE	JOB NO.	SHEET NO.	TOTAL SHEETS
		6	ARK.	012326	165	838
		ITS PLAN SHEET (STA 499+25)				
2						

STATE OF ARKANSAS
LICENSED PROFESSIONAL ENGINEER
No.8141
NICCI D. TINER

DIGITALLY SIGNED 8/10/2023

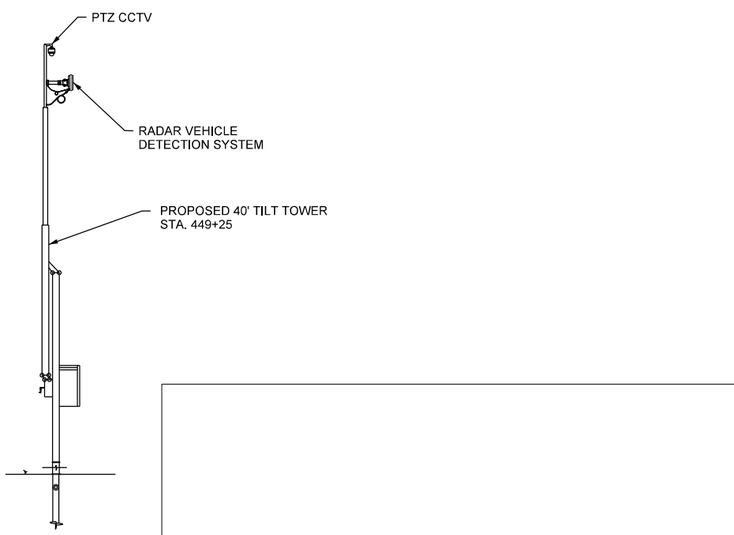

SUMMARY OF CONDUIT AND CABLES										
RUN NO.	TOTAL LENGTH (FT.)	CONDUIT		CONDUCTORS			COMM.			
		2" NON-METALLIC CONDUIT	3" NON-METALLIC CONDUIT	3C/#8 A.W.G. 1C/#8 E.G.C.	1C/#8 A.W.G. *	3C/#6 A.W.G. 1C/#8 E.G.C.	F.O. CABLE*	RADAR CABLE*	CAT5E*
07-1	26	1		1					
07-2	144	1		1					
07-3	24	1		1					
CABLING IN TILT TOWER									
Column-1	48							1	1
SUBTOTAL		194	0	194	0	0	0	48	48

* - QUANTITY SHOWN FOR BIDDING PURPOSES SUBSIDIARY TO PTZ CAMERA SYSTEM

ITS QUANTITIES

ITEM NUMBER	ITEM	QUANTITY	UNIT
SP	ETHERNET SWITCH, T100 HARDENED (8-PORT)	1	EACH
SP	POLE MOUNTED ITS CABINET	1	EACH
SP	CELLULAR MODEM	1	EACH
SP	PTZ CAMERA SYSTEM	1	EACH
SP	ELECTRICAL CONDUCTORS-IN-CONDUIT, COPPER (3C/8 A.W.G., E.G.C.)	194	LIN. FT.
710	NON-METALLIC CONDUIT (2")	194	LIN. FT.
SS & 711	CONCRETE PULL BOX (TYPE 2 HD)	2	EACH
SP	TILT TOWER (40')	1	EACH
SP	SERVICE POINT ASSEMBLY (1 CIRCUIT)	1	EACH
SP	RADAR DETECTION SYSTEM	1	EACH

PULL BOX SCHEDULE			
PULL BOX ID	NORTHING	EASTING	TYPE
PB1	696552.56	654634.58	TYPE 2 HD
PB2	696624.20	654502.76	TYPE 2 HD

SERVICE POINT AND TILT TOWER SUMMARY			
PULL BOX ID	NORTHING	EASTING	TYPE
SP1	696552.65	654643.3	
TILT TOWER 1	696520.46	654492.25	

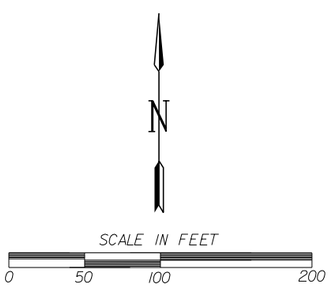

JATurner 8/10/2023 1:42:56 PM
WORKSPACE: AHTD
L:\20IT\I70I660 - ARDOT 012326 Hwy 412 - Hwy 112\Drawings\ITS\ITS_7a.dgn
REVISED DATE:

DATE REVISED	DATE REVISED	FED. RD. DIST. NO.	STATE	JOB NO.	SHEET NO.	TOTAL SHEETS
10-02-2023		6	ARK.	012326	166	838
10-23-2023		ITS PLAN SHEET (LM 1.81)				

(2)

STATE OF ARKANSAS
LICENSED PROFESSIONAL ENGINEER
No.8141
NICCI D. TINER
DIGITALLY SIGNED 10/23/2023

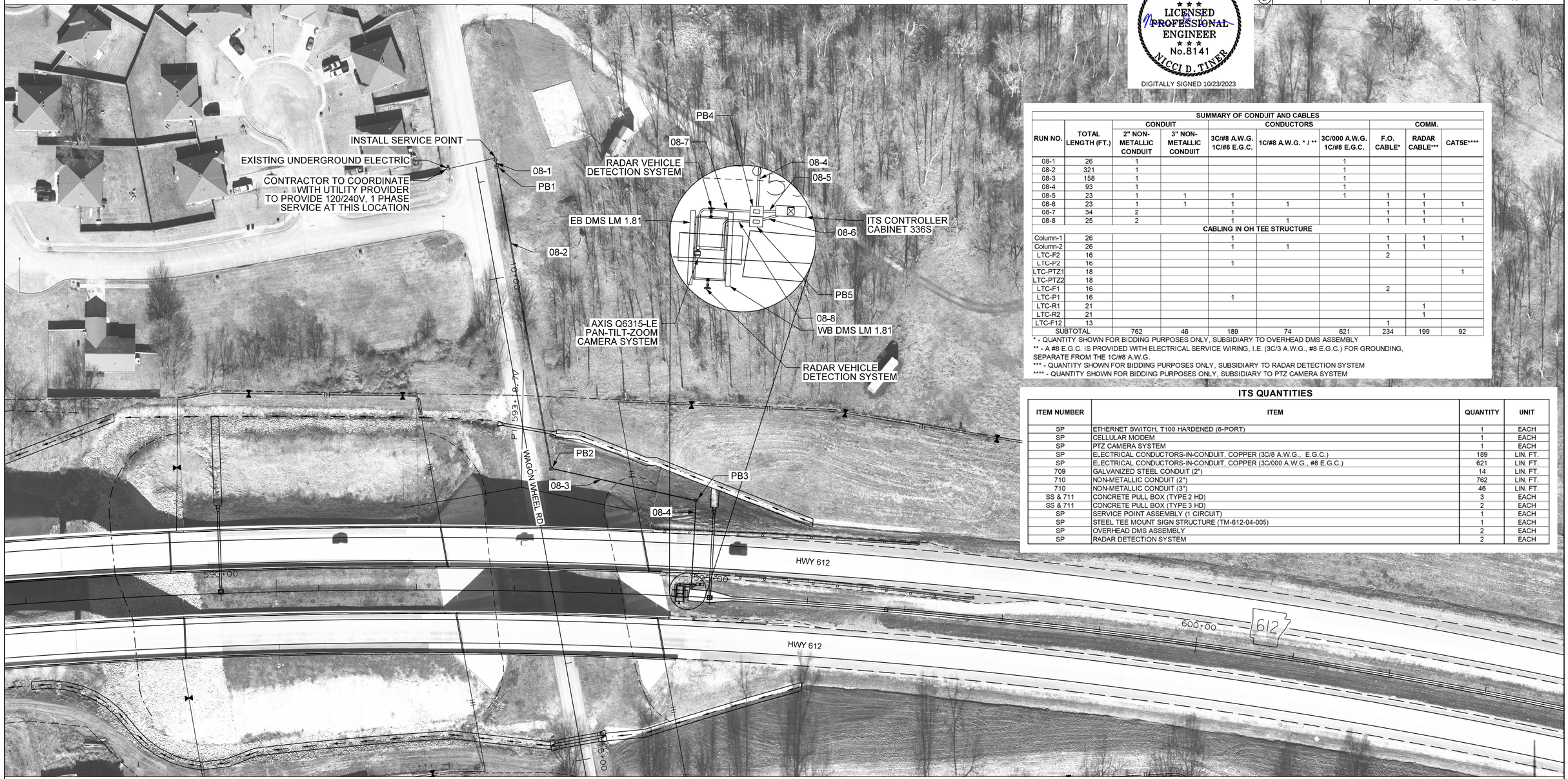

SUMMARY OF CONDUIT AND CABLES

RUN NO.	TOTAL LENGTH (FT.)	CONDUIT		CONDUCTORS			COMM.		
		2" NON-METALLIC CONDUIT	3" NON-METALLIC CONDUIT	3C/#8 A.W.G. 1C/#8 E.G.C.	1C/#8 A.W.G. * / **	3C/000 A.W.G. 1C/#8 E.G.C.	F.O. CABLE*	RADAR CABLE***	CAT5E****
08-1	26	1				1			
08-2	321	1				1			
08-3	158	1				1			
08-4	93	1				1			
08-5	23	1	1	1		1	1	1	
08-6	23	1	1	1	1		1	1	1
08-7	34	2		1			1	1	
08-8	25	2		1	1		1	1	1
CABLING IN OH TEE STRUCTURE									
Column-1	26			1			1	1	1
Column-2	26			1	1		1	1	
LTC-F2	16						2		
LTC-P2	16			1					
LTC-PTZ1	18								1
LTC-PTZ2	18								
LTC-F1	16						2		
LTC-P1	16			1					
LTC-R1	21							1	
LTC-R2	21							1	
LTC-F12	13						1		
SUBTOTAL		762	46	189	74	621	234	199	92

* - QUANTITY SHOWN FOR BIDDING PURPOSES ONLY, SUBSIDIARY TO OVERHEAD DMS ASSEMBLY
** - A #8 E.G.C. IS PROVIDED WITH ELECTRICAL SERVICE WIRING, I.E. (3C/3 A.W.G., #8 E.G.C.) FOR GROUNDING, SEPARATE FROM THE 1C/#8 A.W.G.
*** - QUANTITY SHOWN FOR BIDDING PURPOSES ONLY, SUBSIDIARY TO RADAR DETECTION SYSTEM
**** - QUANTITY SHOWN FOR BIDDING PURPOSES ONLY, SUBSIDIARY TO PTZ CAMERA SYSTEM

ITS QUANTITIES

ITEM NUMBER	ITEM	QUANTITY	UNIT
SP	ETHERNET SWITCH, T100 HARDENED (8-PORT)	1	EACH
SP	CELLULAR MODEM	1	EACH
SP	PTZ CAMERA SYSTEM	1	EACH
SP	ELECTRICAL CONDUCTORS-IN-CONDUIT, COPPER (3C/8 A.W.G., E.G.C.)	189	LIN. FT.
SP	ELECTRICAL CONDUCTORS-IN-CONDUIT, COPPER (3C/000 A.W.G., #8 E.G.C.)	621	LIN. FT.
709	GALVANIZED STEEL CONDUIT (2")	14	LIN. FT.
710	NON-METALLIC CONDUIT (2")	762	LIN. FT.
710	NON-METALLIC CONDUIT (3")	46	LIN. FT.
SS & 711	CONCRETE PULL BOX (TYPE 2 HD)	3	EACH
SS & 711	CONCRETE PULL BOX (TYPE 3 HD)	2	EACH
SP	SERVICE POINT ASSEMBLY (1 CIRCUIT)	1	EACH
SP	STEEL TEE MOUNT SIGN STRUCTURE (TM-612-04-005)	1	EACH
SP	OVERHEAD DMS ASSEMBLY	2	EACH
SP	RADAR DETECTION SYSTEM	2	EACH

C.L. MEDIAN STATIONING	GUARDRAIL (TYPE A)	THRIE BEAM GUARDRAIL TERMINAL	TERMINAL ANCHOR POST (TYPE I)
WB STA. 594+58.70 TO STA. 595+77.45 LT. OF R.M.L. =	100 LIN. FT.	1EACH	1EACH

PULL BOX SCHEDULE			
PULL BOX ID	NORTHING	EASTING	TYPE
PB1	698789.68	663186.64	TYPE 2 HD
PB2	698540.57	663378.44	TYPE 2 HD
PB3	698580.40	663524.81	TYPE 2 HD
PB4	698501.75	663560.06	TYPE 3 HD
PB5	698499.38	663561.15	TYPE 3 HD

SERVICE POINT AND DMS SUMMARY			
PULL BOX ID	NORTHING	EASTING	TYPE
SP1	698796.44	663181.31	
DMS1	698487.91	663553.87	

N

SCALE IN FEET
0 50 100 200

EPSherrill 10/19/2023 2:32:55 PM
WORKSPACE: AHTD
L:\20\7\170\7660 - ARDOT 012326 Hwy 412 - Hwy 412\Drawings\ITS\ITS_8a.dgn
REVISED DATE:

DATE REVISED	DATE REVISED	FED. RD. DIST. NO.	STATE	JOB NO.	SHEET NO.	TOTAL SHEETS
10-02-2023		6	ARK.	012326	167	838
10-23-2023		ITS ELEVATION SHEET (LM 1.81)				
(2)						

STATE OF ARKANSAS
LICENSED PROFESSIONAL ENGINEER
No.8141
NICCI D. TINER

DIGITALLY SIGNED 10/23/2023

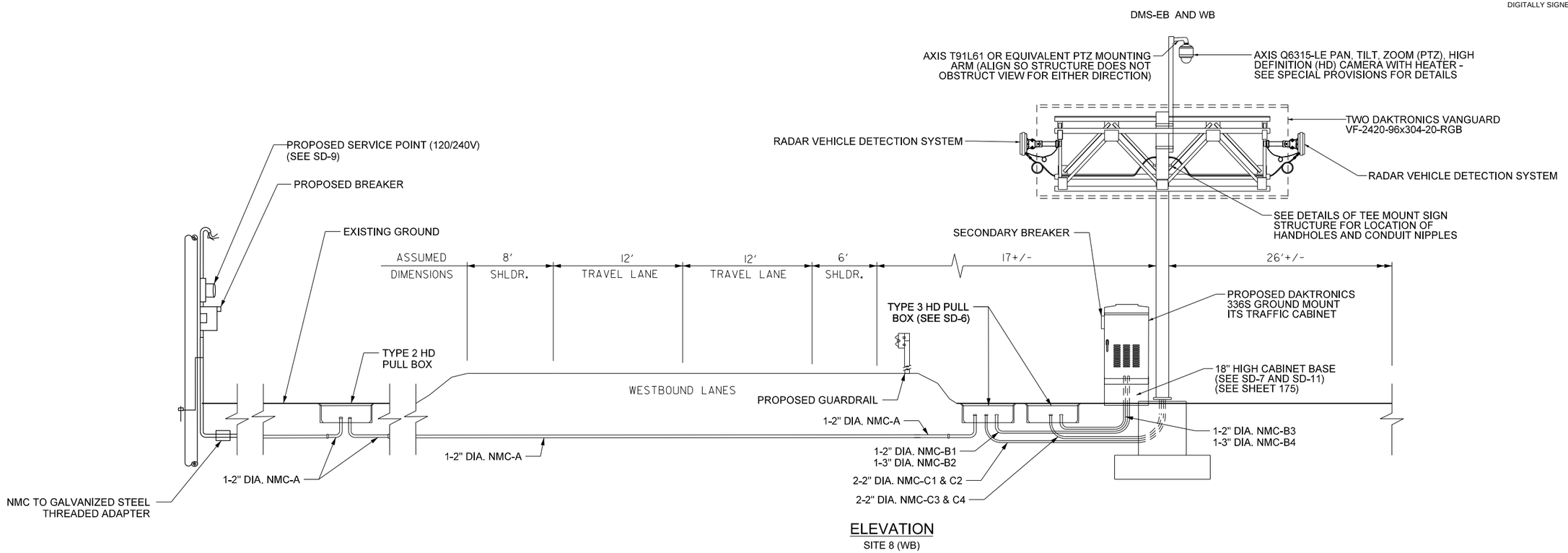

ELEVATION
SITE 8 (WB)

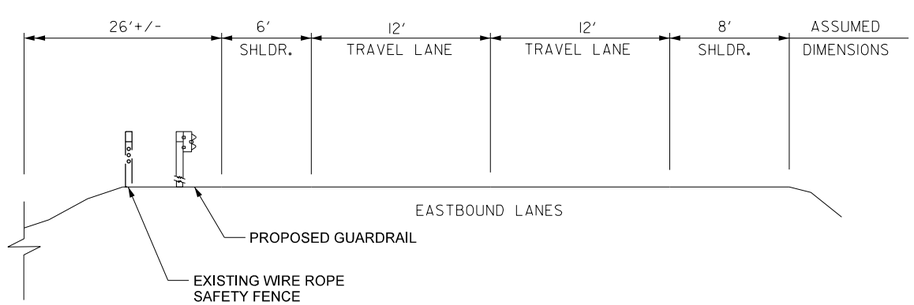

ELEVATION
SITE 8 (EB)

EPSherrill 10/19/2023 2:33:0 PM
WORKSPACE: AHTD
L:\20IT\I70I660 - ARDOT 012326 Hwy 412 - Hwy 112\Drawings\ITS\ITS_8b.dgn
REVISED DATE:

DATE REVISED	DATE REVISED	FED. RD. DIST. NO.	STATE	JOB NO.	SHEET NO.	TOTAL SHEETS
		6	ARK.	012326	168	838
		ITS PLAN SHEET (LM 3.74)				
2						

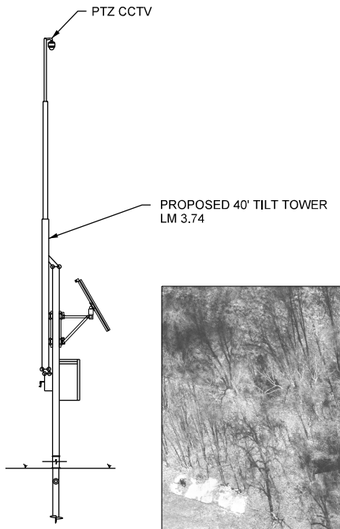

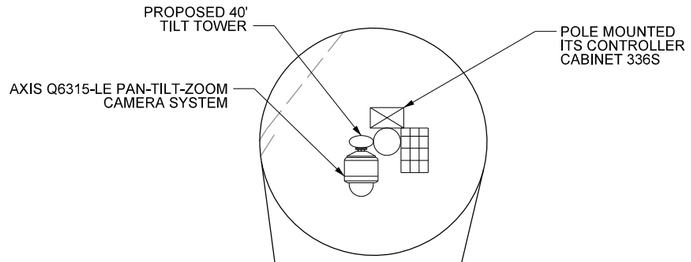

STATE OF ARKANSAS
LICENSED PROFESSIONAL ENGINEER
No.8141
NICCI D. TINER

DIGITALLY SIGNED 7/28/2023



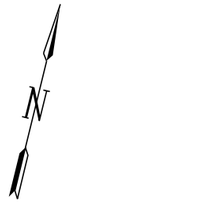

SCALE IN FEET

0 50 100 200

SUMMARY OF CONDUIT AND CABLES									
RUN NO.	TOTAL LENGTH (FT.)	CONDUIT		CONDUCTORS			COMM.		
		2" NON-METALLIC CONDUIT	3" NON-METALLIC CONDUIT	3C/#8 A.W.G. 1C/#8 E.G.C.	1C/#8 A.W.G. *	3C/#4 A.W.G. 1C/#8 E.G.C.	F.O. CABLE*	RADAR CABLE*	CAT5E*
CABLING IN TILT TOWER									
Column-1	48								1
SUBTOTAL		0	0	0	0	0	0	0	48

* - QUANTITY SHOWN FOR BIDDING PURPOSES SUBSIDIARY TO PTZ CAMERA SYSTEM

ITS QUANTITIES

ITEM NUMBER	ITEM	QUANTITY	UNIT
SP	ETHERNET SWITCH, T100 HARDENED (8-PORT)	1	EACH
SP	CELLULAR MODEM	1	EACH
SP	PTZ CAMERA SYSTEM	1	EACH
SP	TILT TOWER (40')	1	EACH

SERVICE POINT AND TILT TOWER SUMMARY			
PULL BOX ID	NORTHING	EASTING	TYPE
TILT TOWER 1	699842.06	667047.01	

WBCallaway 7/28/2023 10:30:48 AM
WORKSPACE: AHTD
L:\2017\17017660 - ARDOT 012326 Hwy 412 - Hwy 112\Drawings\ITS\ITS_9a.dgn
REVISED DATE:

DATE REVISED	DATE REVISED	FED. RD. DIST. NO.	STATE	JOB NO.	SHEET NO.	TOTAL SHEETS
		6	ARK.	012326	169	838
		ITS PLAN SHEET (LM 4.11)				

2

STATE OF ARKANSAS
LICENSED PROFESSIONAL ENGINEER
No.8141
NICCI D. TINER

DIGITALLY SIGNED 7/28/2023

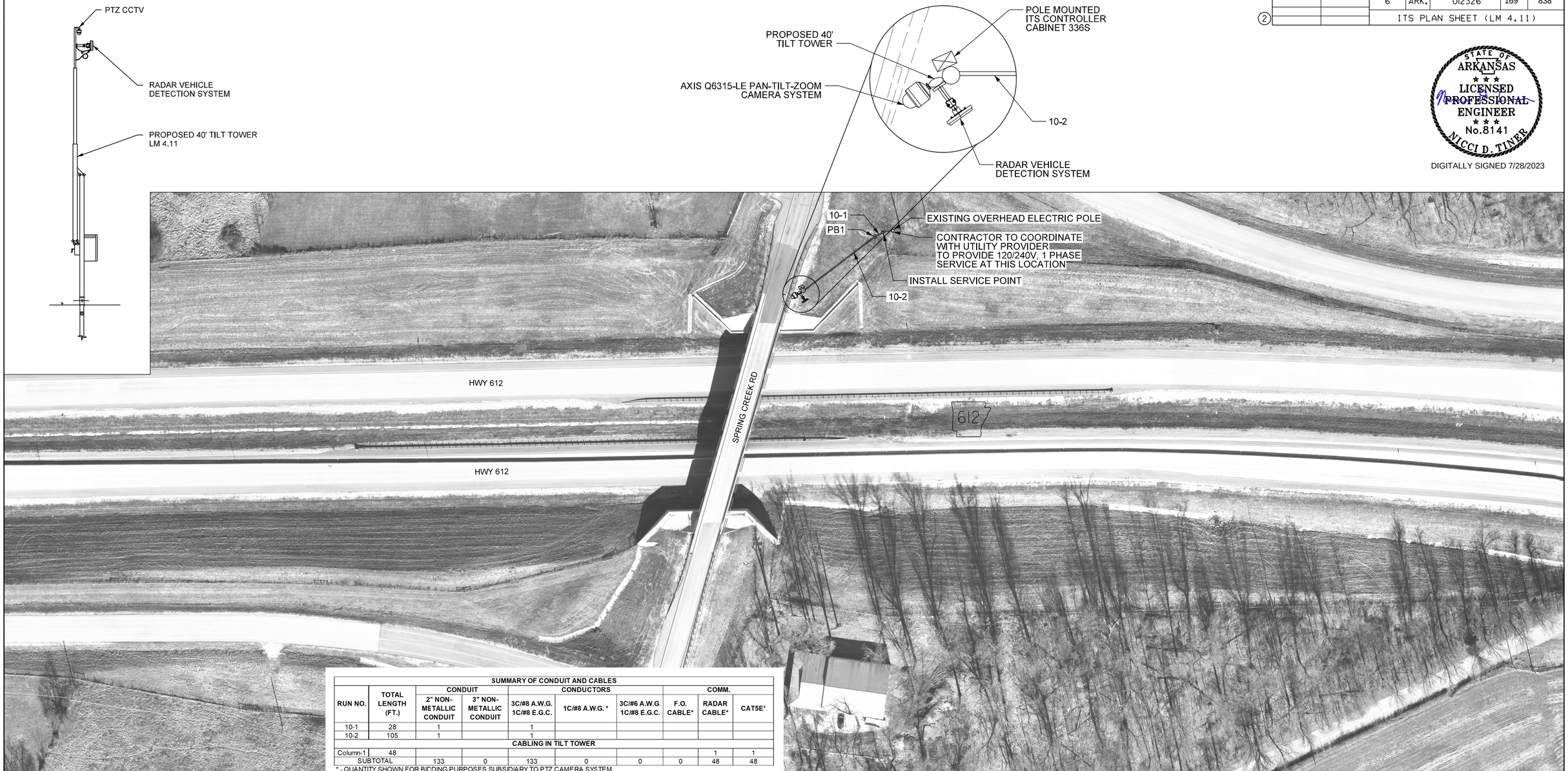

SUMMARY OF CONDUIT AND CABLES									
RUN NO.	TOTAL LENGTH (FT.)	CONDUIT		CONDUCTORS			COMM.		
		2" NON-METALLIC CONDUIT	3" NON-METALLIC CONDUIT	3C/#8 A.W.G. 1C/#8 E.G.C.	1C/#8 A.W.G. *	3C/#6 A.W.G. 1C/#8 E.G.C.	F.O. CABLE*	RADAR CABLE*	CAT5E*
10-1	28	1		1					
10-2	105	1		1					
CABLING IN TILT TOWER									
Column-1	48							1	1
SUBTOTAL		133	0	133	0	0	0	48	48

* - QUANTITY SHOWN FOR BIDDING PURPOSES SUBSIDIARY TO PTZ CAMERA SYSTEM

ITS QUANTITIES

ITEM NUMBER	ITEM	QUANTITY	UNIT
SP	ETHERNET SWITCH, T100 HARDENED (8-PORT)	1	EACH
SP	POLE MOUNTED ITS CABINET	1	EACH
SP	CELLULAR MODEM	1	EACH
SP	PTZ CAMERA SYSTEM	1	EACH
SP	ELECTRICAL CONDUCTORS-IN-CONDUIT, COPPER (3C/8 A.W.G., E.G.C.)	133	LIN. FT.
709	GALVANIZED STEEL CONDUIT (2")	14	LIN. FT.
710	NON-METALLIC CONDUIT (2")	133	LIN. FT.
SS & 711	CONCRETE PULL BOX (TYPE 2 HD)	1	EACH
SP	TILT TOWER (40')	1	EACH
SP	SERVICE POINT ASSEMBLY (1 CIRCUIT)	1	EACH
SP	RADAR DETECTION SYSTEM	1	EACH

N

SCALE IN FEET

0 50 100 200

PULL BOX SCHEDULE			
PULL BOX ID	NORTHING	EASTING	TYPE
PB1	701167.62	671636.84	TYPE 2 HD

SERVICE POINT AND TILT TOWER SUMMARY			
PULL BOX ID	NORTHING	EASTING	TYPE
SP1	701179.54	671660.47	
TILT TOWER 1	701096.10	671578.98	

WBCallaway 7/28/2023 10:32:05 AM
WORKSPACE: AHTD
L:\2017\17017660 - ARDOT 012326 Hwy 412 - Hwy 112\Drawings\ITS\ITS_10a.dgn
REVISED DATE:

DATE REVISED	DATE REVISED	FED. RD. DIST. NO.	STATE	JOB NO.	SHEET NO.	TOTAL SHEETS
10-23-2023		6	ARK.	012326	170	838
(2)		ITS VOLTAGE DROP CALCULATIONS				

STATE OF ARKANSAS
LICENSED PROFESSIONAL ENGINEER
No.8141
NICCI D. TINER

DIGITALLY SIGNED 10/23/2023

VOLTAGE DROP CALCULATIONS

Site No.	Panel ID	ITS Equipment				# of Sets	Wire Size	One-Way Length (ft)	Line Current (Amps)	Voltage (Line-to-Line)	Phase	Power Factor (100% or 85%)	Wire Type	Conduit Type	Impedance (Ω/1000 ft)	Voltage Drop (Volts)	%VD
		DMS	CCTV	RDS	Comm												
1	LM 0.64	2	1	2	1	1	1/0	412	87	240	1	85%	Copper	PVC	0.13	9.34	3.89%
3	STA 219+37		1	1	1	1	8	45	11	120	1	85%	Copper	PVC	0.69	0.68	0.56%
4	STA 293+90		1	2	1	1	3	764	12	120	1	85%	Copper	PVC	0.23	4.27	3.56%
5	STA388+00		1	1	1	1	6	346	11	120	1	85%	Copper	PVC	0.44	3.32	2.77%
7	STA 499+37		1	1	1	1	8	184	11	120	1	85%	Copper	PVC	0.69	2.77	2.31%
8	LM 1.81	2	1	2	1	1	3/0	621	87	240	1	85%	Copper	PVC	0.088	9.53	3.97%
10	LM 4.11		1		1	1	8	129	10	120	1	85%	Copper	PVC	0.69	1.72	1.43%

	POWER REQUIREMENTS			
	DMS	CCTV	RDS	Comm
Power (Amps)	37.50	5.78	1.25	3.88

EPSherrill 10/9/2023 2:33:10 PM
WORKSPACE: AHTD
L:\2017\1701660 - ARDOT 012326 Hwy 412 - Hwy 112\Drawings\ITS\ITS_Voltage Drop.dgn
REVISED DATE:

DATE REVISED	DATE REVISED	FED. RD. DIST. NO.	STATE	JOB NO.	SHEET NO.	TOTAL SHEETS
		6	ARK.	012326	171	838
		ITS POWER RANKINGS				

2

STATE OF ARKANSAS
LICENSED PROFESSIONAL ENGINEER
No.8141
NICCI D. TINER
DIGITALLY SIGNED 7/28/2023

ONE LINE DIAGRAM FOR DUAL DMS SYSTEMS

SCALE: NONE

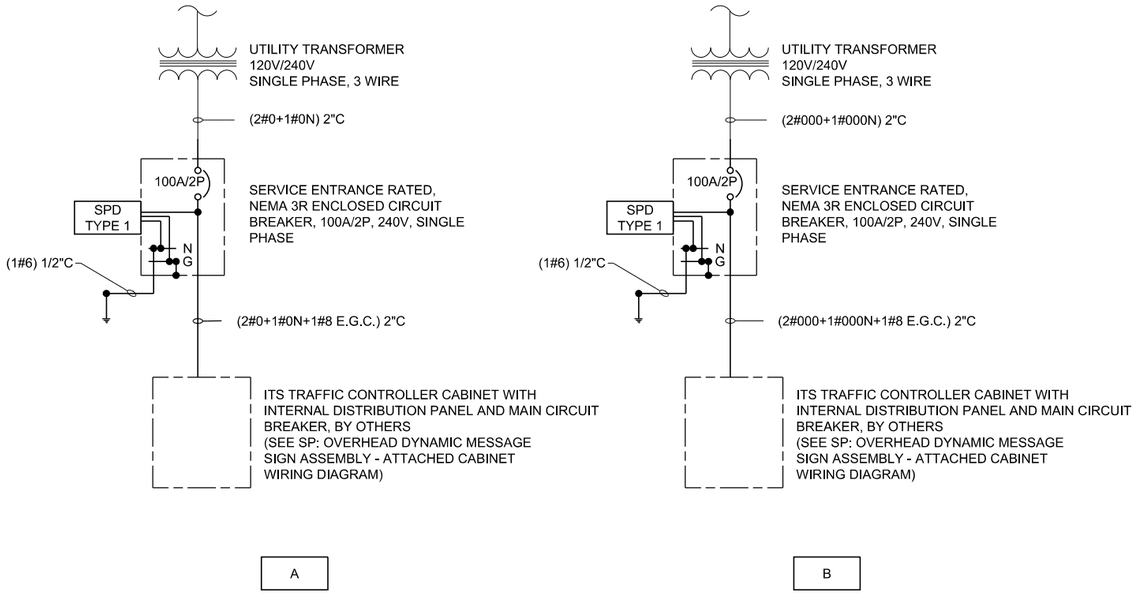

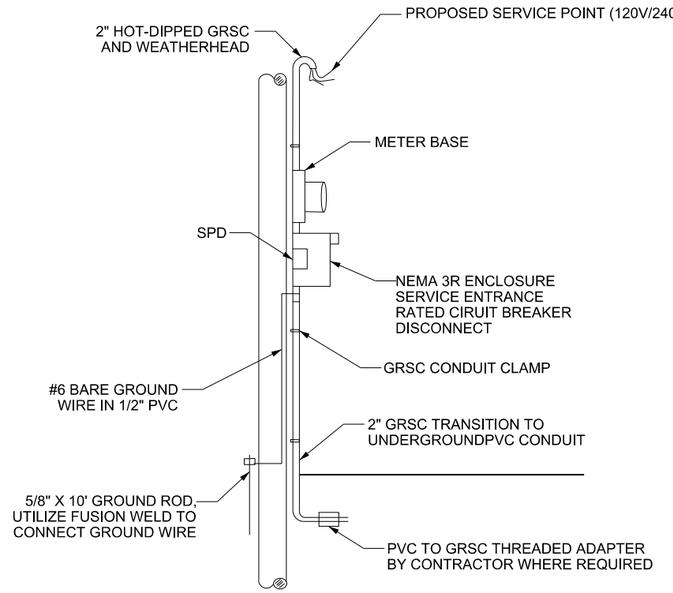

ONE LINE DIAGRAM FOR TILT TOWER SYSTEMS

SCALE: NONE

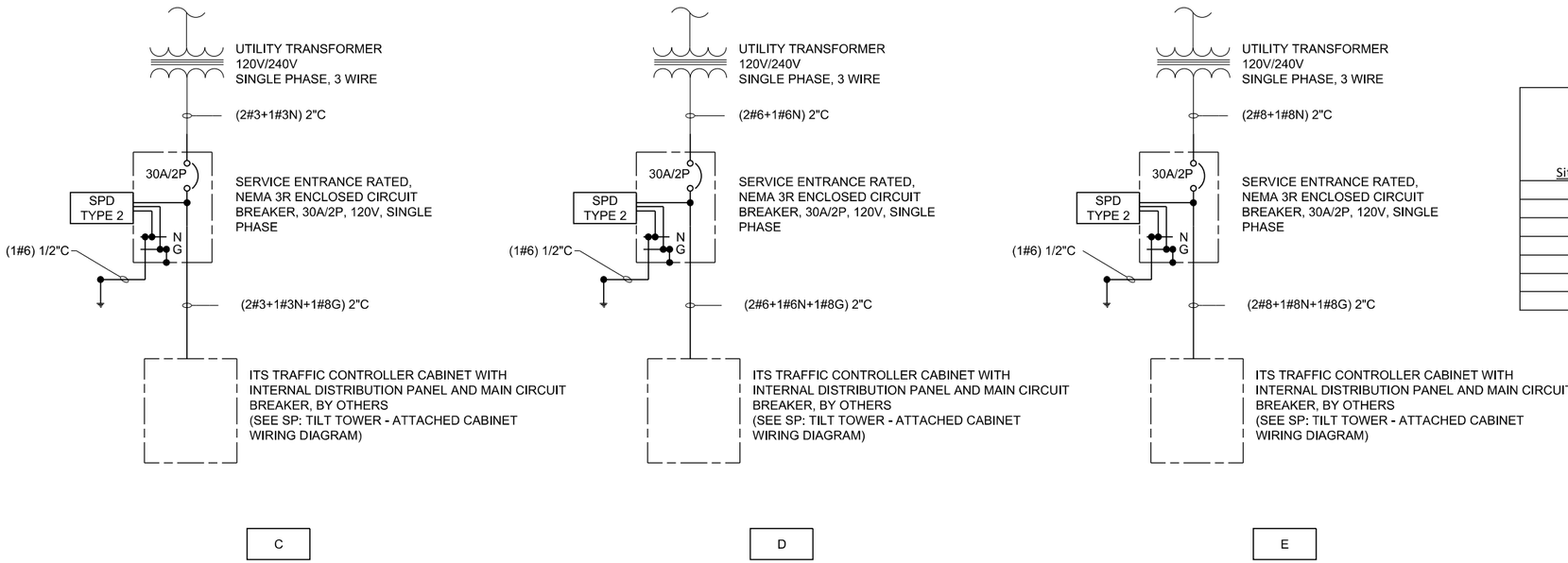

Site No.	Panel ID	ITS Equipment				
		DMS	CCTV	RDS	Comm	Service Point Type
1	LM 0.64	2	1	2	1	A
3	STA 219+37		1	1	1	E
4	STA 293+90		1	2	1	C
5	STA 388+00		1	1	1	D
7	STA 499+37		1	1	1	E
8	LM 1.81	2	1	2	1	B
10	LM 4.11		1		1	E

HBVinson 7/27/2023 1:49:23 PM
WORKSPACE: AHTD
L:\2017\17017660 - ARDOT 012326 Hwy 412 - Hwy 112\Drawings\ITS\ITS_ELECTRICAL.dgn
REVISED DATE:

DATE REVISED	DATE REVISED	FED. RD. DIST. NO.	STATE	JOB NO.	SHEET NO.	TOTAL SHEETS
		6	ARK.	012326	172	838
		ITS WIRING DIAGRAM				
2						

GENERAL NOTES:

IT IS THE RESPONSIBILTY OF THE ELECTRICAL INSTALLATION CONTRACTOR TO ENSURE THAT ALL ELECTRICAL WORK PERFORMED ON SITE MEETS OR EXCEEDS ALL LOCAL AND NATIONAL ELECTRICAL CODES

STATE OF ARKANSAS
LICENSED PROFESSIONAL ENGINEER
No.8141
NICCI D. TINER
DIGITALLY SIGNED 7/28/2023

FIBER OPTIC REQUIREMENTS:

50/125 um MM GRADED INDEX, OM3 STANDARD COMPLIANT LASER OPTIMIZED, STANDARD AND PREFERRED FOR MOST SYSTEMS. FIBER OPTIC CABLE SHALL BE 6 STRAND CORNING/95-050-99-X. FIBER OPTIC CABLE DIAMETER SHALL BE 50/125 um 6 FIBER OD, 0.195" (4.0MM) W-1489-DX. ALL ENDS SHALL HAVE UNICAM LC CONNECTORS WITH TWO STRANDS FOR REDUNDANT TX/RX AND TWO UNUSED FIBERS.

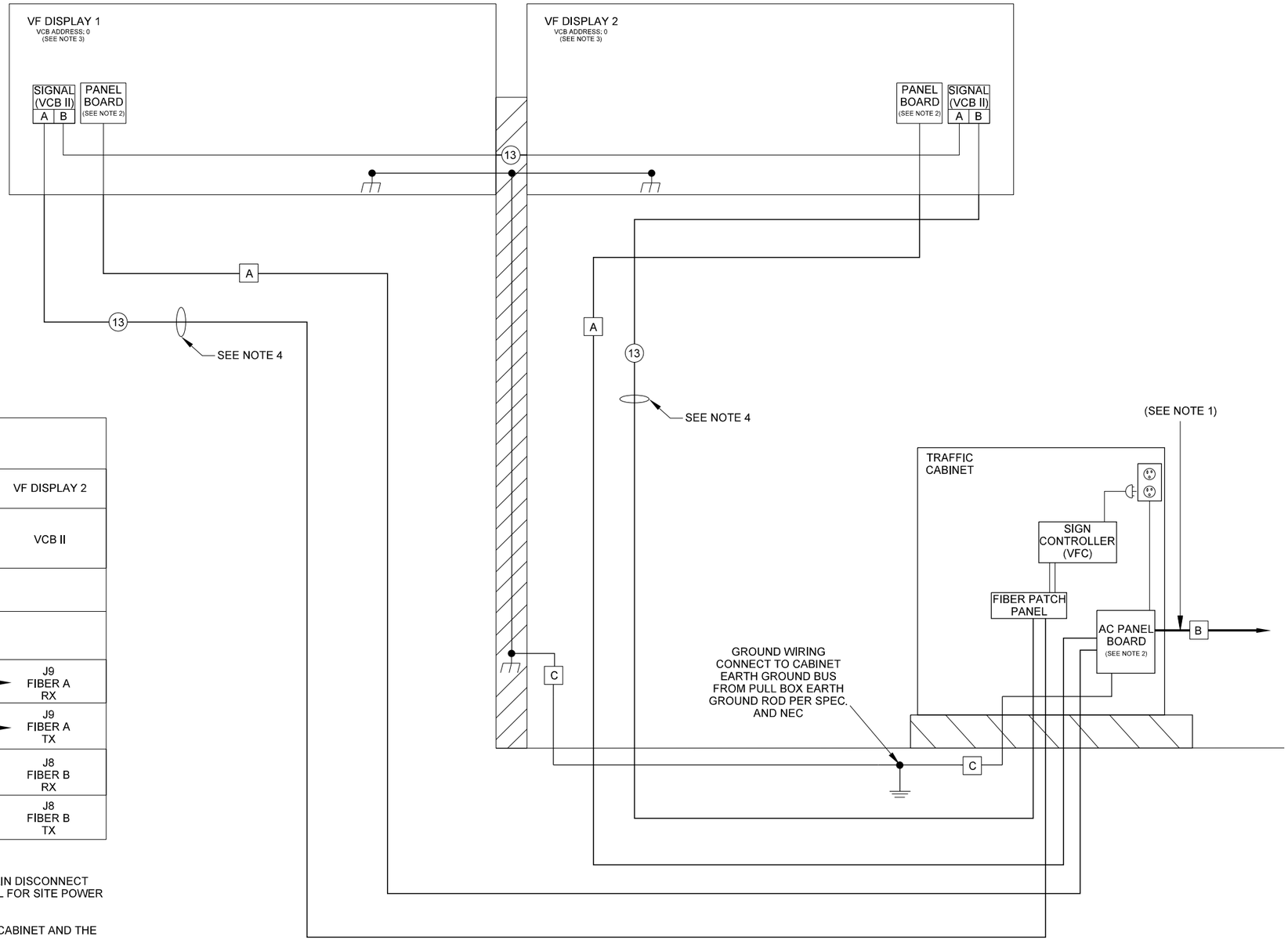

SITE FIBER INTERCONNECT			
TRAFFIC CABINET		VF DISPLAY 1	VF DISPLAY 2
SIGN CONTROLLER (VFC)	FIBER PATCH PANEL	VCB II	VCB II
J5 FIBER A TX	FIBER A TX	J9 FIBER A RX	
J5 FIBER A RX	FIBER A RX	J9 FIBER A TX	
		J8 FIBER B RX	J9 FIBER A RX
		J8 FIBER B TX	J9 FIBER A TX
J6 FIBER B TX	FIBER B TX		J8 FIBER B RX
J6 FIBER B RX	FIBER B RX		J8 FIBER B TX

NOTES:

1. WIRE BETWEEN TRAFFIC CABINET PANEL BOARD AND MAIN DISCONNECT SIZED AS SPECIFIED. CONTACT DAKTRONICS PERSONNEL FOR SITE POWER NUMBER AND SIGN PARAMETERS.
2. DAKTRONICS SUPPLIED PANEL BOARDS IN THE TRAFFIC CABINET AND THE VF-2X20 (DMS) ACCEPTS 8 AWG TO 1 AWG WIRE.
3. SEE DISPLAY MANUAL FOR INSTRUCTIONS ON VCB ADDRESSING.
4. 6 STRAND MM F.O. CABLE, SEE F.O. REQUIREMENTS FOR ADDITIONAL INFORMATION.
5. LIQUID-TIGHT CONDUIT SHALL BE 1.5" FLEXIBLE WATER TIGHT CONDUIT CONNECTING FROM THE 1.5" THREADED CONDUIT NIPPLE OF THE OH TEE STRUCTURE TO THE 1.5" HUB CONNECTOR ON THE DMS FOR COMMUNICATION (SIGNAL) CABLING OR POWER WIRING.
6. SEE TEE MOUNT STRUCTURE CONDUIT RUNS (ISOMETRIC VIEW) TABLE ON SHEET 251 FOR MORE DETAILS.

WIRE DETAIL

ID TAG	DESCRIPTION	FUNCTION
13	F.O.CABLE, 6 STRAND, 50/125 uM, LC CONNECTORS (2 SPARE)	SIGNAL
A	3C/8 A.W.G. E.G.C.	120/240 VAC (FROM CABINET TO DMS)
B	FOR WIRING TYPE, SEE "SITE CONDUIT RUNS AND CABLING" TABLE	120/240 VAC (FROM SERV. POLE TO CABINET)
C	1C/8 A.W.G.	SYSTEM GROUND INTERCONNECTION

* - GROUND BOND CONNECTION BETWEEN EQUIPMENT AND SERVICE POINT GROUND AS PER MANUFACTURER'S RECOMMENDATION, INSTALLATION OF GROUND BOND CONNECTION IS SUBSIDIARY TO PAY ITEM "OVERHEAD DMS ASSEMBLY".

WIRING DIAGRAM
DUAL DMS

ITS WIRING DIAGRAM

HBVinson 7/27/2023 14:49:26 PM
WORKSPACE: AHTD
L:\20\T\T017660 - ARDOT 012326 Hwy 412 - Hwy 412\Drawings\ITS\ITS_Wiring Diagram DualDMS.dgn
REVISED DATE:

DATE REVISED	DATE REVISED	FED. RD. DIST. NO.	STATE	JOB NO.	SHEET NO.	TOTAL SHEETS
		6	ARK.	012326	173	838
		ITS BLOCK DIAGRAM				
2						

STATE OF ARKANSAS
LICENSED PROFESSIONAL ENGINEER
No.8141
NICCI D. TINER

DIGITALLY SIGNED 7/28/2023

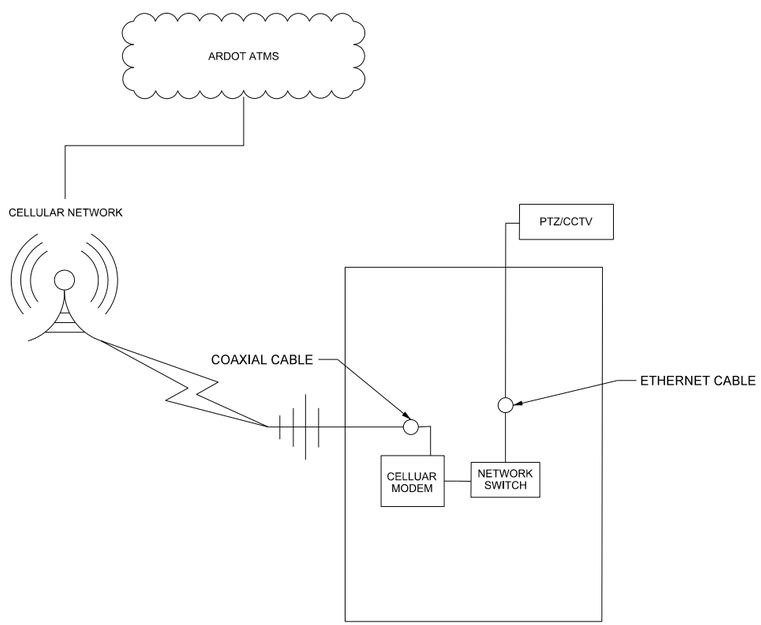

TILT TOWER BLOCK DIAGRAM 1

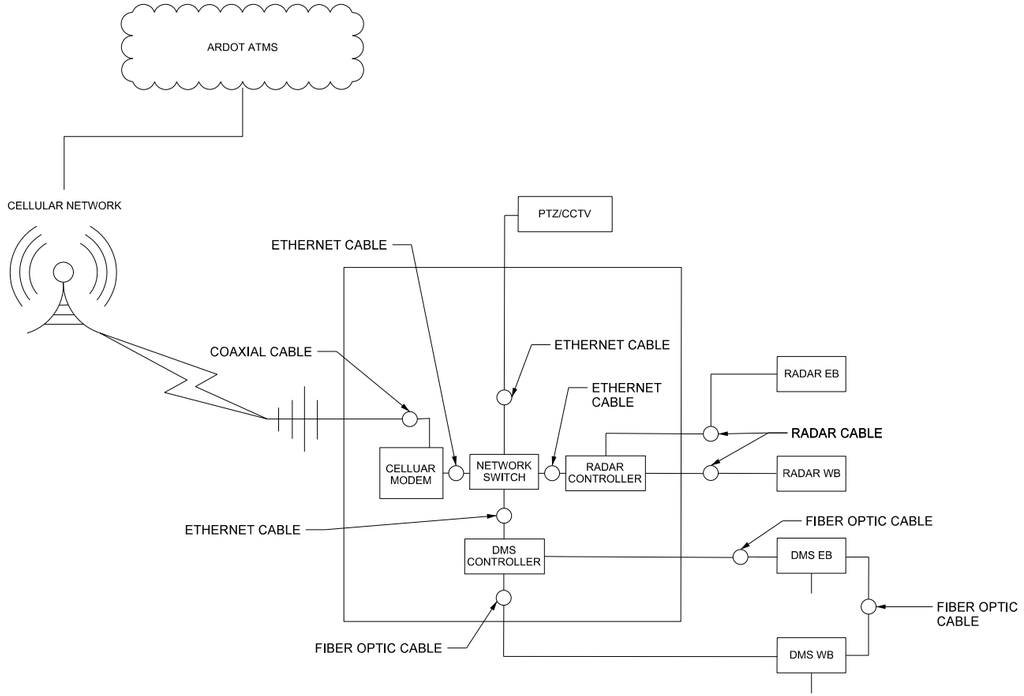

DUAL DMS BLOCK DIAGRAM

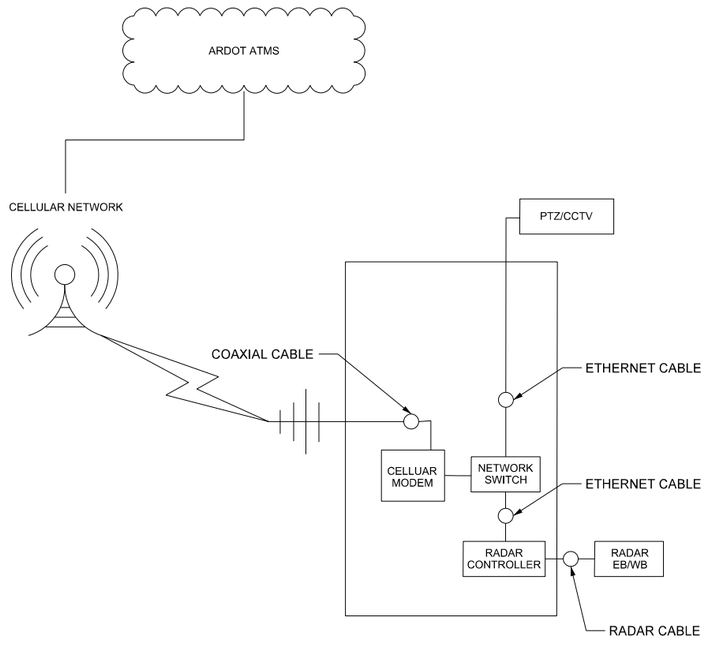

TILT TOWER BLOCK DIAGRAM 2

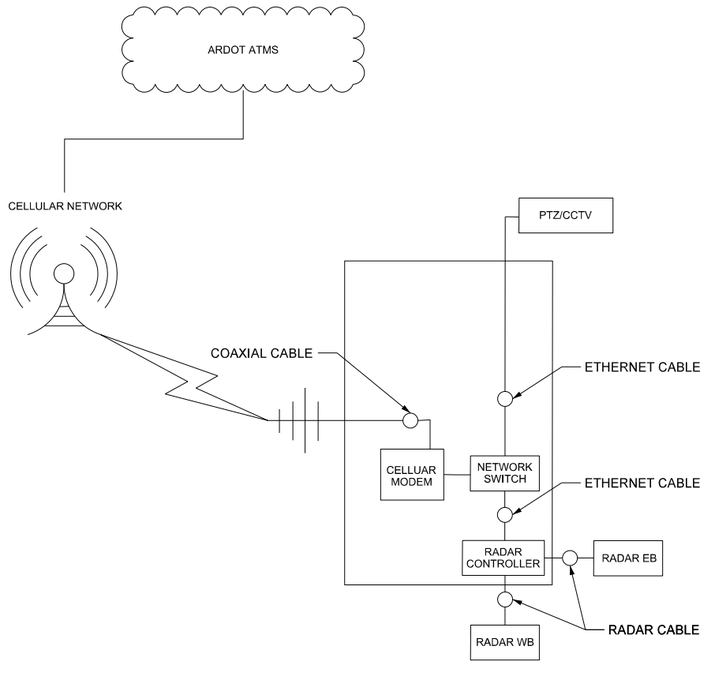

TILT TOWER BLOCK DIAGRAM 3

HBVinson 7/27/2023 1:49:28 PM
WORKSPACE: AHTD
L:\2017\170176\660 - ARDOT 012326 Hwy 412 - Hwy 112\Drawings\ITS\ITS_Block Diagram.dgn
REVISED DATE:

DATE REVISED	DATE REVISED
10-02-2023	
10-23-2023	

FED. RD. DIST. NO.	STATE	JOB NO.	SHEET NO.	TOTAL SHEETS
6	ARK.	012326	173A	838

ITS DETAIL

(2)

STATE OF ARKANSAS
LICENSED PROFESSIONAL ENGINEER
No.8141
NICCI D. TINER

DIGITALLY SIGNED 10/23/2023

TEE-MOUNT STRUCTURE CONDUIT RUNS																							
SITE	LOCATION	DMS	PTZ	RDS	NMC-A (2" DIA.)	NMC-B1 (2" DIA.)	NMC-B2 (3" DIA.)	NMC-C1 (2" DIA.)	NMC-C2 (2" DIA.)	COLUMN 1	LTC-F1 (1.5" DIA.)	LTC-P1 (1.5" DIA.)	LTC-R1 (1.5" DIA.)	LTC-F12 (1.5" DIA.)	LTC-PTZ1 (1.5" DIA.)	LTC-PTZ2 (1.5" DIA.)	NMC-B3 (2" DIA.)	NMC-B4 (3" DIA.)	NMC-C3 (2" DIA.)	NMC-C4 (2" DIA.)	COLUMN 2	LTC-F2 (1.5" DIA.)	LTC-P2 (1.5" DIA.)	LTC-R2 (1.5" DIA.)
1	LM 0.64	2	1	2	1-3C/0 A.W.G., #8 E.G.C.	1-F.O. CBL 1-CAT5E, 1-R CBL	1-3C/0 A.W.G., #8 E.G.C., 1-3C/8 A.W.G., #8 E.G.C.	1-F.O. CBL 1-CAT5E, 1-R CBL	3C/8 A.W.G., #8 E.G.C.	3C/8 A.W.G., #8 E.G.C. 1-F.O. CBL, 1-R CBL, 1-CAT5E CBL	2-F.O. CABLE	3C/8 A.W.G., #8 E.G.C.	1-R CABLE	1-F.O. CABLE	1-CAT5E CBL	SPARE	1-F.O. CBL, 1-R CBL	3C/8 A.W.G., #8 E.G.C.	1-F.O. CBL, 1-R CBL	3C/8 A.W.G., #8 E.G.C.	3C/8 A.W.G., #8 E.G.C. 1-F.O. CBL, 1-R CBL	2-F.O. CBL	3C/8 A.W.G., #8 E.G.C.	1-R CBL
8	LM 1.81	2	1	2	1-3C/3/0 A.W.G., #8 E.G.C.	1-F.O. CBL 1-CAT5E, 1-R CBL	1-3C/3/0 A.W.G., #8 E.G.C., 1-3C/8 A.W.G., #8 E.G.C.	1-F.O. CBL 1-CAT5E, 1-R CBL	3C/8 A.W.G., #8 E.G.C.	3C/8 A.W.G., #8 E.G.C. 1-F.O. CBL, 1-R CBL, 1-CAT5E CBL	2-F.O. CABLE	3C/8 A.W.G., #8 E.G.C.	1-R CABLE	1-F.O. CABLE	1-CAT5E CBL	SPARE	1-F.O. CBL, 1-R CBL	3C/8 A.W.G., #8 E.G.C.	1-F.O. CBL, 1-R CBL	3C/8 A.W.G., #8 E.G.C.	3C/8 A.W.G., #8 E.G.C. 1-F.O. CBL, 1-R CBL	2-F.O. CBL	3C/8 A.W.G., #8 E.G.C.	1-R CBL
CONDUIT FILL (LARGEST FILL %)		N/A	N/A	N/A	13%	8%	15%	8%	2%	N/A	9%	3%	5%	5%	4%	N/A	5%	1%	5%	2%	N/A	9%	3%	5%

REFER TO ITS PLAN SHEETS FOR MORE DETAILS. 1-1C#8 A.W.G., E.G.C. - UTILIZED FOR DMS GROUNDING

NOTES:

1. CONDUITS BETWEEN SERVICE POINT AND PULL BOXES ARE NUMBERED WITH LETTER A.
2. CONDUITS BETWEEN ITS CABINET AND PULL BOXES ARE NUMBERED WITH LETTER B.
3. CONDUITS BETWEEN DMS STRUCTURE AND PULL BOXES ARE NUMBERED WITH LETTER C.

EPSherrill 10/19/2023 2:33:13 PM
WORKSPACE: AHTD
L:\2017\17017660 - ARDOT 012326 Hwy 412 - Hwy 112\Drawings\ITS\ITS_Detail.dgn
REVISED DATE:

DATE REVISED	DATE REVISED	FED. RD. DIST. NO.	STATE	JOB NO.	SHEET NO.	TOTAL SHEETS
10-02-2023		6	ARK.	012326	174	838
(2) 10-23-2023		ITS TEE-MOUNT STANDARD DETAIL				

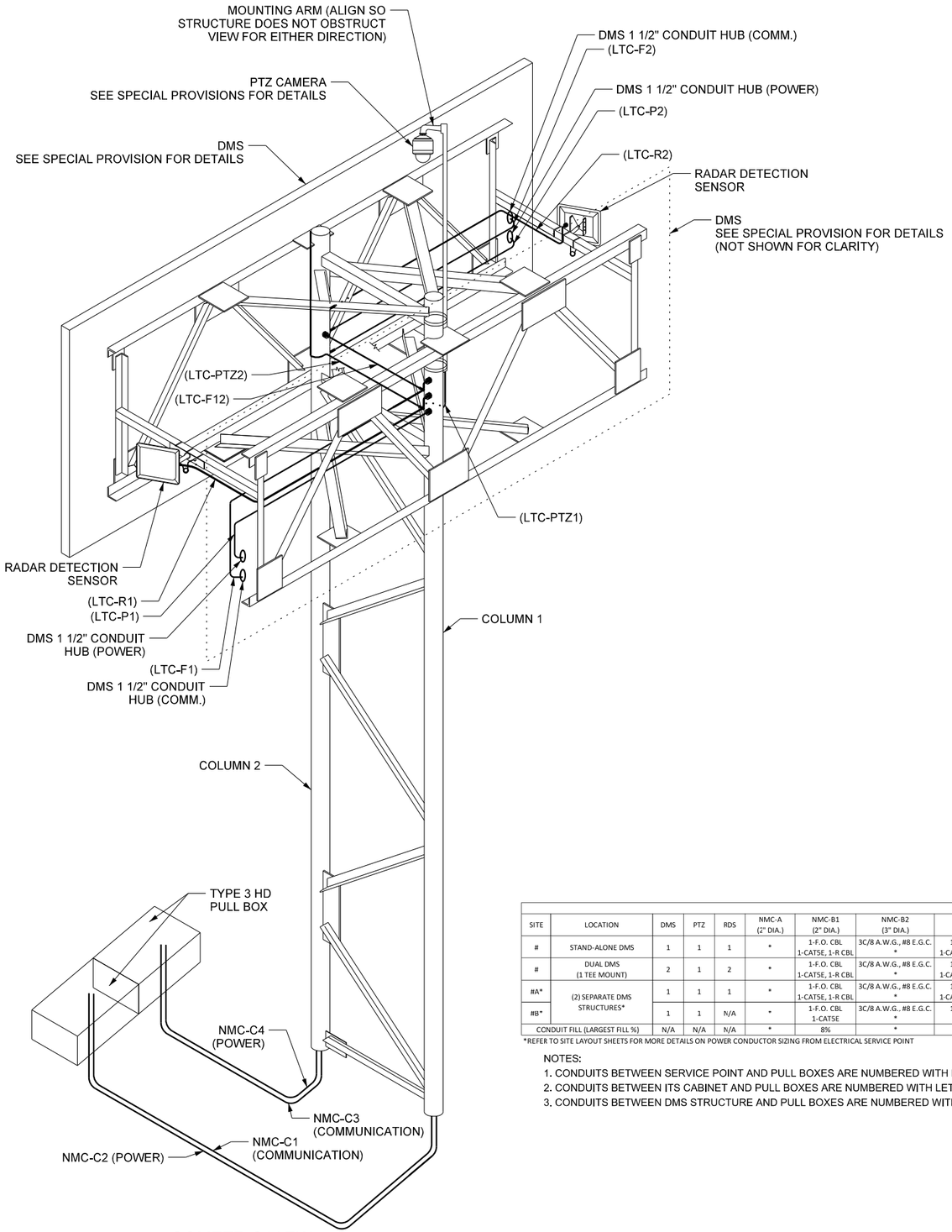

ISOMETRIC VIEW

NOT TO SCALE

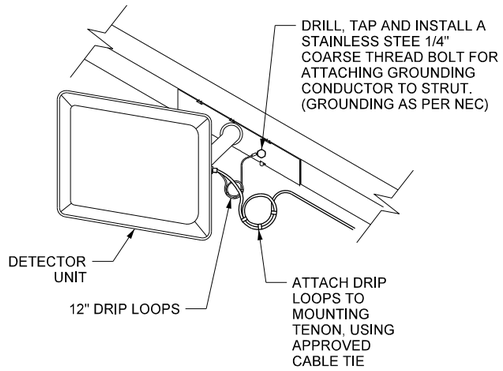

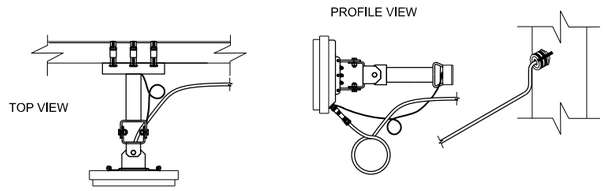

SENSOR MOUNTING BRACKET DETAILS

NOT TO SCALE

STATE OF ARKANSAS
LICENSED PROFESSIONAL ENGINEER
No.8141
NICCI D. TINER

DIGITALLY SIGNED 10/23/2023

TEE-MOUNT STRUCTURE CONDUIT RUNS (STANDARD DETAIL)

SITE	LOCATION	DMS	PTZ	RDS	NMC-A (2" DIA.)	NMC-B1 (2" DIA.)	NMC-B2 (3" DIA.)	NMC-C1 (2" DIA.)	NMC-C2 (2" DIA.)	COLUMN 1	LTC-F1 (1.5" DIA.)	LTC-P1 (1.5" DIA.)	LTC-R1 (1.5" DIA.)	LTC-F12 (1.5" DIA.)	LTC-PTZ1 (1.5" DIA.)	LTC-PTZ2 (1.5" DIA.)	NMC-B3 (2" DIA.)	NMC-B4 (3" DIA.)	NMC-C3 (2" DIA.)	NMC-C4 (2" DIA.)	COLUMN 2	LTC-F2 (1.5" DIA.)	LTC-P2 (1.5" DIA.)	LTC-R2 (1.5" DIA.)
#	STAND-ALONE DMS	1	1	1	*	1-F.O. CBL 1-CAT5E, 1-R CBL	3C/8 A.W.G., #8 E.G.C. *	1-F.O. CBL 1-CAT5E, 1-R CBL	3C/8 A.W.G., #8 E.G.C.	3C/8 A.W.G., #8 E.G.C. 1-F.O. CBL, 1-R CBL, 1-CAT5E	1-F.O. CBL	3C/8 A.W.G., #8 E.G.C.	1-R CBL	SPARE	1-CAT5E CBL	SPARE	SPARE	SPARE	SPARE	SPARE	SPARE	SPARE	SPARE	SPARE
#	DUAL DMS (1 TEE MOUNT)	2	1	2	*	1-F.O. CBL 1-CAT5E, 1-R CBL	3C/8 A.W.G., #8 E.G.C. *	1-F.O. CBL 1-CAT5E, 1-R CBL	3C/8 A.W.G., #8 E.G.C.	3C/8 A.W.G., #8 E.G.C. 1-F.O. CBL, 1-R CBL, 1-CAT5E	2-F.O. CBL	3C/8 A.W.G., #8 E.G.C.	1-R CBL	1-F.O. CBL	1-CAT5E CBL	SPARE	1-F.O. CBL, 1-R CBL	3C/8 A.W.G., #8 E.G.C.	1-F.O. CBL, 1-R CBL	3C/8 A.W.G., #8 E.G.C.	3C/8 A.W.G., #8 E.G.C. 1-F.O. CBL, 1-R CBL	2-F.O. CBL	3C/8 A.W.G., #8 E.G.C.	1-R CBL
#A*	(2) SEPARATE DMS STRUCTURES*	1	1	1	*	1-F.O. CBL 1-CAT5E, 1-R CBL	3C/8 A.W.G., #8 E.G.C. *	1-F.O. CBL 1-CAT5E, 1-R CBL	3C/8 A.W.G., #8 E.G.C.	3C/8 A.W.G., #8 E.G.C. 1-F.O. CBL, 1-R CBL, 1-CAT5E	1-F.O. CBL	3C/8 A.W.G., #8 E.G.C.	1-R CBL	SPARE	1-CAT5E CBL	SPARE	SPARE	SPARE	SPARE	SPARE	SPARE	SPARE	SPARE	SPARE
#B*		1	1	N/A	*	1-F.O. CBL 1-CAT5E	3C/8 A.W.G., #8 E.G.C. *	1-F.O. CBL 1-CAT5E	3C/8 A.W.G., #8 E.G.C.	3C/8 A.W.G., #8 E.G.C. 1-F.O. CBL, 1-CAT5E	1-F.O. CBL	3C/8 A.W.G., #8 E.G.C.	SPARE	SPARE	1-CAT5E CBL	SPARE	SPARE	SPARE	SPARE	SPARE	SPARE	SPARE	SPARE	SPARE
CONDUIT FILL (LARGEST FILL %)		N/A	N/A	N/A	*	8%	*	8%	2%	N/A	9%	3%	5%	5%	4%	N/A	5%	1%	5%	2%	N/A	9%	3%	5%

*REFER TO SITE LAYOUT SHEETS FOR MORE DETAILS ON POWER CONDUCTOR SIZING FROM ELECTRICAL SERVICE POINT

NOTES:

1. CONDUITS BETWEEN SERVICE POINT AND PULL BOXES ARE NUMBERED WITH LETTER A.
2. CONDUITS BETWEEN ITS CABINET AND PULL BOXES ARE NUMBERED WITH LETTER B.
3. CONDUITS BETWEEN DMS STRUCTURE AND PULL BOXES ARE NUMBERED WITH LETTER C.

LEGEND

DMS: DYNAMIC MESSAGING BOARD
NMC: NON-METALLIC CONDUIT
LTC: LIQUID TIGHT CONDUIT
F: FIBER OPTIC
PTZ: PAN-TILT-ZOOM CAMERA
P: POWER
R: RADAR DETECTION SENSOR

ITS TEE-MOUNT STANDARD DETAIL

EPSherrill 10/9/2023 2:33:14 PM
WORKSPACE: AHTD
L:\2017\17017660 - ARDOT 012326 Hwy 412 - Hwy 112\Drawings\ITS\ITS_Tee Mount Detail.ldgn
REVISED DATE:

DATE REVISED	DATE REVISED	FED. RD. DIST. NO.	STATE	JOB NO.	SHEET NO.	TOTAL SHEETS
10-02-2023		6	ARK.	012326	175	838
10-23-2023		ITS TEE-MOUNT STANDARD DETAIL				
(2)						

STATE OF ARKANSAS
LICENSED PROFESSIONAL ENGINEER
No.8141
NICCI D. TINER
DIGITALLY SIGNED 10/23/2023

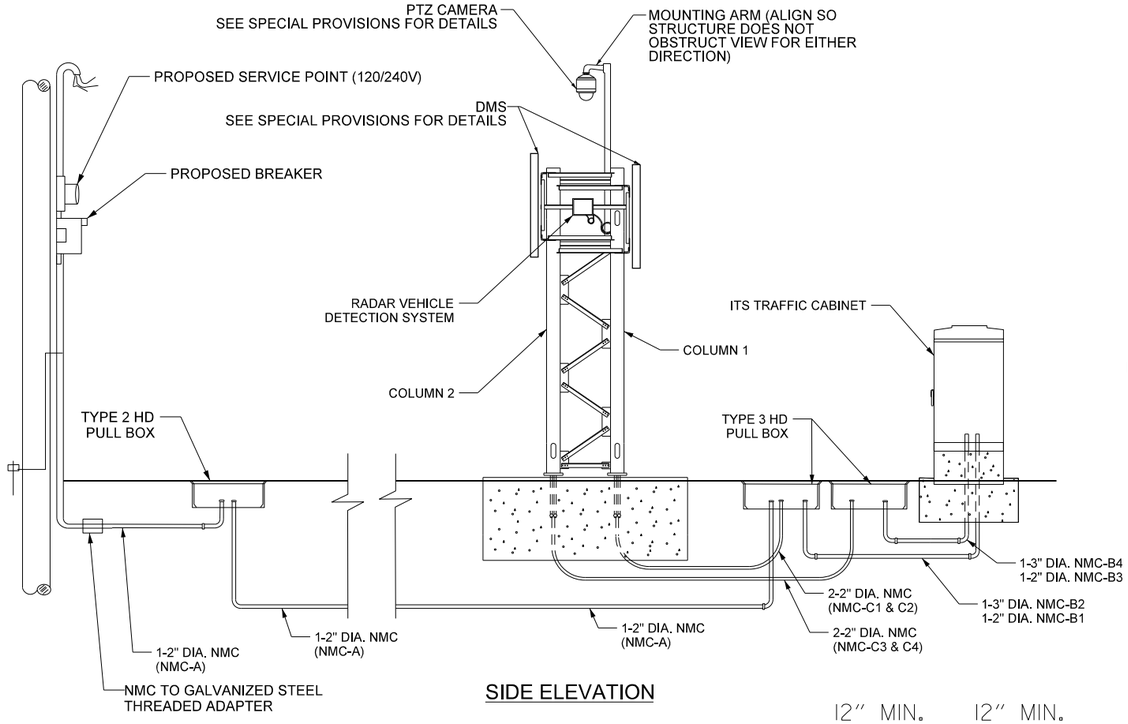

SIDE ELEVATION

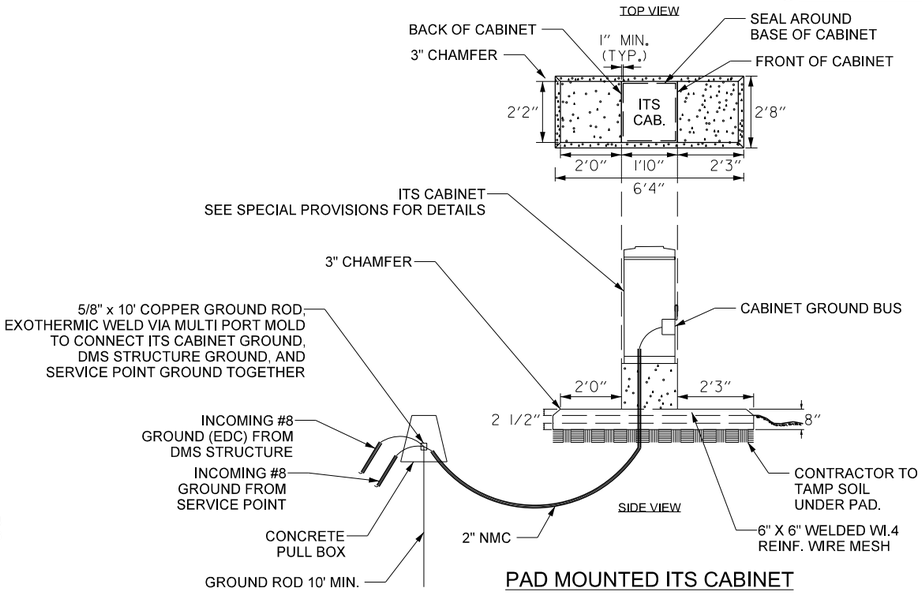

PAD MOUNTED ITS CABINET

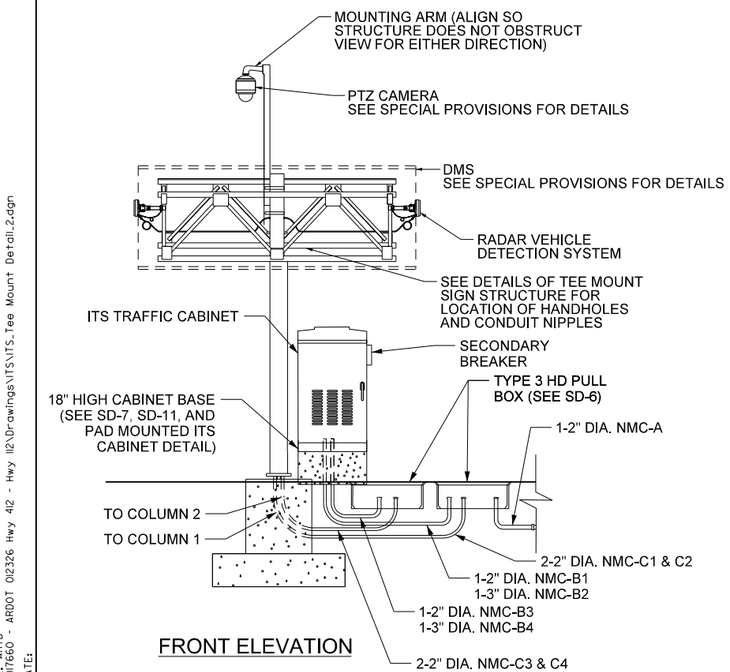

FRONT ELEVATION

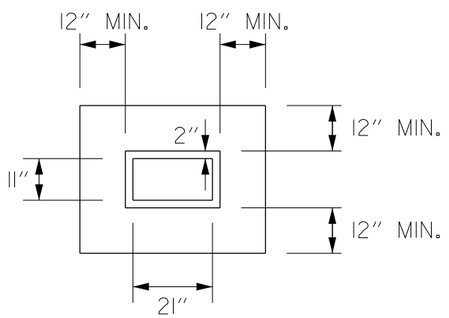

TYPE 2 HD PULL BOX

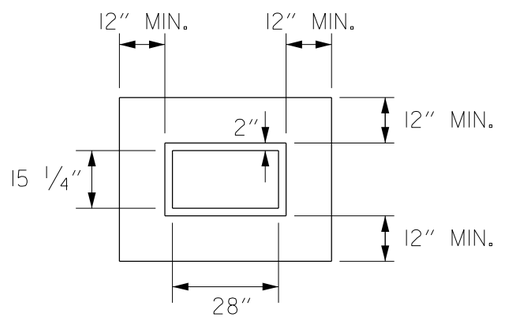

TYPE 3 HD PULL BOX

TEE-MOUNT STRUCTURE CONDUIT RUNS (STANDARD DETAIL)																								
SITE	LOCATION	DMS	PTZ	RDS	NMC-A (2" DIA.)	NMC-B1 (2" DIA.)	NMC-B2 (3" DIA.)	NMC-C1 (2" DIA.)	NMC-C2 (2" DIA.)	COLUMN 1	LTC-F1 (1.5" DIA.)	LTC-P1 (1.5" DIA.)	LTC-R1 (1.5" DIA.)	LTC-F12 (1.5" DIA.)	LTC-PTZ1 (1.5" DIA.)	LTC-PTZ2 (1.5" DIA.)	NMC-B3 (2" DIA.)	NMC-B4 (3" DIA.)	NMC-C3 (2" DIA.)	NMC-C4 (2" DIA.)	COLUMN 2	LTC-F2 (1.5" DIA.)	LTC-P2 (1.5" DIA.)	LTC-R2 (1.5" DIA.)
#	STAND-ALONE DMS	1	1	1	*	1-F.O. CBL 1-CAT5E, 1-R CBL	3C/8 A.W.G., #8 E.G.C. *	1-F.O. CBL 1-CAT5E, 1-R CBL	3C/8 A.W.G., #8 E.G.C.	3C/8 A.W.G., #8 E.G.C. 1-F.O. CBL, 1-R CBL, 1-CAT5E	1-F.O. CBL	3C/8 A.W.G., #8 E.G.C.	1-R CBL	SPARE	1-CAT5E CBL	SPARE	SPARE	SPARE	SPARE	SPARE	SPARE	SPARE	SPARE	SPARE
#	DUAL DMS (1 TEE MOUNT)	2	1	2	*	1-F.O. CBL 1-CAT5E, 1-R CBL	3C/8 A.W.G., #8 E.G.C. *	1-F.O. CBL 1-CAT5E, 1-R CBL	3C/8 A.W.G., #8 E.G.C.	3C/8 A.W.G., #8 E.G.C. 1-F.O. CBL, 1-R CBL, 1-CAT5E	2-F.O. CBL	3C/8 A.W.G., #8 E.G.C.	1-R CBL	1-F.O. CBL	1-CAT5E CBL	SPARE	1-F.O. CBL, 1-R CBL	3C/8 A.W.G., #8 E.G.C.	1-F.O. CBL, 1-R CBL	3C/8 A.W.G., #8 E.G.C.	3C/8 A.W.G., #8 E.G.C. 1-F.O. CBL, 1-R CBL	2-F.O. CBL	3C/8 A.W.G., #8 E.G.C.	1-R CBL
#A*	(2) SEPARATE DMS STRUCTURES*	1	1	1	*	1-F.O. CBL 1-CAT5E, 1-R CBL	3C/8 A.W.G., #8 E.G.C. *	1-F.O. CBL 1-CAT5E, 1-R CBL	3C/8 A.W.G., #0 E.G.C.	3C/8 A.W.G., #8 E.G.C. 1-F.O. CBL, 1-R CBL, 1-CAT5E	1-F.O. CBL	3C/8 A.W.G., #8 E.G.C.	1-R CBL	SPARE	1-CAT5E CBL	SPARE	SPARE	SPARE	SPARE	SPARE	SPARE	SPARE	SPARE	SPARE
#B*		1	1	N/A	*	1-F.O. CBL 1-CAT5E	3C/8 A.W.G., #8 E.G.C. *	1-F.O. CBL 1-CAT5E	3C/8 A.W.G., #8 E.G.C.	3C/8 A.W.G., #8 E.G.C. 1-F.O. CBL, 1-CAT5E	1-F.O. CBL	3C/8 A.W.G., #8 E.G.C.	SPARE	SPARE	1-CAT5E CBL	SPARE	SPARE	SPARE	SPARE	SPARE	SPARE	SPARE	SPARE	SPARE
CONDUIT FILL (LARGEST FILL %)		N/A	N/A	N/A	*	8%	*	8%	2%	N/A	9%	3%	5%	5%	4%	N/A	5%	1%	5%	2%	N/A	9%	3%	5%

*REFER TO SITE LAYOUT SHEETS FOR MORE DETAILS ON POWER CONDUCTOR SIZING FROM ELECTRICAL SERVICE FOINT

NOTES:
1. CONDUITS BETWEEN SERVICE POINT AND PULL BOXES ARE NUMBERED WITH LETTER A.
2. CONDUITS BETWEEN ITS CABINET AND PULL BOXES ARE NUMBERED WITH LETTER B.
3. CONDUITS BETWEEN DMS STRUCTURE AND PULL BOXES ARE NUMBERED WITH LETTER C.

LEGEND
DMS: DYNAMIC MESSAGING BOARD
NMC: NON-METALLIC CONDUIT
LTC: LIQUID TIGHT CONDUIT
F: FIBER OPTIC
PTZ: PAN-TILT-ZOOM CAMERA
P: POWER
R: RADAR DETECTION SENSOR

ITS TEE-MOUNT STANDARD DETAIL

EPSherrill 10/9/2023 2:33:15 PM
WORKSPACE: AHTD
L:\2017\17017660 - ARDOT 012326 Hwy 412 - Hwy 112\Drawings\ITS\ITS_Tee Mount Detail.2.dgn
REVISED DATE:

DATE REVISED	DATE REVISED	FED. RD. DIST. NO.	STATE	JOB NO.	SHEET NO.	TOTAL SHEETS
		6	ARK.	012326	176	838
		ITS TILT TOWER STANDARD DETAIL				
2						

STATE OF ARKANSAS
LICENSED PROFESSIONAL ENGINEER
No.8141
NICCI D. TINER

DIGITALLY SIGNED 7/28/2023

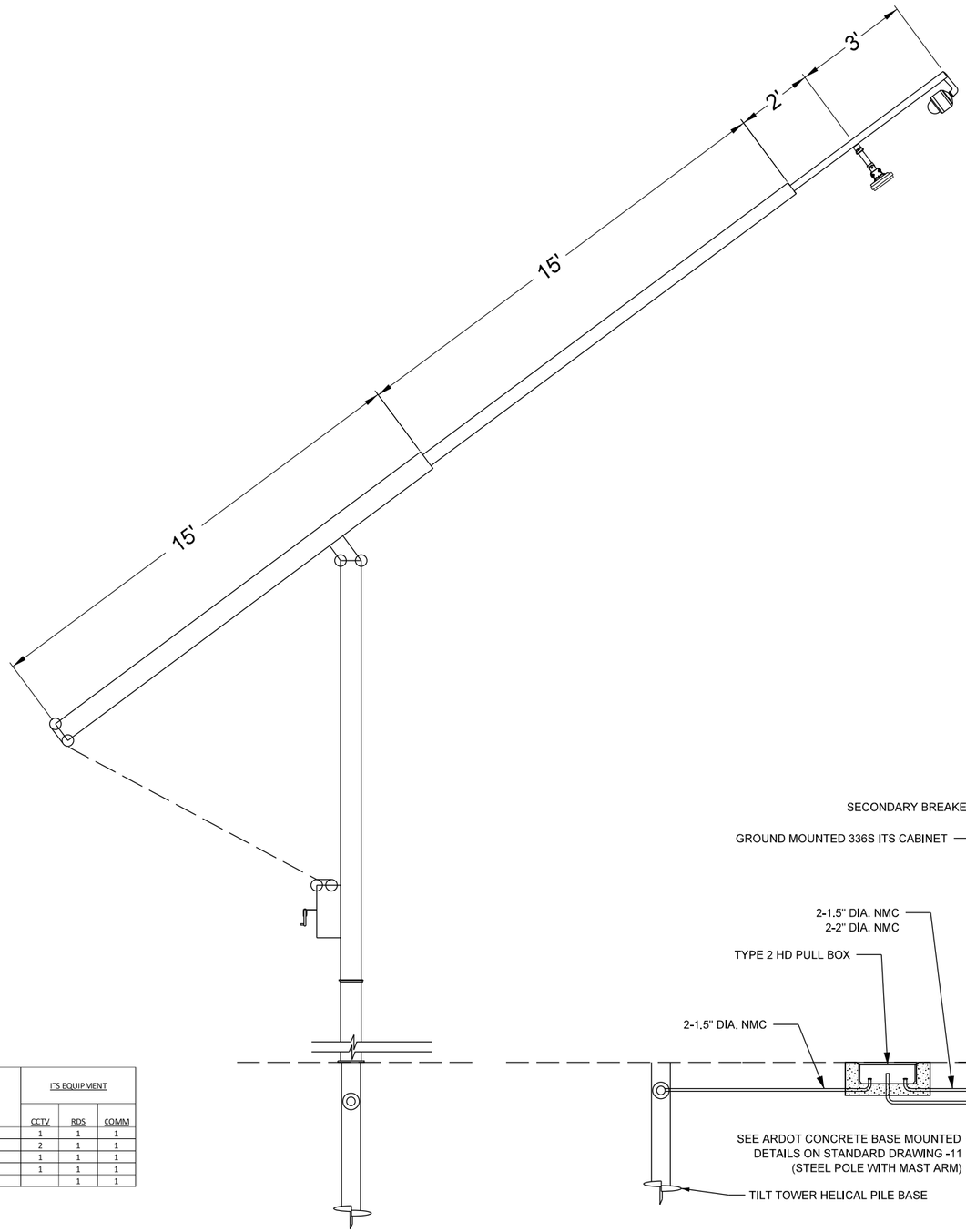

SITE NO.	LOCATION	ITS EQUIPMENT		
		CCTV	RDS	COMM
3	STA 219+37	1	1	1
4	STA 293+90	2	1	1
5	STA 388+00	1	1	1
7	STA 499+37	1	1	1
10	LM 4.11		1	1

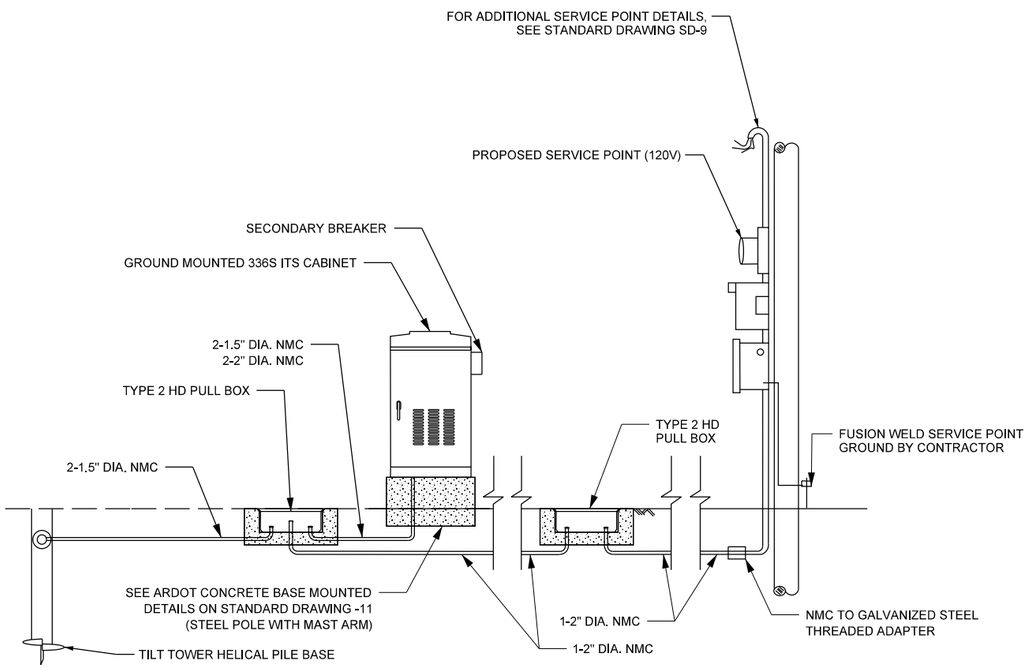

HBVinson
WORKSPACE: AHTD
L:\2017\17017660 - ARDOT 012326 Hwy 412 - Hwy 112\Drawings\ITS\ITS_Tilt Tower Detail.dgn
7/27/2023 1:49:36 PM
REVISED DATE:

DATE REVISED	DATE REVISED	FED. RD. DIST. NO.	STATE	JOB NO.	SHEET NO.	TOTAL SHEETS
		6	ARK.	012326	177	838
		ITS TILT TOWER STANDARD DETAIL				
2						

STATE OF ARKANSAS
LICENSED PROFESSIONAL ENGINEER
No.8141
NICCI D. TINER

DIGITALLY SIGNED 7/28/2023

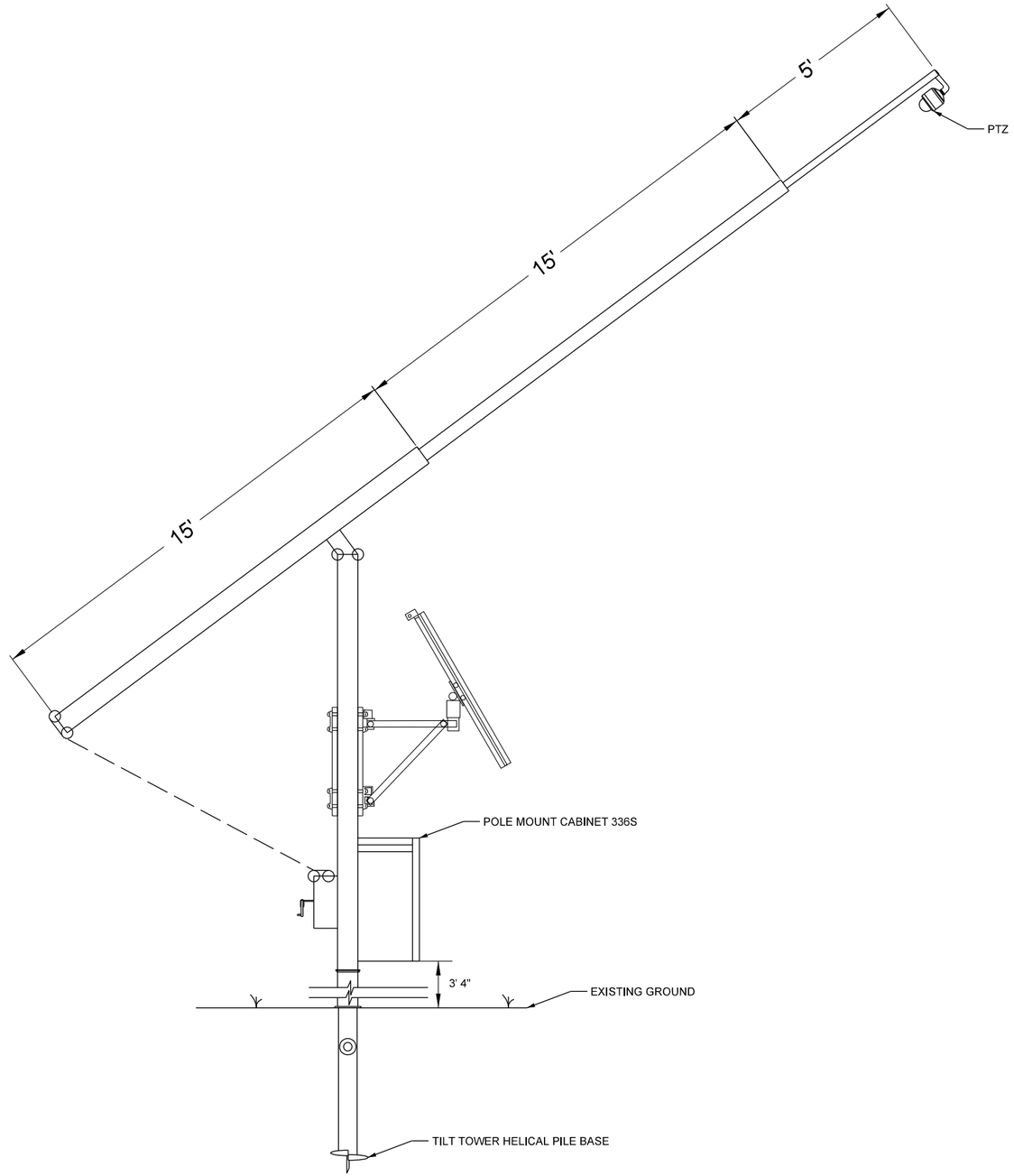

FRONT ELEVATION

Site No.	Location	ITS Equipment	
		CCTV	Comm
6	STA 441+25	1	1
9	LM 3.74	1	1

HBVinson 7/27/2023 11:49:37 PM
WORKSPACE: AHTD
L:\2017\170176\60 - ARDOT 012326 Hwy 412 - Hwy 112\Drawings\ITS\ITS_Tilt Tower Detail2.dgn
REVISED DATE:

DATE REVISED	DATE REVISED	FED. RD. DIST. NO.	STATE	JOB NO.	SHEET NO.	TOTAL SHEETS
		6	ARK.	012326	178	838
		SOIL BORING LOG				
2						

STATE OF ARKANSAS
LICENSED PROFESSIONAL ENGINEER
No.13436
SHAUN A. ROBERSON
DIGITALLY SIGNED 7/28/2023

SOIL BORING LOG (BOX 1 OF 4)

BORING NO. No.	APPROX. STATION	SAMPLE DEPTH (ft)	WATER CONTENT (%)	ATTERBERG LIMITS			PERCENT PASSING #200	UNIFIED CLASS.	AASHTO CLASS.
				LIQUID LIMIT	PLASTIC LIMIT	PLASTICITY INDEX			
1	165+00,CL	0.3-5.0	27	49	22	27	61	CL	A-6-7
4	183+00, CL	0.3-5.5	25	38	19	19	64	CL	A-6
6	195+00,CL	0.4-6.6	23	37	19	18	68	CL	A-6
9	213+00,CL	0.5-6.0	8	30	18	12	44	GC	A-6
11	221+00,CL	0.2-7.2	20	32	18	14	95	CL	A-6
13	229+00,CL	0.3-3.7	21	35	19	16	53	CL	A-6
16	245+00,CL	0.3-8.0	20	40	20	20	62	CL	A-6
19	259+00,CL	0.4-9.5	28	34	18	16	50	CL	A-6
23	278+70,CL	0.4-14.4	35	39	18	21	57	CL	A-6
30	315+00,CL	0.5-12.0	16	31	19	12	45	SC	A-6
33	333+00,25' R	0.4-7.4	20	31	18	13	38	SC	A-6
36	347+00,CL	0.5-5.5	17	37	19	18	59	CL	A-6
39	361+00,CL	0.4-14.3	25	37	19	18	61	CL	A-6
42	373+00,CL	0.3-17.5	22	37	19	18	58	CL	A-6
44	385+00,CL	0.5-10.0	33	39	20	19	19	GC	A-2-6
47	399+00,CL	0.7-22.0	17	28	20	8	50	SC	A-4
47	399+00,CL	22.0-34.0	21	37	19	18	66.3	CL	A-6
50	411+00,CL	0.6-17.0	34	44	23	21	69	CL	A-7-6
50	411+00,CL	17.0-28.0	34	48	27	21	56	CL	A-7-6
53	425+00,CL	0.7-7.0	30	47	21	26	73	CL	A-7-6
53	425+00,CL	7.0-19.0	32	47	24	23	65	CL	A-7-6
55	437+00,CL	0.7-11.0	13	41	20	21	52	CL	A-7-6
24	285+00,CL	0.5-16.0	23	43	22	21	57	CL	A-7-6
84	447+00,CL	1.0-22.0	17	33	17	16	58	CL	A-6
93	497+00,CL	0.3-5.0	25	27	20	7	63	CL-ML	A-4
89	473+00,CL	0.3-15.0	24	51	23	28	66	CH	A-7-6
95	507+00,CL	0.3-10.2	35	56	24	32	67	CH	A-7-6
249	198+00 US 412 RAMP 3,CL	0.3-5.0	21	31	20	11	59	CL	A-6
243	195+00 US 412 RAMP 2,38' R	0.3-9.8	25	44	22	22	75	CL	A-7-6
252	208+00 US 412 RAMP 3,CL	0.3-8.0	26	33	20	13	74	CL	A-6
259	22+67 HWY. 68,46' L	0.3-5.5	13	33	19	14	56	CL	A-6
278	35+00 MUSTEEN RD.,CL	0.3-5.0	28	41	22	19	66	CL	A-7-6
272	21+00 MUSTEEN RD., CL	0.3-18.0	22	37	20	17	64	CL	A-6
241	188+00 US 412 RAMP 1,42'L	0.6-9.0	25	43	20	23	49	SC	A-7-6
257	10+68 HWY. 68,39' R	0.6-10.0	28	38	21	17	66	CL	A-6
235	10+98 HWY.412B,60' L	0.6-11.0	19	32	16	16	60	CL	A-6

SOIL CHARACTERISTICS TABULATED ABOVE ARE REPRESENTATIVE AT THE LOCATION OF THE SAMPLE, AND FROM SURFACE INDICATIONS ARE TYPICAL FOR THE LIMIT SHOWN. THESE DATA ARE SHOWN FOR INFORMATION ONLY. THE STATE WILL NOT BE RESPONSIBLE FOR VARIATIONS IN THE SOIL CHARACTERISTICS AND/OR EXTENT OF SAME DIFFERING FROM THE ABOVE TABULATIONS.

SOIL BORING LOG (BOX 2 OF 4)

BORING NO.	APPROX. STATION	SAMPLE DEPTH (ft)	WATER CONTENT (%)	ATTERBERG LIMITS			PERCENT PASSING #200	UNIFIED CLASS.	AASHTO CLASS.
				LIQUID LIMIT	PLASTIC LIMIT	PLASTICITY INDEX			
269	18+70 LIBERTY AVE.,18' L	0.3-5.0	25	34	20	14	95	CL	A-6
260	18+00 JAVELLO RD.,24' R	0.6-8.0	15	27	22	5	30	GM	A-2-4
263	25+00 JAVELLO RD.,20' L	0.6-16.0	12	37	21	16	50	SC	A-6
304	18+00 HWY. 112, CL	0.6-5.0	34	32	20	12	62	CL	A-6
313	493+00 HWY. 112 RAMP 1,75' R	0.6-20.0	30	37	15	22	53	CL	A-6
315	496+00 HWY. 112 RAMP 1,CL	0.6-15.0	32	52	23	29	62	CH	A-7-6
309	484+00 HWY. 112 RAMP 1,38' L	0.6-20.0	27	42	19	23	60	CL	A-7-6
326	485+00 HWY. 112 RAMP 4,40' L	0.6-30.0	25	45	19	26	50	SC	A-7-6
330	494+00 HWY.112 RAMP 4,CL	0.6-5.0	27	41	19	22	66	CL	A-7-6
326	485+00 HWY. 112 RAMP 4,40' L	0.6-30.0	25	45	19	26	50	SC	A-7-6
130	191+00,183' R	5.0-11.5	28	49	30	19	40	SM	A-7-5
130	191+00,183' R	30.0-46.5	21	43	20	23	25	GC	A-2-7
128	186+00,168' R	5.0-26.5	24	36	21	15	27	SC	A-2-6
127	186+00,CL	35.0-45.5	27	NP	NP	NP	7	SW-SM	A-1-a
147	255+00,CL	4.4-10.9	18	25	19	6	32	SC-SM	A-2-4
150	266+00,84' L	10.00-21.5	27	41	19	22	33	SC	A-2-7
148	261+00,84' L	40.0-55.7	28	NP	NP	NP	43	SM	A-4
154	279+00,178' R	5.0-11.5	22	41	18	23	21	GC	A-2-7
152	271+00,84' R	5.0-31.5	24	38	20	18	27	GC	A-2-6
155	285+00,84' L	35.0-50.3	25	NP	NP	NP	22.9	GM	A-2-4
165	337+00,191' L	5.0-21.2	25	42	17	25	34	GC	A-2-7
166	337+00,177' R	15.0-26.1	34	50	21	29	31	GC	A-2-7
170	364+00,84' R	25.0-46.5	29	39	24	15	27	GC	A-2-6
180	421+00,CL	5.0-16.5	37	47	24	23	43	SC	A-7-6
181	421+00,156' R	20.0-26.5	50	38	27	11	42	SM	A-6
183	427+00,178' R	20.0-31.1	27	40	19	21	23	GC	A-2-6
194	487+00,84' L	5.0-16.5	27	32	19	13	45	SC	A-6
195	487+00,84' R	20.0-31.5	25	35	23	12	32	GC	A-2-6
200	509+00,166' R	30.0-46.5	26	32	29	3	23	GM	A-2-4
160	312+00,222' L	5.0-15.4	25	32	20	12	20	GC	A-2-6
162	312+00,202' R	10.0-20.6	24	32	19	13	25	GC	A-2-6
174	386+00,182' L	5.0-11.5	22	33	16	17	57	CL	A-6
178	405+00,84' L	10.0-26.5	32	38	31	7	31	GM	A-2-4
177	400+00,84' L	20.0-36.5	20	39	22	17	24	SC	A-2-6
142	244+00,247' L	5.0-10.9	20	31	21	10	41	SC	A-4

HBVinson
WORKSPACE: AHTD
L:\2017\170766O - ARDOT 012326 Hwy 412 - Hwy 112\Drawings\r012326_QTY.DGN
7/27/2023 1:49:43 PM
REVISED DATE:

DATE REVISED	DATE REVISED	FED. RD. DIST. NO.	STATE	JOB NO.	SHEET NO.	TOTAL SHEETS
		6	ARK.	012326	179	838
		SOIL BORING LOG				
②						

SOIL BORING LOG (BOX 3 OF 4)

BORING No.	APPROX. STATION	SAMPLE DEPTH (ft)	WATER CONTENT (%)	ATTERBERG LIMITS			PERCENT PASSING #200	UNIFIED CLASS.	AASHTO CLASS.
				LIQUID LIMIT	PLASTIC LIMIT	PLASTICITY INDEX			
141	239+00,123' R	10.0-15.6	24	33	26	7	35	SM	A-4
191	474+00,180' L	5.0-21.5	39	41	34	7	41	SM	A-5
187	458+00,CL	25.0-36.5	30	37	37	NP	26	GM	A-2-4
188	464+00,197' L	20.0-36.1	21	34	18	16	19	GC	A-2-6
247	202+00 US 412 RAMP 2, 120' R	5.0-11.5	44	49	26	23	50	SC	A-7-6
245	202+00 US 412 RAMP 2,104' L	15.0-26.5	29	33	16	17	12	GP-GC	A-2-6
256	179+00 US 412 RAMP 4,88' L	5.0-6.5	33	46	24	22	35	SC	A-2-7
256	179+00 US 412 RAMP 4,88' L	10.0-21.5	30	46	30	16	36	SM	A-7-5
255	179+00 US 412 RAMP 4,110' R	20.0-30.9	18	38	20	18	17	GC	A-2-6
265	35+00 JAVELLO RD.,76' L	5.0-11.5	31	43	21	22	32	SC	A-2-7
266	34+85 JAVELLO RD.,CL	5.0-15.6	19	30	23	7	33	SM	A-2-4
264	30+00 JAVELLO RD.,92' R	20.0-31.5	37	43	27	16	45	GM	A-7-6
277	33+00 MUSTEEN RD.,85' R	5.0-16.5	30	41	24	17	40	GC	A-7-6
276	33+00 MUSTEEN RD.,CL	10.0-26.5	30	46	24	22	35	GC	A-2-7
307	21+00 HWY. 112, 82' R	5.0-6.5	18	35	32	3	52	ML	A-4
307	21+00 HWY. 112, 82' R	10.0-26.5	38	29	26	3	31	GM	A-2-4
305	19+00 HWY. 112,90' R	5.0-5.5	8	NA	NA	NA	4	GP	A-1-a
311	487+00 HWY.112 RAMP 1,168' R	5.0-16.5	19	36	18	18	34	GC	A-2-6
311	487+00 HWY.112 RAMP 1,168' R	20.0-21.5	37	46	28	18	45	SM	A-7-6
311	487+00 HWY.112 RAMP 1,168' R	40.0-46.5	73	61	30	31	24	SC	A-2-7
314	495+00 HWY. 112 RAMP 1,105' L	10.0-11.4	20	25	21	4	40	GM	A-4
314	495+00 HWY. 112 RAMP 1,105' L	15.0-26.5	35	44	38	6	38	GM	A-5
314	495+00 HWY. 112 RAMP 1,105' L	30.0-41.2	30	36	31	5	27	GM	A-2-4
327	485+00 HWY. 112 RAMP 4,115' L	5.0-16.5	30	41	30	11	29	GM	A-2-7
327	485+00 HWY. 112 RAMP 4,115' L	20.0-26.5	31	37	32	5	30	SM	A-2-4
327	485+00 HWY. 112 RAMP 4,115' L	30.0-36.5	24	46	22	24	26	GC	A-2-7
332	497+00 HWY. 112 RAMP 4,122' L	10.0-20.3	15	32	21	11	18	GC	A-2-6
332	497+00 HWY. 112 RAMP 4,122' L	30.0-36.5	22	28	21	7	12	GP-GC	A-2-4

SOIL BORING LOG (BOX 4 OF 4)

BORING NO.	APPROX. STATION	SAMPLE DEPTH (ft)	WATER CONTENT (%)	ATTERBERG LIMITS			PERCENT PASSING #200	UNIFIED CLASS.	AASHTO CLASS.
				LIQUID LIMIT	PLASTIC LIMIT	PLASTICITY INDEX			
R48	459+00, CL - XNA RAMP 1	0.5-1.5	21	NON-PLASTIC			44	SM	A-4
R48	459+00, CL - XNA RAMP 1	2.5-3.5	21	42	21	21	47	SC	A-7-6
R51	475+00, CL - XNA RAMP 1	0.5-1.5	22	33	23	10	50	SC	A-4
R51	475+00, CL - XNA RAMP 1	2.5-3.5	20	36	23	13	54	CL	A-6
R53	425+75, CL - XNA RAMP 1	2.5-3.5	19	48	20	28	63	CL	A-7-6
R55	440+00, CL - XNA RAMP 2	2.5-3.5	21	33	25	8	39	SM	A-4
R56	445+00, CL - XNA RAMP 2	0.5-1.5	20	24	21	3	52	ML	A-4
R56	445+00, CL - XNA RAMP 2	4.5-5.5	25	55	35	20	32	SM	A-2-7
R60	440+00, CL - XNA RAMP 3	0.5-1.5	16	NON-PLASTIC			42	GM	A-4
R60	440+00, CL - XNA RAMP 3	2.5-3.5	21	29	17	12	35	GC	A-2-6
R61	445+00, CL - XNA RAMP 3	2.5-3.5	20	40	24	16	40	SC	A-6
R61	445+00, CL - XNA RAMP 3	9.0-10.0	9	NON-PLASTIC			20	SM	A-1-b
R63	432+00,CL	0.5-1.5	15				40	GM	A-4
R63	432+00,CL	2.5-3.5	19	39	23	16	44	GC	A-6
R64	437+00,CL	0.5-1.5	17	31	19	12	67	CL	A-6

SOIL CHARACTERISTICS TABULATED ABOVE ARE REPRESENTATIVE AT THE LOCATION OF THE SAMPLE, AND FROM SURFACE INDICATIONS ARE TYPICAL FOR THE LIMIT SHOWN. THESE DATA ARE SHOWN FOR INFORMATION ONLY. THE STATE WILL NOT BE RESPONSIBLE FOR VARIATIONS IN THE SOIL CHARACTERISTICS AND/OR EXTENT OF SAME DIFFERING FROM THE ABOVE TABULATIONS.

STATE OF ARKANSAS
LICENSED PROFESSIONAL ENGINEER
No.13436
SHAUN A. ROBERSON
DIGITALLY SIGNED 7/28/2023

HBVinson 7/27/2023 11:49:57 PM
WORKSPACE: AHTD
L:\2017\170176\60 - ARDOT 012326 Hwy 412 - Hwy 112\Drawings\r012326_QTY.DGN
REVISED DATE:

DATE REVISED	DATE REVISED	FED. RD. DIST. NO.	STATE	JOB NO.	SHEET NO.	TOTAL SHEETS
10/26/2023		6	ARK.	012326	180	838
(2)		QUANTITIES				

STATE OF ARKANSAS
LICENSED PROFESSIONAL ENGINEER
No.13436
SHAUN A. ROBERSON

DIGITALLY SIGNED 10/26/2023

CONSTRUCTION PAVEMENT MARKINGS AND PERMANENT PAVEMENT MARKINGS

DESCRIPTION	STAGE 1	STAGE 2	STAGE 3	END OF JOB	REMOVAL OF PERMANENT PAVEMENT MARKINGS	CONSTRUCTION PAVEMENT MARKINGS	REMOVABLE CONSTRUCTION PAVEMENT MARKINGS	REMOVAL OF CONSTRUCTION PAVEMENT MARKINGS	RAISED PAVEMENT MARKERS		ENHANCED THERMOPLASTIC PAVEMENT MARKING			THERMOPLASTIC PAVEMENT MARKING								REFLECTORIZED PAINT PAVEMENT MARKING			
									TYPE II (WHITE/RED)	TYPE II (YELLOW/YELLOW)	6" WHITE	6" YELLOW	12" WHITE	6" WHITE	6" YELLOW	8" WHITE	8" YELLOW	12" WHITE	WORDS	ARROWS	6" WHITE	6" YELLOW	10" WHITE	12" WHITE
	LIN. FT. - EACH				LIN. FT.				EACH		LIN. FT.								EACH		LIN. FT.			
REMOVAL OF PERMANENT PAVEMENT MARKINGS	7029	290	4488		11807																			
CONSTRUCTION PAVEMENT MARKINGS	1787	6250				8037																		
REMOVABLE CONSTRUCTION PAVEMENT MARKINGS	7813	15253	8398				31464																	
* REMOVAL OF CONSTRUCTION PAVEMENT MARKINGS		1391	1042					2433																
RAISED PAVEMENT MARKERS TYPE II (WHITE/RED)				1727					1727															
RAISED PAVEMENT MARKERS TYPE II (YELLOW/YELLOW)				147						147														
ENHANCED THERMOPLASTIC PAVEMENT MARKING WHITE (6")				108888							108888													
ENHANCED THERMOPLASTIC PAVEMENT MARKING YELLOW (6")				87214								87214												
ENHANCED THERMOPLASTIC PAVEMENT MARKING WHITE (12")				5694									5694											
THERMOPLASTIC PAVEMENT MARKING WHITE (6")				9380										9380										
THERMOPLASTIC PAVEMENT MARKING YELLOW (6")				20458											20458									
THERMOPLASTIC PAVEMENT MARKING WHITE (8")				1251												1251								
THERMOPLASTIC PAVEMENT MARKING YELLOW (8")				655													655							
THERMOPLASTIC PAVEMENT MARKING WHITE (12")				191														191						
THERMOPLASTIC PAVEMENT MARKING (WORDS)				20															20					
THERMOPLASTIC PAVEMENT MARKING (ARROWS)				30																30				
REFLECTORIZED PAINT PAVEMENT MARKING WHITE (6")				14394																	14394			
REFLECTORIZED PAINT PAVEMENT MARKING YELLOW (6")				13635																		13635		
REFLECTORIZED PAINT PAVEMENT MARKING WHITE (10")				724																			724	
REFLECTORIZED PAINT PAVEMENT MARKING WHITE (12")				60																				60
TOTALS:					**11807**	**8037**	**31464**	**2433**	**1727**	**147**	**108888**	**87214**	**5694**	**9380**	**20458**	**1251**	**655**	**191**	**20**	**30**	**14394**	**13635**	**724**	**60**

NOTE: THIS IS A HIGH TRAFFIC VOLUME ROAD AS DEFINED IN SECTION 604.03, STANDARD SPECIFICATIONS FOR HIGHWAY CONSTRUCTION.
NOTE: THE THERMOPLASTIC PAVEMENT MARKING (WORDS) QUANTITY HAS BEEN ESTIMATED BASED ON THE INCLUSION OF YIELD LINES.

* QUANTITY ESTIMATED.
SEE SECTION 104.03 OF THE STD. SPECS.
TO BE USED IF AND WHERE DIRECTED BY THE ENGINEER.

WBCallaway 10/25/2023 6:56:46 PM
WORKSPACE: AHTD
L:\2017\17017660 - ARDOT 012326 Hwy 412 - Hwy 112\Drawings\r012326_QTY.DGN
REVISED DATE:

STATE OF ARKANSAS
LICENSED PROFESSIONAL ENGINEER
No.13436
SHAUN A. ROBBERSON

DIGITALLY SIGNED 7/28/2023

DATE REVISED	DATE REVISED	FED. RD. DIST. NO.	STATE	JOB NO.	SHEET NO.	TOTAL SHEETS
		6	ARK.	012326	181	838
②		QUANTITIES				

ADVANCE WARNING SIGNS AND DEVICES

SIGN NUMBER	DESCRIPTION	SIGN SIZE	STAGE 1	STAGE 2	STAGE 3	END OF JOB	MAXIMUM NUMBER REQUIRED	TOTAL SIGNS REQUIRED		CONSTRUCTION PROJECT INFORMATION SIGN	VERTICAL PANELS	TRAFFIC DRUMS	BARRICADES (TYPE III)		PRECAST CONCRETE BARRIER LEFT IN PLACE	FURNISHING & INSTALLING PRECAST CONC. BARRIER	RELOCATING PRECAST CONCRETE BARRIER	TEMPORARY IMPACT ATTENUATION BARRIER LEFT IN PLACE	TEMPORARY IMPACT ATTENUATION BARRIER (REPAIR)	PORTABLE CONSTRUCTION LIGHTING
													RIGHT	LEFT						
			LIN. FT. - EACH					NO.	SQ. FT.	EACH					LIN. FT.			EACH		DAY
W20-1	ROAD WORK 1 MILE	48"x48"	2	2	2		2	2	32.0											
W20-1	ROAD WORK 1/2 MILE	48"x48"	2	2	2		2	2	32.0											
W20-1	ROAD WORK 1500 FT.	48"x48"	7	7	9		9	9	144.0											
W20-1	ROAD WORK 1000 FT.	48"x48"	5	5	7		7	7	112.0											
W20-1	ROAD WORK 500 FT.	48"x48"	5	4	8		8	8	128.0											
W20-1	ROAD WORK AHEAD	48"x48"	4		4		4	4	64.0											
W20-3	ROAD CLOSED AHEAD	48"x48"		2	2		2	2	32.0											
G20-2	END ROAD WORK	48"x24"	8	9	9		9	9	72.0											
W1-4AR	REVERSE CURVE RT.	48"x48"		2			2	2	32.0											
W1-4AL	REVERSE CURVE LT.	48"x48"		2			2	2	32.0											
W1-4BL	REVERSE CURVE LT. (2 LANES)	48"x48"	1	2			2	2	32.0											
W1-4BR	REVERSE CURVE RT. (2 LANES)	48"x48"	3	2			3	3	48.0											
W13-1	SPEED LIMIT (ADVISORY)	24"x24"		4			4	4	32.0											
R11-2	ROAD CLOSED	48"x30"	7	11	14		14	14	140.0											
R11-3A	ROAD CLOSED LOCAL TRAFFIC ONLY	60"x30"		2	2		2	2	25.0											
W1-6	LARGE ARROW	48"x24"	5	7	5		7	7	56.0											
W1-8	CHEVRONS	18"x24"	8	28			28	28	84.0											
W3-5	REDUCED SPEED AHEAD	48"x48"	3	3	5		5	5	80.0											
R1-1	STOP	30"x30"		1			1	1	6.3											
R2-1	SPEED LIMIT	48"x60"	5	5	7		7	7	140.0											
R55-1	FINES DOUBLE IN WORK ZONES	36"x60"	3	3	3		3	3	45.0											
RSP-1	SHOULDER CLOSED	48"x30"	2				2	2	24.0											
W21-5	SHOULDER WORK	30"x30"	2				2	2	12.5											
W21-5A	LEFT SHOULDER CLOSED	48"x48"			2		2	2	32.0											
W6-2	DIVIDED HIGHWAY ENDS	36"x36"	2				2	2	18.0											
W6-3	TWO-WAY TRAFFIC	48"x48"	2				2	2	32.0											
M4-8A	END DETOUR	48"x24"		2	2		2	2	16.0											
M4-10R	DETOUR ARROW RIGHT	48"x18"		3	3		3	3	18.0											
M4-10L	DETOUR ARROW LEFT	48"x18"		3	3		3	3	18.0											
W16-8P	DETOUR ROAD SIGN	48"x15"		6	6		6	6	30.0											
W8-11	UNEVEN LANES	48"x48"		2	1		2	2	32.0											
SPECIAL	CONSTRUCTION PROJECT INFORMATION SIGN	48"x96"	1	1	1		1			1										
	VERTICAL PANELS			10			10				10									
	TRAFFIC DRUMS		186	139	214		214					214								
	TYPE III BARRICADE-RT. (16')		2	2	4		4						64							
	TYPE III BARRICADE-LT. (16')		1	4	6		6							96						
	TYPE III BARRICADE-RT. (24')			2			2						48							
	TYPE III BARRICADE-LT. (24')			1	2		2							48						
	TYPE III BARRICADE-RT. (40')		1				1						40							
	TYPE III BARRICADE-LT. (48')		1	1	1		1							48						
	PRECAST CONCRETE BARRIER LEFT IN PLACE					4180	4180								4180					
	FURNISHING AND INSTALLING PRECAST CONCRETE BARRIER			1180			1180									1180				
	RELOCATING PRECAST CONCRETE BARRIER				260		260										260			
	TEMPORARY IMPACT ATTENUATION BARRIER LEFT IN PLACE					3	3											3		
	TEMPORARY IMPACT ATTENUATION BARRIER (REPAIR)					3	3												3	
	PORTABLE CONSTRUCTION LIGHTING																			180
TOTALS:									**1600.8**	**1**	**10**	**214**	**152**	**192**	**4180**	**1180**	**260**	**3**	**3**	**180**

NOTE: THIS IS A HIGH TRAFFIC VOLUME ROAD AS DEFINED IN SECTION 604.03, STANDARD SPECIFICATIONS FOR HIGHWAY CONSTRUCTION.

HBVinson 7/27/2023 1:50:15 PM
WORKSPACE: AHTD
L:\2017\170\T660 - ARDOT 012326 Hwy 412 - Hwy 112\Drawings\r012326_QTY.DGN
REVISED DATE:

DATE REVISED	DATE REVISED	FED. RD. DIST. NO.	STATE	JOB NO.	SHEET NO.	TOTAL SHEETS
10-30-2023		6	ARK.	012326	182	838
(2)		QUANTITIES				

STATE OF ARKANSAS
LICENSED PROFESSIONAL ENGINEER
No.13436
SHAUN A. ROBERSON

DIGITALLY SIGNED 10/30/2023

EARTHWORK

STATION	STATION	LOCATION / DESCRIPTION	UNCLASSIFIED EXCAVATION	REMOVING AND REPLACING TOPSOIL	COMPACTED EMBANKMENT	ROCK FILL
			CU. YD.			
144+68	515+00	MAIN LANES - STAGE 1	19225		14931	
144+68	515+00	MAIN LANES - STAGE 2	10571		6605	
144+68	515+00	MAIN LANES - STAGE 3	2747770		1909248	413433
144+68	515+00	MAIN LANES - STAGE 3 UNDERCUT	6418		6418	
177+62	194+51	HWY. 412B RAMP 1 - STAGE 1	1801		470	
177+62	194+51	HWY. 412B RAMP 1 - STAGE 2	25		11299	
177+62	194+51	HWY. 412B RAMP 1 - STAGE 3	3233		113	
192+43	206+69	HWY. 412B RAMP 2 - STAGE 2	8540		55836	
192+43	206+69	HWY. 412B RAMP 2 - STAGE 3	1661		1433	
192+33	205+32	HWY. 412B RAMP 3 - STAGE 2	1989		34807	
192+33	205+32	HWY. 412B RAMP 3 - STAGE 3			261	
170+68	195+51	HWY. 412B RAMP 4 - STAGE 1	93855		22151	
447+94	484+20	XNA ACCESS RD. RAMP 1	54390		112347	
416+52	460+87	XNA ACCESS RD. RAMP 2	96115		204579	
434+38	449+34	XNA ACCESS RD. RAMP 3	34647		12791	
431+18	442+58	XNA ACCESS RD. RAMP 4	6901		6466	1350
10+00	18+00	HWY. 412B - STAGE 1	2831		21	
10+00	18+00	HWY. 412B - STAGE 3	1639		25	
43+50	56+61	HWY. 68 - STAGE 1	1728		108	
43+50	56+61	HWY. 68 - STAGE 2	4748		434	
43+50	56+61	HWY. 68 - STAGE 3	3251		108	
14+27	39+70	MUSTEEN RD.	19300		16044	12200
14+00	28+00	LIBERTY AVE. DETOUR - STAGE 1	3060		1339	
14+00	28+00	LIBERTY AVE. - STAGE 2	311		4637	
14+00	28+00	LIBERTY AVE. DETOUR - STAGE 3	1788		2361	
15+37	19+90	LIBERTY AVE. ACCESS RD.	730		165	
17+00	38+00	JAVELLO RD. - STAGE 2	45566		16620	
17+00	38+00	JAVELLO RD. - STAGE 3	2494		1451	
15+00	25+00	MARCHANT RD.	444			
12+61	19+88	MARCHANT RD. ACCESS	1004		3631	
19+00	30+13	ROBBINS RD.	217			
ENTIRE	PROJECT	APPROACHES			628	
ENTIRE	PROJECT	TEMPORARY APPROACHES			60	
ENTIRE	PROJECT			194011		
TOTALS:			**3176252**	**194011**	**2447387**	**426983**

SOIL STABILIZATION

STATION	STATION	LOCATION / DESCRIPTION	SOIL STABILIZATION
			TON
ENTIRE	PROJECT	TO BE USED IF AND WHERE DIRECTED BY THE ENGINEER.	1000
TOTAL:			**1000**

QUANTITY ESTIMATED.
SEE SECTION 104.03 OF THE STD. SPECS.

PRESPLITTING

LOCATION	PRESPLITTING
	SQ.YD.
ENTIRE PROJECT - TO BE USED IF AND WHERE DIRECTED BY THE ENGINEER	8300
TOTAL:	**8300**

NOTE: QUANTITY ESTIMATED.
SEE SECTION 104.03 OF THE STD. SPECS.

SUBGRADE PREPARATION

STATION	STATION	LOCATION	LENGTH
			STATIONS
483+09.00	499+04.00	HWY. 112 RAMP 4	15.95
478+50.00	514+00.00	MAIN LANES	35.50
480+00.00	501+33.00	HWY. 112 RAMP 1	21.33
TOTAL:			**72.78**

CLEARING AND GRUBBING

STATION	STATION	LOCATION	CLEARING	GRUBBING
			STATION	
144+68	535+00	MAIN LANES	391	391
172+37	194+51	HWY. 412B RAMP 1	23	23
192+25	209+00	HWY. 412B RAMP 2	17	17
192+20	210+58	HWY. 412B RAMP 3	19	19
169+46	195+51	HWY. 412B RAMP 4	27	27
446+49	484+24	XNA ACCESS RD. RAMP 1	38	38
416+52	461+83	XNA ACCESS RD. RAMP 2	46	46
429+54	453+47	XNA ACCESS RD. RAMP 3	24	24
428+87	444+25	XNA ACCESS RD. RAMP 4	16	16
478+76	501+62	HWY. 112 RAMP 1	23	23
483+09	499+33	HWY. 112 RAMP 4	17	17
10+00	18+00	HWY. 412B	8	8
43+50	56+61	HWY. 68	14	14
14+27	39+70	MUSTEEN RD.	26	26
14+50	26+50	LIBERTY AVE.	12	12
17+00	38+00	JAVELLO RD.	21	21
TOTALS:			**722**	**722**

EROSION CONTROL

STATION	STATION	LOCATION	PERMANENT EROSION CONTROL					TEMPORARY EROSION CONTROL									
			SEEDING	LIME	MULCH COVER	WATER	SECOND SEEDING APPLICATION	TEMPORARY SEEDING	MULCH COVER	WATER	SAND BAG DITCH CHECKS	ROCK DITCH CHECKS	DROP INLET SILT FENCE	SILT FENCE	DIVERSION DITCH	PIPE FOR SLOPE DRAINS	DUMPED RIPRAP
											(E-5)	(E-6)	(E-7)	(E-11)	(E-8)	SLOPE DRAIN (E-12)	
			ACRE	TON	ACRE	M.GAL.	ACRE	ACRE	ACRE	M.GAL.	BAG	CU.YD.	LIN. FT.	LIN. FT.	LIN. FT.	LIN. FT.	CU.YD.
ENTIRE	PROJECT	CLEARING AND GRUBBING						256.93	256.93	5241.4	2640	99	200	29735	950	355	6
ENTIRE	PROJECT	STAGE 1						12.20	12.20	248.8	1144	75	20	3435	395	110	2
ENTIRE	PROJECT	STAGE 2						16.18	16.18	330.1	1452	99	40	1065	700	165	9
ENTIRE	PROJECT	STAGE 3	240.51	481.01	240.51	24531.8	240.51	223.52	223.52	4559.8	14234	441	600	5965	7470	1460	42
*ENTIRE PROJECT TO BE USED IF AND WHERE DIRECTED BY THE ENGINEER.											1947	72	86	4021	952	209	6
TOTALS:			**240.51**	**481.01**	**240.51**	**24531.8**	**240.51**	**508.83**	**508.83**	**10380.1**	**21417**	**786**	**946**	**44221**	**10467**	**2299**	**65**

BASIS OF ESTIMATE:
LIME .....2 TONS / ACRE OF SEEDING
WATER.....102.0 M.G. / ACRE OF SEEDING
WATER.....20.4 M.G. / ACRE OF TEMPORARY SEEDING
SAND BAG DITCH CHECKS.....22 BAGS / LOCATION
ROCK DITCH CHECKS.....3 CU.YD./LOCATION

EROSION CONTROL - CONTINUED

STATION	STATION	LOCATION	TEMPORARY EROSION CONTROL										
			SEDIMENT BASIN	ROCK FILTER FOR SEDIMENT BASIN	DUMPED RIPRAP	GEOTEXTILE FABRIC (TYPE 5)	SEDIMENT BASIN	ROCK FILTER FOR SEDIMENT BASIN	PIPE CULVERT FOR SEDIMENT BASIN	DUMPED RIPRAP	SEDIMENT BASIN	OBLITERATION OF SEDIMENT BASIN	*SEDIMENT REMOVAL & DISPOSAL
			SEDIMENT BASIN WITH RIPRAP OUTLET (E-9)				SEDIMENT BASIN WITH PIPE OUTLET (E-10)				(E-14)		
			CU.YD.	TON	CU.YD.	SQ. YD.	CU.YD.	TON	LIN. FT.	CU.YD.	CU.YD.	CU.YD.	CU. YD.
ENTIRE	PROJECT	CLEARING AND GRUBBING	15486	45	93	137	4053	10	20	50		19539	5170
ENTIRE	PROJECT	STAGE 1											205
ENTIRE	PROJECT	STAGE 2											140
ENTIRE	PROJECT	STAGE 3									3761	3803	1037
*ENTIRE PROJECT TO BE USED IF AND WHERE DIRECTED BY THE ENGINEER.			1549	5	10	14	406	2	2	5	377	2335	1701
TOTALS:			**17035**	**50**	**103**	**151**	**4459**	**12**	**22**	**55**	**4138**	**25677**	**8253**

*QUANTITIES ESTIMATED.
SEE SECTION 104.03 OF THE STD. SPECS.

NOTE: THE TEMPORARY EROSION CONTROL DEVICES SHOWN ABOVE AND ON THE PLANS SHALL BE INSTALLED IN SUCH A SEQUENCE AS TO DETER EROSION AND SEDIMENTATION ON U.S. WATERWAYS AS EXPLAINED BY THE NATIONAL POLLUTANT DISCHARGE ELIMINATION SYSTEM PERMIT.

ACHM PATCHING OF EXISTING ROADWAY

DESCRIPTION	TON
ENTIRE PROJECT - TO BE USED IF AND WHERE	150
DIRECTED BY THE ENGINEER	
TOTAL:	**150**

NOTE: QUANTITY ESTIMATED.
SEE SECTION 104.03 OF THE STD. SPECS.

ASPHALT CONCRETE PATCHING FOR MAINTENANCE OF TRAFFIC

LOCATION	TON	TACK COAT
		GALLON
ENTIRE PROJECT - TO BE USED IF AND WHERE	175	350
DIRECTED BY THE ENGINEER		
TOTALS:	**175**	**350**

BASIS OF ESTIMATE:
ASPHALT CONCRETE PATCHING FOR MAINTENANCE OF TRAFFIC...25 TON/MILE
TACK COAT FOR MAINTENANCE OF TRAFFIC.....50 GAL./MILE

EPSherrill 10/30/2023 10:59:11 AM
WORKSPACE: AHTD
L:\20\T\T01T660 - ARDOT 012326 Hwy 412 - Hwy 112\Drawings\r012326_QTY.DGN
REVISED DATE:



DIGITALLY SIGNED 7/28/2023

DATE REVISED	DATE REVISED	FED. RD. DIST. NO.	STATE	JOB NO.	SHEET NO.	TOTAL SHEETS
		6	ARK.	012326	183	838
②		QUANTITIES				

REMOVAL AND DISPOSAL OF ITEMS (BOX 1 OF 2)

STATION	STATION	LOCATION	GATES	CONCRETE ISLANDS	CONCRETE DRIVEWAYS	FOUNDATIONS	PRECAST CONCRETE BARRIER LEFT IN PLACE	GUARDRAIL	BUILDINGS	BILLBOARDS	SIGNS	PLANTERS	MAILBOXES	FLAG POLE	WIRE ROPE SAFETY FENCE END TERMINAL	IMPACT ATTENUATION BARRIER
			EACH	SQ. YD.	SQ. YD.	SQ. YD.	LIN. FT.	LIN. FT.	EACH	EACH	EACH	EACH	EACH	EACH	EACH	EACH
C.L. MEDIAN																
153+50	174+65	MAIN LANES - RT.													1	
165+58	165+58	MAIN LANES - LT.								1						
166+35	166+35	MAIN LANES - LT.								1						
174+98	174+98	MAIN LANES - RT.									1					
175+54	175+54	MAIN LANES - LT.									1					
175+76	175+76	MAIN LANES - RT.									1					
177+02	177+02	MAIN LANES - LT.									1					
179+35	179+35	MAIN LANES - LT.									1					
188+51	188+51	MAIN LANES - LT.							1							
190+23	190+23	MAIN LANES - LT.							1							
190+53	190+53	MAIN LANES - LT.							1							
193+46	193+46	MAIN LANES - LT.							1							
194+97	194+97	MAIN LANES - LT.							1							
195+37	195+37	MAIN LANES - RT.							1							
195+62	195+62	MAIN LANES - RT.							1							
227+61	227+61	MAIN LANES - RT.	1													
228+59	228+59	MAIN LANES - LT.				14										
228+86	228+86	MAIN LANES - RT./LT.				20										
229+21	229+21	MAIN LANES - RT.				24										
229+67	229+67	MAIN LANES - RT.	1													
235+53	235+53	MAIN LANES - LT.	1													
274+50	274+50	MAIN LANES - RT.	1													
274+54	274+54	MAIN LANES - LT.	1													
275+12	275+12	MAIN LANES - RT./LT.							1							
275+93	275+93	MAIN LANES - RT.				72										
276+10	276+10	MAIN LANES - RT./LT.							1							
276+16	276+16	MAIN LANES - RT.	1													
293+71	293+71	MAIN LANES - RT.							1							
294+28	294+28	MAIN LANES - RT.							1							
294+60	294+60	MAIN LANES - RT.	1													
294+68	294+68	MAIN LANES - RT.							1							
295+88	295+88	MAIN LANES - LT.											1			
296+29	296+29	MAIN LANES - RT.				35										
296+31	296+31	MAIN LANES - RT./LT.							1							
298+42	298+42	MAIN LANES - LT.				15										
300+34	300+34	MAIN LANES - RT.											1			
300+67	300+67	MAIN LANES - RT.											1			
303+07	303+07	MAIN LANES - LT.							1							
303+62	303+62	MAIN LANES - RT.							1							
303+65	303+65	MAIN LANES - LT.							1							
304+05	304+05	MAIN LANES - RT.							1							
304+76	304+76	MAIN LANES - RT.										1				
305+25	305+25	MAIN LANES - RT.							1							
332+97	332+97	MAIN LANES - LT.	1													
340+06	340+06	MAIN LANES - RT.							1							
345+15	345+15	MAIN LANES - RT.				8										
345+65	345+65	MAIN LANES - RT.							1							
345+97	345+97	MAIN LANES - RT.							1							
346+95	346+95	MAIN LANES - RT.							1							
347+79	347+79	MAIN LANES - RT./LT.							1							
348+35	348+35	MAIN LANES - LT.							1							
348+49	348+49	MAIN LANES - RT.							1							
349+09	349+09	MAIN LANES - RT.	1													
349+49	349+49	MAIN LANES - RT.							1							
362+01	362+01	MAIN LANES - RT.	1													
384+53	384+53	MAIN LANES - LT.							1							
384+60	384+60	MAIN LANES - LT.							1							
385+27	385+27	MAIN LANES - LT.							1							
385+27	385+27	MAIN LANES - LT.												1		
389+35	390+94	MAIN LANES - RT./LT.			344											
396+73	396+73	MAIN LANES - RT.							1							
397+06	397+06	MAIN LANES - RT.							1							
397+89	397+89	MAIN LANES - RT.							1							
399+62	399+62	MAIN LANES - RT./LT.							1							
400+30	400+30	MAIN LANES - RT.							1							
400+63	400+63	MAIN LANES - LT.							1							
407+94	407+94	MAIN LANES - LT.							1							
408+57	408+57	MAIN LANES - LT.							1							
408+84	408+84	MAIN LANES - LT.							1							
409+11	409+11	MAIN LANES - LT.							1							
412+86	414+02	MAIN LANES - RT./LT.			624											
413+62	413+62	MAIN LANES - LT.							1							
413+79	413+79	MAIN LANES - RT.							1							
414+37	414+37	MAIN LANES - RT./LT.							1							
442+72	442+72	MAIN LANES - RT.							1							
443+40	443+40	MAIN LANES - RT.							1							
445+83	445+83	MAIN LANES - RT./LT.							1							
447+60	447+60	MAIN LANES - LT.	1													
455+28	455+28	MAIN LANES - LT.							1							
473+94	473+94	MAIN LANES - LT.											1			
513+66	513+66	MAIN LANES - RT.						45								
514+51	541+13	MAIN LANES - LT.					2662									
541+13	541+13	MAIN LANES - LT.														1
SUBTOTALS (BOX 1 OF 2):			11		968	188	2662	45	46	2	5	1	4	1	1	1

EROSION CONTROL MATTING (BOX 1 OF 2)

STATION	STATION	LOCATION	LENGTH	CLASS 3
			LIN. FT.	SQ. YD.
C.L. MEDIAN				
154+00.00	155+45.00	MAIN LANES - LT.	145.00	128.89
154+53.00	156+90.00	MAIN LANES - RT.	237.00	210.67
157+00.00	158+91.00	MAIN LANES - LT.	191.00	169.78
160+53.00	169+40.00	MAIN LANES - LT.	887.00	788.44
160+90.00	165+90.00	MAIN LANES - RT.	500.00	444.44
171+20.00	172+37.00	MAIN LANES - RT.	117.00	104.00
194+00.00	198+71.00	MAIN LANES - LT.	471.00	418.67
209+00.00	218+57.00	MAIN LANES - RT.	957.00	850.67
210+70.00	218+35.00	MAIN LANES - LT.	765.00	680.00
218+67.00	219+19.00	MAIN LANES - RT.	52.00	46.22
220+53.00	229+00.00	MAIN LANES - RT.	847.00	752.89
221+00.00	239+00.00	MAIN LANES - LT.	1800.00	1600.00
232+25.00	235+00.00	MAIN LANES - RT.	275.00	244.44
236+75.00	241+00.00	MAIN LANES - RT.	425.00	377.78
243+78.00	248+00.00	MAIN LANES - RT.	422.00	375.11
245+42.00	251+00.00	MAIN LANES - LT.	558.00	496.00
256+80.00	260+00.00	MAIN LANES - LT.	320.00	284.44
257+40.00	266+00.00	MAIN LANES - RT.	860.00	764.44
261+00.00	267+00.00	MAIN LANES - LT.	600.00	533.33
269+01.00	272+00.00	MAIN LANES - RT.	299.00	265.78
270+00.00	273+00.00	MAIN LANES - LT.	300.00	266.67
281+00.00	292+20.00	MAIN LANES - LT.	1120.00	995.56
281+00.00	290+25.00	MAIN LANES - RT.	925.00	822.22
291+00.00	293+00.00	MAIN LANES - RT.	200.00	177.78
299+00.00	300+40.00	MAIN LANES - RT.	140.00	124.44
301+00.00	307+50.00	MAIN LANES - LT.	650.00	577.78
302+00.00	309+00.00	MAIN LANES - RT.	700.00	622.22
311+00.00	316+00.00	MAIN LANES - RT.	500.00	444.44
315+00.00	317+00.00	MAIN LANES - LT.	200.00	177.78
321+00.00	323+25.00	MAIN LANES - LT.	225.00	200.00
322+60.00	323+00.00	MAIN LANES - RT.	40.00	35.56
325+00.00	334+10.00	MAIN LANES - LT.	910.00	808.89
325+00.00	328+00.00	MAIN LANES - RT.	300.00	266.67
330+00.00	334+30.00	MAIN LANES - RT.	430.00	382.22
340+50.00	354+00.00	MAIN LANES - RT.	1350.00	1200.00
340+70.00	355+00.00	MAIN LANES - LT.	1430.00	1271.11
358+90.00	369+00.00	MAIN LANES - RT.	1010.00	897.78
358+90.00	370+00.00	MAIN LANES - LT.	1110.00	986.67
372+20.00	374+90.00	MAIN LANES - RT.	270.00	240.00
383+53.00	386+34.00	MAIN LANES - LT.	281.00	249.78
387+70.00	391+00.00	MAIN LANES - LT.	330.00	293.33
393+00.00	399+00.00	MAIN LANES - LT.	600.00	533.33
394+00.00	416+80.00	MAIN LANES - RT.	2280.00	2026.67
411+00.00	419+40.00	MAIN LANES - LT.	840.00	746.67
423+00.00	425+00.00	MAIN LANES - LT.	200.00	177.78
428+01.00	429+49.00	MAIN LANES - LT.	148.00	131.56
432+00.00	437+40.00	MAIN LANES - RT.	540.00	480.00
438+52.00	441+00.00	MAIN LANES - RT.	248.00	220.44
441+68.00	446+90.00	MAIN LANES - LT.	522.00	464.00
441+68.00	446+49.00	MAIN LANES - RT.	481.00	427.56
449+23.00	457+40.00	MAIN LANES - RT.	817.00	726.22
461+94.00	462+50.00	MAIN LANES - RT.	56.00	49.78
463+93.00	465+00.00	MAIN LANES - LT.	107.00	95.11
465+64.00	472+20.00	MAIN LANES - RT.	656.00	583.11
469+00.00	470+00.00	MAIN LANES - LT.	100.00	88.89
474+90.00	479+00.00	MAIN LANES - RT.	410.00	364.44
475+70.00	479+70.00	MAIN LANES - LT.	400.00	355.56
482+10.00	483+09.00	MAIN LANES - LT.	99.00	88.00
SUBTOTAL (BOX 1 OF 2):				28136.01

HBVinson 7/27/2023 13:50:42 PM
WORKSPACE: AHTD
L:\20\T0176660 - ARDOT 012326 Hwy 412 - Hwy 112\Drawings\r012326_QTY.DGN
REVISED DATE:

DATE REVISED	DATE REVISED	FED. RD. DIST. NO.	STATE	JOB NO.	SHEET NO.	TOTAL SHEETS
		6	ARK.	012326	184	838
②		QUANTITIES				

STATE OF ARKANSAS
LICENSED PROFESSIONAL ENGINEER
No.13436
SHAUN A. ROBERSON

DIGITALLY SIGNED 8/09/2023

REMOVAL AND DISPOSAL OF ITEMS (BOX 2 OF 2)

STATION	STATION	LOCATION	GATES	CONCRETE ISLANDS	CONCRETE DRIVEWAYS	FOUNDATIONS	PRECAST CONCRETE BARRIER LEFT IN PLACE	GUARDRAIL	BUILDINGS	BILLBOARDS	SIGNS	PLANTERS	MAILBOXES	FLAG POLE	WIRE ROPE SAFETY FENCE END TERMINAL	IMPACT ATTENUATION BARRIER
			EACH	SQ. YD.	SQ. YD.	SQ. YD.	LIN. FT.	LIN. FT.	EACH	EACH	EACH	EACH	EACH	EACH	EACH	EACH
HWY. 412B																
173+86	173+86	RAMP 1 - RT.									1					
174+69	174+69	RAMP 1 - RT.									1					
175+02	175+02	RAMP 1 - RT.									1					
175+62	175+62	RAMP 1 - RT.									1					
176+14	190+69	RAMP 1 - LT.													2	
179+51	179+51	RAMP 1 - RT.									1					
183+86	183+86	RAMP 1 - LT.									2					
186+10	186+10	RAMP 1 - RT.									1					
186+30	186+30	RAMP 1 - LT.									1					
187+83	187+83	RAMP 1 - RT./LT.									2					
188+53	188+53	RAMP 1 - RT.									1					
191+89	191+89	RAMP 1 - LT.									1					
192+13	192+13	RAMP 1 - RT.									1					
193+54	193+54	RAMP 1 - RT.									1					
195+15	195+15	RAMP 2 - LT.							1							
194+62	194+62	RAMP 3 - LT.							1							
195+69	195+69	RAMP 3 - LT.							1							
188+85	188+85	RAMP 3 - RT.									1					
10+70	10+70	MAIN LANES - LT.									1					
11+14	11+14	MAIN LANES - LT.									1					
11+33	11+33	MAIN LANES - RT.									1					
11+67	11+67	MAIN LANES - LT.									1					
11+85	11+85	MAIN LANES - LT.									3					
17+70	17+70	MAIN LANES - LT.									1					
HWY. 112																
11+96	11+96	MAIN LANES - RT.									1					
16+34	16+34	MAIN LANES - RT.									1					
498+08	498+08	RAMP 4 - LT.									1					
498+14	498+14	RAMP 4 - RT./LT.					80									
499+01	499+01	RAMP 4 - LT.									1					
500+62	500+62	RAMP 1 - RT.									1					
500+68	500+68	RAMP 1 - RT./LT.					120									
500+80	500+80	RAMP 1 - RT.									1					
501+02	501+02	RAMP 1 - LT.									1					
HWY. 68																
42+97	42+97	MAIN LANES - RT.									1					
45+71	45+71	MAIN LANES - LT.											1			
47+57	47+57	MAIN LANES - RT.									1					
47+88	47+88	MAIN LANES - RT./LT.									2					
48+31	48+31	MAIN LANES - LT.											1			
49+73	49+73	MAIN LANES - RT./LT.									2					
53+69	53+69	MAIN LANES - LT.									1					
54+96	54+96	MAIN LANES - LT.									1					
55+59	55+59	MAIN LANES - LT.											1			
56+04	56+50	MAIN LANES - RT.		108												
56+42	56+50	MAIN LANES - RT.		5												
SIDE & ACCESS ROADS																
16+16	16+16	MUSTEEN RD. - RT.											1			
16+83	16+83	JAVELLO RD. - RT.	1													
16+83	16+83	JAVELLO RD. - LT.	1													
23+87	23+87	JAVELLO RD. - RT.							1							
35+92	36+67	JAVELLO RD. - RT./LT.						125								
19+52	19+52	ROBBINS RD. - RT.											2			
SUBTOTALS (BOX 2 OF 2):			**2**	**113**			**200**	**125**	**4**		**39**		**6**		**2**	
SUBTOTALS (BOX 1 OF 2):			**11**		**968**	**188**	**2662**	**45**	**46**	**2**	**5**	**1**	**4**	**1**	**1**	**1**
TOTALS:			**13**	**113**	**968**	**188**	**2862**	**170**	**50**	**2**	**44**	**1**	**10**	**1**	**3**	**1**

EROSION CONTROL MATTING (BOX 2 OF 2)

STATION	STATION	LOCATION	LENGTH	CLASS 3
			LIN. FT.	SQ. YD.
HWY. 412B				
11+39.00	18+00.00	HWY. 412B LT.	661.00	587.56
11+40.00	18+00.00	HWY. 412B RT.	660.00	586.67
172+37.00	175+08.00	C.L. RAMP 1 RT.	271.00	240.89
176+11.00	177+62.00	C.L. RAMP 1 RT.	151.00	134.22
176+85.00	182+00.00	C.L. RAMP 4 RT.	515.00	457.78
179+00.00	185+00.00	C.L. RAMP 4 LT.	600.00	533.33
182+39.00	188+62.00	C.L. RAMP 1 LT.	623.00	553.78
185+50.00	194+00.00	C.L. RAMP 1 RT.	850.00	755.56
186+70.00	188+00.00	C.L. RAMP 4 RT.	130.00	115.56
187+10.00	190+90.00	C.L. RAMP 4 LT.	380.00	337.78
189+00.00	189+73.00	C.L. RAMP 4 RT.	73.00	64.89
191+03.00	194+30.00	C.L. RAMP 4 LT.	327.00	290.67
192+26.00	196+81.00	C.L. RAMP 2 LT.	455.00	404.44
192+45.00	197+00.00	C.L. RAMP 3 LT.	455.00	404.44
192+75.00	198+56.00	C.L. RAMP 2 RT.	581.00	516.44
192+76.00	199+06.00	C.L. RAMP 3 RT.	630.00	560.00
200+00.00	201+15.00	C.L. RAMP 3 LT.	115.00	102.22
XNA ACCESS RD.				
431+75.00	434+00.00	XNA ACCESS RD. RAMP 2 RT.	225.00	200.00
433+58.00	436+60.00	XNA ACCESS RD. RAMP 4 LT.	302.00	268.44
438+25.00	444+23.00	XNA ACCESS RD. RAMP 4 LT.	598.00	531.56
438+60.00	448+90.00	XNA ACCESS RD. RAMP 3 LT.	1030.00	915.56
439+41.00	443+25.00	XNA ACCESS RD. RAMP 3 LT.	384.00	341.33
446+49.00	458+00.00	XNA ACCESS RD. RAMP 1 RT.	1151.00	1023.11
449+11.00	461+94.00	XNA ACCESS RD. RAMP 2 RT.	1283.00	1140.44
449+91.00	455+75.00	XNA ACCESS RD. RAMP 2 LT.	584.00	519.11
450+20.00	455+34.00	XNA ACCESS RD. RAMP 1 LT.	514.00	456.89
SIDE ROADS				
14+27.00	15+96.00	C.L. MUSTEEN RD. LT.	169.00	150.22
14+27.00	25+60.00	C.L. MUSTEEN RD. RT.	1133.00	1007.11
15+19.00	16+10.00	C.L. LIBERTY RD. LT.	91.00	80.89
15+25.00	19+59.00	C.L. LIBERTY FRONTAGE LT.	434.00	385.78
15+25.00	19+71.00	C.L. LIBERTY FRONTAGE RT.	446.00	396.44
17+00.00	24+10.00	C.L. JAVELLO RD. RT.	710.00	631.11
18+11.00	26+70.00	C.L. MUSTEEN RD. LT.	859.00	763.56
18+60.00	22+20.00	C.L. JAVELLO RD. LT.	360.00	320.00
24+90.00	29+00.00	C.L. MUSTEEN RD. LT.	410.00	364.44
25+03.00	26+50.00	C.L. LIBERTY RD. LT.	147.00	130.67
25+79.00	26+50.00	C.L. LIBERTY RD. RT.	71.00	63.11
26+80.00	27+60.00	C.L. MUSTEEN RD. RT.	80.00	71.11
36+40.00	38+00.00	C.L. JAVELLO RD. LT.	160.00	142.22
37+00.00	39+36.00	C.L. MUSTEEN RD. LT.	236.00	209.78
37+36.00	39+28.00	C.L. MUSTEEN RD. RT.	192.00	170.67
41+00.00	45+75.00	C.L. HWY. 68 LT.	475.00	422.22
44+50.00	48+76.00	C.L. HWY. 68 RT.	426.00	378.67
47+02.00	49+18.00	C.L. HWY. 68 LT.	216.00	192.00
51+00.00	52+00.00	C.L. HWY. 68 RT.	100.00	88.89
51+46.00	52+00.00	C.L. HWY. 68 LT.	54.00	48.00
53+00.00	55+92.00	C.L. HWY. 68 RT.	292.00	259.56
SUBTOTAL (BOX 2 OF 2):				**18319.12**
SUBTOTAL (BOX 1 OF 2):				**28136.01**
TOTAL:				**46455.13**

NOTE: AVERAGE WIDTH = 8'-0"

DRIVEWAYS & TURNOUTS

STATION	SIDE	LOCATION	WIDTH	ACHM SURFACE COURSE (1/2") 220 LBS. PER SQ. YD. (PG 64-22)		AGGREGATE BASE COURSE (CLASS 7)	SIDE DRAINS	STANDARD DRAWINGS
							18"	
			FEET	SQ. YD.	TON	TON	LIN. FT.	
15+91	RT.	HWY. 412B	16	106.30	11.69	43.40	52	DR-2, PCC-1, PCM-1, PCP-1, PCP-2, PCP-3
17+55	RT.	HWY. 412B	16	97.40	10.71	39.77	50	DR-2, PCC-1, PCM-1, PCP-1, PCP-2, PCP-3
41+65	LT.	HWY. 68	24	100.82	11.09	41.17	42	DR-2, PCC-1, PCM-1, PCP-1, PCP-2, PCP-3
42+55	RT.	HWY. 68	24	124.78	13.73	50.95		DR-2
43+00	LT.	HWY. 68	24	128.76	14.16	52.58	52	DR-2, PCC-1, PCM-1, PCP-1, PCP-2, PCP-3
15+16	RT.	MUSTEEN RD.	24	170.10	18.71	69.46		DR-2
16+25	LT.	MUSTEEN RD.	24	138.79	15.27	56.67	90	DR-2, PCC-1, PCM-1, PCP-1, PCP-2, PCP-3
16+60	LT.	MUSTEEN RD.	16	185.03	20.35	75.56		DR-2
25+90	RT.	MUSTEEN RD.	24	316.30	34.79	129.16		DR-2
15+00	LT.	LIBERTY AVE.	24	101.52	11.17	41.45		DR-2
15+00	RT.	LIBERTY AVE.	24	97.30	10.70	39.73		DR-2
24+80	LT.	LIBERTY AVE.	24	116.76	12.84	47.68	54	DR-2, PCC-1, PCM-1, PCP-1, PCP-2, PCP-3
15+43	RT.	LIBERTY AVE. ACCESS RD.	24	123.77	13.61	50.54	40	DR-2, PCC-1, PCM-1, PCP-1, PCP-2, PCP-3
36+00	LT.	JAVELLO RD.	18	162.13	17.83	66.20	86	DR-2, PCC-1, PCM-1, PCP-1, PCP-2, PCP-3
-	-	KELLY DR. N. CUL-DE-SAC	20	85.50	9.41	34.91		DR-2
* ENTIRE PROJECT TEMPORARY DRIVES				105.00	11.55	42.88		
TOTALS:				**2160.26**	**237.61**	**882.11**	**466**	

BASIS OF ESTIMATE:
ACHM SURFACE COURSE (1/2")...94.3% MIN. AGGR...5.7% ASPHALT BINDER
MAXIMUM NUMBER OF GYRATIONS = 115 FOR PG 64-22

THE CONTRACTOR, WITH THE APPROVAL OF THE ENGINEER, WILL BE ALLOWED TO SUBSTITUTE A HIGHER PERFORMANCE GRADE ASPHALT SURFACE COURSE FOR DRIVEWAYS AND MINOR SIDE STREET CONSTRUCTION AT NO ADDITIONAL COST TO THE DEPARTMENT.

MAILBOXES

LOCATION	MAILBOXES	MAILBOX SUPPORTS (SINGLE)
		EACH
ENTIRE PROJECT	3	3
TOTALS:	**3**	**3**

PAVEMENT REPAIR OVER CULVERTS (CONCRETE)

STATION	LOCATION	WIDTH	LENGTH	CU.YD.
		FEET		
166+00	MAIN LANES - RT.	8.50	24	5.7
53+00	HWY. 68	8.50	27	6.4
19+00	BRUSH CREEK RD.	26.75	19	14.1
21+76	BRUSH CREEK RD.	15.67	19	8.3
19+00	MARCHANT RD.	17.33	23	11.1
TOTAL:				**45.6**

AVG. DEPTH = 9"

REMOVAL AND DISPOSAL OF CULVERTS

STATION	DESCRIPTION	PIPE CULVERTS
		EACH
175+00	MAIN LANES	1
374+22	MAIN LANES	1
15+91	HWY. 412B	1
17+55	HWY. 412B	1
45+62	HWY. 68	1
46+34	HWY. 68	1
48+54	HWY. 68	1
48+64	HWY. 68	1
17+50	MUSTEEN RD.	1
24+80	LIBERTY AVE.	1
36+16	JAVELLO RD.	1
TOTAL:		**11**

NOTE: QUANTITIES SHOWN ABOVE SHALL INCLUDE REMOVAL & DISPOSAL OF ALL HEADWALLS AND FLARED END SECTIONS IF APPLICABLE.

JATurner 8/9/2023 7:46:13 AM
WORKSPACE: AHTD
L:\20ITV1701660 - ARDOT 012326 Hwy 412 - Hwy 112\Drawings\r012326_QTY.DGN
REVISED DATE:

GUARDRAIL

STATION	STATION	LOCATION	GUARDRAIL (TYPE A)	GUARDRAIL (TYPE C)	THRIE BEAM GUARDRAIL TERMINAL	GUARDRAIL TERMINAL (TYPE 2)	TERMINAL ANCHOR POST (TYPE 1)
			LIN. FT.		EACH		
172+40.00	176+15.00	MAIN LANES - LT. OF R.M.L.	300			1	1
180+96.62	184+15.32	MAIN LANES - LT. OF R.M.L.	250		1	1	
181+85.51	184+54.26	MAIN LANES - RT. OF R.M.L.	200		1	1	
182+25.16	183+18.30	MAIN LANES - LT. OF L.M.L.	75		1		1
186+70.61	189+39.36	MAIN LANES - LT. OF L.M.L.	200		1	1	
187+05.82	190+24.53	MAIN LANES - RT. OF L.M.L.	250		1	1	
188+11.76	191+30.47	MAIN LANES - LT. OF R.M.L.	250		1	1	
188+72.13	191+40.88	MAIN LANES - RT. OF R.M.L.	200		1	1	
193+67.75	196+36.46	MAIN LANES - LT. OF L.M.L.	200		1	1	
193+75.76	196+94.45	MAIN LANES - RT. OF L.M.L.	250		1	1	
206+35.00	210+10.00	MAIN LANES - RT. OF L.M.L.	300			1	1
215+55.00	220+55.00	MAIN LANES - LT. OF R.M.L.	450			1	1
218+35.00	223+35.00	MAIN LANES - RT. OF L.M.L.	450			1	1
290+69.37	293+88.12	MAIN LANES - LT. OF R.M.L.	250		1	1	
291+36.52	294+05.27	MAIN LANES - RT. OF R.M.L.	200		1	1	
296+49.37	299+18.12	MAIN LANES - LT. OF L.M.L.	200		1	1	
296+66.51	299+85.26	MAIN LANES - RT. OF L.M.L.	250		1	1	
301+75.34	301+90.54	MAIN LANES - RT. OF R.M.L.		25			
334+50.00	334+68.82	MAIN LANES - RT. OF R.M.L.		25			
374+92.75	378+11.50	MAIN LANES - LT. OF R.M.L.	250		1	1	
375+42.75	378+11.50	MAIN LANES - RT. OF R.M.L.	200		1	1	
387+99.49	390+68.24	MAIN LANES - LT. OF L.M.L.	200		1	1	
387+99.49	391+18.24	MAIN LANES - RT. OF L.M.L.	250		1	1	
412+37.17	412+61.88	MAIN LANES - RT. OF R.M.L.		25			
423+74.25	426+93.00	MAIN LANES - LT. OF R.M.L.	250		1	1	
424+36.28	427+05.03	MAIN LANES - RT. OF R.M.L.	200		1	1	
429+15.08	432+33.83	MAIN LANES - RT. OF L.M.L.	250		1	1	
434+60.00	442+85.00	MAIN LANES - LT. OF R.M.L.	775			1	1
437+40.00	445+40.00	MAIN LANES - RT. OF L.M.L.	750			1	1
459+36.22	462+54.97	MAIN LANES - LT. OF R.M.L.	250		1	1	
464+73.20	467+41.95	MAIN LANES - LT. OF L.M.L.	200		1	1	
464+82.69	468+01.44	MAIN LANES - RT. OF L.M.L.	250		1	1	
494+95.00	499+95.00	MAIN LANES - LT. OF R.M.L.	450			1	1
498+25.00	503+25.00	MAIN LANES - RT. OF L.M.L.	450			1	1
465+06.17	466+74.92	MAIN LANES - RT. OF R.M.L.	125		1	1	
478+04.50	481+79.50	MAIN LANES - RT. OF R.M.L.	300			1	1
517+45.50	521+20.50	MAIN LANES - LT. OF L.M.L.	300			1	1
468+08.67	470+27.42	XNA ACCESS RD. RAMP 1 - RT.	150		1	1	
468+08.67	470+27.42	XNA ACCESS RD. RAMP 1 - LT.	150		1	1	
426+19.88	428+38.63	XNA ACCESS RD. RAMP 2 - LT.	150		1	1	
426+28.48	428+47.23	XNA ACCESS RD. RAMP 2 - RT.	150		1	1	
459+94.96	462+63.71	XNA ACCESS RD. RAMP 2 - RT.	200		1	1	
428+98.34	431+67.09	XNA ACCESS RD. RAMP 4 - LT.	200		1	1	
16+59.26	18+78.01	LIBERTY AVE. - RT.	150		1	1	
17+43.27	18+87.02	LIBERTY AVE. - LT.	75		1	1	
21+12.97	22+56.72	LIBERTY AVE - RT.	75		1	1	
21+21.98	23+40.73	LIBERTY AVE - LT.	150		1	1	
LM 0.651	LM 0.670	ITS SITE 1	100		1		1
594+59.31	596+18.45	ITS SITE 8	100		1		1
TOTALS:			**11375**	**75**	**36**	**43**	**13**

NOTE: PRICE BID FOR GUARDRAIL (TYPE C) INCLUDES RED DIAMOND REFLECTORS AND SUPPORTS.

APPROACH GUTTERS AND SLABS

STATION	STATION	LOCATION	APPROACH GUTTER (TYPE F)	APPROACH SLABS	REINFORCING STEEL-RDWY. (GR. 60)	AGGREGATE BASE CRS. (CLASS 7)
			CU.YD.	CU.YD.	POUND	TON
183+22.52	183+57.52	MAIN LANES - LT.	8.40	78.80	7483	40.3
184+17.68	184+52.68	MAIN LANES - RT.	8.40	78.23	7409	40.3
186+66.07	187+01.07	MAIN LANES - LT.	8.40	76.90	7209	40.3
187+40.30	187+75.30	MAIN LANES - RT.	8.40	76.52	7146	40.3
190+92.39	191+27.39	MAIN LANES - LT.	8.40	71.91	6391	40.3
191+11.91	191+46.91	MAIN LANES - RT.	8.40	71.91	6388	40.3
193+59.29	193+94.29	MAIN LANES - LT.	8.40	71.58	6344	40.3
193+80.44	194+15.44	MAIN LANES - RT.	8.40	71.54	6341	40.3
293+37.27	293+72.27	MAIN LANES - LT.	8.40	72.87	8854	40.3
293+75.00	294+10.00	MAIN LANES - RT.	8.40	72.87	8854	40.3
296+44.63	296+79.63	MAIN LANES - LT.	8.40	72.87	8854	40.3
296+82.36	297+17.36	MAIN LANES - RT.	8.40	72.87	8854	40.3
377+86.91	378+21.91	MAIN LANES - RT.	8.40	71.06	8600	42.4
377+86.91	378+21.91	MAIN LANES - LT.	8.40	71.06	8600	42.4
387+89.09	388+24.09	MAIN LANES - RT.	8.40	71.06	8600	42.4
387+89.09	388+24.09	MAIN LANES - LT.	8.40	71.06	8600	42.4
426+48.43	426+83.03	MAIN LANES - LT.	8.40	87.93	10662	49.2
426+74.02	427+09.38	MAIN LANES - RT.	8.40	71.94	8730	40.3
428+97.83	429+32.43	MAIN LANES - LT.	8.40	88.41	10716	49.2
429+29.20	429+64.67	MAIN LANES - RT.	8.40	72.57	8817	40.3
462+18.42	462+53.02	MAIN LANES - LT.	8.40	71.49	8661	40.3
462+33.60	462+69.01	MAIN LANES - RT.	8.40	87.35	10585	49.2
464+67.76	465+02.36	MAIN LANES - LT.	8.40	71.77	8687	40.3
464+88.75	465+24.16	MAIN LANES - RT.	8.40	87.69	10637	49.2
18+57.86	18+92.86	LIBERTY AVE.	8.40	48.26	5869	26.8
21+07.13	21+42.13	LIBERTY AVE.	8.40	48.26	5869	26.8
470+03.82	470+38.82	XNA ACCESS RD. RAMP 1	8.40	41.45	5049	24.7
472+50.99	472+85.99	XNA ACCESS RD. RAMP 1	8.40	41.45	5049	24.7
430+77.22	431+12.22	XNA ACCESS RD. RAMP 2	8.40	42.36	5159	23.5
428+20.93	428+55.93	XNA ACCESS RD. RAMP 2	8.40	42.36	5159	23.5
TOTALS:			**252.00**	**2076.40**	**234176**	**1161.2**

WIRE ROPE SAFETY FENCE

STATION	STATION	LOCATION	WIRE ROPE SAFETY FENCE	CONCRETE DITCH PAVING (TYPE B)			SOLID SODDING	WATER
			LIN. FT.	LENGTH	AVG. WIDTH	SQ. YD.	SQ. YD.	M.G.
152+63.00	181+82.09	MAIN LANES - MEDIAN	2919	2919	4.0	1297	649	8.18
196+05.59	219+21.99	MAIN LANES - MEDIAN	2316	2316	4.0	1029	515	6.48
219+68.00	291+56.36	MAIN LANES - MEDIAN	7188	7188	4.0	3195	1597	20.13
298+98.26	375+79.75	MAIN LANES - MEDIAN	7681	7681	4.0	3414	1707	21.51
390+31.24	424+61.24	MAIN LANES - MEDIAN	3430	3430	4.0	1524	762	9.60
431+46.83	438+27.00	MAIN LANES - MEDIAN	680	680	4.0	302	151	1.90
441+98.01	460+23.21	MAIN LANES - MEDIAN	1825	1825	4.0	811	406	5.11
467+14.44	498+62.00	MAIN LANES - MEDIAN	3148	3148	4.0	1399	700	8.81
499+58.00	535+37.00	MAIN LANES - MEDIAN	3579	3579	4.0	1591	795	10.02
TOTALS:			**32766**			**14562**	**7282**	**91.74**

BASIS OF ESTIMATE:
WATER.....12.6 GAL/SQ. YD. OF SOLID SODDIND

REMOVAL AND DISPOSAL OF FENCE (BOX 1 OF 2)

STATION	STATION	LOCATION	FENCE
			LIN. FT.
C.L. MEDIAN			
152+59	159+00	MAIN LANES - LT.	699
154+75	157+10	MAIN LANES - RT.	226
161+49	170+85	MAIN LANES - LT.	1038
165+43	174+62	MAIN LANES - RT.	920
181+86	183+90	MAIN LANES - LT.	337
187+37	188+25	MAIN LANES - RT.	154
187+72	188+54	MAIN LANES - LT.	216
193+68	194+16	MAIN LANES - LT.	58
194+16	196+92	MAIN LANES - RT.	357
201+90	204+61	MAIN LANES - LT.	375
204+61	206+09	MAIN LANES - RT.	244
218+25	219+69	MAIN LANES - RT.	167
224+61	227+96	MAIN LANES - RT.	421
228+63	229+63	MAIN LANES - LT.	313
228+77	238+55	MAIN LANES - RT.	1780
232+58	239+71	MAIN LANES - LT.	894
240+61	243+51	MAIN LANES - LT.	435
258+24	258+38	MAIN LANES - LT.	215
258+38	258+57	MAIN LANES - RT.	241
265+97	266+16	MAIN LANES - LT.	182
271+35	271+39	MAIN LANES - RT.	29
274+00	276+40	MAIN LANES - RT.	633
274+46	276+22	MAIN LANES - LT.	488
284+56	285+18	MAIN LANES - RT.	224
285+18	285+89	MAIN LANES - RT.	253
287+26	288+97	MAIN LANES - RT.	331
288+17	288+97	MAIN LANES - LT.	243
292+29	292+38	MAIN LANES - RT.	84
293+26	294+83	MAIN LANES - LT.	158
294+02	295+00	MAIN LANES - RT.	94
299+02	300+21	MAIN LANES - RT.	284
303+28	315+65	MAIN LANES - RT.	2192
303+46	303+77	MAIN LANES - LT.	192
305+63	305+85	MAIN LANES - LT.	155
311+79	314+96	MAIN LANES - LT.	434
314+99	317+33	MAIN LANES - RT.	341
318+43	319+64	MAIN LANES - RT.	272
319+64	320+44	MAIN LANES - LT.	159
326+08	327+72	MAIN LANES - RT.	261
327+41	329+68	MAIN LANES - LT.	486
329+68	332+61	MAIN LANES - RT.	405
331+61	333+48	MAIN LANES - LT.	432
333+11	334+73	MAIN LANES - RT.	393
335+32	337+68	MAIN LANES - RT.	299
337+68	339+65	MAIN LANES - LT.	230
340+63	341+04	MAIN LANES - LT.	79
341+42	342+11	MAIN LANES - RT.	156
345+41	347+74	MAIN LANES - RT.	731
346+83	348+54	MAIN LANES - LT.	421
348+54	349+60	MAIN LANES - RT.	468
361+91	374+94	MAIN LANES - RT.	1756
362+01	362+10	MAIN LANES - LT.	169
368+88	368+96	MAIN LANES - LT.	191
374+94	386+43	MAIN LANES - LT.	1292
387+66	389+36	MAIN LANES - RT.	178
SUBTOTAL (BOX 1 OF 2):			**23785**

REMOVAL AND DISPOSAL OF FENCE (BOX 2 OF 2)

STATION	STATION	LOCATION	FENCE
			LIN. FT.
C.L. MEDIAN			
392+99	393+03	MAIN LANES - LT.	32
397+92	398+77	MAIN LANES - RT.	105
398+46	412+52	MAIN LANES - LT.	1927
399+40	399+44	MAIN LANES - RT.	25
401+30	401+41	MAIN LANES - RT.	153
412+17	412+83	MAIN LANES - RT.	198
413+15	414+61	MAIN LANES - RT.	266
414+61	414+66	MAIN LANES - LT.	149
420+71	421+09	MAIN LANES - RT.	373
420+88	421+09	MAIN LANES - LT.	153
427+59	428+59	MAIN LANES - RT.	157
433+03	452+81	MAIN LANES - RT.	5757
435+61	444+95	MAIN LANES - LT.	2547
447+15	449+19	MAIN LANES - LT.	530
452+81	455+93	MAIN LANES - LT.	391
455+93	461+21	MAIN LANES - RT.	796
458+58	463+36	MAIN LANES - LT.	648
463+88	464+71	MAIN LANES - LT.	88
464+21	467+10	MAIN LANES - LT.	386
467+10	474+21	MAIN LANES - LT.	1194
473+56	474+02	MAIN LANES - RT.	308
477+41	477+63	MAIN LANES - RT.	43
HWY. 412B			
10+82	15+55	MAIN LANES - RT.	531
11+89	17+95	MAIN LANES - LT.	628
16+89	19+55	MAIN LANES - RT.	295
172+50	176+01	RAMP 1 - RT.	346
175+45	194+51	RAMP 1 - LT.	1962
176+15	190+49	RAMP 1 - LT.	1437
179+31	180+17	RAMP 4 - LT.	133
192+62	193+65	RAMP 2 - LT.	152
193+65	195+71	RAMP 2 - RT.	352
194+80	196+31	RAMP 2 - LT.	311
194+29	196+15	RAMP 3 - RT.	349
196+15	196+40	RAMP 3 - LT.	66
HWY. 68			
42+89	50+26	MAIN LANES - RT.	1058
44+66	44+76	MAIN LANES - LT.	15
47+65	50+26	MAIN LANES - RT.	311
54+45	56+09	MAIN LANES - RT.	145
SIDE & ACCESS ROADS			
14+00	16+86	MUSTEEN RD. - RT.	459
14+00	18+06	MUSTEEN RD. - LT.	599
20+15	39+31	MUSTEEN RD. - LT.	1882
14+28	25+54	LIBERTY AVE. - LT.	1203
21+63	26+75	LIBERTY AVE. - RT.	513
16+75	17+56	JAVELLO RD. - RT.	101
16+75	19+20	JAVELLO RD. - LT.	260
18+47	20+27	JAVELLO RD. - RT.	193
22+87	23+17	JAVELLO RD. - RT.	63
23+17	23+89	JAVELLO RD. - LT.	97
23+89	24+95	JAVELLO RD. - RT.	120
32+95	33+31	JAVELLO RD. - LT.	50
33+31	34+09	JAVELLO RD. - RT.	123
36+25	38+25	JAVELLO RD. - LT.	217
19+27	20+40	BRUSH CREEK RD. - RT.	111
20+63	21+93	BRUSH CREEK RD. - RT.	126
17+66	21+98	MARCHANT RD. - LT.	432
18+22	22+45	MARCHANT RD. - RT.	424
15+02	15+59	ROBBINS RD. FRONTAGE RD. - RT.	94
15+59	16+63	ROBBINS RD. FRONTAGE RD. - LT.	151
19+36	19+56	ROBBINS RD. - RT.	20
19+65	22+12	ROBBINS RD. - LT.	264
SUBTOTAL (BOX 2 OF 2):			**31819**
SUBTOTAL (BOX 1 OF 2):			**23785**
TOTAL:			**55604**

DATE REVISED	DATE REVISED	FED. RD. DIST. NO.	STATE	JOB NO.	SHEET NO.	TOTAL SHEETS
		6	ARK.	012326	185	838
②		QUANTITIES				

STATE OF ARKANSAS
LICENSED PROFESSIONAL ENGINEER
No.13436
SHAUN A. ROBERSON
DIGITALLY SIGNED 7/28/2023

HBVinson 7/27/2023 15:18 PM
WORKSPACE: AHTD
L:\20\7\70\7660 - ARDOT 012326 Hwy 412 - Hwy 112\Drawings\r012326_QTY.DGN
REVISED DATE:

DATE REVISED	DATE REVISED	FED. RD. DIST. NO.	STATE	JOB NO.	SHEET NO.	TOTAL SHEETS
10-23-2023		6	ARK.	012326	186	838
(2)		QUANTITIES				

CONCRETE DITCH PAVING (BOX 1 OF 2)

STATION	STATION	LOCATION	LENGTH	"W"	"B"	CONC. DITCH PAVING (TYPE A)	CONC. DITCH PAVING (TYPE B)	SOLID SODDING	WATER
			LIN. FT.	FEET	FEET	SQ. YD.	SQ. YD.	SQ. YD.	M. GAL.
155+45.00	157+00.00	MAIN LANES - LT.	162.00	6.00			108.00	72.00	0.91
160+30.00	160+50.00	MAIN LANES - LT.	36.00	9.00			36.00	16.00	0.20
166+00.00	166+00.00	MAIN LANES - RT.	28.00	6.00			18.67	12.44	0.16
170+20.00	170+70.00	MAIN LANES - LT.	51.00	6.00			34.00	22.67	0.29
175+00.00	176+00.00	MAIN LANES - RT.	104.00	6.00			69.33	46.22	0.58
204+00.00	204+00.00	MAIN LANES - RT.	53.00	6.00			35.33	23.56	0.30
218+50.00	281+80.00	MAIN LANES - RT.	100.00	9.00			100.00	44.44	0.56
219+50.00	221+00.00	MAIN LANES - LT.	148.00	6.00			98.67	65.78	0.83
229+00.00	232+25.00	MAIN LANES - RT.	312.00	6.00			208.00	138.67	1.75
235+00.00	236+75.00	MAIN LANES - RT.	177.00	6.00			118.00	78.67	0.99
239+00.00	240+00.00	MAIN LANES - LT.	111.00	14.00	5.00	172.67		49.33	0.62
240+00.00	241+00.00	MAIN LANES - LT.	106.00	14.00	5.00	164.89		47.11	0.59
241+00.00	244+40.00	MAIN LANES - LT.	416.00	6.00			277.33	184.89	2.33
241+00.00	241+00.00	MAIN LANES - LT.	21.00	6.00			14.00	9.33	0.12
242+00.00	243+00.00	MAIN LANES - RT.	94.00	6.00			62.67	41.78	0.53
248+00.00	255+00.00	MAIN LANES - RT.	716.00	6.00			477.33	318.22	4.01
251+00.00	251+00.00	MAIN LANES - RT.	61.00	6.00			40.67	27.11	0.34
251+00.00	254+55.00	MAIN LANES - LT.	419.00	6.00			279.33	186.22	2.35
255+00.00	256+21.00	MAIN LANES - RT.	152.00	6.00			101.33	67.56	0.85
260+00.00	261+00.00	MAIN LANES - LT.	100.00	9.00			100.00	44.44	0.56
266+00.00	267+90.00	MAIN LANES - RT.	201.00	6.00			134.00	89.33	1.13
267+00.00	269+00.00	MAIN LANES - LT.	219.00	6.00			146.00	97.33	1.23
268+00.00	268+00.00	MAIN LANES - LT.	13.00	6.00			8.67	5.78	0.07
272+00.00	281+00.00	MAIN LANES - RT.	960.00	6.00			640.00	426.67	5.38
275+86.00	276+89.00	MAIN LANES - LT.	103.00	6.00			68.67	45.78	0.58
279+00.00	281+00.00	MAIN LANES - LT.	254.00	6.00			169.33	112.89	1.42
280+00.00	280+00.00	MAIN LANES - LT.	84.00	6.00			56.00	37.33	0.47
290+25.00	291+00.00	MAIN LANES - RT.	74.00	6.00			49.33	32.89	0.41
296+70.00	299+00.00	MAIN LANES - RT.	246.00	6.00			164.00	109.33	1.38
296+81.00	300+00.00	MAIN LANES - LT.	344.00	6.00			229.33	152.89	1.93
297+00.00	297+00.00	MAIN LANES - LT.	65.00	6.00			43.33	28.89	0.36
300+00.00	301+00.00	MAIN LANES - LT.	101.00	6.00			67.33	44.89	0.57
300+90.00	302+00.00	MAIN LANES - RT.	114.00	6.00			76.00	50.67	0.64
308+00.00	308+00.00	MAIN LANES - LT.	53.00	6.00			35.33	23.56	0.30
309+00.00	311+00.00	MAIN LANES - RT.	238.00	6.00			158.67	105.78	1.33
311+45.00	315+00.00	MAIN LANES - LT.	346.00	6.00			230.67	153.78	1.94
317+00.00	321+00.00	MAIN LANES - LT.	398.00	6.00			265.33	176.89	2.23
318+00.00	318+00.00	MAIN LANES - LT.	43.00	6.00			28.67	19.11	0.24
323+00.00	325+00.00	MAIN LANES - RT.	210.00	6.00			140.00	93.33	1.18
324+00.00	325+00.00	MAIN LANES - LT.	101.00	6.00			67.33	44.89	0.57
326+00.00	326+00.00	MAIN LANES - RT.	43.00	6.00			28.67	19.11	0.24
328+00.00	330+00.00	MAIN LANES - RT.	211.00	6.00			140.67	93.78	1.18
354+00.00	357+50.00	MAIN LANES - RT.	368.00	6.00			245.33	163.56	2.06
355+00.00	357+55.00	MAIN LANES - LT.	258.00	6.00			172.00	114.67	1.44
358+00.00	358+00.00	MAIN LANES - LT.	62.00	6.00			41.33	27.56	0.35
369+00.00	372+00.00	MAIN LANES - RT.	318.00	6.00			212.00	141.33	1.78
370+00.00	374+35.00	MAIN LANES - LT.	448.00	6.00			298.67	199.11	2.51
379+00.00	379+00.00	MAIN LANES - LT.	54.00	6.00			36.00	24.00	0.30
386+84.00	387+70.00	MAIN LANES - LT.	87.00	11.00	5.00	106.33		38.67	0.49
387+08.00	390+00.00	MAIN LANES - RT.	293.00	11.00	5.00	358.11		130.22	1.64
389+00.00	389+00.00	MAIN LANES - LT.	36.00	6.00			24.00	16.00	0.20
390+00.00	392+00.00	MAIN LANES - RT.	200.00	11.00	5.00	244.44		88.89	1.12
391+00.00	393+00.00	MAIN LANES - LT.	208.00	11.00		254.22		92.44	1.16
392+00.00	394+00.00	MAIN LANES - RT.	210.00	6.00			140.00	93.33	1.18
399+00.00	401+00.00	MAIN LANES - LT.	200.00	6.00			133.33	88.89	1.12
409+00.00	411+00.00	MAIN LANES - LT.	200.00	9.00			200.00	88.89	1.12
419+40.00	420+00.00	MAIN LANES - LT.	64.00	6.00			42.67	28.44	0.36
420+00.00	423+00.00	MAIN LANES - LT.	315.00	6.00			210.00	140.00	1.76
428+77.00	432+00.00	MAIN LANES - RT.	320.00	6.00			213.33	142.22	1.79
430+00.00	430+32.00	MAIN LANES - RT.	32.00	6.00			21.33	14.22	0.18
461+00.00	463+11.00	MAIN LANES - LT.	248.00	6.00			165.33	110.22	1.39
462+00.00	462+00.00	MAIN LANES - LT.	50.00	6.00			33.33	22.22	0.28
462+50.00	463+75.00	MAIN LANES - RT.	133.00	6.00			88.67	59.11	0.74
465+00.00	469+00.00	MAIN LANES - RT.	431.00	6.00			287.33	191.56	2.41
472+00.00	472+30.00	MAIN LANES - LT.	30.00	6.00			20.00	13.33	0.17
472+00.00	473+50.00	MAIN LANES - RT.	136.00	9.00			136.00	60.44	0.76
479+00.00	480+00.00	MAIN LANES - RT.	100.00	6.00			66.67	44.44	0.56
480+00.00	481+13.00	MAIN LANES - RT.	114.00	6.00			76.00	50.67	0.64
SUBTOTALS (BOX 1 OF 2):						**1300.66**	**7989.31**	**5645.77**	**71.16**

CONCRETE DITCH PAVING (BOX 2 OF 2)

STATION	STATION	LOCATION	LENGTH	"W"	"B"	CONC. DITCH PAVING (TYPE A)	CONC. DITCH PAVING (TYPE B)	SOLID SODDING	WATER
			LIN. FT.	FEET	FEET	SQ. YD.	SQ. YD.	SQ. YD.	M. GAL.
197+00.00	200+00.00	HWY. 412B RAMP 3 - LT.	309.00	6.00			206.00	137.33	1.73
201+15.00	202+00.00	HWY. 412B RAMP 3 - LT.	82.00	6.00			54.67	36.44	0.46
173+10.00	173+10.00	HWY. 412B RAMP 4 - LT.	64.00	6.00			42.67	28.44	0.36
173+35.00	179+00.00	HWY. 412B RAMP 4 - LT.	558.00	6.00			372.00	248.00	3.12
175+80.00	180+00.00	HWY. 412B RAMP 4 - RT.	486.00	6.00			324.00	216.00	2.72
180+00.00	180+00.00	HWY. 412B RAMP 4 - RT.	265.00	6.00			176.67	117.78	1.48
184+95.00	186+25.00	HWY. 412B RAMP 4 - LT.	212.00	6.00			141.33	94.22	1.19
187+00.00	188+55.00	HWY. 412B RAMP 4 - RT.	155.00	6.00			103.33	68.89	0.87
188+00.00	189+00.00	HWY. 412B RAMP 4 - RT.	100.00	6.00			66.67	44.44	0.56
188+26.00	188+96.00	HWY. 412B RAMP 4 - LT.	66.00	6.00			44.00	29.33	0.37
189+06.00	189+35.00	HWY. 412B RAMP 4 - LT.	78.00	6.00			52.00	34.67	0.44
458+00.00	462+00.00	XNA ACCESS RAMP 1 - RT.	400.00	6.00			266.67	177.78	2.24
416+70.00	418+00.00	XNA ACCESS RAMP 2 - RT.	129.00	6.00			86.00	57.33	0.72
434+00.00	438+00.00	XNA ACCESS RAMP 2 - RT.	476.00	6.00			317.33	211.56	2.67
438+75.00	440+00.00	XNA ACCESS RAMP 2 - LT.	110.00	6.00			73.33	48.89	0.62
455+75.00	457+80.00	XNA ACCESS RAMP 2 - LT.	221.00	6.00			147.33	98.22	1.24
443+25.00	444+88.00	XNA ACCESS RAMP 3 - RT.	171.00	6.00			114.00	76.00	0.96
448+90.00	450+38.00	XNA ACCESS RAMP 3 - LT.	151.00	6.00			100.67	67.11	0.85
436+60.00	438+20.00	XNA ACCESS RAMP 4 - RT.	165.00	6.00			110.00	73.33	0.92
436+60.00	438+25.00	XNA ACCESS RAMP 4 - LT.	159.00	6.00			106.00	70.67	0.89
52+00.00	53+00.00	HWY. 68 - LT.	100.00	6.00			66.67	44.44	0.56
52+00.00	53+00.00	HWY. 68 - RT.	100.00	6.00			66.67	44.44	0.56
55+00.00	56+00.00	HWY. 68 - LT.	125.00	6.00			83.33	55.56	0.70
33+60.00	37+00.00	MUSTEEN RD. - LT	313.00	6.00			208.67	139.11	1.75
24+20.00	26+70.00	JAVELLO RD. - LT.	250.00	7.00			194.44	111.11	1.40
24+70.00	26+30.00	JAVELLO RD. - RT.	160.00	7.00			124.44	71.11	0.90
28+30.00	30+00.00	JAVELLO RD. - RT.	170.00	7.00			132.22	75.56	0.95
29+00.00	30+00.00	JAVELLO RD. - LT.	100.00	7.00			77.78	44.44	0.56
30+00.00	33+75.00	JAVELLO RD. - RT.	375.00	7.00			291.67	166.67	2.10
30+00.00	33+50.00	JAVELLO RD. - LT.	350.00	7.00			272.22	155.56	1.96
18+94.00	20+00.00	MARCHANT RD. - RT.	106.00	6.00			70.67	47.11	0.59
17+60.00	19+00.00	MARCHANT RD. ACCESS RD. - RT.	140.00	6.00			93.33	62.22	0.78
19+00.00	19+80.00	MARCHANT RD. ACCESS RD. - RT.	80.00	7.00			62.22	35.56	0.45
18+00.00	21+20.00	ROBBINS RD. - RT.	319.00	7.00			248.11	141.78	1.79
SUBTOTALS (BOX 2 OF 2):							**4897.11**	**3131.10**	**39.46**
SUBTOTALS (BOX 1 OF 2):						**1300.66**	**7989.31**	**5645.77**	**71.16**
TOTALS:						**1300.66**	**12886.42**	**8776.87**	**110.62**

BASIS OF ESTIMATE:
WATER.....12.6 GAL. / SQ. YD. OF SOLID SODDING.

RUMBLE STRIPS - ALTERNATE 1

STATION	STATION	LOCATION	* RUMBLE STRIPS IN ASPHALT SHOULDERS	* RUMBLE STRIPS IN CONCRETE SHOULDERS
			LIN.FT.	
148+68	183+58	MAIN LANES - RT.	3489	3489
148+68	184+53	MAIN LANES - LT.	3585	3585
186+66	191+27	MAIN LANES - RT.	461	461
187+40	191+47	MAIN LANES - LT.	407	407
193+59	293+72	MAIN LANES - RT.	10013	10013
193+80	294+10	MAIN LANES - LT.	10030	10030
296+45	380+62	MAIN LANES - RT.	8417	8417
296+82	380+65	MAIN LANES - LT.	8383	8383
387+89	426+83	MAIN LANES - RT.	3894	3894
387+89	427+09	MAIN LANES - LT.	3920	3920
428+98	462+53	MAIN LANES - RT.	3355	3355
429+29	462+69	MAIN LANES - LT.	3340	3340
464+68	514+00	MAIN LANES - RT.	4932	4932
464+89	514+00	MAIN LANES - LT.	4911	4911
448+21	480+17	XNA ACCESS RD. RAMP 1	6392	
416+52	460+08	XNA ACCESS RD. RAMP 2	8711	
436+90	448+83	XNA ACCESS RD. RAMP 3	2385	
432+89	441+63	XNA ACCESS RD. RAMP 4	1749	
TOTALS:			88374	69138

* QUANTITY ESTIMATED.
SEE SECTION 104.03 OF THE STD. SPECS.
TO BE USED IF AND WHERE DIRECTED BY THE ENGINEER.

RUMBLE STRIPS - ALTERNATE 2

STATION	STATION	LOCATION	* RUMBLE STRIPS IN ASPHALT SHOULDERS
			LIN.FT.
148+68	183+58	MAIN LANES - RT.	6979
148+68	184+53	MAIN LANES - LT.	7169
186+66	191+27	MAIN LANES - RT.	923
187+40	191+47	MAIN LANES - LT.	813
193+59	293+72	MAIN LANES - RT.	20026
193+80	294+10	MAIN LANES - LT.	20059
296+45	380+62	MAIN LANES - RT.	16835
296+82	380+65	MAIN LANES - LT.	16765
387+89	426+83	MAIN LANES - RT.	7788
387+89	427+09	MAIN LANES - LT.	7841
428+98	462+53	MAIN LANES - RT.	6710
429+29	462+69	MAIN LANES - LT.	6680
464+68	514+00	MAIN LANES - RT.	9864
464+89	514+00	MAIN LANES - LT.	9823
448+21	480+17	XNA ACCESS RD. RAMP 1	6392
416+52	460+08	XNA ACCESS RD. RAMP 2	8711
436+90	448+83	XNA ACCESS RD. RAMP 3	2385
432+89	441+63	XNA ACCESS RD. RAMP 4	1749
TOTAL:			157512

* QUANTITY ESTIMATED.
SEE SECTION 104.03 OF THE STD. SPECS.
TO BE USED IF AND WHERE DIRECTED BY THE ENGINEER.

STATE OF ARKANSAS
LICENSED PROFESSIONAL ENGINEER
No.13436
SHAUN A. ROBERSON
DIGITALLY SIGNED 10/23/2023

EPSherrill 10/9/2023 4:24:04 PM
WORKSPACE: AHTD
L:\2017\170760 - ARDOT 012326 Hwy 412 - Hwy 112\Drawings\r012326_QTY.DGN
REVISED DATE:

DATE REVISED	DATE REVISED	FED. RD. DIST. NO.	STATE	JOB NO.	SHEET NO.	TOTAL SHEETS
10-23-2023		6	ARK.	012326	187	838
(2)		QUANTITIES				

SELECTED PIPE BEDDING

LOCATION	SELECTED PIPE BEDDING
	CU.YD.
ENTIRE PROJECT TO BE USED IF	
AND WHERE DIRECTED BY THE	1540
ENGINEER	
TOTAL:	**1540**

NOTE: QUANTITY ESTIMATED.
SEE SECTION 104.03 OF THE STD. SPECS.

4" PIPE UNDERDRAIN

STATION	STATION	LOCATIONS	4" PIPE UNDERDRAINS	UNDERDRAIN OUTLET PROTECTORS
			LIN. FT.	EACH
*		ENTIRE PROJECT TO BE USED IF AND	7500	60
		WHERE DIRECTED BY THE ENGINEER		
TOTALS:			**7500**	**60**

* NOTE: QUANTITY ESTIMATED.
SEE SECTION 104.03 OF THE STD. SPECS.

FLOWABLE SELECT MATERIAL

STATION	LOCATION	CU. YD.
170+06	HWY. 612	50
51+03	HWY. 68	16
189+05	HWY. 412B RAMP 1	55
19+36	BRUSH CREEK RD.	17
18+93	LIBERTY RD.	20
21+07	LIBERTY RD.	20
428+56	XNA ACCESS RD. RAMP 2	18
430+77	XNA ACCESS RD. RAMP 2	18
470+39	XNA ACCESS RD. RAMP 1	18
472+51	XNA ACCESS RD. RAMP 1	18
TOTAL:		**250**

STATE OF ARKANSAS
LICENSED PROFESSIONAL ENGINEER
No.13436
SHAUN A. ROBERSON
DIGITALLY SIGNED 10/23/2023

BENCH MARKS

STATION	LOCATION	BENCH MARKS
		EACH
183+58	BEGIN BRIDGE A OVER HWY. 412B RAMP 4 - C.L. BRIDGE	1
191+27	BEGIN BRIDGE A OVER HWY. 68 - C.L. BRIDGE	1
293+72	BEGIN BRIDGE A OVER JAVELLO RD. - C.L. BRIDGE	1
378+22	BEGIN BRIDGE A OVER BRUSH CREEK - C.L. BRIDGE	1
426+83	BEGIN BRIDGE A OVER MARCHANT RD. - C.L. BRIDGE	1
462+53	BEGIN BRIDGE A OVER ROBBINS RD. - C.L. BRIDGE	1
428+56	BEGIN BRIDGE XNA ACCESS RD. RAMP 2 OVER C.L. MEDIAN - C.L. BRIDGE	1
470+39	BEGIN BRIDGE XNA ACCESS RD. RAMP 1 OVER C.L. MEDIAN - C.L. BRIDGE	1
18+93	BEGIN BRIDGE LIBERTY AVE. OVER C.L. MEDIAN - C.L. BRIDGE	1
18+00	JAVELLO RD. (CO. RD. 946) - HEADWALL LT.	1
TOTAL:		**10**

NOTE: SHOWN FOR INFORMATION ONLY. BENCH MARKS
SHALL BE FURNISHED AND PLACED BY STATE FORCES.

CONCRETE ISLAND

STATION	LOCATION	CURB FACE TYPE	CONCRETE ISLAND
			SQ.YD.
56+06	HWY. 68 - RT.	TYPE C	81
56+26	HWY. 68 - LT.	TYPE C	65
192+51	HWY. 412B RAMP 2 - RT.	TYPE C	240
192+30	HWY. 412B RAMP 3 - LT.	TYPE C	155
501+17	HWY. 112 RAMP 1 - RT.	TYPE C	25
TOTAL:			**566**

DUMPED RIPRAP AND FILTER BLANKET

STATION	LOCATION	DUMPED RIPRAP	FILTER BLANKET
		CU. YD.	SQ. YD.
464+35	XNA ACCESS RD. RAMP 1	9	17
458+00	XNA ACCESS RD. RAMP 1	9	17
438+75	XNA ACCESS RD. RAMP 2	26	53
451+00	XNA ACCESS RD. RAMP 2	9	17
457+95	MAIN LANES	6	12
18+26 TO 24+00	JAVELLO RD.	1083	2166
TOTALS:		**1142**	**2282**

NOTE: FILTER BLANKET SHALL BE GEOTEXTILE FABRIC (TYPE 5).

COLD MILLING ASPHALT PAVEMENT

STATION	STATION	LOCATION	AVG. WIDTH	COLD MILLING ASPHALT PAVEMENT
			FEET	SQ. YD.
144+68.03	145+68.03	MAIN LANES	40.00	444.44
17+00.00	18+00.00	HWY. 412B	72.00	800.00
43+48.00	44+48.00	HWY. 68	24.00	266.67
14+26.86	15+26.86	MUSTEEN RD.	20.00	222.22
14+50.00	15+50.00	LIBERTY AVE.	24.00	266.67
25+50.00	26+50.00	LIBERTY AVE.	20.00	222.22
17+00.00	18+00.00	JAVELLO RD.	20.00	222.22
37+00.00	38+00.00	JAVELLO RD.	20.00	222.22
TOTAL:				**2666.66**

NOTE: COORDINATE COLD MILLING STOCKPILE LOCATIONS WITH DISTRICT ENGINEER.
STOCKPILE LOCATIONS SHALL BE NO FURTHER THAN FIVE MILES FROM EACH SITE.

DELINEATORS

STATION	STATION	LOCATION	TYPE-2 DELINEATORS (WHITE-RED)	TYPE-2 DELINEATORS (YELLOW-RED)
			EACH	EACH
172+37.13	194+50.62	HWY. 412 RAMP 1	27	20
192+19.83	210+57.66	HWY. 412 RAMP 3	32	26
446+49.37	484+19.87	XNA ACCESS RD. RAMP 1	52	53
432+88.18	453+46.66	XNA ACCESS RD. RAMP 3	32	26
478+75.52	501+61.75	HWY. 112 RAMP 1	33	34
TOTALS:			**176**	**159**

FENCING

STATION	STATION	LOCATION	WIRE FENCE (TYPE C)	* 16'-0" GATES
			LIN. FT.	EACH
152+59	159+00	MAIN LANES - LT.	729	
154+75	157+10	MAIN LANES - RT.	330	
161+59	191+40	MAIN LANES - LT.	2975	
172+50	176+00	MAIN LANES - RT.	376	
177+20	188+40	MAIN LANES - RT.	1293	
191+42	218+20	MAIN LANES - LT.	2714	1
194+24	219+10	MAIN LANES - RT.	2781	
219+70	278+67	MAIN LANES - LT.	6651	1
220+54	278+67	MAIN LANES - RT.	6064	1
279+13	293+65	MAIN LANES - LT.	1629	1
279+13	294+20	MAIN LANES - RT.	1852	1
296+35	310+95	MAIN LANES - LT.	1728	1
296+90	315+68	MAIN LANES - RT.	2269	1
311+54	378+23	MAIN LANES - LT.	6748	1
316+20	378+23	MAIN LANES - RT.	6678	1
387+88	426+78	MAIN LANES - LT.	4116	1
387+88	427+17	MAIN LANES - RT.	4278	1
428+90	439+56	MAIN LANES - LT.	2229	
429+35	462+75	MAIN LANES - RT.	4199	1
442+14	462+51	MAIN LANES - LT.	3051	1
464+62	475+42	MAIN LANES - LT.	1412	
464+95	474+10	MAIN LANES - RT.	985	1
100+00	100+37	XNA ACCESS RD. - LT.	47	
100+00	103+18	XNA ACCESS RD. - RT.	635	
11+36	15+25	HWY. 412B - RT.	390	
11+54	15+00	HWY. 412B - LT.	558	
43+48	48+30	HWY. 68 - RT.	483	
TOTALS:			**67200**	**14**

* DENOTES ALTERNATE BID ITEM.

RETAINING WALLS

STATION	STATION	LOCATION	UNCL.EXC. FOR STR.- ROADWAY	CONCRETE DITCH PAVING (TYPE B)	SELECT GRANULAR BACKFILL	TEXTURED COATING FINISH	RETAINING WALL
			CU.YDS.	SQ. YD.	CU. YD.	SQ.YD.	SQ. FT.
182+25	184+01	MAIN LANES - LT. (WALL NO. 1)	1141	79	929	264	2210
218+15	219+89	MAIN LANES - LT. (WALL NO. 2)	1903	130	2167	358	3739
219+08	220+56	MAIN LANES - RT. (WALL NO. 3)	1474	119	1792	314	3283
428+60	428+03	XNA ACCESS RD. RAMP 2 - LT. & RT. (WALL NO. 4)	928	84	2006	299	3120
430+79	431+32	XNA ACCESS RD. RAMP 2 - LT. & RT. (WALL NO. 5)	1009	99	2405	335	3639
470+13	470+17	XNA ACCESS RD. RAMP 1 - LT. & RT. (WALL NO. 6)	1036	100	2103	327	3338
472+74	472+76	XNA ACCESS RD. RAMP 1 - LT. & RT. (WALL NO. 7)	363	89	1864	334	3317
TOTALS:			**7854**	**700**	**13266**	**2231**	**22646**

EPSherrill 10/9/2023 2:33:25 PM
WORKSPACE: AHTD
L:\2017\170176\60 - ARDOT 012326 Hwy 412 - Hwy 112\Drawings\r012326_QTY.DGN
REVISED DATE:

DATE REVISED	DATE REVISED	FED. RD. DIST. NO.	STATE	JOB NO.	SHEET NO.	TOTAL SHEETS
		6	ARK.	012326	188	838
		QUANTITIES				
②						

STRUCTURES

STATION	DESCRIPTION	(CLASS III)							(CLASS IV)			(CLASS V)					(CLASS SPL)	ZINC COATED (GALV. C.S.P. 16 GUAGE)	FLARED END SECTIONS FOR R.C. PIPE CULVERTS									TEMPORARY CULVERTS	DROP INLETS		CONCRETE SPILLWAY
		24"	30"	36"	42"	48"	72"	44"X27"	24"	36"	42"	36"	42"	48"	54"	60"	54"	12"	24"	30"	36"	42"	48"	54"	60"	72"	44"X27"	18"	TYPE N2	TYPE RM	(TYPE A)
		LIN. FEET																	EACH									LIN. FT.	EACH		EACH
156+75	MAIN LANES						44																			2					
156+92	MAIN LANES						30																			2					
157+58	MAIN LANES	20																	1												
166+00	MAIN LANES	98																	1											1	
169+05	MAIN LANES						32																			1					
175+00	MAIN LANES	116																	1											1	
187+50	MAIN LANES	104																	1											1	
187+64	MAIN LANES		366																	2											
201+69	MAIN LANES													968									2								
204+00	MAIN LANES	126																	1											1	
211+00	MAIN LANES	102																	1											1	
221+00	MAIN LANES	84																	1											1	
231+00	MAIN LANES	88																	1											1	
241+00	MAIN LANES	94																	1											1	
243+77	MAIN LANES															458									1						
251+00	MAIN LANES	84																	1											1	
251+60	MAIN LANES												442									1									
255+58	MAIN LANES																1020							2							
261+00	MAIN LANES	86																	1											1	
268+00	MAIN LANES	86																	1											1	
268+44	MAIN LANES														316									1							
275+86	MAIN LANES	86																	1											1	
278+90	MAIN LANES - DOUBLE BOX																														
280+00	MAIN LANES	86																	1											1	
290+25	MAIN LANES	86																	1											1	
297+00	MAIN LANES	90																	1											1	
299+82	MAIN LANES		306																	2											
308+00	MAIN LANES	84																	1											1	
313+88	MAIN LANES - DOUBLE BOX																														
318+00	MAIN LANES	84																	1											1	
323+24	MAIN LANES												296									1									
326+00	MAIN LANES	92																	1											1	
337+05	MAIN LANES														768									2							
340+00	MAIN LANES	90																	1											1	
350+00	MAIN LANES	84																	1											1	
357+81	MAIN LANES													594									2								
358+00	MAIN LANES	84																	1											1	
368+00	MAIN LANES	86																	1											1	
373+15	MAIN LANES														778									2							
377+00	MAIN LANES	82																	1											1	
389+00	MAIN LANES	92																	1											1	
399+00	MAIN LANES	86																	1											1	
409+00	MAIN LANES	85																	1											1	
419+00	MAIN LANES	97																	1											1	
421+31	MAIN LANES											292									1										
430+00	MAIN LANES	82																	1											1	
441+87	MAIN LANES							570																		4				1	
451+00	MAIN LANES	118																	1											1	
457+95	MAIN LANES		291																	2											
462+00	MAIN LANES	88																	1											1	
472+00	MAIN LANES	91																	1											1	
473+95	MAIN LANES													314										1							
480+93	MAIN LANES				7																	1									
178+60	HWY. 412B RAMP 1	70																	1											1	
199+00	HWY. 412B RAMP 3		109																	1											
173+10	HWY. 412B RAMP 4	70																	1											1	
176+00	HWY. 412B RAMP 4									182									2												
188+50	HWY. 412B RAMP 4		126																	2											
458+00	XNA ACCESS RD. RAMP 1										213													2							
460+00	XNA ACCESS RD. RAMP 1	86																	2												
464+35	XNA ACCESS RD. RAMP 1										149													2							
438+75	XNA ACCESS RD. RAMP 2													245									2								
451+00	XNA ACCESS RD. RAMP 2		99																	2											
457+80	XNA ACCESS RD. RAMP 2	88																	2												
444+90	XNA ACCESS RD. RAMP 3	84																	1											1	
53+00	HWY. 68	85																	2												
55+50	HWY. 68	94																	2												
27+24	JAVELLO RD.					66																		1							
34+70	JAVELLO RD.										164											1									
17+39	MUSTEEN RD	64																	2												
28+54	MUSTEEN RD										124											1								1	
33+31	MUSTEEN RD										140											1									
19+00	MARCHANT RD.			72																	2										
16+75	MARCHANT RD. ACCESS RD.			152																	2										
19+00	BRUSH CREEK RD.							120																		6					
21+76	BRUSH CREEK RD.		76																	4											
18+52	LIBERTY AVE.																	64										1			
18+60	LIBERTY AVE.																	40										1		1	
21+40	LIBERTY AVE.																	36										1		1	
24+80	LIBERTY AVE.																	54										1			
13+27	TEMP. CROSSOVER 2																										300				
SUBTOTALS:		**3502**	**1373**	**224**	**7**	**66**	**106**	**690**	**182**	**362**	**428**	**292**	**738**	**2121**	**1862**	**458**	**1020**	**194**	**47**	**15**	**9**	**6**	**8**	**7**	**1**	**5**	**10**	**300**	**4**	**36**	**2**
STRUCTURES OVER 20' - 0" SPAN																															
18+38	JAVELLO RD. - SEXTUPLE BOX																														
SUBTOTALS (STRUCTURES OVER 20'-0" SPAN):																															
TOTALS:		**3502**	**1373**	**224**	**7**	**66**	**106**	**690**	**182**	**362**	**428**	**292**	**738**	**2121**	**1862**	**458**	**1020**	**194**	**47**	**15**	**9**	**6**	**8**	**7**	**1**	**5**	**10**	**300**	**4**	**36**	**2**

NOTE: FOR R.C. PIPE CULVERT INSTALLATIONS USE TYPE 3 BEDDING UNLESS OTHERWISE SPECIFIED.
WATER.....12.6 GAL. / SQ. YD. OF SOLID SODDING

STATE OF ARKANSAS
LICENSED PROFESSIONAL ENGINEER
No.13436
SHAUN A. ROBERSON
DIGITALLY SIGNED 7/28/2023

HBVinson
WORKSPACE: AHTD
L:\20\T\70\7660 - ARDOT 012326 Hwy 412 - Hwy 112\Drawings\r012326_QTY.DGN
7/27/2023 15:57 PM
REVISED DATE:

DATE REVISED	DATE REVISED	FED. RD. DIST. NO.	STATE	JOB NO.	SHEET NO.	TOTAL SHEETS
10-23-2023		6	ARK.	012326	189	838
(2)		QUANTITIES				

STATE OF ARKANSAS
LICENSED PROFESSIONAL ENGINEER
No. 13436
SHAUN A. ROBERSON

DIGITALLY SIGNED 10/23/2023

STRUCTURES - CONTINUED

STATION	DESCRIPTION	SPAN	HEIGHT	LENGTH	CONTRA-COSTA ENERGY DISSIPATOR	RIPRAP BASIN	CLASS S CONCRETE-ROADWAY	REINF. STEEL-ROADWAY (GRADE 60)	UNCL.EXC. FOR STR.-ROADWAY	SOLID SODDING	WATER	STD. DWG. NOS.
		LIN. FT.			EACH		CU.YD.	POUND	CU.YD.	SQ.YD.	M.GAL.	
156+75	MAIN LANES									128	1.61	PCC-1, FES-1, FES-2
156+92	MAIN LANES									128	1.61	PCC-1, FES-1, FES-2
157+58	MAIN LANES									8	0.10	PCC-1, FES-1, FES-2
166+00	MAIN LANES									8	0.10	FPC-9D, PCC-1, FES-1, FES-2
169+05	MAIN LANES					1				64	0.81	PCC-1, FES-1, FES-2
175+00	MAIN LANES									8	0.10	FPC-9D, PCC-1, FES-1, FES-2
187+50	MAIN LANES									8	0.10	FPC-9D, PCC-1, FES-1, FES-2
187+64	MAIN LANES									26	0.33	PCC-1, FES-1, FES-2
201+69	MAIN LANES					1				31	0.39	PCC-1, FES-1, FES-2
204+00	MAIN LANES									8	0.10	FPC-9D, PCC-1, FES-1, FES-2
211+00	MAIN LANES									8	0.10	FPC-9D, PCC-1, FES-1, FES-2
221+00	MAIN LANES									8	0.10	FPC-9D, PCC-1, FES-1, FES-2
231+00	MAIN LANES									8	0.10	FPC-9D, PCC-1, FES-1, FES-2
241+00	MAIN LANES									8	0.10	FPC-9D, PCC-1, FES-1, FES-2
243+77	MAIN LANES				1					45	0.57	PCC-1, FES-1, FES-2
251+00	MAIN LANES									8	0.10	FPC-9D, PCC-1, FES-1, FES-2
251+60	MAIN LANES					1				23	0.29	PCC-1, FES-1, FES-2
255+58	MAIN LANES					1				37	0.47	PCC-1, FES-1, FES-2
261+00	MAIN LANES									8	0.10	FPC-9D, PCC-1, FES-1, FES-2
268+00	MAIN LANES									8	0.10	FPC-9D, PCC-1, FES-1, FES-2
268+44	MAIN LANES					1				35	0.44	PCC-1, FES-1, FES-2
275+86	MAIN LANES									8	0.10	FPC-9D, PCC-1, FES-1, FES-2
278+90	MAIN LANES - DOUBLE BOX	9	9	400		1	1504.45	198450	1676	26	0.33	RCB-1, RCB-2, SPECIAL DETAILS
280+00	MAIN LANES									8	0.10	FPC-9D, PCC-1, FES-1, FES-2
290+25	MAIN LANES									8	0.10	FPC-9D, PCC-1, FES-1, FES-2
297+00	MAIN LANES									8	0.10	FPC-9D, PCC-1, FES-1, FES-2
299+82	MAIN LANES									26	0.33	PCC-1, FES-1, FES-2
308+00	MAIN LANES									8	0.10	FPC-9D, PCC-1, FES-1, FES-2
313+88	MAIN LANES - DOUBLE BOX	8	7	618		1	1697.10	240494	3680	30	0.38	RCB-1, RCB-2, SPECIAL DETAILS
318+00	MAIN LANES									8	0.10	FPC-9D, PCC-1, FES-1, FES-2
323+24	MAIN LANES				1					23	0.29	PCC-1, FES-1, FES-2
326+00	MAIN LANES									8	0.10	FPC-9D, PCC-1, FES-1, FES-2
337+05	MAIN LANES					1				37	0.47	PCC-1, FES-1, FES-2
340+00	MAIN LANES									8	0.10	FPC-9D, PCC-1, FES-1, FES-2
350+00	MAIN LANES									8	0.10	FPC-9D, PCC-1, FES-1, FES-2
357+81	MAIN LANES					1				31	0.39	PCC-1, FES-1, FES-2
358+00	MAIN LANES									8	0.10	FPC-9D, PCC-1, FES-1, FES-2
368+00	MAIN LANES									8	0.10	FPC-9D, PCC-1, FES-1, FES-2
373+15	MAIN LANES					1				37	0.47	PCC-1, FES-1, FES-2
377+00	MAIN LANES									8	0.10	FPC-9D, PCC-1, FES-1, FES-2
389+00	MAIN LANES									8	0.10	FPC-9D, PCC-1, FES-1, FES-2
399+00	MAIN LANES									8	0.10	FPC-9D, PCC-1, FES-1, FES-2
409+00	MAIN LANES									8	0.10	FPC-9D, PCC-1, FES-1, FES-2
419+00	MAIN LANES									8	0.10	FPC-9D, PCC-1, FES-1, FES-2
421+31	MAIN LANES				1					17	0.21	PCC-1, FES-1, FES-2
430+00	MAIN LANES									8	0.10	FPC-9D, PCC-1, FES-1, FES-2
441+87	MAIN LANES									50	0.63	FPC-9D, PCC-1, FES-1, FES-2
451+00	MAIN LANES									8	0.10	FPC-9D, PCC-1, FES-1, FES-2
457+95	MAIN LANES									26	0.33	PCC-1, FES-1, FES-2
462+00	MAIN LANES									8	0.10	FPC-9D, PCC-1, FES-1, FES-2
472+00	MAIN LANES									8	0.10	FPC-9D, PCC-1, FES-1, FES-2
473+95	MAIN LANES					1				29	0.37	PCC-1, FES-1, FES-2
480+93	MAIN LANES									23	0.29	PCC-1, FES-1, FES-2
178+60	HWY. 412B RAMP 1									8	0.10	FPC-9D, PCC-1, FES-1, FES-2
199+00	HWY. 412B RAMP 3					1				13	0.16	PCC-1, FES-1, FES-2
173+10	HWY. 412B RAMP 4									8	0.10	FPC-9D, PCC-1, FES-1, FES-2
176+00	HWY. 412B RAMP 4									16	0.20	PCC-1, FES-1, FES-2
188+50	HWY. 412B RAMP 4									26	0.33	PCC-1, FES-1, FES-2
458+00	XNA ACCESS RD. RAMP 1									34	0.43	PCC-1, FES-1, FES-2
460+00	XNA ACCESS RD. RAMP 1									16	0.20	PCC-1, FES-1, FES-2
464+35	XNA ACCESS RD. RAMP 1									34	0.43	PCC-1, FES-1, FES-2
438+75	XNA ACCESS RD. RAMP 2									58	0.73	PCC-1, FES-1, FES-2
451+00	XNA ACCESS RD. RAMP 2									26	0.33	PCC-1, FES-1, FES-2
457+80	XNA ACCESS RD. RAMP 2									16	0.20	PCC-1, FES-1, FES-2
444+90	XNA ACCESS RD. RAMP 3									8	0.10	FPC-9D, PCC-1, FES-1, FES-2
53+00	HWY. 68									16	0.20	PCC-1, FES-1, FES-2
55+50	HWY. 68									16	0.20	PCC-1, FES-1, FES-2
27+24	JAVELLO RD.					1				29	0.37	PCC-1, FES-1, FES-2
34+70	JAVELLO RD.					1				23	0.29	PCC-1, FES-1, FES-2
17+39	MUSTEEN RD									16	0.20	PCC-1, FES-1, FES-2
28+54	MUSTEEN RD					1				23	0.29	FPC-9D, PCC-1, FES-1, FES-2
33+31	MUSTEEN RD				1					23	0.29	PCC-1, FES-1, FES-2
19+00	MARCHANT RD.									34	0.43	PCC-1, FES-1, FES-2
16+75	MARCHANT RD. ACCESS RD.									34	0.43	PCC-1, FES-1, FES-2
19+00	BRUSH CREEK RD.									40	0.50	PCC-1, FES-1, FES-2
21+76	BRUSH CREEK RD.									14	0.18	PCC-1, FES-1, FES-2
18+52	LIBERTY AVE.											
18+60	LIBERTY AVE.											
21+40	LIBERTY AVE.											
24+80	LIBERTY AVE.											
13+27	TEMP. CROSSOVER 2											
SUBTOTALS:					**4**	**15**	**3201.55**	**438944**	**5356**	**1659**	**20.90**	
STRUCTURES OVER 20' - 0" SPAN												
18+38	JAVELLO RD. - SEXTUPLE BOX	6	3	46			152.87	21759	1353	30	0.38	RCB-1, RCB-2, SPECIAL DETAILS
SUBTOTALS (STRUCTURES OVER 20'-0" SPAN):							**152.87**	**21759**	**1353**	**30**	**0.38**	
TOTALS:					**4**	**15**	**3354.42**	**460703**	**6709**	**1689**	**21.28**	

NOTE: FOR R.C. PIPE CULVERT INSTALLATIONS USE TY BASIS OF ESTIMATE:
WATER.....12.6 GAL. / SQ. YD. OF SOLID SODDING

EPSherrill 10/23/2023 11:42:21 AM
WORKSPACE: AHTD
L:\20\T\T01T660 - ARDOT 012326 Hwy 412 - Hwy 112\Drawings\r012326_QTY.DGN
REVISED DATE:

STATE OF ARKANSAS
LICENSED PROFESSIONAL ENGINEER
No.13436
SHAUN A. ROBERSON
DIGITALLY SIGNED 10/02/2023

DATE REVISED	DATE REVISED	FED. RD. DIST. NO.	STATE	JOB NO.	SHEET NO.	TOTAL SHEETS
10-02-2023		6	ARK.	012326	190	838
②		QUANTITIES				

CONCRETE PAVEMENT - ALTERNATIVE 1 (BOX 1 OF 2)

STATION	STATION	LOCATION	LENGTH	CEMENT STABILIZED CRUSHED STONE BASE COURSE (6" COMP'D. DEPTH)				GEOTEXTILE FABRIC (TYPE SPECIAL)		PORTLAND CEMENT CONCRETE PAVEMENT	
				AVG. WID.	PROCESSING	CEMENT	AGGREGATE	AVG. WID.	SQ. YD.	AVG. WID.	11" U.T.
			FEET	FEET	SQ. YD.	TON	TON	FEET		FEET	SQ. YD.
MAIN LANES											
170+00.00	172+00.00	TYPICAL S.E. SECTION, RT LANES	200.00	30.00	666.67	14.00	219.33	30.00	666.67	26.00	577.78
172+00.00	177+53.19	TYPICAL S.E. SECTION, MAIN LANES	553.19	60.00	3687.93	77.45	1213.33	60.00	3687.93	52.00	3196.21
177+53.19	183+22.52	TYPICAL S.E. SECTION, LT LANES	569.33	30.00	1897.77	39.85	624.37	30.00	1897.77	26.00	1644.73
177+53.19	184+17.68	TYPICAL S.E. SECTION, RT LANES	664.49	30.00	2214.97	46.51	728.73	30.00	2214.97	26.00	1919.64
BRIDGE											
187+01.07	190+92.39	TYPICAL S.E. SECTION, LT LANES	391.32	30.00	1304.40	27.39	429.15	30.00	1304.40	26.00	1130.48
187+75.30	191+11.91	TYPICAL S.E. SECTION, RT LANES	336.61	30.00	1122.03	23.56	369.15	30.00	1122.03	26.00	972.43
BRIDGE											
193+94.29	206+72.36	TYPICAL S.E. SECTION, LT LANES	1278.07	30.00	4260.23	89.46	1401.62	30.00	4260.23	26.00	3692.20
194+15.44	206+72.36	TYPICAL S.E. SECTION, RT LANES	1256.92	30.00	4189.73	87.98	1378.42	30.00	4189.73	26.00	3631.10
206+72.36	216+72.36	TYPICAL S.E. SECTION, MAIN LANES	1000.00	60.00	6666.67	140.00	2193.33	60.00	6666.67	52.00	5777.78
216+72.36	222+98.54	TYPICAL S.E. SECTION, MAIN LANES	626.18	60.00	4174.53	87.67	1373.42	60.00	4174.53	52.00	3617.93
222+98.54	226+69.81	TYPICAL SECTION, MAIN LANES	371.27	60.00	2475.13	51.98	814.32	60.00	2475.13	52.00	2145.12
226+69.81	252+75.46	TYPICAL S.E. SECTION, MAIN LANES	2605.65	60.00	17371.00	364.79	5715.06	60.00	17371.00	52.00	15054.87
252+75.46	293+37.27	TYPICAL SECTION, LT LANES	4061.81	30.00	13539.37	284.33	4454.45	30.00	13539.37	26.00	11734.12
252+75.46	293+75.00	TYPICAL SECTION, RT LANES	4099.54	30.00	13665.13	286.97	4495.83	30.00	13665.13	26.00	11843.12
BRIDGE											
296+79.63	301+33.58	TYPICAL SECTION, LT LANES	453.95	30.00	1513.17	31.78	497.83	30.00	1513.17	26.00	1311.41
297+17.36	301+33.58	TYPICAL SECTION, RT LANES	416.22	30.00	1387.40	29.14	456.45	30.00	1387.40	26.00	1202.41
301+33.58	364+82.77	TYPICAL S.E. SECTION, MAIN LANES	6349.19	60.00	42327.93	888.89	13925.89	60.00	42327.93	52.00	36684.21
364+82.77	377+86.91	TYPICAL SECTION, MAIN LANES	1304.14	60.00	8694.27	182.58	2860.41	60.00	8694.27	52.00	7535.03
BRIDGE											
388+24.09	411+61.02	TYPICAL SECTION, MAIN LANES	2336.93	60.00	15579.53	327.17	5125.67	60.00	15579.53	52.00	13502.26
411+61.02	421+14.82	TYPICAL S.E. SECTION, MAIN LANES	953.80	60.00	6358.67	133.53	2092.00	60.00	6358.67	52.00	5510.84
421+14.82	426+48.43	TYPICAL S.E. SECTION, LT LANES	533.61	30.00	1778.70	37.35	585.19	30.00	1778.70	26.00	1541.54
421+14.82	426+74.02	TYPICAL S.E. SECTION, RT LANES	559.20	30.00	1864.00	39.14	613.26	30.00	1864.00	26.00	1615.47
BRIDGE											
429+32.43	431+14.82	TYPICAL S.E. SECTION, LT LANES	182.39	30.00	607.97	12.77	200.02	30.00	607.97	26.00	526.90
429+64.67	431+14.82	TYPICAL S.E. SECTION, RT LANES	150.15	30.00	500.50	10.51	164.66	30.00	500.50	26.00	433.77
431+14.82	435+99.37	TYPICAL S.E. SECTION, MAIN LANES	484.55	60.00	3230.33	67.84	1062.78	60.00	3230.33	52.00	2799.62
435+99.37	447+96.54	TYPICAL S.E. SECTION, MAIN LANES	1197.17	60.00	7981.13	167.60	2625.79	60.00	7981.13	52.00	6916.98
447+96.54	449+41.15	TYPICAL S.E. SECTION, MAIN LANES	144.61	60.00	964.07	20.25	317.18	60.00	964.07	52.00	835.52
449+41.15	462+18.42	TYPICAL S.E. SECTION, LT LANES	1277.27	30.00	4257.57	89.41	1400.74	30.00	4257.57	26.00	3689.89
449+41.15	462+33.60	TYPICAL S.E. SECTION, RT LANES	1292.45	30.00	4308.17	90.47	1417.39	30.00	4308.17	26.00	3733.74
BRIDGE											
465+02.36	474+53.69	TYPICAL S.E. SECTION, LT LANES	951.33	30.00	3171.10	66.59	1043.29	30.00	3171.10	26.00	2748.29
465+24.16	474+53.69	TYPICAL S.E. SECTION, RT LANES	929.53	30.00	3098.43	65.07	1019.38	30.00	3098.43	26.00	2685.31
474+53.69	478+40.00	TYPICAL S.E. SECTION, MAIN LANES	386.31	60.00	2575.40	54.08	847.31	60.00	2575.40	52.00	2232.01
478+40.00	484+53.69	TYPICAL SECTION, MAIN LANES	613.69	60.00	4091.27	85.92	1346.03	60.00	4091.27	52.00	3545.76
484+53.69	514+00.00	TYPICAL SECTION, MAIN LANES	2946.31	60.00	19642.07	412.48	6462.24	60.00	19642.07	52.00	17023.12
AUXILIARY LANES											
170+00.00	177+53.19	TYPICAL S.E. SECTION, MAIN LANES W/ AUX. LANE - RIGHT LANES	753.19	12.08	1011.20	21.24	332.68	12.08	1011.20	10.08	843.82
206+72.36	216+72.36	TYPICAL S.E. SECTION, MAIN LANES W/ AUX. LANE - RIGHT LANES	1000.00	12.08	1342.56	28.19	441.70	12.08	1342.56	10.08	1120.33
421+14.82	426+48.43	TYPICAL S.E. SECTION, MAIN LANES W/ AUX. LANE - LEFT LANES	533.61	8.04	476.69	10.01	156.83	8.04	476.69	6.04	358.11
429+32.43	431+14.82	TYPICAL S.E. SECTION, MAIN LANES W/ AUX. LANE - LEFT LANES	182.39	8.04	162.94	3.42	53.61	8.04	162.94	6.04	122.40
435+99.37	447+96.54	TYPICAL S.E. SECTION, MAIN LANES W/ AUX. LANE - RIGHT LANES	1197.17	12.08	1607.27	33.75	528.79	12.08	1607.27	10.08	1341.23
449+41.15	460+96.66	TYPICAL S.E. SECTION, MAIN LANES W/ AUX. LANE - LEFT LANES	1155.51	8.04	1032.26	21.68	339.61	8.04	1032.26	6.04	775.48
460+84.46	462+33.60	TYPICAL S.E. SECTION, MAIN LANES W/ AUX. LANE - RIGHT LANES	149.14	12.08	200.23	4.20	65.88	12.08	200.23	10.08	167.09
465+24.16	478+40.00	TYPICAL S.E. SECTION, MAIN LANES W/ AUX. LANE - RIGHT LANES	1315.84	12.08	1766.59	37.10	581.21	12.08	1766.59	10.08	1474.18
474+53.69	478+40.00	TYPICAL S.E. SECTION, MAIN LANES W/ AUX. LANE - LEFT LANES	386.31	8.04	345.10	7.25	113.54	8.04	345.10	6.04	259.26
478+40.00	483+29.51	TYPICAL SECTION, MAIN LANES W/ AUX. LANE - RIGHT LANES	489.51	12.00	652.68	13.71	214.73	12.00	652.68	10.00	543.90
478+40.00	484+53.69	TYPICAL SECTION, MAIN LANES W/ AUX. LANE - LEFT LANES	613.69	12.00	818.25	17.18	269.20	12.00	818.25	10.00	681.88
SUBTOTALS (BOX 1 OF 2):					**220583.01**	**4632.24**	**72571.80**		**220583.01**		**190699.27**

BASIS OF ESTIMATE:
CEMENT STABILIZED CRUSHED STONE BASE COURSE = 94.0% AGGR. 6.0% CEMENT

HBVinson 10/2/2023 1:45:41 PM
WORKSPACE: AHTD
L:\20\7\7017660 - ARDOT 012326 Hwy 412 - Hwy 112\Drawings\r012326_QTY.DGN
REVISED DATE:



DIGITALLY SIGNED 10/02/2023

DATE REVISED	DATE REVISED	FED. RD. DIST. NO.	STATE	JOB NO.	SHEET NO.	TOTAL SHEETS
10-02-2023		6	ARK.	012326	191	838
(2)		QUANTITIES				

CONCRETE PAVEMENT - ALTERNATIVE 1 (BOX 2 OF 2)

STATION	STATION	LOCATION	LENGTH	CEMENT STABILIZED CRUSHED STONE BASE COURSE (6" COMP'D. DEPTH)				GEOTEXTILE FABRIC (TYPE SPECIAL)		PORTLAND CEMENT CONCRETE PAVEMENT	
				AVG. WID.	PROCESSING	CEMENT	AGGREGATE	AVG. WID.	SQ. YD.	AVG. WID.	11" U.T.
			FEET	FEET	SQ. YD.	TON	TON	FEET		FEET	SQ. YD.
ADDITIONAL FOR GORE											
175+37.85	177+53.19	TYPICAL S.E. SECTION, MAIN LANES W/ AUX. LANE - RIGHT LANES	215.34	10.88	260.26	5.47	85.63	10.88	260.26	10.88	260.26
177+53.19	180+89.79	TYPICAL S.E. SECTION, MAIN LANES - RIGHT LANES	336.60	3.45	128.99	2.71	42.44	3.45	128.99	3.45	128.99
203+08.67	206+72.36	TYPICAL S.E. SECTION, MAIN LANES - LEFT LANES	363.69	14.05	567.85	11.92	186.82	14.05	567.85	14.05	567.85
206+72.36	209+74.69	TYPICAL S.E. SECTION, MAIN LANES - LEFT LANES	302.33	7.25	243.68	5.12	80.17	7.25	243.68	7.25	243.68
206+72.36	207+49.66	TYPICAL S.E. SECTION, MAIN LANES W/ AUX. LANE - RIGHT LANES	77.30	1.87	16.10	0.34	5.30	1.87	16.10	1.87	16.10
428+97.83	431+14.82	TYPICAL S.E. SECTION, MAIN LANES W/ AUX. LANE - LEFT LANES	216.99	2.44	58.90	1.24	19.38	2.44	58.90	2.44	58.90
446+49.37	447+96.58	TYPICAL S.E. SECTION, MAIN LANES W/ AUX. LANE - RIGHT LANES	147.21	7.07	115.63	2.43	38.04	7.07	115.63	7.07	115.63
447+96.58	450+68.08	TYPICAL S.E. SECTION, MAIN LANES W/ AUX. LANE - RIGHT LANES	271.50	4.34	130.86	2.75	43.05	4.34	130.86	4.34	130.86
447+66.06	449+41.15	TYPICAL S.E. SECTION, MAIN LANES W/ AUX. LANE - LEFT LANES	175.09	4.77	92.86	1.95	30.55	4.77	92.86	4.77	92.86
449+41.15	453+46.66	TYPICAL S.E. SECTION, MAIN LANES W/ AUX. LANE - LEFT LANES	405.51	7.41	334.01	7.01	109.89	7.41	334.01	7.41	334.01
460+84.46	462+18.04	TYPICAL S.E. SECTION, MAIN LANES W/ AUX. LANE - RIGHT LANES	133.58	1.82	27.04	0.57	8.90	1.82	27.04	1.82	27.04
479+96.17	483+29.51	TYPICAL SECTION, MAIN LANES W/ AUX. LANE - RIGHT LANES	333.34	8.98	332.68	6.99	109.45	8.98	332.68	8.98	332.68
483+29.51	484+53.69	TYPICAL SECTION, MAIN LANES W/ AUX. LANE - RIGHT LANES	124.18	7.52	103.79	2.18	34.15	7.52	103.79	7.52	103.79
483+09.14	484+53.69	TYPICAL SECTION, MAIN LANES W/ AUX. LANE - LEFT LANES	144.55	2.28	36.54	0.77	12.02	2.28	36.54	2.28	36.54
484+53.69	485+41.37	TYPICAL SECTION, MAIN LANES W/ AUX. LANE - RIGHT LANES	87.68	0.81	7.90	0.17	2.60	0.81	7.90	0.81	7.90
177+62.07	180+04.46	TWO LANE RAMP TYPICAL S.E. SECTION - 412B RAMP 1 LEFT	242.39	4.88	131.35	2.76	43.21	4.88	131.35	4.88	131.35
480+16.93	482+70.26	RAMP TYPICAL SECTION - XNA ACCESS RD RAMP 1 RIGHT	253.33	14.47	407.26	8.55	133.99	14.47	407.26	14.47	407.26
482+70.26	484+19.97	TWO LANE RAMP TYPICAL SECTION - XNA ACCESS RD RAMP 1 RIGHT	149.71	7.32	121.77	2.56	40.06	7.32	121.77	7.32	121.77
421+81.07	424+21.33	TWO LANE RAMP TYPICAL S.E. SECTION - XNA ACCESS RD RAMP 2 RIGHT	240.26	6.71	179.23	3.76	58.97	6.71	179.23	6.71	179.23
424+21.33	425+21.33	RAMP TYPICAL S.E. SECTION - XNA ACCESS RD RAMP 2 RIGHT	100.00	3.58	39.79	0.84	13.09	3.58	39.79	3.58	39.79
HWY. 412B											
192+33.34	193+15.21	RAMP 3 - RAMP TYPICAL SECTION	81.87	19.00	172.84	3.63	56.86	19.00	172.84	15.00	136.45
193+15.21	205+31.72	RAMP 3 - RAMP TYPICAL S.E. SECTION	1216.51	19.00	2568.19	53.93	844.93	19.00	2568.19	15.00	2027.52
192+42.58	194+08.59	RAMP 2 - RAMP TYPICAL SECTION	166.01	19.00	350.47	7.36	115.30	19.00	350.47	15.00	276.68
194+08.59	206+69.05	RAMP 2 - RAMP TYPICAL S.E. SECTION	1260.46	19.00	2660.97	55.88	875.46	19.00	2660.97	15.00	2100.77
XNA ACCESS RD.											
416+52.40	424+21.33	RAMP 2 - TWO LANE RAMP TYPICAL S.E. SECTION	768.93	28.00	2392.23	50.24	787.04	28.00	2392.23	24.00	2050.48
424+21.33	426+22.22	RAMP 2 - RAMP TYPICAL S.E. SECTION	200.89	19.00	424.10	8.91	139.53	19.00	424.10	15.00	334.82
426+22.22	428+20.93	RAMP 2 - RAMP TYPICAL SECTION	198.71	19.00	419.50	8.81	138.02	19.00	419.50	15.00	331.18
431+12.22	451+20.56	RAMP 2 - RAMP TYPICAL S.E. SECTION	2008.34	19.00	4239.83	89.04	1394.90	19.00	4239.83	15.00	3347.23
451+20.57	460+86.86	RAMP 2 - RAMP TYPICAL S.E. SECTION	966.29	19.00	2039.95	42.84	671.14	19.00	2039.95	15.00	1610.48
431+18.13	431+57.19	RAMP 4 - RAMP TYPICAL SECTION	39.06	19.00	82.46	1.73	27.13	19.00	82.46	15.00	65.10
431+57.19	441+85.55	RAMP 4 - RAMP TYPICAL S.E. SECTION	1028.36	19.00	2170.98	45.59	714.25	19.00	2170.98	15.00	1713.93
434+37.71	449+34.18	RAMP 3 - RAMP TYPICAL S.E. SECTION	1496.47	19.00	3159.21	66.34	1039.38	19.00	3159.21	15.00	2494.12
447+93.93	468+94.40	RAMP 1 - RAMP TYPICAL S.E. SECTION	2100.47	19.00	4434.33	93.12	1458.89	19.00	4434.33	15.00	3500.78
468+94.40	470+03.82	RAMP 1 - RAMP TYPICAL SECTION	109.42	19.00	231.00	4.85	76.00	19.00	231.00	15.00	182.37
472+85.99	482+70.26	RAMP 1 - RAMP TYPICAL SECTION	984.27	19.00	2077.90	43.64	683.63	19.00	2077.90	15.00	1640.45
482+70.26	484+19.97	RAMP 1 - TWO LANE RAMP TYPICAL SECTION	149.71	28.00	465.76	9.78	153.24	28.00	465.76	24.00	399.23
HWY. 112											
483+30.39	483+71.30	RAMP 1 - RAMP TYPICAL SECTION	40.91	19.00	86.37	1.81	28.42	19.00	86.37	15.00	68.18
483+71.30	493+74.64	RAMP 1 - RAMP TYPICAL S.E. SECTION	1003.34	19.00	2118.16	44.48	696.87	19.00	2118.16	15.00	1672.23
493+74.64	493+81.27	RAMP 1 - RAMP TYPICAL SECTION	6.63	19.00	14.00	0.29	4.61	19.00	14.00	15.00	11.05
493+81.27	498+30.00	RAMP 1 - RAMP TYPICAL S.E. SECTION	448.73	19.00	947.32	19.89	311.67	19.00	947.32	15.00	747.88
498+30.00	501+38.11	RAMP 1 - RAMP W/ AUX. LANE TYPICAL S.E. SECTION	308.11	26.42	904.47	18.99	297.57	26.42	904.47	22.42	767.54
501+38.11	501+41.07	RAMP 1 - RAMP W/ AUX. LANE TYPICAL SECTION	2.96	28.00	9.21	0.19	3.03	28.00	9.21	24.00	7.89
484+53.20	493+60.68	RAMP 4 - RAMP TYPICAL S.E. SECTION	907.48	19.00	1915.79	40.23	630.29	19.00	1915.79	15.00	1512.47
493+60.68	499+12.74	RAMP 4 - RAMP TYPICAL SECTION	552.06	19.00	1165.46	24.47	383.44	19.00	1165.46	15.00	920.10
SUBTOTALS (BOX 2 OF 2):					**38386.99**	**806.13**	**12629.31**		**38386.99**		**31255.42**
SUBTOTALS (BOX 1 OF 2):					**220583.01**	**4632.24**	**72571.80**		**220583.01**		**190699.27**
TOTALS:					**258970.00**	**5438.37**	**85201.11**		**258970.00**		**221954.69**

BASIS OF ESTIMATE:
CEMENT STABILIZED CRUSHED STONE BASE COURSE = 94.0% AGGR. 6.0% CEMENT

HBVinson 10/2/2023 14:45:54 PM
WORKSPACE: AHTD
L:\2017\17017660 - ARDOT 012326 Hwy 412 - Hwy 112\Drawings\r012326_QTY.DGN
REVISED DATE:

DATE REVISED	DATE REVISED	FED. RD. DIST. NO.	STATE	JOB NO.	SHEET NO.	TOTAL SHEETS
		6	ARK.	012326	192	838
②		QUANTITIES				



DIGITALLY SIGNED 8/10/2023

BASE AND SURFACING - ALTERNATIVE 1 (BOX 1 OF 4)

STATION	STATION	LOCATION	LENGTH	AGGREGATE BASE COURSE (CLASS 7)		TACK COAT							ACHM BASE COURSE (1 1/2")				ACHM BINDER COURSE (1")				ACHM SURFACE COURSE (1/2")									
						(0.05 GAL. PER SQ. YD.)			(0.17 GAL. PER SQ. YD.)																					
				TON / STATION	TON	TOTAL WID.	SQ.YD.	GALLON	TOTAL WID.	SQ.YD.	GALLON	TOTAL GALLONS	AVG. WID.	SQ.YD.	POUND / SQ.YD.	PG 70-22	AVG. WID.	SQ.YD.	POUND / SQ.YD.	PG 70-22	AVG. WID. SHOULDER	SQ.YD.	PCUND / SQ.YD.	PG 64-22	PG 70-22	AVG. WID. LANES	SQ.YD.	POUND / SQ.YD.	PG 70-22	TOTAL PG 64-22	TOTAL PG 70-22
			FEET			FEET			FEET				FEET			TON	FEET			TON	FEET			TON	TON	FEET			TON	TON
LEFT MAIN LANES																														
144+68.03	145+68.03	TRANSITION LT LANES	100.00	144.38	144.38	24.00	266.67	13.33	24.00	266.67	45.33	58.66									14.00	155.56	220.00		17.11	24.00	266.67	220.00	29.33		46.44
145+68.03	158+68.03	TYPICAL S.E. N&W SECTION, MAIN LANES W/ AUX. LANE	1300.00	344.25	4475.25	56.81	8205.17	410.26	24.00	3466.67	589.33	999.59	11.13	1606.94	550.00	441.91	10.93	1578.78	495.00	390.75	14.00	2022.22	220.00		222.44	34.75	5015.44	220.00	552.14		774.58
158+68.03	169+23.05	TYPICAL S.E. N&W SECTION, MAIN LANES W/ 2 AUX. LANES	1055.02	405.00	4272.83	79.93	9369.75	468.49	24.00	2813.39	478.28	946.77	22.83	2676.23	550.00	735.96	22.64	2653.96	495.00	656.86	14.00	1641.14	220.00		180.53	34.46	4039.55	220.00	444.35		624.88
169+23.05	170+68.03	TYPICAL S.E. N&W SECTION, MAIN LANES W/ AUX. LANE	144.98	413.00	598.77	96.56	1555.39	77.77	24.00	386.61	65.72	143.49	24.38	392.65	550.00	107.98	24.18	389.51	495.00	96.40	14.00	225.52	220.00		24.81	48.00	773.23	220.00	85.06		109.87
170+68.03	172+00.00	TYPICAL S.E. N&W SECTION, MAIN LANES W/ AUX. LANE	131.97	232.75	307.16	24.00	351.92	17.60	24.00	351.92	59.83	77.43									14.00	205.29	220.00		22.58	24.00	351.92	220.00	38.71		61.29
172+00.00	177+53.19	TYPICAL S.E. SECTION, MAIN LANES W/ AUX. LANE	553.19	201.75	1116.06																12.00	737.59	220.00	81.13					81.13	
177+53.19	183+22.52	TYPICAL S.E. SECTION, MAIN LANES	569.33	201.75	1148.62																12.00	759.11	220.00	83.50					83.50	
BRIDGE																														
187+01.07	190+92.39	TYPICAL S.E. SECTION, MAIN LANES	391.32	201.75	789.49																12.00	521.76	220.00	57.39					57.39	
BRIDGE																														
193+94.29	206+72.36	TYPICAL S.E. SECTION, MAIN LANES	1278.07	201.75	2578.51																12.00	1704.09	220.00	187.45					187.45	
206+72.36	216+72.36	TYPICAL S.E. SECTION, MAIN LANES W/ AUX. LANE	1000.00	201.75	2017.50																12.00	1333.33	220.00	146.67					146.67	
216+72.36	222+98.54	TYPICAL S.E. SECTION, MAIN LANES	626.18	201.75	1263.32																12.00	834.91	220.00	91.84					91.84	
222+98.54	226+69.81	TYPICAL SECTION, MAIN LANES	371.27	201.75	749.04																12.00	495.03	220.00	54.45					54.45	
226+69.81	252+75.46	TYPICAL S.E. SECTION, MAIN LANES	2605.65	201.75	5256.90																12.00	3474.20	220.00	382.16					382.16	
252+75.46	293+37.27	TYPICAL SECTION, MAIN LANES	4061.81	201.75	8194.70																12.00	5415.75	220.00	595.73					595.73	
BRIDGE																														
296+79.63	301+33.58	TYPICAL SECTION, MAIN LANES	453.95	201.75	915.84																12.00	605.27	220.00	66.58					66.58	
301+33.58	364+82.77	TYPICAL S.E. SECTION, MAIN LANES	6349.19	201.75	12809.49																12.00	8465.59	220.00	931.21					931.21	
364+82.77	377+86.91	TYPICAL SECTION, MAIN LANES	1304.14	201.75	2631.10																12.00	1738.85	220.00	191.27					191.27	
BRIDGE																														
388+24.09	411+61.02	TYPICAL SECTION, MAIN LANES	2336.93	201.75	4714.76																12.00	3115.91	220.00	342.75					342.75	
411+61.02	421+14.82	TYPICAL S.E. SECTION, MAIN LANES	953.80	201.75	1924.29																12.00	1271.73	220.00	139.89					139.89	
421+14.82	426+48.43	TYPICAL S.E. SECTION, MAIN LANES W/ AUX. LANE	533.61	187.00	997.85																10.00	592.90	220.00	65.22					65.22	
BRIDGE																														
420+32.43	431+14.82	TYPICAL S.E. SECTION, MAIN LANES W/ AUX. LANE	182.30	187.00	341.07																10.00	202.66	220.00	22.29					22.29	
431+14.82	435+99.37	TYPICAL S.E. SECTION, MAIN LANES	484.55	201.75	977.58																12.00	646.07	220.00	71.07					71.07	
435+99.37	447+96.54	TYPICAL S.E. SECTION, MAIN LANES W/ AUX. LANE	1197.17	201.75	2415.29																12.00	1596.23	220.00	175.59					175.59	
447+96.54	449+41.15	TYPICAL S.E. SECTION, MAIN LANES	144.61	201.75	291.75																12.00	192.81	220.00	21.21					21.21	
449+41.15	460+96.66	TYPICAL S.E. SECTION, MAIN LANES W/ AUX. LANE	1155.51	187.00	2160.80																10.00	1283.90	220.00	141.23					141.23	
460+96.66	462+18.42	TYPICAL S.E. SECTION, MAIN LANES W/ AUX. LANE	121.76	201.75	245.65																12.00	162.35	220.00	17.86					17.86	
BRIDGE																														
465+02.36	474+53.69	TYPICAL S.E. SECTION, MAIN LANES W/ AUX. LANE	951.33	201.75	1919.31																12.00	1268.44	220.00	139.53					139.53	
474+53.69	478+40.00	TYPICAL S.E. SECTION, MAIN LANES W/ AUX. LANE	386.31	187.00	722.40																10.00	429.23	220.00	47.22					47.22	
478+40.00	484+53.69	TYPICAL SECTION, MAIN LANES W/ AUX. LANE	613.69	187.00	1147.60																10.00	681.88	220.00	75.01					75.01	
484+53.69	514+00.00	TYPICAL SECTION, MAIN LANES	2946.31	201.75	5944.18																12.00	3928.41	220.00	432.13					432.13	
RIGHT MAIN LANES																														
153+53.19	154+53.19	TRANSITION RT LANES	100.00	144.38	144.38	24.00	266.67	13.33	24.00	266.67	45.33	58.66									14.00	155.56	220.00		17.11	24.00	266.67	220.00	29.33		46.44
154+53.19	169+23.05	TYPICAL S.E. N&W SECTION, MAIN LANES W/ AUX. LANE	1469.86	341.75	5023.25	55.31	9032.29	451.61	24.00	3919.63	666.34	1117.95	10.63	1735.25	550.00	477.19	10.43	1703.40	495.00	421.59	14.00	2286.45	220.00		251.51	34.25	5593.63	220.00	615.30		866.81
169+23.05	170+00.00	TYPICAL S.E. N&W SECTION, MAIN LANES W/ AUX. LANE	76.95	341.75	262.98	60.55	517.72	25.89	24.00	205.20	34.88	60.77	12.38	105.81	550.00	29.10	12.18	104.11	495.00	25.77	14.00	119.70	220.00		13.17	36.00	307.80	220.00	33.86		47.03
170+00.00	177+53.19	TYPICAL S.E. SECTION, MAIN LANES W/ AUX. LANE	753.19	201.75	1519.56																14.00	1171.63	220.00	128.88					128.88	
177+53.19	184+17.68	TYPICAL S.E. SECTION, MAIN LANES	664.49	201.75	1340.61																12.00	885.99	220.00	97.46					97.46	
BRIDGE																														
187+75.30	191+11.91	TYPICAL S.E. SECTION, MAIN LANES	336.61	201.75	679.11																12.00	448.81	220.00	49.37					49.37	
BRIDGE																														
194+15.44	206+72.36	TYPICAL S.E. SECTION, MAIN LANES	1256.92	201.75	2535.84																12.00	1675.89	220.00	184.35					184.35	
206+72.36	216+72.36	TYPICAL S.E. SECTION, MAIN LANES W/ AUX. LANE	1000.00	187.00	1870.00																10.00	1111.11	220.00	122.22					122.22	
216+72.36	222+98.54	TYPICAL S.E. SECTION, MAIN LANES	626.18	201.75	1263.32																12.00	834.91	220.00	91.84					91.84	
222+98.54	226+69.81	TYPICAL SECTION, MAIN LANES	371.27	201.75	749.04																12.00	495.03	220.00	54.45					54.45	
226+69.81	252+75.46	TYPICAL S.E. SECTION, MAIN LANES	2605.65	201.75	5256.90																12.00	3474.20	220.00	382.16					382.16	
252+75.46	293+75.00	TYPICAL SECTION, MAIN LANES	4099.54	201.75	8270.82																12.00	5466.05	220.00	601.27					601.27	
BRIDGE																														
297+17.36	301+33.58	TYPICAL SECTION, MAIN LANES	416.22	201.75	839.72																12.00	554.96	220.00	61.05					61.05	
301+33.58	364+82.77	TYPICAL S.E. SECTION, MAIN LANES	6349.19	201.75	12809.49																12.00	8465.59	220.00	931.21					931.21	
364+82.77	377+86.91	TYPICAL SECTION, MAIN LANES	1304.14	201.75	2631.10																12.00	1738.85	220.00	191.27					191.27	
BRIDGE																														
388+24.09	411+61.02	TYPICAL SECTION, MAIN LANES	2336.93	201.75	4714.76																12.00	3115.91	220.00	342.75					342.75	
411+61.02	421+14.82	TYPICAL S.E. SECTION, MAIN LANES	953.80	201.75	1924.29																12.00	1271.73	220.00	139.89					139.89	
421+14.82	426+74.02	TYPICAL S.E. SECTION, MAIN LANES W/ AUX. LANE	559.20	201.75	1128.19																12.00	745.60	220.00	82.02					82.02	
BRIDGE																														
429+64.67	431+14.82	TYPICAL S.E. SECTION, MAIN LANES W/ AUX. LANE	150.15	201.75	302.93																12.00	200.20	220.00	22.02					22.02	
431+14.82	435+99.37	TYPICAL S.E. SECTION, MAIN LANES	484.55	201.75	977.58																12.00	646.07	220.00	71.07					71.07	
435+99.37	447+96.54	TYPICAL S.E. SECTION, MAIN LANES W/ AUX. LANE	1197.17	187.00	2238.71																10.00	1330.19	220.00	146.32					146.32	
447+96.54	449+41.15	TYPICAL S.E. SECTION, MAIN LANES	144.61	201.75	291.75																12.00	192.81	220.00	21.21					21.21	
449+41.15	460+84.47	TYPICAL S.E. SECTION, MAIN LANES W/ AUX. LANE	1143.32	201.75	2306.65																12.00	1524.43	220.00	167.69					167.69	
460+84.47	462+33.60	TYPICAL S.E. SECTION, MAIN LANES W/ AUX. LANE	149.13	187.00	278.87																10.00	165.70	220.00	18.23					18.23	
BRIDGE																														
465+24.16	478+40.00	TYPICAL S.E. SECTION, MAIN LANES W/ AUX. LANE	1315.84	187.00	2460.62																10.00	1462.04	220.00	160.82					160.82	
478+40.00	483+53.69	TYPICAL SECTION, MAIN LANES W/ AUX. LANE	513.69	187.00	960.60																10.00	570.77	220.00	62.78					62.78	
483+29.51	514+00.00	TYPICAL SECTION, MAIN LANES	3070.49	201.75	6194.71																12.00	4093.99	220.00	450.34					450.34	
SUBTOTALS (BOX 1 OF 4):					**142047.27**		**29565.58**	**1478.28**		**11676.76**	**1985.04**	**3463.32**		**6516.88**		**1792.14**		**6429.76**		**1591.37**		**89911.90**		**9141.05**	**749.26**		**16618.91**		**1828.08**	**9141.05**	**2577.34**

BASIS OF ESTIMATE:
ACHM SURFACE COURSE (1/2").....94.3% MIN. AGGR.....5.7% ASPHALT BINDER
ACHM BINDER COURSE (1").....95.4% MIN. AGGR.....4.6% ASPHALT BINDER
ACHM BASE COURSE (1 1/2").....96.0% MIN. AGGR.....4.0% ASPHALT BINDER
MAXIMUM NUMBER OF GYRATIONS = 115 FOR PG 64-22
MAXIMUM NUMBER OF GYRATIONS = 160 FOR PG 70-22
TACK COAT QUANTITIES WERE CALCULATED USING THE EMULSIFIED ASPHALT RATES. REFER TO SS-400-1 FOR THE RESIDUAL ASPHALT APPLICATION RATES.

JATurner 8/10/2023 3:00:30 PM
WORKSPACE: AHTD
L:\20\TV\170\7660 - ARDOT 012326 Hwy 412 - Hwy 112\Drawings\r012326_QTY.DGN
REVISED DATE:



DIGITALLY SIGNED 7/28/2023

DATE REVISED	DATE REVISED	FED. RD. DIST. NO.	STATE	JOB NO.	SHEET NO.	TOTAL SHEETS
		6	ARK.	012326	193	838
		QUANTITIES				
②						

BASE AND SURFACING - ALTERNATIVE 1 (BOX 2 OF 4)

STATION	STATION	LOCATION	LENGTH	AGGREGATE BASE COURSE (CLASS 7)		TACK COAT							ACHM BASE COURSE (1 1/2")				ACHM BINDER COURSE (1")				ACHM SURFACE COURSE (1/2")										
						(0.05 GAL. PER SQ. YD.)			(0.17 GAL. PER SQ. YD.)																					
				TON / STATION	TON	TOTAL WID.	SQ.YD.	GALLON	TOTAL WID.	SQ.YD.	GALLON	TOTAL GALLONS	AVG. WID.	SQ.YD.	POUND / SQ.YD.	PG 70-22	AVG. WID.	SQ.YD.	POUND / SQ.YD.	PG 70-22	AVG. WID. SHOULDER	SQ.YD.	PCUND / SQ.YD.	PG 64-22	PG 70-22	AVG. WID. LANES	SQ.YD.	POUND / SQ.YD.	PG 70-22	TOTAL PG 64-22	TOTAL PG 70-22
			FEET			FEET			FEET				FEET			TON	FEET			TON	FEET			TON	TON	FEET			TON	TON
ADDITIONAL FOR GORE																														
169+46.18	170+68.03	TYPICAL S.E. N&W SECTION, MAIN LANES W/ AUX. LANE - LEFT LANES	121.85	132.25	161.15	23.32	315.73	13.79				15.79	11.66	157.86	550.00	43.41	11.66	157.86	495.00	39.07						11.66	157.86	220.00	17.36		17.36
ADDITIONAL FOR GUARDRAIL																														
171+97.84	176+55.32	C.L. MEDIAN RT.	458.48	58.50	268.21																5.15	262.38	220.00	28.86					28.86	
181+80.08	183+13.13	C.L. MEDIAN LT.	136.05	39.00	53.06																3.77	56.97	220.00	6.27					6.27	
180+31.09	184+13.24	C.L. MEDIAN RT.	382.15	60.75	232.16																5.87	249.25	220.00	27.42					27.42	
181+26.13	184+52.28	C.L. MEDIAN RT.	326.15	55.50	181.01																5.35	193.81	220.00	21.32					21.32	
186+72.61	189+98.76	C.L. MEDIAN LT.	326.15	53.75	175.31																5.18	187.71	220.00	20.65					20.65	
187+07.85	190+90.00	C.L. MEDIAN LT.	382.15	59.25	226.42																5.72	243.05	220.00	26.74					26.74	
187+49.63	191+31.78	C.L. MEDIAN RT.	382.15	59.00	225.47																5.69	241.80	220.00	26.60					26.60	
188+16.05	191+42.20	C.L. MEDIAN RT.	326.15	55.50	181.01																5.35	193.81	220.00	21.32					21.32	
193+66.37	196+92.52	C.L. MEDIAN LT.	326.15	53.75	175.31																5.18	187.71	220.00	20.65					20.65	
193+74.41	197+55.56	C.L. MEDIAN LT.	382.15	59.25	226.42																5.72	243.04	220.00	26.73					26.73	
205+90.78	210+54.08	C.L. MEDIAN LT.	463.30	52.50	243.23																5.06	260.62	220.00	28.67					28.67	
215+12.00	220+98.00	C.L. MEDIAN RT.	586.00	54.25	317.91																5.22	339.77	220.00	37.37					37.37	
217+92.00	223+78.00	C.L. MEDIAN LT.	586.00	53.75	314.98																5.18	337.08	220.00	37.08					37.08	
290+05.35	293+87.51	C.L. MEDIAN RT.	382.16	59.75	228.34																5.76	244.79	220.00	26.93					26.93	
290+78.50	294+04.66	C.L. MEDIAN RT.	326.16	54.50	177.76																5.26	190.78	220.00	20.99					20.99	
296+49.96	299+73.13	C.L. MEDIAN LT.	326.17	54.50	177.76																5.26	190.79	220.00	20.99					20.99	
296+67.11	300+49.27	C.L. MEDIAN LT.	382.16	59.75	228.34																5.76	244.79	220.00	26.93					26.93	
374+28.75	378+13.90	C.L. MEDIAN RT.	382.15	59.75	228.33																5.76	244.78	220.00	26.93					26.93	
374+84.75	378+13.39	C.L. MEDIAN RT.	325.64	54.75	178.29																5.27	190.77	220.00	20.99					20.99	
388+00.08	391+23.24	C.L. MEDIAN LT.	326.16	54.50	177.76																5.26	190.78	220.00	20.99					20.99	
388+00.08	391+82.24	C.L. MEDIAN LT.	382.16	59.75	228.34																5.76	244.78	220.00	26.93					26.93	
423+10.25	426+93.00	C.L. MEDIAN RT.	382.75	59.25	226.78																5.72	243.27	220.00	26.76					26.76	
423+78.28	427+04.43	C.L. MEDIAN LT.	326.15	53.75	175.31																5.18	187.70	220.00	20.65					20.65	
428+93.22	432+19.01	C.L. MEDIAN LT.	324.79	55.50	180.26																5.35	192.93	220.00	21.22					21.22	
429+15.68	432+97.83	C.L. MEDIAN LT.	382.15	60.25	230.25																5.82	247.18	220.00	27.19					27.19	
434+17.00	443+29.00	C.L. MEDIAN RT.	911.00	54.75	498.77																5.27	533.38	220.00	58.67					58.67	
436+97.00	445+83.00	C.L. MEDIAN LT.	886.00	55.25	489.52																5.33	524.37	220.00	57.68					57.68	
458+72.22	462+54.97	C.L. MEDIAN RT.	382.75	59.25	226.78																5.72	243.27	220.00	26.76					26.76	
459+40.18	462+68.81	C.L. MEDIAN RT.	328.63	53.50	175.82																5.16	188.57	220.00	20.74					20.74	
464+73.20	468+01.95	C.L. MEDIAN LT.	328.75	55.50	182.46																5.34	194.92	220.00	21.44					21.44	
464+82.68	468+65.44	C.L. MEDIAN LT.	382.76	60.00	229.66																5.79	246.17	220.00	27.08					27.08	
465+01.10	467+09.88	C.L. MEDIAN RT.	208.78	33.75	70.46																3.25	75.37	220.00	8.29					8.29	
477+57.00	482+23.55	C.L. MEDIAN RT.	466.55	53.00	247.27																5.11	264.90	220.00	29.14					29.14	
494+82.00	500+68.00	C.L. MEDIAN RT.	586.00	53.75	314.98																5.19	337.94	220.00	37.17					37.17	
497+52.00	503+38.00	C.L. MEDIAN LT.	586.00	53.75	314.98																5.19	337.94	220.00	37.17					37.17	
517+02.12	521+63.50	C.L. MEDIAN LT.	461.38	53.00	244.53																5.12	262.29	220.00	28.85					28.85	
LM 0.651	LM 0.883	ITS SITE 1	170.75	50.75	86.66																4.89	92.80	220.00	10.21					10.21	
594+59.31	596+19.45	ITS SITE 8	159.15	50.75	80.77																3.76	66.52	220.00	7.32					7.32	
ADDITIONAL FOR SUPERELEVATION																														
146+73.33	150+23.33	C.L. MEDIAN - TYPICAL S.E. N&W SECTION, ML W/ AUX. LANE - TRANS.	350.00	83.25	291.38																									
150+23.33	154+53.19	C.L. MEDIAN - TYPICAL S.E. N&W SECTION, ML W/ AUX. LANE - FULL SUPER	429.86	166.50	715.72																									
154+53.19	158+68.03	C.L. MEDIAN - TYPICAL S.E. N&W SECTION, ML W/ AUX. LANE - FULL SUPER	414.84	277.50	1151.18																									
158+68.03	165+11.08	C.L. MEDIAN - TYPICAL S.E. N&W SECTION, ML W/ 2 AUX. LANES - FULL SUPER	643.05	277.50	1784.46																									
165+11.08	168+61.08	C.L. MEDIAN - TYPICAL S.E. N&W SECTION, ML W/ 2 AUX. LANES - TRANS.	350.00	138.75	485.63																									
169+23.05	170+00.00	C.L. MEDIAN - TYPICAL S.E. N&W SECTION, ML W/ AUX. LANES - TRANS.	76.95	8.50	6.54																									
170+00.00	170+68.03	C.L. MEDIAN - TYPICAL S.E. N&W SECTION, ML W/ AUX. LANES - TRANS.	68.03	33.13	22.53																									
170+68.03	172+00.00	C.L. MEDIAN - TYPICAL S.E. SECTION, ML W/ AUX. LANE - TRANS.	131.97	98.75	130.32																									
172+00.00	172+73.05	C.L. MEDIAN - TYPICAL S.E. SECTION, ML W/ AUX. LANE - TRANS.	73.05	199.50	145.73																									
172+73.05	177+53.19	C.L. MEDIAN - TYPICAL S.E. SECTION, ML W/ AUX. LANE - FULL SUPER	480.14	209.75	1007.09																									
177+53.19	183+22.52	C.L. MEDIAN - TYPICAL S.E. SECTION, LEFT ML - FULL SUPER	569.33	93.25	530.90																									
177+53.19	184+17.68	C.L. MEDIAN - TYPICAL S.E. SECTION, RIGHT ML - FULL SUPER	664.49	116.50	774.13																									
187+01.07	190+92.39	C.L. MEDIAN - TYPICAL S.E. SECTION, LEFT ML - FULL SUPER	391.32	93.25	364.91																									
187+75.30	191+11.91	C.L. MEDIAN - TYPICAL S.E. SECTION, RIGHT ML - FULL SUPER	336.61	116.50	392.15																									
193+94.29	206+72.36	C.L. MEDIAN - TYPICAL S.E. SECTION, LEFT ML - FULL SUPER	1278.07	93.25	1191.80																									
194+15.44	206+72.36	C.L. MEDIAN - TYPICAL S.E. SECTION, RIGHT ML - FULL SUPER	1256.92	116.50	1464.31																									
206+72.36	216+72.36	C.L. MEDIAN - TYPICAL S.E. SECTION, ML W/ AUX. LANE - FULL SUPER	1000.00	181.75	1817.50																									
216+72.36	219+48.54	C.L. MEDIAN - TYPICAL S.E. SECTION, ML - FULL SUPER	276.18	209.75	579.29																									
219+48.54	222+98.54	C.L. MEDIAN - TYPICAL S.E. SECTION, ML - TRANS.	350.00	104.88	367.06																									
226+69.81	231+19.81	C.L. MEDIAN - TYPICAL S.E. SECTION, ML - TRANS.	450.00	198.13	891.56																									
231+19.81	248+25.46	C.L. MEDIAN - TYPICAL S.E. SECTION, ML - FULL SUPER	1705.65	396.25	6758.64																									
248+25.46	252+75.46	C.L. MEDIAN - TYPICAL S.E. SECTION, ML - TRANS.	450.00	198.13	891.56																									
301+33.58	304+83.58	C.L. MEDIAN - TYPICAL S.E. SECTION, ML - TRANS.	350.00	104.88	367.06																									
304+83.58	361+32.77	C.L. MEDIAN - TYPICAL S.E. SECTION, ML - FULL SUPER	5649.19	209.75	11849.18																									
361+32.77	364+82.77	C.L. MEDIAN - TYPICAL S.E. SECTION, ML - TRANS.	350.00	104.88	367.06																									
411+61.02	415+11.02	C.L. MEDIAN - TYPICAL S.E. SECTION, ML - TRANS.	350.00	104.88	367.06																									
415+11.02	421+14.82	C.L. MEDIAN - TYPICAL S.E. SECTION, ML - FULL SUPER	603.80	209.75	1266.47																									
421+14.82	426+48.43	C.L. MEDIAN - TYPICAL S.E. SECTION, LEFT ML W/ AUX. LANE- FULL SUPER	533.61	88.50	472.24																									
421+14.82	426+74.02	C.L. MEDIAN - TYPICAL S.E. SECTION, RIGHT ML W/ AUX. LANE- FULL SUPER	559.20	93.25	521.45																									
429+32.43	431+14.82	C.L. MEDIAN - TYPICAL S.E. SECTION, LEFT ML W/ AUX. LANE- FULL SUPER	182.39	88.50	161.42																									
429+64.67	431+14.82	C.L. MEDIAN - TYPICAL S.E. SECTION, RIGHT ML W/ AUX. LANE- FULL SUPER	150.15	93.25	140.01																									
431+14.82	435+99.37	C.L. MEDIAN - TYPICAL S.E. SECTION, ML - FULL SUPER	484.55	209.75	1016.34																									
435+99.37	447+95.54	C.L. MEDIAN - TYPICAL S.E. SECTION, ML W/ AUX. LANE - FULL SUPER	1197.17	205.00	2454.20																									
447+96.54	449+41.15	C.L. MEDIAN - TYPICAL S.E. SECTION, ML - FULL SUPER	144.61	209.75	303.32																									
449+41.15	460+95.66	C.L. MEDIAN - TYPICAL S.E. SECTION, LEFT ML W/ AUX. LANE- FULL SUPER	1155.51	88.50	1022.63																									
449+41.15	460+84.46	C.L. MEDIAN - TYPICAL S.E. SECTION, RIGHT ML W/ AUX. LANE- FULL SUPER	1143.31	93.25	1066.14																									
460+96.66	474+53.69	C.L. MEDIAN - TYPICAL S.E. SECTION, LEFT ML W/ AUX. LANE- FULL SUPER	1357.03	116.50	1580.94																									
460+84.46	474+53.69	C.L. MEDIAN - TYPICAL S.E. SECTION, RIGHT ML W/ AUX. LANE- FULL SUPER	1369.23	88.50	1211.77																									
474+53.69	474+90.00	C.L. MEDIAN - TYPICAL S.E. SECTION, ML W/ AUX. LANE - FULL SUPER	36.31	177.00	64.27																									
474+90.00	478+40.00	C.L. MEDIAN - TYPICAL S.E. SECTION, ML W/ AUX. LANE - TRANS.	350.00	88.50	309.75																									
ADDITIONAL FOR LEVELING																														
145+68.03	154+53.19	C.L. MEDAIN LT. LANES	885.16			28.00	2753.83	137.69				137.69									4.00	393.40	VAR.	21.64		24.00	2360.43	VAR.	129.82	21.64	129.82
154+53.19	170+00.00	C.L. MEDIAN	1546.81			56.00	9624.60	481.23				481.23									8.00	1374.94	VAR.	75.62		48.00	8249.65	VAR.	1361.19	75.62	1361.19
170+00.00	172+00.00	C.L. MEDIAN LT. LANES	200.00			24.00	533.33	29.67				26.67														24.00	533.33	VAR.	29.33		29.33
SUBTOTALS (BOX 2 OF 4):					**54887.53**		**13227.49**	**661.38**				**661.38**		**157.86**		**43.41**		**157.86**		**39.07**		**10747.12**		**1084.96**			**11301.27**		**1537.70**	**1084.96**	**1537.70**

BASIS OF ESTIMATE:
ACHM SURFACE COURSE (1/2").....94.3% MIN. AGGR.....5.7% ASPHALT BINDER
ACHM BINDER COURSE (1").....95.4% MIN. AGGR.....4.6% ASPHALT BINDER
ACHM BASE COURSE (1 1/2").....96.0% MIN. AGGR.....4.0% ASPHALT BINDER
MAXIMUM NUMBER OF GYRATIONS = 115 FOR PG 64-22
MAXIMUM NUMBER OF GYRATIONS = 160 FOR PG 70-22
TACK COAT QUANTITIES WERE CALCULATED USING THE EMULSIFIED ASPHALT RATES. REFER TO SS-400-1 FOR THE RESIDUAL ASPHALT APPLICATION RATES.

HBVinson
7/27/2023 1:54:14 PM
WORKSPACE: AHTD
L:\20\TO\70660 - ARDOT 012326 Hwy 412 - Hwy 412\Drawings\r012326_QTY.DGN
REVISED DATE:

STATE OF ARKANSAS
LICENSED PROFESSIONAL ENGINEER
No.13436
SHAUN A. ROBBERSON
DIGITALLY SIGNED 7/28/2023

DATE REVISED	DATE REVISED	FED. RD. DIST. NO.	STATE	JOB NO.	SHEET NO.	TOTAL SHEETS
		6	ARK.	012326	194	838
2		QUANTITIES				

BASE AND SURFACING - ALTERNATIVE 1 (BOX 3 OF 4)

STATION	STATION	LOCATION	LENGTH	AGGREGATE BASE COURSE (CLASS 7)		TACK COAT							ACHM BASE COURSE (1 1/2")					ACHM BINDER COURSE (1")					ACHM SURFACE COURSE (1/2")									
						(0.05 GAL. PER SQ. YD.)			(0.17 GAL. PER SQ. YD.)																						
						TOTAL WID.			TOTAL WID.																						
			FEET	TON / STATION	TON	FEET	SQ.YD.	GALLON	FEET	SQ.YD.	GALLON	TOTAL GALLONS	AVG. WID. FEET	SQ.YD.	POUND / SQ.YD.	PG 64-22 TON	PG 70-22 TON	AVG. WID. FEET	SQ.YD.	POUND / SQ.YD.	PG 64-22 TON	PG 70-22 TON	AVG. WID. FEET	SQ.YD.	POUND / SQ.YD.	PG 64-22 TON	PG 70-22 TON	AVG. WID. FEET	SQ.YD.	POUND / SQ.YD.	PG 64-22 TON	PG 70-22 TON	TOTAL PG 64-22 TON	TOTAL PG 70-22 TON
HWY. 412B																															
170+67.64	194+00.00	RAMP 4 - 2 LANE RAMP TYPICAL S.E. SECTION	2332.36	410.50	9574.34	49.10	12725.40	636.27				636.27	24.75	6413.99	550.00		1763.85	24.35	6311.41	495.00		1562.07						40.00	10366.04	220.00		1140.26		1140.26
194+00.00	195+51.46	RAMP 4 - 2 LANE RAMP OVERLAY TYPICAL SECTION	151.46	1.75	2.65				34.00	572.18	97.27	97.27																34.00	572.18	220.00		62.94		62.94
177+62.07	180+62.97	RAMP 1 - 2 LANE RAMP TYPICAL S.E. SECTION	300.00	410.50	1231.50	49.10	1636.81	81.84				81.84	24.75	825.00	550.00		226.88	24.35	811.81	495.00		200.92						40.00	1333.33	220.00		146.67		146.67
180+62.07	187+50.00	RAMP 1 - 2 LANE RAMP TYPICAL SECTION	687.93	410.50	2823.95	49.10	3753.36	187.67				187.67	24.75	1891.81	550.00		520.25	24.35	1861.55	495.00		460.73						40.00	3057.47	220.00		336.32		336.32
187+50.00	194+50.62	RAMP 1 - 2 LANE RAMP N&W W/ TURN LANE TYPICAL SECTION	700.62	151.25	1059.69	9.72	756.67	37.83	34.00	2646.79	449.95	487.78	4.96	386.12	550.00		106.18	4.76	370.55	495.00		91.71						44.58	3470.40	220.00		381.74		381.74
192+33.34	193+15.21	RAMP 3 - RAMP TYPICAL SECTION	81.87	177.50	145.32																						10.00	90.97	220.00	10.01		10.01	
193+15.21	205+31.72	RAMP 3 - RAMP TYPICAL S.E. SECTION	1216.51	177.50	2159.31																						10.00	1351.68	220.00	148.68		148.68	
192+42.58	194+08.39	RAMP 2 - RAMP TYPICAL SECTION	166.01	177.50	294.67																						10.00	184.46	220.00	20.29		20.29	
194+08.59	206+69.05	RAMP 2 - RAMP TYPICAL S.E. SECTION	1260.46	177.50	2237.32																						10.00	1400.51	220.00	154.06		154.06	
10+00.00	17+00.00	TYPICAL OVERLAY SECTION	700.00	3.50	24.50	81.63	6349.00	317.45	81.63	6349.00	1079.33	1396.78																81.63	6349.00	220.00		698.39		698.39
HWY. 112																															
483+30.39	483+71.30	RAMP 1 - RAMP TYPICAL SECTION	40.91	177.50	72.62																						10.00	45.46	220.00	5.00		5.00	
483+71.30	493+74.64	RAMP 1 - RAMP TYPICAL S.E. SECTION	1003.34	177.50	1780.93																						10.00	1114.82	220.00	122.63		122.63	
493+74.64	493+81.27	RAMP 1 - RAMP TYPICAL SECTION	6.63	177.50	11.77																						10.00	7.37	220.00	0.81		0.81	
493+81.27	498+30.00	RAMP 1 - RAMP TYPICAL S.E. SECTION	448.73	177.50	796.50																						10.00	498.59	220.00	54.84		54.84	
498+30.00	501+38.11	RAMP 1 - RAMP W/ AUX. LANE TYPICAL S.E. SECTION	308.11	177.50	546.90																						10.00	342.34	220.00	37.66		37.66	
501+38.11	501+41.07	RAMP 1 - RAMP W/ AUX. LANE TYPICAL SECTION	2.96	177.50	5.25																						10.00	3.29	220.00	0.36		0.36	
484+53.20	493+60.68	RAMP 4 - RAMP TYPICAL S.E. SECTION	907.48	177.50	1610.78																						10.00	1008.31	220.00	110.91		110.91	
493+60.68	499+12.74	RAMP 4 - RAMP TYPICAL SECTION	552.06	177.50	979.91																						10.00	613.40	220.00	67.47		67.47	
XNA ACCESS RD.																															
416+52.40	424+21.33	RAMP 2 - TWO LANE RAMP TYPICAL S.E. SECTION	768.93	213.25	1639.74																						16.00	1366.99	220.00	150.37		150.37	
424+21.33	426+22.22	RAMP 2 - RAMP TYPICAL S.E. SECTION	200.89	177.50	356.58																						10.00	223.21	220.00	24.55		24.55	
426+22.22	428+20.93	RAMP 2 - RAMP TYPICAL SECTION	198.71	177.50	352.71																						10.00	220.79	220.00	24.29		24.29	
431+12.22	451+20.56	RAMP 2 - RAMP TYPICAL S.E. SECTION	2008.34	177.50	3564.80																						10.00	2231.49	220.00	245.46		245.46	
451+20.57	460+86.86	RAMP 2 - RAMP TYPICAL S.E. SECTION	966.29	177.50	1715.16																						10.00	1073.66	220.00	118.10		118.10	
431+18.13	431+57.19	RAMP 4 - RAMP TYPICAL SECTION	39.06	177.50	69.33																						10.00	43.40	220.00	4.77		4.77	
431+57.19	441+85.55	RAMP 4 - RAMP TYPICAL S.E. SECTION	1028.36	177.50	1825.34																						10.00	1142.62	220.00	125.69		125.69	
434+37.71	449+34.18	RAMP 3 - RAMP TYPICAL S.E. SECTION	1496.47	177.50	2656.23																						10.00	1662.74	220.00	182.90		182.90	
447+93.93	468+94.40	RAMP 1 - RAMP TYPICAL S.E. SECTION	2100.47	177.50	3728.33																						10.00	2333.86	220.00	256.72		256.72	
468+94.40	470+03.82	RAMP 1 - RAMP TYPICAL SECTION	109.42	177.50	194.22																						10.00	121.58	220.00	13.37		13.37	
472+85.99	482+70.26	RAMP 1 - RAMP TYPICAL SECTION	984.27	177.50	1747.08																						10.00	1093.63	220.00	120.30		120.30	
482+70.26	484+19.97	RAMP 1 - TWO LANE RAMP TYPICAL SECTION	149.71	178.25	266.86																						11.08	184.36	220.00	20.28		20.28	
HWY. 68																															
44+50.00	47+67.57	TYPICAL SECTION	317.57	165.00	523.99	24.00	846.85	42.34	24.00	846.85	143.96	186.30															40.00	1411.42	220.00	155.26		155.26	
47+67.57	53+00.00	TYPICAL SECTION	532.43	229.00	1219.26	45.96	2718.71	135.94	21.08	1247.25	212.03	347.97				12.54	741.85	330.00	122.41			12.33	729.61	220.00	80.26		48.63	2876.60	220.00	316.43		396.69	
53+00.00	56+60.84	TYPICAL SECTION	360.84	351.75	1269.25	72.71	2915.19	145.76				145.76				36.46	1461.80	330.00	241.20			36.25	1453.38	220.00	159.87		52.00	2084.85	220.00	229.33		389.20	
MUSTEEN RD.																															
15+26.86	24+12.27	TYPICAL S.E. SECTION	885.41	204.25	1808.45	20.25	1992.17	99.61				99.61										20.25	1992.17	220.00	219.14		28.00	2754.61	220.00	303.01		522.15	
24+12.27	28+42.47	TYPICAL SECTION	430.20	204.25	878.68	20.25	967.95	48.40				48.40										20.25	967.95	220.00	106.47		28.00	1338.40	220.00	147.22		253.69	
28+42.27	33+87.82	TYPICAL S.E. SECTION	545.55	204.25	1114.29	20.25	1227.46	61.37				61.37										20.25	1227.49	220.00	135.02		28.00	1697.27	220.00	186.70		321.72	
33+87.82	34+76.65	TYPICAL SECTION	88.83	204.25	181.44	20.25	199.87	9.99				9.99										20.25	199.87	220.00	21.99		28.00	276.36	220.00	30.40		52.39	
34+76.65	39+30.54	TYPICAL S.E. SECTION	453.89	204.25	927.07	20.25	1021.25	51.06				51.06										20.25	1021.25	220.00	112.34		28.00	1412.10	220.00	155.33		267.67	
39+30.54	39+70.00	TYPICAL SECTION	39.46	204.25	80.60	20.25	88.79	4.44				4.44										20.25	88.79	220.00	9.77		28.00	122.76	220.00	13.50		23.27	
LIBERTY AVE.																															
15+50.00	18+57.86	TYPICAL SECTION	307.86	204.25	628.80	20.25	692.69	34.63				34.63										20.25	692.69	220.00	76.20		28.00	957.79	220.00	105.36		181.56	
21+42.13	25+50.00	TYPICAL SECTION	407.87	204.25	833.07	20.25	917.71	45.89				45.89										20.25	917.71	220.00	100.95		28.00	1268.93	220.00	139.58		240.53	
LIBERTY AVE. ACCESS RD.																															
15+36.83	16+66.83	CUL-DE-SAC	130.00	513.00	666.90																						67.13	969.67	220.00	106.66		106.66	
16+66.83	19+89.65	TYPICAL SECTION	322.82	207.75	670.66																						28.00	1004.33	220.00	110.48		110.48	
JAVELLO RD.																															
18+00.00	27+96.65	TYPICAL SECTION	996.65	204.25	2035.66	20.25	2242.46	112.12				112.12										20.25	2242.46	220.00	246.67		28.00	3100.69	220.00	341.08		587.75	
27+96.65	35+41.17	TYPICAL S.E. SECTION	744.52	204.25	1520.68	20.25	1675.17	83.76				83.76										20.25	1675.17	220.00	184.27		28.00	2316.28	220.00	254.79		439.06	
35+41.17	37+00.00	TYPICAL SECTION	158.83	204.25	324.41	20.25	357.37	17.87				17.87										20.25	357.37	220.00	39.31		28.00	494.14	220.00	54.36		93.67	
SUBTOTALS (BOX 3 OF 4):					**58157.50**		**43084.91**	**2154.24**		**11662.07**	**1982.54**	**4136.78**		**9516.92**			**2617.16**		**11558.97**		**363.61**	**2315.43**		**13565.91**		**1492.26**			**67594.15**		**4669.01**	**2766.32**	**6161.27**	**2766.32**

BASIS OF ESTIMATE:
ACHM SURFACE COURSE (1/2").....94.3% MIN. AGGR.....5.7% ASPHALT BINDER
ACHM BINDER COURSE (1").....95.4% MIN. AGGR.....4.6% ASPHALT BINDER
ACHM BASE COURSE (1 1/2").....96.0% MIN. AGGR.....4.0% ASPHALT BINDER
MAXIMUM NUMBER OF GYRATIONS = 115 FOR PG 64-22
MAXIMUM NUMBER OF GYRATIONS = 160 FOR PG 70-22
TACK COAT QUANTITIES WERE CALCULATED USING THE EMULSIFIED ASPHALT RATES. REFER TO SS-400-1 FOR THE RESIDUAL ASPHALT APPLICATION RATES.

HBVinson
WORKSPACE: AHTD
L:\2017\17017660 - ARDOT 012326 Hwy 412 - Hwy 412\Drawings\r012326_QTY.DGN
7/27/2023 1:52:57 PM
REVISED DATE:

DATE REVISED	DATE REVISED	FED. RD. DIST. NO.	STATE	JOB NO.	SHEET NO.	TOTAL SHEETS
		6	ARK.	012326	195	838
				QUANTITIES		
2						

BASE AND SURFACING - ALTERNATIVE 1 (BOX 4 OF 4)

STATION	STATION	LOCATION	LENGTH	AGGREGATE BASE COURSE (CLASS 7)		TACK COAT							ACHM BASE COURSE (1 1/2")					ACHM BINDER COURSE (1")					ACHM SURFACE COURSE (1/2")									
						(0.05 GAL. PER SQ. YD.)			(0.17 GAL. PER SQ. YD.)																						
				TON / STATION	TON	TOTAL WID.	SQ.YD.	GALLON	TOTAL WID.	SQ.YD.	GALLON	TOTAL GALLONS	AVG. WID.	SQ.YD.	POUND / SQ.YD.	PG 64-22	PG 70-22	AVG. WID.	SQ.YD.	POUND / SQ.YD.	PG 64-22	PG 70-22	AVG. WID.	SQ.YD.	POUND / SQ.YD.	PG 64-22	PG 70-22	AVG. WID.	SQ.YD.	POUND / SQ.YD.	PG 64-22	PG 70-22	TOTAL PG 64-22	TOTAL PG 70-22
			FEET			FEET			FEET				FEET			TON	TON	FEET			TON	TON	FEET			TON	TON	FEET			TON	TON		
MARCHANT RD. ACCESS RD.																																	
12+63.92	13+90.70	CUL-DE-SAC	126.78	524.25	664.64																						68.84	969.67	220.00	106.66		106.66	
13+90.82	19+87.87	TYPICAL SECTION	597.05	207.75	1240.37																						28.00	1857.49	220.00	204.32		204.32	
KELLY RD.																																	
473+59.80	473+71.91	CUL-DE-SAC - SOUTH	180.01	426.25	767.29																						53.74	1074.76	220.00	118.22		118.22	
473+62.24	474+08.70	CUL-DE-SAC - NORTH	187.98	450.50	846.85																						57.48	1200.64	220.00	132.07		132.07	
TEMPORARY ROADS, DETOURS, AND WIDENING																																	
10+00.00	13+28.82	TEMPORARY CROSSOVER 1 - TYPICAL N&W SECTION	328.62	99.50	326.98	18.10	660.89	33.04				33.04						9.10	332.27	330.00	54.82		9.00	328.62	220.00	36.15		12.88	470.11	220.00	51.71		87.86	
13+28.62	14+58.77	TEMPORARY CROSSOVER 1 - TYPICAL SECTION	130.15	325.75	423.96	48.71	704.38	35.22				35.22						24.46	353.69	330.00	58.36		24.25	350.68	220.00	38.57		32.00	462.76	220.00	50.90		89.47	
14+58.77	16+14.84	TEMPORARY CROSSOVER 1 - TYPICAL N&W SECTION	155.87	99.50	155.09	18.10	313.47	15.87				15.87						9.10	157.80	330.00	26.00		9.00	155.87	220.00	17.15		12.88	222.98	220.00	24.53		41.68	
10+00.00	12+44.87	TEMPORARY CROSSOVER 2 - TYPICAL N&W SECTION	244.87	99.50	243.65	18.10	492.46	24.62				24.62						9.10	247.59	330.00	40.85		9.00	244.87	220.00	26.94		12.88	350.30	220.00	38.53		65.47	
12+44.87	14+83.20	TEMPORARY CROSSOVER 2 - TYPICAL SECTION	238.33	325.75	776.36	48.71	1289.85	64.49				64.49						24.46	647.68	330.00	106.87		24.25	642.17	220.00	70.64		32.00	847.40	220.00	93.21		163.85	
14+83.20	18+06.52	TEMPORARY CROSSOVER 2 - TYPICAL N&W SECTION	323.32	99.50	321.70	18.10	650.23	32.51				32.51						9.10	326.91	330.00	53.94		9.00	323.32	220.00	35.57		12.88	462.53	220.00	50.88		86.45	
13+31.17	14+39.36	LIBERTY AVE. DETOUR - TYPICAL N&W SECTION	108.19	76.75	83.04																						11.88	142.81	220.00	15.71		15.71	
14+39.36	27+59.26	LIBERTY AVE. DETOUR - TYPICAL SECTION	1319.90	181.25	2392.32																						24.00	3519.73	220.00	387.17		387.17	
27+59.26	28+56.71	LIBERTY AVE. DETOUR - TYPICAL N&W SECTION	97.45	76.75	74.79																						11.88	128.63	220.00	14.15		14.15	
180+05.27	194+50.62	HWY. 412B RAMP 1 - TYPICAL N&W SECTION TEMP. WIDENING	1445.35	151.75	2193.32	28.72	4612.27	230.61				230.61	14.46	2322.20	550.00	638.61		14.26	2290.08	495.00	566.79							18.08	2904.03	220.00	319.44		319.44	
10+00.00	16+22.28	HWY. 412B - TYPICAL N&W SECTION TEMP. WIDENING	622.28	151.75	944.31	28.72	1985.76	99.29				99.29	14.46	999.80	550.00	274.95		14.26	985.97	495.00	244.03							18.08	1250.30	220.00	137.53		137.53	
48+00.00	56+46.00	HWY. 68 - TYPICAL N&W SECTION TEMP. WIDENING	846.00	166.75	1410.71	44.19	4153.86	207.69				207.69						22.15	2082.10	330.00	343.55		22.04	2071.76	220.00	227.89		25.92	2436.48	220.00	268.01		495.90	
ADDITIONAL FOR LEVELING																																	
10+00.00	17+00.00	HWY. 412B - TYPICAL OVERLAY SECTION	700.00			176.35	13716.44	685.82				385.82											88.35	6871.99	VAR.		377.96						377.96
187+50.00	194+50.62	HWY. 412B RAMP 1	700.62			64.00	4982.16	249.11				249.11											24.00	1868.32	VAR.		102.76						102.76
194+00.00	195+51.46	HWY. 412B RAMP 4	151.46			80.35	1352.27	67.61				67.61											40.35	679.12	VAR.		37.35						37.35
ADDITIONAL FOR GUARDRAIL																																	
467+54.68	470+30.43	XNA ACCESS RD. RAMP 1 RT	275.75	49.25	135.81																						4.74	145.17	220.00	15.97		15.97	
467+54.74	470+30.50	XNA ACCESS RD. RAMP 1 LT	275.76	49.25	135.81																						4.74	145.17	220.00	15.97		15.97	
425+67.92	428+43.67	XNA ACCESS RD. RAMP 2 LT	275.75	49.25	135.81																						4.74	145.17	220.00	15.97		15.97	
425+76.48	428+52.23	XNA ACCESS RD. RAMP 2 RT	275.75	49.25	135.81																						4.74	145.17	220.00	15.97		15.97	
16+07.26	18+77.41	LIBERTY AVE. RT	270.15	34.00	91.85																						4.76	142.97	220.00	15.73		15.73	
17+00.27	18+86.41	LIBERTY AVE. LT	186.14	28.50	53.05																						4.01	82.96	220.00	9.13		9.13	
21+13.58	22+99.72	LIBERTY AVE. RT	186.14	28.50	53.05																						4.01	82.96	220.00	9.13		9.13	
21+22.58	23+92.73	LIBERTY AVE. LT	270.15	34.50	93.20																						4.84	145.17	220.00	15.97		15.97	
ADDITIONAL FOR SUPERELEVATION																																	
170+67.64	171+61.08	HWY. 412B RAMP 4 - 2 LANE RAMP TYPICAL S.E. SECTION - TRANS.	93.44	92.75	86.67																												
171+61.08	175+69.10	HWY. 412B RAMP 4 - 2 LANE RAMP TYPICAL S.E. SECTION - FULL SUPER	408.02	116.00	473.30																												
175+69.10	177+87.10	HWY. 412B RAMP 4 - 2 LANE RAMP TYPICAL S.E. SECTION - TRANS.	218.00	67.75	147.70																												
177+87.10	181+69.10	HWY. 412B RAMP 4 - 2 LANE RAMP TYPICAL S.E. SECTION - TRANS.	382.00	164.63	628.87																												
181+69.10	183+25.05	HWY. 412B RAMP 4 - 2 LANE RAMP TYPICAL S.E. SECTION - FULL SUPER	155.95	309.75	483.06																												
183+25.05	186+89.05	HWY. 412B RAMP 4 - 2 LANE RAMP TYPICAL S.E. SECTION - TRANS.	364.00	164.63	599.24																												
186+89.05	190+25.05	HWY. 412B RAMP 4 - 2 LANE RAMP TYPICAL S.E. SECTION - TRANS.	336.00	105.00	352.80																												
190+25.05	191+25.88	HWY. 412B RAMP 4 - 2 LANE RAMP TYPICAL S.E. SECTION - FULL SUPER	100.83	190.50	192.08																												
191+25.88	194+00.00	HWY. 412B RAMP 4 - 2 LANE RAMP TYPICAL S.E. SECTION - TRANS.	274.12	137.25	376.23																												
177+62.07	178+67.80	HWY. 412B RAMP 1 - 2 LANE RAMP TYPICAL S.E. SECTION - TRANS.	105.73	30.75	32.51																												
193+15.21	194+50.92	HWY. 412B RAMP 3 - RAMP TYPICAL S.E. SECTION - TRANS.	135.71	41.38	56.15																												
194+50.92	196+58.32	HWY. 412B RAMP 3 - RAMP TYPICAL S.E. SECTION - TRANS.	207.40	40.63	84.26																												
196+58.32	199+58.32	HWY. 412B RAMP 3 - RAMP TYPICAL S.E. SECTION - TRANS.	300.00	29.25	87.75																												
199+58.32	205+15.93	HWY. 412B RAMP 3 - RAMP TYPICAL S.E. SECTION - FULL SUPER	557.61	60.00	334.57																												
205+15.93	205+31.72	HWY. 412B RAMP 3 - RAMP TYPICAL S.E. SECTION - TRANS.	15.79	58.38	9.22																												
194+08.59	197+08.59	HWY. 412B RAMP 2 - RAMP TYPICAL S.E. SECTION - TRANS.	300.00	61.88	185.63																												
197+08.59	198+16.67	HWY. 412B RAMP 2 - RAMP TYPICAL S.E. SECTION - FULL SUPER	108.08	123.75	133.75																												
198+16.67	200+81.67	HWY. 412B RAMP 2 - RAMP TYPICAL S.E. SECTION - TRANS.	265.00	61.13	161.98																												
200+81.67	202+66.67	HWY. 412B RAMP 2 - RAMP TYPICAL S.E. SECTION - TRANS.	185.00	38.88	71.92																												
202+66.67	203+30.72	HWY. 412B RAMP 2 - RAMP TYPICAL S.E. SECTION - FULL SUPER	64.05	60.00	38.43																												
203+30.72	205+10.72	HWY. 412B RAMP 2 - RAMP TYPICAL S.E. SECTION - TRANS.	180.00	29.25	52.65																												
205+10.72	206+69.05	HWY. 412B RAMP 2 - RAMP TYPICAL S.E. SECTION - TRANS.	158.33	37.25	58.98																												
483+71.30	486+71.30	HWY. 112 RAMP 1 - RAMP TYPICAL S.E. SECTION - TRANS.	300.00	46.75	140.25																												
486+71.30	490+74.64	HWY. 112 RAMP 1 - RAMP TYPICAL S.E. SECTION - FULL SUPER	403.34	93.50	377.12																												
490+74.64	493+74.64	HWY. 112 RAMP 1 - RAMP TYPICAL S.E. SECTION - TRANS.	300.00	46.75	140.25																												
494+18.77	496+68.77	HWY. 112 RAMP 1 - RAMP TYPICAL S.E. SECTION - TRANS.	250.00	4.00	10.00																												
496+68.77	498+30.00	HWY. 112 RAMP 1 - RAMP TYPICAL S.E. SECTION - FULL SUPER	161.23	8.00	12.90																												
498+30.00	498+50.61	HWY. 112 RAMP 1 - RAMP W/ AUX. LANE TYPICAL S.E. SECTION - FULL SUPER	20.61	8.00	1.65																												
498+50.61	501+00.61	HWY. 112 RAMP 1 - RAMP W/ AUX. LANE TYPICAL S.E. SECTION - TRANS.	250.00	4.00	10.00																												
484+53.20	490+60.68	HWY. 112 RAMP 4 - RAMP TYPICAL S.E. SECTION - FULL SUPER	607.48	74.75	454.09																												
490+60.68	493+60.69	HWY. 112 RAMP 4 - RAMP TYPICAL S.E. SECTION - TRANS.	300.01	37.38	112.13																												
416+52.40	417+39.90	XNA ACCESS RD. RAMP 2 - TWO LANE RAMP TYPICAL S.E. SECTION - TRANS.	87.50	113.88	99.64																												
417+39.90	422+72.22	XNA ACCESS RD. RAMP 2 - TWO LANE RAMP TYPICAL S.E. SECTION - FULL SUPER	532.32	122.25	650.76																												
422+72.22	424+21.33	XNA ACCESS RD. RAMP 2 - TWO LANE RAMP TYPICAL S.E. SECTION - TRANS.	149.11	107.13	159.73																												
424+21.33	426+22.22	XNA ACCESS RD. RAMP 2 - RAMP TYPICAL S.E. SECTION - TRANS.	200.89	25.25	50.72																												
431+12.22	432+41.93	XNA ACCESS RD. RAMP 2 - RAMP TYPICAL S.E. SECTION - TRANS.	129.71	107.25	139.11																												
432+41.93	447+70.56	XNA ACCESS RD. RAMP 2 - RAMP TYPICAL S.E. SECTION - FULL SUPER	1528.63	159.25	2434.34																												
447+70.56	451+20.56	XNA ACCESS RD. RAMP 2 - RAMP TYPICAL S.E. SECTION - TRANS.	350.00	79.63	278.69																												
451+20.56	454+70.57	XNA ACCESS RD. RAMP 2 - RAMP TYPICAL S.E. SECTION - TRANS.	350.01	62.63	219.19																												
454+70.57	460+86.86	XNA ACCESS RD. RAMP 2 - RAMP TYPICAL S.E. SECTION - FULL SUPER	616.29	125.25	771.90																												
431+57.19	435+07.19	XNA ACCESS RD. RAMP 4 - RAMP TYPICAL S.E. SECTION - TRANS.	350.00	54.63	191.19																												
435+07.19	441+85.55	XNA ACCESS RD. RAMP 4 - RAMP TYPICAL S.E. SECTION - FULL SUPER	678.36	109.25	741.11																												
434+37.71	437+35.64	XNA ACCESS RD. RAMP 3 - RAMP TYPICAL S.E. SECTION - TRANS.	297.93	72.13	214.88																												
437+35.64	447+30.64	XNA ACCESS RD. RAMP 3 - RAMP TYPICAL S.E. SECTION - FULL SUPER	995.00	109.25	1087.04																												
447+30.64	449+34.18	XNA ACCESS RD. RAMP 3 - RAMP TYPICAL S.E. SECTION - TRANS.	203.54	81.00	164.87																												
447+93.93	465+44.40	XNA ACCESS RD. RAMP 1 - RAMP TYPICAL S.E. SECTION - FULL SUPER	1750.47	125.25	2192.46																												
465+44.40	468+94.40	XNA ACCESS RD. RAMP 1 - RAMP TYPICAL S.E. SECTION - TRANS.	350.00	62.63	219.19																												
15+26.86	17+76.86	MUSTEEN RD. - TYPICAL S.E. SECTION - TRANS.	250.00	24.13	60.31																												
17+76.86	21+62.27	MUSTEEN RD. - TYPICAL S.E. SECTION - FULL SUPER	385.41	48.25	185.96																												
21+62.27	24+12.27	MUSTEEN RD. - TYPICAL S.E. SECTION - TRANS.	250.00	24.13	60.31																												
28+42.27	30+92.47	MUSTEEN RD. - TYPICAL S.E. SECTION - TRANS.	250.20	24.13	60.36																												
30+92.47	31+37.82	MUSTEEN RD. - TYPICAL S.E. SECTION - FULL SUPER	45.35	48.25	21.88																												
31+37.82	33+87.82	MUSTEEN RD. - TYPICAL S.E. SECTION - TRANS.	250.00	24.13	60.31																												
34+76.65	37+03.60	MUSTEEN RD. - TYPICAL S.E. SECTION - TRANS.	226.95	21.50	48.79																												
37+03.60	39+30.54	MUSTEEN RD. - TYPICAL S.E. SECTION - TRANS.	226.94	21.50	48.79																												
27+96.65	30+46.85	JAVELLO RD. - TYPICAL S.E. SECTION - TRANS.	250.00	24.13	60.31																												
30+46.65	32+91.17	JAVELLO RD. - TYPICAL S.E. SECTION - FULL SUPER	244.52	48.25	117.98																												
32+91.17	35+41.17	JAVELLO RD. - TYPICAL S.E. SECTION - FULL SUPER	250.00	24.13	60.31																												
SUBTOTALS (BOX 4 OF 4):						**30006.04**		**34914.07**	**1745.68**			**1745.68**		**3322.00**		**913.56**			**7423.89**		**1495.21**			**13536.72**		**452.91**	**518.07**		**19335.37**		**2126.88**		**2579.79**	**518.07**
SUBTOTALS (BOX 3 OF 4):						**58157.50**		**43084.91**	**2154.24**		**11662.07**	**1982.54**	**4136.78**		**9516.92**		**2617.16**		**11558.97**		**363.61**	**2315.43**		**13565.91**		**1492.26**			**67594.15**		**4669.01**	**2766.32**	**6161.27**	**2766.32**
SUBTOTALS (BOX 2 OF 4):						**54887.53**		**13227.49**	**661.38**				**361.38**		**157.86**		**43.41**		**157.86**			**39.07**								**22048.39**		**1084.96**	**1537.70**	**1084.96**	**1537.70**
SUBTOTALS (BOX 1 OF 4):						**142047.27**		**29565.53**	**1478.28**		**11676.76**	**1985.04**	**3463.32**		**6516.88**		**1792.14**		**6429.76**			**1591.37**								**106530.81**		**9141.05**	**2577.34**	**9141.05**	**2577.34**
TOTALS:						**285098.34**		**120792.05**	**6039.58**		**23338.83**	**3967.58**	**13007.16**		**19513.66**	**913.56**	**4452.71**		**25570.48**		**1858.82**	**3945.87**		**27102.63**		**1945.17**	**518.07**		**215508.72**		**17021.90**	**6881.36**	**18967.07**	**7399.43**

BASIS OF ESTIMATE:
ACHM SURFACE COURSE (1/2").....94.3% MIN. AGGR.....5.7% ASPHALT BINDER
ACHM BINDER COURSE (1").....95.4% MIN. AGGR.....4.6% ASPHALT BINDER
ACHM BASE COURSE (1 1/2").....96.0% MIN. AGGR.....4.0% ASPHALT BINDER
MAXIMUM NUMBER OF GYRATIONS = 115 FOR PG 64-22
MAXIMUM NUMBER OF GYRATIONS = 160 FOR PG 70-22
TACK COAT QUANTITIES WERE CALCULATED USING THE EMULSIFIED ASPHALT RATES. REFER TO SS-400-1 FOR THE RESIDUAL ASPHALT APPLICATION RATES.

STATE OF ARKANSAS
LICENSED PROFESSIONAL ENGINEER
No.13436
SHAUN A. ROBBERSON
DIGITALLY SIGNED 8/10/2023

JATurner 8/10/2023 1:43:10 PM
WORKSPACE: AHTD
L:\201\170\7660 - ARDOT 012326 Hwy 412 - Hwy 112\Drawings\r012326_QTY.DGN
REVISED DATE:



DIGITALLY SIGNED 7/28/2023

DATE REVISED	DATE REVISED	FED. RD. DIST. NO.	STATE	JOB NO.	SHEET NO.	TOTAL SHEETS
		6	ARK.	012326	196	838
		QUANTITIES				

BASE AND SURFACING - ALTERNATIVE 2 (BOX 1 OF 4)

STATION	STATION	LOCATION	LENGTH	AGGREGATE BASE COURSE (CLASS 7)		TACK COAT							ACHM BASE COURSE (1 1/2")				ACHM BINDER COURSE (1")				ACHM SURFACE COURSE (1/2")								
				TON / STATION	TON	(0.05 GAL. PER SQ. YD.)			(0.17 GAL. PER SQ. YD.)			TOTAL GALLONS	AVG. WID.	SQ.YD.	POUND / SQ.YD.	PG 70-22	AVG. WID.	SQ.YD.	POUND / SQ.YD.	PG 70-22	AVG. WID.	SQ.YD.	POUND / SQ.YD.	PG 64-22	PG 70-22	AVG. WID.	SQ.YD.	POUND / SQ.YD.	PG 64-22	PG 70-22	TOTAL PG 64-22	TOTAL PG 70-22
			FEET			TOTAL WID. FEET	SQ.YD.	GALLON	TOTAL WID. FEET	SQ.YD.	GALLON		FEET			TON	FEET			TON	FEET			TON	TON	FEET			TON	TON	TON
LEFT MAIN LANES																															
144+68.03	145+68.03	TRANSITION LT LANES	100.00	144.38	144.38	38.00	422.22	21.11	24.00	266.67	45.33	66.44														38.00	422.22	220.00		46.44		46.44
145+68.03	158+68.03	TYPICAL S.E. N&W SECTION. MAIN LANES W/ AUX. LANE	1300.00	344.25	4475.25	70.81	10227.39	511.37	24.00	3466.67	589.33	1100.70	11.13	1606.94	550.00	441.91	10.53	1578.78	495.00	390.75						48.75	7041.67	220.00		774.58		774.58
158+68.03	169+23.05	TYPICAL S.E. N&W SECTION. MAIN LANES W/ 2 AUX. LANES	1055.02	405.00	4272.83	93.93	11010.89	550.54	24.00	2813.39	478.28	1028.82	22.83	2676.23	550.00	735.96	22.64	2653.96	495.00	656.86						48.46	5680.70	220.00		624.88		624.38
169+23.05	170+68.03	TYPICAL S.E. N&W SECTION. MAIN LANES W/ AUX. LANE	144.98	413.00	598.77	110.56	1780.92	89.05	24.00	386.61	65.72	154.77	24.38	392.65	550.00	107.98	24.18	389.51	495.00	96.40						62.00	998.75	220.00		109.86		109.36
170+68.03	172+00.00	TYPICAL S.E. N&W SECTION. MAIN LANES W/ AUX. LANE	131.97	232.75	307.16	38.00	557.21	27.86	24.00	351.92	59.83	87.69														38.00	557.21	220.00		61.29		61.29
172+00.00	177+53.19	TYPICAL S.E. SECTION, MAIN LANES W/ AUX. LANE	553.19	348.00	1925.10	97.62	6000.42	300.02				300.02	32.83	2018.07	550.00	554.97	32.50	1997.63	330.00	329.61	32.29	1984.72	220.00		218.32	42.04	2584.01	220.00		284.24		502.56
177+53.19	183+22.52	TYPICAL S.E. SECTION, MAIN LANES	569.33	340.25	1937.15	79.50	5029.08	251.45				251.45	26.79	1694.71	550.00	466.05	26.46	1673.83	330.00	276.18	26.25	1660.55	220.00		182.66	38.00	2403.84	220.00		264.42		447.38
BRIDGE																															
187+01.07	190+92.39	TYPICAL S.E. SECTION, MAIN LANES	391.32	340.25	1331.47	79.50	3456.66	172.83				172.83	26.79	1164.83	550.00	320.33	26.46	1150.48	330.00	189.83	26.25	1141.35	220.00		125.55	38.00	1652.24	220.00		181.75		307.30
BRIDGE																															
193+94.29	206+72.36	TYPICAL S.E. SECTION, MAIN LANES	1278.07	340.25	4348.63	79.50	11289.62	564.48				564.48	26.79	3804.39	550.00	1046.21	26.46	3757.53	330.00	619.99	26.25	3727.70	220.00		410.05	38.00	5396.30	220.00		593.59		1003.64
206+72.36	216+72.36	TYPICAL S.E. SECTION, MAIN LANES W/ AUX. LANE	1000.00	340.25	3402.50	79.50	8833.33	441.67				441.67	26.79	2976.67	550.00	818.58	26.46	2940.00	330.00	485.10	26.25	2916.67	220.00		320.83	38.00	4222.22	220.00		464.44		785.27
216+72.36	222+98.54	TYPICAL S.E. SECTION, MAIN LANES	626.18	340.25	2130.58	79.50	5531.26	276.56				276.56	26.79	1863.93	550.00	512.58	26.46	1840.97	330.00	303.76	26.25	1826.36	220.00		200.90	38.00	2643.87	220.00		290.83		491.73
222+98.54	226+69.81	TYPICAL SECTION, MAIN LANES	371.27	340.25	1263.25	79.50	3279.55	163.98				163.98	26.79	1105.15	550.00	303.92	26.46	1091.53	330.00	180.10	26.25	1082.87	220.00		119.12	38.00	1567.58	220.00		172.43		291.55
226+69.81	252+75.46	TYPICAL S.E. SECTION, MAIN LANES	2605.65	340.25	8865.72	79.50	23016.58	1150.83				1150.83	26.79	7756.15	550.00	2132.94	26.46	7660.61	330.00	1264.00	26.25	7599.81	220.00		835.98	38.00	11001.63	220.00		1210.18		2046.16
252+75.46	293+37.27	TYPICAL SECTION, MAIN LANES	4061.81	340.25	13820.31	79.50	35879.32	1793.97				1793.97	26.79	12090.65	550.00	3324.93	26.46	11941.72	330.00	1970.38	26.25	11846.95	220.00		1303.16	38.00	17149.86	220.00		1886.48		3189.64
BRIDGE																															
296+79.63	301+33.58	TYPICAL SECTION, MAIN LANES	453.95	340.25	1544.56	79.50	4009.89	200.49				200.49	26.79	1351.26	550.00	371.60	26.46	1334.61	330.00	220.21	26.25	1324.02	220.00		145.64	38.00	1916.68	220.00		210.83		356.47
301+33.58	364+82.77	TYPICAL S.E. SECTION, MAIN LANES	6349.19	340.25	21603.12	79.50	56084.51	2804.23				2804.23	26.79	18899.42	550.00	5197.34	26.46	18666.62	330.00	3079.99	26.25	18518.47	220.00		2037.03	38.00	26807.69	220.00		2948.85		4985.88
364+82.77	377+86.91	TYPICAL SECTION, MAIN LANES	1304.14	340.25	4437.34	79.50	11519.90	576.00				576.00	26.79	3881.99	550.00	1067.55	26.46	3834.17	330.00	632.64	26.25	3803.74	220.00		418.41	38.00	5506.37	220.00		605.70		1024.11
BRIDGE																															
388+24.09	411+61.02	TYPICAL SECTION, MAIN LANES	2336.93	340.25	7951.40	79.50	20642.88	1032.14				1032.14	26.79	6956.26	550.00	1912.97	26.46	6870.57	330.00	1133.64	26.25	6816.05	220.00		749.77	38.00	9867.04	220.00		1085.37		1835.14
411+61.02	421+14.82	TYPICAL S.E. SECTION, MAIN LANES	953.80	340.25	3245.30	79.50	8425.23	421.26				421.26	26.79	2839.14	550.00	780.76	26.46	2804.17	330.00	462.69	26.25	2781.92	220.00		306.01	38.00	4027.16	220.00		442.99		749.30
421+14.82	426+48.43	TYPICAL S.E. SECTION, MAIN LANES W/ AUX. LANE	533.61	348.00	1856.96	97.62	5787.89	289.39				289.39	32.83	1946.49	550.00	535.28	32.50	1926.93	330.00	317.94	32.29	1914.47	220.00		210.59	42.04	2492.55	220.00		274.18		484.77
BRIDGE																															
429+32.43	431+14.82	TYPICAL S.E. SECTION, MAIN LANES W/ AUX. LANE	182.39	348.00	634.72	97.62	1978.32	98.92				98.92	32.83	665.32	550.00	182.96	32.50	658.63	330.00	108.67	32.29	654.37	220.00		71.98	42.04	851.96	220.00		93.72		165.70
431+14.82	435+99.37	TYPICAL S.E. SECTION, MAIN LANES	484.55	340.25	1648.68	79.50	4280.19	214.01				214.01	26.79	1442.34	550.00	396.64	26.46	1424.58	330.00	235.06	26.25	1413.27	220.00		155.46	38.00	2045.88	220.00		225.05		380.51
435+99.37	447+96.54	TYPICAL S.E. SECTION, MAIN LANES W/ AUX. LANE	1197.17	340.25	4073.37	79.50	10575.00	528.75				528.75	26.79	3563.58	550.00	979.98	26.46	3519.68	330.00	580.75	26.25	3491.75	220.00		384.09	38.00	5054.72	220.00		556.02		940.11
447+96.54	449+41.15	TYPICAL S.E. SECTION, MAIN LANES W/ AUX. LANE	144.61	340.25	492.04	79.50	1277.39	63.87				63.87	26.79	430.46	550.00	118.38	26.46	425.15	330.00	70.15	26.25	421.78	220.00		46.40	38.00	610.58	220.00		67.16		113.56
449+41.15	460+96.66	TYPICAL S.E. SECTION, MAIN LANES W/ AUX. LANE	1155.51	348.00	4021.17	97.62	12533.43	626.67				626.67	32.83	4215.04	550.00	1159.14	32.50	4172.68	330.00	688.49	32.29	4145.71	220.00		456.03	42.04	5397.52	220.00		593.73		1049.76
460+96.66	462+18.42	TYPICAL S.E. SECTION, MAIN LANES W/ AUX. LANE	121.76	340.25	414.29	79.50	1075.55	53.78				53.78	26.79	362.44	550.00	99.67	26.46	357.97	330.00	59.07	26.25	355.13	220.00		39.06	38.00	514.10	220.00		56.55		95.61
BRIDGE																															
465+02.36	474+53.69	TYPICAL S.E. SECTION, MAIN LANES W/ AUX. LANE	951.33	340.25	3236.90	79.50	8403.42	420.17				420.17	26.79	2831.79	550.00	778.74	26.46	2796.91	330.00	461.49	26.25	2774.71	220.00		305.22	38.00	4016.73	220.00		441.84		747.36
474+53.69	478+40.00	TYPICAL S.E. SECTION, MAIN LANES W/ AUX. LANE	386.31	348.00	1344.36	97.62	4190.18	209.51				209.51	32.83	1409.17	550.00	387.52	32.50	1395.01	330.00	230.18	32.29	1385.99	220.00		152.46	42.04	1804.50	220.00		198.50		350.96
478+40.00	484+53.69	TYPICAL SECTION, MAIN LANES W/ AUX. LANE	613.69	348.00	2135.64	97.62	6656.49	332.82				332.82	32.83	2238.60	550.00	615.62	32.50	2216.10	330.00	365.66	32.29	2201.78	220.00		242.20	42.04	2866.61	220.00		315.33		557.53
484+53.69	514+00.00	TYPICAL SECTION, MAIN LANES	2946.31	340.25	10024.82	79.50	26026.72	1301.34				1301.34	26.79	8771.16	550.00	2412.07	26.46	8662.15	330.00	1429.25	26.25	8593.40	220.00		945.27	38.00	12439.98	220.00		1368.40		2313.67
RIGHT MAIN LANES																															
153+53.19	154+53.19	TRANSITION RT LANES	100.00	144.38	144.38	38.00	422.22	21.11	24.00	266.67	45.33	66.44														38.00	422.22	220.00		46.44		46.44
154+53.19	169+23.05	TYPICAL S.E. N&W SECTION. MAIN LANES W/ AUX. LANE	1469.86	341.75	5023.25	69.31	11318.74	565.94	24.00	3919.63	666.34	1232.28	10.63	1735.25	550.00	477.19	10.43	1703.40	495.00	421.59						48.25	7880.08	220.00		866.81		866.31
169+23.05	170+00.00	TYPICAL S.E. N&W SECTION. MAIN LANES W/ AUX. LANE	76.95	341.75	262.98	74.55	637.42	31.87	24.00	205.20	34.88	66.75	12.38	105.81	550.00	29.10	12.18	104.11	495.00	25.77						50.00	427.50	220.00		47.03		47.03
170+00.00	177+53.19	TYPICAL S.E. SECTION, MAIN LANES W/ AUX. LANE	753.19	363.75	2739.73	109.50	9163.81	458.19				458.19	36.79	3078.87	550.00	846.69	36.46	3051.26	330.00	503.46	36.25	3033.68	220.00		333.70	46.08	3856.58	220.00		424.22		757.92
177+53.19	184+17.68	TYPICAL S.E. SECTION, MAIN LANES	664.49	340.25	2260.93	79.50	5869.66	293.48				293.48	26.79	1977.97	550.00	543.94	26.46	1953.60	330.00	322.34	26.25	1938.10	220.00		213.19	38.00	2805.62	220.00		308.62		521.31
BRIDGE																															
187+75.30	191+11.91	TYPICAL S.E. SECTION, MAIN LANES	336.61	340.25	1145.32	79.50	2973.39	148.67				148.67	26.79	1001.98	550.00	275.54	26.46	989.63	330.00	163.29	26.25	981.78	220.00		108.00	38.00	1421.24	220.00		156.34		264.34
BRIDGE																															
194+15.44	206+72.36	TYPICAL S.E. SECTION, MAIN LANES	1256.92	340.25	4276.67	79.50	11102.79	555.14				555.14	26.79	3741.43	550.00	1028.89	26.46	3695.34	330.00	609.73	26.25	3666.02	220.00		403.26	38.00	5307.00	220.00		583.77		987.33
206+72.36	216+72.36	TYPICAL S.E. SECTION, MAIN LANES W/ AUX. LANE	1000.00	363.75	3637.50	109.50	12186.67	608.33				608.33	36.79	4087.78	550.00	1124.14	36.46	4051.11	330.00	668.43	36.25	4027.78	220.00		443.06	46.08	5120.33	220.00		563.24		1009.30
216+72.36	222+98.54	TYPICAL S.E. SECTION, MAIN LANES	626.18	340.25	2130.58	79.50	5531.26	276.56				276.56	26.79	1863.93	550.00	512.58	26.46	1840.97	330.00	303.76	26.25	1826.36	220.00		200.90	38.00	2643.87	220.00		290.83		491.73
222+98.54	226+69.81	TYPICAL SECTION, MAIN LANES	371.27	340.25	1263.25	79.50	3279.55	163.98				163.98	26.79	1105.15	550.00	303.92	26.46	1091.53	330.00	180.10	26.25	1082.87	220.00		119.12	38.00	1567.58	220.00		172.43		291.55
226+69.81	252+75.46	TYPICAL S.E. SECTION, MAIN LANES	2605.65	340.25	8865.72	79.50	23016.58	1150.83				1150.83	26.79	7756.15	550.00	2132.94	26.46	7660.61	330.00	1264.00	26.25	7599.81	220.00		835.98	38.00	11001.63	220.00		1210.18		2046.16
252+75.46	293+75.00	TYPICAL SECTION, MAIN LANES	4099.54	340.25	13948.68	79.50	36212.60	1810.63				1810.63	26.79	12202.96	550.00	3355.81	26.46	12052.65	330.00	1988.69	26.25	11956.99	220.00		1315.27	38.00	17309.17	220.00		1904.01		3219.28
BRIDGE																															
297+17.36	301+33.58	TYPICAL SECTION, MAIN LANES	416.22	340.25	1416.19	79.50	3676.61	183.83				183.83	26.79	1238.95	550.00	340.71	26.46	1223.69	330.00	201.91	26.25	1213.98	220.00		133.54	38.00	1757.37	220.00		193.31		326.35
301+33.58	364+82.77	TYPICAL S.E. SECTION, MAIN LANES	6349.19	340.25	21603.12	79.50	56084.51	2804.23				2804.23	26.79	18899.42	550.00	5197.34	26.46	18666.62	330.00	3079.99	26.25	18518.47	220.00		2037.03	38.00	26807.69	220.00		2948.85		4985.88
364+82.77	377+86.91	TYPICAL SECTION, MAIN LANES	1304.14	340.25	4437.34	79.50	11519.90	576.00				576.00	26.79	3881.99	550.00	1067.55	26.46	3834.17	330.00	632.64	26.25	3803.74	220.00		418.41	38.00	5506.37	220.00		605.70		1024.11
BRIDGE																															
388+24.09	411+61.02	TYPICAL SECTION, MAIN LANES	2336.93	340.25	7951.40	79.50	20642.88	1032.14				1032.14	26.79	6956.26	550.00	1912.97	26.46	6870.57	330.00	1133.64	26.25	6816.05	220.00		749.77	38.00	9867.04	220.00		1085.37		1835.14
411+61.02	421+14.82	TYPICAL S.E. SECTION, MAIN LANES	953.80	340.25	3245.30	79.50	8425.23	421.26				421.26	26.79	2839.14	550.00	780.76	26.46	2804.17	330.00	462.69	26.25	2781.92	220.00		306.01	38.00	4027.16	220.00		442.99		749.30
421+14.82	426+74.02	TYPICAL S.E. SECTION, MAIN LANES W/ AUX. LANE	559.20	340.25	1902.68	79.50	4939.60	246.98				246.98	26.79	1664.55	550.00	457.75	26.46	1644.05	330.00	271.27	26.25	1631.00	220.00		179.41	38.00	2361.07	220.00		259.72		439.13
BRIDGE																															
429+64.67	431+14.82	TYPICAL S.E. SECTION, MAIN LANES W/ AUX. LANE	150.15	340.25	510.89	79.50	1326.33	66.32				66.32	26.79	446.95	550.00	122.91	26.46	441.44	330.00	72.84	26.25	437.94	220.00		48.17	38.00	633.97	220.00		69.74		117.31
431+14.82	435+99.37	TYPICAL S.E. SECTION, MAIN LANES	484.55	340.25	1648.68	79.50	4280.19	214.01				214.01	26.79	1442.34	550.00	396.64	26.46	1424.58	330.00	235.06	26.25	1413.27	220.00		155.46	38.00	2045.88	220.00		225.05		380.51
435+99.37	447+96.54	TYPICAL S.E. SECTION, MAIN LANES W/ AUX. LANE	1197.17	363.75	4354.71	109.50	14565.57	728.28				728.28	36.79	4893.76	550.00	1345.78	36.46	4849.87	330.00	800.23	36.25	4821.93	220.00		530.41	46.08	6129.91	220.00		674.29		1204.70
447+96.54	449+41.15	TYPICAL S.E. SECTION, MAIN LANES	144.61	340.25	492.04	79.50	1277.39	63.87				63.87	26.79	430.46	550.00	118.38	26.46	425.15	330.00	70.15	26.25	421.78	220.00		46.40	38.00	610.58	220.00		67.16		113.56
449+41.15	460+84.47	TYPICAL S.E. SECTION, MAIN LANES W/ AUX. LANE	1143.32	340.25	3890.15	79.50	10099.33	504.97				504.97	26.79	3403.28	550.00	935.90	26.46	3361.36	330.00	554.62	26.25	3334.68	220.00		366.81	38.00	4827.35	220.00		531.01		897.32
460+84.47	462+33.60	TYPICAL S.E. SECTION, MAIN LANES W/ AUX. LANE	149.13	363.75	542.46	109.50	1814.41	90.72				90.72	36.79	609.61	550.00	167.64	36.46	604.14	330.00	99.68	36.25	600.66	220.00		66.07	46.08	763.60	220.00		84.00		150.37
BRIDGE																															
465+24.16	478+40.00	TYPICAL S.E. SECTION, MAIN LANES W/ AUX. LANE	1315.84	363.75	4786.37	109.50	16009.39	800.47				800.47	36.79	5378.86	550.00	1479.19	36.46	5330.61	330.00	879.55	36.25	5299.91	220.00		582.99	46.08	6737.54	220.00		741.13		1324.12
478+40.00	483+53.69	TYPICAL SECTION, MAIN LANES W/ AUX. LANE	513.69	363.75	1868.55	109.50	6249.90	312.50				312.50	36.79	2099.85	550.00	577.46	36.46	2081.02	330.00	343.37	36.25	2069.03	220.00		227.59	46.08	2630.26	220.00		289.33		516.92
483+29.51	514+00.00	TYPICAL SECTION, MAIN LANES	3070.49	340.25	10447.34	79.50	27122.66	1356.13				1356.13	26.79	9139.83	550.00	2513.45	26.46	9027.24	330.00	1489.49	26.25	8955.60	220.00		985.12	38.00	12964.29	220.00		1426.07		2411.19
SUBTOTALS (BOX 1 OF 4):					**232283.98**		**619510.03**	**30975.51**		**11676.76**	**1985.04**	**32960.55**		**202937.36**		**55807.75**		**200525.37**		**33617.13**		**192616.89**			**21187.86**		**296975.07**			**32667.27**		**53855.13**

BASIS OF ESTIMATE:
ACHM SURFACE COURSE (1/2").....94.3% MIN. AGGR.....5.7% ASPHALT BINDER
ACHM BINDER COURSE (**).....95.4% MIN. AGGR.....4.6% ASPHALT BINDER
ACHM BASE COURSE (1 1/2").....96.0% MIN. AGGR.....4.0% ASPHALT BINDER
MAXIMUM NUMBER OF GYRATIONS = 115 FOR PG 64-22
MAXIMUM NUMBER OF GYRATIONS = 160 FOR PG 70-22
TACK COAT QUANTITIES WERE CALCULATED USING THE EMULSIFIED ASPHALT RATES. REFER TO SS-400-1 FOR THE RESIDUAL ASPHALT APPLICATION RATES.

HBVinson
WORKSPACE: AHTD
L:\2017\170760 - ARDOT 012326 Hwy 412 - Hwy 112\Drawings\r012326_QTY.DGN
7/27/2023 15:53:08 PM
REVISED DATE:

DATE REVISED	DATE REVISED	FED. RD. DIST. NO.	STATE	JOB NO.	SHEET NO.	TOTAL SHEETS
		6	ARK.	012326	197	838
		QUANTITIES				
②						

STATE OF ARKANSAS
LICENSED PROFESSIONAL ENGINEER
No.13436
SHAUN A. ROBERSON

DIGITALLY SIGNED 7/28/2023

BASE AND SURFACING - ALTERNATIVE 2 (BOX 2 OF 4)

STATION	STATION	LOCATION	LENGTH	AGGREGATE BASE COURSE (CLASS 7)		TACK COAT							ACHM BASE COURSE (1 1/2")				ACHM BINDER COURSE (1")				ACHM SURFACE COURSE (1/2")											
						(0.05 GAL. PER SQ. YD.)			(0.17 GAL. PER SQ. YD.)																						
			FEET	TON / STATION	TON	TOTAL WID. FEET	SQ.YD.	GALLON	TOTAL WID. FEET	SQ.YD.	GALLON	TOTAL GALLONS	AVG. WID. FEET	SQ.YD.	POUND / SQ.YD.	PG 70-22 TON	AVG. WID. FEET	SQ.YD.	POUND / SQ.YD.	PG 70-22 TON	AVG. WID. FEET	SQ.YD.	POUND / SQ.YD.	PG 64-22 TON	PG 70-22 TON	AVG. WID. FEET	SQ.YD.	POUND / SQ.YD.	PG 64-22 TON	PG 70-22 TON	TOTAL PG 64-22 TON	TOTAL PG 70-22 TON
ADDITIONAL FOR GORE																															
169+46.18	170+68.03	TYPICAL S.E. N&W SECTION, MAIN LANES W/ AUX. LANE - LEFT LANES	121.85	132.25	161.15	23.32	315.73	15.79				15.79	11.66	157.86	550.00	43.41	11.66	157.86	495.00	39.07												
175+37.85	177+53.19	TYPICAL S.E. SECTION, MAIN LANES W/ AUX. LANE - RIGHT LANES	215.34	42.25	90.98	21.75	520.52	26.03				26.03	10.88	260.26	550.00	71.57	10.88	260.26	330.00	42.94	10.88	260.26	220.00		28.63	10.88	260.26	220.00		28.63		57.26
177+53.19	180+89.79	TYPICAL S.E. SECTION, MAIN LANES - RIGHT LANES	336.60	13.50	45.44	6.90	257.98	12.90				12.90	3.45	128.99	550.00	35.47	3.45	128.99	330.00	21.28	3.45	128.99	220.00		14.19	3.45	128.99	220.00		14.19		28.38
203+08.67	206+72.36	TYPICAL S.E. SECTION, MAIN LANES - LEFT LANES	363.69	54.75	199.12	28.10	1135.70	56.79				56.79	14.05	567.85	550.00	156.16	14.05	567.85	330.00	93.70	14.05	567.85	220.00		62.46	14.05	567.85	220.00		62.46		124.92
206+72.36	209+74.59	TYPICAL S.E. SECTION, MAIN LANES - LEFT LANES	302.33	28.25	85.41	14.51	487.36	24.37				24.37	7.25	243.68	550.00	67.01	7.25	243.68	330.00	40.21	7.25	243.68	220.00		26.80	7.25	243.68	220.00		26.80		53.60
206+72.36	207+49.96	TYPICAL S.E. SECTION, MAIN LANES W/ AUX. LANE - RIGHT LANES	77.30	7.25	5.60	3.75	32.20	1.61				1.61	1.87	16.10	550.00	4.43	1.87	16.10	330.00	2.66	1.87	16.10	220.00		1.77	1.87	16.10	220.00		1.77		3.54
428+97.83	431+14.82	TYPICAL S.E. SECTION, MAIN LANES W/ AUX. LANE - LEFT LANES	216.99	9.50	20.61	4.89	117.80	5.89				5.89	2.44	58.90	550.00	16.20	2.44	58.90	330.00	9.72	2.44	58.90	220.00		6.48	2.44	58.90	220.00		6.48		12.96
446+49.37	447+96.58	TYPICAL S.E. SECTION, MAIN LANES W/ AUX. LANE - RIGHT LANES	147.21	27.50	40.48	14.14	231.27	11.56				11.56	7.07	115.63	550.00	31.80	7.07	115.63	330.00	19.08	7.07	115.63	220.00		12.72	7.07	115.63	220.00		12.72		25.44
447+96.58	450+68.38	TYPICAL S.E. SECTION, MAIN LANES W/ AUX. LANE - RIGHT LANES	271.50	17.00	46.16	8.68	261.73	13.09				13.09	4.34	130.86	550.00	35.99	4.34	130.86	330.00	21.59	4.34	130.86	220.00		14.39	4.34	130.86	220.00		14.39		28.78
447+66.06	449+41.15	TYPICAL S.E. SECTION, MAIN LANES W/ AUX. LANE - LEFT LANES	175.09	18.50	32.39	9.55	185.71	9.29				9.29	4.77	92.86	550.00	25.54	4.77	92.86	330.00	15.32	4.77	92.86	220.00		10.21	4.77	92.86	220.00		10.21		20.42
449+41.15	453+46.96	TYPICAL S.E. SECTION, MAIN LANES W/ AUX. LANE - LEFT LANES	405.51	28.75	116.58	14.83	668.02	33.40				33.40	7.41	334.01	550.00	91.85	7.41	334.01	330.00	55.11	7.41	334.01	220.00		36.74	7.41	334.01	220.00		36.74		73.48
460+84.46	462+18.04	TYPICAL S.E. SECTION, MAIN LANES W/ AUX. LANE - RIGHT LANES	133.58	7.00	9.35	3.64	54.08	2.70				2.70	1.82	27.04	550.00	7.44	1.82	27.04	330.00	4.46	1.82	27.04	220.00		2.97	1.82	27.04	220.00		2.97		5.94
479+96.17	483+29.51	TYPICAL SECTION, MAIN LANES W/ AUX. LANE - RIGHT LANES	333.34	35.00	116.67	17.96	665.36	33.27				33.27	8.98	332.68	550.00	91.49	8.98	332.68	330.00	54.89	8.98	332.68	220.00		36.59	8.98	332.68	220.00		36.59		73.18
483+29.51	484+53.99	TYPICAL SECTION, MAIN LANES W/ AUX. LANE - RIGHT LANES	124.18	29.25	36.32	15.04	207.58	10.38				10.38	7.52	103.79	550.00	28.54	7.52	103.79	330.00	17.13	7.52	103.79	220.00		11.42	7.52	103.79	220.00		11.42		22.84
483+09.14	484+53.99	TYPICAL SECTION, MAIN LANES W/ AUX. LANE - LEFT LANES	144.55	8.75	12.65	4.55	73.09	3.65				3.65	2.28	36.54	550.00	10.05	2.28	36.54	330.00	6.03	2.28	36.54	220.00		4.02	2.28	36.54	220.00		4.02		8.04
484+53.69	485+41.37	TYPICAL SECTION, MAIN LANES W/ AUX. LANE - RIGHT LANES	87.68	3.25	2.85	1.62	15.79	0.79				0.79	0.81	7.90	550.00	2.17	0.81	7.90	330.00	1.30	0.81	7.90	220.00		0.87	0.81	7.90	220.00		0.87		1.74
177+62.07	180+04.46	TWO LANE RAMP TYPICAL S.E. SECTION - 412B RAMP 1 LEFT	242.39	19.00	46.05	9.75	262.70	13.14				13.14	4.88	131.35	550.00	36.12	4.88	131.35	330.00	21.67	4.88	131.35	220.00		14.45	4.88	131.35	220.00		14.45		28.90
480+16.93	482+70.26	RAMP TYPICAL SECTION - XNA ACCESS RD RAMP 1 RIGHT	253.33	56.25	142.50	28.94	814.51	40.73				40.73	14.47	407.26	550.00	112.00	14.47	407.26	330.00	67.20	14.47	407.26	220.00		44.80	14.47	407.26	220.00		44.80		89.60
482+70.26	484+19.97	TWO LANE RAMP TYPICAL SECTION - XNA ACCESS RD RAMP 1 RIGHT	149.71	28.50	42.67	14.64	243.53	12.18				12.18	7.32	121.77	550.00	33.49	7.32	121.77	330.00	20.09	7.32	121.77	220.00		13.39	7.32	121.77	220.00		13.39		26.78
421+81.07	424+21.33	TWO LANE RAMP TYPICAL S.E. SECTION - XNA ACCESS RD RAMP 2 RIGHT	240.26	26.00	62.47	13.43	358.45	17.92				17.92	6.71	179.23	550.00	49.29	6.71	179.23	330.00	29.57	6.71	179.23	220.00		19.72	6.71	179.23	220.00		19.72		39.44
424+21.33	425+21.33	RAMP TYPICAL S.E. SECTION - XNA ACCESS RD RAMP 2 RIGHT	100.00	14.00	14.00	7.16	79.59	3.98				3.98	3.58	39.79	550.00	10.94	3.58	39.79	330.00	6.57	3.58	39.79	220.00		4.38	3.58	39.79	220.00		4.38		8.75
ADDITIONAL FOR GUARDRAIL																															
171+97.84	176+56.32	C.L. MEDIAN RT.	458.48	58.50	268.21																5.15	262.38	220.00	28.86					28.86	
181+80.08	183+16.13	C.L. MEDIAN LT.	136.05	39.00	53.06																3.77	56.97	220.00	6.27					6.27	
180+31.09	184+13.24	C.L. MEDIAN RT.	382.15	60.75	232.16																5.87	249.25	220.00	27.42					27.42	
181+26.13	184+52.28	C.L. MEDIAN RT.	326.15	55.50	181.01																5.35	193.81	220.00	21.32					21.32	
186+72.61	189+98.76	C.L. MEDIAN LT.	326.15	53.75	175.31																5.15	187.71	220.00	20.65					20.65	
187+07.85	190+90.30	C.L. MEDIAN LT.	382.15	59.25	226.42																5.72	243.05	220.00	26.74					26.74	
187+49.63	191+31.78	C.L. MEDIAN RT.	382.15	59.00	225.47																5.66	241.80	220.00	26.60					26.60	
188+16.05	191+42.20	C.L. MEDIAN RT.	326.15	55.50	181.01																5.35	193.81	220.00	21.32					21.32	
193+66.37	196+92.52	C.L. MEDIAN LT.	326.15	53.75	175.31																5.15	187.71	220.00	20.65					20.65	
193+74.41	197+56.56	C.L. MEDIAN LT.	382.15	59.25	226.42																5.72	243.04	220.00	26.73					26.73	
205+90.78	210+54.38	C.L. MEDIAN LT.	463.30	52.50	243.23																5.06	260.62	220.00	28.67					28.67	
215+12.00	220+98.00	C.L. MEDIAN RT.	586.00	54.25	317.91																5.22	339.77	220.00	37.37					37.37	
217+92.00	223+78.00	C.L. MEDIAN LT.	586.00	53.75	314.98																5.15	337.08	220.00	37.08					37.08	
290+05.35	293+87.51	C.L. MEDIAN RT.	382.16	59.75	228.34																5.76	244.79	220.00	26.93					26.93	
290+78.50	294+04.66	C.L. MEDIAN RT.	326.16	54.50	177.76																5.26	190.78	220.00	20.99					20.99	
296+49.96	299+76.13	C.L. MEDIAN LT.	326.17	54.50	177.76																5.26	190.79	220.00	20.99					20.99	
296+67.11	300+49.27	C.L. MEDIAN LT.	382.16	59.75	228.34																5.76	244.79	220.00	26.93					26.93	
374+28.75	378+10.90	C.L. MEDIAN RT.	382.15	59.75	228.33																5.76	244.78	220.00	26.93					26.93	
374+84.75	378+10.39	C.L. MEDIAN RT.	325.64	54.75	178.29																5.27	190.77	220.00	20.99					20.99	
388+00.08	391+26.24	C.L. MEDIAN LT.	326.16	54.50	177.76																5.26	190.78	220.00	20.99					20.99	
388+00.08	391+82.24	C.L. MEDIAN LT.	382.16	59.75	228.34																5.76	244.78	220.00	26.93					26.93	
423+10.25	426+93.00	C.L. MEDIAN RT.	382.75	59.25	226.78																5.72	243.27	220.00	26.76					26.76	
423+78.28	427+04.43	C.L. MEDIAN RT.	326.15	53.75	175.31																5.15	187.70	220.00	20.65					20.65	
428+93.22	432+18.01	C.L. MEDIAN LT.	324.79	55.50	180.26																5.35	192.93	220.00	21.22					21.22	
429+15.68	432+97.33	C.L. MEDIAN LT.	382.15	60.25	230.25																5.82	247.18	220.00	27.19					27.19	
434+17.00	443+28.00	C.L. MEDIAN RT.	911.00	54.75	498.77																5.27	533.38	220.00	58.67					58.67	
436+97.00	445+83.00	C.L. MEDIAN LT.	886.00	55.25	489.52																5.33	524.37	220.00	57.68					57.68	
458+72.22	462+54.97	C.L. MEDIAN RT.	382.75	59.25	226.78																5.72	243.27	220.00	26.76					26.76	
459+40.18	462+68.81	C.L. MEDIAN RT.	328.63	53.50	175.82																5.15	188.57	220.00	20.74					20.74	
464+73.20	468+01.95	C.L. MEDIAN LT.	328.75	55.50	182.46																5.34	194.92	220.00	21.44					21.44	
464+82.68	468+65.44	C.L. MEDIAN LT.	382.76	60.00	229.66																5.75	246.17	220.00	27.08					27.08	
465+01.10	467+09.38	C.L. MEDIAN RT.	208.78	33.75	70.46																3.25	75.37	220.00	8.29					8.29	
477+57.00	482+23.35	C.L. MEDIAN RT.	466.55	53.00	247.27																5.11	264.90	220.00	29.14					29.14	
494+82.00	500+68.00	C.L. MEDIAN RT.	586.00	53.75	314.98																5.15	337.94	220.00	37.17					37.17	
497+52.00	503+38.00	C.L. MEDIAN LT.	586.00	53.75	314.98																5.15	337.94	220.00	37.17					37.17	
517+02.12	521+63.50	C.L. MEDIAN LT.	461.38	53.00	244.53																5.12	262.29	220.00	28.85					28.85	
LM 0.651	LM 0.683	ITS SITE 1	170.75	50.75	86.66																4.89	92.80	220.00	10.21					10.21	
594+59.31	596+18.45	ITS SITE 8	159.15	50.75	80.77																3.76	66.52	220.00	7.32					7.32	
ADDITIONAL FOR SUPERELEVATION																															
146+73.33	150+23.33	C.L. MEDIAN - TYPICAL S.E. N&W SECTION, ML W/ AUX. LANE - TRANS.	350.00	83.25	291.38																										
150+23.33	154+53.19	C.L. MEDIAN - TYPICAL S.E. N&W SECTION, ML W/ AUX. LANE - FULL SUPER	429.86	166.50	715.72																										
154+53.19	158+68.03	C.L. MEDIAN - TYPICAL S.E. N&W SECTION, ML W/ AUX. LANE - FULL SUPER	414.84	277.50	1151.18																										
158+68.03	165+11.08	C.L. MEDIAN - TYPICAL S.E. N&W SECTION, ML W/ 2 AUX. LANES - FULL SUPER	643.05	277.50	1784.46																										
165+11.08	168+61.08	C.L. MEDIAN - TYPICAL S.E. N&W SECTION, ML W/ 2 AUX. LANES - TRANS.	350.00	138.75	485.63																										
169+23.05	170+00.00	C.L. MEDIAN - TYPICAL S.E. N&W SECTION, ML W/ AUX. LANES - TRANS.	76.95	8.50	6.54																										
170+00.00	170+68.03	C.L. MEDIAN - TYPICAL S.E. N&W SECTION, ML W/ AUX. LANES - TRANS.	68.03	33.13	22.53																										
170+68.03	172+00.00	C.L. MEDIAN - TYPICAL S.E. SECTION, ML W/ AUX. LANE - TRANS.	131.97	98.75	130.32																										
172+00.00	172+73.05	C.L. MEDIAN - TYPICAL S.E. SECTION, ML W/ AUX. LANE - TRANS.	73.05	183.75	134.23																										
172+73.05	177+53.19	C.L. MEDIAN - TYPICAL S.E. SECTION, ML W/ AUX. LANE - FULL SUPER	480.14	216.00	1037.10																										
177+53.19	183+22.52	C.L. MEDIAN - TYPICAL S.E. SECTION, LEFT ML - FULL SUPER	569.33	96.00	546.56																										
177+53.19	184+17.58	C.L. MEDIAN - TYPICAL S.E. SECTION, RIGHT ML - FULL SUPER	664.49	120.00	797.39																										
187+01.07	190+92.39	C.L. MEDIAN - TYPICAL S.E. SECTION, LEFT ML - FULL SUPER	391.32	96.00	375.67																										
187+75.30	191+11.91	C.L. MEDIAN - TYPICAL S.E. SECTION, RIGHT ML - FULL SUPER	336.61	120.00	403.93																										
193+94.29	206+72.36	C.L. MEDIAN - TYPICAL S.E. SECTION, LEFT ML - FULL SUPER	1278.07	96.00	1226.95																										
194+15.44	206+72.36	C.L. MEDIAN - TYPICAL S.E. SECTION, RIGHT ML - FULL SUPER	1256.92	120.00	1508.30																										
206+72.36	216+72.36	C.L. MEDIAN - TYPICAL S.E. SECTION, ML W/ AUX. LANE - FULL SUPER	1000.00	187.00	1870.00																										
216+72.36	219+48.54	C.L. MEDIAN - TYPICAL S.E. SECTION, ML - FULL SUPER	276.18	216.00	596.55																										
219+48.54	222+98.54	C.L. MEDIAN - TYPICAL S.E. SECTION, ML - TRANS.	350.00	108.00	378.00																										
226+69.81	231+19.31	C.L. MEDIAN - TYPICAL S.E. SECTION, ML - TRANS.	450.00	209.00	940.50																										
231+19.81	248+25.46	C.L. MEDIAN - TYPICAL S.E. SECTION, ML - FULL SUPER	1705.65	418.00	7129.62																										
248+25.46	252+75.46	C.L. MEDIAN - TYPICAL S.E. SECTION, ML - TRANS.	450.00	209.00	940.50																										
301+33.58	304+83.58	C.L. MEDIAN - TYPICAL S.E. SECTION, ML - TRANS.	350.00	108.00	378.00																										
304+83.58	361+32.77	C.L. MEDIAN - TYPICAL S.E. SECTION, ML - FULL SUPER	5649.19	216.00	12202.25																										
361+32.77	364+82.77	C.L. MEDIAN - TYPICAL S.E. SECTION, ML - TRANS.	350.00	108.00	378.00																										
411+61.02	415+11.02	C.L. MEDIAN - TYPICAL S.E. SECTION, ML - TRANS.	350.00	108.00	378.00																										
415+11.02	421+14.82	C.L. MEDIAN - TYPICAL S.E. SECTION, ML - FULL SUPER	603.80	216.00	1304.21																										
421+14.82	426+48.43	C.L. MEDIAN - TYPICAL S.E. SECTION, LEFT ML W/ AUX. LANE- FULL SUPER	533.61	75.25	401.54																										
421+14.82	426+74.32	C.L. MEDIAN - TYPICAL S.E. SECTION, RIGHT ML W/ AUX. LANE- FULL SUPER	559.20	96.00	536.83																										
429+32.43	431+14.82	C.L. MEDIAN - TYPICAL S.E. SECTION, LEFT ML W/ AUX. LANE- FULL SUPER	182.39	75.25	137.25																										
429+64.67	431+14.82	C.L. MEDIAN - TYPICAL S.E. SECTION, RIGHT ML W/ AUX. LANE- FULL SUPER	150.15	96.00	144.14																										
431+14.82	435+99.37	C.L. MEDIAN - TYPICAL S.E. SECTION, ML - FULL SUPER	484.55	216.00	1046.63																										
435+99.37	447+96.54	C.L. MEDIAN - TYPICAL S.E. SECTION, ML W/ AUX. LANE - FULL SUPER	1197.17	195.25	2337.47																										
447+96.54	449+41.15	C.L. MEDIAN - TYPICAL S.E. SECTION, ML - FULL SUPER	144.61	216.00	312.36																										
449+41.15	460+96.96	C.L. MEDIAN - TYPICAL S.E. SECTION, LEFT ML W/ AUX. LANE- FULL SUPER	1155.51	75.25	869.52																										
449+41.15	460+84.46	C.L. MEDIAN - TYPICAL S.E. SECTION, RIGHT ML W/ AUX. LANE- FULL SUPER	1143.31	96.00	1097.58																										
460+96.66	474+53.99	C.L. MEDIAN - TYPICAL S.E. SECTION, LEFT ML W/ AUX. LANE- FULL SUPER	1357.03	96.00	1302.75																										
460+84.46	474+53.99	C.L. MEDIAN - TYPICAL S.E. SECTION, RIGHT ML W/ AUX. LANE- FULL SUPER	1369.23	75.25	1030.35																										
474+53.69	474+90.30	C.L. MEDIAN - TYPICAL S.E. SECTION, ML W/ AUX. LANE - FULL SUPER	36.31	216.00	78.43																										
474+90.00	478+40.00	C.L. MEDIAN - TYPICAL S.E. SECTION, ML W/ AUX. LANE - TRANS.	350.00	108.00	378.00																										
ADDITIONAL FOR LEVELING																															
145+68.03	154+53.19	C.L. MEDAIN LT. LANES	885.16			28.00	2753.83	137.69				137.69									4.00	393.40	VAR.	21.64	24.00	2360.43	VAR.		129.82	21.64	129.82	
154+53.19	170+00.00	C.L. MEDIAN	1546.81			56.00	9624.60	481.23				481.23									8.00	1374.94	VAR.	75.62	48.00	8249.65	VAR.		1361.19	75.62	1361.19	
170+00.00	172+00.00	C.L. MEDIAN LT. LANES	200.00			24.00	533.33	26.67				26.67													24.00	533.33	VAR.		29.33		29.33	
SUBTOTALS (BOX 2 OF 4):					56536.50		19900.46	995.05				995.05		3494.35		960.96		3494.35		589.59		14083.61		1084.96	367.00	14637.76			1904.70	1084.96	2271.70	

BASIS OF ESTIMATE:
ACHM SURFACE COURSE (1/2").....94.3% MIN. AGGR.....5.7% ASPHALT BINDER
ACHM BINDER COURSE (1").....95.4% MIN. AGGR.....4.6% ASPHALT BINDER
ACHM BASE COURSE (1 1/2").....96.0% MIN. AGGR.....4.0% ASPHALT BINDER
MAXIMUM NUMBER OF GYRATIONS = 115 FOR PG 64-22
MAXIMUM NUMBER OF GYRATIONS = 160 FOR PG 70-22
TACK COAT QUANTITIES WERE CALCULATED USING THE EMULSIFIED ASPHALT RATES. REFER TO SS-400-1 FOR THE RESIDUAL ASPHALT APPLICATION RATES.

HBVinson 7/27/2023 1:53:23 PM
WORKSPACE: AHTD
L:\20T\T0T660 - ARDOT 012326 Hwy 412 - Hwy 412\Drawings\r012326_QTY.DGN
REVISED DATE:



DIGITALLY SIGNED 7/28/2023

DATE REVISED	DATE REVISED	FED. RD. DIST. NO.	STATE	JOB NO.	SHEET NO.	TOTAL SHEETS
		6	ARK.	012326	198	838
		QUANTITIES				
2						

BASE AND SURFACING - ALTERNATIVE 2 (BOX 3 OF 4)

STATION	STATION	LOCATION	LENGTH	AGGREGATE BASE COURSE (CLASS 7)		TACK COAT							ACHM BASE COURSE (1 1/2")					ACHM BINDER COURSE (1")					ACHM SURFACE COURSE (1/2")										
				TON / STATION	TON	(0.05 GAL. PER SQ. YD.)			(0.17 GAL. PER SQ. YD.)			TOTAL GALLONS	AVG. WID.	SQ.YD.	POUND / SQ.YD.	PG 64-22	PG 70-22	AVG. WID.	SQ.YD.	POUND / SQ.YD.	PG 64-22	PG 70-22	AVG. WID.	SQ.YD.	POUND / SQ.YD.	PG 64-22	PG 70-22	AVG. WID.	SQ.YD.	POUND / SQ.YD.	PG 64-22	PG 70-22	TOTAL PG 64-22	TOTAL PG 70-22
			FEET			TOTAL WID. FEET	SQ.YD.	GALLON	TOTAL WID. FEET	SQ.YD.	GALLON		FEET			TON	TON	FEET			TON	TON	FEET			TON	TON	FEET			TON	TON	TON	TON
HWY. 112B																																	
170+67.64	194+00.00	RAMP 4 - 2 LANE RAMP TYPICAL S.E. SECTION	2332.36	410.50	9574.34	49.10	12725.40	636.27				636.27	24.75	6413.99	550.00		1763.85	24.35	6311.41	495.00		1562.07						40.00	10366.04	220.00		1140.26		1140.26
194+00.00	195+51.46	RAMP 4 - 2 LANE RAMP OVERLAY TYPICAL SECTION	151.46	1.75	2.65				34.00	572.18	97.27	97.27																34.00	572.18	220.00		62.94		62.94
177+62.07	180+62.07	RAMP 1 - 2 LANE RAMP TYPICAL S.E. SECTION	300.00	410.50	1231.50	49.10	1636.81	81.84				81.84	24.75	825.00	550.00		226.88	24.35	811.81	495.00		200.92						40.00	1333.33	220.00		146.67		146.67
180+62.07	187+50.00	RAMP 1 - 2 LANE RAMP TYPICAL SECTION	687.93	410.50	2823.95	49.10	3753.36	187.67				187.67	24.75	1891.81	550.00		520.25	24.35	1861.55	495.00		460.73						40.00	3057.47	220.00		336.32		336.32
187+50.00	194+50.62	RAMP 1 - 2 LANE RAMP N&W W/ TURN LANE TYPICAL SECTION	700.62	151.25	1059.69	9.72	756.67	37.83	34.00	2646.79	449.95	487.78	4.96	386.12	550.00		106.18	4.76	370.55	495.00		91.71						44.58	3470.40	220.00		381.74		381.74
192+33.34	193+15.21	RAMP 3 - RAMP TYPICAL SECTION	81.87	262.75	215.11	46.50	422.99	21.15				21.15	15.79	143.64	550.00		39.50	15.46	140.63	330.00		23.20	15.25	138.72	220.00		15.26	25.00	227.42	220.00		25.02		40.28
193+15.21	205+31.72	RAMP 3 - RAMP TYPICAL S.E. SECTION	1216.51	262.75	3196.38	46.50	6285.30	314.27				314.27	15.79	2134.30	550.00		586.93	15.46	2089.69	330.00		344.80	15.25	2061.31	220.00		226.74	25.00	3379.19	220.00		371.71		598.45
192+42.58	194+08.59	RAMP 2 - RAMP TYPICAL SECTION	166.01	262.75	436.19	46.50	857.72	42.89				42.89	15.79	291.26	550.00		80.10	15.46	285.17	330.00		47.05	15.25	281.29	220.00		30.94	25.00	461.14	220.00		50.73		81.67
194+08.59	206+69.05	RAMP 2 - RAMP TYPICAL S.E. SECTION	1260.46	262.75	3311.86	46.50	6512.38	325.62				325.62	15.79	2211.41	550.00		608.14	15.46	2165.19	330.00		357.26	15.25	2135.78	220.00		234.94	25.00	3501.28	220.00		385.14		620.08
10+00.00	17+00.00	TYPICAL OVERLAY SECTION	700.00	3.50	24.50	81.63	6349.00	317.45	81.63	6349.00	1079.33	1396.78																81.63	6349.00	220.00		698.39		698.39
HWY. 112																																	
483+30.39	483+71.30	RAMP 1 - RAMP TYPICAL SECTION	40.91	262.75	107.49	46.50	211.37	10.57				10.57	15.79	71.77	550.00		19.74	15.46	70.27	330.00		11.59	15.25	69.32	220.00		7.63	25.00	113.64	220.00		12.50		20.13
483+71.30	493+74.64	RAMP 1 - RAMP TYPICAL S.E. SECTION	1003.34	262.75	2636.28	46.50	5183.92	259.20				259.20	15.79	1760.30	550.00		484.08	15.46	1723.52	330.00		284.38	15.25	1700.10	220.00		187.01	25.00	2787.06	220.00		306.58		493.59
493+74.64	493+81.27	RAMP 1 - RAMP TYPICAL SECTION	6.63	262.75	17.42	46.50	34.25	1.71				1.71	15.79	11.63	550.00		3.20	15.46	11.39	330.00		1.88	15.25	11.23	220.00		1.24	25.00	18.42	220.00		2.03		3.27
493+81.27	498+30.00	RAMP 1 - RAMP TYPICAL S.E. SECTION	448.73	262.75	1179.04	46.50	2318.44	115.92				115.92	15.79	787.27	550.00		216.50	15.46	770.82	330.00	127.19	127.19	15.25	760.35	220.00		83.64	25.00	1246.47	220.00		137.11		220.75
498+30.00	501+38.11	RAMP 1 - RAMP W/ AUX. LANE TYPICAL S.E. SECTION	308.11	262.75	809.56	68.76	2353.79	117.69				117.69	23.21	794.58	550.00		218.51	22.88	783.11	330.00	129.21	129.21	22.67	776.09	220.00		85.37	32.42	1109.88	220.00		122.09		207.46
501+38.11	501+41.07	RAMP 1 - RAMP W/ AUX. LANE TYPICAL SECTION	2.96	262.75	7.78	73.50	24.17	1.21				1.21	24.79	8.15	550.00		2.24	24.46	8.04	330.00	1.33	1.33	24.25	7.98	220.00		0.88	34.00	11.18	220.00		1.23		2.11
484+57.20	493+60.68	RAMP 4 - RAMP TYPICAL S.E. SECTION	907.48	262.75	2384.40	46.50	4688.65	234.43				234.43	15.79	1592.12	550.00		437.83	15.46	1556.85	330.00	257.21	257.21	15.25	1537.67	220.00		169.14	25.00	2520.78	220.00		277.29		446.43
493+60.68	499+12.74	RAMP 4 - RAMP TYPICAL SECTION	552.06	262.75	1450.54	46.50	2852.31	142.62				142.62	15.79	968.56	550.00		266.35	15.46	948.32	330.00	156.47	156.47	15.25	935.43	220.00		102.90	25.00	1533.50	220.00		168.69		271.59
XNA ACCESS RD.																																	
416+52.40	424+21.33	RAMP 2 - TWO LANE RAMP TYPICAL S.E. SECTION	768.93	344.00	2645.12	73.50	6279.60	313.98				313.98	24.79	2117.97	550.00		582.44	24.46	2089.78	330.00		344.81	24.25	2071.84	220.00		227.90	40.00	3417.47	220.00		375.92		603.82
424+21.33	426+22.22	RAMP 2 - RAMP TYPICAL S.E. SECTION	200.89	262.75	527.84	46.50	1037.93	51.90				51.90	15.79	352.45	550.00		96.92	15.46	345.08	330.00		56.94	15.25	340.40	220.00		37.44	25.00	558.03	220.00		61.38		98.82
426+22.22	428+20.93	RAMP 2 - RAMP TYPICAL S.E. SECTION	198.71	262.75	522.11	46.50	1026.87	51.33				51.33	15.79	348.63	550.00		95.87	15.46	341.34	330.00		56.32	15.25	336.70	220.00		37.04	25.00	551.97	220.00		60.72		97.76
431+12.22	451+20.56	RAMP 2 - RAMP TYPICAL S.E. SECTION	2008.34	262.75	5276.91	46.50	10376.42	518.82				518.82	15.79	3523.52	550.00		968.97	15.46	3449.88	330.00		569.23	15.25	3403.02	220.00		374.33	25.00	5578.72	220.00		613.66		987.99
451+20.57	460+86.86	RAMP 2 - RAMP TYPICAL S.E. SECTION	966.29	262.75	2538.93	46.50	4992.50	249.63				249.63	15.79	1695.30	550.00		466.21	15.46	1659.87	330.00		273.88	15.25	1637.32	220.00		180.11	25.00	2684.14	220.00		295.26		475.37
431+18.13	431+57.19	RAMP 4 - RAMP TYPICAL SECTION	39.06	262.75	102.63	46.50	201.81	10.09				10.09	15.79	68.53	550.00		18.85	15.46	67.10	330.00		11.07	15.25	66.19	220.00		7.28	25.00	108.50	220.00		11.94		19.22
431+57.19	441+85.55	RAMP 4 - RAMP TYPICAL S.E. SECTION	1028.36	262.75	2702.02	46.50	5313.19	265.66				265.66	15.79	1804.20	550.00		496.16	15.46	1766.49	330.00		291.47	15.25	1742.50	220.00		191.68	25.00	2856.56	220.00		314.22		505.90
434+37.71	449+34.18	RAMP 3 - RAMP TYPICAL S.E. SECTION	1496.47	262.75	3931.97	46.50	7731.76	386.59				386.59	15.79	2625.47	550.00		722.00	15.46	2570.60	330.00		424.15	15.25	2535.69	220.00		278.93	25.00	4156.86	220.00		457.25		736.18
447+93.93	468+94.40	RAMP 1 - RAMP TYPICAL S.E. SECTION	2100.47	262.75	5518.98	46.50	10852.43	542.62				542.62	15.79	3685.16	550.00		1013.42	15.46	3608.14	330.00		595.34	15.25	3559.13	220.00		391.50	25.00	5834.64	220.00		641.81		1033.31
468+94.40	470+03.82	RAMP 1 - RAMP TYPICAL SECTION	109.42	262.75	287.50	46.50	565.34	28.27				28.27	15.79	191.97	550.00		52.79	15.46	187.96	330.00		31.01	15.25	185.41	220.00		20.40	25.00	303.94	220.00		33.43		53.83
472+85.99	482+70.26	RAMP 1 - RAMP TYPICAL SECTION	984.27	262.75	2586.17	46.50	5085.40	254.27				254.27	15.79	1726.85	550.00		474.88	15.46	1690.76	330.00		278.98	15.25	1667.79	220.00		183.46	25.00	2734.08	220.00		300.75		484.21
482+70.26	484+19.97	RAMP 1 - TWO LANE RAMP TYPICAL SECTION	149.71	306.25	458.49	73.50	1222.63	61.13				61.13	24.79	412.37	550.00		113.40	24.46	406.88	330.00		67.14	24.25	403.39	220.00		44.37	35.08	583.59	220.00		64.19		108.56
HWY. 68																																	
44+50.00	47+67.57	TYPICAL SECTION	317.57	165.00	523.99	24.00	846.85	42.34	24.00	846.85	143.96	186.30																40.00	1411.42	220.00	155.26		155.26	
47+67.57	53+00.00	TYPICAL SECTION	532.43	229.00	1219.26	45.96	2718.71	135.94	21.08	1247.25	212.03	347.97						12.54	741.85	330.00	122.41		12.33	729.61	220.00	80.26		48.63	2876.60	220.00	316.43		396.69	
53+00.00	56+60.84	TYPICAL SECTION	360.84	351.75	1269.25	72.71	2915.19	145.76				145.76						36.46	1461.80	330.00	241.20		36.25	1453.38	220.00	159.87		52.00	2084.85	220.00	229.33		389.20	
MUSTEEN RD.																																	
15+26.86	24+12.27	TYPICAL S.E. SECTION	885.41	204.25	1808.45	20.25	1992.17	99.61				99.61											20.25	1992.17	220.00	219.14		28.00	2754.61	220.00	303.01		522.15	
24+12.27	28+42.47	TYPICAL SECTION	430.20	204.25	878.68	20.25	967.95	48.40				48.40											20.25	967.95	220.00	106.47		28.00	1338.40	220.00	147.22		253.69	
28+42.27	33+87.82	TYPICAL S.E. SECTION	545.55	204.25	1114.29	20.25	1227.49	61.37				61.37											20.25	1227.49	220.00	135.02		28.00	1697.27	220.00	186.70		321.72	
33+87.82	34+76.65	TYPICAL SECTION	88.83	204.25	181.44	20.25	199.87	9.99				9.99											20.25	199.87	220.00	21.99		28.00	276.36	220.00	30.40		52.39	
34+76.65	39+30.54	TYPICAL S.E. SECTION	453.89	204.25	927.07	20.25	1021.25	51.06				51.06											20.25	1021.25	220.00	112.34		28.00	1412.10	220.00	155.33		267.67	
39+30.54	39+70.00	TYPICAL SECTION	39.46	204.25	80.60	20.25	88.79	4.44				4.44											20.25	88.79	220.00	9.77		28.00	122.76	220.00	13.50		23.27	
LIBERTY AVE.																																	
15+50.00	18+57.86	TYPICAL SECTION	307.86	204.25	628.80	20.25	692.69	34.63				34.63											20.25	692.69	220.00	76.20		28.00	957.79	220.00	105.36		181.56	
21+42.13	25+50.00	TYPICAL SECTION	407.87	204.25	833.07	20.25	917.71	45.89				45.89											20.25	917.71	220.00	100.95		28.00	1268.93	220.00	139.58		240.53	
LIBERTY AVE. ACCESS RD.																																	
15+36.83	16+66.83	CUL-DE-SAC	130.00	513.00	666.90																							67.13	969.67	220.00	106.66		106.66	
16+66.83	19+89.65	TYPICAL SECTION	322.82	207.75	670.66																							28.00	1004.33	220.00	110.48		110.48	
JAVELLO RD.																																	
18+00.00	27+96.65	TYPICAL SECTION	996.65	204.25	2035.66	20.25	2242.46	112.12				112.12											20.25	2242.46	220.00	246.67		28.00	3100.69	220.00	341.08		587.75	
27+96.65	35+41.17	TYPICAL S.E. SECTION	744.52	204.25	1520.68	20.25	1675.17	83.76				83.76											20.25	1675.17	220.00	184.27		28.00	2316.28	220.00	254.79		439.06	
35+41.17	37+00.00	TYPICAL SECTION	158.83	204.25	324.41	20.25	357.37	17.87				17.87											20.25	357.37	220.00	39.31		28.00	494.14	220.00	54.36		93.67	
SUBTOTALS (BOX 3 OF 4):					**72250.56**		**129515.88**	**6475.81**		**11662.07**	**1982.54**	**8458.35**		**38844.33**			**10682.19**		**40297.85**		**1035.02**	**7057.34**		**41930.56**		**1492.26**	**3120.13**		**95513.08**		**2649.49**	**7856.97**	**4141.75**	**10977.10**

BASIS OF ESTIMATE:
ACHM SURFACE COURSE (1/2").....94.3% MIN. AGGR.....5.7% ASPHALT BINDER
ACHM BINDER COURSE (1").....95.4% MIN. AGGR.....4.6% ASPHALT BINDER
ACHM BASE COURSE (1 1/2").....96.0% MIN. AGGR.....4.0% ASPHALT BINDER
MAXIMUM NUMBER OF GYRATIONS = 115 FOR PG 64-22
MAXIMUM NUMBER OF GYRATIONS = 160 FOR PG 70-22
TACK COAT QUANTITIES WERE CALCULATED USING THE EMULSIFIED ASPHALT RATES. REFER TO SS-400-1 FOR THE RESIDUAL ASPHALT APPLICATION RATES.

HBVinson
WORKSPACE: AHTD
L:\20I\7\0I7660 - ARDOT 02326 Hwy 412 - Hwy I2\Drawings\r02326_QTY.DGN
7/27/2023 I:54:49 PM
REVISED DATE:



DIGITALLY SIGNED 7/28/2023

DATE REVISED	DATE REVISED	FED. RD. DIST. NO.	STATE	JOB NO.	SHEET NO.	TOTAL SHEETS
		6	ARK.	012326	199	838
2		QUANTITIES				

BASE AND SURFACING - ALTERNATIVE 2 (BOX 4 OF 4)

STATION	STATION	LOCATION	LENGTH	AGGREGATE BASE COURSE (CLASS 7)		TACK COAT							ACHM BASE COURSE (1 1/2")					ACHM BINDER COURSE (1")					ACHM SURFACE COURSE (1/2")									
				TON / STATION	TON	(0.05 GAL. PER SQ. YD.)			(0.17 GAL. PER SQ. YD.)			TOTAL GALLONS	AVG. WID.	SQ.YD.	POUND / SQ.YD.	PG 64-22	PG 70-22	AVG. WID.	SQ.YD.	POUND / SQ.YD.	PG 64-22	PG 70-22	AVG. WID.	SQ.YD.	POUND / SQ.YD.	PG 64-22	PG 70-22	AVG. WID.	SQ.YD.	POUND / SQ.YD.	PG 64-22	PG 70-22	TOTAL PG 64-22	TOTAL PG 70-22
			FEET			TOTAL WID. FEET	SQ.YD.	GALLON	TOTAL WID. FEET	SQ.YD.	GALLON		FEET			TON	TON	FEET			TON	TON	FEET			TON	TON	FEET			TON	TON	TON	TON
MARCHANT RD. ACCESS RD.																																	
12+63.92	13+90.70	CUL-DE-SAC	126.78	524.25	664.64																		68.84	969.67	220.00	106.66				106.66	
13+90.82	19+87.87	TYPICAL SECTION	597.05	207.75	1240.37																		28.00	1857.49	220.00	204.32				204.32	
KELLY RD.																																	
473+59.80	473+71.91	CUL-DE-SAC - SOUTH	180.01	426.25	767.29																		53.74	1074.76	220.00	118.22				118.22	
473+62.24	474+08.70	CUL-DE-SAC - NORTH	187.98	450.50	846.85																		57.48	1200.64	220.00	132.07				132.07	
TEMPORARY ROADS, DETOURS, AND WIDENING																																	
10+00.00	13+28.62	TEMPORARY CROSSOVER 1 - TYPICAL N&W SECTION	328.62	99.50	326.98	18.10	660.89	33.04				33.04						9.10	332.27	330.00	54.82		9.00	328.62	220.00	36.15		12.88	470.11	220.00	51.71		87.86	
13+28.62	14+58.77	TEMPORARY CROSSOVER 1 - TYPICAL SECTION	130.15	325.75	423.96	48.71	704.38	35.22				35.22						24.46	353.69	330.00	58.36		24.25	350.68	220.00	38.57		32.00	462.76	220.00	50.90		89.47	
14+58.77	16+14.64	TEMPORARY CROSSOVER 1 - TYPICAL N&W SECTION	155.87	99.50	155.09	18.10	313.47	15.67				15.67						9.10	157.60	330.00	26.00		9.00	155.87	220.00	17.15		12.88	222.98	220.00	24.53		41.68	
10+00.00	12+44.87	TEMPORARY CROSSOVER 2 - TYPICAL N&W SECTION	244.87	99.50	243.65	18.10	492.46	24.62				24.62						9.10	247.59	330.00	40.85		9.00	244.87	220.00	26.94		12.88	350.30	220.00	38.53		65.47	
12+44.87	14+83.20	TEMPORARY CROSSOVER 2 - TYPICAL SECTION	238.33	325.75	776.36	48.71	1289.85	64.49				64.49						24.46	647.68	330.00	106.87		24.25	642.17	220.00	70.64		32.00	847.40	220.00	93.21		163.85	
14+83.20	18+06.52	TEMPORARY CROSSOVER 2 - TYPICAL N&W SECTION	323.32	99.50	321.70	18.10	650.23	32.51				32.51						9.10	326.91	330.00	53.94		9.00	323.32	220.00	35.57		12.88	462.53	220.00	50.88		86.45	
13+31.17	14+39.36	LIBERTY AVE. DETOUR TYPICAL N&W SECTION	108.19	76.75	83.04																							11.88	142.81	220.00	15.71		15.71	
14+39.36	27+59.26	LIBERTY AVE. DETOUR - TYPICAL SECTION	1319.90	181.25	2392.32																												
27+59.26	28+56.71	LIBERTY AVE. DETOUR - TYPICAL N&W SECTION	97.45	76.75	74.79																							11.88	128.63	220.00	14.15		14.15	
180+05.27	194+50.62	HWY. 412B RAMP 1 - TYPICAL N&W SECTION TEMP. WIDENING	1445.35	151.75	2193.32	28.72	4612.27	230.61				230.61	14.46	2322.20	550.00	638.61		14.26	2290.08	495.00	566.79							18.08	2904.03	220.00	319.44		319.44	
10+00.00	16+22.28	HWY. 412B - TYPICAL N&W SECTION TEMP. WIDENING	622.28	151.75	944.31	28.72	1985.76	99.29				99.29	14.46	999.80	550.00	274.95		14.26	985.97	495.00	244.03							18.08	1250.30	220.00	137.53		137.53	
48+00.00	56+46.00	HWY. 68 - TYPICAL N&W SECTION TEMP. WIDENING	846.00	166.75	1410.71	44.19	4153.86	207.69				207.69						22.15	2082.10	330.00	343.55		22.04	2071.76	220.00	227.89		25.92	2436.48	220.00	268.01		495.90	
ADDITIONAL FOR LEVELING																																	
10+00.00	17+00.00	HWY. 412B - TYPICAL OVERLAY SECTION	700.00			176.35	13716.44	685.82				685.82											88.35	6871.99	VAR.		377.96						377.96
187+50.00	194+50.62	HWY. 412B RAMP 1	700.62			64.00	4982.19	249.11				249.11											24.00	1868.32	VAR.		102.76						102.76
194+00.00	195+51.46	HWY. 412B RAMP 4	151.46			80.35	1352.27	67.61				67.61											40.35	679.12	VAR.		37.35						37.35
ADDITIONAL FOR GUARDRAIL																																	
467+54.68	470+30.43	XNA ACCESS RD. RAMP 1 RT	275.75	49.25	135.81																		4.74	145.17	220.00	15.97		15.97			
467+54.74	470+30.50	XNA ACCESS RD. RAMP 1 LT	275.76	49.25	135.81																		4.74	145.17	220.00	15.97		15.97			
425+67.92	428+43.67	XNA ACCESS RD. RAMP 2 LT	275.75	49.25	135.81																		4.74	145.17	220.00	15.97		15.97			
425+76.48	428+52.23	XNA ACCESS RD. RAMP 2 RT	275.75	49.25	135.81																		4.74	145.17	220.00	15.97		15.97			
16+07.26	18+77.41	LIBERTY AVE. RT	270.15	34.00	91.85																		4.76	142.97	220.00	15.73		15.73			
17+00.27	18+86.41	LIBERTY AVE. LT	186.14	28.50	53.05																		4.01	82.97	220.00	9.13		9.13			
21+13.58	22+99.72	LIBERTY AVE. RT	186.14	28.50	53.05																		4.01	82.96	220.00	9.13		9.13			
21+22.58	23+92.73	LIBERTY AVE. LT	270.15	34.50	93.20																		4.84	145.17	220.00	15.97		15.97			
ADDITIONAL FOR SUPERELEVATION																																	
170+67.64	171+61.08	HWY. 412B RAMP 4 - 2 LANE RAMP TYPICAL S.E. SECTION - TRANS.	93.44	92.75	86.67																												
171+61.08	175+69.10	HWY. 412B RAMP 4 - 2 LANE RAMP TYPICAL S.E. SECTION - FULL SUPER	408.02	116.00	473.30																												
175+69.10	177+87.10	HWY. 412B RAMP 4 - 2 LANE RAMP TYPICAL S.E. SECTION - TRANS.	218.00	67.75	147.70																												
177+87.10	181+69.10	HWY. 412B RAMP 4 - 2 LANE RAMP TYPICAL S.E. SECTION - TRANS.	382.00	164.63	628.87																												
181+69.10	183+25.05	HWY. 412B RAMP 4 - 2 LANE RAMP TYPICAL S.E. SECTION - FULL SUPER	155.95	309.75	483.06																												
183+25.05	186+89.05	HWY. 412B RAMP 4 - 2 LANE RAMP TYPICAL S.E. SECTION - TRANS.	364.00	164.63	599.24																												
186+89.05	190+25.05	HWY. 412B RAMP 4 - 2 LANE RAMP TYPICAL S.E. SECTION - TRANS.	336.00	105.00	352.80																												
190+25.05	191+25.88	HWY. 412B RAMP 4 - 2 LANE RAMP TYPICAL S.E. SECTION - FULL SUPER	100.83	190.50	192.08																												
191+25.88	194+00.00	HWY. 412B RAMP 4 - 2 LANE RAMP TYPICAL S.E. SECTION - TRANS.	274.12	137.25	376.23																												
177+62.07	178+67.80	HWY. 412B RAMP 1 - 2 LANE RAMP TYPICAL S.E. SECTION - TRANS.	105.73	30.75	32.51																												
193+15.21	194+50.92	HWY. 412B RAMP 3 - RAMP TYPICAL S.E. SECTION - TRANS.	135.71	47.00	63.78																												
194+50.92	196+58.32	HWY. 412B RAMP 3 - RAMP TYPICAL S.E. SECTION - TRANS.	207.40	56.50	117.18																												
196+58.32	199+58.32	HWY. 412B RAMP 3 - RAMP TYPICAL S.E. SECTION - TRANS.	300.00	44.75	134.25																												
199+58.32	205+15.93	HWY. 412B RAMP 3 - RAMP TYPICAL S.E. SECTION - FULL SUPER	557.61	70.50	393.12																												
205+15.93	205+31.72	HWY. 412B RAMP 3 - RAMP TYPICAL S.E. SECTION - TRANS.	15.79	68.75	10.86																												
194+08.59	197+08.59	HWY. 412B RAMP 2 - RAMP TYPICAL S.E. SECTION - TRANS.	300.00	69.13	207.38																												
197+08.59	198+16.67	HWY. 412B RAMP 2 - RAMP TYPICAL S.E. SECTION - FULL SUPER	108.08	138.25	149.42																												
198+16.67	200+81.67	HWY. 412B RAMP 2 - RAMP TYPICAL S.E. SECTION - TRANS.	265.00	78.63	208.36																												
200+81.67	202+66.67	HWY. 412B RAMP 2 - RAMP TYPICAL S.E. SECTION - TRANS.	185.00	44.75	82.79																												
202+66.67	203+30.72	HWY. 412B RAMP 2 - RAMP TYPICAL S.E. SECTION - FULL SUPER	64.05	70.50	45.16																												
203+30.72	205+10.72	HWY. 412B RAMP 2 - RAMP TYPICAL S.E. SECTION - TRANS.	180.00	44.75	80.55																												
205+10.72	206+69.05	HWY. 412B RAMP 2 - RAMP TYPICAL S.E. SECTION - TRANS.	158.33	52.88	83.72																												
483+71.30	486+71.30	HWY. 112 RAMP 1 - RAMP TYPICAL S.E. SECTION - TRANS.	300.00	53.63	160.88																												
486+71.30	490+74.64	HWY. 112 RAMP 1 - RAMP TYPICAL S.E. SECTION - FULL SUPER	403.34	107.25	432.58																												
490+74.64	493+74.64	HWY. 112 RAMP 1 - RAMP TYPICAL S.E. SECTION - TRANS.	300.00	53.63	160.88																												
494+18.77	496+68.77	HWY. 112 RAMP 1 - RAMP TYPICAL S.E. SECTION - TRANS.	250.00	47.00	117.50																												
496+68.77	498+30.00	HWY. 112 RAMP 1 - RAMP TYPICAL S.E. SECTION - FULL SUPER	161.23	94.00	151.56																												
498+30.00	498+50.61	HWY. 112 RAMP 1 - RAMP W/ AUX. LANE TYPICAL S.E. SECTION - FULL SUPER	20.61	94.00	19.37																												
498+50.61	501+00.61	HWY. 112 RAMP 1 - RAMP W/ AUX. LANE TYPICAL S.E. SECTION - TRANS.	250.00	47.00	117.50																												
484+53.20	490+60.68	HWY. 112 RAMP 4 - RAMP TYPICAL S.E. SECTION - FULL SUPER	607.48	86.00	522.43																												
490+60.68	493+60.69	HWY. 112 RAMP 4 - RAMP TYPICAL S.E. SECTION - TRANS.	300.01	43.00	129.00																												
416+52.40	417+39.90	XNA ACCESS RD. RAMP 2 - TWO LANE RAMP TYPICAL S.E. SECTION - TRANS.	87.50	26.38	23.08																												
417+39.90	422+72.22	XNA ACCESS RD. RAMP 2 - TWO LANE RAMP TYPICAL S.E. SECTION - FULL SUPER	532.32	36.25	192.97																												
422+72.22	424+21.33	XNA ACCESS RD. RAMP 2 - TWO LANE RAMP TYPICAL S.E. SECTION - TRANS.	149.11	19.38	28.89																												
424+21.33	426+22.22	XNA ACCESS RD. RAMP 2 - RAMP TYPICAL S.E. SECTION - TRANS.	200.89	30.13	60.52																												
431+12.22	432+41.93	XNA ACCESS RD. RAMP 2 - RAMP TYPICAL S.E. SECTION - TRANS.	129.71	121.25	157.27																												
432+41.93	447+70.56	XNA ACCESS RD. RAMP 2 - RAMP TYPICAL S.E. SECTION - FULL SUPER	1528.63	179.00	2736.25																												
447+70.56	451+20.56	XNA ACCESS RD. RAMP 2 - RAMP TYPICAL S.E. SECTION - TRANS.	350.00	89.50	313.25																												
451+20.56	454+70.57	XNA ACCESS RD. RAMP 2 - RAMP TYPICAL S.E. SECTION - TRANS.	350.01	71.00	248.51																												
454+70.57	460+86.86	XNA ACCESS RD. RAMP 2 - RAMP TYPICAL S.E. SECTION - FULL SUPER	616.29	142.00	875.13																												
431+57.19	435+07.19	XNA ACCESS RD. RAMP 4 - RAMP TYPICAL S.E. SECTION - TRANS.	350.00	104.50	365.75																												
435+07.19	441+85.55	XNA ACCESS RD. RAMP 4 - RAMP TYPICAL S.E. SECTION - FULL SUPER	678.36	67.00	454.50																												
434+37.71	437+35.64	XNA ACCESS RD. RAMP 3 - RAMP TYPICAL S.E. SECTION - TRANS.	297.93	61.75	183.97																												
437+35.64	447+30.64	XNA ACCESS RD. RAMP 3 - RAMP TYPICAL S.E. SECTION - FULL SUPER	995.00	123.50	1228.83																												
447+30.64	449+34.18	XNA ACCESS RD. RAMP 3 - RAMP TYPICAL S.E. SECTION - TRANS.	203.54	61.75	125.69																												
447+93.93	465+44.40	XNA ACCESS RD. RAMP 1 - RAMP TYPICAL S.E. SECTION - FULL SUPER	1750.47	142.00	2485.67																												
465+44.40	468+94.40	XNA ACCESS RD. RAMP 1 - RAMP TYPICAL S.E. SECTION - TRANS.	350.00	71.00	248.50																												
15+26.86	17+76.86	MUSTEEN RD. - TYPICAL S.E. SECTION - TRANS.	250.00	24.13	60.31																												
17+76.86	21+92.27	MUSTEEN RD. - TYPICAL S.E. SECTION - FULL SUPER	380.41	48.25	185.90																												
21+62.27	24+12.27	MUSTEEN RD. - TYPICAL S.E. SECTION - TRANS.	250.00	24.13	60.31																												
28+42.27	30+92.47	MUSTEEN RD. - TYPICAL S.E. SECTION - TRANS.	250.20	24.13	60.36																												
30+92.47	31+37.82	MUSTEEN RD. - TYPICAL S.E. SECTION - FULL SUPER	45.35	48.25	21.88																												
31+37.82	33+87.82	MUSTEEN RD. - TYPICAL S.E. SECTION - TRANS.	250.00	24.13	60.31																												
34+76.65	37+03.60	MUSTEEN RD. - TYPICAL S.E. SECTION - TRANS.	226.95	21.50	48.79																												
37+03.60	39+30.54	MUSTEEN RD. - TYPICAL S.E. SECTION - TRANS.	226.94	21.50	48.79																												
27+96.65	30+46.65	JAVELLO RD. - TYPICAL S.E. SECTION - TRANS.	250.00	24.13	60.31																												
30+46.65	32+91.17	JAVELLO RD. - TYPICAL S.E. SECTION - FULL SUPER	244.52	48.25	117.98																												
32+91.17	35+41.17	JAVELLO RD. - TYPICAL S.E. SECTION - FULL SUPER	250.00	24.13	60.31																												
SUBTOTALS (BOX 4 OF 4):								**30974.59**																									
SUBTOTALS (BOX 3 OF 4):								**72250.56**																									
SUBTOTALS (BOX 2 OF 4):								**56536.50**																									
SUBTOTALS (BOX 1 OF 4):								**232283.98**																									
TOTALS:								**392045.63**																									

SUBTOTALS (BOX 4 OF 4):								**30974.59**		**34914.07**	**1745.68**				**1745.68**		**3322.00**		**913.56**			**7423.89**		**1495.21**			**13536.72**		**452.91**	**518.07**		**19335.38**		**2126.88**		**2579.79**	**518.07**
SUBTOTALS (BOX 3 OF 4):								**72250.56**		**129515.88**	**6475.81**		**11662.07**	**1982.54**	**8458.35**		**38844.33**			**10682.19**		**40297.85**		**1035.02**	**7057.34**		**41930.56**		**1492.26**	**3120.13**		**95513.08**		**2649.49**	**7856.97**	**4141.75**	**10977.10**
SUBTOTALS (BOX 2 OF 4):								**56536.50**		**19900.46**	**995.05**				**995.05**		**3494.35**			**960.96**		**3494.35**			**589.59**		**14083.61**		**1084.96**	**367.00**		**14637.76**			**1904.70**	**1084.96**	**2271.70**
SUBTOTALS (BOX 1 OF 4):								**232283.98**		**619510.03**	**30975.51**		**11676.76**	**1985.04**	**32960.55**		**202937.36**			**55807.75**		**200525.37**			**33617.13**		**192616.89**			**21187.86**		**296975.07**			**32667.27**		**53855.13**
TOTALS:								**392045.63**		**803840.44**	**40192.05**		**23338.83**	**3967.58**	**44159.63**		**248598.04**		**913.56**	**67450.90**		**251741.46**		**2530.23**	**41264.06**		**262167.78**		**3030.13**	**25193.06**		**426461.28**		**4776.37**	**42428.94**	**7806.50**	**67622.00**

BASIS OF ESTIMATE:
ACHM SURFACE COURSE (1/2").....94.3% MIN. AGGR.....5.7% ASPHALT BINDER
ACHM BINDER COURSE (1").....95.4% MIN. AGGR.....4.6% ASPHALT BINDER
ACHM BASE COURSE (1 1/2").....96.0% MIN. AGGR.....4.0% ASPHALT BINDER
MAXIMUM NUMBER OF GYRATIONS = 115 FOR PG 64-22
MAXIMUM NUMBER OF GYRATIONS = 160 FOR PG 70-22
TACK COAT QUANTITIES WERE CALCULATED USING THE EMULSIFIED ASPHALT RATES. REFER TO SS-400-1 FOR THE RESIDUAL ASPHALT APPLICATION RATES.

HBVinson
WORKSPACE: AHTD
L:\20\T\170\7660 - ARDOT 012326 Hwy 412 - Hwy 112\Drawings\r012326_QTY.DGN
7/27/2023 15:55:07 PM
REVISED DATE:

DATE REVISED	DATE FILMED	DATE REVISED	DATE FILMED	FED. ROAD DIST. NO.	STATE	FED. AID PROJ. NO.	SHEET NO.	TOTAL SHEETS
10/23/2023				6	ARK.		200	838
				JOB NO.		012326		
				① A&B 7612, A&B 7613		QUANTITIES		66104

SCHEDULE OF BRIDGE QUANTITIES - JOB NO. 012326

Bridge No.	Name Plate Title	Unit of Structure	Item No.	801	SP, SS, & 802	SP, SS, & 802	SS & 802	SS & 802	SP & 803	SS & 804	SS & 804	SS & 805	SS & 805	SS & 805	SP, SS, & 807	SP, SS, & 807	SP, SS, & 807	SS & 807
			Item	Unclassified Excavation for Structures - Bridge	Class S Concrete - Bridge	Class S (AE) Concrete - Bridge	Prestressed Concrete Girders (Type III)	Prestressed Concrete Girders (Type IV)	Class 2 Protective Surface Treatment	Reinforcing Steel - Bridge (Grade 60)	Epoxy Coated Reinforcing Steel (Grade 60)	Steel Piling (HP 12x53)	Steel Piling (HP 14x73)	Preboring	Structural Steel in Plate Girder Spans (A709-Gr. 50)	Structural Steel in Beam Spans (A709-Gr. 50)	Structural Steel in Beam Spans (A709, Gr. 50W)	Painting Structural Steel
			Unit	Cu. Yd.	Cu. Yd.	Cu. Yd.	Lin. Ft.	Lin. Ft.	Sq. Yd.	Lb.	Lb.	Lin. Ft.	Lin. Ft.	Lin. Ft.	Lb.	Lb.	Lb.	Ton
A7612	Hwy 612 over Ramp 4	Bent 1			55.08				25.3	6,822	939	⚠1 312 ~~482~~		279	1,160			
		Bent 2		249	122.52					22,997		792						
		Bent 3		283	124.17					23,380		⚠1 816						
		Bent 4			53.23				29.2	6,581	1,125	368 ~~568~~		153	1,160			
		302'-0" Cont. Plate Girder Unit				415.50			1,486.7		127,496				403,700			196.3
		Totals For Bridge No. A7612		532	355.00	415.50			1,541.2	59,780	129,560	⚠1 2,288 ~~2,658~~		432	406,020	-		196.3
B7612	Hwy 612 over Ramp 4	Bent 1			54.47				25.6	6,487	945	551			1,216			
		Bent 2		229	125.36					22,608		864						
		Bent 3		240	126.04					22,802		960						
		Bent 4			52.33				25.2	6,153	945	616			1,144			
		288'-0" Cont. Plate Girder Unit				396.30			1,417.8		135,760				376,680			182.9
		Totals For Bridge No. B7612		469	358.20	396.30			1,468.6	58,050	137,650	2,991		-	379,040	-		182.9
A7613	Hwy 612 over Hwy 68	Bent 1			38.37				20.3	3,866	763	630		496		930		
		Bent 2		226	84.19					18,663		900						
		Bent 3		206	85.38					18,976		918						
		Bent 4			37.06				18.3	3,605	663	590		436		919		
		227'-0" Cont. W-Beam Unit				314.50			1,117.4		91,014					277,731		138.9
		Totals For Bridge No. A7613		432	245.00	314.50			1,156.0	45,110	92,440	3,038		932	-	279,580		138.9
B7613	Hwy 612 over Hwy 68	Bent 1			36.81				17.4	3,735	620	662				916		
		Bent 2		214	87.74					19,597		864						
		Bent 3		204	88.53					19,803		1,062						
		Bent 4			36.22				17.3	3,735	623	710				926		
		234'-0" Cont. W-Beam Unit				324.20			1,151.8		94,687				⚠1	⚠1 332,418 ~~284118~~	⚠1	⚠1 166.2 ~~142.0~~
		Totals For Bridge No. B7613		418	249.30	324.20			1,186.5	46,870	95,930	⚠1 3,298		-	-	⚠1 334,260 ~~285,960~~	⚠1	⚠1 166.2 ~~142.0~~
		Sheet 1 Totals		1,851	1,207.50	1,450.50			5,352.3	209,810	455,580	11,615 ~~11,985~~		1,364	785,060	613,840 ~~565,540~~		684.3 ~~660.1~~

⚠1 Revised Quantities.
By: WKB Date: 10/23/2023
Checked By: DHP Date: 10/23/2023

10-23-23
STATE OF ARKANSAS
LICENSED PROFESSIONAL ENGINEER
No. 19188
ERIC S. CHRISTIANSEN
Eric S. Christiansen
BRIDGE ENGINEER

SHEET 1 OF 8
SCHEDULE OF BRIDGE QUANTITIES
HWY. 412 - HWY. 112
(SPRINGDALE BYPASS) (F)
WASHINGTON AND BENTON COUNTIES

ROUTE 612 SEC. 1 & 2

ARKANSAS STATE HIGHWAY COMMISSION

LITTLE ROCK, ARK.

DRAWN BY: FAN DATE: 04-23
CHECKED BY: DHP DATE: 04-23
DESIGNED BY: WKB DATE: 04-23
FILENAME: R012326 q1.DGN
SCALE: AS SHOWN

BRIDGE NO. A&B 7612, A&B 7613 DRAWING NO. 66104

Date Plotted: 10/19/2023

DATE REVISED	DATE FILMED	DATE REVISED	DATE FILMED	FED. ROAD DIST. NO.	STATE	FED. AID PROJ. NO.	SHEET NO.	TOTAL SHEETS
10/23/2023				6	ARK.		201	838
				JOB NO.		012326		
				①	A&B 7612, A&B 7613	QUANTITIES		66105

SCHEDULE OF BRIDGE QUANTITIES - JOB NO. 012326

Bridge No.	Name Plate Title	Unit of Structure	Item No.	SS & 808	SS & 809	SS & 809	812	SS & 816	SS & 816	SS & 816	SP Job 012326	SP Job 012326
			Item	Elastomeric Bearings	Silicone Joint Sealant	Armored Joint With Neoprene Strip Seal	Bridge Name Plate (Type D)	Filter Blanket	Dumped Riprap	Concrete Riprap	Textured Coating Finish	Exploratory Holes
			Unit	Cu. In.	Lin. Ft.	Lin. Ft.	Each	Sq. Yd.	Cu. Yd.	Cu. Yd.	Sq. Yd.	Lin. Ft.
A7612	Hwy 612 over Ramp 4											
		Bent 1		3,400.0 ~~4,946.0~~						153	55	
		Bent 2		6,800.0 ~~9,892.0~~							165	
		Bent 3		6,800.0 ~~9,892.0~~							172	
		Bent 4		3,400.0 ~~4,946.0~~						194	62	
		302'-0" Cont. Plate Girder Unit			117		1				254	
		Totals For Bridge No. A7612		20,400.0 ~~29,676.0~~	117		1			347	708	
B7612	Hwy 612 over Ramp 4											
		Bent 1		3,400.0 ~~4,946.0~~						196	54	
		Bent 2		6,800.0 ~~9,892.0~~							175	
		Bent 3		6,800.0 ~~9,892.0~~							178	
		Bent 4		3,400.0 ~~4,946.0~~						204	53	
		288'-0" Cont. Plate Girder Unit			115		1				243	
		Totals For Bridge No. B7612		20,400.0 ~~29,676.0~~	115		1			400	703	
A7613	Hwy 612 over Hwy 68											
		Bent 1		3,347.0						153	41	
		Bent 2		6,101.0							130	
		Bent 3		6,101.0							134	
		Bent 4		3,347.0						165	36	
		227'-0" Cont. W-Beam Unit			89		1				168	
		Totals For Bridge No. A7613		18,896.0	89		1			318	509	
B7613	Hwy 612 over Hwy 68											
		Bent 1		3,347.0						179	35	
		Bent 2		6,101.0							144	
		Bent 3		6,101.0							147	
		Bent 4		3,347.0						158	34	
		234'-0" Cont. W-Beam Unit			88		1				173	
		Totals For Bridge No. B7613		18,896.0	88		1			337	533	
		Sheet 2 Totals		78,592.0 ~~97,144.0~~	409		4			1,402	2,453	

⚠ Revised Quantities.
By: WKB Date: 10/23/2023
Checked By: DHP Date: 10/23/2023

10-23-23
STATE OF ARKANSAS
LICENSED PROFESSIONAL ENGINEER
No. 19188
ERIC S. CHRISTIANSEN
Eric S. Christiansen
BRIDGE ENGINEER

SHEET 2 OF 8
SCHEDULE OF BRIDGE QUANTITIES
HWY. 412 - HWY. 112
(SPRINGDALE BYPASS) (F)
WASHINGTON AND BENTON COUNTIES

ROUTE 612 SEC. 1 & 2

ARKANSAS STATE HIGHWAY COMMISSION

LITTLE ROCK, ARK.

DRAWN BY: FAN DATE: 04-23
CHECKED BY: DHP DATE: 04-23
DESIGNED BY: WKB DATE: 04-23
FILENAME: B012326_qI.DGN
SCALE: AS SHOWN

BRIDGE NO. A&B 7612, A&B 7613 DRAWING NO. 66105

Date Plotted: 10/19/2023

DATE REVISED	DATE REVISED	FED. ROAD DIST. NO.	STATE	JOB NO.	SHEET NO.	TOTAL SHEETS
		6	ARK.	012326	202	838
		07614, A7615 & B7615		QUANTITIES		66106

SCHEDULE OF BRIDGE QUANTITIES - JOB NO. 012326

BRIDGE NO.	NAME PLATE TITLE	UNIT OF STRUCTURE / ITEM / UNIT	801 UNCLASSIFIED EXCAVATION FOR STRUCTURES - BRIDGE CU. YD.	SP, SS & 802 CLASS S CONCRETE - BRIDGE CU. YD.	SP, SS & 802 CLASS S(AE) CONCRETE - BRIDGE CU. YD.	SS & 802 PRESTRESSED CONCRETE GIRDERS (TYPE III) LIN. FT.	SS & 802 PRESTRESSED CONCRETE GIRDERS (TYPE IV) LIN. FT.	SP & 803 CLASS 2 PROTECTIVE SURFACE TREATMENT SQ. YD.	SS & 804 REINFORCING STEEL-BRIDGE (GRADE 60) LB.	SS & 804 EPOXY COATED REINFORCING STEEL (GRADE 60) LB.	SS & 805 STEEL PILING (HP12X53) (2) LIN. FT.	SS & 805 STEEL PILING (HP14X73) (2) LIN. FT.	SS & 805 PREBORING (3) LIN. FT.	SP, SS & 807 STRUCTURAL STEEL IN PLATE GIRDER SPANS (A709, GR. 50) LB.	SP, SS & 807 STRUCTURAL STEEL IN BEAM SPANS (A709, GR. 50) LB.	SP, SS & 807 STRUCTURAL STEEL IN BEAM SPANS (A709, GR. 50W) LB.	SS & 807 PAINTING STRUCTURAL STEEL TON
07614	LIBERTY ROAD OVER HWY. 612	BENT NO. 1		35.82				13.1	4,163	485	245		21	616			
		BENT NO. 2	154	123.28					19,034		200		220				
		BENT NO. 3		35.90				13.1	4,163	485	280		21	616			
		212'-0" CONTINUOUS PLATE GIRDER UNIT			211.20			832.3		48,590				197,198			97.0
		TOTALS FOR BRIDGE NO. 07614	154	195.00	211.20			858.5	27,360	49,560	725		262	198,430			97.0
A7615	HWY. 612 OVER JAVELLO ROAD	BENT NO. 1		58.89				19.2	6,483	711	530					881	
		BENT NO. 2	346	161.07					21,727								
		BENT NO. 3	354	161.07					21,727								
		BENT NO. 4		58.97				19.2	6,483	711	530					881	
		270'-0" CONTINUOUS PRESTRESSED CONCRETE GIRDER UNIT			422.90		1,602.0	1,458.8		109,958						5,488	
		TOTALS FOR BRIDGE NO. A7615	700 (1)	440.00	422.90		1,602.0	1,497.2	56,420	111,380	1,060					7,250	
B7615	HWY. 612 OVER JAVELLO ROAD	BENT NO. 1		58.38				19.2	6,483	711	520					881	
		BENT NO. 2	325	161.00					21,973								
		BENT NO. 3	413	159.60					21,691								
		BENT NO. 4		58.42				19.2	6,483	711	465					881	
		270'-0" CONTINUOUS PRESTRESSED CONCRETE GIRDER UNIT			422.90		1,602.0	1,458.8		109,958						5,488	
		TOTALS FOR BRIDGE NO. B7615	738 (1)	437.40	422.90		1,602.0	1,497.2	56,630	111,380	985					7,250	
		SUBTOTAL FOR SHEET 3	1,592	1,072.40	1,057.00		3,204.0	3,852.9	140,410	272,320	2,770		262	198,430		14,500	97.0

(1) Bridge A7615 includes approximately 77 cu. yds. of rock excavation.

Bridge B7615 includes approximately 62 cu. yds. of rock excavation.

(2) All Steel piling shall be Grade 50 and are required to have OPL-approved driving points which will not be paid for directly but will be considered subsidiary to the items "STEEL PILING (HP12X53)" and "STEEL PILING (HP14X73)". All piles shall conform to Std. Dwg. No. 55020.

(3) Quantity of Preboring shown is for estimating and bidding purposes only. Actual quantities will be determined in the field.

STATE OF ARKANSAS
LICENSED PROFESSIONAL ENGINEER
No. 16458
JOEL E. SKINNER
Digitally Signed 07/28/2023
BRIDGE ENGINEER

SHEET 3 OF 8
SCHEDULE OF BRIDGE QUANTITIES
HWY. 412 - HWY. 112
(SPRINGDALE BYPASS) (F)
WASHINGTON & BENTON COUNTIES
ROUTE 612 SEC. 1 & 2
ARKANSAS STATE HIGHWAY COMMISSION
LITTLE ROCK, ARK.

DRAWN BY: HEW DATE: MAR. 2023 FILENAME: b012326_q3.dgn
CHECKED BY: CSW DATE: APR. 2023 SCALE: No Scale
DESIGNED BY: SJV DATE: MAR. 2023
BRIDGE NO. 07614, A7615 & B7615 DRAWING NO. 66106

JEskinner 7/28/2023 12:09:22 PM
WORKSPACE: ARDOT Bridge
\\garverinc.local\gdata\Projects\2017\17017660 - ARDOT 012326 Hwy 412 - Hwy 112\Drawings\b012326x0.sl01.01.dgn
REVISED DATE:

DATE REVISED	DATE REVISED	FED. ROAD DIST. NO.	STATE	JOB NO.	SHEET NO.	TOTAL SHEETS
		6	ARK.	012326	203	838
		07614, A7615 & B7615		QUANTITIES		66107

SCHEDULE OF BRIDGE QUANTITIES - JOB NO. 012326

BRIDGE NO.	NAME PLATE TITLE	ITEM / UNIT OF STRUCTURE	SS & 808 ELASTOMERIC BEARINGS CU. IN.	SS & 809 SILICONE JOINT SEALANT LIN. FT.	SS & 809 ARMORED JOINT WITH NEOPRENE STRIP SEAL LIN. FT.	812 BRIDGE NAME PLATE (TYPE D) EACH	SS & 816 FILTER BLANKET SQ. YD.	SS & 816 DUMPED RIPRAP CU. YD.	SS & 816 CONCRETE RIPRAP CU. YD.	SP JOB 012326 TEXTURED COATING FINISH SQ. YD.	SP JOB 012326 EXPLORATORY HOLES LIN. FT.
07614	LIBERTY ROAD OVER HWY. 612	BENT NO. 1	2,610.0	32		1			14	25	
		BENT NO. 2	3,480.0							101	10
		BENT NO. 3	2,610.0	32					15	25	
		212'-0" CONTINUOUS PLATE GIRDER UNIT								285	
		TOTALS FOR BRIDGE NO. 07614	8,700.0	64		1			29	436	10
A7615	HWY. 612 OVER JAVELLO ROAD	BENT NO. 1	7,507.5	47		1			122	39	
		BENT NO. 2	7,605.0							161	
		BENT NO. 3	7,605.0							161	
		BENT NO. 4	7,507.5	47					118	39	
		270'-0" CONTINUOUS PRESTRESSED CONCRETE GIRDER UNIT								700	
		TOTALS FOR BRIDGE NO. A7615	30,225.0	94		1			240	1,100	
B7615	HWY. 612 OVER JAVELLO ROAD	BENT NO. 1	7,507.5	47		1			111	39	
		BENT NO. 2	7,605.0							164	
		BENT NO. 3	7,605.0							160	
		BENT NO. 4	7,507.5	47					123	39	
		270'-0" CONTINUOUS PRESTRESSED CONCRETE GIRDER UNIT								700	
		TOTALS FOR BRIDGE NO. B7615	30,225.0	94		1			234	1,102	
		SUBTOTAL FOR SHEET 4	69,150.0	252		3			503	2,638	10

STATE OF ARKANSAS
LICENSED PROFESSIONAL ENGINEER
No. 16458
JOEL E. SKINNER
Digitally Signed 07/28/2023
BRIDGE ENGINEER

SHEET 4 OF 8
SCHEDULE OF BRIDGE QUANTITIES
HWY. 412 - HWY. 112
(SPRINGDALE BYPASS) (F)
WASHINGTON & BENTON COUNTIES
ROUTE 612 SEC. 1 & 2
ARKANSAS STATE HIGHWAY COMMISSION
LITTLE ROCK, ARK.

DRAWN BY: HEW DATE: MAR. 2023 FILENAME: b012326_q4.dgn
CHECKED BY: CSW DATE: APR. 2023 SCALE: No Scale
DESIGNED BY: RAK DATE: MAR. 2023
BRIDGE NO. 07614, A7615 & B7615 DRAWING NO. 66107

JEskinner 7/28/2023 12:09:22 PM
WORKSPACE: ARDOT Bridge
\\garverinc.local\gdata\Projects\2017\170176660 - ARDOT 012326 Hwy 412 - Hwy 112\Drawings\b012326x0.S102.01.dgn
REVISED DATE:

DATE REVISED	DATE REVISED	FED. ROAD DIST. NO.	STATE	JOB NO.	SHEET NO.	TOTAL SHEETS
		6	ARK.	012326	204	838
		A7616 & B7616		QUANTITIES		66108

SCHEDULE OF BRIDGE QUANTITIES - JOB NO. 012326

BRIDGE NO.	NAME PLATE TITLE	UNIT OF STRUCTURE / ITEM / UNIT	801 UNCLASSIFIED EXCAVATION FOR STRUCTURES -BRIDGE CU. YD.	SP, SS & 802 CLASS S CONCRETE - BRIDGE CU. YD.	SP, SS & 802 CLASS S(AE) CONCRETE - BRIDGE CU. YD.	SS & 802 PRESTRESSED CONCRETE GIRDERS (TYPE III) LIN. FT.	SS & 802 PRESTRESSED CONCRETE GIRDERS (TYPE IV) LIN. FT.	SP & 803 CLASS 2 PROTECTIVE SURFACE TREATMENT SQ. YD.	SS & 804 REINFORCING STEEL-BRIDGE (GRADE 60) LB.	SS & 804 EPOXY COATED REINFORCING STEEL (GRADE 60) LB.	SS & 805 STEEL PILING (HP12X53) (2) LIN. FT.	SS & 805 STEEL PILING (HP14X73) (2) LIN. FT.	SS & 805 PREBORING (3) LIN. FT.	SP, SS & 807 STRUCTURAL STEEL IN PLATE GIRDER SPANS (A709, GR. 50) LB.	SP, SS & 807 STRUCTURAL STEEL IN BEAM SPANS (A709, GR. 50) LB.	SP, SS & 807 STRUCTURAL STEEL IN BEAM SPANS (A709, GR. 50W) LB.	SS & 807 PAINTING STRUCTURAL STEEL TON
A7616	HWY. 612 OVER BRUSH CREEK	BENT NO. 1		47.48				6.5	5,898	618	281		238			836		
		BENT NO. 2	241	221.86					34,278									
		BENT NO. 3	337	228.67					35,370									
		BENT NO. 4	317	226.72					35,049									
		BENT NO. 5	302	230.62					35,692									
		BENT NO. 6	312	234.51					36,334									
		BENT NO. 7	423	244.25					37,941									
		BENT NO. 8	360	242.30					37,619									
		BENT NO. 9	357	244.25					37,941									
		BENT NO. 10	508	248.14					38,583									
		BENT NO. 11	531	248.14					38,583									
		BENT NO. 12	651	232.58					36,014									
		BENT NO. 13		47.38				6.5	5,898	618	340					836		
		240'-0" CONTINUOUS PRESTRESSED CONCRETE GIRDER UNIT			369.32		1,185.0	1,295.4		91,488						4,807		
		240'-0" CONTINUOUS PRESTRESSED CONCRETE GIRDER UNIT			369.32		1,185.0	1,295.4		91,488						4,828		
		240'-0" CONTINUOUS PRESTRESSED CONCRETE GIRDER UNIT			369.32		1,185.0	1,295.4		91,488						4,811		
		245'-0" CONTINUOUS PRESTRESSED CONCRETE GIRDER UNIT			376.24		1,210.0	1,322.4		93,610						6,422		
		TOTALS FOR BRIDGE NO. A7616	4,339 (1)	2,696.90	1,484.20		4,765.0	5,221.6	415,200	369,310	621		238			22,540		
B7616	HWY. 612 OVER BRUSH CREEK	BENT NO. 1		46.90				6.5	5,898	618	314		312			836		
		BENT NO. 2	239	221.86					34,278									
		BENT NO. 3	428	234.51					36,335									
		BENT NO. 4	285	225.75					34,920									
		BENT NO. 5	336	228.67					35,370									
		BENT NO. 6	410	234.51					36,334									
		BENT NO. 7	322	238.41					36,977									
		BENT NO. 8	393	244.25					37,941									
		BENT NO. 9	406	248.14					38,583									
		BENT NO. 10	342	246.19					38,262									
		BENT NO. 11	527	248.14					38,584									
		BENT NO. 12	528	242.30					37,620									
		BENT NO. 13		47.37				6.5	5,898	618	505					836		
		240'-0" CONTINUOUS PRESTRESSED CONCRETE GIRDER UNIT			369.32		1,185.0	1,295.4		91,488						4,807		
		240'-0" CONTINUOUS PRESTRESSED CONCRETE GIRDER UNIT			369.32		1,185.0	1,295.4		91,488						4,828		
		240'-0" CONTINUOUS PRESTRESSED CONCRETE GIRDER UNIT			369.32		1,185.0	1,295.4		91,488						4,811		
		245'-0" CONTINUOUS PRESTRESSED CONCRETE GIRDER UNIT			376.24		1,210.0	1,322.4		93,610						6,422		
		TOTALS FOR BRIDGE NO. B7616	4,216 (1)	2,707.00	1,484.20		4,765.0	5,221.6	417,000	369,310	819		312			22,540		
		SUBTOTAL FOR SHEET 5	8,555	5,403.90	2,968.40		9,530.0	10,443.2	832,200	738,620	1,440		550			45,080		

(1) Bridge A7616 includes approximately 1,095 cu. yds. of rock excavation.

Bridge B7616 includes approximately 857 cu. yds. of rock excavation.

(2) All Steel piling shall be Grade 50 and are required to have QPL-approved driving points which will not be paid for directly but will be considered subsidiary to the items "STEEL PILING (HP12X53)" and "STEEL PILING (HP14X73)". All piles shall conform to Std. Dwg. No. 55020.

(3) Quantity of Preboring shown is for estimating and bidding purposes only. Actual quantity will be determined in the field.

STATE OF ARKANSAS
LICENSED PROFESSIONAL ENGINEER
No. 16458
JOEL E. SKINNER
Digitally Signed 07/28/2023
BRIDGE ENGINEER

SHEET 5 OF 8
SCHEDULE OF BRIDGE QUANTITIES
HWY. 412 - HWY. 112
(SPRINGDALE BYPASS) (F)
WASHINGTON & BENTON COUNTIES
ROUTE 612 SEC. 1 & 2
ARKANSAS STATE HIGHWAY COMMISSION
LITTLE ROCK, ARK.

DRAWN BY: HEW DATE: MAR. 2023 FILENAME: b012326_q5.dgn
CHECKED BY: CSW DATE: APR. 2023 SCALE: No Scale
DESIGNED BY: RAK DATE: MAR. 2023
BRIDGE NO. A7616 & B7616 DRAWING NO. 66108

JESkinner 7/28/2023 12:09:22 PM
WORKSPACE: ARDOT Bridge
\\garverinc.local\gdata\Projects\2017\17017660 - ARDOT 012326 Hwy 412 - Hwy 112\Drawings\b012326x0.S03.OT.dgn
REVISED DATE:

DATE REVISED	DATE REVISED	FED. ROAD DIST. NO.	STATE	JOB NO.	SHEET NO.	TOTAL SHEETS
		6	ARK.	012326	205	838
		A7616 & B7616		QUANTITIES		66109

SCHEDULE OF BRIDGE QUANTITIES - JOB NO. 012326

BRIDGE NO.	NAME PLATE TITLE	ITEM / UNIT OF STRUCTURE	SS & 808 ELASTOMERIC BEARINGS	SS & 809 SILICONE JOINT SEALANT	SS & 809 ARMORED JOINT WITH NEOPRENE STRIP SEAL	812 BRIDGE NAME PLATE (TYPE D)	SS & 816 FILTER BLANKET	SS & 816 DUMPED RIPRAP	SS & 816 CONCRETE RIPRAP	SP JOB 012326 TEXTURED COATING FINISH	SP JOB 012326 EXPLORATORY HOLES
		UNIT	CU. IN.	LIN. FT.	LIN. FT.	EACH	SQ. YD.	CU. YD.	CU. YD.	SQ. YD.	LIN. FT.
A7616	HWY. 612 OVER BRUSH CREEK	BENT NO. 1	3,169.0		44	1	1,035	557		36	
		BENT NO. 2	6,338.0							155	
		BENT NO. 3	6,338.0							167	
		BENT NO. 4	6,338.0		44					164	
		BENT NO. 5	6,338.0							171	
		BENT NO. 6	6,338.0							178	
		BENT NO. 7	6,338.0		44					196	
		BENT NO. 8	6,338.0							193	
		BENT NO. 9	6,338.0							196	
		BENT NO. 10	6,338.0		44					203	
		BENT NO. 11	6,338.0							203	
		BENT NO. 12	6,338.0							175	
		BENT NO. 13	3,169.0		44				162	36	
		240'-0" CONTINUOUS PRESTRESSED CONCRETE GIRDER UNIT								622	
		240'-0" CONTINUOUS PRESTRESSED CONCRETE GIRDER UNIT								622	
		240'-0" CONTINUOUS PRESTRESSED CONCRETE GIRDER UNIT								622	
		245'-0" CONTINUOUS PRESTRESSED CONCRETE GIRDER UNIT								635	
		TOTALS FOR BRIDGE NO. A7616	76,056.0		220	1	1,035	557	162	4,574	
B7616	HWY. 612 OVER BRUSH CREEK	BENT NO. 1	3,169.0		44	1	981	529		36	
		BENT NO. 2	6,338.0							155	
		BENT NO. 3	6,338.0							178	
		BENT NO. 4	6,338.0		44					162	
		BENT NO. 5	6,338.0							167	
		BENT NO. 6	6,338.0							178	
		BENT NO. 7	6,338.0		44					185	
		BENT NO. 8	6,338.0							196	
		BENT NO. 9	6,338.0							204	
		BENT NO. 10	6,338.0		44					200	
		BENT NO. 11	6,338.0							204	
		BENT NO. 12	6,338.0							193	
		BENT NO. 13	3,169.0		44				119	36	
		240'-0" CONTINUOUS PRESTRESSED CONCRETE GIRDER UNIT								622	
		240'-0" CONTINUOUS PRESTRESSED CONCRETE GIRDER UNIT								622	
		240'-0" CONTINUOUS PRESTRESSED CONCRETE GIRDER UNIT								622	
		245'-0" CONTINUOUS PRESTRESSED CONCRETE GIRDER UNIT								635	
		TOTALS FOR BRIDGE NO. B7616	76,056.0		220	1	981	529	119	4,595	
		SUBTOTAL FOR SHEET 6	152,112.0		440	2	2,016	1,086	281	9,169	

STATE OF ARKANSAS
LICENSED PROFESSIONAL ENGINEER
No. 16458
JOEL E. SKINNER
Digitally Signed 07/28/2023
BRIDGE ENGINEER

SHEET 6 OF 8
SCHEDULE OF BRIDGE QUANTITIES
HWY. 412 - HWY. 112
(SPRINGDALE BYPASS) (F)
WASHINGTON & BENTON COUNTIES
ROUTE 612 SEC. 1 & 2
ARKANSAS STATE HIGHWAY COMMISSION
LITTLE ROCK, ARK.

DRAWN BY: HEW DATE: MAR. 2023 FILENAME: b012326_q6.dgn
CHECKED BY: CSW DATE: APR. 2023 SCALE: No Scale
DESIGNED BY: RAK DATE: MAR. 2023
BRIDGE NO. A7616 & B7616 DRAWING NO. 66109

JESkinner 7/28/2023 12:09:23 PM
WORKSPACE: ARDOT Bridge
\\garverinc.local\gdata\Projects\2017\17017660 - ARDOT 012326 Hwy 412 - Hwy 112\Drawings\b012326x0.S104_QT.dgn
REVISED DATE:

DATE REVISED	DATE REVISED	FED. ROAD DIST. NO.	STATE	JOB NO.	SHEET NO.	TOTAL SHEETS
10/23/2023		6	ARK.	012326	206	838
		SEE TABLE		QUANTITIES		66110

SCHEDULE OF BRIDGE QUANTITIES - JOB NO. 012326

BRIDGE NO.	NAME PLATE TITLE	UNIT OF STRUCTURE / ITEM / UNIT	801 UNCLASSIFIED EXCAVATION FOR STRUCTURES -BRIDGE CU. YD.	SP, SS & 802 CLASS S CONCRETE - BRIDGE CU. YD.	SP, SS & 802 CLASS S(AE) CONCRETE - BRIDGE CU. YD.	SS & 802 PRESTRESSED CONCRETE GIRDERS (TYPE III) LIN. FT.	SS & 802 PRESTRESSED CONCRETE GIRDERS (TYPE IV) LIN. FT.	SP & 803 CLASS 2 PROTECTIVE SURFACE TREATMENT SQ. YD.	SS & 804 REINFORCING STEEL-BRIDGE (GRADE 60) LB.	SS & 804 EPOXY COATED REINFORCING STEEL (GRADE 60) LB.	SS & 805 STEEL PILING (HPI2X53) (1) LIN. FT.	SS & 805 STEEL PILING (HPI4X73) (1) LIN. FT.	SS & 805 PREBORING (2) LIN. FT.	SP, SS & 807 STRUCTURAL STEEL IN PLATE GIRDER SPANS (A709, GR. 50) LB.	SP, SS & 807 STRUCTURAL STEEL IN BEAM SPANS (A709, GR. 50)	SP, SS & 807 STRUCTURAL STEEL IN BEAM SPANS (A709, GR. 50W)	SS & 807 PAINTING STRUCTURAL STEEL TON
A7617	HWY. 612 OVER MARCHANT ROAD	BENT NO. 1		55.29				17.1	6,474	502	495						1,047	
		BENT NO. 2	292	172.18					21,774		405		297					
		BENT NO. 3	292	173.58					22,015		405		297					
		BENT NO. 4		55.65				17.2	6,547	502	605						1,065	
		215'-0" CONTINUOUS PRESTRESSED CONCRETE GIRDER UNIT			379.00	1,272.0		1,429.2		93,846							6,018	
		TOTALS FOR BRIDGE NO. A7617	584	456.70	379.00	1,272.0		1,463.5	56,810	94,850	1,910		594				8,130	
B7617	HWY. 612 OVER MARCHANT ROAD	BENT NO. 1		49.79				16.1	5,505	502	715						874	
		BENT NO. 2	176	123.28					16,497		324		198					
		BENT NO. 3	155	121.46					16,151		360		198					
		BENT NO. 4		49.97				16.2	5,597	502	605						891	
		215'-0" CONTINUOUS PRESTRESSED CONCRETE GIRDER UNIT			328.70	1,060.0		1,160.8		81,376							5,055	
		TOTALS FOR BRIDGE NO. B7617	331	344.50	328.70	1,060.0		1,193.1	43,750	82,380	2,004		396				6,820	
07618	XNA ACCESS RD. RAMP 2 OVER HWY. 612	BENT NO. 1		45.73				17.3	5,915	712	385			509				
		BENT NO. 2	180	124.47					23,010			848						
		BENT NO. 3		45.50				17.3	5,915	712	406			509				
		219'-0" CONTINUOUS PLATE GIRDER UNIT			215.00			816.6		53,296				206,052				101.5
		TOTALS FOR BRIDGE NO. 07618	180	215.70	215.00			851.2	34,840	54,720	791	848		207,070				101.5
07619	XNA ACCESS RD. RAMP 1 OVER HWY. 612	BENT NO. 1		37.58				15.2	4,918	618	595			523				
		BENT NO. 2	204	127.22					23,514			720						
		BENT NO. 3		37.60				15.2	4,918	618	413			523				
		210'-0" CONTINUOUS PLATE GIRDER UNIT			209.40			784.5		51,214				191,924				96.1
		TOTALS FOR BRIDGE NO. 07619	204	202.40	209.40			814.9	33,350	52,450	1,008	720		192,970				96.1
A7620	HWY. 612 OVER ROBBINS ROAD	BENT NO. 1		48.88				16.0	5,371	499	792						847	
		BENT NO. 2	175	123.54					17,084		432		198					
		BENT NO. 3	194	122.99					16,991		252		198					
		BENT NO. 4		49.19				16.1	5,404	499	649						857	
		215'-0" CONTINUOUS PRESTRESSED CONCRETE GIRDER UNIT			328.00	1,060.0		1,160.6		81,042							4,836	
		TOTALS FOR BRIDGE NO. A7620	369	344.60	328.00	1,060.0		1,192.7	44,850	82,040	2,125		396				6,540	
B7620	HWY. 612 OVER ROBBINS ROAD	BENT NO. 1		56.05				16.9	6,311	500	715						1,020	
		BENT NO. 2	272	164.32					20,630		486		297					
		BENT NO. 3	341	169.55					21,589		567		297					
		BENT NO. 4		56.38				17.0	6,340	500	682						1,033	
		215'-0" CONTINUOUS PRESTRESSED CONCRETE GIRDER UNIT			379.00	1,272.0		1,351.7		93,900							5,837	
		TOTALS FOR BRIDGE NO. B7620	613	446.30	379.00	1,272.0		1,385.6	54,870	94,900	2,450		594				7,890	
		SUBTOTAL FOR SHEET 7	2,281	2,010.20	1,839.10	4,664.0		6,901.0	268,470	461,340	10,288	1,568	1,980	400,040		29,380	197.6	
		SUBTOTAL FOR SHEET 1	1,851	1,207.50	1,450.50			5,352.3	209,810	455,580	~~11,985~~ 11,615	1	1,364	785,060	~~565,540~~ 613,840	1	~~660.1~~ 684.3	1
		SUBTOTAL FOR SHEET 3	1,592	1,072.40	1,057.00		3,204.0	3,852.9	140,410	272,320	2,770		262	198,430		14,500	97.0	
		SUBTOTAL FOR SHEET 5	8,555	5,403.90	2,968.40		9,530.0	10,443.2	832,200	738,620	1,440		550			45,080		
		TOTALS FOR JOB NO. 012326	14,279	~~9,694.20~~ 9,694.00	7,315.00	4,664.0	12,734.0	26,549.4	1,450,890	1,927,860	~~26,483~~ 26,113	1,568	4,156	1,383,530	~~565,540~~ 613,840	88,960	~~954.7~~ 978.9	1

1 All Steel piling shall be Grade 50 and are required to have OPL-approved driving points which will not be paid for directly but will be considered subsidiary to the items "STEEL PILING (HPI2X53)" and "STEEL PILING (HPI4X73)". All piles shall conform to Std. Dwg. No. 55020.

2 Quantity of Preboring shown is for estimating and bidding purposes only. Actual quantity will be determined in the field.

BRIDGE NUMBERS

A7612
B7612
A7613
B7613
07614
A7615
B7615
A7616
B7616
A7617
B7617
07618
07619
A7620
B7620

1 Revised Quantities

Made By: JES Date: 10/23/2023
Ckecked By: CSW Date: 10/23/2023

STATE OF ARKANSAS
LICENSED PROFESSIONAL ENGINEER
No. 16458
JOEL E. SKINNER

DIGITALLY SIGNED 10/23/2023
BRIDGE ENGINEER

SHEET 7 OF 8
SCHEDULE OF BRIDGE QUANTITIES
HWY. 412 - HWY. 112
(SPRINGDALE BYPASS) (F)
WASHINGTON & BENTON COUNTIES
ROUTE 612 SEC. 1 & 2
ARKANSAS STATE HIGHWAY COMMISSION
LITTLE ROCK, ARK.

DRAWN BY: HEW DATE: MAR. 2023 FILENAME: b012326_q7.dgn
CHECKED BY: CSW DATE: APR. 2023 SCALE: No Scale
DESIGNED BY: RAK DATE: MAR. 2023
BRIDGE NO. SEE TABLE DRAWING NO. 66110

JESkinner 10/20/2023 10:08:56 AM
WORKSPACE: ARDOT Bridge
\\garverinc.local\gdata\Projects\20T\170T660 - ARDOT 012326 Hwy 412 - Hwy 112\Drawings\b012326x0.SI05.0T.dgn
REVISED DATE:

DATE REVISED	DATE REVISED	FED. ROAD DIST. NO.	STATE	JOB NO.	SHEET NO.	TOTAL SHEETS
10/23/2023		6	ARK.	012326	207	838
		SEE TABLE		QUANTITIES		66111

SCHEDULE OF BRIDGE QUANTITIES - JOB NO. 012326

BRIDGE NO.	NAME PLATE TITLE	ITEM / UNIT OF STRUCTURE	SS & 808 ELASTOMERIC BEARINGS (CU. IN.)	SS & 809 SILICONE JOINT SEALANT (LIN. FT.)	SS & 809 ARMORED JOINT WITH NEOPRENE STRIP SEAL (LIN. FT.)	812 BRIDGE NAME PLATE (TYPE D) (EACH)	SS & 816 FILTER BLANKET (SQ. YD.)	SS & 816 DUMPED RIPRAP (CU. YD.)	SS & 816 CONCRETE RIPRAP (CU. YD.)	SP JOB 012326 TEXTURED COATING FINISH (SQ. YD.)	SP JOB 012326 EXPLORATORY HOLES (LIN. FT.)
A7617	HWY. 612 OVER MARCHANT ROAD	BENT NO. 1	3,217.5	53		1			76	34	
		BENT NO. 2	6,435.0							183	10
		BENT NO. 3	6,435.0							202	10
		BENT NO. 4	3,217.5	54					132	34	
		215'-0" CONTINUOUS PRESTRESSED CONCRETE GIRDER UNIT								541	
		TOTALS FOR BRIDGE NO. A7617	19,305.0	107		1			208	994	20
B7617	HWY. 612 OVER MARCHANT ROAD	BENT NO. 1	2,681.4	45		1			98	31	
		BENT NO. 2	5,362.6							149	10
		BENT NO. 3	5,362.6							143	10
		BENT NO. 4	2,681.4	46					94	31	
		215'-0" CONTINUOUS PRESTRESSED CONCRETE GIRDER UNIT								534	
		TOTALS FOR BRIDGE NO. B7617	16,088.0	91		1			192	889	20
07618	XNA ACCESS RD. RAMP 2 OVER HWY. 612	BENT NO. 1	2,436.0	29		1			14	34	
		BENT NO. 2	2,457.0							94	
		BENT NO. 3	2,436.0	30					15	34	
		219'-0" CONTINUOUS PLATE GIRDER UNIT								241	
		TOTALS FOR BRIDGE NO. 07618	7,329.0	59		1			29	403	
07619	XNA ACCESS RD. RAMP 1 OVER HWY. 612	BENT NO. 1	2,016.2	28		1			16	31	
		BENT NO. 2	1,957.6							100	
		BENT NO. 3	2,016.2	28					17	31	
		210'-0" CONTINUOUS PLATE GIRDER UNIT								306	
		TOTALS FOR BRIDGE NO. 07619	5,990.0	56		1			33	468	
A7620	HWY. 612 OVER ROBBINS ROAD	BENT NO. 1	2,681.4	44		1		1	~~119~~ 115	30	
		BENT NO. 2	5,362.6							145	10
		BENT NO. 3	5,362.6							144	10
		BENT NO. 4	2,681.4	44				1	~~92~~ 109	30	
		215'-0" CONTINUOUS PRESTRESSED CONCRETE GIRDER UNIT								562	
		TOTALS FOR BRIDGE NO. A7620	16,088.0	88		1		1	~~21~~ 224	911	20
B7620	HWY. 612 OVER ROBBINS ROAD	BENT NO. 1	3,217.5	52		1			57	34	
		BENT NO. 2	6,435.0							166	10
		BENT NO. 3	6,435.0							182	10
		BENT NO. 4	3,217.5	52					50	34	
		215'-0" CONTINUOUS PRESTRESSED CONCRETE GIRDER UNIT								595	
		TOTALS FOR BRIDGE NO. B7620	19,305.0	104		1			107	1,011	20
		SUBTOTAL FOR SHEET 8	84,105.0	505		6		1	~~780~~ 793	4,676	80
		SUBTOTAL FOR SHEET 2	1 ~~97,144.0~~ 78,592.0	409		4			1,402	2,453	
		SUBTOTAL FOR SHEET 4	69,150.0	252		3			503	2,638	10
		SUBTOTAL FOR SHEET 6	152,112.0		440	2	2,016	1,086	281	9,169	
		TOTALS FOR JOB NO. 012326	~~402,511.0~~ 383,959.0 1	1,166	440	15	2,016	1,086	~~2,966~~ 2,979 1	18,936	90

BRIDGE NUMBERS

A7612
B7612
A7613
B7613
07614
A7615
B7615
A7616
B7616
A7617
B7617
07618
07619
A7620
B7620

1 Revised Quantities

Made By: JES Date: 10/23/2023
Ckecked By: CSW Date: 10/23/2023

STATE OF ARKANSAS
LICENSED PROFESSIONAL ENGINEER
No. 16458
JOEL E. SKINNER

DIGITALLY SIGNED 10/23/2023
BRIDGE ENGINEER

SHEET 8 OF 8
SCHEDULE OF BRIDGE QUANTITIES
HWY. 412 - HWY. 112
(SPRINGDALE BYPASS) (F)
WASHINGTON & BENTON COUNTIES
ROUTE 612 SEC. 1 & 2
ARKANSAS STATE HIGHWAY COMMISSION
LITTLE ROCK, ARK.

DRAWN BY: HEW DATE: MAR. 2023 FILENAME: b012326_q8.dgn
CHECKED BY: CSW DATE: APR. 2023 SCALE: No Scale
DESIGNED BY: RAK DATE: MAR. 2023
BRIDGE NO. SEE TABLE DRAWING NO. 66111

JESkinner 10/20/2023 10:08:56 AM
WORKSPACE: ARDOT Bridge
\\garverinc.local\gdata\Projects\2017\17017660 - ARDOT 02326 Hwy 412 - Hwy 112\Drawings\b012326x0_S06_01.dgn
REVISED DATE:

DATE REVISED	DATE REVISED	FED. RD. DIST. NO.	STATE	JOB NO.	SHEET NO.	TOTAL SHEETS
10-02-2023	10-30-2023	6	ARK.	012326	208	838
10-23-2023		SUMMARY OF QUANTITIES				
10-26-2023						

(2)

STATE OF ARKANSAS
LICENSED PROFESSIONAL ENGINEER
No.13436
SHAUN A. ROBERSON

DIGITALLY SIGNED 10/30/2023

SUMMARY OF QUANTITIES (BOX 1 OF 3)

ITEM NUMBER	ITEM	QUANTITY (ALT. 1)	QUANTITY (ALT. 2)	UNIT
201	CLEARING	722	722	STATION
201	GRUBBING	722	722	STATION
202	REMOVAL AND DISPOSAL OF FENCE	55604	55604	LIN. FT.
202	REMOVAL AND DISPOSAL OF GATES	13	13	EACH
202	REMOVAL AND DISPOSAL OF CONCRETE ISLANDS	113	113	SQ. YD.
202	REMOVAL AND DISPOSAL OF CONCRETE DRIVEWAYS	968	968	SQ. YD.
202	REMOVAL AND DISPOSAL OF FOUNDATIONS	188	188	SQ. YD.
202	REMOVAL AND DISPOSAL OF PIPE CULVERTS	11	11	EACH
202	REMOVAL AND DISPOSAL OF PRECAST CONCRETE BARRIER WALL LEFT IN PLACE	2862	2862	LIN. FT.
202	REMOVAL AND DISPOSAL OF GUARDRAIL	170	170	LIN. FT.
202	REMOVAL AND DISPOSAL OF BUILDINGS	50	50	EACH
202	REMOVAL AND DISPOSAL OF BILLBOARDS	2	2	EACH
202	REMOVAL AND DISPOSAL OF SIGNS	44	44	EACH
202	REMOVAL AND DISPOSAL OF PLANTERS	1	1	EACH
202	REMOVAL AND DISPOSAL OF MAILBOXES	10	10	EACH
202	REMOVAL AND DISPOSAL OF FLAG POLE	1	1	EACH
202	REMOVAL AND DISPOSAL OF WIRE ROPE SAFETY FENCE END TERMINAL	3	3	EACH
202	REMOVAL AND DISPOSAL OF IMPACT ATTENUATION BARRIER	1	1	EACH
SS & 206	FLOWABLE SELECT MATERIAL	250	250	CU. YD.
SP, SS, & 210	UNCLASSIFIED EXCAVATION	3176252	3176252	CU. YD.
SP	SELECT GRANULAR BACKFILL	13266	13266	CU. YD.
210	PRESPLITTING	8300	8300	SQ. YD.
SP & 210	COMPACTED EMBANKMENT	2447387	2447387	CU. YD.
SP & 210	ROCK FILL	426983	426983	CU. YD.
SP	REMOVING AND REPLACING TOPSOIL	194011	194011	CU. YD.
SP & 210	SOIL STABILIZATION	1000	1000	TON
214	SUBGRADE PREPARATION	73	73	STATION
SP, SS, & 303	AGGREGATE BASE COURSE (CLASS 7)	287142	394089	TON
SP, SS, & 308	AGGREGATE IN CEMENT STABILIZED CRUSHED STONE BASE COURSE	85201		TON
SP, SS, & 308	CEMENT IN CEMENT STABILIZED CRUSHED STONE BASE COURSE	5438		TON
SP, SS, & 308	PROCESSING CEMENT STABILIZED CRUSHED STONE BASE COURSE	258970		SQ. YD.
SS & 401	TACK COAT	10357	44510	GAL.
SP, SS, & 405	MINERAL AGGREGATE IN ACHM BASE COURSE (1 1/2")	5152	65630	TON
SP, SS, & 405	ASPHALT BINDER (PG 64-22) IN ACHM BASE COURSE (1 1/2")	37	37	TON
SP, SS, & 405	ASPHALT BINDER (PG 70-22) IN ACHM BASE COURSE (1 1/2")	178	2698	TON
SP, SS, & 406	MINERAL AGGREGATE IN ACHM BINDER COURSE (1")	5538	41780	TON
SP, SS, & 406	ASPHALT BINDER (PG 64-22) IN ACHM BINDER COURSE (1")	86	116	TON
SP, SS, & 406	ASPHALT BINDER (PG 70-22) IN ACHM BINDER COURSE (1")	182	1898	TON
SP, SS, & 407	MINERAL AGGREGATE IN ACHM SURFACE COURSE (1/2")	25088	71354	TON
SP, SS, & 407	ASPHALT BINDER (PG 64-22) IN ACHM SURFACE COURSE (1/2")	1095	459	TON
SP, SS, & 407	ASPHALT BINDER (PG 70-22) IN ACHM SURFACE COURSE (1/2")	422	3854	TON
SP & 412	COLD MILLING ASPHALT PAVEMENT	2667	2667	SQ. YD.
SP, SS, & 414	ASPHALT CONCRETE PATCHING FOR MAINTENANCE OF TRAFFIC	175	175	TON
SP, SS, & 415	ACHM PATCHING OF EXISTING ROADWAY	150	150	TON
SP, SS, & 501	PORTLAND CEMENT CONCRETE PAVEMENT (11" UNIFORM THICKNESS)	221955		SQ. YD.
SP, SS, & 504	APPROACH SLABS	2076.40	2076.40	CU. YD.
SP, SS, & 504	APPROACH GUTTERS	252.00	252.00	CU. YD.
601	MOBILIZATION	1.00	1.00	LUMP SUM
SP & 602	FURNISHING FIELD OFFICE	1	1	EACH
SP, SS, & 603	MAINTENANCE OF TRAFFIC	1.00	1.00	LUMP SUM
603	18" TEMPORARY CULVERT	300	300	LIN. FT.
SS & 604	SIGNS	1601	1601	SQ. FT.
SP, SS, & 604	CONSTRUCTION PROJECT INFORMATION SIGN UPDATE	1	1	EACH
SS & 604	BARRICADES	344	344	LIN. FT.
SS & 604	TRAFFIC DRUMS	214	214	EACH
SP	PRECAST CONCRETE BARRIER LEFT IN PLACE	4180	4180	LIN. FT.
SS & 604	FURNISHING AND INSTALLING PRECAST CONCRETE BARRIER	1180	1180	LIN. FT.
SS & 604	RELOCATING PRECAST CONCRETE BARRIER	260	260	LIN. FT.
604	CONSTRUCTION PAVEMENT MARKINGS	8037	8037	LIN. FT.
604	REMOVABLE CONSTRUCTION PAVEMENT MARKINGS	31464	31464	LIN. FT.
604	REMOVAL OF CONSTRUCTION PAVEMENT MARKINGS	2433	2433	LIN. FT.
604	REMOVAL OF PERMANENT PAVEMENT MARKINGS	11807	11807	LIN. FT.
SS & 604	VERTICAL PANELS	10	10	EACH
SP	PORTABLE CONSTRUCTION LIGHTING	180	180	DAY
SP, SS, & 605	CONCRETE DITCH PAVING (TYPE A)	1301	1301	SQ. YD.
SP, SS, & 605	CONCRETE DITCH PAVING (TYPE B)	28148	28148	SQ. YD.
SS & 606	24" REINFORCED CONCRETE PIPE CULVERTS (CLASS III)	3502	3502	LIN. FT.
SS & 606	24" REINFORCED CONCRETE PIPE CULVERTS (CLASS IV)	182	182	LIN. FT.
SS & 606	30" REINFORCED CONCRETE PIPE CULVERTS (CLASS III)	1373	1373	LIN. FT.
SS & 606	36" REINFORCED CONCRETE PIPE CULVERTS (CLASS III)	224	224	LIN. FT.
SS & 606	36" REINFORCED CONCRETE PIPE CULVERTS (CLASS IV)	362	362	LIN. FT.
SS & 606	36" REINFORCED CONCRETE PIPE CULVERTS (CLASS V)	292	292	LIN. FT.
SS & 606	42" REINFORCED CONCRETE PIPE CULVERTS (CLASS III)	7	7	LIN. FT.
SS & 606	42" REINFORCED CONCRETE PIPE CULVERTS (CLASS IV)	428	428	LIN. FT.
SS & 606	42" REINFORCED CONCRETE PIPE CULVERTS (CLASS V)	738	738	LIN. FT.
SS & 606	48" REINFORCED CONCRETE PIPE CULVERTS (CLASS III)	66	66	LIN. FT.
SS & 606	48" REINFORCED CONCRETE PIPE CULVERTS (CLASS V)	2121	2121	LIN. FT.
SS & 606	54" REINFORCED CONCRETE PIPE CULVERTS (CLASS V)	1862	1862	LIN. FT.
SS & 606	60" REINFORCED CONCRETE PIPE CULVERTS (CLASS V)	458	458	LIN. FT.
SS & 606	72" REINFORCED CONCRETE PIPE CULVERTS (CLASS III)	106	106	LIN. FT.
SP, SS, & 606	54" REINFORCED CONCRETE PIPE CULVERTS (CLASS SPECIAL)	1020	1020	LIN. FT.
SS & 606	12" ZINC COATED (GALVANIZED) CORRUGATED STEEL PIPE CULVERTS (16 GAUGE)	194	194	LIN. FT.
SS & 606	44" X 27" REINFORCED CONCRETE ARCH PIPE CULVERTS (CLASS III)	690	690	LIN. FT.
SS & 606	24" FLARED END SECTIONS FOR REINFORCED CONCRETE PIPE CULVERTS	47	47	EACH
SS & 606	30" FLARED END SECTIONS FOR REINFORCED CONCRETE PIPE CULVERTS	15	15	EACH

SUMMARY OF QUANTITIES (BOX 2 OF 3)

ITEM NUMBER	ITEM	QUANTITY (ALT. 1)	QUANTITY (ALT. 2)	UNIT
SS & 606	36" FLARED END SECTIONS FOR REINFORCED CONCRETE PIPE CULVERTS	9	9	EACH
SS & 606	42" FLARED END SECTIONS FOR REINFORCED CONCRETE PIPE CULVERTS	6	6	EACH
SS & 606	48" FLARED END SECTIONS FOR REINFORCED CONCRETE PIPE CULVERTS	8	8	EACH
SS & 606	54" FLARED END SECTIONS FOR REINFORCED CONCRETE PIPE CULVERTS	7	7	EACH
SS & 606	60" FLARED END SECTIONS FOR REINFORCED CONCRETE PIPE CULVERTS	1	1	EACH
SS & 606	72" FLARED END SECTIONS FOR REINFORCED CONCRETE PIPE CULVERTS	5	5	EACH
SS & 606	44" X 27" FLARED END SECTIONS FOR REINFORCED CONCRETE ARCH PIPE CULVERTS	10	10	EACH
SP, SS, & 606	18" SIDE DRAIN	466	466	LIN. FT.
SS & 606	SELECTED PIPE BEDDING	1540	1540	CU. YD.
SP	CONTRA-COSTA ENERGY DISSIPATOR	4	4	EACH
SS & 609	DROP INLETS (TYPE N2)	4	4	EACH
SS & 609	DROP INLETS (TYPE RM)	36	36	EACH
SS & 611	4" PIPE UNDERDRAINS	7500	7500	LIN. FT.
SS & 611	UNDERDRAIN OUTLET PROTECTORS	60	60	EACH
614	CONCRETE SPILLWAY (TYPE A)	2	2	EACH
SS & 615	PAVEMENT REPAIR OVER CULVERTS (CONCRETE)	45.6	45.6	CU. YD.
SS & 617	GUARDRAIL (TYPE C)	75	75	LIN. FT.
SS & 617	GUARDRAIL (TYPE A)	11375	11375	LIN. FT.
SS & 617	TERMINAL ANCHOR POSTS (TYPE 1)	13	13	EACH
SS & 617	GUARDRAIL TERMINAL (TYPE 2)	43	43	EACH
SS & 617	THRIE BEAM GUARDRAIL TERMINAL	36	36	EACH
SP	WIRE ROPE SAFETY FENCE	32766	32766	LIN. FT.
SS & 619	WIRE FENCE (TYPE C)	67200	67200	LIN. FT.
* SS & 619	16' STEEL GATES (ALTERNATE NO.1)	14	14	EACH
* SS & 619	16' ALUMINUM GATES (ALTERNATE NO.2)	14	14	EACH
620	LIME	481	481	TON
620	SEEDING	240.51	240.51	ACRE
SS & 620	MULCH COVER	749.34	749.34	ACRE
620	WATER	35135.5	35135.5	M. GAL.
621	TEMPORARY SEEDING	508.83	508.83	ACRE
621	SILT FENCE	44221	44221	LIN. FT.
621	SAND BAG DITCH CHECKS	21417	21417	BAG
621	DIVERSION DITCH	10467	10467	LIN. FT.
621	DROP INLET SILT FENCE	946	946	LIN. FT.
621	SEDIMENT BASIN	25632	25632	CU. YD.
621	ROCK FILTER FOR SEDIMENT BASIN	62	62	TON
621	PIPE CULVERT FOR SEDIMENT BASIN	22	22	LIN. FT.
621	OBLITERATION OF SEDIMENT BASIN	25677	25677	CU. YD.
621	SEDIMENT REMOVAL AND DISPOSAL	8253	8253	CU. YD.
621	PIPE FOR SLOPE DRAINS	2299	2299	LIN. FT.
621	ROCK DITCH CHECKS	786	786	CU. YD.
623	SECOND SEEDING APPLICATION	240.51	240.51	ACRE
624	SOLID SODDING	17748	17748	SQ. YD.
625	GEOTEXTILE FABRIC (TYPE 5)	151	151	SQ. YD.
SP & 625	GEOTEXTILE FABRIC (TYPE SPECIAL)	258970		SQ. YD.
626	EROSION CONTROL MATTING (CLASS 3)	46455	46455	SQ. YD.
SP, SS, & 632	CONCRETE ISLAND	566	566	SQ. YD.
635	ROADWAY CONSTRUCTION CONTROL	1.00	1.00	LUMP SUM
637	MAILBOXES	3	3	EACH
637	MAILBOX SUPPORTS (SINGLE)	3	3	EACH
642	RUMBLE STRIPS IN ASPHALT SHOULDERS	88374	157512	LIN. FT.
642	RUMBLE STRIPS IN PORTLAND CEMENT CONCRETE SHOULDERS	69138		LIN. FT.
SP & 701	ACTUATED CONTROLLER TS2-TYPE 2 (8 PHASES)	1	1	EACH
SP	ETHERNET SWITCH, 1100 HARDENED (8-PORT)	10	10	EACH
SP	POLE MOUNTED ITS CABINET	5	5	EACH
SP	CELLULAR MODEM	10	10	EACH
SP	PTZ CAMERA SYSTEM	10	10	EACH
SP & 706	TRAFFIC SIGNAL HEAD, LED, (3 SECTION, 1 WAY)	10	10	EACH
SP & 706	TRAFFIC SIGNAL HEAD, LED, (4 SECTION, 1 WAY)	3	3	EACH
SP	LOUVERS	3	3	EACH
708	TRAFFIC SIGNAL CABLE (5C/14 A.W.G.)	756	756	LIN. FT.
708	TRAFFIC SIGNAL CABLE (7C/14 A.W.G.)	241	241	LIN. FT.
708	TRAFFIC SIGNAL CABLE (20C/14 A.W.G.)	617	617	LIN. FT.
SP	ELECTRICAL CONDUCTORS-IN-CONDUIT (1C/8 A.W.G., E.G.C.)	615	615	LIN. FT.
SP	ELECTRICAL CONDUCTORS-IN-CONDUIT (1C/12 A.W.G., E.G.C.)	355	355	LIN. FT.
SP	ELECTRICAL CONDUCTORS-IN-CONDUIT (2C/6 A.W.G.)	46	46	LIN. FT.
SP	ELECTRICAL CONDUCTORS-IN-CONDUIT, COPPER (3C/6 A.W.G., E.G.C.)	359	359	LIN. FT.
SP	ELECTRICAL CONDUCTORS-IN-CONDUIT, COPPER (3C/8 A.W.G., E.G.C.)	755	755	LIN. FT.
SP	ELECTRICAL CONDUCTORS-IN-CONDUIT, COPPER (3C/000 A.W.G. #8 E.G.C.)	621	621	LIN. FT.
SP	ELECTRICAL CONDUCTORS-IN-CONDUIT, COPPER (3C/0 A.W.G. #8 E.G.C.)	435	435	LIN. FT.
SP	ELECTRICAL CONDUCTORS-IN-CONDUIT, COPPER (3C/3 A.W.G. #8 E.G.C.)	785	785	LIN. FT.
SP	ELECTRICAL CONDUCTORS FOR LUMINAIRES	1305	1305	LIN. FT.
709	GALVANIZED STEEL CONDUIT (2")	112	112	LIN. FT.
710	NON-METALLIC CONDUIT (2")	2895	2895	LIN. FT.
710	NON-METALLIC CONDUIT (3")	581	581	LIN. FT.
SS & 711	CONCRETE PULL BOX (TYPE 2)	2	2	EACH
SS & 711	CONCRETE PULL BOX (TYPE 2 HD)	23	23	EACH
SS & 711	CONCRETE PULL BOX (TYPE 3 HD)	4	4	EACH
SS & 714	TRAFFIC SIGNAL MAST ARM AND POLE WITH FOUNDATION (0')	1	1	EACH
SS & 714	TRAFFIC SIGNAL MAST ARM AND POLE WITH FOUNDATION (44')	1	1	EACH
SS & 714	TRAFFIC SIGNAL MAST ARM AND POLE WITH FOUNDATION (50')	1	1	EACH
SS & 714	TRAFFIC SIGNAL MAST ARM AND POLE WITH FOUNDATION (52')	1	1	EACH
SS & 714	TRAFFIC SIGNAL MAST ARM AND POLE WITH FOUNDATION (62')	1	1	EACH
SP	LED LUMINAIRE ASSEMBLY	6	6	EACH
SP	TILT TOWER (40')	7	7	EACH

*DENOTES ALTERNATE BID ITEMS.

SUMMARY OF QUANTITIES

EPSherrill 10/30/2023 10:06:11 AM
WORKSPACE: AHTD
L:\20TY\17017660 - ARDOT 012326 Hwy 412 - Hwy 112\Drawings\r012326_QTY.DGN
REVISED DATE:

DATE REVISED	DATE REVISED	FED. RD. DIST. NO.	STATE	JOB NO.	SHEET NO.	TOTAL SHEETS
10-02-2023	10-30-2023	6	ARK.	012326	209	838
10-23-2023						
10-26-2023		SUMMARY OF QUANTITIES AND REVISIONS				

(2)

STATE OF ARKANSAS
LICENSED PROFESSIONAL ENGINEER
No.13436
SHAUN A. ROBERSON

DIGITALLY SIGNED 10/30/2023

SUMMARY OF QUANTITIES (BOX 3 OF 3)

ITEM NUMBER	ITEM	QUANTITY (ALT. 1)	QUANTITY (ALT. 2)	UNIT
SP	SERVICE POINT ASSEMBLY (1 CIRCUIT)	7	7	EACH
SP	SERVICE POINT ASSEMBLY (2 CIRCUITS)	1	1	EACH
718	REFLECTORIZED PAINT PAVEMENT MARKING WHITE (6")	14394	14394	LIN. FT.
718	REFLECTORIZED PAINT PAVEMENT MARKING WHITE (10")	724	724	LIN. FT.
718	REFLECTORIZED PAINT PAVEMENT MARKING WHITE (12")	60	60	LIN. FT.
718	REFLECTORIZED PAINT PAVEMENT MARKING YELLOW (6")	13635	13635	LIN. FT.
719	THERMOPLASTIC PAVEMENT MARKING WHITE (6")	9380	9380	LIN. FT.
719	THERMOPLASTIC PAVEMENT MARKING WHITE (8")	1251	1251	LIN. FT.
719	THERMOPLASTIC PAVEMENT MARKING WHITE (12")	191	191	LIN. FT.
719	THERMOPLASTIC PAVEMENT MARKING YELLOW (6")	20458	20458	LIN. FT.
719	THERMOPLASTIC PAVEMENT MARKING YELLOW (8")	655	655	LIN. FT.
719	THERMOPLASTIC PAVEMENT MARKING (WORDS)	20	20	EACH
719	THERMOPLASTIC PAVEMENT MARKING (ARROWS)	30	30	EACH
SP	ENHANCED THERMOPLASTIC PAVEMENT MARKING WHITE (6")	108888	108888	LIN. FT.
SP	ENHANCED THERMOPLASTIC PAVEMENT MARKING WHITE (12")	5694	5694	LIN. FT.
SP	ENHANCED THERMOPLASTIC PAVEMENT MARKING YELLOW (6")	87214	87214	LIN. FT.
721	RAISED PAVEMENT MARKERS (TYPE II)	1874	1874	EACH
SP	STEEL OVERHEAD SIGN STRUCTURE (OH-412-72-002)	1	1	EACH
SP	STEEL OVERHEAD SIGN STRUCTURE (OH-612-72-001)	1	1	EACH
SP	STEEL OVERHEAD SIGN STRUCTURE (OH-RMP2-04-001)	1	1	EACH
SP	STEEL TEE MOUNT SIGN STRUCTURE (TM-412-72-001)	1	1	EACH
SP	STEEL TEE MOUNT SIGN STRUCTURE (TM-612-04-005)	1	1	EACH
SP	STEEL CANTILEVER SIGN STRUCTURE (OC-612-04-002)	1	1	EACH
SP	STEEL CANTILEVER SIGN STRUCTURE (OC-612-04-003)	1	1	EACH
SP	STEEL CANTILEVER SIGN STRUCTURE (OC-612-04-004)	1	1	EACH
SS & 725	GUIDE SIGN-ROADSIDE MOUNTED (DEMOUNTABLE LEGEND)	1205	1205	SQ. FT.
SS & 725	GUIDE SIGN-OVERHEAD MOUNTED (DEMOUNTABLE LEGEND)	1570	1570	SQ. FT.
SS & 726	STANDARD SIGN	1283	1283	SQ. FT.
SP	18" STREET NAME SIGN	4	4	EACH
SS & 727	EXIT NUMBER PANEL (TYPE A)	105	105	SQ. FT.
SS & 728	DELINEATOR (TYPE 2)	335	335	EACH
SS & 730	BREAKAWAY SIGN SUPPORT (TYPE G-2)	6017	6017	POUND
SP	OMNI-DIRECTIONAL BREAKAWAY SIGN SUPPORTS (TYPE G-1)	51	51	EACH
SP	OMNI-DIRECTIONAL BREAKAWAY SIGN SUPPORTS (TYPE G-2)	7	7	EACH
SP	OMNI-DIRECTIONAL BREAKAWAY SIGN SUPPORTS (TYPE G2-1)	35	35	EACH
SP	OMNI-DIRECTIONAL BREAKAWAY SIGN SUPPORTS (TYPE G2-3)	8	8	EACH
SP	OMNI-DIRECTIONAL BREAKAWAY SIGN SUPPORTS (TYPE G2-4)	2	2	EACH
SP	OMNI-DIRECTIONAL BREAKAWAY SIGN SUPPORTS (TYPE G2-5)	2	2	EACH
SS & 731	TEMPORARY IMPACT ATTENUATION BARRIER (REPAIR)	3	3	EACH
SS & 731	TEMPORARY IMPACT ATTENUATION BARRIER LEFT IN PLACE	3	3	EACH
SP & 733	VIDEO DETECTOR (IP)	1	1	EACH
SP & 733	HYBRID VIDEO/RADAR DETECTOR	3	3	EACH
SP & 733	VIDEO CABLE (EXTERIOR CAT 5E)	901	901	LIN. FT.
SP & 733	VIDEO MONITOR (CLR)	1	1	EACH
SP & 733	CENTRAL CONTROL UNIT (8 CHANNEL)	1	1	EACH
801	UNCLASSIFIED EXCAVATION FOR STRUCTURES-ROADWAY	13210	13210	CU. YD.
SP, SS, & 802	CLASS S CONCRETE-ROADWAY	3201.55	3201.55	CU. YD.
SP	RETAINING WALL	22646	22646	SQ. FT.
SP	TEXTURED COATING FINISH	2231	2231	SQ. YD.
SS & 804	REINFORCING STEEL-ROADWAY (GRADE 60)	673120	673120	POUND
SS & 816	FILTER BLANKET	2282	2282	SQ. YD.
SP	RIPRAP BASIN	15	15	EACH
SS & 816	DUMPED RIPRAP	1365	1365	CU. YD.
SP	OVERHEAD DMS ASSEMBLY	4	4	EACH
SP	RADAR DETECTION SYSTEM	10	10	EACH
	STRUCTURES OVER 20' SPAN			
636	BRIDGE CONSTRUCTION CONTROL	1.00	1.00	LUMP SUM
801	UNCLASSIFIED EXCAVATION FOR STRUCTURES-BRIDGE	14279	14279	CU. YD.
801	UNCLASSIFIED EXCAVATION FOR STRUCTURES-ROADWAY	1353	1353	CU. YD.
SP, SS, & 802	CLASS S CONCRETE-ROADWAY	152.87	152.87	CU. YD.
SP, SS, & 802	CLASS S CONCRETE-BRIDGE	9694.00	9694.00	CU. YD.
SP, SS, & 802	CLASS S(AE) CONCRETE-BRIDGE	7315.00	7315.00	CU. YD.
SS & 802	PRESTRESSED CONCRETE GIRDERS (TYPE III)	4664.0	4664.0	LIN. FT.
SS & 802	PRESTRESSED CONCRETE GIRDERS (TYPE IV)	12734.0	12734.0	LIN. FT.
SP	TEXTURED COATING FINISH	18936	18936	SQ. YD.
SP & 803	CLASS 2 PROTECTIVE SURFACE TREATMENT	26549.4	26549.4	SQ. YD.
SS & 804	REINFORCING STEEL-ROADWAY (GRADE 60)	21759	21759	POUND
SS & 804	REINFORCING STEEL-BRIDGE (GRADE 60)	1450890	1450890	POUND
SS & 804	EPOXY COATED REINFORCING STEEL (GRADE 60)	1927860	1927860	POUND
SS & 805	STEEL PILING (HP 12X53)	26113	26113	LIN. FT.
SS & 805	STEEL PILING (HP 14X73)	1568	1568	LIN. FT.
SS & 805	PREBORING	4156	4156	LIN. FT.
SP, SS, & 807	STRUCTURAL STEEL IN BEAM SPANS (A709, GR. 50W)	88960	88960	POUND
SP, SS, & 807	STRUCTURAL STEEL IN BEAM SPANS (A709, GR. 50)	613840	613840	POUND
SP, SS, & 807	STRUCTURAL STEEL IN PLATE GIRDER SPANS (A709, GR. 50)	1383530	1383530	POUND
SS & 807	PAINTING STRUCTURAL STEEL	978.9	978.9	TON
SS & 808	ELASTOMERIC BEARINGS	383959	383959	CU. IN.
SS & 809	ARMORED JOINT WITH NEOPRENE STRIP SEAL	440	440	LIN. FT.
SS & 809	SILICONE JOINT SEALANT	1166	1166	LIN. FT.
812	BRIDGE NAME PLATE (TYPE D)	15	15	EACH
SS & 816	FILTER BLANKET	2016	2016	SQ. YD.
SS & 816	DUMPED RIPRAP	1086	1086	CU. YD.
SS & 816	CONCRETE RIPRAP	2979	2979	CU. YD.
SP	EXPLORATORY HOLES	90	90	LIN. FT.

REVISIONS

DATE	REVISION	SHEET NUMBER
10/02/2023	ADDED SS 409-2 "ASPHALT LABORATORY FACILITY"; ADDED SP "CONTACT INFORMATION FOR MOTORIST DAMAGE CLAIMS"; ADDED SP "LONGITUDINAL TINING"; REVISED SP "MAINTENANCE OF TRAFFIC" AND "SITE USE (A+C METHOD) - CALENDAR DAY CONTRACT"; ADDED SHEET NO. 173A; REVISED QUANTITIES PORTLAND CEMENT CONCRETE PAVEMENT (11' UNIFORM THICKNESS); ELECTRICAL CONDUCTORS-IN-CONDUIT, COPPER (3C8 A.W.G., E.G.C.); ELECTRICAL CONDUCTORS-IN-CONDUIT, COPPER (3C/000, A.W.G., #8 E.G.C.); ELECTRICAL CONDUCTORS-IN-CONDUIT, COPPER (3C/0, A.W.G., #8 E.G.C.); GALVANIZED STEEL CONDUIT (2"); NON-METALLIC CONDUIT (2"); NON-METALLIC CONDUIT (3"); CONCRETE PULL BOX (TYPE 2 HD); CONCRETE PULL BOX (TYPE 3 HD); REVISED ITS PLAN, ELEVATION, DETAIL, AND QUANTITY SHEETS TO INCLUDE ADDITIONAL TYPE 3 PULL BOXES AT ALL DMS LOCATIONS; REVISED SUMMARY OF QUANTITIES SHEET TO INCLUDE BOTH ITS AND TRAFFIC SIGNAL QUANTITIES FOR NON-METALLIC CONDUIT (2" AND 3"), AND CONCRETE PULL BOXES (TYPE 2 AND 3 HD).	3, 6, 157, 158, 159, 166, 167, 173A, 174, 175, 190, 191, 208, & 209
10/23/2023	REMOVED SP "AIRPORT CLEARANCE REQUIREMENTS"; ADDED SP "DELAY IN RIGHT OF WAY OCCUPANCY"; REMOVED SP "ELECTRICAL CONDUCTORS-IN-CONDUIT"; ADDED SP "ELECTRICAL CONDUCTORS-IN-CONDUIT (ITS)"; REVISED SP "ELECTRICAL CONDUCTORS-IN-CONDUIT (TRAFFIC SIGNAL)"; REVISED SP "LED LUMINAIRE ASSEMBLY (BUG U0 TYPE)"; REVISED SP "MAINTENANCE OF TRAFFIC"; REVISED SP "PERCENT WITHIN LIMITS-PAVEMENT SMOOTHNESS (IRI)"; REVISED SP "UTILITY ADJUSTMENTS"; ADDED SP "STEEL SIGN STRUCTURES"; REVISED ITS NOTES, PLAN, ELEVATION, DETAIL, AND QUANTITY SHEETS; REVISED ITS VOLTAGE DROP CALCULATIONS AND TEE MOUNT STANDARD DETAILS; REMOVED "SP, " FROM CEMENT IN CEMENT STABILIZED CRUSHED STONE BASE COURSE ITEM NUMBER; REMOVED "SP, " FROM PROCESSING CEMENT STABILIZED CRUSHED STONE BASE COURSE ITEM NUMBER; ADDED "SP, " TO 54" REINFORCED CONCRETE PIPE CULVERTS (CLASS SPECIAL) ITEM NUMBER; REVISED RUMBLE STRIPS IN ASPHALT SHOULDERS QUANTITY (ALT. 1); ADDED RUMBLE STRIPS IN PORTLAND CEMENT CONCRETE SHOULDERS QUANTITY (ALT. 1); REVISED ELECTRICAL CONDUCTORS-IN-CONDUIT, COPPER (3C/0, A.W.G., #8 E.G.C.) QUANTITY; REVISED CLASS S CONCRETE-BRIDGE (STRUCTURES OVER 20' SPAN) QUANTITY; REVISED STEEL PILING (HP 12X53) (STRUCTURES OVER 20' SPAN) QUANTITY; REVISED STRUCTURAL STEEL IN BEAM SPANS (A709, GR. 50) (STRUCTURES OVER 20' SPAN) QUANTITY; REVISED PAINTING STRUCTURAL STEEL (STRUCTURES OVER 20' SPAN) QUANTITY; REVISED ELASTOMERIC BEARINGS (STRUCTURES OVER 20' SPAN) QUANTITY; REVISED CONCRETE RIPRAP (STRUCTURES OVER 20' SPAN) QUANTITY; REVISED BOX CULVERT NOTE AT STATION 278+90 TO DOUBLE 9'X9' RCB; REVISED BRUSH CREEK BRIDGE LAYOUT DETAILS AND SCHEDULE OF BRIDGE QUANTITIES; REVISED SUMMARY OF QUANTITIES.	6, 155, 157, 158, 159, 166, 167, 170, 173A, 174, 175, 186, 187, 189, 200, 201, 206, 207, 208, 209, 243, 313, 357, 430, 433, 434, & 622
10/26/2023	ADDED SP "CEMENT STABILIZED CRUSHED STONE BASE COURSE", REVISED PAVEMENT MARKING QUANTITIES, ADDED "SP, " TO CEMENT IN CEMENT STABILIZED CRUSED STONE BASE COURSE AND PROCESSING CEMENT STABILIZED CRUSHED STONE BASE COURSE ITEM NUMBERS, ADDED RETAINING WALL CONTROL ELEVATION TABLES TO RETAINING WALL NOS. 1-3	6, 108, 180, 208, 209, 547, 548 & 549
10/30/2023	ADDED SP "REMOVING AND REPLACING TOPSOIL", ADDED REMOVING AND REPLACING TOPSOIL QUANTITY.	6, 182, 208, & 209

EPSherrill 10/30/2023 10:06:20 AM
WORKSPACE: AHTD
L:\20\T\T0176\60 - ARDOT 012326 Hwy 412 - Hwy 112\Drawings\r012326_QTY.DGN
REVISED DATE:

DATE REVISED	DATE REVISED	FED. RD. DIST. NO.	STATE	JOB NO.	SHEET NO.	TOTAL SHEETS
		6	ARK.	012326	210	838
②		SURVEY CONTROL DETAILS				

STATE OF ARKANSAS
LICENSED PROFESSIONAL ENGINEER
No.13436
SHAUN A. ROBERSON
DIGITALLY SIGNED 7/28/2023

COORDINATES
ARKANSAS STATE PLANE, BASED ON GPS CONTROL, PROJECTED TO GROUND

NAME	NORTHING	EASTING	ELEVATION	REFERENCE	DESCRIPTION
1	678548.5766	629885.3993	1166.4056	SU	REBAR/CAP
2	678812.2884	630558.7034	1171.5007	SU	REBAR/CAP
3	679012.7836	631037.0611	1173.3202	SU	REBAR/CAP
4	679199.4844	631505.62	1176.7167	SU	REBAR/CAP
5	679336.2374	632053.5572	1180.8261	SU	REBAR/CAP
6	679395.7074	632649.2223	1198.5959	SU	REBAR/CAP
7	679379.4584	633263.6709	1222.2059	SU	REBAR/CAP
8	679388.6613	633928.1832	1256.1425	SU	REBAR/CAP
9	680055.2417	633893.6709	1265.1391	SU	REBAR/CAP
10	679386.6663	634323.1951	1272.1714	SU	REBAR/CAP
11	679657.4692	634452.3122	1277.7549	SU	REBAR/CAP
12	680553.6527	634889.4059	1295.441	SU	REBAR/CAP
13	680523.5481	635682.2629	1266.8409	SU	REBAR/CAP
14	681279.0437	636810.6216	1272.5308	SU	REBAR/CAP
15	681707.0334	637361.8769	1273.4814	SU	REBAR/CAP
16	682475.2908	638090.8211	1285.32	SU	REBAR/CAP
17	682740.7041	638316.0974	1270.4952	SU	REBAR/CAP
18	683032.4066	638823.8785	1251.1847	SU	REBAR/CAP
19	683414.8554	639332.8481	1233.7866	SU	REBAR/CAP
20	684054.7863	640094.6403	1231.6671	SU	REBAR/CAP
21	684380.9995	640401.2427	1231.2447	SU	REBAR/CAP
22	684387.237	640827.0571	1209.7145	SU	REBAR/CAP
23	683970.2143	641302.8179	1193.2666	SU	REBAR/CAP
24	683911.0478	642286.6393	1195.2799	SU	REBAR/CAP
25	683881.242	642701.1263	1214.172	SU	REBAR/CAP
26	684404.773	642513.9555	1210.3578	GPS	REBAR/CAP
27	684195.5406	642958.3809	1211.732	SU	REBAR/CAP
28	684262.3117	643365.5623	1186.7706	SU	REBAR/CAP
29	684423.9074	644048.4482	1198.7398	SU	REBAR/CAP
30	684246.2877	644622.1231	1212.5891	SU	REBAR/CAP
31	684727.3914	645702.4135	1213.4879	SU	REBAR/CAP
32	685016.6276	646156.436	1237.7747	SU	REBAR/CAP
33	685235.8982	646805.8017	1245.2056	SU	REBAR/CAP
34	685838.1115	647465.4517	1220.3153	SU	REBAR/CAP
35	686318.1396	647473.7281	1241.6308	SU	REBAR/CAP
36	686836.98	647359.9572	1240.0596	SU	REBAR/CAP
37	687202.0818	647370.7358	1230.2609	SU	REBAR/CAP
38	688292.8381	647515.6633	1195.1716	SU	REBAR/CAP
39	688545.5421	647990.4157	1200.9465	SU	REBAR/CAP
40	689392.2284	648045.014	1147.5774	SU	REBAR/CAP
41	690266.1493	647832.5946	1151.0524	SU	CPS
42	691005.5844	647980.3056	1188.8712	SU	REBAR/CAP
43	691238.8701	647720.5608	1206.9864	SU	REBAR/CAP
44	691285.4291	647859.8253	1209.631	SU	REBAR/CAP
45	691816.6335	647921.7208	1241.4727	SU	REBAR/CAP
46	692308.7554	648229.158	1256.7194	SU	REBAR/CAP
47	692901.4162	648138.704	1258.1578	SU	REBAR/CAP
48	693626.9892	648198.1885	1250.8758	SU	REBAR/CAP
49	694425.8865	648155.1222	1263.9405	SU	REBAR/CAP
50	695049.6236	648811.4141	1286.3155	SU	REBAR/CAP
51	695681.3915	649419.3959	1282.8812	SU	RBR ALUM CAP
52	696100.0603	650363.3974	1281.3135	SU	RBR ALUM CAP
53	696080.9676	651162.9121	1274.1132	SU	RBR ALUM CAP
54	696090.7104	651909.0667	1288.1869	SU	RBR ALUM CAP C
55	696436.1249	652236.684	1282.1672	SU	RBR ALUM CAP
56	696325.2948	653147.9958	1276.9865	SU	RBR ALUM CAP
57	696236.4131	654625.6109	1273.4174	SU	RBR ALUM CAP
58	695094.4337	654509.8035	1279.5402	SU	RBR ALUM CAP
59	697108.2839	654505.5956	1252.2764	SU	RBR ALUM CAP
60	696238.633	655222.0309	1261.2904	SU	RBR ALUM CAP
61	696185.5394	655953.5076	1267.9223	SU	RBR ALUM CAP
62	696090.2883	656770.461	1274.5424	SU	RBR ALUM CAP
63	696187.8051	658109.395	1280.6253	SU	RBR ALUM CAP
64	696137.2527	659266.7368	1282.2111	SU	RBR ALUM CAP
65	695878.2273	660557.8108	1285.8968	SU	RBR ALUM CAP
66	696284.8889	661468.2655	1278.1867	SU	RBR ALUM CAP
67	696650.2128	661835.1698	1271.8922	SU	RBR ALUM CAP
68	697007.8371	662125.8975	1256.9539	SU	RBR ALUM CAP
69	697556.7054	662826.6148	1145.0474	SU	T-69 RBR/CAP
70	697119.9644	663156.1671	1148.7452	SU	T-70 RBR/CAP
71	698027.2646	663616.099	1175.1909	SU	T-71 RBR/CAP
72	697320.3725	664263.14	1178.0506	SU	T-72 RBR/CAP
73	697559.1382	664720.9039	1224.232	SU	RBR ALUM CAP

COORDINATES
ARKANSAS STATE PLANE, BASED ON GPS CONTROL, PROJECTED TO GROUND

NAME	NORTHING	EASTING	ELEVATION	REFERENCE	DESCRIPTION
74	697640.0105	665044.0804	1225.2971	SU	RBR ALUM CAP
75	698158.3974	665752.4995	1267.502	SU	T-75 RBR/CAP
76	698174.4081	666767.2901	1277.8641	SU	RBR ALUM CAP
77	697567.183	666774.3224	1276.2975	SU	RBR ALUM CAP
78	698775.8453	666764.8584	1279.1731	SU	RBR ALUM CAP
79	698843.2258	667483.6778	1287.8223	SU	RBR ALUM CAP
80	699334.2538	668003.0304	1297.2598	SU	RBR ALUM CAP
81	700020.1601	668275.68	1286.8033	SU	RBR ALUM CAP
82	699887.5288	668848.6014	1284.1979	SU	RBR ALUM CAP
83	699960.0626	669631.8535	1283.3275	SU	RBR ALUM CAP
84	700675.3989	670639.1755	1290.467	SU	RBR ALUM CAP
85	701200.7318	671233.6488	1296.5604	SU	RBR ALUM CAP
86	701338.8896	671576.8702	1298.2932	SU	RBR ALUM CAP
87	701084.4103	671899.6348	1291.6987	SU	T-87 RBR/CAP
88	700318.7273	671848.8238	1231.171	SU	RBR CAP
89	700980.5995	672670.1857	1239.5815	SU	RBR CAP
90	700997.5192	672998.6789	1231.6712	SU	RBR CAP
91	708188.9316	678352.3369	1310.7445	SU	RBR ALUM CAP
92	707160.6438	678314.6864	1304.3441	SU	RBR ALUM CAP
93	705873.8972	678268.2609	1282.8392	SU	RBR ALUM CAP
94	705077.5535	678235.7066	1267.4833	SU	RBR ALUM CAP
95	704299.1318	678203.3794	1271.4777	SU	RBR ALUM CAP
96	703629.4554	678131.5351	1285.5455	SU	RBR ALUM CAP
97	703074.5172	677985.6666	1284.5531	SU	RBR ALUM CAP
98	702004.9825	677464.3042	1291.6431	SU	RBR ALUM CAP
99	701370.7345	676955.1799	1308.7855	SU	T 99 RBR CAP
100	700851.5602	676354.0909	1310.2575	SU	T 100 RBR CAP
101	700465.5549	675714.1856	1311.6973	SU	T 101 RBR CAP
102	700195.6915	675140.4283	1312.3265	SU	T 102 RBR CAP
103	699876.8548	674433.747	1310.0433	SU	T 103 RBR CAP
104	699633.3729	673897.7233	1304.8134	SU	T 104 RBR CAP
105	699300.6563	673165.6804	1293.5242	SU	T 105 RBR CAP
106	698974.0278	672530.38	1292.354	SU	T 106 RBR CAP
107	698645.1214	671950.2715	1273.236	SU	T 107 RBR CAP
108	698323.5724	671395.5823	1258.7734	SU	T 108 RBR CAP
109	698036.754	670902.7747	1253.2241	SU	T 109 RBR CAP
110	697624.0839	670411.2557	1253.8296	SU	T 110 RBR CAP
111	697072.6646	669984.2869	1257.3267	SU	T 111 RBR CAP
112	700403.4065	676149.9076	1315.7038	SU	RBR ALUM CAP
113	700629.7808	676518.7832	1314.6848	SU	T 113 RBR CAP
114	700176.7232	675752.3604	1318.2394	SU	RBR ALUM CAP
115	699676.1979	676450.7697	1336.1406	SU	RBR ALUM CAP
116	699324.3237	678095.6123	1331.979	SU	RBR ALUM CAP
117	699792.6041	678112.1244	1320.2733	SU	RBR ALUM CAP
118	698397.9036	678066.9691	1368.7741	SU	RBR ALUM CAP
119	698120.69	679443.7864	1342.4216	SU	RBR ALUM CAP
120	697911.8648	680322.1519	1361.0113	SU	RBR ALUM CAP
121	697274.5091	681334.248	1362.4207	SU	RBR ALUM CAP
122	697116.6363	682039.0327	1357.4037	SU	RBR ALUM CAP
123	696569.7917	682012.1743	1354.2763	SU	RBR ALUM CAP
124	698445.4239	682094.4571	1353.4388	SU	RBR ALUM CAP
125	697096.955	682628.0382	1360.2803	SU	REBAR/CAP
126	697003.8427	683692.4691	1364.0605	SU	RBR ALUM CAP
127	696942.28	684766.2212	1371.9502	SU	RBR ALUM CAP
128	696925.2713	685933.4907	1391.0175	SU	RBR ALUM CAP
129	696493.9084	686365.7073	1399.0804	SU	REBAR/CAP
130	696497.1915	687108.215	1406.5613	SU	RBR ALUM CAP
131	696413.3405	687608.3515	1402.1236	SU	RBR ALUM CAP
132	696386.3137	688296.9699	1391.2384	SU	RBR ALUM CAP
133	696393.6525	689048.4298	1390.8627	SU	RBR ALUM CAP
134	695863.6963	689099.5597	1385.2024	SU	REBAR/CAP
135	697128.2824	688944.3598	1387.2762	SU	REBAR/CAP
136	696357.7093	689613.8303	1392.7147	SU	RBR ALUM CAP
137	696329.9294	690444.7545	1384.6324	SU	REBAR/CAP
138	696297.7287	691117.6223	1385.1789	SU	REB/CAP
139	697072.36	691193.6605	1395.0177	SU	REBAR/CAP
140	695381.9431	691129.5872	1387.5363	SU	REBAR/CAP
141	695993.139	691690.014	1390.8896	SU	REB/CAP
142	695836.9871	692449.8038	1381.8234	SU	REB/CAP
143	694950.3164	692445.6872	1395.2158	SU	REB/CAP
144	694854.153	692996.3794	1388.5497	SU	REB/CAP
145	694803.0135	694052.7358	1405.6276	SU	REB/CAP
146	693984.3337	694026.7036	1396.1326	SU	REB/CAP

COORDINATES
ARKANSAS STATE PLANE, BASED ON GPS CONTROL, PROJECTED TO GROUND

NAME	NORTHING	EASTING	ELEVATION	REFERENCE	DESCRIPTION
147	693529.4493	694150.8556	1398.4133	SU	REB/CAP
148	692838.2281	694333.3777	1397.8155	SU	
149	692477.7742	695000.4592	1403.0594	SU	
150	692032.0484	695777.0787	1404.7728	SU	REB/CAP
151	691268.2138	696711.3963	1390.6879	SU	REB/CAP
152	690987.0229	697155.6969	1373.59	SU	REB/CAP
153	690270.6484	698012.7426	1351.3991	SU	REB/CAP
154	689892.0144	698260.1679	1332.8725	SU	REB/CAP
155	689097.5586	699517.7841	1377.5666	SU	T 155 RBR CAP
156	688867.8325	699914.5768	1383.9413	SU	REB/CAP
157	688167.0258	700985.2276	1385.3832	SU	T 157 RBR CAP
158	688083.5272	701407.3439	1383.6713	SU	T 158 RBR CAP
159	686689.7857	703122.8493	1376.6738	SU	T 159 RBR CAP
160	686478.6759	703390.6618	1392.2636	SU	T 160 RBR CAP
161	686137.5199	703768.5864	1388.8807	SU	T 161 RBR CAP
162	685462.0394	704391.4466	1396.2977	SU	T 162 RBR CAP
163	685137.0904	704834.5114	1402.0689	SU	T 163 RBR CAP
164	684530.6969	705260.9046	1379.8565	SU	T 164 RBR CAP
165	683798.641	705410.3982	1368.2011	SU	T 165 RBR CAP
166	683155.9861	706175.3337	1360.6664	SU	T 166 RBR CAP
167	682489.1072	705561.3182	1355.2502	SU	T 167 RBR CAP
168	683059.3027	706696.9896	1362.7077	SU	T 168 RBR CAP
169	682359.9065	706401.03	1338.9225	SU	T 169 RBR CAP
170	681337.2246	706841.302	1330.1418	SU	T 170 RBR CAP
171	682069.9072	707093.7823	1354.0962	SU	T 171 RBR CAP
172	681673.5825	707492.5155	1342.2803	SU	T 172 RBR CAP
173	680873.527	707626.6958	1328.0521	SU	T 173 RBR CAP
174	676361.3622	709833.8897	1308.0994	SU	T 174 RBR CAP
175	676415.2732	710456.5671	1319.8495	SU	T 175 RBR CAP
176	676572.4799	711069.8809	1331.525	SU	T 176 RBR CAP
177	676131.1589	711248.2695	1323.3074	SU	T 177 RBR CAP
178	675473.3702	711784.4398	1318.5875	SU	T 178 RBR CAP
179	675340.0423	712263.1183	1327.9987	SU	T 179 RBR CAP
180	674971.4394	712625.9792	1329.9202	SU	T 180 RBR CAP
181	673086.2498	708837.3835	1312.3856	SU	T 181 RBR CAP
182	673279.743	709735.3368	1309.1832	SU	T 182 RBR CAP
183	673548.8116	710667.003	1325.7085	SU	T 183 RBR CAP
184	673753.6373	711354.9334	1332.8106	SU	T 184 RBR CAP
185	673977.5532	712103.0645	1336.6887	SU	T 185 RBR CAP
186	674169.5191	712712.2101	1338.999	SU	T 186 RBR CAP
187	674547.0923	713185.1134	1328.0727	SU	T 187 RBR CAP
188	675003.3234	714072.3012	1286.3835	SU	T 188 RBR CAP
189	675159.1383	714986.3626	1241.1364	SU	T 189 RBR CAP
190	675170.8777	715714.8924	1206.8225	SU	T 190 RBR CAP
191	675175.9098	716709.2626	1163.0431	SU	
192	675184.7416	717921.9026	1167.0796	SU	
193	677937.5686	709355.7443	1142.3566	SU	RBR CAP
194	678357.4904	709035.4981	1147.8454	SU	RBR CAP
195	678807.9125	708661.8549	1183.6309	SU	RBR CAP
196	684729.1628	645817.4809	1219.7211	SU	RBR ALUM CAP
500	680243.3579	635020.6191	1288.29	GPS	720036
501	679261.8727	636001.5593	1262.872	GPS	GPS 720036A
502	690496.7318	629749.3548	1053.101	GPS	AHTD GPS
503	693340.8572	629805.4702	1068.682	GPS	AHTD GPS
504	695801.9812	637362.6408	1068.815	GPS	AHTD GPS
505	697185.003	637482.0281	1088.614	GPS	AHTD GPS
506	704848.496	653540.8221	1137.813	GPS	AHTD GPS
507	703714.0414	652466.9652	1124.718	GPS	AHTD GPS
508	701538.965	665704.7521	1270.329	GPS	AHTD GPS
509	700807.1661	666210.0411	1285.326	GPS	AHTD GPS
510	698898.7791	672516.3079	1289.526	GPS	AHTD GPS
511	697703.5968	670588.4147	1251.037	GPS	040051A
512	705599.8001	678469.4071	1273.4	GPS	RBR ALUM CAP 0
513	703836.602	678245.3223	1282.035	GPS	RBR ALUM CAP 0
514	697739.416	681987.1588	1357.481	GPS	RBR ALUM CAP 0
515	695764.7249	681987.8279	1345.862	GPS	RBR ALUM CAP 0
516	697165.1198	688896.2076	1389.103	GPS	GPS 040054 REB
517	698849.7281	688757.5701	1381.12	GPS	AHTD GPS
518	693955.2539	695070.7203	1410.315	GPS	AHTD GPS
519	692085.3632	694955.0282	1400.522	GPS	GPS 040055A RB
520	689257.5247	700304.5543	1390.711	GPS	RBR ALUM CAP 0
521	689223.1626	702302.3539	1399.16	GPS	AHTD GPS
522	679860.5764	704033.454	1305.37	GPS	AHTD GPS

COORDINATES
ARKANSAS STATE PLANE, BASED ON GPS CONTROL, PROJECTED TO GROUND

NAME	NORTHING	EASTING	ELEVATION	PREFERENCE	DESCRIPTION
523	679663.0343	707195.876	1217.9	GPS	AHTD GPS
525	673968.087	711654.8705	1335.033	GPS	GPS 720039A
526	674380.6873	713290.1318	1335.9242	GPS	GPS 720044 AHT
527	679662.8743	707195.538	1217.3876	GPS	AHTD CAP 7200
528	696173.5222	658119.7322	1280.0644	GPS	AHTD CAP 0400
529	697173.0336	658127.692	1279.1594	GPS	AHTD CAP 0400
530	695205.2857	665625.7058	**********	GPS	AHTD GPS
531	694218.0913	665401.1583	**********	GPS	AHTD GPS
532	686671.2097	644580.4151	1335.9242	GPS	AHTD GPS
601	679507.9664	627339.6337	1087.4483	VPT	
602	677523.6207	626979.6876	1090.0499	VPT	24" WALNUT
603	679324.8045	630484.9019	1179.1912	VPT	
604	677087.392	631130.6428	1209.1046	VPT	
605	679844.7596	638084.6359	1268.3337	VPT	
606	677485.5099	632623.1892	1240.5009	VPT	
607	-100005.1338	-100005.1338	1259.1158	VPT	60PN
608	677533.1928	635792.4657	1214.4469	VPT	
609	679426.8209	639133.2757	1270.566	VPT	
610	677712.01	639047.6965	1275.7325	VPT	
611	678887.4319	623606.0331	1105.3874	VPT	
612	678521.7684	640626.0902	1232.9444	VPT	
613	684214.4647	641494.7284	1146.1927	VPT	
614	681738.4479	639254.1156	1274.0815	VPT	
615	696568.892	668035.895	1199.3145	VPT	
616	681440.8868	635553.84	1278.3709	VPT	
617	696460.1503	670883.6731	1270.4145	VPT	
618	681255.4013	633830.229	1292.1257	VPT	
619	697750.5099	669240.674	1223.5096	VPT	
620	681230.0287	630802.6566	1226.9038	VPT	
621	699632.0302	671208.8392	1215.7062	VPT	
622	680999.9322	626020.0841	1052.9924	VPT	
623	698855.6725	673320.2065	1302.2176	VPT	
624	701358.6469	672906.8871	1252.982	VPT	
625	700764.6314	675463.2721	1305.4248	VPT	
626	702313.2115	676894.1824	1291.2014	VPT	
627	702815.571	675229.1512	1279.9879	VPT	
628	706179.1974	677809.6281	1312.3993	VPT	
629	704680.8602	679054.7032	1287.0427	VPT	
630	706145.3562	680657.5462	1294.5308	VPT	
631	701042.6243	678300.4078	1303.1586	VPT	
632	699412.9871	676355.0415	1337.0708	VPT	
633	697512.5359	674638.7948	1302.2109	VPT	
634	695921.7706	672683.4048	1241.652	VPT	
635	696842.5526	666096.4138	1232.4883	VPT	
636	699730.3465	667497.6944	1277.3553	VPT	
637	697561.9319	666784.2127	1274.7259	VPT	
638	702523.2101	673008.1294	1308.5717	VPT	
639	697553.8048	665019.9414	1216.4958	VPT	
640	695472.0792	661403.4725	1275.5561	VPT	
641	697248.419	661011.0514	1267.4054	VPT	
642	695366.3254	658088.2961	1277.2047	VPT	-SPK BASE CON
643	697039.222	658130.9222	1279.1871	VPT	
644	697152.0001	654507.1019	1254.3928	VPT	8-SPK
645	696047.4609	654598.2085	1276.2799	VPT	8-SPK
646	695141.8868	651404.3086	1285.5878	VPT	
647	696816.1966	650973.4291	1237.5083	VPT	
648	696848.5011	649431.3786	1273.0183	VPT	
649	684048.4586	638978.5986	1236.748	VPT	
650	683099.7335	639261.2856	1232.0717	VPT	
651	681719.8837	638044.8363	1283.411	VPT	
652	685794.8019	647984.6124	1246.2369	VPT	
653	683575.5074	644421.3518	1222.1114	VPT	
654	685329.1875	643416.3441	1171.5016	VPT	
655	682916.3552	641825.5419	1140.0852	VPT	
656	690005.2405	646875.5911	1164.9096	VPT	
657	690449.9774	649239.5918	1156.5703	VPT	

HBVinson 7/27/2023 1:55:26 PM
WORKSPACE: AHTD
L:\20\7\07\7660 - ARDOT 012326 Hwy 412 - Hwy 112\Drawings\r012326_SC_01.dgn
REVISED DATE:

DATE REVISED	DATE REVISED	FED. RD. DIST. NO.	STATE	JOB NO.	SHEET NO.	TOTAL SHEETS
		6	ARK.	012326	211	838
		SURVEY CONTROL DETAILS				

(2)

COORDINATES
ARKANSAS STATE PLANE, BASED ON GPS CONTROL, PROJECTED TO GROUND

NAME	NORTHING	EASTING	ELEVATION	REFERENCE	DESCRIPTION
658	691895.9003	649136.806	1217.1559	VPT	
659	695524.2051	647955.0604	1283.7397	VPT	
660	695516.8882	650237.2765	1271.732	VPT	
661	674552.3075	708854.0158	1305.5687	VPT	
662	672282.4062	708523.5237	1293.1675	VPT	
663	672672.3046	710533.131	1314.3381	VPT	
664	674435.366	709904.965	1313.1078	VPT	
665	674907.8688	713164.2932	1315.0355	VPT	
666	673705.9669	712637.5702	1336.3698	VPT	
667	673765.3752	715524.565	1315.4193	VPT	
668	675783.3919	717920.4047	1179.3864	VPT	
669	674456.1149	717700.5045	1148.4206	VPT	
670	675063.2888	709520.209	1296.3083	VPT	
671	675304.8647	712273.6626	1340.1288	VPT	
672	675025.8083	711427.7144	1319.3992	VPT	
673	677303.1203	714875.8991	1319.4843	VPT	
674	685142.6632	704209.5421	1384.2188	VPT	
675	685877.346	705261.1896	1419.855	VPT	
676	682377.547	705634.1245	1353.1704	VPT	
677	681275.595	708159.1225	1321.0729	VPT	
678	679607.5417	707048.267	1207.3296	VPT	
679	-100005.1338	-100005.1338	1199.0898	VPT	VPT 679 END OF
680	673744.7949	711296.2335	1333.706	VPT	
681	700466.8931	677724.8476	1310.9153	VPT	
682	699027.7192	678032.1869	1383.518	VPT	
683	697592.4734	683588.8017	1367.052	VPT	
684	695930.1896	692562.2637	1385.9369	VPT	
685	695299.6655	692461.5193	1391.005	VPT	
686	697425.2314	691225.3883	1394.6928	VPT	
687	695600.0485	691050.3397	1385.4131	VPT	
688	697333.9178	688886.4252	1386.8547	VPT	
689	695776.1069	689160.7178	1387.8081	VPT	
690	695846.6574	685780.2979	1378.6568	VPT	
691	697368.7762	686036.7457	1388.2354	VPT	
692	691862.4619	690129.2155	1512.1782	VPT	
693	694585.5813	688915.4662	1383.9168	VPT	
694	694455.1633	690117.758	1398.2808	VPT	
695	695320.3574	688500.3523	1388.5551	VPT	
696	697934.0485	688126.4461	1385.4912	VPT	
697	699917.4173	689707.3037	1396.025	VPT	
698	700417.6853	687735.692	1361.4231	VPT	
699	700357.9358	689835.2875	1378.7664	VPT	
701	679280.4124	627619.2902	1092.1301	HPT	PKNL
702	678953.8534	631050.0802	1176.4773	HPT	PK NAIL
703	679262.0006	633781.234	1246.7255	HPT	PK NAIL
704	679273.1749	635873.9111	1263.7836	HPT	CPS
705	679063.1391	638912.0211	1270.5463	HPT	PK NAIL
706	678965.5671	640974.4738	1275.3582	HPT	PK NAIL
707	680049.8652	640070.2397	1195.173	HPT	CPS @ SW EDGE
708	680962.1456	635690.7277	1268.6867	HPT	X IN DRIVEWAY
709	678994.0121	626526.8738	1069.986	HPT	PK NAIL
710	680864.9889	623055.1199	1124.4331	HPT	PK NAIL
712	685558.6191	639664.7416	1102.8614	HPT	N W COR WINDMI
713	694878.5015	668852.2525	1244.8799	HPT	JOINT IN CONC
714	697989.1734	670444.1221	1220.8242	HPT	HPT-714 CL OF
715	699111.5803	672219.9165	1283.8108	HPT	HPT-715 COR OF
716	701514.7751	674193.7142	1245.2927	HPT	HPT-716 LEG OF
717	702674.2012	676800.2558	1283.0912	HPT	
718	704651.3038	678485.9726	1265.753	HPT	CENTER CATCHBA
719	705084.9408	679552.7655	1273.9292	HPT	CENTER STS HM
720	703062.1862	680435.5739	1312.7326	HPT	HPT-720 TOP OF
721	699357.3919	675473.8022	1333.2205	HPT	CENTER OF CATC
722	698559.2873	674769.3446	1320.0345	HPT	COR CONC SIDEW
723	695774.7412	670564.1003	1265.4012	HPT	X IN CONC AT D
724	694600.4218	661884.839	1276.5294	HPT	8-SPK COR ASPH
725	695677.8419	660594.5859	1283.491	HPT	8-SPK COR CONC
726	698181.2393	663670.5498	1181.4584	HPT	HPT-726 CPS EN
727	695744.0069	664800.1418	1181.2985	HPT	8-SPK COR CONC
728	695556.9246	666722.361	1281.2351	HPT	HPT 8 SPK COR
729	700440.1948	669571.9633	1289.8694	HPT	HPT 8SPK
730	701372.8412	670280.3096	1290.6061	HPT	HPT PK NAIL
731	695204.7791	665550.2713	1160.9189	HPT	HPT-731 END OF

COORDINATES
ARKANSAS STATE PLANE, BASED ON GPS CONTROL, PROJECTED TO GROUND

NAME	NORTHING	EASTING	ELEVATION	REFERENCE	DESCRIPTION
732	696350.5045	658936.5222	1282.6709	HPT	RBR ALUM CAP C
733	695376.4501	654710.6309	1278.2671	HPT	COR CONC DRIVE
734	696041.6834	652203.4831	1293.8845	HPT	HPT RBR ALUM C
735	694844.8938	648947.9334	1282.8927	HPT	REBAR/CAP
736	682790.2672	639675.687	1246.9556	HPT	X MARK W CORNE
737	682152.5602	636256.6733	1257.7694	HPT	X MARK CONC DW
738	685224.508	648010.5959	1215.7621	HPT	
739	684138.3738	648073.3552	1265.2219	HPT	X MARK ON S E
740	685596.62	645744.014	1234.5489	HPT	X MARK COR OF
741	683573.54	645940.4896	1228.9265	HPT	X MARK ON CONC
742	684107.3978	644439.7318	1213.1684	HPT	X MARK ON CONC
743	685332.7278	642405.3982	1157.2549	HPT	X MARK ON CONC
744	688342.2718	646610.0221	1154.0526	HPT	X MARK COR CON
745	688867.8691	648691.3163	1174.7744	HPT	
746	690271.6407	647874.1443	1148.801	HPT	CPS AT END OF
748	694043.4122	647790.8821	1271.7065	HPT	X MARK ON CONC
749	673167.7123	708653.7527	1307.1155	HPT	HPT 749 CPS EN
750	673403.8406	710314.2395	1319.1704	HPT	HPT 750 CPS EN
751	674264.8283	712681.3005	1333.5337	HPT	HPT 751 CPS EN
752	675206.8536	714956.5162	1246.7033	HPT	HT 752 CPS WHI
753	675391.6616	718077.7027	1170.182	HPT	
754	676999.9944	717677.9009	1160.8073	HPT	
755	685354.0951	705168.5776	1410.6525	HPT	HPT 755 SW COR
756	683273.3178	706865.2542	1369.3112	HPT	HPT 756 NE COR
757	682076.6859	707230.1006	1353.4755	HPT	HPT 757 NBC EN
758	677522.9202	708745.0365	1148.3246	HPT	HPT 758 SE COR
759	699660.8328	678048.971	1325.094	HPT	120PN @ BASE O
760	698833.4499	681374.5689	1344.9228	HPT	PK NAIL
761	698159.3324	681331.8859	1353.2272	HPT	PK NAIL
762	696826.1774	680466.2877	1342.4082	HPT	PN NAIL END OF
763	696511.1137	683497.2243	1357.6854	HPT	PK NAIL
764	695694.7334	683424.3162	1338.5267	HPT	X MARK ON CORN
765	696169.2095	692597.6601	1379.445	HPT	S E CORNER CON
766	696276.4445	690527.7689	1385.0896	HPT	PK NAIL IN CON
767	696363.4277	689047.2605	1392.2375	HPT	PK NAIL @ END
768	696263.101	685881.7796	1388.7364	HPT	PK NAIL
769	691745.027	689171.3846	1420.1488	HPT	120PN N E CORN
770	693705.317	689709.2956	1414.5574	HPT	PK NAIL END OF
771	697961.4866	688817.8102	1383.8293	HPT	PK NAIL END OF
772	700392.0982	688506.7079	1370.04	HPT	PK NAIL END OF
773	687716.5612	701831.5247	1378.8629	HPT	PKNL & END PAI
775	690556.0113	697698.6779	1359.6553	HPT	REB/CAP
776	691793.2678	696273.6741	1398.7756	HPT	REB/CAP
803	678673.7259	635872.3795	1257.5195	SU	
804	678665.3171	636456.5061	1243.9408	SU	REBAR/CAP
808	682035.0714	638668.504	1286.9181	SU	REBAR/CAP
830	679106.1511	634177.7214	1268.5346	SU	REBAR/CAP
831	678837.5761	635137.5216	1238.7986	SU	REBAR/CAP
833	679108.1652	637030.6419	1240.6171	SU	REBAR/CAP S SI
834	680335.9381	637666.5749	1269.8027	SU	REBAR/CAP
835	-100005.1338	637788.6235	1278.7152	SU	REBAR/CAP
900	700534.8941	684826.9166	1337.56	BM	NGS J309
901	700349.3879	682182.6025	1325.3224	BM	6'X3' BOX CU
902	698020.9249	682082.8861	1359.1572	BM	CPS BASE OF PP
903	701689.6445	682231.3625	1307.0612	BM	DOUBLE 4'X8' B
904	704023.6618	682355.7675	1324.285	BM	60PN IN PP EAS
905	705957.8276	682446.9023	1318.6756	BM	CP
906	706499.95	684036.6164	1342.95	BM	NGS V26 1982
907	706187.5106	679699.0412	1272.6175	BM	DIXIELAND-WEST
908	701254.3835	676862.7721	1310.0672	BM	OVERPASS SOUTH
909	700942.9059	679451.9747	1304.5694	BM	CPS IN PP
910	700434.1495	675535.8992	1312.5341	BM	CPS PP
911	699270.2079	673244.6677	1290.3094	BM	DROP INLET
912	697858.7129	670783.3865	1249.2622	BM	CH SQ DI CEN O
913	695571.9114	669214.368	1261.4502	BM	CPS PP
914	695015.2461	667495.5684	1172.9802	BM	24 RCP
915	695389.2059	665781.0277	1158.2369	BM	CHSLD SQ NO. E
916	693472.9386	665887.5358	1223.9539	BM	PP
917	691300.547	665868.6828	1283.5516	BM	PP
918	691141.267	663214.0844	1292.5051	BM	PP
919	692679.7136	662269.7467	1288.5942	BM	PP
920	693879.1589	660747.4203	1281.5999	BM	CPS BOTTOM FEN

COORDINATES
ARKANSAS STATE PLANE, BASED ON GPS CONTROL, PROJECTED TO GROUND

NAME	NORTHING	EASTING	ELEVATION	REFERENCE	DESCRIPTION
921	693993.0985	658379.4915	1269.7906	BM	CPS BASE POWER
922	694131.5787	655471.1425	1278.7024	BM	PP
923	694195.9774	654503.7498	1285.4814	BM	CPS BASE POWER
924	696797.4311	654606.9451	1264.4081	BM	CPS
925	699209.7781	653946.6023	1168.3904	BM	PP
926	699863.8819	653742.1681	1155.2447	BM	8'X4' BOX CULV
927	703110.1685	652178.6092	1115.2244	BM	SPRING CREEK B
928	704568.282	653450.674	1134.626	BM	3'X5' BOX CULV
929	694247.3207	651706.556	1255.0262	BM	PP
930	694447.7196	649040.633	1277.2224	BM	CPS IN PP
931	693659.3437	647684.881	1269.8006	BM	CPS IN PP
932	693030.9882	646499.9492	1212.7994	BM	PP
933	693596.6984	644594.8244	1229.9751	BM	POWER POLE
934	693927.7791	642079.4229	1166.6617	BM	POWER POLE
935	694732.1315	639579.9507	1092.6924	BM	POWER POLE
936	695608.8299	637372.4497	1068.6914	BM	POWER POLE
937	697464.3032	637450.0071	1102.3196	BM	POWER POLE
938	699643.0837	635892.715	1248.6669	BM	POWER POLE
939	700152.3747	633057.5379	1141.7456	BM	POWER POLE
940	698491.3178	631676.2013	1103.8632	BM	26" WALNUT TRE
941	695375.4774	630732.6629	1082.0167	BM	8" FENCE POST
942	693264.5533	630678.1898	1071.9122	BM	POWER POLE
943	690901.7392	630494.8353	1053.6024	BM	PP
944	691487.2649	647384.3169	1176.6767	BM	BRIDGE WALL ON
945	690258.4918	647769.3547	1150.1139	BM	CPS IN PP
946	690317.72	650515.0662	1163.9279	BM	CONC RAIL BRID
947	690847.279	651548.2087	1169.9359	BM	LOW WATER BRID
948	689416.6573	645836.641	1147.7156	BM	CPS IN PP
949	688400.0425	645244.8592	1124.7321	BM	NE BRIDGE WING
950	686752.4133	644240.6563	1131.4132	BM	PP
951	686433.8996	643529.2496	1115.8432	BM	CHISELED SQUAR
952	684069.6473	643716.4807	1158.7528	BM	CPS IN PP
953	682668.1196	645278.3166	1252.8728	BM	POWER POLE
954	681374.08	645597.9411	1260.4164	BM	POWER POLE
955	681454.8232	642878.8889	1223.7478	BM	POWER POLE
956	682057.4886	641591.0796	1153.2049	BM	NW WINGWALL BR
957	681759.1979	638900.5126	1283.7649	BM	CPS IN PP
958	681828.1173	636456.7474	1275.3626	BM	CPS IN PP
959	680823.3353	634514.3989	1299.1909	BM	CPS IN PP
960	697431.7959	666088.7734	1269.7489	BM	CPS IN CP
961	699433.4904	666143.1621	1250.3709	BM	PP
962	700387.1961	687734.4355	1361.8115	BM	CPS IN PP
963	697784.5364	688814.3031	1385.9473	BM	CPS IN PP
964	696334.5794	690484.5821	1386.6845	BM	CPS IN PP
965	694912.7423	691978.5958	1401.4088	BM	CPS IN PP
966	693565.0425	693700.5543	1403.6695	BM	POWER POLE
967	693464.7295	694991.8146	1402.8076	BM	CPS IN PP
968	692288.5135	698370.0873	1382.5043	BM	CPS IN PP EAST
969	690569.7716	700212.9135	1379.4001	BM	POWER POLE
970	689260.1046	701817.8822	1394.7024	BM	TBM 970 CPS BA
971	690389.8502	694887.0916	1359.4836	BM	BRIDGE WALL
972	686859.2634	694807.1072	1345.2294	BM	USGS MON 16WHV
973	687715.2368	703998.8495	1400.5251	BM	TBM 973 CPS BA
974	686458.0457	706072.914	1408.8869	BM	TBM 974 CPS BA
975	683375.4715	706918.6699	1369.7914	BM	TBM 975 CPS BA
976	681385.9601	707574.3529	1333.6816	BM	T 976 CPS CUT
977	679369.388	706067.6284	1181.5878	BM	FRIENDSHIP CRE
978	679088.3857	707611.6262	1167.3298	BM	978 AHTD CAP O
979	676561.666	708582.5195	1168.2168	BM	TBM 979 CH SQ
980	673246.4133	708656.3396	1308.9858	BM	TBM 980 CPS BA
981	674341.9966	713293.332	1338.1859	BM	TOP METAL POST
982	-100005.1338	-100005.1338	1237.5859	BM	6'X5' DOUBLE B
983	-100005.1338	-100005.1338	1079.7354	BM	CONCRETE WALL
984	-100005.1338	-100005.1338	1274.1764	BM	POWER POLE
985	-100005.1338	-100005.1338	1274.2511	BM	POWER POLE
986	-100005.1338	-100005.1338	1227.9935	BM	POWER POLE
987	-100005.1338	-100005.1338	1280.1986	BM	POWER POLE
988	-100005.1338	-100005.1338	1233.8687	BM	36" OAK
989	-100005.1338	-100005.1338	1123.0471	BM	36" SWEET GUM
990	-100005.1338	-100005.1338	1208.9286	BM	38" OAK TREE
991	-100005.1338	-100005.1338	1205.4991	BM	TRANSMISSION L
992	-100005.1338	-100005.1338	1174.8778	BM	POWER POLE

COORDINATES
ARKANSAS STATE PLANE, BASED ON GPS CONTROL, PROJECTED TO GROUND

NAME	NORTHING	EASTING	ELEVATION	PREFERENCE	DESCRIPTION
993	-100005.1338	-100005.1338	1113.2834	BM	POWER POLE
994	696398.2948	687877.8287	1398.9986	BM	CPS BASE OF CI
995	-100005.1338	-100005.1338	1388.2029	BM	POWER POLE
996	-100005.1338	-100005.1338	1430.2429	BM	8"CMP CULVERT
999	675103.2329	715806.2155	**********	BM	AHTD STD CAP S
1000	700798.1556	666218.4376	1284.293	TV	PROJECT METAD
1050	679151.806	638656.2006	**********	TV	8" SPK NBC
1051	679207.1128	637815.7371	**********	TV	8" SPIKE
1100	-100005.1338	-100005.1338	1165.846	TV	NBC MOVE UP
1101	-100005.1338	-100005.1338	1164.3509	TV	NBC MOVE UP
1102	697610.8207	669899.2443	1205.4361	TV	NBC MOVE UP
1103	697279.4867	669702.656	1200.7733	TV	3 SPIKE MOVE U
1104	697894.6627	670560.9338	1241.8632	TV	3 SPIKE MOVE U
1105	698287.8884	671094.2949	1255.8104	TV	3 SPIKE MOVE U
1106	698084.9863	670529.7628	1214.2104	TV	3 SPIKE MOVE U
1107	698373.4727	671780.3294	1264.5442	TV	3 SPIKE MOVE U
1108	698427.6494	671559.45	1260.6236	TV	3 SPIKE MOVE U
1109	698565.1551	671484.041	1214.1751	TV	3 SPIKE MOVE U
1110	698304.1481	671830.5369	1234.0945	TV	3 SPIKE MOVE U
1111	698357.8889	671943.6523	1230.9153	TV	3 SPIKE MOVE U
1112	698213.6072	671835.9662	1237.2821	TV	3 SPIKE MOVE U
1113	698361.102	672026.504	1235.2655	TV	3 SPIKE MOVE U
1114	698434.1404	672181.4782	1238.6747	TV	3 SPIKE MOVE U
1115	698413.3497	672311.3588	1242.2422	TV	3 SPIKE MOVE U
1116	698443.0546	672533.9831	1251.8386	TV	3 SPIKE MOVE U
1117	698406.9814	672625.0415	1252.5644	TV	3 SPIKE MOVE U
1118	699820.6353	674644.0653	1310.7981	TV	3 SPIKE MOVE U
1119	699300.7802	673143.434	1292.4488	TV	3 SPIKE MOVE U
1120	699339.8007	673222.6703	1291.9654	TV	3 SPIKE MOVE U
1121	699387.9328	673325.6699	1292.1276	TV	3 SPIKE MOVE U
1122	699406.2432	673114.6376	1254.3624	TV	3 SPIKE MOVE U
1123	699709.4088	673853.6325	1305.8489	TV	3 SPIKE MOVE U
1124	700191.0898	674917.9181	1297.1704	TV	3 SPIKE MOVE U
1125	700016.3962	674534.5073	1300.7242	TV	3 SPIKE MOVE U
1126	700459.917	675484.568	1309.6666	TV	3 SPIKE MOVE U
1128	700117.5794	675309.763	1312.1845	TV	3 SPIKE MOVE U
1129	701054.7515	675478.3825	1299.9445	TV	3 SPIKE MOVE U
1130	675224.9435	715095.8517	1238.6522	TV	3 SPIKE MOVE U
1131	675090.5032	715151.3963	1234.3173	TV	3 SPIKE MOVE U
1132	675159.0088	714054.2925	1262.7925	TV	3 SPIKE MOVE U
1133	696867.6293	680661.2583	**********	SU	8"SPK
1134	674220.4726	713480.4626	1333.1604	TV	3 SPIKE MOVE U
1135	674174.4607	714023.5153	1318.1487	TV	3 SPIKE MOVE U
1136	674962.2165	712672.8131	1328.8302	TV	8" SPK
1137	675288.743	712667.8789	1326.8715	TV	8" SPK
1138	675480.5409	712477.9121	1324.0097	TV	3 SPIKE MOVE U
1139	675810.8138	712507.5834	1327.8774	TV	3 SPIKE MOVE U
1140	676211.9793	712270.5263	1333.1277	TV	3 SPIKE MOVE U
1141	673803.8354	712649.5358	1341.2768	TV	8" SPK
1142	675023.056	712729.5923	1322.4522	TV	8" SPK
1143	675159.4352	712841.3902	1279.0409	TV	3 SPIKE MOVE U
1144	675293.4388	712910.3644	1270.2936	TV	3 SPIKE MOVE U
1145	675499.1225	713005.9397	1239.3686	TV	3 SPIKE MOVE U
1146	675749.3964	713103.2398	1222.5343	TV	3 SPIKE MOVE U
1147	675736.7027	713034.56	1223.4317	TV	3 SPIKE MOVE U
1148	675843.2474	712872.6143	1234.4784	TV	3 SPIKE MOVE U
1149	675691.5277	712754.7755	1254.3198	TV	3 SPIKE MOVE U
1150	704821.8086	678212.4446	1263.2401	SU	8SPK
1151	704955.4241	678492.758	1265.7584	SU	8 SPK
1152	704342.0615	678446.4384	1271.852	SU	8SPK
1153	703567.6178	678390.4784	1300.2888	SU	8SPK
1154	704724.7044	678014.7242	1248.2307	SU	8SPK
1155	704701.1356	678213.0473	1264.956	SU	8SPK
1156	704562.1869	678210.1868	1266.4165	SU	8SPK
1157	703514.5219	678052.5793	1292.6417	SU	8SPK

STATE OF ARKANSAS
LICENSED PROFESSIONAL ENGINEER
No.13436
SHAUN A. ROBERSON
DIGITALLY SIGNED 7/28/2023

HBVinson 7/27/2023 11:55:42 PM
WORKSPACE: AHTD
L:\20IT\7017660 - ARDOT 012326 Hwy 412 - Hwy 112\Drawings\r012326_SC_02.dgn
REVISED DATE:

DATE REVISED	DATE REVISED	FED. RD. DIST. NO.	STATE	JOB NO.	SHEET NO.	TOTAL SHEETS
		6	ARK.	012326	212	838
		SURVEY CONTROL DETAILS				
2						

STATE OF ARKANSAS
LICENSED PROFESSIONAL ENGINEER
No.13436
SHAUN A. ROBERSON
DIGITALLY SIGNED 7/28/2023

COORDINATES
ARKANSAS STATE PLANE, BASED ON GPS CONTROL, PROJECTED TO GROUND

NAME	NORTHING	EASTING	ELEVATION	REFERENCE	DESCRIPTION
1158	702545.6172	677746.2962	1274.46	SU	8SPK
1159	702571.2855	677948.5548	1278.40	SU	8SPK
1160	702401.356	678259.9867	1260.96	SU	8SPK
1161	704459.6236	678209.0046	1268.06	SU	8-SPK
1162	701945.1692	676854.1319	1300.56	SU	8SPK
1163	701214.6019	676603.9026	1300.92	SU	8 SPIKE MOVE U
1164	701021.9181	676405.5241	1305.45	SU	8 SPIKE MOVE U
1165	701089.2883	677214.0377	1304.97	SU	8SPK
1166	701465.8632	676881.8076	1296.94	SU	8SPK
1167	701636.2835	676881.9637	1302.62	SU	8SPK
1168	701017.3447	677639.1162	1310.25	SU	8SPK
1169	700960.5558	677005.848	1286.66	SU	8 SPIKE MOVE U
1170	700826.9696	677071.6879	1288.53	SU	8SPK
1171	700513.7623	676699.1743	1314.16	SU	8SPK
1172	700332.5608	676637.0919	1319.03	SU	8SPK
1173	700234.7364	676639.3102	1320.93	SU	8SPK
1174	700105.6922	675497.6679	1304.32	SU	8SPK
1175	699609.5617	675443.3798	1327.74	SU	8SPK
1176	698780.8587	678728.6484	1346.19	SU	8"SPK
1177	698699.6153	678081.0779	1352.79	SU	8"SPK
1178	697498.3632	679342.3206	1349.80	SU	8"SPK
1179	697499.0496	681487.4865	1361.39	SU	8"SPK
1180	696851.5652	680226.1095	1341.02	SU	8"SPK
1181	696795.4915	681170.7887	1350.29	SU	8"SPK
1182	696768.8124	681663.6578	1353.69	SU	8"SPK
1183	696867.631	680661.2664	1341.76	SU	8"SPK
1184	698074.4717	681686.9994	1361.32	SU	8"SPK
1185	697287.6242	685986.3215	1388.70	SU	8"SPK
1186	696520.5383	686503.2823	1400.89	SU	8"SPK
1187	695277.3531	689263.2067	1379.70	TV	8" SPK
1188	694989.2795	689464.3595	1384.07	TV	8"SPK
1189	696629.2698	684923.3337	1379.63	TV	8"SPK
1190	693292.7798	693717.4386	1400.42	TV	8"SPK
1191	691552.8612	696306.6934	1386.82	TV	8-SPK
1192	691326.2049	696446.9239	1388.71	TV	8-SPK
1193	690866.7284	696425.2119	1362.57	TV	8-SPK
1194	690169.5207	697078.3262	1356.61	TV	8-SPK
1195	690179.4715	697607.2169	1345.58	TV	8-SPK
1196	689766.8952	697862.3582	1325.76	TV	8-SPK
1197	690457.9414	698546.0261	1348.10	TV	8-SPK
1198	689997.8225	698438.6991	1327.19	TV	8-SPK
1199	689594.8327	698226.7574	1320.16	TV	8-SPK
1300	700316.7287	672143.1214	1219.70	TV	1300\NBC
1301	700278.9894	672295.6462	1206.50	TV	1301\NBC
1302	700452.2374	672571.2492	1208.44	TV	1302\NBC
1303	700504.4915	672858.1822	1210.20	TV	1303\NBC
1304	700630.2863	673253.8084	1212.28	TV	1304\NBC
1305	701004.2769	673345.8248	1213.66	TV	1305\NBC
1306	701349.6964	673361.8339	1215.53	TV	1306\NBC
1307	679178.3247	637854.3469	1260.56	TV	NBC
1308	679078.7379	638126.0644	1267.87	SU	8"B SPIKE
1309	679028.422	638799.1785	1271.31	SU	NBC 8" SPK
1310	678972.5324	639855.9771	1242.97	SU	NBC 8" SPK
1311	679269.6439	635244.8412	1263.85	TV	8" SPIKE
1312	678304.6914	629323.9876	1148.09	TV	NBC
1313	678230.7278	628838.3349	1122.57	TV	NBC
1314	679705.8646	635524.9028	1268.78	TV	8" SPIKE
1315	681040.4342	634359.0637	1299.72	TV	NBC 8" SPIKE
1316	679149.411	635243.4824	1261.83	TV	8" SPIKE
1317	679307.7058	634893.9183	1263.87	TV	8" SPIKE
1318	679232.432	633375.2653	1227.97	TV	RBC
1319	679241.6229	633089.1662	1215.52	TV	RBC
1320	679297.1839	631868.9979	1179.26	TV	NBC
1321	679204.5437	632140.9654	1180.90	TV	NBC
1322	679135.5665	631345.7876	1176.87	TV	NBC
1323	678728.8879	630356.337	1170.57	TV	NBC
1324	678653.3572	630172.2706	1169.22	TV	NBC .
1325	678521.3668	629793.3797	1168.21	TV	NBC
1326	678479.0653	629658.6992	1168.69	TV	NBC
1327	678444.0397	629533.3547	1168.97	TV	NBC
1328	678366.6358	629342.8742	1158.72	TV	NBC
1329	678311.2259	629169.3708	1147.49	TV	NBC
1330	680013.2854	635253.6479	1280.00	TV	NBC 8" SPIKE

COORDINATES
ARKANSAS STATE PLANE, BASED ON GPS CONTROL, PROJECTED TO GROUND

NAME	NORTHING	EASTING	ELEVATION	REFERENCE	DESCRIPTION
1331	679109.9202	632951.1499	**********	TV	NBC
1332	679074.9882	632693.379	**********	TV	NBC
1333	679122.6352	632417.7241	**********	TV	8" SPK NBC
1334	679108.4675	632226.1928	**********	TV	8" SPK NBC
1336	684232.988	640047.5657	**********	TV	NBC
1337	683330.0707	639016.9036	1229.62	TV	NBC
1339	683244.1711	638752.3537	1236.73	TV	NBC
1340	682692.8249	637902.1982	1267.70	TV	NBC
1341	682767.6197	638050.4506	1269.82	TV	NBC
1350	675703.0543	713264.9945	1207.30	TV	8 SPIKE MOVE U
1351	675675.0502	713439.7335	1200.40	TV	8 SPIKE MOVE U
1352	675171.0387	713100.5634	1325.09	TV	8 SPIKE MOVE U
1353	675537.3665	713641.685	1195.52	TV	8 SPIKE MOVE U
1354	675415.0497	713664.3539	1191.17	TV	8 SPIKE MOVE U
1355	675193.2855	713588.385	1203.03	TV	8 SPIKE MOVE U
1356	675110.0855	713490.6792	1246.46	TV	8 SPIKE MOVE U
1357	676379.4363	711128.3474	1322.96	TV	8 SPIKE MOVE U
1358	676330.7753	711034.2917	1291.08	TV	8 SPIKE MOVE U
1359	676250.4788	710618.2467	1304.62	TV	8 SPIKE MOVE U
1360	676120.0572	710612.2199	1270.48	TV	8 SPIKE MOVE U
1361	676969.8255	710300.9839	1302.45	TV	8 SPIKE MOVE U
1363	676653.8069	710414.2767	1320.68	TV	8 SPIKE MOVE U
1364	676938.9112	710133.791	1307.69	TV	8 SPIKE MOVE U
1365	677085.3747	709997.3664	1307.32	TV	8 SPIKE MOVE U
1366	677242.8845	709873.8291	1300.20	TV	8 SPIKE MOVE U
1367	677317.1238	709803.0693	1290.71	TV	8 SPIKE MOVE U
1368	677401.5135	709751.9381	1273.50	TV	8 SPIKE MOVE U
1369	677483.5328	709694.6968	1244.24	TV	8 SPIKE MOVE U
1370	677564.8364	709636.3757	1209.76	TV	8 SPIKE MOVE U
1371	677647.1317	709579.4072	1160.02	TV	8 SPIKE MOVE U
1372	677756.3464	709509.0701	1132.61	TV	8 SPIKE MOVE U
1373	677809.1294	709461.2983	1142.19	TV	8 SPIKE MOVE U
1374	677813.9593	709216.5356	1134.58	TV	8 SPIKE MOVE U
1375	677779.4487	709836.5445	1130.67	TV	8 SPIKE MOVE U
1376	677582.4631	709359.5036	1158.44	TV	8 SPIKE MOVE U
1377	677420.5359	709630.1069	1247.96	TV	8 SPIKE MOVE U
1378	677321.9671	709541.7985	1230.32	TV	8 SPIKE MOVE U
1379	677499.05	709907.0971	1248.13	TV	8 SPIKE MOVE U
1380	677340.8168	709983.1896	1290.03	TV	8 SPIKE MOVE U
1381	677151.5233	709767.0587	1287.84	TV	8 SPIKE MOVE U
1382	677125.2452	710115.6865	1302.43	TV	8 SPIKE MOVE U
1383	674781.5401	713664.3418	1305.18	TV	8 SPIKE MOVE U
1384	678247.9662	710616.3192	1141.16	TV	8 SPIKE MOVE U
1385	678603.0763	711133.2924	1130.64	TV	8 SPIKE MOVE U
1386	678737.1794	711522.9016	1128.37	MU	4INX4IN CONC P
1387	678901.4048	711530.5088	**********	TV	BRASS CAP SET
1388	678886.1617	711861.5402	**********	TV	5/8" REBAR SET
1389	680632.6852	707619.0002	1325.73	TV	8 SPIKE MOVE U
1390	680999.7577	707486.6392	1323.86	TV	8 SPIKE MOVE U
1391	681636.5123	707062.0045	1322.23	TV	8 SPIKE MOVE U
1392	681354.6283	707010.2426	1315.63	TV	8 SPIKE
1393	682964.8457	706754.6769	1356.86	TV	8 SPIKE
1394	682419.7245	706555.4496	1323.82	TV	8 SPIKE
1395	682008.0926	706470.6682	1307.30	TV	8 SPIKE
1396	682335.4307	706281.7347	1328.89	TV	8 SPIKE
1397	682601.9475	706352.8172	1330.45	TV	8 SPIKE
1398	682968.0482	706523.059	1346.24	TV	8 SPIKE
1399	683447.3751	705863.175	1283.17	TV	8 SPIKE
1400	683354.7481	705902.2401	1279.21	TV	8 SPIKE
1402	683777.6514	705794.0996	1301.98	TV	8 SPIKE
1403	696925.7492	663186.3315	1147.42	TV	8 SPIKE
1404	696455.5338	663179.3596	1149.34	TV	8 SPIKE
1405	696628.0156	663069.7521	1148.92	TV	8 SPIKE
1406	696750.8564	662854.3889	1148.31	TV	8 SPIKE
1407	696862.6989	662681.6482	1147.11	TV	8 SPIKE
1408	695998.6334	660761.1428	1281.03	TV	8 SPIKE
1409	696719.1389	662084.0996	1249.49	TV	8 SPIKE
1410	696559.0849	662084.4906	1257.09	TV	8 SPIKE
1411	696134.255	662044.786	1245.65	TV	8 SPIKE
1412	696285.5578	662080.3225	1229.39	TV	8 SPIKE
1413	696682.2369	662264.5351	1228.42	TV	8 SPIKE
1414	695950.8667	662022.5604	1244.25	TV	8 SPIKE
1415	697247.1611	664760.348	1195.83	TV	8 SPIKE

COORDINATES
ARKANSAS STATE PLANE, BASED ON GPS CONTROL, PROJECTED TO GROUND

NAME	NORTHING	EASTING	ELEVATION	REFERENCE	DESCRIPTION
1416	700510.3154	671526.8594	1267.65	TV	8 SPIKE
1500	689957.6953	698645.9975	1334.14	TV	8-SPK
1501	689739.3642	698827.6761	1347.12	TV	8-SPK
1502	690209.7822	698917.3275	1351.43	TV	8-SPK
1503	689336.7692	699056.739	1356.51	TV	8-SPK
1504	689614.4381	699274.0094	1354.14	TV	8-SPK
1505	689872.5334	699529.3582	1367.23	TV	8-SPK
1506	689545.6064	698591.5041	1328.50	TV	8-SPK
1507	689439.0968	699402.3048	1365.29	TV	8-SPK
1508	689598.5492	699571.9574	1372.46	TV	8-SPK
1509	689212.9304	700188.1299	1389.86	SU	8-SPK
1510	688643.449	700248.1382	1366.81	SU	8-SPK
1511	688389.9205	700656.1237	1356.49	SU	8-SPK
1512	688837.8425	700899.5665	1347.69	SU	8-SPK
1513	687804.9915	701566.5171	1369.94	SU	8-SPK
1514	687558.9023	701430.4947	1344.46	SU	8-SPK
1515	687725.3593	702182.4746	1376.52	SU	8-SPK
1516	686955.2397	701704.2133	1375.07	SU	8-SPK
1517	686367.313	702989.4918	1380.15	SU	8-SPK
1518	687407.6395	702713.8939	1377.63	SU	8-SPK
1519	687274.7033	703041.1677	1380.39	SU	8-SPK
1520	686895.3182	702478.9934	1345.08	SU	PASTURE
1521	687544.4967	702510.9827	1343.71	SU	8-SPK
1522	687275.3888	702498.8703	1351.69	SU	8-SPK
1523	689610.9378	700220.984	1395.62	SU	8-SPK
1524	685906.9636	703907.3604	**********	SU	8-SPK
1525	685922.2554	704229.97	1383.54	SU	8-SPK
1526	694675.0904	649075.8672	1279.22	SU	8-SPK
1527	693211.1502	648004.668	1259.14	SU	8-SPK
1528	685454.6981	646921.775	**********	SU	8-SPK
1529	684732.9793	646540.7498	1223.09	SU	8-SPK
1530	684541.1128	645382.0192	1182.45	SU	8-SPK
1531	683949.7396	644351.8507	1208.16	SU	8-SPK
1532	684143.8411	643890.754	1173.28	SU	8"SPK
1533	684326.3118	642284.5664	1191.76	SU	8"SPK
1534	684157.7192	641888.122	1123.36	SU	8"SPK
1631	707535.138	679822.2306	1288.13	VPT	
1749	696191.6518	649344.9482	1292.54	HPT	X MARK ON YELL
9000	-100005.1338	-100005.1338	1284.74	BM	RBR ALUN CAP I
9001	-100005.1338	-100005.1338	1284.09	BM	RAILROAD SPK I
9002	695872.892	660723.9251	1285.79	BM	CH SQ BASE CON
9003	697262.2951	664774.0028	1197.02	BM	CPS CP N. SIDE
9004	-100005.1338	-100005.1338	1232.92	BM	TBM-9004 CPS I
9005	-100005.1338	-100005.1338	1207.69	BM	TBM 9005 AHTD
9950	677796.8744	709516.855	1140.87	BM	CPS IN ROOT OF

USE CAF = 1.0 FOR STAKEOUT FOR THIS PROJECT.
TO CONVERT TO GRID USE CAF = 0.9999386648.
GRID DISTANCE = GROUND DISTANCE X CAF.
GRID COORDINATES ARE STORED UNDER FILE NAME 001966GI.CTL
HORIZONTAL DATUM: NAD 83
VERTICAL DATUM: NAVD 88
REFERENCES POINTS (1500 SERIES) TO BE USED TO ESTABLISH CONTROL POINTS BY RESECTION.
REFERENCE POINTS ARE NOT TO BE USED FOR VERTICAL CONTROL.
BASIS OF BEARINGS
GRID NORTH, BASED ON GPS CONTROL AT POINT NUMBER 513, (GPS 040052A)
ARKANSAS STATE PLANE GRID COORDINATES NORTH ZONE,
NORTHING 703793.4320, EASTING 6782C3.7220.
CONVERGENCE ANGLE 1^15'05.2" RIGHT.
GRID AZIMUTH = ASTRONOMICAL AZIMUTH - CONVERGENCE ANGLE.
ALL BEARINGS AND DISTANCES DISPLAYED ARE GRID PROJECTED TO GROUND FOR DESIGN.

HBVinson 7/27/2023 11:56:01 PM
WORKSPACE: AHTD
L:\20\T\701\660 - ARDOT 012326 Hwy 412 - Hwy 112\Drawings\r012326_SC_03.dgn
REVISED DATE:

DATE REVISED	DATE REVISED	FED. RD. DIST. NO.	STATE	JOB NO.	SHEET NO.	TOTAL SHEETS
		6	ARK.	012326	213	838
		SURVEY CONTROL DETAILS				
2						

STATE OF ARKANSAS
LICENSED PROFESSIONAL ENGINEER
No.13436
SHAUN A. ROBERSON
DIGITALLY SIGNED 7/28/2023

ALIGNMENT NAME: C.L. MEDIAN

POINT	STATION	TYPE	NORTHING	EASTING
8000	139+46.19	POB	678659.1020	630389.3424
8001	149+35.83	PC	679036.1229	631304.3466
8002	165+98.58	PT	679320.4022	632929.3247
8003	171+85.55	PC	679294.3124	633515.7108
8004	220+36.03	PT	681816.9859	637279.6126
8005	230+07.31	PC	682730.8917	637608.4627
8006	249+37.95	PT	683811.9217	639073.4788
8007	303+96.08	PC	684063.0563	644525.8273
8008	362+20.27	PT	687878.7295	648169.7965
8009	414+23.52	PC	693081.9784	648169.7965
8010	475+77.50	PT	696898.5938	652143.4544
8011	545+71.84	PC	696616.7136	659132.1079

ALIGNMENT NAME: HWY. 412B

POINT	STATION	TYPE	NORTHING	EASTING
8198	10+00.00	POB	679193.8624	635778.8433
8199	16+06.94	PC	679166.1583	636385.1533
8200	20+16.21	PT	679154.7814	636794.2412
8201	25+57.65	POE	679149.3964	637335.6550

ALIGNMENT NAME: HWY. 412B RAMP 1

POINT	STATION	TYPE	NORTHING	EASTING
8049	172+37.13	POB	679242.8901	633565.7219
8050	180+22.36	PC	679218.5835	634350.5787
8051	181+75.93	PT	679212.8018	634504.0316
8052	183+45.86	PC	679205.2658	634673.8001
8053	186+86.81	PT	679195.2152	635014.5919
8054	192+13.38	PC	679187.5240	635541.1062
8055	194+50.62	PT	679180.3764	635778.2271

ALIGNMENT NAME: HWY. 412B RAMP 2

POINT	STATION	TYPE	NORTHING	EASTING
8060	192+24.57	POB	679490.7956	635739.6115
8061	196+33.59	PC	679766.3950	636041.8431
8062	199+42.97	PT	680003.0047	636239.7104
8063	202+20.36	PC	680237.8035	636387.3989
8064	203+75.72	PT	680365.8065	636475.3741
8065	209+00.00	POE	680785.4419	636789.6536

ALIGNMENT NAME: HWY. 412B RAMP 3

POINT	STATION	TYPE	NORTHING	EASTING
8078	192+19.83	POB	680016.0980	635273.1675
8079	193+44.30	PC	680081.1392	635379.2870
8080	195+57.53	PT	680167.7646	635573.4763
8081	197+59.11	PC	680225.2784	635766.6766
8082	210+57.66	PT	680974.9319	636796.3713

ALIGNMENT NAME: HWY 412B RAMP 4

POINT	STATION	TYPE	NORTHING	EASTING
8090	169+46.18	PC	679366.3913	633279.3116
8091	176+12.97	PT	679452.4573	633937.1090
8092	179+61.23	PC	679556.9278	634269.3363
8093	185+23.80	PT	679502.0941	634813.8959
8094	188+54.29	PC	679342.0896	635103.0765
8095	192+76.85	PT	679224.6033	635505.3902
8096	195+51.46	POE	679207.3483	635779.4595

ALIGNMENT NAME: MUSTEEN RD.

POINT	STATION	TYPE	NORTHING	EASTING
8205	13+00.00	POB	678444.1163	633810.7354
8206	15+26.86	PC	678670.1110	633830.5178
8207	22+24.77	PT	679088.1565	634305.0633
8208	30+29.97	PC	679056.6674	635109.6503
8209	32+00.32	PT	679020.1005	635275.1075
8210	34+76.65	PC	678913.5367	635530.0630
8211	39+30.54	PT	679120.7477	635857.2036
8212	40+00.00	POE	679190.1370	635860.3742

ALIGNMENT NAME: HWY. 68

POINT	STATION	TYPE	NORTHING	EASTING
8220	41+00.00	POB	680426.5208	634910.0006
8221	51+83.56	PC	679615.0387	635628.0491
8222	53+54.91	PT	679487.5646	635742.5566
8223	54+42.82	PC	679422.6091	635801.7883
8224	56+28.29	PT	679252.6246	635863.2295
8212	56+90.84	POE	679190.1370	635860.3742

ALIGNMENT NAME: LIBERTY AVENUE

POINT	STATION	TYPE	NORTHING	EASTING
8230	12+78.71	POB	681773.6701	636527.7561
8231	22+50.90	PC	681717.3198	637498.3089
8232	24+10.18	PT	681709.1926	637657.3878
8233	29+08.60	POE	681687.2222	638155.3237

ALIGNMENT NAME: LIBERTY ACCESS RD.

POINT	STATION	TYPE	NORTHING	EASTING
8240	14+47.34	POB	681607.8077	637316.7861
8241	18+33.74	PC	681585.4116	637702.5281
8242	19+29.68	PT	681635.9749	637775.8914
8243	20+00.00	POE	681703.0296	637797.0676

ALIGNMENT NAME: JAVELLO RD.

POINT	STATION	TYPE	NORTHING	EASTING
8250	16+00.00	POB	684383.7911	643499.1445
8251	29+84.15	PC	683138.0824	644102.5376
8252	33+53.67	PT	682906.8017	644376.8323
8253	38+50.00	POE	682769.0067	644853.6552

ALIGNMENT NAME: MARCHANT ACCESS RD.

POINT	STATION	TYPE	NORTHING	EASTING
8260	12+24.84	POB	693687.0814	648427.0272
8261	20+00.00	POE	694424.0332	648667.4067

ALIGNMENT NAME: HWY. 112

POINT	STATION	TYPE	NORTHING	EASTING
8280	6+90.00	POB	698082.3950	654201.1562
8281	11+87.84	PC	697605.0305	654342.4592
8282	15+61.10	PT	697240.0903	654418.8542
8283	25+68.19	PC	696240.8495	654544.3352
8284	29+49.12	PT	695860.6913	654560.2414
8285	32+83.72	POE	695526.3753	654546.4299

ALIGNMENT NAME: HWY. 112 RAMP 1

POINT	STATION	TYPE	NORTHING	EASTING
8290	479+96.17	PC	696823.2927	652558.8253
8291	481+86.45	PT	696806.1738	652748.2525
8292	485+96.30	PC	696749.0052	653154.1012
8293	491+49.64	PT	696545.0491	653662.7041
8294	496+06.27	PC	696278.6812	654033.6029
8295	499+13.11	PT	696157.6963	654313.0322
8296	501+61.75	POE	696109.6670	654556.9895

ALIGNMENT NAME: HWY. 112 RAMP 4

POINT	STATION	TYPE	NORTHING	EASTING
8340	483+09.15	PC	696927.5601	652876.8614
8341	491+35.68	PT	697113.8346	653671.8153
8320	499+33.42	POE	697496.7461	654371.6504

ALIGNMENT NAME: XNA ACCESS RD.

POINT	STATION	TYPE	NORTHING	EASTING
8400	100+00.00	POB	696391.3234	648122.1911
8401	105+96.27	PC	696783.0886	647672.6800

ALIGNMENT NAME: XNA ACCESS RD. RAMP 1

POINT	STATION	TYPE	NORTHING	EASTING
8420	446+49.37	PC	695894.0800	649491.7460
8421	466+31.90	PT	695244.7887	649494.7995
8422	484+19.97	POE	696419.5934	648146.8296

ALIGNMENT NAME: XNA ACCESS RD. RAMP 2

POINT	STATION	TYPE	NORTHING	EASTING
8430	416+52.40	PC	696363.0533	648097.5527
8431	423+59.72	PT	695837.5410	648568.2982
8432	431+54.43	PC	695184.8079	649021.6264
8433	448+58.06	PT	695524.4254	650284.2349
8434	453+83.07	PC	696047.6838	650326.9788
8435	461+93.78	PT	696649.9528	650779.4207

ALIGNMENT NAME: XNA ACCESS RD. RAMP 3

POINT	STATION	TYPE	NORTHING	EASTING
8440	429+54.36	PC	696645.6746	647901.1223
8441	433+59.53	PT	696384.9250	648211.2071
8442	436+48.14	PC	696203.1088	648435.3511
8443	448+18.14	PT	696127.5100	649530.9289
8444	453+46.66	POE	696400.9202	649983.2237

ALIGNMENT NAME: XNA ACCESS RD. RAMP 4

POINT	STATION	TYPE	NORTHING	EASTING
8450	428+87.18	POB	694531.9579	648392.5526
8451	434+19.69	PC	695025.8482	648591.6462
8452	444+24.83	PT	695975.4184	648454.8251

ALIGNMENT NAME: TEMPORARY CROSSOVER 1

POINT	STATION	TYPE	NORTHING	EASTING
8500	10+00.00	PC	679284.2148	634687.8621
8501	13+47.36	PRC	679235.5076	635031.3047
8502	17+60.48	PT	679184.6488	635440.4703

ALIGNMENT NAME: TEMPORARY CROSSOVER 2

POINT	STATION	TYPE	NORTHING	EASTING
8510	10+00.00	PC	679247.4101	632246.8439
8511	12+37.49	PRC	679294.0923	632479.5396
8512	18+19.94	PT	679356.4436	633056.3628

ALIGNMENT NAME: LIBERTY AVE. DETOUR

POINT	STATION	TYPE	NORTHING	EASTING
8520	12+53.88	POB	681775.9478	636485.2729
8521	13+02.49	PC	681773.2566	636533.8076
8522	14+97.82	PT	681720.2781	636720.1582
8523	15+34.75	PC	681702.6183	636752.5935
8524	17+28.96	PT	681649.7030	636937.8296
8525	24+47.99	PC	681608.0770	637655.6464
8526	26+14.50	PT	681629.6946	637819.7513
8527	27+32.73	PC	681666.8739	637931.9898
8528	28+99.48	PT	681688.4779	638096.3265
8529	29+14.86	POE	681687.5793	638111.6836

ALIGNMENT NAME: BRUSH CREEK RD.

POINT	STATION	TYPE	NORTHING	EASTING
8600	11+02.51	POB	690142.3411	647293.6576
8601	15+29.41	PC	690221.3865	647713.1772
8602	16+92.27	PT	690261.1237	647871.0128
8603	17+65.80	PC	690283.3458	647941.0993
8604	20+78.72	PT	690338.3904	648248.2444
8605	23+16.57	PC	690349.7132	648485.8260
8606	25+37.67	PT	690392.8611	648701.8350
8607	26+18.76	PC	690420.4151	648778.1025
8608	29+05.88	PT	690454.8306	649060.7129
8609	29+63.52	POE	690448.8288	649118.0317

ALIGNMENT NAME: MARCHANT RD.

POINT	STATION	TYPE	NORTHING	EASTING
8620	10+14.82	POB	694033.7517	647822.6561
8621	13+84.81	PC	694403.5634	647833.9843
8622	14+75.62	PT	694459.0474	647893.8190
8623	21+48.95	PC	694428.8944	648566.4755
8624	23+16.71	PT	694420.1556	648734.0028
8625	26+25.76	POE	694401.7973	649042.5124

ALIGNMENT NAME: ROBBINS RD.

POINT	STATION	TYPE	NORTHING	EASTING
8630	9+05.87	POB	697714.7341	650424.5772
8631	12+27.48	PC	697423.3279	650560.6401
8632	14+43.25	PT	697238.0777	650670.6030
8633	14+95.44	PC	697196.0529	650701.5379
8634	16+80.06	PT	697039.9713	650799.8401
8635	20+57.83	PC	696706.5744	650977.4786
8636	23+04.03	PT	696476.8494	651064.1163
8637	25+39.33	PC	696247.8325	651118.1577
8638	27+00.82	PT	696091.6373	651159.1065
8639	30+13.42	POE	695791.3055	651245.8119

HBVinson 7/27/2023 1:56:15 PM
WORKSPACE: AHTD
L:\20\T\70\7660 - ARDOT 012326 Hwy 412 - Hwy 112\Drawings\r-012326_SC_04.dgn
REVISED DATE:

DATE REVISED	DATE REVISED	FED. RD. DIST. NO.	STATE	JOB NO.	SHEET NO.	TOTAL SHEETS
		6	ARK.	012326	214	838
		SURVEY CONTROL DETAILS				
2						

STATE OF ARKANSAS
LICENSED PROFESSIONAL ENGINEER
No.13436
SHAUN A. ROBERSON
DIGITALLY SIGNED 7/28/2023

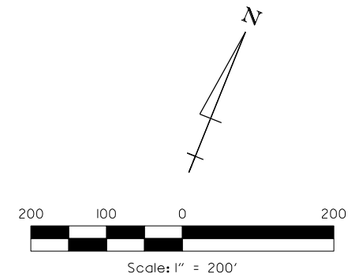

ALL BEARINGS ARE GRID
BASED ON GPS
ALL DISTANCES ARE GROUND

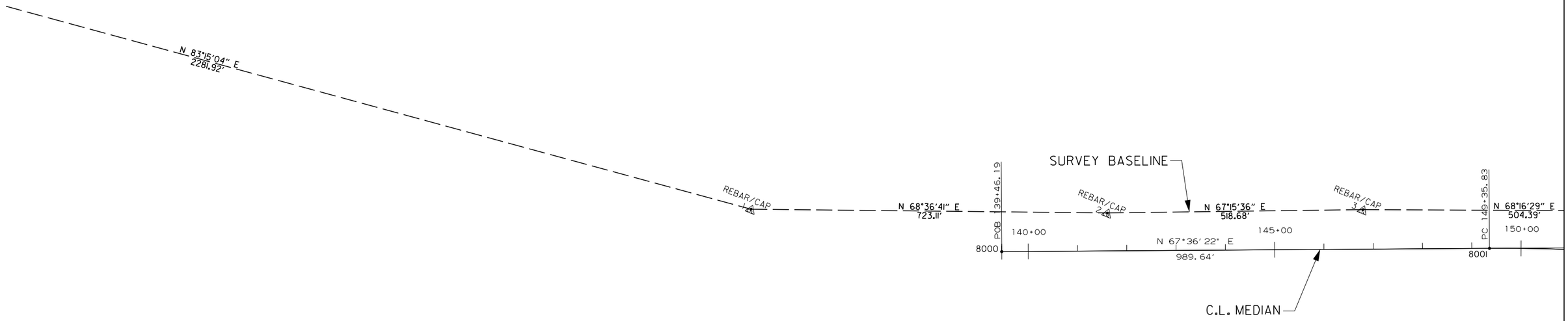

C.L. MEDIAN
P.I. = 157+80.59
Δ = 24°56'29" RT.
D = 01°30'00"
T = 844.76'
L = 1662.75'
P.C. = 149+35.83
P.T. = 165+98.58
e = 0.054'/'
Ls = 350'

SURVEY CONTROL DETAILS

HBVinson 7/27/2023 1:56:31PM
WORKSPACE: AHTD
L:\2017\17017660 - ARDOT 012326 Hwy 412 - Hwy 112\Drawings\r012326_SC_ALL_01.dgn
REVISED DATE:

DATE REVISED	DATE REVISED	FED. RD. DIST. NO.	STATE	JOB NO.	SHEET NO.	TOTAL SHEETS
		6	ARK.	012326	215	838
		SURVEY CONTROL DETAILS				

(2)

STATE OF ARKANSAS
LICENSED PROFESSIONAL ENGINEER
No.13436
SHAUN A. ROBERSON
DIGITALLY SIGNED 7/28/2023

N

200 100 0 200

Scale: 1" = 200'

ALL BEARINGS ARE GRID
BASED ON GPS
ALL DISTANCES ARE GROUND

C.L. MEDIAN
P.I. = 157+80.59
Δ = 24°56'29" RT.
D = 01°30'00"
T = 844.76'
L = 1662.75'
P.C. = 149+35.83
P.T. = 165+98.58
e = 0.054 '/'
Ls = 350'

C.L. MEDIAN
P.I. = 199+99.50
Δ = 72°45'26" LT.
D = 01°30'00"
T = 2813.95'
L = 4850.49'
P.C. = 171+85.55
P.T. = 220+36.04
e = 0.054'/'
Ls = 350'

C.L. MEDIAN STA. 169+46.18, 61.50' LT. =
C.L. HWY. 412B RAMP 4 STA. 169+46.18

C.L. MEDIAN STA. 172+37.13, 49.50' RT. =
C.L. HWY. 412B RAMP 1 STA. 172+37.13

SURVEY BASELINE

C.L. MEDIAN

HWY. 412B RAMP 4

HWY. 412B RAMP 1

MUSTEEN RD.

REBAR/CAP

N 68°16'29" E 504.39'

N 75°59'12" E 564.74'

N 67°36'22" E 1844.76'

N 84°17'55" E 598.63'

S 87°27'09" E 844.76'

S 88°29'07" E 614.66'

S 87°27'09" E 586.97'

N 89°12'24" E 664.58'

S 87°27'09" E

S 89°42'38" E 395.02'

N 72°32'38" E 300.01'

S 87°27'09" E 2813.95'

S 87°45'32" E

N 5°00'09" E

PC 149+35.83
PI 157+80.59
PT 165+98.58
PC 169+46.18
PC 171+85.55
PI 172+85.00
POB 172+37.13
PT 176+12.97
PC 179+61.23
PI 179+63.63
PT 220+24.27
PC 180+22.36
PC 15+26.86
POB 13+00.00

8001 8002 8003 8049 8090 8091 8092 8050 8207 8206 8205

150+00 155+00 160+00 165+00 170+00 175+00 180+00 20+00 15+00 13+00

HBVinson 7/27/2023 1:56:34 PM
WORKSPACE: AHTD
L:\20\7\0\7660 - ARDOT 012326 Hwy 412 - Hwy 112\Drawings\r012326.SC_ALL_02.dgn
REVISED DATE:

SURVEY CONTROL DETAILS

DATE REVISED	DATE REVISED	FED. RD. DIST. NO.	STATE	JOB NO.	SHEET NO.	TOTAL SHEETS
		6	ARK.	012326	216	838
		SURVEY CONTROL DETAILS				

STATE OF ARKANSAS
LICENSED PROFESSIONAL ENGINEER
No. 13436
SHAUN A. ROBERSON
DIGITALLY SIGNED 7/28/2023

N

400 200 0 400
Scale: 1" = 400'
ALL BEARINGS ARE GRID BASED ON GPS
ALL DISTANCES ARE GROUND

SURVEY BASELINE
C.L. MEDIAN
HWY. 68
LIBERTY AVE.
ACCESS RD.
MUSTEEN RD.
HWY. 412B RAMP 1
HWY. 412B RAMP 2
HWY. 412B RAMP 3
HWY. 412B RAMP 4
HWY. 412B

C.L. MEDIAN STA. 169+46.18, 61.50' LT. =
C.L. HWY. 412B RAMP 4 STA. 169+46.18

C.L. MEDIAN STA. 172+37.13, 49.50' RT. =
C.L. HWY. 412B RAMP 1 STA. 172+37.13

C.L. HWY. 68 STA. 53+50.54 =
C.L. HWY. 412B RAMP 2 STA. 192+24.57

C.L. HWY. 68 STA. 46+48.03 =
C.L. HWY. 412B RAMP 3 STA. 192+19.83

C.L. MEDIAN STA. 210+57.66, 46.50' LT. =
C.L. HWY. 412B RAMP 3 STA. 210+57.66

C.L. MEDIAN STA. 209+00.00, 58.50' RT. =
C.L. HWY. 412B RAMP 2 STA. 209+00.00

C.L. HWY. 412B STA. 10+81.62 =
C.L. HWY. 68 STA. 56+90.84 =
C.L. MUSTEEN STA. 40+00.00

C.L. HWY. 412B STA. 10+00.00 =
C.L. HWY. 412B RAMP 4 STA. 195+50.88, 13.50' RT. =
C.L. HWY. 412B RAMP 1 STA. 194+50.62, 13.50' LT.

CURVE DATA

CURVE	PC	PI	PT	Δ	D	TANGENT FEET	LENGTH FEET	e FT./FT.	Ls FEET	DESIGN SPEED
I-1	180+22.36	180+99.15	181+75.93	0°46'04"	0°30'00"	76.79	153.57	N/A	N/A	50 MPH
I-2	183+45.86	185+16.35	186+86.81	1°42'17"	0°30'00"	170.49	340.95	N/A	N/A	50 MPH
I-3	192+13.38	193+32.01	194+50.62	1°46'45"	0°45'00"	118.63	237.24	N/A	N/A	40 MPH
2-1	196+33.59	197+89.23	199+42.97	15°28'08"	5°00'00"	155.64	309.38	0.083	300	50 MPH
2-2	202+20.36	202+98.08	203+75.72	4°39'39"	3°00'00"	77.72	155.36	0.057	300	50 MPH
3-1	193+44.30	194+51.52	195+57.53	14°55'36"	7°00'00"	107.22	213.23	0.098	350	50 MPH
3-2	197+59.11	204+34.61	210+57.66	38°57'23"	3°00'00"	675.50	1298.55	0.057	300	50 MPH
4-1	169+46.18	172+83.00	176+12.97	20°00'13"	3°00'00"	336.82	666.79	0.057	300	50 MPH
4-2	179+61.23	182+58.98	185+23.80	46°24'43"	8°15'00"	297.75	562.57	0.10	350	50 MPH
4-3	188+54.29	190+69.09	192+76.85	25°21'12"	6°00'00"	214.80	422.56	0.092	350	50 MPH
ML-1	149+35.83	157+80.59	165+98.58	24°56'29"	1°30'00"	844.76	1662.75	0.054	350	70 MPH
ML-2	171+85.55	199+99.50	220+36.04	72°45'26"	1°30'00"	2813.95	4850.49	0.054	350	70 MPH
68-1	51+83.56	52+69.24	53+54.91	0°51'24"	0°30'00"	85.68	171.35	N/A	N/A	50 MPH
68-2	54+42.82	55+40.63	56+28.29	44°58'38"	24°15'00"	97.81	185.47	N/A	N/A	50 MPH
B-1	16+06.94	18+11.60	20+16.21	2°02'47"	0°30'00"	204.66	409.27	N/A	N/A	60 MPH
M-1	15+26.86	19+63.65	22+24.77	87°14'19"	12°30'00"	436.79	697.91	0.10	250	40 MPH
M-2	30+29.97	31+16.06	32+00.32	20°26'32"	12°00'00"	86.09	170.35	0.099	250	40 MPH
M-3	34+76.65	38+14.50	39+30.54	110°04'02"	24°15'00"	337.85	453.89	0.10	250	30 MPH

HBVinson 7/27/2023 1:56:36 PM
WORKSPACE: AHTD
L:\2017\17017660 - ARDOT 012326 Hwy 412 - Hwy 412\Drawings\r012326_SC_ALL_03.dgn
REVISED DATE:

SURVEY CONTROL DETAILS

DATE REVISED	DATE REVISED	FED. RD. DIST. NO.	STATE	JOB NO.	SHEET NO.	TOTAL SHEETS
		6	ARK.	012326	217	838
		SURVEY CONTROL DETAILS				
2						

STATE OF ARKANSAS
LICENSED PROFESSIONAL ENGINEER
No.13436
SHAUN A. ROBERSON
DIGITALLY SIGNED 7/28/2023

N

200 100 0 200

Scale: 1" = 200'

ALL BEARINGS ARE GRID
BASED ON GPS
ALL DISTANCES ARE GROUND

POB 12+78.71
8230
15.00
S 86°40'38" E
972.19'
C.L. LIBERTY AVE.
REBAR/CAP
14A
N 52°10'28" E
691.90'
210+00
215+00
220+00
PT 220+36.03
20.00
8004
N 19°47'25" E
971.28'
225+00
C.L. MEDIAN
PC 230+07.31
230+00
8005
235+00
N 19°47'25" E
1095.32
240+00
N 19°47'25" E
2813.95'
REBAR/CAP
15A
POB 14+47.34
8240
15.00
S 86°40'38" E
8231
PC 22+50.90
PI 23+30.54
8232
PT 24+10.18
25.00
8241
8243
8242
PC 18+33.74
C.L. LIBERTY AVE.
ACCESS RD.
C.L. LIBERTY AVE. STA. 25+50.00 =
C.L. LIBERTY AVE. ACCESS RD. STA. 20+00.00
PI 18+90.19
19.29
PT
00.00
POE
S 87°28'25" E
29.09
8233
POE 29+08.60
N 17°31'35" E
SURVEY BASELINE
N 43°29'45" E
1059.05'
REBAR/CAP
16A
N 40°19'26" E
348.13'
REBAR/CAP
17A
N 60°07'27" E
585.60'
REBAR/CAP
18A

C.L. MEDIAN
P.I. 199+99.50
Δ = 72°45'26" LT.
D = 01°30'00"
T = 2813.95'
L = 4850.49'
P.C. = 171+85.55
P.T. = 220+36.03
e = 0.054'/'
Ls = 350'

C.L. LIBERTY AVE. ACCESS RD.
P.I. = 18+90.19
Δ = 75°47'47" LT.
D = 79°00'00"
T = 56.46'
L = 95.94'
P.C. = 18+33.74
P.T. = 19+29.68

C.L. LIBERTY AVE.
P.I. = 23+30.54
Δ = 00°47'47" LT.
D = 00°30'00"
T = 79.65'
L = 159.29'
P.C. = 22+50.90
P.T. = 24+10.18

C.L. MEDIAN
P.I. 241+02.63
Δ = 67°34'21" RT.
D = 03°30'00"
T = 1095.32'
L = 1930.64'
P.C. = 230+07.31
P.T. = 249+37.96
e = 0.10'/'
Ls = 450'

SURVEY CONTROL DETAILS

HBVinson 7/27/2023 11:56:36 PM
WORKSPACE: AHTD
L:\2017\170176\60 - ARDOT 02326 Hwy 412 - Hwy 112\Drawings\r02326_SC_ALL_04.dgn
REVISED DATE:

DATE REVISED	DATE REVISED	FED. RD. DIST. NO.	STATE	JOB NO.	SHEET NO.	TOTAL SHEETS
		6	ARK.	012326	218	838
		SURVEY CONTROL DETAILS				
2						

STATE OF ARKANSAS
LICENSED PROFESSIONAL ENGINEER
No.13436
SHAUN A. ROBERSON
DIGITALLY SIGNED 7/28/2023

200 100 0 200
Scale: 1" = 200'
ALL BEARINGS ARE GRID
BASED ON GPS
ALL DISTANCES ARE GROUND

N

SURVEY BASELINE

N 87°21'46" E
1095.32'

240+00
245+00
PT 249+37.95
8006
250+00
255+00
260+00
265+00
270+00

REBAR/CAP
20

S 85°59'45" E
1211.13'

N 87°21'46" E
5458.12'

N 49°58'07" E
994.51'

C.L. MEDIAN

C.L. MEDIAN
P.I. = 241+02.63
Δ = 67°34'21" RT.
D = 03°30'00"
T = 1095.32'
L = 1930.64'
P.C. = 230+07.31
P.T. = 249+37.95
e = 0.10'/'
Ls = 450'

REBAR/CAP
19

N 53°04'41" E
636.65'

REBAR/CAP
18

N 60°07'27" E
585.60'

REBAR/CAP
17

E

HBVinson
7/27/2023 11:56:37 PM
WORKSPACE: AHTD
L:\2017\170760 - ARDOT 012326 Hwy 412 - Hwy 112\Drawings\r012326_SC_ALL_05.dgn
REVISED DATE:

SURVEY CONTROL DETAILS

DATE REVISED	DATE REVISED	FED. RD. DIST. NO.	STATE	JOB NO.	SHEET NO.	TOTAL SHEETS
		6	ARK.	012326	219	838
②		SURVEY CONTROL DETAILS				

STATE OF ARKANSAS
LICENSED PROFESSIONAL ENGINEER
No.13436
SHAUN A. ROBERSON
DIGITALLY SIGNED 7/28/2023

N

200 100 0 200

Scale: 1" = 200'

ALL BEARINGS ARE GRID
BASED ON GPS
ALL DISTANCES ARE GROUND

SURVEY BASELINE

REBAR/CAP 23

N 70°15'43" E
1286.14'

REBAR/CAP 26

S 64°47'21" E
491.21'

REBAR/CAP 27

N 80°41'14" E
412.62'

REBAR/CAP 28

POB 16+00.00

8250

N 76°41'12" E
701.75'

REBAR/CAP 29

270+00 275+00 280+00 285+00 290+00 295+00 300+00

N 87°21'46" E
5458.12'

REBAR/CAP 24

REBAR/CAP 25

C.L. MEDIAN

20.00

C.L. JAVELLO RD.

25.00

30.00

8251

PC 29+84.15

S 25°50'40" E

PI 31+80.55

C.L. JAVELLO RD.
P.I. = 31+80.55'
Δ = 48°02'13" RT.
D = 13°00'00"
T = 196.40'
L = 369.52'
P.C. = 29+84.15
P.T. = 33+53.67
e = 0.10'/'
Ls = 250'

SURVEY CONTROL DETAILS

HBVinson
7/27/2023 11:56:37 PM
WORKSPACE: AHTD
L:\2017\17017660 - ARDOT 012326 Hwy 412 - Hwy 112\Drawings\r012326_SC_ALL_06.dgn
REVISED DATE:

DATE REVISED	DATE REVISED	FED. RD. DIST. NO.	STATE	JOB NO.	SHEET NO.	TOTAL SHEETS
		6	ARK.	012326	220	838
		SURVEY CONTROL DETAILS				

STATE OF ARKANSAS
LICENSED PROFESSIONAL ENGINEER
No.13436
SHAUN A. ROBERSON
DIGITALLY SIGNED 7/28/2023

200 100 0 200
Scale: 1" = 200'
ALL BEARINGS ARE GRID
BASED ON GPS
ALL DISTANCES ARE GROUND

N

REBAR/CAP 29

S 72°47'48" E
600.54'

REBAR/CAP 30

N 65°59'40" E
1182.58'

SURVEY BASELINE

REBAR/CAP 31

RBR ALUM CAP 196

N 57°30'03" E
538.33'

REBAR/CAP 32

N 71°20'30" E
685.39'

REBAR/CAP 33

300+00

N 87°21'46" E
5458.12'

PC 303+96.08

8007

305+00

310+00

315+00

320+00

325+00

330+00

C.L. MEDIAN

N 87°21'46" E
3647.83'

C.L. MEDIAN
P.I. = 340+43.91
Δ = 87°21'46" LT.
D = 01°30'00"
T = 3647.83'
L = 5824.19'
P.C. = 303+96.08
P.T. = 362+20.27
e = 0.054'/'
Ls = 350'

35+00

C.L. JAVELLO RD.

S 73°52'53" E

POE 38+50.00

8253

HBVinson 7/27/2023 11:56:38 PM
WORKSPACE: AHTD
L:\2017\7017660 - ARDOT 012326 Hwy 412 - Hwy 112\Drawings\r012326_SC_ALL_07.dgn
REVISED DATE:

SURVEY CONTROL DETAILS

DATE REVISED	DATE REVISED	FED. RD. DIST. NO.	STATE	JOB NO.	SHEET NO.	TOTAL SHEETS
		6	ARK.	012326	221	838
		SURVEY CONTROL DETAILS				

STATE OF ARKANSAS
LICENSED PROFESSIONAL ENGINEER
No.13436
SHAUN A. ROBERSON
DIGITALLY SIGNED 7/28/2023

N

200 100 0 200

Scale: 1" = 200'

ALL BEARINGS ARE GRID
BASED ON GPS
ALL DISTANCES ARE GROUND

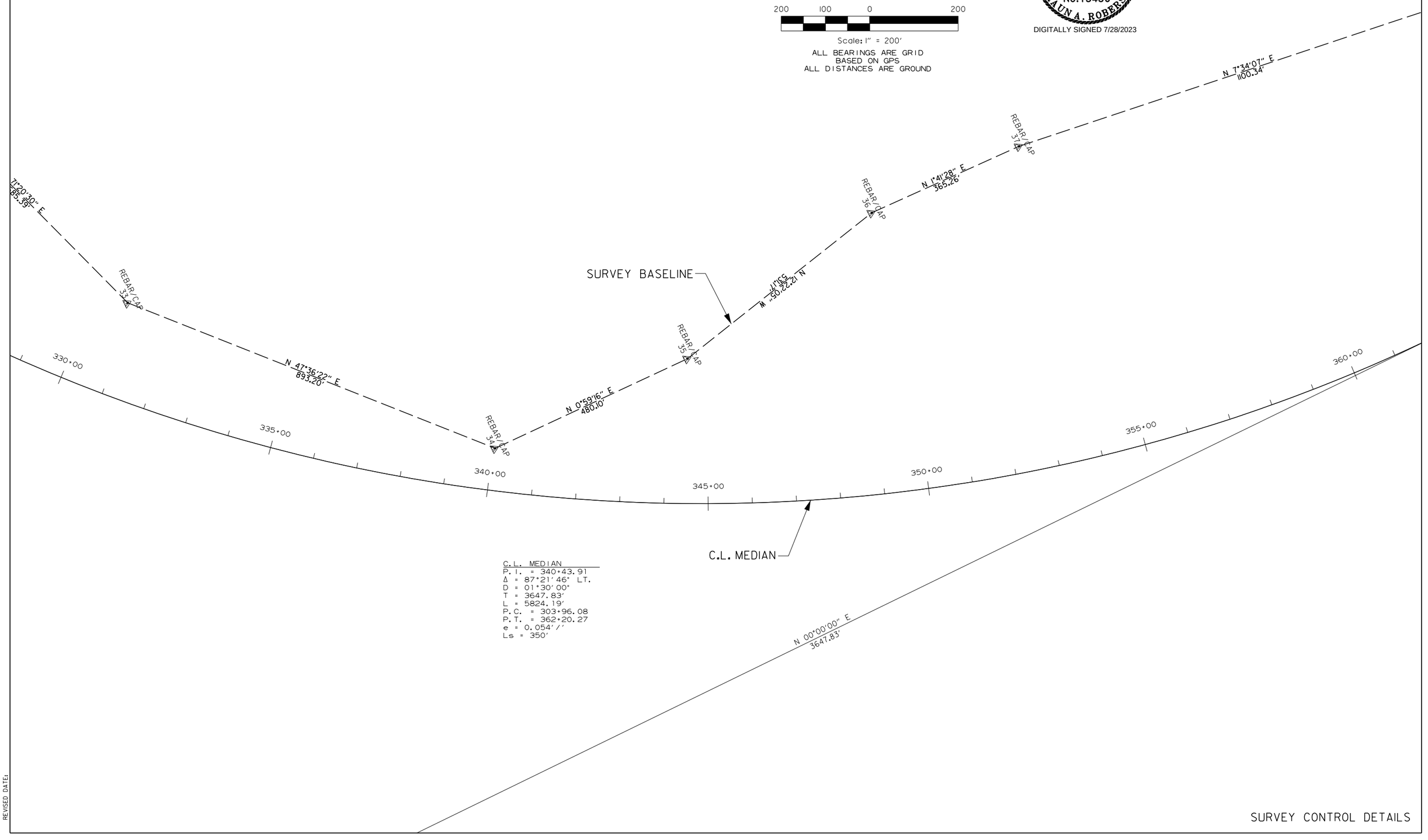

C.L. MEDIAN
P.I. = 340+43.91
Δ = 87°21'46" LT.
D = 01°30'00"
T = 3647.83'
L = 5824.19'
P.C. = 303+96.08
P.T. = 362+20.27
e = 0.054'/'
Ls = 350'

SURVEY CONTROL DETAILS

HBVinson 7/27/2023 1:56:39 PM
WORKSPACE: AHTD
L:\2017\17017660 - ARDOT 012326 Hwy 412 - Hwy 112\Drawings\r012326_SC_ALL_08.dgn
REVISED DATE:

DATE REVISED	DATE REVISED	FED. RD. DIST. NO.	STATE	JOB NO.	SHEET NO.	TOTAL SHEETS
		6	ARK.	012326	222	838
②		SURVEY CONTROL DETAILS				

STATE OF ARKANSAS
LICENSED PROFESSIONAL ENGINEER
No.13436
SHAUN A. ROBERSON
DIGITALLY SIGNED 7/28/2023

N

200 100 0 200

Scale: 1" = 200'
ALL BEARINGS ARE GRID
BASED ON GPS
ALL DISTANCES ARE GROUND

N 7°34'07" E
1100.34'

REBAR/CAP 38

N 6°58'27" E
931.82'

REBAR/CAP 39

N 3°41'23" E
848.44'

REBAR/CAP 40

SURVEY BASELINE

N 13°39'42" W
899.37'

POB 11+02.51

8600

C.L. BRUSH CREEK RD.

N 79°19'46" E
426.90'

15+00

PC 15+29.41

8601

N 79°19'46" E
81.53'

PI 16+10.94

CPS 41

PT 16+92.27

8602

N 72°24'29" E
81.53'

PC 17+65.80

N 11°17'49" E
754.04'

N 72°24'29" E
73.53'

8603

N 72°24'29" E
157.34'

PI 19+23.14

N 87°16'17" E
157.34'

20+00

C.L. BRUSH CREEK RD.
P.I. = 16+10.94
Δ = 6°55'17" LT.
D = 4°15'00"
T = 81.53'
L = 162.86'
P.C. = 15+29.41
P.T. = 16+92.27
e = NO SUPER

360+00 365+00 370+00 375+00 380+00 385+00 390+00

PT 362+20.27

8008

N 00°00'00" E
3647.83'

N 00°00'00" E
5203.25'

C.L. MEDIAN

C.L. MEDIAN
P.I. = 340+43.91
Δ = 87°21'46" LT.
D = 01°30'00"
T = 3647.83'
L = 5824.19'
P.C. = 303+96.08
P.T. = 362+20.27
e = 0.054'/'
Ls = 350'

C.L. BRUSH CREEK RD.
P.I. = 19+23.14
Δ = 14°51'48" RT.
D = 4°45'00"
T = 157.34'
L = 312.92'
P.C. = 17+65.80
P.T. = 20+78.72
e = NO SUPER

8604

PT 20+78.72

N 87°16'17" E
237.85'

8605

PC 23+16.57

N 87°16'17" E
111.38'

C.L. BRUSH CREEK RD.
P.I. = 24+27.95
Δ = 17°08'07" LT.
D = 7°45'00"
T = 111.38'
L = 221.10'
P.C. = 23+16.57
P.T. = 25+37.67
e = NO SUPER

PI 24+27.95

25+00

PT 25+37.67

N 70°08'10" E
111.38'

8606

PC 26+18.76

N 70°08'10" E
81.09'

8607

N 70°08'10" E
146.04'

C.L. BRUSH CREEK RD.
P.I. = 27+64.80
Δ = 25°50'29" RT.
D = 9°00'00"
T = 146.04'
L = 287.12'
P.C. = 26+18.76
P.T. = 29+05.88
e = NO SUPER

PI 27+64.80

S 84°01'21" E
146.04'

S 84°01'21" E
57.64'

8608

PT 29+05.88

POE 29+63.52

8609

SURVEY CONTROL DETAILS

HBVinson
7/27/2023 1:56:39 PM
WORKSPACE: AHTD
L:\2017\1701660 - ARDOT 012326 Hwy 412 - Hwy 112\Drawings\r012326_SC_ALL_09.dgn
REVISED DATE:

DATE REVISED	DATE REVISED	FED. RD. DIST. NO.	STATE	JOB NO.	SHEET NO.	TOTAL SHEETS
		6	ARK.	012326	223	838
		SURVEY CONTROL DETAILS				
(2)						

N

200 100 0 200

Scale: 1" = 200'
ALL BEARINGS ARE GRID
BASED ON GPS
ALL DISTANCES ARE GROUND

STATE OF ARKANSAS
LICENSED PROFESSIONAL ENGINEER
No.13436
SHAUN A. ROBERSON

DIGITALLY SIGNED 7/28/2023

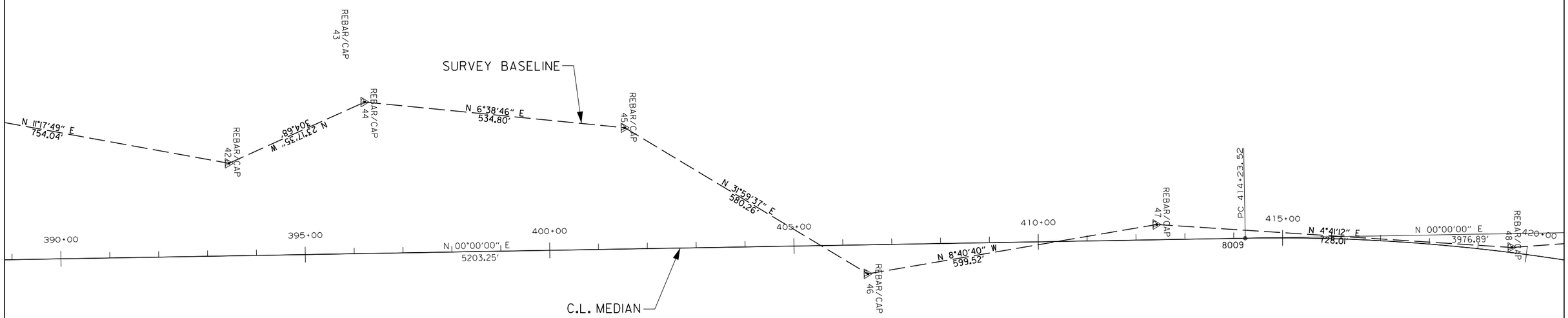

C.L. MEDIAN
P.I. = 454+00.41
Δ = 92°18'35" RT.
D = 01°30'00"
T = 3976.89'
L = 6153.98'
P.C. = 414+23.52
P.T. = 475+77.50
e = 0.054'/'
Ls = 350'

SURVEY CONTROL DETAILS

HBVinson
7/27/2023 11:56:40 PM
WORKSPACE: AHTD
L:\2017\170760 - ARDOT 012326 Hwy 412 - Hwy 112\Drawings\r012326.SC.ALL.10.dgn
REVISED DATE:

DATE REVISED	DATE REVISED	FED. RD. DIST. NO.	STATE	JOB NO.	SHEET NO.	TOTAL SHEETS
		6	ARK.	012326	224	838
(2)		SURVEY CONTROL DETAILS				

STATE OF ARKANSAS
LICENSED PROFESSIONAL ENGINEER
No.13436
SHAUN A. ROBERSON
DIGITALLY SIGNED 7/28/2023

Scale: 1" = 400'

C.L. XNA ACCESS RD. MEDIAN
C.L. XNA ACCESS RD. MEDIAN STA. 103+33.77 46.50' RT. =
C.L. XNA ACCESS RD. RAMP 3 STA. 429+54.36
C.L. XNA ACCESS RD. MEDIAN STA. 100+00.00 37.50' RT. =
C.L. XNA ACCESS RD. RAMP 1 STA. 484+19.97
C.L. XNA ACCESS RD. MEDIAN STA. 100+00.00 37.50' LT. =
C.L. XNA ACCESS RD. RAMP 2 STA. 416+52.40
C.L. XNA ACCESS RD. RAMP 2 STA. 421+81.07 9.00' RT. =
C.L. XNA ACCESS RD. RAMP 4 STA. 444+24.83
C.L. XNA ACCESS RD. RAMP 3
C.L. MEDIAN STA. 441+53.13 =
C.L. XNA ACCESS RD. RAMP 1 STA. 471+49.90
C.L. XNA ACCESS RD. RAMP 4
C.L. MEDIAN STA. 438+43.91 =
C.L. XNA ACCESS RD. RAMP 2 STA. 429+61.07
C.L. MEDIAN STA. 428+87.18 58.50' LT. =
C.L. XNA ACCESS RD. RAMP 4 STA. 428+87.18
C.L. MEDIAN STA. 446+49.37 58.50' RT. =
C.L. XNA ACCESS RD. RAMP 1 STA. 446+49.37
C.L. MEDIAN STA. 453+46.66 58.50' LT. =
C.L. XNA ACCESS RD. RAMP 3 STA. 453+46.66
C.L. MARCHANT RD.
C.L. MEDIAN STA. 428+07.17 =
C.L. MARCHANT RD. STA. 20+00.00
C.L. MARCHANT RD. ACCESS RD.
C.L. MARCHANT RD. STA. 22+50.00 =
C.L. MARCHANT RD. ACCESS RD. STA. 20+00.00
C.L. XNA ACCESS RD. RAMP 2
C.L. XNA ACCESS RD. RAMP 1
C.L. MEDIAN STA. 461+93.78 58.50' RT. =
C.L. XNA ACCESS RD. RAMP 2 STA. 461+93.78
C.L. MEDIAN STA. 463+71.03 =
C.L. ROBBINS RD. STA. 20+00.00
C.L. ROBBINS RD.
C.L. HWY. 612 MEDIAN
C.L. HWY. 112 RAMP 1
SURVEY BASELINE
SURVEY CONTROL DETAILS

RBR ALUM CAP 51
REBAR/CAP 48
REBAR/CAP 50

CURVE DATA

CURVE	PC	PI	PT	Δ	D	TANGENT FEET	LENGTH FEET	e FT./FT.	Ls FEET	DESIGN SPEED
1-1	446+49.37	N/A	466+31.90	262°41'08" RT.	13°15'00"	N/A	1982.53	0.100	350	40 MPH
2-1	416+52.40	420+07.87	423+59.72	14°08'47" RT.	2°00'00"	355.47	707.32	0.070	350	70 MPH
2-2	431+54.43	450+91.40	448+58.06	140°32'59" LT.	8°15'00"	1936.97	1703.63	0.100	350	50 MPH
2-3	453+83.07	458+41.73	461+93.78	66°53'02" RT.	8°15'00"	458.66	810.71	0.100	350	50 MPH
3-1	429+54.36	431+56.96	433+59.53	2°01'33" LT.	0°30'00"	202.60	405.17	N/A	N/A	50 MPH
3-2	436+48.14	443+19.28	448+18.14	70°12'01" LT.	6°00'00"	671.14	1170.00	0.092	350	50 MPH
4-1	434+19.69	439+74.45	444+24.83	60°18'30" LT.	6°00'00"	554.76	1005.14	0.092	350	50 MPH
612-5	414+23.52	454+00.41	475+77.50	92°18'35" RT.	1°30'00"	3976.89	6153.98	0.054	350	70 MPH
5-1	13+84.81	14+42.92	14+75.62	90°48'44" RT.	100°00'00"	58.11	90.81	N/A	N/A	35 MPH
5-2	21+48.95	22+32.83	23+16.71	0°50'20" RT.	0°30'00"	83.88	167.76	N/A	N/A	35 MPH
6-1	12+27.48	13+35.72	14+43.25	11°19'42" LT.	5°15'00"	108.24	215.77	N/A	N/A	35 MPH
6-2	14+95.44	15+87.91	16+80.06	8°18'28" RT.	4°30'00"	92.47	184.62	N/A	N/A	35 MPH
6-3	20+57.83	21+81.61	23+04.03	14°46'20" RT.	6°00'00"	123.78	246.20	N/A	N/A	35 MPH
6-4	25+39.33	26+20.09	27+00.82	2°49'34" LT.	1°45'00"	80.76	161.49	N/A	N/A	35 MPH

HBVinson 7/27/2023 1:56:46 PM
WORKSPACE: AHTD
L:\20IT\1701660 - ARDOT 012326 Hwy 412 - Hwy 112\Drawings\r012326_SC_ALL_II.dgn
REVISED DATE:

DATE REVISED	DATE REVISED	FED. RD. DIST. NO.	STATE	JOB NO.	SHEET NO.	TOTAL SHEETS
		6	ARK.	012326	225	838
(2)		SURVEY CONTROL DETAILS				

STATE OF ARKANSAS
LICENSED PROFESSIONAL ENGINEER
No.13436
SHAUN A. ROBERSON
DIGITALLY SIGNED 7/28/2023

N

400 200 0 400
Scale: 1" = 400'

ALL BEARINGS ARE GRID
BASED ON GPS
ALL DISTANCES ARE GROUND

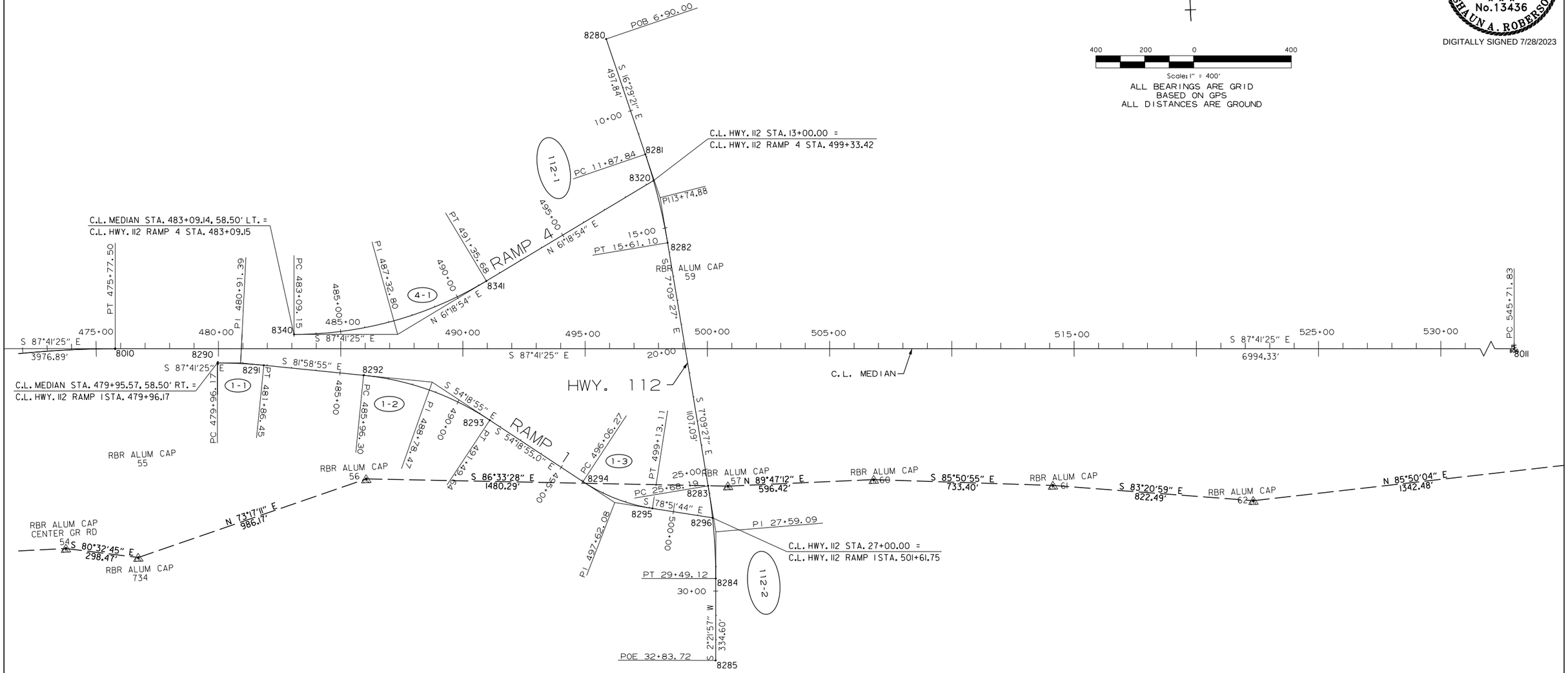

CURVE DATA

CURVE	PC	PI	PT	Δ	D	TANGENT (FEET)	LENGTH (FEET)	e (FT./FT.)	Ls (FEET)	DESIGN SPEED
1-1	479+96.17	480+91.39	481+86.45	5°42'30"	3°00'00.0"	95.22	190.28	NC	NA	50 MPH
1-2	485+96.30	488+78.47	491+49.64	27°40'00"	5°00'00.0"	282.17	553.34	0.083	300	50 MPH
1-3	496+06.27	497+62.08	499+13.11	24°32'49"	8°00'00.0"	155.81	306.84	0.084	300	40 MPH
4-1	483+09.15	487+32.80	491+35.68	30°59'41"	3°45'00.0"	423.65	826.53	0.069	300	50 MPH
112-1	11+87.84	13+74.88	15+61.10	9°19'54"	2°30'00.0"	187.04	373.26	0.049	300	50 MPH
112-2	25+68.19	27+59.09	29+49.12	9°31'24"	2°30'00.0"	190.90	380.93	0.049	300	50 MPH

HBVinson 7/27/2023 1:56:47 PM
WORKSPACE: AHTD
L:\2017\17017660 - ARDOT 012326 Hwy 412 - Hwy 112\Drawings\r012326_SC_ALL_12.dgn
REVISED DATE:

SURVEY CONTROL DETAILS

DATE REVISED	DATE REVISED	FED. RD. DIST. NO.	STATE	JOB NO.	SHEET NO.	TOTAL SHEETS
		6	ARK.	012326	226	838
		SURVEY CONTROL DETAILS				
②						

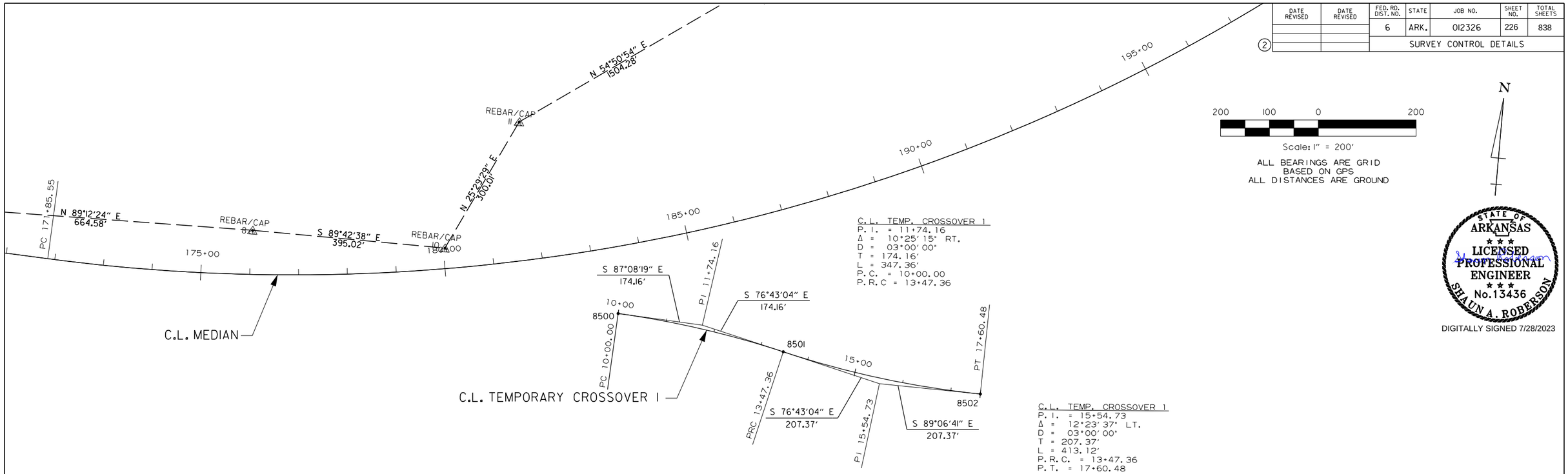

SURVEY CONTROL DETAILS
TEMPORARY CROSSOVER 1

STATE OF ARKANSAS
LICENSED PROFESSIONAL ENGINEER
No.13436
SHAUN A. ROBERSON
DIGITALLY SIGNED 7/28/2023

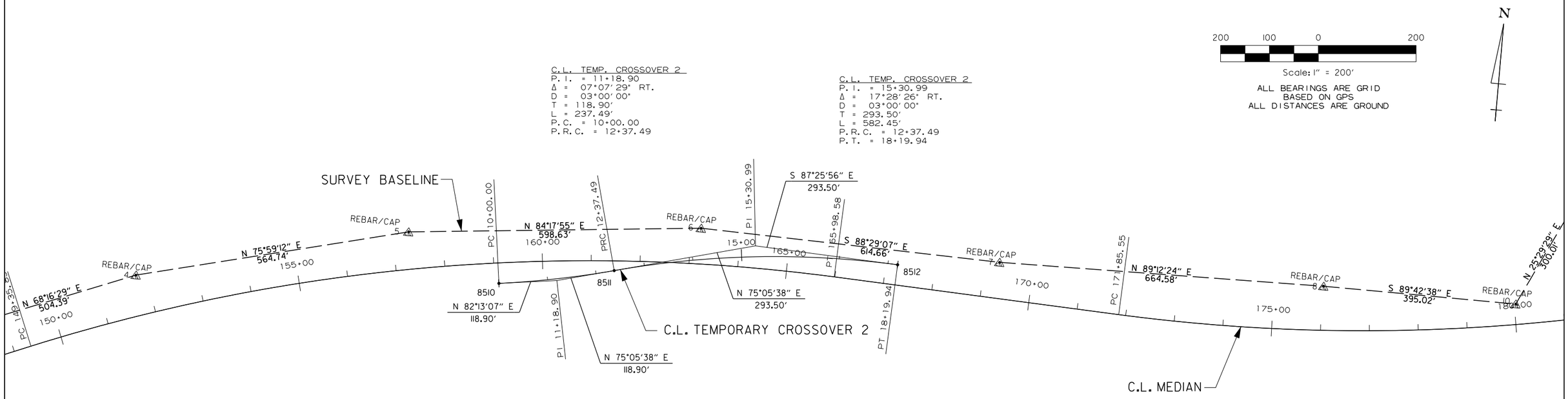

SURVEY CONTROL DETAILS
TEMPORARY CROSSOVER 2

HBVinson 7/27/2023 1:56:48 PM
WORKSPACE: AHTD
L:\2017\17017660 - ARDOT 012326 Hwy 412 - Hwy 112\Drawings\r012326_SC_DETOUR.01.dgn
REVISED DATE:

DATE REVISED	DATE REVISED	FED. RD. DIST. NO.	STATE	JOB NO.	SHEET NO.	TOTAL SHEETS
		6	ARK.	012326	227	838
		SURVEY CONTROL DETAILS				

STATE OF ARKANSAS
LICENSED PROFESSIONAL ENGINEER
No. 13436
SHAUN A. ROBERSON

DIGITALLY SIGNED 7/28/2023

200 100 0 200

Scale: 1" = 200'

ALL BEARINGS ARE GRID
BASED ON GPS
ALL DISTANCES ARE GROUND

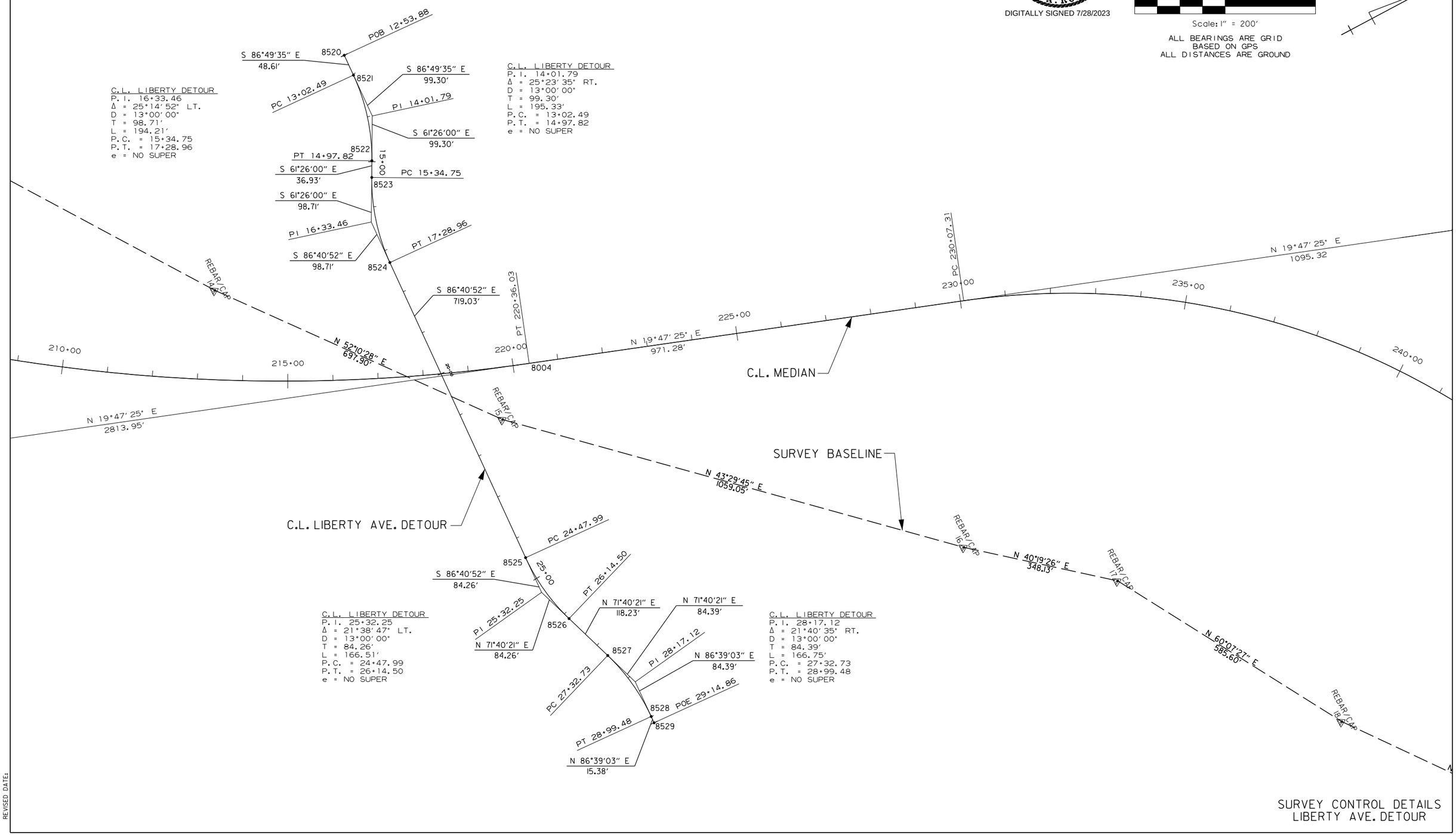

C.L. LIBERTY DETOUR
P.I. 16+33.46
Δ = 25°14'52" LT.
D = 13°00'00"
T = 98.71'
L = 194.21'
P.C. = 15+34.75
P.T. = 17+28.96
e = NO SUPER

C.L. LIBERTY DETOUR
P.I. 14+01.79
Δ = 25°23'35" RT.
D = 13°00'00"
T = 99.30'
L = 195.33'
P.C. = 13+02.49
P.T. = 14+97.82
e = NO SUPER

C.L. LIBERTY DETOUR
P.I. 25+32.25
Δ = 21°38'47" LT.
D = 13°00'00"
T = 84.26'
L = 166.51'
P.C. = 24+47.99
P.T. = 26+14.50
e = NO SUPER

C.L. LIBERTY DETOUR
P.I. 28+17.12
Δ = 21°40'35" RT.
D = 13°00'00"
T = 84.39'
L = 166.75'
P.C. = 27+32.73
P.T. = 28+99.48
e = NO SUPER

SURVEY CONTROL DETAILS
LIBERTY AVE. DETOUR

HBVinson 7/27/2023 1:56:49 PM
WORKSPACE: AHTD
L:\2017\17017660 - ARDOT 012326 Hwy 412 - Hwy 112\Drawings\r012326_SC_DETOUR_02.dgn
REVISED DATE:

DATE REVISED	DATE REVISED	FED. RD. DIST. NO.	STATE	JOB NO.	SHEET NO.	TOTAL SHEETS
		6	ARK.	012326	228	838
		PLAN - C.L. MEDIAN				

(2)

STATE OF ARKANSAS
LICENSED PROFESSIONAL ENGINEER
No.13436
SHAUN A. ROBERSON
DIGITALLY SIGNED 7/28/2023

N

STA. 146+48 IN PLACE
DROP INLET
36" X 209' R.C. PIPE CULVERT
WITH FES LT. & RT.
TO REMAIN

EXISTING R/W & C/A

STA. 144+68.03
STA. 145+68.03
STA. 148+68.03
CONSTRUCTION LIMITS
100' TRANSITION TO MATCH EXISTING
300' TAPER
1000' ACCELERATION LANE

C.L. MEDIAN

10'
24'
6'
60'
6'
24'
10'

140+00

TRANSITION CROSSOVER 145+00 TO MATCH EXISTING

N 67°36'22" E

PC 149+35.83
10'
36'
6'
150+00

145+36.09
30.00' LT.

146+30.15
18.00' LT.

147+25.00
18.00' LT.

149+50.00
30.00' LT.

STA. 145+68.03
BEGIN JOB 012326

C.L. MEDIAN
P.I. = 157+80.59
Δ = 24°56'29" RT.
D = 1°30'00"
T = 844.76'
L = 1662.75'
P.C. = 149+35.83
P.T. = 165+98.58
e = 0.054'/'
Ls = 350'

EXISTING R/W & C/A

GATE

C.L. MEDIAN

WBCallaway 7/31/2023 3:54:57 PM
WORKSPACE: AHTD
L:\20\1\101\660 - ARDOT 012326 Hwy 412 - Hwy 112\Drawings\r012326_PP_01_MNL.dgn
REVISED DATE:

DATE REVISED	DATE REVISED	FED. RD. DIST. NO.	STATE	JOB NO.	SHEET NO.	TOTAL SHEETS
		6	ARK.	012326	229	838
		PROFILE - C.L. MEDIAN				
②						

STATE OF ARKANSAS
LICENSED PROFESSIONAL ENGINEER
No.13436
SHAUN A. ROBERSON
DIGITALLY SIGNED 7/28/2023

REFER TO SURVEY CONTROL DETAIL SHEETS
FOR HORIZONTAL AND VERTICAL CONTROL POINTS

STA. 146+73.33 BEGIN SUPERELEVATION
STA. 150+23.33 MAX. SUPERELEVATION (0.054'/')
STA. 165+11.08 MAX. SUPERELEVATION (0.054'/')
STA. 168+61.08 END SUPERELEVATION

STA. 145+68.03
BEGIN JOB 012326

100' TRANSITION TO MATCH EXISTING

OVERLAY WITH NOTCH & WIDEN

EXISTING GROUND

F.L. = 1159.28 LT.
F.L. = 1166.44 RT.

1220
1210
1200
1190
1180
1170
1160
1150
1140
1130

139+46 140+00 141+00 142+00 143+00 144+00 145+00 146+00 147+00 148+00 149+00 150+00

WBCallaway 7/31/2023 3:54:57 PM
WORKSPACE: AHTD
L:\20IT\170I7660 - ARDOT 012326 Hwy 412 - Hwy 112\Drawings\r012326_PP_01_MNL.dgn
REVISED DATE:

DATE REVISED	DATE REVISED	FED. RD. DIST. NO.	STATE	JOB NO.	SHEET NO.	TOTAL SHEETS
		6	ARK.	012326	230	838

PLAN - C.L. MEDIAN

STATE OF ARKANSAS
LICENSED PROFESSIONAL ENGINEER
No. 13436
SHAUN A. ROBERSON

DIGITALLY SIGNED 8/09/2023

CONCRETE DITCH PAVING (TYPE B)

STA.	STA.	SIDE	"W"	SQ. YDS.
155+45	157+00	LT. = 162 LIN. FT.	6'-0"	108.00
160+30	160+50	LT. = 36 LIN. FT.	9'-0"	36.00

CONCRETE DITCH PAVING REMOVAL (TYPE B)

STA.	STA.	SIDE	SQ. YDS.
160+15	160+45	LT.	25.9

FENCING

STA.	STA.	SIDE	TYPE A FENCE
152+59	159+00	LT.	729 LIN. FT.
154+75	157+10	RT.	330 LIN. FT.
161+59	165+00	LT.	363 LIN. FT.

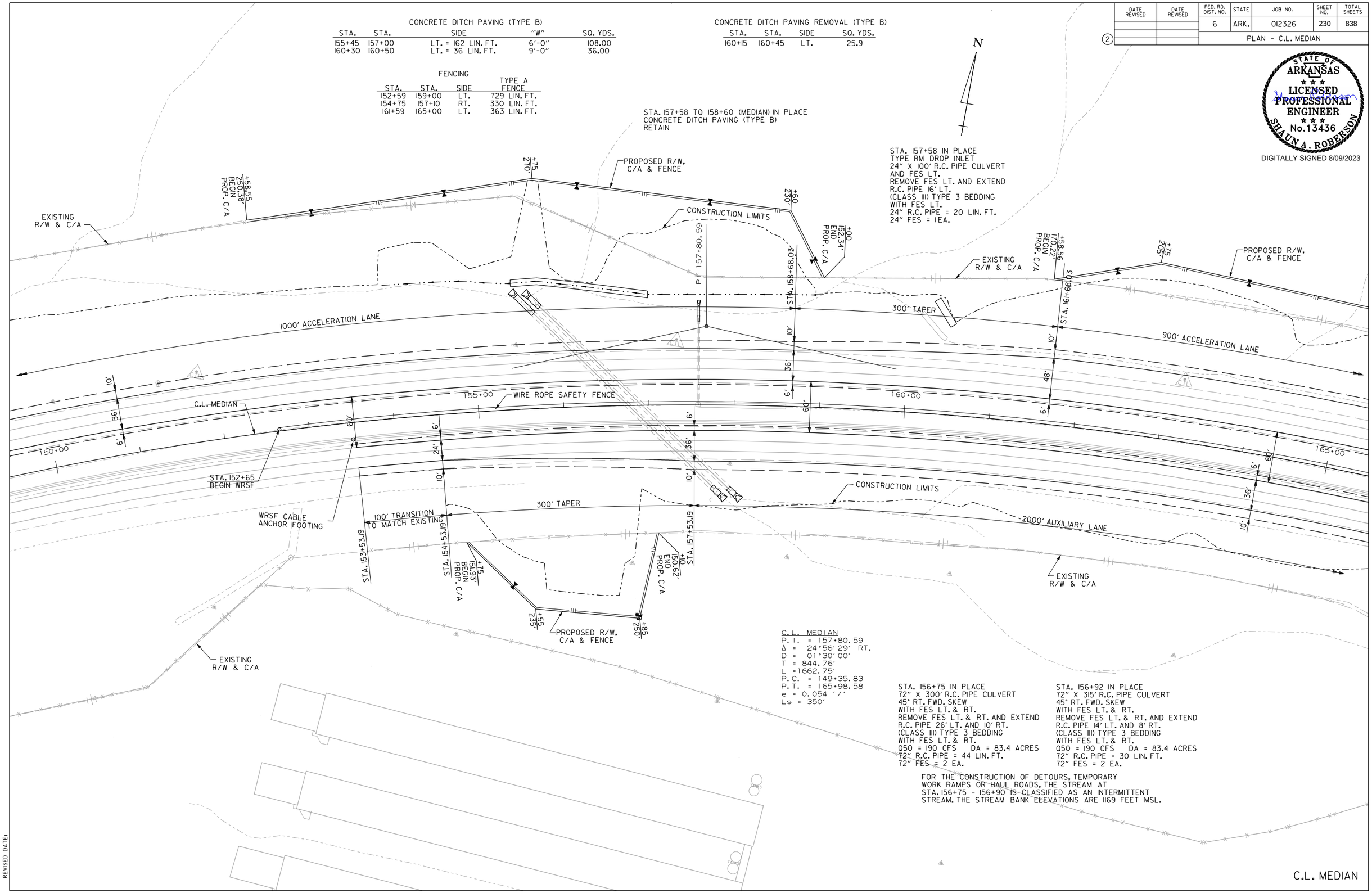

C.L. MEDIAN
P.I. = 157+80.59
Δ = 24°56'29" RT.
D = 01°30'00"
T = 844.76'
L = 1662.75'
P.C. = 149+35.83
P.T. = 165+98.58
e = 0.054 '/'
Ls = 350'

STA. 156+75 IN PLACE
72" X 300' R.C. PIPE CULVERT
45° RT. FWD. SKEW
WITH FES LT. & RT.
REMOVE FES LT. & RT. AND EXTEND
R.C. PIPE 26' LT. AND 10' RT.
(CLASS III) TYPE 3 BEDDING
WITH FES LT. & RT.
Q50 = 190 CFS DA = 83.4 ACRES
72" R.C. PIPE = 44 LIN. FT.
72" FES = 2 EA.

STA. 156+92 IN PLACE
72" X 315' R.C. PIPE CULVERT
45° RT. FWD. SKEW
WITH FES LT. & RT.
REMOVE FES LT. & RT. AND EXTEND
R.C. PIPE 14' LT. AND 8' RT.
(CLASS III) TYPE 3 BEDDING
WITH FES LT. & RT.
Q50 = 190 CFS DA = 83.4 ACRES
72" R.C. PIPE = 30 LIN. FT.
72" FES = 2 EA.

FOR THE CONSTRUCTION OF DETOURS, TEMPORARY WORK RAMPS OR HAUL ROADS, THE STREAM AT STA. 156+75 - 156+90 IS CLASSIFIED AS AN INTERMITTENT STREAM. THE STREAM BANK ELEVATIONS ARE 1169 FEET MSL.

C.L. MEDIAN

JATurner 8/9/2023 7:47:00 AM
WORKSPACE: AHTD
L:\2017\7017660 - ARDOT 012326 Hwy 412 - Hwy 112\Drawings\r012326_PP_02_MNL.dgn
REVISED DATE:

DATE REVISED	DATE REVISED	FED. RD. DIST. NO.	STATE	JOB NO.	SHEET NO.	TOTAL SHEETS
		6	ARK.	012326	231	838
②		PROFILE - C.L. MEDIAN				

STATE OF ARKANSAS
LICENSED PROFESSIONAL ENGINEER
No.13436
SHAUN A. ROBERSON
DIGITALLY SIGNED 8/09/2023

REFER TO SURVEY CONTROL DETAIL SHEETS
FOR HORIZONTAL AND VERTICAL CONTROL POINTS

STA. 146+73.33 BEGIN SUPERELEVATION
STA. 150+23.33 MAX. SUPERELEVATION (0.054'/')
STA. 165+11.08 MAX. SUPERELEVATION (0.054'/')
STA. 168+61.08 END SUPERELEVATION

STA.163+23.05
600' TRANSITION
SEE SPECIAL DETAILS

OVERLAY WITH
NOTCH AND WIDEN

FOR THE CONSTRUCTION OF DETOURS, TEMPORARY WORK RAMPS OR HAUL ROADS, THE STREAM AT STA. 156+75 - 156+90 IS CLASSIFIED AS AN INTERMITTENT STREAM. THE STREAM BANK ELEVATIONS ARE 1169 FEET MSL.

EXISTING GROUND

1.84% LEFT DITCH GRADE
0.51% L.D.G.
6.06% LEFT DITCH GRADE
1.39% LEFT DITCH GRADE

+00.00 LT. 1158.54
+00.00 LT. 1160.38
+45.00 LT. 1160.61
F.L. = 1160.61 LT.
F.L. = 1167.90 RT.
+00.00 LT. 1170.00
TOP 1178.51
INV 1174.12
F.L. 1172.03 LT.
F.L. = 1161.22 LT.
F.L. = 1168.16 RT.
+00.00 LT. 1172.77

1220 1210 1200 1190 1180 1170 1160 1150 1140 1130

150+00 151+00 152+00 153+00 154+00 155+00 156+00 157+00 158+00 159+00 160+00 161+00 162+00 163+00 164+00 165+00

JATurner 8/9/2023 7:47:00 AM
WORKSPACE: AHTD
L:\20\T\01\1660 - ARDOT 012326 Hwy 412 - Hwy 112\Drawings\r012326_PP_02.MNL.dgn
REVISED DATE:

DATE REVISED	DATE REVISED	FED. RD. DIST. NO.	STATE	JOB NO.	SHEET NO.	TOTAL SHEETS
		6	ARK.	012326	232	838
		PLAN - C.L. MEDIAN				

STATE OF ARKANSAS
LICENSED PROFESSIONAL ENGINEER
No.13436
SHAUN A. ROBERSON
DIGITALLY SIGNED 7/28/2023

FOR THE CONSTRUCTION OF DETOURS, TEMPORARY WORK RAMPS OR HAUL ROADS, THE STREAM AT STA. 167+50 - 170+60 IS CLASSIFIED AS AN INTERMITTENT STREAM. THE STREAM BANK ELEVATIONS ARE 1210 FEET MSL.

FENCING

STA.	STA.	SIDE	TYPE A FENCE
165+00	180+00	LT.	1476 LIN. FT.
172+50	176+00	RT.	376 LIN. FT.
177+20	180+00	RT.	298 LIN. FT.

CONCRETE DITCH PAVING REMOVAL (TYPE B)

STA.	STA.	SIDE	SQ. YDS.
169+45	171+22	RT.	17.9
170+20	170+44	LT.	15.0
172+73	174+29	LT.	122.8

STA. 169+05 IN PLACE
72" X 400' R.C. PIPE CULVERT
45° LT. FWD. SKEW
WITH FES LT. & RT.
REMOVE FES LT.
CONSTRUCT PIPE COLLAR (TYPE SPECIAL)
WITH 72" X 28' R.C. PIPE CULVERT
OUTLET LT.
56° LT. FWD. SKEW
(CLASS III) TYPE 3 BEDDING
WITH FES LT. & RIPRAP BASIN RT.
Q50 = 92 CFS DA = 41.1 ACRES
72" R.C. PIPE = 32 LIN. FT.
72" FES = 1EA.

C.L. MEDIAN
P.I. = 199+99.50
Δ = 72°45'26" LT.
D = 01°30'00"
T = 2813.95'
L = 4850.49'
P.C. = 171+85.55
P.T. = 220+36.04
e = 0.054'/'
Ls = 350'

C.L. MEDIAN
P.I. = 157+80.59
Δ = 24°56'29" RT.
D = 01°30'00"
T = 844.76'
L = 1662.75'
P.C. = 149+35.83
P.T. = 165+98.58
e = 0.054 '/'
Ls = 350'

STA. 166+00 CONSTRUCT
TYPE RM DROP INLET
IN MEDIAN (4' X 3' X H=3'0")
WITH 24" X 98' R.C. PIPE OUTLET ON RT.
(CLASS III) TYPE 3 BEDDING WITH FES.

STA. 170+06 IN PLACE
24" X 91' PIPE CULVERT RT.
PLUG & ABANDON

STA. 175+00 IN PLACE
24" X 79' PIPE CULVERT RT.
REMOVE

STA. 175+00 CONSTRUCT
TYPE RM DROP INLET
IN MEDIAN (4' X 3' X H=3'0")
WITH 24" X 116' R.C. PIPE OUTLET ON RT.
(CLASS III) TYPE 3 BEDDING WITH FES.

C.L. MEDIAN STATIONING	GUARDRAIL (TYPE A)	TERMINAL ANCHOR POST (TYPE I)	GUARDRAIL TERMINAL (TYPE 2)
STA. 172+40.00 TO STA. 176+15.00 LT. OF R.M.L. =	300 LIN. FT.	1EACH	1EACH

CONCRETE DITCH PAVING (TYPE B) (MAINLANES)

STA.	STA.	SIDE	"W"	SQ. YDS.
166+00	166+00	RT. = 28 LIN. FT.	6'-0"	18.67
170+20	170+70	LT. = 51 LIN. FT.	6'-0"	34.00
175+00	176+00	RT. = 100 LIN. FT.	6'-0"	66.6

C.L. HWY. 412B RAMP 4 STA. 169+46.18
C.L. MEDIAN STA. 169+46.18, 61.50' LT. =

C.L. HWY. 412B RAMP 1 STA. 172+37.13
C.L. MEDIAN STA. 172+37.13, 49.50' RT. =

C.L. MEDIAN STA. 170+68.03

C.L. MEDIAN STA. 177+53.19

PROPOSED R/W, C/A & FENCE
CONSTRUCTION LIMITS
EXISTING R/W & C/A
900' ACCELERATION LANE
2000' AUXILIARY LANE
C.L. MEDIAN
WIRE ROPE SAFETY FENCE
TEMPORARY CONSTRUCTION EASEMENT
OBLITERATE EXISTING ROADWAY
HWY. 412B RAMP 4
HWY. 412B RAMP 1
C.L. MUSTEEN RD.
PROP. R/W
PROPOSED R/W
S 87°27'09" E
S 88°13'34" E
PC 165+98.58
PT 149+35.83
PI 157+80.59
PC 171+85.55
PI 172+83.00
PT 179+12.97
PC 179+19.32
PT 180+22.36
POB 172+37.13
PC 177+44.77
PT 180+00
NOSE +67.84 7.50' RT.
NOSE +53.19 7.50' LT.
NOSE +62.07 7.50' LT.
NOSE +71.32 7.50' RT.
+46.87 290'
+05.95 200.14'
+98.84 200'
+20 188.88' BEGIN PROP. C/A
+00 177.32' END PROP. C/A
+40 191.66'
+65 181.19'
+50 150.35' BEGIN PROP. C/A
+50 170'
+00 340'
+50 328.01'
+50 305'
+25 435'
+50 400'
+50 355.22'
+00 70'
+00 75'
+11.93 65'
+75 52.98'
+60 110'
+63.65
+19.62

WBCalloway 7/31/2023 3:54:58 PM
WORKSPACE: AHTD
L:\2017\1701660 - ARDOT 012326 Hwy 412 - Hwy 112\Drawings\r012326_PP_03.MNL.dgn
REVISED DATE:

C.L. MEDIAN

DATE REVISED	DATE REVISED	FED. RD. DIST. NO.	STATE	JOB NO.	SHEET NO.	TOTAL SHEETS
		6	ARK.	012326	233	838
		PROFILE - C.L. MEDIAN				

STATE OF ARKANSAS
LICENSED PROFESSIONAL ENGINEER
No. 13436
SHAUN A. ROBERSON
DIGITALLY SIGNED 7/28/2023

REFER TO SURVEY CONTROL DETAIL SHEETS
FOR HORIZONTAL AND VERTICAL CONTROL POINTS

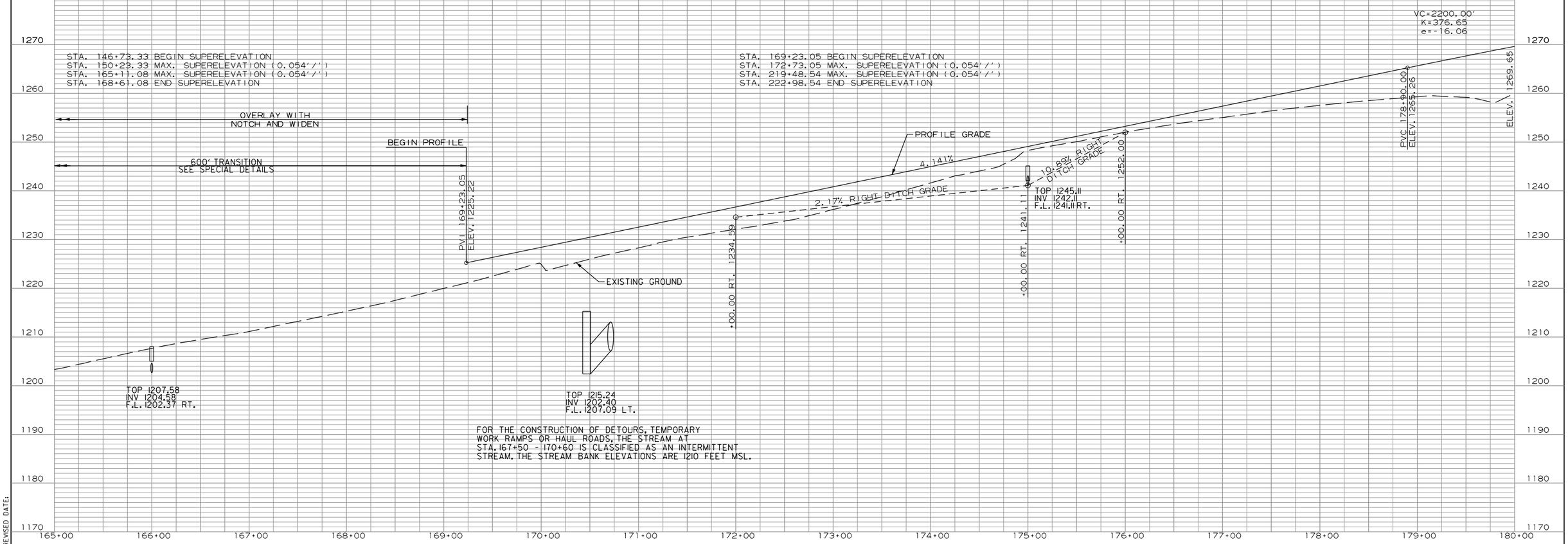

WBCallaway 7/31/2023 3:54:58 PM
WORKSPACE: AHTD
L:\2017\17017660 - ARDOT 012326 Hwy 412 - Hwy 112\Drawings\r012326_PP_03_MNL.dgn
REVISED DATE:

DATE REVISED	DATE REVISED	FED. RD. DIST. NO.	STATE	JOB NO.	SHEET NO.	TOTAL SHEETS
		6	ARK.	012326	234	838

PLAN & PROFILE - C.L. MEDIAN

STATE OF ARKANSAS
LICENSED PROFESSIONAL ENGINEER
No. 13436
SHAUN A. ROBERSON
DIGITALLY SIGNED 8/09/2023

STA. 183+57.52 TO STA. 186+66.07 LT. LN.
CONSTRUCT 305'-0" X 40' BRIDGE
302' CONTINUOUS
PLATE GIRDER UNIT (85'-132'-85')

STA. 184+52.68 TO STA. 187+40.30 RT. LN.
CONSTRUCT 290'-11 3/16" X 40' BRIDGE
288' CONTINUOUS
PLATE GIRDER UNIT (82'-124'-82')

BEGIN BRIDGE STA. 183+57.52

MSE WALL #1

C.L. HWY. 412B RAMP 4

WIRE ROPE SAFETY FENCE

STA. 181+80 END WRSF

STA. 181+13 TO 181+32 (MEDIAN) IN PLACE CONCRETE DITCH PAVING (TYPE B) REMOVE

BEGIN BRIDGE STA. 184+52.68

C.L. MEDIAN STA. 185+50.43 = C.L. HWY. 412B RAMP 4 STA. 185+77.78

OBLITERATE EXISTING ROADWAY

RAMP 1

PC 182+44.29

PT 181+75.93

P.I. 180+89.15

180+22.36

END BRIDGE STA. 186+66.07

PT 185+23.65

STA. 187+64 CONSTRUCT
30" X 366' R.C. PIPE CULVERT
30° RT. FWD. SKEW
(CLASS V) TYPE 3 BEDDING
WITH FES LT. & RT.
050 = 30 CFS DA = 9.2 ACRES

EXISTING R/W & C/A, PROPOSED FENCE

CONSTRUCTION LIMITS

C.L. MEDIAN
P. I. = 199+99.50
Δ = 72°45' 26" LT.
D = 01°30' 00"
T = 2813.95'
L = 4850.49'
P.C. = 171+85.55
P. T. = 220+36.04
e = 0.054'/'
Ls = 350'

PROPOSED R/W, C/A & FENCE

FENCING

STA.	STA.	SIDE	TYPE A FENCE
180+00	188+40	RT.	995 LIN. FT.
180+00	191+40	LT.	1136 LIN. FT.

STA. 191+27.39 TO STA. 193+59.29 LT. LN.
CONSTRUCT 229'-2 11/16" X 40' BRIDGE
227' CONTINUOUS
W-BEAM UNIT (64'-99'-64')

BEGIN BRIDGE STA. 191+27.39

C.L. MEDIAN

END BRIDGE STA. 193+59.29

END BRIDGE STA. 193+80.44

BEGIN BRIDGE STA. 191+46.91

C.L. MEDIAN STA. 192+53.46 = C.L. HWY. 68 STA. 50+00.00

END BRIDGE STA. 187+40.30

STA. 187+50 CONSTRUCT
TYPE RM DROP INLET
IN MEDIAN (4' X 3' X H=3'0")
WITH 24" X 104' R.C. PIPE OUTLET ON RT.
30° RT. FWD. SKEW
(CLASS III) TYPE 3 BEDDING WITH FES.

HWY 68 STA. 51+03 IN PLACE
18" X 49' PIPE CULVERT
PLUG & ABANDON

PC 188+54.29

CONSTRUCTION LIMITS

STA. 191+46.91 TO STA. 193+80.44 RT. LN.
CONSTRUCT 236'-2 11/16" X 40' BRIDGE
234' CONTINUOUS
W-BEAM UNIT (66'-102'-66')

PC 51+83.56

C.L. MEDIAN

REFER TO SURVEY CONTROL DETAIL SHEETS
FOR HORIZONTAL AND VERTICAL CONTROL POINTS

STA. 169+23.05 BEGIN SUPERELEVATION
STA. 172+73.05 MAX. SUPERELEVATION (0.054'/')
STA. 219+48.54 MAX. SUPERELEVATION (0.054'/')
STA. 222+98.54 END SUPERELEVATION

PVI 189+90.00
ELEV. 1310.81
P.G. 294.75

4.14%

PROFILE GRADE

VC=2200.00'
K=376.69
e=-16.06'

-1.70%

STA. 183+57.52 BEGIN BRIDGE LT.

STA. 184+52.68 BEGIN BRIDGE RT.

STA. 186+66.07 END BRIDGE LT.

STA. 187+40.30 END BRIDGE RT.

STA. 191+27.39 BEGIN BRIDGE LT.

STA. 191+46.91 BEGIN BRIDGE RT.

STA. 193+59.29 END BRIDGE LT.

STA. 193+80.44 END BRIDGE RT.

ELEV. 1269.65

5' ROCK FILL
DRAINAGE/STABILIZING LAYER

2:7+1

TOP 1287.55
INV 1284.55
F.L. 1283.41 RT.

2:4+1

8.29% GRADE

+50.00 LT. 1268.64

+27.00 LT. 1262.18

+65.00 LT. 1262.75

1.50% LT. DITCH GRADE

+25.00 LT. 1269.50

11.25% LT. DITCH GRADE

4.50% GRADE

+75.00 LT. 1271.75

F.L. = 1262.18 LT.
F.L. = 1260.43 RT.

EXISTING GROUND

3:1

2:7+1

2:8+1

2:4+1

1.55% LEFT DITCH GRADE

+00.00 LT. 1271.56

ELEV. 1297.52

5' ROCK FILL
DRAINAGE/STABILIZING LAYER

C.L. MEDIAN STATIONING	GUARDRAIL (TYPE A)	THRIE BEAM GUARDRAIL TERMINAL	TERMINAL ANCHOR POST (TYPE I)	GUARDRAIL TERMINAL (TYPE 2)
STA. 180+96.62 TO STA. 184+15.32 LT. OF R.M.L.	= 250 LIN. FT.	1 EACH		1 EACH
STA. 181+85.51 TO STA. 184+54.26 RT. OF R.M.L.	= 200 LIN. FT.	1 EACH		1 EACH
STA. 182+25.16 TO STA. 183+18.30 LT. OF L.M.L.	= 75 LIN. FT.	1 EACH	1 EACH	
STA. 186+70.61 TO STA. 189+39.36 LT. OF L.M.L.	= 200 LIN. FT.	1 EACH		1 EACH
STA. 187+05.82 TO STA. 190+24.53 RT. OF L.M.L.	= 250 LIN. FT.	1 EACH		1 EACH
STA. 188+11.76 TO STA. 191+30.47 LT. OF R.M.L.	= 250 LIN. FT.	1 EACH		1 EACH
STA. 188+72.13 TO STA. 191+40.88 RT. OF R.M.L.	= 200 LIN. FT.	1 EACH		1 EACH

1310 1300 1290 1280 1270 1260 1250 1240 1230 1220

180+00 181+00 182+00 183+00 184+00 185+00 186+00 187+00 188+00 189+00 190+00 191+00 192+00 193+00 194+00 195+00

JATurner
WORKSPACE: AHTD
L:\2017\170176\660 - ARDOT 012326 Hwy 412 - Hwy 412\Drawings\r012326_PP_04_MNL.dgn
8/9/2023 7:47:04 AM
REVISED DATE:

DATE REVISED	DATE REVISED	FED. RD. DIST. NO.	STATE	JOB NO.	SHEET NO.	TOTAL SHEETS
		6	ARK.	012326	235	838
		PLAN & PROFILE - C.L. MEDIAN				

C.L. MEDIAN
P.I. = 199+99.50
Δ = 72°45'26" LT.
D = 01°30'00"
T = 2813.95'
L = 4850.49'
P.C. = 171+85.55
P.T. = 220+36.04
e = 0.054'/'
Ls = 350'

STATE OF ARKANSAS
LICENSED PROFESSIONAL ENGINEER
No.13436
SHAUN A. ROBERSON
DIGITALLY SIGNED 7/28/2023

EXISTING R/W & C/A, PROPOSED FENCE
TEMPORARY CONSTRUCTION EASEMENT
CONSTRUCTION LIMITS

FENCING

STA.	STA.	SIDE	TYPE A FENCE
191+42	210+00	LT.	1895 LIN. FT.
194+24	210+00	RT.	1822 LIN. FT.

STA. 201+69 CONSTRUCT
DBL. 48" X 484' R.C. PIPE CULVERT
10° RT. FWD. SKEW
(CLASS V) TYPE 2 BEDDING
WITH FES LT. & RIPRAP BASIN RT.
Q50 = 226 CFS DA = 70.0 ACRES
48" RCP = 968 LIN. FT.
48" FES = 2 EACH

HWY. 412B RAMP 3
HWY. 412B RAMP 2
PROPOSED R/W, C/A & FENCE
CONSTRUCTION LIMITS
C.L. MEDIAN
NOSE +37.72 7.30' RT.
NOSE +24.17 14.17' LT.
NOSE +72.36 57.88' RT.
NOSE +69.05 7.50' LT.
700' ACCELERATION LANE
C.L. HWY. 412B RAMP 2 STA. 209+00.00
C.L. MEDIAN STA. 209+00.00, 58.50' RT. =
C.L. MEDIAN STA. 206+72.36
WIRE ROPE SAFETY FENCE
STA. 196+08 BEGIN WRSF
STA. 204+00 CONSTRUCT
TYPE RM DROP INLET
IN MEDIAN (4' X 3' X H=3'0")
WITH 24" X 126' R.C. PIPE OUTLET ON RT.
(CLASS III) TYPE 3 BEDDING WITH FES.
PI 199+42.97
PI 202+20.36
PI 202+98.08
PI 204+34.6
PI 203+75.72

REFER TO SURVEY CONTROL DETAIL SHEETS
FOR HORIZONTAL AND VERTICAL CONTROL POINTS

CONCRETE DITCH PAVING (TYPE B)

STA.	STA.	SIDE	"W"	SQ. YDS.
204+00	204+00	RT. = 53 LIN. FT.	6'-0"	35.33

STA. 169+23.05 BEGIN SUPERELEVATION
STA. 172+73.05 MAX. SUPERELEVATION (0.054'/')
STA. 219+48.54 MAX. SUPERELEVATION (0.054'/')
STA. 222+98.54 END SUPERELEVATION

C.L. MEDIAN STATIONING	GUARDRAIL (TYPE A)	THRIE BEAM GUARDRAIL TERMINAL	TERMINAL ANCHOR POST (TYPE I)	GUARDRAIL TERMINAL (TYPE 2)
STA. 193+67.75 TO STA. 196+36.49 LT. OF L.M.L. =	200 LIN. FT.	1EACH		1EACH
STA. 193+75.76 TO STA. 196+94.45 RT. OF L.M.L. =	250 LIN. FT.	1EACH		1EACH
STA. 206+35.00 TO STA. 210+10.00 RT. OF L.M.L. =	300 LIN. FT.		1EACH	1EACH

ELEV. 1297.52
VC=2200.00'
K=376.69
e=-16.06'
PVT 200+90.00
ELEV. 1292.11
5' ROCK FILL
DRAINAGE/STABILIZING LAYER
-1.55% LEFT DITCH GRADE
+75.00 LT. 1264.20
TOP 1282.84
INV 1279.84
F.L. 1278.49 RT.
F.L. = 1256.00 LT.
F.L. = 1250.80 RT.
PROFILE GRADE
-1.70%
EXISTING GROUND
-1.68% RIGHT DITCH GRADE
+00.00 RT. 1270.4
ELEV. 1276.64

1320 1310 1300 1290 1280 1270 1260 1250 1240 1230

195+00 196+00 197+00 198+00 199+00 200+00 201+00 202+00 203+00 204+00 205+00 206+00 207+00 208+00 209+00 210+00

WBCalloway 7/31/2023 3:54:59 PM
WORKSPACE: AHTD
L:\20\7\01\7660 - ARDOT 012326 Hwy 412 - Hwy 112\Drawings\r012326_PP_05_MNL.dgn
REVISED DATE:

DATE REVISED	DATE REVISED	FED. RD. DIST. NO.	STATE	JOB NO.	SHEET NO.	TOTAL SHEETS
		6	ARK.	012326	236	838
		PLAN & PROFILE - C.L. MEDIAN				

(2)

C.L. MEDIAN
P.I. = 199+99.50
Δ = 72°45'26" LT.
D = 01°30'00"
T = 2813.95'
L = 4850.49'
P.C. = 171+85.55
P.T. = 220+36.04
e = 0.054'/'
Ls = 350

CONCRETE DITCH PAVING (TYPE B)

STA.	STA.	SIDE	"W"	SQ. YDS.
218+50	218+80	RT. = 100 LIN. FT.	9'-0"	100.00
219+50	221+00	LT. = 148 LIN. FT.	6'-0"	98.67

FENCING TYPE A

STA.	STA.	SIDE	FENCE	16' GATE
210+00	218+20	LT.	819 LIN. FT.	1 EACH
210+00	219+10	RT.	959 LIN. FT.	
219+70	225+00	LT.	561 LIN. FT.	
220+54	225+00	RT.	464 LIN. FT.	1 EACH

C.L. MEDIAN STATIONING	GUARDRAIL (TYPE A)	TERMINAL ANCHOR POST (TYPE I)	GUARDRAIL TERMINAL (TYPE 2)
STA. 215+55.00 TO STA. 220+55.00 LT. OF R.M.L. = 450 LIN. FT.	1 EACH	1 EACH	1 EACH
STA. 218+35.00 TO STA. 223+35.00 RT. OF L.M.L. = 450 LIN. FT.			

STATE OF ARKANSAS
LICENSED PROFESSIONAL ENGINEER
No. 13436
SHAUN A. ROBERSON
DIGITALLY SIGNED 7/28/2023

C.L. HWY. 412B RAMP 3 STA. 210+57.66 =
C.L. MEDIAN STA. 210+57.66, 46.50' LT.

PROPOSED R/W, C/A & FENCE

CONSTRUCTION LIMITS

C.L. MEDIAN

WIRE ROPE SAFETY FENCE

700' ACCELERATION LANE

300' TAPER

16' GATE

TEMPORARY CONSTRUCTION EASEMENT

PROPOSED R/W

S 86°40'31.1" E

C.L. LIBERTY AVE. STA. 20+00.00

C.L. MEDIAN STA. 219+45.18 =

N 19°47'24.8" E

STA. 219+20 END WRSF

STA. 219+70 BEGIN WRSF

POB 14+47.34

STA. 211+00 CONSTRUCT TYPE RM DROP INLET IN MEDIAN (4' X 3' X H=3'0") WITH 24" X 102' R.C. PIPE OUTLET ON RT. (CLASS III) TYPE 3 BEDDING WITH FES.

STA. 221+00 CONSTRUCT TYPE RM DROP INLET IN MEDIAN (4' X 3' X H=3'0") WITH 24" X 84' R.C. PIPE OUTLET ON LT. (CLASS III) TYPE 3 BEDDING WITH FES.

C.L. MEDIAN

REFER TO SURVEY CONTROL DETAIL SHEETS FOR HORIZONTAL AND VERTICAL CONTROL POINTS

STA. 169+23.03 BEGIN SUPERELEVATION
STA. 172+73.05 MAX. SUPERELEVATION (0.054'/')
STA. 219+48.54 MAX. SUPERELEVATION (0.054'/')
STA. 222+98.54 END SUPERELEVATION

ELEV. 1276.64

-1.68% RIGHT DITCH GRADE

TOP 1270.94
INV 1267.94
F.L. 1267.06 RT.

+00.00 RT. 1267.06

-0.57% RIGHT DITCH GRADE

+00.00 RT. 1264.22

EXISTING GROUND

PROFILE GRADE

-1.70%

+50.00 LT. 1255.33

-3.50% LEFT DITCH GRADE

-0.78% LEFT DITCH GRADE

TOP 1253.94
INV 1250.94
F.L. 1250.08 LT.

+00.00 LT. 1250.08

ELEV. 1251.14

+00.00 LT. 1246.97

1300 1290 1280 1270 1260 1250 1240 1230 1220 1210

210+00 211+00 212+00 213+00 214+00 215+00 216+00 217+00 218+00 219+00 220+00 221+00 222+00 223+00 224+00 225+00

WBCallaway 7/31/2023 3:55:00 PM
WORKSPACE: AHTD
L:\20\7\01\7660 - ARDOT 012326 Hwy 412 - Hwy 112\Drawings\r012326_PP_06_MNL.dgn
REVISED DATE:

DATE REVISED	DATE REVISED	FED. RD. DIST. NO.	STATE	JOB NO.	SHEET NO.	TOTAL SHEETS
		6	ARK.	012326	237	838
		PLAN - C.L. MEDIAN				

STATE OF ARKANSAS
LICENSED PROFESSIONAL ENGINEER
No.13436
SHAUN A. ROBERSON
DIGITALLY SIGNED 7/28/2023

2

N

CONSTRUCTION LIMITS

C.L. MEDIAN

WIRE ROPE SAFETY FENCE

PROPOSED R/W, C/A & FENCE

CONSTRUCTION LIMITS

PROPOSED R/W, C/A & FENCE

N 19°47'25" E

STA. 231+00 CONSTRUCT
TYPE RM DROP INLET
IN MEDIAN (4' X 3' X H=3'0")
WITH 24" X 88' R.C. PIPE OUTLET ON RT.
(CLASS III) TYPE 3 BEDDING WITH FES.

FENCING

STA.	STA.	SIDE	TYPE A FENCE
225+00	240+00	LT.	1639 LIN. FT.
225+00	240+00	RT.	1505 LIN. FT.

CONCRETE DITCH PAVING (TYPE B)

STA.	STA.	SIDE	"W"	SQ. YDS.
229+00	232+25	RT. = 312 LIN. FT.	6'-0"	208.00
235+00	236+75	RT. = 177 LIN. FT.	6'-0"	118.00

CONCRETE DITCH PAVING (TYPE A)

STA.	STA.	SIDE	"B"	"W"	SQ. YDS.
239+00	240+00	LT. = 111 LIN. FT.	5' - 0"	14' - 0"	172.67

C. L. MEDIAN
P. I. 241+02.63
Δ = 67°34'21" RT.
D = 03°30'00"
T = 1095.32'
L = 1930.64'
P. C. = 230+07.31
P. T. = 249+37.96
e = 0.10'/'
Ls = 450'

C.L. MEDIAN

WBCallaway 7/31/2023 3:55:00 PM
WORKSPACE: AHTD
L:\2017\017660 - ARDOT 012326 Hwy 412 - Hwy 112\Drawings\r012326_PP_07_MNL.dgn
REVISED DATE:

DATE REVISED	DATE REVISED	FED. RD. DIST. NO.	STATE	JOB NO.	SHEET NO.	TOTAL SHEETS
		6	ARK.	012326	238	838
②		PROFILE - C.L. MEDIAN				

STATE OF ARKANSAS
LICENSED PROFESSIONAL ENGINEER
No.13436
SHAUN A. ROBERSON
DIGITALLY SIGNED 7/28/2023

REFER TO SURVEY CONTROL DETAIL SHEETS
FOR HORIZONTAL AND VERTICAL CONTROL POINTS

+00.00 LT.
5' FLAT BOTTOM DITCH LT.
EXISTING GROUND
ELEV. 1251.14
PROFILE GRADE
-1.70%
-3.75% RIGHT DITCH GRADE
-4.34% RIGHT DITCH GRADE
-0.50% RIGHT DITCH GRADE
-15.50% RIGHT DITCH GRADE
-0.50% RIGHT DITCH GRADE
-12.95% LEFT DITCH GRADE
5' ROCK FILL
DRAINAGE/STABILIZING LAYER
STA. 226+69.81 BEGIN SUPERELEVATION
STA. 231+19.81 MAX SUPERELEVATION (0.10'/')
STA. 248+25.46 MAX SUPERELEVATION (0.10'/')
STA. 252+75.46 END SUPERELEVATION
+00.00 RT. 1238.41
TOP 1236.95
INV 1233.95
F.L. 1230.92 RT.
+00.00 RT. 1230.92
+25.00 RT. 1225.50
+00.00 RT. 1224.13
+75.00 RT. 1197.00
ELEV. 1225.64
+00.00 LT. 1226.45
+00.00 LT. 1213.50

1280 1270 1260 1250 1240 1230 1220 1210 1200 1190 1180

225+00 226+00 227+00 228+00 229+00 230+00 231+00 232+00 233+00 234+00 235+00 236+00 237+00 238+00 239+00 240+00

WBCallaway 7/31/2023 3:55:00 PM
WORKSPACE: AHTD
L:\20\T\T01T660 - ARDOT 012326 Hwy 412 - Hwy 112\Drawings\r012326_PP_07_MNL.dgn
REVISED DATE:

DATE REVISED	DATE REVISED	FED. RD. DIST. NO.	STATE	JOB NO.	SHEET NO.	TOTAL SHEETS
		6	ARK.	012326	239	838
		PLAN - C.L. MEDIAN				
2						

STATE OF ARKANSAS
LICENSED PROFESSIONAL ENGINEER
No.13436
SHAUN A. ROBBERSON
DIGITALLY SIGNED 7/28/2023

CONCRETE DITCH PAVING (TYPE A)

STA.	STA.	SIDE "B" "W"	SQ. YDS.
240+00	241+00	LT. = 106 LIN. FT. 5' - 0" 14' - 0"	164.89

CONCRETE DITCH PAVING (TYPE B)

STA.	STA.	SIDE	"W"	SQ. YDS.
241+00	244+40	LT. = 416 LIN. FT.	6'-0"	277.33
241+00	241+00	LT. = 21 LIN. FT.	6'-0"	14.00
242+00	243+00	RT. = 94 LIN. FT.	6'-0"	62.67
248+00	255+00	RT. = 716 LIN. FT.	6'-0"	477.33
251+00	251+00	RT. = 61 LIN. FT.	6'-0"	10.67
251+00	254+55	LT. = 419 LIN. FT.	6'-0"	279.33

STA. 241+00 CONSTRUCT
TYPE RM DROP INLET
IN MEDIAN (4' X 3' X H=3'0")
WITH 24" X 94' R.C. PIPE OUTLET ON LT.
(CLASS III) TYPE 3 BEDDING WITH FES.

STA. 251+60 CONSTRUCT
42" X 442' R.C. PIPE CULVERT
40° LT. FWD. SKEW
(CLASS V) TYPE 2 BEDDING
WITH FES RT. & RIPRAP BASIN LT.
Q50 = 67 CFS DA = 10.1 ACRES

TEMPORARY CONSTRUCTION EASEMENT

PROPOSED R/W, C/A & FENCE

CONSTRUCTION LIMITS

WIRE ROPE SAFETY FENCE

C.L. MEDIAN

C.L. MEDIAN
P.I. = 241+02.63
Δ = 67°34'21" RT.
D = 03°30'00"
T = 1095.32'
L = 1930.64'
P.C. = 230+07.31
P.T. = 249+37.96
e = 0.10'/'
Ls = 450'

FENCING

STA.	STA.	SIDE	TYPE A FENCE
240+00	255+00	LT.	1875 LIN. FT.
240+00	255+00	RT.	1657 LIN. FT.

STA. 243+77 CONSTRUCT
60" X 458' R.C. PIPE CULVERT
23° LT. FWD. SKEW
(CLASS V) TYPE I BEDDING
WITH FES RT. & CONTRA-COSTA ENERGY DISSIPATOR LT.
Q50 = 166 CFS DA = 33.4 ACRES

STA. 251+00 CONSTRUCT
TYPE RM DROP INLET
IN MEDIAN (4' X 3' X H=3'0")
WITH 24" X 84' R.C. PIPE OUTLET ON RT.
(CLASS III) TYPE 3 BEDDING WITH FES.

STA. 255+58 CONSTRUCT
DBL. 54" X 510' R.C. PIPE CULVERT
17° RT. FWD. SKEW
(CLASS SPECIAL) TYPE I BEDDING
WITH FES RT. & RIPRAP BASIN LT.
Q50 = 243 CFS DA = 51.7 ACRES
54" RCP = 1020 LIN. FT.
54" FES = 2 EACH

C.L. MEDIAN

WBCalloway 7/31/2023 3:55:00 PM
WORKSPACE: AHTD
L:\201\1701\660 - ARDOT 012326 Hwy 412 - Hwy 112\Drawings\r012326_PP_08_MNL.dgn
REVISED DATE:

DATE REVISED	DATE REVISED	FED. RD. DIST. NO.	STATE	JOB NO.	SHEET NO.	TOTAL SHEETS
		6	ARK.	012326	240	838
		PROFILE - C.L. MEDIAN				

STATE OF ARKANSAS
LICENSED PROFESSIONAL ENGINEER
No. 13436
SHAUN A. ROBERSON
DIGITALLY SIGNED 7/28/2023

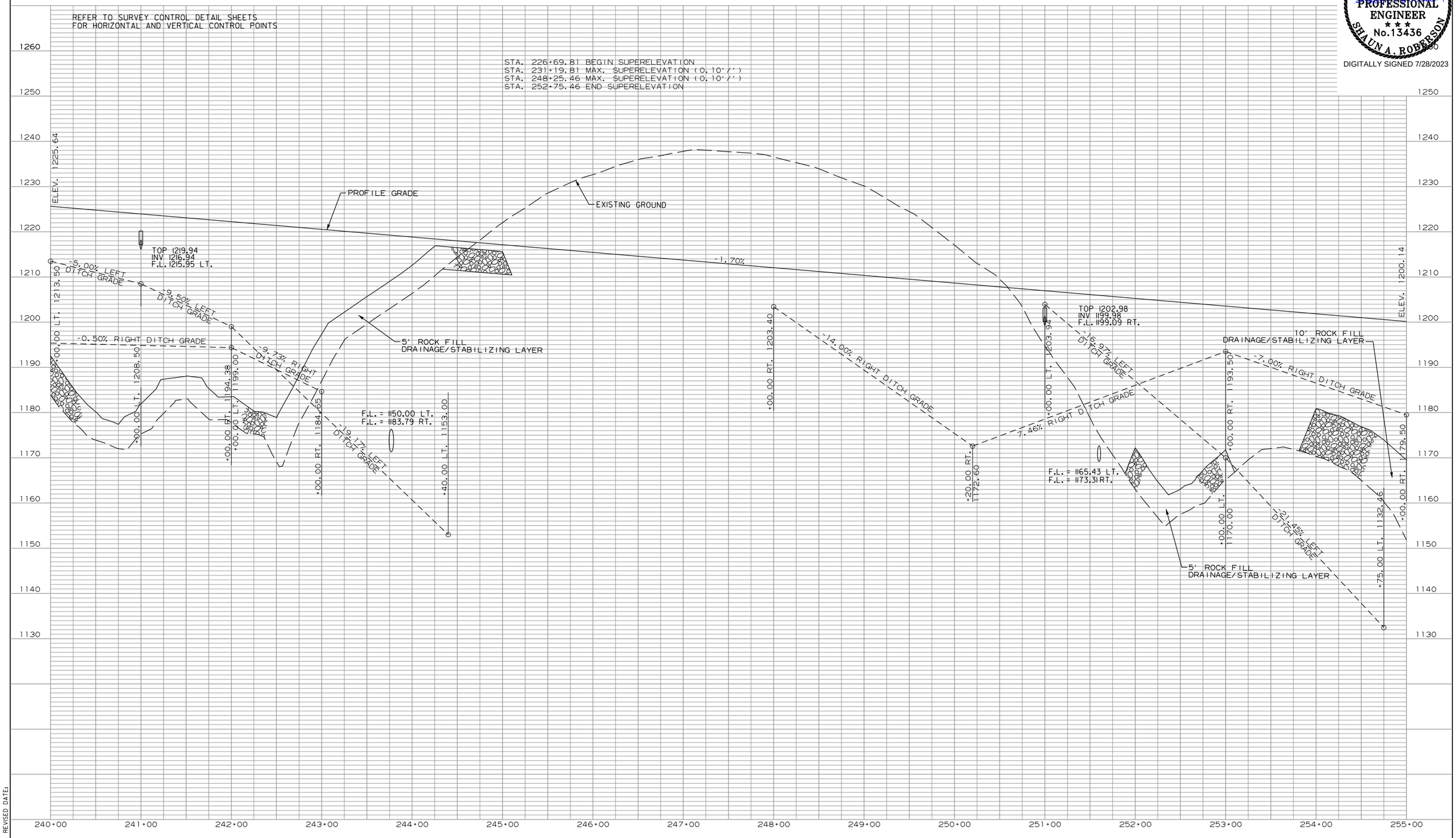

WBCallaway 7/31/2023 3:55:08 PM
WORKSPACE: AHTD
L:\2017\17017660 - ARDOT 012326 Hwy 412 - Hwy 112\Drawings\r012326_PP_08_MNL.dgn
REVISED DATE:

DATE REVISED	DATE REVISED	FED. RD. DIST. NO.	STATE	JOB NO.	SHEET NO.	TOTAL SHEETS
		6	ARK.	012326	241	838
		PLAN - C.L. MEDIAN				

STATE OF ARKANSAS
LICENSED PROFESSIONAL ENGINEER
No.13436
SHAUN A. ROBERSON
DIGITALLY SIGNED 7/28/2023

FOR THE CONSTRUCTION OF DETOURS, TEMPORARY WORK RAMPS OR HAUL ROADS, THE STREAM AT STA. 255+50 - 255+80 IS CLASSIFIED AS AN INTERMITTENT STREAM. THE STREAM BANK ELEVATIONS ARE 1145 FEET MSL.

N

+99.94
440.66'

TEMPORARY CONSTRUCTION EASEMENT

STA. 255+58 CONSTRUCT
DBL. 54" X 510' R.C. PIPE CULVERT
17° RT. FWD. SKEW
(CLASS SPECIAL) TYPE I BEDDING
WITH FES RT. & RIPRAP BASIN LT.
Q50 = 243 CFS DA = 51.7 ACRES
54" RCP = 1020 LIN. FT.
54" FES = 2 EACH

+00
340'

+5
320.11'

STA. 261+00 CONSTRUCT
TYPE RM DROP INLET
IN MEDIAN (4' X 3' X H=3'0")
WITH 24" X 86' R.C. PIPE OUTLET ON LT.
(CLASS III) TYPE 3 BEDDING WITH FES.

+60
305'

STA. 268+00 CONSTRUCT
TYPE RM DROP INLET
IN MEDIAN (4' X 3' X H=3'0")
WITH 24" X 86' R.C. PIPE OUTLET ON LT.
(CLASS III) TYPE 3 BEDDING WITH FES.

TEMPORARY CONSTRUCTION EASEMENT

+10
335'

PROPOSED R/W, C/A & FENCE

CONSTRUCTION LIMITS

+00
270'

+75
115'

+08.39
215'

+45
206.89'

+00
205'

C.L. MEDIAN

10'
24'
6'
60'
6'
24'
10'

255+00
260+00
265+00
270+00

WIRE ROPE SAFETY FENCE

N 87°21'46" E

+95
170'

+60
245'

+00
240'

+25
210'

+73.42
150'

+65
220'

PROPOSED R/W, C/A & FENCE

CONSTRUCTION LIMITS

STA. 268+44 CONSTRUCT
54" X 316' R.C. PIPE CULVERT
20° LT. FWD. SKEW
(CLASS V) TYPE 3 BEDDING
WITH FES RT. & RIPRAP BASIN LT.
Q50 = 128 CFS DA = 58.6 ACRES

FENCING

STA.	STA.	SIDE	TYPE A FENCE
255+00	270+00	LT.	1666 LIN. FT.
255+00	270+00	RT.	1551 LIN. FT.

CONCRETE DITCH PAVING (TYPE B)

STA.	STA.	SIDE	"W"	SQ. YDS.
255+00	256+21	RT. = 152 LIN. FT.	6'-0"	101.33
260+00	261+00	LT. = 100 LIN. FT.	9'-0"	100.00
266+00	267+90	RT. = 201 LIN. FT.	6'-0"	134.00
267+00	269+00	LT. = 219 LIN. FT.	6'-0"	146.00
268+00	268+00	LT. = 13 LIN. FT.	6'-0"	8.67

C.L. MEDIAN

WBCallaway 7/31/2023 3:55:09 PM
WORKSPACE: AHTD
L:\20\7\7017660 - ARDOT 012326 Hwy 412 - Hwy 112\Drawings\r-012326_PP_09_MNL.dgn
REVISED DATE:

DATE REVISED	DATE REVISED	FED. RD. DIST. NO.	STATE	JOB NO.	SHEET NO.	TOTAL SHEETS
		6	ARK.	012326	242	838
		PROFILE - C.L. MEDIAN				
②						

STATE OF ARKANSAS
LICENSED PROFESSIONAL ENGINEER
No.13436
SHAUN A. ROBERSON
DIGITALLY SIGNED 7/28/2023

REFER TO SURVEY CONTROL DETAIL SHEETS
FOR HORIZONTAL AND VERTICAL CONTROL POINTS

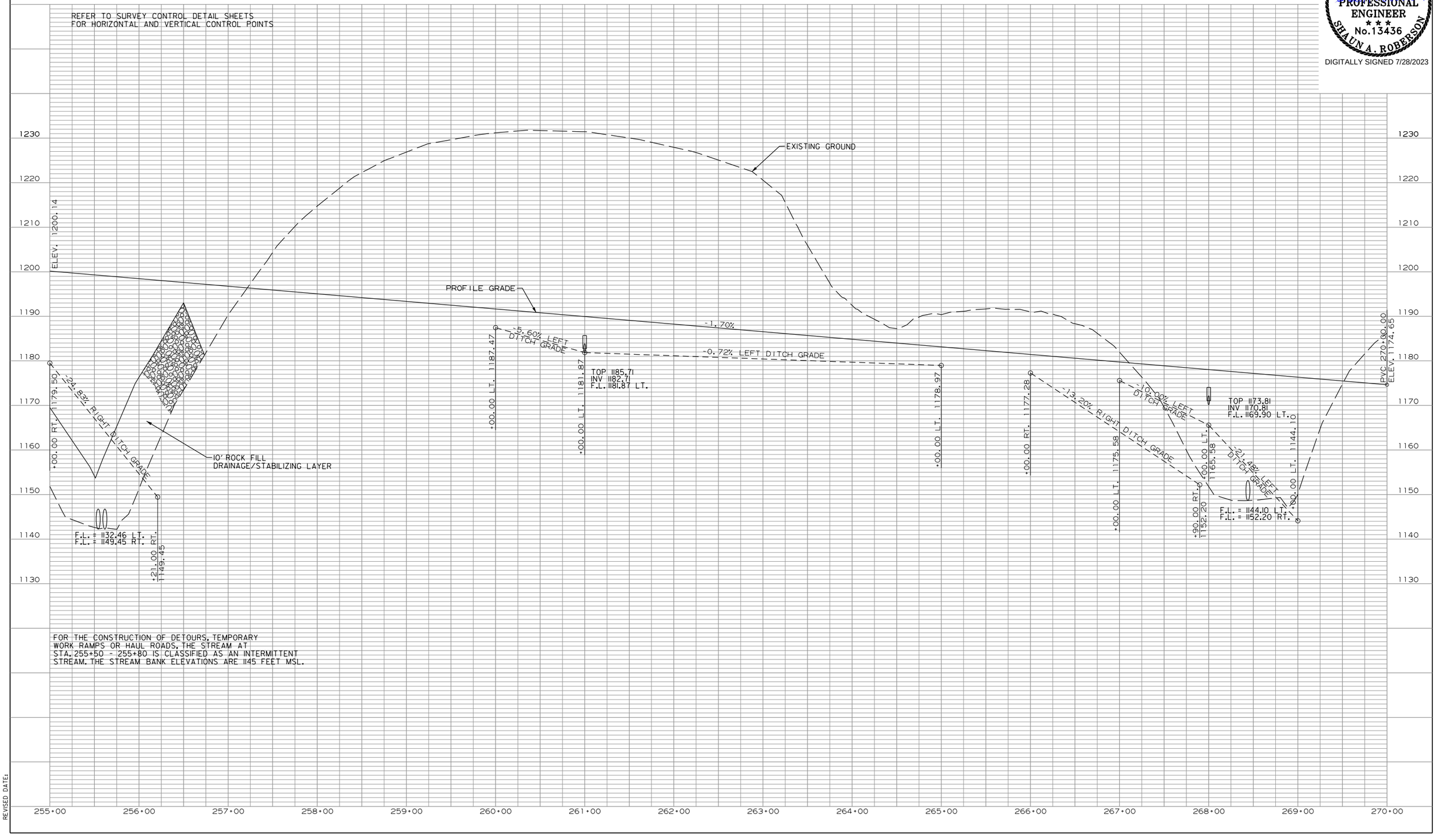

FOR THE CONSTRUCTION OF DETOURS, TEMPORARY WORK RAMPS OR HAUL ROADS, THE STREAM AT STA. 255+50 - 255+80 IS CLASSIFIED AS AN INTERMITTENT STREAM. THE STREAM BANK ELEVATIONS ARE 1145 FEET MSL.

WBCallaway 7/31/2023 3:55:09 PM
WORKSPACE: AHTD
L:\2017\17017660 - ARDOT 012326 Hwy 412 - Hwy 112\Drawings\r012326_PP_09_MNL.dgn
REVISED DATE:

DATE REVISED	DATE REVISED	FED. RD. DIST. NO.	STATE	JOB NO.	SHEET NO.	TOTAL SHEETS
10-23-2023		6	ARK.	012326	243	838
(2)		PLAN - C.L. MEDIAN				

STATE OF ARKANSAS
LICENSED PROFESSIONAL ENGINEER
No.13436
SHAUN A. ROBERSON
DIGITALLY SIGNED 10/23/2023

DRAIN EXISTING POND AND GRADE TO PROVIDE POSITIVE DRAINAGE

+70 540'

+5 500'

+25 440'

+60 440'

N

STA. 280+00 CONSTRUCT TYPE RM DROP INLET IN MEDIAN (4' X 3' X H=3'0") WITH 24" X 86' R.C. PIPE OUTLET ON LT. (CLASS III) TYPE 3 BEDDING WITH FES.

TEMPORARY CONSTRUCTION EASEMENT

TEMPORARY CONSTRUCTION EASEMENT

+10 335'

TEMPORARY CONSTRUCTION EASEMENT

+85 255'

+10 188.50'

STA. 275+86 CONSTRUCT TYPE RM DROP INLET IN MEDIAN (4' X 3' X H=3'0") WITH 24" X 86' R.C. PIPE OUTLET ON LT. (CLASS III) TYPE 3 BEDDING WITH FES.

+70 225.75'

+85 245.64'

+50 205'

+00 145'

+25 269.85'

+41.53 290'

+60 274.65'

16' GATE

CONSTRUCTION LIMITS

PROPOSED R/W, C/A & FENCE

+10 150'

C.L. MEDIAN

10' 24' 6' 60' 6' 24' 10'

270+00 275+00 280+00 285+00

WIRE ROPE SAFETY FENCE

N 87°21'46" E

TRAIL

+05 155'

16' GATE

CONSTRUCTION LIMITS

PROPOSED R/W, C/A & FENCE

+88.88 255'

+65 022

STA. 278+90 CONSTRUCT DBL. 9' X 9' X 400' R.C. BOX CULVERT WITH 3:1 WINGS LT. & RT. & RIPRAP BASIN LT. Q50 = 1589 CFS DA = 861.3 ACRES

FENCING

STA.	STA.	SIDE	TYPE A FENCE	16' GATE
270+00	278+67	LT.	910 LIN. FT.	1 EACH
270+00	278+67	RT.	886 LIN. FT.	
279+13	285+00	LT.	681 LIN. FT.	
279+13	285+00	RT.	623 LIN. FT.	1 EACH

CONCRETE DITCH PAVING (TYPE B)

STA.	STA.	SIDE	"W"	SQ. YDS.
272+00	281+00	RT. = 960 LIN. FT.	6'-0"	640.00
275+86	275+89	LT. = 103 LIN. FT.	6'-0"	68.67
279+00	281+00	LT. = 254 LIN. FT.	6'-0"	169.33
280+00	280+00	LT. = 84 LIN. FT.	6'-0"	56.00

FOR THE CONSTRUCTION OF DETOURS, TEMPORARY WORK RAMPS OR HAUL ROADS, THE STREAM AT STA. 278+80 - 279+00 IS CLASSIFIED AS AN INTERMITTENT STREAM. THE STREAM BANK ELEVATIONS ARE 1127 FEET MSL.

C.L. MEDIAN

EPSherrill 10/23/2023 2:35:45 PM
WORKSPACE: AHTD
L:\20\T01\660 - ARDOT 012326 Hwy 412 - Hwy 112\Drawings\r012326_PP_10_MNL.dgn
REVISED DATE:

DATE REVISED	DATE REVISED	FED. RD. DIST. NO.	STATE	JOB NO.	SHEET NO.	TOTAL SHEETS
		6	ARK.	012326	244	838
		PROFILE - C.L. MEDIAN				

STATE OF ARKANSAS
LICENSED PROFESSIONAL ENGINEER
No. 13436
SHAUN A. ROBERSON
DIGITALLY SIGNED 7/28/2023

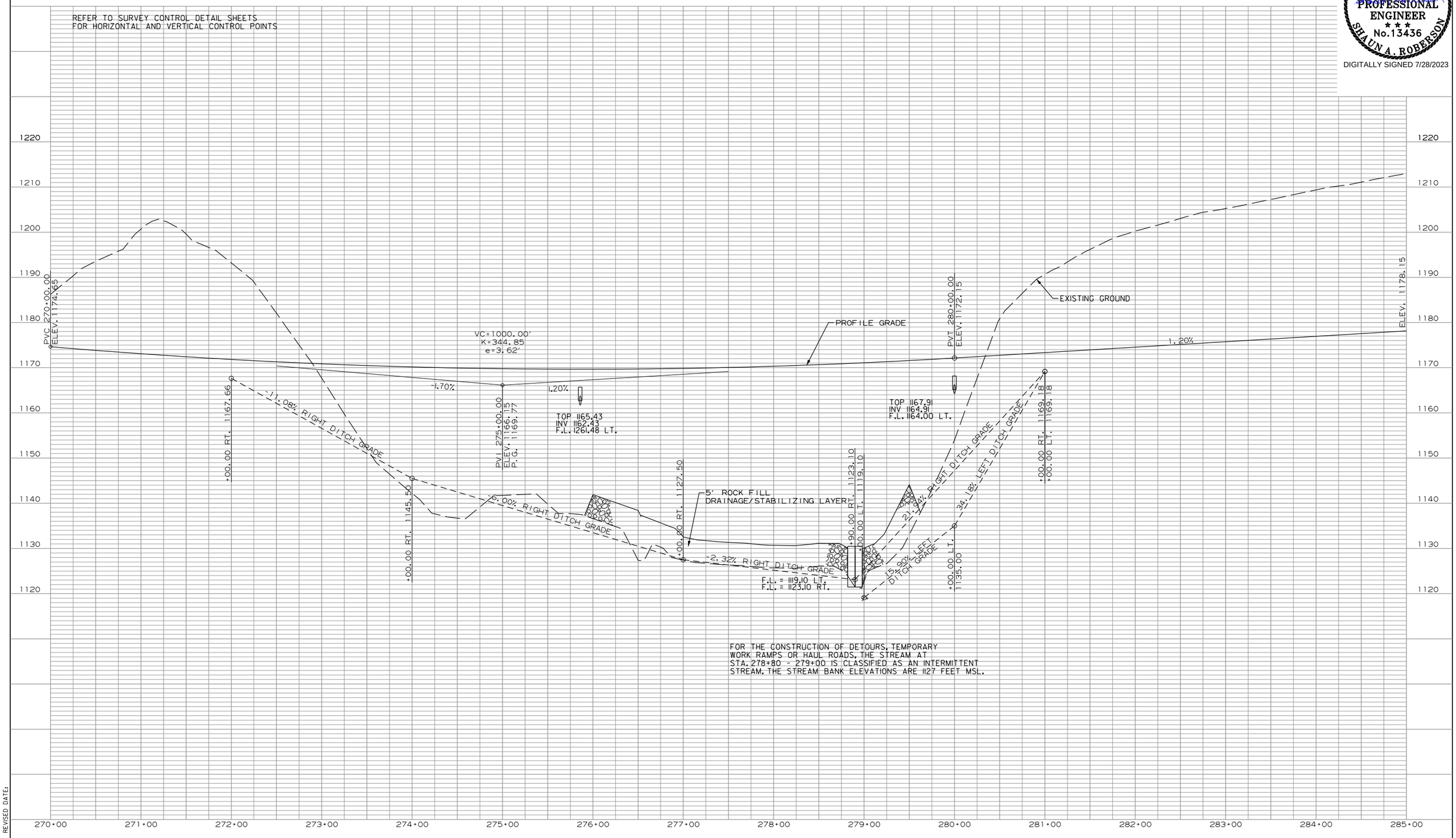

WBCalloway 7/31/2023 3:55:09 PM
WORKSPACE: AHTD
L:\2017\17017660 - ARDOT 012326 Hwy 412 - Hwy 112\Drawings\r012326_PP_10_MNL.dgn
REVISED DATE:

DATE REVISED	DATE REVISED	FED. RD. DIST. NO.	STATE	JOB NO.	SHEET NO.	TOTAL SHEETS
		6	ARK.	012326	245	838
		PLAN - C.L. MEDIAN				

STATE OF ARKANSAS
LICENSED PROFESSIONAL ENGINEER
No. 13436
SHAUN A. ROBERSON
DIGITALLY SIGNED 7/28/2023

STA. 293+72.27 TO STA. 296+44.63 LT. LN.
CONSTRUCT 272'-4 1/4" X 40' BRIDGE
270' CONTINUOUS COMPOSITE PRESTRESSED
CONCRETE GIRDER UNIT (85'-100'-85')

C.L. MEDIAN STATIONING	GUARDRAIL (TYPE A)	THRIE BEAM GUARDRAIL TERMINAL	GUARDRAIL TERMINAL (TYPE 2)
STA. 290+69.37 TO STA. 293+88.12 LT. OF R.M.L. =	250 LIN. FT.	1 EACH	1 EACH
STA. 291+36.52 TO STA. 294+05.27 RT. OF R.M.L. =	200 LIN. FT.	1 EACH	1 EACH
STA. 296+49.37 TO STA. 299+18.12 LT. OF L.M.L. =	200 LIN. FT.	1 EACH	1 EACH
STA. 296+66.51 TO STA. 299+85.26 RT. OF L.M.L. =	250 LIN. FT.	1 EACH	1 EACH

N

TRANSMISSION LINES

TEMPORARY CONSTRUCTION EASEMENT

PERMANENT DRAINAGE EASEMENT

TEMPORARY CONSTRUCTION EASEMENT

STA. 297+00 CONSTRUCT
TYPE RM DROP INLET
IN MEDIAN (4' X 3' X H=3'0")
WITH 24" X 90' R.C. PIPE OUTLET ON LT.
(CLASS III) TYPE 3 BEDDING WITH FES.

PROPOSED R/W

PROPOSED R/W, C/A & FENCE

CONSTRUCTION LIMITS

16' GATE

C.L. MEDIAN STA. 295+42.87 =
C.L. JAVELLO RD. STA. 20+00.00

BEGIN BRIDGE STA. 293+72.27

END BRIDGE STA. 296+44.63

STA. 291+55 END WRSF

STA. 299+00 BEGIN WRSF

C.L. MEDIAN

WIRE ROPE SAFETY FENCE

N 87°21'46" E

BEGIN BRIDGE STA. 294+10.00

113°12'26"

END BRIDGE STA. 296+82.36

S 25°00'40" E

16' GATE

PROPOSED R/W

C.L. JAVELLO RD.

STA. 299+82 CONSTRUCT
30" X 306' R.C. PIPE CULVERT
45° RT. FWD. SKEW
(CLASS III) TYPE 3 BEDDING
WITH FES LT. & RT.
Q50 = 28 CFS DA = 7.5 ACRES

STA. 290+25 CONSTRUCT
TYPE RM DROP INLET
IN MEDIAN (4' X 3' X H=3'0")
WITH 24" X 86' R.C. PIPE OUTLET ON RT.
(CLASS III) TYPE 3 BEDDING WITH FES.

FOR THE CONSTRUCTION OF DETOURS, TEMPORARY WORK RAMPS OR HAUL ROADS, THE STREAM AT STA. 290+75 - 301+00 IS CLASSIFIED AS AN INTERMITTENT STREAM. THE STREAM BANK ELEVATIONS ARE 1184 FEET MSL.

STA. 294+10.00 TO STA. 296+82.36 RT. LN.
CONSTRUCT 272'-4 1/4" X 40' BRIDGE
270' CONTINUOUS COMPOSITE PRESTRESSED
CONCRETE GIRDER UNIT (85'-100'-85')

FENCING

STA.	STA.	SIDE	TYPE A FENCE	16' GATE
285+00	293+65	LT.	948 LIN. FT.	1 EACH
285+00	294+20	RT.	1229 LIN. FT.	
296+35	300+00	LT.	605 LIN. FT.	
296+90	300+00	RT.	462 LIN. FT.	1 EACH

CONCRETE DITCH PAVING (TYPE B)

STA.	STA.	SIDE	"W"	SQ. YDS.
290+25	291+00	RT. = 74 LIN. FT.	6'-0"	49.33
296+70	299+00	RT. = 246 LIN. FT.	6'-0"	164.00
296+77	300+00	LT. = 344 LIN. FT.	6'-0"	229.33
297+00	297+00	LT. = 68 LIN. FT.	6'-0"	43.33

C.L. MEDIAN

WBCallaway 7/31/2023 3:55:10 PM
WORKSPACE: AHTD
L:\2017\1701660 - ARDOT 012326 Hwy 412 - Hwy 112\Drawings\r012326_PP_II_MNL.dgn
REVISED DATE:

DATE REVISED	DATE REVISED	FED. RD. DIST. NO.	STATE	JOB NO.	SHEET NO.	TOTAL SHEETS
		6	ARK.	012326	246	838
		PROFILE - C.L. MEDIAN				

(2)

STATE OF ARKANSAS
LICENSED PROFESSIONAL ENGINEER
No. 13436
SHAUN A. ROBERSON
DIGITALLY SIGNED 7/28/2023

REFER TO SURVEY CONTROL DETAIL SHEETS
FOR HORIZONTAL AND VERTICAL CONTROL POINTS

ELEV. 1178.15
+00.00 RT. 1173.98
0.48% RIGHT DITCH GRADE
TOP 1180.21
INV 1177.21
F.L. 1176.50 RT.
+25.00 RT. 1176.50
6.24% RIGHT DITCH GRADE
+00.00 RT. 1181.78
5' ROCK FILL
DRAINAGE/STABILIZING LAYER
1.20%
BEGIN BRIDGE LT.
STA. 293+72.27
BEGIN BRIDGE RT.
STA. 294+10.00
2:1
EXISTING GROUND
END BRIDGE LT.
STA. 296+44.63
END BRIDGE RT.
STA. 296+82.36
PROFILE GRADE
TOP 1188.55
INV 1185.55
F.L. 1184.64 LT.
+40.00 RT. 1158.50
+70.00 RT. 1159.00
+00.00 LT. 1162.03
1.67% RIGHT DITCH GRADE
+00.00 LT. 1177.03
13.82% LEFT DITCH GRADE
15.00% LEFT DITCH GRADE
+00.00 RT. 1190.78
5.38% LEFT DITCH GRADE
ELEV. 1196.15
F.L. = 1180.35 LT.
F.L. = 1183.00 RT.

FOR THE CONSTRUCTION OF DETOURS, TEMPORARY WORK RAMPS OR HAUL ROADS, THE STREAM AT STA. 290+75 - 301+00 IS CLASSIFIED AS AN INTERMITTENT STREAM. THE STREAM BANK ELEVATIONS ARE 1184 FEET MSL.

1220 1210 1200 1190 1180 1170 1160 1150 1140 1130

285+00 286+00 287+00 288+00 289+00 290+00 291+00 292+00 293+00 294+00 295+00 296+00 297+00 298+00 299+00 300+00

WBCallaway 7/31/2023 3:55:10 PM
WORKSPACE: AHTD
L:\20\7\701660 - ARDOT 012326 Hwy 412 - Hwy 112\Drawings\r012326_PP_ILMNL.dgn
REVISED DATE:

DATE REVISED	DATE REVISED	FED. RD. DIST. NO.	STATE	JOB NO.	SHEET NO.	TOTAL SHEETS
		6	ARK.	012326	247	838
		PLAN - C.L. MEDIAN				

(2)

STATE OF ARKANSAS
LICENSED PROFESSIONAL ENGINEER
No. 13436
SHAUN A. ROBERSON
DIGITALLY SIGNED 7/28/2023

N

C.L. MEDIAN
P.I. = 340+43.91
Δ = 87°21'46" LT.
D = 01°30'00"
T = 3647.83'
L = 5824.19'
P.C. = 303+96.08
P.T. = 362+20.27
e = 0.054'/'
Ls = 350'

STA. 299+82 CONSTRUCT
30" X 306' R.C. PIPE CULVERT
45° RT. FWD. SKEW
(CLASS III) TYPE 3 BEDDING
WITH FES LT. & RT.
Q50 = 28 CFS DA = 7.5 ACRES

STA. 308+00 CONSTRUCT
TYPE RM DROP INLET
IN MEDIAN (4' X 3' X H=3'0")
WITH 24" X 84' R.C. PIPE OUTLET ON LT.
(CLASS III) TYPE 3 BEDDING WITH FES.

STA. 313+88 CONSTRUCT
DBL. 8' X 7' X 618' R.C. BOX CULVERT
45° RT. FWD. SKEW
WITH 3:1 WINGS LT. & RT. & RIPRAP BASIN LT.
Q50 = 1264 CFS DA = 466.8 ACRES

TEMPORARY CONSTRUCTION EASEMENT

16' GATE

PROPOSED R/W, C/A & FENCE

CONSTRUCTION LIMITS

C.L. MEDIAN

WIRE ROPE SAFETY FENCE

N 87°21'46" E

PC 303+96.08

JAVELLO RD.

STA. 301+75 RT. C.L. MEDIAN CONSTRUCT
25' GUARDRAIL (TYPE C) AND THREE (3)
REFLECTIVE RED DIAMOND OBJECT
MARKERS MOUNTED ON U-CHANNEL
POSTS DIRECTLY BEHIND THE GUARDRAIL
AT A HEIGHT OF 4'.

FOR THE CONSTRUCTION OF DETOURS, TEMPORARY WORK RAMPS OR HAUL ROADS, THE STREAM AT STA. 313+80 - 316+50 IS CLASSIFIED AS AN INTERMITTENT STREAM. THE STREAM BANK ELEVATIONS ARE 1164 FEET MSL.

FENCING

STA.	STA.	SIDE	TYPE A FENCE	16' GATE
300+00	310+95	LT.	1123 LIN. FT.	1 EACH
300+00	315+68	RT.	1807 LIN. FT.	
311+54	315+00	LT.	382 LIN. FT.	

CONCRETE DITCH PAVING (TYPE B)

STA.	STA.	SIDE	"W"	SQ. YDS.
300+00	301+00	LT. = 101 LIN. FT.	6'-0"	67.33
300+90	302+00	RT. = 114 LIN. FT.	6'-0"	76.00
308+00	308+00	LT. = 53 LIN. FT.	6'-0"	35.33
309+00	311+00	RT. = 238 LIN. FT.	6'-0"	158.67
311+45	315+00	LT. = 346 LIN. FT.	6'-0"	230.67

C.L. MEDIAN

WBCallaway 7/31/2023 3:55:11 PM
WORKSPACE: AHTD
L:\201\101660 - ARDOT 012326 Hwy 412 - Hwy 112\Drawings\r012326_PP_12_MNL.dgn
REVISED DATE:

DATE REVISED	DATE REVISED	FED. RD. DIST. NO.	STATE	JOB NO.	SHEET NO.	TOTAL SHEETS
		6	ARK.	012326	248	838
		PROFILE - C.L. MEDIAN				
(2)						

STATE OF ARKANSAS
LICENSED PROFESSIONAL ENGINEER
No.13436
SHAUN A. ROBERSON
DIGITALLY SIGNED 7/28/2023

REFER TO SURVEY CONTROL DETAIL SHEETS
FOR HORIZONTAL AND VERTICAL CONTROL POINTS

STA. 301+33.58 BEGIN SUPERELEVATION
STA. 304+83.58 MAX. SUPERELEVATION (0.054'/')
STA. 361+32.77 MAX. SUPERELEVATION (0.054'/')
STA. 364+82.77 END SUPERELEVATION

EXISTING GROUND
PROFILE GRADE
ELEV. 1196.15
ELEV. 1214.15
1.20%
5.38% LEFT DITCH GRADE
10.92% RIGHT DITCH GRADE
+90.00 RT. 1183.00
+00.00 LT. 1193.18
+00.00 RT. 1195.01
5' ROCK FILL
DRAINAGE/STABILIZING LAYER
TOP 1201.75
INV 1198.75
F.L. 1197.86 LT.
+00.00 RT. 1203.01
17.01% RIGHT DITCH GRADE
+00.00 RT. 1186.00
16.25% RIGHT DITCH GRADE
+40.00 LT. 1154.00
1.05% LEFT DITCH GRADE
+00.00 RT. 1169.75
+45.00 LT. 1152.70
5' ROCK FILL
DRAINAGE/STABILIZING LAYER
0.75% RIGHT DITCH GRADE
10.00% LEFT DITCH GRADE
5.74% LEFT DITCH GRADE
+00.00 LT. 1161.00
F.L. = 1152.10 LT.
F.L. = 1166.00 RT.
+00.00 LT. 1181.00

FOR THE CONSTRUCTION OF DETOURS, TEMPORARY WORK RAMPS OR HAUL ROADS, THE STREAM AT STA. 313+80 - 316+50 IS CLASSIFIED AS AN INTERMITTENT STREAM. THE STREAM BANK ELEVATIONS ARE 1164 FEET MSL.

1250 1240 1230 1220 1210 1200 1190 1180 1170 1160 1150

300+00 301+00 302+00 303+00 304+00 305+00 306+00 307+00 308+00 309+00 310+00 311+00 312+00 313+00 314+00 315+00

WBCallaway 7/31/2023 3:55:11 PM
WORKSPACE: AHTD
L:\2017\17017660 - ARDOT 012326 Hwy 412 - Hwy 112\Drawings\r012326_PP_12_MNL.dgn
REVISED DATE:

DATE REVISED	DATE REVISED	FED. RD. DIST. NO.	STATE	JOB NO.	SHEET NO.	TOTAL SHEETS
		6	ARK.	012326	249	838
		PLAN - C.L. MEDIAN				
②						

STATE OF ARKANSAS
LICENSED PROFESSIONAL ENGINEER
No. 13436
SHAUN A. ROBERSON
DIGITALLY SIGNED 7/28/2023

STA. 318+00 CONSTRUCT
TYPE RM DROP INLET
IN MEDIAN (4' X 3' X H=3'0")
WITH 24" X 84' R.C. PIPE OUTLET ON LT.
(CLASS III) TYPE 3 BEDDING WITH FES.

C.L. MEDIAN
P.I. = 340+43.91
Δ = 87°21'46" LT.
D = 01°30'00"
T = 3647.83'
L = 5824.19'
P.C. = 303+96.08
P.T. = 362+20.27
e = 0.054'/'
Ls = 350'

PROPOSED R/W.
C/A & FENCE

CONSTRUCTION LIMITS

C.L. MEDIAN

WIRE ROPE SAFETY FENCE

CONSTRUCTION LIMITS

PROPOSED R/W.
C/A & FENCE

STA. 313+88 CONSTRUCT
DBL. 8' X 7' X 618' R.C. BOX CULVERT
45° RT. FWD. SKEW
WITH 3:1 WINGS LT. & RT.
Q50 = 1264 CFS DA = 466.8 ACRES

FENCING

STA.	STA.	SIDE	TYPE A FENCE	16' GATE
315+00	330+00	LT.	1458 LIN. FT.	
315+00	315+68	RT.	170 LIN. FT.	
316+20	330+00	RT.	1497 LIN. FT.	1 EACH

STA. 323+24 CONSTRUCT
42" X 296' R.C. PIPE CULVERT
30° LT. FWD. SKEW
(CLASS V) TYPE 3 BEDDING
WITH FES LT. & CONTRA-COSTA ENERGY DISSIPATOR RT.
Q50 = 59 CFS DA = 9.4 ACRES

CONCRETE DITCH PAVING (TYPE B)

STA.	STA.	SIDE	"W"	SQ. YDS.
317+00	321+00	LT. = 398 LIN. FT.	6'-0"	265.33
318+00	318+00	LT. = 43 LIN. FT.	6'-0"	28.67
323+00	325+00	RT. = 210 LIN. FT.	6'-0"	140.00
324+00	325+00	LT. = 101 LIN. FT.	6'-0"	67.33
326+00	326+00	RT. = 42 LIN. FT.	6'-0"	28.0
328+00	330+00	RT. = 211 LIN. FT.	6'-0"	133.3

STA. 326+00 CONSTRUCT
TYPE RM DROP INLET
IN MEDIAN (4' X 3' X H=3'0")
WITH 24" X 92' R.C. PIPE OUTLET ON RT.
(CLASS III) TYPE 3 BEDDING WITH FES.

C.L. MEDIAN

WBCallaway 7/31/2023 3:55:11 PM
WORKSPACE: AHTD
L:\2017\1701760 - ARDOT 012326 Hwy 412 - Hwy 412\Drawings\r012326_PP_13_MNL.dgn
REVISED DATE:

DATE REVISED	DATE REVISED	FED. RD. DIST. NO.	STATE	JOB NO.	SHEET NO.	TOTAL SHEETS
		6	ARK.	012326	250	838
		PROFILE - C.L. MEDIAN				
②						

STATE OF ARKANSAS
LICENSED PROFESSIONAL ENGINEER
No.13436
SHAUN A. ROBERSON
DIGITALLY SIGNED 7/28/2023

REFER TO SURVEY CONTROL DETAIL SHEETS
FOR HORIZONTAL AND VERTICAL CONTROL POINTS

STA. 301+33.58 BEGIN SUPERELEVATION
STA. 304+83.58 MAX. SUPERELEVATION (0.054'/')
STA. 361+32.77 MAX. SUPERELEVATION (0.054'/')
STA. 364+82.77 END SUPERELEVATION

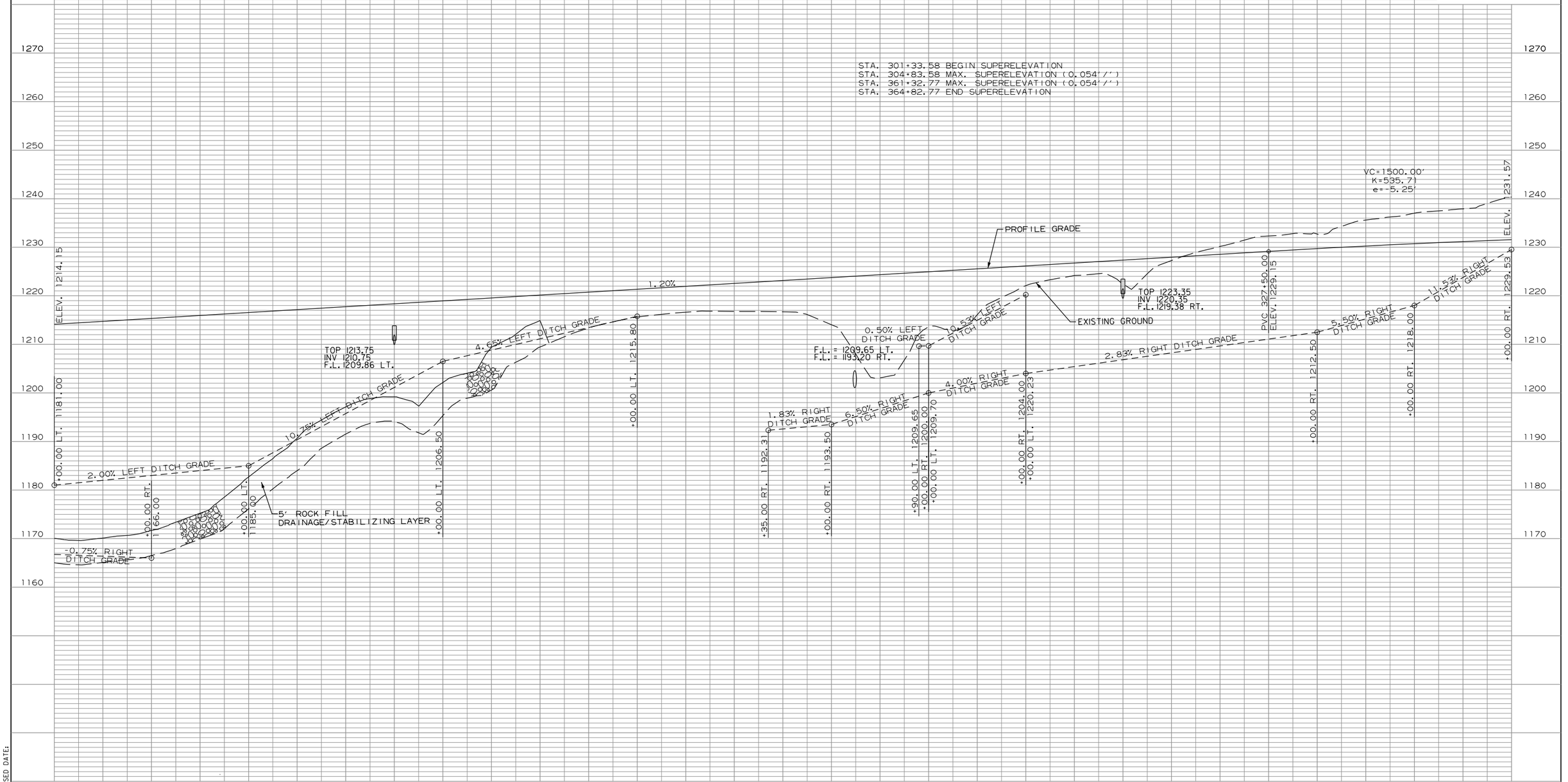

WBCallaway 7/31/2023 3:55:11 PM
WORKSPACE: AHTD
L:\2017\17017660 - ARDOT 012326 Hwy 412 - Hwy 112\Drawings\r012326_PP_13_MNL.dgn
REVISED DATE:

DATE REVISED	DATE REVISED	FED. RD. DIST. NO.	STATE	JOB NO.	SHEET NO.	TOTAL SHEETS
		6	ARK.	012326	251	838

PLAN - C.L. MEDIAN

STATE OF ARKANSAS
LICENSED PROFESSIONAL ENGINEER
No. 13436
SHAUN A. ROBERSON

DIGITALLY SIGNED 7/28/2023

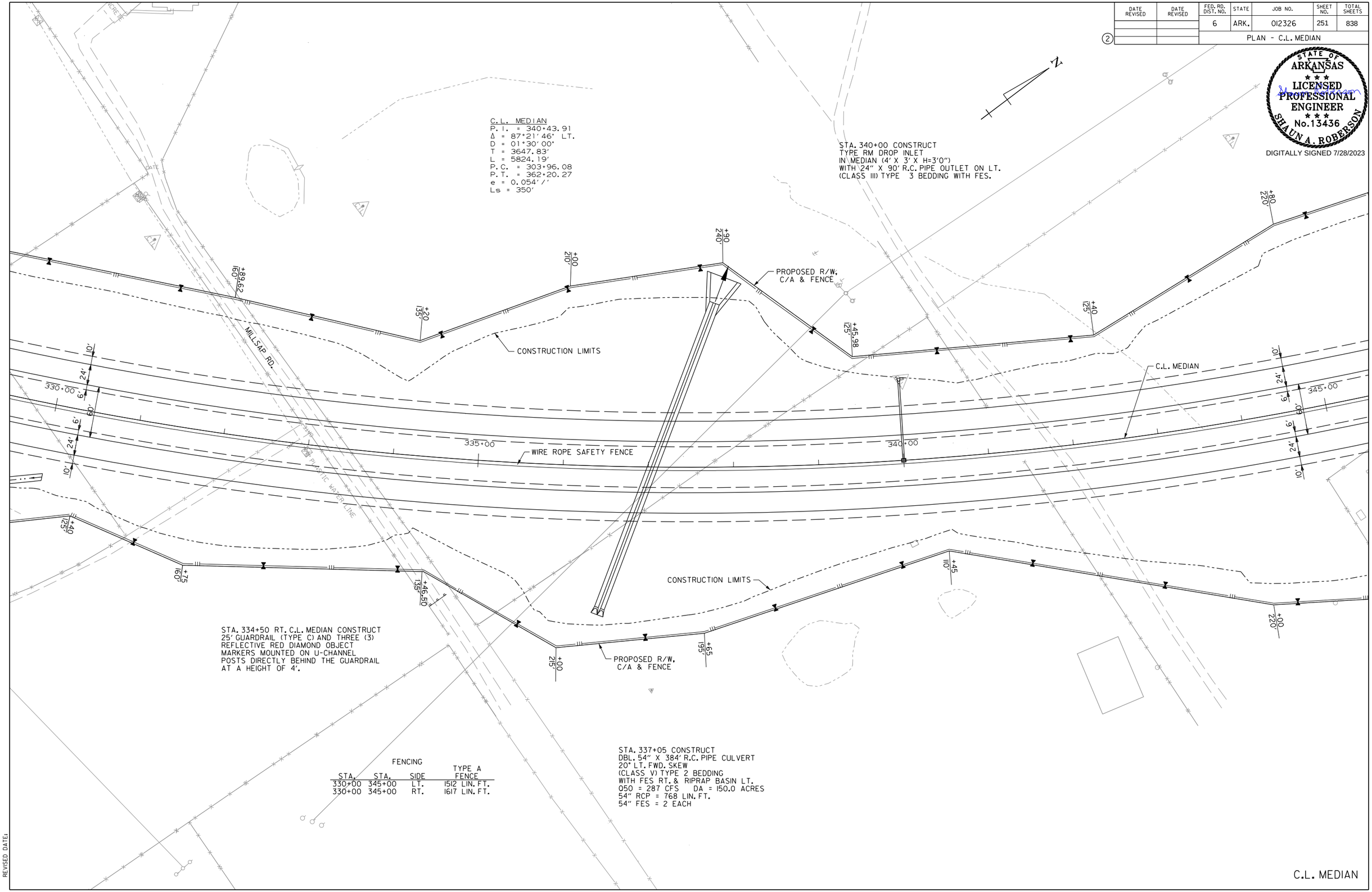

FENCING

STA.	STA.	SIDE	TYPE A FENCE
330+00	345+00	LT.	1512 LIN. FT.
330+00	345+00	RT.	1617 LIN. FT.

WBCallaway 7/31/2023 3:55:12 PM
WORKSPACE: AHTD
L:\2017\17017660 - ARDOT 012326 Hwy 412 - Hwy 112\Drawings\r012326_PP_14_MNL.dgn
REVISED DATE:

DATE REVISED	DATE REVISED	FED. RD. DIST. NO.	STATE	JOB NO.	SHEET NO.	TOTAL SHEETS
		6	ARK.	012326	252	838
		PROFILE - C.L. MEDIAN				
②						

STATE OF ARKANSAS
LICENSED PROFESSIONAL ENGINEER
No.13436
SHAUN A. ROBERSON
DIGITALLY SIGNED 7/28/2023

REFER TO SURVEY CONTROL DETAIL SHEETS
FOR HORIZONTAL AND VERTICAL CONTROL POINTS

STA. 301+33.58 BEGIN SUPERELEVATION
STA. 304+83.58 MAX. SUPERELEVATION (0.054'/')
STA. 361+32.77 MAX. SUPERELEVATION (0.054'/')
STA. 364+82.77 END SUPERELEVATION

ELEV. 1231.57
1.20%
PVI 335+00.00
ELEV. 1238.15
P.G. 1232.90
-1.60%
VC=1500.00'
K=535.71
e=-5.25'
PROFILE GRADE
EXISTING GROUND
-1.60%
ELEV. 1222.15
PVT 342+50.00
ELEV. 1226.15
TOP 1225.57
INV 1222.57
F.L. 1219.84 LT.
F.L. = 1190.73 LT.
F.L. = 1199.51RT.

1270 1260 1250 1240 1230 1220 1210 1200 1190 1180

330+00 331+00 332+00 333+00 334+00 335+00 336+00 337+00 338+00 339+00 340+00 341+00 342+00 343+00 344+00 345+00

WBCallaway 7/31/2023 3:55:12 PM
WORKSPACE: AHTD
L:\20\T\701\660 - ARDOT 012326 Hwy 412 - Hwy 112\Drawings\r012326_PP_14_MNL.dgn
REVISED DATE:

DATE REVISED	DATE REVISED	FED. RD. DIST. NO.	STATE	JOB NO.	SHEET NO.	TOTAL SHEETS
		6	ARK.	012326	253	838
②		PLAN - C.L. MEDIAN				

STATE OF ARKANSAS
LICENSED PROFESSIONAL ENGINEER
No. 13436
SHAUN A. ROBERSON
DIGITALLY SIGNED 7/28/2023

STA. 350+00 CONSTRUCT
TYPE RM DROP INLET
IN MEDIAN (4' X 3' X H=3'0")
WITH 24" X 84' R.C. PIPE OUTLET ON LT.
(CLASS III) TYPE 3 BEDDING WITH FES.

C.L. MEDIAN
P. I. = 340+43.91
Δ = 87°21'46" LT.
D = 01°30'00"
T = 3647.83'
L = 5824.19'
P. C. = 303+96.08
P. T. = 362+20.27
e = 0.054'/'
Ls = 350'

STA. 358+00 CONSTRUCT
TYPE RM DROP INLET
IN MEDIAN (4' X 3' X H=3'0")
WITH 24" X 84' R.C. PIPE OUTLET ON LT.
(CLASS III) TYPE 3 BEDDING WITH FES.

TEMPORARY CONSTRUCTION EASEMENT

PROPOSED R/W, C/A & FENCE

CONSTRUCTION LIMITS

C.L. MEDIAN

WIRE ROPE SAFETY FENCE

CONSTRUCTION LIMITS

PROPOSED R/W, C/A & FENCE

FOR THE CONSTRUCTION OF DETOURS, TEMPORARY WORK RAMPS OR HAUL ROADS, THE STREAM AT STA. 357+70 - 357+30 IS CLASSIFIED AS AN INTERMITTENT STREAM. THE STREAM BANK ELEVATIONS ARE 1177 FEET MSL.

STA. 357+81 CONSTRUCT
DBL. 48" X 298' R.C. PIPE CULVERT
12° LT. FWD. SKEW
(CLASS V) TYPE 3 BEDDING
WITH FES RT. & RIPRAP BASIN LT.
Q50 = 213 CFS DA = 106.5 ACRES
48" RCP = 594 LIN. FT.
48" FES = 2 EACH

FENCING

STA.	STA.	SIDE	TYPE A FENCE
345+00	360+00	LT.	1448 LIN. FT.
345+00	360+00	RT.	1586 LIN. FT.

CONCRETE DITCH PAVING (TYPE B)

STA.	STA.	SIDE	"W"	SQ. YDS.
354+00	357+50	RT. = 368 LIN. FT.	6'-0"	245.33
355+00	357+55	LT. = 258 LIN. FT.	6'-0"	172.00
358+00	358+00	LT. = 62 LIN. FT.	6'-0"	41.33

C.L. MEDIAN

WBCallaway 7/31/2023 3:55:12 PM
WORKSPACE: AHTD
L:\20\7\1701660 - ARDOT 012326 Hwy 412 - Hwy 62\Drawings\r012326_PP_15_MNL.dgn
REVISED DATE:

DATE REVISED	DATE REVISED	FED. RD. DIST. NO.	STATE	JOB NO.	SHEET NO.	TOTAL SHEETS
		6	ARK.	012326	254	838
		PROFILE - C.L. MEDIAN				
②						

STATE OF ARKANSAS
LICENSED PROFESSIONAL ENGINEER
No.13436
SHAUN A. ROBERSON
DIGITALLY SIGNED 7/28/2023

REFER TO SURVEY CONTROL DETAIL SHEETS
FOR HORIZONTAL AND VERTICAL CONTROL POINTS

EXISTING GROUND

PROFILE GRADE

STA. 301+33.58 BEGIN SUPERELEVATION
STA. 304+83.58 MAX. SUPERELEVATION (0.054'/')
STA. 361+32.77 MAX. SUPERELEVATION (0.054'/')
STA. 364+82.77 END SUPERELEVATION

ELEV. 1222.15

-1.60%

-2.77% LEFT DITCH GRADE

-0.44% LEFT DITCH GRADE

+00.00 LT. 1211.80 ℄

+00.00 LT. 1206.27 ℄

TOP 1210.5
INV 1207.15
F.L. 1206.27 LT.

+00.00 LT. 1205.40 ℄

+00.00 RT. 1205.71 ℄

-10.80% LEFT DITCH GRADE

-9.49% RIGHT DITCH GRADE

+00.00 LT. 1200.60 ℄

-12.18% LEFT DITCH GRADE

+00.00 LT. 1179.00 ℄

+50.00 RT. 1176.00 ℄

+55.00 LT. 1171.75 ℄

TOP 1197.35
INV 1194.35
F.L. 1193.46 LT.

F.L. = 1173.27 LT.
F.L. = 1176.00 RT.

ELEV. 1198.15

FOR THE CONSTRUCTION OF DETOURS, TEMPORARY WORK RAMPS OR HAUL ROADS, THE STREAM AT STA. 357+70 - 357+30 IS CLASSIFIED AS AN INTERMITTENT STREAM. THE STREAM BANK ELEVATIONS ARE 1177 FEET MSL.

1250 1240 1230 1220 1210 1200 1190 1180 1170 1160 1150

345+00 346+00 347+00 348+00 349+00 350+00 351+00 352+00 353+00 354+00 355+00 356+00 357+00 358+00 359+00 360+00

WBCallaway 7/31/2023 3:55:12 PM
WORKSPACE: AHTD
L:\2017\17017660 - ARDOT 012326 Hwy 412 - Hwy 112\Drawings\r012326_PP_I5_MNL.dgn
REVISED DATE:

DATE REVISED	DATE REVISED	FED. RD. DIST. NO.	STATE	JOB NO.	SHEET NO.	TOTAL SHEETS
		6	ARK.	012326	255	838
		PLAN C.L. MEDIAN				

STATE OF ARKANSAS
LICENSED PROFESSIONAL ENGINEER
No.13436
SHAUN A. ROBERSON
DIGITALLY SIGNED 7/28/2023

N

C.L. MEDIAN
P.I. = 340+43.91
Δ = 87°21'46" LT.
D = 01°30'00"
T = 3647.83'
L = 5824.19'
P.C. = 303+96.08
P.T. = 362+20.27
e = 0.054'/'
Ls = 350'

STA. 368+00 CONSTRUCT
TYPE RM DROP INLET
IN MEDIAN (4' X 3' X H=3'0")
WITH 24" X 86' R.C. PIPE OUTLET ON LT.
(CLASS III) TYPE 3 BEDDING WITH FES.

STA. 374+22 IN PLACE
DBL. 24" X 30' PIPE CULVERT LT.
REMOVE

TEMPORARY CONSTRUCTION EASEMENT

PROPOSED R/W, C/A & FENCE

CONSTRUCTION LIMITS

C.L. MEDIAN

WIRE ROPE SAFETY FENCE

N 0°00'00" E

PT 362+20.27

+60 375'
+99.22 170'
+00 200'
+00 200'
+96 170'
+75 365'
+00 290.15'
+25 225'
+14.64 185'
+50 125'
+41.63 165'
+20 195'
+86.23 230'
+25 235'
+50 25'

360+00 365+00 370+00 375+00

10' 24' 6' 60' 6' 24' 10'

FENCING

STA.	STA.	SIDE	TYPE A FENCE
360+00	375+00	LT.	1507 LIN. FT.
360+00	375+00	RT.	1546 LIN. FT.

CONCRETE DITCH PAVING (TYPE B)

STA.	STA.	SIDE	"W"	SQ. YDS.
369+00	372+00	RT. = 318 LIN. FT.	6'-0"	212.00
370+00	374+35	LT. = 448 LIN. FT.	6'-0"	298.67

STA. 373+15 CONSTRUCT
DBL. 54" X 390' R.C. PIPE CULVERT
35° LT. FWD. SKEW
(CLASS V) TYPE 3 BEDDING
WITH FES RT. & RIPRAP BASIN LT.
Q50 = 257 CFS DA = 146.1 ACRES
54" RCP = 778 LIN. FT.
54" FES = 2 EACH

FOR THE CONSTRUCTION OF DETOURS, TEMPORARY WORK RAMPS OR HAUL ROADS, THE STREAM AT STA. 372+00 - 374+40 IS CLASSIFIED AS AN INTERMITTENT STREAM. THE STREAM BANK ELEVATIONS ARE 1146 FEET MSL.

C.L. MEDIAN

WBCallaway 7/31/2023 3:55:13 PM
WORKSPACE: AHTD
L:\201\T\701T660 - ARDOT 012326 Hwy 412 - Hwy 112\Drawings\r012326_PP_16.MNL.dgn
REVISED DATE:

DATE REVISED	DATE REVISED	FED. RD. DIST. NO.	STATE	JOB NO.	SHEET NO.	TOTAL SHEETS
		6	ARK.	012326	256	838
		PROFILE - C.L. MEDIAN				
2						

STATE OF ARKANSAS
LICENSED PROFESSIONAL ENGINEER
No.13436
SHAUN A. ROBERSON
DIGITALLY SIGNED 7/28/2023

REFER TO SURVEY CONTROL DETAIL SHEETS
FOR HORIZONTAL AND VERTICAL CONTROL POINTS

STA. 301+33.58 BEGIN SUPERELEVATION
STA. 304+83.58 MAX. SUPERELEVATION (0.054'/')
STA. 361+32.77 MAX. SUPERELEVATION (0.054'/')
STA. 364+82.77 END SUPERELEVATION

ELEV. 1198.115
-1.60%
-2.90% LEFT DITCH GRADE
+00.00 LT. 1185.98
-0.50% LEFT DITCH GRADE
TOP 1181.11
INV 1178.11
F.L. 1177.27 LT.
+00.00 LT. 1177.27
-4.21% RIGHT DITCH GRADE
+00.00 RT. 1179.58
+00.00 LT. 1176.27
PROFILE GRADE
EXISTING GROUND
PVC 373+00.00
ELEV. 1177.35
VC=1500.00'
K=375.00
e=7.50%
ELEV. 1174.68
-20.00% RIGHT DITCH GRADE
+90.00 RT. 1171.58
-10.13% LEFT DITCH GRADE
0.56% RIGHT DITCH GRADE
+00.00 RT. 1149.58
+00.00 LT. 1145.87
F.L. = 1138.48 LT.
F.L. = 1149.58 RT.
-5.47% LEFT DITCH GRADE
+35.00 LT. 1138.48
+00.00 RT. 1151.27

FOR THE CONSTRUCTION OF DETOURS, TEMPORARY WORK RAMPS OR HAUL ROADS, THE STREAM AT STA. 372+00 - 374+40 IS CLASSIFIED AS AN INTERMITTENT STREAM. THE STREAM BANK ELEVATIONS ARE 1146 FEET MSL.

1230 1220 1210 1200 1190 1180 1170 1160 1150 1140 1130

360+00 361+00 362+00 363+00 364+00 365+00 366+00 367+00 368+00 369+00 370+00 371+00 372+00 373+00 374+00 375+00

WBCalaway 7/31/2023 3:55:13 PM
WORKSPACE: AHTD
L:\2017\17017660 - ARDOT 012326 Hwy 412 - Hwy 112\Drawings\r012326_PP_i6_MNL.dgn
REVISED DATE:

DATE REVISED	DATE REVISED	FED. RD. DIST. NO.	STATE	JOB NO.	SHEET NO.	TOTAL SHEETS
		6	ARK.	012326	257	838
		PLAN & PROFILE - C.L. MEDIAN				

STATE OF ARKANSAS
LICENSED PROFESSIONAL ENGINEER
No. 13436
SHAUN A. ROBERSON
DIGITALLY SIGNED 7/28/2023

STA. 377+00 CONSTRUCT TYPE RM DROP INLET IN MEDIAN (4' X 3' X H=3'0") WITH 24" X 82' R.C. PIPE OUTLET ON LT. (CLASS III) TYPE 3 BEDDING WITH FES.

CONCRETE DITCH PAVING (TYPE A)

STA.	STA.	SIDE	"B"	"W"	SQ. YDS.
386+84	387+70	LT. = 106 LIN. FT.	5'-0"	11'-0"	106.33
387+08	390+00	RT. = 293 LIN. FT.	5'-0"	11'-0"	358.11

STA. 378+21.91 TO STA. 387+89.09 LT. LN.
CONSTRUCT 967'-2⅛" X 40' BRIDGE
725' CONTINUOUS COMPOSITE PRESTRESSED
CONCRETE GIRDER UNIT (7 @ 80'-95'-70')

STA. 378+21.91 TO STA. 387+89.09 RT. LN.
CONSTRUCT 967'-2⅛" X 40' BRIDGE
725' CONTINUOUS COMPOSITE PRESTRESSED
CONCRETE GIRDER UNIT (7 @ 80'-95'-70')

FENCING

STA.	STA.	SIDE	TYPE A FENCE	16' GATE
375+00	378+23	LT.	439 LIN. FT.	1 EACH
375+00	378+23	RT.	431 LIN. FT.	
387+88	390+00	LT.	298 LIN. FT.	
387+88	390+00	RT.	382 LIN. FT.	1 EACH

CONCRETE DITCH PAVING (TYPE B)

STA.	STA.	SIDE	"W"	SQ. YDS.
379+00	379+00	LT. = 54 LIN. FT.	6'-0"	36.00
389+00	389+00	LT. = 36 LIN. FT.	6'-0"	24.00

PC 17+65.80
PT 19+23.14
PT 20+78.72
BRUSH CREEK RD. ASTT
C.L. MEDIAN
N 0°00'00" E
BEGIN BRIDGE STA. 378+21.91
END BRIDGE STA. 387+89.09
WIRE ROPE SAFETY FENCE
16' GATE
CONSTRUCTION LIMITS
PROPOSED R/W, C/A & FENCE
PROPOSED R/W
STA. 375+78 END WRSF
APPROXIMATE FEMA 100 YR. FLOODPLAIN LIMITS
BRUSH CREEK STA. 19+36 IN PLACE
18" X 32' PIPE CULVERT
PLUG & ABANDON
C.L. MEDIAN STA. 386+73.62 =
C.L. BRUSH CREEK RD. STA. 20+00.00
STA. 389+00 CONSTRUCT TYPE RM DROP INLET IN MEDIAN (4' X 3' X H=3'0") WITH 24" X 92' R.C. PIPE OUTLET ON LT. (CLASS III) TYPE 3 BEDDING WITH FES.
C.L. MEDIAN

REFER TO SURVEY CONTROL DETAIL SHEETS FOR HORIZONTAL AND VERTICAL CONTROL POINTS

FOR THE CONSTRUCTION OF DETOURS, TEMPORARY WORK RAMPS OR HAUL ROADS, THE STREAM AT BRUSH CREEK IS CLASSIFIED AS AN 5CFS STREAM. THE STREAM BANK ELEVATIONS ARE 1137 FEET MSL.

C.L. MEDIAN STATIONING	GUARDRAIL (TYPE A)	THRIE BEAM GUARDRAIL TERMINAL	GUARDRAIL TERMINAL (TYPE 2)
STA. 374+92.75 TO STA. 378+11.50 LT. OF R.M.L.	= 250 LIN. FT.	1 EACH	1 EACH
STA. 375+42.75 TO STA. 378+11.50 RT. OF R.M.L.	= 200 LIN. FT.	1 EACH	1 EACH
STA. 387+99.49 TO STA. 390+68.24 LT. OF L.M.L.	= 200 LIN. FT.	1 EACH	1 EACH
STA. 387+99.49 TO STA. 391+18.24 RT. OF L.M.L.	= 250 LIN. FT.	1 EACH	1 EACH

ELEV. 1174.68
BEGIN BRIDGE RT. &LT. STA. 378+21.91
VC=1500.00'
K=375.00
e=7.50'
PROFILE GRADE
END BRIDGE RT. &LT. STA. 387+89.09
PVT 388+00.00 ELEV. 1183.35
ELEV. 1188.15
2.40%
-1.60%
TOP 1169.17 INV 1166.17 F.L. 1165.15 LT.
5' ROCK FILL DRAINAGE/STABILIZING LAYER
PVI 380+50.00 ELEV. 1165.35 P.G. 1172.85
EXISTING GROUND
BRUSH CREEK Q50 EL. = 1144.24
1.69% LEFT DITCH GRADE
62.84 LT. 1134.94
88.63 LT. 1139.78
77.87 LT. 1140.43
29.76' LEFT DITCH GRADE
16.67' RIGHT DITCH GRADE
+70.00 LT. 1167.85
+50.00 RT. 1150.00
+08.00 RT. 1143.00
TOP 1181.80 INV 1178.80 F.L. 1177.84 LT.
0.50% LEFT DITCH GRADE
5' ROCK FILL DRAINAGE/STABILIZING LAYER
3.20% RIGHT DITCH GRADE
5' FLAT BOTTOM DITCH LT.
+70.00 LT.
+00.00 LT. 1188.15
+00.00 RT. 1158.00
1220
1210
1200
1190
1180
1170
1160
1150
1140
1130
375+00
376+00
377+00
378+00
379+00
380+00
381+00
382+00
383+00
384+00
385+00
386+00
387+00
388+00
389+00
390+00

WBCalloway 7/31/2023 3:55:13 PM
WORKSPACE: AHTD
L:\20T\1701660 - ARDOT 012326 Hwy 412 - Hwy 112\Drawings\r012326_PP_17_MNL.dgn
REVISED DATE:

DATE REVISED	DATE REVISED	FED. RD. DIST. NO.	STATE	JOB NO.	SHEET NO.	TOTAL SHEETS
		6	ARK.	012326	258	838
②		PLAN & PROFILE - C.L. MEDIAN				

STATE OF ARKANSAS
LICENSED PROFESSIONAL ENGINEER
No. 13436
SHAUN A. ROBERSON
DIGITALLY SIGNED 7/28/2023

FENCING

STA.	STA.	SIDE	TYPE A FENCE
390+00	405+00	LT.	1517 LIN. FT.
390+00	405+00	RT.	1507 LIN. FT.

CONCRETE DITCH PAVING (TYPE B)

STA.	STA.	SIDE	"W"	SQ. YDS.
392+00	394+00	RT. = 210 LIN. FT.	6'-0"	140.00
399+00	401+00	LT. = 200 LIN. FT.	6'-0"	133.33

CONCRETE DITCH PAVING (TYPE A)

STA.	STA.	SIDE	"B"	"W"	SQ. YDS.
390+00	392+00	RT. = 200 LIN. FT.	5'-0"	11'-0"	244.44
391+00	393+00	LT. = 208 LIN. FT.	5'-0"	11'-0"	254.22

STA. 399+00 CONSTRUCT TYPE RM DROP INLET IN MEDIAN (4' X 3' X H=3'0") WITH 24" X 86' R.C. PIPE OUTLET ON LT. (CLASS III) TYPE 3 BEDDING WITH FES.

PROPOSED R/W, C/A & FENCE

CONSTRUCTION LIMITS

C.L. MEDIAN

WIRE ROPE SAFETY FENCE

STA. 390+33
BEGIN WRSF

N 0°00'00" E

C.L. MEDIAN

REFER TO SURVEY CONTROL DETAIL SHEETS FOR HORIZONTAL AND VERTICAL CONTROL POINTS

5' FLAT BOTTOM DITCH LT.

5' FLAT BOTTOM DITCH RT.

EXISTING GROUND

PROFILE GRADE

5" ROCK FILL DRAINAGE/STABILIZING LAYER

0.50% LEFT DITCH GRADE

10.84% LEFT DITCH GRADE

17.50% RIGHT DITCH GRADE

6.50% RIGHT DITCH GRADE

5.08% RIGHT DITCH GRADE

0.45% LEFT DITCH GRADE

2.40%

4.36% LEFT DITCH GRADE

TOP 1205.51
INV 1202.51
F.L. 1201.67 LT.

ELEV. 1188.15

ELEV. 1207.35

ELEV. 1224.15

+00.00 LT. 1158.00

+00.00 LT. 1169.50

+00.00 RT. 1171.00

+00.00 RT. 1188.50

+00.00 LT. 1191.18

+00.00 RT. 1193.58

+00.00 LT. 1200.78

+00.00 LT. 1201.67

+00.00 LT. 1210.38

1230
1220
1210
1200
1190
1180
1170
1160
1150
1140

1260
1250
1240
1230
1220
1210
1200
1190
1180
1170

390+00 391+00 392+00 393+00 394+00 395+00 396+00 397+00 398+00 399+00 400+00 401+00 402+00 403+00 404+00 405+00

WBCalloway 7/31/2023 3:55:14 PM
WORKSPACE: AHTD
L:\20IT\1701660 - ARDOT 012326 Hwy 412 - Hwy 112\Drawings\r012326_PP_18_MNL.dgn
REVISED DATE:

DATE REVISED	DATE REVISED	FED. RD. DIST. NO.	STATE	JOB NO.	SHEET NO.	TOTAL SHEETS
		6	ARK.	012326	259	838
		PLAN & PROFILE - C.L. MEDIAN				

(2)

STATE OF ARKANSAS
LICENSED PROFESSIONAL ENGINEER
No. 13436
SHAUN A. ROBERSON
DIGITALLY SIGNED 7/28/2023

+93.74 225'
+83.86 225'
+03.23 235'
+40 175'
PROPOSED R/W, C/A & FENCE
CONSTRUCTION LIMITS
+75.74 150'
N
C.L. MEDIAN
PC 414+23.52
415+00
WIRE ROPE SAFETY FENCE
405+00
410+00
N 0°00'00" E
420+00
10' 24' 6' 60' 6' 24' 10'
CONSTRUCTION LIMITS
PROPOSED R/W, C/A & FENCE
+63.11 125'
+00 135'
+28.86 135'
+00 110'
+25 130'
+70 195'

FENCING

STA.	STA.	SIDE	TYPE A FENCE
405+00	420+00	LT.	1528 LIN. FT.
405+00	420+00	RT.	1495 LIN. FT.

STA. 409+00 CONSTRUCT TYPE RM DROP INLET IN MEDIAN (4' X 3' X H=3'0") WITH 24" X 85' R.C. PIPE OUTLET ON LT. (CLASS III) TYPE 3 BEDDING WITH FES.

STA. 412+55 RT. C.L. MEDIAN CONSTRUCT 25' GUARDRAIL (TYPE C) AND THREE (3) REFLECTIVE RED DIAMOND OBJECT MARKERS MOUNTED ON U-CHANNEL POSTS DIRECTLY BEHIND THE GUARDRAIL AT A HEIGHT OF 4'.

CONCRETE DITCH PAVING (TYPE B)

STA.	STA.	SIDE	"W"	SQ. YDS.
409+00	411+00	LT. = 200 LIN. FT.	9'-0"	200.00
419+40	420+00	LT. = 64 LIN. FT.	6'-0"	42.67

C.L. MEDIAN
P.I. = 454+00.41
Δ = 92°18'35" RT.
D = 01°30'00"
T = 3976.89'
L = 6153.98'
P.C. = 414+23.52
P.T. = 475+77.50
e = 0.054'/'
Ls = 350'

STA. 419+00 CONSTRUCT TYPE RM DROP INLET IN MEDIAN (4' X 3' X H=3'0") WITH 24" X 97' R.C. PIPE OUTLET ON RT. (CLASS III) TYPE 3 BEDDING WITH FES.

+65 185'
C.L. MEDIAN

REFER TO SURVEY CONTROL DETAIL SHEETS FOR HORIZONTAL AND VERTICAL CONTROL POINTS

STA. 411+61.02 BEGIN SUPERELEVATION
STA. 415+11.02 MAX. SUPERELEVATION (0.054'/')
STA. 474+90.00 MAX. SUPERELEVATION (0.054'/')
STA. 478+40.00 END SUPERELEVATION

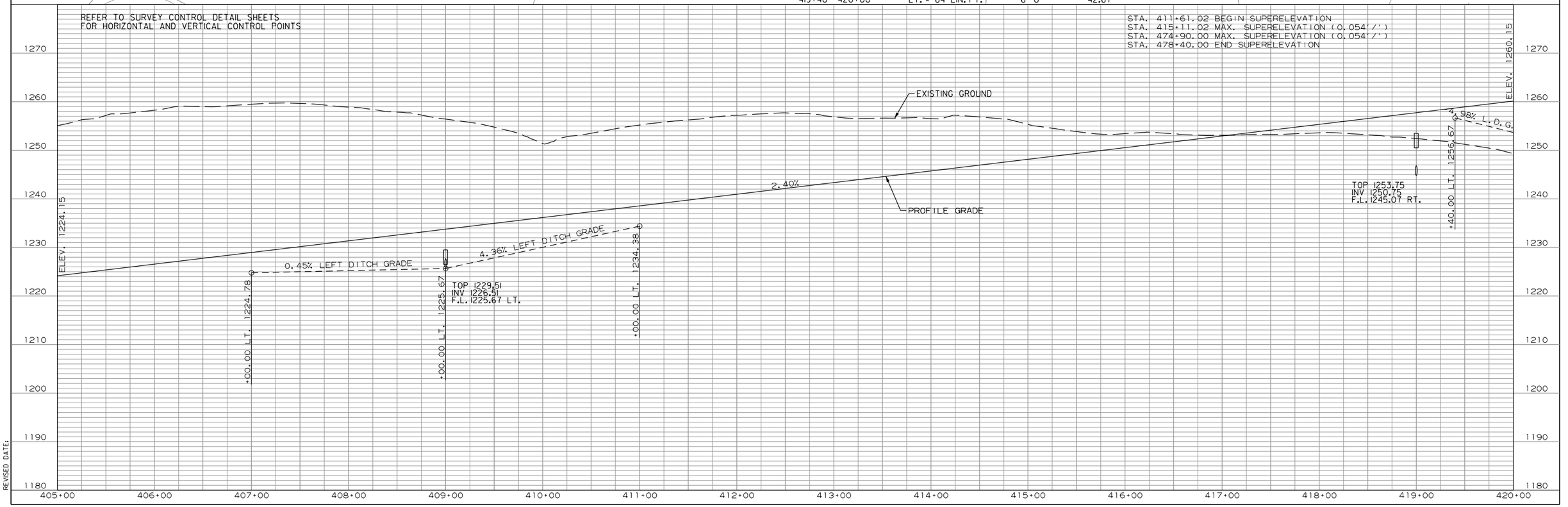

WBCalloway 7/31/2023 3:55:14 PM
WORKSPACE: AHTD
L:\20\T\1701660 - ARDOT 012326 Hwy 412 - Hwy 112\Drawings\r012326_PP_19_MNL.dgn
REVISED DATE:

DATE REVISED	DATE REVISED	FED. RD. DIST. NO.	STATE	JOB NO.	SHEET NO.	TOTAL SHEETS
		6	ARK.	012326	260	838
		PLAN - C.L. MEDIAN				

(2)

STATE OF ARKANSAS
LICENSED PROFESSIONAL ENGINEER
No. 13436
SHAUN A. ROBERSON
DIGITALLY SIGNED 7/28/2023

CONCRETE DITCH PAVING (TYPE B)

STA.	STA.	SIDE	"W"	SQ. YDS.
420+00	423+00	LT. = 315 LIN. FT.	6'-0"	210.00
428+75	432+00	RT. = 320 LIN. FT.	6'-0"	213.33
430+00	430+00	RT. = 32 LIN. FT.	6'-0"	21.33

FENCING

STA.	STA.	SIDE	TYPE A FENCE	16' GATE
420+00	426+78	LT.	770 LIN. FT.	1 EACH
420+00	427+17	RT.	894 LIN. FT.	
428+90	435+00	LT.	699 LIN. FT.	
429+35	435+00	RT.	620 LIN. FT.	1 EACH

STA. 426+83.03 TO STA. 428+97.83 LT. LN.
CONSTRUCT 217'-3⅜" X 40' BRIDGE
215' CONTINUOUS COMPOSITE PRESTRESSED
CONCRETE GIRDER UNIT (70'-75'-70')

C.L. MARCHANT ROAD

C.L. XNA ACCESS RAMP 4 STA. 428+87.18 =
C.L. MEDIAN STA. 428+87.18, 58.50' LT.

700' ACCELERATION LANE

300' TAPER

C.L. MEDIAN STA. 428+07.17 =
C.L. MARCHANT ROAD STA. 20+00.00

PROP. R/W

S 81°26'00" E

PROPOSED R/W, C/A & FENCE

16' GATE

CONSTRUCT 1 EA. 36" X 292' R.C. PIPE CULVERT, 20° LT. FWD. SKEW, (CLASS V) TYPE 3 BEDDING WITH FES LT. & CONTRA-COSTA ENERGY DISSIPATOR RT. Q50 = 34 CFS DA = 7.6 ACRES

CONSTRUCTION LIMITS

BEGIN BRIDGE STA. 426+83.03

C.L. MEDIAN

WIRE ROPE SAFETY FENCE

END BRIDGE STA. 428+97.83

108°22'10.8"

C.L. XNA ACCESS RD. RAMP 4

PC 34+19.69

STA. 424+59 END WRSF

BEGIN BRIDGE STA. 427+09.38

END BRIDGE STA. 429+20.20

STA. 431+48 BEGIN WRSF

WIRE ROPE SAFETY FENCE

PC 21+48.95

PROPOSED C/A & FENCE

CONSTRUCTION LIMITS

16' GATE

PI 22+32.83

PROPOSED R/W, C/A & FENCE

C.L. MARCHANT RD. STA. 22+50.00 =
C.L. MARCHANT ROAD ACCESS RD STA. 20+00.00

PT 23+16.71

C.L. MARCHANT ROAD ACCESS RD.

PROPOSED R/W

MARCHANT RD. (ASPHALT)

C.L. MEDIAN STATIONING	GUARDRAIL (TYPE A)	THRIE BEAM GUARDRAIL TERMINAL	GUARDRAIL TERMINAL (TYPE 2)
STA. 423+74.25 TO STA. 426+93.00 LT. OF R.M.L.	= 250 LIN. FT.	1 EACH	1 EACH
STA. 424+36.28 TO STA. 427+05.03 RT. OF R.M.L.	= 200 LIN. FT.	1 EACH	1 EACH
STA. 429+15.08 TO STA. 432+33.83 RT. OF L.M.L.	= 250 LIN. FT.	1 EACH	1 EACH
C.L. XNA ACCESS RAMP 4 STATIONING			
STA. 428+98.34 TO STA. 431+67.09 LT.	= 200 LIN. FT.	1 EACH	1 EACH

STA. 430+00 CONSTRUCT
TYPE RM DROP INLET
IN MEDIAN (4' X 3' X H=3'0")
WITH 24" X 82' R.C. PIPE OUTLET ON RT.
(CLASS III) TYPE 3 BEDDING WITH FES.

C.L. MEDIAN
P.I. 454+00.41
Δ = 92°18'35" RT.
D = 01°30'00"
T = 3976.89'
L = 6153.98'
P.C. = 414+23.52
P.T. = 475+77.50
e = 0.054'/'
Ls = 350'

STA. 427+09.38 TO STA. 429+20.20 RT. LN.
CONSTRUCT 217'-3⅜" X 40' BRIDGE
215' CONTINUOUS COMPOSITE PRESTRESSED
CONCRETE GIRDER UNIT (70'-75'-70')

C.L. MEDIAN

WBCalloway 7/31/2023 3:55:44 PM
WORKSPACE: AHTD
L:\20TN\10T660 - ARDOT 012326 Hwy 412 - Hwy 112\Drawings\r012326_PP_20_MNL.dgn
REVISED DATE:

DATE REVISED	DATE REVISED	FED. RD. DIST. NO.	STATE	JOB NO.	SHEET NO.	TOTAL SHEETS
		6	ARK.	012326	261	838
		PROFILE - C.L. MEDIAN				
②						

STATE OF ARKANSAS
LICENSED PROFESSIONAL ENGINEER
No.13436
SHAUN A. ROBERSON
DIGITALLY SIGNED 7/28/2023

REFER TO SURVEY CONTROL DETAIL SHEETS
FOR HORIZONTAL AND VERTICAL CONTROL POINTS

STA. 411+61.02 BEGIN SUPERELEVATION
STA. 415+11.02 MAX. SUPERELEVATION (0.054'/')
STA. 474+90.00 MAX. SUPERELEVATION (0.054'/')
STA. 478+40.00 END SUPERELEVATION

ELEV. 1260.15
2.40%
PVC 422+50.00
ELEV. 1266.15
-4.98% LEFT DITCH GRADE
-8.45% LEFT DITCH GRADE
2.48% LEFT DITCH GRADE
F.L. = 1244.77 LT.
F.L. = 1231.14 RT.
+79.00 LT. 1244.77
+00.00 LT. 1255.00
+00.00 LT. 1259.96
BEGIN BRIDGE LT.
STA. 426+83.03
BEGIN BRIDGE RT.
STA. 427+09.38
1:2
1:2
+00.00 RT. 1235.46
2.19% RIGHT DITCH GRADE
+05.00 LT. 1245.00
+07.00 RT. 1240.00
1.36% LEFT DITCH GRADE
END BRIDGE LT.
STA. 428+97.83
END BRIDGE RT.
STA. 429+29.20
2:1
2:1
+75.00 RT. 1250.00
6.00% RIGHT DITCH GRADE
+00.00 LT. 1246.29
VC=1500.00'
K=517.24
e=-5.44'
PVI 430+00.00
ELEV. 1284.15
P.G. 1278.71
2.40%
-0.50%
PROFILE GRADE
TOP 1274.96
INV 1271.96
F.L. 1271.06 RT.
+00.00 RT. 1260.00
6.00% RIGHT DITCH GRADE
EXISTING GROUND
5' ROCK FILL
DRAINAGE/STABILIZING LAYER
+00.00 RT. 1272.00
3.14% RIGHT DITCH GRADE
+00.00 RT. 1275.14
ELEV. 1281.05

1320
1310
1300
1290
1280
1270
1260
1250
1240
1230
1220

420+00 421+00 422+00 423+00 424+00 425+00 426+00 427+00 428+00 429+00 430+00 431+00 432+00 433+00 434+00 435+00

WBCallaway 7/31/2023 3:55:14 PM
WORKSPACE: AHTD
L:\2017\17017660 - ARDOT 012326 Hwy 412 - Hwy 112\Drawings\r012326_PP_20_MNL.dgn
REVISED DATE:

DATE REVISED	DATE REVISED	FED. RD. DIST. NO.	STATE	JOB NO.	SHEET NO.	TOTAL SHEETS
		6	ARK.	012326	262	838

PLAN & PROFILE - C.L. MEDIAN

STATE OF ARKANSAS
LICENSED PROFESSIONAL ENGINEER
No. 13436
SHAUN A. ROBERSON
DIGITALLY SIGNED 7/28/2023

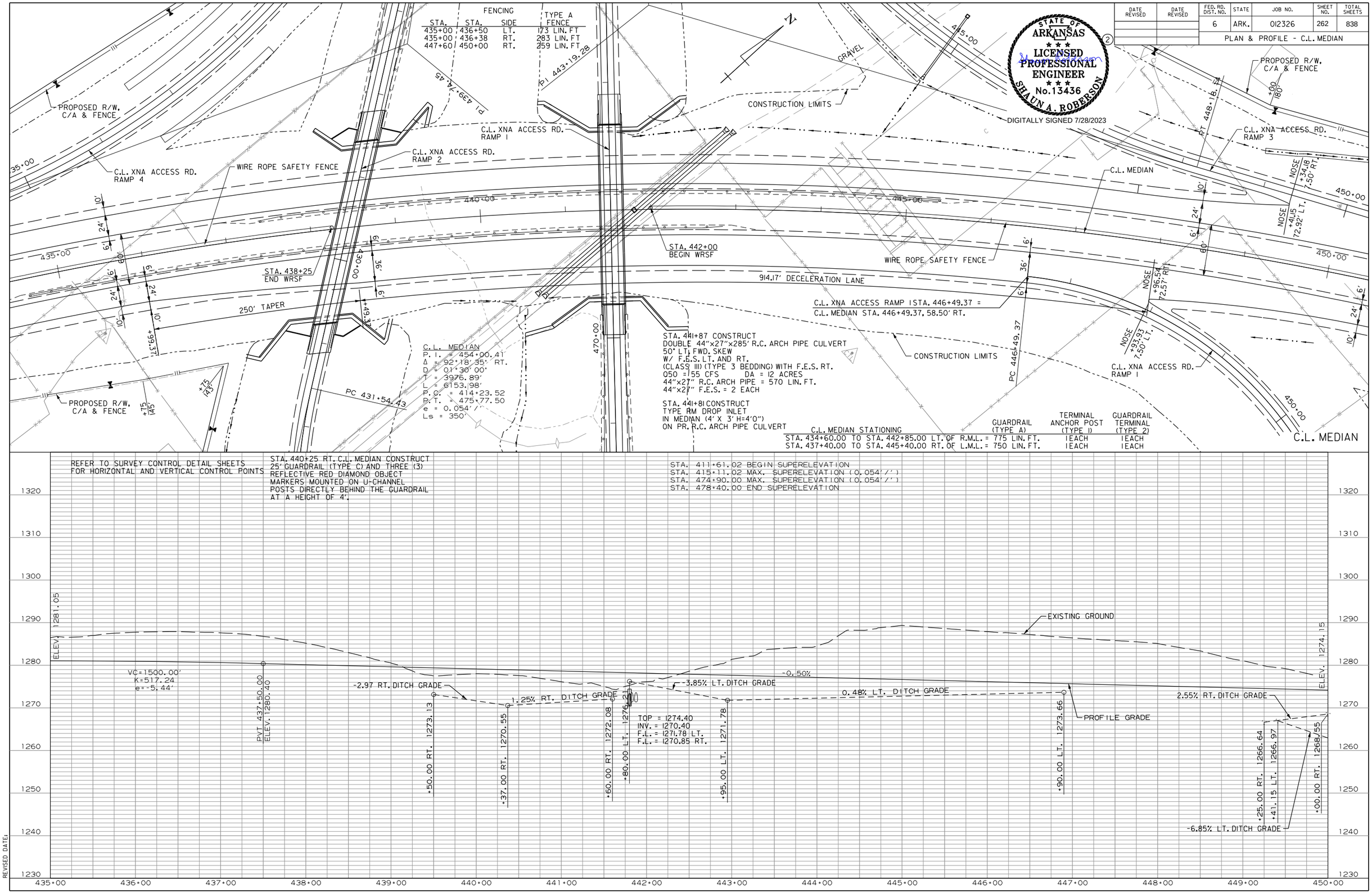

WBCallaway 7/31/2023 3:55:16 PM
WORKSPACE: AHTD
L:\2017\17017660 - ARDOT 012326 Hwy 412 - Hwy 112\Drawings\r012326_PP_21_MNL.dgn
REVISED DATE:

DATE REVISED	DATE REVISED	FED. RD. DIST. NO.	STATE	JOB NO.	SHEET NO.	TOTAL SHEETS
		6	ARK.	012326	263	838

PLAN - C.L. MEDIAN

STATE OF ARKANSAS
LICENSED PROFESSIONAL ENGINEER
No. 13436
SHAUN A. ROBERSON
DIGITALLY SIGNED 7/28/2023

FENCING

STA.	STA.	SIDE	TYPE A FENCE	16' GATE
450+00	462+51	LT.	1454 LIN. FT.	1 EACH
456+00	462+75	RT.	849 LIN. FT.	
464+62	465+00	LT.	267 LIN. FT.	
464+95	465+00	RT.	22 LIN. FT.	

CONCRETE DITCH PAVING (TYPE B)

STA.	STA.	SIDE	"W"	SQ. YDS.
461+00	463+15	LT. = 248 LIN. FT.	6'-0"	165.33
462+00	462+00	LT. = 50 LIN. FT.	6'-0"	33.33
462+50	463+75	RT. = 133 LIN. FT.	6'-0"	88.67

C.L. MEDIAN STATIONING	GUARDRAIL (TYPE A)	THRIE BEAM GUARDRAIL TERMINAL	GUARDRAIL TERMINAL (TYPE 2)
STA. 459+36.22 TO STA. 462+54.97 LT. OF R.M.L.	= 250 LIN. FT.	1 EACH	1 EACH
C.L. XNA ACCESS RAMP 2 STATIONING			
STA. 459+94.96 TO STA. 462+63.71 RT.	= 200 LIN. FT.	1 EACH	1 EACH

C.L. MEDIAN
P. I. = 454+00.41
Δ = 92°18'35" RT.
D = 01°30'00"
T = 3976.89'
L = 6153.98'
P. C. = 414+23.52
P. T. = 475+77.50
e = 0.054'/'
Ls = 350'

STA. 451+00 CONSTRUCT
TYPE RM DROP INLET
IN MEDIAN (4' X 3' X H=3'0")
WITH 24" X 118' R.C. PIPE OUTLET ON LT.
(CLASS III) TYPE 3 BEDDING WITH FES.

STA. 457+95 CONSTRUCT
30"x291' R.C. PIPE CULVERT
18° LT. FWD. SKEW
WITH F.E.S. LT. & RT.
(CLASS III) (TYPE 3 BEDDING) WITH F.E.S. LT. & RT.
Q50 = 18 CFS DA = 5.8 ACRES
30" R.C. PIPE = 289 LIN. FT.
30" F.E.S. = 2 EACH
DUMPED RIPRAP = 6 CU. YD.

STA. 462+53.02 TO STA. 464+67.76 LT. LN.
CONSTRUCT 217'-2 9/16" X 40' BRIDGE
215' CONTINUOUS COMPOSITE PRESTRESSED
CONCRETE GIRDER UNIT (70'-75'-70')

STA. 462+00 CONSTRUCT
TYPE RM DROP INLET
IN MEDIAN (4' X 3' X H=3'0")
WITH 24" X 88' R.C. PIPE OUTLET ON LT.
(CLASS III) TYPE 3 BEDDING WITH FES.

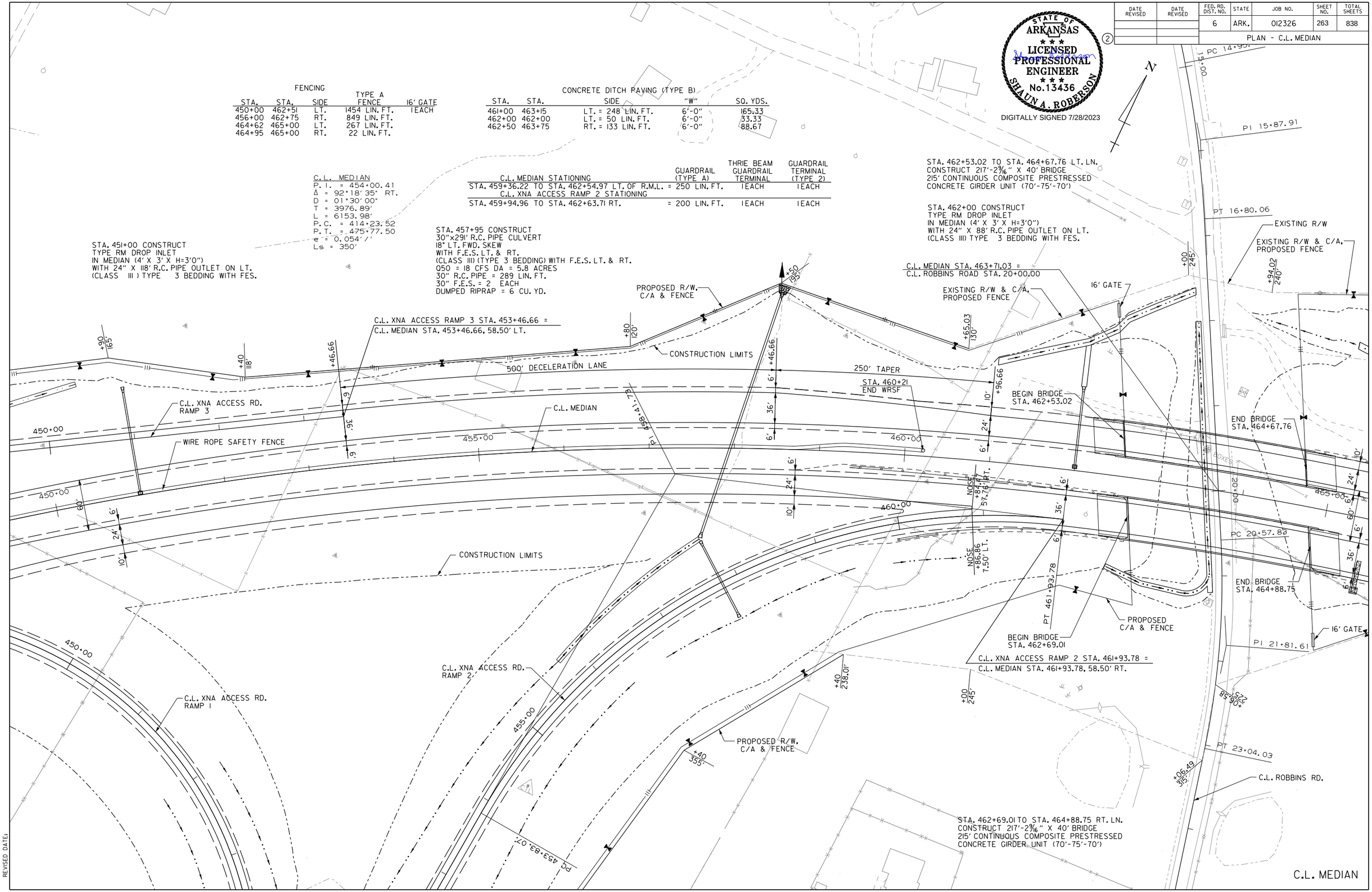

WBCallaway 7/31/2023 3:55:16 PM
WORKSPACE: AHTD
L:\2017\17017660 - ARDOT 012326 Hwy 412 - Hwy 112\Drawings\r012326_PP_22_MNL.dgn
REVISED DATE:

DATE REVISED	DATE REVISED	FED. RD. DIST. NO.	STATE	JOB NO.	SHEET NO.	TOTAL SHEETS
		6	ARK.	012326	264	838
②		PROFILE - C.L. MEDIAN				

STATE OF ARKANSAS
LICENSED PROFESSIONAL ENGINEER
No.13436
SHAUN A. ROBERSON
DIGITALLY SIGNED 7/28/2023

REFER TO SURVEY CONTROL DETAIL SHEETS
FOR HORIZONTAL AND VERTICAL CONTROL POINTS

STA. 411+61.02 BEGIN SUPERELEVATION
STA. 415+11.02 MAX. SUPERELEVATION (0.054'/')
STA. 474+90.00 MAX. SUPERELEVATION (0.054'/')
STA. 478+40.00 END SUPERELEVATION

ELEV. 1274.15
EXISTING GROUND
-0.50%
PROFILE GRADE
+00.00 RT. 1268.55
-6.85% LT. DITCH GRADE
TOP 1269.65
INV 1266.90
F.L. 1260.82 LT.
+46.00 LT. 1259.79
+65.00 RT. 1266.27
-2.98% RT. DITCH GRADE
+59.00 RT. 1257.51
F.L. = 1237.53 LT.
F.L. = 1257.51 RT.
TOP 1264.59
INV 1261.59
F.L. 1260.59 LT.
-1.69% RT. DITCH GRADE
+84.46 RT. 1257.51
+00.00 LT. 1255.81
-1.81% LEFT DITCH GRADE
+00.00 LT. 1244.00
+50.00 RT. 1254.72
-2.00% LEFT DITCH GRADE
+00.00 LT. 1223.00
-6.67% LEFT DITCH GRADE
+15.00 LT. 1222.00
BEGIN BRIDGE LT.
STA. 462+53.02
BEGIN BRIDGE RT.
STA. 462+69.01
5' ROCK FILL
DRAINAGE/STABILIZING LAYER
-15.48% RT. DITCH GRADE
+76.95 RT. 1233.26
+50.00 LT. 1225.20
4.00% LEFT DITCH GRADE
END BRIDGE LT.
STA. 464+67.76
END BRIDGE RT.
STA. 464+88.75
ELEV. 1266.65
+00.00 LT. 1231.20
2:1

1320 1310 1300 1290 1280 1270 1260 1250 1240 1230 1220

450+00 451+00 452+00 453+00 454+00 455+00 456+00 457+00 458+00 459+00 460+00 461+00 462+00 463+00 464+00 465+00

WBCalaway 7/31/2023 3:55:16 PM
WORKSPACE: AHTD
L:\2017\17017660 - ARDOT 012326 Hwy 412 - Hwy 112\Drawings\r012326_PP_22_MNL.dgn
REVISED DATE:

DATE REVISED	DATE REVISED	FED. RD. DIST. NO.	STATE	JOB NO.	SHEET NO.	TOTAL SHEETS
		6	ARK.	012326	265	838
②		PLAN & PROFILE - C.L. MEDIAN				

CONCRETE DITCH PAVING (TYPE B)

STA.	STA.	SIDE	"W"	SQ. YDS.
465+00	469+00	LT. = 431 LIN. FT.	6'-0"	287.33
472+00	472+00	LT. = 30 LIN. FT.	6'-0"	20.00
472+00	473+50	RT. = 188 LIN. FT.	9'-0"	136.00
479+00	480+00	RT. = 100 LIN. FT.	6'-0"	66.67

STA. 472+00 CONSTRUCT TYPE RM DROP INLET IN MEDIAN (4' X 3' X H=3'0") WITH 24" X 91' R.C. PIPE OUTLET ON LT. (CLASS III) TYPE 3 BEDDING WITH FES.

PERMANENT CONSTRUCTION EASEMENT

EXISTING R/W & C/A, PROPOSED FENCE

CONSTRUCTION LIMITS

C.L. MEDIAN

WIRE ROPE SAFETY FENCE

STA. 465+55 INSTALL OVERHEAD HIGHWAY SIGN HWY. 612 RT. LANES SEE SIGNING PLANS

STA. 467+16 BEGIN WRSF

STA. 473+95 CONSTRUCT 48" X 314' R.C. PIPE CULVERT 03° LT. FWD. SKEW (CLASS V) TYPE 3 BEDDING WITH FES RT. & RIPRAP BASIN LT. Q50 = 83 CFS DA = 14.9 ACRES

EXISTING R/W, C/A & FENCE

300' TAPER

700' ACCELERATION LANE

STA. 478+50.00
END GRADING
BEGIN PAVING

C.L. HWY. 112 RAMP 1 STA. 479+96.17 = C.L. MEDIAN STA. 479+96.17, 58.50' RT.

FENCING

STA.	STA.	SIDE	TYPE A FENCE	16' GATE
465+00	475+40	LT.	1145 LIN. FT.	
465+00	474+10	RT.	963 LIN. FT.	1 EACH

C.L. MEDIAN STATIONING	GUARDRAIL (TYPE A)	TERMINAL ANCHOR POST (TYPE I)	THRIE BEAM GUARDRAIL TERMINAL	GUARDRAIL TERMINAL (TYPE 2)
STA. 464+73.20 TO STA. 467+41.95 LT. OF L.M.L. = 200 LIN. FT.			1 EACH	1 EACH
STA. 464+82.69 TO STA. 468+01.44 RT. OF L.M.L. = 250 LIN. FT.			1 EACH	1 EACH
STA. 465+06.17 TO STA. 466+74.92 RT. OF R.M.L. = 125 LIN. FT.			1 EACH	1 EACH
STA. 478+04.50 TO STA. 481+79.50 RT. OF R.M.L. = 300 LIN. FT.	1 EACH			1 EACH

C.L. MEDIAN
P.I. = 454+00.41
Δ = 92°18'35.0" RT.
D = 01°30'00"
T = 3976.89'
L = 6153.98'
P.C. = 414+23.52
P.T. = 475+77.50
e = 0.054'/'
Ls = 350'

REFER TO SURVEY CONTROL DETAIL SHEETS FOR HORIZONTAL AND VERTICAL CONTROL POINTS

STA. 411+61.02 BEGIN SUPERELEVATION
STA. 415+11.02 MAX. SUPERELEVATION (0.054'/')
STA. 474+90.00 MAX. SUPERELEVATION (0.054'/')
STA. 478+40.00 END SUPERELEVATION

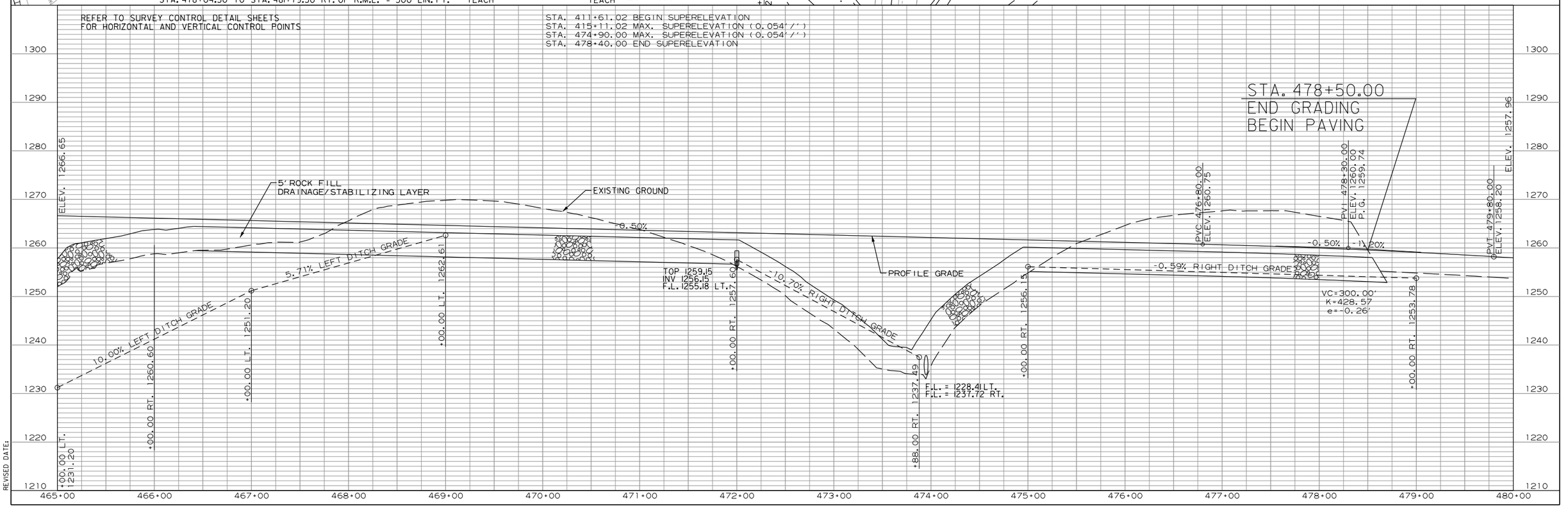

STATE OF ARKANSAS
LICENSED PROFESSIONAL ENGINEER
No. 13436
SHAUN A. ROBERSON
DIGITALLY SIGNED 7/28/2023

WBCalloway 7/31/2023 3:55:17 PM
WORKSPACE: AHTD
L:\2017\170\1660 - ARDOT 012326 Hwy 412 - Hwy 112\Drawings\r012326_PP_23_MNL.dgn
REVISED DATE:

DATE REVISED	DATE REVISED	FED. RD. DIST. NO.	STATE	JOB NO.	SHEET NO.	TOTAL SHEETS
		6	ARK.	012326	266	838
②		PLAN & PROFILE - C.L. MEDIAN				

STATE OF ARKANSAS
LICENSED PROFESSIONAL ENGINEER
No.13436
SHAUN A. ROBERSON
DIGITALLY SIGNED 7/28/2023

+54.84
195'
EXISTING R/W, C/A & FENCE
C.L. MEDIAN STA. 483+09.15, 58.50' LT.
BEGIN HWY. 112 RAMP 4 STA. 483+09.15 =
+75 120'
+25 125'
+20 220'
700' ACCELERATION LANE
NOSE +53.20 7.50' RT.
485+00
HWY. 112 RAMP 4
STA. 490+00 EXISTING
TYPE RM DROP INLET
IN MEDIAN (4' X 3' X H=3'0")
WITH 24" X 84' R.C. PIPE OUTLET ON LT.
(CLASS III) TYPE 3 BEDDING WITH FES.
RETAIN
STA. 495+00 EXISTING
TYPE RM DROP INLET
IN MEDIAN (4' X 3' X H=3'0")
WITH 24" X 86' R.C. PIPE OUTLET ON LT.
(CLASS III) TYPE 3 BEDDING WITH FES.
RETAIN
C.L. MEDIAN
NOSE +53.69 57.82' LT.
PI 480+91.39
480+00
485+00
490+00
495+00
WIRE ROPE SAFETY FENCE
S 87°41'25" E
NOSE +29.51 74.83' RT.
NOSE +30.39 7.50' LT.
HWY. 112 RAMP 1
PI 488+78.47
+57.37 145'
+00 140'
EXISTING R/W, C/A & FENCE
STA. 481+00 INSTALL
OVERHEAD HIGHWAY SIGN
HWY. 612 RT. LANES
SEE SIGNING PLANS
PC 485+96.30
STA. 480+93 IN PLACE
42"x273' R.C. PIPE CULVERT
10° RT. FWD. SKEW
WITH F.E.S. RT. & CONTRA-COSTA
ENERGY DISSIPATOR LT.
REMOVE FES RT. AND EXTEND 3' RT.
(CLASS III) (TYPE 3 BEDDING) WITH F.E.S. RT.
Q50 = 73 CFS DA = 13 ACRES
42" R.C. PIPE = 7 LIN. FT.
42" F.E.S. = 1 EACH
STA. 482+00 EXISTING
TYPE RM DROP INLET
IN MEDIAN (4' X 3' X H=3'0")
WITH 24" X 94' R.C. PIPE OUTLET ON LT.
(CLASS III) TYPE 3 BEDDING WITH FES.
RETAIN
STA. 495+32 EXISTING
54" X 242' R.C. PIPE CULVERT
18° LT. FWD. SKEW
(CLASS IV) TYPE 3 BEDDING
WITH FES LT. & RT.
Q50 = 154 CFS DA = 64.6 ACRES
RETAIN

C.L. MEDIAN

REFER TO SURVEY CONTROL DETAIL SHEETS
FOR HORIZONTAL AND VERTICAL CONTROL POINTS

CONCRETE DITCH PAVING (TYPE B)

STA.	STA.	SIDE	"W"	SQ. YDS.
480+00	481+13	RT. = 115 LIN. FT.	6'-0"	76.00

ELEV. 1257.96
-1.20%
TOP 1251.32
INV 1248.32
F.L. 1247.58 LT.
EXISTING GROUND
EX. F.L. = 1229.02 LT.
EX. F.L. = 1243.03 RT.
PROP. F.L. = 1243.38 RT.
PROFILE GRADE
TOP 1241.72
INV 1238.72
F.L. 1238.52 LT.
PVC 492+50.00
ELEV. 1242.96
VC=500.00'
K=208.33
e=1.50'
P.G. 1241.46
-1.20%
1.20%
TOP 1237.22
INV 1234.22
F.L. 1233.31 LT.
PVT 495+00.00
ELEV. 1239.96

1290 1280 1270 1260 1250 1240 1230 1220 1210 1200

480+00 481+00 482+00 483+00 484+00 485+00 486+00 487+00 488+00 489+00 490+00 491+00 492+00 493+00 494+00 495+00

WBCallaway 7/31/2023 3:55:17 PM
WORKSPACE: AHTD
L:\20\T\T01\T660 - ARDOT 012326 Hwy 412 - Hwy 112\Drawings\r012326_PP_24_MNL.dgn
REVISED DATE:

DATE REVISED	DATE REVISED	FED. RD. DIST. NO.	STATE	JOB NO.	SHEET NO.	TOTAL SHEETS
		6	ARK.	012326	267	838
②		PLAN & PROFILE - C.L. MEDIAN				

STATE OF ARKANSAS
LICENSED PROFESSIONAL ENGINEER
No. 13436
SHAUN A. ROBERSON
DIGITALLY SIGNED 7/28/2023

STA. 495+00 EXISTING
TYPE RM DROP INLET
IN MEDIAN (4' X 3' X H=3'0")
WITH 24" X 86' R.C. PIPE OUTLET ON LT.
(CLASS III) TYPE 3 BEDDING WITH FES.
RETAIN

HWY. 112
STA. 18+99.90 TO STA. 21+00.10
EXISTING 200'-2⅜" X 40' BRIDGE
198' CONTINUOUS COMPOSITE
PLATE GIRDER UNIT (99'-99')
RETAIN

STA. 505+00 EXISTING
TYPE RM DROP INLET
IN MEDIAN (4' X 3' X H=3'0")
WITH 24" X 86' R.C. PIPE OUTLET ON LT.
(CLASS III) TYPE 3 BEDDING WITH FES.
RETAIN

N

C.L. HWY. 112

C.L. MEDIAN STA. 499+09.48
C.L. HWY. 112 STA. 20+00.00

STA. 498+60
END WRSF

STA. 499+60
BEGIN WRSF

C.L. MEDIAN

WIRE ROPE SAFETY FENCE

S 87°41'25" E

80°31'58"

PAVED DRAIN

CONSTRUCTION LIMITS

495+00 | 500+00 | 505+00 | 510+00

10' | 24' | 6' | 60' | 6' | 24' | 10'

20+00

8' | 24' | 8'

S 7°09'27" E

C.L. MEDIAN STATIONING	GUARDRAIL (TYPE A)	TERMINAL ANCHOR POST (TYPE I)	GUARDRAIL TERMINAL (TYPE 2)
STA. 494+95.00 TO STA. 499+95.00 LT. OF R.M.L. =	450 LIN. FT.	1 EACH	1 EACH
STA. 498+25.00 TO STA. 503+25.00 RT. OF L.M.L. =	450 LIN. FT.	1 EACH	1 EACH

STA. 495+32 EXISTING
54" X 242' R.C. PIPE CULVERT
18° LT. FWD. SKEW
(CLASS IV) TYPE 3 BEDDING
WITH FES LT. & RT.
Q50 = 154 CFS DA = 64.6 ACRES
RETAIN

STA. 508+55 EXISTING
54" X 330' R.C. PIPE CULVERT
17° RT. FWD. SKEW
(CLASS V) TYPE 3 BEDDING
WITH FES LT. & RT.
Q50 = 138 CFS DA = 51.6 ACRES
RETAIN

C.L. MEDIAN

REFER TO SURVEY CONTROL DETAIL SHEETS
FOR HORIZONTAL AND VERTICAL CONTROL POINTS

PROFILE GRADE

EXISTING GROUND

VC=500.00'
K=208.33
e=1.50'

P.G. 1241.46

PVI 495+00.00
ELEV. 1239.96

PVT 497+50.00
ELEV. 1242.96

-1.20%

1.20%

1.20%

TOP 1237.22
INV 1234.22
F.L. 1233.31 LT.

F.L. = 1218.05 LT.
F.L. = 1225.20 RT.

TOP 1247.72
INV 1244.72
F.L. 1243.88 LT.

F.L. = 1219.13 LT.
F.L. = 1225.18 RT.

ELEV. 1257.96

1290 | 1280 | 1270 | 1260 | 1250 | 1240 | 1230 | 1220 | 1210 | 1200

495+00 | 496+00 | 497+00 | 498+00 | 499+00 | 500+00 | 501+00 | 502+00 | 503+00 | 504+00 | 505+00 | 506+00 | 507+00 | 508+00 | 509+00 | 510+00

WBCallaway 7/31/2023 3:55:17 PM
WORKSPACE: AHTD
L:\20\T\01\T660 - ARDOT 012326 Hwy 412 - Hwy 112\Drawings\r012326_PP_25_MNL.dgn
REVISED DATE:

DATE REVISED	DATE REVISED	FED. RD. DIST. NO.	STATE	JOB NO.	SHEET NO.	TOTAL SHEETS
		6	ARK.	012326	268	838
		PLAN & PROFILE - C.L. MEDIAN				

(2)

STATE OF ARKANSAS
LICENSED PROFESSIONAL ENGINEER
No. 13436
SHAUNA A. ROBERSON
DIGITALLY SIGNED 7/28/2023

EXISTING R/W, C/A & FENCE

+20 200'

+80.35 185'

+35 191.63'

+00 210'

+00 190'

+70 145'

+41.14 65'

+75 155'

N

STA. 514+00.00
END JOB 012326
END PAVING

C.L. MEDIAN

510+00

515+00

520+00

525+00

WIRE ROPE SAFETY FENCE

S 87°41'25" E

STA. 512+00 EXISTING
TYPE RM DROP INLET
IN MEDIAN (4' X 3' X H=3'0")
WITH 24" X 86' R.C. PIPE OUTLET ON LT.
(CLASS III) TYPE 3 BEDDING WITH FES.
RETAIN

+70 135'

+41.12 135'

+00 170'

EXISTING R/W, C/A & FENCE

C.L. MEDIAN STATIONING	GUARDRAIL (TYPE A)	TERMINAL ANCHOR POST (TYPE I)	GUARDRAIL TERMINAL (TYPE 2)
STA. 517+45.50 TO STA. 521+20.50 LT. OF L.M.L. = 300 LIN. FT.	1 EACH	1 EACH	1 EACH

C.L. MEDIAN

REFER TO SURVEY CONTROL DETAIL SHEETS
FOR HORIZONTAL AND VERTICAL CONTROL POINTS

VC=300.00'
K=428.59
e=-0.26'

PVI 511+70.00
ELEV. 1260.00
P.G. 1259.74

STA. 514+00.00
END JOB 012326
END PAVING
ELEV. 1261.15

PROFILE GRADE

1.20%

0.50%

0.50%

ELEV. 1257.96

PVC 510+20.00
ELEV. 1258.20

TOP 1255.74
INV 1252.74
F.L. 1252.01LT.

PVT 513+20.00
ELEV. 1260.76

EXISTING GROUND

ELEV. 1264.65

1300 1290 1280 1270 1260 1250 1240 1230 1220 1210

510+00 511+00 512+00 513+00 514+00 515+00 516+00 517+00 518+00 519+00 520+00 521+00 522+00 523+00 524+00 525+00

WBCallaway 7/31/2023 3:55:19 PM
WORKSPACE: AHTD
L:\2017\17017660 - ARDOT 012326 Hwy 412 - Hwy 112\Drawings\r012326_PP_26_MNL.dgn
REVISED DATE:

DATE REVISED	DATE REVISED	FED. RD. DIST. NO.	STATE	JOB NO.	SHEET NO.	TOTAL SHEETS
		6	ARK.	012326	269	838
②		PLAN & PROFILE - C.L. MEDIAN				

STATE OF ARKANSAS
LICENSED PROFESSIONAL ENGINEER
No. 13436
SHAUN A. ROBERSON
DIGITALLY SIGNED 7/28/2023

STA. 530+00 EXISTING
TYPE RM DROP INLET
IN MEDIAN (4' X 3' X H=3'0")
WITH 24" X 86' R.C. PIPE OUTLET ON LT.
(CLASS III) TYPE 3 BEDDING WITH FES.
RETAIN

STA. 534+00 EXISTING
TYPE RM DROP INLET
IN MEDIAN (4' X 3' X H=3'0")
WITH 24" X 85' R.C. PIPE OUTLET ON LT.
(CLASS III) TYPE 3 BEDDING WITH FES.
RETAIN

N

EXISTING R/W,
C/A & FENCE

C.L. MEDIAN

EXISTING WRSF

525+00

530+00

535+00

540+00

S 87°41'25" E

WIRE ROPE SAFETY FENCE

STA. 535+35
BEGIN WRSF

C.L. GRIMSLEY RD.

EXISTING R/W,
C/A & FENCE

10'
24'
6'
60'
6'
24'
10'

6'
36'
6'

C.L. MEDIAN

REFER TO SURVEY CONTROL DETAIL SHEETS
FOR HORIZONTAL AND VERTICAL CONTROL POINTS

ELEV. 1266.65

ELEV. 1274.15

0.50%

TOP 1264.91
INV 1261.91
F.L. 1261.07 LT.

TOP 1266.91
INV 1263.91
F.L. 1263.07 LT.

1310
1300
1290
1280
1270
1260
1250
1240
1230
1220

525+00 526+00 527+00 528+00 529+00 530+00 531+00 532+00 533+00 534+00 535+00 536+00 537+00 538+00 539+00 540+00

WBCalloway 7/31/2023 3:55:19 PM
WORKSPACE: AHTD
L:\20\T\T01T660 - ARDOT 012326 Hwy 412 - Hwy 112\Drawings\r012326_PP_26A_MNL.dgn
REVISED DATE:

DATE REVISED	DATE REVISED	FED. RD. DIST. NO.	STATE	JOB NO.	SHEET NO.	TOTAL SHEETS
		6	ARK.	012326	270	838
		INTERCHANGE LAYOUT - HWY 412B				

STATE OF ARKANSAS
LICENSED PROFESSIONAL ENGINEER
No.13436
SHAUN A. ROBERSON
DIGITALLY SIGNED 7/28/2023

N

Scale: 1" = 400'

1000' ACCELERATION LANE
300' TAPER
900' ACCELERATION LANE
2000' AUXILIARY LANE
700' ACCELERATION LANE
300' TAPER

C.L. MEDIAN STA. 170+68.03
C.L. MEDIAN STA. 169+46.18, 61.50' LT. -
BEGIN HWY. 412B RAMP 4 STA. 169+46.18
C.L. HWY. 412B RAMP 3 STA. 192+19.83 =
C.L. HWY. 68 STA. 46+48.03
C.L. MEDIAN STA. 185+50.42 =
C.L. HWY. 412B RAMP 4 STA. 185+77.78
C.L. MEDIAN STA. 172+37.13, 49.50' RT. -
HWY. 412B RAMP 1 STA. 172+37.13
C.L. MEDIAN STA. 177+53.19
C.L. MEDIAN STA. 210+57.66, 46.50' LT. -
END HWY. 412B RAMP 3 STA. 210+57.66
C.L. MEDIAN STA. 192+53.46 =
C.L. HWY. 68 STA. 50+00.00
C.L. MEDIAN STA. 209+00.00, 58.50' RT. -
END HWY. 412B RAMP 2 STA. 209+00.00
C.L. MEDIAN STA. 206+72.36
C.L. HWY. 412B RAMP 2 STA. 192+24.57 -
C.L. HWY. 68 STA. 53+50.54
C.L. HWY. 412B STA. 10+81.62 =
C.L. HWY. 68 STA. 56+90.84 =
C.L. MUSTEEN RD. STA. 40+00.00
C.L. HWY. 412B RAMP 4 STA. 195+51.46 -
C.L. HWY. 412B STA. 10+00.00, 13.50' LT.
C.L. HWY. 412B RAMP 1 STA. 194+50.62 -
C.L. HWY. 412B STA. 10+00.00, 13.50' RT.

PI 157+80.59
PC 169+46.18
PT 171+85.55
PC 172+83.00
PT 176+12.97
PC 179+61.23
PI 182+58.98
PT 185+23.80
PC 188+54.29
PT 194+50.62
PI 193+44.90
PI 44+25.38
PI 44+57.96
PC 193+44.90
PI 194+51.52
PT 195+57.53
PC 197+59.11
PT 210+57.66
PI 204+34.61
PC 202+98.36
PT 203+75.72
PC 220+56.04
PT 220+76.04
PI 51+83.56
PI 52+69.24
PT 53+54.91
PC 54+42.82
PI 55+40.63
PC 56+28.29
PI 92+76.85
PC 192+13.38
PI 31+16.06
PT 22+24.77
PC 180+22.36
PI 180+99.15
PT 181+75.93
PC 183+45.86
PI 185+16.35
PT 186+86.81
PC 30+29.97
PI 30+60.00
PT 32+00.32
PC 34+76.65
PI 193+32.01
PI 38+14.50
PC 15+26.86
PT 19+63.65
PI 55+00
PI 160+00
PI 165+00
PI 175+00
PI 180+00
PI 185+00
PI 190+00
PI 195+00
PI 200+00
PI 205+00
PI 210+00
PI 215+00
PI 220+00
PI 190+00
PI 195+00
PI 200+00
PI 205+00
PI 190+00
PI 195+00
PI 200+00
PI 190+00
PI 195+00
PI 25+00
PI 30+00
PI 35+00
PI 45+00
PI 50+00
PI 55+00
PI 20+00
PI 25+00
PI 15+00
PI 20+00
PI 45+00
PI 50+00
PI 55+00
PC 45+00
PC 50+00
PC 55+00
PC 16+06.94
PT 20+16.21
PI 18+11.60
PI 199+96.99
PI 199+42.97
PT 199+89.08
PC 202+98.36
PT 203+75.72
PC 220+56.04
PT 220+76.04
M-1
I-1
I-2
I-3
M-2
M-3
4-1
4-2
4-3
A-1
A-2
3-1
3-2
2-1
2-2
B-1
ML-1
ML-2

CURVE DATA

CURVE	PC	PI	PT	Δ	D	TANGENT FEET	LENGTH FEET	e FT./FT.	Ls FEET	DESIGN SPEED
I-1	180+22.36	180+99.15	181+75.93	0°46'04"	0°30'00"	76.79	153.57	N/A	N/A	50 MPH
I-2	183+45.86	185+16.35	186+86.81	1°42'17"	0°30'00"	170.49	340.95	N/A	N/A	50 MPH
I-3	192+13.38	193+32.01	194+50.62	1°46'45"	0°45'00"	118.63	237.24	N/A	N/A	40 MPH
2-1	196+33.59	197+89.23	199+42.97	15°28'08"	5°00'00"	155.64	309.38	0.083	300	50 MPH
2-2	202+20.36	202+98.08	203+75.72	4°39'39"	3°00'00"	77.72	155.36	0.057	300	50 MPH
3-1	193+44.30	194+51.52	195+57.53	14°55'36"	7°00'00"	107.22	213.23	0.058	350	50 MPH
3-2	197+59.11	204+34.61	210+57.66	38°57'23"	3°00'00"	675.50	1298.55	0.057	300	50 MPH
4-1	169+46.18	172+83.00	176+12.97	20°00'13"	3°00'00"	336.82	666.79	0.057	300	50 MPH
4-2	179+61.23	182+58.98	185+23.80	46°24'43"	8°15'00"	297.75	562.57	0.10	350	50 MPH
4-3	188+54.29	190+69.09	192+76.85	25°21'12"	6°00'00"	214.80	422.56	0.092	350	50 MPH
ML-1	149+35.83	157+80.59	165+98.58	24°56'29"	1°30'00"	844.76	1662.75	0.054	350	70 MPH
ML-2	171+85.55	199+99.50	220+36.04	72°45'26"	1°30'00"	2813.95	4850.49	0.054	350	70 MPH
68-1	51+83.56	52+69.24	53+54.91	0°51'24"	0°30'00"	85.68	171.35	N/A	N/A	50 MPH
68-2	54+42.82	55+40.63	56+28.29	44°58'38"	24°15'00"	97.81	185.47	N/A	N/A	50 MPH
B-1	16+06.94	18+11.60	20+16.21	2°02'47"	0°30'00"	204.66	409.27	N/A	N/A	60 MPH
M-1	15+26.86	19+63.65	22+24.77	87°14'19"	12°30'00"	436.79	697.91	0.10	250	40 MPH
M-2	30+29.97	31+16.06	32+00.32	20°26'32"	12°00'00"	86.09	170.35	0.099	250	40 MPH
M-3	34+76.65	38+14.50	39+30.54	110°04'02"	24°15'00"	337.85	453.89	0.10	250	30 MPH

INTERCHANGE LAYOUT - HWY 412B

WBCallaway 7/31/2023 3:55:25 PM
WORKSPACE: AHTD
L:\2017\17017660 - ARDOT 012326 Hwy 412 - Hwy 112\Drawings\r012326_IP_MNL_01.dgn
REVISED DATE:

DATE REVISED	DATE REVISED	FED. RD. DIST. NO.	STATE	JOB NO.	SHEET NO.	TOTAL SHEETS
		6	ARK.	012326	271	838

PLAN & PROFILE - HWY. 412B RAMP 1

STATE OF ARKANSAS
LICENSED PROFESSIONAL ENGINEER
No. 13436
SHAUN A. ROBERSON

DIGITALLY SIGNED 7/28/2023

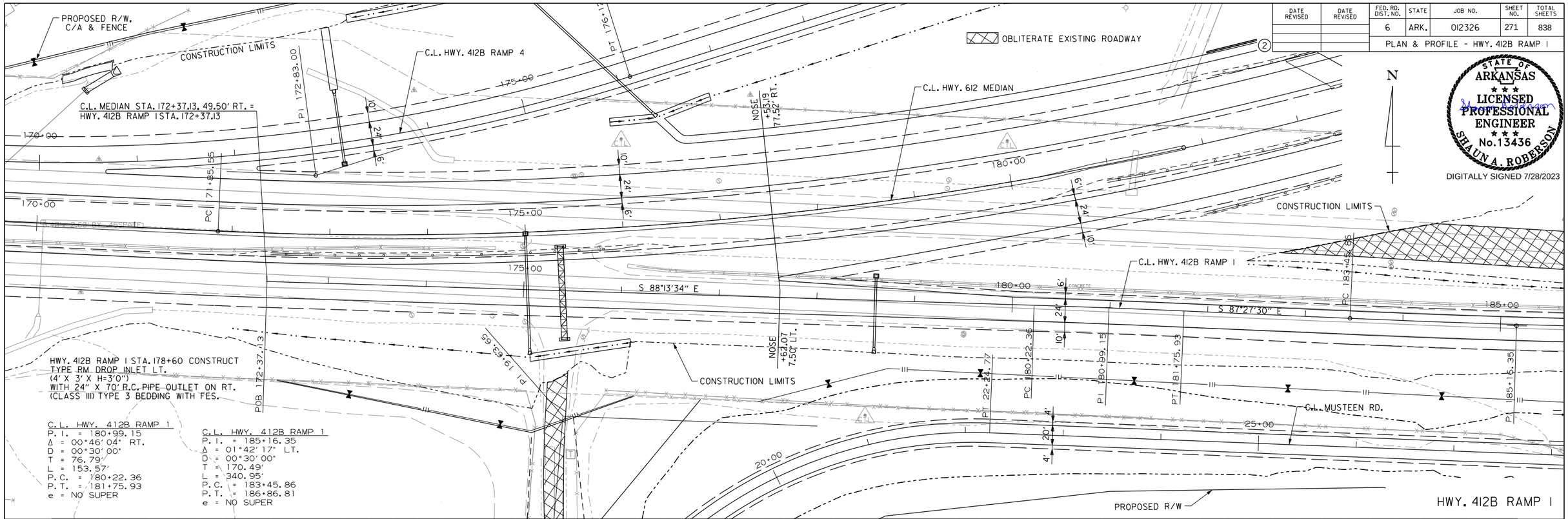

WBCallaway 7/31/2023 3:55:20 PM
WORKSPACE: AHTD
L:\2017\17017660 - ARDOT 012326 Hwy 412 - Hwy 112\Drawings\r012326_PP_412 Ramp 01_01.dgn
REVISED DATE:

DATE REVISED	DATE REVISED	FED. RD. DIST. NO.	STATE	JOB NO.	SHEET NO.	TOTAL SHEETS
		6	ARK.	012326	272	838
		PLAN & PROFILE - HWY. 412B RAMP 1				

OBLITERATE EXISTING ROADWAY

CONSTRUCTION LIMITS

CONCRETE DITCH PAVING REMOVAL (TYPE B)

STA.	STA.	SIDE	SQ. YDS.
188+89	190+82	LT.	168.9

C.L. HWY. 412B RAMP 1
P. I. = 185+16.35
Δ = 01°42'17" LT.
D = 00°30'00"
T = 170.49'
L = 340.95'
P. C. = 183+45.86
P. T. = 186+86.81
e = NO SUPER

C.L. HWY. 412B RAMP 1
P. I. = 193+32.01
Δ = 01°46'45" RT.
D = 00°45'00"
T = 118.63'
L = 237.24'
P. C. = 192+13.38
P. T. = 194+50.62
e = NO SUPER

HWY. 412B RAMP 1 STA. 191+55 IN PLACE
42" X 237' PIPE CULVERT
TO REMAIN

HWY. 412B RAMP 1 STA. 189+05 IN PLACE
D.I. WITH 24" X 100' PIPE CULVERT
PLUG & ABANDON

HWY. 412B RAMP 1 STA. 185+85 IN PLACE
42" X 273' R.C. PIPE CULVERT
7° RT. FWD. SKEW
WITH D.I. & FES LT.
RETAIN
Q50 = 40 CFS DA = 14.4 ACRES

C.L. HWY. 412B RAMP 1 STA. 194+50.62 =
C.L. HWY. 412B STA. 10+00.00, 13.5' RT.

EXISITNG R/W & C/A
PROPOSED FENCE

PROPOSED R/W, C/A & FENCE

C.L. HWY. 412B

C.L. HWY. 68

C.L. HWY. 412B RAMP 4

C.L. HWY. 412B RAMP 1

C.L. MUSTEEN RD.

WASHINGTON COUNTY 38

PT 56+28.29

STATE OF ARKANSAS
LICENSED PROFESSIONAL ENGINEER
No. 13436
SHAUN A. ROBERSON
DIGITALLY SIGNED 7/28/2023

HWY. 412B RAMP 1

REFER TO SURVEY CONTROL DETAIL SHEETS
FOR HORIZONTAL AND VERTICAL CONTROL POINTS

OVERLAY WITH
NOTCH AND WIDEN

STA. 194+50.62

VC=300.00'
K=187.50
e=0.60'

PROFILE GRADE

-2.06%

-0.30% LT. DITCH GRADE

-0.45%

PVT 187+00.00
ELEV. 1265.84

PVI 187+50.00
ELEV. 1265.62

PVI 185+50.00
ELEV. 1266.52

+00.00 LT. 1262.32

EXISTING GROUND

TOP 1252.88
INV 1247.55

1310 1300 1290 1280 1270 1260 1250 1240 1230 1220

185+00 186+00 187+00 188+00 189+00 190+00 191+00 192+00 193+00 194+00 195+00

WBCalloway 7/31/2023 3:55:21PM
WORKSPACE: AHTD
L:\20IT\170I7660 - ARDOT 012326 Hwy 412 - Hwy 112\Drawings\r012326_PP_412 Ramp 01_02.dgn
REVISED DATE:

DATE REVISED	DATE REVISED	FED. RD. DIST. NO.	STATE	JOB NO.	SHEET NO.	TOTAL SHEETS
		6	ARK.	012326	273	838

PLAN & PROFILE - HWY. 412B RAMP 2

STATE OF ARKANSAS
LICENSED PROFESSIONAL ENGINEER
No. 13436
SHAUN A. ROBERSON
DIGITALLY SIGNED 7/28/2023

C.L. HWY. 68
PC 51+83.56
PI 52+69.24
C.L. HWY. 412B RAMP 2 STA. 192+24.57 =
C.L. HWY. 68 STA. 53+50.54
Δ 90°00'00"
CONSTRUCTION LIMITS
C.L. HWY. 412B RAMP 2
C.L. MEDIAN
PT 53+54.91
PC 54+42.82
PI 55+40.63
PT 196+42.67
PC 196+33.59
PI 197+89.23
PC 202+20.36
PI 202+98.08
PT 203+75.72
N 47°38'20" E
N 32°10'12" E
N 36°49'51" E
EXISTING R/W & C/A
PROPOSED FENCE
TEMPORARY CONSTRUCTION EASEMENT
WASHINGTON COUNTY 58
195+00
200+00
+00 395'
+30 485'
+50 330'
+75 300'
+40 287.32'
+00 210'
+00 253.53'
+75 265'
+20 360'
+40 380'
+90 490'

C.L. HWY. 412B RAMP 2
P.I. = 197+89.23
Δ = 15°28'08" LT.
D = 05°00'00"
T = 155.64'
L = 309.38'
P.C. = 196+33.59
P.T. = 199+42.97
e = 0.083'/'
Ls = 300'

C.L. HWY. 412B RAMP 2
P.I. = 202+98.08
Δ = 4°39'39" RT.
D = 03°00'00"
T = 77.72'
L = 155.36'
P.C. = 202+20.36
P.T. = 203+75.72
e = 0.057'/'
Ls = 300'

HWY. 412B RAMP 2

REFER TO SURVEY CONTROL DETAIL SHEETS FOR HORIZONTAL AND VERTICAL CONTROL POINTS

STA. 194+08.59 BEGIN SUPERELEVATION
STA. 197+08.59 MAX SUPERELEVATION (0.083 FT./FT.)
STA. 198+16.67 MAX SUPERELEVATION (0.083 FT./FT.)
STA. 200+81.67 END SUPERELEVATION (0.00 FT./FT.)

STA. 200+81.67 BEGIN SUPERELEVATION (0.00 FT./FT.)
STA. 202+66.67 MAX SUPERELEVATION (0.057 FT./FT.)
STA. 203+30.72 MAX SUPERELEVATION (0.057 FT./FT.)
STA. 205+10.72 END SUPERELEVATION (0.00 FT./FT.)

C.L. HWY. 68 STA. 53+43.02 18.00' LT. =
C.L. HWY. 412B RAMP 2 STA. 192+42.57 7.50' LT.
ELEV. 1264.34
PVC 193+00.00
ELEV. 1264.17
0.29%
VC=300.00'
K=104.90
e=1.07'
PVT 196+00.00
ELEV. 1267.59
PROFILE GRADE
2.57%
PVI 204+20.00
ELEV. 1288.63
-1.97%
PVC 202+20.00
ELEV. 1283.50
VC=400.00'
K=88.11
e=-2.27'
+75.00 LT. 1258.00
+85.00 RT. 1258.93
0.77% RT. DITCH GRADE
+00.00 RT. 1259.82
PVI 194+50.00
ELEV. 1263.74
0.96% LT. DITCH GRADE
+50.00 LT. 1263.50
EXISTING GROUND

1310 1300 1290 1280 1270 1260 1250 1240 1230 1220

192+00 193+00 194+00 195+00 196+00 197+00 198+00 199+00 200+00 201+00 202+00 203+00 204+00 205+00

WBCallaway 7/31/2023 3:55:22 PM
WORKSPACE: AHTD
L:\20\T\01\f660 - ARDOT 012326 Hwy 412 - Hwy 112\Drawings\r012326_PP_412 Ramp 02.01.dgn
REVISED DATE:

DATE REVISED	DATE REVISED	FED. RD. DIST. NO.	STATE	JOB NO.	SHEET NO.	TOTAL SHEETS
		6	ARK.	012326	274	838
②		PLAN & PROFILE - HWY. 412B RAMP 2				

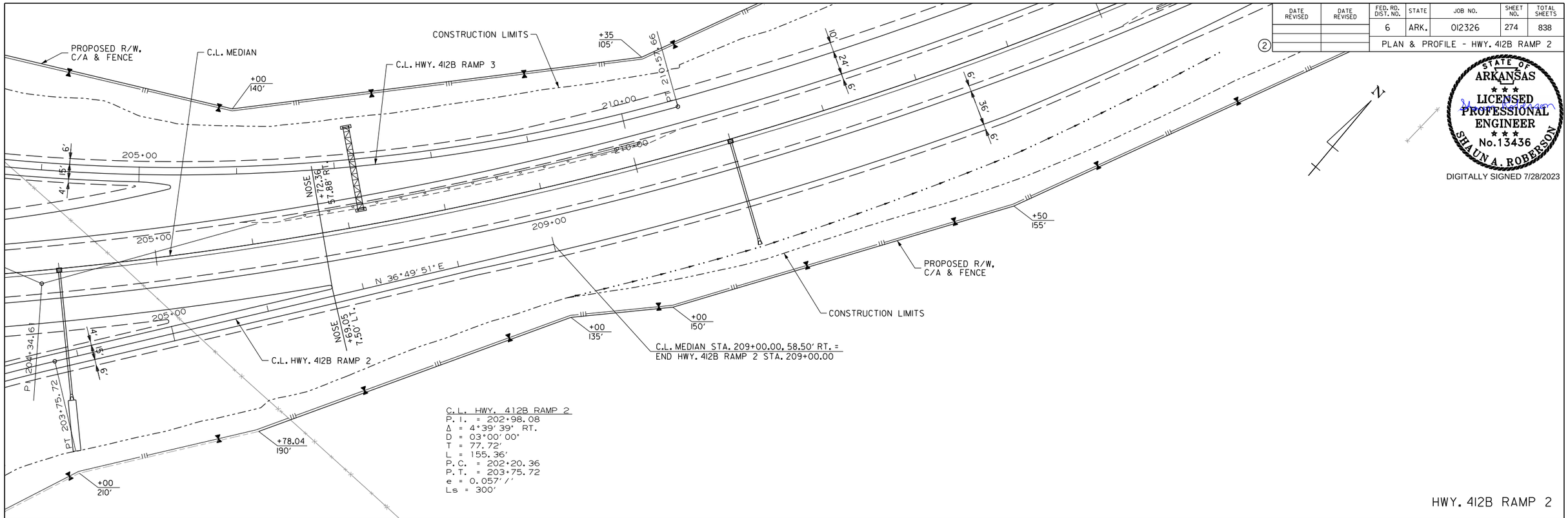

HWY. 412B RAMP 2

STATE OF ARKANSAS
LICENSED PROFESSIONAL ENGINEER
No.13436
SHAUN A. ROBERSON
DIGITALLY SIGNED 7/28/2023

REFER TO SURVEY CONTROL DETAIL SHEETS FOR HORIZONTAL AND VERTICAL CONTROL POINTS

STA. 200+81.67 BEGIN SUPERELEVATION (0.00 FT./FT.)
STA. 202+66.67 MAX SUPERELEVATION (0.057 FT./FT.)
STA. 203+30.72 MAX SUPERELEVATION (0.057 FT./FT.)
STA. 205+10.72 END SUPERELEVATION (0.00 FT./FT.)

STA. 205+10.72 BEGIN SUPERELEVATION (0.00 FT./FT.)
STA. 206+80.72 MATCH MAIN LANES SUPERELEVATION (0.054 FT./FT.)

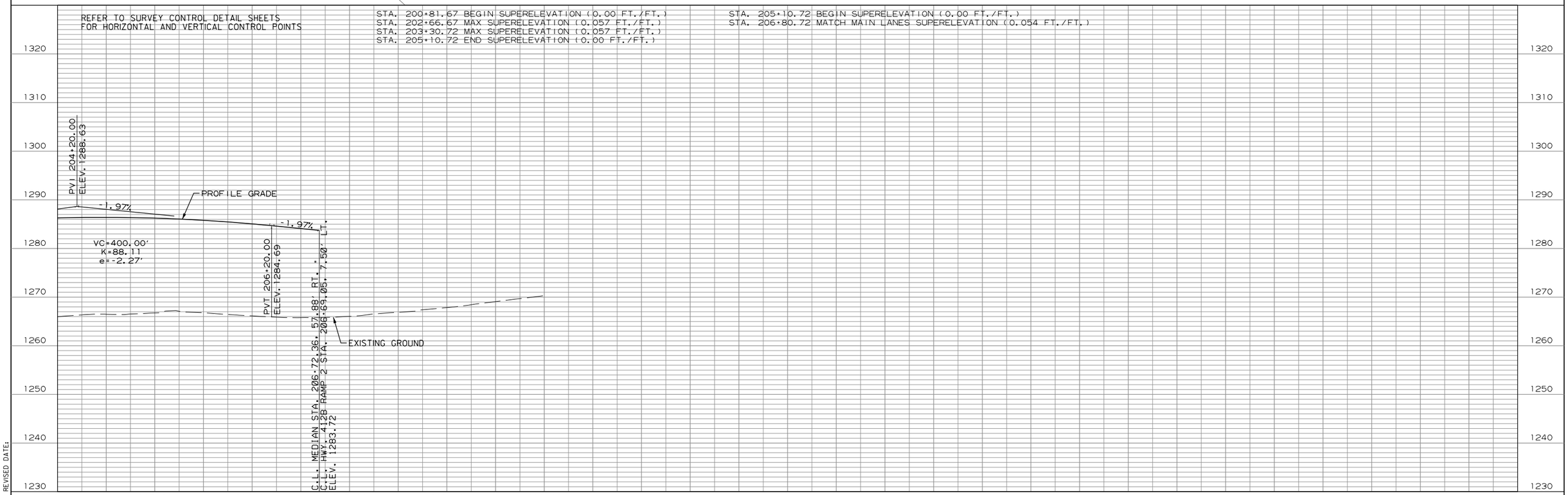

WBCallaway 7/31/2023 3:55:22 PM
WORKSPACE: AHTD
L:\20\T\T01T660 - ARDOT 012326 Hwy 412 - Hwy 112\Drawings\r012326_PP_412 Ramp 02_02.dgn
REVISED DATE:

DATE REVISED	DATE REVISED	FED. RD. DIST. NO.	STATE	JOB NO.	SHEET NO.	TOTAL SHEETS
		6	ARK.	012326	275	838

PLAN & PROFILE - HWY. 412B RAMP 3

STATE OF ARKANSAS
LICENSED PROFESSIONAL ENGINEER
No. 13436
SHAUN A. ROBERSON

DIGITALLY SIGNED 7/28/2023

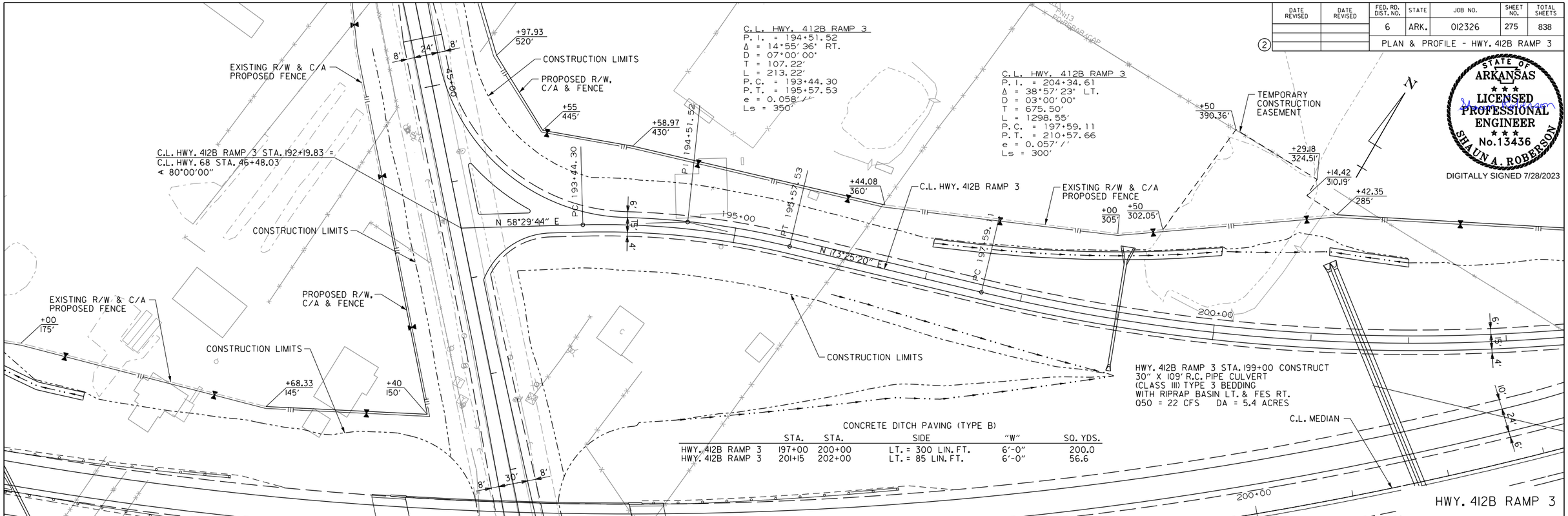

CONCRETE DITCH PAVING (TYPE B)

	STA.	STA.	SIDE	"W"	SQ. YDS.
HWY. 412B RAMP 3	197+00	200+00	LT. = 300 LIN. FT.	6'-0"	200.0
HWY. 412B RAMP 3	201+15	202+00	LT. = 85 LIN. FT.	6'-0"	56.6

REFER TO SURVEY CONTROL DETAIL SHEETS FOR HORIZONTAL AND VERTICAL CONTROL POINTS

STA. 193+15.21 BEGIN SUPERELEVATION (0.02 FT./FT. R.C.)
STA. 194+50.92 MAX SUPERELEVATION (0.058 FT./FT.)
STA. 196+58.32 END SUPERELEVATION (0.00 FT./FT.)

STA. 196+58.32 BEGIN SUPERELEVATION (0.00 FT./FT.)
STA. 199+58.32 MAX SUPERELEVATION (0.057 FT./FT.)
STA. 205+15.93 MAX SUPERELEVATION (0.057 FT./FT.)
STA. 205+31.72 MATCH MAIN LANES SUPERELEVATION (0.054 FT./FT.)

CONCRETE DITCH PAVING (TYPE B) (HWY. 412B RAMP 3)

197+00	200+00	LT. = 309 LIN. FT.	6'-0"	206.00
201+15	202+00	LT. = 82 LIN. FT.	6'-0"	54.67

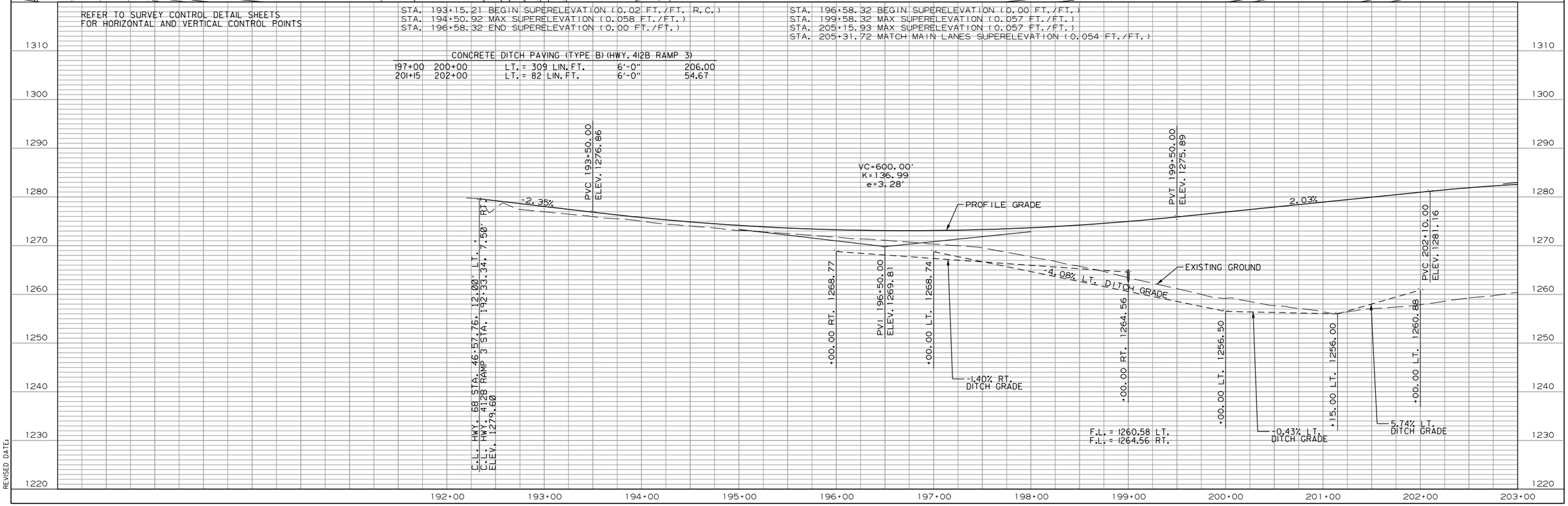

WBCallaway 7/31/2023 3:55:23 PM
WORKSPACE: AHTD
L:\2017\17017660 - ARDOT 012326 Hwy 412 - Hwy 112\Drawings\r012326_PP_412 Ramp 03_01.dgn
REVISED DATE:

DATE REVISED	DATE REVISED	FED. RD. DIST. NO.	STATE	JOB NO.	SHEET NO.	TOTAL SHEETS
		6	ARK.	012326	276	838
		PLAN & PROFILE - HWY. 412B RAMP 3				

STATE OF ARKANSAS
LICENSED PROFESSIONAL ENGINEER
No.13436
SHAUN A. ROBERSON
DIGITALLY SIGNED 7/28/2023

C.L. HWY. 412B RAMP 3
P.I. = 204+34.61
Δ = 38°57'23" LT.
D = 03°00'00"
T = 675.50'
L = 1298.55'
P.C. = 197+59.11
P.T. = 210+57.66
e = 0.057'/'
Ls = 300'

C.L. MEDIAN STA. 210+57.66, 46.50' LT. =
HWY. 412B RAMP 3 STA. 210+57.66

PROPOSED R/W, C/A & FENCE
C.L. HWY. 412B RAMP 3
CONSTRUCTION LIMITS
+00 140'
+35 105'
210+00
209+00
205+00
N05E +31.72 7.50' RT.
N05E +27.77 74.77' LT.
N 34°21'57" E
+50 155'
C.L. MEDIAN
PROPOSED R/W, C/A & FENCE
+00 150'
+00 135'
CONSTRUCTION LIMITS

HWY. 412B RAMP 3

REFER TO SURVEY CONTROL DETAIL SHEETS FOR HORIZONTAL AND VERTICAL CONTROL POINTS

STA. 196+58.32 BEGIN SUPERELEVATION (0.00 FT./FT.)
STA. 199+58.32 MAX SUPERELEVATION (0.057 FT./FT.)
STA. 205+15.93 MAX SUPERELEVATION (0.057 FT./FT.)
STA. 205+31.72 MATCH MAIN LANES SUPERELEVATION (0.054 FT./FT.)

PVI 203+60.00
ELEV. 1284.20
PROFILE GRADE
2.03%
-1.10%
VC=300.00'
K=95.85
e=-1.17'
PVT 205+10.00
ELEV. 1282.55
EXISTING GROUND
C.L. MEDIAN STA. 205+24.17, 74.77' LT.
C.L. HWY. 412B RAMP 3 STA. 205+31.72, 7.50' RT.
ELEV. 1282.31

1310 1300 1290 1280 1270 1260 1250 1240 1230 1220
203+00 204+00 205+00 206+00 207+00 208+00 209+00 210+00 211+00

WBCalloway 7/31/2023 3:55:24 PM
WORKSPACE: AHTD
L:\20IT\I70I660 - ARDOT 012326 Hwy 412 - Hwy 112\Drawings\r012326_PP_412 Ramp 03_02.dgn
REVISED DATE:

DATE REVISED	DATE REVISED	FED. RD. DIST. NO.	STATE	JOB NO.	SHEET NO.	TOTAL SHEETS
		6	ARK.	012326	277	838
②		PLAN & PROFILE - HWY. 412B RAMP 4				

CONCRETE DITCH PAVING (TYPE B) (HWY. 412B RAMP 4)

STA.	STA.	SIDE	"W"	SQ. YDS.
173+10	173+10	LT. = 64 LIN. FT.	6'-0"	42.67
173+35	179+00	LT. = 558 LIN. FT.	6'-0"	372.00
175+80	183+14	RT. = 751 LIN. FT.	6'-0"	500.67

HWY. 412B RAMP 4 STA. 173+10 CONSTRUCT TYPE RM DROP INLET RT. (4' X 3' X H=4'0") WITH 24" X 70' R.C. PIPE OUTLET ON LT. (CLASS III) TYPE 3 BEDDING WITH FES.

C.L. HWY. 412B RAMP 4
P. I. = 172+83.00
Δ = 20°00' 13" LT.
D = 03°00' 00"
T = 336.82'
L = 666.79'
P.C. = 169+46.18
P.T. = 176+12.97
e = 0.057'/'
Ls = 300'

HWY. 412B RAMP 4 STA. 176+00 CONSTRUCT 24" X 182' R.C. PIPE CULVERT 30° RT. FWD. SKEW (CLASS IV) TYPE 3 BEDDING WITH FES LT. & RT. Q50 = 15 CFS DA = 3.6 ACRES

C.L. HWY. 412B RAMP 4
P. I. = 182+58.98
Δ = 46°24' 43" RT.
D = 08°15' 00"
T = 297.75'
L = 562.57'
P.C. = 179+61.23
P.T. = 185+23.80
e = 0.10'/'
Ls = 350'

STATE OF ARKANSAS ★★★ LICENSED PROFESSIONAL ENGINEER ★★★ No. 13436 SHAUN A. ROBERSON

DIGITALLY SIGNED 7/28/2023

CONSTRUCTION LIMITS

C.L. MEDIAN STA. 169+46.18, 61.50' LT. = HWY. 412B RAMP 4 STA. 169+46.18

C.L. MEDIAN STA. 170+68.03

PROPOSED R/W, C/A & FENCE

TEMPORARY CONSTRUCTION EASEMENT

900' ACCELERATION LANE

C.L. MEDIAN

PC 169+46.18

NOSE +67.64 7.50' RT.

NOSE +68.03 57.88' LT.

PC 171+85.55

PI 172+83.00

PT 176+12.97

PC 179+61.23

PI 182+58.98

S 87°27'09" E

N 72°32'38" E

S 16°02'39" E

C.L. HWY. 412B RAMP 4

+25 435'

+50 410'

+50 355.22'

+00 365'

+82.45 325'

+46.87 290'

+50 329.01'

+50 305'

HWY. 412B RAMP 4

REFER TO SURVEY CONTROL DETAIL SHEETS FOR HORIZONTAL AND VERTICAL CONTROL POINTS

STA. 168+61.08 BEGIN SUPERELEVATION
STA. 171+61.08 MAX SUPERELEVATION (0.057 FT./FT.)
STA. 175+69.10 MAX SUPERELEVATION (0.057 FT./FT.)
STA. 177+87.10 END SUPERELEVATION (0.00 FT./FT.)

STA. 177+87.10 BEGIN SUPERELEVATION (0.00 FT./FT.)
STA. 181+69.10 MAX SUPERELEVATION (0.10 FT./FT.)
STA. 183+25.05 MAX SUPERELEVATION (0.10 FT./FT.)
STA. 186+89.05 END SUPERELEVATION (0.00 FT./FT.)

C.L. MEDIAN STA. 170+68.03, 57.88' LT. = C.L. HWY. 412B RAMP 4 STA. 170+67.64, 7.50' RT.
ELEV. 1230.29

PROFILE GRADE

EXISTING GROUND

4.08%

PVC 172+75.00
ELEV. 1238.73

F.L. = 1215.99 LT.
F.L. = 1242.50 RT.

TOP 1238.64
INV 1234.64
F.L. 1231.80 LT.

VC=600.00'
K=187.50
e=-2.40'

PVI 175+75.00
ELEV. 1250.97

4.80% RT. DITCH GRADE

4.17% RT. DITCH GRADE

0.88%

1.30% RT. DITCH GRADE

0.84% RT. DITCH GRADE

PVT 178+75.00
ELEV. 1253.62

+75.00 RT. 1244.90

+25.00 RT. 1242.50

+85.00 RT. 1245.00

+00.00 LT. 1218.50

+60.00 LT. 1221.80

+25.00 LT. 1233.50

+00.00 LT. 1239.50

+00.00 LT. 1247.80

+00.00 LT. 1250.93

+00.00 RT. 1250.32

+35.00 LT. 1209.75

3.30% LT. DITCH GRADE

5.50% LT. DITCH GRADE

18.00% LT. DITCH GRADE

8.00% LT. DITCH GRADE

11.43% LT. DITCH GRADE

1280 1270 1260 1250 1240 1230 1220 1210 1200 1190

169+00 170+00 171+00 172+00 173+00 174+00 175+00 176+00 177+00 178+00 179+00 180+00 181+00 182+00 183+00

WBCalloway 7/31/2023 3:55:24 PM
WORKSPACE: AHTD
L:\2017\1701660 - ARDOT 012326 Hwy 412 - Hwy 412\Drawings\r012326_PP_412 Ramp 04_01.dgn
REVISED DATE:

DATE REVISED	DATE REVISED	FED. RD. DIST. NO.	STATE	JOB NO.	SHEET NO.	TOTAL SHEETS
		6	ARK.	012326	278	838

PLAN & PROFILE - HWY. 412B RAMP 4

STATE OF ARKANSAS
LICENSED PROFESSIONAL ENGINEER
No. 13436
SHAUN A. ROBERSON
DIGITALLY SIGNED 7/28/2023

C.L. HWY. 412B RAMP 4
P.I. = 182+58.98
Δ = 46°24'43" RT.
D = 08°15'00"
T = 297.75'
L = 562.57'
P.C. = 179+61.23
P.T. = 185+23.80
e = 0.10'/'
Ls = 300'

C.L. HWY. 412B RAMP 4
P.I. = 190+69.09
Δ = 25°21'12" LT.
D = 06°00'00"
T = 214.80'
L = 422.56
P.C. = 188+54.29
P.T. = 192+76.85
e = 0.092'/'
Ls = 300'

C.L. HWY. 412B RAMP 4 STA. 195+51.46 =
C.L. HWY. 412B STA. 10+00.00, 13.5' LT.

CONSTRUCTION LIMITS
EXISITNG R/W & C/A, PROPOSED FENCE
C.L. MEDIAN
C.L. HWY. 68
PROPOSED R/W, C/A & FENCE
HWY. 412B
HWY. 412B RAMP 1
OBLITERATE EXISTING ROADWAY
HWY. 412B RAMP 4

REFER TO SURVEY CONTROL DETAIL SHEETS
FOR HORIZONTAL AND VERTICAL CONTROL POINTS

HWY. 412B RAMP 4 STA. 188+50 CONSTRUCT
30" X 126' R.C. PIPE CULVERT
45° LT. FWD. SKEW
(CLASS III) TYPE 3 BEDDING
WITH FES LT. & RT.
Q50 = 33 CFS DA = 11.1 ACRES

STA. 177+87.10 BEGIN SUPERELEVATION (0.00 FT./FT.)
STA. 181+69.10 MAX SUPERELEVATION (0.10 FT./FT.)
STA. 183+25.05 MAX SUPERELEVATION (0.10 FT./FT.)
STA. 186+89.05 END SUPERELEVATION (0.00 FT./FT.)

STA. 186+89.05 BEGIN SUPERELEVATION (0.00 FT./FT.)
STA. 190+25.05 MAX SUPERELEVATION (0.092 FT./FT.)
STA. 191+25.88 MAX SUPERELEVATION (0.092 FT./FT.)
STA. 194+75.88 END SUPERELEVATION

CONCRETE DITCH PAVING (TYPE B) (HWY. 412B RAMP 4)

184+95	186+25	LT. = 212 LIN. FT.	6'-0"	141.33
187+00	188+55	RT. = 155 LIN. FT.	6'-0"	42.67
188+26	188+96	LT. = 66 LIN. FT.	6'-0"	44.00
188+00	189+00	RT. = 100 LIN. FT.	6'-0"	66.67
189+06	189+35	LT. = 78 LIN. FT.	6'-0"	52.00

PROFILE GRADE
EXISTING GROUND
0.88%
-1.41% LT. DITCH GRADE
5.44% RT. DITCH GRADE
1.42% RT. DITCH GRADE
1.66% LT. DITCH GRADE
VC=400.00'
K=291.97
e=-0.69'
-0.49%
OVERLAY
PVI 191+50.00 ELEV. 1264.86
PVC 189+50.00 ELEV. 1263.10
PVT 193+50.00 ELEV. 1263.88
STA. 194+00.00 ELEV. 1263.64
PVI 195+51.46
+70.00 RT. 1251.71
+00.00 LT. 1257.09
+00.00 RT. 1253.56
+00.00 RT. 1259.00
+05.00 LT. 1254.20
+00.00 LT. 1255.78
F.L. = 1254.20 LT.
F.L. = 1253.56 RT.

1300 1290 1280 1270 1260 1250 1240 1230 1220 1210
183+00 184+00 185+00 186+00 187+00 188+00 189+00 190+00 191+00 192+00 193+00 194+00 195+00 196+00

WBCalloway 7/31/2023 3:55:25 PM
WORKSPACE: AHTD
L:\2017\1701660 - ARDOT 012326 Hwy 412 - Hwy 112\Drawings\r012326_PP_412 Ramp 04_02.dgn
REVISED DATE:

DATE REVISED	DATE REVISED	FED. RD. DIST. NO.	STATE	JOB NO.	SHEET NO.	TOTAL SHEETS
		6	ARK.	012326	279	838
		INTERCHANGE LAYOUT - XNA ACCESS RD.				

2

STATE OF ARKANSAS
LICENSED PROFESSIONAL ENGINEER
No. 13653
ADAM E. WIERCIAK

DIGITALLY SIGNED 07/31/2023

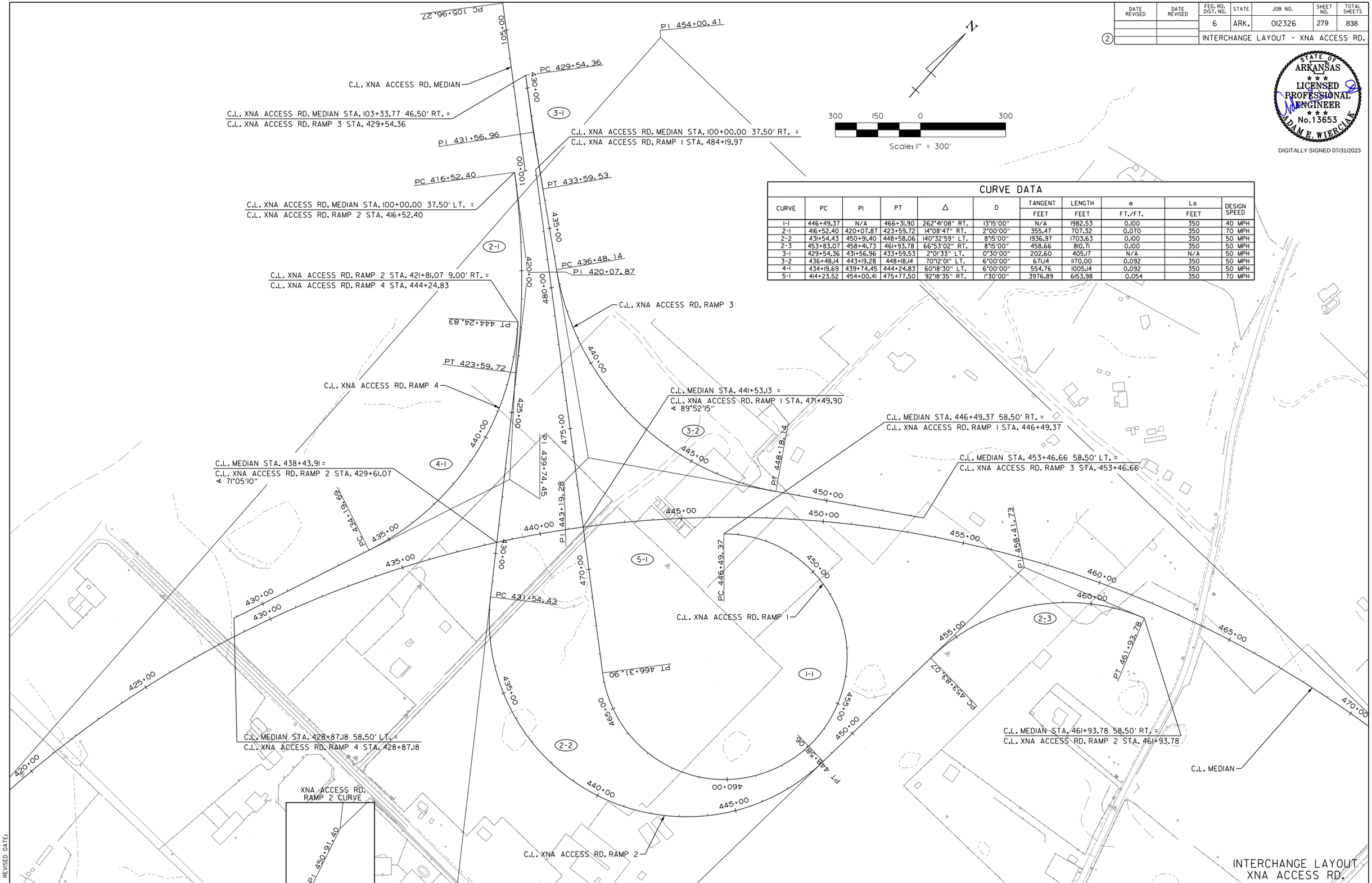

CURVE DATA

CURVE	PC	PI	PT	Δ	D	TANGENT FEET	LENGTH FEET	e FT./FT.	Ls FEET	DESIGN SPEED
1-1	446+49.37	N/A	466+31.90	262°41'08" RT.	13°15'00"	N/A	1982.53	0.100	350	40 MPH
2-1	416+52.40	420+07.87	423+59.72	14°08'47" RT.	2°00'00"	355.47	707.32	0.070	350	70 MPH
2-2	431+54.43	450+91.40	448+58.06	140°32'59" LT.	8°15'00"	1936.97	1703.63	0.100	350	50 MPH
2-3	453+83.07	458+41.73	461+93.78	66°53'02" RT.	8°15'00"	458.66	810.71	0.100	350	50 MPH
3-1	429+54.36	431+56.96	433+59.53	2°01'33" LT.	0°30'00"	202.60	405.17	N/A	N/A	50 MPH
3-2	436+48.14	443+19.28	448+18.14	70°12'01" LT.	6°00'00"	671.14	1170.00	0.092	350	50 MPH
4-1	434+19.69	439+74.45	444+24.83	60°18'30" LT.	6°00'00"	554.76	1005.14	0.092	350	50 MPH
5-1	414+23.52	454+00.41	475+77.50	92°18'35" RT.	1°30'00"	3976.89	6153.98	0.054	350	70 MPH

INTERCHANGE LAYOUT
XNA ACCESS RD.

WBCallaway 7/31/2023 3:55:50 PM
WORKSPACE: AHTD
L:\2017\17017660 - ARDOT 012326 Hwy 412 - Hwy 112\Drawings\r012326_ILS_HWY. 612.dgn
REVISED DATE:

DATE REVISED	DATE REVISED	FED. RD. DIST. NO.	STATE	JOB NO.	SHEET NO.	TOTAL SHEETS
		6	ARK.	012326	280	838
		PLAN - XNA ACCESS RD.				
2						

STATE OF ARKANSAS
LICENSED PROFESSIONAL ENGINEER
No.13653
ADAM E. WIERCIAK

DIGITALLY SIGNED 07/31/2023

N

C.L. XNA ACCESS RD. MEDIAN STA. 100+00.00, 37.50' LT. =
C.L. XNA ACCESS RD. RAMP 2 STA. 416+52.40

+52.88
1314.58'

+70
850'

PROP. R/W, C/A & FENCE

+10
1207.05'

CONSTRUCTION LIMITS

C.L. XNA ACCESS RD. RAMP 2

PC 416+52.40

PROP. R/W

FUTURE JOB 090069 CONSTRUCTION
(NOT IN CONTRACT)

PC 105+96.27

S 34°46'49" E

420+00

S 48°55'36" E

105+00

110+00

C.L. XNA ACCESS RD. MEDIAN (FUTURE)

N 48°55'36" W

100+00

C.L. XNA ACCESS RD. RAMP 1

480+00

NOSE
+70.26
111.43' RT.

N 48°55'36" W

S 50°57'09" E

S 48°55'36" E

430+00

PT 431+96.96

+17.83
125

PC 429+54.36

435+00

NOSE
+37.71
7.50' RT.

C.L. XNA ACCESS RD. RAMP 3

PT 420+07.87

PC 436+48.14

PT 433+59.53

CONSTRUCTION LIMITS

PROP. R/W, C/A & FENCE

+28.65
1260'

+20
140'

+70
900'

+70
995'

+40
357.42'

+90
335'

C.L. XNA ACCESS RD. MEDIAN STA. 100+00.00, 37.50' RT. =
C.L. XNA ACCESS RD. RAMP 1 STA. 484+19.97

C.L. XNA ACCESS RD. MEDIAN STA. 103+33.77, 46.50' RT. =
C.L. XNA ACCESS RD. RAMP 3 STA. 429+54.36

FENCING

STA.	STA.	SIDE	TYPE A FENCE
100+00	103+18	XNA ACCESS RD. RT.	635 LIN. FT.
100+00	100+37	XNA ACCESS RD. LT.	47 LIN. FT.

DECK

DECK

XNA ACCESS RD.

WBCallaway 7/31/2023 3:55:28 PM
WORKSPACE: AHTD
L:\2017\170176\660 - ARDOT 012326 Hwy 412 - Hwy 112\Drawings\r012326_PP_XNA Access_01.dgn
REVISED DATE:

DATE REVISED	DATE REVISED	FED. RD. DIST. NO.	STATE	JOB NO.	SHEET NO.	TOTAL SHEETS
		6	ARK.	012326	281	838
		PLAN & PROFILE - XNA ACCESS RD. RAMP 1				

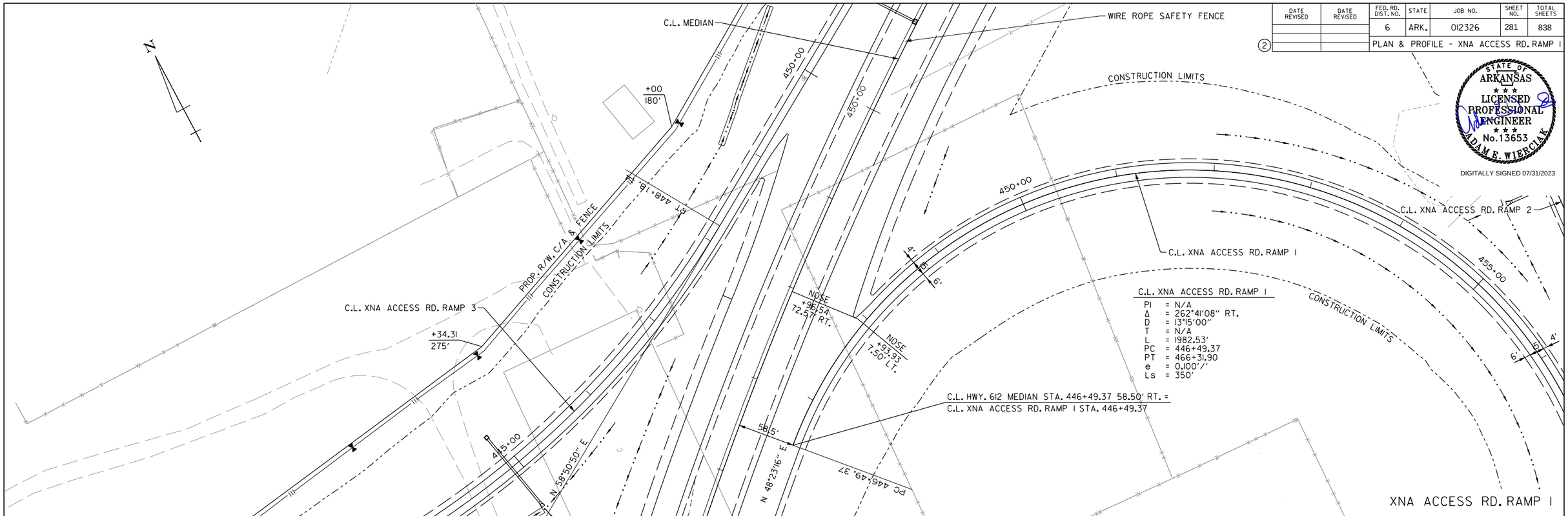

STATE OF ARKANSAS
LICENSED PROFESSIONAL ENGINEER
No. 13653
ADAM E. WIERCIAK

DIGITALLY SIGNED 07/31/2023

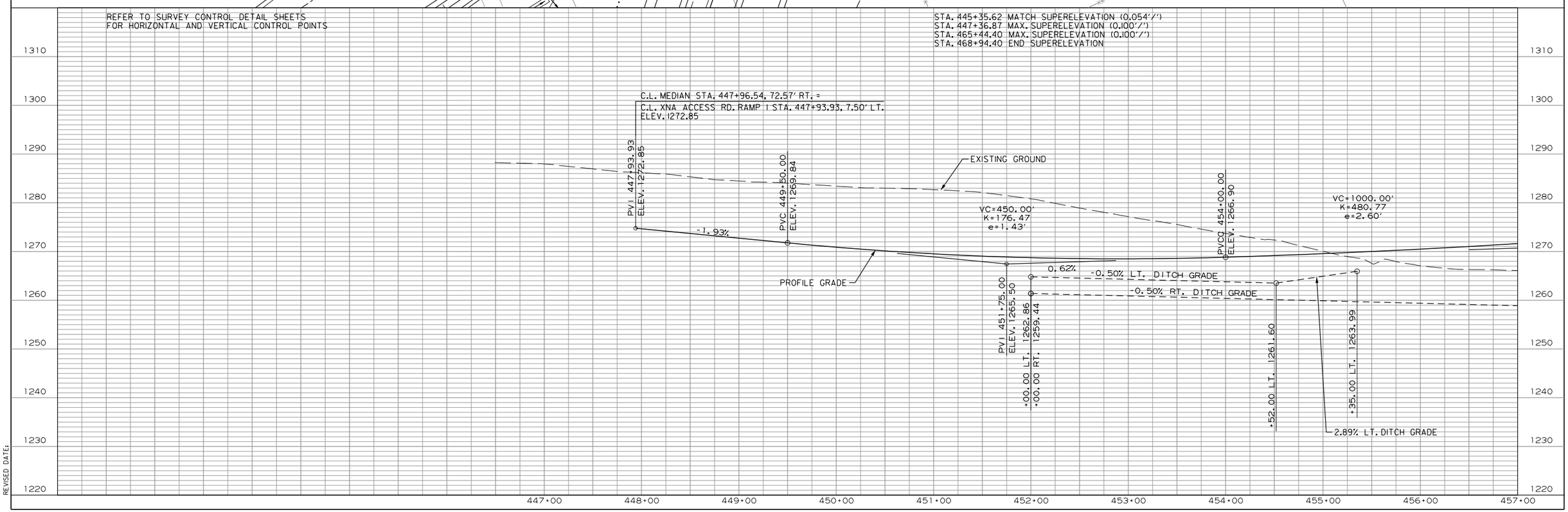

WBCalloway 7/31/2023 3:55:28 PM
WORKSPACE: AHTD
L:\2017\17017660 - ARDOT 012326 Hwy 412 - Hwy 112\Drawings\r012326_PP_XNA Access Ramp 1_01.dgn
REVISED DATE:

DATE REVISED	DATE REVISED	FED. RD. DIST. NO.	STATE	JOB NO.	SHEET NO.	TOTAL SHEETS
		6	ARK.	012326	282	838
		PLAN & PROFILE - XNA ACCESS RD. RAMP 1				

STATE OF ARKANSAS
LICENSED PROFESSIONAL ENGINEER
No. 13653
ADAM E. WIERCIAK
DIGITALLY SIGNED 07/31/2023

C.L. XNA ACCESS RD. RAMP 2

+90
1149.89'

PROP. R/W, C/A & FENCE

N 4°40'12" E

+90
1070'

+50
970'

4' 5' 6'

C.L. XNA ACCESS RD. RAMP 1

445.00

460.00

465.00

CONSTRUCTION LIMITS

STA. 460+00 CONSTRUCT
24" X 86' R.C. PIPE CULVERT
(CLASS III) (TYPE 3 BEDDING)
WITH FES LT. & RT.
Q50 = 6.8 CFS DA = 1.3 ACRES

STA. 458+00 CONSTRUCT
36" X 213' R.C. PIPE CULVERT
(CLASS IV) (TYPE 3 BEDDING)
WITH FES LT. & RT.
Q50 = 29 CFS DA = 8.3 ACRES
DUMPED RIPRAP = 12 CU. YD.

STA. 464+35 CONSTRUCT
36" X 149' R.C. PIPE CULVERT
(CLASS IV) (TYPE 3 BEDDING)
WITH FES LT. & RT.
Q50 = 30 CFS DA = 8.8 ACRES
DUMPED RIPRAP = 11 CU. YD.

N

CONSTRUCTION LIMITS

PT 466+31.90

N 48°55'36" W

470.00

C.L. XNA ACCESS RD. RAMP 1

PI	= N/A
Δ	= 262°41'08" RT.
D	= 13°15'00"
T	= N/A
L	= 1982.53'
PC	= 446+49.37
PT	= 466+31.90
e	= 0.100'/'
Ls	= 350'

FENCING STA.	STA.	SIDE	TYPE A FENCE
451+50	444+40	HWY. 612 LT.	553 LIN. FT.

STA.	STA.	SIDE	GUARDRAIL (TYPE A)	THRIE BEAM GUARDRAIL TERMINAL	GUARDRAIL TERMINAL (TYPE 2)
468+08.67	470+27.42	RT. OF XNA RAMP 1	150 LIN. FT.	1 EACH	1 EACH
468+08.67	470+27.42	LT. OF XNA RAMP 1	150 LIN. FT.	1 EACH	1 EACH

CONCRETE DITCH PAVING (TYPE B)

STA.	STA.	SIDE	"W"	SQ. YDS.
458+00	462+00	RT. = 400 LIN. FT.	6'-0"	266.67

C.L. HWY. 612 MEDIAN STA. 441+53.13 =
C.L. XNA ACCESS RD. RAMP 1 STA. 471+49.90
∢ 89°52'15"

BEGIN BRIDGE
STA. 470+38.82

WIRE ROPE SAFETY FENCE

PC 431+54.43

C.L. XNA ACCESS RD. RAMP 2

430.00

J 430+76.23

C.L. MEDIAN

80'-0"

PI 439

XNA ACCESS RD. RAMP 1

STA. 445+35.62 MATCH SUPERELEVATION (0.054'/')
STA. 447+36.87 MAX. SUPERELEVATION (0.100'/')
STA. 465+44.40 MAX. SUPERELEVATION (0.100'/')
STA. 468+94.40 END SUPERELEVATION

REFER TO SURVEY CONTROL DETAIL SHEETS
FOR HORIZONTAL AND VERTICAL CONTROL POINTS

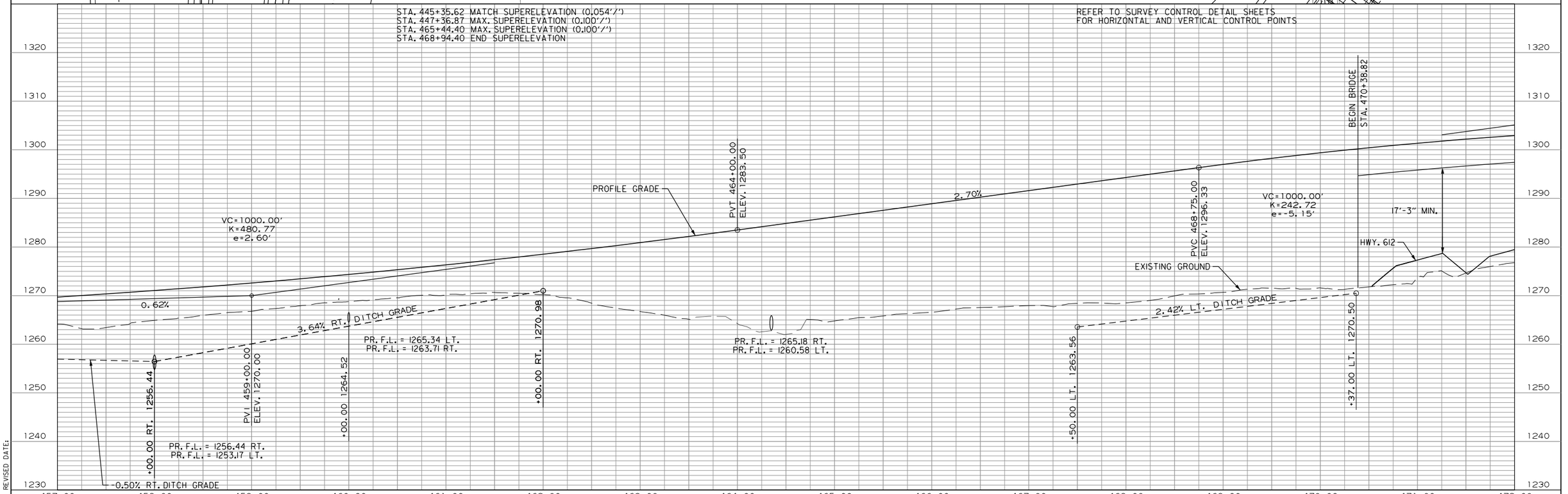

WBallaway 7/31/2023 3:55:29 PM
WORKSPACE: AHTD
L:\20\7\01\7660 - ARDOT 012326 Hwy 412 - Hwy 112\Drawings\r012326.PP_XNA Access Ramp 1_02.dgn
REVISED DATE:

DATE REVISED	DATE REVISED	FED. RD. DIST. NO.	STATE	JOB NO.	SHEET NO.	TOTAL SHEETS
		6	ARK.	012326	283	838
		PLAN & PROFILE - XNA ACCESS RD. RAMP 1				

STATE OF ARKANSAS
LICENSED PROFESSIONAL ENGINEER
No. 13653
ADAM E. WIERCIAK
DIGITALLY SIGNED 07/31/2023

S 34°46'49" E
N 38°21'12" W
C.L. XNA ACCESS RD. RAMP 2
PI 439+74.45
425+00
C.L. XNA ACCESS RD. RAMP 4
PT 444+24.83
+70
850'
PROP. R/W, C/A & FENCE
CONSTRUCTION LIMITS
+10
1207.05'
PC 416+52.40
PROP. R/W
CONSTRUCTION LIMITS
PI 443+19.28
C.L. XNA ACCESS RD. RAMP 1
420+00
S 48°55'36" E
140' SHOULDER TAPER
100+00
C.L. XNA ACCESS RD. MEDIAN (FUTURE)
N 48°55'36" W
WIRE ROPE SAFETY FENCE
NOSE
+70.26
11.43' RT.
+10.26
6'
4'
16'
6'
475+00
480+00
N 48°55'36" W
S 48°55'36" E
END BRIDGE
STA. 472+50.99
S 50°57'09" E
435+00
430+00
NOSE
+37.71
7.50' RT.
PI 431+56.96
FUTURE JOB 090069
CONSTRUCTION
(NOT IN CONTRACT)
CONSTRUCTION LIMITS
PI 420+07.87
PC 436+48.14
PT 438+59.53
CONSTRUCTION LIMITS
+28.65
1260'
+20
140'
+17.83
125'
C.L. XNA ACCESS RD. RAMP 3
440+00
N 58°50'50" E
+50
811.09'
+70
684.41'
+70
900'
+70
995'
PROP. R/W, C/A & FENCE
C.L. XNA ACCESS RD. MEDIAN STA. 100+00.00, 37.50' RT. =
C.L. XNA ACCESS RD. RAMP 1 STA. 484+19.97
CONSTRUCTION LIMITS
XNA ACCESS RD. RAMP 1

REFER TO SURVEY CONTROL DETAIL SHEETS
FOR HORIZONTAL AND VERTICAL CONTROL POINTS

END BRIDGE
STA. 472+50.99
PVI 473+75.00
ELEV. 1309.83
2.70%
VC=1000.00'
K=242.72
e=-5.15'
17'-0" MIN.
PROFILE GRADE
EXISTING GROUND
PVT 478+75.00
ELEV. 1302.73
-1.42%
C.L. XNA ACCESS RD. MEDIAN STA. 100+00.00, 30.00' RT. =
C.L. XNA ACCESS RD. RAMP 1 STA. 484+19.97, 7.50' LT.
ELEV. 1294.99
PVI 484+19.97
ELEV. 1294.99
1.3'

1340 1330 1320 1310 1300 1290 1280 1270 1260 1250

472+00 473+00 474+00 475+00 476+00 477+00 478+00 479+00 480+00 481+00 482+00 483+00 484+00 485+00

WBCallaway 7/31/2023 3:55:29 PM
WORKSPACE: AHTD
L:\20\T\T01T660 - ARDOT 012326 Hwy 412 - Hwy 112\Drawings\r012326_PP_XNA Access Ramp 1_03.dgn
REVISED DATE:

DATE REVISED	DATE REVISED	FED. RD. DIST. NO.	STATE	JOB NO.	SHEET NO.	TOTAL SHEETS
		6	ARK.	012326	284	838
		PLAN & PROFILE - XNA ACCESS RD. RAMP 2				

STATE OF ARKANSAS
LICENSED PROFESSIONAL ENGINEER
No. 13653
ADAM E. WIERCIAK
DIGITALLY SIGNED 07/31/2023

+90 335′
+17.83 125′
+20 140′
+28.65 1260′
+70 995′
+70 900′
+50 811.09′
PC 429+54.36
PI 431+59.66
PT 438+59.53
PC 436+88.14
PI 420+07.87
PROP. R/W, C/A & FENCE
CONSTRUCTION LIMITS
C.L. XNA ACCESS RD. RAMP 3
C.L. XNA ACCESS RD. RAMP 1
N 48°55′36″ W
475+00
480+00
435+00
430+00
S 48°55′36″ E
S 50°57′09″ E
FUTURE JOB 090069 CONSTRUCTION (NOT IN CONTRACT)
WIRE ROPE SAFETY FENCE
S 48°55′36″ E
S 34°46′49″ E
420+00
425+00
NOSE +21.33 22.19′ RT.
100′ SHOULDER TAPER
+21.33
C.L. XNA ACCESS RD. RAMP 2
N 38°21′12″ W
C.L. XNA ACCESS RD. MEDIAN (FUTURE)
105+00
00+001
6′
24′
10′
C.L. XNA ACCESS RD. MEDIAN STA. 100+00.00, 37.50′ LT. =
C.L. XNA ACCESS RD. RAMP 2 STA. 416+52.40
PC 416+52.40
PROP. R/W
CONSTRUCTION LIMITS
+70 850′
PT 444+24.83
NOSE +85.55 7.50′ RT.
423+59.72
+06.53 600′
PROP. R/W, C/A & FENCE
C.L. XNA ACCESS RD. RAMP 2 STA. 421+81.07, 9.00′ RT. =
C.L. XNA ACCESS RD. RAMP 4 STA. 444+24.83
+30 435′
440+00
C.L. XNA ACCESS RD. RAMP 4
+10 1207.05′
END OF DITCH IS BELOW GRADE UNTIL CONSTRUCTION OF JOB 090069. GRADE TO DRAIN FOR THE INTERIM CONDITION.
STA. 422+75 INSTALL OVERHEAD HIGHWAY SIGN XNA ACCESS RD. RAMP 2 SEE SIGNING PLANS

FENCING

STA.	STA.	SIDE	TYPE A FENCE
437+50	439+56	HWY. 612 LT.	1080 LIN. FT.
442+29	442+65	HWY. 612 LT.	586 LIN. FT.

CONCRETE DITCH PAVING (TYPE B)

STA.	STA.	SIDE	"W"	SQ. YDS.
416+70	418+00	RT. = 129 LIN. FT.	6′-0″	86.00

C.L. XNA ACCESS RD. RAMP 2

PI	= 420+07.87
Δ	= 14°08′47″ RT.
D	= 2°00′00″
T	= 355.47′
L	= 707.32′
PC	= 416+52.40
PT	= 423+59.72
e	= 0.070′/′
Ls	= 350′

XNA ACCESS RD. RAMP 2

REFER TO SURVEY CONTROL DETAIL SHEETS FOR HORIZONTAL AND VERTICAL CONTROL POINTS

STA. 416+52.40 SUPERELEVATION (0.058′/′) (MATCH XNA ACCESS RD.)
STA. 417+39.90 MAX. SUPERELEVATION (0.070′/′)
STA. 422+72.22 MAX. SUPERELEVATION (0.070′/′)
STA. 426+22.22 END SUPERELEVATION

STA. 421+61.63 OUTSIDE LANE MATCH SUPERELEVATION (0.070′/′) XNA ACCESS RD. RAMP 2
STA. 421+81.07 OUTSIDE LANE MATCH SUPERELEVATION (0.074′/′) XNA ACCESS RD. RAMP 4

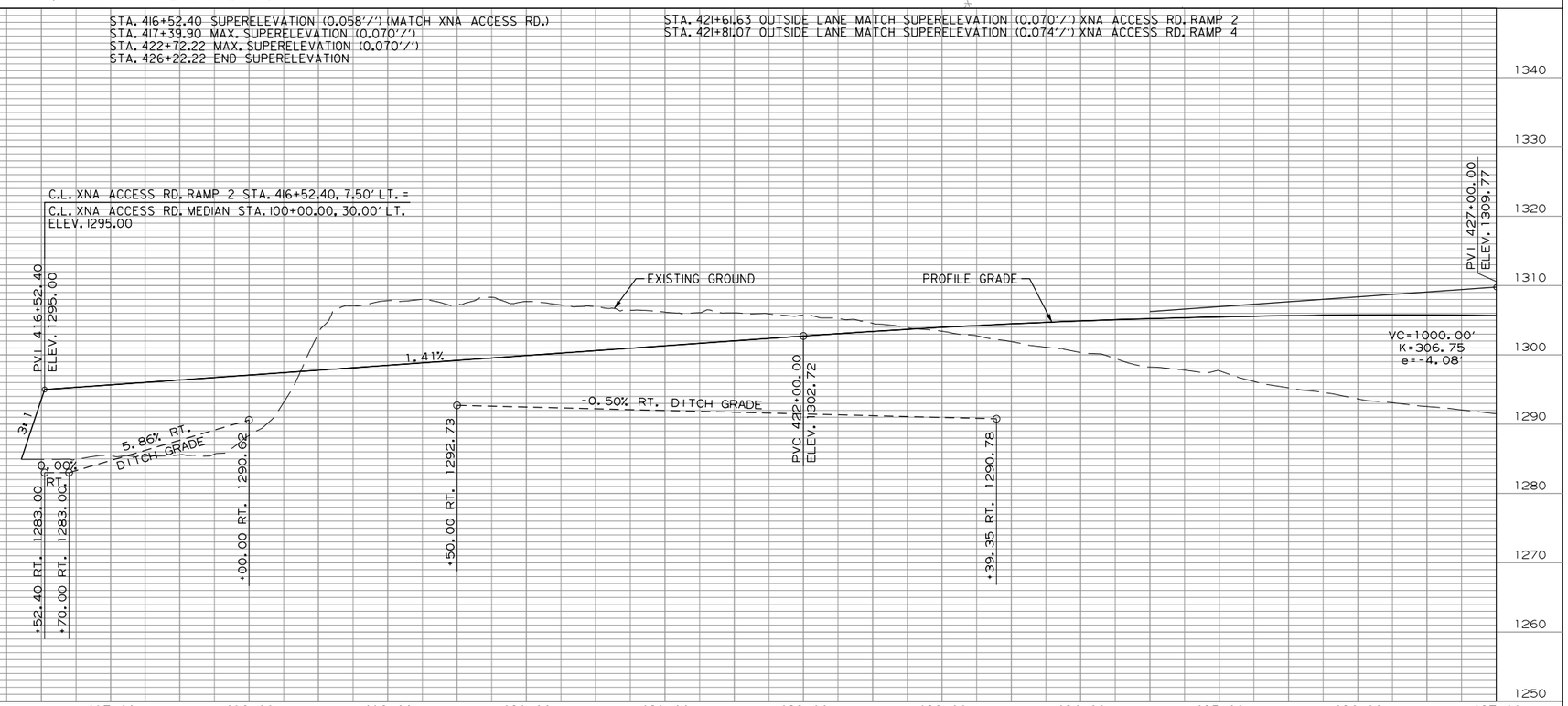

WBCalloway 7/31/2023 3:55:30 PM
WORKSPACE: AHTD
L:\2017\170176\60 - ARDOT 012326 Hwy 412 - Hwy 112\Drawings\r012326_PP_XNA Access Ramp 2.0.dgn
REVISED DATE:

DATE REVISED	DATE REVISED	FED. RD. DIST. NO.	STATE	JOB NO.	SHEET NO.	TOTAL SHEETS
		6	ARK.	012326	285	838

PLAN & PROFILE - XNA ACCESS RD. RAMP 2

STATE OF ARKANSAS
LICENSED PROFESSIONAL ENGINEER
No. 13653
ADAM E. WIERCIAK

DIGITALLY SIGNED 07/31/2023

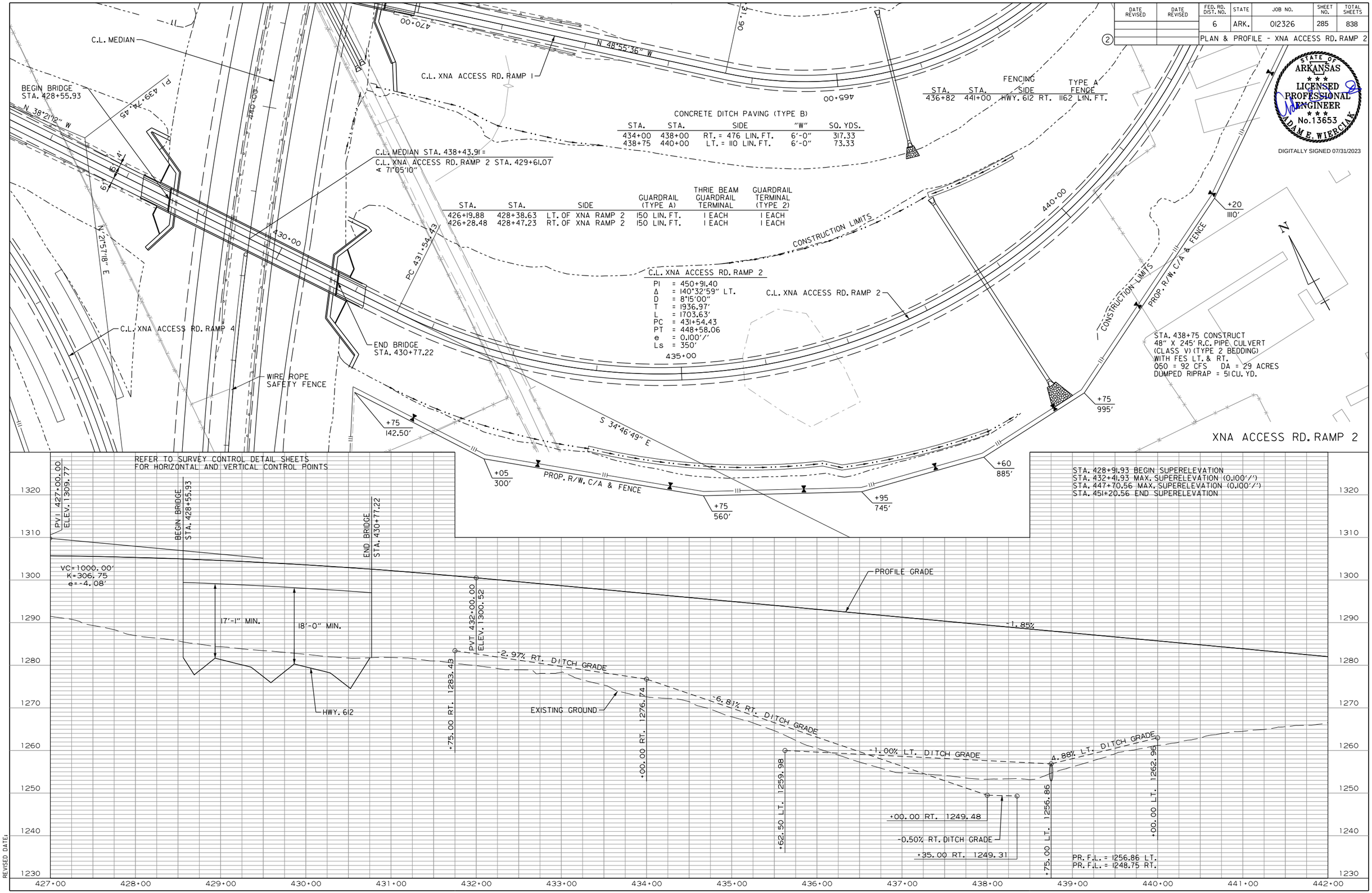

CONCRETE DITCH PAVING (TYPE B)

STA.	STA.	SIDE	"W"	SQ. YDS.
434+00	438+00	RT. = 476 LIN. FT.	6'-0"	317.33
438+75	440+00	LT. = 110 LIN. FT.	6'-0"	73.33

FENCING

STA.	STA.	SIDE	TYPE A FENCE
436+82	441+00	HWY. 612 RT.	1162 LIN. FT.

STA.	STA.	SIDE	GUARDRAIL (TYPE A)	THRIE BEAM GUARDRAIL TERMINAL	GUARDRAIL TERMINAL (TYPE 2)
426+19.88	428+38.63	LT. OF XNA RAMP 2	150 LIN. FT.	1 EACH	1 EACH
426+28.48	428+47.23	RT. OF XNA RAMP 2	150 LIN. FT.	1 EACH	1 EACH

WBCallaway 7/31/2023 3:55:30 PM
WORKSPACE: AHTD
L:\2017\17017660 - ARDOT 012326 Hwy 412 - Hwy 112\Drawings\r012326_PP_XNA Access Ramp 2_02.dgn
REVISED DATE:

DATE REVISED	DATE REVISED	FED. RD. DIST. NO.	STATE	JOB NO.	SHEET NO.	TOTAL SHEETS
		6	ARK.	012326	286	838

PLAN & PROFILE - XNA ACCESS RD. RAMP 2

STATE OF ARKANSAS
LICENSED PROFESSIONAL ENGINEER
No. 13653
ADAM E. WIERCIAK

DIGITALLY SIGNED 07/31/2023

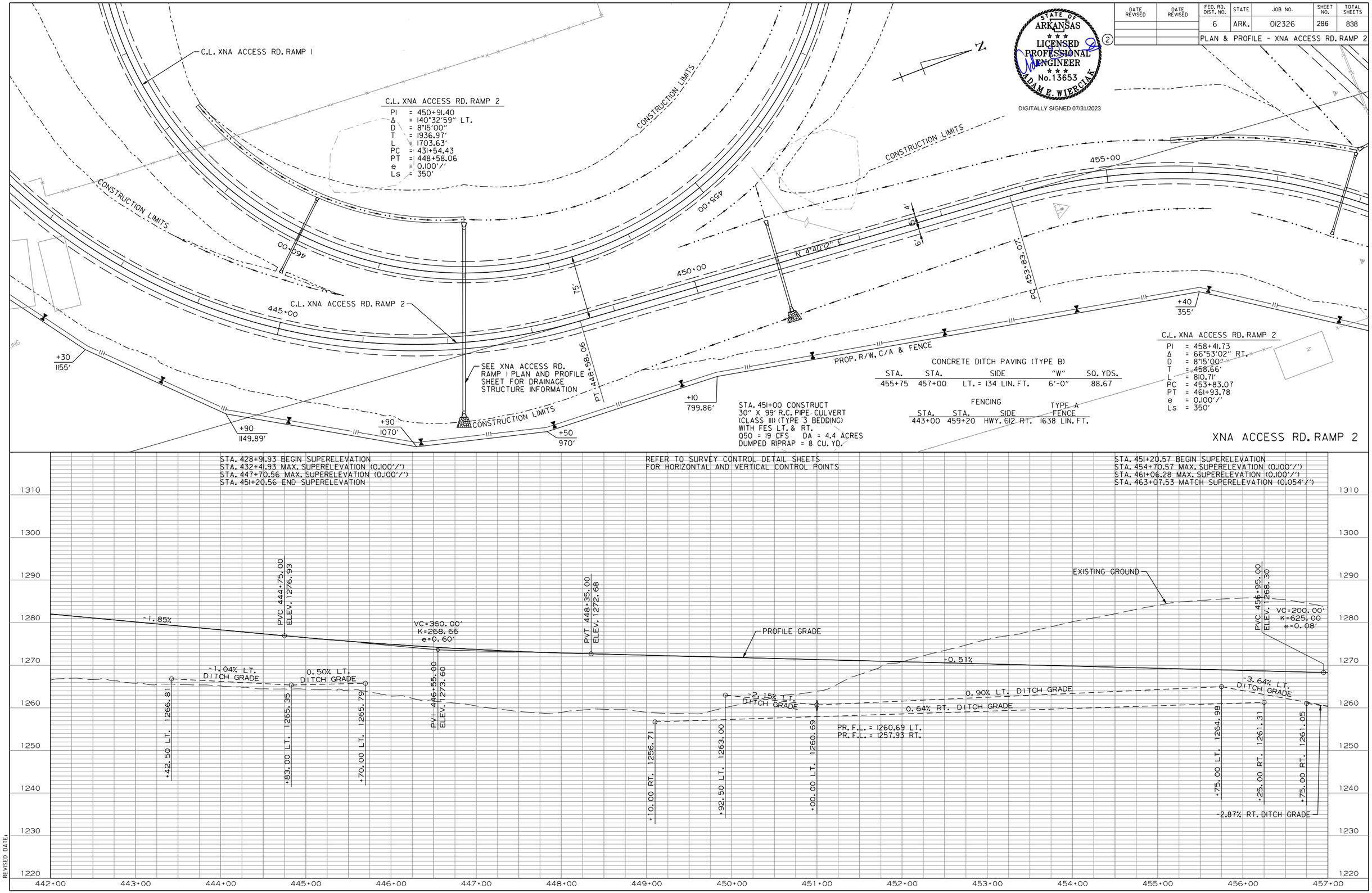

CONCRETE DITCH PAVING (TYPE B)

STA.	STA.	SIDE	"W"	SQ. YDS.
455+75	457+00	LT. = 134 LIN. FT.	6'-0"	88.67

FENCING

STA.	STA.	SIDE	TYPE A FENCE
443+00	459+20	HWY. 612 RT.	1638 LIN. FT.

WBCallaway 7/31/2023 3:55:30 PM
WORKSPACE: AHTD
L:\2017\17017660 - ARDOT 012326 Hwy 412 - Hwy 112\Drawings\r012326_PP_XNA Access Ramp 2_03.dgn
REVISED DATE:

DATE REVISED	DATE REVISED	FED. RD. DIST. NO.	STATE	JOB NO.	SHEET NO.	TOTAL SHEETS
		6	ARK.	012326	287	838
		PLAN & PROFILE - XNA ACCESS RD. RAMP 2				
2						

STATE OF ARKANSAS
LICENSED PROFESSIONAL ENGINEER
No. 13653
ADAM E. WIERCIAK
DIGITALLY SIGNED 07/31/2023

C.L. MEDIAN STA. 461+93.78 58.50' RT. =
C.L. XNA ACCESS RD. RAMP 2 STA. 461+93.78

PT 16+80.06

EXIST. R/W & C/A

WIRE ROPE SAFETY FENCE

PI 458+41.73

460.00

N 71°33'14" E

N 4°40'12" E

460.00

NOSE STA. 460+84.47 57.76' RT.

NOSE +86.86 7.50' LT.

ROBBINS RD.

CONSTRUCTION LIMITS

C.L. MEDIAN

C.L. XNA ACCESS RD. RAMP 2

465.00

PC 20+57.83

PT 461+93.78

+40
238.01'

WIRE ROPE SAFETY FENCE

PROP. R/W, C/A & FENCE

EXIST. R/W & C/A

PI 21+81.61

+40
355'

C.L. XNA ACCESS RD. RAMP 2

PI	= 458+41.73
Δ	= 66°53'02" RT.
D	= 8°15'00"
T	= 458.66'
L	= 810.71'
PC	= 453+83.07
PT	= 461+93.78
e	= 0.100'/'
Ls	= 350'

STA. 457+80 CONSTRUCT
24" X 88' R.C. PIPE CULVERT
(CLASS III) (TYPE 3 BEDDING)
WITH FES LT. & RT.
Q50 = 5.6 CFS DA = 1.1 ACRES

CONCRETE DITCH PAVING (TYPE B)

STA.	STA.	SIDE	"W"	SQ. YDS.
457+00	457+80	LT. = 87 LIN. FT.	6'-0"	57.33

XNA ACCESS RD. RAMP 2

STA. 451+20.57 BEGIN SUPERELEVATION
STA. 454+70.57 MAX. SUPERELEVATION (0.100'/')
STA. 461+06.28 MAX. SUPERELEVATION (0.100'/')
STA. 463+07.53 MATCH SUPERELEVATION (0.054'/')

REFER TO SURVEY CONTROL DETAIL SHEETS
FOR HORIZONTAL AND VERTICAL CONTROL POINTS

C.L. MEDIAN STA. 460+84.47, 57.76' RT. =
C.L. XNA ACCESS RD. RAMP 2 STA. 460+86.86, 7.50' LT.
ELEV. 1267.24

VC=200.00'
K=625.00
e=0.08'

PVT 458+95.00
ELEV. 1267.60

PVI 460+86.86
ELEV. 1267.24

EXISTING GROUND

PROFILE GRADE

-0.51%

-0.19%

1.35% RT. DITCH GRADE

-1.74% RT.
DITCH GRADE

+80.00 LT. 1257.51
+80.00 RT. 1258.04

PVI 457+95.00
ELEV. 1267.79

+37.50 RT. 1260.16

+85.00 RT. 1259.28

+86.86 RT. 1257.51

-2.87% RT. DITCH GRADE

-3.64% LT.
DITCH GRADE

PR. F.L. = 1258.04 RT.
PR. F.L. = 1257.51 LT.

1310 1300 1290 1280 1270 1260 1250 1240 1230 1220

457+00 458+00 459+00 460+00 461+00 462+00

WBCallaway 7/31/2023 3:55:31 PM
WORKSPACE: AHTD
L:\20\T\01\T660 - ARDOT 012326 Hwy 412 - Hwy 112\Drawings\r012326_PP_XNA Access Ramp 2.04.dgn
REVISED DATE:

DATE REVISED	DATE REVISED	FED. RD. DIST. NO.	STATE	JOB NO.	SHEET NO.	TOTAL SHEETS
		6	ARK.	012326	288	838
		PLAN & PROFILE - XNA ACCESS RD. RAMP 3				

STATE OF ARKANSAS
LICENSED PROFESSIONAL ENGINEER
No.13653
ADAM E. WIERCIAK
DIGITALLY SIGNED 07/31/2023

C.L. XNA ACCESS RD. MEDIAN STA. 103+33.77 46.50' RT. =
C.L. XNA ACCESS RD. RAMP 3 STA. 429+54.36

C.L. XNA ACCESS RD. RAMP 3
PI = 431+56.96
Δ = 2°01'33" LT.
D = 0°30'00"
T = 202.60'
L = 405.17'
PC = 429+54.36
PT = 433+59.53
e = NO SUPER

CONCRETE DITCH PAVING (TYPE B)

STA.	STA.	SIDE	"W"	SQ. YDS.
443+25	444+88	RT. = 171 LIN. FT.	6'-0"	114.00

STA. 444+90 CONSTRUCT
DROP INLET 40' LT. H=2'-6"
WITH 24" x 84' R.C. PIPE OUTLET
TO F.E.S. RT.
TYPE RM DROP INLET = 4'X3'
24" R.C. PIPE (CLASS III)
(TYPE 3 BEDDING) = 84 LIN. FT.
24" F.E.S. = 1 EACH
Q50 = 11 CFS DA = 2.5 ACRES

C.L. XNA ACCESS RD. RAMP 3
PI = 443+19.28
Δ = 70°12'01" LT.
D = 6°00'00"
T = 671.14'
L = 1170.00'
PC = 436+48.14
PT = 448+18.14
e = 0.092'/'
Ls = 350'

PC 429+54.36
+17.83
125'
+20
140'
PI 431+56.96
+28.65
1260'
PT 433+59.53
+70
995'
+70
900'
+50
811.09'
+70
684.41'
+00
455'
430+00
46.5'
S 48°55'36" E
C.L. XNA ACCESS RD. MEDIAN
N 48°55'36" W
37.5'
PROP. R/W. C/A & FENCE
CONSTRUCTION LIMITS
NOSE +37.71 7.50' RT.
PC 436+48.14
PI 420+07.87
435+00
S 50°57'09" E
00+00
C.L. XNA ACCESS RD. MEDIAN STA. 100+00.00 37.50' LT. =
C.L. XNA ACCESS RD. RAMP 2 STA. 416+52.40
NOSE +10.26 11.43' RT.
RET. WALL
480+00
WIRE ROPE SAFETY FENCE
S 48°55'36" E
420+00
S 34°46'49" E
N 48°55'36" W
C.L. XNA ACCESS RD. RAMP 3
4.5%
6%
4%
C.L. XNA ACCESS RD. RAMP 2
C.L. XNA ACCESS RD. RAMP 1
PI 443+19.28
440+00
CONSTRUCTION LIMITS
N 58°50'50" E
PROP. R/W
PC 416+52.40
PROP. R/W. C/A & FENCE
+10
1207.05'
00+00

XNA ACCESS RD. RAMP 3

REFER TO SURVEY CONTROL DETAIL SHEETS
FOR HORIZONTAL AND VERTICAL CONTROL POINTS

STA. 433+85.64 BEGIN SUPERELEVATION
STA. 437+35.64 MAX. SUPERELEVATION (0.092'/')
STA. 447+30.64 MAX. SUPERELEVATION (0.092'/')
STA. 450+80.64 END SUPERELEVATION

C.L. XNA ACCESS RD. RAMP 3 STA. 434+37.71, 7.50' RT. =
C.L. XNA ACCESS RD. RAMP 1 STA. 482+70.26, 11.43' RT.
ELEV. 1296.74

PVI 434+37.71
ELEV. 1296.74
PROFILE GRADE
1.34%
PVC 437+00.00
ELEV. 1300.25
EXISTING GROUND
PVI 440+00.00
ELEV. 1304.27
VC=600.00'
K=100.50
e=-4.48'
PVT 443+00.00
ELEV. 1290.38
-4.63%
PVC 443+50.00
ELEV. 1288.07
VC=400.00'
K=101.78
e=1.96'
TOP ELEV.=1275.77
-7.44% RT. DITCH GRADE
+25.00 RT. 1285.26
PR. F.L. = 1273.27 LT.
F.L. OUTLET 1272.99
+90.00 RT. 1272.99
2.37% RT. DITCH GRADE

1330 1320 1310 1300 1290 1280 1270 1260 1250 1240

434+00 435+00 436+00 437+00 438+00 439+00 440+00 441+00 442+00 443+00 444+00 445+00

WBCallaway 7/31/2023 3:55:31 PM
WORKSPACE: AHTD
L:\20\7\1701660 - ARDOT 012326 Hwy 412 - Hwy 112\Drawings\r012326_PP_XNA Access Ramp 3.01.dgn
REVISED DATE:

DATE REVISED	DATE REVISED	FED. RD. DIST. NO.	STATE	JOB NO.	SHEET NO.	TOTAL SHEETS
		6	ARK.	012326	289	838
(2)		PLAN & PROFILE - XNA ACCESS RD. RAMP 3				

CONCRETE DITCH PAVING (TYPE B)

STA.	STA.	SIDE	"W"	SQ. YDS.
448+90	450+38	LT. = 151 LIN. FT.	6'-0"	100.67

C.L. XNA ACCESS RD. RAMP 3
PI = 443+19.28
Δ = 70°12'01" LT.
D = 6°00'00"
T = 671.14'
L = 1170.00'
PC = 436+48.14
PT = 448+18.14
e = 0.092'/'
Ls = 350'

C.L. MEDIAN STA. 453+46.66, 58.50' LT. =
C.L. XNA ACCESS RD. RAMP 3 STA. 453+46.66

STATE OF ARKANSAS
LICENSED PROFESSIONAL ENGINEER
No. 13653
ADAM E. WIERCIAK
DIGITALLY SIGNED 07/31/2023

+34.31 275'
+00 180'
+90 165'
+40 118.16'
PROP. R/W, C/A & FENCE
CONSTRUCTION LIMITS
EXIST. R/W & C/A
CONSTRUCTION LIMITS
250' TAPER
+46.66
6'
36'
6'
C.L. XNA ACCESS RD. RAMP 3
445+00
450+00
455+00
460+00
PI 448+18.14
NOSE +34.18 7.50' RT.
NOSE +41.15 72.92' LT.
SLOPE GORE AREA AT 2%
WIRE ROPE SAFETY FENCE
C.L. MEDIAN
PI 458+41.78
N 58°50'50" E
N 71°33'14" E
N 44°01'2" E
C.L. XNA ACCESS RD. RAMP 2
C.L. XNA ACCESS RD. RAMP 1
CONSTRUCTION LIMITS
XNA ACCESS RD. RAMP 3

STA. 433+85.64 BEGIN SUPERELEVATION
STA. 437+35.64 MAX. SUPERELEVATION (0.092'/')
STA. 447+30.64 MAX. SUPERELEVATION (0.092'/')
STA. 450+80.64 END SUPERELEVATION

STA. 450+80.64 BEGIN SUPERELEVATION
STA. 454+40.36 MATCH SUPERELEVATION (0.054'/')

REFER TO SURVEY CONTROL DETAIL SHEETS
FOR HORIZONTAL AND VERTICAL CONTROL POINTS

C.L. MEDIAN STA. 449+41.15, 72.92' LT. =
C.L. XNA ACCESS RD. RAMP 3 STA. 449+34.18, 7.50' RT.
ELEV. 1276.12

VC=400.00'
K=101.78
e=1.96'
PROFILE GRADE
-4.63%
PVT 447+50.00
ELEV. 1277.41
-0.70%
PVI 449+34.18
ELEV. 1276.12
-0.50% LT. DITCH GRADE
EXISTING GROUND
PVI 445+50.00
ELEV. 1278.81
+00.00 RT. 1275.60
+30.64 LT. 1270.78
+90.00 LT. 1269.99
+34.18 LT. 1266.96
2.37% RT. DITCH GRADE
-6.84% LT. DITCH GRADE

1320 1310 1300 1290 1280 1270 1260 1250 1240 1230
445+00 446+00 447+00 448+00 449+00 450+00 451+00 452+00 453+00 454+00

WBCallaway 7/31/2023 3:55:32 PM
WORKSPACE: AHTD
L:\20\7\01\7660 - ARDOT 012326 Hwy 412 - Hwy 112\Drawings\r012326_PP_XNA Access Ramp 3.02.dgn
REVISED DATE:

DATE REVISED	DATE REVISED	FED. RD. DIST. NO.	STATE	JOB NO.	SHEET NO.	TOTAL SHEETS
		6	ARK.	012326	290	838
		PLAN & PROFILE - XNA ACCESS RD. RAMP 4				

STATE OF ARKANSAS
LICENSED PROFESSIONAL ENGINEER
No. 13653
ADAM E. WIERCIAK
DIGITALLY SIGNED 07/31/2023

C.L. MEDIAN STA. 428+87.18, 58.50' LT. =
C.L. XNA ACCESS RD. RAMP 4 STA. 428+87.18

CONCRETE DITCH PAVING (TYPE B)

STA.	STA.	SIDE	"W"	SQ. YDS.
436+60	438+20	RT. = 165 LIN. FT.	6'-0"	110.00
436+60	438+25	LT. = 159 LIN. FT.	6'-0"	106.00

C.L. XNA ACCESS RD. RAMP 4
PI = 439+74.45
Δ = 60°18'30" LT.
D = 6°00'00"
T = 554.76'
L = 1005.14'
PC = 434+19.69
PT = 444+24.83
e = 0.092'/'
Ls = 350'

C.L. XNA ACCESS RD. RAMP 2 STA. 421+81.07, 9.00' RT. =
C.L. XNA ACCESS RD. RAMP 4 STA. 444+24.83

XNA ACCESS RD. RAMP 4

STA. 427+97.47 MATCH SUPERELEVATION (0.054'/')
STA. 431+57.19 END SUPERELEVATION

STA. 431+57.19 BEGIN SUPERELEVATION
STA. 435+07.19 MAX. SUPERELEVATION (0.092'/')
STA. 443+37.33 MAX. SUPERELEVATION (0.092'/')
STA. 444+24.83 (0.074'/') (SEE XNA ACCESS RD. RAMP 2 FOR CONTINUATION)

REFER TO SURVEY CONTROL DETAIL SHEETS
FOR HORIZONTAL AND VERTICAL CONTROL POINTS

C.L. MEDIAN STA. 431+14.82, 57.88' LT. =
C.L. XNA ACCESS RD. RAMP 4 STA. 431+18.13, 7.50' RT.
ELEV. 1281.18

C.L. XNA ACCESS RD. RAMP 4 STA. 442+57.79, 7.50' RT. =
C.L. XNA ACCESS RD. RAMP 2 STA. 423+49.32, 11.27' RT.
ELEV. 1303.36

PVI 431+18.13
ELEV. 1281.18
1.04%
PVC 431+25.00
ELEV. 1281.25
VC=150.00'
K=272.73
e=-0.10'
PVI 432+00.00
ELEV. 1282.03
PVT 432+75.00
ELEV. 1282.40
0.49%
PVC 434+15.00
ELEV. 1283.08
VC=410.00'
K=97.85
e=2.15'
PVI 436+20.00
ELEV. 1284.09
PROFILE GRADE
PVT 438+25.00
ELEV. 1293.68
4.68%
+25.00 LT. 1286.90
PVC 438+35.00
ELEV. 1294.15
2.22% LT. DITCH GRADE
+25.00 LT. 1289.12
PVI 440+45.00
ELEV. 1303.98
-0.29%
PVT 442+57.79
ELEV. 1303.36
0.50% LT. DITCH GRADE
VC=420.00'
K=84.51
e=-2.61'
+57.78 LT. 1290.78
PVT 442+55.00
ELEV. 1303.37
EXISTING GROUND

1330 1320 1310 1300 1290 1280 1270 1260 1250 1240

429+00 430+00 431+00 432+00 433+00 434+00 435+00 436+00 437+00 438+00 439+00 440+00 441+00 442+00 443+00 444+00

WBCallaway 7/31/2023 3:55:32 PM
WORKSPACE: AHTD
L:\20\T\T01T660 - ARDOT 012326 Hwy 412 - Hwy 112\Drawings\r012326_PP_XNA Access Ramp 4_01.dgn
REVISED DATE:

DATE REVISED	DATE REVISED	FED. RD. DIST. NO.	STATE	JOB NO.	SHEET NO.	TOTAL SHEETS
		6	ARK.	012326	291	838

(2) INTERCHANGE LAYOUT - HWY. 112

STATE OF ARKANSAS
LICENSED PROFESSIONAL ENGINEER
No. 13436
SHAUN A. ROBERSON

DIGITALLY SIGNED 7/28/2023

CURVE DATA

CURVE	PC	PI	PT	Δ	D	TANGENT	LENGTH	e	Ls	DESIGN
						FEET		FT./FT.	FEET	SPEED
1-1	478+75.52	479+70.74	480+65.80	5°42′30″	3°00′00″	95.22	190.28	NC	NA	70 MPH
1-2	485+96.30	488+78.47	491+49.64	27°40′00″	5°00′00″	282.17	553.34	0.083	300	50 MPH
1-3	496+06.27	497+62.08	499+13.11	24°32′49″	8°00′00″	155.81	306.84	0.058	250	30 MPH
4-1	483+09.15	487+32.80	491+35.68	30°59′41″	3°45′00″	423.65	826.53	0.069	300	50 MPH
112-1	11+87.84	13+74.88	15+61.10	9°19′54″	2°30′00″	187.04	373.26	0.049	300	50 MPH
112-2	25+68.19	27+59.09	29+49.12	9°31′24″	2°30′00″	190.90	380.93	0.049	300	50 MPH

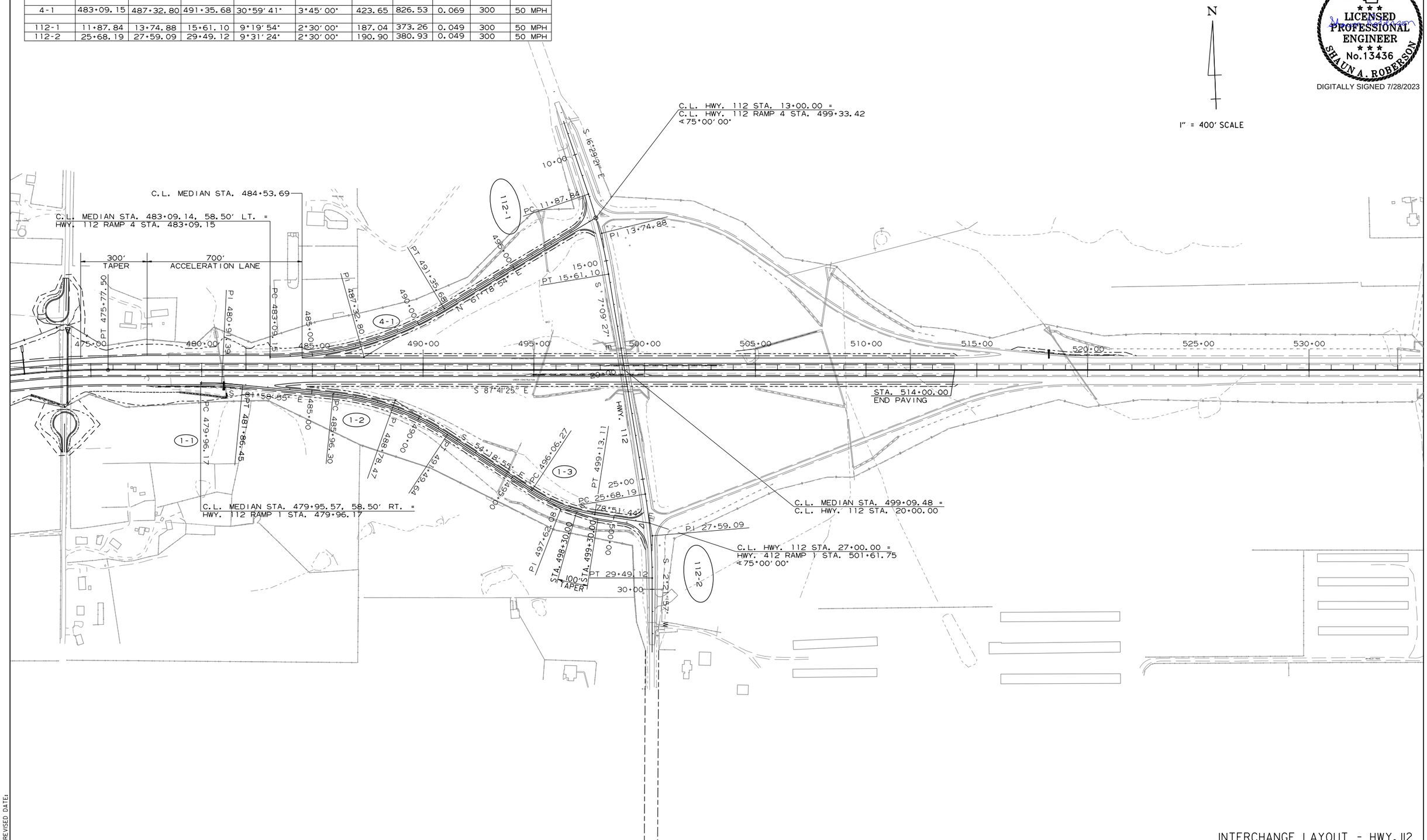

INTERCHANGE LAYOUT - HWY. 112

WBCallaway 7/31/2023 3:55:32 PM
WORKSPACE: AHTD
L:\2017\17017660 - ARDOT 012326 Hwy 412 - Hwy 112\Drawings\r012326_IP_112_01.dgn
REVISED DATE:

DATE REVISED	DATE REVISED	FED. RD. DIST. NO.	STATE	JOB NO.	SHEET NO.	TOTAL SHEETS
		6	ARK.	012326	292	838
		PLAN & PROFILE - HWY. 112 RAMP 1				

STATE OF ARKANSAS
LICENSED PROFESSIONAL ENGINEER
No. 13436
SHAUN A. ROBERSON
DIGITALLY SIGNED 7/28/2023

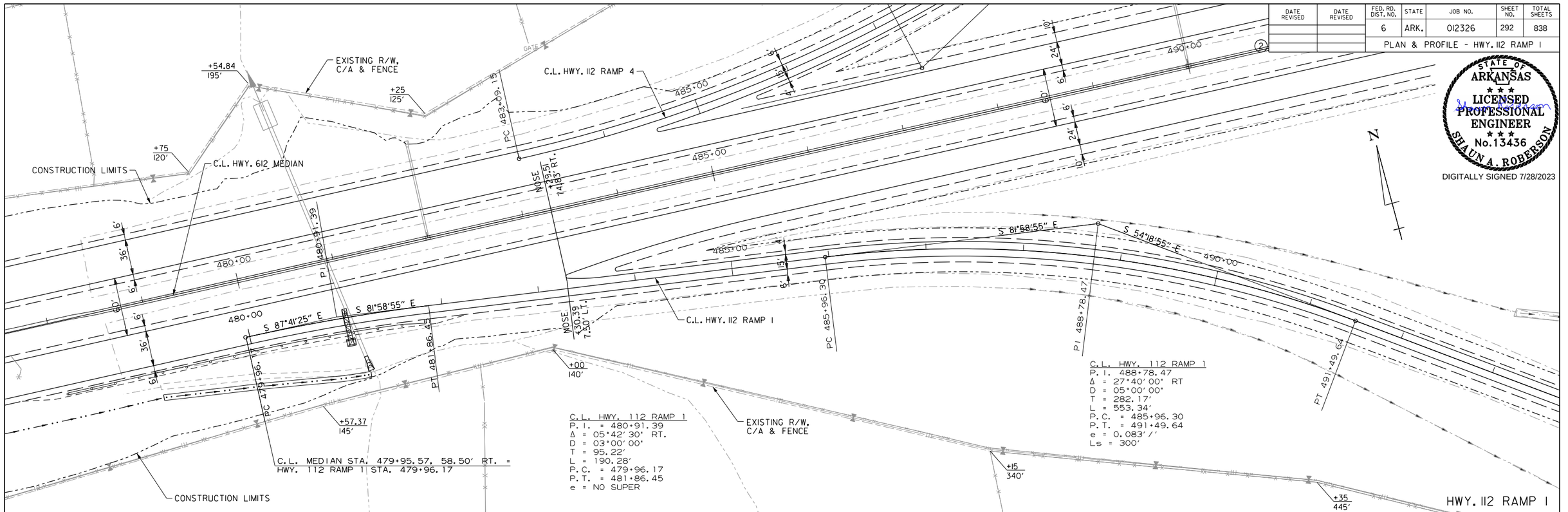

REFER TO SURVEY CONTROL DETAIL SHEETS FOR HORIZONTAL AND VERTICAL CONTROL POINTS

STA. 483+71.30 BEGIN SUPERELEVATION
STA. 486+71.30 MAX SUPERELEVATION (0.083 FT./FT)
STA. 490+74.64 MAX SUPERELEVATION (0.083 FT./FT.)
STA. 493+74.64 END SUPERELEVATION

STA. 494+18.77 BEGIN SUPERELEVATION
STA. 496+68.77 MAX SUPERELEVATION (0.058 FT./FT)
STA. 498+50.61 MAX SUPERELEVATION (0.058 FT./FT.)
STA. 501+00.61 END SUPERELEVATION

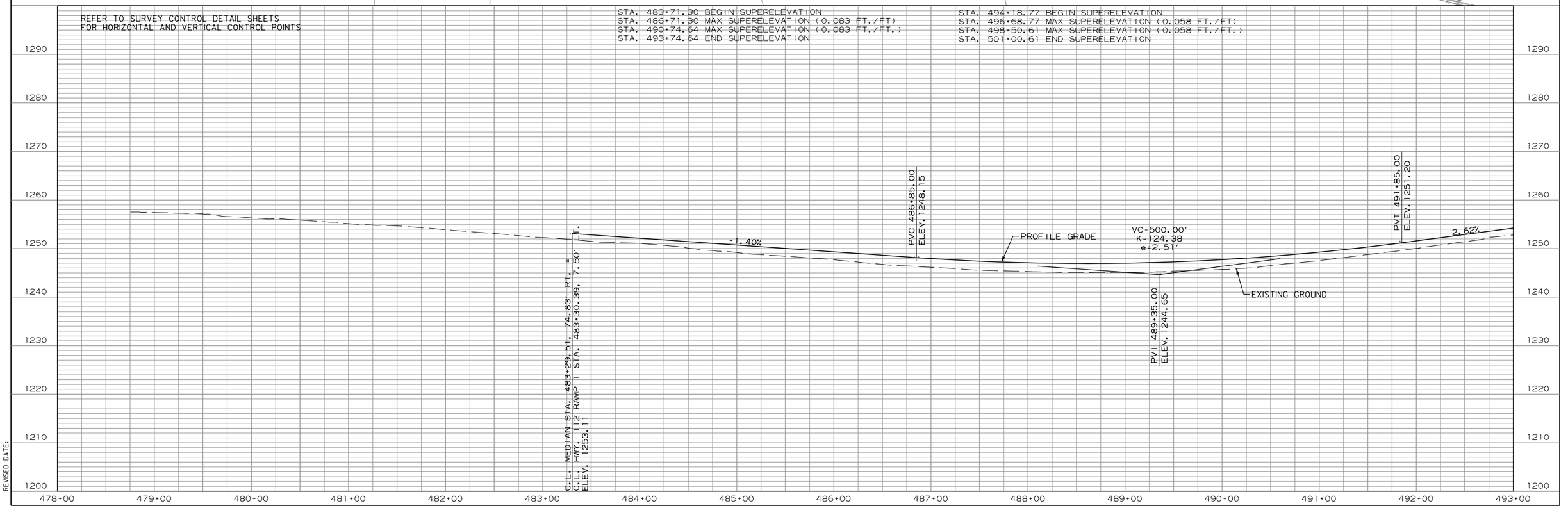

WBCallaway 7/31/2023 3:55:33 PM
WORKSPACE: AHTD
L:\2017\17017660 - ARDOT 012326 Hwy 412 - Hwy 112\Drawings\r012326_PP_112 Ramp 01_01.dgn
REVISED DATE:

DATE REVISED	DATE REVISED	FED. RD. DIST. NO.	STATE	JOB NO.	SHEET NO.	TOTAL SHEETS
		6	ARK.	012326	293	838
		PLAN & PROFILE - HWY. 112 RAMP 1				

HWY. 112 RAMP 1 STA. 494+70 EXISTING
54" X 174' R.C. PIPE CULVERT
8° RT. FWD. SKEW
(CLASS V) TYPE 3 BEDDING
WITH FES LT. & RT.
Q50 = 121 CFS DA = 52.3 ACRES
RETAIN

C.L. HWY. 112 RAMP 1
P.I. = 497+62.08
Δ = 24°32'49" LT.
D = 8°00'00"
T = 155.81'
L = 306.84'
P.C. = 496+06.27
P.T. = 499+13.11
e = 0.058 '/'
Ls = 250'

PAVED DRAIN
S 54°18'55.0" E
495.00
PC 496+06.27
C.L. HWY. 112 RAMP 1
PT 499+13.11
500.00
S 78°51'44" E
24'
16'
EXISTING R/W, C/A & FENCE
PAVED DRAIN
PI 497+62.08
+95
725'
+45
795'
APN:1810
PD:8"SPK
C.L. HWY. 112
25.00
PC 25+68.19
C.L. HWY. 112 STA. 27+00.00 =
C.L. HWY. 112 RAMP 1 STA. 501+61.75
∢ 75°00'00"
PI 27+59.09
+35
762'
EXISTING R/W, C/A & FENCE
N
HWY. 112 RAMP 1

STATE OF ARKANSAS
LICENSED PROFESSIONAL ENGINEER
No.13436
SHAUN A. ROBERSON
DIGITALLY SIGNED 7/28/2023

REFER TO SURVEY CONTROL DETAIL SHEETS
FOR HORIZONTAL AND VERTICAL CONTROL POINTS

STA. 483+71.30 BEGIN SUPERELEVATION
STA. 486+71.30 MAX SUPERELEVATION (0.083 FT./FT)
STA. 490+74.64 MAX SUPERELEVATION (0.083 FT./FT.)
STA. 493+74.64 END SUPERELEVATION

STA. 494+18.77 BEGIN SUPERELEVATION
STA. 496+68.77 MAX SUPERELEVATION (0.058 FT./FT)
STA. 498+50.61 MAX SUPERELEVATION (0.058 FT./FT.)
STA. 501+00.61 END SUPERELEVATION

PROFILE GRADE
EXISTING GROUND
2.62%

C.L. HWY. 112 STA. 26+87.30 18.00' RT. =
C.L. HWY. 112 RAMP 1 STA. 501+41.07, 7.50' LT.:
ELEV. 1276.25

1290 1280 1270 1260 1250 1240 1230 1220 1210 1200

493+00 494+00 495+00 496+00 497+00 498+00 499+00 500+00 501+00 502+00

WBCalloway 7/31/2023 3:55:34 PM
WORKSPACE: AHTD
L:\20\T\01\7660 - ARDOT 012326 Hwy 412 - Hwy 112\Drawings\r012326_PP_112 Ramp 01_02.dgn
REVISED DATE:

DATE REVISED	DATE REVISED	FED. RD. DIST. NO.	STATE	JOB NO.	SHEET NO.	TOTAL SHEETS
		6	ARK.	012326	294	838
		PLAN & PROFILE - HWY. 112 RAMP 4				
2						

STATE OF ARKANSAS
LICENSED PROFESSIONAL ENGINEER
No. 13436
SHAUN A. ROBERSON
DIGITALLY SIGNED 7/28/2023

N

C.L. HWY. 112 RAMP 4
P.I. = 487+32.80
Δ = 30°59'41" LT.
D = 03°45'00"
T = 423.65'
L = 826.53'
P.C. = 483+09.15
P.T. = 491+35.68
e = 0.069'/'
Ls = 300'

CONSTRUCTION LIMITS
C.L. MEDIAN
HWY. 112 RAMP 4 STA. 483+09.15 = C.L. MEDIAN STA. 483+09.15, 58.50' LT.
EXISTING R/W, C/A & FENCE
CONSTRUCTION LIMITS
C.L. HWY. 112 RAMP 1
C.L. HWY. 112 RAMP 4
PI 480+91.39
PC 483+09.15
PT 481+86.45
PC 479+96.12
P.I. 487+32.80
PT 491+35.68
NOSE +54.20 7.50' RT.
NOSE +53.69 57.82' LT.
S 87°41'25" E
N 61°18'54" E
N 61°18'54" E
+70 120'
+25 125'
+20 220'
+65 320'
+00 420'
+00 140'
480+00
485+00
490+00
GATE
UNDER PI=191.66 PC=96.83 PT=96.83

HWY. 112 RAMP 4

REFER TO SURVEY CONTROL DETAIL SHEETS FOR HORIZONTAL AND VERTICAL CONTROL POINTS

STA. 480+84.15 BEGIN SUPERELEVATION
STA. 483+84.15 MAX SUPERELEVATION (0.069 FT./FT)
STA. 490+60.68 MAX SUPERELEVATION (0.069 FT./FT.)
STA. 493+60.68 END SUPERELEVATION

C.L. MEDIAN STA. 484+53.69, 57.82' LT. =
C.L. HWY. 112 RAMP 4 STA. 484+53.20, 7.50' RT.
ELEV. 1251.96

PROFILE GRADE
-1.20%
EXISTING GROUND

1280 1270 1260 1250 1240 1230 1220 1210 1200 1190

483+00 484+00 485+00 486+00 487+00 488+00 489+00 490+00 491+00 492+00 493+00 494+00

WBCallaway 7/31/2023 3:55:34 PM
WORKSPACE: AHTD
L:\20\7\01\7660 - ARDOT 012326 Hwy 412 - Hwy 112\Drawings\r012326_PP_112 Ramp 04_01.dgn
REVISED DATE:

DATE REVISED	DATE REVISED	FED. RD. DIST. NO.	STATE	JOB NO.	SHEET NO.	TOTAL SHEETS
		6	ARK.	012326	295	838
		PLAN & PROFILE - HWY. 112 RAMP 4				
2						

STATE OF ARKANSAS
LICENSED PROFESSIONAL ENGINEER
No. 13436
SHAUN A. ROBERSON
DIGITALLY SIGNED 7/28/2023

HWY. 112 RAMP 4 STA. 496+65 EXISTING
60" X 224' R.C. PIPE CULVERT
24° LT. FWD. SKEW
(CLASS V) TYPE 3 BEDDING
WITH FES RT. & RIPRAP BASIN LT.
Q50 = 197 CFS DA = 76.5 ACRES
RETAIN

+10
725'

EXISTING R/W,
C/A & FENCE

+05
630'

+80
730'

PAVED DRAIN

10.00

C.L. HWY. 112

PC 11+87.84

C.L. HWY. 112 STA. 13+00.00 =
C.L. HWY. 112 RAMP 4 STA. 499+33.42
∢ 75°00' 00"

+50
785'

EXISTING R/W,
C/A & FENCE

C.L. HWY. 112 RAMP 4

495+00

N 61°18'54" E

16'

PI 13+74.88

+20
765'

PN:1808
PD:8"C

HWY. 112 RAMP 4

REFER TO SURVEY CONTROL DETAIL SHEETS
FOR HORIZONTAL AND VERTICAL CONTROL POINTS

STA. 480+84.15 BEGIN SUPERELEVATION
STA. 483+84.15 MAX SUPERELEVATION (0.069 FT./FT.)
STA. 490+60.68 MAX SUPERELEVATION (0.069 FT./FT.)
STA. 493+60.68 END SUPERELEVATION

1280
1270
1260
1250
1240
1230
1220
1210
1200
1190

PVC 495+30.00
ELEV. 1239.04

VC=300.00'
K=125.00
e=0.90'

PROFILE GRADE

PVT 498+30.00
ELEV. 1239.04

1.20%

1.20%

EXISTING GROUND

PVI 496+80.00
ELEV. 1237.24

C.L. HWY. 112 STA. 13+12.70, 18.00' RT.
C.L. RAMP 4 STA. 499+12.74, 7.50' RT.
ELEV. 1240.03

494+00
495+00
496+00
497+00
498+00
499+00
500+00

WBCalloway
7/31/2023 3:55:34 PM
WORKSPACE: AHTD
L:\2017\170\7660 - ARDOT 012326 Hwy 412 - Hwy 112\Drawings\r012326_PP_112 Ramp 04_02.dgn
REVISED DATE:

DATE REVISED	DATE REVISED	FED. RD. DIST. NO.	STATE	JOB NO.	SHEET NO.	TOTAL SHEETS
		6	ARK.	012326	296	838

PLAN AND PROFILE - HIGHWAY 412B

STATE OF ARKANSAS
LICENSED PROFESSIONAL ENGINEER
No. 13436
SHAUN A. ROBERSON

DIGITALLY SIGNED 7/28/2023

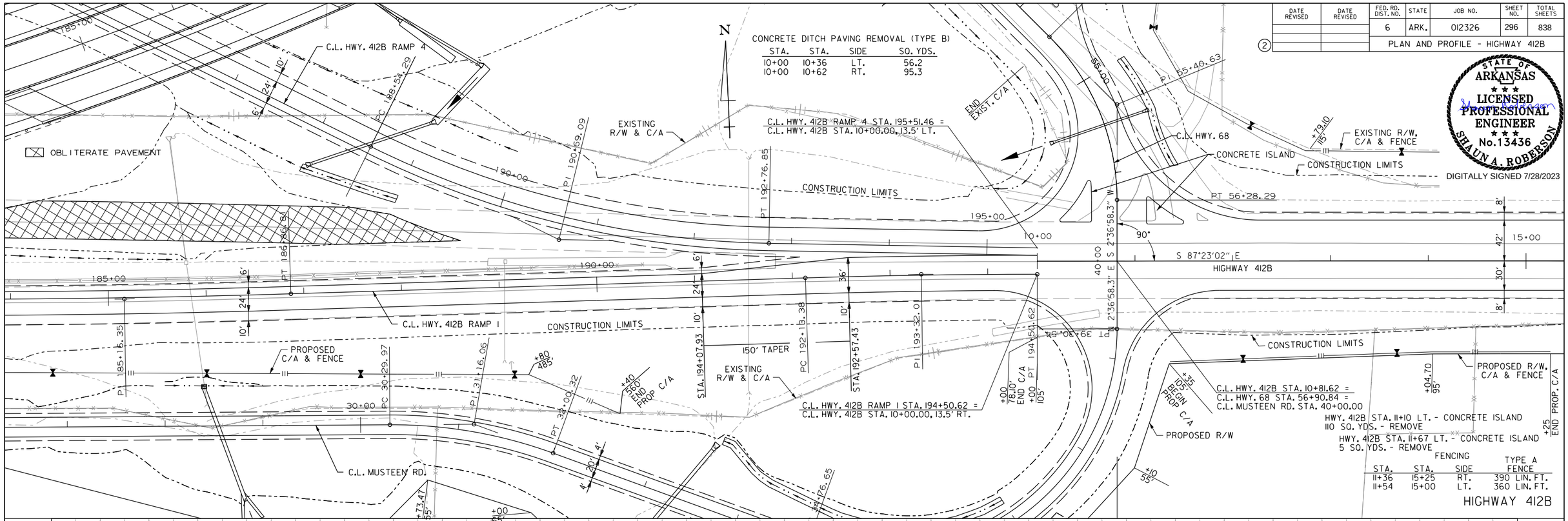

CONCRETE DITCH PAVING REMOVAL (TYPE B)

STA.	STA.	SIDE	SQ. YDS.
10+00	10+36	LT.	56.2
10+00	10+62	RT.	95.3

FENCING

STA.	STA.	SIDE	TYPE A FENCE
11+36	15+25	RT.	390 LIN. FT.
11+54	15+00	LT.	360 LIN. FT.

HIGHWAY 412B

REFER TO SURVEY CONTROL DETAIL SHEETS
FOR HORIZONTAL AND VERTICAL CONTROL POINTS



WBCallaway 7/31/2023 3:55:35 PM
WORKSPACE: AHTD
L:\2017\17017660 - ARDOT 012326 Hwy 412 - Hwy 112\Drawings\r012326_PP_27_412B.dgn
REVISED DATE:

DATE REVISED	DATE REVISED	FED. RD. DIST. NO.	STATE	JOB NO.	SHEET NO.	TOTAL SHEETS
		6	ARK.	012326	297	838
②		PLAN AND PROFILE - HWY. 412B				

STATE OF ARKANSAS
LICENSED PROFESSIONAL ENGINEER
No. 13436
SHAUN A. ROBERSON
DIGITALLY SIGNED 7/28/2023

N

150' TAPER
100' TRANSITION TO MATCH EXISTING
STA. 15+50.00
STA. 17+00.00
CONSTRUCTION LIMITS
EXISTING R/W, C/A & FENCE
+98.71
110' BEGIN PROP. C/A
8'
42'
30'
15+00
S 87°23'02" E
20+00
S 89°25'49" E
25+00
HWY. 412B
PAVED DRAIN
EXISTING R/W
PAVED SHOULDER
CONCRETE
PAVED
CONSTRUCTION LIMITS
PROPOSED R/W, C/A & FENCE
PROPOSED R/W
+93.76
95'
+55
79.64'
+25
END PROP. C/A
PARKING
CONC

FENCING			
STA.	STA.	SIDE	TYPE A FENCE
15+00	16+99	LT.	198 LIN. FT.

STA. 15+91 IN PLACE
18" X 46' PIPE CULVERT
SIDE DRAIN RT.
REMOVE AND INSTALL
18" X 40' PIPE CULVERT
RT. SIDE DRAIN
CONSTRUCT APPROACH
19 CU. YDS.

STA. 17+55 IN PLACE
18" X 46' PIPE CULVERT
RT. SIDE DRAIN
REMOVE AND INSTALL
18" X 50' PIPE CULVERT
RT. SIDE DRAIN
CONSTRUCT APPROACH
13 CU. YDS.

C.L. HWY. 412B
PI = 18+11.60
Δ = 02°02'47"LT.
D = 00°30'00"
T = 204.66
L = 409.27
PC= 16+06.94
PT= 20+16.21
e = NO SUPER

HIGHWAY 412B

REFER TO SURVEY CONTROL DETAIL SHEETS
FOR HORIZONTAL AND VERTICAL CONTROL POINTS

OVERLAY
100' TRANSITION TO MATCH EXISTING
STA. 17+00.00
EXISTING GROUND

1300
1290
1280
1270
1260
1250
1240
1230
1220
1210

15+00 16+00 17+00 18+00 19+00 20+00 21+00 22+00 23+00 24+00 25+00 25+58

WBCalloway 7/31/2023 3:55:35 PM
WORKSPACE: AHTD
L:\2017\1701660 - ARDOT 012326 Hwy 412 - Hwy 112\Drawings\r012326_PP_28_412B.dgn
REVISED DATE:

DATE REVISED	DATE REVISED	FED. RD. DIST. NO.	STATE	JOB NO.	SHEET NO.	TOTAL SHEETS
		6	ARK.	012326	298	838
		PLAN AND PROFILE - HWY. 68				

STATE OF ARKANSAS
LICENSED PROFESSIONAL ENGINEER
No. 13436
SHAUN A. ROBERSON
DIGITALLY SIGNED 7/28/2023

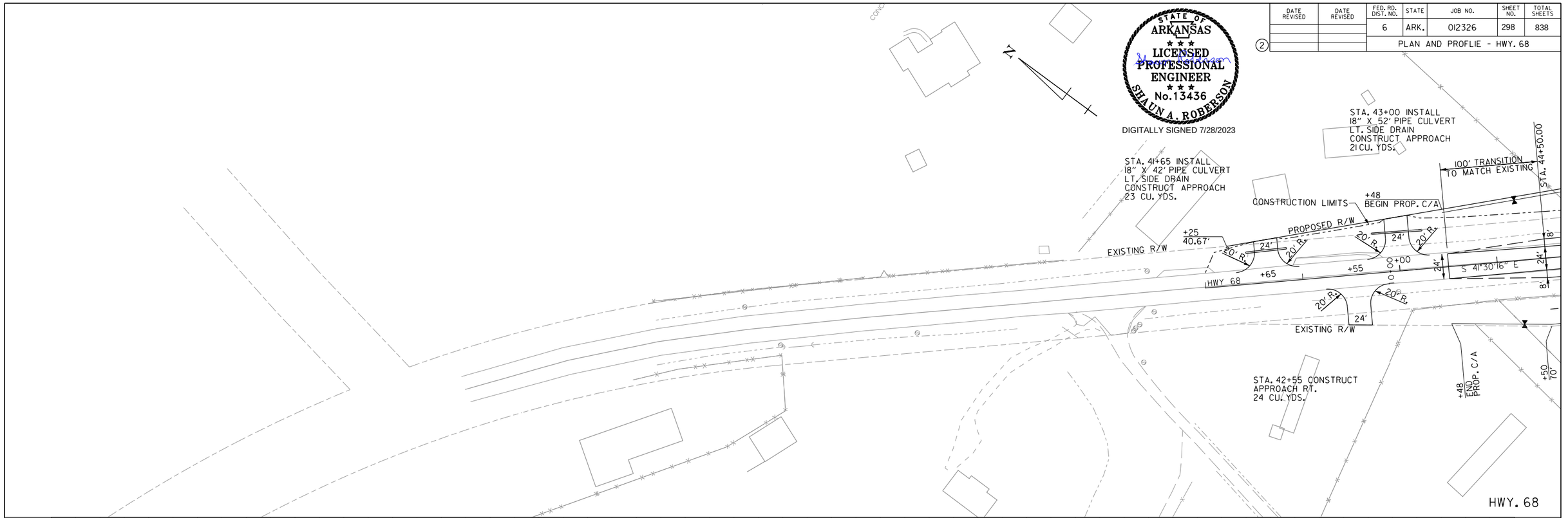

REFER TO SURVEY CONTROL DETAIL SHEETS
FOR HORIZONTAL AND VERTICAL CONTROL POINTS

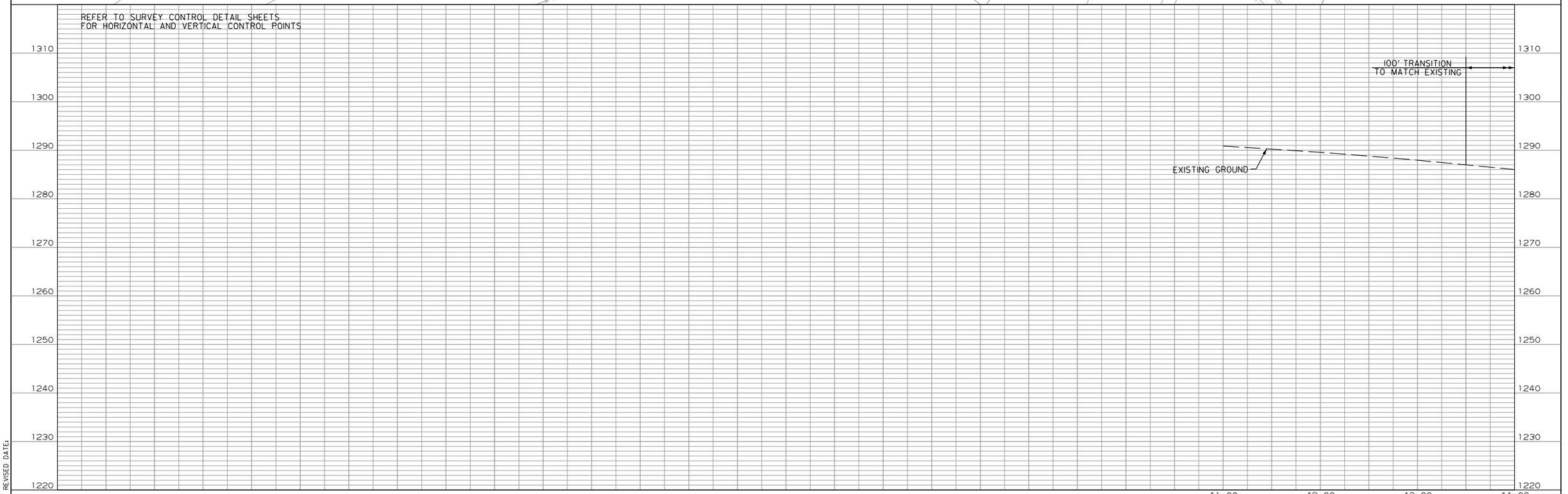

WBCalloway 7/31/2023 3:55:36 PM
WORKSPACE: AHTD
L:\20IT\I70I7660 - ARDOT 012326 Hwy 412 - Hwy 112\Drawings\r012326_PP_29_HWY68.dgn
REVISED DATE:

DATE REVISED	DATE REVISED	FED. RD. DIST. NO.	STATE	JOB NO.	SHEET NO.	TOTAL SHEETS
		6	ARK.	012326	299	838
		PLAN AND PROFILE - HWY. 68				

STATE OF ARKANSAS
LICENSED PROFESSIONAL ENGINEER
No. 13436
SHAUN A. ROBERSON
DIGITALLY SIGNED 7/28/2023

PROPOSED R/W, C/A & FENCE
100' TRANSITION TO MATCH EXISTING
+48 BEGIN PROP. C/A
STA. 44+50.00
+55 43.45
+30 56.97
PC 193+44.30
C.L. HWY. 68 STA. 50+00.00 = C.L. MEDIAN STA. 192+53.46
STA. 48+54 IN PLACE 18" X 44' CM PIPE CULVERT REMOVE
HWY. 412B RAMP 3
CONSTRUCTION LIMITS
EXISTING R/W
HWY 68
2' R. (TYP.)
45.00
24'
8'
20'
80°
75' R.
200' R.
18'
21'
6'
5'
4'
S 41°30'16" E
50+00
PC 51+83.56
C.L. HWY. 68
PI = 52+69.24
Δ = 00°51'24" LT.
D = 00°30'00"
T = 85.68
L = 171.35
PC= 51+83.56
PT= 53+54.91
e = NO SUPER
RAMP 2
PT 53+54.91
75' R.
200' R.
PC 54+42.82
90°
26'
55+00
2' R. (TYP.)
S 42°21'40" E
CONCRETE ISLAND
2' R. (TYP.)
CONSTRUCTION LIMITS
C.L. HWY. 68
PI = 55+40.63
Δ = 44°58'38"RT.
D = 24°15'00"
T = 97.81
L = 185.47
PC= 54+42.82
PT= 56+28.29
e = NO SUPER
CONCRETE ISLAND
END EXIST. C/A
18' 20'
100' R.
S 2°36'58" W
N 2°36'58" E
PT 56+28.29
+27.49 550'
150' R.
PI 56+28.29
8'
42'
30'
8'
2' R. (TYP.)
S 87°23'02" E
C.L. HWY. 412B
90°
100' R.
+35 105' BEGIN PROP C/A
C.L. MUSTEEN RD.
PROPOSED R/W
+10 55'
4'
20'
4'
10+00
195.00
PT 194+99.29
100' R.
29.09°
+00 END C/A
193.32
192.76
55
EXISTING R/W & C/A
HWY. 68
STA. 50+67.57
PI 52+69.24
+40 150'
300' TAPER
+24.77 70.92'
C.L. HWY. 68 STA. 46+48.03 = C.L. HWY. 412B RAMP 3 STA. 192+19.83
STA. 47+67.57
STA. 45+62 IN PLACE 18" X 24' CM PIPE CULVERT REMOVE
STA. 46+34 IN PLACE 18" X 31' CM PIPE CULVERT REMOVE
STA. 48+64 IN PLACE 18" X 24' CM PIPE CULVERT REMOVE
PROPOSED R/W, C/A & FENCE
+75 53.49
+48 END PROP. C/A
+50 70'
+68.33 145'
EXISTING R/W, C/A & FENCE
C.L. MEDIAN
C.L. HWY. 68 STA. 53+50.54 = C.L. HWY. 412B RAMP 2 STA. 192+24.57
C.L. HWY. 68 STA. 56+90.84 = C.L. HWY. 412B STA. 10+81.62 = C.L. MUSTEEN RD. STA. 40+00.00
STA. 51+03 IN PLACE 18" X 49' PIPE CULVERT PLUG & ABANDON
STA. 53+00 CONSTRUCT 24" X 85' R.C. PIPE CULVERT (CLASS III) TYPE 3 BEDDING WITH FES LT. & RT. Q50 = 16 CFS DA = 5.1 ACRES
EXISTING R/W & C/A
STA. 55+50 CONSTRUCT 24" X 94' R.C. PIPE CULVERT (CLASS III) TYPE 3 BEDDING WITH FES LT. & RT. Q50 = 5 CFS DA = 1.0 ACRES
190.90

FENCING STA.	STA.	SIDE	TYPE A FENCE 483 LIN. FT.
43+48	48+30	RT.	

CONCRETE DITCH PAVING (TYPE B) STA.	STA.	SIDE	"W"	SQ. YDS.
52+00	53+00	LT. = 100 LIN. FT.	6'-0"	66.66
52+00	53+00	RT. = 100 LIN. FT.	6'-0"	66.66
55+00	56+00	LT. = 125 LIN. FT.	6'-0"	83.33

REFER TO SURVEY CONTROL DETAIL SHEETS FOR HORIZONTAL AND VERTICAL CONTROL POINTS

100' TRANSITION TO MATCH EXISTING
OVERLAY WITH NOTCH AND WIDEN
STA 44+50.00
BEGIN PROFILE
PVI 53+00.00 ELEV. 1265.07
PROFILE GRADE
EXISTING GROUND
-0.86%
VC=130.00'
K=95.59
e=0.22'
PVC 55+29.00 ELEV. 1263.10
PVT 56+59.00 ELEV. 1262.86
PVI 55+94.00 ELEV. 1262.54
-0.50%
3.38% LEFT DITCH GRADE
3.80% RIGHT DITCH GRADE
-0.85% RIGHT DITCH GRADE
3.40% L.D.G.
-0.26% L.D.G.
+00.00 LT. 1261.05
+00.00 RT. 1261.05
+00.00 LT. 1257.67
+00.00 RT. 1257.16
F.L. = 1257.67 LT.
F.L. = 1257.16 RT.
+00.00 LT. 1258.17
+50.00 LT. 1255.54
+50.00 RT. 1255.03
P.C. 1262.76
+00.00 RT. 1254.78
+00.00 LT. 1257.24
-0.50% RIGHT DITCH GRADE
F.L. = 1255.54 LT.
F.L. = 1255.03 RT.
1310 1300 1290 1280 1270 1260 1250 1240 1230 1220
43+00 44+00 45+00 46+00 47+00 48+00 49+00 50+00 51+00 52+00 53+00 54+00 55+00 56+00 57+00

WBCallaway 7/31/2023 3:55:36 PM
WORKSPACE: AHTD
L:\20\7\1017660 - ARDOT 012326 Hwy 412 - Hwy 62\Drawings\r012326_PP_30_HWY68.dgn
REVISED DATE:

DATE REVISED	DATE REVISED	FED. RD. DIST. NO.	STATE	JOB NO.	SHEET NO.	TOTAL SHEETS
		6	ARK.	012326	300	838
		PLAN AND PROFILE - MUSTEEN ROAD				

2

STATE OF ARKANSAS
LICENSED PROFESSIONAL ENGINEER
No. 13436
SHAUN A. ROBERSON
DIGITALLY SIGNED 8/09/2023

STA. 17+50 LT. IN PLACE
24" X 47' PIPE CULVERT
REMOVE

TEMPORARY CONSTRUCTION EASEMENT

STA. 16+59 CONSTRUCT
APPROACH LT.
207 CU. YDS.

STA. 16+22 INSTALL
18" X 90' PIPE CULVERT
LT. SIDE DRAIN
CONSTRUCT APPROACH
29 CU. YDS.

PROPOSED R/W

N 5°00'00" E

100' TRANSITION TO MATCH EXISTING

C.L. MUSTEEN RD.

C.L. MUSTEEN RD.
PI = 19+63.65
Δ = 87°14'19"RT.
D = 12°30'00"
T = 436.79
L = 697.91
PC= 15+26.86
PT= 22+24.77
e = 0.10 '/'
Ls = 250'

STA. 17+39 CONSTRUCT
24" X 64' R.C. PIPE CULVERT
(CLASS III) TYPE 3 BEDDING
WITH FES LT. & RT.
Q10 = 9 CFS DA = 3.1 ACRES

STA. 15+16
CONSTRUCT APPROACH
22 CU. YDS.

WIRE ROPE SAFETY FENCE

C.L. HWY. 412B RAMP 1

C.L. MEDIAN

PROPOSED R/W

S 81°45'32" E

CONSTRUCTION LIMITS

PROPOSED C/A & FENCE

EXISTING R/W & C/A

STA. 25+90
CONSTRUCT APPROACH
91 CU. YDS.

MUSTEEN ROAD

REFER TO SURVEY CONTROL DETAIL SHEETS
FOR HORIZONTAL AND VERTICAL CONTROL POINTS

STA. 15+26.86 BEGIN SUPERELEVATION
STA. 17+76.86 MAX. SUPERELEVATION (0.10'/')
STA. 21+62.27 MAX. SUPERELEVATION (0.10'/')
STA. 24+12.27 END SUPERELEVATION

100' TRANSITION TO MATCH EXISTING

PVI 15+26.86 ELEV. 1259.54

-1.00%

+00.00 RT. 1255.77

PVC 16+65.00 ELEV. 1258.16

VC=400.00'
K=181.82
e=1.10'

-0.50% RIGHT DITCH GRADE

+40.00 RT. 1252.27

F.L. = 1247.93 LT.
F.L. = 1252.27 RT.

PVI 18+65.00
ELEV. 1256.16
P.G. 1257.26

+00.00 RT. 1253.42

0.72% RIGHT DITCH GRADE

PVT 20+65.00
ELEV. 1258.56

EXISTING GROUND

1.20%

PROFILE GRADE

PVC 23+50.00
ELEV. 1261.98

VC=300.00'
K=136.36
e=-0.82'

PVI 25+00.00
ELEV. 1263.78
P.G. 1262.95

PVT 26+50.00
ELEV. 1262.28

1300 1290 1280 1270 1260 1250 1240 1230 1220 1210

14+00 15+00 16+00 17+00 18+00 19+00 20+00 21+00 22+00 23+00 24+00 25+00 26+00 27+00

JATurner 8/9/2023 7:47:06 AM
WORKSPACE: AHTD
L:\2017\170T660 - ARDOT 012326 Hwy 412 - Hwy 112\Drawings\r012326_PP_38_MUS.dgn
REVISED DATE:

DATE REVISED	DATE REVISED	FED. RD. DIST. NO.	STATE	JOB NO.	SHEET NO.	TOTAL SHEETS
		6	ARK.	012326	301	838
		PLAN AND PROFILE - MUSTEEN ROAD				

STATE OF ARKANSAS
LICENSED PROFESSIONAL ENGINEER
No. 13436
SHAUN A. ROBERSON
DIGITALLY SIGNED 7/28/2023

STA. 28+54 IN PLACE
42" X 146' R.C. PIPE CULVERT
8' RT. FWD. SKEW
WITH FES LT. & RT.
REMOVE FES AND 21' RC PIPE RT.
CONSTRUCT TYPE RM DROP INLET LT.
(4'7" X 3' X H=9'3")
WITH 42" X 124' R.C. PIPE OUTLET ON RT.
20° RT. FWD. SKEW
(CLASS IV) TYPE 3 BEDDING
WITH RIPRAP BASIN RT.
Q50 = 40 CFS DA = 14.4 ACRES

STA. 33+31 CONSTRUCT
42" X 140' R.C. PIPE CULVERT
20° LT. FWD. SKEW
(CLASS IV) TYPE 3 BEDDING
WITH FES LT. & CONTRA-COSTA ENERGY DISSIPATOR RT.
Q50 = 52 CFS DA = 16.8 ACRES

C.L. MUSTEEN RD.
PI = 31+16.06
Δ = 20°26'32"RT.
D = 12°00'00"
T = 86.09
L = 170.35
PC= 30+29.97
PT= 32+00.32
e = 0.099 '/'
Ls = 250'

C.L. MUSTEEN RD.
PI = 38+14.50
Δ = 110°04'02.2"LT.
D = 24°15'00"
T = 337.85
L = 453.89
PC= 34+76.65
PT= 39+30.54
e = 0.10 '/'
Ls = 250'
30 MPH Design Speed

PROPOSED R/W, C/A & FENCE
C.L. MUSTEEN STA. 40+00.00 =
C.L. HWY. 68 STA. 56+90.84 =
C.L. 412B STA. 10+81.62

CONCRETE DITCH PAVING (TYPE B)

STA.	STA.	SIDE	"W"	SQ. YDS.
33+60	37+00	LT. = 313 LIN. FT.	6'-0"	208.67

MUSTEEN ROAD

REFER TO SURVEY CONTROL DETAIL SHEETS
FOR HORIZONTAL AND VERTICAL CONTROL POINTS

STA. 28+42.47 BEGIN SUPERELEVATION
STA. 30+92.47 MAX. SUPERELEVATION (0.099'/')
STA. 31+37.82 MAX. SUPERELEVATION (0.099'/')
STA. 33+87.82 END SUPERELEVATION

STA. 34+76.65 BEGIN SUPERELEVATION
STA. 37+03.60 MAX. SUPERELEVATION (0.091'/')
STA. 39+30.54 END SUPERELEVATION

PROFILE GRADE
-1.00%
-0.43% LEFT DITCH GRADE
0.50% LEFT DITCH GRADE
13.44% LEFT DITCH GRADE
3.47% LEFT DITCH GRADE
1.93%
5' ROCK FILL DRAINAGE/STABILIZING LAYER
EXISTING GROUND
TOP = 1251.50
INV. = 1242.29
F.L. = 1237.40 RT.
F.L. = 1236.61 LT.
F.L. = 1232.12 RT.
PVC 33+00.00 ELEV. 1255.78
VC=400.00'
K=136.52
e=1.47'
PVT 37+00.00 ELEV. 1257.64
PVI 35+00.00 ELEV. 1253.78 P.G. 1255.24
PVI 39+70.00 ELEV. 1262.85
+00.00 LT. 1251.67
+40.00 LT. 1251.50
+00.00 LT. 1251.80
+60.00 LT. 1236.61
+15.00 LT. 1244.00
+00.00 LT. 1253.89

WBCalloway 7/31/2023 3:55:37 PM
WORKSPACE: AHTD
L:\20IT\170I7660 - ARDOT 012326 Hwy 412 - Hwy 112\Drawings\r012326_PP_39_MUS.dgn
REVISED DATE:

DATE REVISED	DATE REVISED	FED. RD. DIST. NO.	STATE	JOB NO.	SHEET NO.	TOTAL SHEETS
		6	ARK.	012326	302	838
		PLAN & PROFILE - LIBERTY AVE.				

C.L. LIBERTY STATIONING	GUARDRAIL (TYPE A)	THRIE BEAM GUARDRAIL TERMINAL	GUARDRAIL TERMINAL (TYPE 2)
STA. 16+59.26 TO STA. 18+78.01 RT.	= 150 LIN. FT.	1 EACH	1 EACH
STA. 17+43.27 TO STA. 18+87.02 LT.	= 75 LIN. FT.	1 EACH	1 EACH
STA. 21+12.97 TO STA. 22+56.72 RT.	= 75 LIN. FT.	1 EACH	1 EACH
STA. 21+21.98 TO STA. 23+40.73 LT.	= 150 LIN. FT.	1 EACH	1 EACH

STA. 18+92.86 TO STA. 21+07.13
CONSTRUCT 214'-3¼" X 28' BRIDGE
212' CONTINUOUS COMPOSITE
PLATE GIRDER UNIT (106'-106')

STA. 18+60 CONSTRUCT
TYPE N2 DI. LT.
12" X 40' Z.C.C.S.P.
OUTLET ON LT.
WITH TYPE A
CONCRETE SPILLWAY

STA. 21+48 CONSTRUCT
TYPE N2 DI. RT.
12" X 53' Z.C.C.S.P.
OUTLET ON RT. (2)

C.L. CO. RD. 904/LIBERTY AVE.
PI = 23+30.54
Δ = 00°47'47"LT.
D = 00°30'00"
T = 79.65
L = 159.29
PC= 22+50.90
PT= 24+10.18

STA. 24+80 IN PLACE
X" X 40' PIPE CULVERT
LT. SIDE DRAIN
REMOVE AND INSTALL
18" X 54' PIPE CULVERT
LT. SIDE DRAIN
CONSTRUCT APPROACH
13 CU. YDS.

C.L. CO. RD. 904/LIBERTY AVE. FRONTAGE RD.
PI = 18+90.19
Δ = 75°47'47"LT.
D = 79°00'00"
T = 56.46
L = 95.94
PC= 18+33.74
PT= 19+29.68

STATE OF ARKANSAS
LICENSED PROFESSIONAL ENGINEER
No. 13436
SHAUN A. ROBERSON
DIGITALLY SIGNED 7/28/2023

STA. 15+00 CONSTRUCT
APPROACH LT.
20 CU. YDS.

C.L. CO. RD. 904/LIBERTY AVE. STA. 20+00.00=
C.L. MEDIAN STA. 219+45.18

C.L. CO. RD. 904/LIBERTY AVE. STA. 25+50.00 =
C.L. CO. RD. 904/LIBERTY AVE. ACCESS RD. STA. 20+00.00

TEMPORARY CONSTRUCTION EASEMENT

PROPOSED R/W, C/A & FENCE

WIRE ROPE SAFETY FENCE

C.L. MEDIAN

N 19°47'25" E

PROPOSED R/W

CONSTRUCTION LIMITS

100' TRANSITION TO MATCH EXISTING

16' GATE

BEGIN BRIDGE STA. 18+92.86

END BRIDGE STA. 21+07.13

S 86°40'38" E

S 87°28'25" E

C.L. CO. RD. 904/LIBERTY AVE.

PROPOSED R/W

STA. 18+52 CONSTRUCT
TYPE N2 DI. RT.
12" X 64' Z.C.C.S.P.
OUTLET ON RT.

107°49'49"

14°47

50'R.

EXISTING R/W

STA. 21+40 CONSTRUCT
TYPE N2 DI. LT.
12" X 36' Z.C.C.S.P.
OUTLET ON LT.
WITH TYPE A
CONCRETE SPILLWAY

STA. 15+00 CONSTRUCT
APPROACH RT.
27 CU. YDS.

CO. RD. 904/LIBERTY AVE.

REFER TO SURVEY CONTROL DETAIL SHEETS
FOR HORIZONTAL AND VERTICAL CONTROL POINTS

PVI 15+50.00
ELEV. 1277.74

PVC 16+00.00
ELEV. 1278.14

VC=200.00'
K=125.00
e=0.40'

PVI 17+00.00
ELEV. 1278.94
P.G. 1279.34

PVT 18+00.00
ELEV. 1281.34

2.40%

0.80%

PVC 18+50.00
ELEV. 1282.54

EXISTING GROUND

MSE RETAINING WALLS

PVI 20+00.00
ELEV. 1286.14
P.G. 1284.42

VC=300.00'
K=65.22
e=-1.72'

PVT 21+50.00
ELEV. 1282.84

2.20%

PVC 22+30.00
ELEV. 12281.08

PROFILE GRADE
VC=300.00'
K=78.95
e=1.42'

PVI 23+80.00
ELEV. 1277.78
P.G. 1279.21

PVT 25+30.00
ELEV. 1280.18
PVI 25+50.00
ELEV. 1280.50

1.60%

12+00 13+00 14+00 15+00 16+00 17+00 18+00 19+00 20+00 21+00 22+00 23+00 24+00 25+00 26+00 27+00

1320 1310 1300 1290 1280 1270 1260 1250 1240 1230

WBCalloway 7/31/2023 3:55:41PM
WORKSPACE: AHTD
L:\20IT\I70I660 - ARDOT 012326 Hwy 412 - Hwy 112\Drawings\r012326_PP_34_LIB.dgn
REVISED DATE:

DATE REVISED	DATE REVISED	FED. RD. DIST. NO.	STATE	JOB NO.	SHEET NO.	TOTAL SHEETS
		6	ARK.	012326	303	838

PLAN & PROFILE - LIBERTY AVE. ACCESS

STATE OF ARKANSAS
LICENSED PROFESSIONAL ENGINEER
No. 13436
SHAUN A. ROBERSON

DIGITALLY SIGNED 7/28/2023

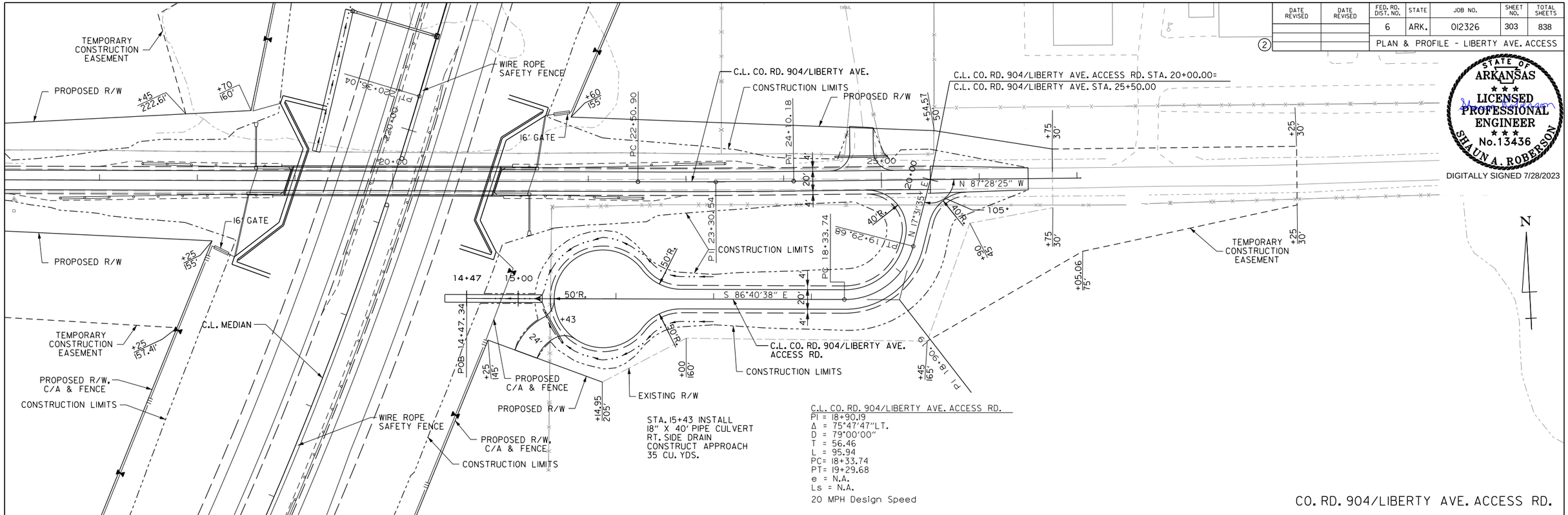

CO. RD. 904/LIBERTY AVE. ACCESS RD.

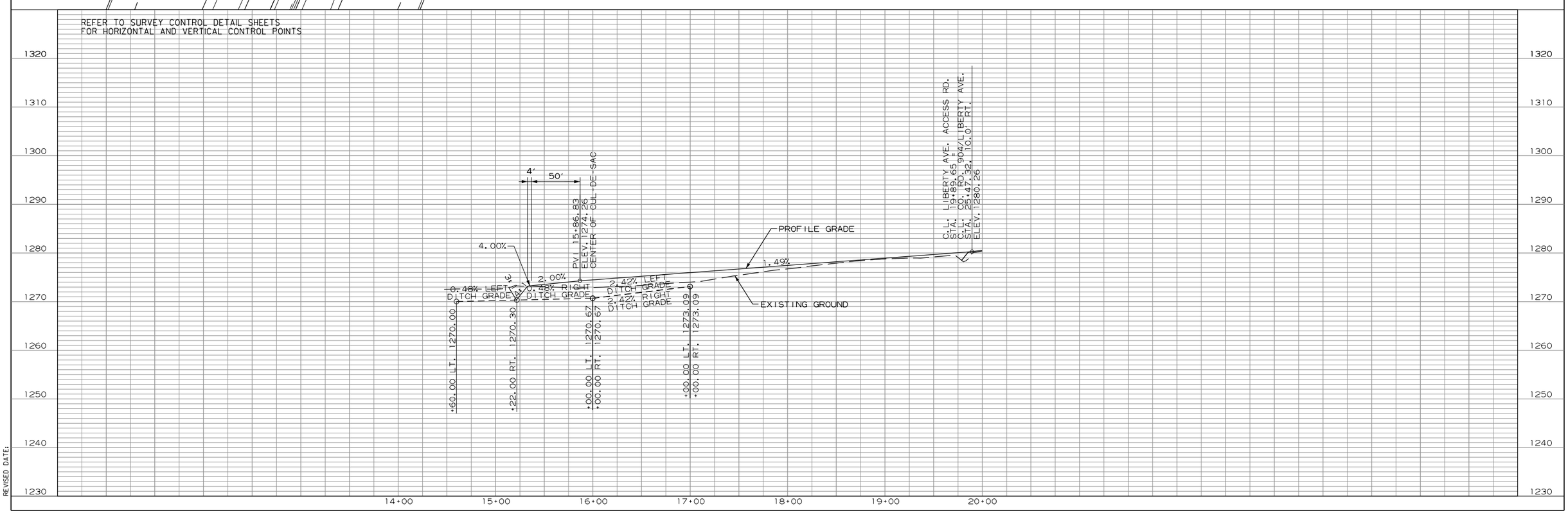

WBCallaway 7/31/2023 3:55:41 PM
WORKSPACE: AHTD
L:\2017\17017660 - ARDOT 012326 Hwy 412 - Hwy 112\Drawings\r012326_PP_35_LIB.dgn
REVISED DATE:

DATE REVISED	DATE REVISED	FED. RD. DIST. NO.	STATE	JOB NO.	SHEET NO.	TOTAL SHEETS
		6	ARK.	012326	304	838
		PLAN & PROFILE - JAVELLO RD.				

(2)

C.L. CO. RD. 946/JAVELLO RD. STA. 20+00.00 =
C.L. MEDIAN STA. 295+42.87

PERMANENT DRAINAGE EASEMENT

TCE

PROPOSED R/W, C/A & FENCE

C.L. MEDIAN

N 87°21'46" E

STA. 18+38 JAVELLO RD. CONSTRUCT SEXT. 6' X 3' X 46' R.C. BOX CULVERT 30° RT. FWD. SKEW WITH 3:1 WINGS LT. & RT.
QIO = 508 CFS DA = 271 ACRES

16' GATE

100' TRANSITION TO MATCH EXISTING

PROPOSED R/W

S 25°50'40" E

113°12'26"

CONSTRUCTION LIMITS

DUMPED RIPRAP (18" THICKNESS) STA. 18+25.96 TO STA. 24+00.00

PROPOSED R/W, C/A & FENCE

C.L. CO. RD. 946/JAVELLO RD.

PI = 31+80.55
Δ = 48°02'13.0"LT.
D = 13°00'00"
T = 196.40
L = 369.52
PC= 29+84.15
PT= 33+53.67
e = 0.100'/'
Ls= 250'

STA. 27+24 JAVELLO RD. CONSTRUCT 48" X 66' R.C. PIPE CULVERT 30° LT. FWD. SKEW (CLASS III) TYPE 3 BEDDING WITH FES LT. & RIPRAP BASIN RT.
QIO = 83 CFS DA = 47.2 ACRES

FLAT BOTTOM DITCH DETAIL

-2.0% -4.0% -4:1 3:1 OR 4:1 1.9' MIN. 3:1 EXISTING GROUND 25' FLAT BOTTOM DITCH

CONCRETE DITCH PAVING (TYPE B)

STA.	STA.	SIDE	"W"	SQ. YDS.
24+20	26+70	LT. = 250 LIN. FT.	7'-0"	194.44
24+70	26+30	RT. = 160 LIN. FT.	7'-0"	124.44
28+30	30+00	RT. = 170 LIN. FT.	7'-0"	132.22
29+00	30+00	LT. = 100 LIN. FT.	7'-0"	77.78

CO. RD. 946/JAVELLO RD.

STATE OF ARKANSAS
LICENSED PROFESSIONAL ENGINEER
No. 13436
SHAUN A. ROBERSON
DIGITALLY SIGNED 7/28/2023

REFER TO SURVEY CONTROL DETAIL SHEETS FOR HORIZONTAL AND VERTICAL CONTROL POINTS

FOR THE CONSTRUCTION OF DETOURS, TEMPORARY WORK RAMPS OR HAUL ROADS, THE STREAM AT STA. 18+00 - 18+30 IS CLASSIFIED AS AN INTERMITTENT STREAM. THE STREAM BANK ELEVATIONS ARE TO BE DETERMINED.

STA. 27+96.65 BEGIN SUPERELEVATION
STA. 30+46.65 MAX SUPERELEVATION (0.10 FT./FT.)
STA. 32+91.17 MAX SUPERELEVATION (0.10 FT./FT.)
STA. 35+41.17 END SUPERELEVATION

PVC 30+00.00 ELEV. 1193.01

PROFILE GRADE

4.00%

PVT 22+00.00 ELEV. 1161.01

VC=300.00'
K=88.24
e=1.28'

PVC 19+00.00 ELEV. 1154.11

PVI 18+00.00 ELEV. 1153.51

0.60%

1.90% RT. DITCH GRADE 25' FLAT BOTTOM (SEE DETAIL THIS SHEET.

EXISTING GROUND

+00.00 RT. 1158.95

PVI 20+50.00 ELEV. 1155.01 P.G. 1156.28

0.40% LEFT DITCH GRADE 25' FLAT BOTTOM SEE DETAIL THIS SHEET.

+40.00 173' LT. 1147.00

+18.00 LT. 1148.00

+50.00 RT. 1148.50

F.L. = 1148.00 LT.
F.L. = 1148.50 RT.

F.L. = 1174.90 LT.
F.L. = 1173.22 RT.

100' TRANSITION TO MATCH EXISTING

1200 1190 1180 1170 1160 1150 1140 1130 1120 1110

16+00 17+00 18+00 19+00 20+00 21+00 22+00 23+00 24+00 25+00 26+00 27+00 28+00 29+00 30+00

WBCallaway 7/31/2023 3:55:42 PM
WORKSPACE: AHTD
L:\2017\17017660 - ARDOT 012326 Hwy 412 - Hwy 112\Drawings\r012326_PP_32_JAV.dgn
REVISED DATE:

DATE REVISED	DATE REVISED	FED. RD. DIST. NO.	STATE	JOB NO.	SHEET NO.	TOTAL SHEETS
		6	ARK.	012326	305	838
		PLAN & PROFILE - JAVELLO RD.				

(2)

STATE OF ARKANSAS
LICENSED PROFESSIONAL ENGINEER
No. 13436
SHAUN A. ROBERSON
DIGITALLY SIGNED 7/28/2023

C.L. CO. RD. 946/JAVELLO RD.
PI = 31+80.55
Δ = 48°02'13"LT.
D = 13°00'00"
T = 196.40
L = 369.52
PC= 29+84.15
PT= 33+53.67
e = 0.10 '/'
Ls = 250'

STA. 36+00 INSTALL
18" X 85' PIPE CULVERT
LT. SIDE DRAIN
CONSTRUCTAPPROACH
19 CU. YDS.

TEMPORARY CONSTRUCTION EASEMENT

CONSTRUCTION LIMITS

PROPOSED R/W

100' TRANSITION TO MATCH EXISTING

29+84.15
PC
33+53.67
PT
PI 31+80.55
35+00
S 73°52'53" E
+00
+75 135'
+00 125'
+50 80'
+40 120'
+15 60'
+10 85'
+00 60'
+25 30'
+25 51.77'
+25 96.08'
+35 55.36'
18'
40' R
80'
50'

C.L. CO. RD. 946/JAVELLO RD.

PROPOSED R/W

CONSTRUCTION LIMITS

CONCRETE DITCH PAVING (TYPE B)

STA.	STA.	SIDE	"W"	SQ. YDS.
30+00	33+75	RT. = 375 LIN. FT.	7'-0"	291.67
30+00	33+50	LT. = 350 LIN. FT.	7'-0"	272.22

STA. 34+70 JAVELLO CONSTRUCT
42" X 164' R.C. PIPE CULVERT
30° RT. FWD. SKEW
(CLASS IV) TYPE 3 BEDDING
WITH FES RT. & RIPRAP BASIN LT.
QIO = 63 CFS DA = 33.6 ACRES

CO. RD. 946/JAVELLO RD.

REFER TO SURVEY CONTROL DETAIL SHEETS
FOR HORIZONTAL AND VERTICAL CONTROL POINTS

STA. 27+96.65 BEGIN SUPERELEVATION
STA. 30+46.65 MAX SUPERELEVATION (0.10 FT./FT.)
STA. 32+91.17 MAX SUPERELEVATION (0.10 FT./FT.)
STA. 35+41.17 END SUPERELEVATION

100' TRANSITION TO MATCH EXISTING

PVC 30+00.00
ELEV. 1193.01

VC=200.00'
K=153.85
e=0.33'

4.00%
5.30%

PVI 31+00.00
ELEV. 1197.01
P.G. 1197.33

PVT 32+00.00
ELEV. 1202.81

5.30%

PVC 33+20.00
ELEV. 1208.67

PROFILE GRADE

EXISTING GROUND

F.L. = 1191.81 LT.
F.L. = 1196.49 RT.

VC=300.00'
K=135.83
e=-0.83'

PVI 34+70.00
ELEV. 1216.62
P.G. 1215.79

PVT 36+20.00
ELEV. 1221.26

3.09%

PVI 37+00.00
ELEV. 1223.73

1240
1230
1220
1210
1200
1190
1180
1170
1160
1150

30+00 31+00 32+00 33+00 34+00 35+00 36+00 37+00 38+00

WBCallaway
WORKSPACE: AHTD
L:\2017\17017660 - ARDOT 012326 Hwy 412 - Hwy 112\Drawings\r012326_PP_33_JAV.dgn
REVISED DATE: 7/31/2023 3:55:44 PM

DATE REVISED	DATE REVISED	FED. RD. DIST. NO.	STATE	JOB NO.	SHEET NO.	TOTAL SHEETS
		6	ARK.	012326	306	838

PLAN & PROFILE - MARCHANT RD.

STATE OF ARKANSAS
LICENSED PROFESSIONAL ENGINEER
No. 13436
SHAUN A. ROBERSON

DIGITALLY SIGNED 7/28/2023

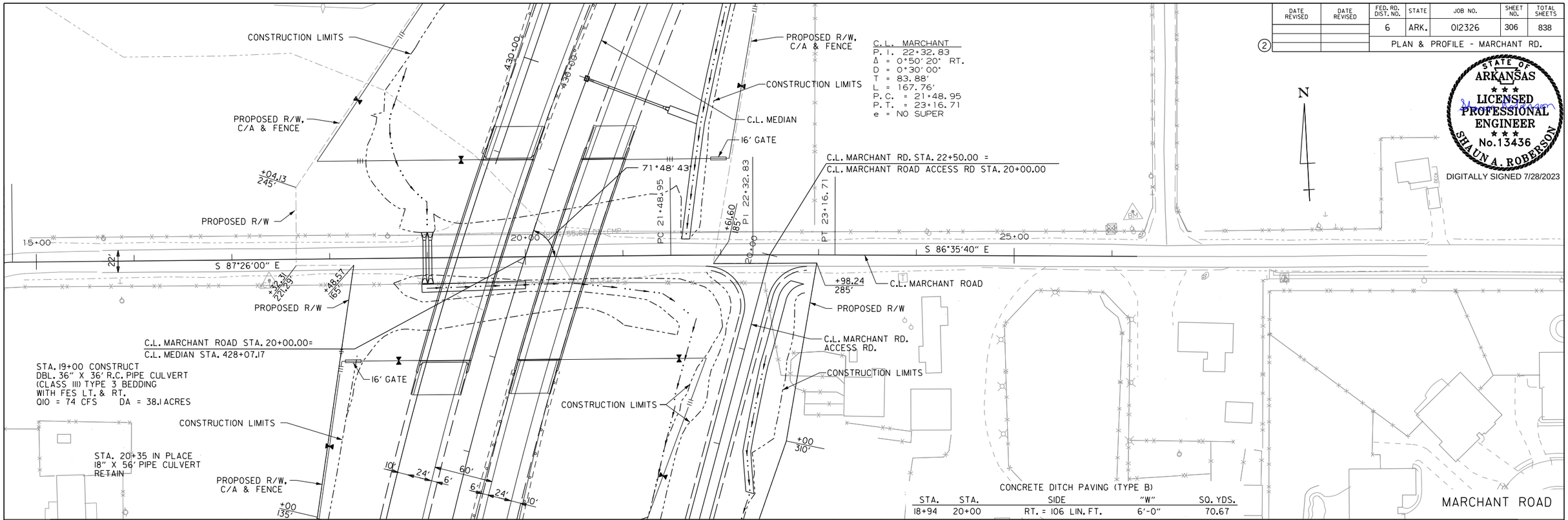

CONCRETE DITCH PAVING (TYPE B)

STA.	STA.	SIDE	"W"	SQ. YDS.
18+94	20+00	RT. = 106 LIN. FT.	6'-0"	70.67

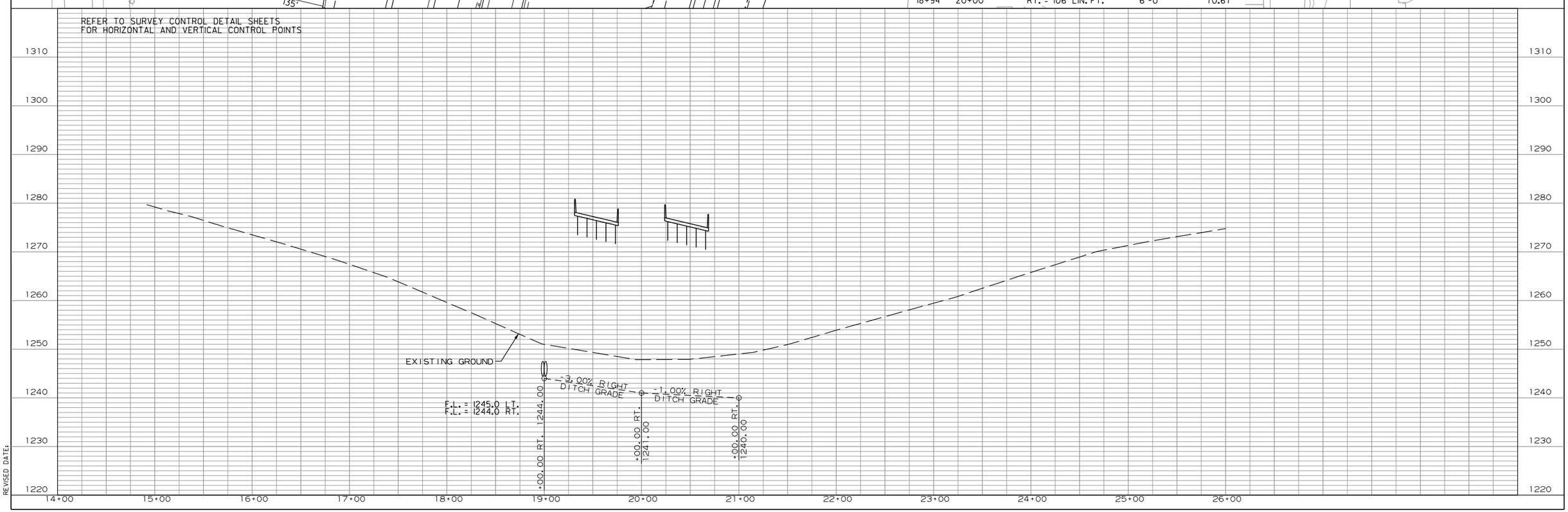

WBCallaway 7/31/2023 3:55:44 PM
WORKSPACE: AHTD
L:\2017\17017660 - ARDOT 012326 Hwy 412 - Hwy 112\Drawings\r012326_PP_36_MAR.dgn
REVISED DATE:

DATE REVISED	DATE REVISED	FED. RD. DIST. NO.	STATE	JOB NO.	SHEET NO.	TOTAL SHEETS
		6	ARK.	012326	307	838

PLAN & PROFILE - MARCHANT RD. ACCESS

STATE OF ARKANSAS
LICENSED PROFESSIONAL ENGINEER
No. 13436
SHAUN A. ROBERSON

DIGITALLY SIGNED 7/28/2023

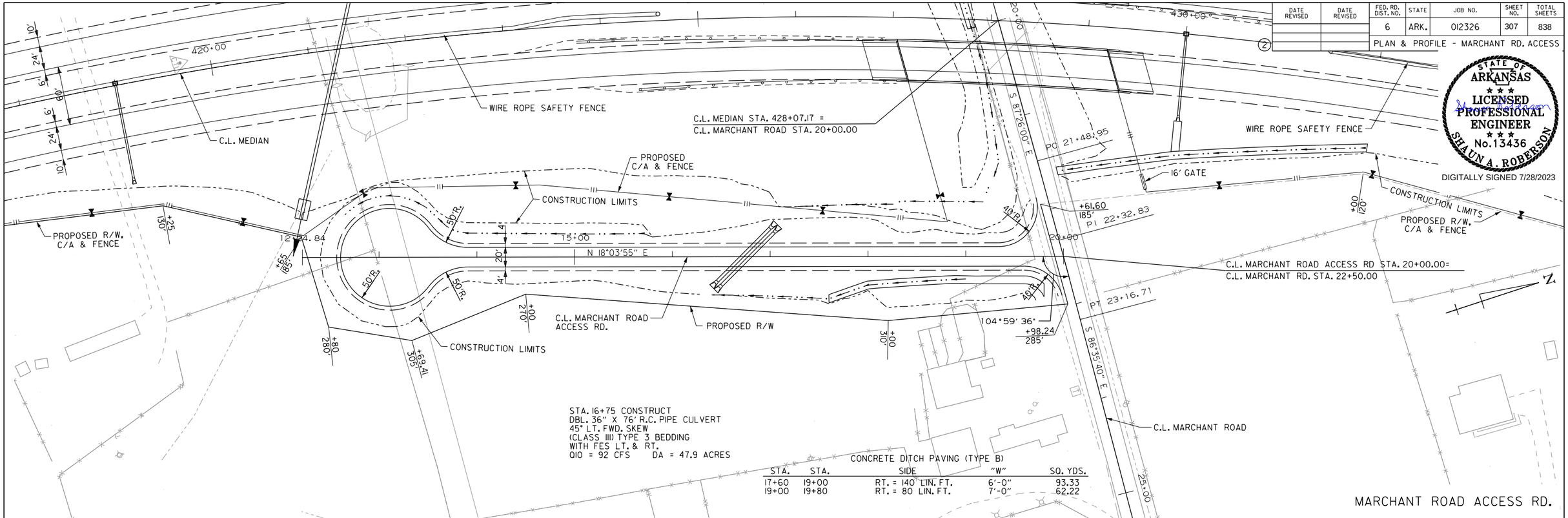

CONCRETE DITCH PAVING (TYPE B)

STA.	STA.	SIDE	"W"	SQ. YDS.
17+60	19+00	RT. = 140 LIN. FT.	6'-0"	93.33
19+00	19+80	RT. = 80 LIN. FT.	7'-0"	62.22

MARCHANT ROAD ACCESS RD.

REFER TO SURVEY CONTROL DETAIL SHEETS
FOR HORIZONTAL AND VERTICAL CONTROL POINTS

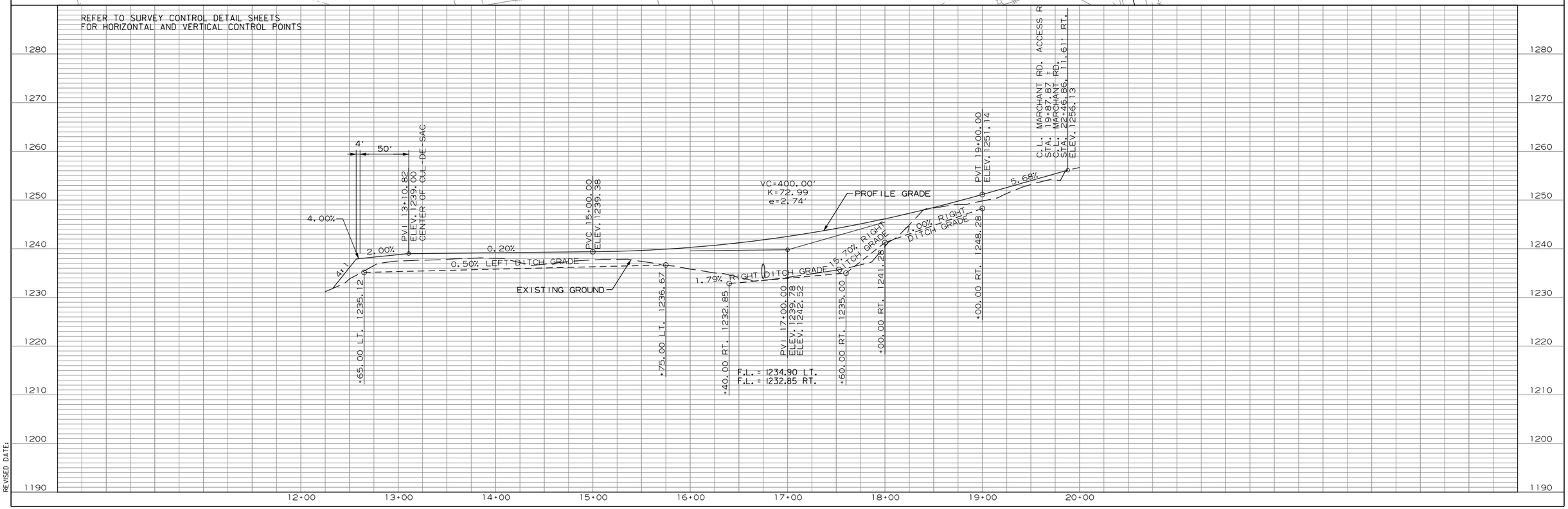

WBCallaway 7/31/2023 3:55:45 PM
WORKSPACE: AHTD
L:\2017\17017660 - ARDOT 012326 Hwy 412 - Hwy 112\Drawings\r012326_PP_37_MAR.dgn
REVISED DATE:

DATE REVISED	DATE REVISED	FED. RD. DIST. NO.	STATE	JOB NO.	SHEET NO.	TOTAL SHEETS
		6	ARK.	012326	308	838
		PLAN & PROFILE - BRUSH CREEK ROAD				

②

STATE OF ARKANSAS
LICENSED PROFESSIONAL ENGINEER
No. 13436
SHAUN A. ROBERSON
DIGITALLY SIGNED 7/28/2023

C.L. BRUSH CK. RD.
P. I. 16+10.94
Δ = 06°55' 17" LT.
D = 04°15' 00"
T = 81.53
L = 162.86'
P. C. = 15+29.41
P. T. = 16+92.27
e = N. A.
Ls = N. A.

STA. 19+00 CONSTRUCT
TRP. 44" X 27" X 40' R.C. ARCH PIPE
WITH F.E.S. LT. & RT.
Q25 = 64 CFS DA = 26.7 ACRES
44" X 27" R.C. ARCH PIPE = 120 LIN. FT.
44" X 27" F.E.S. = 6 EACH

STA. 19+36 IN PLACE
18" X 32' PIPE CULVERT
PLUG & ABANDON

PROPOSED R/W, C/A & FENCE

PROPOSED R/W, C/A & FENCE

CONSTRUCTION LIMITS

C.L. BRUSH CK. RD.
P. I. 24+27.95
Δ = 17°08' 07" LT.
D = 07°45' 00"
T = 111.38
L = 221.10'
P. C. = 23+16.57
P. T. = 25+37.67
e = N. A.
Ls = N. A.

N

60'
6'
24'
10'

PC 15+29.41
PT 16+92.27
PC 17+65.80
PI 19+23.14
PT 20+78.72
PC 23+16.57
PT 25+37.67
PC 26+18.76
PI 16+10.94
PI 24+27.95

15+00
20+00
25+00

N 79°19'46" E
N 72°24'29" E
N 87°16'17" E
N 70°08'10" E

+19.94
157.37'

83°31'57"

+111.33
240'

16' GATE

PROPOSED R/W

C.L. BRUSH CREEK RD. STA. 20+00.00=
C.L. MEDIAN STA. 386+73.62

C.L. BRUSH CREEK RD.

APPROXIMATE FEMA 100 YR. FLOODPLAIN LIMITS

+50
155'

APPROXIMATE FEMA 100 YR. FLOODPLAIN LIMITS

C.L. BRUSH CK. RD.
P. I. 19+23.14
Δ = 14°51' 48" RT.
D = 04°45' 00"
T = 157.34
L = 312.92'
P. C. = 17+65.80
P. T. = 20+78.72
e = N. A.
Ls = N. A.

385.00'
N 0°00'00" E

C.L. MEDIAN

PROPOSED R/W

STA. 21+76 CONSTRUCT
DBL. 30" X 38" R.C. PIPE CULVERT
8°17'18" LT. FWD. SKEW
(CLASS III) TYPE 3 BEDDING
WITH FES LT. & RT.
Q25 = 29 CFS DA = 12.4 ACRES

BRUSH CREEK ROAD

REFER TO SURVEY CONTROL DETAIL SHEETS
FOR HORIZONTAL AND VERTICAL CONTROL POINTS

EXISTING GROUND

F.L. = 1140.43 LT.
F.L. = 1139.78 RT.

F.L. = 1141.92 LT.
F.L. = 1141.42 RT.

1190
1180
1170
1160
1150
1140
1130
1120
1110
1100

11+00 12+00 13+00 14+00 15+00 16+00 17+00 18+00 19+00 20+00 21+00 22+00 23+00 24+00 25+00 26+00

WBCalloway 7/31/2023 3:55:46 PM
WORKSPACE: AHTD
L:\2017\170\1660 - ARDOT 012326 Hwy 412 - Hwy 112\Drawings\r012326_PP_3L.BRC.dgn
REVISED DATE:

DATE REVISED	DATE REVISED	FED. RD. DIST. NO.	STATE	JOB NO.	SHEET NO.	TOTAL SHEETS
		6	ARK.	012326	309	838
		PLAN & PROFILE - EX. ROBBINS RD.				

STATE OF ARKANSAS
LICENSED PROFESSIONAL ENGINEER
No. 13436
SHAUN A. ROBERSON
DIGITALLY SIGNED 7/28/2023

C.L. ROBBINS ROAD STA. 20+00.00 =
C.L. MEDIAN STA. 463+71.03

EXISTING R/W, C/A & FENCE

EXISTING R/W

16' GATE

+00
260'

+94.02
240'

+00
245'

C.L. ROBBINS RD.

P I 15+87.91

P T 16+80.06

S 36°21'26" E

S 28°02'58" E

20+00

465+00

P C 20+57.83

77°44'17"

P I 21+81.61

+06.58
225'

P T 23+04.03

S 13°16'38" E

25+00

P C 25+39.33

+06.49
315'

S 16°06'12" E

30+00

P T 27+00.82

P I 26+20.09

EXISTING R/W

P T 461+93.78

C.L. MEDIAN

EXISTING R/W, C/A & FENCE

10' 24' 6' 6' 24' 10'
60'

C.L. ROBBINS RD.
P. I. = 15+87.91
Δ = 08°18'28" RT.
D = 04°30'00"
T = 92.47'
L = 184.62'
P.C. = 14+95.44
P.T. = 16+80.06
e = N.A.
Ls = N.A.

C.L. ROBBINS RD.
P. I. = 26+20.09
Δ = 02°49'34" LT.
D = 01°45'00"
T = 80.76
L = 161.49
P.C. = 25+39.33
P.T. = 27+00.82
e = N.A.
Ls = N.A.

C.L. ROBBINS RD.
P. I. = 21+81.61
Δ = 14°46'20" RT.
D = 06°00'00"
T = 123.78'
L = 246.20'
P.C. = 20+57.83
P.T. = 23+04.03
e = N.A.
Ls = N.A.

CONCRETE DITCH PAVING (TYPE B)

STA.	STA.	SIDE	"W"	SQ. YDS.
18+00	21+50	RT. = 350 LIN. FT.	7'-0"	248.11

ROBBINS ROAD

REFER TO SURVEY CONTROL DETAIL SHEETS
FOR HORIZONTAL AND VERTICAL CONTROL POINTS

1280
1270
1260
1250
1240
1230
1220
1210
1200
1190

+00.00 RT. 1222.71 — 3.48% RIGHT DITCH GRADE
+00.00 RT. 1226.19 — 3.22% RIGHT DITCH GRADE
+00.00 RT. 1229.41 — 3.85% RIGHT DITCH GRADE
+00.00 RT. 1233.26

EXISTING GROUND

16+00 17+00 18+00 19+00 20+00 21+00 22+00 23+00 24+00 25+00 26+00 27+00 28+00 29+00 30+00

WBCalloway 7/31/2023 3:55:47 PM
WORKSPACE: AHTD
L:\2017\1701660 - ARDOT 012326 Hwy 412 - Hwy 112\Drawings\r012326_PP_40_ROB.dgn
REVISED DATE:

DATE REVISED	DATE REVISED	FED. RD. DIST. NO.	STATE	JOB NO.	SHEET NO.	TOTAL SHEETS
		6	ARK.	012326	310	838
		LIBERTY AVE. DETOUR				

2

STATE OF ARKANSAS
LICENSED PROFESSIONAL ENGINEER
No. 13436
SHAUN A. ROBERSON
DIGITALLY SIGNED 7/28/2023

N

1" = 100'

BEGIN LIBERTY AVENUE DETOUR STA. 13+31.17, 10' RT. =
C.L. LIBERTY AVENUE STA. 13+12.81, 10.90' RT.

C.L. LIBERTY DETOUR
P.I. 14+01.79
Δ = 25°23' 35" RT.
D = 13°00' 00"
T = 99.30'
L = 195.33'
P.C. = 13+02.49
P.T. = 14+97.82
e = NO SUPER

C.L. MEDIAN

EXISTING LIBERTY AVENUE

C.L. LIBERTY DETOUR
P.I. 25+32.25
Δ = 21°38' 47" LT.
D = 13°00' 00"
T = 84.26'
L = 166.51'
P.C. = 24+47.99
P.T. = 26+14.50
e = NO SUPER

PC 13+02.49
PI 14+01.79
S 86°49' 35" E
S 61°26' 00" E
15.00
PT 14+97.82
PC 15+34.75
20.00
24.00
TEMP. CONSTRUCTION LIMITS
PT 17+28.96
20+00
S 86°40' 52" E
PI 16+33.46
220+00
PC 24+47.99
25+00
PT 26+14.50
N 71°40' 21" E
24.00
20.00
PC 27+32.73
PI 28+17.12
S 86°39' 03" E
PT 28+99.48
TEMP. CONSTRUCTION LIMITS
END LIBERTY AVENUE DETOUR STA. 28+56.71, 10' RT. =
C.L. LIBERTY AVENUE STA. 28+07.71, 12.77' RT.
PI 25+32.25
C.L. LIBERTY AVENUE DETOUR

C.L. LIBERTY DETOUR
P.I. 16+33.46
Δ = 25°14' 52" LT.
D = 13°00' 00"
T = 98.71'
L = 194.21'
P.C. = 15+34.75
P.T. = 17+28.96
e = NO SUPER

C.L. LIBERTY DETOUR
P.I. 28+17.12
Δ = 21°40' 35" RT.
D = 13°00' 00"
T = 84.39'
L = 166.75'
P.C. = 27+32.73
P.T. = 28+99.48
E = NO SUPER

LIBERTY AVE. DETOUR

REFER TO SURVEY CONTROL DETAIL SHEETS
FOR HORIZONTAL AND VERTICAL CONTROL POINTS

PVI 14+39.36
ELEV. 1275.89
-0.58%
PVC 16+25.00
ELEV. 1274.81
VC=250.00'
K=106.89
e=0.73'
PVI 17+50.00
ELEV. 1274.09
PVRC 18+75.00
ELEV. 1276.29
PVI 20+00.00
ELEV. 1278.49
VC=250.00'
K=106.91
e=-0.73'
PROFILE GRADE
PVT 21+25.00
ELEV. 1277.76
EXISTING GROUND
PVC 23+00.00
ELEV. 1276.75
-0.58%
VC=300.00'
K=128.25
e=0.88'
PVI 24+50.00
ELEV. 1275.88
PVT 26+00.00
ELEV. 1278.52
1.76%
PVI 27+59.26
ELEV. 1281.32

1320 1310 1300 1290 1280 1270 1260 1250 1240 1230

14+00 15+00 16+00 17+00 18+00 19+00 20+00 21+00 22+00 23+00 24+00 25+00 26+00 27+00 28+00 29+00

WBCallaway
7/31/2023 3:55:49 PM
WORKSPACE: AHTD
L:\2017\17017660 - ARDOT 012326 Hwy 412 - Hwy 112\Drawings\r012326_PP_LIB_DETOUR.dgn
REVISED DATE:

DATE REVISED	DATE REVISED	FED. RD. DIST. NO.	STATE	JOB NO.	SHEET NO.	TOTAL SHEETS
		6	ARK.	012326	311	838
		TEMPORARY CROSSOVER I				

(2)

STATE OF ARKANSAS
LICENSED PROFESSIONAL ENGINEER
No.13436
SHAUN A. ROBERSON
DIGITALLY SIGNED 7/28/2023

N

WASHINGTON

PI 11+74.16

10+00

S 87°08'19" E

S 76°43'04" E

TEMP. CONSTRUCTION LIMITS

CONCRETE

24'

4'

4'

15+00

17+60

TEMP. CONSTRUCTION LIMITS

N 89°06'41" W

C.L. TEMP. CROSSOVER 1
P.I. = 15+54.73
Δ = 12°23'37" LT.
D = 03°00'00"
T = 207.37'
L = 413.12'
P.R.C. = 13+47.36
P.T. = 17+60.48

C.L. TEMP. CROSSOVER 1
P.I. = 11+74.16
Δ = 10°25'15" RT.
D = 03°00'00"
T = 174.16'
L = 347.36'
P.C. = 10+00.00
P.R.C. = 13+47.36

PRC 13+47.36

PI 15+54.73

TEMPORARY CROSSOVER I

REFER TO SURVEY CONTROL DETAIL SHEETS
FOR HORIZONTAL AND VERTICAL CONTROL POINTS

PVI 13+27.56
ELEV. 1265.51

PROFILE GRADE

0.07%

PVI 14+62.23
ELEV. 1265.61

EXISTING GROUND

1310
1300
1290
1280
1270
1260
1250
1240
1230
1220

10+00 11+00 12+00 13+00 14+00 15+00 16+00 17+00 18+00

WBCalaway 7/31/2023 3:55:49 PM
WORKSPACE: AHTD
L:\2017\170176660 - ARDOT 012326 Hwy 412 - Hwy 112\Drawings\r012326_PP_TEMPORARY CROSSOVER 1.dgn
REVISED DATE:

DATE REVISED	DATE REVISED	FED. RD. DIST. NO.	STATE	JOB NO.	SHEET NO.	TOTAL SHEETS
		6	ARK.	012326	312	838
		TEMPORARY CROSSOVER 2				

(2)

STATE OF ARKANSAS
LICENSED PROFESSIONAL ENGINEER
No.13436
SHAUN A. ROBERSON
DIGITALLY SIGNED 7/28/2023

N

C.L. TEMP. CROSSOVER 2
P.I. = 11+18.90
Δ = 07°07'29" RT.
D = 03°00'00"
T = 118.90'
L = 237.49'
P.C. = 10+00.00
P.R.C. = 12+37.49

PC 10+00.00
PRC 12+37.49
PI 15+30.99
PI 11+18.90
PT 18+19.94

TEMP. CONSTRUCTION LIMITS
N 82°13'07" E
N 75°05'38" E
15+00
S 87°25'56" E
18+20
TEMP. CONSTRUCTION LIMITS

STA. 13+27 CONSTRUCT
TEMP CROSS DRAIN
18" X 300' R.C. PIPE CULVERT

C.L. TEMP. CROSSOVER 2
P.I. = 15+30.99
Δ = 17°28'26" RT.
D = 03°00'00"
T = 293.50'
L = 582.45'
P.R.C. = 12+37.49
P.T. = 18+19.94

BILLBOARD
BILLBOARD
CONCRETE

TEMPORARY CROSSOVER 2

REFER TO SURVEY CONTROL DETAIL SHEETS
FOR HORIZONTAL AND VERTICAL CONTROL POINTS

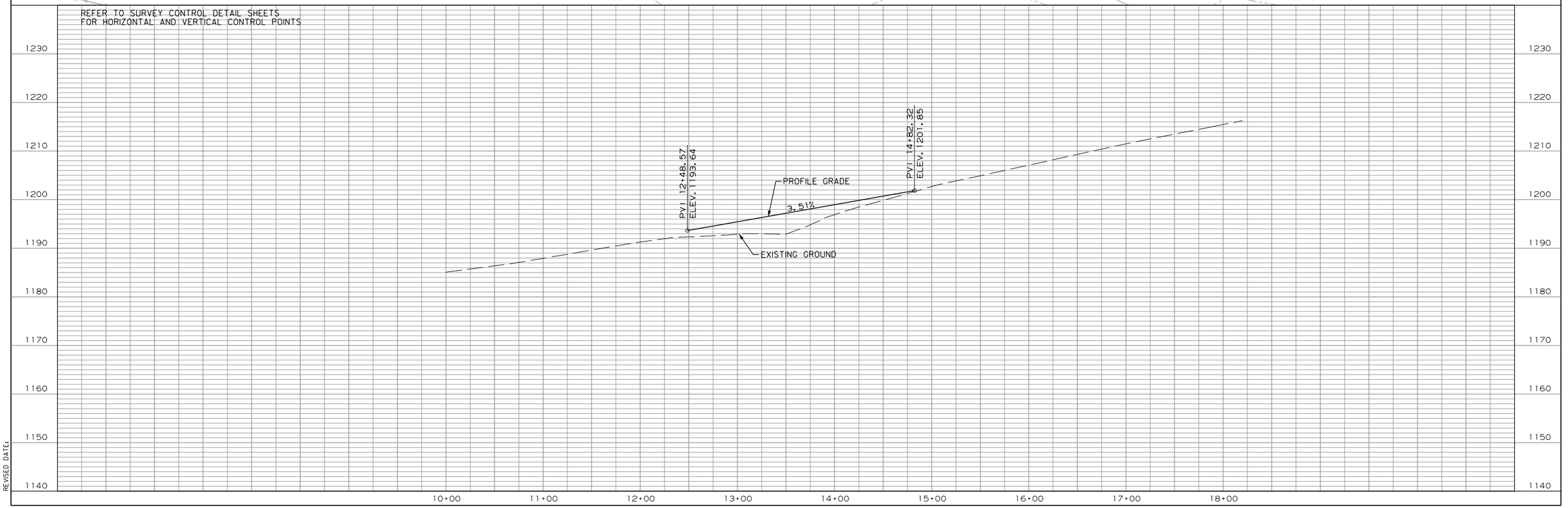

WBCalloway
7/31/2023 3:55:50 PM
WORKSPACE: AHTD
L:\2017\1701660 - ARDOT 012326 Hwy 412 - Hwy 112\Drawings\r012326_PP_TEMPORARY CROSSOVER 2.dgn
REVISED DATE:

DATE REVISED	DATE REVISED	FED. RD. DIST. NO.	STATE	JOB NO.	SHEET NO.	TOTAL SHEETS
10-23-2023		6	ARK.	012326	313	838
		CULVERT DIAGRAM				

STATE OF ARKANSAS
LICENSED PROFESSIONAL ENGINEER
No.13436
SHAUN A. ROBERSON
DIGITALLY SIGNED 10/23/2023

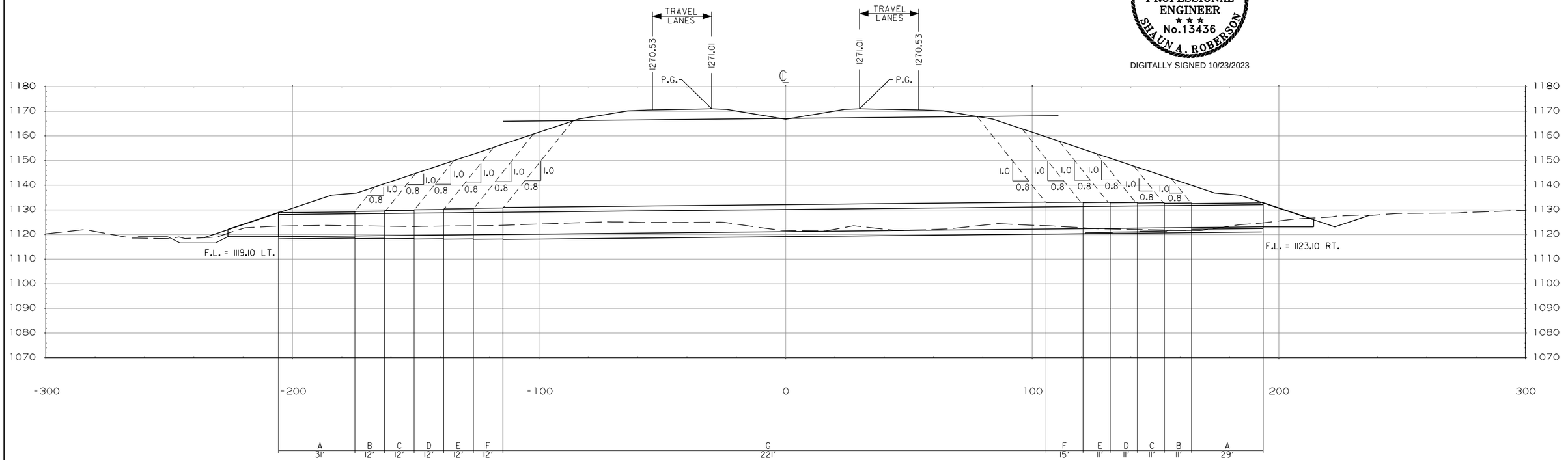

STATION 278+90 - CULVERT SECTION

DOUBLE 9′ X 9′ X 400′ R.C. BOX CULVERT
WITH 3:1 WINGS LT. & RT. & RIPRAP BASIN LT.

SEE SP JOB 001966 FOR ADDITIONAL DETAILS.
SEE STD. DWG. NO. W-X003-2 FOR DETAILS AND QUANTITIES OF WINGS. SEE STD. DWG. R-200X-X4 FOR DETAILS AND QUANTITIES OF BARRELS.

STATION	LOCATION	DESCRIPTION	DIMENSIONS			BOX CULVERTS			STANDARD DRAWINGS
						CLASS S CONCRETE ROADWAY	REINFORCING STEEL (GR 60) ROADWAY	UNCL. EXE. FOR STRUCT. - ROADWAY	
			W	H	L	CU. YDS.	LBS.	CU. YDS.	
278+90	MAIN LANES	DOUBLE 9′ X 9′ X 400′ R.C. BOX CULVERT WITH 3:1 WINGS LT. & RT. & RIPRAP BASIN LT.	9	9	400	1504.45	198450	1676	RCB-1, RCB-2, W-X003-2, R200X-X4

CULVERT DIAGRAM

EPSherrill 10/23/2023 2:56:03 PM
WORKSPACE: AHTD - ARDOT 012326 Hwy 412 - Hwy 112\Drawings\r012326.CD.ALL.01.dgn
LEVEL: WORKSPACE: AHTD - ARDOT 012326 Hwy 412 - Hwy 112\Drawings\r012326.CD.ALL.01.dgn
REVISED DATE:

DATE REVISED	DATE REVISED	FED. RD. DIST. NO.	STATE	JOB NO.	SHEET NO.	TOTAL SHEETS
		6	ARK.	012326	314	838
②		CULVERT DIAGRAM				

STATE OF ARKANSAS
LICENSED PROFESSIONAL ENGINEER
No.13436
SHAUN A. ROBBERSON
DIGITALLY SIGNED 7/28/2023

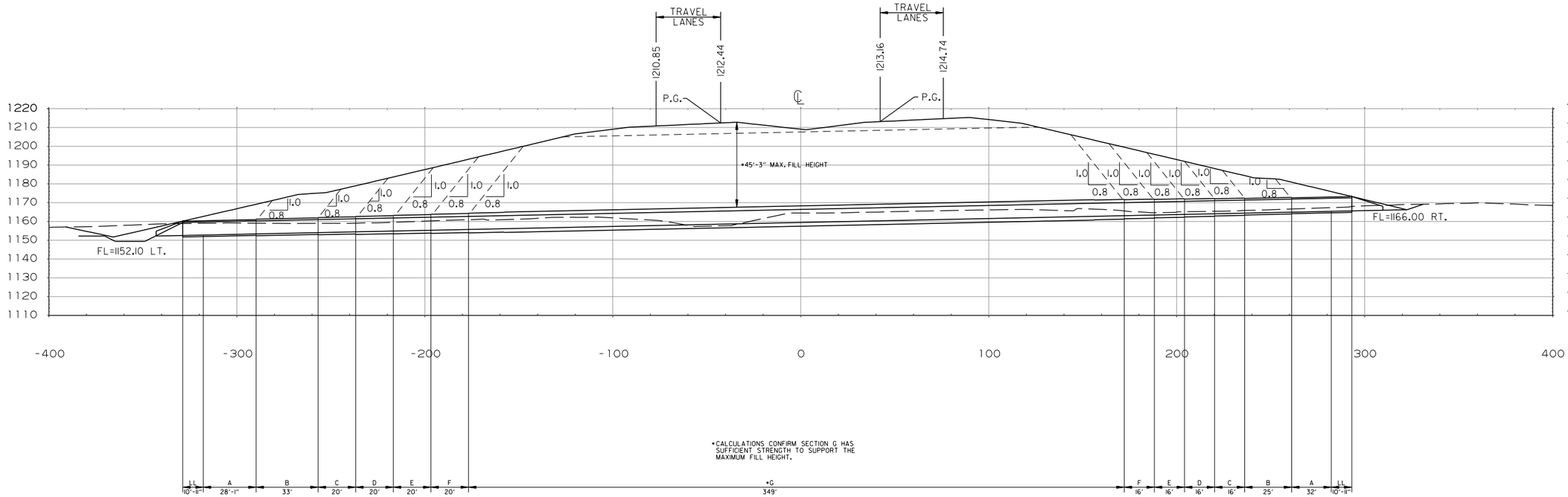

•CALCULATIONS CONFIRM SECTION G HAS SUFFICIENT STRENGTH TO SUPPORT THE MAXIMUM FILL HEIGHT.

STATION 313+88 - CULVERT SECTION

DOUBLE 8' X 7' X 622' R.C. BOX CULVERT
45° RT. FWD. SKEW
WITH 3:1 WINGS LT. & RT. & RIPRAP BASIN LT.

SEE SP JOB 001966 FOR ADDITIONAL DETAILS.
SEE SHEET NO. XX FOR DETAILS OF RIPRAP BASIN.
SEE STD. DWG. NO. W-X453-1 FOR DETAILS AND QUANTITIES OF WINGS. SEE SHEET NOS. XX - XX FOR DETAILS AND QUANTITIES OF BARRELS.

STATION	LOCATION	DESCRIPTION	DIMENSIONS			BOX CULVERTS			STANDARD DRAWINGS
						CLASS S CONCRETE ROADWAY	REINFORCING STEEL (GR 60) ROADWAY	UNCL. EXC. FOR STRUCT. - ROADWAY	
			W	H	L	CU. YDS.	LBS.	CU. YDS.	
313+88	MAIN LANES	DOUBLE 8' X 7' X 622' R.C. BOX CULVERT, 45° RT. FWD. SKEW WITH 3:1 WINGS LT. & RT.	8	7	622	1,697.10	240,494	3680	RCB-1, RCB-2

CULVERT DIAGRAM

HBVinson
WORKSPACE: AHTD
L:\2017\170166O - ARDOT 012326 Hwy 412 - Hwy 112\Drawings\r012326_CD_ALL_01.dgn
7/27/2023 2:02:28 PM
REVISED DATE:
REVISED DATE:

DATE REVISED	DATE REVISED	FED. RD. DIST. NO.	STATE	JOB NO.	SHEET NO.	TOTAL SHEETS
		6	ARK.	012326	315	838
		SUMMARY OF TRAFFIC SIGNAL QUANTITIES				
2						

STATE OF ARKANSAS
LICENSED PROFESSIONAL ENGINEER
No.8141
NICCI D. TINER

DIGITALLY SIGNED 7/28/2023

SUMMARY OF TRAFFIC SIGNAL QUANTITIES

ITEM NUMBER	ITEM	QUANTITY	UNIT
SP & 701	ACTUATED CONTROLLER TS2-TYPE 2 (8 PHASES)	1	EACH
SP & 706	TRAFFIC SIGNAL HEAD, LED, (3 SECTION, 1 WAY)	10	EACH
SP & 706	TRAFFIC SIGNAL HEAD, LED, (4 SECTION, 1 WAY)	3	EACH
SP	LOUVERS	3	EACH
708	TRAFFIC SIGNAL CABLE (5C/14 A.W.G.)	756	LIN. FT.
708	TRAFFIC SIGNAL CABLE (7C/14 A.W.G.)	241	LIN. FT.
708	TRAFFIC SIGNAL CABLE (20C/14 A.W.G.)	617	LIN. FT.
SP	ELECTRICAL CONDUCTORS-IN-CONDUIT (1C/8 A.W.G., E.G.C.)	615	LIN. FT.
SP	ELECTRICAL CONDUCTORS-IN-CONDUIT (1C/12 A.W.G., E.G.C.)	355	LIN. FT.
SP	ELECTRICAL CONDUCTORS-IN-CONDUIT (2C/6 A.W.G.)	46	LIN. FT.
SP	ELECTRICAL CONDUCTORS FOR LUMINAIRES	1305	LIN. FT.
709	GALVANIZED STEEL CONDUIT (2")	14	LIN. FT.
710	NON-METALLIC CONDUIT (2")	32	LIN. FT.
710	NON-METALLIC CONDUIT (3")	492	LIN. FT.
SS & 711	CONCRETE PULL BOX (TYPE 2)	2	EACH
SS & 711	CONCRETE PULL BOX (TYPE 2 HD)	5	EACH
SS & 714	TRAFFIC SIGNAL MAST ARM AND POLE WITH FOUNDATION (0')	1	EACH
SS & 714	TRAFFIC SIGNAL MAST ARM AND POLE WITH FOUNDATION (44')	1	EACH
SS & 714	TRAFFIC SIGNAL MAST ARM AND POLE WITH FOUNDATION (50')	1	EACH
SS & 714	TRAFFIC SIGNAL MAST ARM AND POLE WITH FOUNDATION (52')	1	EACH
SS & 714	TRAFFIC SIGNAL MAST ARM AND POLE WITH FOUNDATION (62')	1	EACH
SP	LED LUMINAIRE ASSEMBLY	6	EACH
SP	SERVICE POINT ASSEMBLY (2 CIRCUITS)	1	EACH
SP	18" STREET NAME SIGN	4	EACH
SP & 733	VIDEO DETECTOR (IP)	1	EACH
SP & 733	HYBRID VIDEO/RADAR DETECTOR	3	EACH
SP & 733	VIDEO CABLE (EXTERIOR CAT 5E)	901	LIN. FT.
SP & 733	VIDEO MONITOR (CLR)	1	EACH
SP & 733	CENTRAL CONTROL UNIT (8 CHANNEL)	1	EACH

DATE: 5/4/2023 FILE NAME: t012326_Signal_Qtys.dgn

LOCATION: HWY. 412B/HENRIDE TONTI BLVD. AND OLD HWY. 68/MUSTEEN RD.
CITY: TONTITOWN
COUNTY: WASHINGTON
DISTRICT: 04 SCALE: N/A DRAWN BY: HRH

HBWinson 7/27/2023 2:03:03 PM
WORKSPACE: AHTD
L:\2017\17017660 - ARDOT 012326 Hwy 412 - Hwy 112\Drawings\t012326_Signal_Qtys.dgn
REVISED DATE:

DATE REVISED	DATE REVISED	FED. RD. DIST. NO.	STATE	JOB NO.	SHEET NO.	TOTAL SHEETS
		6	ARK.	012326	316	838
		TRAFFIC SIGNAL NOTES				
②						

TRAFFIC SIGNAL NOTES:

1. THE TRAFFIC SIGNAL SHALL NOT BE PUT INTO OPERATION OR SWITCHED TO THE NEXT CONSTRUCTION STAGE PRIOR TO THE FOLLOWING:
   A. ALL TRAFFIC SIGNAL EQUIPMENT HAS BEEN INSTALLED ACCORDING TO THE PLANS, SPECIAL PROVISIONS, AND PROPERLY FUNCTIONAL. THIS INCLUDES BUT NOT LIMITED TO: CABINETS, PULL BOXES, JUNCTION BOXES, POLES, MAST ARMS, FOUNDATIONS, LUMINAIRES, SIGNAL HEADS, PEDESTRIAN SIGNAL HEAD, PUSH BUTTONS, DETECTION SYSTEM, CONDUITS, CONDUCTORS, CABLE, TRAFFIC CONTROLLER, CONFLICT MONITOR, COMMUNICATIONS, SERVICE POINT, AND RAILROAD INTERCONNECT SYSTEM.
   B. THE DETECTION SYSTEM SHALL BE INSTALLED, SETUP, AND CONFIGURED BY THE CONTRACTOR OR THEIR SUPPLIER PER PLANS. A TRAFFIC OPERATIONS INSPECTOR SHALL INSPECT AND PROVIDE APPROVAL IN ORDER TO PUT THE TRAFFIC SIGNAL INTO OPERATION.
   C. THE TRAFFIC CONTROLLER AND CONFLICT MONITOR SHALL BE PROGRAMMED TO OPERATE AS REQUIRED PER THE PLANS (PHASING DIAGRAM, INTERVAL CHART, AND ANY ADDITIONAL NOTES), SPECIAL PROVISIONS AND ARDOT SPECIFICATIONS.
   D. TIMING SETTINGS HAVE BEEN PROGRAMMED AS REQUIRE BY ITS MANAGEMENT SECTION-MAINTENANCE DIVISION AND APPROVED.
   E. THE TRAFFIC SIGNAL HAS BEEN INSPECTED AND APPROVED BY A TRAFFIC OPERATIONS INSPECTOR.
   F. ALL REQUIRED DOCUMENTS RELATED TO THE TRAFFIC SIGNAL EQUIPMENT, THIS INCLUDES BUT NOT LIMITED TO: TEST RESULTS, CONFIGURATION/DATA REPORTS, WARRANTYS, AND ANY OTHER DOCUMENTATION REQUIRED PER PLANS AND SPECIAL PROVISIONS.
2. CONTRACTOR SHALL NOTIFY ALL EXISTING UTILITY OWNERS BEFORE BEGINNING WORK ON THIS PROJECT.
3. TRAFFIC SIGNAL CONTRACTOR SHALL NOTIFY THE RESIDENT ENGINEER OR ASSIGNED DEPARTMENT PROJECT INSPECTOR EACH DAY PRIOR TO SIGNAL RELATED WORK. NO WORK ON TRAFFIC SIGNALS WILL BE ALLOWED OR APPROVED WITHOUT THIS PRIOR NOTIFICATION.
4. THE CONTRACTOR SHALL PERFORM ALL WORK POSSIBLE THAT WILL MINIMIZE THE TIME THAT THE TRAFFIC SIGNAL IS OUT OF OPERATION. IF, IN THE OPINION OF THE ENGINEER, TRAFFIC CONDITIONS WARRANT, THE CONTRACTOR SHALL PROVIDE FLAGMEN TO DIRECT TRAFFIC WHILE THE TRAFFIC SIGNAL IS OUT OF OPERATION.
5. ALL ELECTRICAL WORK SHALL BE PERFORMED IN ACCORDANCE WITH THE CURRENT EDITIONS OF THE NFPA 70 (CURRENT EDITION) NATIONAL ELECTRICAL CODE, NFPA 101 (CURRENT EDITION) LIFE SAFETY CODE, STATE ELECTRICAL CODE AND LOCAL ELECTRICAL CODE.
6. EXTEND GREEN EQUIPMENT GROUNDING CONDUCTOR (E.G.C.) FROM GROUND BAR AT MAIN BREAKER TO CONTROL PANEL AND TO FIRST POLE. SOLIDLY BOND E.G.C. TO GROUND LUG OF CONTROL CABINET AND TO POLE GROUND. ENSURE THAT ONLY ONE NEUTRAL-TO-GROUND BOND EXISTS IN THE SYSTEM AND THAT IT IS AT THE MAIN BREAKER.
7. ELECTRICAL SERVICE SHALL BE PROVIDED BY THE CITY/COUNTY TO A SERVICE POLE WITH EXTERNAL RAINTIGHT BREAKER (MAIN BREAKER), GALVANIZED STEEL SERVICE RISER, METER LOOP (IF REQUIRED), AND WEATHERHEAD AT A MUTUALLY ACCEPTABLE POINT WITHIN THE RIGHT-OF-WAY. IF THE SERVICE POINT IS OVER 10 FEET FROM THE CONTROLLER, THE CONTRACTOR SHALL PROVIDE AND INSTALL A SEPARATE TWO CIRCUIT EXTERNAL BREAKER (SECONDARY BREAKER) ON OR NEAR THE TRAFFIC SIGNAL CONTROLLER CABINET AND SHALL INSTALL CONDUIT, ELECTRICAL SERVICE WIRE (2c/#6 A.W.G. USE RATED, WITH GROUND TYPICAL), AND PERFORM WIRING TO TAP INTO THE CITY'S/ COUNTY'S MAIN BREAKER AS PART OF THIS CONTRACT. CONDUIT IS PAID FOR AS A SEPARATE ITEM OF THIS CONTRACT. TWO CIRCUIT BREAKERS, CONSIDERED SUBSIDIARY TO THE CONTROL EQUIPMENT, ARE NEEDED WHERE STREET LIGHTING IS INCLUDED. AS PART OF THE SIGNAL INSTALLATION, STREET LIGHTING CIRCUIT (2c/#12 A.W.G. UF RATED, TYPICAL) SHALL BE KEPT FROM THE CIRCUIT SERVING THE TRAFFIC SIGNAL CONTROL EQUIPMENT FROM THE POINT OF TIE-IN AT THE SECONDARY BREAKER PROVIDED BY THE CONTRACTOR.
8. CONTRACTOR SHALL CONNECT A SEPARATE NEUTRAL FOR EACH LOAD SWITCH REPRESENTED ON EACH SIGNAL POLE.
9. TRAFFIC CONTROLLER CABINET AND LAYOUT SHALL BE SUCH THAT IT IS NOT NECESSARY TO SHUT DOWN POWER OR REMOVE LOAD SWITCHES IN ORDER TO EASILY TEST OR MODIFY DETECTOR INPUTS TO THE CONTROLLER.
10. CONTROLLER CABINET SHALL BE WIRED SUCH THAT DURING FLASH OPERATIONS POWER TO THE LOAD SWITCHES CANNOT BACKFEED TO LOAD SWITCH POWER BUSS.
11. ALL PARTS OF THIS INSTALLATION SHALL BE IN ACCORDANCE WITH THE STANDARD SPECIFICATIONS FOR HIGHWAY CONSTRUCTION, STANDARD DRAWINGS, AND WITH THE MANUAL ON UNIFORM TRAFFIC CONTROL DEVICES, CURRENT EDITION.
12. CONTROLLER CABINET LAYOUT AND ORIENTATION SHALL CONFORM TO IMSA STANDARDS.
13. DOOR PANEL TEST PUSH BUTTONS SHALL ACTUATE INDICATED PHASES. DETECTOR ASSIGNMENTS AND/OR SIDE PANEL JUMPERS MAY REQUIRE MODIFICATION.
14. ALL SYSTEM DETECTOR RACKS AND ASSOCIATED EQUIPMENT SHALL BE PROTECTED BY THE MAIN CONTROLLER CABINET POWER SURGE PROTECTION.
15. ONE VIDEO PROGRAMMNG MODULE SHALL BE PROVIDED FOR AIMING AND SETUP OF DETECTORS IF THE VIDEO SYSTEM CANNOT BE ADJUSTED THROUGH HARDWARE AND SOFTWARE PROVIDED BY ITEMS WITHIN THE JOB.
16. HARDWARE INPUTS MAY BE DETERMINED BY SUPPLIER. EACH DETECTOR OUTPUT SHALL INPUT THE CONTROLLER THROUGH A SEPARATE INPUT UNLESS OTHERWISE NOTED AND BE PROGRAMMED TO ACTUATE THE ASSOCIATED PHASE. COMBINATION (COMB.) DETECTORS SHALL ALSO BE PROGRAMMED TO PROVIDE VEHICLE COUNT/OCCUPANCY DATA.
17. THE LOCAL RADIO WITH ANTENNA AND TRAFFIC SIGNAL CONTROLLER SHALL BE COMPATIBLE WITH THE EXISTING COORDINATION SYSTEM IN THE CITY/COUNTY.
18. CONDUIT INSTALLED UNDER ROADWAY SURFACES SHALL BE INSTALLED BY PUSHING OR BORING METHOD OR AS DIRECTED BY THE ENGINEER. PVC OR HDPE CONDUIT SHALL BE USED AND SHALL BE UL LISTED. PVC CONDUIT SHALL BE MARKED "DIR. BORING" OR "DIRECTIONAL BORING" PER NEC. IF THE ENGINEER DETERMINES THIS IS NOT FEASIBLE, THEN A TRENCHING METHOD AS SHOWN IN THE STANDARD DRAWINGS MAY BE USED. THE ENGINEER SHALL GRANT A WRITTEN APPROVAL PRIOR TO USING THE TRENCHING METHOD.
19. ALL CONDUIT SHALL BE THREE (3") INCH DIAMETER UNLESS SPECIFIED ON PLANS. ALL CONDUIT UNDER THE ROADWAY, SIDEWALKS, AND DRIVEWAYS SHALL HAVE A MINIMUM DEPTH OF 24" FROM THE TOP OF THE CONDUIT TO THE FINISHED GRADE. CONDUIT DEPTH MAY NEED TO INCREASE NEAR DRAINAGE STRUCTURES.
20. CONDUIT BELL END FITTINGS SHALL BE INSTALLED ON ALL TERMINATING ENDS OF NON-METALLIC CONDUIT RUNS. THIS INCLUDES PULL BOXES, POLE BASES, AND TRAFFIC SIGNAL CABINETS. THE COST OF THE FITTINGS SHALL BE CONSIDERED SUBSIDARY TO THE PAY ITEM. ALL NON-METALLIC CONDUIT SHALL USE LONG SWEEP 90 DEGREE ELBOWS ON ALL CONDUIT BENDS.
21. ALL CONCRETE PULL BOXES SHALL BE (TYPE 2 HD) UNLESS OTHERWISE INDICATED. PULL BOX LIDS SHALL CLOSE FLUSH WITHOUT PINCHING ANY CONDUCTORS. CONDUIT LENGTHS IN PULL BOXES SHALL BE SET ACCORDINGLY. ANY CONDUCTORS THAT HAVE BEEN DAMAGED BY PINCHING SHALL BE COMPLETELY REPLACED AT THE CONTRACTOR'S EXPENSE.
22. ALL CONCRETE PULL BOXES SHALL BE SET ON A GRAVEL OR CRUSHED STONE BEDDING AS SPECIFIED IN SECTION 711, CONCRETE PULL BOX, OF THE STANDARD SPECIFICATIONS FOR HIGHWAY CONSTRUCTION, EDITION OF 2014.
23. CONTRACTOR SHALL ATTACH A PERMANENT TAG OF RIGID PLASTIC OR NON-FERROUS METAL TO EACH CONDUIT AT PULLBOXES, POLE BASES, JUNCTION BOXES AND CONTROLLER CABINETS. TAGS SHALL BE EMBOSSED, STAMPED OR ENGRAVED WITH LETTERS 1/4" OR GREATER IN HEIGHT AND SECURED TO THE CONDUIT WITH NYLON OR PLASTIC TIES. EACH TAG SHALL INDICATE THE END LOCATION OF CONDUIT RUN. THE COST OF THE TAGS SHALL BE SUBSIDIARY TO THE CONDUIT PAY ITEM.
    EXAMPLES FOR CONDUIT IN SIDE CABINET: "TO POLE A AND B" OR "TO POLE C"
    EXAMPLES FOR CONDUIT IN PULL BOX: "TO POLE A" OR "TO TRAFFIC CABINET"
24. ALL STEEL POLES SHALL BE DESIGNED TO MEET THE AASHTO STANDARD SPECIFICATIONS FOR STRUCTURAL SUPPORTS FOR HIGHWAY SIGNS, LUMINAIRES AND TRAFFIC SIGNALS, 4th EDITION (2001) WITH 2003 AND 2006 INTERIMS.
25. ALL TRAFFIC SIGNAL POLES SHALL BE GALVANIZED.
26. CONNECTION OF TRAFFIC SIGNAL DISPLAY TO FIELD WIRING SHALL UTILIZE AN APPROVED TERMINAL STRIP BEHIND HAND-HOLE COVER AT BASE OF POLE. TERMINAL STRIP SHALL PROVIDE PROTECTION TO PREVENT EXPOSURE TO THE PUBLIC IN THE EVENT THAT POLE COVER IS MISSING. PAYMENT FOR TERMINAL STRIPS SHALL BE INCLUDED IN ITEM 714 TRAFFIC SIGNAL MAST ARM AND POLE WITH FOUNDATION OF THE STANDARD SPECIFICATIONS FOR HIGHWAY CONSTRUCTION, CURRENT EDITION.
27. FOUNDATION FOR ALL POLES SHALL BE EXTENDED IF NECESSARY TO ACCOMMODATE THE REQUIREMENTS FOR SIGNAL HEAD CLEARANCE ABOVE ROADWAY ONLY AT LOCATIONS WHERE THE GROUND ELEVATION AT THE POLE IS BELOW THE ELEVATION OF THE ROADWAY (SEE NOTES ON STANDARD DRAWING). PAYMENT WILL BE INCLUDED IN SECTION 714 TRAFFIC SIGNAL MAST ARM AND POLE WITH FOUNDATION OF THE STANDARD SPECIFICATIONS FOR HIGHWAY CONSTRUCTION, CURRENT EDITION.
28. TO DETERMINE UTILITY CLEARANCES ABOVE THE TRAFFIC SIGNAL POLE, REFER TO THE POLE SCHEDULE FOR VERTICAL SHAFT HEIGHT. WHERE THE POLE SCHEDULE INDICATES THAT A LUMINAIRE ARM WILL BE USED, THIRTY-EIGHT (38') FEET SHOULD BE USED TO DETERMINE UTILITY CLEARANCE ABOVE THE LUMINAIRE ARM. WHERE THE POLE SCHEDULE INDICATES A TRAFFIC SIGNAL POLE WITHOUT A LUMINAIRE ARM, A HEIGHT OF TWENTY-ONE (21') FEET SHOULD BE USED TO DETERMINE UTILITY CLEARANCE ABOVE THE TRAFFIC SIGNAL MAST ARM. AN ADDITIONAL SIX (6') FEET SHOULD BE USED DIRECTLY ABOVE "VIDEO DETECTOR" AT LOCATIONS SHOWN ON THE SIGNAL PLANS.
29. THE DESIRABLE MINIMUM DISTANCE FROM THE FACE OF ROADWAY CURB OR SHOULDER EDGE TO THE FACE OF NON-BREAKAWAY POLE OR OBSTRUCTION IS SIX (6') FEET. REFER TO TRAFFIC SIGNAL PLANS FOR SPECIFIC LOCATION OF POLES, CONTROLLER AND ANY OTHER NON-BREAKAWAY OBSTRUCTIONS. REFER TO "DESIGN PARAMETERS, MINIMUM CLEAR ZONE DISTANCE" FOR MINIMUM DISTANCE FROM THE EDGE OF TRAVELED WAY TO THE FACE OF A NON-BREAKAWAY POLE OR OBSTRUCTION. TRAFFIC SIGNAL POLES OR ANY OTHER NON-BREAKAWAY OBSTRUCTION SHALL NOT BE INSTALLED WITHIN THE CLEAR ZONE.
30. AS DETERMINED BY THE ENGINEER, FOUNDATION EMBEDMENT MAY BE DECREASED BY A MAXIMUM OF TWO FEET IF COMPETENT ROCK IS ENCOUNTERED PRIOR TO ACHIEVING PLAN EMBEDMENT AND AT LEAST HALF OF THE REMAINING PLAN EMBEDMENT LENGTH IS KEYED INTO COMPETENT ROCK.
31. LED LUMINAIRE ASSEMBLIES SHALL HAVE A BUG RATING OF U0.
32. BACKPLATES SHALL BE SUPPLIED FOR ALL TRAFFIC SIGNAL HEADS, REFER TO THE RETROREFLECTIVE BACKPLATES SPECIAL PROVISION FOR REQUIREMENTS.
33. PAVEMENT MARKINGS SHOWN FOR REFERENCE ONLY. SEE PERMANENT PAVEMENT MARKING DETAILS.
34. BEFORE FINAL ACCEPTANCE OF THE TRAFFIC SIGNAL, THE CONTRACTOR SHALL PROVIDE TWO (2) SETS OF LEDGER SIZE (11" X 17") AS-BUILT TRAFFIC SIGNAL PLANS TO THE MAINTENANCE AUTHORITY AND ARDOT.

STATE OF ARKANSAS
LICENSED PROFESSIONAL ENGINEER
No.8141
NICCI D. TINER

DIGITALLY SIGNED 7/28/2023

DATE: 3/23/2023 FILE NAME: t012326_Signal_Notes.dgn

LOCATION: HWY. 412B/HENRIDE TONTI BLVD. AND OLD HWY. 68/MUSTEEN RD.
CITY: TONTITOWN
COUNTY: WASHINGTON
DISTRICT: 04 SCALE: N/A DRAWN BY: HRH

HBVinson
WORKSPACE: AHTD
L:\2017\17017660 - ARDOT 012326 Hwy 412 - Hwy 112\Drawings\t012326_Signal_Notes.dgn
7/27/2023 2:03:11PM
REVISED DATE:

DATE REVISED	DATE REVISED	FED. RD. DIST. NO.	STATE	JOB NO.	SHEET NO.	TOTAL SHEETS
		6	ARK.	012326	317	838
		TRAFFIC SIGNAL STREET NAME SIGNS				
2						

STATE OF ARKANSAS
LICENSED PROFESSIONAL ENGINEER
No.8141
NICCI D. TINER

DIGITALLY SIGNED 7/28/2023

OVERHEAD STREET NAME MARKER STANDARD MAST ARM MOUNTED

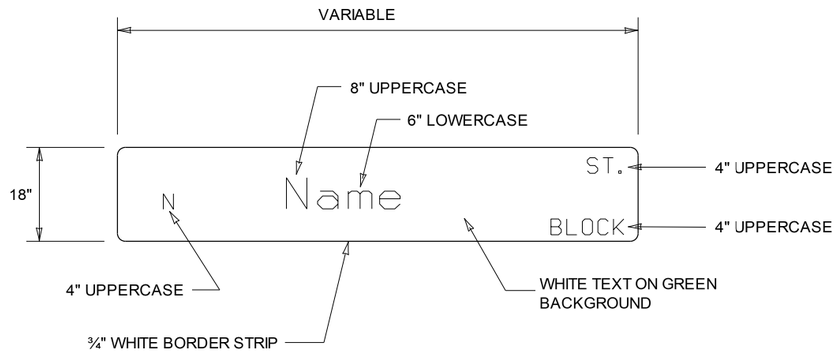



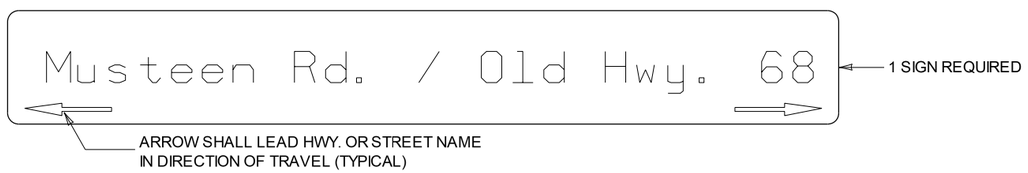



NOTES:

1. REFLECTIVE SHEETING SHALL COMPLY WITH ASTM 4956 TYPE 8 OR 9 REFLECTIVE SHEETING. SHEETING AND LEGEND SHALL BE APPLIED IN SUCH A MANNER TO PROVIDE WRINKLE AND BUBBLE FREE SURFACES. APPLICATION OF SHEETING IS CAUSE FOR REJECTION OF MATERIALS DUE TO WORKMANSHIP.
2. ALUMINUM SIGN BLANK SHALL BE ALLOY 6061-T6 OR 5052-H38. THE ALUMINUM SIGN SHALL BE ALSO ALODIZED. THE ALUMINUM SHEETING SHALL BE 0.100 INCH NOMINAL THICKNESS AND OF THE SIZE SHOWN WITH 1.5" CORNER RADII. PRIOR TO FABRICATION OF THE SIGNS, THE LAYOUT SHALL FIRST BE APPROVED BY AN AGENT OF THE CITY/ COUNTY.
3. WHEN CROSSROAD HAS TWO NAMES, THE SIGN FOR THE CROSSROAD TO THE LEFT MAY BE INSTALLED ON THE BACKSIDE OF THE MAST ARM ON THE NEARSIDE LEFT POLE. SEE STANDARD DRAWING SHEET FOR MORE INFORMATION FOR MOUNTING ON MAST ARM ASSEMBLY.
4. THE SERIES C 2000 STANDARD ALPHABET SHALL BE USED FOR ALL LETTERS.

DATE: 3/23/2023 FILE NAME: t012326_Street_name_signs.dgn

LOCATION: HWY. 412B/HENRI DE TONTI BLVD. AND OLD HWY. 68/MUSTEEN RD.
CITY: TONTITOWN
COUNTY: WASHINGTON
DISTRICT: 04 SCALE: N/A DRAWN BY: HRH

HBVinson 7/27/2023 2:03:31 PM
WORKSPACE: AHTD
L:\20IT\T0I7660 - ARDOT 012326 Hwy 412 - Hwy 112\Drawings\t012326_Street_name_signs.dgn
REVISED DATE:

DATE REVISED	DATE REVISED	FED. RD. DIST. NO.	STATE	JOB NO.	SHEET NO.	TOTAL SHEETS
		6	ARK.	012326	318	838
		GROUNDING ARRAY DETAIL				
2						

GROUNDING ARRAY
SINGLE-PORT FUSION WELDS

STATE OF ARKANSAS
LICENSED PROFESSIONAL ENGINEER
No.8141
NICCI D. TINER

DIGITALLY SIGNED 7/28/2023

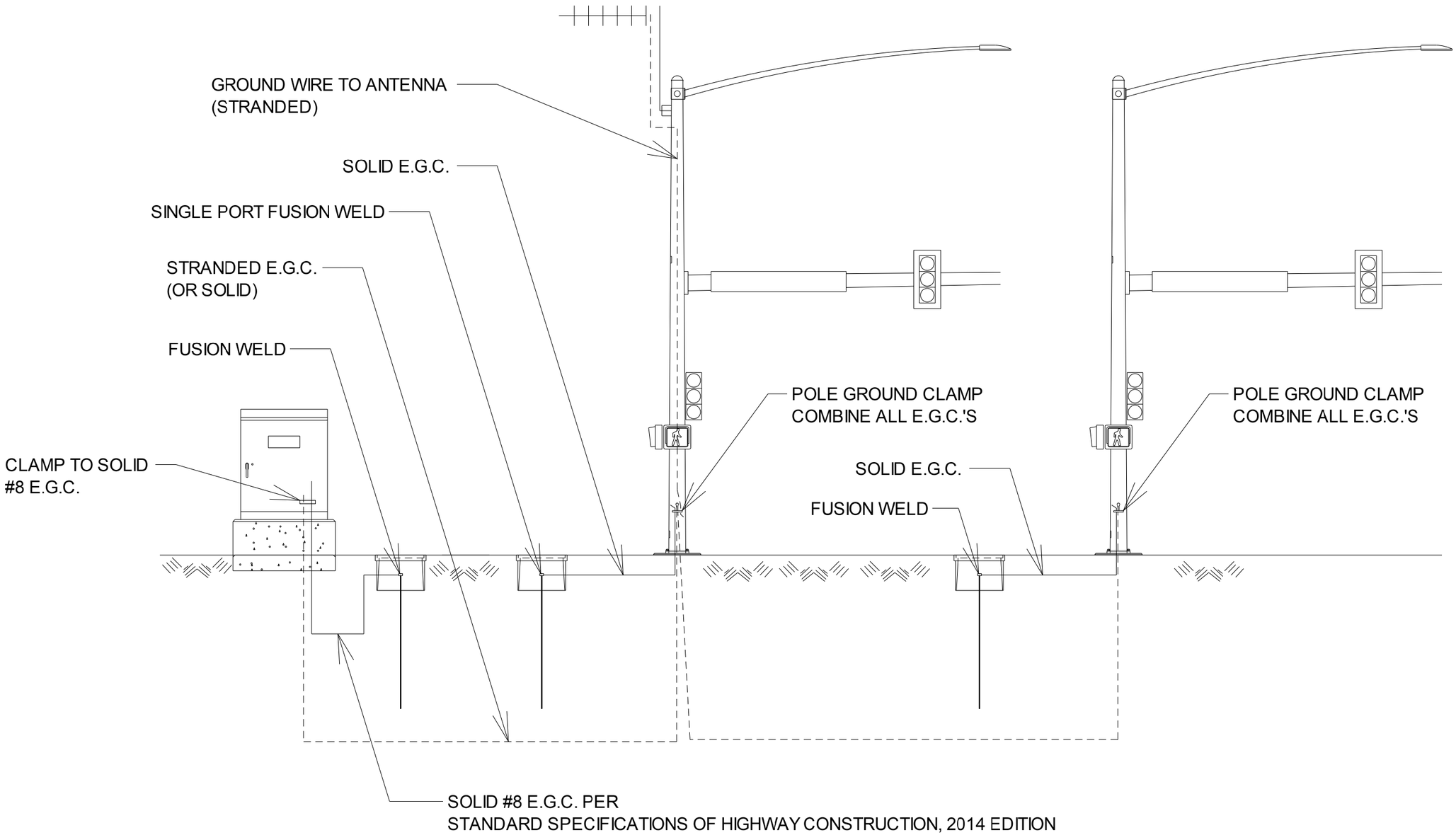

DATE: 4/10/2023 FILE NAME: t012326_Grd_Ary_Det.dgn

LOCATION: HWY. 412B/HENRIDE TONTI BLVD. AND OLD HWY. 68/MUSTEEN RD.
CITY: TONTITOWN
COUNTY: WASHINGTON
DISTRICT: 04 SCALE: N/A DRAWN BY: HRH

HBVinson 7/27/2023 2:03:35 PM
WORKSPACE: AHTD
L:\20\T\T017660 - ARDOT 012326 Hwy 412 - Hwy 112\Drawings\t012326_Grd_Ary_Det.dgn
REVISED DATE:

DATE REVISED	DATE REVISED	FED. RD. DIST. NO.	STATE	JOB NO.	SHEET NO.	TOTAL SHEETS
		6	ARK.	012326	319	838
		SIGNALIZATION PLAN SHEET				

②

STATE OF ARKANSAS
LICENSED PROFESSIONAL ENGINEER
No.8141
NICCI D. TINER

DIGITALLY SIGNED 7/28/2023

PHASING DIAGRAM

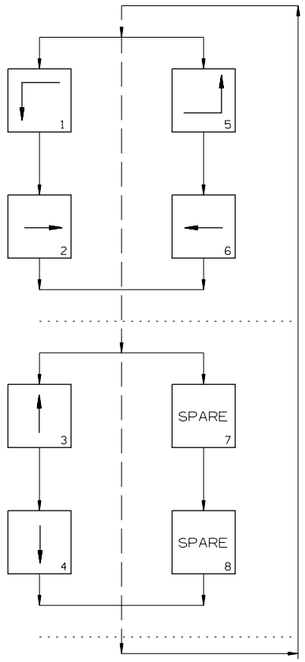

SIGNAL FACES

12" LENSES

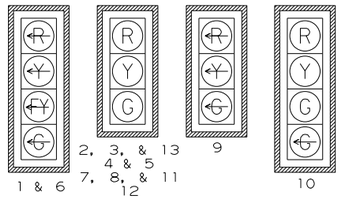

NOTES:
1. ALL SIGNAL HEADS SHALL HAVE BACKPLATES.
2. REFER TO SPECIAL PROVISION "RETROREFLECTIVE BACKPLATES" FOR DETAILS ON REQUIREMENTS FOR BACKPLATES.
3. INSTALL LOUVERS ON SIGNAL FACE 13 ON RED BALL, YELLOW BALL, AND GREEN BALL SUCH THAT THE INDICATIONS ARE NOT VISIBLE FOR THE WESTBOUND RIGHT TURN LANE.

HWY. 412B/HENRI DE TONTI BLVD. AND OLD HWY. 68/MUSTEEN RD.
POLE DIMENSIONS

POLE	MAST ARM	* MAST ARM ANGLE	** HAND HOLE	VERT. SHAFT	LUM. ARM	* LUM. ANGLE
A	62'	3°	90°	35'	15'	3°
B	52'	93°	90°	35'	15'	93°
C	N/A	N/A	N/A	35'	25'	3°
D	50'	183°	90°	35'	20'	183°
E	44'	273°	90°	35'	15'/25'	183°/273°

* MAST ARM AND LUMINAIRE ARM ANGLE MEASURED FROM PLAN NORTH = 0°, CLOCKWISE ROTATION.
** HAND HOLE LOCATION MEASURED CLOCKWISE FROM MAST ARM.

DETECTOR SPACING CHART

HIGHWAY 412B/HENRI DE TONTI BLVD. VIRTUAL LOOPS		
POSTED SPEED	DISTANCE FROM STOP LINE	
	LEAD VDZ	LAG VDZ
60 MPH	440'/260'	100'
OLD HWY. 68 VIRTUAL LOOPS		
POSTED SPEED	DISTANCE FROM STOP LINE	
	LEAD VDZ	LAG VDZ
45 MPH	115'	N/A
MUSTEEN RD. VIRTUAL LOOPS		
POSTED SPEED	DISTANCE FROM STOP LINE	
	LEAD VDZ	LAG VDZ
35 MPH	85'	N/A

SCALE IN FEET
0 30 60 120

DATE: 5/4/2023 FILE NAME: t012326_p01a.dgn

LOCATION: HWY. 412B/HENRI DE TONTI BLVD. AND OLD HWY. 68/MUSTEEN RD.
CITY: TONTITOWN
COUNTY: WASHINGTON
DISTRICT: 04 SCALE: 1"=60' DRAWN BY: HRH

HBVinson 7/27/2023 2:03:49 PM
WORKSPACE: AHTD
L:\2017\1701660 - ARDOT 012326 Hwy 412 - Hwy 112\Drawings\t012326_p01a.dgn
REVISED DATE:

DATE REVISED	DATE REVISED	FED. RD. DIST. NO.	STATE	JOB NO.	SHEET NO.	TOTAL SHEETS
		6	ARK.	012326	320	838
②		SIGNALIZATION PLAN SHEET				

HWY. 412B/HENRI DE TONTI BLVD. AND OLD HWY. 68/MUSTEEN RD.
POLE LOCATIONS

POLE	LOCATION & STATION	OFFSET	X, Y COORDINATES
A	HWY. 412B - STA. 11+30.39	61.90' RT.	635906.27, 679126.08
B	HWY. 412B - STA. 10+31.01	83.46' RT.	635806.01, 679109.07
C	HWY. 412B - STA. 10+11.56	61.30' RT.	635787.59, 679132.10
D	HWY. 412B - STA. 10+45.56	50.04' LT.	635826.64, 679241.77
E	HWY. 412B - STA. 11+26.09	45.77' LT.	635906.89, 679233.83

TOP OF POLE FOUNDATION ELEVATION SHALL BE THREE (3) INCHES ABOVE THE FINISHED SURFACE ELEVATION AT THE LOCATIONS SHOWN ABOVE.

TOP OF POLE FOUNDATION ELEVATION MAY BE INCREASED IN ACCORDANCE WITH STANDARD DRAWING SD-11.

CONTROLLER CABINET LOCATION

LOCATION & STATION	* OFFSET	* X, Y COORDINATES
HWY. 412B - STA. 11+48.77	77.31' RT.	635923.93, 679109.84

* CENTER OF CABINET

STATE OF ARKANSAS
LICENSED PROFESSIONAL ENGINEER
No.8141
NICCI D. TINER

DIGITALLY SIGNED 7/28/2023

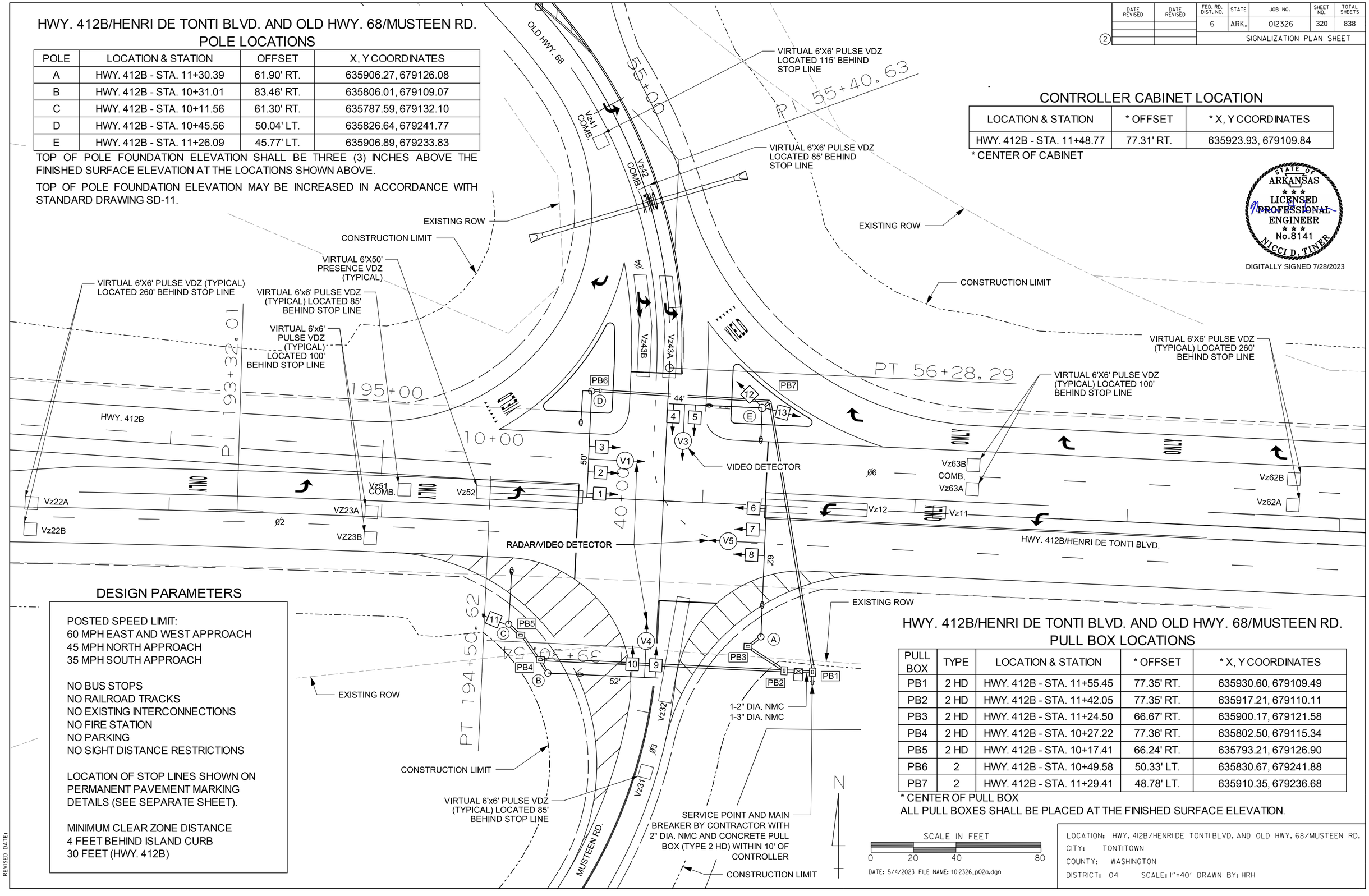

DESIGN PARAMETERS

POSTED SPEED LIMIT:
60 MPH EAST AND WEST APPROACH
45 MPH NORTH APPROACH
35 MPH SOUTH APPROACH

NO BUS STOPS
NO RAILROAD TRACKS
NO EXISTING INTERCONNECTIONS
NO FIRE STATION
NO PARKING
NO SIGHT DISTANCE RESTRICTIONS

LOCATION OF STOP LINES SHOWN ON PERMANENT PAVEMENT MARKING DETAILS (SEE SEPARATE SHEET).

MINIMUM CLEAR ZONE DISTANCE
4 FEET BEHIND ISLAND CURB
30 FEET (HWY. 412B)

HWY. 412B/HENRI DE TONTI BLVD. AND OLD HWY. 68/MUSTEEN RD.
PULL BOX LOCATIONS

PULL BOX	TYPE	LOCATION & STATION	* OFFSET	* X, Y COORDINATES
PB1	2 HD	HWY. 412B - STA. 11+55.45	77.35' RT.	635930.60, 679109.49
PB2	2 HD	HWY. 412B - STA. 11+42.05	77.35' RT.	635917.21, 679110.11
PB3	2 HD	HWY. 412B - STA. 11+24.50	66.67' RT.	635900.17, 679121.58
PB4	2 HD	HWY. 412B - STA. 10+27.22	77.36' RT.	635802.50, 679115.34
PB5	2 HD	HWY. 412B - STA. 10+17.41	66.24' RT.	635793.21, 679126.90
PB6	2	HWY. 412B - STA. 10+49.58	50.33' LT.	635830.67, 679241.88
PB7	2	HWY. 412B - STA. 11+29.41	48.78' LT.	635910.35, 679236.68

* CENTER OF PULL BOX
ALL PULL BOXES SHALL BE PLACED AT THE FINISHED SURFACE ELEVATION.

SCALE IN FEET
0 20 40 80

DATE: 5/4/2023 FILE NAME: t012326_p02a.dgn

LOCATION: HWY. 412B/HENRI DE TONTI BLVD. AND OLD HWY. 68/MUSTEEN RD.
CITY: TONTITOWN
COUNTY: WASHINGTON
DISTRICT: 04 SCALE: 1"=40' DRAWN BY: HRH

HBVinson
WORKSPACE: AHTD
L:\2017\17017660 - ARDOT 012326 Hwy 412 - Hwy 112\Drawings\t012326_p02a.dgn
7/27/2023 2:03:56 PM
REVISED DATE:

DATE REVISED	DATE REVISED	FED. RD. DIST. NO.	STATE	JOB NO.	SHEET NO.	TOTAL SHEETS
		6	ARK.	012326	321	838
2		SIGNALIZATION PLAN SHEET				

STATE OF ARKANSAS
LICENSED PROFESSIONAL ENGINEER
No.8141
NICCI D. TINER

DIGITALLY SIGNED 7/28/2023

WIRING DIAGRAM

NOTES TO CONTRACTOR:
1. ALL DETECTOR RACK CHANNELS, INCLUDING UNUSED, SHALL BE BROUGHT TO TERMINAL STRIP IN DETECTOR AREA OF CABINET.
2. THE LOCAL GOVERNMENT SHALL BE RESPONSIBLE FOR PROVIDING POWER TO THE SERVICE POINT.
3. SEE SHEET NUMBER 304 FOR GROUNDING ARRAY DETAIL.

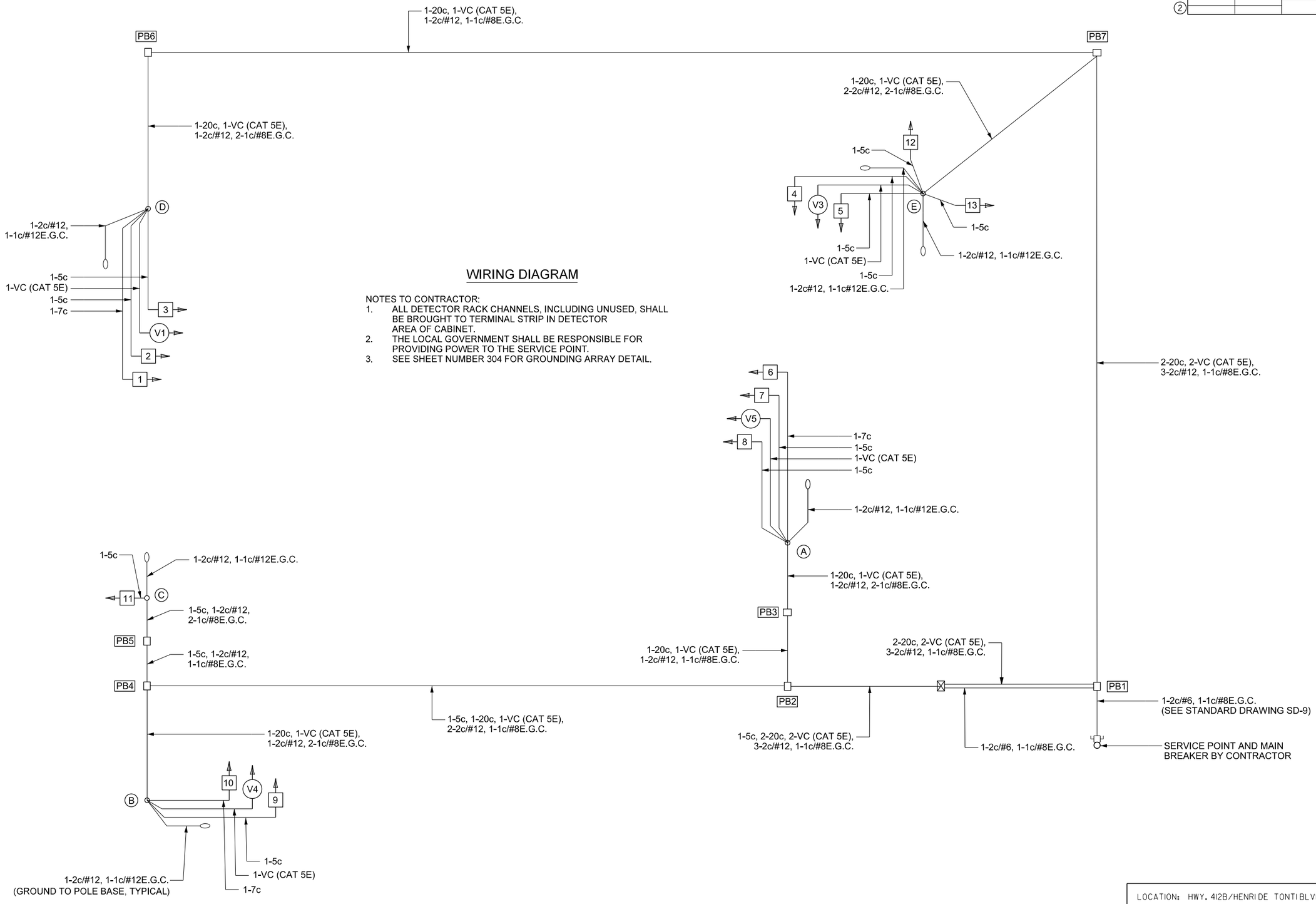

LOCATION: HWY. 412B/HENRIDE TONTI BLVD. AND OLD HWY. 68/MUSTEEN RD.
CITY: TONTITOWN
COUNTY: WASHINGTON
DISTRICT: 04 SCALE: N/A DRAWN BY: HRH

DATE: 5/4/2023 FILE NAME: T012326_P03A.DGN

HBVinson
7/27/2023 2:04:07 PM
WORKSPACE: AHTD
L:\20IT\T0I7660 - ARDOT 012326 Hwy 412 - Hwy 112\Drawings\T012326_p03a.dgn
REVISED DATE:

DATE REVISED	DATE REVISED	FED. RD. DIST. NO.	STATE	JOB NO.	SHEET NO.	TOTAL SHEETS
		6	ARK.	012326	322	838
②		SIGNALIZATION PLAN SHEET				

PHASING DIAGRAM

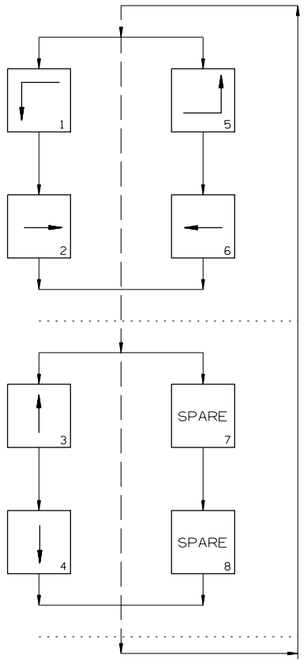

SIGNAL FACES

12" LENSES

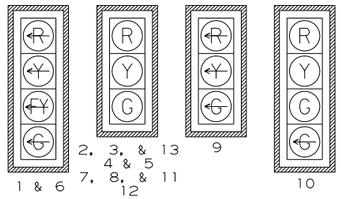

NOTES:
1. ALL SIGNAL HEADS SHALL HAVE BACKPLATES.
2. REFER TO SPECIAL PROVISION "RETROREFLECTIVE BACKPLATES" FOR DETAILS ON REQUIREMENTS FOR BACKPLATES.
3. INSTALL LOUVERS ON SIGNAL FACE 13 ON RED BALL, YELLOW BALL, AND GREEN BALL SUCH THAT THE INDICATIONS ARE NOT VISIBLE FOR THE WESTBOUND RIGHT TURN LANE.

TRAFFIC FLOW DIAGRAM

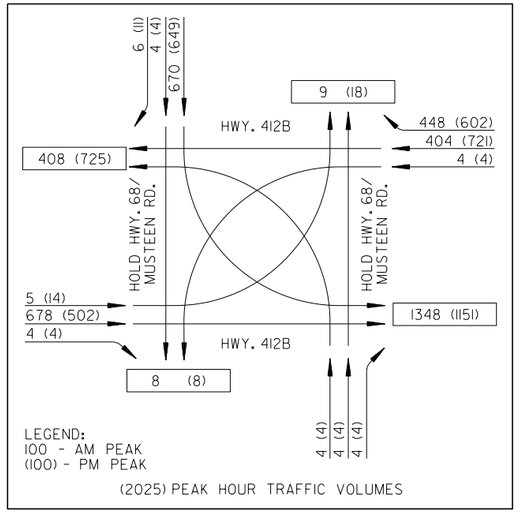

STATE OF ARKANSAS
LICENSED PROFESSIONAL ENGINEER
No.8141
NICCI D. TINER

DIGITALLY SIGNED 7/28/2023

DETECTOR CHART

DETECTOR SYSTEM DESCRIPTION: JOB 012326											
HWY. 412B/HENRI DE TONTI BLVD. AND OLD HWY. 68/MUSTEEN RD. DETECTOR ASSIGNMENTS				HARDWARE INPUTS BY SUPPLIER			PROGRAM ASSIGNMENTS			COMMENTS	TUBE LENGTHS
							LOCAL		MASTER SYSTEM DETECTOR NUMBERS		
DET. ID #	LOCATION DIRECTION	TYPE	DET. #	CAB. TRM. #	AMP CHN. #	CON. IMP. #	PHS	SYSTEM DET. #			
Vz11	WB LEFT TURN FAR	COMB.				V9	1	1		V1	23"
Vz12	WB LEFT TURN	LOCAL				V1	1			V1	23"
Vz21 A&B	EB ADVANCE	LOCAL				19	2			V5	23"
Vz22 A&B	EB INTERMEDIATE	LOCAL				20	2			V5	23"
Vz23 A&B	EB NEAR	COMB.				V2	2	2		V5	23"
Vz31	NB ADVANCE	COMB.				V11	3	3		V3	58"
Vz32	NB NEAR	LOCAL				V3	3			V3	58"
Vz41	SB ADVANCE	COMB.				21	4	4		V4	23"
Vz42	SB ADVANCE	COMB.				22	4	4		V4	23"
Vz43 A&B	SB NEAR	LOCAL				V4	4			V4	23"
Vz51	EB LEFT TURN FAR	COMB.				V13	5	5		V5	23"
Vz52	EB LEFT TURN	LOCAL				V5	5			V5	23"
Vz61 A&B	WB ADVANCE	LOCAL				17	6			V1	23"
Vz62 A&B	WB INTERMEDIATE	LOCAL				18	6			V1	23"
Vz63 A&B	WB NEAR	COMB.				V6	6	6		V1	23"
					SPARE:						

CONTROLLER INPUT ABBREVIATIONS:
V = VEHICLE INPUT
D = SYSTEM OR AUXILIARY INPUT
P = PEDESTRIAN INPUT

NOTE: "AMP CHN =" REFERS TO THE RACK OUTPUT POSITION.
THIS IS WIRED TO CONTROLLER INPUT DETECTOR NUMBER WHICH IS PROGRAMMED TO ACTUATE THE DESIGNATED PHASE.
EXAMPLE: V9 = SYSTEM DETECTOR 1, V10 = SYSTEM DETECTOR 2

INTERVAL CHART

SIGNAL FACES	HWY. 412B/HENRI DE TONTI BLVD. AND OLD HWY. 68/MUSTEEN RD.												FLASH SEQUENCE
	1+5	CLR.	1+6	CLR.	2+5	CLR.	2+6	CLR.	3	CLR.	4	CLR.	
1	~~G~~	*	~~G~~	*	~~FY~~	***	~~FY~~	***	~~R~~	~~R~~	~~R~~	~~R~~	~~R~~
2, 3, & 13	R	R	G	**	R	R	G	**	R	R	R	R	R
4 & 5	R	R	R	R	R	R	R	R	G	Y	R	R	R
6	~~G~~	*	~~FY~~	***	~~G~~	*	~~FY~~	***	~~R~~	~~R~~	~~R~~	~~R~~	~~R~~
7, 8, & 11	R	R	R	R	G	**	G	**	R	R	R	R	R
9	~~R~~	~~R~~	~~R~~	~~R~~	~~R~~	~~R~~	~~R~~	~~R~~	~~R~~	~~R~~	~~G~~	~~Y~~	~~R~~
10	R	R	R	R	R	R	R	R	R	R	G ~~G~~	Y	R
12	R	R	R	R	R	R	R	R	R	R	G	Y	R

* DENOTES GREEN OR YELLOW ARROW DEPENDING ON NEXT PHASE
** DENOTES GREEN OR YELLOW BALL DEPENDING ON NEXT PHASE
*** DENOTES FLASHING YELLOW ARROW OR YELLOW ARROW DEPENDING ON NEXT PHASE

DATE: 5/4/2023 FILE NAME: t012326_p04a.dgn

LOCATION: HWY. 412B/HENRI DE TONTI BLVD. AND OLD HWY. 68/MUSTEEN RD.
CITY: TONTITOWN
COUNTY: WASHINGTON
DISTRICT: 04 SCALE: N/A DRAWN BY: HRH

HBVinson
7/27/2023 2:04:08 PM
WORKSPACE: AHTD
L:\2017\17017660 - ARDOT 012326 Hwy 412 - Hwy 112\Drawings\t012326_p04a.dgn
REVISED DATE:

DATE REVISED	DATE FILMED	DATE REVISED	DATE FILMED	FED. ROAD DIST. NO.	STATE	FED. AID PROJ. NO.	SHEET NO.	TOTAL SHEETS
				6	ARK.		323	838
				JOB NO.		012326		
				(1) A7612		LAYOUT		66112

For R/W Data, See Roadway Plans

Use Type F Approach Gutters and Type Special Approach Slabs (width = 36'-0") at both ends of bridge. See Std. Dwg. No. 55030F and 66334A, respectively.

Limits of Class 7 fill. See DETAIL A on Dwg. No. 66113. (Typ. Each End)

Ditch

Retaining Wall I See Dwg. No. 66335

Ramp PGL

C.L. Ramp 4

Toe of Fill Slope

Concrete Riprap For details, see Std. Dwg. No. 55002 (Typ. each end)

Top of Cut

Test Hole (Typ.)

Point of Min. Vert. Clr.

B-1001

B-1003

B-1005

B-1007

C.L. Bridge

C.L. Lanes

Profile Grade

Approx. 0.2 Miles To Hwy. 412

Approx. 5.9 Miles To Hwy. 112

Toe of Fill Slope

Tangent To C.L. Median At Sta. 185+50.42

Excavation (See Rdwy. Dwg.)

Sta. 185+50.42
C.L. Median Hwy. 612
Sta. 185+77.78
C.L. Ramp 4

Toe of Cut

C.L. Construction & Median Hwy. 612 (1.5° Curve)

Toe of Fill Slope

Note: All bents are parallel.

PLAN

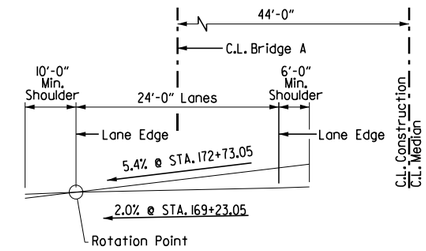

SUPERELEVATION SKETCH

No Scale
(Looking Ahead)

Begin Superelevation Sta. 169+23.05
Max. Superelevation Sta. 172+73.05 (0.054'/')
Max. Superelevation Sta. 219+48.54 (0.054'/')
See Roadway Plans for superelevation beyond limits shown.

Total Length of Bridge = 305'-0"
302'-0" Continuous Plate Girder Unit (85'-132'-85')
(Measured Along C.L. Bridge)

C.L. 2" Poured Silicone Joint

C.L. 2" Poured Silicone Joint

Slope Intercept Sta. 183+38.61

5' Drainage/ Stabilizing Layer

Proposed Grade Line Along C.L. Bridge

Begin Bridge Sta. 183+57.52 Elev. 1280.96

C.L. Bent 2 Sta. 184+45.09 Elev. 1283.40

Bridge Traffic Rail (Type SSTR42) See Dwg. No. 66130

C.L. Bent 3 Sta. 185+78.62 Elev. 1286.72

See DETAIL A Dwg. No. 66113 (Typ. Both Ends)

End Bridge Sta. 186+66.07 Elev. 1288.64

Slope Intercept Sta. 186+89.44

Guardrail (Typ.)

El. 1272.1

El. 1270.1

Fix

Proposed Ground Line @ C.L. Bridge

Existing Ground Line Along C.L. Bridge

Concrete Riprap

Excavation (See Rdwy. Dwg.)

C.L. Ramp 4

El. 1247.58

El. 1249.00

El. 1263.4

El. 1263.3

Concrete Riprap

5' Drainage/ Stabilizing Layer

40' Piles

44' Pile (Each Wing)

37' Pile (Each Wing)

34' Piles

33' Piles

34' Piles

Sta. 183+73
66' Lt. of C.L. Median
5.5 - 5.8, N = 100+
10.5 - 11.5, N = 37
15.5 - 16.5, N = 33
20.5 - 21.5, N = 70
25.5 - 26.5, N = 35
30.5 - 31.3, N = 100+
35.5 - 36.5, N = 28
40.5 - 41.5, N = 50
45.5 - 46.5, N = 16
50.5 - 51.5, N = 17

BENT NO. 1 55.0 - 55.3, N = 100+
55.3 - 56.0, SCR% = 100, ROD% = 0
56.0 - 61.0, SCR% = 52, ROD% = 11

Sta. 184+32
58' Lt. of C.L. Median
5.0 - 5.5, N = 100+
10.5 - 11.5, N = 48
15.5 - 16.5, N = 58
20.5 - 21.5, N = 38
25.5 - 26.5, N = 27
30.5 - 31.5, N = 14
35.5 - 36.5, N = 8
40.5 - 41.5, N = 17
45.5 - 46.5, N = 5

2 50.5 - 51.5, N = 52
53.0 - 56.0, SCR% = 50, ROD% = 17
56.0 - 61.0, SCR% = 56, ROD% = 22
61.0 - 66.0, SCR% = 60, ROD% = 7

Sta. 185+66
58' Lt. of C.L. Median
5.5 - 5.9, N = 100+
10.5 - 11.5, N = 27
15.5 - 16.5, N = 35
20.5 - 21.5, N = 33
25.5 - 26.5, N = 22
30.5 - 31.5, N = 65
35.5 - 36.5, N = 8
40.5 - 41.5, N = 9
44.5 - 45.9, SCR% = 64, ROD% = 0
45.9 - 50.9, SCR% = 56, ROD% = 0
50.9 - 55.9, SCR% = 64, ROD% = 0

3

Sta. 186+40
66' Lt. of C.L. Median
5.5 - 6.5, N = 58
10.5 - 11.5, N = 49
15.5 - 16.5, N = 23
20.5 - 21.3, N = 100+
25.5 - 26.5, N = 57
30.5 - 31.5, N = 28
35.5 - 36.5, N = 16
40.5 - 41.5, N = 70
45.5 - 46.0, N = 100+
46.5 - 50.2, SCR% = 49, ROD% = 0
50.2 - 55.2, SCR% = 44, ROD% = 7
55.2 - 60.2, SCR% = 80, ROD% = 0

4

ELEVATION

For GENERAL NOTES & SOIL BORING LEGEND, See Dwg. No. 66113.

Stationing is along C.L. Median. Stations shown in elevation are determined by a radial projection from C.L. Bridge to C.L. Median. For more information refer to STAKING DIAGRAM on Dwg. No. 66113.

Elevations shown are actual top of deck elevations at C.L. Bridge. Any vertical dimension to C.L. Deck is based on actual top of deck elevation at C.L. Bridge.

(1) C.L. Deck at C.L. Bent to low side Top of Cap.

(2) C.L. Deck to Low Steel.

07-27-23

STATE OF ARKANSAS
LICENSED PROFESSIONAL ENGINEER
No. 19188
ERIC S. CHRISTIANSEN

Eric S. Christiansen
BRIDGE ENGINEER

SHEET 1 OF 2
LAYOUT OF BRIDGE A
HWY. 612 OVER W. INTERCHANGE RAMP 4
HWY. 412 - HWY. 112 (SPRINGDALE BYPASS) (F)
WASHINGTON COUNTY

ROUTE 612 SEC. 1

ARKANSAS STATE HIGHWAY COMMISSION

LITTLE ROCK, ARK.

DRAWN BY: FAN DATE: 04-23
CHECKED BY: DHP DATE: 04-23
DESIGNED BY: WKB DATE: 04-23
FILENAME: B012326aC_L.dgn
SCALE: 1" = 20'-0"

BRIDGE NO. A7612 DRAWING NO. 66112

Date Plotted: 7/27/2023

DATE REVISED	DATE FILMED	DATE REVISED	DATE FILMED	FED. ROAD DIST. NO.	STATE	FED. AID PROJ. NO.	SHEET NO.	TOTAL SHEETS
				6	ARK.		324	838
				JOB NO.		012326		
				(1)	A&B7612	GENERAL NOTES		66113

GENERAL NOTES

BENCHMARK: Vertical Control Data are shown on the Survey Control Sheets.

CONSTRUCTION SPECIFICATIONS: Arkansas State Highway and Transportation Department Standard Specifications for Highway Construction (2014 edition) with applicable Supplemental Specifications and Special Provisions. Section and Subsection refer to the Standard Construction Specifications unless otherwise noted in the Plans.

DESIGN SPECIFICATIONS: AASHTO LRFD Bridge Design Specifications, Eighth Edition (2017).

LIVE LOADING: HL-93

SEISMIC ZONE: I SDI: 0.052 SITE CLASS: D

SEISMIC OPERATIONAL CLASSIFICATION: Other

MATERIALS AND STRENGTHS:

Class S(AE) Concrete (superstructure)	f'c = 4,000 psi
Class S Concrete (substructure)	f'c = 3,500 psi
Reinforcing Steel (AASHTO M 31 or M 322, Type A)	fy = 60,000 psi
Structural Steel (ASTM A709, Gr. 50)	Fy = 50,000 psi
Structural Steel (ASTM A709, Gr. 36)	Fy = 36,000 psi

BORING LOGS: Boring logs may be obtained from the Construction Contract Development Section of the Program Management Division.

STEEL PILING: All piling shall be HP 12x53 (Grade 50) and shall be driven with an approved air, steam, or diesel hammer to a minimum safe bearing capacity of 95 tons per pile and into the material designated as Weathered Limestone on the boring legend. Minimum penetration shall be 10' below natural ground for all piles in Bents 1 and 4, and 10' below bottom of footing for all piles in Bents 2 and 3. Piling in end bents shall be driven after embankment to bottom of cap is in place. Lengths shown are for estimating quantities and for use in determining payment for cut-off and build-up in accordance with Section 805. The Contractor shall use approved steel H-Pile driving points on all piles.

PREBORING: Preboring is required for all piles in Bents 1 and 4 of Bridge A. The depth of preboring shall be to a depth sufficient to provide the specified minimum penetration and to a minimum 3' depth into material designated as Limestone on the boring legend, whichever is lower. The actual size and depth of preboring shall be determined in the field by the Engineer. The Contractor shall be responsible for keeping prebored holes free of debris prior to driving piles and backfilling which may require the use of temporary casings or other approved methods. After driving is completed, the prebored hole shall be backfilled with Class S Concrete to the top of the rock and the remaining length backfilled in accordance with Subsection 805.08(a). Any related cost for backfilling and temporary casing will not be paid for directly, but shall be considered subsidiary to the item "Preboring".

Preboring may be required at Bents 2 and 3 of Bridge A and at all Bents of Bridge B to obtain the minimum pile penetration requirement. The size and depth of preboring, if required, will be determined by the Engineer. The Contractor shall be responsible for keeping the prebored holes free from debris prior to backfilling which may require the use of temporary casings or other methods. Additional Preboring shall be paid for at the contract unit price bid. The cost of temporary casings and the preboring, if required, will not be paid for directly but will be considered subsidiary to the item "PREBORING".

PILE FOOTINGS: The top of all bent footings shall be set a minimum of 2' below finished ground or at the elevations shown on the plans, whichever is lower. Foundations for footings shall be prepared in accordance with Subsection 801.04. Foundation piles shall not be driven until after the excavation to bottom of footing is complete. Excavations shall be backfilled and compacted to the level of the existing ground in accordance with Subsection 801.08.

PAINTING: All Grade 50 structural steel, except galvanized members and surfaces in contact with concrete shall be painted as specified in Subsection 807.75. The color of paint shall be Dark Brown equal or close to Federal Std. 595B, Color Chip No. 20108.

TEXTURED COATING FINISH: Class 3 Textured Coating Finish shall be applied to the bridge and retaining wall surfaces as specified in Special Provision Job No. 801232G "Textured Coating Finish" and in accordance with Subsection 802.19(b)(3). Textured Coating Finish shall not be applied on surfaces where Class 2 Protective Surface Treatment is applied.

BRIDGE DECK: The concrete bridge deck shall be given a tine finish as specified for final finishing in Subsection 802.19 for Class 5 Tined Bridge Roadway Surface Finish.

PROTECTIVE SURFACE TREATMENT: Class 2 Protective Surface Treatment shall be applied to the roadway surface and to the roadway face and top of the bridge traffic rail in accordance with Section 803.

DETAIL DRAWINGS:	DRAWING NO.
End Bents	66114-66117; 66121-66123; 66132-66134; 66137-66139
Intermediate Bents	66118-66120; 66135-66136
Elastomeric Bearings	66146
302'-0" Continuous Plate Girder Unit	66124-66129
288'-0" Continuous Plate Girder Unit	66140-66144
General Notes For Steel Bridge Structures	55006
Details For Steel Bridge Structures	55007
Poured Silicone Joints	55008, 66145
Type F Approach Gutters	55030F
Type Special Approach Slab	66334A
Steel H-Piling	55020
Bridge Traffic Rail	66130
Concrete Riprap	55002

MAINTENANCE OF TRAFFIC: See Roadway Plans.

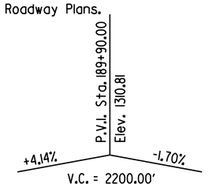

VERTICAL CURVE DATA
(Along Profile Grade)

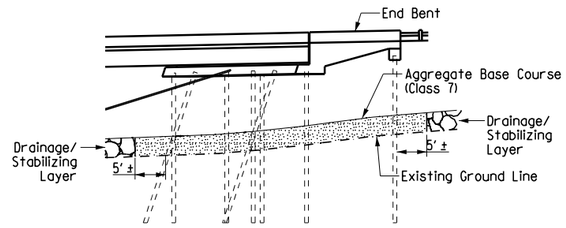

Where a drainage/stabilizing layer is required for embankment construction, aggregate base course (Class 7), in accordance with Section 303.02, shall be placed as shown in areas where piling will be located. Aggregate base course (Class 7) shall be paid for as "COMPACTED EMBANKMENT".

At the Contractor's option, preboring or other methods as approved by the Engineer may be used to facilitate pile installation through the aggregate base course (Class 7) material at these locations. Preboring or other methods used for installation of piles, where rock fill is used for embankment construction, will not be paid for separately but shall be included in item "STEEL PILING".

DETAIL A
No Scale

HORIZONTAL CURVE DATA
C.L. MEDIAN HWY. 612

PI Sta = 199+99.50
PC Sta = 171+85.55
PT Sta = 220+36.04
R = 3819.72
△ = 72°45' 26.4" LT.
D = 1°30' 00"
L = 4850.49
T = 2813.94

HORIZONTAL CURVE DATA
C.L. RAMP 4

PI Sta = 182+58.98
PC Sta = 179+61.23
PT Sta = 185+23.80
R = 694.49
△ = 46°24' 42.8" RT.
D = 8°15' 00"
L = 562.57
T = 297.75

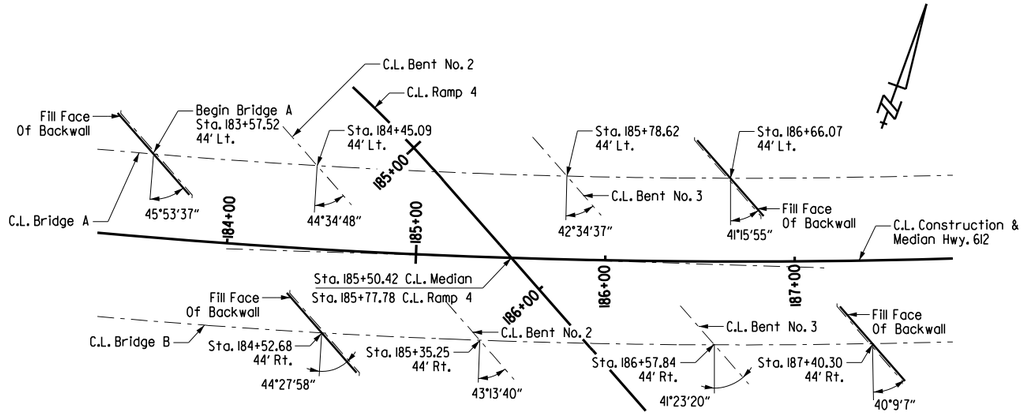

STAKING DIAGRAM

Stationing for the project is along C.L. Median and C.L. Construction. C.L. Bridge is on a horizontal curve concentric to C.L. Median. The bent stations shown are determined by projecting a radial line from C.L. Median to C.L. Bridge. The offsets shown are measured along radial lines. The total bridge length, span lengths, and C.L. Joint to Beginning and End of Bridge dimensions are measured along C.L. Bridge. Deck elevations are at C.L. Bridge. All bents are constructed along lines skewed from radial lines.

Boring Legend

A - Dark tan, very dense clayey sand with gravel.
B - Dark tan & reddish brown, dense to very dense clayey gravel with sand.
C - Tan, yellowish orange, reddish brown & reddish, dense to very dense silty sand with gravel.
D - Brown, tan, light gray, light brown, white, gray & dark brown, medium dense to very dense clayey gravel with sand.
E - Dark brown & copper, very dense clayey gravel with sand.
F - Tan & dark tan, very dense clayey sand with gravel.
G - Reddish brown & dark brown, medium dense to very dense clayey gravel with sand.
H - Dark brown, tan & light gray, medium dense to very dense silty sand with gravel.
I - Dark beige & dark tan, very dense clayey gravel with sand.
J - Tan & black, dense to very dense clayey sand with gravel.
K - Brown & tan, medium dense to dense clayey gravel with sand.
L - Brown, dark brown & copper, loose to medium dense clayey gravel with sand.
M - Brown & tan, medium dense silty sand with gravel.
N - Dark brown & tan, loose to very dense clayey gravel with sand.
O - Brown & tan, very dense clayey sand with gravel.
P - Dark tan, very dense clayey gravel with sand.
Q - Brown, dark brown & white, dense to very dense clayey gravel with sand.
R - Dark brown & tan, very dense clayey gravel with sand.
S - Reddish brown & brown, medium dense to very dense clayey gravel with sand.
T - Dark brown & brown, dense clayey gravel with sand.
U - Brown, copper, dark reddish, tan & black, loose to very dense silty sand with gravel.
V - Dark beige, tan, dark brown & beige, medium dense to very dense clayey gravel with sand.
W - Tan, brown & dark brown, dense to very dense clayey gravel with sand.
X - Brown, very dense silty sand with gravel.
Y - Light brown, dense to very dense silty sand with gravel.
Z - Dark brown, tan & brown, medium dense to very dense clayey gravel with sand.
AA - Brown, tan, dark brown, dark yellowish orange, beige, copper & black, medium dense to very dense silty sand with gravel.
AB - Light beige, white, light gray, brown & tan, very dense silty sand with gravel.
AC - Tan, very dense clayey gravel with sand.
AD - Dark brown & brown, medium dense to very dense clayey gravel with sand.
AE - Light brown, copper, reddish, brown & beige, loose to dense silty sand with gravel.
AF - Dark reddish brown & dark brown, stiff to very hard gravelly fat clay.
AG - White, fine grain, chalky, severely weathered limestone.
AH - White & light gray, fine grain, chalky, severely weathered limestone.
AI - White to light gray, fine grain, chalky, predominately severely weathered limestone.
AJ - White to light gray, fine grain, chalky, predominately severely weathered limestone.
AK - White to light gray, fine grain, chalky, severely weathered limestone.
AL - White to light gray, fine grain, chalky, severely weathered limestone.
AM - White, fine grain, chalky to cherty, severely weathered limestone.
AN - White to light gray, fine grain, chalky to cherty, moderately to severely weathered limestone.

07-27-23
STATE OF ARKANSAS
LICENSED PROFESSIONAL ENGINEER
No. 19188
ERIC S. CHRISTIANSEN
Eric S. Christiansen
BRIDGE ENGINEER

SHEEET 2 OF 2
LAYOUT OF BRIDGE A
HWY. 612 OVER W. INTERCHANGE RAMP 4
HWY. 412 - HWY 112 (SPRINGDALE BYPASS) (F)
WASHINGTON COUNTY

ROUTE 612 SEC. 1

ARKANSAS STATE HIGHWAY COMMISSION
LITTLE ROCK, ARK.

DRAWN BY: FAN DATE: 04-23
CHECKED BY: DHP DATE: 04-23
DESIGNED BY: WKB DATE: 04-23
FILENAME: B012326MC_L.dgn
SCALE: 1" = 20'-0"

BRIDGE NO. A&B7612 DRAWING NO. 66113

Date Plotted: 7/21/2023

NOTE: Class 2 Protective Surface Treatment shall be applied to the roadway face and top of the end bent rail and the top of the backwall.

DATE REVISED	DATE FILMED	DATE REVISED	DATE FILMED	FED. ROAD DIST. NO.	STATE	FED. AID PROJ. NO.	SHEET NO.	TOTAL SHEETS
				6	ARK.		325	838
				JOB NO.		012326		
				(1) A7612		END BENT 1 DETAILS		66114

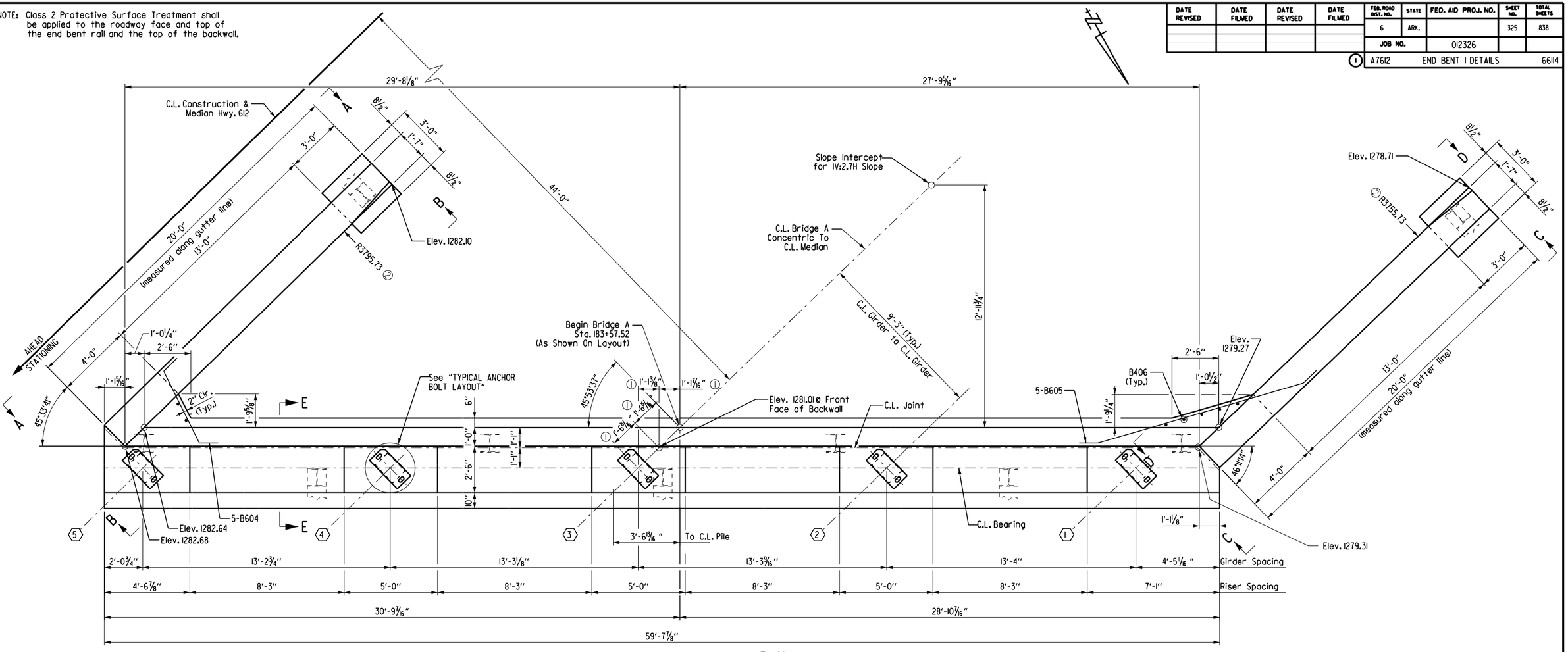

PLAN

Scale: ⅜" = 1'-0"

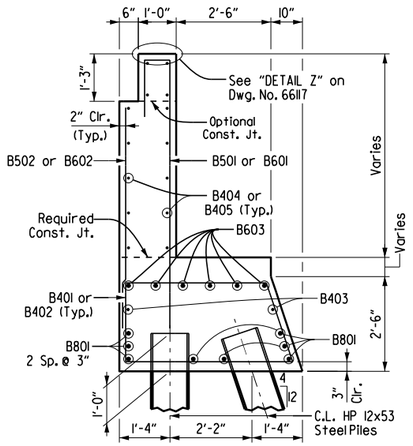

SECTION E-E

½" = 1'-0"

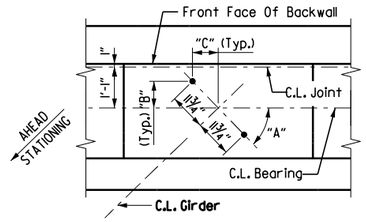

GIRDER	"A"	"B"	"C"
1	46°08'16"	8½"	8⅛"
2	45°59'29"	8⅛16"	8⅜16"
3	45°50'47"	8⅛16"	8⅜16"
4	45°42'08"	8⅛16"	8⅜16"
5	45°33'34"	8⅜"	8¼"

Note: For Details Of Elastomeric Bearings, See Dwg. No. 66146.

TYPICAL ANCHOR BOLT LAYOUT

½" = 1'-0"

GENERAL NOTES FOR SUBSTRUCTURE

The backwall above the required construction joint shall not be poured until the girders are in place. Backwall may be poured prior to placing the adjacent concrete deck only if the optional backwall construction joint is used. See "DETAILS FOR BLOCKING EXPANSION JOINT DEVICE" on Dwg. No. 66145 for additional information. No heavy construction equipment or backfill shall be allowed directly behind the backwall unit before the concrete for the adjacent span has been completed.

For additional information, see LAYOUT on Dwg. No. 66112.

For VIEW A-A, VIEW B-B, VIEW C-C, and VIEW D-D, see Dwg. No. 66116.

For DETAIL Z, see Dwg. No. 66117.

For Details of Wing and Rail, see Dwg. No. 66116, 66117, & 66130.

① Dimensions shown are to C.L. Joint

② Radius is for Gutter line only. Wingwall and Rail shall be constructed perpendicular to radial line at intersection of Gutterline Radii and Front Face of Backwall.

07·27·23

STATE OF ARKANSAS
LICENSED PROFESSIONAL ENGINEER
No. 19188
ERIC S. CHRISTIANSEN

Eric S. Christiansen

BRIDGE ENGINEER

SHEET 1 OF 3
BRIDGE A
DETAILS OF END BENT 1
HWY. 612 OVER RAMP 4

ROUTE 612 SEC. 1

ARKANSAS STATE HIGHWAY COMMISSION

LITTLE ROCK, ARK.

DRAWN BY: FAN DATE: 04-23
CHECKED BY: DHP DATE: 04-23
DESIGNED BY: WKB DATE: 04-23
FILENAME: B012326aC_B11.DGN
SCALE: AS SHOWN

BRIDGE NO. A7612 DRAWING NO. 66114

Date Plotted: 1/21/2023

DATE REVISED	DATE FILMED	DATE REVISED	DATE FILMED	FED. ROAD DIST. NO.	STATE	FED. AID PROJ. NO.	SHEET NO.	TOTAL SHEETS
				6	ARK.		326	838
				JOB NO.		012326		

(1) END BENT 1 DETAILS 66115

(A) B601 - 5 Spa. @ 6" = 2'-6" (Fr. Fa.)
B602 - 5 Spa. @ 6" = 2'-6" (Bk. Fa.)

(B) B601 - Front Face Only

(C) B601 - 3 Spa. @ 6" = 1'-6" (Fr. Fa.)
B602 - 3 Spa. @ 6" = 1'-6" (Bk. Fa.)

(D) B602 - Back Face Only

(E) B401 U-Bars where indicated

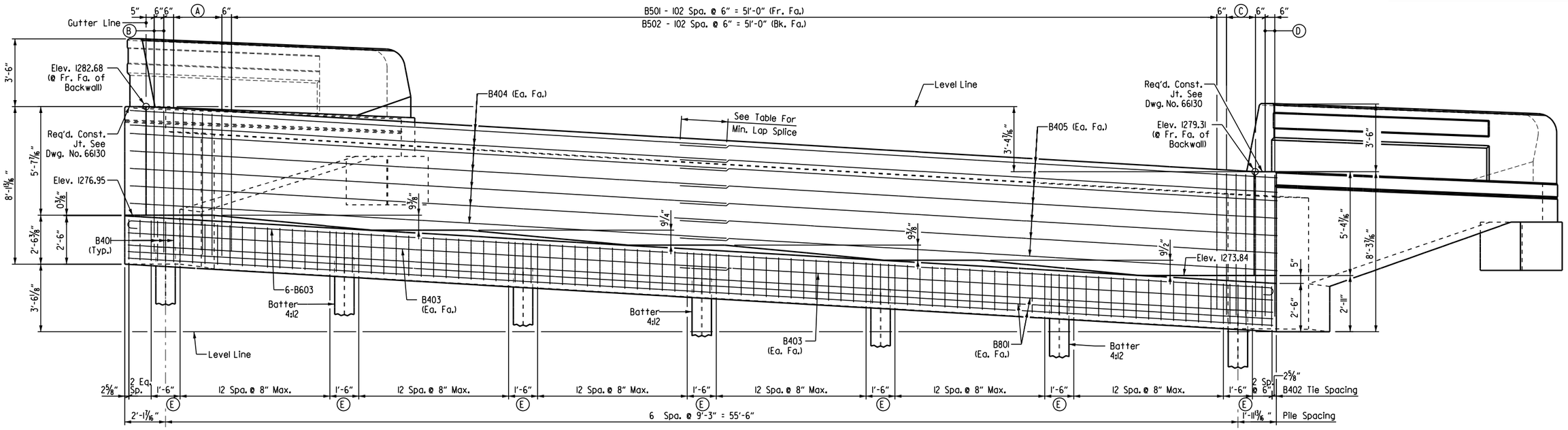

ELEVATION

(Looking Back)
Scale: 3/8" = 1'-0"

BRIDGE A - END BENT 1 BAR LIST

Mark	No. Req'd	Length	Pin Dia.
B401	21	7'-10"	2"
B402	84	12'-9"	2"
B403	4	30'-11"	Str.
B404	14	31'-3"	3"
B405	14	31'-5"	3"
B406	7	6'-5"	Str.
B501	103	9'-1"	2 1/2"
B502	103	5'-7"	Str.
B601	12	9'-2"	4 1/2"
B602	12	5'-10"	Str.
B603	12	32'-2"	4 1/2"
B604	5	6'-2"	4 1/2"
B605	5	12'-10"	4 1/2"
B801	8	59'-4"	Str.
W401	4	7'-11"	Str.
W402	4	10'-4"	Str.
W403 to W409	1 Each	5'-1" to 3'-8"	Str.
W410 to W415	1 Each	3'-5" to 2'-2 1/2"	Str.
W416 to W422	1 Each	5'-1" to 3'-8"	Str.
W423 to W428	1 Each	3'-5" to 2'-2 1/2"	Str.
W429	3	7'-8"	2"
W430	4	8'-0 1/2"	Str.
W431	4	10'-6"	Str.
W432 to W437	1 Each	4'-8" to 3'-5"	Str.

Mark	No. Req'd	Length	Pin Dia.
W438 to W444	1 Each	4'-9" to 5'-8 1/2"	Str.
W445 to W450	1 Each	4'-8" to 3'-5"	Str.
W451 to W457	1 Each	4'-9" to 5'-8 1/2"	Str.
W458	3	13'-5"	2"
W459E	80	4'-7"	6"
W601	24	4'-0"	4 1/2"
W602	12	2'-8"	Str.
W701	12	19'-8"	Str.
W702	2	13'-4"	Str.
W703	2	9'-2"	Str.
W704	2	5'-0"	Str.
W705	2	18'-1"	5 1/4"
W706	2	13'-10"	Str.
W707	2	10'-5"	Str.
W708	2	7'-0"	Str.
W709	2	18'-4"	5 1/4"
R401E	76	7'-6"	3"
R402E	8	5'-6"	Str.
R404E	4	3'-8"	8 1/2"
R405E	16	19'-8"	Str.
R406E	4	19'-5"	Str.
R407E	2	6'-8"	3"
R408E	2	5'-1"	3"

BENDING DIAGRAMS
(Dimensions are out to out of bars)

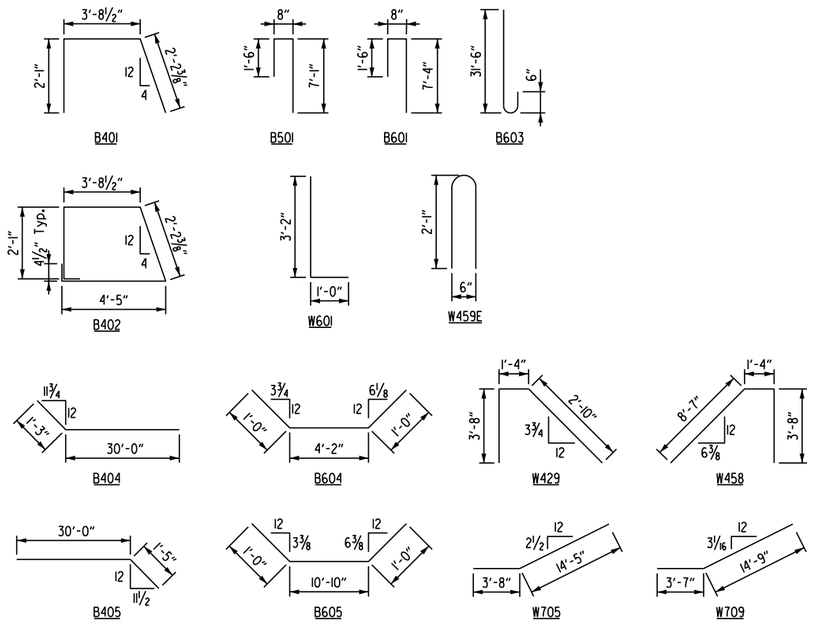

LAP SPLICE TABLE	
Bar Size	Min. Lap Length
4	2'-5"
6	3'-7"

Note:
See Dwg. No. 66130 for Traffic Rail reinforcing bar bending diagrams.

For GENERAL NOTES FOR SUBSTRUCTURE, see Dwg. No. 66114 and Std. Dwg. No. 55006.

For additional information, see LAYOUT on Dwg. No. 66112.

For Details of Wing and Rail, see Dwg. No. 66116, 66117, 66130.

Class 2 Protective Surface Treatment shall be applied to the roadway face and top of the end bent rail and the top of the backwall.

07-27-23

STATE OF ARKANSAS
LICENSED PROFESSIONAL ENGINEER
No. 19188
ERIC S. CHRISTIANSEN

Eric S. Christiansen

BRIDGE ENGINEER

SHEET 2 OF 3
BRIDGE A
DETAILS OF END BENT 1
HWY. 612 OVER RAMP 4

ROUTE 612 SEC. 1

ARKANSAS STATE HIGHWAY COMMISSION

LITTLE ROCK, ARK.

DRAWN BY: FAN DATE: 04-23
CHECKED BY: DHP DATE: 04-23
DESIGNED BY: WKB DATE: 04-23
FILENAME: B012326aC_B12.DGN
SCALE: 3/8" = 1'-0"

BRIDGE NO. DRAWING NO. 66115

Date Plotted: 7/21/2023

DATE REVISED	DATE FILMED	DATE REVISED	DATE FILMED	FED. ROAD DIST. NO.	STATE	FED. AID PROJ. NO.	SHEET NO.	TOTAL SHEETS
				6	ARK.		327	838
				JOB NO.		012326		
				(1)	A7612	END BENT 1 DETAILS		66116

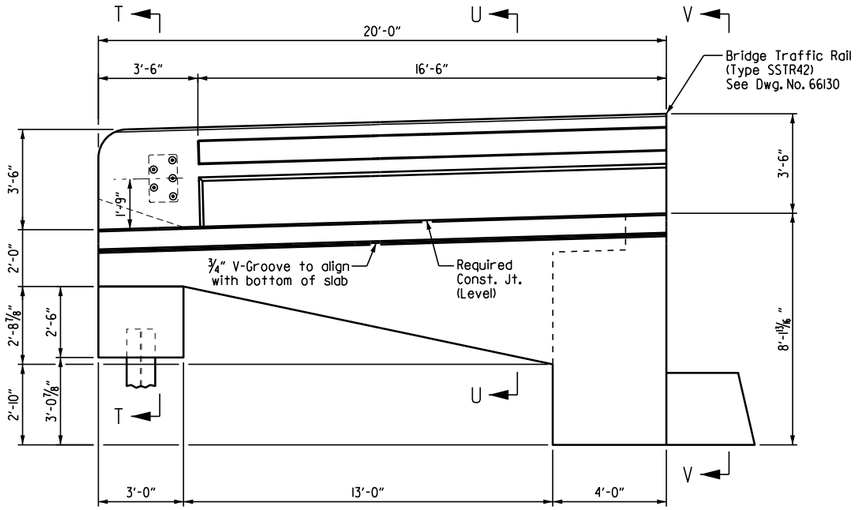

VIEW A-A

Scale: ⅜" = 1'-0"

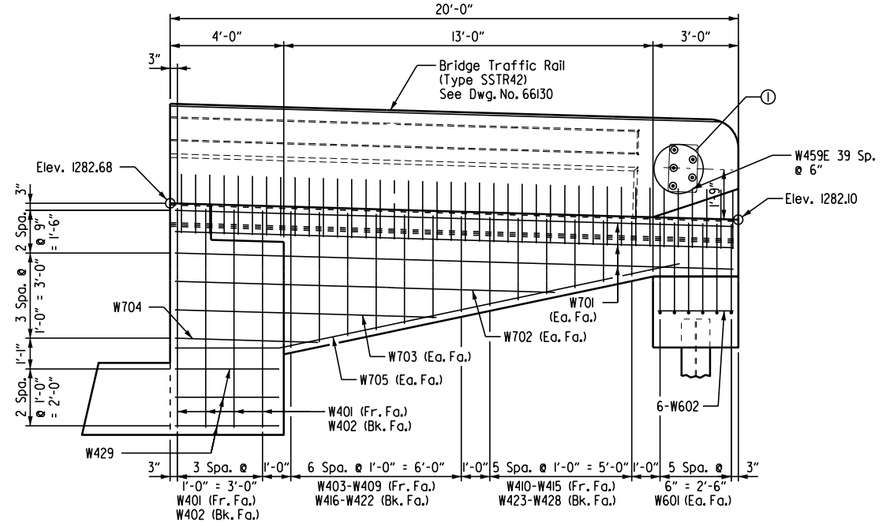

VIEW B-B

Scale: ⅜" = 1'-0"

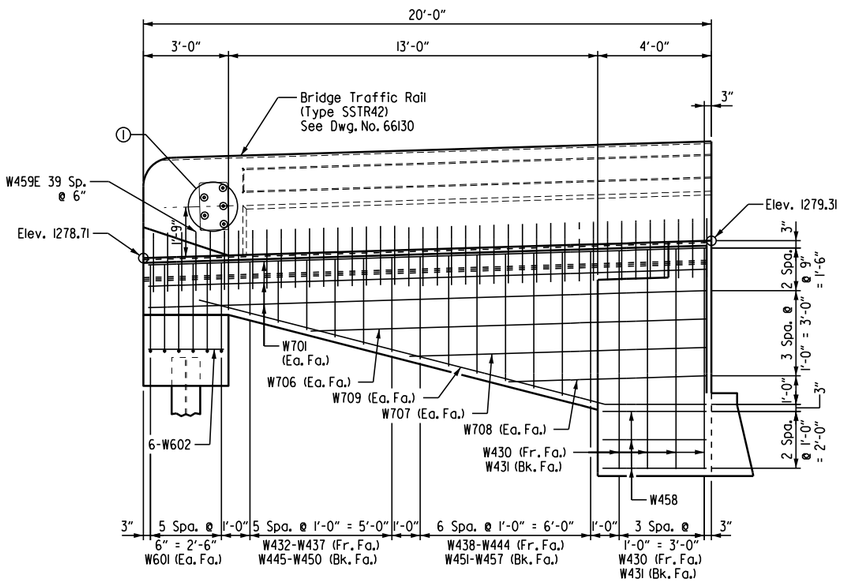

VIEW D-D

Scale: ⅜" = 1'-0"

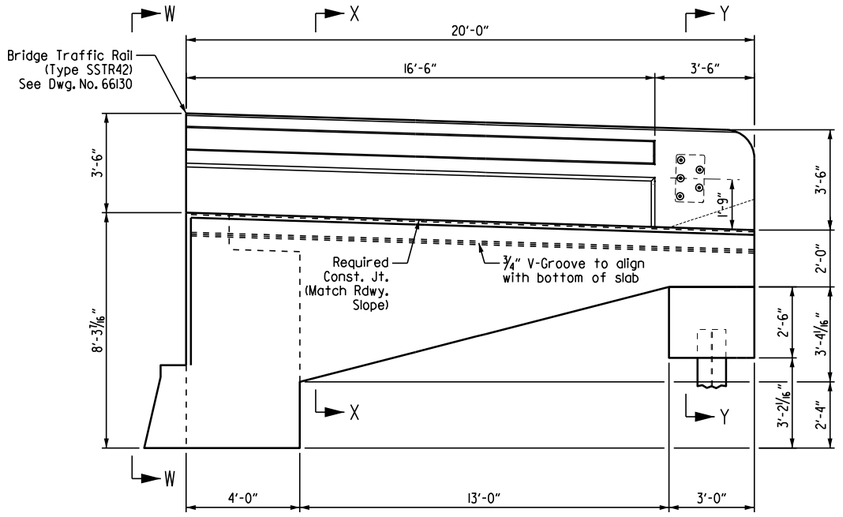

VIEW C-C

Scale: ⅜" = 1'-0"

For GENERAL NOTES FOR SUBSTRUCTURE, see Dwg. No. 66114 and Std. Dwg. No. 55006.

For additional information, see LAYOUT on Dwg. No. 66112.

For SECTION T-T, SECTION U-U, VIEW V-V, VIEW W-W, SECTION X-X, and SECTION Y-Y, see Dwg. No. 66117.

(1) 5 - 1"ø formed holes for guard rail connection. See Std. Dwg. No. GR-10 for bolt spacing and additional connection details.

07-27-23

STATE OF ARKANSAS
LICENSED PROFESSIONAL ENGINEER
No. 19188
ERIC S. CHRISTIANSEN

Eric S. Christiansen

BRIDGE ENGINEER

SHEET 3 OF 3
BRIDGE A
DETAILS OF END BENT 1
HWY. 612 OVER RAMP 4

ROUTE 612 SEC. 1

ARKANSAS STATE HIGHWAY COMMISSION

LITTLE ROCK, ARK.

DRAWN BY: FAN DATE: 04-23
CHECKED BY: DHP DATE: 04-23
DESIGNED BY: WKB DATE: 04-23

FILENAME: B012326aC_B13.DGN
SCALE: AS SHOWN

BRIDGE NO. A7612 DRAWING NO. 66116

Date Plotted: 1/27/2023

DATE REVISED	DATE FILMED	DATE REVISED	DATE FILMED	FED. ROAD DIST. NO.	STATE	FED. AID PROJ. NO.	SHEET NO.	TOTAL SHEETS
				6	ARK.		328	838
				JOB NO.		012326		

(1) A&B7612 COMMON END BENT DETAILS 66117

(1) 1"ø formed holes required on all bents. See Dwg. Nos. 66112 & 66131 for location of guard rail.

For GENERAL NOTES FOR SUBSTRUCTURE, see Dwg. No. 66114 and Std. Dwg. No. 55006.

For additional information, see LAYOUT on Dwg. No. 66112 & 66131.

For Details of Wing and Rail, see Dwg. No. 66123, 66134, 66139, & 66130.

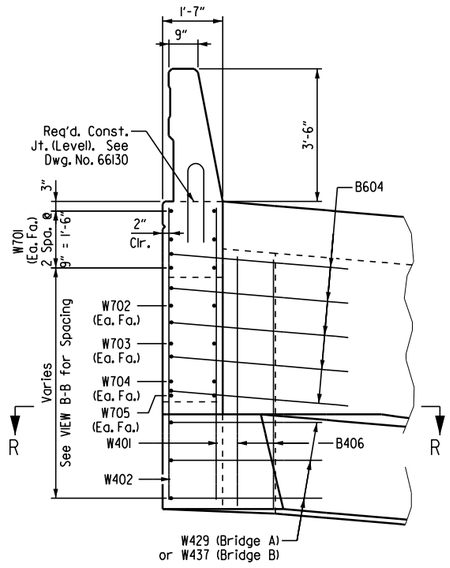

VIEW V-V

Scale: ½" = 1'-0"

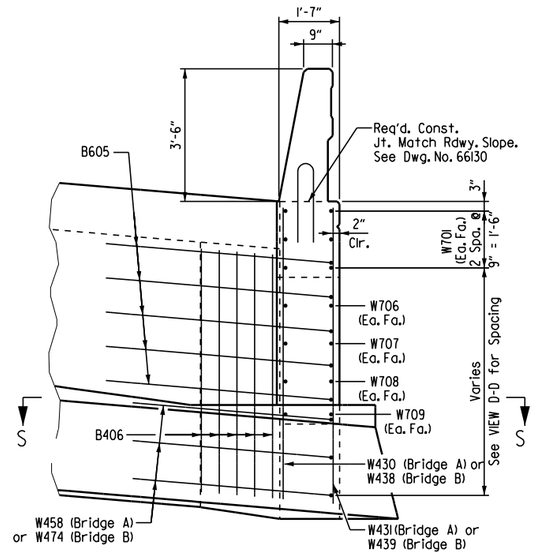

VIEW W-W

Scale: ½" = 1'-0"

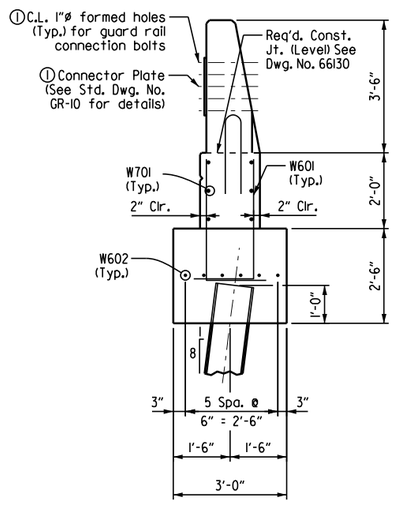

SECTION T-T

Scale: ½" = 1'-0"

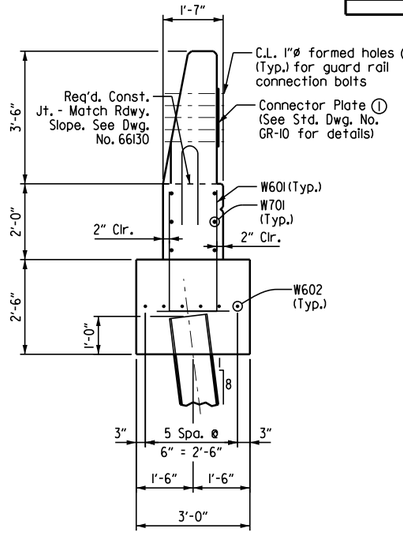

SECTION Y-Y

Scale: ½" = 1'-0"

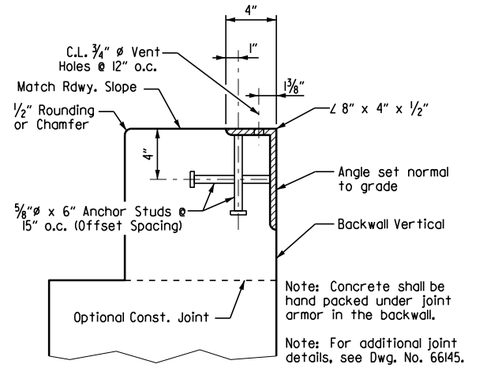

DETAIL Z

Scale: 2" = 1'-0"

Note: Concrete shall be hand packed under joint armor in the backwall.

Note: For additional joint details, see Dwg. No. 66145.

Note: The profile of the backwall angle shall be established based on the vertical curve in conjunction with the skew.

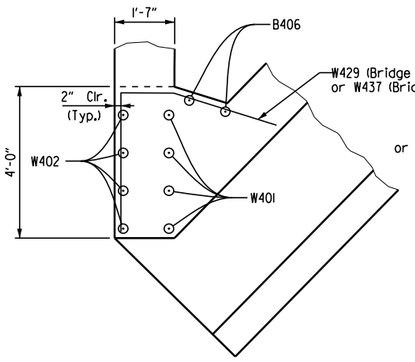

SECTION R-R

Scale: ½" = 1'-0"

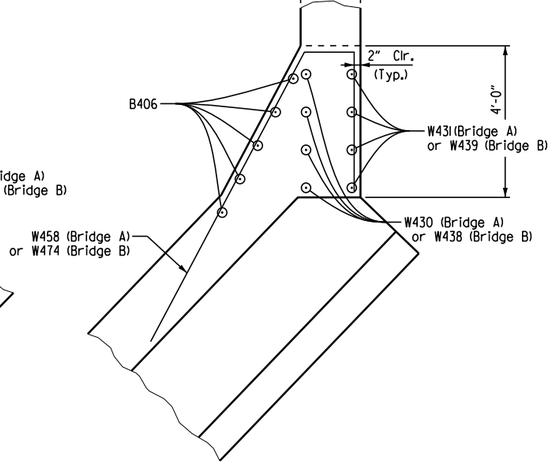

SECTION S-S

Scale: ½" = 1'-0"

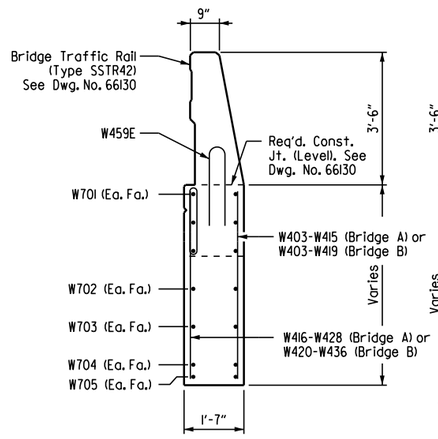

SECTION U-U

Scale: ½" = 1'-0"

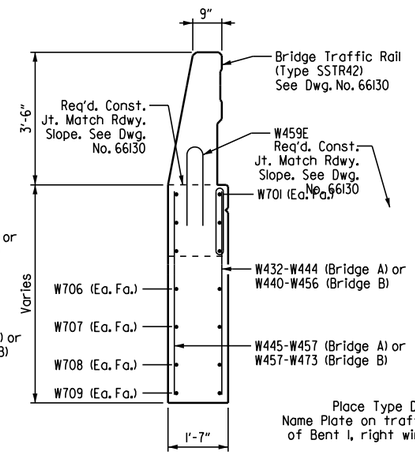

SECTION X-X

Scale: ½" = 1'-0"

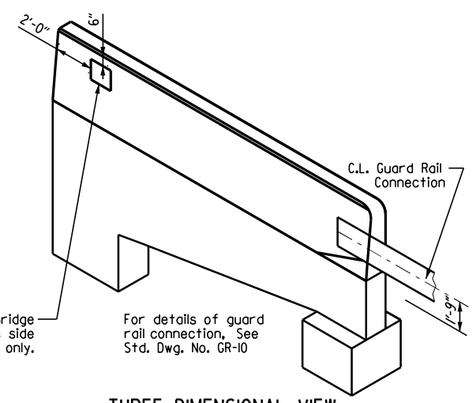

THREE DIMENSIONAL VIEW OF WING & RAIL

Not To Scale

07-27-23

STATE OF ARKANSAS
LICENSED PROFESSIONAL ENGINEER
No. 19188
ERIC S. CHRISTIANSEN

Eric S. Christiansen

BRIDGE ENGINEER

COMMON DETAILS OF END BENTS HWY. 612 OVER RAMP 4

ROUTE 612 SEC. 1

ARKANSAS STATE HIGHWAY COMMISSION

LITTLE ROCK, ARK.

DRAWN BY: FAN DATE: 04-23 FILENAME: B012326MC_BI.DGN

CHECKED BY: DHP DATE: 04-23 SCALE: AS SHOWN

DESIGNED BY: WKB DATE: 04-23

BRIDGE NO. A&B7612 DRAWING NO. 66117

Date Plotted: 7/21/2023

DATE REVISED	DATE FILMED	DATE REVISED	DATE FILMED	FED. ROAD DIST. NO.	STATE	FED. AID PROJ. NO.	SHEET NO.	TOTAL SHEETS
				6	ARK.		329	838
				JOB NO.		012326		
				(1) A7612		BENT 2 DETAILS		66118

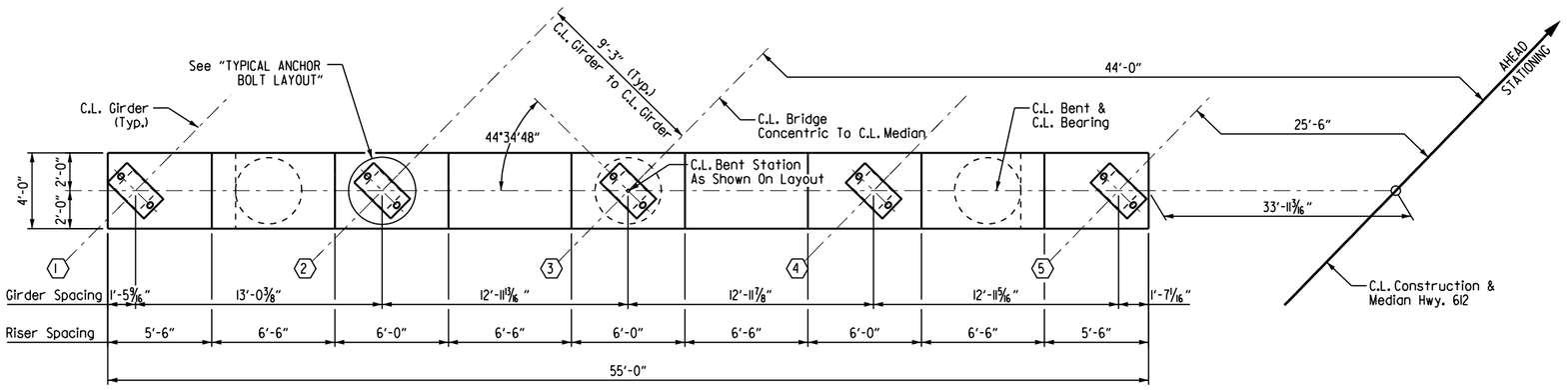

PLAN

1/4" = 1'-0"

BRIDGE A - BENT 2 BAR LIST

Mark	Number Required	Length	Pin Dia.
B501	124	14'-4"	2½"
B502	12	12'-6"	2½"
B503 to B516	2 Each	12'-3" to 14'-4"	2½"
B517 to B530	2 Each	15'-1" to 13'-5"	2½"
B531	8	54'-9"	Str.
B532	2	54'-2"	Str.
B533	2	51'-3"	Str.
B901	16	57'-3"	9"
B902	8	54'-10"	9"
C401	75	10'-9"	3"
C901	17	23'-6"	Str.
C902	17	24'-6"	Str.
C903	17	25'-8"	Str.
F501	72	5'-3"	2½"
F502	66	5'-1"	2½"
F503	72	10'-6"	Str.
F601	126	11'-10"	4½"
F701	174	12'-2"	5¼"
F702	24	4'-3¾"	5¼"
F901	51	10'-7"	9"

Bending Diagrams (Dimensions are out to out of bars.)

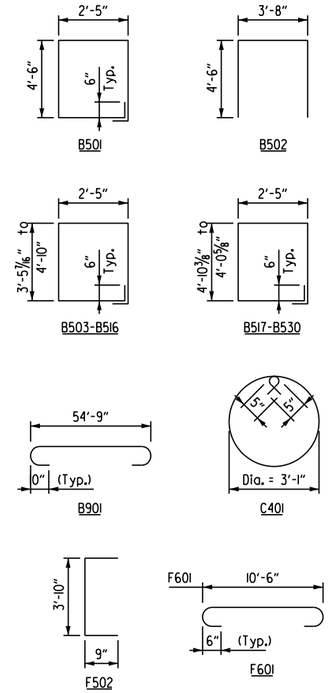

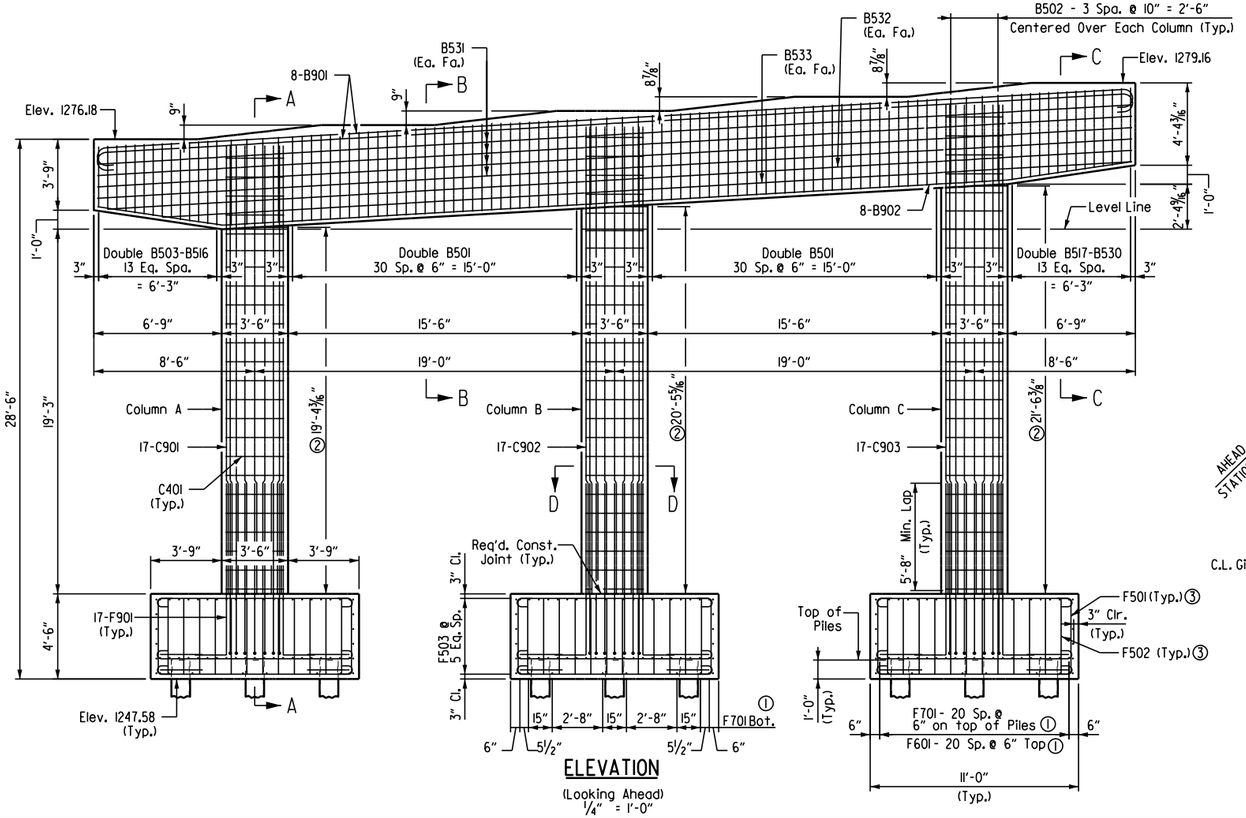

ELEVATION

(Looking Ahead)

1/4" = 1'-0"

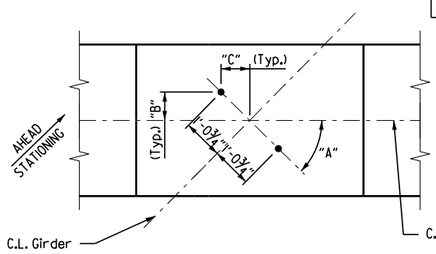

GIRDER	"A"	"B"	"C"
1	44°51'32"	9"	9¼16"
2	44°43'08"	9"	9¼16"
3	44°34'48"	8⅝16"	9¼16"
4	44°26'32"	8⅝16"	9⅛"
5	44°18'20"	8⅛"	9⅛"

Note: For Details Of Elastomeric Bearings, See Dwg. No. 66146.

TYPICAL ANCHOR BOLT LAYOUT

1/2" = 1'-0"

07.27.23

STATE OF ARKANSAS
LICENSED PROFESSIONAL ENGINEER
No. 19188
ERIC S. CHRISTIANSEN

Eric S. Christiansen

BRIDGE ENGINEER

① Bar spacing in both directions.

② Dimension shown is at C.L. of Column.

③ See REINFORCING PLAN on Dwg. No. 66120.

For GENERAL NOTES FOR SUBSTRUCTURE, see Dwg. No. 66114 and Std. Dwg. No. 55006.

For additional information, see LAYOUT on Dwg. No. 66112.

For SECTION A-A, SECTION B-B, & SECTION C-C, see Dwg. No. 66120.

BRIDGE A
DETAILS OF BENT 2
HWY. 612 OVER RAMP 4

ROUTE 612 SEC. 1

ARKANSAS STATE HIGHWAY COMMISSION

LITTLE ROCK, ARK.

DRAWN BY: FAN DATE: 04-23
CHECKED BY: DHP DATE: 04-23
DESIGNED BY: WKB DATE: 04-23

FILENAME: B012326aC_B2.DGN
SCALE: AS SHOWN

BRIDGE NO. A7612

DRAWING NO. 66118

Date Plotted: 7/27/2023

DATE REVISED	DATE FILMED	DATE REVISED	DATE FILMED	FED. ROAD DIST. NO.	STATE	FED. AID PROJ. NO.	SHEET NO.	TOTAL SHEETS
				6	ARK.		330	838
				JOB NO.		012326		
				(1) A7612		BENT 3 DETAILS		66119

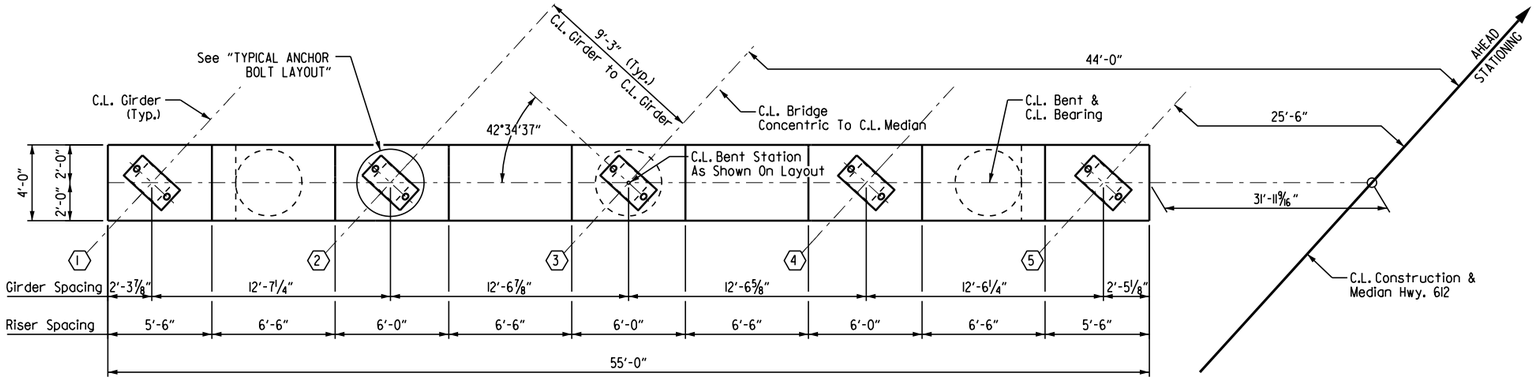

PLAN

¼" = 1'-0"

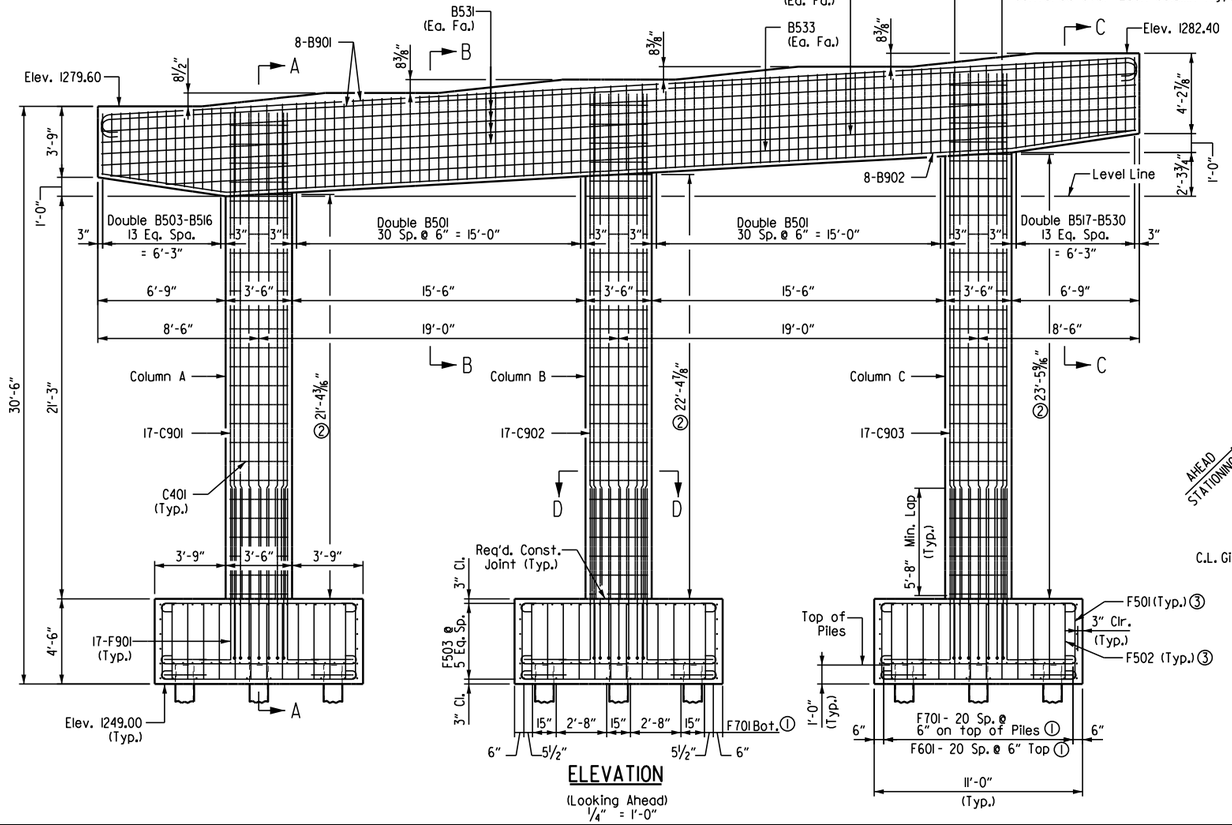

ELEVATION

(Looking Ahead)
¼" = 1'-0"

BRIDGE A - BENT 3 BAR LIST

Mark	Number Required	Length	Pin Dia.	Bending Diagrams (Dimensions are out to out of bars.)
B501	124	14'-4"	2½"	
B502	12	12'-6"	2½"	
B503 to B516	2 Each	12'-3" to 14'-4"	2½"	
B517 to B530	2 Each	15'-1" to 13'-5"	2½"	
B531	8	54'-9"	Str.	
B532	2	54'-3"	Str.	
B533	2	51'-3"	Str.	
B901	16	57'-3"	9"	
B902	8	54'-10"	9"	
C401	81	10'-9"	3"	
C901	17	25'-6"	Str.	
C902	17	26'-6"	Str.	
C903	17	27'-7"	Str.	
F501	72	5'-3"	2½"	
F502	66	5'-1"	2½"	
F503	72	10'-6"	Str.	
F601	126	11'-10"	4½"	
F701	174	12'-2"	5¼"	
F702	24	4'-3¾"	5¼"	
F901	51	10'-7"	9"	

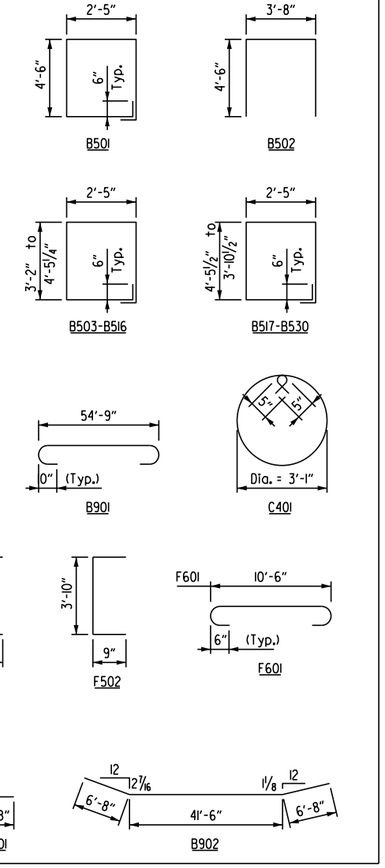

① Bar spacing in both directions.

② Dimension shown is at C.L. of Column.

③ See REINFORCING PLAN on Dwg. No. 66120.

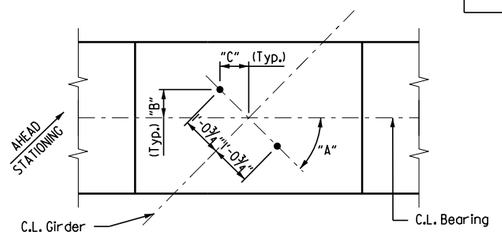

GIRDER	"A"	"B"	"C"
1	42°50'13"	8 11/16"	9 1/4"
2	42°42'23"	8 5/8"	9 3/8"
3	42°34'37"	8 5/8"	9 3/8"
4	42°26'55"	8 5/8"	9 7/16"
5	42°19'15"	8 7/16"	9 7/16"

Note: For Details Of Elastomeric Bearings, See Dwg. No. 66146.

TYPICAL ANCHOR BOLT LAYOUT

½" = 1'-0"

07.27.23

STATE OF ARKANSAS
LICENSED PROFESSIONAL ENGINEER
No. 19188
ERIC S. CHRISTIANSEN

Eric S. Christiansen

BRIDGE ENGINEER

For GENERAL NOTES FOR SUBSTRUCTURE, see Dwg. No. 66114 and Std. Dwg. No. 55006.

For additional information, see LAYOUT on Dwg. No. 66112.

For SECTION A-A, SECTION B-B, & SECTION C-C, see Dwg. No. 66120.

BRIDGE A
DETAILS OF BENT 3
HWY. 612 OVER RAMP 4

ROUTE 612 SEC. 1

ARKANSAS STATE HIGHWAY COMMISSION

LITTLE ROCK, ARK.

DRAWN BY: FAN DATE: 04-23
CHECKED BY: DHP DATE: 04-23
DESIGNED BY: WKB DATE: 04-23

FILENAME: B012326aC_B3.DGN
SCALE: AS SHOWN

BRIDGE NO. A7612

DRAWING NO. 66119

Date Plotted: 7/21/2023

DATE REVISED	DATE FILMED	DATE REVISED	DATE FILMED	FED. ROAD DIST. NO.	STATE	FED. AID PROJ. NO.	SHEET NO.	TOTAL SHEETS
				6	ARK.		331	838
				JOB NO.		012326		
				①	A&B7612	DETAILS OF BENTS 2 & 3		66120

GENERAL NOTES

For additional information, see LAYOUT on Dwg. No. 66112 & 66131.

① See REINFORCING PLAN

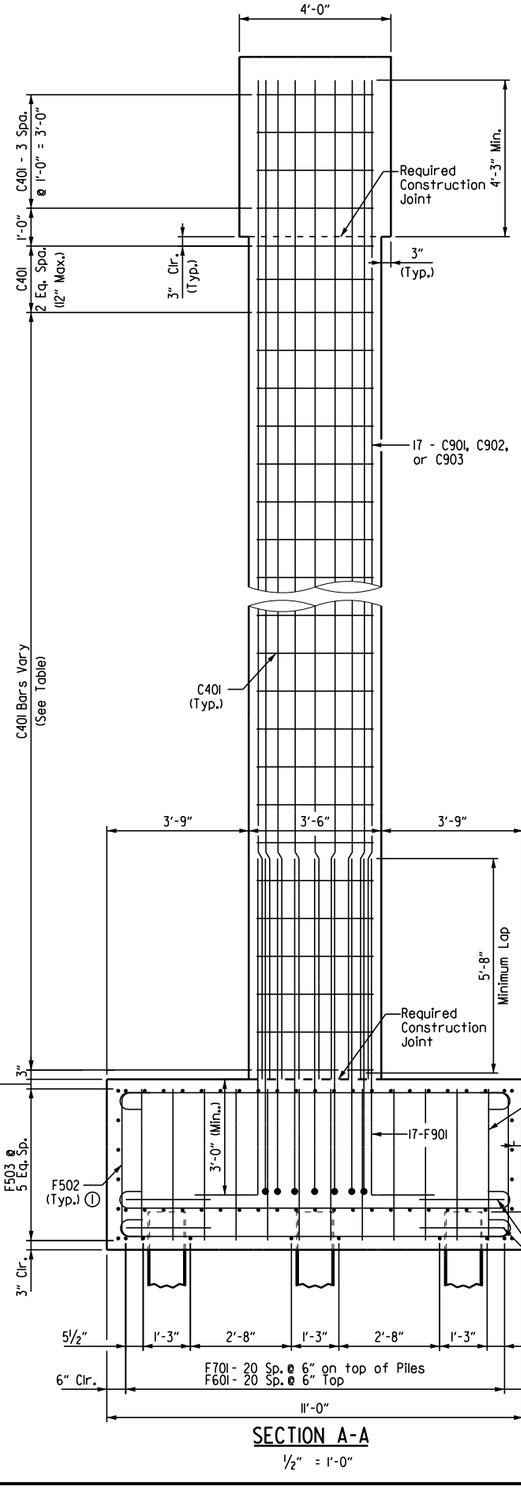

SECTION A-A

½" = 1'-0"

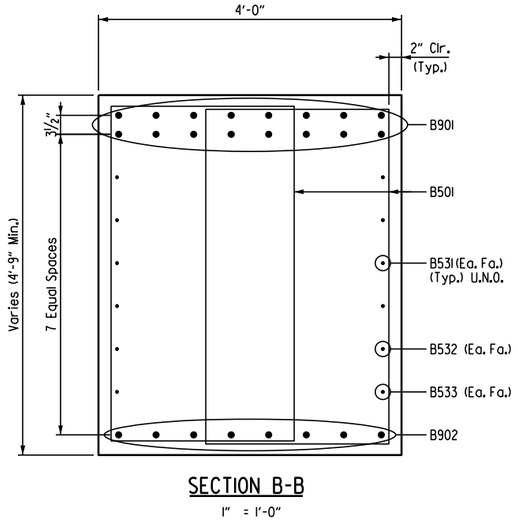

SECTION B-B

1" = 1'-0"

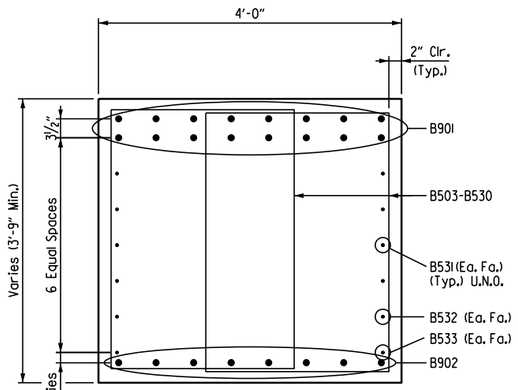

SECTION C-C

1" = 1'-0"

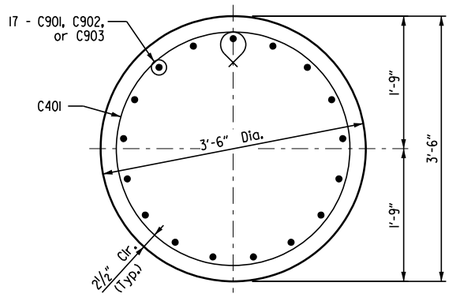

SECTION D-D

1" = 1'-0"

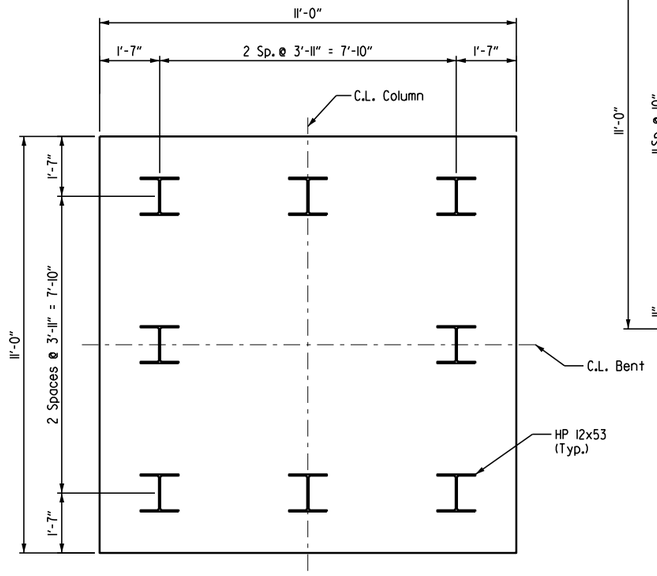

FOOTING PLAN

1" = 1'-0"

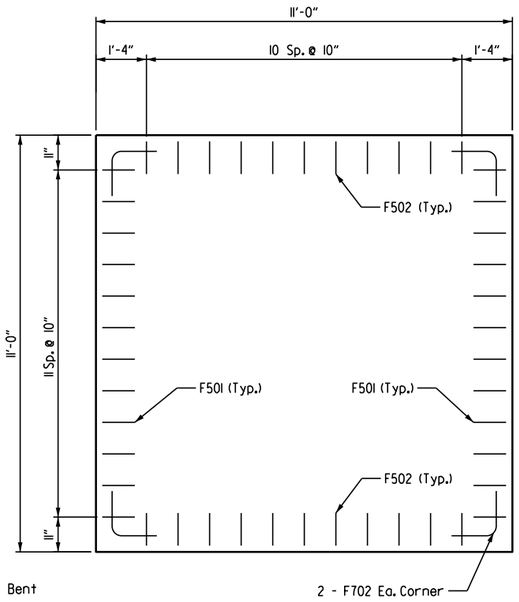

REINFORCING PLAN

1" = 1'-0"

C401 COLUMN BARS

	Bridge A		Bridge B	
	Bent 2	Bent 3	Bent 2	Bent 3
Column A	17 Spa. @ 1'-0" = 17'-0"	19 Spa. @ 1'-0" = 19'-0"	20 Spa. @ 1'-0" = 20'-0"	21 Spa. @ 1'-0" = 21'-0"
Column B	18 Spa. @ 1'-0" = 18'-0"	20 Spa. @ 1'-0" = 20'-0"	21 Spa. @ 1'-0" = 21'-0"	22 Spa. @ 1'-0" = 22'-0"
Column C	19 Spa. @ 1'-0" = 19'-0"	21 Spa. @ 1'-0" = 21'-0"	22 Spa. @ 1'-0" = 22'-0"	23 Spa. @ 1'-0" = 23'-0"

07.27.23

STATE OF ARKANSAS
LICENSED PROFESSIONAL ENGINEER
No. 19188
ERIC S. CHRISTIANSEN

Eric S. Christiansen

BRIDGE ENGINEER

COMMON DETAILS OF BENTS 2 & 3 HWY. 612 OVER RAMP 4

ROUTE 612 SEC. 1

ARKANSAS STATE HIGHWAY COMMISSION

LITTLE ROCK, ARK.

DRAWN BY: FAN DATE: 04-23 FILENAME: B012326MC_B2.DGN

CHECKED BY: DHP DATE: 04-23 SCALE: AS SHOWN

DESIGNED BY: WKB DATE: 04-23

BRIDGE NO. A&B7612 DRAWING NO. 66120

Date Plotted: 7/27/2023

NOTE: Class 2 Protective Surface Treatment shall be applied to the roadway face and top of the end bent rail and the top of the backwall.

DATE REVISED	DATE FILMED	DATE REVISED	DATE FILMED	FED. ROAD DIST. NO.	STATE	FED. AID PROJ. NO.	SHEET NO.	TOTAL SHEETS
				6	ARK.		332	838
				JOB NO.		012326		
				(1) A7612		END BENT 4 DETAILS		66121

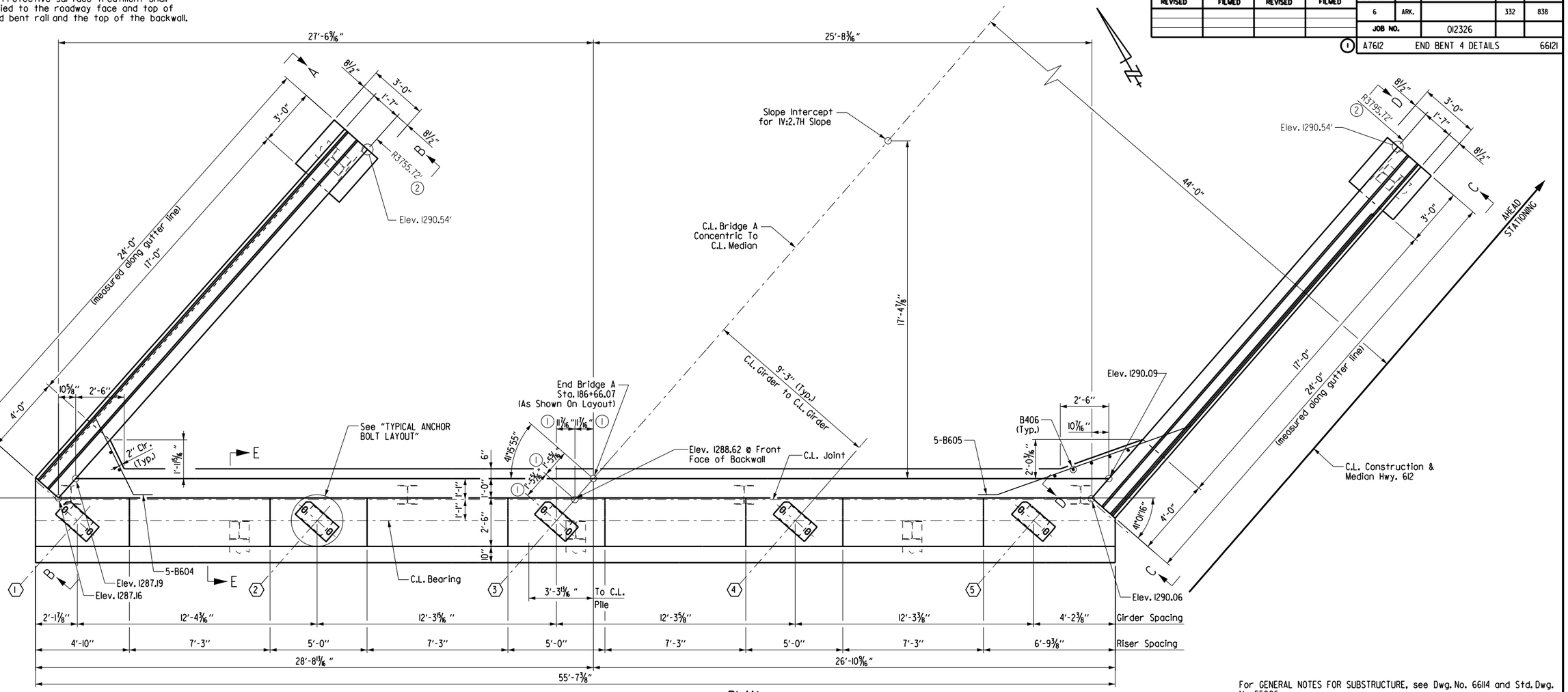

PLAN

Scale: ⅜" = 1'-0"

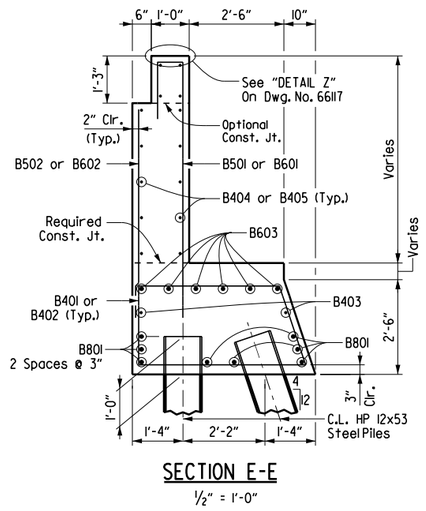

SECTION E-E

½" = 1'-0"

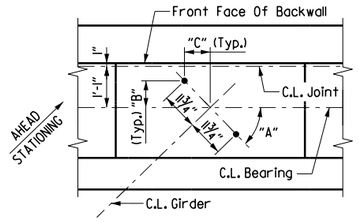

GIRDER	"A"	"B"	"C"
1	41°33'27"	7¹⁵⁄₁₆"	8¹³⁄₁₆"
2	41°25'58"	7¾"	8¹³⁄₁₆"
3	41°18'33"	7¾"	8¹³⁄₁₆"
4	41°11'10"	7¾"	8¹³⁄₁₆"
5	41°03'50"	7¹¹⁄₁₆"	8⅞"

Note: For Details Of Elastomeric Bearings, See Dwg. No. 66146.

TYPICAL ANCHOR BOLT LAYOUT

½" = 1'-0"

07.27.23

STATE OF ARKANSAS
LICENSED PROFESSIONAL ENGINEER
No. 19188
ERIC S. CHRISTIANSEN

Eric S. Christiansen

BRIDGE ENGINEER

For GENERAL NOTES FOR SUBSTRUCTURE, see Dwg. No. 66114 and Std. Dwg. No. 55006.

For additional information, see LAYOUT on Dwg. No. 66112.

For VIEW A-A, VIEW B-B, VIEW C-C, and VIEW D-D, see Dwg. No. 66123.

For DETAIL Z, see Dwg. No. 66117.

For Details of Wing and Rail, see Dwg. No. 66117, 66123, & 66130.

(1) Dimensions shown are to C.L. Joint

(2) Radius is for Gutter line only. Wingwall and Rail shall be constructed perpendicular to radial line at intersection of Gutter line Radii and Front Face of Backwall.

SHEET 1 OF 3
BRIDGE A
DETAILS OF END BENT 4
HWY. 612 OVER RAMP 4

ROUTE 612 SEC. 1

ARKANSAS STATE HIGHWAY COMMISSION

LITTLE ROCK, ARK.

DRAWN BY: FAN DATE: 04-23
CHECKED BY: DHP DATE: 04-23
DESIGNED BY: WKB DATE: 04-23

FILENAME: B012326aC_B41.DGN
SCALE: ⅜" = 1'-0"

BRIDGE NO. A7612

DRAWING NO. 66121

Date Plotted: 7/21/2023

NOTE: Class 2 Protective Surface Treatment shall be applied to the roadway face and top of the end bent rail and the top of the backwall.

MINIMUM LAP SPLICE
#4 Bars = 2'-5"
#6 Bars = 3'-7"

(A) B601 - 5 Spa. @ 6" = 2'-6" (Fr. Fa.)
B602 - 5 Spa. @ 6" = 2'-6" (Bk. Fa.)

(B) B601 - Front Face Only

(C) B601 - 4 Spa. @ 6" = 2'-0" (Fr. Fa.)
B602 - 4 Spa. @ 6" = 2'-0" (Bk. Fa.)

(D) B602 - Back Face Only

(E) B401U-bars where indicated.

DATE REVISED	DATE FILMED	DATE REVISED	DATE FILMED	FED. ROAD DIST. NO.	STATE	FED. AID PROJ. NO.	SHEET NO.	TOTAL SHEETS
				6	ARK.		333	838
				JOB NO.		012326		
				(1) A7612		END BENT 4 DETAILS		66122

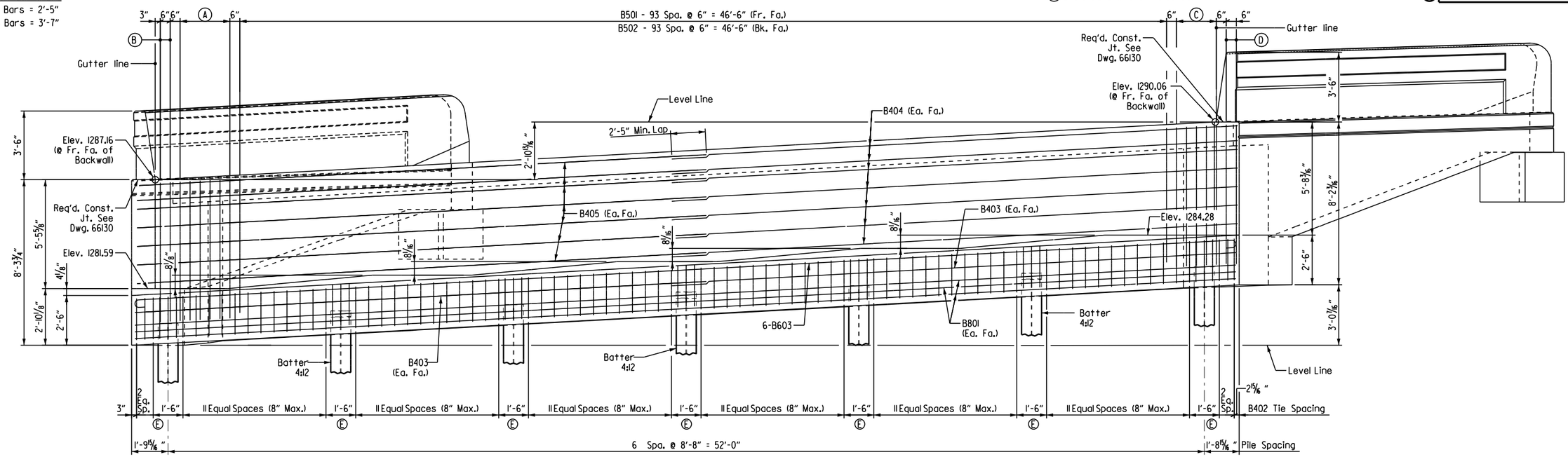

ELEVATION
(Looking Ahead)
Scale: ⅜" = 1'-0"

BRIDGE A - END BENT 4 BAR LIST

Mark	No. Req'd	Length	Pin Dia.
B401	21	7'-10"	2"
B402	78	12'-9"	2"
B403	4	28'-10"	Str.
B404	14	29'-4"	2"
B405	14	29'-2"	2"
B406	7	6'-5"	Str.
B501	94	8'-9"	2 1/2"
B502	94	5'-6"	Str.
B601	13	8'-10"	4 1/2"
B602	13	5'-9"	Str.
B603	6	56'-7"	4 1/2"
B604	5	6'-5"	4 1/2"
B605	5	12'-1"	4 1/2"
B801	8	55'-3"	Str.
W401	4	8'-2"	Str.
W402	4	10'-7"	Str.
W403 to W413	1 Each	5'-5½" to 3'-4"	Str.
W414 to W419	1 Each	4'-3½" to 3'-2½"	Str.
W420 to W430	1 Each	5'-5½" to 3'-4"	Str.
W431 to W436	1 Each	4'-3½" to 3'-2½"	Str.
W437	3	7'-10"	2"
W438	4	8'-0½"	Str.
W439	4	10'-6"	Str.
W440 to W445	1 Each	3'-2½" to 4'-4½"	Str.

Mark	No. Req'd	Length	Pin Dia.
W446 to W456	1 Each	3'-5" to 5'-8½"	Str.
W457 to W462	1 Each	3'-2½" to 4'-4½"	Str.
W463 to W473	1 Each	3'-5" to 5'-8 1/2"	Str.
W474	3	12'-8"	2"
W475E	96	4'-7"	6"
W601	24	4'-0"	4½"
W602	12	2'-8"	Str.
W701	12	23'-8"	Str.
W702	2	16'-2"	Str.
W703	2	11'-6"	Str.
W704	2	6'-10"	Str.
W705	2	22'-4"	5 1/4"
W706	2	16'-6"	Str.
W707	2	12'-2"	Str.
W708	2	7'-10"	Str.
W709	2	22'-5"	5 1/4"
R401E	92	7'-6"	3"
R402E	8	5'-6"	Str.
R404E	4	3'-8"	8½"
R405E	16	23'-8"	Str.
R406E	4	23'-5"	Str.
R407E	2	6'-8"	3"
R408E	2	5'-1"	3"

BENDING DIAGRAMS
(Dimensions are out to out of bars)

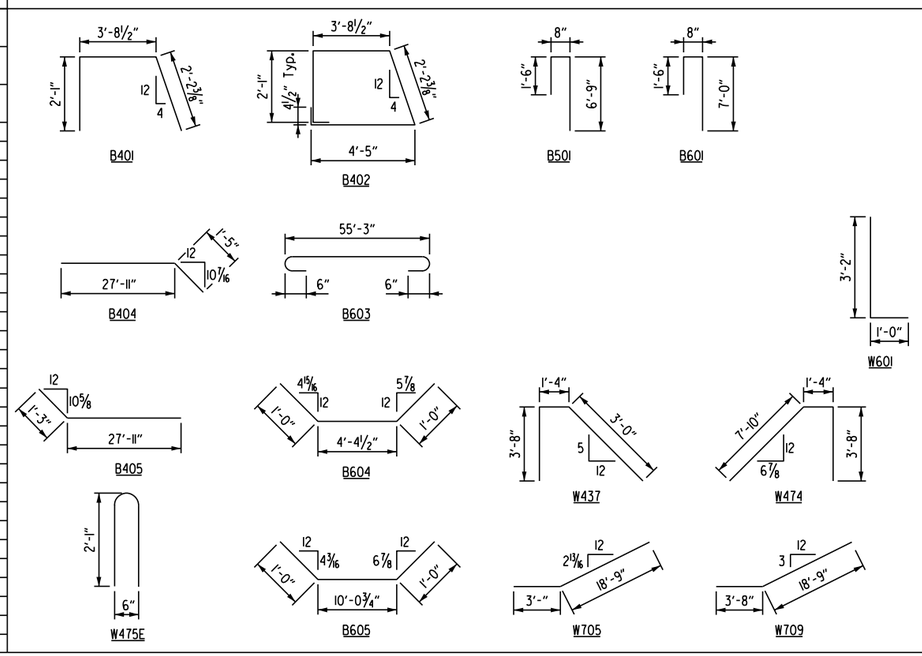

Note:
See Dwg. No. 66130 for Traffic Rail reinforcing bar bending diagrams.

For GENERAL NOTES FOR SUBSTRUCTURE, see Dwg. No. 66114 and Std. Dwg. No. 55006.

For additional information, see LAYOUT on Dwg. No. 66112.

For Details of Wing and Rail, see Dwg. No. 66117, 66123, & 66130.

07.27.23
STATE OF ARKANSAS
LICENSED PROFESSIONAL ENGINEER
No. 19188
ERIC S. CHRISTIANSEN
Eric S. Christiansen
BRIDGE ENGINEER

SHEET 2 OF 3
BRIDGE A
DETAILS OF END BENT 4
HWY. 612 OVER RAMP 4

ROUTE 612 SEC. 1

ARKANSAS STATE HIGHWAY COMMISSION
LITTLE ROCK, ARK.

DRAWN BY: FAN DATE: 04-23
CHECKED BY: DHP DATE: 04-23
DESIGNED BY: WKB DATE: 04-23
FILENAME: B012326aC_B42.DGN
SCALE: ⅜" = 1'-0"

BRIDGE NO. A7612
DRAWING NO. 66122

Date Plotted: 7/21/2023

DATE REVISED	DATE FILMED	DATE REVISED	DATE FILMED	FED. ROAD DIST. NO.	STATE	FED. AID PROJ. NO.	SHEET NO.	TOTAL SHEETS
				6	ARK.		334	838
				JOB NO.		012326		

(1) A7612 END BENT 4 DETAILS 66123

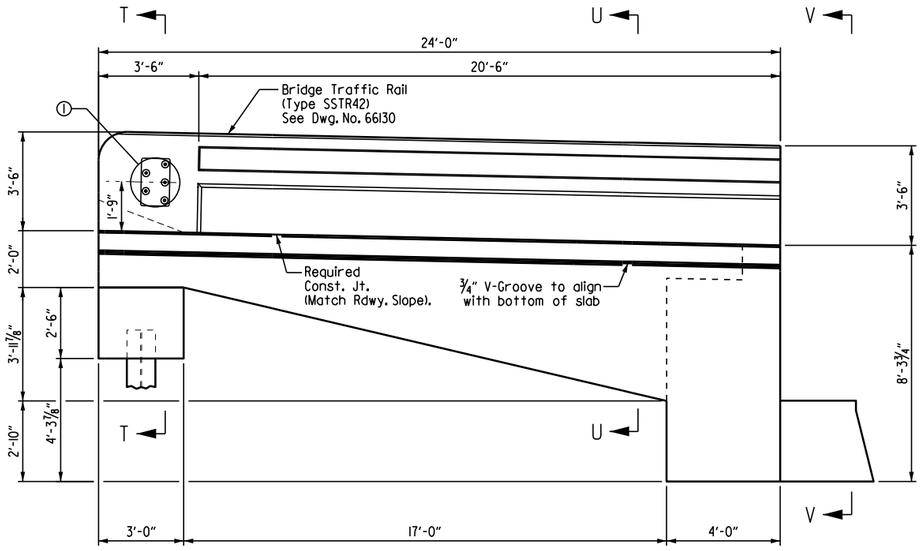

VIEW A-A

Scale: ⅜" = 1'-0"

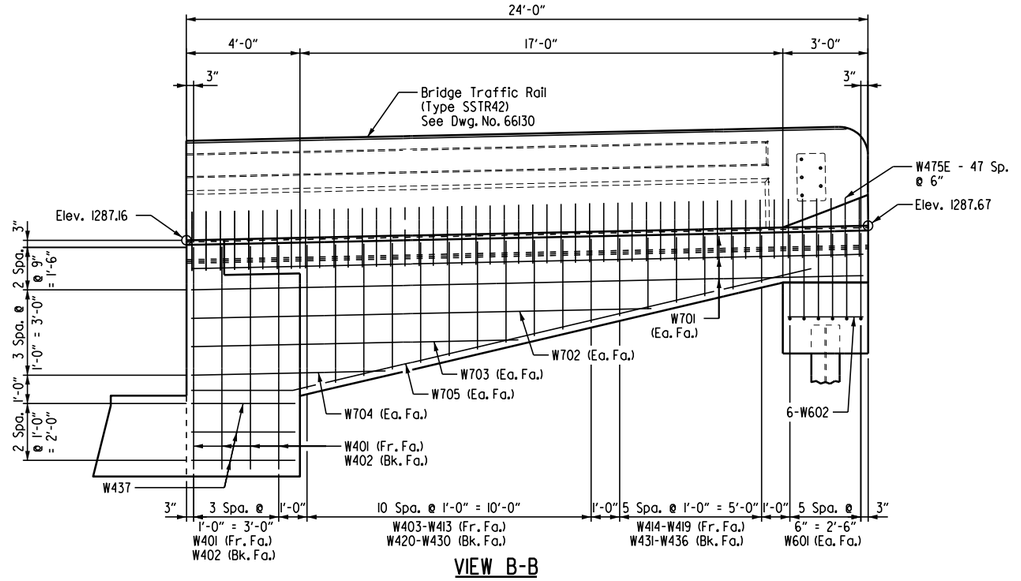

VIEW B-B

Scale: ⅜" = 1'-0"

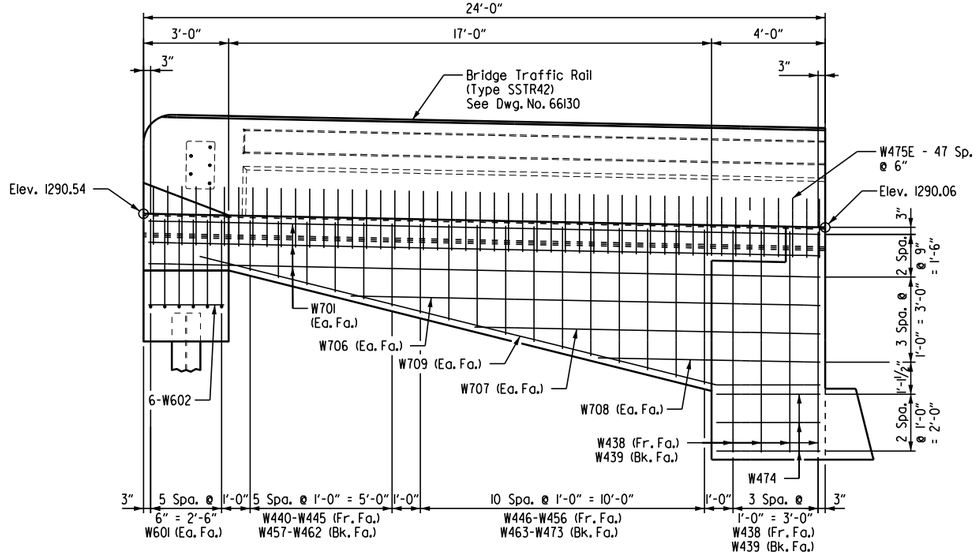

VIEW D-D

Scale: ⅜" = 1'-0"

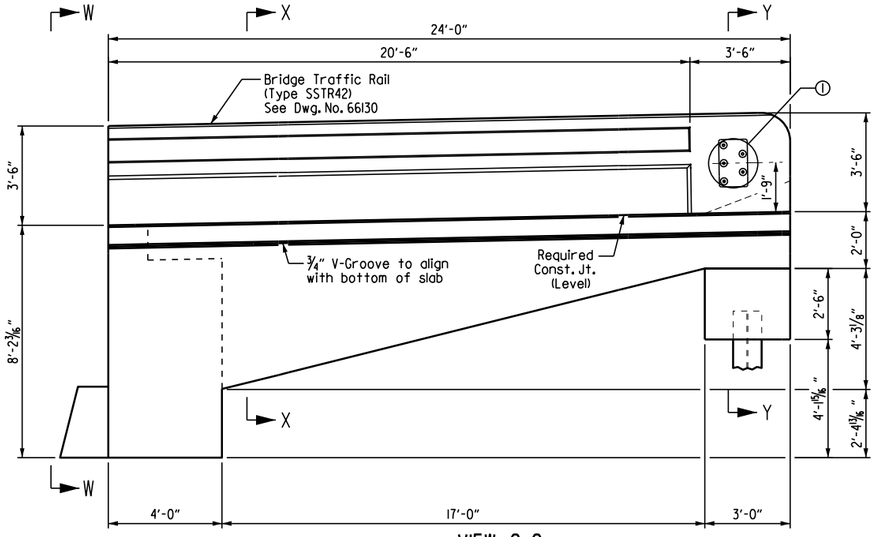

VIEW C-C

Scale: ⅜" = 1'-0"

For GENERAL NOTES FOR SUBSTRUCTURE, see Dwg. No. 66114 and Std. Dwg. No. 55006.

For additional information, see LAYOUT on Dwg. No. 66112.

For SECTION T-T, SECTION U-U, VIEW V-V, VIEW W-W, SECTION X-X, and SECTION Y-Y, see Dwg. No. 66117.

(1) 5 - 1"ø formed holes for guard rail connection. See Std. Dwg. No. GR-10 for bolt spacing and additional connection details.

07-27-23

STATE OF ARKANSAS
LICENSED PROFESSIONAL ENGINEER
No. 19188
ERIC S. CHRISTIANSEN

Eric S. Christiansen

BRIDGE ENGINEER

SHEET 3 OF 3
BRIDGE A
DETAILS OF END BENT 4
HWY. 612 OVER RAMP 4

ROUTE 612 SEC. 1

ARKANSAS STATE HIGHWAY COMMISSION

LITTLE ROCK, ARK.

DRAWN BY: FAN DATE: 04-23
CHECKED BY: DHP DATE: 04-23
DESIGNED BY: WKB DATE: 04-23

FILENAME: B012326aC_B43.DGN
SCALE: AS SHOWN

BRIDGE NO. A7612 DRAWING NO. 66123

Date Plotted: 7/21/2023

DATE REVISED	DATE FILMED	DATE REVISED	DATE FILMED	FED. ROAD DIST. NO.	STATE	FED. AID PROJ. NO.	SHEET NO.	TOTAL SHEETS
				6	ARK.		335	838
				JOB NO.		012326		
				(1) A7612		SPAN DETAILS		66124

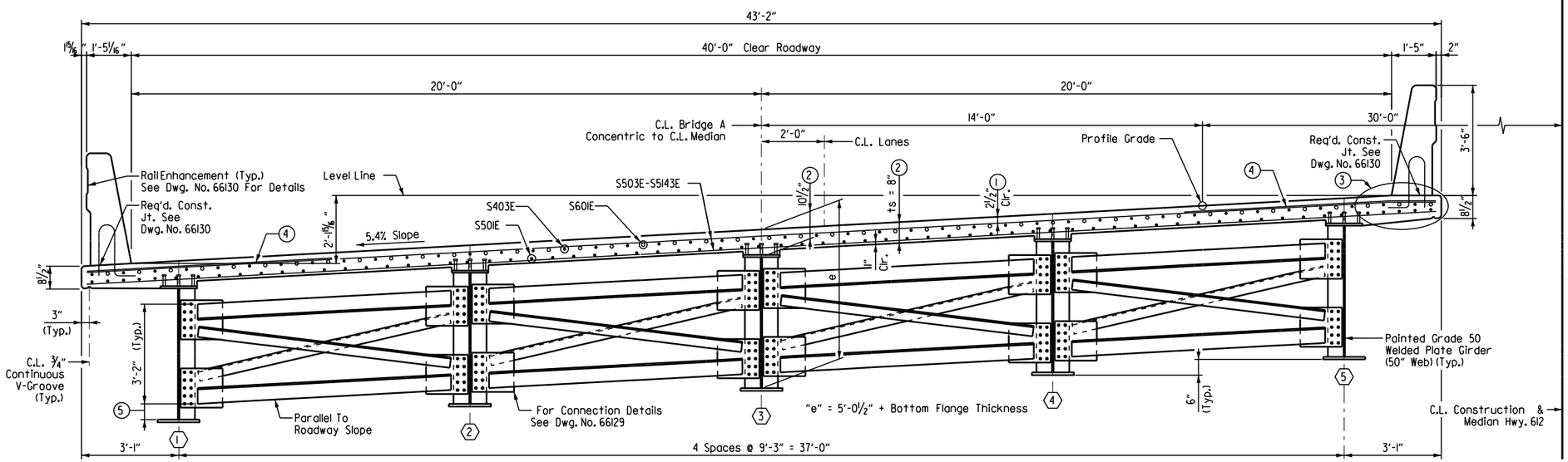

(5) 6" (Typ.) U.N.O. - 3" @ Bents 1 & 4

TYPICAL SECTION

(Looking Ahead)
Scale: 1/2" = 1'-0"

NOTES:

Class 2 Protective Surface Treatment shall be applied to the roadway surface and the top and roadway face of bridge traffic railing.

All bars designated with an "E" suffix are to be epoxy coated.

Bar positions or clearances from the forms shall be maintained by means of stays, ties, hangers or other approved devices per Subsection 804.06. Placement of slab bolsters or hi-chairs with full-length lower runners directly on removable deck forms will not be allowed.

EXPANSION DEVICE:

Roadway Channel MC18x42.7 (ASTM A709, Gr. 50)
Connection ∠'s 8"x4"x1/2" x 8" Long
Detail Device 1/8" high & provide 1/4" shims using 1- 1/8" PL & 2 - 1/16" PL's

For details of Poured Silicone Joint, see Std. Dwg. No. 55008 & Dwg. No. 66145.

SLAB REINFORCING:

Transverse:
S503E @ 6" Centers (Top & Bottom)
S504E-S5143E @ 6" Centers (Top & Bottom)
(4) S602E (Place as shown)
See DETAIL A on Dwg. No. 66125.
Longitudinal:
S403E @ 12" Centers (Top)
S501E Place as shown (Bottom)
S601E @ 12" Centers (Top over Int. Bents)

For additional reinforcing details, see Dwg. No. 66125-66126.

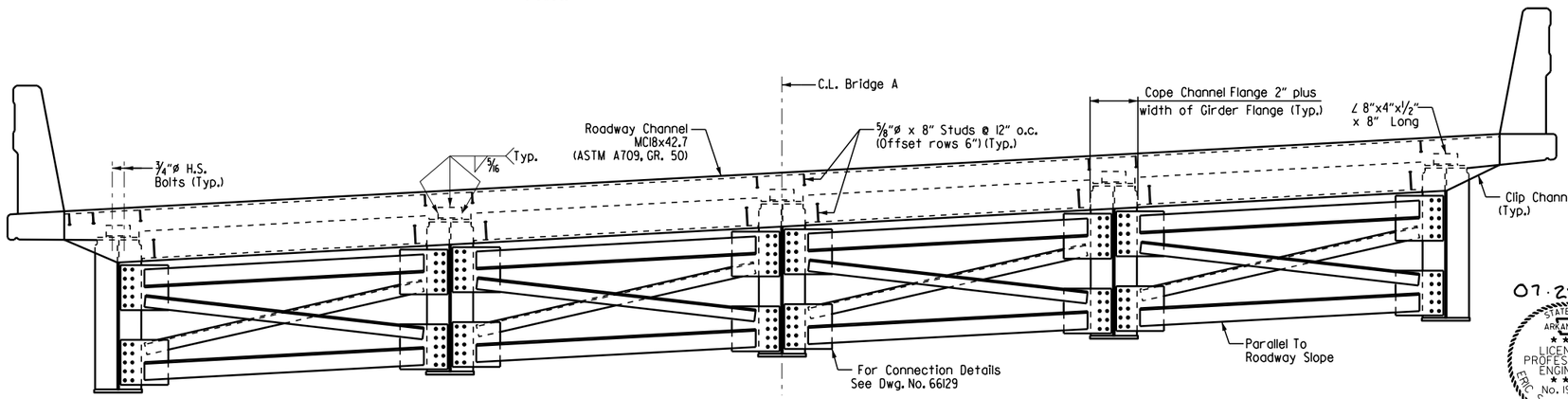

VIEW @ C.L. JOINT

(Looking Ahead)
Scale: 1/2" = 1'-0"

(1) TOLERANCE: Minus = 1/4":
Plus equal to the amount of slab thickening used to meet the slab thickness tolerance. See "ADJUSTMENT FOR SLAB THICKNESS TOLERANCE" on Std. Dwg. No. 55007.

(2) See "ADJUSTMENT FOR SLAB THICKNESS TOLERANCE" on Std. Dwg. No. 55007.

(3) Field bend transverse bars in this area to provide minimum clearances.

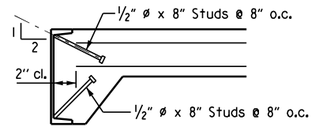

Note: As an alternate to 5/8" ø studs, 1/2" ø x 8" studs spaced as shown may be used. Use weight of 5/8" ø stud as basis of measurement of structural steel in anchors.

DETAIL OF ALTERNATE ANCHORS

No Scale

07.27.23

STATE OF ARKANSAS
LICENSED PROFESSIONAL ENGINEER
No. 19188
ERIC S. CHRISTIANSEN

Eric S. Christiansen

BRIDGE ENGINEER

SHEET 1 OF 5
BRIDGE A
DETAILS OF 302'-0" CONTINUOUS PLATE GIRDER UNIT HWY. 612 OVER RAMP 4

ROUTE 612 SEC. 1

ARKANSAS STATE HIGHWAY COMMISSION

LITTLE ROCK, ARK.

DRAWN BY: FAN DATE: 04-23
CHECKED BY: DHP DATE: 04-23
DESIGNED BY: WKB DATE: 04-23
FILENAME: B012326aC_SI.DGN
SCALE: As Shown

BRIDGE NO. A7612 DRAWING NO. 66124

Date Plotted: 7/21/2023

DATE REVISED	DATE FILMED	DATE REVISED	DATE FILMED	FED. ROAD DIST. NO.	STATE	FED. AID PROJ. NO.	SHEET NO.	TOTAL SHEETS
				6	ARK.		336	838
				JOB NO.		012326		

(1) A7612 SPAN DETAILS 66125

Note: See TYPICAL SECTION on Dwg. No. 66124 for placement of longitudinal reinforcing.

Note: For Bar List, see Dwg. No. 66126.

Note: For SECTION W-W, see Dwg. No. 66126.

Note: All transverse reinforcing steel shall be placed on radial lines. Spacing is measured along C.L. Bridge, unless noted otherwise.

All longitudinal lines and longitudinal reinforcing steel shall be placed on curves concentric with C.L. Bridge.

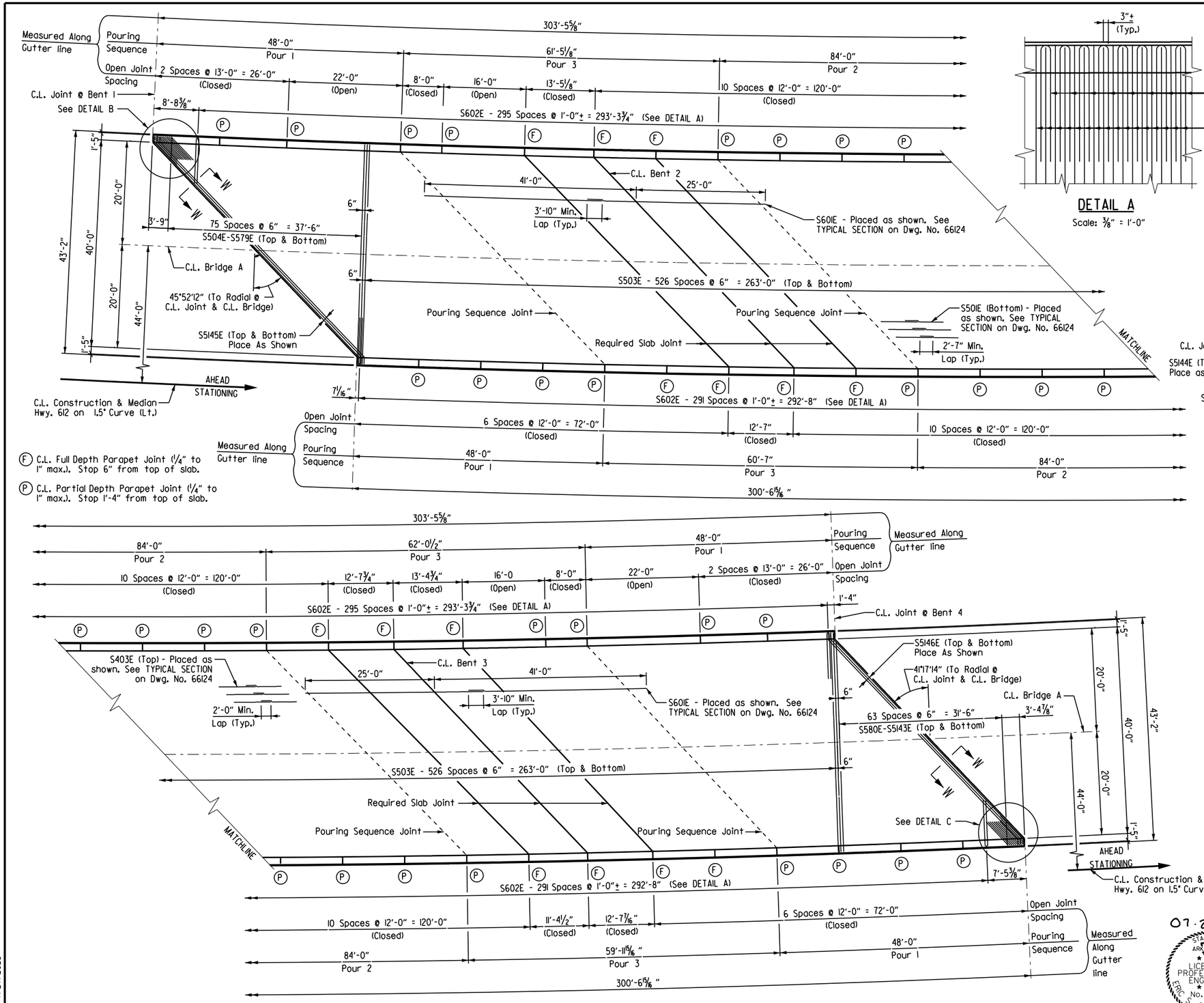

REINFORCING PLAN & POURING SEQUENCE

Scale: 1" = 10'-0"

DETAIL A

Scale: ⅜" = 1'-0"

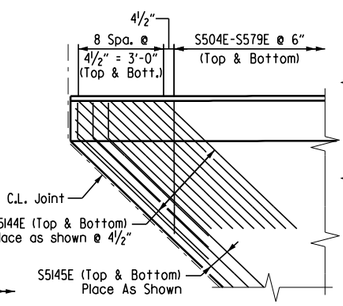

DETAIL B

Scale: ⅜" = 1'-0"

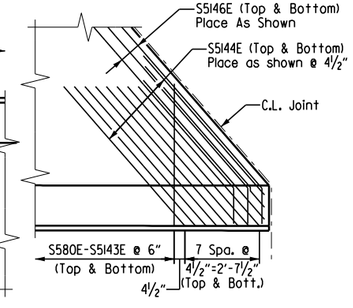

DETAIL C

Scale: ⅜" = 1'-0"

Note: Pours with the same number may be placed simultaneously or separately. All Pours (1) must be placed before Pour (2) can be placed. Pour (2) must be placed before Pour (3) can be placed. 48 hours shall elapse before the end of a pour and the start of the next pour. 72 hours shall elapse between the end of a pour and the start of an adjacent pour. 72 hours shall elapse between the completion of the entire deck and the pouring of the parapet. Any railing pours made before the entire slab unit has been placed must be approved by the Engineer. 72 hours shall elapse between the completion of the entire deck and the pouring of the parapet. Any railing pours made before the entire slab unit has been placed must be approved by the Engineer.

The Contractor must obtain approval from the Engineer for any deviations from the pouring sequence shown.

Concrete in bridge superstructure shall be consolidated for the entire pour before any concrete has taken its initial set. This may require the use of a retarding agent.

Note: Required slab joints and pouring sequence joints shall align with parapet open joint at the gutterline.

07-27-23

STATE OF ARKANSAS
LICENSED PROFESSIONAL ENGINEER
No. 19188
ERIC S. CHRISTIANSEN

Eric S. Christiansen

BRIDGE ENGINEER

SHEET 2 OF 5
BRIDGE A
DETAILS OF 302'-0" CONTINUOUS PLATE GIRDER UNIT
HWY. 612 OVER RAMP 4

ROUTE 612 SEC. 1

ARKANSAS STATE HIGHWAY COMMISSION

LITTLE ROCK, ARK.

DRAWN BY: FAN DATE: 04-23
CHECKED BY: DHP DATE: 04-23
DESIGNED BY: WKB DATE: 04-23
FILENAME: B012326aC_S2.DGN
SCALE: As Shown

BRIDGE NO. A7612 DRAWING NO. 66125

Date Plotted: 7/21/2023

DATE REVISED	DATE FILMED	DATE REVISED	DATE FILMED	FED. ROAD DIST. NO.	STATE	FED. AID PROJ. NO.	SHEET NO.	TOTAL SHEETS
				6	ARK.		337	838
				JOB NO.		012326		
				(1) A7612		SPAN DETAILS		66126

TABLE OF DEAD LOAD DEFLECTIONS (INCHES)

Camber for Dead Load Deflection plus vertical curve +/- 1/4" tolerance. Vertical curve corrections not included. Negative sign (-) indicates upward deflection. Deflections shown are off a chord from centerline bearing to centerline bearing.

Span	Point of Deflection	Stuctural Steel					Structural Steel + Slab					Structural Steel + Slab + Rail					
		Girder 1	Girder 2	Girder 3	Girder 4	Girder 5	Girder 1	Girder 2	Girder 3	Girder 4	Girder 5	Girder 1	Girder 2	Girder 3	Girder 4	Girder 5	
Span 1	0	0	0	0	0	0	0	0	0	0	0	0	0	0	0	0	0
	0.1	0.025	0.025	0.027	0.027	0.023	0.124	0.144	0.148	0.147	0.114	0.145	0.158	0.159	0.159	0.132	
	0.2	0.044	0.045	0.048	0.047	0.041	0.219	0.252	0.26	0.258	0.2	0.258	0.276	0.279	0.279	0.233	
	0.3	0.055	0.054	0.058	0.057	0.049	0.268	0.304	0.316	0.314	0.239	0.318	0.333	0.340	0.340	0.280	
	0.4	0.054	0.052	0.057	0.057	0.048	0.261	0.29	0.306	0.304	0.228	0.313	0.319	0.329	0.330	0.269	
	0.5	0.043	0.039	0.045	0.044	0.036	0.202	0.214	0.233	0.232	0.166	0.249	0.237	0.251	0.253	0.199	
	0.6	0.024	0.019	0.025	0.025	0.018	0.107	0.098	0.119	0.119	0.075	0.141	0.112	0.129	0.131	0.097	
	0.7	0.004	-0.003	0.004	0.003	-0.002	0.004	-0.025	-0.005	-0.003	-0.026	0.022	-0.022	-0.004	0.000	-0.020	
	0.8	-0.012	-0.019	-0.013	-0.014	-0.015	-0.075	-0.113	-0.096	-0.094	-0.093	-0.072	-0.119	-0.102	-0.099	-0.098	
	0.9	-0.015	-0.02	-0.017	-0.017	-0.017	-0.085	-0.116	-0.107	-0.105	-0.094	-0.090	-0.124	-0.114	-0.112	-0.102	
Span 2	0	0	0	0	0	0	0	0	0	0	0	0	0	0	0	0	0
	0.1	0.068	0.078	0.072	0.072	0.065	0.359	0.448	0.431	0.426	0.347	0.400	0.484	0.463	0.461	0.391	
	0.2	0.173	0.191	0.183	0.182	0.167	0.912	1.103	1.086	1.073	0.882	1.022	1.192	1.168	1.162	0.999	
	0.3	0.276	0.306	0.297	0.296	0.275	1.451	1.772	1.756	1.736	1.45	1.630	1.916	2.048	1.880	1.642	
	0.4	0.349	0.387	0.377	0.375	0.349	1.836	2.246	2.227	2.203	1.838	2.065	2.429	2.394	2.386	2.077	
	0.5	0.374	0.414	0.404	0.403	0.375	1.966	2.413	2.39	2.366	1.974	2.214	2.609	2.569	2.564	2.228	
	0.6	0.346	0.383	0.373	0.372	0.35	1.82	2.236	2.211	2.19	1.842	2.053	2.418	2.377	2.375	2.076	
	0.7	0.27	0.299	0.291	0.291	0.275	1.424	1.751	1.73	1.715	1.45	1.610	1.893	1.861	1.861	1.632	
	0.8	0.168	0.184	0.179	0.179	0.17	0.889	1.082	1.068	1.059	0.902	1.007	1.170	1.150	1.150	1.013	
	0.9	0.069	0.071	0.069	0.069	0.069	0.37	0.421	0.415	0.411	0.371	0.419	0.455	0.447	0.447	0.415	
Span 3	0	0	0	0	0	0	0	0	0	0	0	0	0	0	0	0	0
	0.1	-0.012	-0.013	-0.013	-0.013	-0.014	-0.072	-0.088	-0.086	-0.085	-0.082	-0.077	-0.094	-0.092	-0.091	-0.087	
	0.2	-0.006	-0.007	-0.005	-0.007	-0.01	-0.05	-0.06	-0.057	-0.057	-0.066	-0.049	-0.062	-0.060	-0.060	-0.062	
	0.3	0.013	0.012	0.014	0.012	0.007	0.038	0.043	0.046	0.044	0.016	0.053	0.051	0.052	0.051	0.036	
	0.4	0.035	0.037	0.039	0.037	0.031	0.15	0.185	0.188	0.184	0.135	0.181	0.205	0.204	0.203	0.173	
	0.5	0.055	0.06	0.061	0.059	0.051	0.256	0.315	0.317	0.311	0.239	0.301	0.345	0.342	0.341	0.292	
	0.6	0.067	0.072	0.074	0.071	0.062	0.317	0.39	0.39	0.384	0.301	0.369	0.425	0.420	0.420	0.360	
	0.7	0.066	0.072	0.073	0.071	0.063	0.32	0.393	0.393	0.387	0.308	0.370	0.427	0.423	0.422	0.364	
	0.8	0.053	0.058	0.059	0.057	0.051	0.26	0.32	0.32	0.315	0.252	0.299	0.347	0.344	0.344	0.296	
	0.9	0.03	0.033	0.033	0.032	0.029	0.147	0.181	0.181	0.178	0.142	0.169	0.196	0.195	0.194	0.166	
	0	0	0	0	0	0	0	0	0	0	0	0	0	0	0	0	0

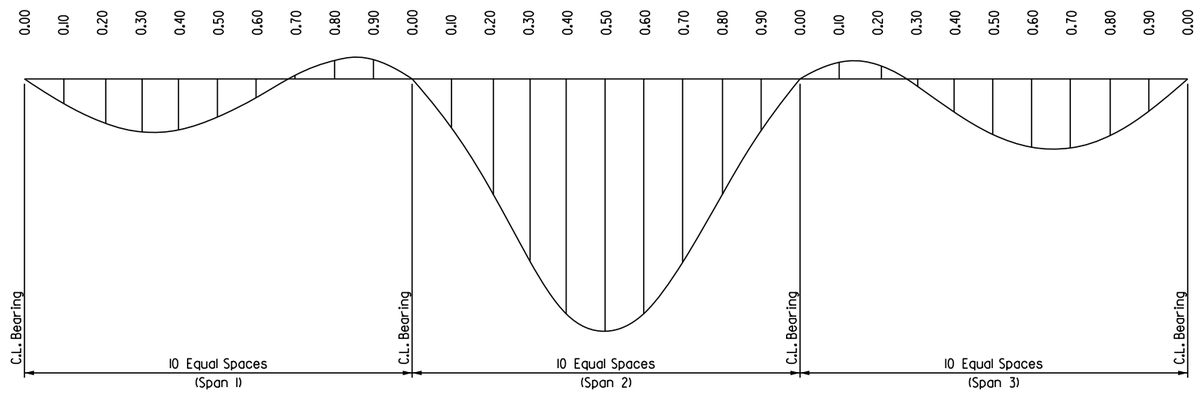

DEAD LOAD DEFLECTION DIAGRAM

Not to Scale

BRIDGE A - SUPERSTRUCTURE BAR LIST

Mark	Number Required	Length	Pin Dia.
S401E	36	4'-1"	2"
S402E	36	4'-0"	2"
S403E	344	39'-8"	Str.
S501E	402	52'-8"	Str.
S503E	1054	42'-10"	Str.
S504E to S579E	2 Each	41'-5" to 5'-0"	Str.
S580E to S5143E	2 Each	41'-2" to 5'-4"	Str.
S5144E	46	6'-10"	Str.
S5145E	6	60'-6"	3 3/4"
S5146E	6	56'-3"	3 3/4"
S5147E	12	13'-0"	Str.
S5148E	12	11'-11"	Str.
S601E	172	34'-11"	Str.
S602E	588	18'-1 1/2"	5 1/4"
R400E	16	6'-3"	3"
R401E	1203	7'-6"	3"
R402E	128	5'-6"	Str.
R403E	1203	3'-8"	6"
R404E	4	3'-8"	8 1/2"
R405E	32	23'-8"	Str.
R406E	8	23'-8"	Str.
R407E	4	6'-8"	3"
R408E	4	5'-1"	3"
R409E	20	7'-8"	Str.
R410E	10	11'-1"	Str.
R411E	320	11'-8"	Str.
R412E	20	12'-3"	Str.
R413E	10	12'-4"	Str.
R414E	40	12'-8"	Str.
R415E	20	13'-1"	Str.
R416E	20	15'-8"	Str.
R417E	20	21'-8"	Str.

Note: See Dwg. No. 66130 For RXXXE Bending Diagrams

Bending Diagrams (Dimensions are out to out of bars.)

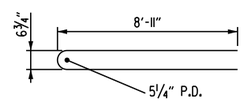

S602E

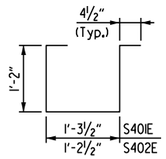

S401E & S402E

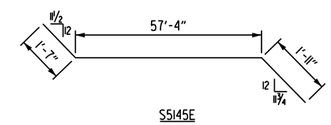

S5145E

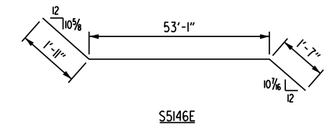

S5146E

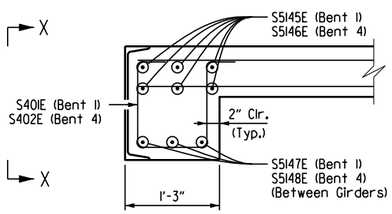

SECTION W-W

Scale: 1" = 1'-0"

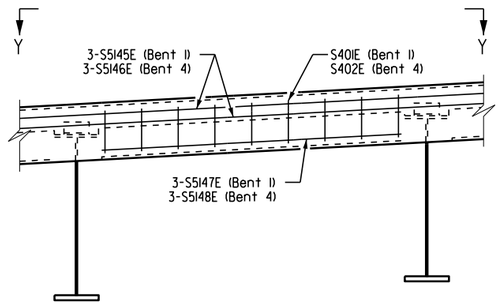

VIEW X-X

Scale: 1/2" = 1'-0"

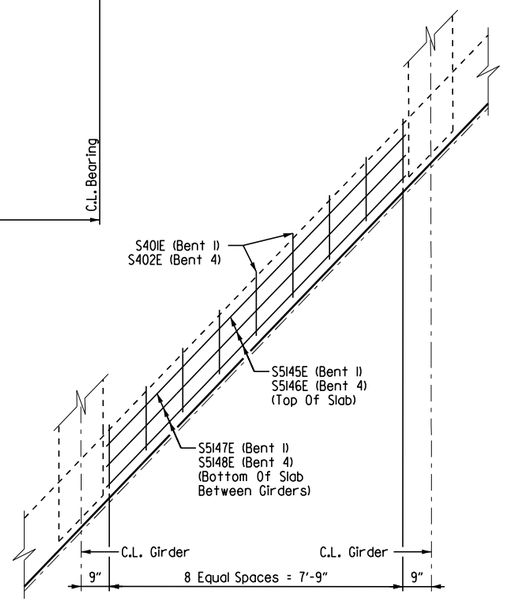

VIEW Y-Y

Scale: 1/2" = 1'-0"

07-27-23

STATE OF ARKANSAS
LICENSED PROFESSIONAL ENGINEER
No. 19188
ERIC S. CHRISTIANSEN

Eric S. Christiansen

BRIDGE ENGINEER

SHEET 3 OF 5
BRIDGE A
DETAILS OF 302'-0" CONTINUOUS PLATE GIRDER UNIT
HWY. 612 OVER RAMP 4

ROUTE 612 SEC. 1

ARKANSAS STATE HIGHWAY COMMISSION

LITTLE ROCK, ARK.

DRAWN BY: FAN DATE: 04-23
CHECKED BY: DHP DATE: 04-23
DESIGNED BY: WKB DATE: 04-23
FILENAME: B012326aC_S3.DGN
SCALE: As Shown

BRIDGE NO. A7612 DRAWING NO. 66126

Date Plotted: 7/27/2023

DATE REVISED	DATE FILMED	DATE REVISED	DATE FILMED	FED. ROAD DIST. NO.	STATE	FED. AID PROJ. NO.	SHEET NO.	TOTAL SHEETS
				6	ARK.		338	838
				JOB NO.		012326		
				(1) A7612		SPAN DETAILS		66127

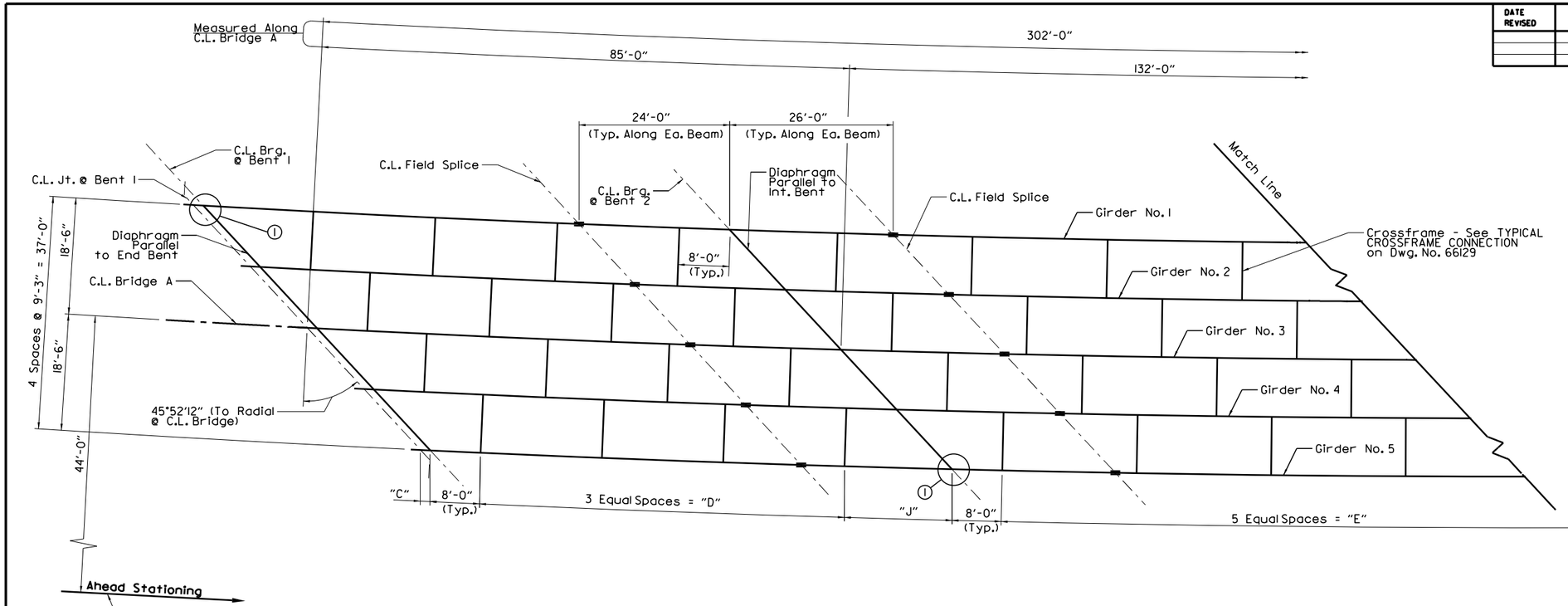

NOTES:

All structural steel shall be ASTM A709, Grade 50 steel, U.N.O.

Girders are curved and concectric to C.L. Bridge A. All crossframes are on radial lines, U.N.O.

For GIRDER ELEVATION, see Dwg. No. 66128.

For FIELD SPLICE DETAILS, see Dwg. No. 66129.
For TYPICAL CROSSFRAME CONNECTION, See Dwg. No. 66129.

(1) Refer to "Typical Bearing Stiffeners" Dwg. No. 66129.

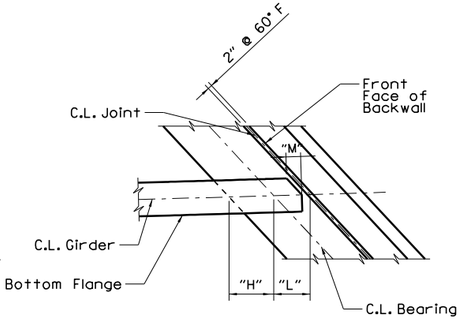

Bearing Plan
@ End Bent 4
Scale: 3/8" = 1'-0"

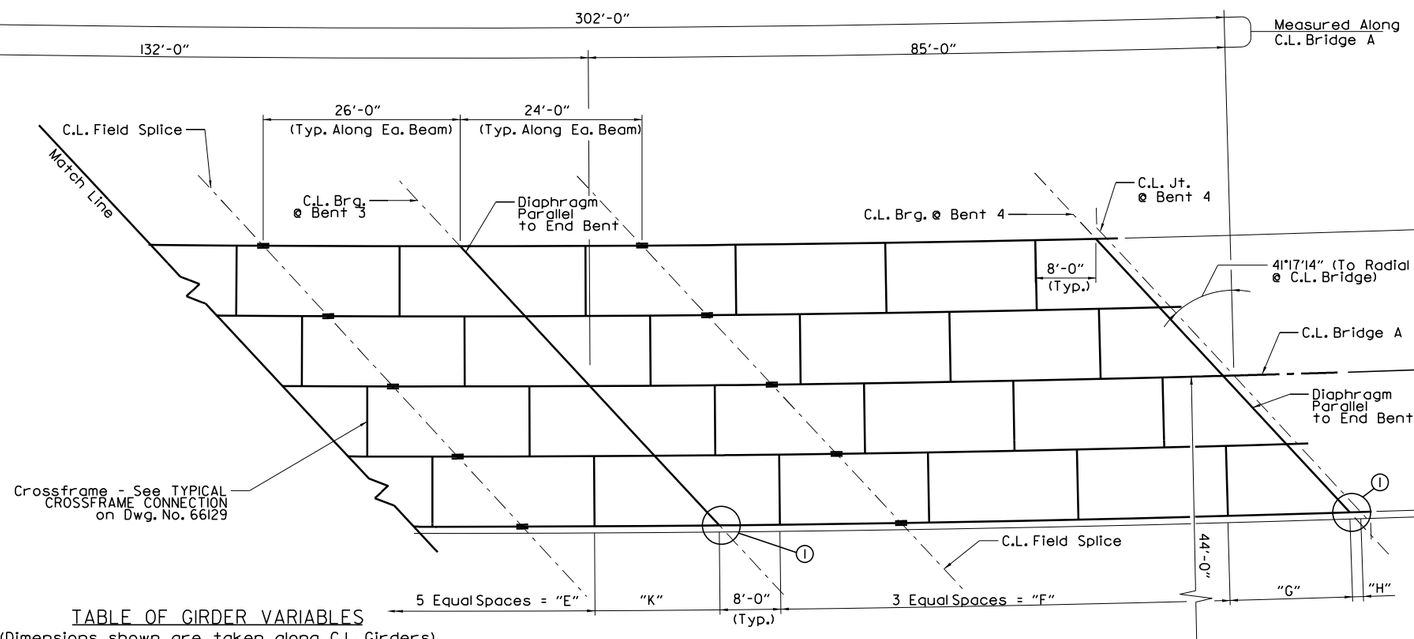

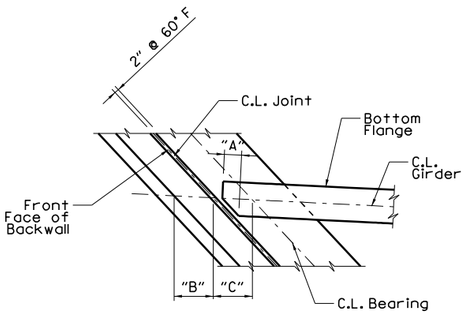

Bearing Plan
@ End Bent 1
Scale: 3/8" = 1'-0"

TABLE OF GIRDER VARIABLES

(Dimensions shown are taken along C.L. Girders)

GIRDER NO.	"A"	"B"	"C"	"D"	"E"	"F"	"G"	"H"	"J"	"K"	"L"	"M"
1	8 5/16"	1'-6 3/4"	1'-6 3/4"					1'-5 3/8"			1'-5 3/8"	7 1/16"
2	8 5/16"	1'-6 3/4"	1'-6 11/16"	58'-5 5/16"	107'-8 1/2"	59'-6 1/8"	16'-2 9/16"	1'-5 5/16"	17'-2 9/16"	16'-7 1/16"	1'-5 5/16"	7 1/16"
3	8 1/4"	1'-6 11/16"	1'-6 11/16"	58'-3 5/16"	107'-5 7/16"	59'-4 9/16"	16'-2 1/8"	1'-5 5/16"	17'-2"	16'-6 9/16"	1'-5 5/16"	7"
4	8 3/16"	1'-6 5/8"	1'-6 5/8"	58'-1 3/8"	107'-2 3/8"	59'-3 1/16"	16'-1 11/16"	1'-5 1/4"	17'-1 1/2"	16'-6 1/8"	1'-5 1/4"	7"
5	8 3/16"	1'-6 9/16"	1'-6 9/16"	57'-11 7/16"	106'-11 3/8"	59'-1 1/2"	16'-1 1/4"	1'-5 1/4"	17'-0 13/16"	16'-5 11/16"	1'-5 1/4"	6 15/16"

FRAMING PLAN
Scale: 1" = 10'-0"

07.27.23
STATE OF ARKANSAS
LICENSED PROFESSIONAL ENGINEER
No. 19188
ERIC S. CHRISTIANSEN
Eric S. Christiansen
BRIDGE ENGINEER

SHEET 4 OF 5
BRIDGE A
DETAILS OF 302'-0" CONTINUOUS PLATE GIRDER UNIT
HWY. 612 OVER RAMP 4

ROUTE 612 SEC. 1

ARKANSAS STATE HIGHWAY COMMISSION
LITTLE ROCK, ARK.

DRAWN BY: FAN DATE: 04-23
CHECKED BY: DHP DATE: 04-23
DESIGNED BY: WKB DATE: 04-23
FILENAME: B012326aC_S6.DGN
SCALE:

BRIDGE NO. A7612
DRAWING NO. 66127

Date Plotted: 7/27/2023

DATE REVISED	DATE FILMED	DATE REVISED	DATE FILMED	FED. ROAD DIST. NO.	STATE	FED. AID PROJ. NO.	SHEET NO.	TOTAL SHEETS
				6	ARK.		339	838
				JOB NO.		012326		
				(1) A7612		SPAN DETAILS		66128

(1) 7/8" x 8 1/2" Bearing Stiffener (Typ. @ Bents 1 & 4)

(2) 7/8" x 9 1/2" Bearing Stiffener (Typ. @ Bents 2 & 3)

See details on Dwg. No. 66129, for modification at exterior girders.

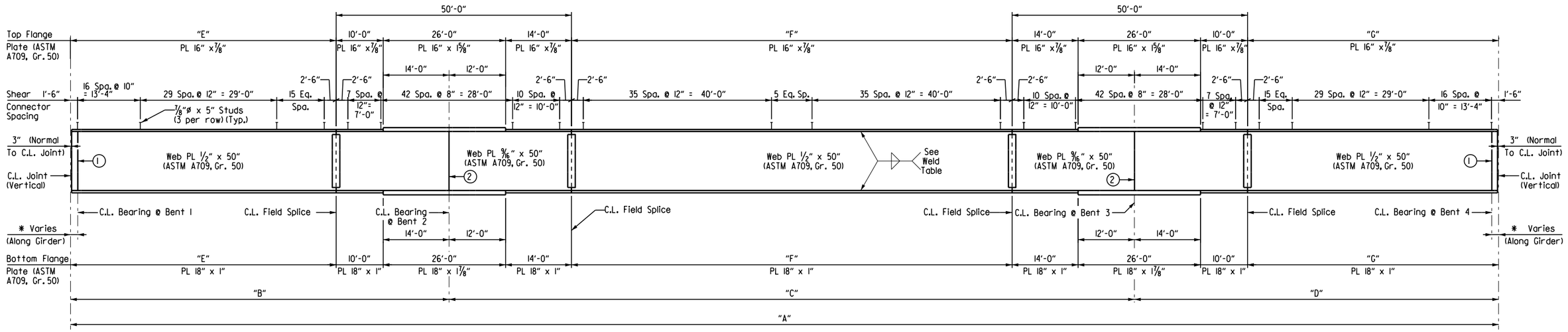

GIRDER ELEVATION

No Scale

TABLE OF TRAFFIC RAIL VARIABLES

Closed Rail Panels			Open Rail Panels					
Panel Length	A	R4XXE	Panel Length	B	C	D	E	R4XXE
8'-0"	15	R409E	16'-0"	8	3	11	6	R416E
11'-4 1/2"	22	R410E	22'-0"	8	3	23	12	R417E
12'-0"	23	R411E						
12'-7"	25	R412E						
12'-7 7/16"	25	R412E						
12'-7 3/4"	25	R413E						
13'-0"	25	E414E						
13'-4 3/4"	26	R415E						
13'-5 1/8"	26	R415E						

TABLE OF GIRDER VARIABLES

Girder No.	"A"	"B"	"C"	"D"	"E"	"F"	"G"
1	303'-4 3/8"	85'-5 1/8"	132'-7 1/8"	85'-4 1/8"	61'-5 1/8"	80'-7 1/8"	61'-4 1/8"
2	302'-8 1/8"	85'-2 9/16"	132'-3 9/16"	85'-2"	61'-2 9/16"	80'-3 9/16"	61'-2"
3	302'-0"	85'-0"	132'-0"	85'-0"	61'-0"	80'-0"	61'-0"
4	301'-4"	84'-9 1/2"	131'-8 1/2"	84'-10"	60'-9 1/2"	79'-8 1/2"	60'-10"
5	300'-8 1/16"	84'-7"	131'-5 1/16"	84'-8"	60'-7"	79'-5 1/16"	60'-8"

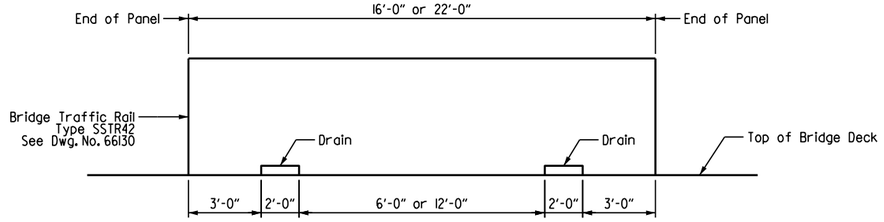

ELEVATION OF OPEN BRIDGE RAIL

No Scale

NOTES:

All structural steel shall be ASTM A709, Grade 50 steel, U.N.O.

Girders are curved and concectric to C.L. Bridge A.

For FIELD SPLICE DETAILS, see Dwg. No. 66129.

For STIFFENER DETAILS, see Dwg. No. 66129.

For SHEAR CONNECTOR DETAIL, see Dwg. No. 66129.

For WELD DETAILS & TABLE, see Dwg. No. 66129.

07-27-23

STATE OF ARKANSAS
LICENSED PROFESSIONAL ENGINEER
No. 19188
ERIC S. CHRISTIANSEN

Eric S. Christiansen

BRIDGE ENGINEER

SHEET 5 OF 5
BRIDGE A
DETAILS OF 302'-0" CONTINUOUS PLATE GIRDER UNIT
HWY. 612 OVER RAMP 4

ROUTE 612 SEC. 1

ARKANSAS STATE HIGHWAY COMMISSION

LITTLE ROCK, ARK.

DRAWN BY: FAN DATE: 04-23
CHECKED BY: DHP DATE: 04-23
DESIGNED BY: WKB DATE: 04-23
FILENAME: B012326aC_S7.DGN
SCALE: As Shown

BRIDGE NO. A7612 DRAWING NO. 66128

Date Plotted: 1/21/2023

DATE REVISED	DATE FILMED	DATE REVISED	DATE FILMED	FED. ROAD DIST. NO.	STATE	FED. AID PROJ. NO.	SHEET NO.	TOTAL SHEETS
				6	ARK.		340	838
				JOB NO.		012326		
				(1) A&B7612		SPAN DETAILS		66129

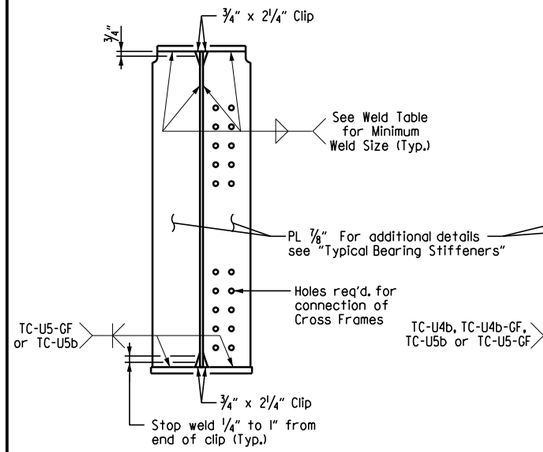

BENTS 1 & 4 BEARING STIFFENER DETAIL

Scale: 1" = 1'-0"

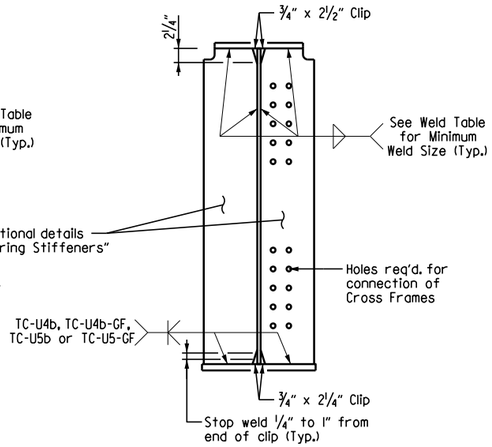

BENTS 2 & 3 BEARING STIFFENER DETAIL

Scale: 1" = 1'-0"

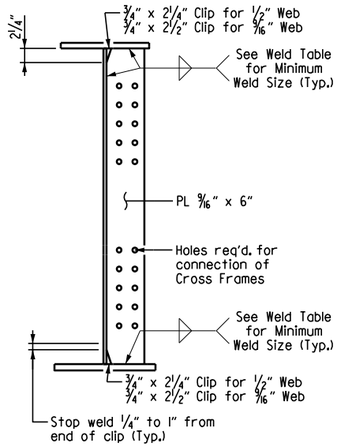

CROSS FRAME CONNECTION DETAIL

Scale: 1" = 1'-0"

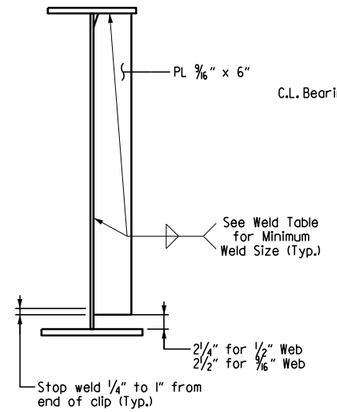

INTERMEDIATE STIFFENER DETAIL

Scale: 1" = 1'-0"

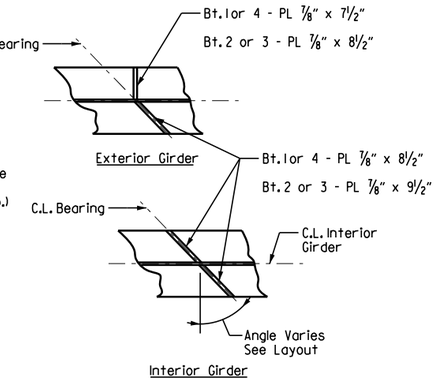

TYPICAL BEARING STIFFENERS

No Scale

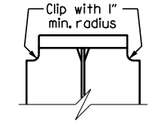

Note: If permanent steel bridge deck forms are used, the fabricator shall clip the plate as necessary to accomodate the deck form support.

PLATE CLIP DETAIL

Not to Scale

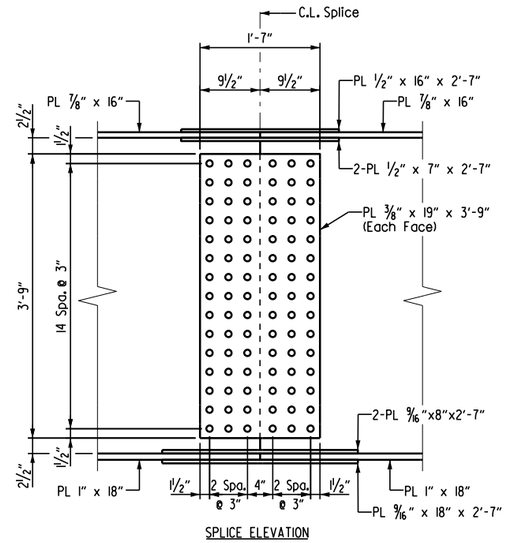

SPLICE ELEVATION

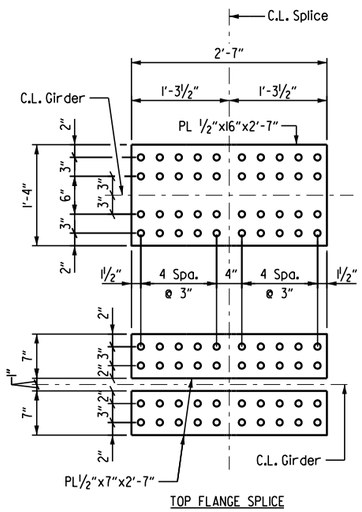

TOP FLANGE SPLICE

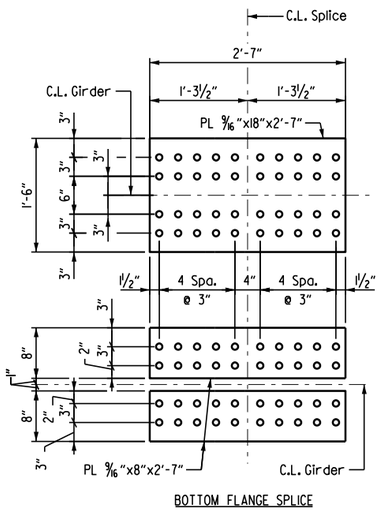

BOTTOM FLANGE SPLICE

FIELD SPLICE DETAILS

Scale: 1" = 1'-0"

NOTE: All field splice bolts shall be ⅞" ø H.S. bolts with 15/16 " ø holes. All field splice plates shall be ASTM A709, Gr. 50 steel.

Bolted field splices shown may be eliminated or shop welded splices may be substituted with approval of the Engineer.

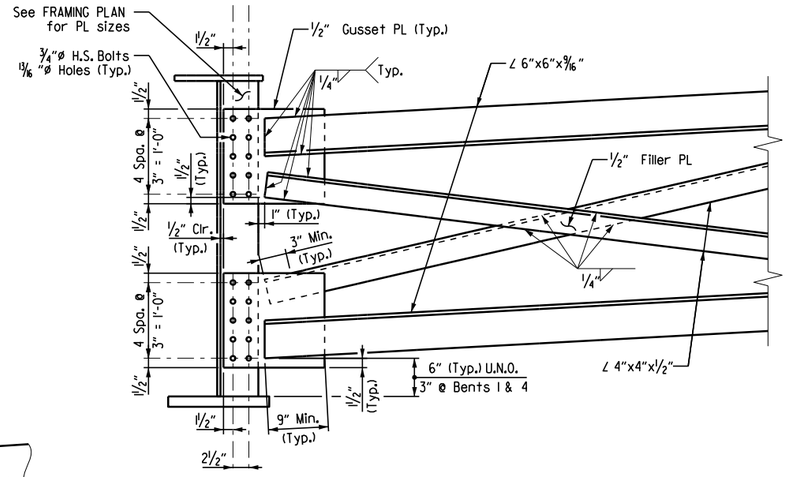

TYPICAL CROSSFRAME CONNECTION

Scale: 1" = 1'-0"

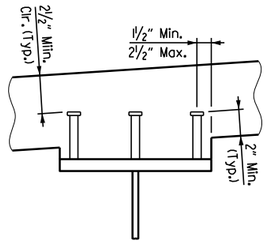

Stud Shear Connectors shown shall be ⅞"ø x 5" long, granular flux filled, solid fluxed or equal, and automatically end welded to the girder flange in accordance with the recommendations of the Manufacturer. ¾"ø studs may be used in place of the ⅞"ø studs shown, at the ratio of 1.361 - ¾"ø studs in place of one ⅞"ø stud. ⅞"ø studs will be used as basis for measurement of structural steel in shear connectors. Maximum stud spacing = 24".

SHEAR CONNECTOR DETAIL

No Scale

07.27.23

STATE OF ARKANSAS
LICENSED PROFESSIONAL ENGINEER
ERIC S. CHRISTIANSEN
No. 19188

Eric S. Christiansen

BRIDGE ENGINEER

COMMON DETAILS OF CONTINUOUS COMPOSITE PLATE GIRDER UNITS HWY. 612 OVER RAMP 4

ROUTE 612 SEC. 1

ARKANSAS STATE HIGHWAY COMMISSION

LITTLE ROCK, ARK.

DRAWN BY: FAN DATE: 04-23
CHECKED BY: DHP DATE: 04-23
DESIGNED BY: WKB DATE: 04-23
FILENAME: B012326MC_SI.DGN
SCALE: As Shown

BRIDGE NO. A&B7612 DRAWING NO. 66129

Date Plotted: 7/27/2023

DATE REVISED	DATE FILMED	DATE REVISED	DATE FILMED	FED. ROAD DIST. NO.	STATE	FED. AID PROJ. NO.	SHEET NO.	TOTAL SHEETS
				6	ARK.		341	838
				JOB NO.		012326		
				1	A&B7612	TRAFFIC RAIL		66130

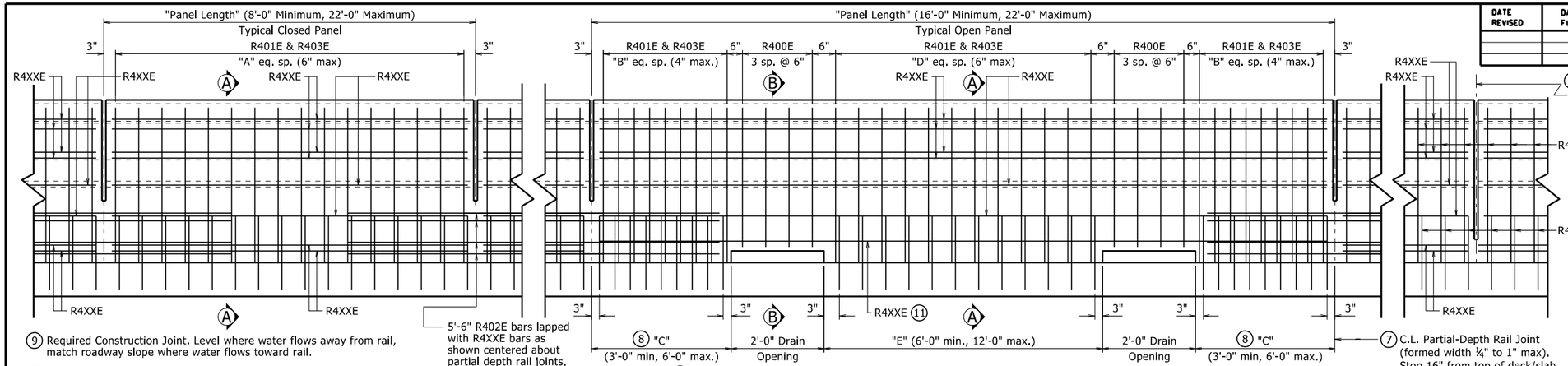

(1) ELEVATION - SINGLE SLOPE TRAFFIC RAIL

(7) C.L. Full-Depth Rail Joint (formed width ¼" to 1" max). Stop 6" from top of deck/slab. Place at all intermediate bent locations where rail is continuous.

(1) All measurements shown are along gutterline at base of rail.

(2) Minimum embedment into deck/slab.

(3) Refer to Bridge General Notes for Textured Coating finish requirements.

(4) C.L. 1" ø formed holes for ⅞" ø bolts. See Standard Drawings GR-10 and GR-12 for additional information.

(5) These bars will not be included in the "TABLE OF VARIABLES", see plans for additional information.

(6) Field bend front leg of R401E bar as required to maintain minimum 1½" front face clearance within limits of taper.

(7) When optional slip forming is used: to control cracking, all rail joints must be V-grooved around the perimeter of the rail prior to concrete set and sawing. Depth of V-groove shall be ½". Sawing of the joints shall be done as soon as practical to a width of ¼", and must be controlled so it will follow the V-Groove.

(8) End posts shall be the same length within a panel.

(9) Required Construction Joint. Level where water flows away from rail, match roadway slope where water flows toward rail.

(10) Top of Abutment Wing & Required Construction Joint (match bridge deck/slab construction joint slope). See Plans for Wing reinforcing.

(11) These bars shall be raised up over drain opening as shown in "SECTION B-B".

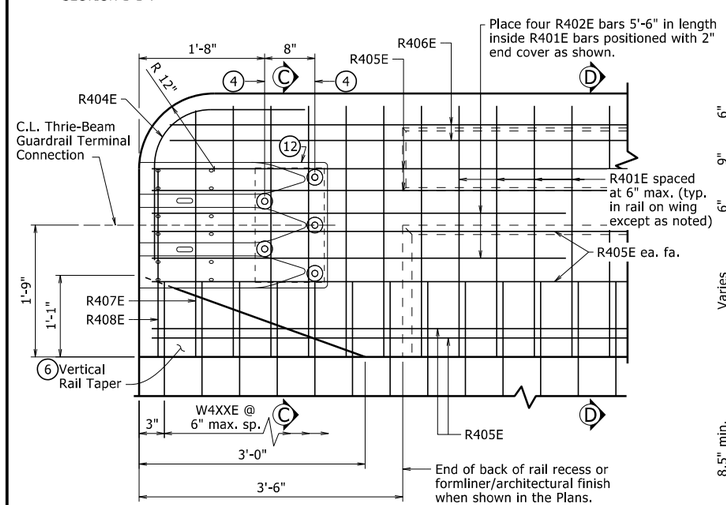

(1)(5) RAIL TERMINUS DETAIL

1" = 1'-0"

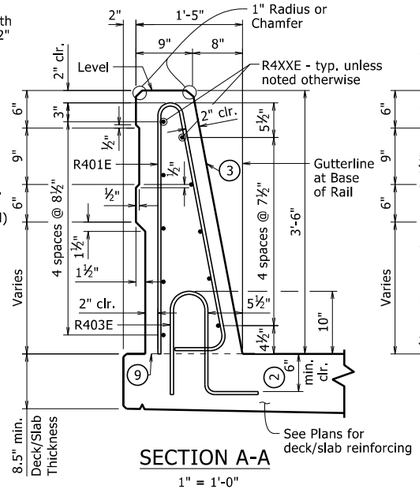

SECTION A-A

1" = 1'-0"

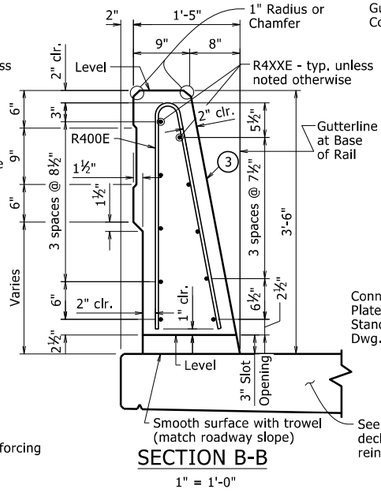

SECTION B-B

1" = 1'-0"

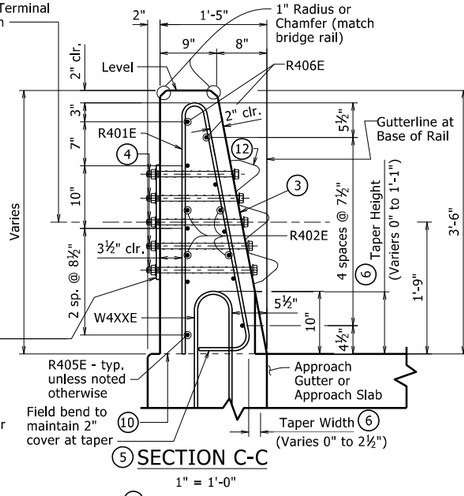

(5) SECTION C-C

1" = 1'-0"

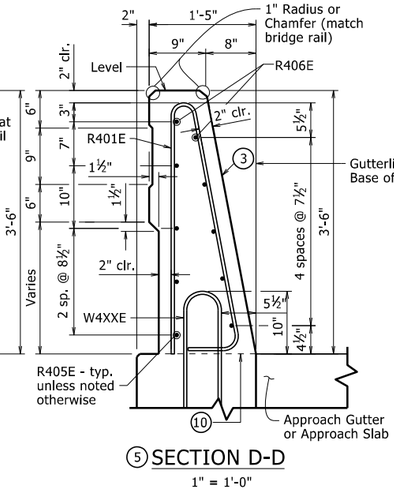

(5) SECTION D-D

1" = 1'-0"

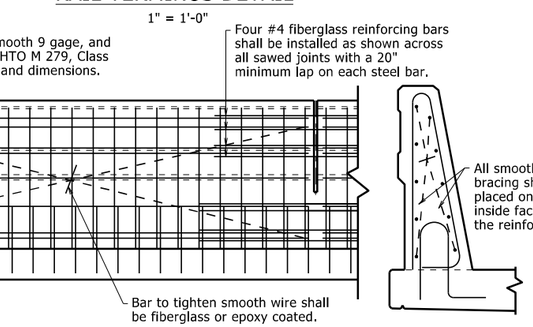

The extruded rail shall conform to the horizontal and vertical lines shown on the plans or as directed by the Engineer and shall present a smooth, uniform appearance and texture. Unless otherwise noted, exposed surfaces may be given a light brush finish or a Class 3, Textured Coating Finish in place of Class 2, Rubbed Finish.

All panels shall be braced as required to prevent racking.

Slip forming will not be allowed on bridges where formliner with architectural treatment is used unless approval from the Engineer is obtained.

DETAILS OF OPTIONAL SLIP FORMING OF BRIDGE TRAFFIC RAIL

No Scale

BENDING DIAGRAM

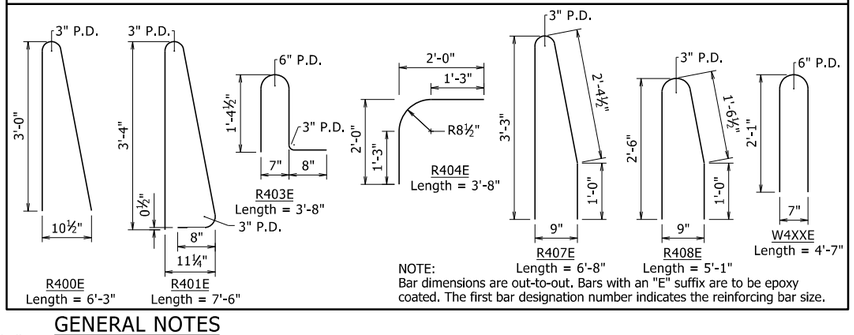

NOTE: Bar dimensions are out-to-out. Bars with an "E" suffix are to be epoxy coated. The first bar designation number indicates the reinforcing bar size.

GENERAL NOTES

This rail has been evaluated and accepted to be of equal strength to railings with similar geometry, which have been evaluated by full-scale crash test to meet MASH TL-4 criteria.

For Table of Variables, Rail Bar List, locations of Full and Partial Depth Rail Joints, and Wing & Rail Bar Lists, see Plans.

For location of drain openings, see Plans. Drain openings will not be allowed over Railroad Right of Way, travelled roadways, and protected waterways.

Rail Terminus details, including Rail Taper, are not applicable when bridge railing is continuous with roadway railing.

Scales shown are for full size 22"x34" drawings. When using 11"x17" drawings, reduce scale by one half.

(12) Bolt Special End Shoe to face of rail as shown. Tapered washers are not required between the head of the bolts and the sloped face of the rail. Tighten the five terminal connection bolts in a well distributed pattern to prevent damage or distortion of the thrie-beam connection. Cut bolts off after installation so as to extend no more than ¾" beyond nut. Paint ends of cut-off bolts with zinc-rich paint. This work and material will not be paid for directly but shall be considered subsidiary to associated contract items.

TABLE OF VARIABLES

Closed Rail Panels			Open Rail Panels					
Panel Length	A	R4XXE	Panel Length	B	C	D	E	R4XXE

See Dwg. No. 66128 & 66144 for table with values.

THESE DETAILS ARE APPLICABLE UNLESS OTHERWISE SHOWN IN THE PLAN DETAILS, SPECIAL PROVISIONS, OR SUPPLEMENTAL SPECIFICATIONS.

07·27·23

STATE OF ARKANSAS
LICENSED PROFESSIONAL ENGINEER
No. 19188
ERIC S. CHRISTIANSEN

Eric S. Christiansen

BRIDGE ENGINEER

DETAILS FOR MODIFIED BRIDGE TRAFFIC RAIL TYPE SSTR42

ROUTE 612 SEC. 1

ARKANSAS STATE HIGHWAY COMMISSION

LITTLE ROCK, ARK.

DRAWN BY: FAN DATE: 04-23
CHECKED BY: DHP DATE: 04-23
DESIGNED BY: WKB DATE: 04-23
FILENAME: B012326MC_S2.dgn
SCALE: AS NOTED

BRIDGE NO. A&B7612 DRAWING NO. 66130

Date Plotted: 7/27/2023

DATE REVISED	DATE FILMED	DATE REVISED	DATE FILMED	FED. ROAD DIST. NO.	STATE	FED. AID PROJ. NO.	SHEET NO.	TOTAL SHEETS
				6	ARK.		342	838
				JOB NO.		012326		
				(1) B7612		LAYOUT		66131

For R/W Data, See Roadway Plans

Use Type Special Approach Gutters and Type F Approach Slabs (width = 36'-0") at both ends of bridge. See Std. Dwg. No. 55030F and 66334A, respectively.

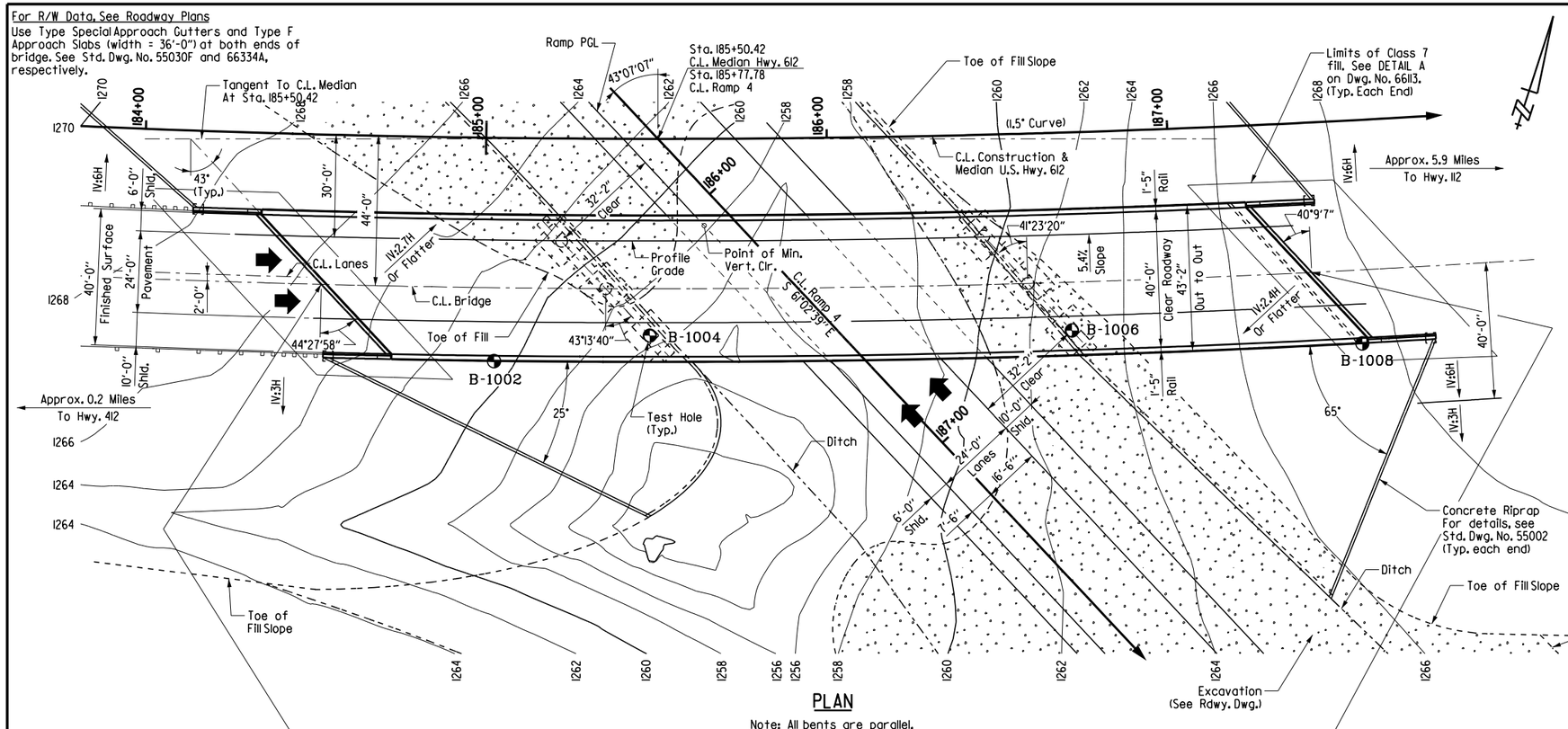

PLAN

Note: All bents are parallel.

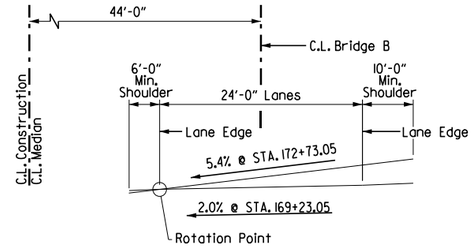

SUPERELEVATION SKETCH

No Scale
(Looking Ahead)

Begin Superelevation Sta. 169+23.05
Max. Superelevation Sta. 172+73.05 (0.054'/')
Max. Superelevation Sta. 219+48.54 (0.054'/')
See Roadway Plans for superelevation beyond limits shown.

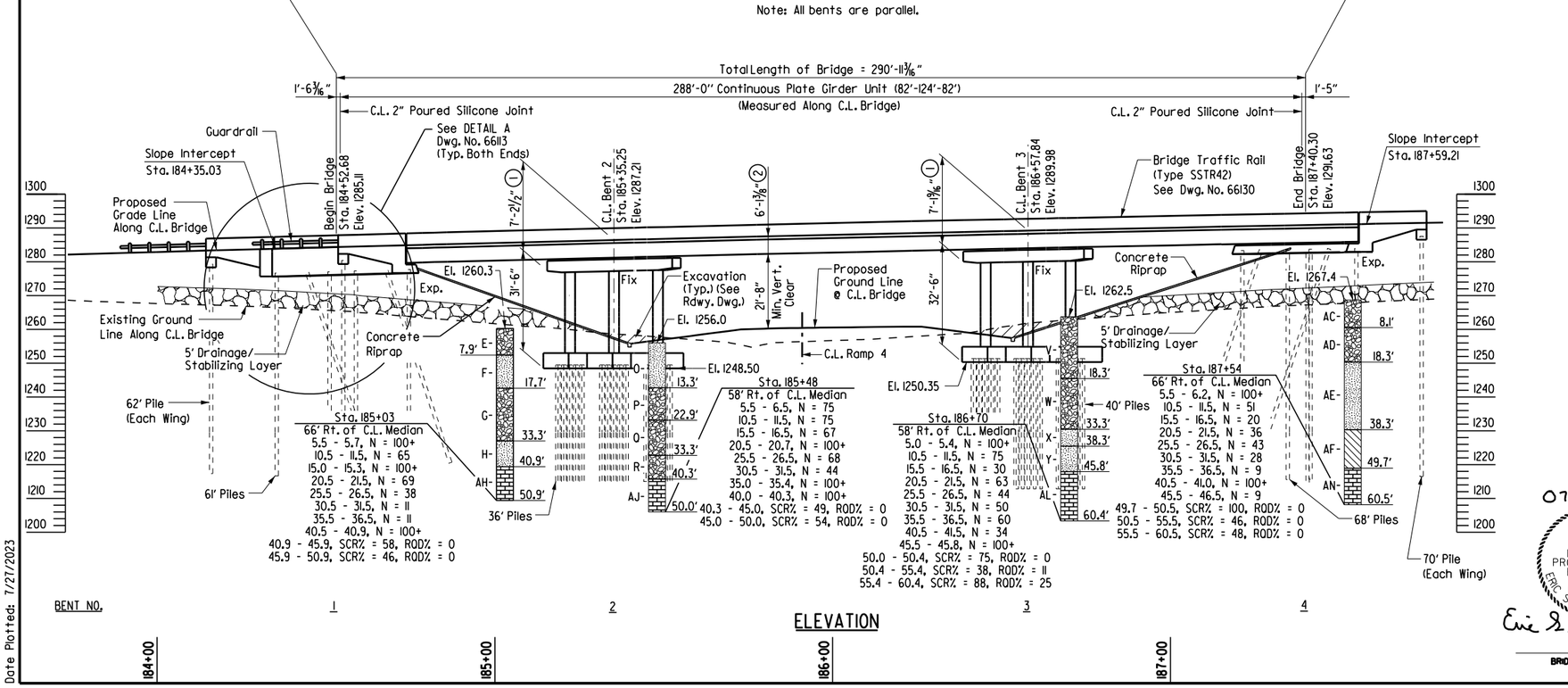

ELEVATION

For GENERAL NOTES & SOIL BORING LEGEND, See Dwg. No. 66113.

Stationing is along C.L. Median. Stations shown in elevation are determined by a radial projection from C.L. Bridge to C.L. Median. For more information refer to STAKING DIAGRAM on Dwg. No. 66113.

Elevations shown are actual top of deck elevations at C.L. Bridge. Any vertical dimension to C.L. Deck is based on actual top of deck elevation at C.L. Bridge.

(1) C.L. Deck at C.L. Bent to low side Top of Cap.

(2) C.L. Deck to Low Steel.

07.27.23
STATE OF ARKANSAS
LICENSED PROFESSIONAL ENGINEER
No. 19188
ERIC S. CHRISTIANSEN
Eric S. Christiansen
BRIDGE ENGINEER

LAYOUT OF BRIDGE B
HWY. 612 OVER W. INTERCHANGE RAMP 4
HWY. 412 - HWY. 112 (SPRINGDALE BYPASS) (F)
WASHINGTON COUNTY

ROUTE 612 SEC. 1

ARKANSAS STATE HIGHWAY COMMISSION

LITTLE ROCK, ARK.

DRAWN BY: FAN DATE: 04-23
CHECKED BY: DHP DATE: 04-23
DESIGNED BY: WKB DATE: 04-23
FILENAME: B012326bC_L.dgn
SCALE: 1" = 20'-0"

BRIDGE NO. B7612 DRAWING NO. 66131

Date Plotted: 7/21/2023

NOTE: Class 2 Protective Surface Treatment shall be applied to the roadway face and top of the end bent rail and the top of the backwall.

DATE REVISED	DATE FILMED	DATE REVISED	DATE FILMED	FED. ROAD DIST. NO.	STATE	FED. AID PROJ. NO.	SHEET NO.	TOTAL SHEETS
				6	ARK.		343	838
				JOB NO.		012326		
				1	B7612	END BENT 1 DETAILS		66132

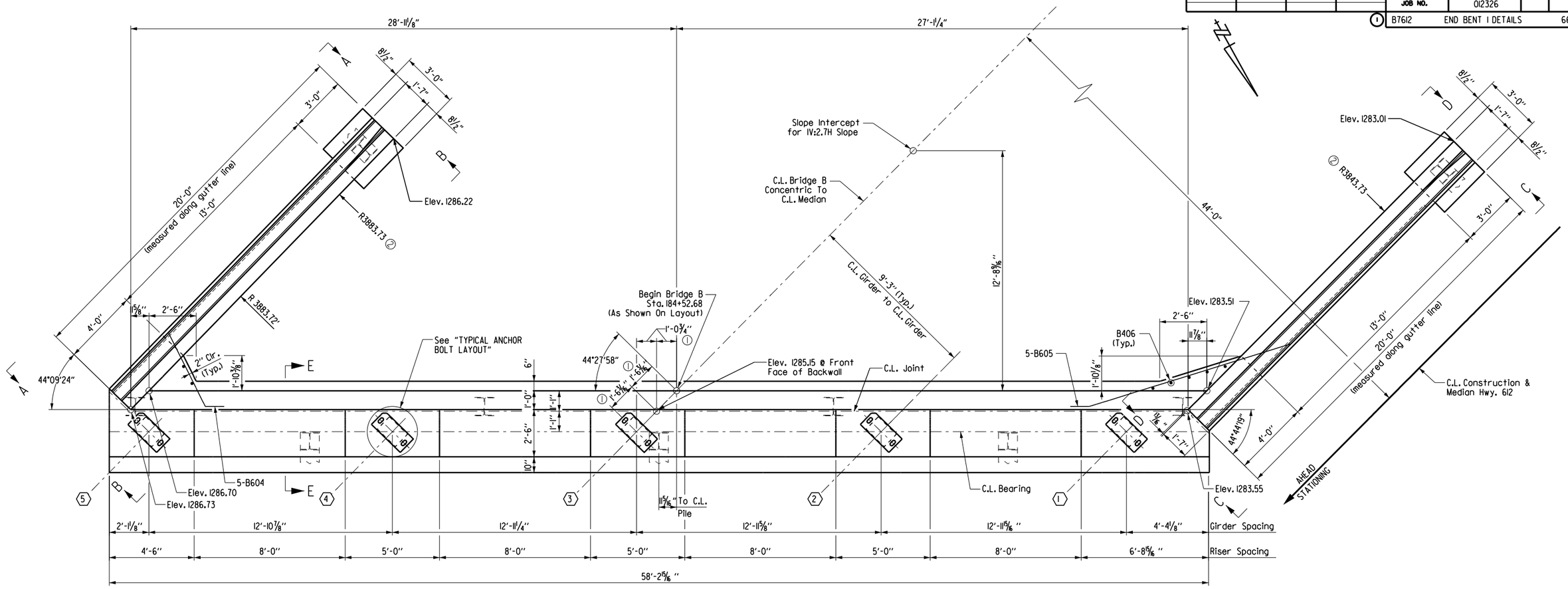

PLAN

Scale: ⅜" = 1'-0"

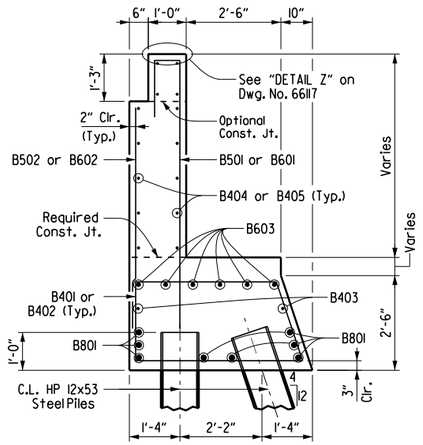

SECTION E-E

½" = 1'-0"

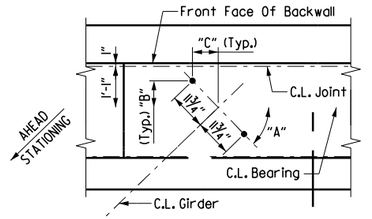

GIRDER	"A"	"B"	"C"
1	44°41'31"	8¼"	8⅜"
2	44°33'22"	8¼"	8⅜"
3	44°26'06"	8¼"	8⅜"
4	44°17'14"	8⅜"	8⅜"
5	44°09'15"	8⅜"	8⅜"

Note: For Details Of Elastomeric Bearings, See Dwg. No. 66146.

TYPICAL ANCHOR BOLT LAYOUT

½" = 1'-0"

For GENERAL NOTES FOR SUBSTRUCTURE, see Dwg. No. 66114 and Std. Dwg. No. 5506.

For additional information, see LAYOUT on Dwg. No. 66131.

For VIEW A-A, VIEW B-B, VIEW C-C, and VIEW D-D, see Dwg. No. 66134.

For DETAIL Z, see Dwg. No. 66117.

For Details of Wing and Rail, see Dwg. No. 66117, 66134, & 66130.

① Dimensions shown are to C.L. Joint

② Radius is for Gutterline only. Wingwall and Rail shall be constructed perpendicular to radial line at intersection of Gutterline Radii and Front Face of Backwall.

07-27-23

STATE OF ARKANSAS
LICENSED PROFESSIONAL ENGINEER
No. 19188
ERIC S. CHRISTIANSEN

Eric S. Christiansen

BRIDGE ENGINEER

SHEET 1 OF 3
BRIDGE B
DETAILS OF END BENT 1
HWY. 612 OVER RAMP 4

ROUTE 612 SEC. 1

ARKANSAS STATE HIGHWAY COMMISSION

LITTLE ROCK, ARK.

DRAWN BY: FAN DATE: 04-23
CHECKED BY: DHP DATE: 04-23
DESIGNED BY: WKB DATE: 04-23

FILENAME: B012326bC_B11.DGN
SCALE: ⅜" = 1'-0"

BRIDGE NO. B7612

DRAWING NO. 66132

Date Plotted: 7/21/2023

NOTE: Class 2 Protective Surface Treatment shall be applied to the roadway face and top of the end bent rail and the top of the backwall.

(A) B601 - 5 Spa. @ 6" = 2'-6" (Fr. Fa.)
B602 - 5 Spa. @ 6" = 2'-6" (Bk. Fa.)

(B) B601 - Front Face Only

(C) B601 - 4 Spa. @ 6" = 2'-0" (Fr. Fa.)
B602 - 4 Spa. @ 6" = 2'-0" (Bk. Fa.)

(D) B602 - Back Face Only

DATE REVISED	DATE FILMED	DATE REVISED	DATE FILMED	FED. ROAD DIST. NO.	STATE	FED. AID PROJ. NO.	SHEET NO.	TOTAL SHEETS
				6	ARK.		344	838
				JOB NO.		012326		

(1) B7612 END BENT 1 DETAILS 66133

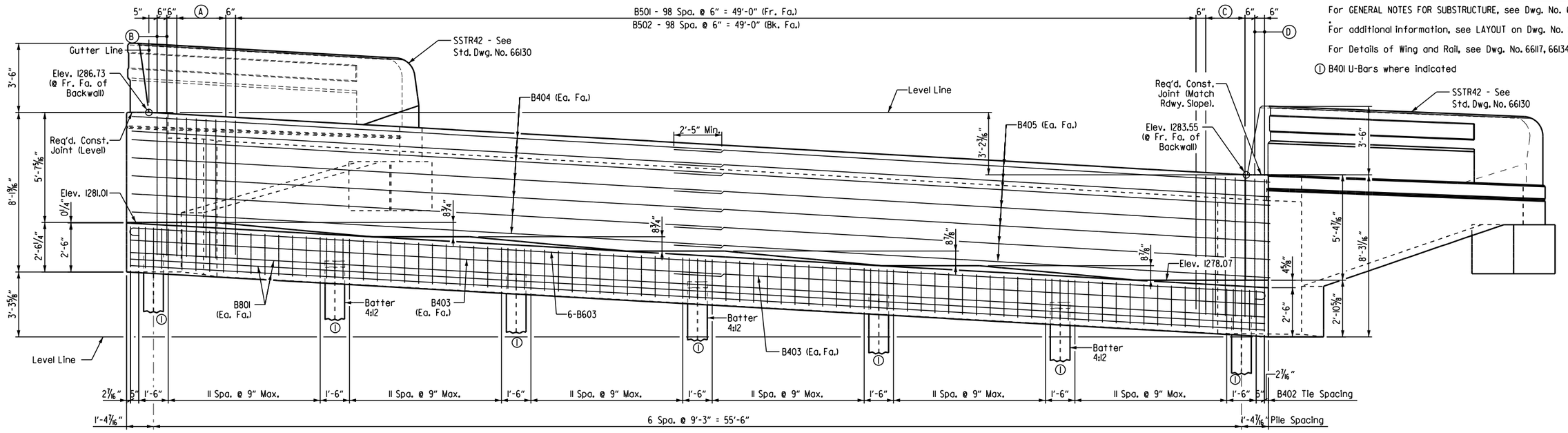

For GENERAL NOTES FOR SUBSTRUCTURE, see Dwg. No. 66114

For additional information, see LAYOUT on Dwg. No. 66131.

For Details of Wing and Rail, see Dwg. No. 66117, 66134, & 66130.

(1) B401 U-Bars where indicated

ELEVATION
(Looking Back)
Scale: ⅜" = 1'-0"

BRIDGE B - END BENT 1 BAR LIST

Mark	No. Req'd	Length	Pin Dia.
B401	21	7'-10"	2"
B402	76	12'-9"	2"
B403	4	30'-2"	Str.
B404	14	30'-8"	3"
B405	14	30'-10"	3"
B406	7	6'-5"	Str.
B501	99	8'-10"	2 1/2"
B502	99	5'-7"	Str.
B601	13	8'-11"	4 1/2"
B602	13	5'-10"	Str.
B603	6	59'-3"	4 1/2"
B604	5	6'-2"	4 1/2"
B605	5	12'-7"	4 1/2"
B801	8	57'-11"	Str.
W401	4	7'-11"	Str.
W402	4	10'-4"	Str.
W403 to W409	1 Each	4'-11" to 3'-6 1/2"	Str.
W410 to W415	1 Each	3'-4" to 2'-2 1/2"	Str.
W416 to W422	1 Each	4'-11" to 3'-6 1/2"	Str.
W423 to W428	1 Each	3'-4" to 2'-2 1/2"	Str.
W429	3	7'-8"	2"
W430	4	8'-0½"	Str.
W431	4	10'-6"	Str.
W432 to W437	1 Each	2'-3" to 3'-7 1/2"	Str.
W438 to W444	1 Each	3'-11" to 5'-7"	Str.

Mark	No. Req'd	Length	Pin Dia.
W445 to W450	1 Each	2'-3" to 3'-7 1/2"	Str.
W451 to W457	1 Each	3'-11" to 5'-7"	Str.
W458	3	13'-2"	2"
W459E	80	4'-7"	6"
W601	24	4'-0"	4½"
W602	12	2'-8"	Str.
W701	12	19'-8"	Str.
W702	2	13'-1"	Str.
W703	2	8'-8"	Str.
W704	2	18'-1"	5 1/4"
W705	2	13'-10"	Str.
W706	2	10'-3"	Str.
W707	2	6'-8"	Str.
W708	2	18'-5"	5 1/4"
R401E	76	7'-6"	3"
R402E	8	5'-6"	Str.
R404E	4	3'-8"	8½"
R405E	16	19'-8"	Str.
R406E	4	19'-5"	Str.
R407E	2	6'-8"	3"
R408E	2	5'-1"	3"

BENDING DIAGRAMS
(Dimensions are out to out of bars)

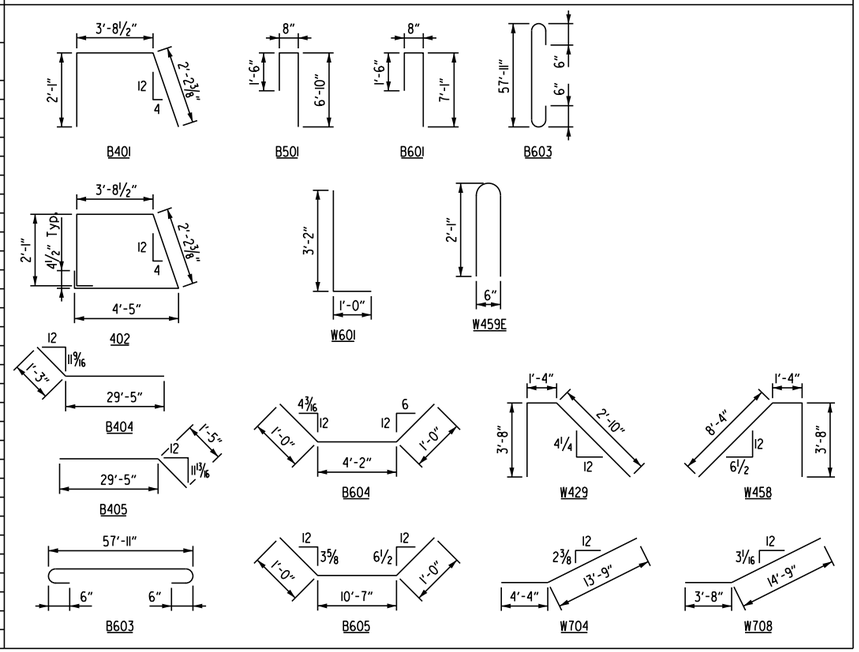

LAP SPLICE TABLE	
Bar Size	Min. Lap Length
4	2'-5"

Note:
See Dwg. No. 66130 for Traffic Rail reinforcing bar bending diagrams.

07.27.23
STATE OF ARKANSAS
LICENSED PROFESSIONAL ENGINEER
ERIC S. CHRISTIANSEN
No. 19188
Eric S. Christiansen
BRIDGE ENGINEER

SHEET 2 OF 3
BRIDGE B
DETAILS OF END BENT 1
HWY. 612 OVER RAMP 4

ROUTE 612 SEC. 1

ARKANSAS STATE HIGHWAY COMMISSION
LITTLE ROCK, ARK.

DRAWN BY: FAN DATE: 04-23
CHECKED BY: DHP DATE: 04-23
DESIGNED BY: WKB DATE: 04-23
FILENAME: B012326bC_B12.DGN
SCALE: ⅜" = 1'-0"

BRIDGE NO. B7612 DRAWING NO. 66133

Date Plotted: 7/21/2023

DATE REVISED	DATE FILMED	DATE REVISED	DATE FILMED	FED. ROAD DIST. NO.	STATE	FED. AID PROJ. NO.	SHEET NO.	TOTAL SHEETS
				6	ARK.		345	838
				JOB NO.		012326		

① B7612 END BENT 1 DETAILS 66134

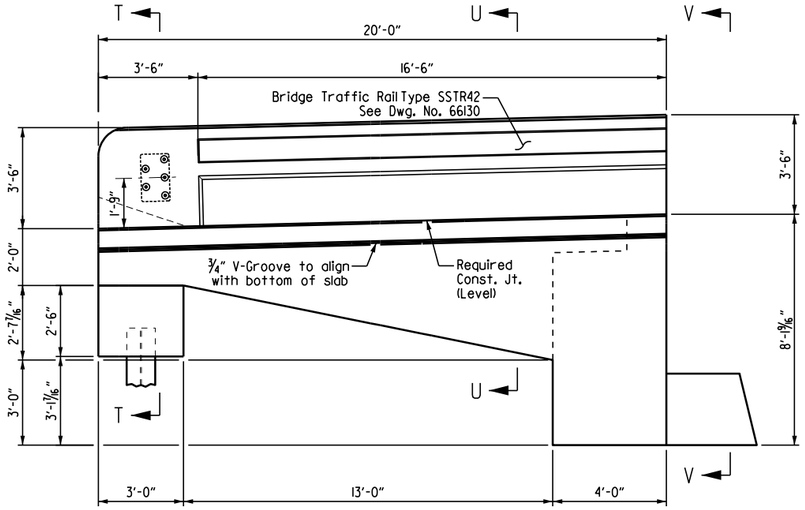

VIEW A-A

Scale: ⅜" = 1'-0"

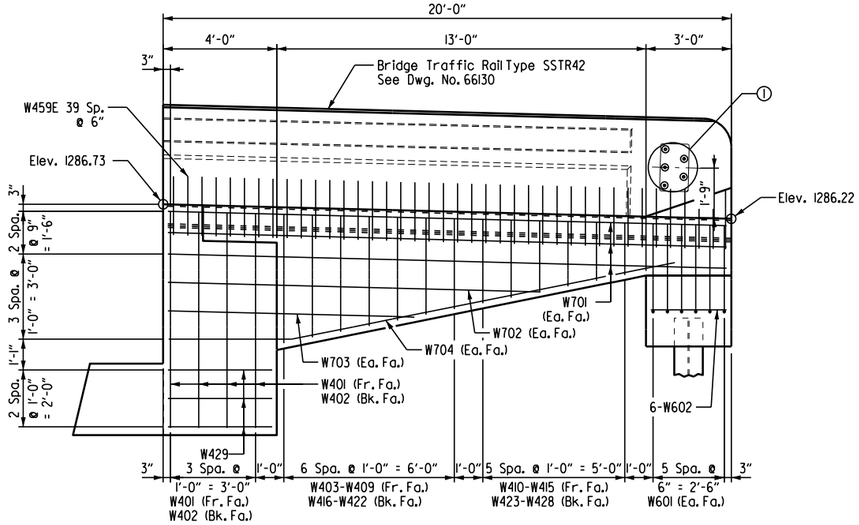

VIEW B-B

Scale: ⅜" = 1'-0"

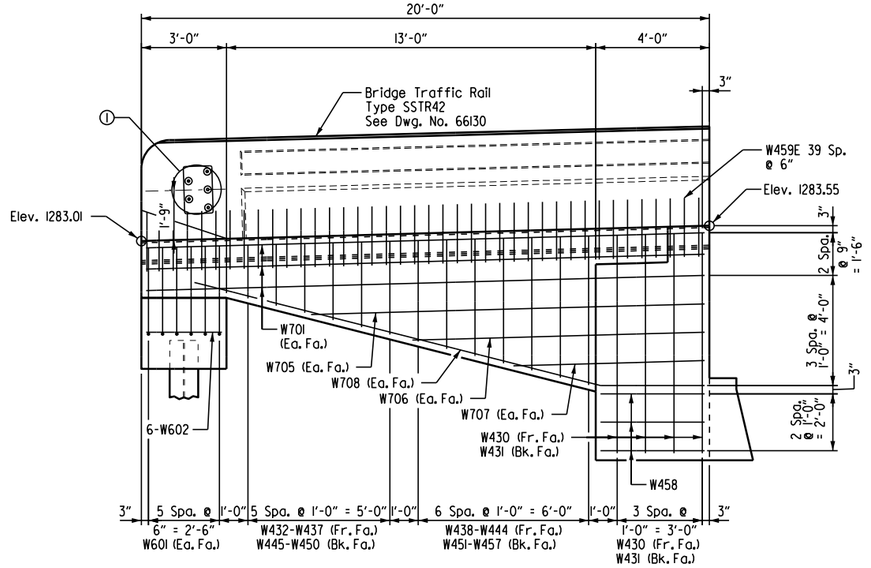

VIEW D-D

Scale: ⅜" = 1'-0"

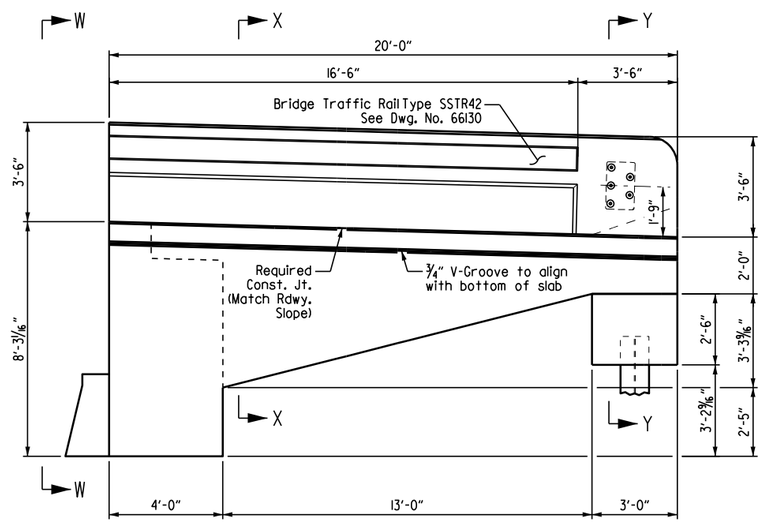

VIEW C-C

Scale: ⅜" = 1'-0"

For GENERAL NOTES FOR SUBSTRUCTURE, see Dwg. No. 66114 and Std. Dwg. No. 55006.

For additional information, see LAYOUT on Dwg. No. 66131.

For SECTION T-T, SECTION U-U, VIEW V-V, VIEW W-W, SECTION X-X, and SECTION Y-Y, see Dwg. No. 66117.

① 5 - 1"ø formed holes for guard rail connection. See Std. Dwg. No. GR-10 for bolt spacing and additional connection details.

07-27-23

STATE OF ARKANSAS
LICENSED PROFESSIONAL ENGINEER
No. 19188
ERIC S. CHRISTIANSEN

Eric S. Christiansen

BRIDGE ENGINEER

SHEET 3 OF 3
BRIDGE B
DETAILS OF END BENT 1
HWY. 612 OVER RAMP 4

ROUTE 612 SEC. 1

ARKANSAS STATE HIGHWAY COMMISSION

LITTLE ROCK, ARK.

DRAWN BY: FAN DATE: 04-23
CHECKED BY: DHP DATE: 04-23
DESIGNED BY: WKB DATE: 04-23
FILENAME: B012326DC_BI3.DGN
SCALE: AS SHOWN

BRIDGE NO. B7612 DRAWING NO. 66134

Date Plotted: 7/21/2023

DATE REVISED	DATE FILMED	DATE REVISED	DATE FILMED	FED. ROAD DIST. NO.	STATE	FED. AID PROJ. NO.	SHEET NO.	TOTAL SHEETS
				6	ARK.		346	838
				JOB NO.		012326		
				(1) B7612		BENT 2 DETAILS		66135

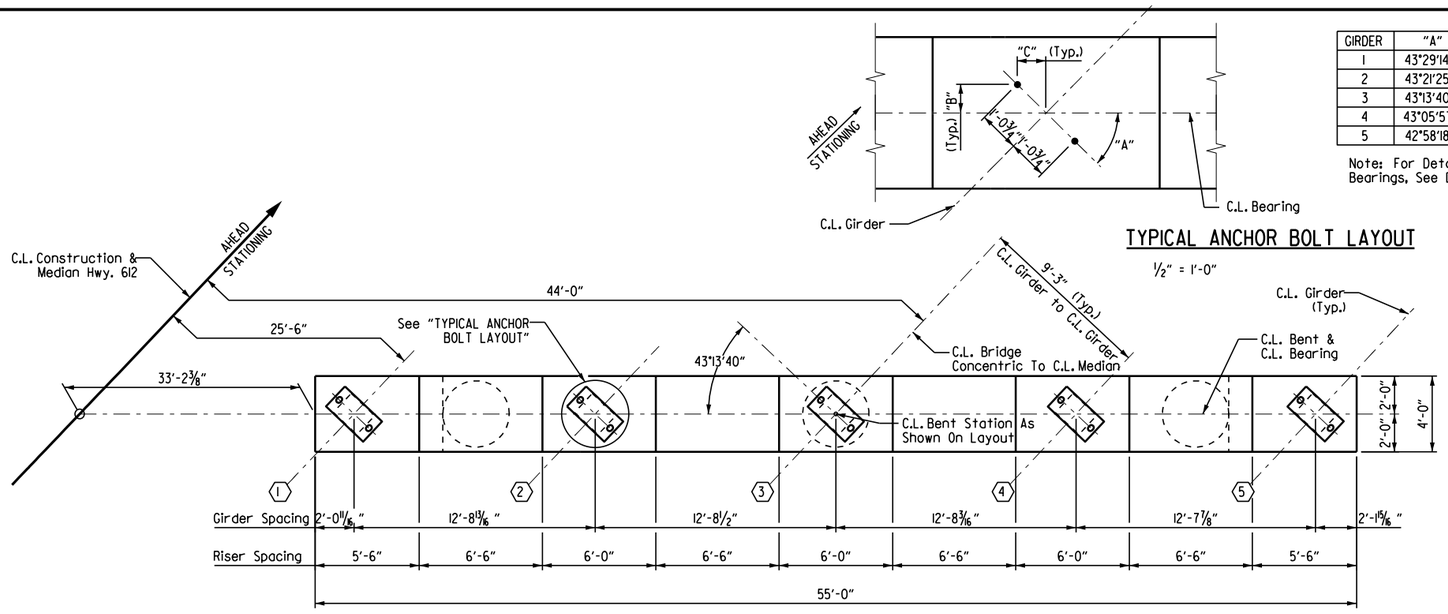

PLAN

¼" = 1'-0"

GIRDER	"A"	"B"	"C"
1	43°29'14"	8¾"	9¼"
2	43°21'25"	8¾"	9¼"
3	43°13'40"	8¾"	9¼"
4	43°05'57"	8¾"	9⅝"
5	42°58'18"	8¹¹⁄₁₆"	9⅝"

Note: For Details Of Elastomeric Bearings, See Dwg. No. 66146.

TYPICAL ANCHOR BOLT LAYOUT

½" = 1'-0"

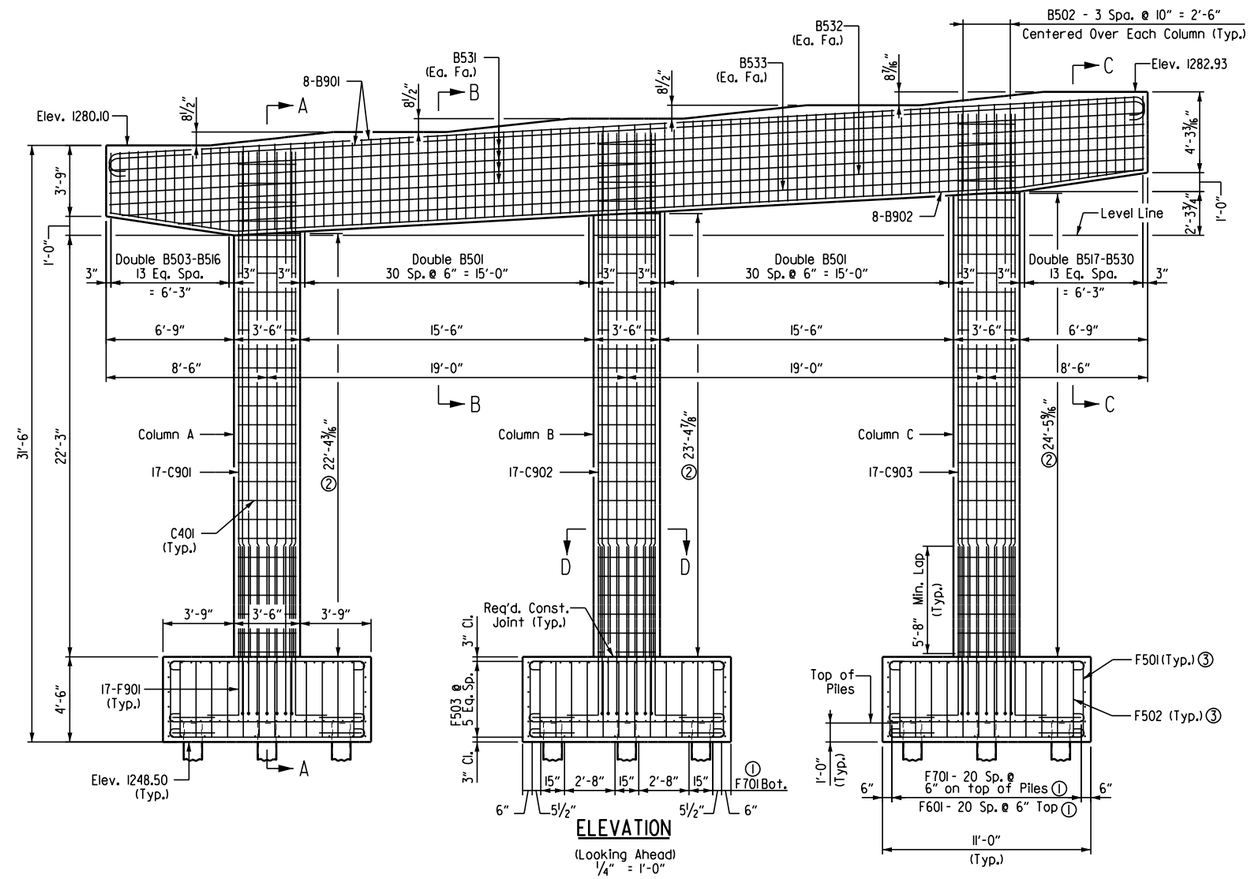

ELEVATION

(Looking Ahead)

¼" = 1'-0"

BRIDGE B - BENT 2 BAR LIST

Mark	Number Required	Length	Pin Dia.
B501	124	14'-4"	2½"
B502	12	12'-6"	2½"
B503 to B516	2 Each	12'-3" to 14'-4"	2½"
B517 to B530	2 Each	15'-1" to 13'-5"	2½"
B531	8	54'-9"	Str.
B532	2	54'-1"	Str.
B533	2	51'-0"	Str.
B901	16	57'-3"	9"
B902	8	54'-10"	9"
C401	84	10'-9"	3"
C901	17	26'-6"	Str.
C902	17	27'-6"	Str.
C903	17	28'-6"	Str.
F501	72	5'-3"	2½"
F502	66	5'-1"	2½"
F503	72	10'-6"	Str.
F601	126	11'-10"	4½"
F701	174	12'-2"	5¼"
F702	24	4'-4"	5¼"
F901	51	10'-7"	9"

Bending Diagrams (Dimensions are out to out of bars.)

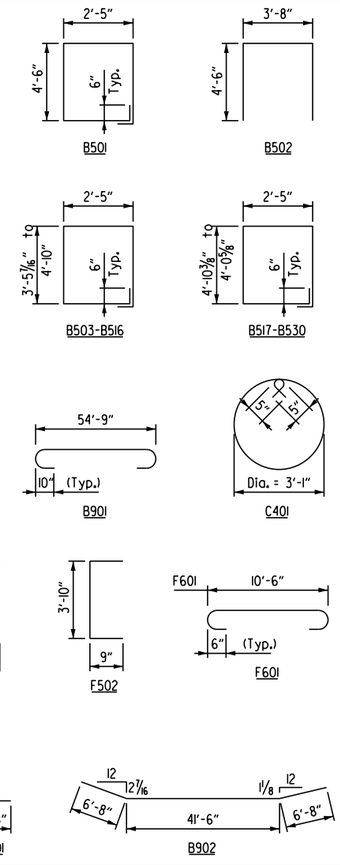

① Bar spacing in both directions.

② Dimension shown is at C.L. of Column.

③ See REINFORCING PLAN on Dwg. No. 66120.

For GENERAL NOTES FOR SUBSTRUCTURE, see Dwg. No. 66114 and Std. Dwg. No. 55006.

For additional information, see LAYOUT on Dwg. No. 66131.

For SECTION A-A, SECTION B-B, & SECTION C-C, see Dwg. No. 66120.

07.27.23

STATE OF ARKANSAS
LICENSED PROFESSIONAL ENGINEER
ERIC S. CHRISTIANSEN
No. 19188

Eric S. Christiansen

BRIDGE ENGINEER

BRIDGE B
DETAILS OF BENT 2
HWY. 612 OVER RAMP 4

ROUTE 612 SEC. 1

ARKANSAS STATE HIGHWAY COMMISSION

LITTLE ROCK, ARK.

DRAWN BY: FAN DATE: 04-23
CHECKED BY: DHP DATE: 04-23
DESIGNED BY: WKB DATE: 04-23
FILENAME: B012326bC_B2.DGN
SCALE: AS SHOWN

BRIDGE NO. B7612 DRAWING NO. 66135

Date Plotted: 7/27/2023

DATE REVISED	DATE FILMED	DATE REVISED	DATE FILMED	FED. ROAD DIST. NO.	STATE	FED. AID PROJ. NO.	SHEET NO.	TOTAL SHEETS
				6	ARK.		347	838
				JOB NO.		012326		
				(1) B7612		BENT 3 DETAILS		66136

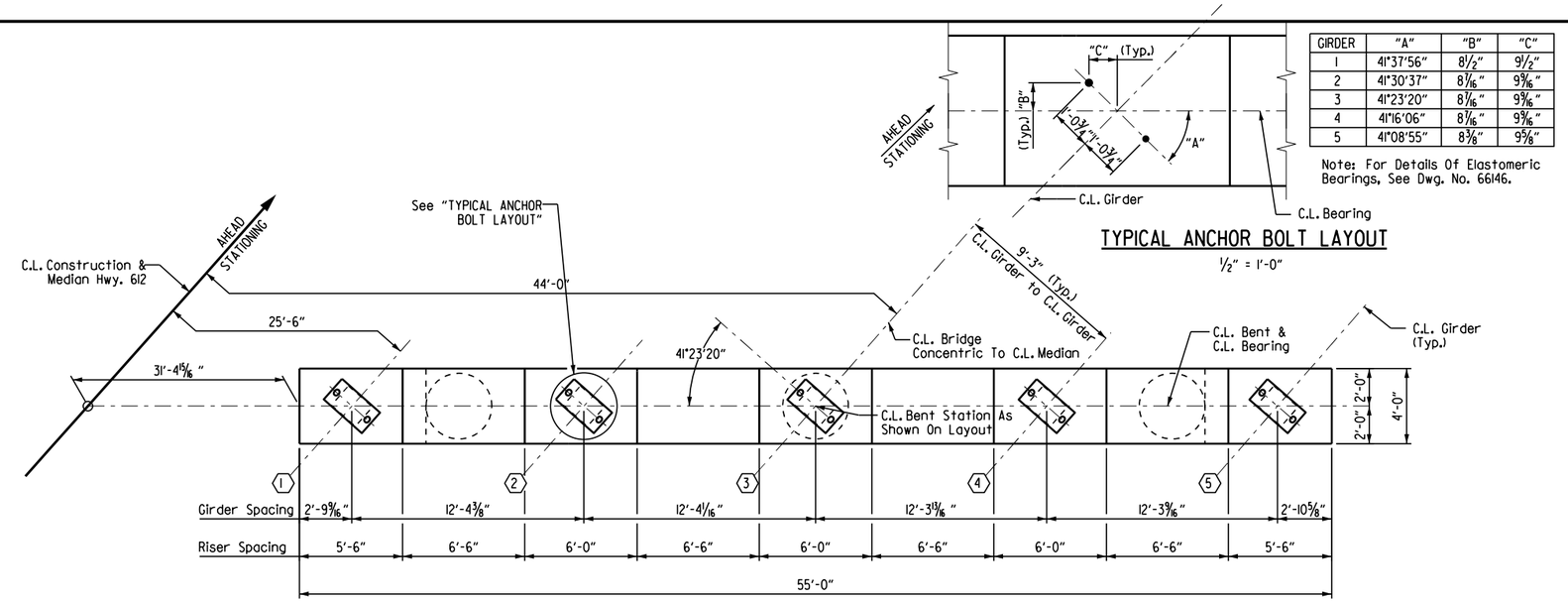

PLAN

1/4" = 1'-0"

GIRDER	"A"	"B"	"C"
1	41°37'56"	8 1/2"	9 1/2"
2	41°30'37"	8 7/16"	9 7/16"
3	41°23'20"	8 7/16"	9 7/16"
4	41°16'06"	8 7/16"	9 7/16"
5	41°08'55"	8 3/8"	9 3/8"

Note: For Details Of Elastomeric Bearings, See Dwg. No. 66146.

TYPICAL ANCHOR BOLT LAYOUT

1/2" = 1'-0"

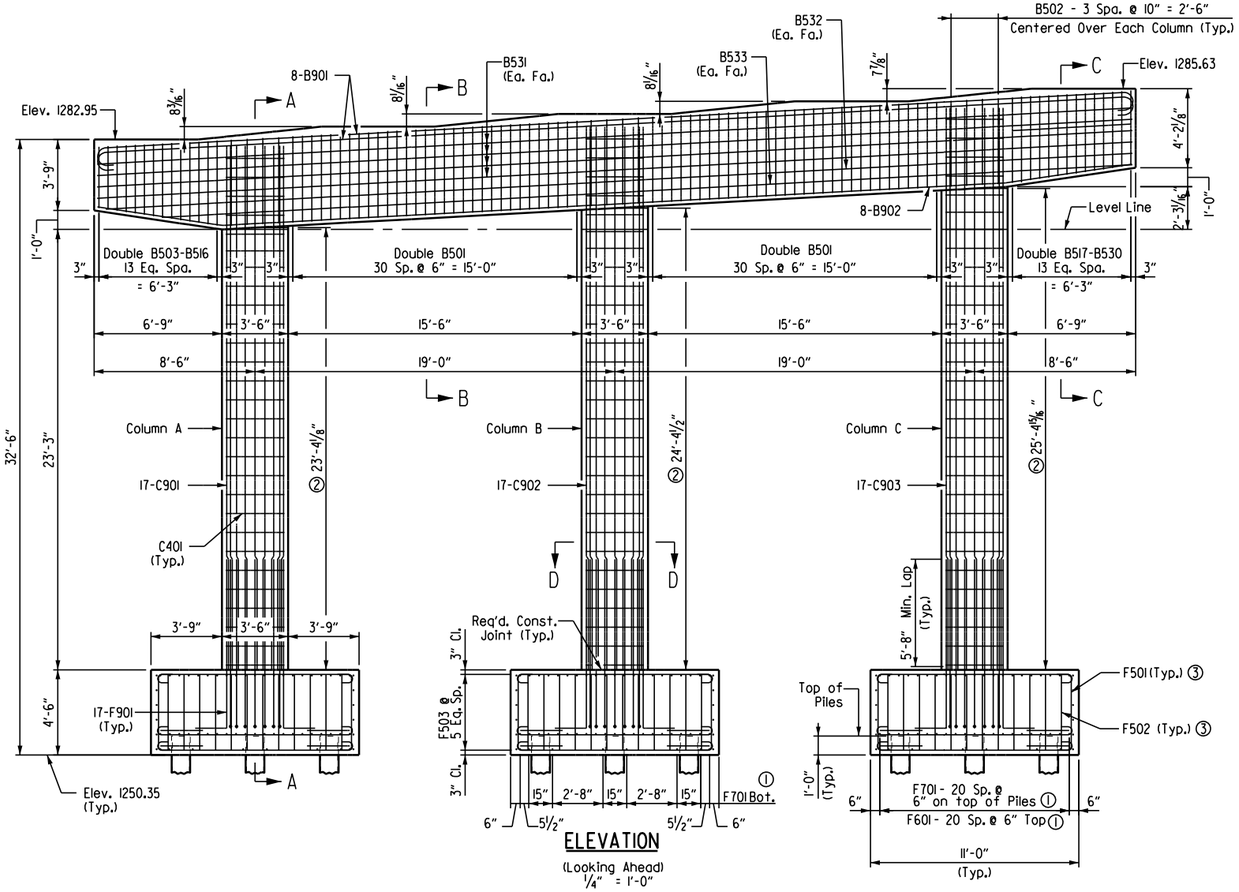

ELEVATION

(Looking Ahead)

1/4" = 1'-0"

BRIDGE B - BENT 3 BAR LIST

Mark	Number Required	Length	Pin Dia.
B501	124	14'-4"	2 1/2"
B502	12	12'-6"	2 1/2"
B503 to B516	2 Each	12'-3" to 14'-4"	2 1/2"
B517 to B530	2 Each	15'-1" to 13'-5"	2 1/2"
B531	8	54'-9"	Str.
B532	2	54'-3"	Str.
B533	2	51'-4"	Str.
B901	16	57'-3"	9"
B902	8	54'-10"	9"
C401	87	10'-9"	3"
C901	17	27'-6"	Str.
C902	17	28'-6"	Str.
C903	17	29'-6"	Str.
F501	72	5'-3"	2 1/2"
F502	66	5'-1"	2 1/2"
F503	72	10'-6"	Str.
F601	126	11'-10"	4 1/2"
F701	174	12'-2"	5 1/4"
F702	24	4'-4"	5 1/4"
F901	51	10'-7"	9"

Bending Diagrams (Dimensions are out to out of bars.)

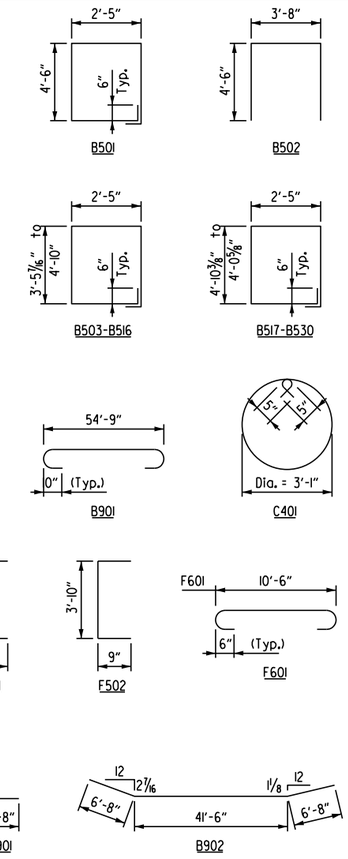

(1) Bar spacing in both directions.

(2) Dimension shown is at C.L. of Column.

(3) See REINFORCING PLAN on Dwg. No. 66120.

For GENERAL NOTES FOR SUBSTRUCTURE, see Dwg. No. 66114 and Std. Dwg. No. 55006.

For additional information, see LAYOUT on Dwg. No. 66131.

For SECTION A-A, SECTION B-B, & SECTION C-C, see Dwg. No. 66120.

07-27-23

STATE OF ARKANSAS
LICENSED PROFESSIONAL ENGINEER
No. 19188
ERIC S. CHRISTIANSEN

Eric S. Christiansen

BRIDGE ENGINEER

BRIDGE B
DETAILS OF BENT 3
HWY. 612 OVER RAMP 4

ROUTE 612 SEC. 1

ARKANSAS STATE HIGHWAY COMMISSION

LITTLE ROCK, ARK.

DRAWN BY: FAN DATE: 04-23
CHECKED BY: DHP DATE: 04-23
DESIGNED BY: WKB DATE: 04-23
FILENAME: B012326bC_B3.DGN
SCALE: AS SHOWN

BRIDGE NO. B7612 DRAWING NO. 66136

Date Plotted: 7/21/2023

NOTE: Class 2 Protective Surface Treatment shall be applied to the roadway face and top of the end bent rail and the top of the backwall.

DATE REVISED	DATE FILMED	DATE REVISED	DATE FILMED	FED. ROAD DIST. NO.	STATE	FED. AID PROJ. NO.	SHEET NO.	TOTAL SHEETS
				6	ARK.		348	838
				JOB NO.		012326		
				(1) B7612		END BENT 4 DETAILS		66137

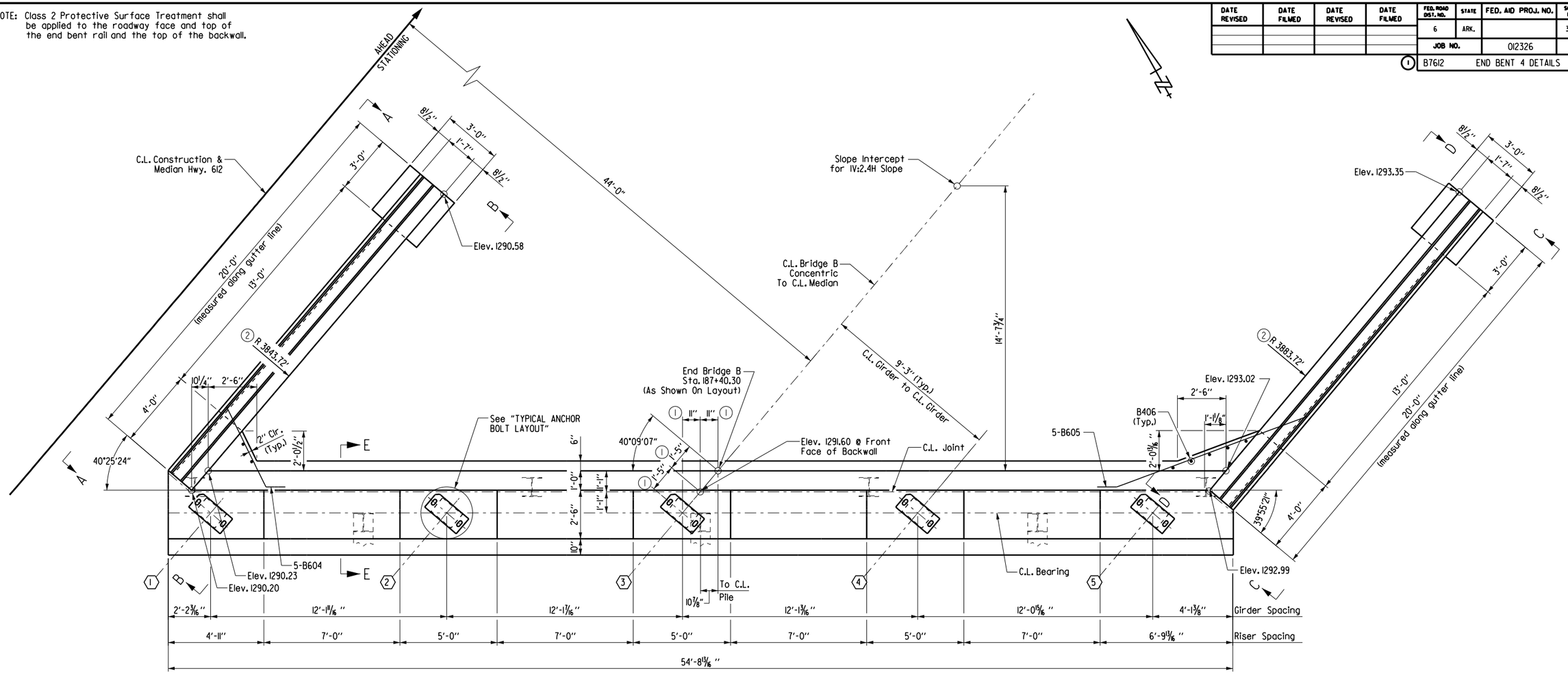

PLAN

Scale: ⅜" = 1'-0"

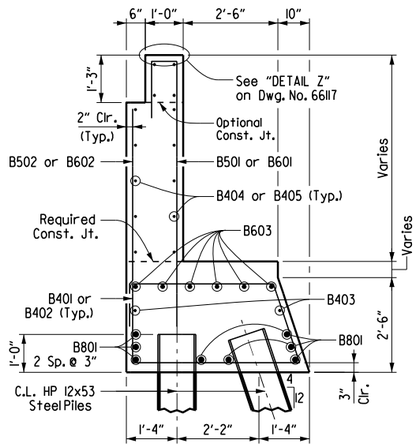

SECTION E-E

½" = 1'-0"

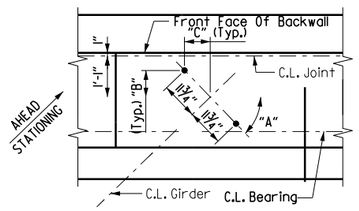

GIRDER	"A"	"B"	"C"
1	40°25'38"	7⅝"	8¹⁵⁄₁₆"
2	40°18'37"	7⅝"	8¹⁵⁄₁₆"
3	40°10'51"	7⅝"	9"
4	40°04'42"	7⅝"	9"
5	39°57'49"	7⅝"	9"

Note: For Details Of Elastomeric Bearings, See Dwg. No. 66146.

TYPICAL ANCHOR BOLT LAYOUT

½" = 1'-0"

For GENERAL NOTES FOR SUBSTRUCTURE, see Dwg. No. 66114 and Std. Dwg. No. 55006.

For additional information, see LAYOUT on Dwg. No. 66131.

For VIEW A-A, VIEW B-B, VIEW C-C, and VIEW D-D, see Dwg. No. 66139.

For DETAIL Z, see Dwg. No. 66117.

For Details of Wing and Rail, see Dwg. No. 66117, 66130, & 66139.

Wingwalls and rails shall be constructed on arcs concentric to centerline median.

(1) Dimensions shown are to C.L. Joint

(2) Radius is for Gutter line only. Wingwall and Rail shall be constructed perpendicular to radial line at intersection of Gutter line Radii and Front Face of Backwall.

07-27-23

STATE OF ARKANSAS
LICENSED PROFESSIONAL ENGINEER
No. 19188
ERIC S. CHRISTIANSEN

Eric S. Christiansen

BRIDGE ENGINEER

SHEET 1 OF 3
BRIDGE B
DETAILS OF END BENT 4
HWY. 612 OVER RAMP 4

ROUTE 612 SEC. 1

ARKANSAS STATE HIGHWAY COMMISSION

LITTLE ROCK, ARK.

DRAWN BY: FAN DATE: 04-23 FILENAME: B012326bC_B41.DGN
CHECKED BY: DHP DATE: 04-23 SCALE: ⅜" = 1'-0"
DESIGNED BY: WKB DATE: 04-23

BRIDGE NO. B7612 DRAWING NO. 66137

Date Plotted: 7/21/2023

NOTE: Class 2 Protective Surface Treatment shall be applied to the roadway face and top of the end bent rail and the top of the backwall.

(A) B601 - 5 Spa. @ 6" = 2'-6" (Fr. Fa.)
B602 - 5 Spa. @ 6" = 2'-6" (Bk. Fa.)

(B) B601 - Front Face Only

(C) B601 - 4 Spa. @ 6" = 2'-0" (Fr. Fa.)
B602 - 4 Spa. @ 6" = 2'-0" (Bk. Fa.)

(D) B602 - Back Face Only

DATE REVISED	DATE FILMED	DATE REVISED	DATE FILMED	FED. ROAD DIST. NO.	STATE	FED. AID PROJ. NO.	SHEET NO.	TOTAL SHEETS
				6	ARK.		349	838
				JOB NO.		012326		
				(1) B7612		END BENT 4 DETAILS		66138

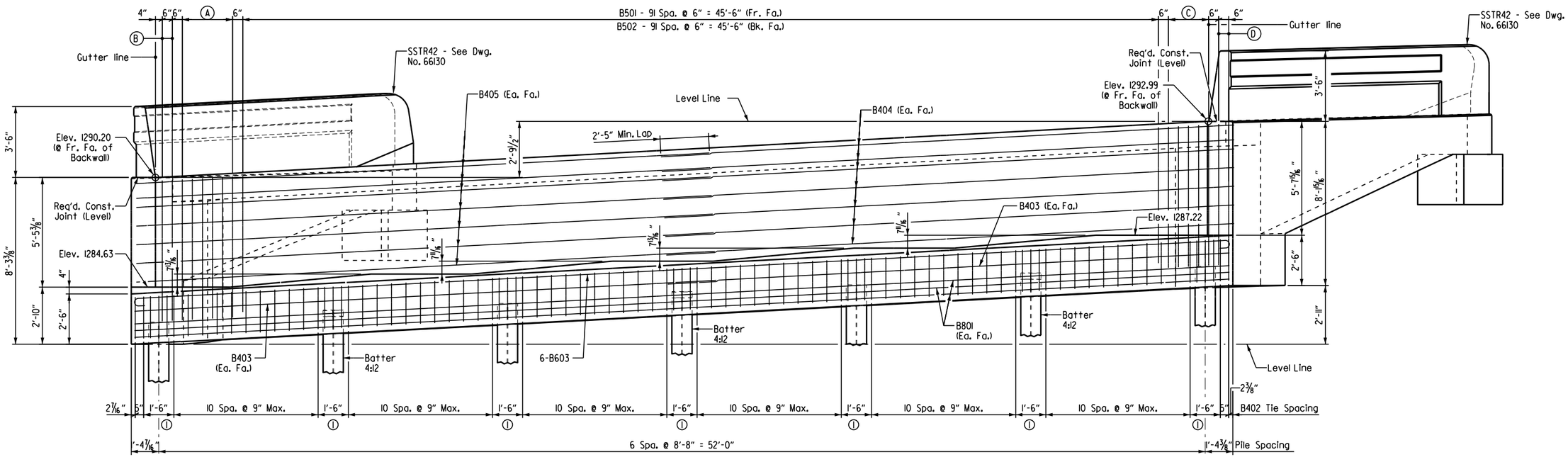

ELEVATION
(Looking Ahead)
Scale: ⅜" = 1'-0"

BRIDGE B - END BENT 4 BAR LIST

Mark	No. Req'd	Length	Pin Dia.	Mark	No. Req'd	Length	Pin Dia.
B401	21	7'-10"	2"	W445 to W450	1 Each	2'-1" to 3'-6½"	Str.
B402	70	12'-9"	2"	W451 to W457	1 Each	3'-9½" to 5'-6"	Str.
B403	4	28'-5"	Str.	W458	3	12'-7"	2"
B404	14	28'-11"	3"	W459E	80	4'-7"	6"
B405	14	28'-9"	3"				
B406	7	6'-5"	Str.				
				W601	24	4'-0"	4½"
B501	92	8'-9"	2 1/2"	W602	12	2'-8"	Str.
B502	92	5'-6"	Str.				
				W701	12	19'-8"	Str.
B601	13	8'-10"	4 1/2"	W702	2	12'-11"	Str.
B602	13	5'-9"	Str.	W703	2	8'-11"	Str.
B603	6	55'-8"	4 1/2"	W704	2	18'-3"	5 1/4"
B604	5	6'-5"	4 1/2"	W705	2	13'-4"	Str.
B605	5	11'-11"	4 1/2"	W706	2	9'-10"	Str.
				W707	2	6'-4"	Str.
B801	8	54'-4"	Str.	W708	2	18'-5"	5 1/4"
W401	4	8'-2"	Str.				
W402	4	10'-7"	Str.				
W403 to W409	1 Each	5'-1" to 3'-7"	Str.	R401E	76	7'-6"	3"
				R402E	8	5'-6"	Str.
W410 to W415	1 Each	3'-4" to 2'-1"	Str.	R404E	4	3'-8"	8½"
				R405E	16	19'-8"	Str.
W416 to W422	1 Each	5'-1" to 3'-7"	Str.	R406E	4	19'-5"	Str.
				R407E	2	6'-8"	3"
W423 to W428	1 Each	3'-4" to 2'-1"	Str.	R408E	2	5'-1"	3"
W429	3	7'-8"	2"				
W430	4	8'-0½"	Str.				
W431	4	10'-6"	Str.				
W432 to W437	1 Each	2'-1" to 3'-6½"	Str.				
W438 to W444	1 Each	3'-9½" to 5'-6"	Str.				

BENDING DIAGRAMS
(Dimensions are out to out of bars)

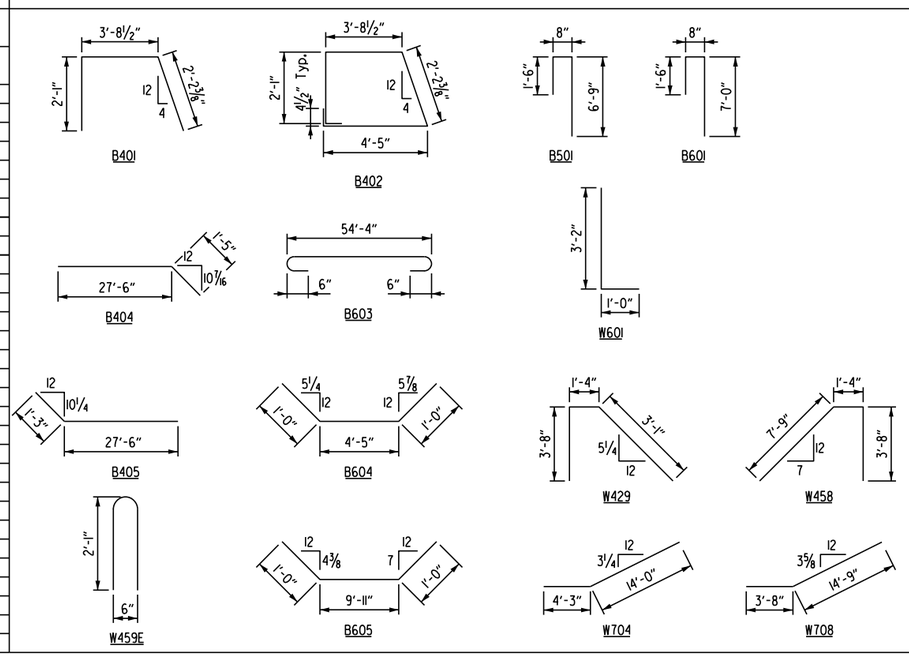

Note:
See Dwg. No. 66130 for Traffic Rail reinforcing bar bending diagrams.

For GENERAL NOTES FOR SUBSTRUCTURE, see Dwg. No. 66114 and Std. Dwg. No. 55006.

For additional information, see LAYOUT on Dwg. No. 66131.

For Details of Wing and Rail, see Dwg. No. 66117, 66130, & 66139.

(1) B401 U-Bars where indicated.

07.27.23
STATE OF ARKANSAS
LICENSED PROFESSIONAL ENGINEER
No. 19188
ERIC S. CHRISTIANSEN
Eric S. Christiansen
BRIDGE ENGINEER

SHEET 2 OF 3
BRIDGE B
DETAILS OF END BENT 4
HWY. 612 OVER RAMP 4

ROUTE 612 SEC. 1

ARKANSAS STATE HIGHWAY COMMISSION
LITTLE ROCK, ARK.

DRAWN BY: FAN DATE: 04-23
CHECKED BY: DHP DATE: 04-23
DESIGNED BY: WKB DATE: 04-23
FILENAME: B012326bC_B42.DGN
SCALE: ⅜" = 1'-0"

BRIDGE NO. B7612 DRAWING NO. 66138

Date Plotted: 7/21/2023

DATE REVISED	DATE FILMED	DATE REVISED	DATE FILMED	FED. ROAD DIST. NO.	STATE	FED. AID PROJ. NO.	SHEET NO.	TOTAL SHEETS
				6	ARK.		350	838
				JOB NO.		012326		
				① B7612		END BENT 4 DETAILS		66139

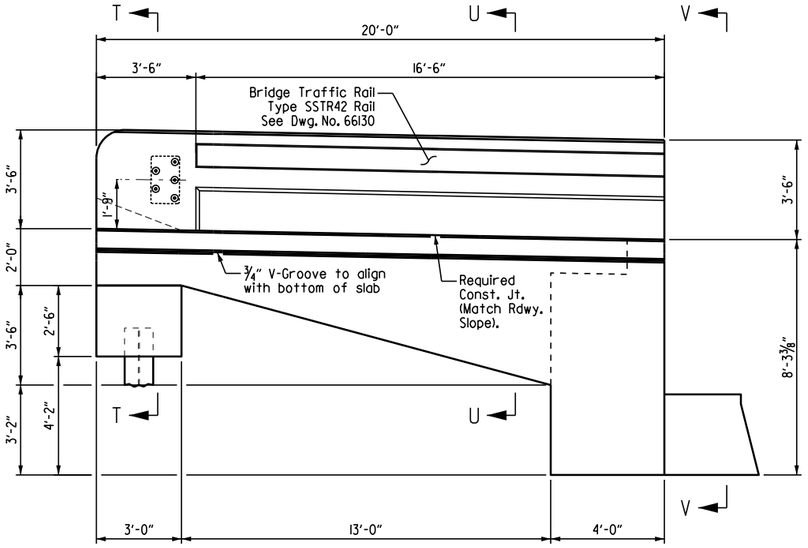

VIEW A-A

Scale: 3/8" = 1'-0"

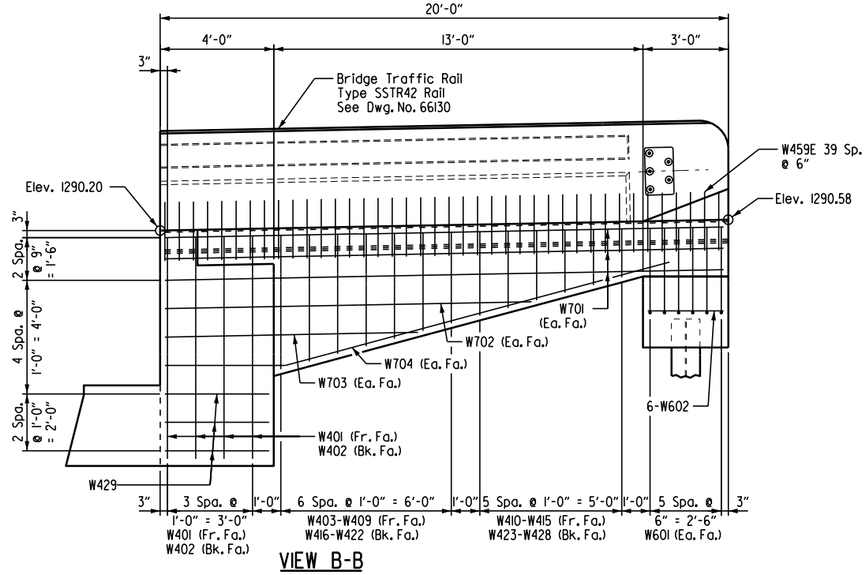

VIEW B-B

Scale: 3/8" = 1'-0"

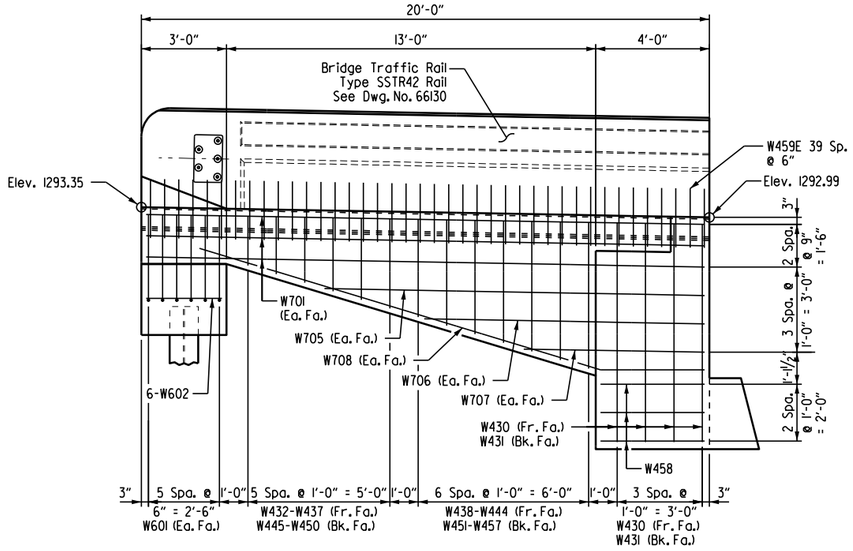

VIEW D-D

Scale: 3/8" = 1'-0"

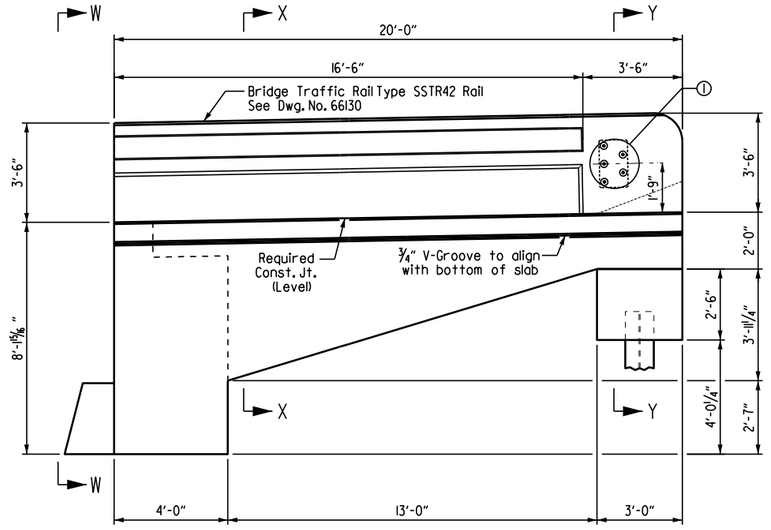

VIEW C-C

Scale: 3/8" = 1'-0"

For GENERAL NOTES FOR SUBSTRUCTURE, see Dwg. No. 66114 and Std. Dwg. No. 55006.

For additional information, see LAYOUT on Dwg. No. 66131.

For SECTION T-T, SECTION U-U, VIEW V-V, VIEW W-W, SECTION X-X, and SECTION Y-Y, see Dwg. No. 66117.

① 5 - 1"ø formed holes for guard rail connection. See Std. Dwg. No. GR-10 for bolt spacing and additional connection details.

07.27.23

STATE OF ARKANSAS
LICENSED PROFESSIONAL ENGINEER
No. 19188
ERIC S. CHRISTIANSEN

Eric S. Christiansen

BRIDGE ENGINEER

SHEET 3 OF 3
BRIDGE B
DETAILS OF END BENT 4
HWY. 612 OVER RAMP 4

ROUTE 612 SEC. 1

ARKANSAS STATE HIGHWAY COMMISSION

LITTLE ROCK, ARK.

DRAWN BY: FAN DATE: 04-23
CHECKED BY: DHP DATE: 04-23
DESIGNED BY: WKB DATE: 04-23

FILENAME: B012326bC_B43.DGN
SCALE: AS SHOWN

BRIDGE NO. B7612

DRAWING NO. 66139

Date Plotted: 7/21/2023

DATE REVISED	DATE FILMED	DATE REVISED	DATE FILMED	FED. ROAD DIST. NO.	STATE	FED. AID PROJ. NO.	SHEET NO.	TOTAL SHEETS
				6	ARK.		351	838
				JOB NO.		012326		
				(1) B7612		SPAN DETAILS		66140

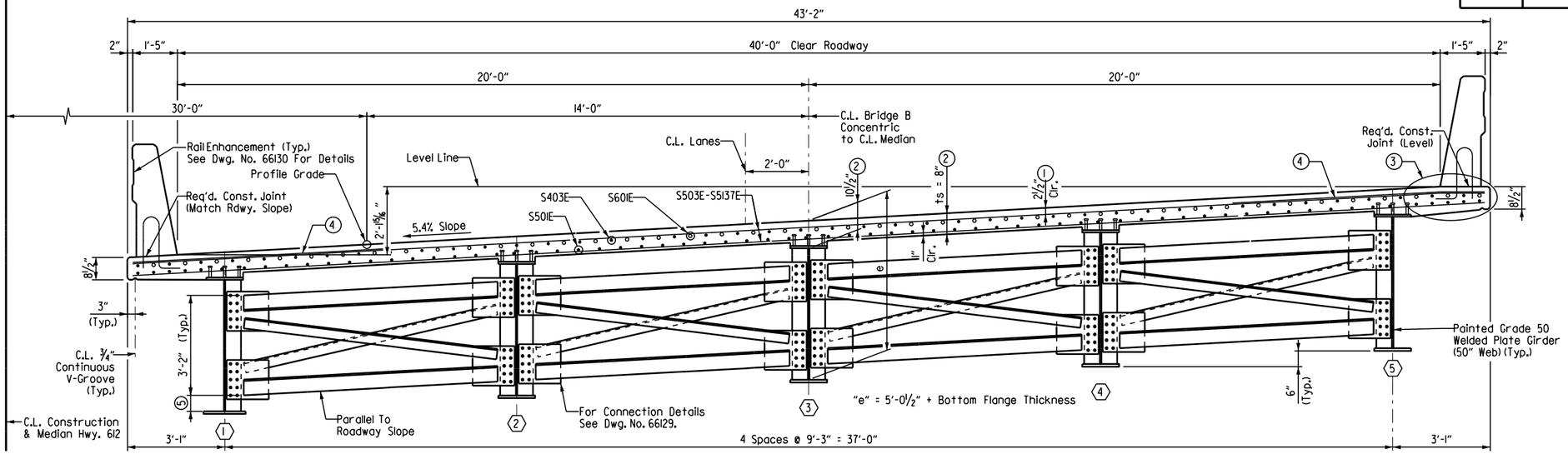

TYPICAL SECTION

(Looking Ahead)
Scale: ½" = 1'-0"

(1) TOLERANCE: Minus = ¼": Plus equal to the amount of slab thickening used to meet the slab thickness tolerance. See "ADJUSTMENT FOR SLAB THICKNESS TOLERANCE" on Std. Dwg. No. 55007.

(2) See "ADJUSTMENT FOR SLAB THICKNESS TOLERANCE" on Std. Dwg. No. 55007.

(3) Field bend transverse bars in this area to provide minimum clearances.

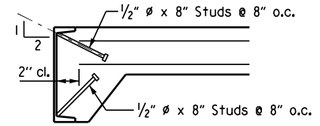

Note: As an alternate to ⅝" ø studs, ½" ø x 8" studs spaced as shown may be used. Use weight of ⅝" ø stud as basis of measurement of structural steel in anchors.

DETAIL OF ALTERNATE ANCHORS

No Scale

NOTES:

Class 2 Protective Surface Treatment shall be applied to the roadway surface and the top and roadway face of bridge traffic railing.

All bars designated with an "E" suffix are to be epoxy coated.

Bar positions or clearances from the forms shall be maintained by means of stays, ties, hangers or other approved devices per Subsection 804.06. Placement of slab bolsters or hi-chairs with full-length lower runners directly on removable deck forms will not be allowed.

EXPANSION DEVICE:

Roadway Channel MC18x42.7 (ASTM A709, Gr. 50)
Connection ∠'s 8"x4"x½" x 8" Long
Detail Device ⅛" high & provide ¼" shims using 1- ⅛" PL & 2 - 1/16" PL's

For details of Poured Silicone Joint, see Std. Dwg. No. 55008 & Dwg. No. 66145.

SLAB REINFORCING:

Transverse:
S503E @ 6" Centers (Top & Bottom)
S504E-S5137E @ 6" Centers (Top & Bottom)
(4) S602E (Place as shown)
See DETAIL A on Dwg. No. 66141
Longitudinal:
S403E @ 12" Centers (Top)
S501E Place as shown (Bottom)
S601E @ 12" Centers (Top over Int. Bents)

For additional reinforcing details, see Dwg. No. 66141 - 66142.

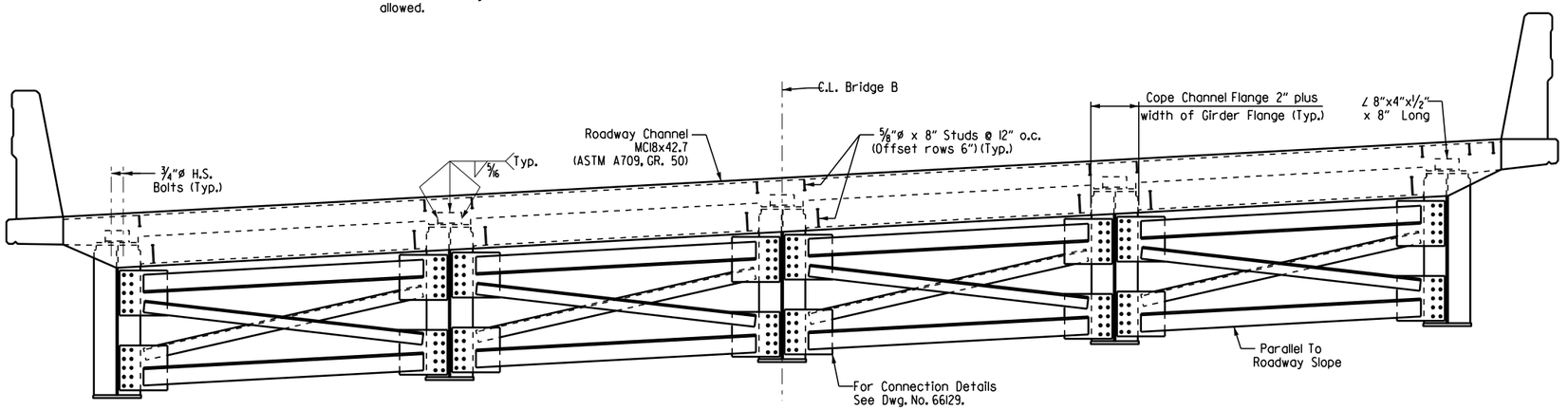

VIEW @ C.L. JOINT

(Looking Ahead)
Scale: ½" = 1'-0"

07-27-23
STATE OF ARKANSAS
LICENSED PROFESSIONAL ENGINEER
No. 19188
ERIC S. CHRISTIANSEN
Eric S. Christiansen
BRIDGE ENGINEER

SHEET 1 OF 5
BRIDGE B
DETAILS OF 288'-0" CONTINUOUS PLATE GIRDER UNIT
HWY. 612 OVER RAMP 4

ROUTE 612 SEC. 1

ARKANSAS STATE HIGHWAY COMMISSION

LITTLE ROCK, ARK.

DRAWN BY: FAN DATE: 04-23 FILENAME: B012326bC_SI.DGN
CHECKED BY: DHP DATE: 04-23 SCALE: As Shown
DESIGNED BY: WKB DATE: 04-23

BRIDGE NO. B7612 DRAWING NO. 66140

Date Plotted: 7/21/2023

DATE REVISED	DATE FILMED	DATE REVISED	DATE FILMED	FED. ROAD DIST. NO.	STATE	FED. AID PROJ. NO.	SHEET NO.	TOTAL SHEETS
				6	ARK.		352	838
				JOB NO.		012326		
				(1) B7612		SPAN DETAILS		66141

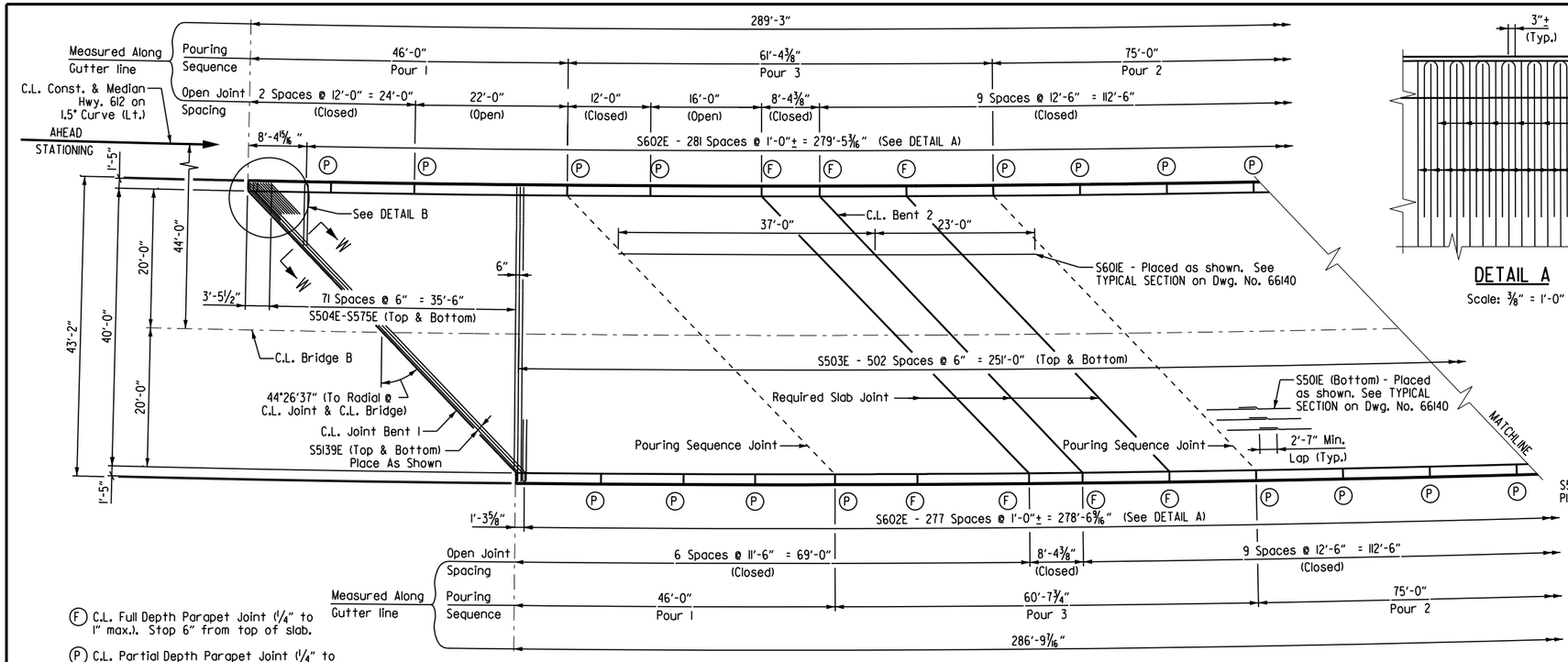

Ⓕ C.L. Full Depth Parapet Joint (¼" to 1" max.). Stop 6" from top of slab.

Ⓟ C.L. Partial Depth Parapet Joint (¼" to 1" max.). Stop 1'-4" from top of slab.

DETAIL A

Scale: ⅜" = 1'-0"

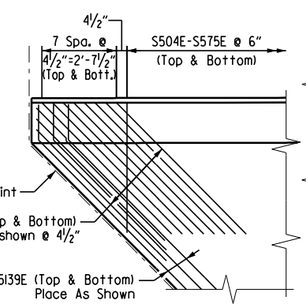

DETAIL B

Scale: ⅜" = 1'-0"

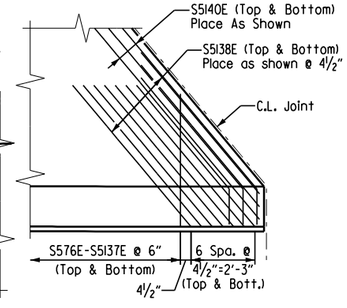

DETAIL C

Scale: ⅜" = 1'-0"

Note: See TYPICAL SECTION on Dwg. No. 66140 for placement of longitudinal reinforcing.

Note: For Bar List, see Dwg. No. 66142.

Note: For SECTION W-W, see Dwg. No. 66142.

Note: All transverse reinforcing steel shall be placed on radial lines. Spacing is measured along C.L. Bridge, unless noted otherwise.

All longitudinal lines and longitudinal reinforcing steel shall be placed on curves concentric with C.L. Bridge.

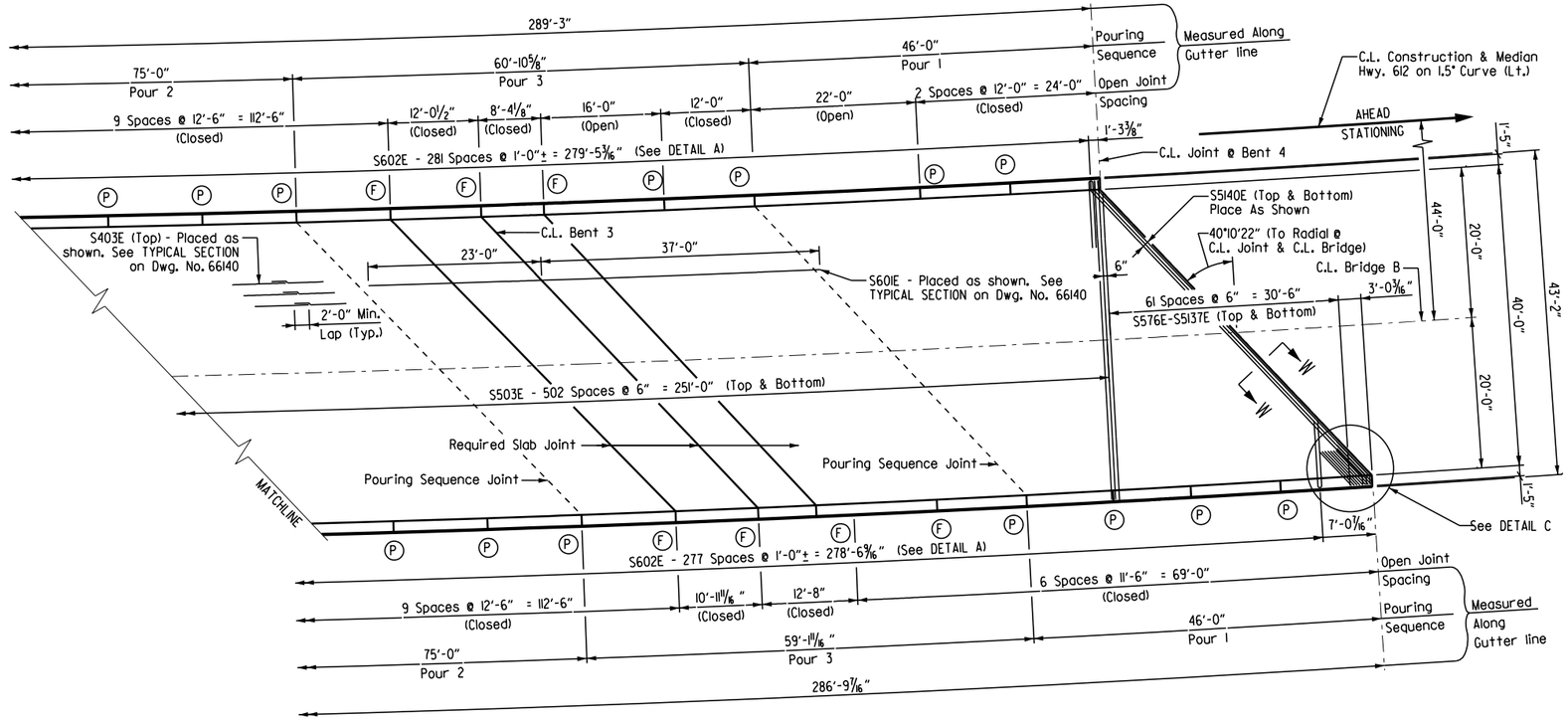

REINFORCING PLAN & POURING SEQUENCE

Scale: 1" = 10'-0"

Note: Pours with the same number may be placed simultaneously or separately. All Pours (1) must be placed before Pour (2) can be placed. Pour (2) must be placed before Pour (3) can be placed. 48 hours shall elapse before the end of a pour and the start of the next pour. 72 hours shall elapse between the end of a pour and the start of an adjacent pour. 72 hours shall elapse between the completion of the entire deck and the pouring of the parapet. Any railing pours made before the entire slab unit has been placed must be approved by the Engineer. 72 hours shall elapse between the completion of the entire deck and the pouring of the parapet. Any railing pours made before the entire slab unit has been placed must be approved by the Engineer.

The Contractor must obtain approval from the Engineer for any deviations from the pouring sequence shown.

Concrete in bridge superstructure shall be consolidated for the entire pour before any concrete has taken its initial set. This may require the use of a retarding agent.

Note: Required slab joints and pouring sequence joints shall align with parapet open joint at the gutterline.

07-27-23

STATE OF ARKANSAS
LICENSED PROFESSIONAL ENGINEER
No. 19188
ERIC S. CHRISTIANSEN

Eric S. Christiansen

BRIDGE ENGINEER

SHEET 2 OF 5
BRIDGE B
DETAILS OF 288'-0" CONTINUOUS PLATE GIRDER UNIT
HWY. 612 OVER RAMP 4

ROUTE 612 SEC. 1

ARKANSAS STATE HIGHWAY COMMISSION

LITTLE ROCK, ARK.

DRAWN BY: FAN DATE: 04-23
CHECKED BY: DHP DATE: 04-23
DESIGNED BY: WKB DATE: 04-23
FILENAME: B012326bC_S2.DGN
SCALE: As Shown

BRIDGE NO. B7612 DRAWING NO. 66141

Date Plotted: 7/21/2023

DATE REVISED	DATE FILMED	DATE REVISED	DATE FILMED	FED. ROAD DIST. NO.	STATE	FED. AID PROJ. NO.	SHEET NO.	TOTAL SHEETS
				6	ARK.		353	838
				JOB NO.		012326		
				①	B7612	SPAN DETAILS		66142

TABLE OF DEAD LOAD DEFLECTIONS (INCHES)

Camber for Dead Load Deflection plus vertical curve +/- 1/4" tolerance. Vertical curve corrections not included. Negative sign (-) indicates upward deflection. Deflections shown are off a chord from centerline bearing to centerline bearing.

Span	Point of Deflection	Stuctural Steel					Structural Steel + Slab					Structural Steel + Slab + Rail				
		Girder 1	Girder 2	Girder 3	Girder 4	Girder 5	Girder 1	Girder 2	Girder 3	Girder 4	Girder 5	Girder 1	Girder 2	Girder 3	Girder 4	Girder 5
Span 1	0	0	0	0	0	0	0	0	0	0	0	0	0	0	0	0
	0.1	0.025	0.025	0.027	0.027	0.023	0.124	0.144	0.148	0.147	0.114	0.145	0.158	0.159	0.159	0.132
	0.2	0.044	0.045	0.048	0.047	0.041	0.219	0.252	0.26	0.258	0.2	0.258	0.276	0.279	0.279	0.233
	0.3	0.055	0.054	0.058	0.057	0.049	0.268	0.304	0.316	0.314	0.239	0.318	0.333	0.340	0.340	0.280
	0.4	0.054	0.052	0.057	0.057	0.048	0.261	0.29	0.306	0.304	0.228	0.313	0.319	0.329	0.330	0.269
	0.5	0.043	0.039	0.045	0.044	0.036	0.202	0.214	0.233	0.232	0.166	0.249	0.237	0.251	0.253	0.199
	0.6	0.024	0.019	0.025	0.025	0.018	0.107	0.098	0.119	0.119	0.075	0.141	0.112	0.129	0.131	0.097
	0.7	0.004	-0.003	0.004	0.003	-0.002	0.004	-0.025	-0.005	-0.003	-0.026	0.022	-0.022	-0.004	0.000	-0.020
	0.8	-0.012	-0.019	-0.013	-0.014	-0.015	-0.075	-0.113	-0.096	-0.094	-0.093	-0.072	-0.119	-0.102	-0.099	-0.098
	0.9	-0.015	-0.02	-0.017	-0.017	-0.017	-0.085	-0.116	-0.107	-0.105	-0.094	-0.090	-0.124	-0.114	-0.112	-0.102
	0	0	0	0	0	0	0	0	0	0	0	0	0	0	0	0
Span 2	0.1	0.068	0.078	0.072	0.072	0.065	0.359	0.448	0.431	0.426	0.347	0.400	0.484	0.463	0.461	0.391
	0.2	0.173	0.191	0.183	0.182	0.167	0.912	1.103	1.086	1.073	0.882	1.022	1.192	1.168	1.162	0.999
	0.3	0.276	0.306	0.297	0.296	0.275	1.451	1.772	1.756	1.736	1.45	1.630	1.916	2.048	1.880	1.642
	0.4	0.349	0.387	0.377	0.375	0.349	1.836	2.246	2.227	2.203	1.838	2.065	2.429	2.394	2.386	2.077
	0.5	0.374	0.414	0.404	0.403	0.375	1.966	2.413	2.39	2.366	1.974	2.214	2.609	2.569	2.564	2.228
	0.6	0.346	0.383	0.373	0.372	0.35	1.82	2.236	2.211	2.19	1.842	2.053	2.418	2.377	2.375	2.076
	0.7	0.27	0.299	0.291	0.291	0.275	1.424	1.751	1.73	1.715	1.45	1.610	1.893	1.861	1.861	1.632
	0.8	0.168	0.184	0.179	0.179	0.17	0.889	1.082	1.068	1.059	0.902	1.007	1.170	1.150	1.150	1.013
	0.9	0.069	0.071	0.069	0.069	0.069	0.37	0.421	0.415	0.411	0.371	0.419	0.455	0.447	0.447	0.415
	0	0	0	0	0	0	0	0	0	0	0	0	0	0	0	0
Span 3	0.1	-0.012	-0.013	-0.013	-0.013	-0.014	-0.072	-0.088	-0.086	-0.085	-0.082	-0.077	-0.094	-0.092	-0.091	-0.087
	0.2	-0.006	-0.007	-0.005	-0.007	-0.01	-0.05	-0.06	-0.057	-0.057	-0.066	-0.049	-0.062	-0.060	-0.060	-0.062
	0.3	0.013	0.012	0.014	0.012	0.007	0.038	0.043	0.046	0.044	0.016	0.053	0.051	0.052	0.051	0.036
	0.4	0.035	0.037	0.039	0.037	0.031	0.15	0.185	0.188	0.184	0.135	0.181	0.205	0.204	0.203	0.173
	0.5	0.055	0.06	0.061	0.059	0.051	0.256	0.315	0.317	0.311	0.239	0.301	0.345	0.342	0.341	0.292
	0.6	0.067	0.072	0.074	0.071	0.062	0.317	0.39	0.39	0.384	0.301	0.369	0.425	0.420	0.420	0.360
	0.7	0.066	0.072	0.073	0.071	0.063	0.32	0.393	0.393	0.387	0.308	0.370	0.427	0.423	0.422	0.364
	0.8	0.053	0.058	0.059	0.057	0.051	0.26	0.32	0.32	0.315	0.252	0.299	0.347	0.344	0.344	0.296
	0.9	0.03	0.033	0.033	0.032	0.029	0.147	0.181	0.181	0.178	0.142	0.169	0.196	0.195	0.194	0.166
	0	0	0	0	0	0	0	0	0	0	0	0	0	0	0	0

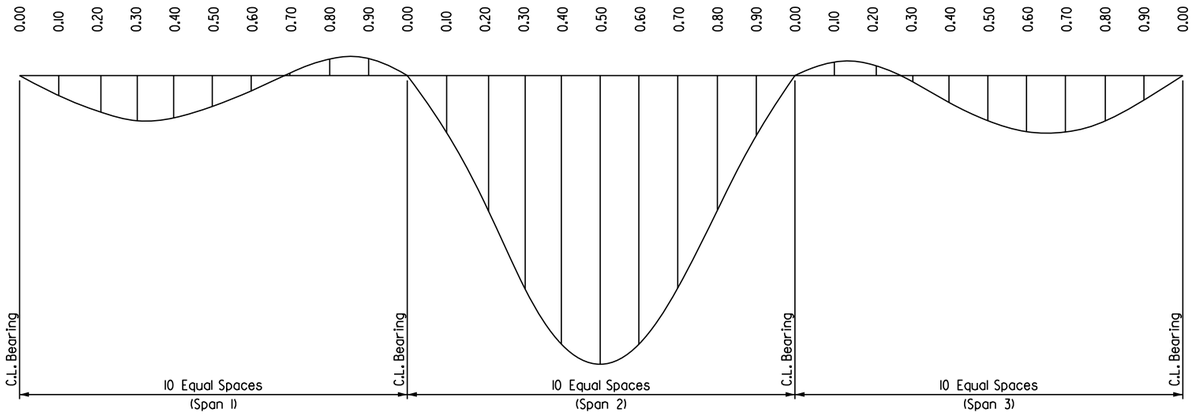

DEAD LOAD DEFLECTION DIAGRAM

Not to Scale

BRIDGE B - SUPERSTRUCTURE BAR LIST

Mark	Number Required	Length	Pin Dia.
S401E	36	4'-1"	2"
S402E	36	4'-0"	2"
S403E	344	37'-11"	Str.
S501E	335	59'-10"	Str.
S503E	1006	42'-10"	Str.
S504E to S575E	2 Each	4'-1" to 4'-11"	Str.
S576E to S5137E	2 Each	4'-1" to 5'-0"	Str.
S5138E	42	6'-10"	Str.
S5139E	6	59'-1"	3 3/4"
S5140E	6	55'-4"	3 3/4"
S5141E	12	12'-6"	Str.
S5142E	12	11'-8"	Str.
S601E	86	60'-0"	Str.
S602E	560	18'-1 1/2"	5 1/4"
R400E	16	6'-3"	3"
R401E	1138	7'-6"	3"
R402E	120	5'-6"	Str.
R403E	1138	3'-8"	6"
R404E	4	3'-8"	8 1/2"
R405E	32	19'-8"	Str.
R406E	8	19'-8"	Str.
R407E	4	6'-8"	3"
R408E	4	5'-1"	3"
R409E	30	8'-1"	Str.
R410E	10	10'-8"	Str.
R411E	120	11'-2"	Str.
R412E	70	11'-8"	Str.
R413E	180	12'-2"	Str.
R414E	10	12'-4"	Str.
R415E	20	15'-8"	Str.
R416E	20	21'-8"	Str.

Note: See Dwg. No. 66130 For RXXXE Bending Diagrams

Bending Diagrams (Dimensions are out to out of bars.)

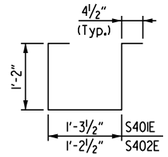

S401E & S402E

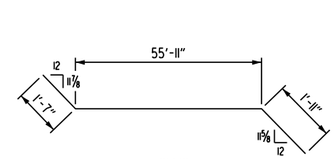

S5139E

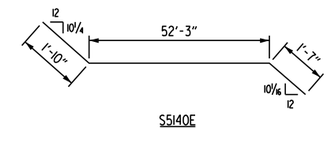

S5140E

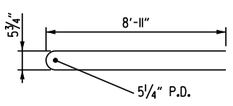

S602E

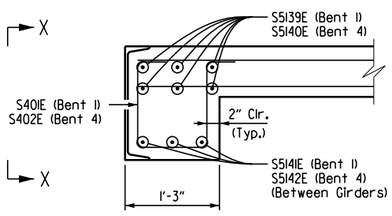

SECTION W-W

Scale: 1" = 1'-0"

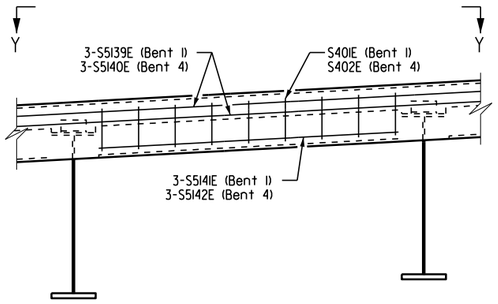

VIEW X-X

Scale: 1/2" = 1'-0"

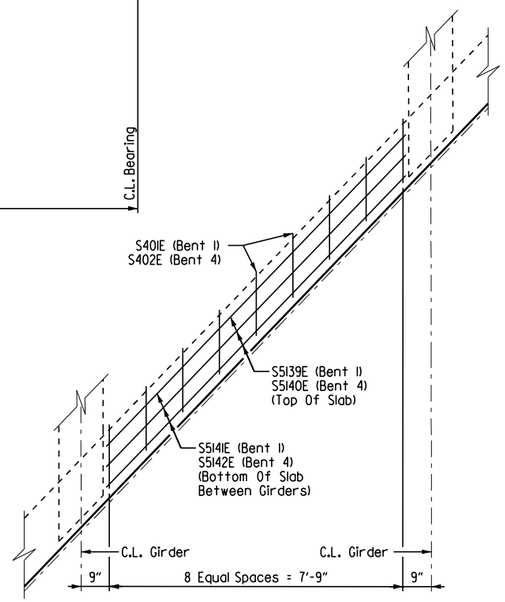

VIEW Y-Y

Scale: 1/2" = 1'-0"

07-27-23
STATE OF ARKANSAS
LICENSED PROFESSIONAL ENGINEER
No. 19188
ERIC S. CHRISTIANSEN

Eric S. Christiansen

BRIDGE ENGINEER

SHEET 3 OF 5
BRIDGE B
DETAILS OF 288'-0" CONTINUOUS PLATE GIRDER UNIT
HWY. 612 OVER RAMP 4

ROUTE 612 SEC. 1

ARKANSAS STATE HIGHWAY COMMISSION

LITTLE ROCK, ARK.

DRAWN BY: FAN DATE: 04-23
CHECKED BY: DHP DATE: 04-23
DESIGNED BY: WKB DATE: 04-23
FILENAME: B012326bC_S3.DGN
SCALE: As Shown

BRIDGE NO. B7612 DRAWING NO. 66142

Date Plotted: 7/21/2023

DATE REVISED	DATE FILMED	DATE REVISED	DATE FILMED	FED. ROAD DIST. NO.	STATE	FED. AID PROJ. NO.	SHEET NO.	TOTAL SHEETS
				6	ARK.		354	838
				JOB NO.		012326		
				(1) B7612		SPAN DETAILS		66143

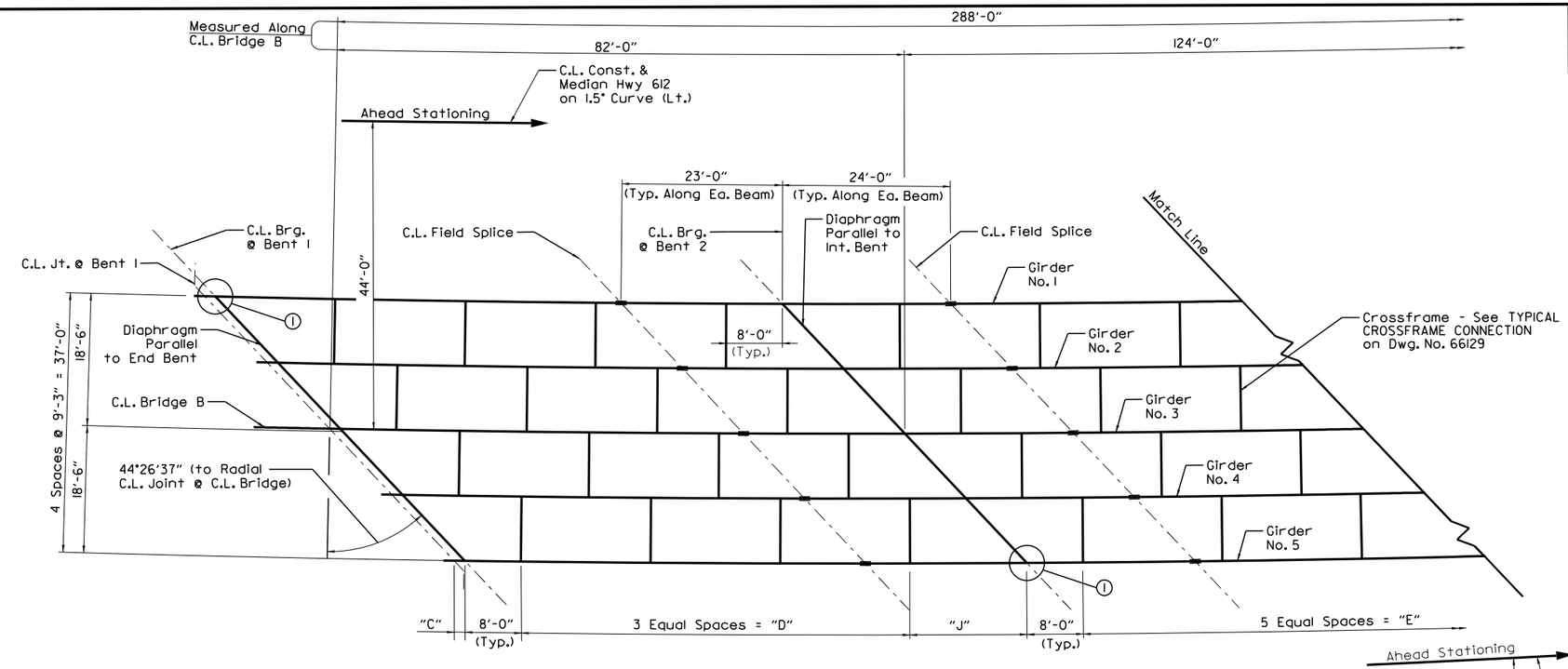

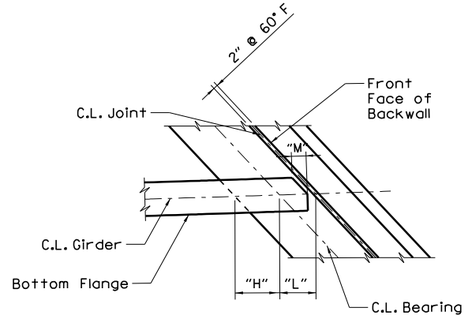

Bearing Plan
@ End Bent 4
Scale: 3/8" = 1'-0"

NOTES:

All structural steel shall be ASTM A709, Grade 50 steel, U.N.O.

Girders are curved and concectric to C.L. Bridge B. All crossframes are on radial lines, U.N.O.

For GIRDER ELEVATION, see Dwg. No. 66144.

For FIELD SPLICE DETAILS, see Dwg. No. 66129.

For TYPICAL CROSSFRAME CONNECTION, see Dwg. No. 66129.

(1) Refer to "Typical Bearing Stiffeners" Dwg. No. 66129.

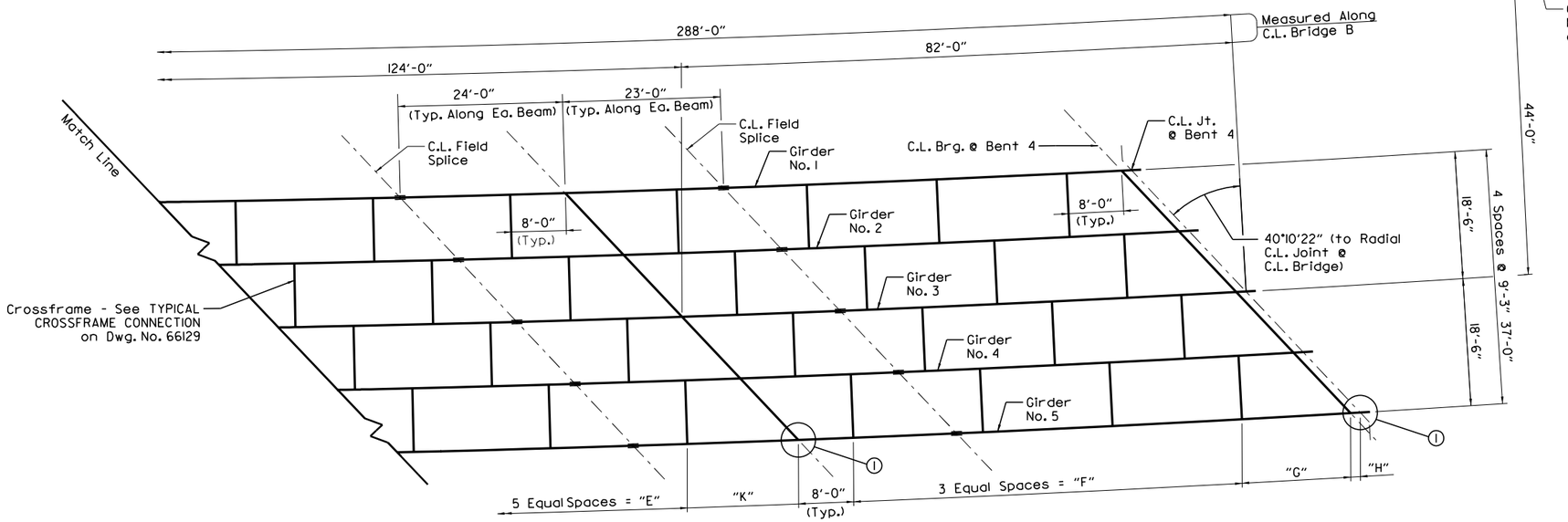

FRAMING PLAN
Scale: 1" = 10'-0"

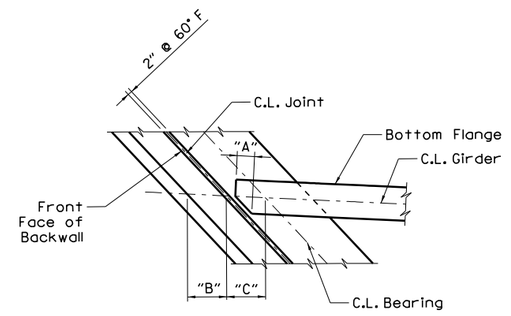

Bearing Plan
@ End Bent 1
Scale: 3/8" = 1'-0"

TABLE OF GIRDER VARIABLES
(Dimensions shown are taken along C.L. Girders)

GIRDER NO.	"A"	"B"	"C"	"D"	"E"	"F"	"G"	"H"	"J"	"K"	"L"	"M"
1	6 15/16"	1'-6 5/16"	1'-6 5/16"					1'-5 1/16"			1'-5 1/16"	5 15/16"
2	6 7/8"	1'-6 1/4"	1'-6 1/4"	55'-10 9/16"	100'-0 3/16"	56'-10"	15'-10 11/16"	1'-5 1/16"	16'-9 3/8"	16'-2 13/16"	1'-5 1/16"	5 15/16"
3	6 7/8"	1'-6 3/16"	1'-6 3/16"	55'-8 7/8"	99'-9 5/8"	56'-8 11/16"	15'-10 5/16"	1'-5"	16'-8 15/16"	16'-2 3/8"	1'-5"	5 15/16"
4	6 13/16"	1'-6 3/16"	1'-6 3/16"	55'-7 1/4"	99'-7 1/8"	56'-7 5/16"	15'-9 15/16"	1'-5"	16'-8 7/16"	16'-1 15/16"	1'-5"	5 7/8"
5	6 13/16"	1'-6 1/8"	1'-6 1/8"	55'-5 5/8"	99'- 4 5/8"	56'-6"	15'-9 9/16"	1'-4 15/16"	16'-8"	16'-1 9/16"	1'-4 15/16"	5 7/8"

07-27-23
STATE OF ARKANSAS
LICENSED PROFESSIONAL ENGINEER
No. 19188
ERIC S. CHRISTIANSEN
Eric S. Christiansen
BRIDGE ENGINEER

SHEET 4 OF 5
BRIDGE B
DETAILS OF 288'-0" CONTINUOUS PLATE GIRDER UNIT
HWY. 612 OVER RAMP 4

ROUTE 612 SEC. 1

ARKANSAS STATE HIGHWAY COMMISSION

LITTLE ROCK, ARK.

DRAWN BY: FAN DATE: 04-23 FILENAME: B012326bC_S6.DGN
CHECKED BY: DHP DATE: 04-23 SCALE: As Shown
DESIGNED BY: WKB DATE: 04-23

BRIDGE NO. B7612 DRAWING NO. 66143

Date Plotted: 7/27/2023

DATE REVISED	DATE FILMED	DATE REVISED	DATE FILMED	FED. ROAD DIST. NO.	STATE	FED. AID PROJ. NO.	SHEET NO.	TOTAL SHEETS
				6	ARK.		355	838
				JOB NO.		012326		
				(1) B7612		SPAN DETAILS		66144

(1) 7/8" x 8 1/2" Bearing Stiffener (Typ. @ Bents 1 & 4)

(2) 7/8" x 9 1/2" Bearing Stiffener (Typ. @ Bents 2 & 3)

See details on Dwg. No. 66129 for modification at exterior girders.

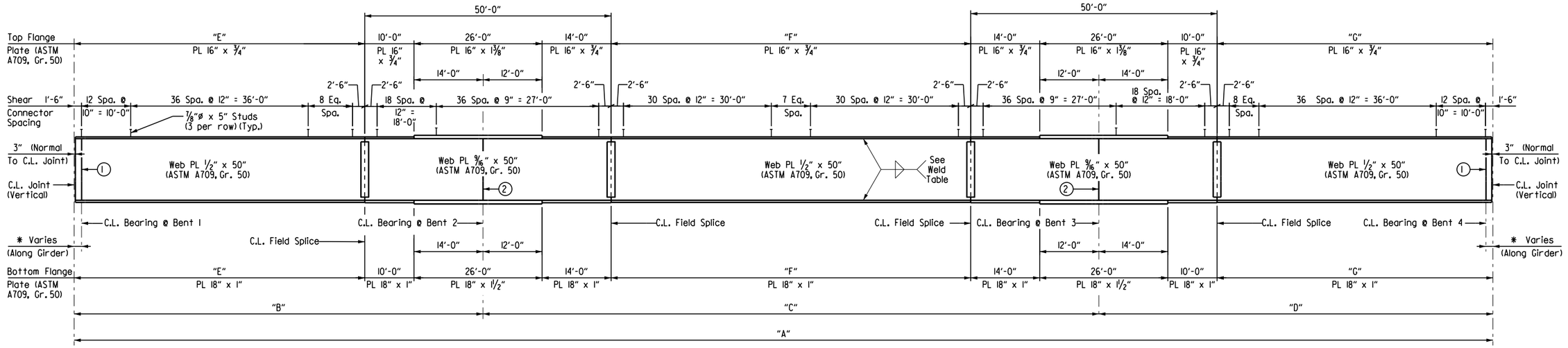

GIRDER ELEVATION

No Scale

TABLE OF TRAFFIC RAIL VARIABLES

Closed Rail Panels			Open Rail Panels					
Panel Length	A	R4XXE	Panel Length	B	C	D	E	R4XXE
8'-4 1/8"	16	R409E	16'-0"	8	3	11	6	R415E
8'-4 3/8"	16	R409E	22'-0"	8	3	23	12	R416E
10'-11 11/16"	21	R410E						
11'-6"	22	R411E						
12'-0"	23	R412E						
12'-0 1/2"	24	R412E						
12'-6"	24	R413E						
12'-8"	25	R414E						

TABLE OF GIRDER VARIABLES

Girder No.	"A"	"B"	"C"	"D"	"E"	"F"	"G"
1	289'-1 15/16"	82'-4 3/8"	124'-6"	82'-3 9/16"	58'-4 3/8"	72'-6"	58'-3 9/16"
2	288'-6 15/16"	82'-2 3/16"	124'-3"	82'-1 3/4"	58'-2 3/16"	72'-3"	58'-1 3/4"
3	288'-0"	82'-0"	124'-0"	82'-0"	58'-0"	72'-0"	58'-0"
4	287'-5 3/16"	81'-9 13/16"	123'-9 1/8"	81'-10 1/4"	57'-9 13/16"	71'-9 1/8"	57'-10 1/4"
5	286'-10 7/16"	81'-7 11/16"	123'-6 3/16"	81'-8 9/16"	57'-7 11/16"	71'-6 3/16"	57'-8 9/16"

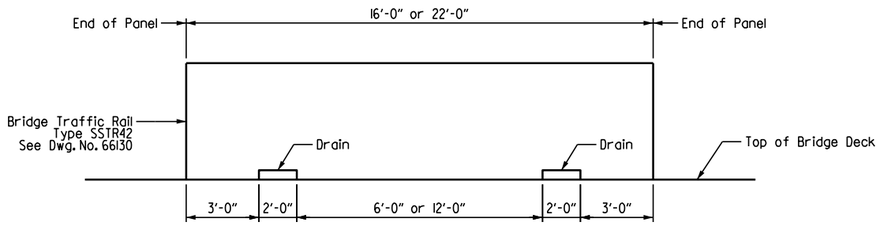

ELEVATION OF OPEN BRIDGE RAIL

No Scale

07.27.23

STATE OF ARKANSAS
LICENSED PROFESSIONAL ENGINEER
No. 19188
ERIC S. CHRISTIANSEN

Eric S. Christiansen

BRIDGE ENGINEER

NOTES:

All structural steel shall be ASTM A709, Grade 50 steel, U.N.O.

Girders are curved and concectric to C.L. Bridge B.

For FIELD SPLICE DETAILS, see Dwg. No. 66129.

For STIFFENER DETAILS, see Dwg. No. 66129.

For SHEAR CONNECTOR DETAIL, see Dwg. No. 66129.

For WELD DETAILS & TABLE, see Dwg. No. 66129.

SHEET 5 OF 5
BRIDGE B
DETAILS OF 288'-0" CONTINUOUS PLATE GIRDER UNIT
HWY. 612 OVER RAMP 4

ROUTE 612 SEC. 1

ARKANSAS STATE HIGHWAY COMMISSION

LITTLE ROCK, ARK.

DRAWN BY: FAN DATE: 04-23 FILENAME: B012326bC_S7.DGN
CHECKED BY: DHP DATE: 04-23 SCALE: As Shown
DESIGNED BY: WKB DATE: 04-23

BRIDGE NO. B7612 DRAWING NO. 66144

Date Plotted: 7/27/2023

DATE REVISED	DATE FILMED	DATE REVISED	DATE FILMED	FED. ROAD DIST. NO.	STATE	FED. AID PROJ. NO.	SHEET NO.	TOTAL SHEETS
				6	ARK.		356	838
				JOB NO.		012326		
				(1) A&B7612		JOINT DETAILS		66145

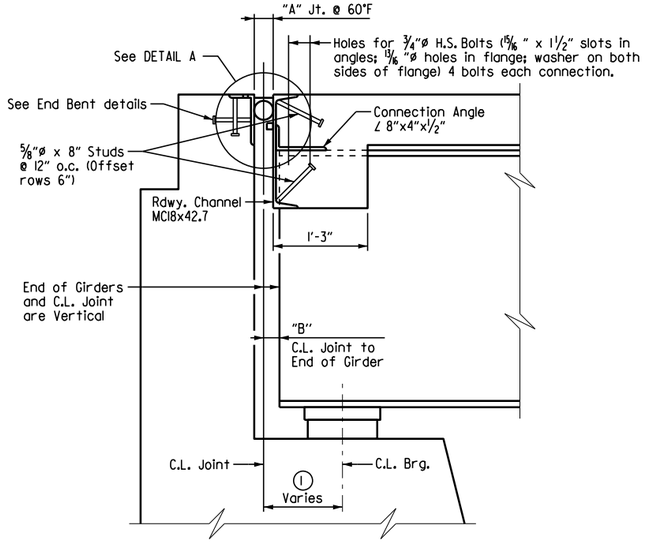

(1) Measured Along C.L. Girder. See TABLE OF GIRDER VARIABLES on Dwg. Nos. 66128 & 66144.

SECTION THRU JOINT AT END BENTS

Scale: 1" = 1'-0"
Note: Sections thru Joints are taken normal to C.L. Joints

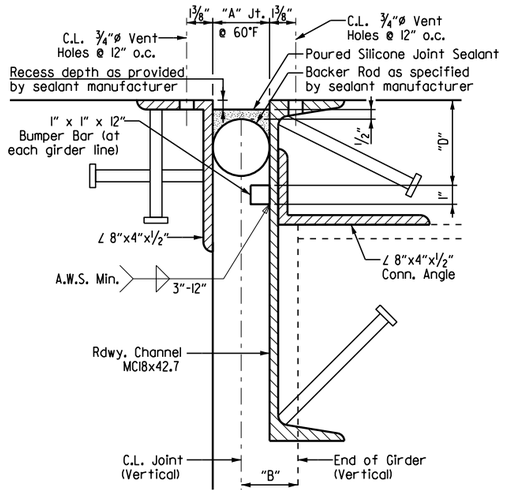

NOTE: Concrete shall be hand packed under the joint armor. Care shall be taken to ensure that concrete completely fills the areas below the top channel flange.

DETAIL A

Scale: 3" = 1'-0"

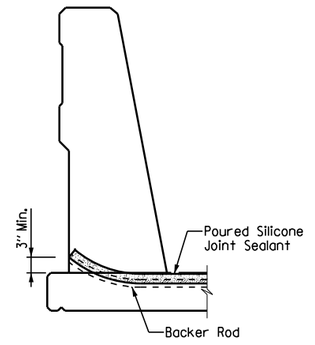

JOINT SEAL PLACEMENT AT CURB

Scale: ¾" = 1'-0"

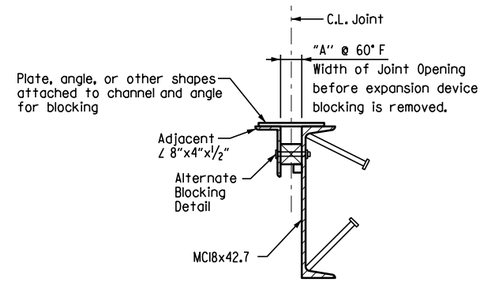

DETAILS FOR BLOCKING EXPANSION JOINT DEVICE

NOTE:
Each expansion joint device shall be blocked in the Shop by the Fabricator to the dimension shown, and the blocking details shall be shown on the Shop Drawings. Blocking shall be placed within 2 feet of each end of the device and with a maximum spacing of 8 feet.

EXPANSION DEVICE INSTALLATION AT END BENTS:

The contractor may elect to install the expansion device using one of the following two alternatives:

1) The concrete span pour adjacent to joint shall be placed before the end bent backwall is placed. After the end bent backwall forms are in place and the beams erected, the blocked expansion device shall be installed and adjusted for grade. All connection bolts shall be fully tightened prior to placing the deck concrete adjacent to the bent. Immediately prior to pouring the backwall concrete, the blocking shall be removed, the opening adjusted for temperature, and the backwall constructed.

2) The backwall shall be poured to the optional construction joint after beams are erected. The blocked expansion device shall be installed and adjusted for grade. All connection bolts shall be fully tightened prior to placing the deck concrete adjacent to the bent. Immediately prior to pouring the remainder of the backwall concrete, the blocking shall be removed and the opening adjusted for temperature.

Cleaning and painting of all exposed surfaces of the expansion joint device shall be in accordance with Section 638 and will not be paid for directly but will be considered subsidiary to STRUCTURAL STEEL IN PLATE GIRDER SPANS (M270, GRADE 50). Structural steel completely embedded in concrete need not be painted.

SILICONE JOINT DATA

	Bent Number	"A" Width Perpendicular to Joint at 24 Hour Average Temperature ** of:			"B" Perpendicular to Joint at 60°F	Bumper Plate Size	"D"
		40° F	60° F	80° F			
Bridge A	1	2¼"	2"	1¾"	3" ±	1" x 1"	4½"
	4	2¼"	2"	1¾"	3" ±	1" x 1"	4½"
Bridge B	1	2¼"	2"	1¾"	3" ±	1" x 1"	4½"
	4	2¼"	2"	1¾"	3" ±	1" x 1"	4½"

** The temperature used to set the joint opening shall be the approximate average air temperature during the 24 hour period immediately before the bolts are tightened. The Engineer shall establish the temperature. Interpolation of the table may be necessary.

NOTES:
The temperature limitations recommended by the sealant manufacturer shall be observed.

The sealant shall be installed only when the average 24 hour air temperature is between 40°F and 80°F.

BACKER ROD NOTE:
Use an appropriately sized backer rod at the depth shown in the manufacturer's literature based on the joint width at the time of sealing.

Except as noted, do not install more backer rod than can be sealed in the same day.

The contractor shall verify separation of the backer rod from the joint material after the joint material has set.

07.27.23

STATE OF ARKANSAS
LICENSED PROFESSIONAL ENGINEER
No. 19188
ERIC S. CHRISTIANSEN

Eric S. Christiansen

BRIDGE ENGINEER

DETAILS OF POURED SILICONE JOINT HWY. 612 OVER RAMP 4

ROUTE 612 SEC. 1

ARKANSAS STATE HIGHWAY COMMISSION

LITTLE ROCK, ARK.

DRAWN BY: FAN DATE: 04-23 FILENAME: B012326MC_J.DGN
CHECKED BY: DHP DATE: 04-23 SCALE: No Scale
DESIGNED BY: WKB DATE: 04-23

BRIDGE NO. A&B7612 DRAWING NO. 66145

Date Plotted: 7/27/2023

DATE REVISED	DATE FILMED	DATE REVISED	DATE FILMED	FED. ROAD DIST. NO.	STATE	FED. AID PROJ. NO.	SHEET NO.	TOTAL SHEETS
10/23/2023				6	ARK.		357	838
				JOB NO.		012326		
				①	A&B7612	ELASTO. BEARINGS		66146

① Care shall be taken to ensure that the external load plate is in full and complete contact with the beam or girder flange before welding begins.

② C.L. Bearing shall align with C.L. Girder

Note: The direction of bevel of the external load plate may not be accurately depicted with respect to the Ta and Tb values shown in the Table of Fabricator Variables.

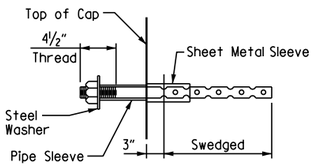

ANCHOR BOLT DETAIL

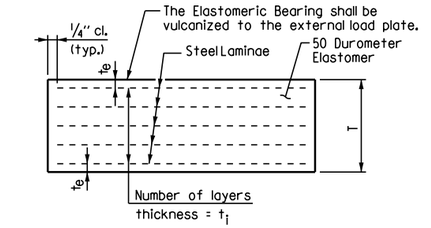

t_e = thickness of elastomer cover on top and bottom of pad

t_i = thickness of elastomer between steel laminae

N = number of elastomer layers of thickness t_i

ELASTOMERIC BEARING

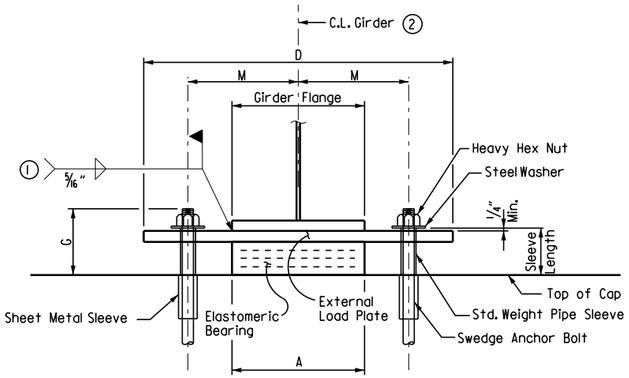

FRONT VIEW @ BENT NOS. 1 & 4

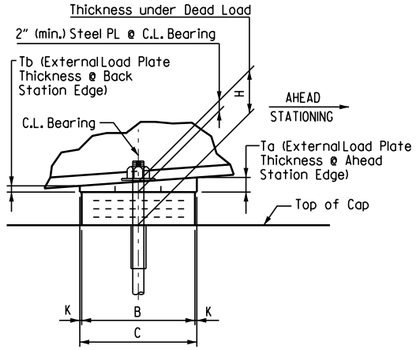

SIDE VIEW @ BENT NOS. 1 & 4

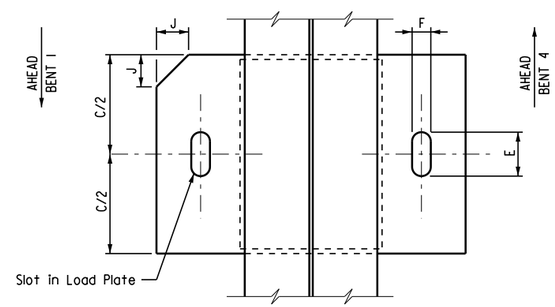

PLAN VIEW @ BENT NOS. 1 & 4

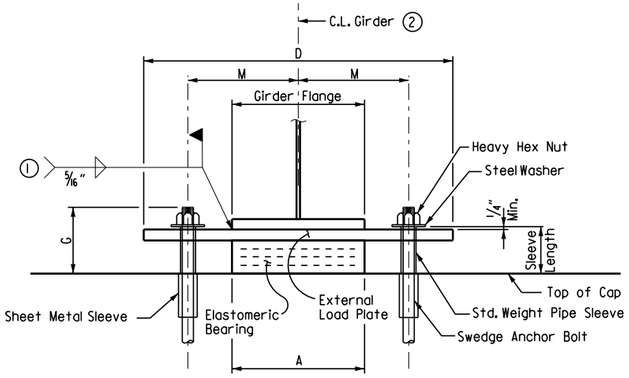

FRONT VIEW @ BENT NOS. 2 & 3

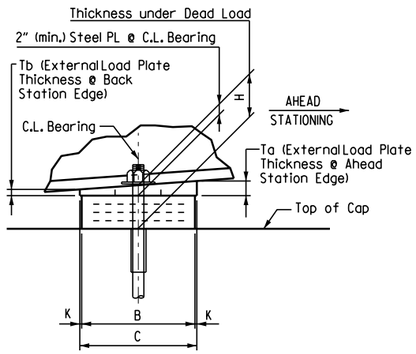

SIDE VIEW @ BENT NOS. 2 & 3

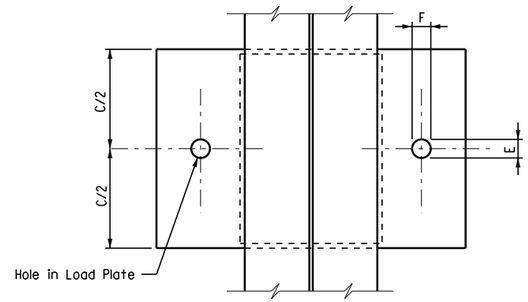

PLAN VIEW @ BENT NOS. 2 & 3

NOTE:
Anchor Bolts may be cast in place or drilled and grouted into place. If Anchor Bolts are to be cast in place, the Galvanized Sheet Metal Sleeves will not be required. If Anchor Bolts are to be drilled and grouted in place, the Galvanized Sheet Metal Sleeves shall be cast in place as shown. Sleeves shall be dry packed with styrofoam, urethane foam, or approved equal prior to pouring of concrete. After pouring of the cap and prior to erection of Structural Steel, the dry pack shall be removed and holes for the anchor bolts shall be accurately drilled into the concrete. Bolts placed in drilled holes shall be accurately set and fixed using a OPL-approved epoxy or non-shrink grout that completely fills the holes. Galvanized Sheet Metal Sleeves shall meet the requirements of ASTM A653, CS Type B or approved equivalent, be of minimum 16 gauge thickness, and be galvanized according to ASTM B695, Class 50. Galvanized Sheet Metal Sleeves will not be paid for directly, but will be considered subsidary to the item "STRUCTURAL STEEL IN PLATE GIRDER SPANS, (M 270, Gr. 50)".

GENERAL NOTES

Elastomeric Bearings shall conform to Section 808 of the Standard Specifications and shall be paid for at the unit price bid for "ELASTOMERIC BEARINGS."

External load plates and shear blocks shall conform to AASHTO M 270, Grade 50. Pipe sleeves shall be ASTM A 53, Grade B, and shall be galvanized to conform to AASHTO M 232, Class C or ASTM B695, Class 50. External load plates (with shear blocks as applicable) shall be completely fabricated (including bevel and bolt holes) and shall be cleaned before vulcanizing to the elastomeric bearing. The surface in contact with the elastomeric bearing shall be cleaned in accordance with subsection 808.03. Other surfaces shall be blast cleaned in accordance with subsection 807.84(b) for painted steel.

Anchor Bolts, Washers, and Nuts shall conform to subsection 807.07 of the Standard Specifications. The anchor bolt grade of steel shall be as specified in the "Table of Fabricator Variables". Indentations shall be circular with rounded bottoms and staggered as shown in the details.

Pipe Sleeves, Anchor Bolts, Washers, and Nuts shall be paid for at the unit price bid for "STRUCTURAL STEEL IN PLATE GIRDER SPANS (A709, Gr. 50)".

Unless otherwise approved by the Engineer, welding of the external load plate at expansion bearings to the girder will be allowed only when 1) the approximate average air temperature during the 24 hour period immediately preceding welding is between 40 F and 80 F; and 2) the slots in the external load plate are positioned to center on the anchor bolts; and 3) no horizontal deformation of the elastomeric pad is evident. If welding at other temperatures is required, the Engineer will provide adjustment data.

External load plates shall be painted in accordance with Section 807.75. Mask areas that are to be welded in the field.

Bearings shall be seated in accordance with Subsection 808.08. This work and materials are considered subsidiary to the item "Elastomeric Bearings" and will not be paid for directly.

⚠ Revised Number of Laminae to Correctly Correspond to Number of Elastomeric Layers and Pipe Sleeve Diameter.
By: WKB Date: 10/23/2023 Checked By: DHP Date: 10/23/2023

TABLE OF FABRICATOR VARIABLES

③ Maximum Design Load = Service Limit State

	LOCATION			BEARING TYPE	NO. of BEARINGS EACH BENT	③ MAXIMUM DESIGN LOAD (KIPS)	ELASTOMERIC PAD								EXTERNAL LOAD PLATE									ANCHOR BOLT				
	BENT NO(S).	SPAN NO.	BEAM OR GIRDER NO.				G	H	A	B	N	t_i	t_e	NO. & THICKNESS OF STEEL LAMINAE	T	C	D	E	F	J	K	M	T_a	T_b	ANCHOR BOLT (ø x L)	GRADE	PIPE SLEEVE SIZE (ø x L)	SHEET METAL SLEEVE SIZE (ø x L)	STEEL WASHER SIZE (O.D.)
BRIDGE A	1	1	All	Exp.	5	119	9¼"	6¼"	16"	10"	6	½"	¼"	7 ~~5~~ @ 12 Ga.	4¼"	11"	29½"	5⅛"	2⅝"	2"	½"	11¾"	2.17"	1.83"	1¾" x 31"	55 ⚠	2"~~-2½"~~ x 6½"	4" x 12½"	3⅜"
	2	1 & 2	All	Fixed	5	363	9¾"	6¼"	20"	16"	6	½"	¼"	7 ~~8~~ @ 12 Ga. ⚠	4¼"	17"	32"	3⅛"	3⅛"	---	½"	12¾"	2.23"	1.77"	2¼" x 36"	55	2½" x 6½"	4" x 12½"	4"
	3	2 & 3	All	Fixed	5	363	9¾"	6¼"	20"	16"	6	½"	¼"	7 ~~8~~ @ 12 Ga. ⚠	4¼"	17"	32"	3⅛"	3⅛"	---	½"	12¾"	2.20"	1.80"	2¼" x 36"	55	2½" x 6½"	4" x 12½"	4"
	4	3	All	Exp.	5	119	9¼"	6¼"	16"	10"	6	½"	¼"	7 ~~5~~ @ 12 Ga.	4¼"	11"	29½"	5⅛"	2⅝"	2"	½"	11¾"	2.13"	1.87"	1¾" x 31"	55 ⚠	2"~~-2½"~~ x 6½"	4" x 12½"	3⅜"
BRIDGE B	1	1	All	Exp.	5	118	9¼"	6¼"	16"	10"	6	½"	¼"	7 ~~5~~ @ 12 Ga.	4¼"	11"	29½"	5"	2⅝"	2"	½"	11¾"	2.16"	1.84"	1¾" x 31"	55 ⚠	2"~~-2½"~~ x 6½"	4" x 12½"	3⅜"
	2	1 & 2	All	Fixed	5	350	9¾"	6¼"	20"	16"	6	½"	¼"	7 ~~8~~ @ 12 Ga. ⚠	4¼"	17"	32"	3⅛"	3⅛"	---	½"	12¾"	2.21"	1.79"	2¼" x 36"	55	2½" x 6½"	4" x 12½"	4"
	3	2 & 3	All	Fixed	5	350	9¾"	6¼"	20"	16"	6	½"	¼"	7 ~~8~~ @ 12 Ga. ⚠	4¼"	17"	32"	3⅛"	3⅛"	---	½"	12¾"	2.18"	1.82"	2¼" x 36"	55	2½" x 6½"	4" x 12½"	4"
	4	3	All	Exp.	5	118	9¼"	6¼"	16"	10"	6	½"	¼"	7 ~~5~~ @ 12 Ga.	4¼"	11"	29½"	5"	2⅝"	2"	½"	11¾"	2.11"	1.89"	1¾" x 31"	55 ⚠	2"~~-2½"~~ x 6½"	4" x 12½"	3⅜"

Date Plotted: 10/19/2023

10.23.23
STATE OF ARKANSAS
LICENSED PROFESSIONAL ENGINEER
No. 19188
ERIC S. CHRISTIANSEN
Eric S. Christiansen
BRIDGE ENGINEER

DETAILS OF ELASTOMERIC BEARINGS HWY. 612 OVER RAMP 4

ROUTE 612 SEC. 1

ARKANSAS STATE HIGHWAY COMMISSION

LITTLE ROCK, ARK.

DRAWN BY: FAN DATE: 04-23
CHECKED BY: DHP DATE: 04-23
DESIGNED BY: WKB DATE: 04-23
FILENAME: B012326MC_E.DGN
SCALE: No Scale

BRIDGE NO. A&B7612 DRAWING NO. 66146

DATE REVISED	DATE FILMED	DATE REVISED	DATE FILMED	FED. ROAD DIST. NO.	STATE	FED. AID PROJ. NO.	SHEET NO.	TOTAL SHEETS
				6	ARK.		358	838
				JOB NO.		012326		
				1 A7613		LAYOUT		66147

For R/W Data, See Roadway Plans

Use Type F Approach Gutters and Type Special Approach Slabs (width = 36'-0") at both ends of bridge. See Std. Dwg. No. 55030F and 66334A, respectively.

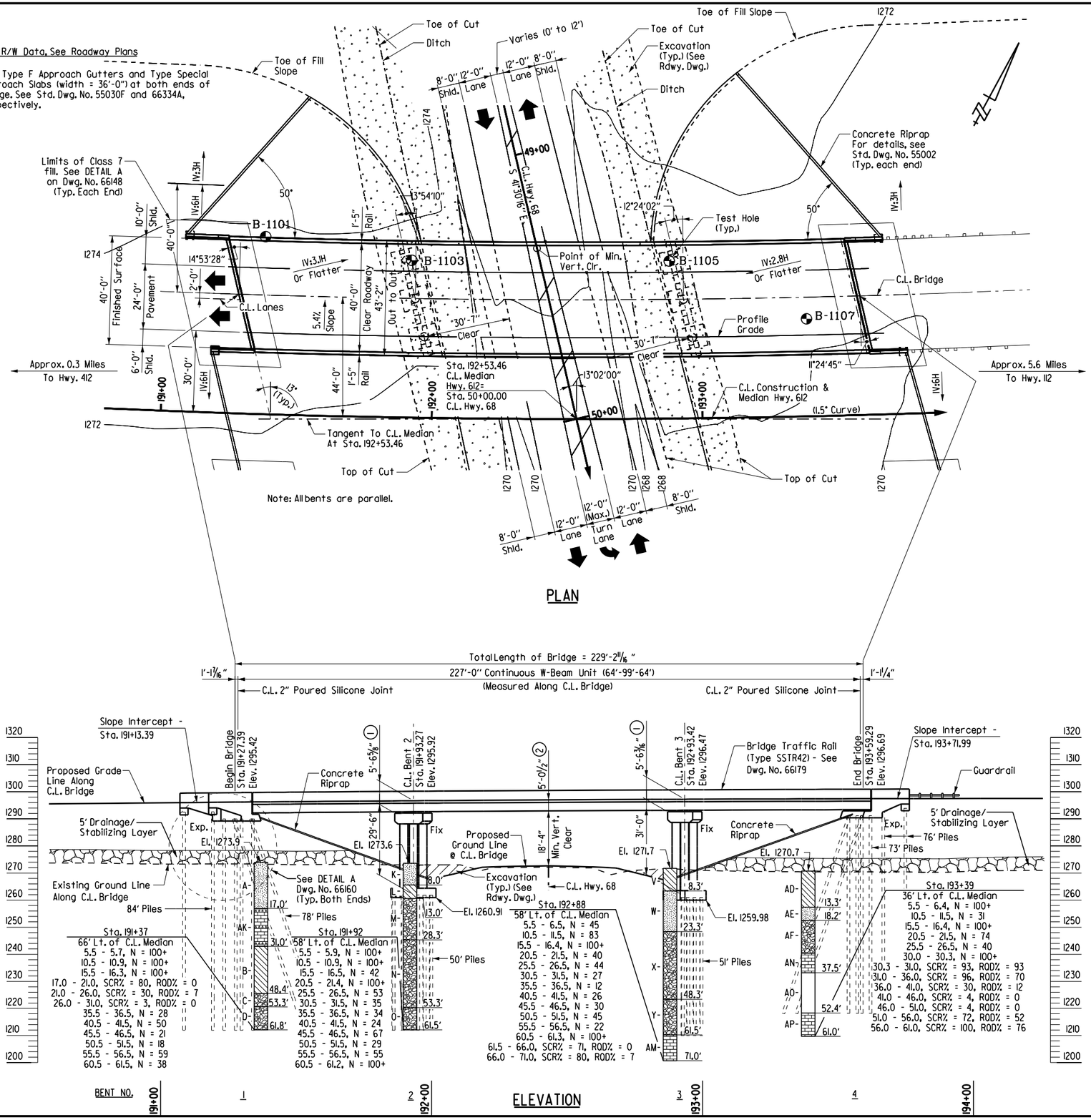

Note: All bents are parallel.

PLAN

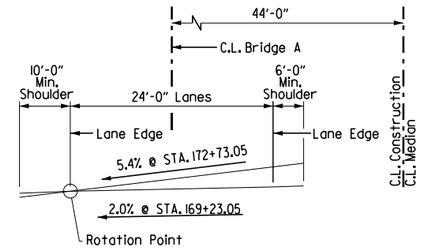

SUPERELEVATION SKETCH

No Scale
(Looking Ahead)

Begin Superelevation Sta. 169+23.05
Max. Superelevation Sta. 172+73.05 (0.054'/')
Max. Superelevation Sta. 219+48.54 (0.054'/')
See Roadway Plans for superelevation beyond limits shown.

ELEVATION

For GENERAL NOTES & SOIL BORING LEGEND, See Dwg. No. 66148.

Stationing is along C.L. Median. Stations shown in elevation are determined by a radial projection from C.L. Bridge to C.L. Median. For more information refer to STAKING DIAGRAM on Dwg. No. 66148.

Elevations shown are actual top of deck elevations at C.L. Bridge. Any vertical dimension to C.L. Deck is based on actual top of deck elevation at C.L. Bridge.

① C.L. Deck at C.L. Bent to low side Top of Cap.

② C.L. Deck to Low Steel.

07.27.23

STATE OF ARKANSAS
LICENSED PROFESSIONAL ENGINEER
No. 19188
ERIC S. CHRISTIANSEN

Eric S. Christiansen

BRIDGE ENGINEER

SHEET 1 OF 2
LAYOUT OF BRIDGE A
HWY. 612 OVER HWY. 68
HWY. 412 - HWY. 112 (SPRINGDALE BYPASS) (F)
WASHINGTON COUNTY

ROUTE 612 SEC. 1

ARKANSAS STATE HIGHWAY COMMISSION

LITTLE ROCK, ARK.

DRAWN BY: FAN DATE: 04-23
CHECKED BY: DHP DATE: 04-23
DESIGNED BY: WKB DATE: 04-23

FILENAME: B012326aD_L1.dgn
SCALE: 1" = 20'-0"

BRIDGE NO. A7613 DRAWING NO. 66147

Date Plotted: 7/21/2023

DATE REVISED	DATE FILMED	DATE REVISED	DATE FILMED	FED. ROAD DIST. NO.	STATE	FED. AID PROJ. NO.	SHEET NO.	TOTAL SHEETS
				6	ARK.		359	838
				JOB NO.		012326		
				1	A&B7613	GENERAL NOTES		66148

GENERAL NOTES

BENCHMARK: Vertical Control Data are shown on the Survey Control Sheets.

CONSTRUCTION SPECIFICATIONS: Arkansas State Highway and Transportation Department Standard Specifications for Highway Construction (2014 edition) with applicable Supplemental Specifications and Special Provisions. Section and Subsection refer to the Standard Construction Specifications unless otherwise noted in the Plans.

DESIGN SPECIFICATIONS: AASHTO LRFD Bridge Design Specifications, Eighth Edition (2017).

LIVE LOADING: HL-93

SEISMIC ZONE: 1 SDI: 0.052 SITE CLASS: D

SEISMIC OPERATIONAL CLASSIFICATION: Other

MATERIALS AND STRENGTHS:

Class S(AE) Concrete (superstructure)	f'c = 4,000 psi
Class S Concrete (substructure)	f'c = 3,500 psi
Reinforcing Steel (AASHTO M 31 or M 322, Type A)	fy = 60,000 psi
Structural Steel (ASTM A709, Gr. 50)	Fy = 50,000 psi
Structural Steel (ASTM A709, Gr. 36)	Fy = 36,000 psi

BORING LOGS: Boring logs may be obtained from the Construction Contract Development Section of the Program Management Division.

STEEL PILING: All piling shall be HP 12x53 (Grade 50) and shall be driven with an approved air, steam, or diesel hammer to a minimum safe bearing capacity of 95 tons per pile and into the material designated as Limestone on the boring legend. Minimum penetration shall be 10' below natural ground for all piles in Bents 1 and 4, and 10' below bottom of footing for all piles in Bents 2 and 3. Piling in end bents shall be driven after embankment to bottom of cap is in place. Lengths shown are for estimating quantities and for use in determining payment for cut-off and build-up in accordance with Section 805. The Contractor shall use approved steel H-Pile driving points on all piles.

PREBORING: Preboring is required for all piles in Bents 1 and 4 of Bridge A. The depth of preboring shall be to a depth sufficient to provide the specified minimum penetration and to a minimum 3' depth into material designated as Limestone on the boring legend, whichever is lower. The actual size and depth of preboring shall be determined in the field by the Engineer. The Contractor shall be responsible for keeping prebored holes free of debris prior to driving piles and backfilling which may require the use of temporary casings or other approved methods. After driving is completed, the prebored hole shall be backfilled with Class S Concrete to the top of the rock and the remaining length backfilled in accordance with Subsection 805.08(a). Any related cost for backfilling and temporary casing will not be paid for directly, but shall be considered subsidiary to the item "Preboring".

Preboring may be required at Bents 2 and 3 of Bridge A and at all Bents of Bridge B to obtain the minimum pile penetration requirement. The size and depth of preboring, if required, will be determined by the Engineer. The Contractor shall be responsible for keeping the prebored holes free from debris prior to backfilling which may require the use of temporary casings or other methods. Additional Preboring shall be paid for at the contract unit price bid. The cost of temporary casings and the preboring, if required, will not be paid for directly but will be considered subsidiary to the item "PREBORING".

PILE FOOTINGS: The top of all bent footings shall be set a minimum of 2' below finished ground or at the elevations shown on the plans, whichever is lower. Foundations for footings shall be prepared in accordance with Subsection 801.04. Foundation piles shall not be driven until after the excavation to bottom of footing is complete. Excavations shall be backfilled and compacted to the level of the existing ground in accordance with Subsection 801.08.

PAINTING: All Grade 50 structural steel, except galvanized members, and surfaces in contact with concrete shall be painted as specified in Subsection 807.75. The color of paint shall be Dark Brown equal or close to Federal Std. 595B, Color Chip No. 20108.

TEXTURED COATING FINISH: Class 3 Textured Coating Finish shall be applied to the bridge and retaining wall surfaces as specified in Special Provision Job No. B012326 "Textured Coating Finish" and in accordance with Subsection 802.19(b)(3). Textured Coating Finish shall not be applied on surfaces where Class 2 Protective Surface Treatment is applied.

BRIDGE DECK: The concrete bridge deck shall be given a tine finish as specified for final finishing in Subsection 802.19 for Class 5 Tined Bridge Roadway Surface Finish.

PROTECTIVE SURFACE TREATMENT: Class 2 Protective Surface Treatment shall be applied to the roadway surface and to the roadway face and top of the bridge traffic rail in accordance with Section 803.

DETAIL DRAWINGS:	DRAWING NO(S).
End Bents	66150-66152; 66156-66158; 66165-66168; 66171-66173.
Intermediate Bents	66153-66155; 66169-66170
Elastomeric Bearings	66180
227'-0" Continuous W-Beam Unit	66159-66163
234'-0" Continuous W-Beam Unit	66174-66177
Type Special Approach Slabs	66334A
General Notes For Steel Bridge Structures	55006
Details For Steel Bridge Structures	55007
Poured Silicone Joints	55008, 66178
Type F Approach Gutters	55030F
Steel H-Piling	55020
Bridge Traffic Rail	66179

MAINTENANCE OF TRAFFIC: See Roadway Plans.

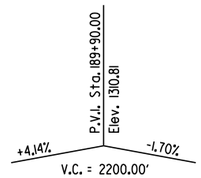

VERTICAL CURVE DATA
(Along Profile Grade)

HORIZONTAL CURVE DATA
C.L. MEDIAN HWY. 612

PI Sta = 199+99.50
PC Sta = 171+85.55
PT Sta = 220+36.04
R = 3819.72
△ = 72°45' 26.4" LT.
D = 1°30' 00"
L = 4850.49
T = 2813.94

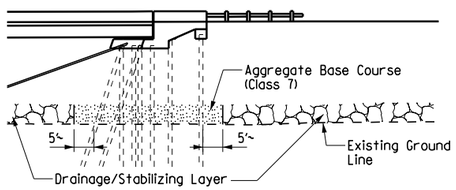

Where a drainage/stabilizing layer is required for embankment construction, aggregate base course (Class 7), in accordance with Section 303.02, shall be placed as shown in areas where piling will be located. Aggregate base course (Class 7) shall be paid for as "COMPACTED EMBANKMENT".

At the Contractor's option, preboring or other methods as approved by the Engineer may be used to facilitate pile installation through the aggregate base course (Class 7) material at these locations. Preboring or other methods used for installation of piles, where rock fill is used for embankment construction, will not be paid for separately but shall be included in item "STEEL PILING".

DETAIL A
No Scale

Boring Legend

A - Dark reddish brown, reddish brown & tan, very dense clayey sand with gravel.
B - Reddish brown, very stiff to hard, sandy fat clay with gravel.
C - Reddish brown, medium dense clayey gravel with sand.
D - Reddish brown, tan & brown, dense to very dense clayey gravel with sand.
E - Reddish brown & tan, very dense clayey sand with gravel.
F - Reddish brown & tan, very dense clayey sand with gravel.
G - Reddish brown, hard, sandy fat clay with gravel.
H - Reddish brown & light reddish brown, medium dense to very dense clayey gravel with sand.
I - Dark reddish brown, reddish brown & tan, medium dense to very dense clayey gravel with sand.
J - Reddish brown & tan, medium dense to very dense silty sand with gravel.
K - White, tan & reddish brown, very dense clayey sand with gravel.
L - White, light reddish tan & brownish red, very hard sandy fat clay with gravel.
M - White, reddish tan & reddish brown, dense to very dense clayey gravel with sand.
N - White, reddish brown, tan, brownish red, dark brownish red & grayish white, medium dense to very dense clayey gravel with sand.
O - Dark brownish red, tan & grayish white, very dense clayey gravel with sand.
P - Reddish brown & dark brown, very dense clayey sand with gravel.
Q - Dark reddish brown, reddish brown & dark brown, very stiff to very hard sandy fat clay with gravel.
R - Reddish brown & dark brown, medium dense to very dense clayey gravel with sand.
S - Reddish brown, medium dense to dense clayey gravel with sand.
T - Dark reddish brown & dark brown, medium dense clayey gravel with sand.
U - Tan & reddish brown, loose to very dense sand with gravel.
V - Brownish red & brown, hard sandy fat clay with gravel.
W - White, reddish tan, reddish brown & beige, clayey sand with gravel.
X - Grayish white, reddish brown, tan, white, dark reddish brown & reddish tan, medium dense to dense clayey gravel with sand.
Y - Brownish red, brown & beige, medium dense to very dense, clayey gravel with sand.
Z - Red, very stiff to very hard sandy fat clay with gravel.
AA - Red & brown, dense to very dense clayey sand with gravel.
AB - Brown & white, very dense clayey gravel with sand.
AC - Brown & white, medium dense to dense clayey gravel with sand.
AD - Light and dark brownish red & gray, hard to very hard sandy fat clay with gravel.
AE - Grayish white & reddish tan, very dense clayey sand with gravel.
AF - White, reddish brown, reddish tan, brown & grayish white, dense to very dense clayey gravel with sand.
AG - Red, white, light reddish tan, gray & reddish brown, hard to very hard sandy fat clay with gravel.
AH - Reddish tan, reddish brown & gray, medium dense to dense clayey sand with gravel.
AI - Reddish tan, gray, brown, white, dark reddish brown & beige, medium dense to very dense clayey gravel with sand.
AJ - Brownish red, white, beige, dark brownish red & light reddish tan, dense to very dense clayey gravel with sand.
AK - Limestone and Chert Fragments: white, light gray, sev. weathered.
AL - Chert Fragments: light gray, yellow, yellow/orange stain, mod. to sli. weathered.
AM - Limestone: white to light gray with red/brown stain, sev. to mod. weathered with intervals completely weathered.
AN - Limestone: white to medium gray, alternating lithographic to coarsely crystalline and fine grain, sli. weathered to fresh.
AO - Core loss interval: white to light gray, severely weathered limestone fragments with red/brown clay remnants.
AP - Limestone: light gray to medium gray, white, gray/brown, fine grain with coarse crystalline inclusions, sli. weathered to fresh.

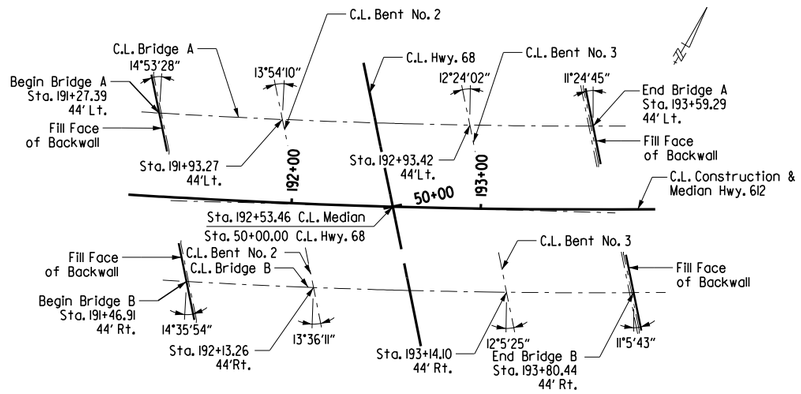

STAKING DIAGRAM

Stationing for the project is along C.L. Median and C.L. Construction. C.L. Bridge is on a horizontal curve concentric to C.L. Median. The bent stations shown are determined by projecting a radial line from C.L. Median to C.L. Bridge. The offsets shown are measured along radial lines. The total bridge length, span lengths, and C.L. Joint to Beginning and End of Bridge dimensions are measured along C.L. Bridge. Deck elevations are at C.L. Bridge. All bents are constructed along lines skewed from radial lines.

07.27.23
STATE OF ARKANSAS
LICENSED PROFESSIONAL ENGINEER
No. 19188
ERIC S. CHRISTIANSEN
Eric S. Christiansen
BRIDGE ENGINEER

SHEET 2 OF 2
LAYOUT OF BRIDGE A
HWY. 412 - HWY. 112 (SPRINGDALE BYPASS) (F)
WASHINGTON COUNTY

ROUTE 612 SEC. 1

ARKANSAS STATE HIGHWAY COMMISSION
LITTLE ROCK, ARK.

DRAWN BY: FAN DATE: 04-23
CHECKED BY: DHP DATE: 04-23
DESIGNED BY: WKB DATE: 04-23
FILENAME: B012326m0_L2.dgn
SCALE: 1" = 20'-0"

BRIDGE NO. A&B7613 DRAWING NO. 66148

Date Plotted: 7/27/2023

NOTE: Class 2 Protective Surface Treatment shall be applied to the roadway face and top of the end bent rail and the top of the backwall.

DATE REVISED	DATE FILMED	DATE REVISED	DATE FILMED	FED. ROAD DIST. NO.	STATE	FED. AID PROJ. NO.	SHEET NO.	TOTAL SHEETS
				6	ARK.		360	838
				JOB NO.		012326		
				(1) A7613		END BENT 1 DETAILS		66149

For additional information, see LAYOUT on Dwg. No. 66148.

For VIEW A-A, VIEW B-B, VIEW C-C, and VIEW D-D, see Dwg. No. 66151.

For DETAIL Z, see Dwg. No. 66152.

For Details of Wing and Rail, see Dwg. No. 66151, 66152 & 66179.

(1) Dimensions shown are to C.L. Joint

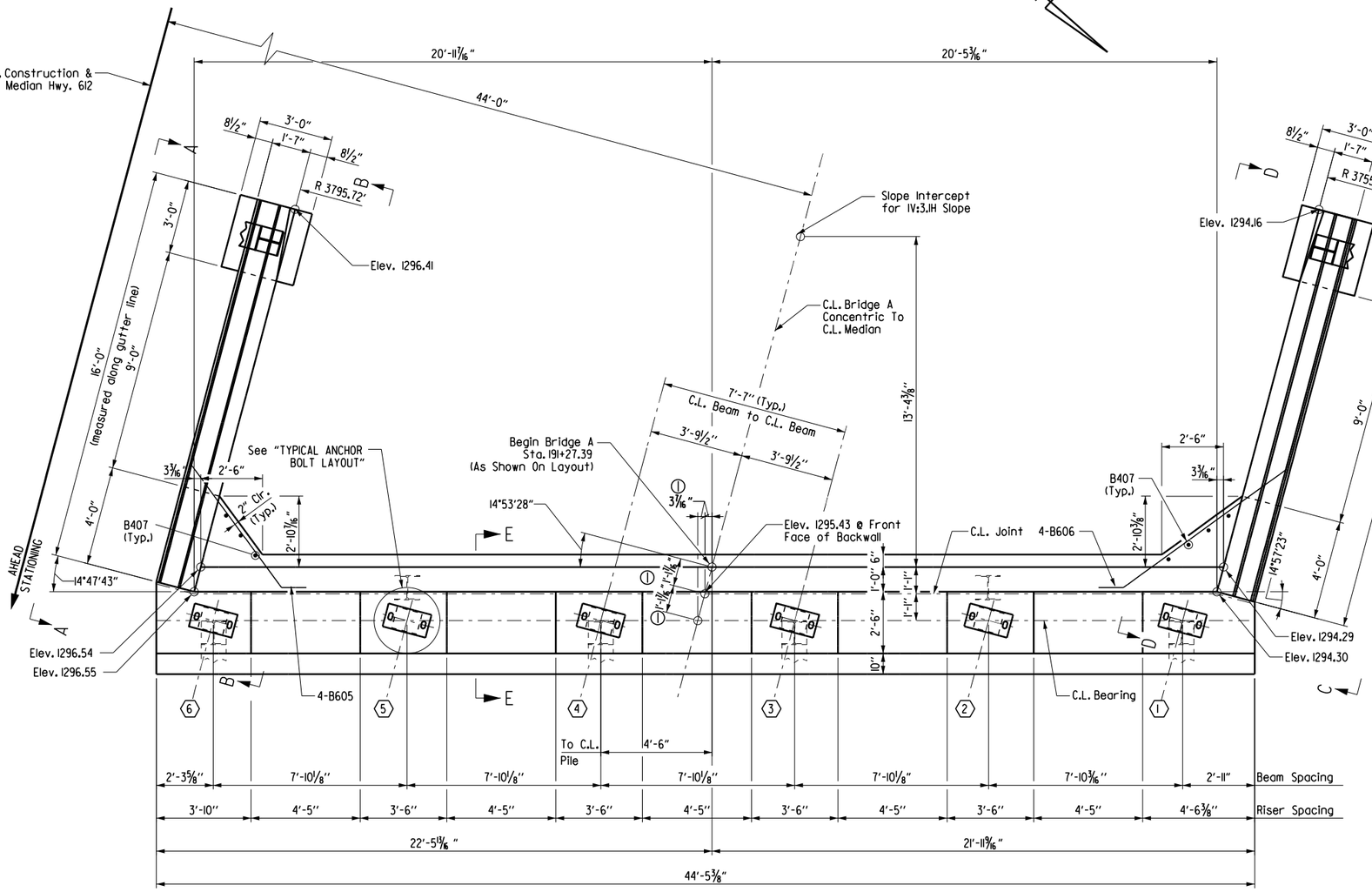

PLAN

Scale: 3/8" = 1'-0"

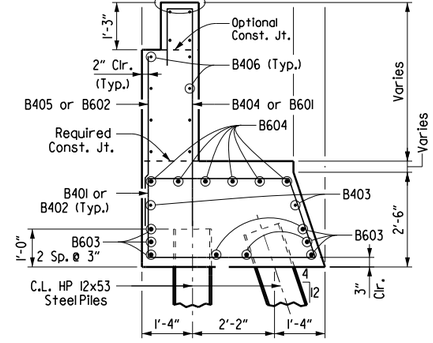

SECTION E-E

1/2" = 1'-0"

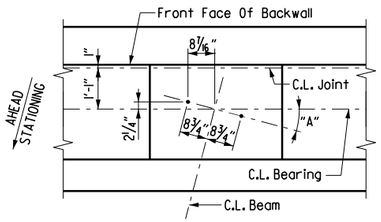

Beam	"A"
1	14°56'02"
2	14°54'10"
3	14°52'20"
4	14°50'30"
5	14°48'41"
6	14°47'16"

Note: For Details Of Elastomeric Bearings, See Dwg. No. 66180.

TYPICAL ANCHOR BOLT LAYOUT

1/2" = 1'-0"

GENERAL NOTES FOR SUBSTRUCTURE

The backwall above the required construction joint shall not be poured until the girders are in place. Backwall may be poured prior to placing the adjacent concrete deck only if the optional backwall construction joint is used. See "DETAILS FOR BLOCKING EXPANSION JOINT DEVICE" on Dwg. No. 66145 for additional information. No heavy construction equipment or backfill shall be allowed directly behind the backwall unit before the concrete for the adjacent span has been completed.

07-27-23

STATE OF ARKANSAS
LICENSED PROFESSIONAL ENGINEER
No. 19188
ERIC S. CHRISTIANSEN

Eric S. Christiansen

BRIDGE ENGINEER

SHEET 1 OF 3
BRIDGE A
DETAILS OF END BENT 1
HWY. 612 OVER HWY. 68

ROUTE 612 SEC. 1

ARKANSAS STATE HIGHWAY COMMISSION

LITTLE ROCK, ARK.

DRAWN BY: FAN DATE: 04-23
CHECKED BY: DHP DATE: 04-23
DESIGNED BY: WKB DATE: 04-23
FILENAME: B012326aD_B11.DGN
SCALE: AS SHOWN

BRIDGE NO. A7613 DRAWING NO. 66149

Date Plotted: 7/21/2023

NOTE: Class 2 Protective Surface Treatment shall be applied to the roadway face and top of the end bent rail and the top of the backwall.

DATE REVISED	DATE FILMED	DATE REVISED	DATE FILMED	FED. ROAD DIST. NO.	STATE	FED. AID PROJ. NO.	SHEET NO.	TOTAL SHEETS
				6	ARK.		361	838
				JOB NO.		012326		
				(1) A7613		END BENT 1 DETAILS		66150

For GENERAL NOTES FOR SUBSTRUCTURE, see Dwg. No. 66149 and Std. Dwg. No. 55006.

For additional information, see LAYOUT on Dwg. No. 66147.

For Details of Wing and Rail, see Dwg. No. 66151, 66152 & 66163.

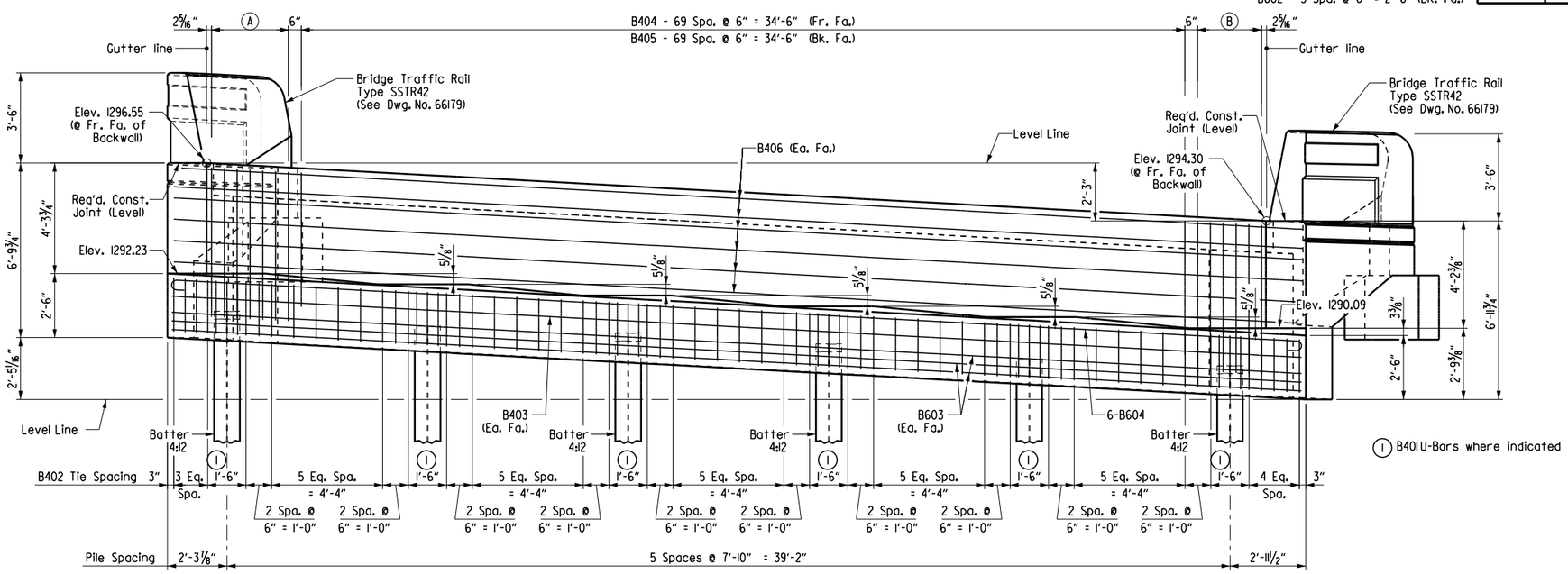

ELEVATION
(Looking Back)
Scale: 3/8" = 1'-0"

BRIDGE A - END BENT 1 BAR LIST

Mark	No. Req'd	Length	Pin Dia.
B401	18	7'-10"	2"
B402	59	12'-9"	2"
B403	2	44'-1"	Str.
B404	70	7'-3"	2"
B405	70	4'-0"	2"
B406	12	44'-2"	3"
B407	7	5'-3"	Str.
B601	13	7'-8"	4 1/2"
B602	13	4'-7"	Str.
B603	8	44'-1"	Str.
B604	6	45'-5"	4 1/2"
B605	4	8'-0"	4 1/2"
B606	4	9'-10"	4 1/2"
W401	4	6'-8"	Str.
W402	4	9'-1"	Str.
W403 to W405	1 Each	3'-8" to 3'-3"	Str.
W406 to W411	1 Each	3'-1" to 2'-1"	2"
W412 to W414	1 Each	3'-8" to 3'-3"	Str.
W415 to W420	1 Each	3'-1" to 2'-1"	Str.
W421	3	9'-1"	2"
W422	4	6'-10"	Str.

Mark	No. Req'd	Length	Pin Dia.
W423	4	9'-3"	Str.
W424 to W426	1 Each	4'-0" to 3'-6"	Str.
W427 to W432	1 Each	3'-3" to 2'-2"	Str.
W433 to W435	1 Each	4'-0" to 3'-6"	Str.
W436 to W441	1 Each	3'-3" to 2'-2"	Str.
W442	3	10'-7"	2"
W443E	64	4'-7"	6"
W601	24	4'-0"	4 1/2"
W602	12	2'-8"	Str.
W701	12	15'-8"	Str.
W702	2	8'-3"	Str.
W703	2	3'-8"	Str.
W704	2	14'-0"	5 1/4"
W705	2	8'-11"	Str.
W706	2	4'-7"	Str.
W707	2	14'-1"	5 1/4"
R401E	60	7'-6"	3"
R402E	8	5'-6"	Str.
R404E	4	3'-8"	8 1/2"
R405E	16	15'-8"	Str.
R406E	4	15'-5"	Str.
R407E	2	6'-8"	3"
R408E	2	5'-1"	3"

BENDING DIAGRAMS
(Dimensions are out to out of bars)

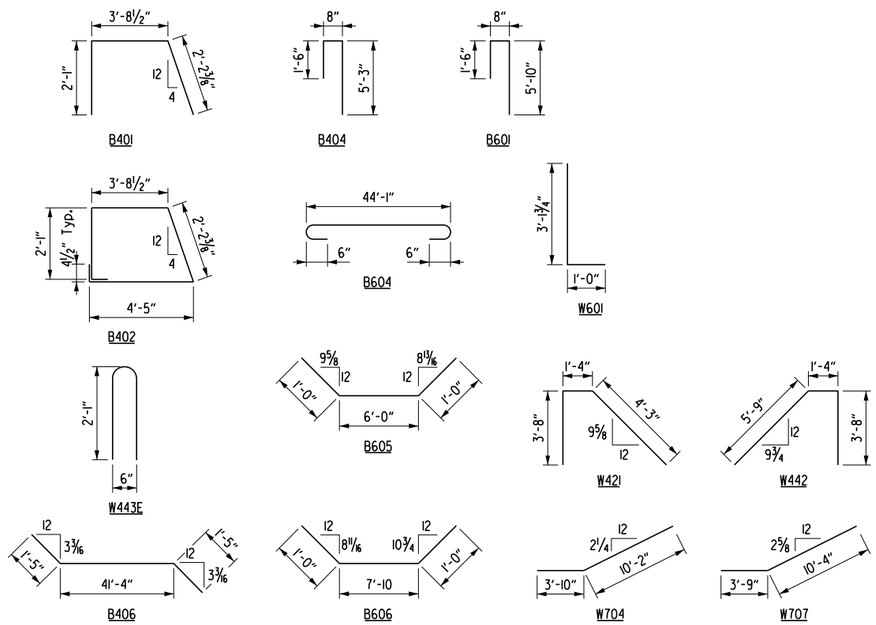

Note:
See Dwg. No. 66179 for Traffic Rail reinforcing bar bending diagrams.

07.27.23
STATE OF ARKANSAS
LICENSED PROFESSIONAL ENGINEER
No. 19188
ERIC S. CHRISTIANSEN
Eric S. Christiansen
BRIDGE ENGINEER

SHEET 2 OF 3
BRIDGE A
DETAILS OF END BENT 1
HWY. 612 OVER HWY. 68

ROUTE 612 SEC. 1

ARKANSAS STATE HIGHWAY COMMISSION
LITTLE ROCK, ARK.

DRAWN BY: FAN DATE: 04-23
CHECKED BY: DHP DATE: 04-23
DESIGNED BY: WKB DATE: 04-23
FILENAME: B012326aD_B12.DGN
SCALE: 3/8" = 1'-0"

BRIDGE NO. A7613 DRAWING NO. 66150

Date Plotted: 7/27/2023

DATE REVISED	DATE FILMED	DATE REVISED	DATE FILMED	FED. ROAD DIST. NO.	STATE	FED. AID PROJ. NO.	SHEET NO.	TOTAL SHEETS
				6	ARK.		362	838
				JOB NO.		012326		
				(1)	A7613	END BENT 1 DETAILS		66151

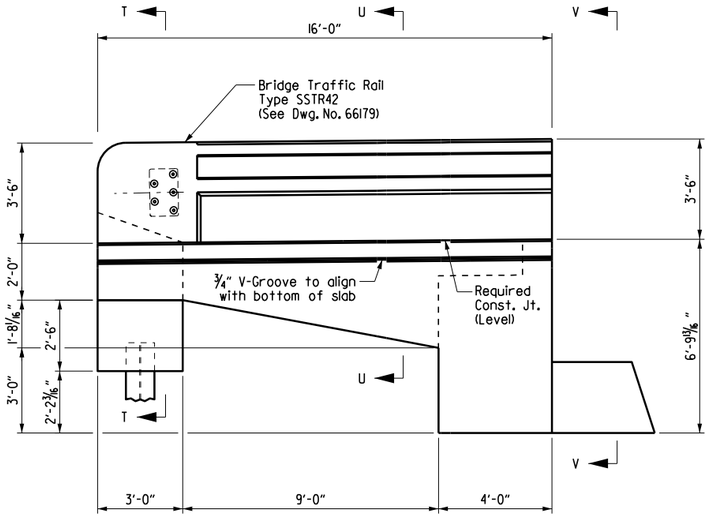

VIEW A-A

Scale: ⅜" = 1'-0"

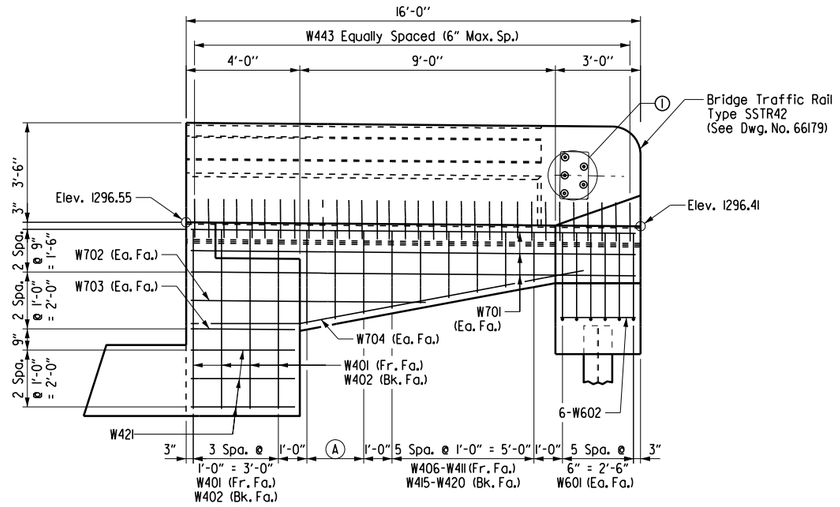

VIEW B-B

Scale: ⅜" = 1'-0"

For GENERAL NOTES FOR SUBSTRUCTURE, see Dwg. No. 66149 and Std. Dwg. No. 55006.

For additional information, see LAYOUT on Dwg. No. 66147.

For SECTION T-T, SECTION U-U, VIEW V-V, VIEW W-W, SECTION X-X, and SECTION Y-Y, see Dwg. No. 66152.

(A) 2 Spa. @ 1'-0" = 2'-0"
W403-W405 (Fr. Fa.)
W412-W414 (Bk. Fa.)

(B) 2 Spa. @ 1'-0" = 2'-0"
W424-W426 (Fr. Fa.)
W433-W435 (Bk. Fa.)

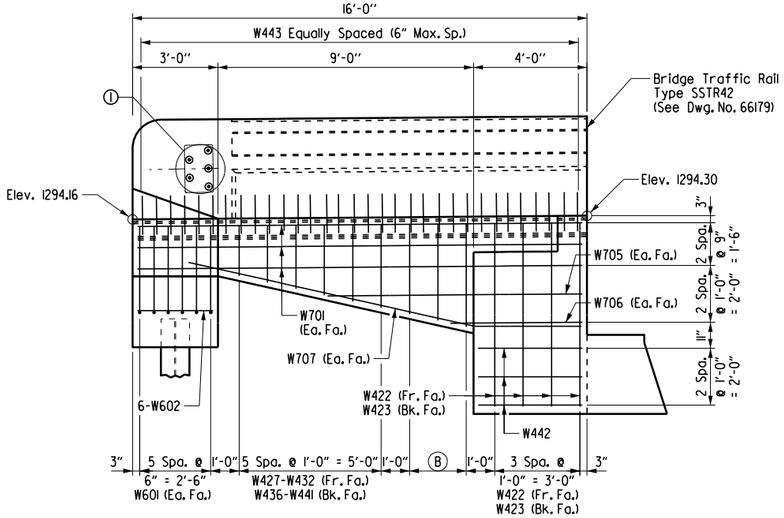

VIEW D-D

Scale: ⅜" = 1'-0"

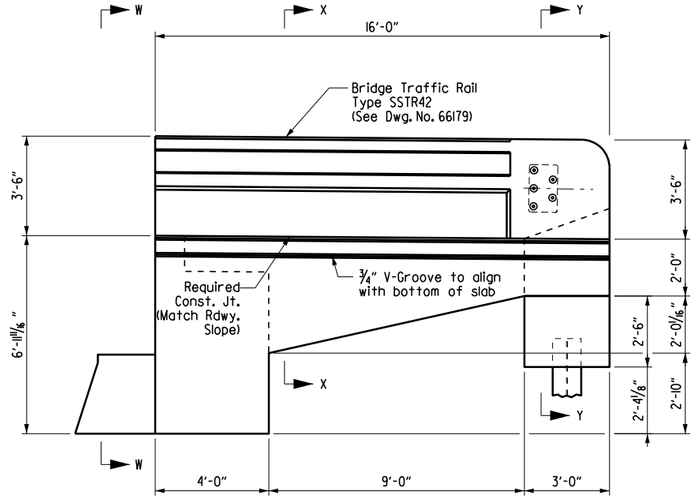

VIEW C-C

Scale: ⅜" = 1'-0"

(1) 5 - 1"ø formed holes for guard rail connection. See Std. Dwg. No. GR-10 for bolt spacing and additional connection details.

07-27-23

STATE OF ARKANSAS
LICENSED PROFESSIONAL ENGINEER
No. 19188
ERIC S. CHRISTIANSEN

Eric S. Christiansen

BRIDGE ENGINEER

SHEET 3 OF 3
BRIDGE A
DETAILS OF END BENT 1
HWY. 612 OVER HWY. 68

ROUTE 612 SEC. 1

ARKANSAS STATE HIGHWAY COMMISSION

LITTLE ROCK, ARK.

DRAWN BY: FAN DATE: 04-23
CHECKED BY: DHP DATE: 04-23
DESIGNED BY: WKB DATE: 04-23
FILENAME: B012326aD_B13.DGN
SCALE: ⅜" = 1'-0"

BRIDGE NO. A7613 DRAWING NO. 66151

Date Plotted: 1/21/2023

DATE REVISED	DATE FILMED	DATE REVISED	DATE FILMED	FED. ROAD DIST. NO.	STATE	FED. AID PROJ. NO.	SHEET NO.	TOTAL SHEETS
				6	ARK.		363	838
				JOB NO.		012326		

1 COMMON END BENT DETAILS 66152

* 1"ø formed holes required on all bents.
See Dwg. No. 66147 for location of guard rail.

For GENERAL NOTES FOR SUBSTRUCTURE, see Dwg. No. 66149 and Std. Dwg. No. 55006.

For additional information, see LAYOUT on Dwg. No. 66147.

For Details of Wing and Rail, see Dwg. No. 66151 & 66179.

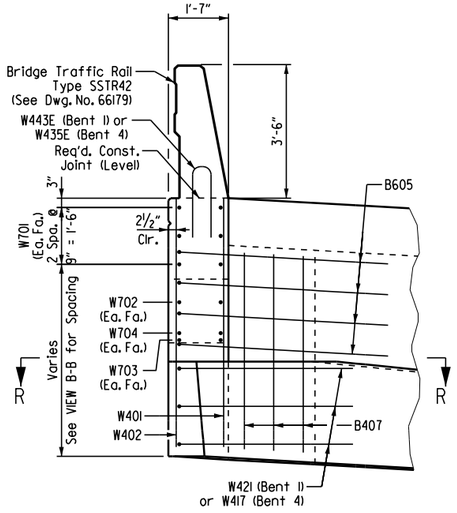

VIEW V-V
Scale: ½" = 1'-0"

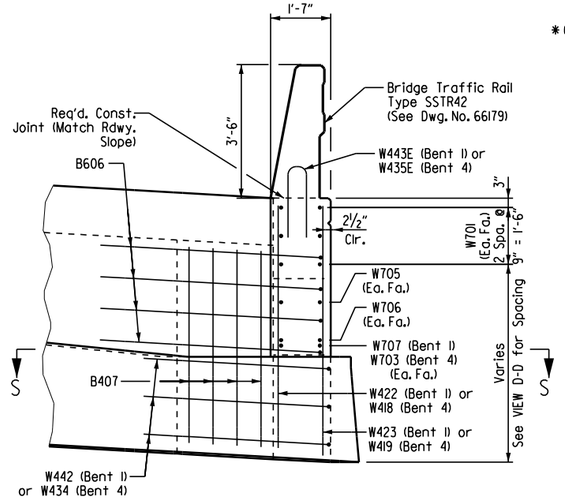

VIEW W-W
Scale: ½" = 1'-0"

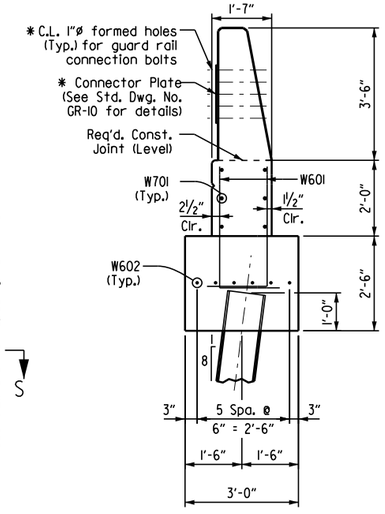

SECTION T-T
Scale: ½" = 1'-0"

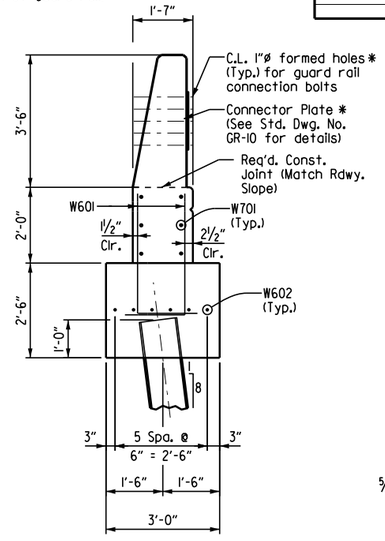

SECTION Y-Y
Scale: ½" = 1'-0"

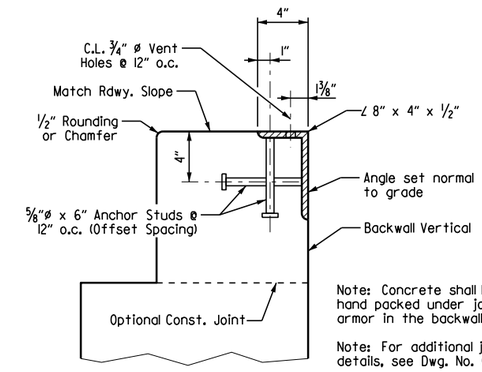

DETAIL Z
Scale: 2" = 1'-0"

Note: Concrete shall be hand packed under joint armor in the backwall.

Note: For additional joint details, see Dwg. No. 66178.

Note: The profile of the backwall angle shall be established based on the vertical curve in conjunction with the skew.

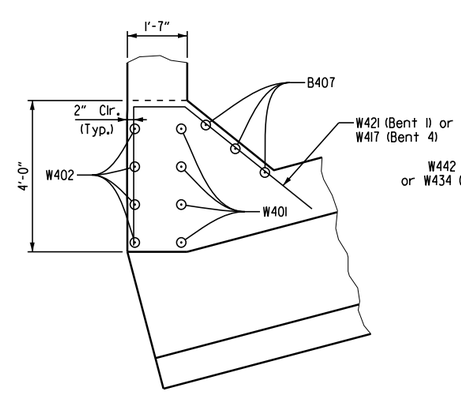

SECTION R-R
Scale: ½" = 1'-0"

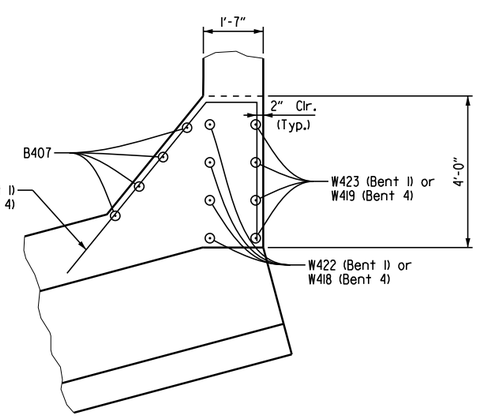

SECTION S-S
Scale: ½" = 1'-0"

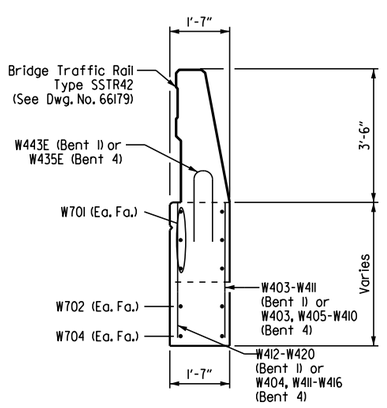

SECTION U-U
Scale: ½" = 1'-0"

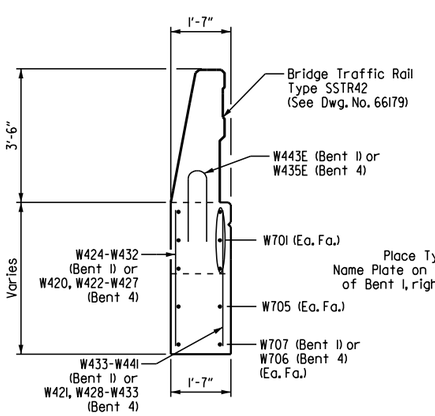

SECTION X-X
Scale: ½" = 1'-0"

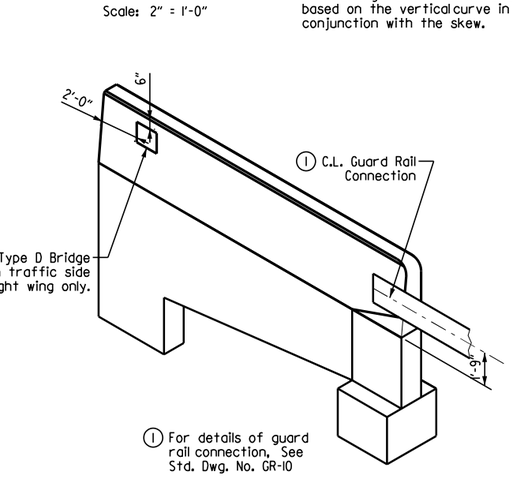

1 For details of guard rail connection, See Std. Dwg. No. GR-10

THREE DIMENSIONAL VIEW OF WING & RAIL
Scale: ¼" = 1'-0"

07.27.23
STATE OF ARKANSAS
LICENSED PROFESSIONAL ENGINEER
No. 19188
ERIC S. CHRISTIANSEN
Eric S. Christiansen
BRIDGE ENGINEER

BRIDGE A
COMMON DETAILS OF END BENTS
HWY. 612 OVER HWY. 68

ROUTE 612 SEC. 1

ARKANSAS STATE HIGHWAY COMMISSION

LITTLE ROCK, ARK.

DRAWN BY: FAN DATE: 04-23
CHECKED BY: DHP DATE: 04-23
DESIGNED BY: WKB DATE: 04-23
FILENAME: B012326aD_B14.DGN
SCALE: AS SHOWN

BRIDGE NO.
DRAWING NO. 66152

Date Plotted: 7/21/2023

DATE REVISED	DATE FILMED	DATE REVISED	DATE FILMED	FED. ROAD DIST. NO.	STATE	FED. AID PROJ. NO.	SHEET NO.	TOTAL SHEETS
				6	ARK.		364	838
				JOB NO.		012326		
				① A7613		BENT 2 DETAILS		66153

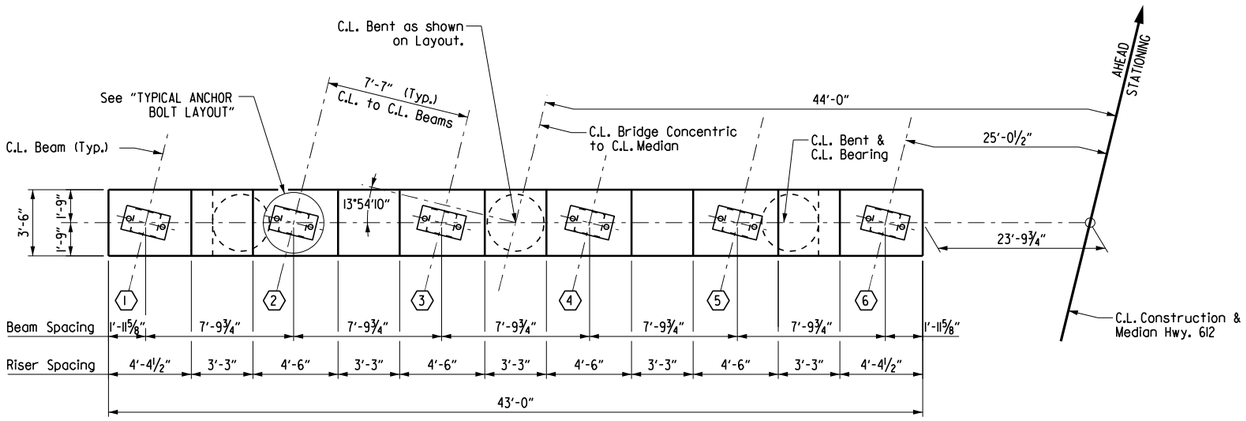

PLAN

1/4" = 1'-0"

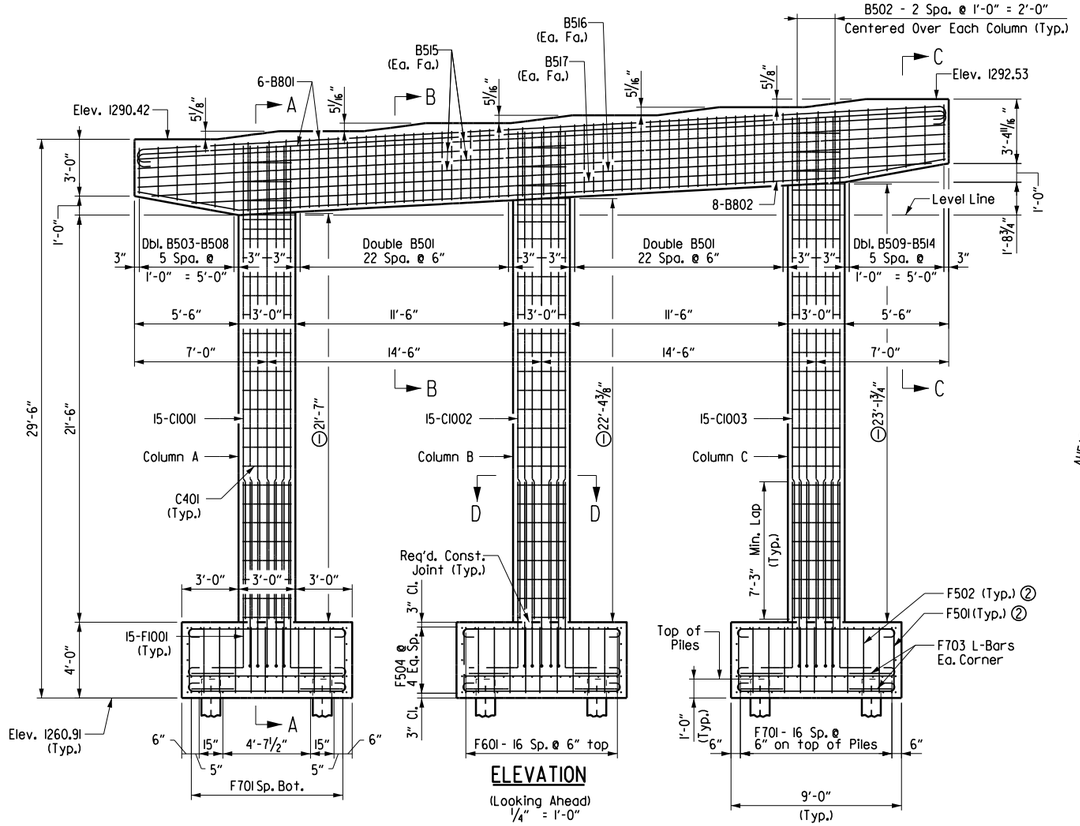

ELEVATION

(Looking Ahead)
1/4" = 1'-0"

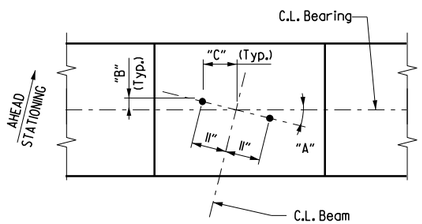

BEAM	"A"	"B"	"C"
1	13°58'28"	2 11/16"	10 11/16"
2	13°56'45"	2 5/8"	10 11/16"
3	13°55'02"	2 5/8"	10 11/16"
4	13°53'19"	2 5/8"	10 11/16"
5	13°51'37"	2 5/8"	10 11/16"
6	13°49'55"	2 5/8"	10 11/16"

Note: For Details Of Elastomeric Bearings, See Dwg. No. 66180.

TYPICAL ANCHOR BOLT LAYOUT

1/2" = 1'-0"

BRIDGE A - BENT 2 BAR LIST

Mark	Number Required	Length	Pin Dia.
B501	92	11'-8"	2 1/2"
B502	9	10'-4"	2 1/2"
B503 to B508	2 Each	9'-2" to 11'-7"	2 1/2"
B509 to B514	2 Each	11'-7" to 10'-4"	2 1/2"
B515	8	42'-8"	Str.
B516	2	41'-11"	Str.
B517	2	39'-1"	Str.
B801	12	44'-6"	6"
B802	8	42'-10"	6"
C401	79	9'-2"	3"
C1001	15	25'-0"	Str.
C1002	15	25'-9"	Str.
C1003	15	26'-6"	Str.
F501	72	3'-10"	2½"
F502	54	4'-1"	2½"
F503	30	8'-6"	Str.
F504	30	10'-6"	Str.
F601	51	11'-9"	4½"
F602	63	9'-9"	4½"
F701	69	12'-1"	5¼"
F702	87	10'-1"	5¼"
F703	24	4'-4"	5¼"
F1001	45	11'-10"	10"

Bending Diagrams (Dimensions are out to out of bars.)

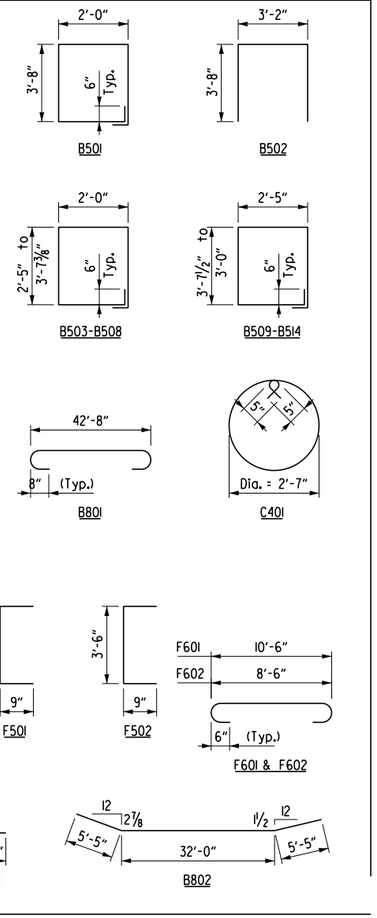

① Dimension shown is at C.L. of Column.

② See REINFORCING PLAN on Dwg. No. 66155

For GENERAL NOTES FOR SUBSTRUCTURE, see Dwg. No. 66149 and Std. Dwg. No. 55006.

For additional information, see LAYOUT on Dwg. No. 66147.

For SECTION A-A, SECTION B-B, SECTION C-C, & SECTION D-D, & FOOTING PLAN see Dwg. No. 66155.

07-27-23

STATE OF ARKANSAS
LICENSED PROFESSIONAL ENGINEER
No. 19188
ERIC S. CHRISTIANSEN

Eric S. Christiansen

BRIDGE ENGINEER

BRIDGE A
DETAILS OF BENT 2
HWY. 612 OVER HWY. 68

ROUTE 612 SEC. 1

ARKANSAS STATE HIGHWAY COMMISSION

LITTLE ROCK, ARK.

DRAWN BY: FAN DATE: 04-23
CHECKED BY: DHP DATE: 04-23
DESIGNED BY: WKB DATE: 04-23
FILENAME: B012326aD_B2.DGN
SCALE: AS SHOWN

BRIDGE NO. A7613 DRAWING NO. 66153

Date Plotted: 7/21/2023

DATE REVISED	DATE FILMED	DATE REVISED	DATE FILMED	FED. ROAD DIST. NO.	STATE	FED. AID PROJ. NO.	SHEET NO.	TOTAL SHEETS
				6	ARK.		365	838
				JOB NO.		012326		
				(1) A7613		BENT 3 DETAILS		66154

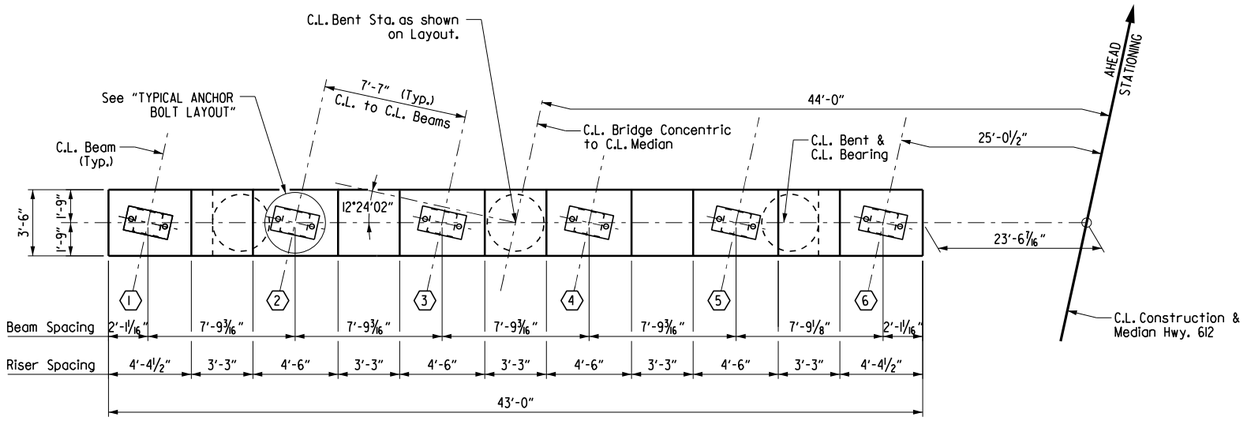

PLAN

¼" = 1'-0"

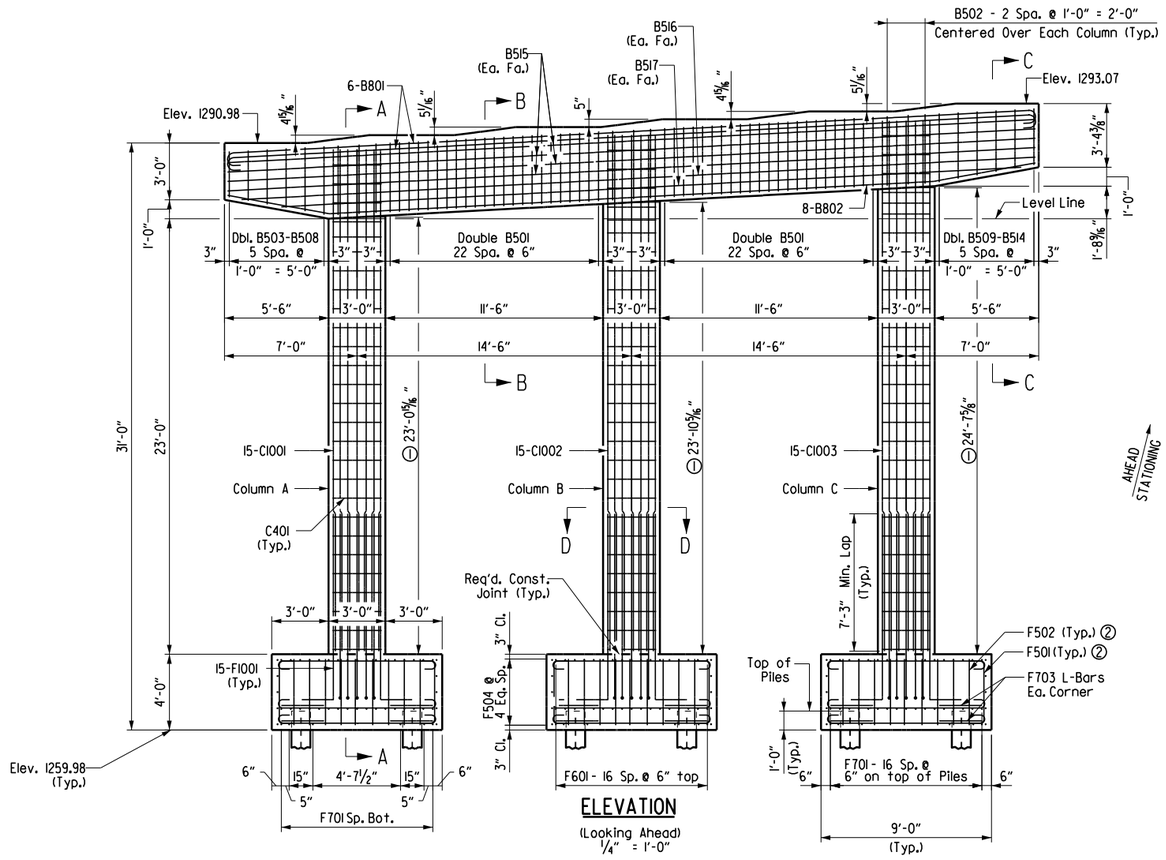

ELEVATION

(Looking Ahead)
¼" = 1'-0"

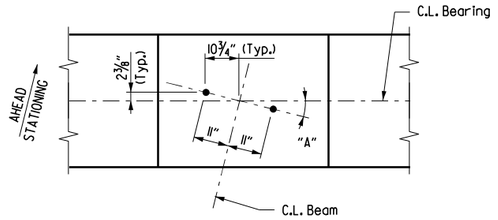

BEAM	"A"
1	12°27'51"
2	12°26'19"
3	12°24'48"
4	12°23'16"
5	12°21'46"
6	12°20'16"

Note: For Details Of Elastomeric Bearings, See Dwg. No. 66180.

TYPICAL ANCHOR BOLT LAYOUT

½" = 1'-0"

BRIDGE A - BENT 3 BAR LIST

Mark	Number Required	Length	Pin Dia.
B501	92	11'-8"	2 1/2"
B502	9	10'-4"	2 1/2"
B503 to B508	2 Each	9'-2" to 11'-7"	2 1/2"
B509 to B514	2 Each	11'-7" to 10'-4"	2 1/2"
B515	8	42'-8"	Str.
B516	2	41'-11"	Str.
B517	2	39'-1"	Str.
B801	12	44'-6"	6"
B802	8	42'-10"	6"
C401	84	9'-2"	3"
C1001	15	26'-6"	Str.
C1002	15	27'-3"	Str.
C1003	15	28'-0"	Str.
F501	72	3'-10"	2½"
F502	54	4'-1"	2½"
F503	30	8'-6"	Str.
F504	30	10'-6"	Str.
F601	51	11'-9"	4½"
F602	63	9'-9"	4½"
F701	69	12'-1"	5¼"
F702	87	10'-1"	5¼"
F703	24	4'-4"	5¼"
F1001	45	11'-10"	10"

Bending Diagrams (Dimensions are out to out of bars.)

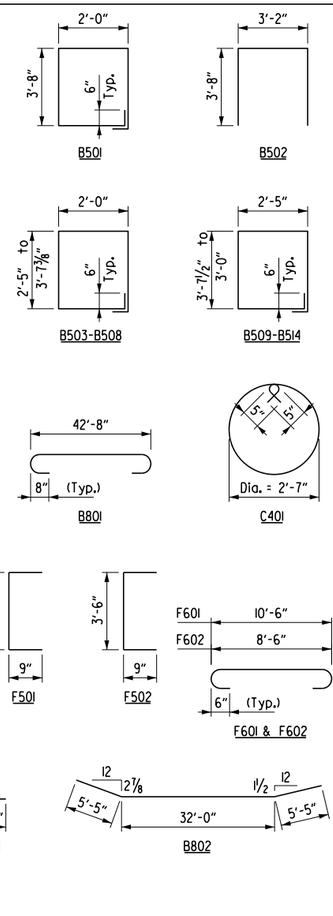

① Dimension shown is at C.L. of Column.

② See REINFORCING PLAN on Dwg. No. 66155.

For GENERAL NOTES FOR SUBSTRUCTURE, see Dwg. No. 66149 and Std. Dwg. No. 55006.

For additional information, see LAYOUT on Dwg. No. 66147.

For SECTION A-A, SECTION B-B, SECTION C-C, SECTION D-D, & FOOTING PLAN see Dwg. No. 66155.

07-27-23

STATE OF ARKANSAS
LICENSED PROFESSIONAL ENGINEER
No. 19188
ERIC S. CHRISTIANSEN

Eric S. Christiansen

BRIDGE ENGINEER

BRIDGE A
DETAILS OF BENT 3
HWY. 612 OVER HWY. 68

ROUTE 612 SEC. 1

ARKANSAS STATE HIGHWAY COMMISSION

LITTLE ROCK, ARK.

DRAWN BY: FAN DATE: 04-23
CHECKED BY: DHP DATE: 04-23
DESIGNED BY: WKB DATE: 04-23
FILENAME: B012326aD_B3.DGN
SCALE: AS SHOWN

BRIDGE NO. A7613 DRAWING NO. 66154

Date Plotted: 7/27/2023

DATE REVISED	DATE FILMED	DATE REVISED	DATE FILMED	FED. ROAD DIST. NO.	STATE	FED. AID PROJ. NO.	SHEET NO.	TOTAL SHEETS
				6	ARK.		366	838
				JOB NO.		012326		
				①	A&B7613	DETAILS OF BENTS 2 & 3		66155

GENERAL NOTES

For additional information, see LAYOUT on Dwg. No. 66147.

① See REINFORCING PLAN.

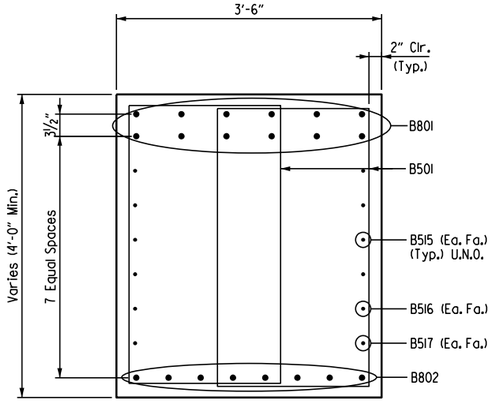

SECTION B-B

1" = 1'-0"

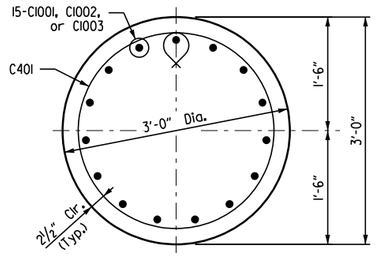

SECTION D-D

1" = 1'-0"

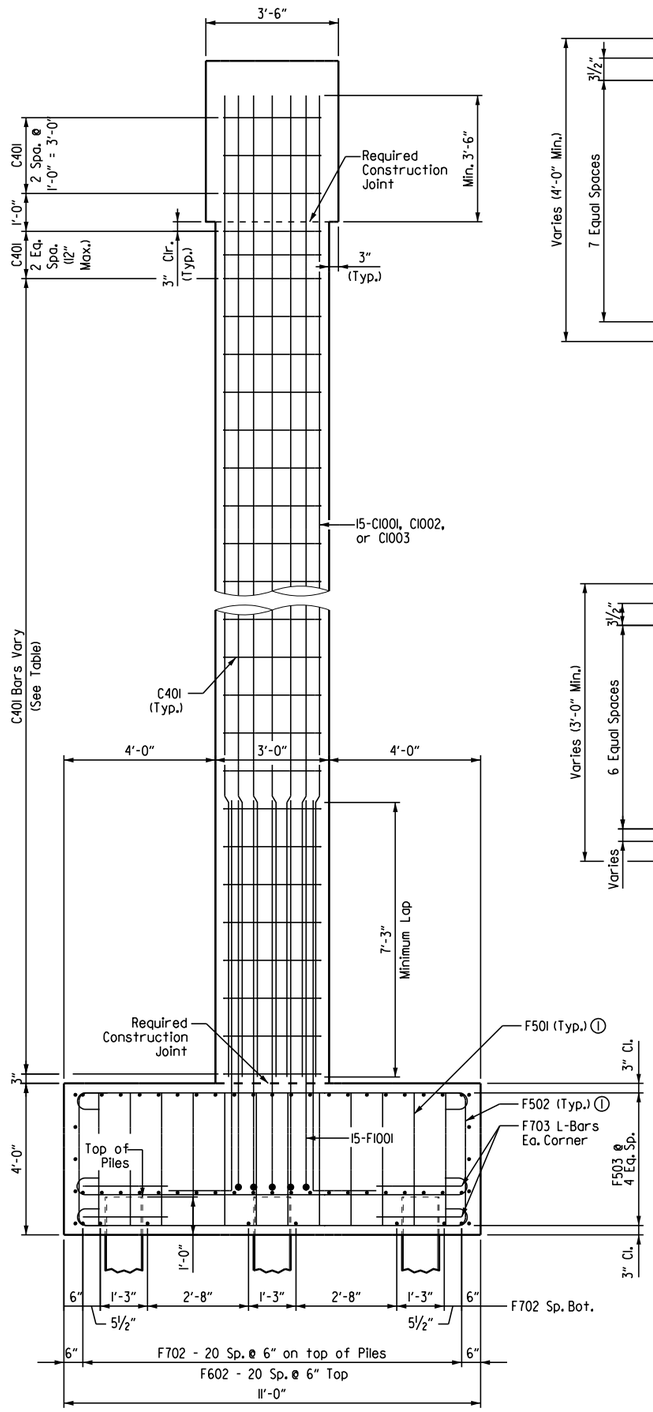

SECTION A-A

½" = 1'-0"

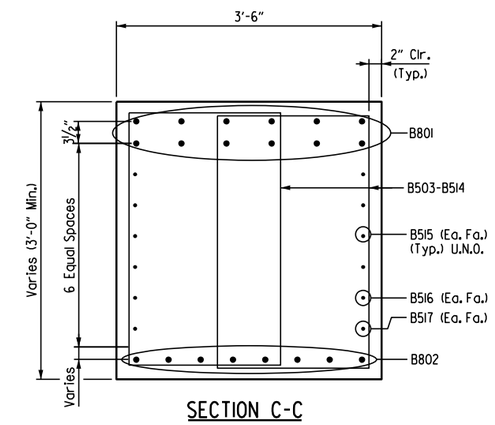

SECTION C-C

1" = 1'-0"

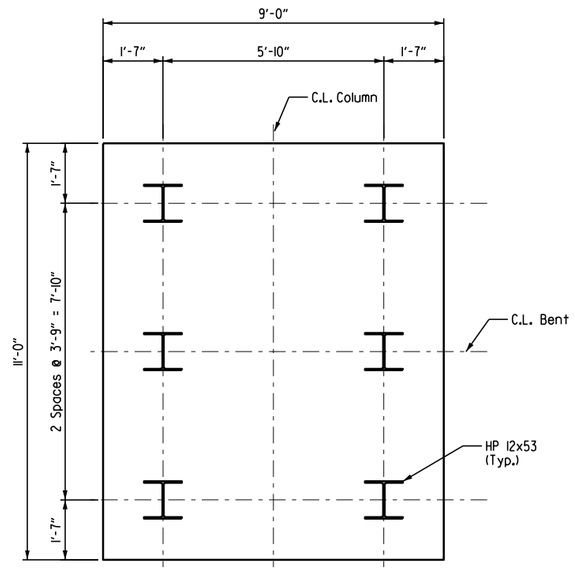

FOOTING PLAN

1" = 1'-0"

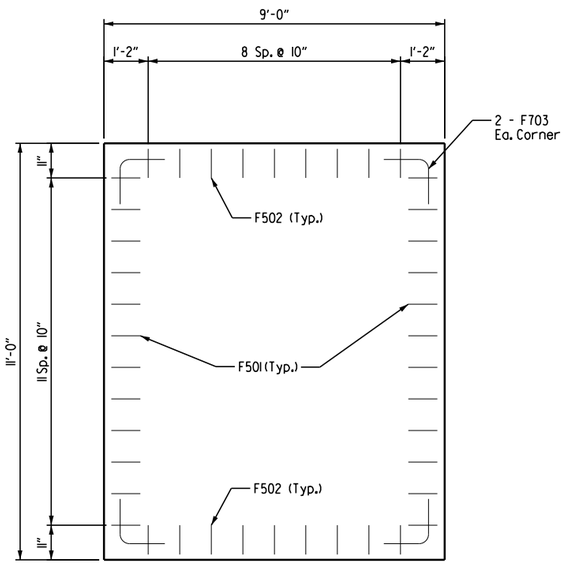

REINFORCING PLAN

1" = 1'-0"

C401 COLUMN BARS

	Bridge A		Bridge B	
	Bent 2	Bent 3	Bent 2	Bent 3
Column A	20 Spa. @ 1'-0" = 20'-0"	21 Spa. @ 1'-0" = 21'-0"	24 Spa. @ 1'-0" = 24'-0"	25 Spa. @ 1'-0" = 25'-0"
Column B	20 Spa. @ 1'-0" = 20'-0"	22 Spa. @ 1'-0" = 22'-0"	25 Spa. @ 1'-0" = 25'-0"	26 Spa. @ 1'-0" = 26'-0"
Column C	21 Spa. @ 1'-0" = 21'-0"	23 Spa. @ 1'-0" = 23'-0"	26 Spa. @ 1'-0" = 26'-0"	27 Spa. @ 1'-0" = 27'-0"

07·27·23

STATE OF ARKANSAS
LICENSED PROFESSIONAL ENGINEER
No. 19188
ERIC S. CHRISTIANSEN

Eric S. Christiansen

BRIDGE ENGINEER

COMMON DETAILS OF BENTS 2 & 3 HWY. 612 OVER HWY. 68

ROUTE 612 SEC. 1

ARKANSAS STATE HIGHWAY COMMISSION

LITTLE ROCK, ARK.

DRAWN BY: FAN DATE: 04-23 FILENAME: B012326mD_B1.DGN

CHECKED BY: DHP DATE: 04-23 SCALE: AS SHOWN

DESIGNED BY: WKB DATE: 04-23

BRIDGE NO. A&B7613 DRAWING NO. 66155

Date Plotted: 7/21/2023

NOTE: Class 2 Protective Surface Treatment shall be applied to the roadway face and top of the end bent rail and the top of the backwall.

DATE REVISED	DATE FILMED	DATE REVISED	DATE FILMED	FED. ROAD DIST. NO.	STATE	FED. AID PROJ. NO.	SHEET NO.	TOTAL SHEETS
				6	ARK.		367	838
				JOB NO.		012326		
				(1) A7613		END BENT 4 DETAILS		66156

For GENERAL NOTES FOR SUBSTRUCTURE, see Dwg. No. 66148 and Std. Dwg. No. 55006.

For additional information, see LAYOUT on Dwg. No. 66148.

For VIEW A-A, VIEW B-B, VIEW C-C, and VIEW D-D, see Dwg. No. 66158.

For DETAIL Z, see Dwg. No. 66152.

(1) For Details of Wing and Rail, see Dwg. No. 66152, 66158 & 66179.

Dimensions shown are to C.L. Joint

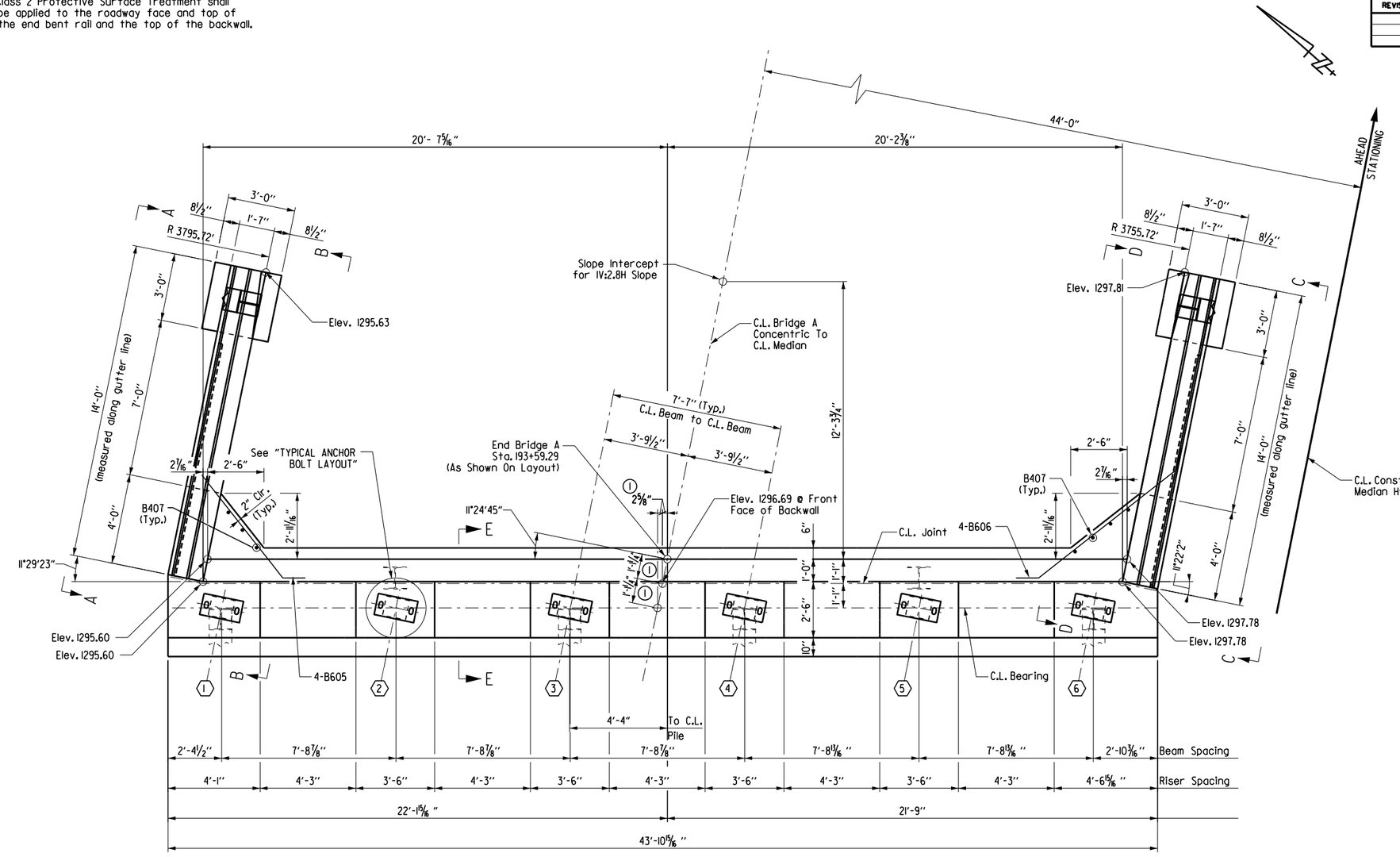

PLAN

Scale: 3/8" = 1'-0"

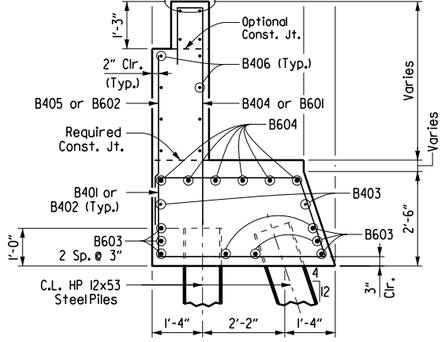

SECTION E-E

1/2" = 1'-0"

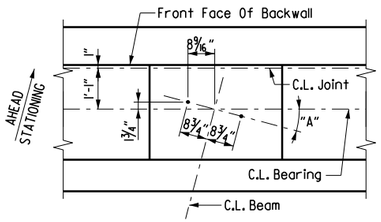

BEAM	"A"
1	11°30'17"
2	11°28'52"
3	11°27'28"
4	11°26'04"
5	11°24'41"
6	11°23'18"

Note: For Details Of Elastomeric Bearings, See Dwg. No. 66180.

TYPICAL ANCHOR BOLT LAYOUT

1/2" = 1'-0"

07-27-23

STATE OF ARKANSAS
LICENSED PROFESSIONAL ENGINEER
No. 19188
ERIC S. CHRISTIANSEN

Eric S. Christiansen

BRIDGE ENGINEER

SHEET 1 OF 3
BRIDGE A
DETAILS OF END BENT 4
HWY. 612 OVER HWY. 68

ROUTE 612 SEC. 1

ARKANSAS STATE HIGHWAY COMMISSION

LITTLE ROCK, ARK.

DRAWN BY: FAN DATE: 04-23
CHECKED BY: DHP DATE: 04-23
DESIGNED BY: WKB DATE: 04-23

FILENAME: B012326aD_B41.DGN
SCALE: AS SHOWN

BRIDGE NO. A7613

DRAWING NO. 66156

Date Plotted: 7/21/2023

NOTE: Class 2 Protective Surface Treatment shall be applied to the roadway face and top of the end bent rail and the top of the backwall.

DATE REVISED	DATE FILMED	DATE REVISED	DATE FILMED	FED. ROAD DIST. NO.	STATE	FED. AID PROJ. NO.	SHEET NO.	TOTAL SHEETS
				6	ARK.		368	838
				JOB NO.		012326		
				(1) A7613		END BENT 4 DETAILS		66157

For GENERAL NOTES FOR SUBSTRUCTURE, see Dwg. No. 66149 and Std. Dwg. No. 55006.

For additional information, see LAYOUT on Dwg. No. 66147.

For Details of Wing and Rail, see Dwg. No. 66152, 66158, & 66179.

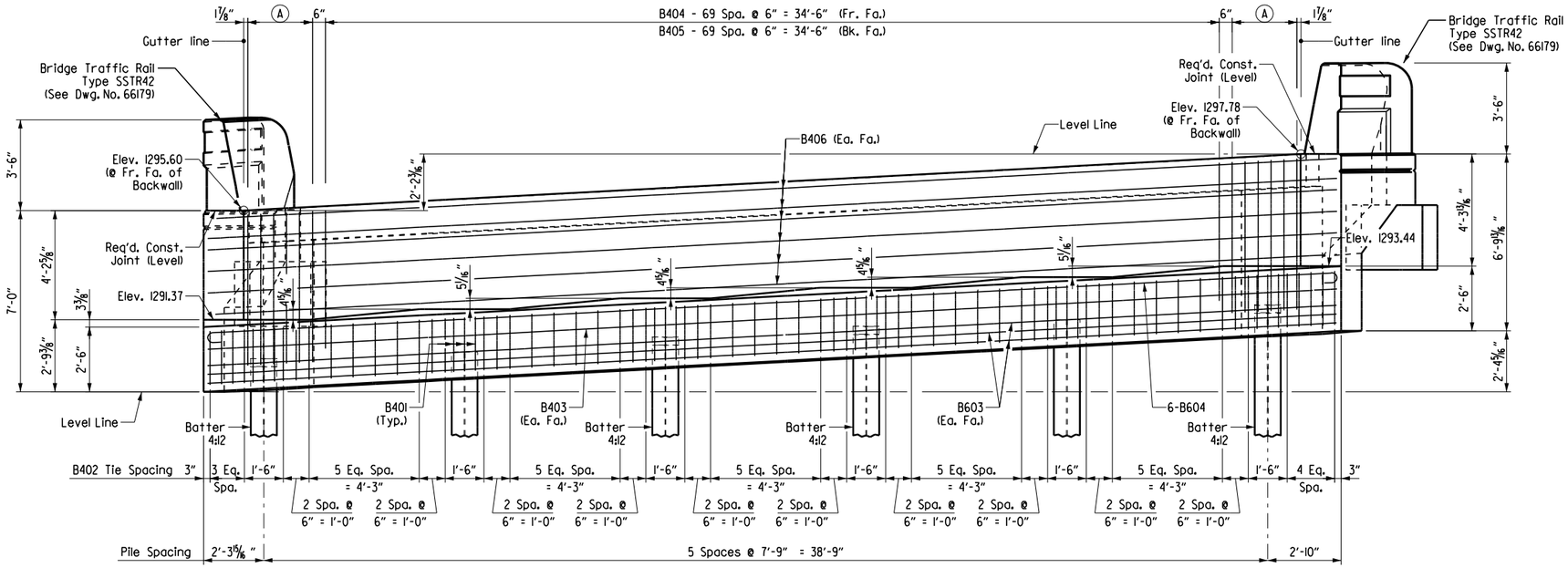

ELEVATION
(Looking Ahead)
Scale: ⅜" = 1'-0"

BRIDGE A - END BENT 4 BAR LIST

Mark	No. Req'd	Length	Pin Dia.
B401	18	7'-10"	2"
B402	59	12'-9"	2"
B403	2	43'-7"	Str.
B404	70	7'-4"	2"
B405	70	4'-1"	Str.
B406	12	43'-7"	3"
B407	7	5'-3"	Str.
B601	12	7'-8"	4½"
B602	12	4'-7"	Str.
B603	8	43'-7"	Str.
B604	6	44'-11"	4½"
B605	4	8'-2"	4½"
B606	4	9'-7"	4½"
W401	4	6'-10"	Str.
W402	4	9'-4"	Str.
W403	1	3'-7"	Str.
W404	1	6'-1"	Str.
W405 to W410	1 Each	3'-4" to 2'-1"	Str.
W411 to W416	1 Each	5'-10" to 4'-7"	Str.
W417	3	9'-4"	2"
W418	4	6'-8"	Str.
W419	4	9'-2"	Str.

Mark	No. Req'd	Length	Pin Dia.
W420	1	3'-10"	2"
W421	1	6'-2"	Str.
W422 to W427	1 Each	3'-5" to 2'-1"	2"
W428 to W433	1 Each	5'-11" to 4'-7"	Str.
W434	3	10'-7"	2"
W435E	56	4'-7"	6"
W601	24	4'-0"	4½"
W602	12	2'-8"	Str.
W701	12	13'-8"	Str.
W702	2	7'-1"	Str.
W703	4	3'-8"	Str.
W704	2	12'-1"	5¼"
W705	2	7'-3"	Str.
W706	2	12'-2"	5¼"
R401E	52	7'-6"	3"
R402E	8	5'-6"	Str.
R404E	4	3'-8"	8½"
R405E	16	13'-8"	Str.
R406E	4	13'-5"	Str.
R407E	2	6'-8"	3"
R408E	2	5'-1"	3"

BENDING DIAGRAMS
(Dimensions are out to out of bars)

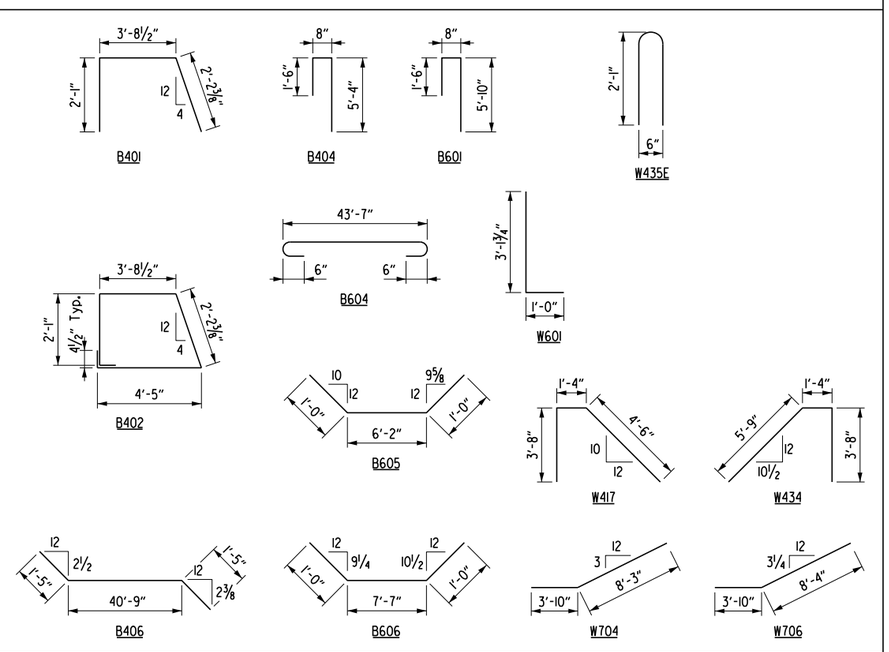

Note:
See Dwg. No. 66179 for Traffic Rail reinforcing bar bending diagrams.

07.27.23
STATE OF ARKANSAS
LICENSED PROFESSIONAL ENGINEER
No. 19188
ERIC S. CHRISTIANSEN
Eric S. Christiansen
BRIDGE ENGINEER

SHEET 2 OF 3
BRIDGE A
DETAILS OF END BENT 4
HWY. 612 OVER HWY. 68

ROUTE 612 SEC. 1

ARKANSAS STATE HIGHWAY COMMISSION
LITTLE ROCK, ARK.

DRAWN BY: FAN DATE: 04-23
CHECKED BY: DHP DATE: 04-23
DESIGNED BY: WKB DATE: 04-23
FILENAME: B012326aD_B42.DGN
SCALE: ⅜" = 1'-0"

BRIDGE NO. A7613 DRAWING NO. 66157

Date Plotted: 7/21/2023

DATE REVISED	DATE FILMED	DATE REVISED	DATE FILMED	FED. ROAD DIST. NO.	STATE	FED. AID PROJ. NO.	SHEET NO.	TOTAL SHEETS
				6	ARK.		369	838
				JOB NO.		012326		
				①	A7613	END BENT 4 DETAILS		66158

For GENERAL NOTES FOR SUBSTRUCTURE, see Dwg. No. 66149 and Std. Dwg. No. 55006.

For additional information, see LAYOUT on Dwg. No. 66147.

For SECTION T-T, SECTION U-U, VIEW V-V, VIEW W-W, SECTION X-X, and SECTION Y-Y, see Dwg. No. 66152.

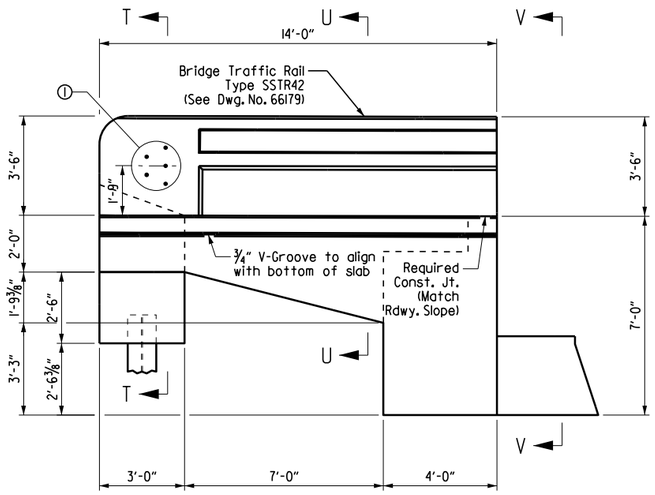

VIEW A-A

Scale: ⅜" = 1'-0"

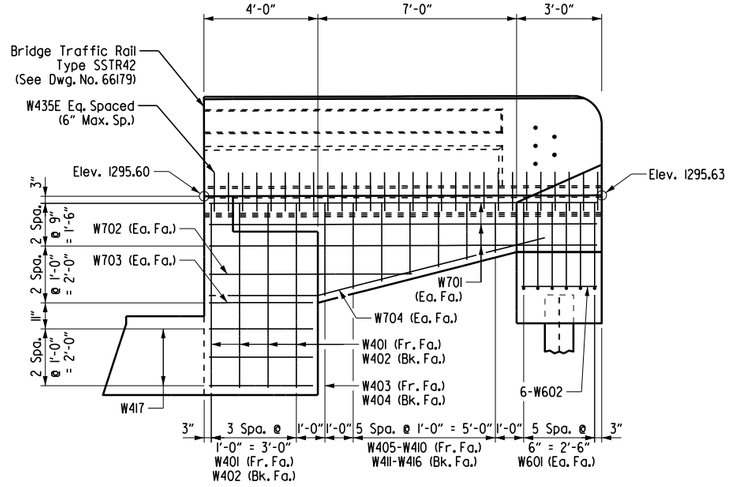

VIEW B-B

Scale: ⅜" = 1'-0"

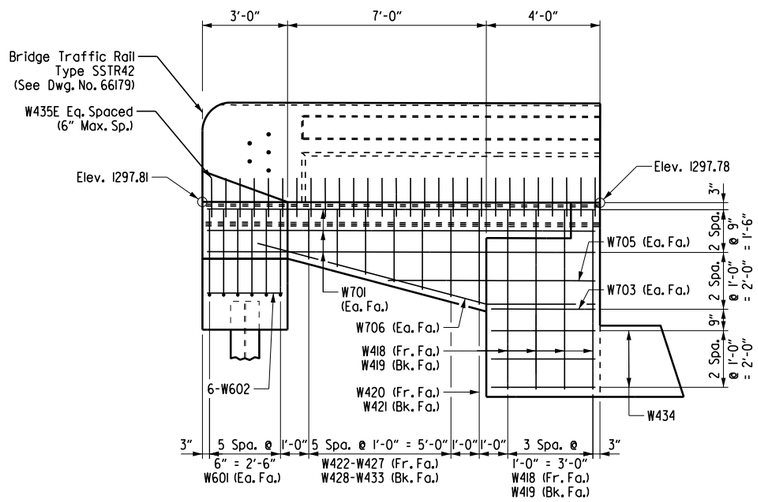

VIEW D-D

Scale: ⅜" = 1'-0"

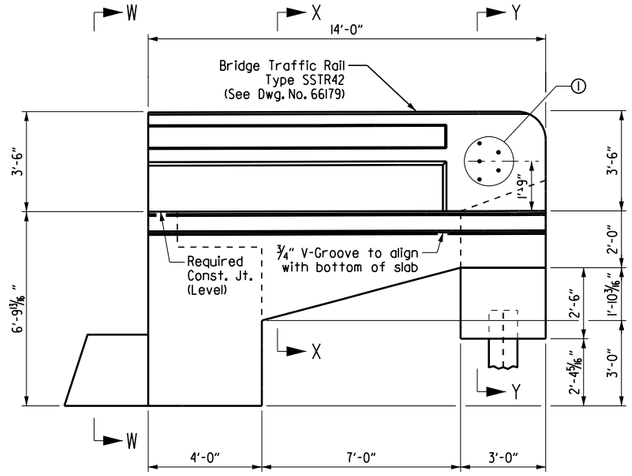

VIEW C-C

Scale: ⅜" = 1'-0"

① 5 - 1"ø formed holes for guard rail connection. See Std. Dwg. No. GR-10 for bolt spacing and additional connection details.

07-27-23

STATE OF ARKANSAS
LICENSED PROFESSIONAL ENGINEER
No. 19188
ERIC S. CHRISTIANSEN

Eric S. Christiansen

BRIDGE ENGINEER

SHEET 3 OF 3
BRIDGE A
DETAILS OF END BENT 4
HWY. 612 OVER HWY. 68

ROUTE 612 SEC. 1

ARKANSAS STATE HIGHWAY COMMISSION

LITTLE ROCK, ARK.

DRAWN BY: FAN DATE: 04-23
CHECKED BY: DHP DATE: 04-23
DESIGNED BY: WKB DATE: 04-23

FILENAME: B012326aD_B43.DGN
SCALE: ⅜" = 1'-0"

BRIDGE NO. A7613 DRAWING NO. 66158

Date Plotted: 7/21/2023

DATE REVISED	DATE FILMED	DATE REVISED	DATE FILMED	FED. ROAD DIST. NO.	STATE	FED. AID PROJ. NO.	SHEET NO.	TOTAL SHEETS
				6	ARK.		370	838
				JOB NO.		012326		
				(1) A7613		SPAN DETAILS		66159

(1) TOLERANCE: Minus = 1/4":
Plus equal to the amount of slab thickening used to meet the slab thickness tolerance. See "ADJUSTMENT FOR SLAB THICKNESS TOLERANCE" on Std. Dwg. No. 55007.

(2) See "ADJUSTMENT FOR SLAB THICKNESS TOLERANCE" on Std. Dwg. No. 55007.

(3) Field bend transverse bars in this area to provide minimum clearances.

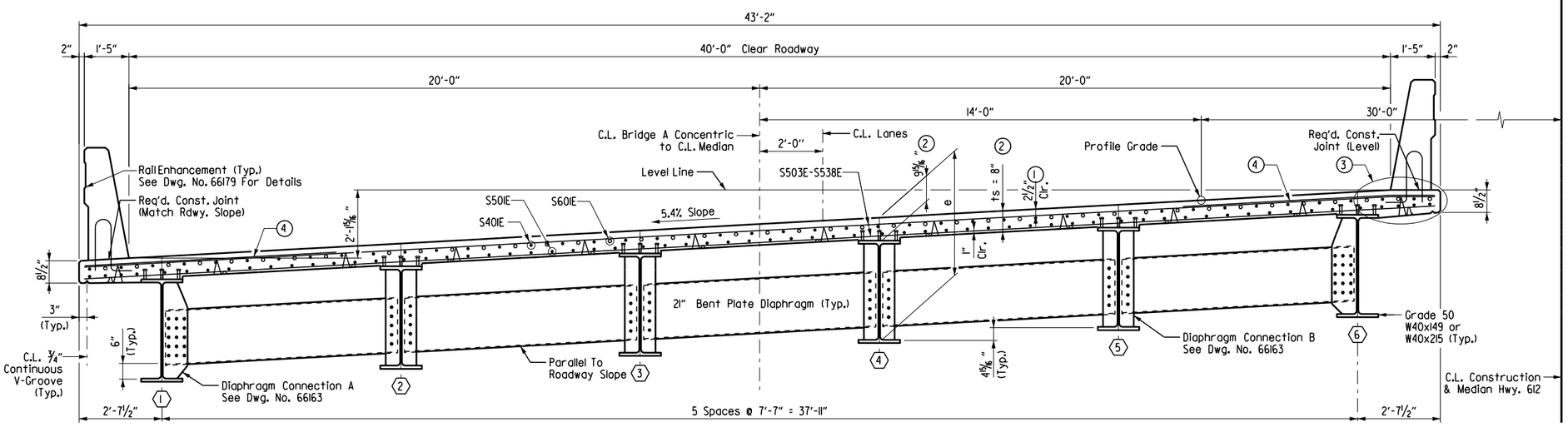

TYPICAL SECTION

(Looking Ahead)
Scale: 1/2" = 1'-0"

"e" = 3'-10 13/16" (W40x149)
"e" = 3'-11 3/16" (W40x215)
@ C.L. Beam & C.L. Bearing

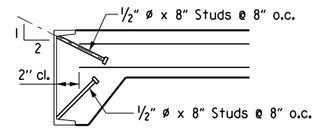

Note: As an alternate to 5/8" ø studs, 1/2" ø x 8" studs spaced as shown may be used. Use weight of 5/8" ø stud as basis of measurement of structural steel in anchors.

DETAIL OF ALTERNATE ANCHORS

No Scale

NOTES:

Class 2 Protective Surface Treatment shall be applied to the roadway surface and the top and roadway face of bridge traffic railing.

All bars designated with an "E" suffix are to be epoxy coated.

Bar positions or clearances from the forms shall be maintained by means of stays, ties, hangers or other approved devices per Subsection 804.06. Placement of slab bolsters or hi-chairs with full-length lower runners directly on removable deck forms will not be allowed.

EXPANSION DEVICE:

Roadway Channel C15x33.9 (ASTM A709, Gr. 50)
Connection ∠'s 7"x4"x1/2" x 8" Long
Detail Device 1/8" high & provide 1/4" shims using 1- 1/8" PL & 2 - 1/16" PL's

For details of Poured Silicone Joint, see Std. Dwg. No. 55008, See Dwg. No. 66178.

SLAB REINFORCING:

Transverse:
S503E @ 6" Centers (Top & Bottom)
S504E-S538E @ 6" Centers (Top & Bottom)
(4) S602E (Place as shown)
See DETAIL A on Dwg. No. 66160
Longitudinal:
S401E @ 12" Centers (Top)
S501E Place as shown (Bottom)
S601E @ 12" Centers (Top over Int. Bents)

For additional reinforcing details, see Dwg. No. 66160 - 66161.

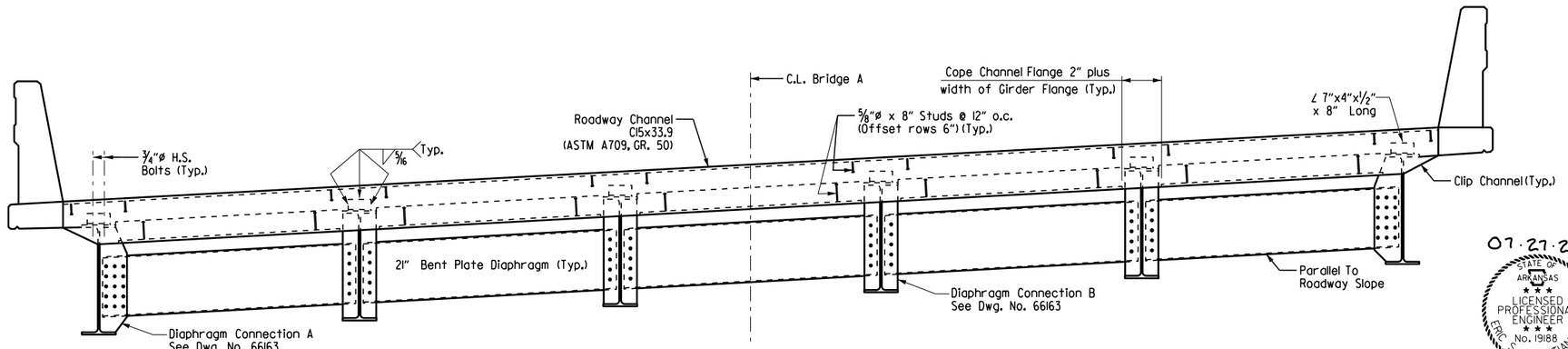

VIEW @ C.L. JOINT

(Looking Ahead)
Scale: 1/2" = 1'-0"

07.27.23
STATE OF ARKANSAS
LICENSED PROFESSIONAL ENGINEER
No. 19188
ERIC S. CHRISTIANSEN
Eric S. Christiansen
BRIDGE ENGINEER

SHEET 1 OF 4
BRIDGE A
DETAILS OF 227'-0"
CONTINUOUS W-BEAM UNIT
HWY 612 OVER HWY. 68

ROUTE 612 SEC. 1

ARKANSAS STATE HIGHWAY COMMISSION
LITTLE ROCK, ARK.

DRAWN BY: FAN DATE: 04-23
CHECKED BY: DHP DATE: 04-23
DESIGNED BY: WKB DATE: 04-23
FILENAME: B012326aD_SI.DGN
SCALE: 1/2" = 1'-0"

BRIDGE NO. A7613 DRAWING NO. 66159

Date Plotted: 7/21/2023

DATE REVISED	DATE FILMED	DATE REVISED	DATE FILMED	FED. ROAD DIST. NO.	STATE	FED. AID PROJ. NO.	SHEET NO.	TOTAL SHEETS
				6	ARK.		371	838
				JOB NO.		012326		
				(1) A7613		SPAN DETAILS		66160

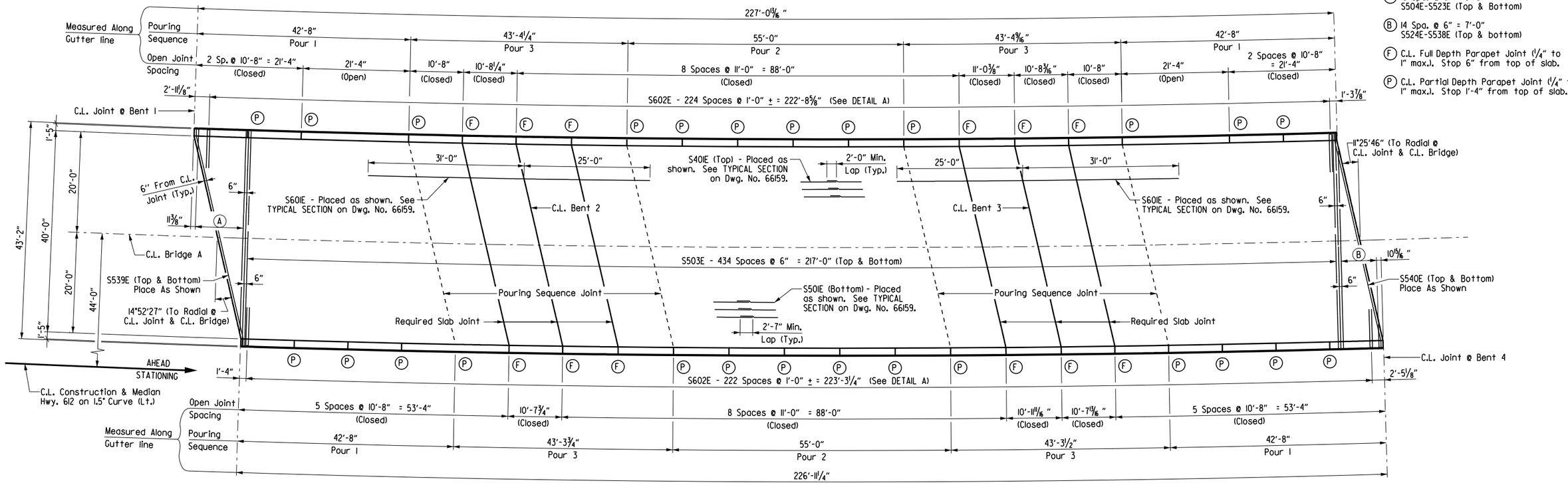

REINFORCING PLAN & POURING SEQUENCE

Scale: 1" = 10'-0"

The 1/2" x 1" Poured Joint Sealer (Type 3 or 4) in slab shall conform to subsection 501.02(h) and 501.05(j). Backer rod filler will not be required. The poured joint sealer shall be paid for as "CLASS S(AE) CONCRETE-BRIDGE". Slab joints shall extend to the outside edge of the deck slab. Slab joints shall be installed before the parapet railing is poured. If slab joints are to be sawed, they shall be sawed as soon as the concrete has sufficiently set to allow sawing of the joint without damage to the slab. Slab joints shall be placed at all Pouring Sequence Construction Joints and Required Slab Joint Locations.

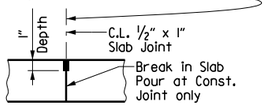

SLAB JOINT DETAIL

No Scale

Note: Pours with the same number may be placed simultaneously or separately. All Pours (1) must be placed before Pour (2) can be placed. Pour (2) must be placed before Pours (3) can be placed. 48 hours shall elapse before the end of a pour and the start of the next pour. 72 hours shall elapse between the end of a pour and the start of an adjacent pour. 72 hours shall elapse between the completion of the entire deck and the pouring of the parapet. Any railing pours made before the entire slab unit has been placed must be approved by the Engineer.

The Contractor must obtain approval from the Engineer for any deviations from the pouring sequence shown.

Concrete in bridge superstructure shall be consolidated for the entire pour before any concrete has taken its initial set. This may require the use of a retarding agent.

Note: Required slab joints and pouring sequence joints shall align with parapet open joint at the gutterline.

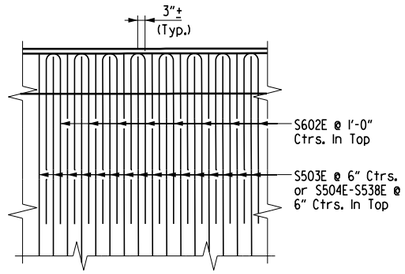

DETAIL A

Scale: 3/8" = 1'-0"

07-27-23

STATE OF ARKANSAS
LICENSED PROFESSIONAL ENGINEER
No. 19188
ERIC S. CHRISTIANSEN

Eric S. Christiansen

BRIDGE ENGINEER

Note: See TYPICAL SECTION on Dwg. No. 66159 for placement of longitudinal reinforcing.

Note: For Bar List, see Dwg. No. 66161.

Note: All transverse reinforcing steel shall be placed on radial lines. Spacing is measured along C.L. Bridge, unless noted otherwise.

All longitudinal lines and longitudinal reinforcing steel shall be placed on curves concentric with C.L. Bridge.

SHEET 2 OF 4
BRIDGE A
DETAILS OF 227'-0" CONTINUOUS W-BEAM UNIT
HWY. 612 OVER HWY. 68

ROUTE 612 SEC. 1

ARKANSAS STATE HIGHWAY COMMISSION

LITTLE ROCK, ARK.

DRAWN BY: FAN DATE: 04-23
CHECKED BY: DHP DATE: 04-23
DESIGNED BY: WKB DATE: 04-23
FILENAME: B012326aD_S2.DGN
SCALE: 1/2" = 1'-0"

BRIDGE NO. A7613 DRAWING NO. 66160

Date Plotted: 7/21/2023

DATE REVISED	DATE FILMED	DATE REVISED	DATE FILMED	FED. ROAD DIST. NO.	STATE	FED. AID PROJ. NO.	SHEET NO.	TOTAL SHEETS
				6	ARK.		372	838
				JOB NO.		012326		
				(1) A7613		SPAN DETAILS		66161

TABLE OF DEAD LOAD DEFLECTIONS (INCHES)

Camber for Dead Load Deflection plus vertical curve +/- 1/4" tolerance. Vertical curve corrections not included. Negative sign (-) indicates upward deflection. Deflections shown are off a chord from centerline bearing to centerline bearing.

Span	Point of Deflection	Stuctural Steel						Structural Steel + Slab						Structural Steel + Slab + Rail					
		Beam 1	Beam 2	Beam 3	Beam 4	Beam 5	Beam 6	Beam 1	Beam 2	Beam 3	Beam 4	Beam 5	Beam 6	Beam 1	Beam 2	Beam 3	Beam 4	Beam 5	Beam 6
Span 1	0	0	0	0	0	0	0	0	0	0	0	0	0	0	0	0	0	0	0
	0.1	0.022	0.029	0.032	0.032	0.028	0.021	0.085	0.106	0.114	0.113	0.103	0.081	0.037	0.038	0.038	0.038	0.037	0.036
	0.2	0.038	0.05	0.056	0.055	0.049	0.036	0.144	0.182	0.197	0.196	0.177	0.141	0.065	0.066	0.067	0.066	0.064	0.063
	0.3	0.045	0.062	0.069	0.068	0.060	0.043	0.172	0.22	0.24	0.238	0.214	0.163	0.079	0.081	0.082	0.080	0.078	0.075
	0.4	0.042	0.059	0.067	0.066	0.058	0.039	0.156	0.205	0.226	0.224	0.199	0.145	0.075	0.077	0.078	0.077	0.075	0.071
	0.5	0.03	0.045	0.051	0.051	0.043	0.026	0.103	0.147	0.165	0.163	0.140	0.092	0.057	0.058	0.058	0.058	0.055	0.052
	0.6	0.012	0.023	0.028	0.027	0.022	0.008	0.031	0.064	0.076	0.075	0.058	0.020	0.030	0.030	0.029	0.028	0.027	0.024
	0.7	-0.006	0.002	0.004	0.004	0.001	-0.009	-0.035	-0.015	-0.009	-0.1	-0.200	-0.049	0.001	0.001	0.000	0.000	0.000	-0.004
	0.8	-0.019	-0.017	-0.016	-0.016	-0.017	-0.020	-0.086	-0.079	-0.078	-0.79	-0.082	-0.091	-0.021	-0.023	-0.023	-0.023	-0.023	-0.023
	0.9	-0.02	-0.02	-0.021	-0.021	-0.021	-0.021	-0.084	-0.085	-0.087	-0.087	-0.087	-0.088	-0.027	-0.027	-0.028	-0.028	-0.028	-0.028
	0	0	0	0	0	0	0	0	0	0	0	0	0	0	0	0	0	0	0
Span 2	0.1	0.084	0.093	0.097	0.097	0.093	0.085	0.335	0.362	0.376	0.375	0.364	0.342	0.127	0.128	0.128	0.128	0.128	0.129
	0.2	0.201	0.223	0.234	0.234	0.223	0.203	0.797	0.864	0.901	0.903	0.871	0.813	0.301	0.305	0.305	0.305	0.305	0.306
	0.3	0.319	0.355	0.374	0.374	0.355	0.322	1.266	1.376	1.437	1.44	1.386	1.290	0.477	0.483	0.485	0.485	0.484	0.484
	0.4	0.414	0.461	0.487	0.487	0.462	0.418	1.646	1.792	1.873	1.875	1.803	1.676	0.617	0.625	0.630	0.630	0.628	0.627
	0.5	0.447	0.498	0.526	0.527	0.499	0.451	1.778	1.935	2.024	2.027	1.948	1.810	0.666	0.675	0.680	0.681	0.679	0.676
	0.6	0.414	0.461	0.487	0.487	0.462	0.417	1.646	1.791	1.872	1.877	1.804	1.676	0.617	0.625	0.629	0.630	0.629	0.625
	0.7	0.326	0.362	0.382	0.382	0.363	0.329	1.294	1.407	1.47	1.472	1.417	1.317	0.487	0.492	0.495	0.496	0.496	0.495
	0.8	0.208	0.23	0.243	0.243	0.231	0.210	0.825	0.895	0.933	0.935	0.902	0.840	0.312	0.313	0.316	0.317	0.317	0.316
	0.9	0.084	0.092	0.096	0.097	0.093	0.085	0.334	0.359	0.373	0.376	0.364	0.341	0.127	0.126	0.126	0.128	0.129	0.129
	0	0	0	0	0	0	0	0	0	0	0	0	0	0	0	0	0	0	0
Span 3	0.1	-0.02	-0.02	-0.021	-0.021	-0.020	-0.021	-0.083	-0.084	-0.087	-0.087	-0.086	-0.087	-0.027	-0.027	-0.028	-0.028	-0.028	-0.028
	0.2	-0.021	-0.018	-0.018	-0.018	-0.019	-0.021	-0.09	-0.084	-0.084	-0.085	-0.088	-0.092	-0.024	-0.025	-0.026	-0.026	-0.027	-0.024
	0.3	-0.006	0.001	0.004	0.003	0.000	-0.009	-0.037	-0.017	-0.011	-0.012	-0.022	-0.049	0.000	0.000	0.000	-0.001	-0.002	-0.004
	0.4	0.012	0.024	0.028	0.028	0.022	0.009	0.033	0.066	0.079	0.077	0.060	0.022	0.030	0.031	0.030	0.029	0.027	0.026
	0.5	0.03	0.046	0.052	0.052	0.044	0.027	0.106	0.15	0.168	0.165	0.143	0.094	0.057	0.060	0.059	0.059	0.056	0.053
	0.6	0.043	0.06	0.067	0.067	0.058	0.040	0.159	0.209	0.229	0.227	0.202	0.148	0.076	0.078	0.078	0.078	0.075	0.072
	0.7	0.046	0.062	0.069	0.069	0.061	0.043	0.174	0.222	0.242	0.239	0.215	0.166	0.080	0.081	0.082	0.081	0.080	0.076
	0.8	0.039	0.052	0.057	0.057	0.050	0.037	0.149	0.188	0.203	0.201	0.182	0.143	0.067	0.068	0.068	0.068	0.066	0.064
	0.9	0.022	0.029	0.032	0.032	0.028	0.021	0.086	0.107	0.115	0.115	0.104	0.082	0.037	0.038	0.038	0.038	0.037	0.036
	0	0	0	0	0	0	0	0	0	0	0	0	0	0	0	0	0	0	0

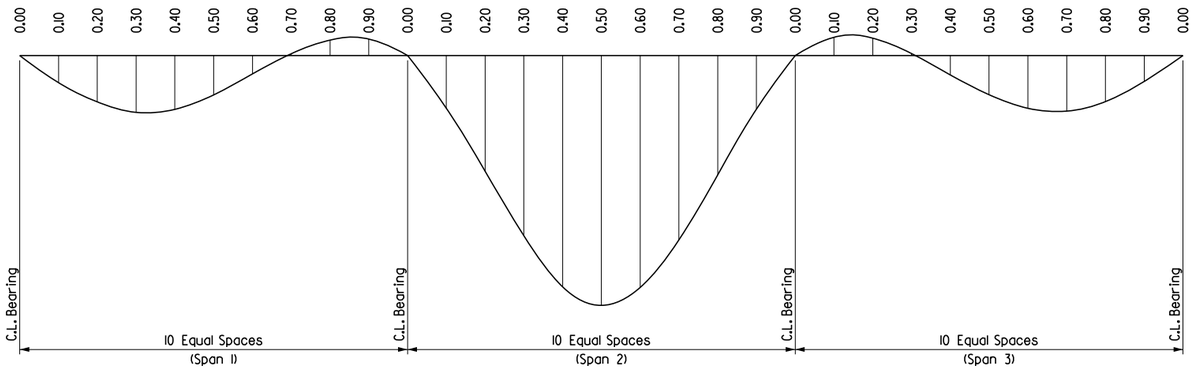

DEAD LOAD DEFLECTION DIAGRAM

Not to Scale

BRIDGE A - SUPERSTRUCTURE BAR LIST

Mark	Number Required	Length	Pin Dia.	Bending Diagrams (Dimensions are out to out of bars.)
S401E	258	39'-6"	Str.	
S501E	256	58'-7"	Str.	
--	--	--	--	
S503E	870	42'-10"	Str.	
S504E to S523E	2 Each	40'-1" to 4'-3"	Str.	
S524E to S538E	2 Each	39'-7" to 5'-0"	Str.	
S539E	2	44'-10"	3 3/4"	
S540E	2	44'-3"	3 3/4"	
S601E	86	56'-0"	Str.	
S602E	448	15'-11"	5 1/8"	
R400E	16	6'-3"	3"	
R401E	849	7'-6"	3"	
R402E	104	5'-6"	Str.	
R403E	849	3'-8"	6"	
R404E	4	3'-8"	8 1/2"	
R405E	32	15'-8"	Str.	
R406E	8	15'-8"	Str.	
R407E	4	6'-8"	3"	
R408E	4	5'-1"	3"	
R409E	10	10'-3"	Str.	
R410E	150	10'-4"	Str.	
R411E	180	10'-8"	Str.	
R412E	20	21'-0"	Str.	

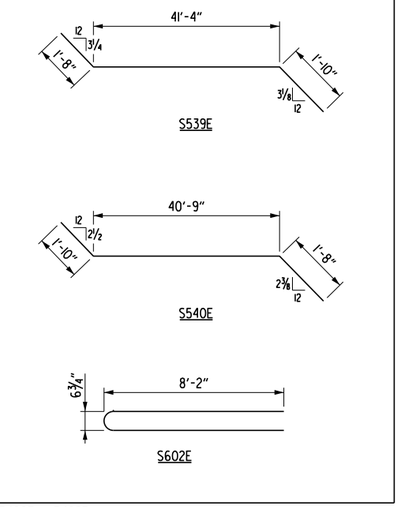

Note: See Dwg. No. 66179 For Bar Diagrams R400E - R408E.

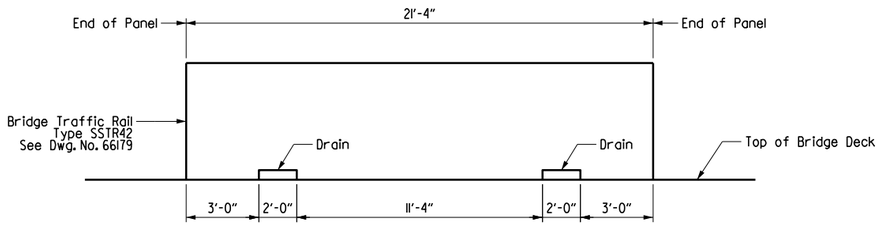

ELEVATION OF OPEN BRIDGE RAIL

No Scale

Table of Traffic Rail Variable

Closed Rail Panels			Open Rail Panels					
Panel Length	A	R4XXE	Panel Length	B	C	D	E	R4XXE
10'-7 3/16"	21	R409E	21'-4"	8	2.67	23	12	R412E
10'-7 3/4"	21	R410E						
10'-8"	21	R410E						
10'-8 3/16"	21	R410E						
10'-8 1/4"	21	R410E						
10'-11 11/16"	21	R411E						
11'-0"	22	R411E						
11'-0 3/8"	22	R411E						

07-27-23
STATE OF ARKANSAS
LICENSED PROFESSIONAL ENGINEER
No. 19188
ERIC S. CHRISTIANSEN
Eric S. Christiansen
BRIDGE ENGINEER

SHEET 3 OF 4
BRIDGE A
DETAILS OF 227'-0"
CONTINUOUS W-BEAM UNIT
HWY. 612 OVER HWY. 68

ROUTE 612 SEC. 1

ARKANSAS STATE HIGHWAY COMMISSION

LITTLE ROCK, ARK.

DRAWN BY: FAN DATE: 04-23
CHECKED BY: DHP DATE: 04-23
DESIGNED BY: WKB DATE: 04-23
FILENAME: B012326aD_S3.DGN
SCALE: 1/2" = 1'-0"

BRIDGE NO. A7613 DRAWING NO. 66161

Date Plotted: 7/21/2023

DATE REVISED	DATE FILMED	DATE REVISED	DATE FILMED	FED. ROAD DIST. NO.	STATE	FED. AID PROJ. NO.	SHEET NO.	TOTAL SHEETS
				6	ARK.		373	838
				JOB NO.		012326		
				1	A7613	SPAN DETAILS		66162

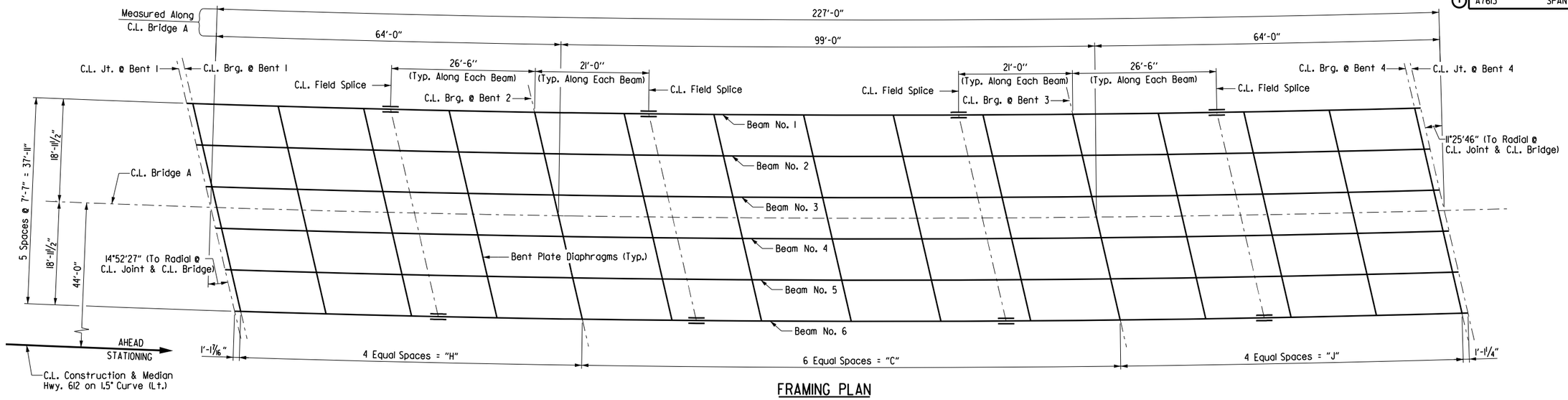

FRAMING PLAN

Scale: 1" = 10'-0"

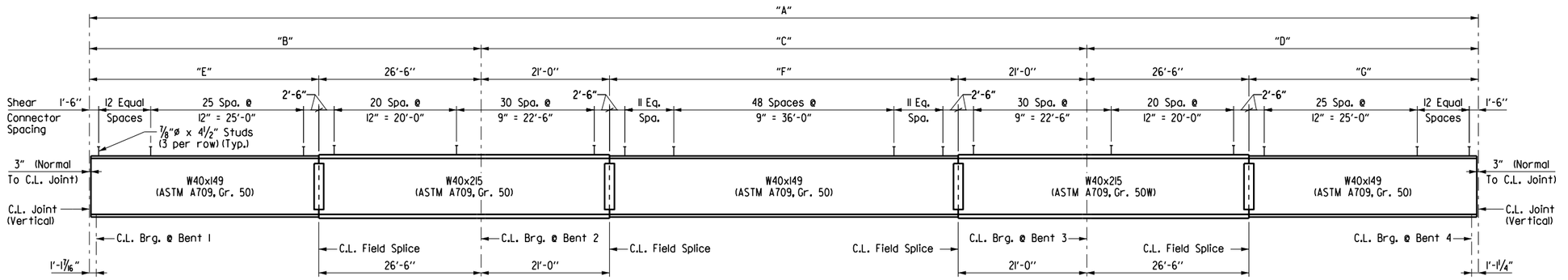

BEAM ELEVATION

Scale: 1" = 10'-0"

TABLE OF BEAM VARIABLES

Beam No.	1	2	3	4	5	6
"A"	227'-0 3/4"	227'-0 1/2"	227'-0 1/8"	226'-11 13/16"	226'-11 1/2"	226'-11 1/4"
"B"	64'-0 1/4"	64'-0 1/8"	64'-0"	63'-11 15/16"	63'-11 7/8"	63'-11 3/4"
"C"	99'-0 5/16"	99'-0 3/16"	99'-0 1/16"	98'-11 5/16"	98'-11 3/4"	98'-11 11/16"
"D"	64'-0 3/16"	64'-0 1/8"	64'-0"	64'-0"	63'-11 7/8"	63'-11 15/16"
"E"	37'-6 1/4"	37'-6 1/8"	37'-6"	37'-5 15/16"	37'-5 7/8"	37'-5 3/4"
"F"	57'-0 5/16"	57'-0 3/16"	57'-0 1/16"	56'-11 5/16"	56'-11 3/4"	56'-11 11/16"
"G"	37'-6 3/16"	37'-6 1/8"	37'-6"	37'-6"	37'-5 7/8"	37'-5 15/16"
"H"	62'-10 15/16"	62'-10 11/16"	62'-10 9/16"	62'-10 1/2"	62'-10 7/16"	62'-10 5/16"
"J"	62'-10 5/16"	62'-10 7/8"	62'-10 3/4"	62'-10 3/4"	62'-10 5/8"	62'-10 9/16"
"K"	1 9/16"	1 9/16"	1 9/16"	1 9/16"	1 9/16"	1 9/16"
"L"	1 3/16"	1 3/16"	1 3/16"	1 3/16"	1 3/16"	1 3/16"

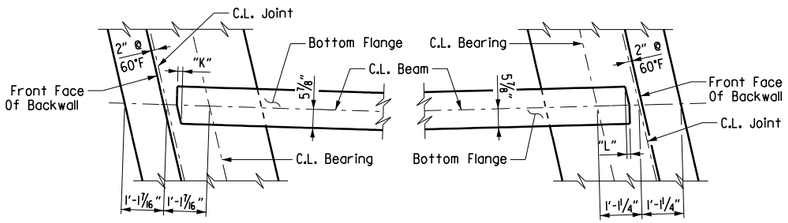

BEARING PLAN @ END BENT 1

Scale: ½" = 1'-0"

BEARING PLAN @ END BENT 4

Scale: ½" = 1'-0"

NOTES:

All longitudinal dimensions are taken along C.L. Beam, U.N.O.

Beams are curved and concectric to C.L. Bridge A.

For FIELD SPLICE DETAILS, see Dwg. No. 66163.

For BENT PLATE DIAPHRAGM DETAILS, see Dwg. No. 66163.

07.27.23

STATE OF ARKANSAS
LICENSED PROFESSIONAL ENGINEER
No. 19188
ERIC S. CHRISTIANSEN

Eric S. Christiansen

BRIDGE ENGINEER

SHEET 4 OF 4
BRIDGE A
DETAILS OF 227'-0" CONTINUOUS W-BEAM UNIT
HWY. 612 OVER HWY. 68

ROUTE 612 SEC. 1

ARKANSAS STATE HIGHWAY COMMISSION

LITTLE ROCK, ARK.

DRAWN BY: FAN DATE: 04-23
CHECKED BY: DHP DATE: 04-23
DESIGNED BY: WKB DATE: 04-23

FILENAME: B012326aD_S4.DGN
SCALE: ½" = 1'-0"

BRIDGE NO. A7613

DRAWING NO. 66162

Date Plotted: 7/21/2023

DATE REVISED	DATE FILMED	DATE REVISED	DATE FILMED	FED. ROAD DIST. NO.	STATE	FED. AID PROJ. NO.	SHEET NO.	TOTAL SHEETS
				6	ARK.		374	838
				JOB NO.		012326		
				(1) A&B7613		SPAN DETAILS		66163

(1) If permanent steel bridge deck forms are used, the fabricator shall clip the plate as necessary to accomodate the deck form support.

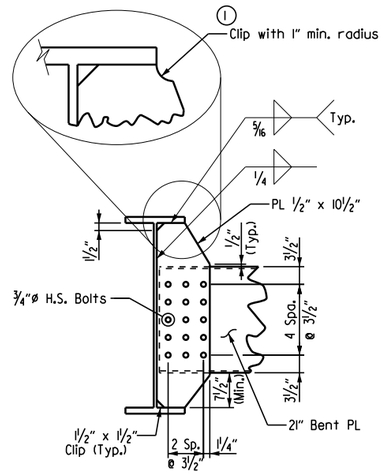

DIAPHRAGM CONNECTION A

Scale: 1½" = 1'-0"
(Typ. Exterior Beams)
(Unless Noted Otherwise)

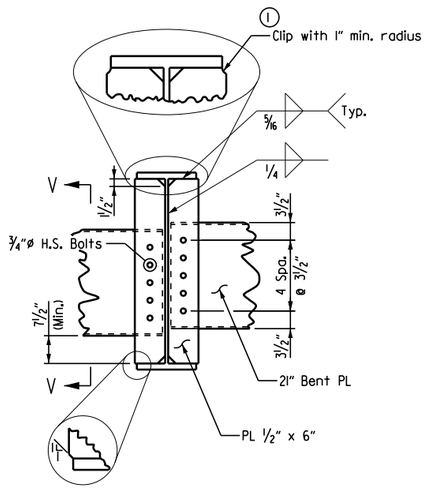

DIAPHRAGM CONNECTION B

Scale: 1½" = 1'-0"
(Typ. @ Interior Beams @ Diaphragms)
(Unless Noted Otherwise)

Note: Stop weld ¼" to 1" from end of clip (Typ.)

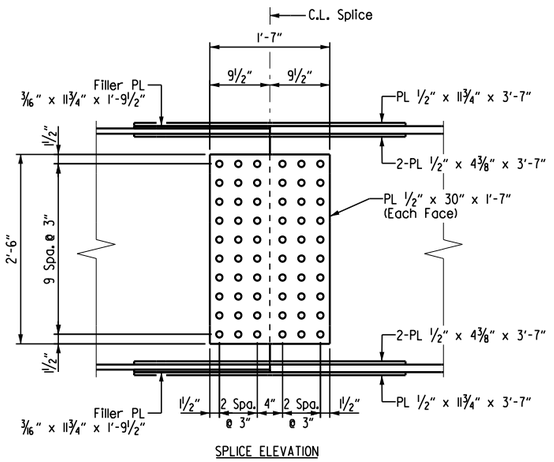

SPLICE ELEVATION

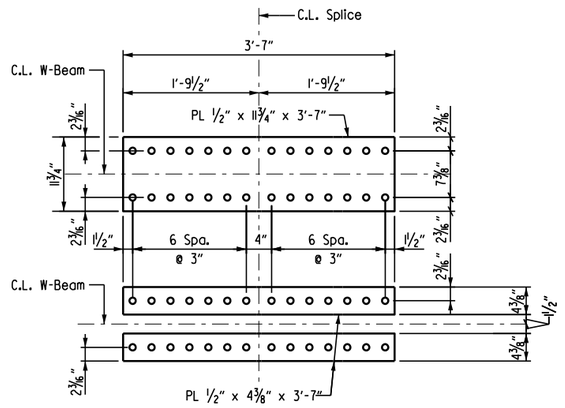

TOP AND BOTTOM FLANGE SPLICE

FIELD SPLICE DETAILS

Scale: 1" = 1'-0"

NOTE: All field splice bolts shall be ⅞" ø H.S. bolts. All field splice plates shall be ASTM A709, Gr. 50 steel.

Bolted field splices shown may be eliminated or shop welded splices may be substituted with approval of the Engineer.

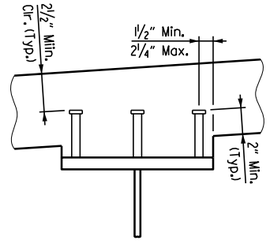

Stud Shear Connectors shown shall be ⅞"ø x 4½" long, granular flux filled, solid fluxed or equal, and automatically end welded to the beam flange in accordance with the recommendations of the Manufacturer. ¾"ø studs may be used in place of the ⅞"ø studs shown, at the ratio of 1.361-¾"ø studs in place of one ⅞"ø stud. ⅞"ø studs will be used as basis for measurment of structural steel in shear connectors. Maximum stud spacing = 24".

SHEAR CONNECTOR DETAIL

No Scale

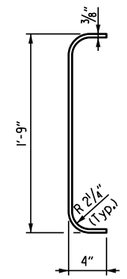

Typ. cross-section for all 21" bent plate diaphragms.

SECTION V-V

Scale: 1½" = 1'-0"

07.27.23

STATE OF ARKANSAS
LICENSED PROFESSIONAL ENGINEER
No. 19188
ERIC S. CHRISTIANSEN

Eric S. Christiansen

BRIDGE ENGINEER

COMMON DETAILS OF CONTINUOUS COMPOSITE W-BEAM UNITS HWY. 612 OVER HWY. 68

ROUTE 612 SEC. 1

ARKANSAS STATE HIGHWAY COMMISSION

LITTLE ROCK, ARK.

DRAWN BY: FAN DATE: 04-23
CHECKED BY: DHP DATE: 04-23
DESIGNED BY: WKB DATE: 04-23
FILENAME: B012326md_SI.DGN
SCALE: As Shown

BRIDGE NO. A&B7613 DRAWING NO. 66163

Date Plotted: 7/27/2023

DATE REVISED	DATE FILMED	DATE REVISED	DATE FILMED	FED. ROAD DIST. NO.	STATE	FED. AID PROJ. NO.	SHEET NO.	TOTAL SHEETS
				6	ARK.		375	838
				JOB NO.		012326		
				(1) B7613		LAYOUT		66164

For R/W Data, See Roadway Plans

Use Type F Approach Gutters and Type Special Approach Slabs (width = 36'-0") at both ends of bridge. See Std. Dwg. No. 55030F and 66334A, respectively.

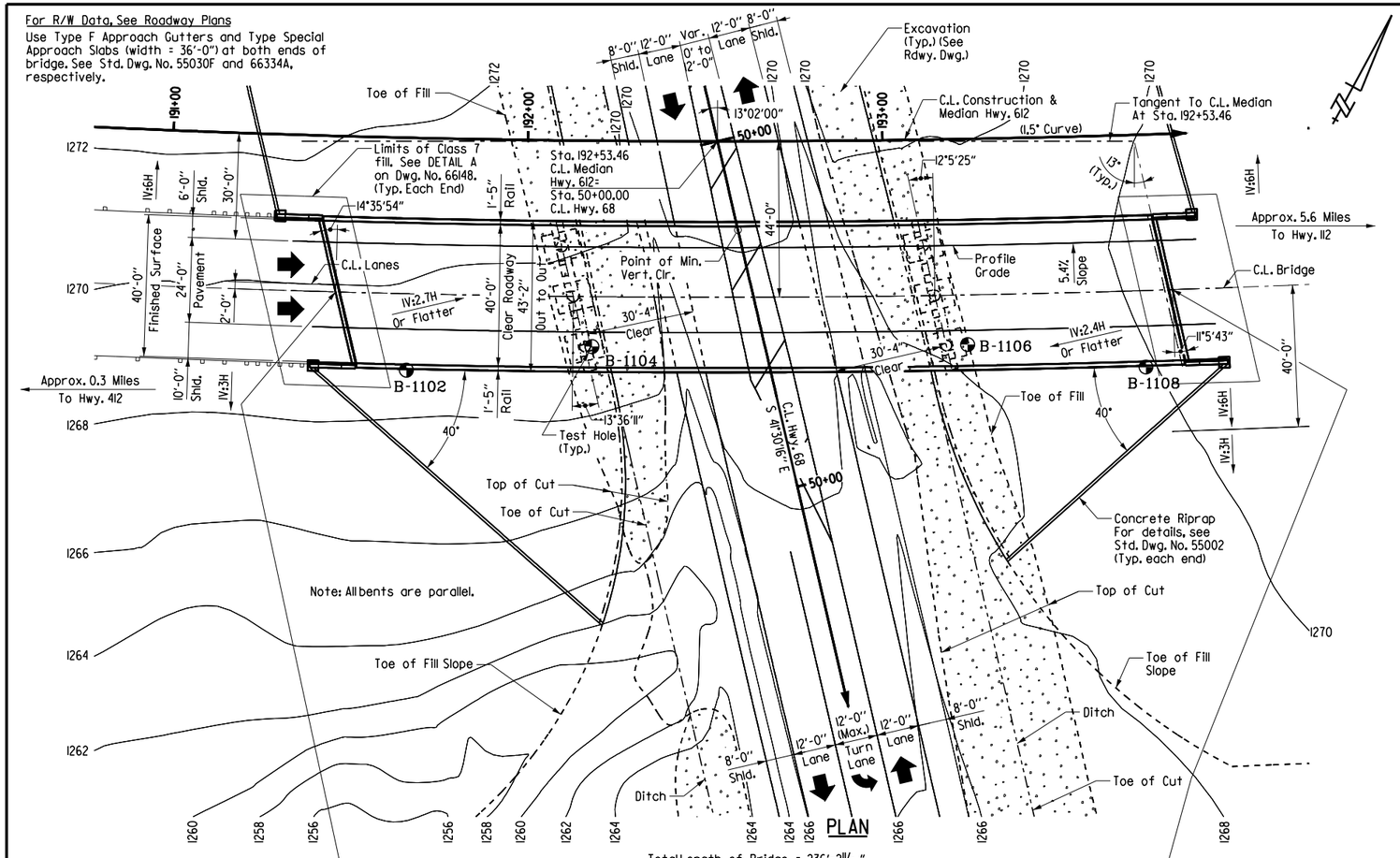

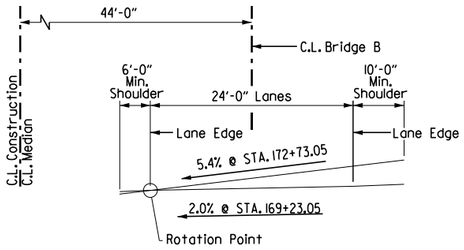

SUPERELEVATION SKETCH

No Scale
(Looking Ahead)

Begin Superelevation Sta. 169+23.05
Max. Superelevation Sta. 172+73.05 (0.054'/')
Max. Superelevation Sta. 219+48.54 (0.054'/')
See Roadway Plans for superelevation beyond limits shown.

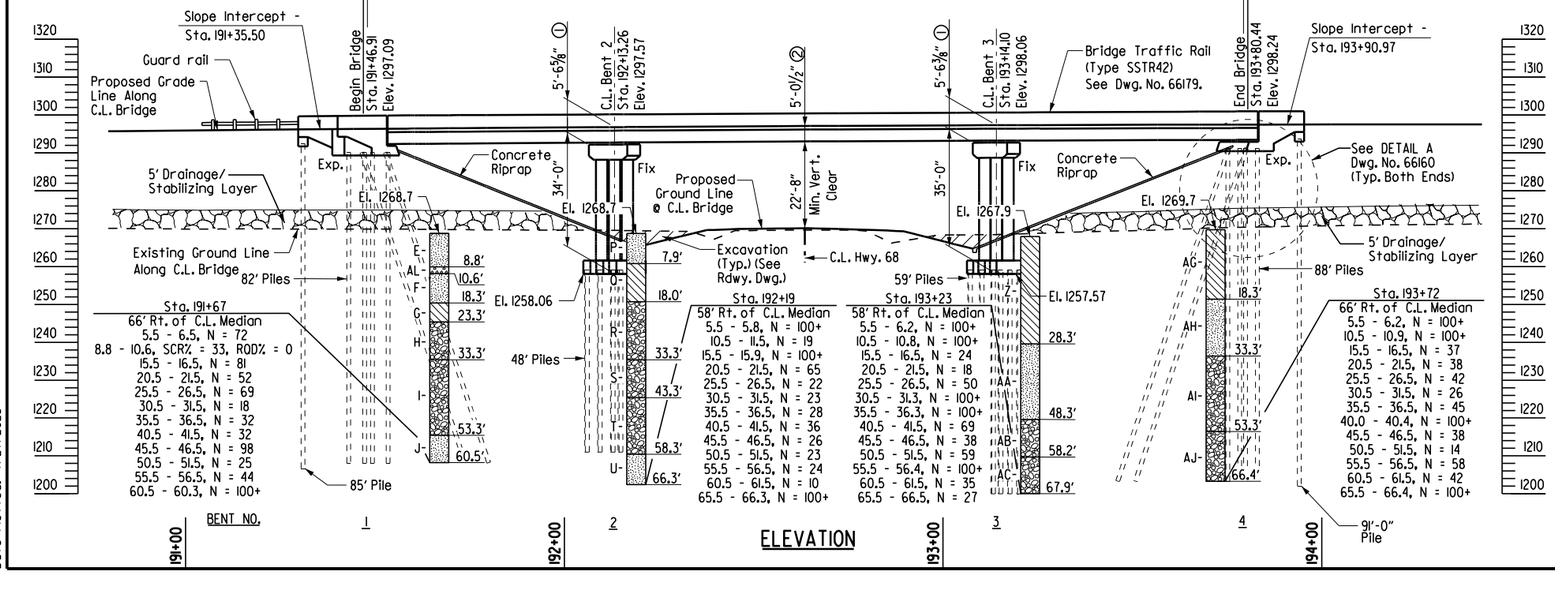

For GENERAL NOTES & SOIL BORING LEGEND, See Dwg. No. 66148.

Stationing is along C.L. Median. Stations shown in elevation are determined by a radial projection from C.L. Bridge to C.L. Median. For more information refer to STAKING DIAGRAM on Dwg. No. 66148.

Elevations shown are actual top of deck elevations at C.L. Bridge. Any vertical dimension to C.L. Deck is based on actual top of deck elevation at C.L. Bridge.

(1) C.L. Deck at C.L. Bent to low side Top of Cap.

(2) C.L. Deck to Low Steel.

07-27-23

STATE OF ARKANSAS
LICENSED PROFESSIONAL ENGINEER
No. 19188
ERIC S. CHRISTIANSEN

Eric S. Christiansen

BRIDGE ENGINEER

LAYOUT OF BRIDGE B
HWY. 612 OVER HWY. 68
HWY. 412 - HWY. 112 (SPRINGDALE BYPASS) (F)
WASHINGTON COUNTY

ROUTE 612 SEC. 1

ARKANSAS STATE HIGHWAY COMMISSION

LITTLE ROCK, ARK.

DRAWN BY: FAN DATE: 04-23
CHECKED BY: DHP DATE: 04-23
DESIGNED BY: WKB DATE: 04-23

FILENAME: B012326bD_LI.dgn
SCALE: 1" = 20'-0"

BRIDGE NO. B7613 DRAWING NO. 66164

Date Plotted: 7/21/2023

NOTE: Class 2 Protective Surface Treatment shall be applied to the roadway face and top of the end bent rail and the top of the backwall.

DATE REVISED	DATE FILMED	DATE REVISED	DATE FILMED	FED. ROAD DIST. NO.	STATE	FED. AID PROJ. NO.	SHEET NO.	TOTAL SHEETS
				6	ARK.		376	838
				JOB NO.		012326		
				(1) B7613		END BENT 1 DETAILS		66165

For GENERAL NOTES FOR SUBSTRUCTURE, see Dwg. No. 66149 and Std. Dwg. No. 55006.

For additional information, see LAYOUT on Dwg. No. 66164.

For VIEW A-A, VIEW B-B, VIEW C-C, and VIEW D-D, see Dwg. No. 66167.

For DETAIL Z, see Dwg. No. 66168.

For Details of Wing and Rail, see Dwg. No. 66167, 66168, & 66179.

(1) Dimensions shown are to C.L. Joint

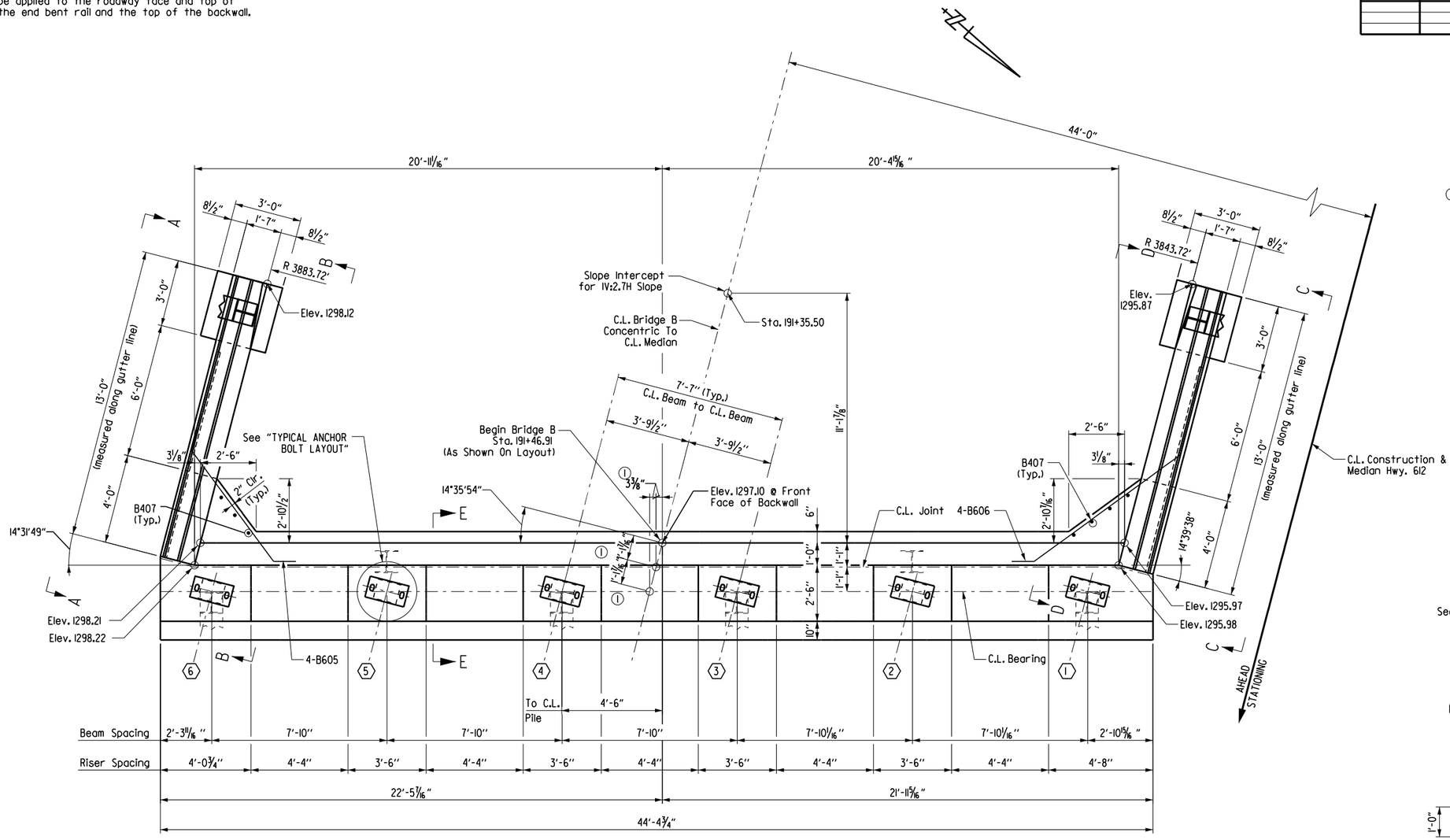

PLAN

Scale: 3/8" = 1'-0"

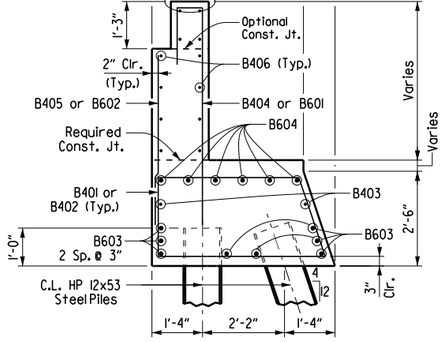

SECTION E-E

1/2" = 1'-0"

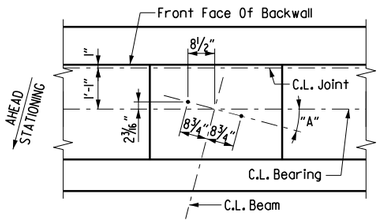

BEAM	"A"	"B"	"C"
1	14°38'18"	2 3/16"	8 7/16"
2	14°36'32"	2 3/16"	8 7/16"
3	14°34'47"	2 3/16"	8 7/16"
4	14°33'01"	2 3/16"	8 1/2"
5	14°31'17"	2 3/16"	8 1/2"
6	14°29'32"	2 3/16"	8 1/2"

Note: For Details Of Elastomeric Bearings, See Dwg. No. 66180.

TYPICAL ANCHOR BOLT LAYOUT

1/2" = 1'-0"

07-27-23

STATE OF ARKANSAS
LICENSED PROFESSIONAL ENGINEER
No. 19188
ERIC S. CHRISTIANSEN

Eric S. Christiansen

BRIDGE ENGINEER

SHEET 1 OF 3
BRIDGE B
DETAILS OF END BENT 1
HWY. 612 OVER HWY. 68

ROUTE 612 SEC. 1

ARKANSAS STATE HIGHWAY COMMISSION

LITTLE ROCK, ARK.

DRAWN BY: FAN DATE: 04-23
CHECKED BY: DHP DATE: 04-23
DESIGNED BY: WKB DATE: 04-23
FILENAME: B012326bD_BII.DGN
SCALE: AS SHOWN

BRIDGE NO. B7613 DRAWING NO. 66165

Date Plotted: 7/21/2023

NOTE: Class 2 Protective Surface Treatment shall be applied to the roadway face and top of the end bent rail and the top of the backwall.

(A) B601 - 6 Spa. @ 6" = 3'-0" (Fr. Fa.)
B602 - 6 Spa. @ 6" = 3'-0" (Bk. Fa.)

(B) B601 - 5 Spa. @ 6" = 2'-6" (Fr. Fa.)
B602 - 5 Spa. @ 6" = 2'-6" (Bk. Fa.)

DATE REVISED	DATE FILMED	DATE REVISED	DATE FILMED	FED. ROAD DIST. NO.	STATE	FED. AID PROJ. NO.	SHEET NO.	TOTAL SHEETS
				6	ARK.		377	838
				JOB NO.		012326		
				(1) B7613		END BENT 1 DETAILS		66166

For GENERAL NOTES FOR SUBSTRUCTURE, see Dwg. No. 66149 and Std. Dwg. No. 55006.

For additional information, see LAYOUT on Dwg. No. 66164.

For Details of Wing and Rail, see Dwg. No. 66167, 66168, & 66179.

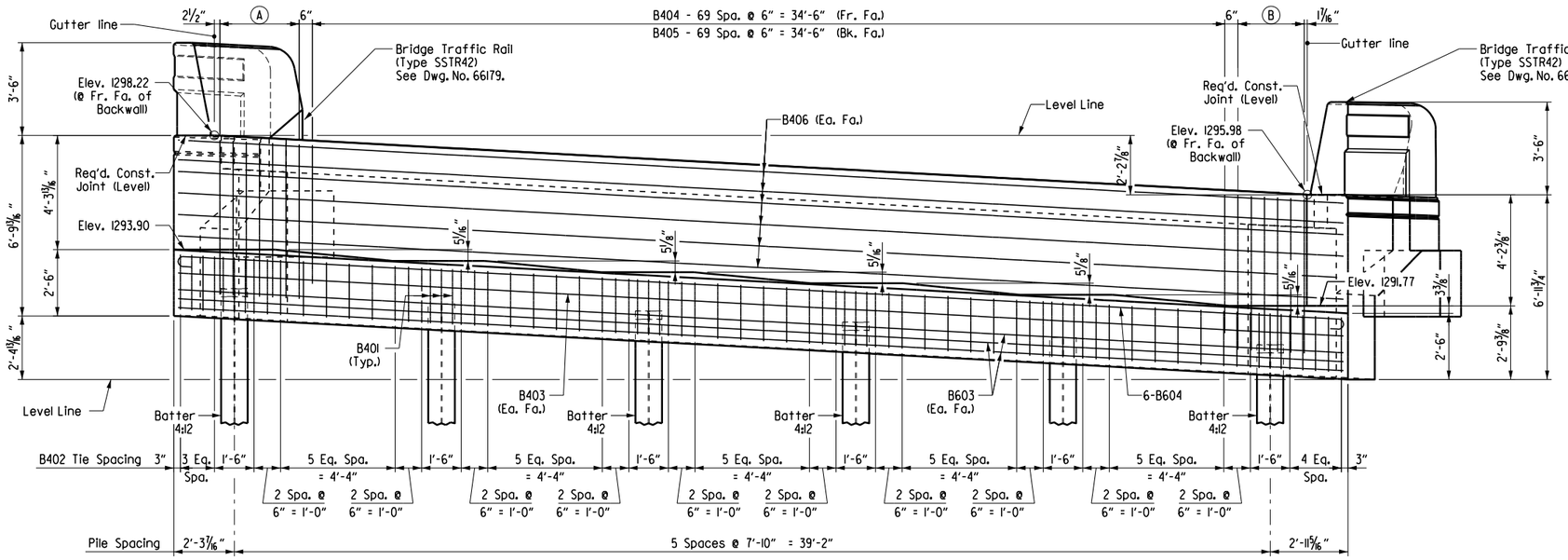

ELEVATION
(Looking Back)
Scale: ⅜" = 1'-0"

BRIDGE B - END BENT 1 BAR LIST

Mark	No. Req'd	Length	Pin Dia.
B401	18	7'-10"	2"
B402	59	12'-9"	2"
B403	2	44'-1"	Str.
B404	70	7'-3"	2"
B405	70	4'-0"	Str.
B406	12	43'-10"	3"
B407	7	5'-3"	Str.
B601	13	7'-8"	4½"
B602	13	4'-7"	Str.
B603	8	44'-1"	Str.
B604	6	45'-5"	4½"
B605	4	7'-11"	4½"
B606	4	9'-8"	4½"
W401	4	6'-8"	2"
W402	4	9'-1"	Str.
W403 to W408	1 Each	3'-4" to 2'-0"	Str.
W409 to W414	1 Each	3'-4" to 2'-0"	Str.
W415	3	9'-3"	2"
W416	4	6'-10"	2"
W417	4	9'-3"	Str.
W418 to W423	1 Each	3'-8" to 2'-0"	Str.

Mark	No. Req'd	Length	Pin Dia.
W424 to W429	1 Each	3'-8" to 2'-0"	Str.
W430	3	10'-9"	2"
W431E	52	4'-7"	6"
W601	24	4'-0"	4½"
W602	12	2'-8"	4½"
W701	12	12'-8"	Str.
W702	2	6'-3"	Str.
W703	4	3'-8"	Str.
W704	2	11'-6"	5¼"
W705	2	7'-0"	Str.
W706	2	11'-7"	5¼"
R401E	48	7'-6"	3"
R402E	8	5'-6"	Str.
R404E	4	3'-8"	8½"
R405E	16	12'-8"	Str.
R406E	4	12'-5"	Str.
R407E	2	6'-8"	3"
R408E	2	5'-1"	3"

BENDING DIAGRAMS
(Dimensions are out to out of bars)

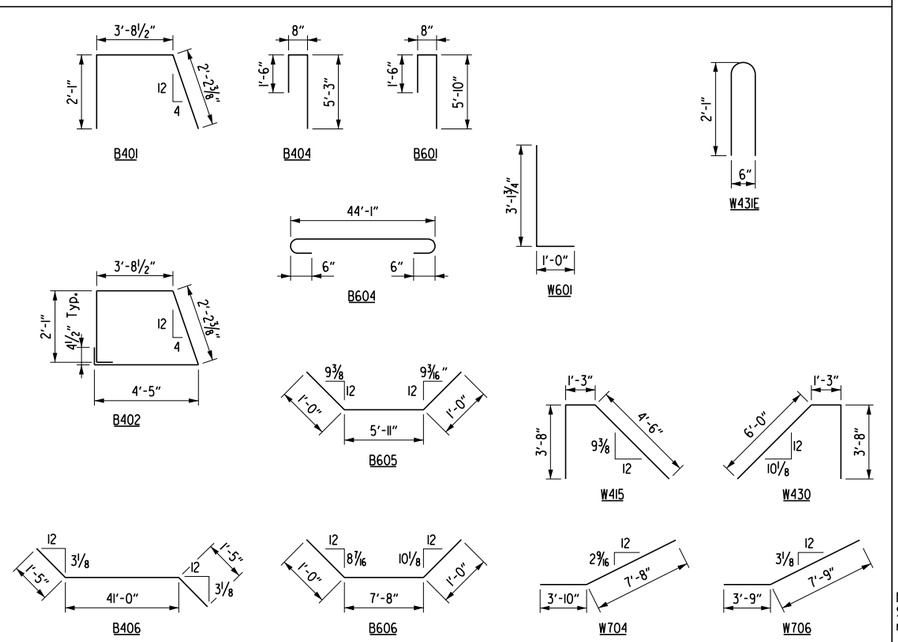

Note:
See Dwg. No. 66179 for Traffic Rail reinforcing bar bending diagrams.

07.27.23
STATE OF ARKANSAS
LICENSED PROFESSIONAL ENGINEER
No. 19188
ERIC S. CHRISTIANSEN
Eric S. Christiansen
BRIDGE ENGINEER

SHEET 2 OF 3
BRIDGE B
DETAILS OF END BENT 1
HWY. 612 OVER HWY. 68

ROUTE 612 SEC. 1

ARKANSAS STATE HIGHWAY COMMISSION
LITTLE ROCK, ARK.

DRAWN BY: FAN DATE: 04-23
CHECKED BY: DHP DATE: 04-23
DESIGNED BY: WKB DATE: 04-23
FILENAME: B012326bD_B12.DGN
SCALE: ⅜" = 1'-0"

BRIDGE NO. B7613
DRAWING NO. 66166

Date Plotted: 7/27/2023

DATE REVISED	DATE FILMED	DATE REVISED	DATE FILMED	FED. ROAD DIST. NO.	STATE	FED. AID PROJ. NO.	SHEET NO.	TOTAL SHEETS
				6	ARK.		378	838
				JOB NO.		012326		
				①	B7613	END BENT 1 DETAILS		66167

For GENERAL NOTES FOR SUBSTRUCTURE, see Dwg. No. 66149.

For additional information, see LAYOUT on Dwg. No. 66164.

For SECTION T-T, SECTION U-U, VIEW V-V, VIEW W-W, SECTION X-X, and SECTION Y-Y, see Dwg. No. 66168.

① 5 - 1"ø formed holes for guard rail connection. See Std. Dwg. No. GR-10 for bolt spacing and additional connection details.

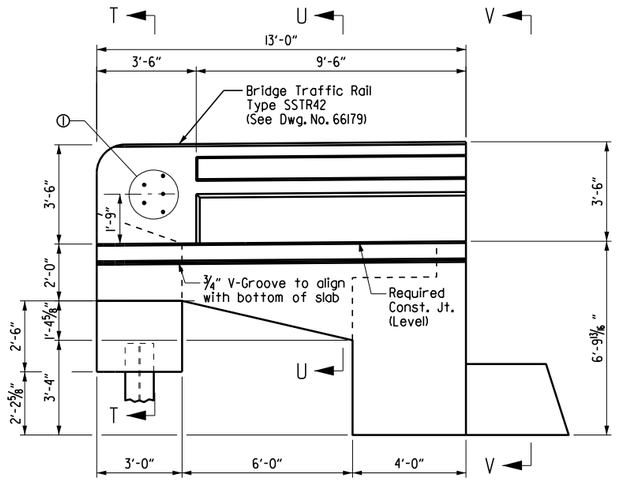

VIEW A-A

Scale: ⅜" = 1'-0"

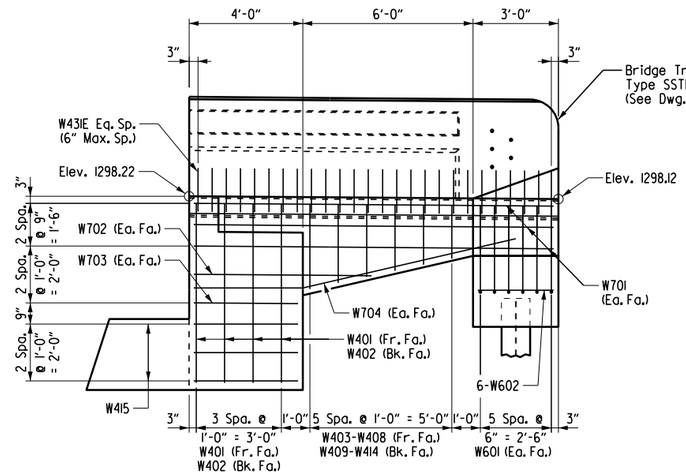

VIEW B-B

Scale: ⅜" = 1'-0"

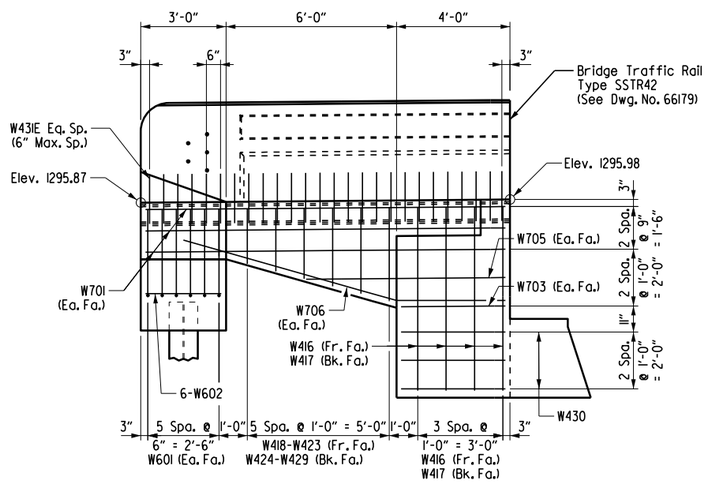

VIEW D-D

Scale: ⅜" = 1'-0"

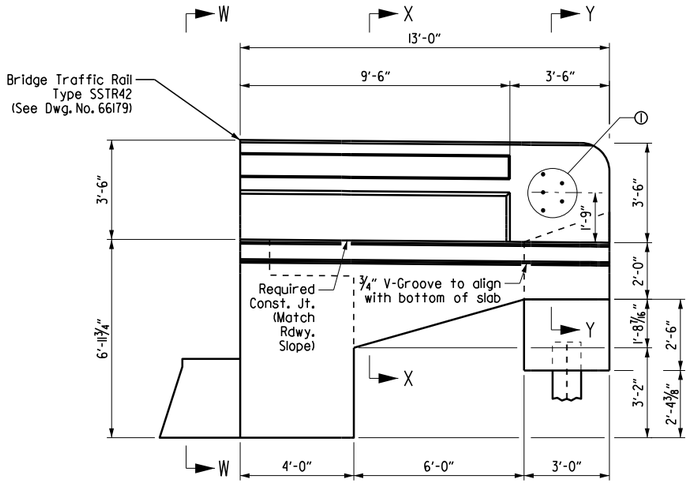

VIEW C-C

Scale: ⅜" = 1'-0"

07.27.23

STATE OF ARKANSAS
LICENSED PROFESSIONAL ENGINEER
No. 19188
ERIC S. CHRISTIANSEN

Eric S. Christiansen

BRIDGE ENGINEER

SHEET 3 OF 3
BRIDGE B
DETAILS OF END BENT 1
HWY. 612 OVER HWY. 68

ROUTE 612 SEC. 1

ARKANSAS STATE HIGHWAY COMMISSION

LITTLE ROCK, ARK.

DRAWN BY: FAN DATE: 04-23 FILENAME: B012326bD_B13.DGN
CHECKED BY: DHP DATE: 04-23 SCALE: ⅜" = 1'-0"
DESIGNED BY: WKB DATE: 04-23

BRIDGE NO. B7613 DRAWING NO. 66167

Date Plotted: 7/27/2023

DATE REVISED	DATE FILMED	DATE REVISED	DATE FILMED	FED. ROAD DIST. NO.	STATE	FED. AID PROJ. NO.	SHEET NO.	TOTAL SHEETS
				6	ARK.		379	838
				JOB NO.		012326		
				(1)	B7613	COMMON END BENT DETAILS		66168

* 1"ø formed holes required on all bents. See Dwg. No. 66164 for location of guard rail.

For GENERAL NOTES FOR SUBSTRUCTURE, see Dwg. No. 66148 and Std. Dwg. No. 55006.

For additional information, see LAYOUT on Dwg. No. 66164.

For Details of Wing and Rail, see Dwg. No. 66173 & 66179.

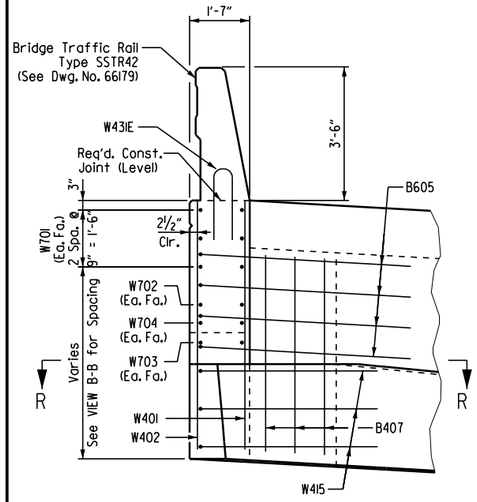

VIEW V-V

Scale: ½" = 1'-0"

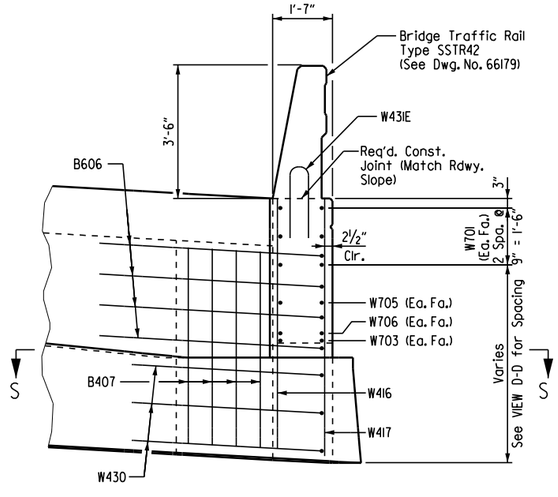

VIEW W-W

Scale: ½" = 1'-0"

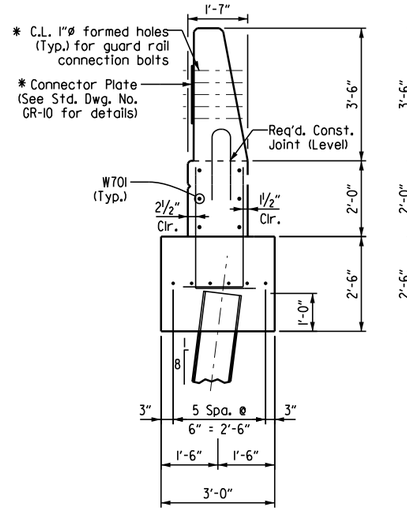

SECTION T-T

Scale: ½" = 1'-0"

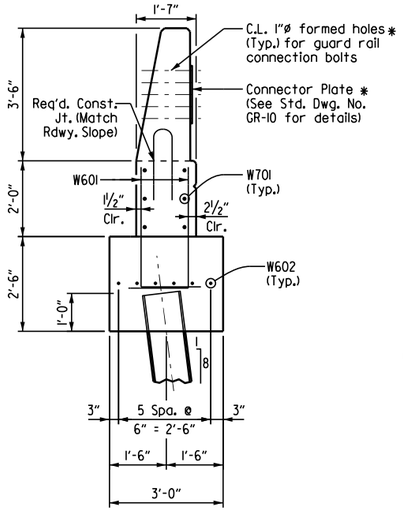

SECTION Y-Y

Scale: ½" = 1'-0"

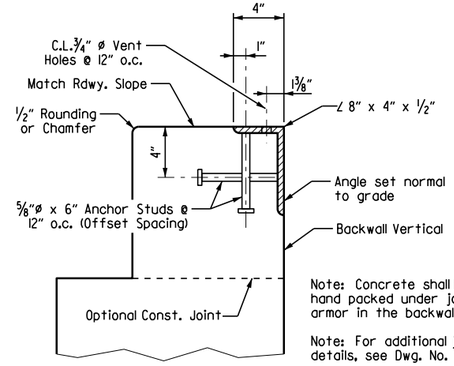

DETAIL Z

Scale: 2" = 1'-0"

Note: Concrete shall be hand packed under joint armor in the backwall.

Note: For additional joint details, see Dwg. No. \$0089.

Note: The profile of the back wall angle shall be established based on the vertical curve in conjunction with the skew.

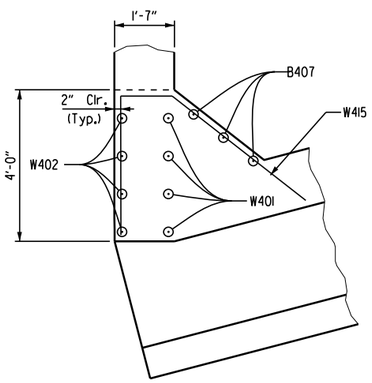

SECTION R-R

Scale: ½" = 1'-0"

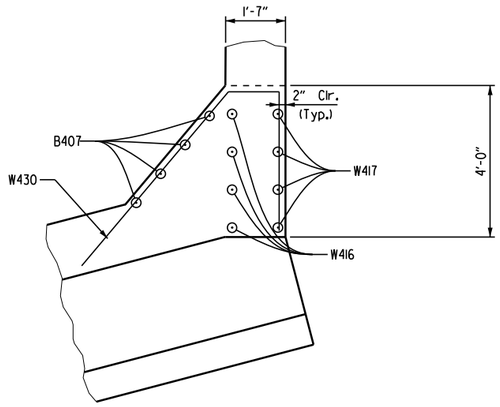

SECTION S-S

Scale: ½" = 1'-0"

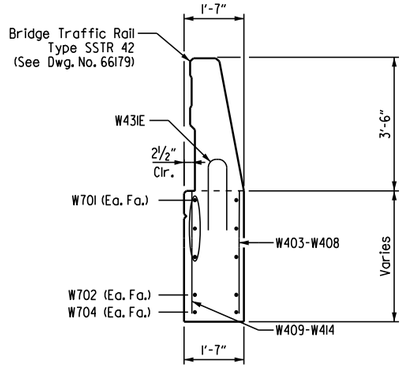

SECTION U-U

Scale: ½" = 1'-0"

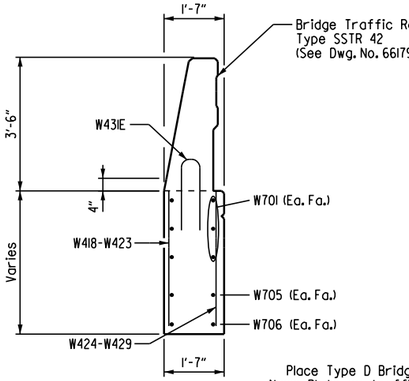

SECTION X-X

Scale: ½" = 1'-0"

Place Type D Bridge Name Plate on traffic side of Bent 1, right wing only.

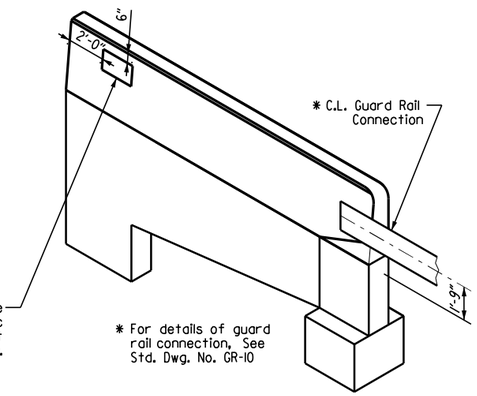

THREE DIMENSIONAL VIEW OF WING & RAIL

Scale: ¼" = 1'-0"

07-27-23

STATE OF ARKANSAS
LICENSED PROFESSIONAL ENGINEER
No. 19188
ERIC S. CHRISTIANSEN

Eric S. Christiansen

BRIDGE ENGINEER

BRIDGE B
COMMON DETAILS OF END BENTS
HWY. 612 OVER HWY. 68

ROUTE 612 SEC. 1

ARKANSAS STATE HIGHWAY COMMISSION

LITTLE ROCK, ARK.

DRAWN BY: FAN DATE: 04-23
CHECKED BY: DHP DATE: 04-23
DESIGNED BY: WKB DATE: 04-23

FILENAME: B012326DD_B14.DGN
SCALE: AS SHOWN

BRIDGE NO. B7613 DRAWING NO. 66168

Date Plotted: 1/21/2023

DATE REVISED	DATE FILMED	DATE REVISED	DATE FILMED	FED. ROAD DIST. NO.	STATE	FED. AID PROJ. NO.	SHEET NO.	TOTAL SHEETS
				6	ARK.		380	838
				JOB NO.		012326		
				(1) B7613		BENT 2 DETAILS		66169

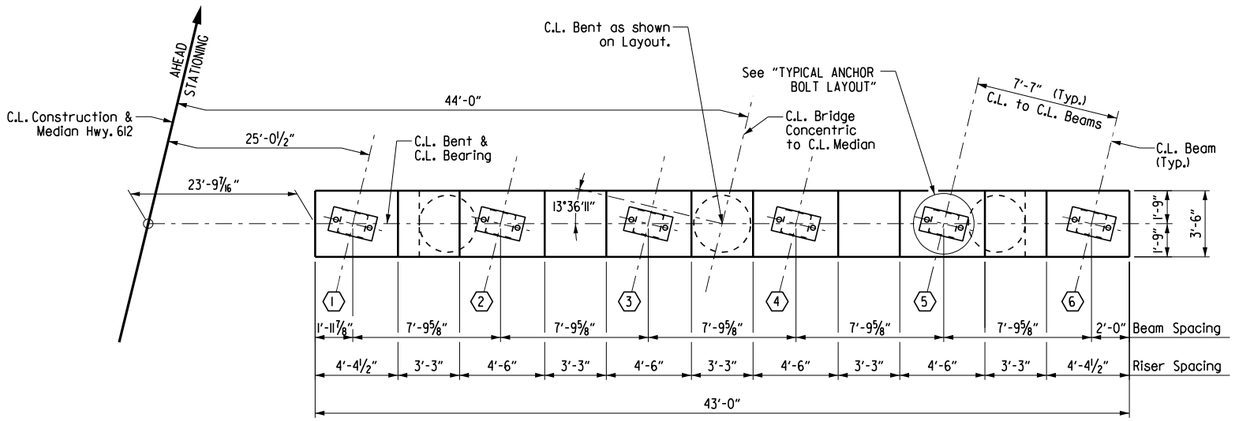

PLAN

¼" = 1'-0"

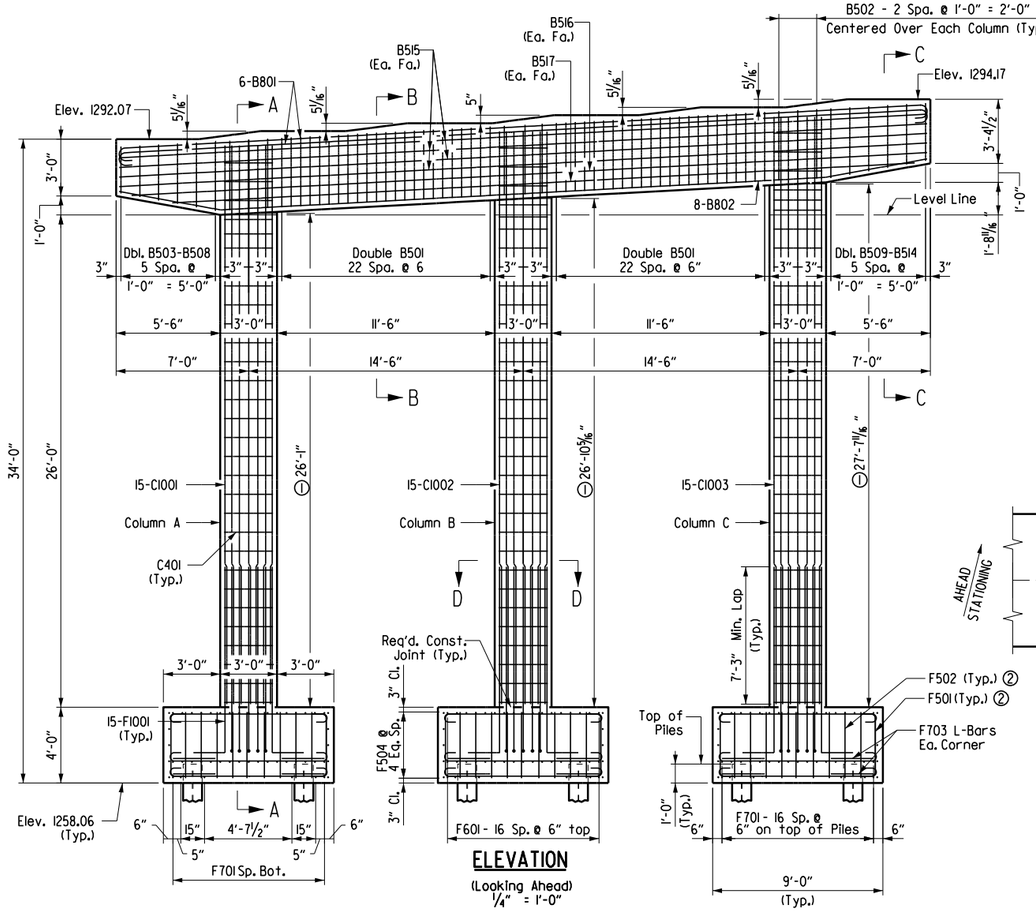

ELEVATION

(Looking Ahead)
¼" = 1'-0"

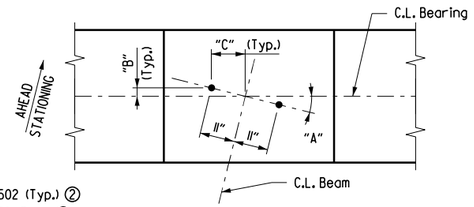

BEAM	"A"	"B"	"C"
1	13°40'17"	2⅝"	10¹¹⁄₁₆"
2	13°38'38"	2⅝"	10¹¹⁄₁₆"
3	13°37'00"	2⅝"	10¹¹⁄₁₆"
4	13°35'22"	2⅝"	10¹¹⁄₁₆"
5	13°33'44"	2⅝"	10¹¹⁄₁₆"
6	13°32'07"	2⅝"	10¹¹⁄₁₆"

Note: For Details Of Elastomeric Bearings, See Dwg. No. 66180.

TYPICAL ANCHOR BOLT LAYOUT

½" = 1'-0"

BRIDGE B - BENT 2 BAR LIST

Mark	Number Required	Length	Pin Dia.
B501	92	11'-8"	2 1/2"
B502	9	10'-4"	2 1/2"
B503 to B508	2 Each	9'-2" to 11'-8"	2 1/2"
B509 to B514	2 Each	10'-5" to 11'-8"	2 1/2"
B515	8	42'-8"	Str.
B516	2	42'-0"	Str.
B517	2	39'-2"	Str.
B801	12	44'-6"	6"
B802	8	42'-10"	6"
C401	93	9'-2"	3"
C1001	15	29'-6"	Str.
C1002	15	30'-3"	Str.
C1003	15	31'-0"	Str.
F501	72	3'-10"	2½"
F502	54	4'-1"	2½"
F503	30	8'-6"	Str.
F504	30	10'-6"	Str.
F601	51	11'-9"	4½"
F602	63	9'-9"	4½"
F701	69	12'-1"	5¼"
F702	87	10'-1"	5¼"
F703	24	4'-4"	5¼"
F1001	45	11'-10"	10"

Bending Diagrams (Dimensions are out to out of bars.)

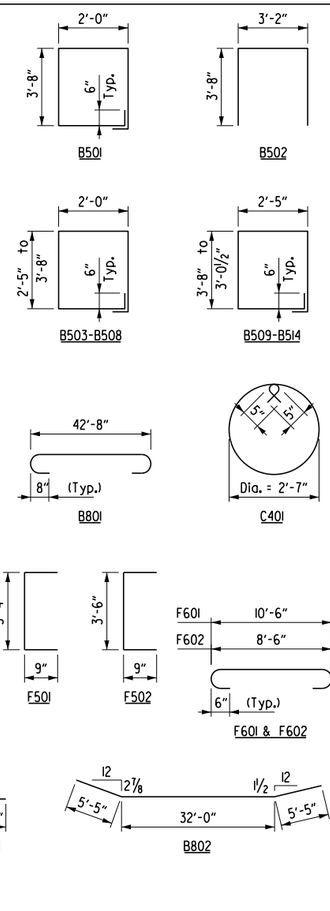

(1) Dimension shown is at C.L. of Column.

(2) See REINFORCING PLAN on Dwg. No. 66155.

For GENERAL NOTES FOR SUBSTRUCTURE, see Dwg. No. 66149 and Std. Dwg. No. 55006.

For additional information, see LAYOUT on Dwg. No. 66164.

For SECTION A-A, SECTION B-B, SECTION C-C, & SECTION D-D, see Dwg. No. 66155.

07·27·23

STATE OF ARKANSAS
LICENSED PROFESSIONAL ENGINEER
ERIC S. CHRISTIANSEN
No. 19188

Eric S. Christiansen

BRIDGE ENGINEER

BRIDGE B
DETAILS OF BENT 2
HWY. 612 OVER HWY. 68

ROUTE 612 SEC. 1

ARKANSAS STATE HIGHWAY COMMISSION

LITTLE ROCK, ARK.

DRAWN BY: FAN DATE: 04-23
CHECKED BY: DHP DATE: 04-23
DESIGNED BY: WKB DATE: 04-23
FILENAME: B012326DD_B2.DGN
SCALE: AS SHOWN

BRIDGE NO. B7613 DRAWING NO. 66169

Date Plotted: 7/21/2023

DATE REVISED	DATE FILMED	DATE REVISED	DATE FILMED	FED. ROAD DIST. NO.	STATE	FED. AID PROJ. NO.	SHEET NO.	TOTAL SHEETS
				6	ARK.		381	838
				JOB NO.		012326		
				①	B7613	BENT 3 DETAILS		66170

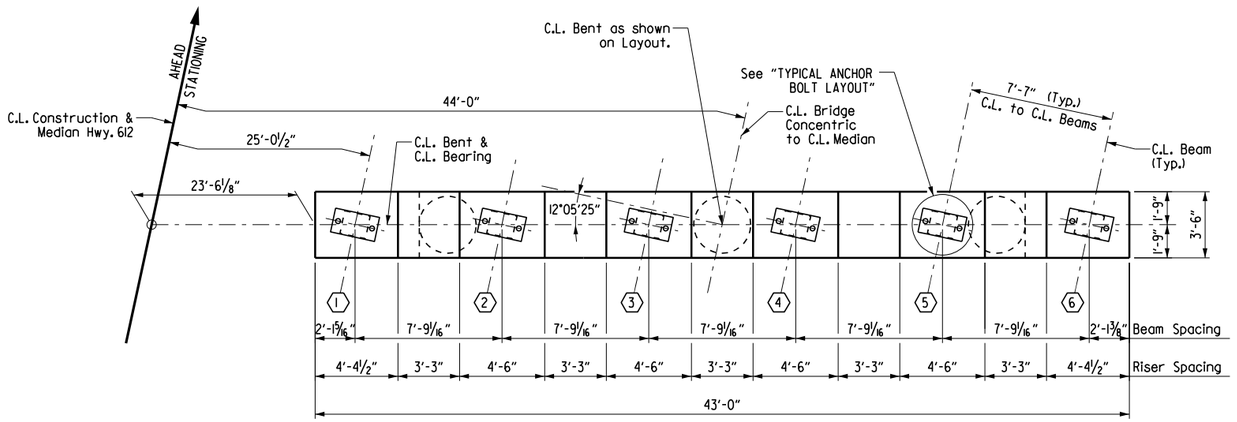

PLAN

¼" = 1'-0"

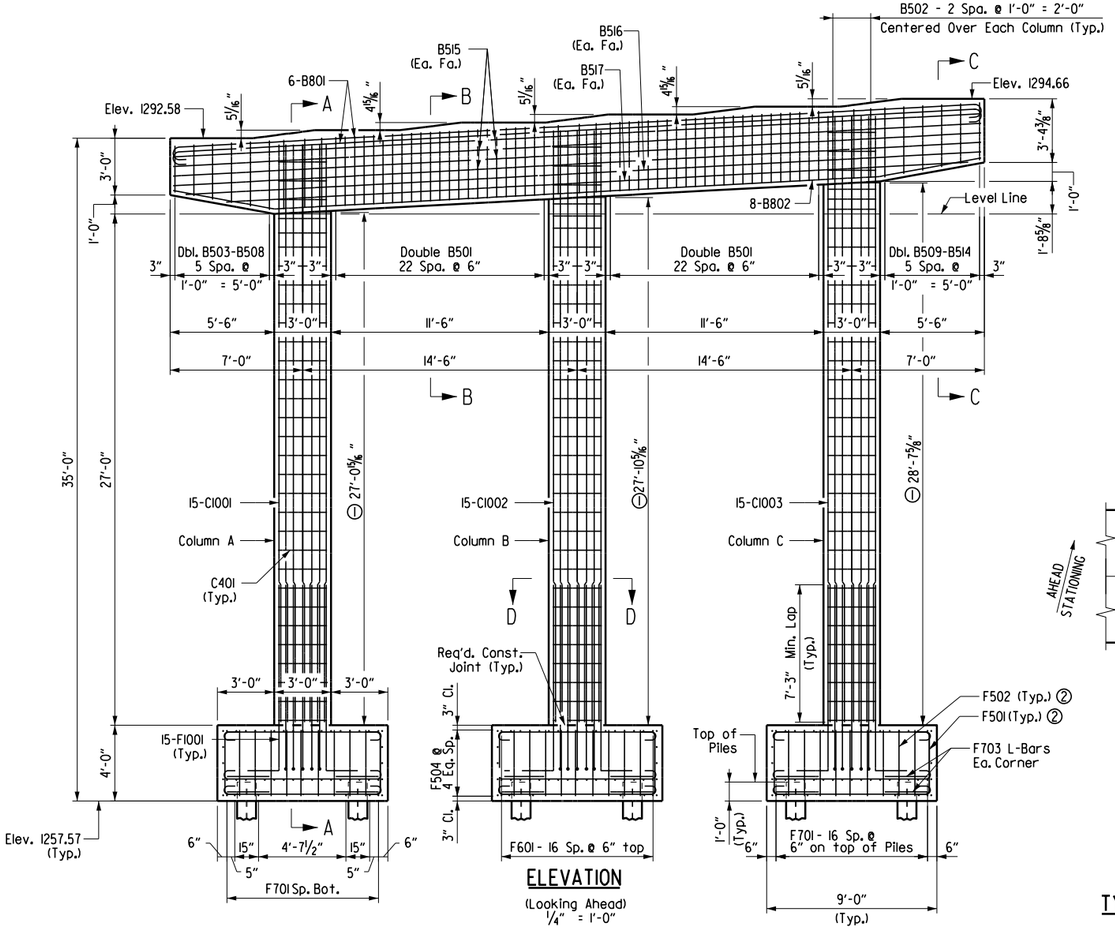

ELEVATION

(Looking Ahead)
¼" = 1'-0"

BRIDGE B - BENT 3 BAR LIST

Mark	Number Required	Length	Pin Dia.	Bending Diagrams (Dimensions are out to out of bars.)
B501	92	11'-8"	2 1/2"	
B502	9	10'-4"	2 1/2"	
B503 to B508	2 Each	9'-3" to 11'-8"	2 1/2"	
B509 to B514	2 Each	10'-5" to 11'-8"	2 1/2"	
B515	8	42'-8"	Str.	
B516	2	42'-0"	Str.	
B517	2	39'-2"	Str.	
B801	12	44'-6"	6"	
B802	8	42'-10"	6"	
C401	96	9'-2"	3"	
C1001	15	30'-6"	Str.	
C1002	15	31'-3"	Str.	
C1003	15	32'-0"	Str.	
F501	72	3'-10"	2½"	
F502	54	4'-1"	2½"	
F503	30	8'-6"	Str.	
F504	30	10'-6"	Str.	
F601	51	11'-9"	4½"	
F602	63	9'-9"	4½"	
F701	69	12'-1"	5¼"	
F702	87	10'-1"	5¼"	
F703	24	4'-4"	5¼"	
F1001	45	11'-10"	10"	

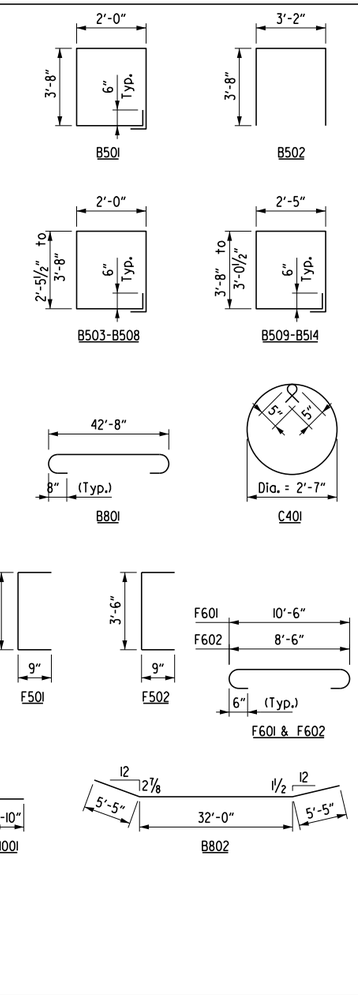

① Dimension shown is at C.L. of Column.

② See REINFORCING PLAN on Dwg. No. 66155.

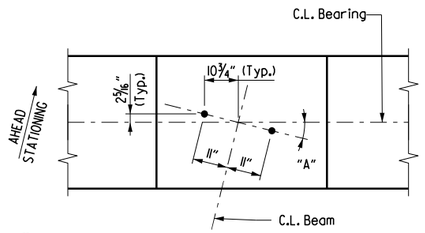

BEAM	"A"
1	12°09'03"
2	12°07'36"
3	12°06'09"
4	12°04'42"
5	12°03'16"
6	12°01'50"

Note: For Details Of Elastomeric Bearings, See Dwg. No. 66180.

TYPICAL ANCHOR BOLT LAYOUT

½" = 1'-0"

For GENERAL NOTES FOR SUBSTRUCTURE, see Dwg. No. 66149 and Std. Dwg. No. 55006.

For additional information, see LAYOUT on Dwg. No. 66164.

For SECTION A-A, SECTION B-B, SECTION C-C, & SECTION D-D, see Dwg. No. 66155.

07-27-23

STATE OF ARKANSAS
LICENSED PROFESSIONAL ENGINEER
ERIC S. CHRISTIANSEN
No. 19188

Eric S. Christiansen

BRIDGE ENGINEER

BRIDGE B
DETAILS OF BENT 3
HWY. 612 OVER HWY. 68

ROUTE 612 SEC. 1

ARKANSAS STATE HIGHWAY COMMISSION

LITTLE ROCK, ARK.

DRAWN BY: FAN DATE: 04-23
CHECKED BY: DHP DATE: 04-23
DESIGNED BY: WKB DATE: 04-23
FILENAME: B012326bD_B3.DGN
SCALE: AS SHOWN

BRIDGE NO. B7613 DRAWING NO. 66170

Date Plotted: 7/21/2023

NOTE: Class 2 Protective Surface Treatment shall be applied to the roadway face and top of the end bent rail and the top of the backwall.

DATE REVISED	DATE FILMED	DATE REVISED	DATE FILMED	FED. ROAD DIST. NO.	STATE	FED. AID PROJ. NO.	SHEET NO.	TOTAL SHEETS
				6	ARK.		382	838
				JOB NO.		012326		
				①	B7613	END BENT 4 DETAILS		66171

For GENERAL NOTES FOR SUBSTRUCTURE, see Dwg. No. 66149 and Std. Dwg. No. 55006.

For additional information, see LAYOUT on Dwg. No. 66164.

For VIEW A-A, VIEW B-B, VIEW C-C, and VIEW D-D, see Dwg. No. 66173.

For DETAIL Z, see Dwg. No. 66168.

For Details of Wing and Rail, see Dwg. No. 66173 & 66179.

① Dimensions shown are to C.L. Joint

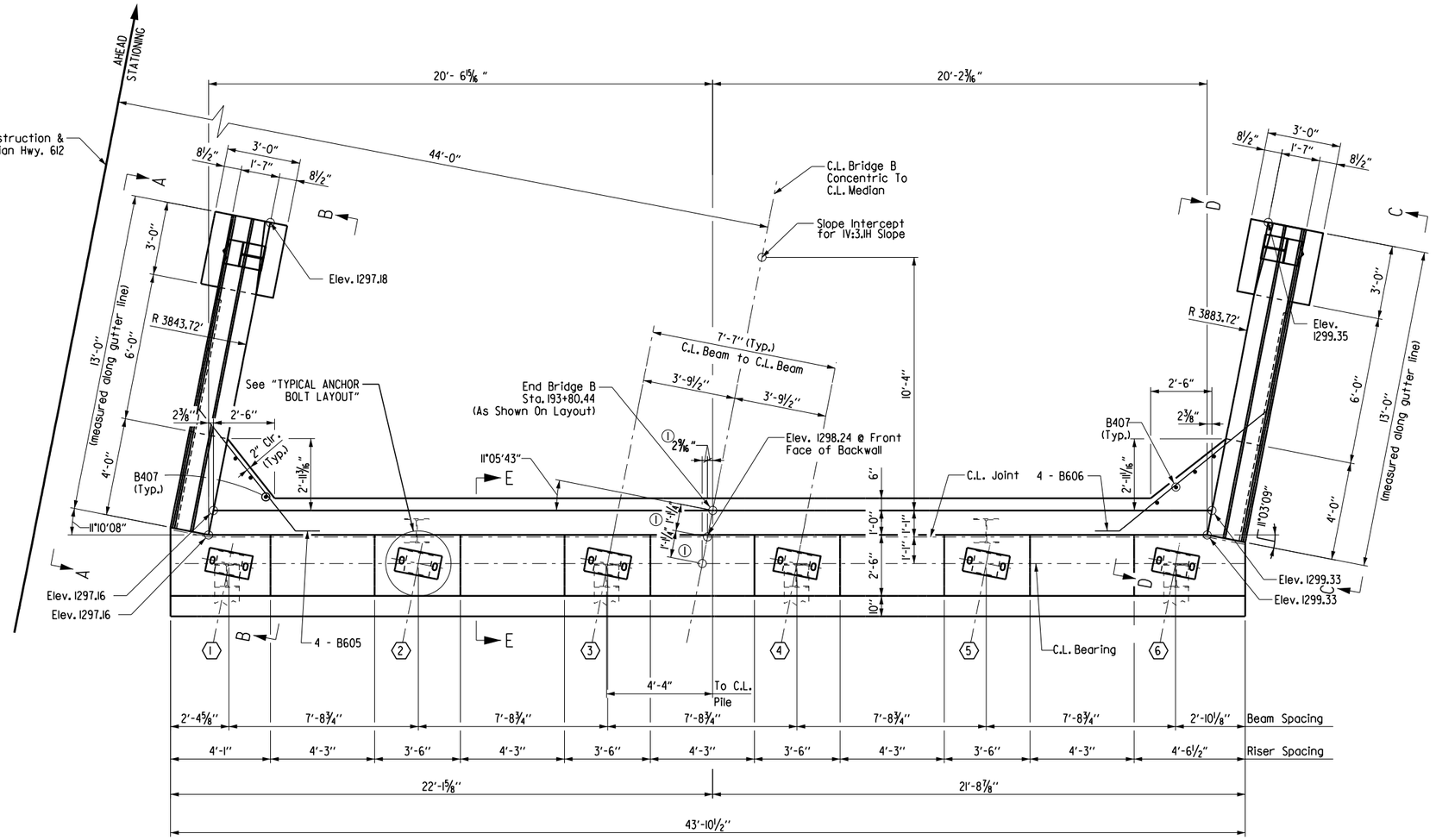

PLAN

Scale: ⅜" = 1'-0"

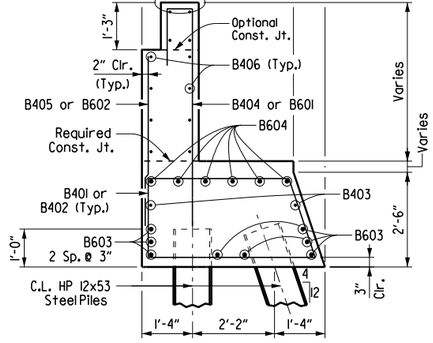

SECTION E-E

½" = 1'-0"

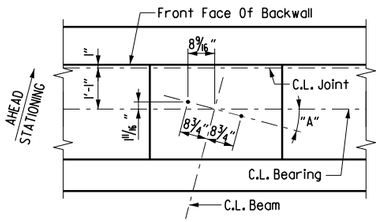

BEAM	"A"
1	11°11'01"
2	11°09'41"
3	11°08'21"
4	11°07'01"
5	11°05'42"
6	11°04'23"

Note: For Details Of Elastomeric Bearings, See Dwg. No. 66180.

TYPICAL ANCHOR BOLT LAYOUT

½" = 1'-0"

07-27-23

STATE OF ARKANSAS
LICENSED PROFESSIONAL ENGINEER
No. 19188
ERIC S. CHRISTIANSEN

Eric S. Christiansen

BRIDGE ENGINEER

SHEET 1 OF 3
BRIDGE B
DETAILS OF END BENT 4
HWY. 612 OVER HWY. 68

ROUTE 612 SEC. 1

ARKANSAS STATE HIGHWAY COMMISSION

LITTLE ROCK, ARK.

DRAWN BY: FAN DATE: 04-23
CHECKED BY: DHP DATE: 04-23
DESIGNED BY: WKB DATE: 04-23
FILENAME: B012326bD_B41.DGN
SCALE: AS SHOWN

BRIDGE NO. B7613 DRAWING NO. 66171

Date Plotted: 7/21/2023

NOTE: Class 2 Protective Surface Treatment shall be applied to the roadway face and top of the end bent rail and the top of the backwall.

(A) B601 - 5 Spa. @ 6" = 2'-6" (Fr. Fa.)
B602 - 5 Spa. @ 6" = 2'-6" (Bk. Fa.)

DATE REVISED	DATE FILMED	DATE REVISED	DATE FILMED	FED. ROAD DIST. NO.	STATE	FED. AID PROJ. NO.	SHEET NO.	TOTAL SHEETS
				6	ARK.		383	838
				JOB NO.		012326		
				(1) B7613		END BENT 4 DETAILS		66172

For GENERAL NOTES FOR SUBSTRUCTURE, see Dwg. No. 66149 and Std. Dwg. No. 55006.

For additional information, see LAYOUT on Dwg. No. 66164.

For Details of Wing and Rail, see Dwg. No. 66173 & 66179.

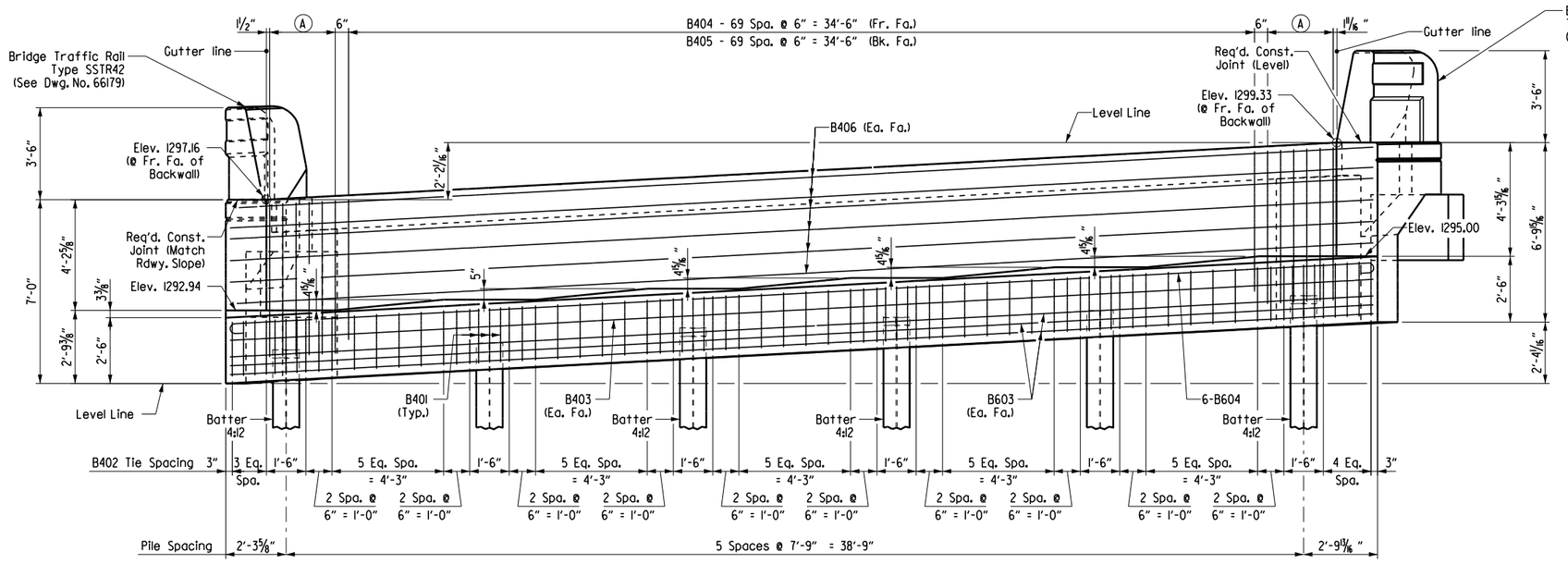

ELEVATION
(Looking Ahead)
Scale: ⅜" = 1'-0"

BRIDGE B - END BENT 4 BAR LIST

Mark	No. Req'd	Length	Pin Dia.	Mark	No. Req'd	Length	Pin Dia.
B401	18	7'-10"	2"	W424 to W429	1 Each	3'-8" to 2'-0"	Str.
B402	59	12'-9"	2"	W430	3	10'-9"	2"
B403	2	44'-1"	Str.	W431E	52	4'-7"	6"
B404	70	7'-3"	2"				
B405	70	4'-0"	Str.				
B406	12	43'-10"	3"	W601	24	4'-0"	4½"
B407	7	5'-3"	Str.	W602	12	2'-8"	4½"
B601	13	7'-8"	4½"	W701	12	12'-8"	Str.
B602	13	4'-7"	Str.	W702	2	6'-3"	Str.
B603	8	44'-1"	Str.	W703	4	3'-8"	Str.
B604	6	45'-5"	4½"	W704	2	11'-6"	5¼"
B605	4	7'-11"	4½"	W705	2	7'-0"	Str.
B606	4	9'-8"	4½"	W706	2	11'-7"	5¼"
W401	4	6'-8"	2"				
W402	4	9'-1"	Str.	R401E	48	7'-6"	3"
W403 to W408	1 Each	3'-4" to 2'-0"	Str.	R402E	8	5'-6"	Str.
				R404E	4	3'-8"	8½"
W409 to W414	1 Each	3'-4" to 2'-0"	Str.	R405E	16	12'-8"	Str.
				R406E	4	12'-5"	Str.
W415	3	9'-3"	2"	R407E	2	6'-8"	3"
W416	4	6'-10"	2"	R408E	2	5'-1"	3"
W417	4	9'-3"	Str.				
W418 to W423	1 Each	3'-8" to 2'-0"	Str.				

BENDING DIAGRAMS
(Dimensions are out to out of bars)

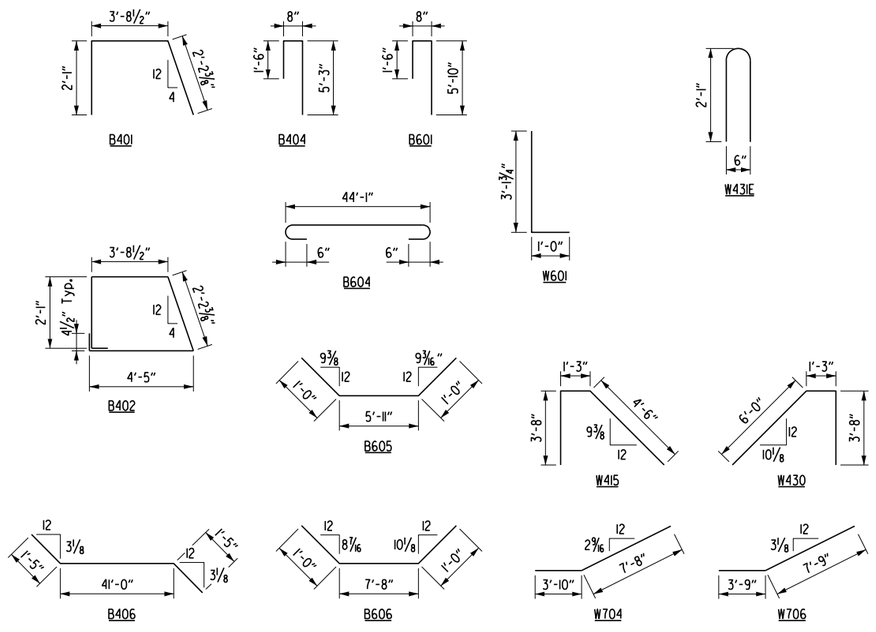

Note:
See Dwg. No. 66179 for Traffic Rail reinforcing bar bending diagrams.

07.27.23
STATE OF ARKANSAS
LICENSED PROFESSIONAL ENGINEER
No. 19188
ERIC S. CHRISTIANSEN
Eric S. Christiansen
BRIDGE ENGINEER

SHEET 2 OF 3
BRIDGE B
DETAILS OF END BENT 4
HWY. 612 OVER HWY. 68

ROUTE 612 SEC. 1

ARKANSAS STATE HIGHWAY COMMISSION
LITTLE ROCK, ARK.

DRAWN BY: FAN DATE: 04-23
CHECKED BY: DHP DATE: 04-23
DESIGNED BY: WKB DATE: 04-23
FILENAME: B012326bD_B42.DGN
SCALE: ⅜" = 1'-0"

BRIDGE NO. B7613
DRAWING NO. 66172

Date Plotted: 7/21/2023

DATE REVISED	DATE FILMED	DATE REVISED	DATE FILMED	FED. ROAD DIST. NO.	STATE	FED. AID PROJ. NO.	SHEET NO.	TOTAL SHEETS
				6	ARK.		384	838
				JOB NO.		012326		
				① B7613		END BENT 4 DETAILS		66173

For GENERAL NOTES FOR SUBSTRUCTURE, see Dwg. No. 66149 and Std. Dwg. No. 55006.

For additional information, see LAYOUT on Dwg. No. 66164.

For SECTION T-T, SECTION U-U, VIEW V-V, VIEW W-W, SECTION X-X, and SECTION Y-Y, see Dwg. No. 66168.

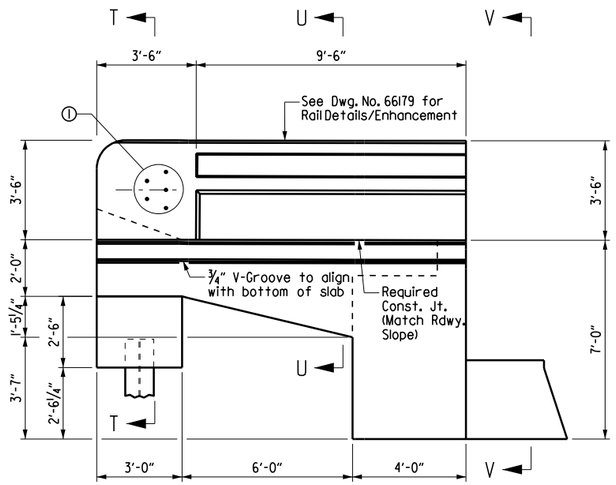

VIEW A-A

Scale: ⅜" = 1'-0"

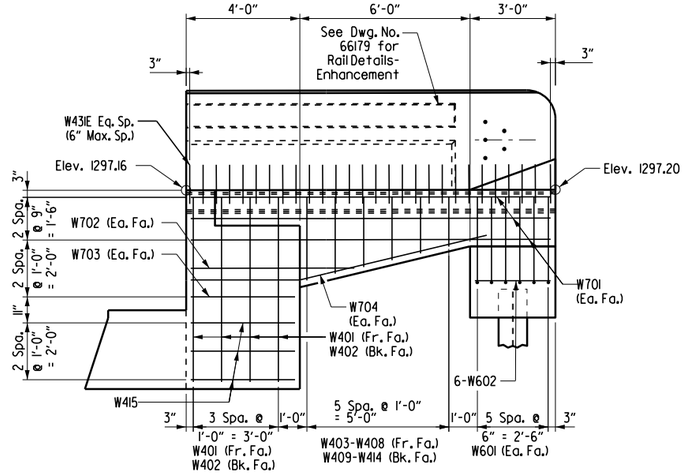

VIEW B-B

Scale: ⅜" = 1'-0"

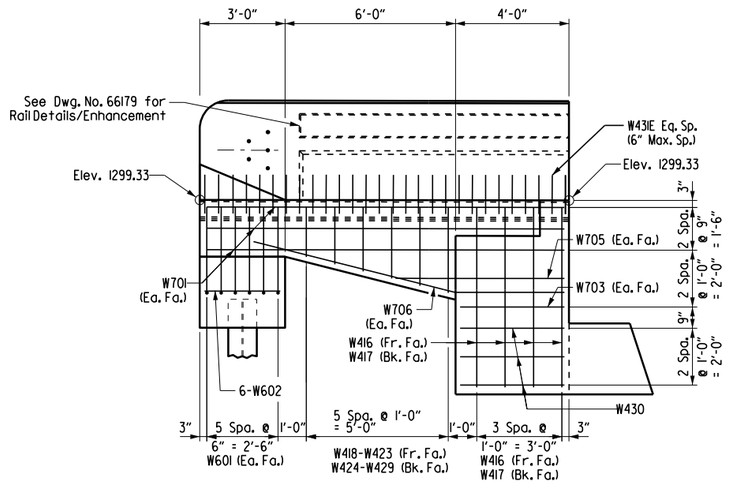

VIEW D-D

Scale: ⅜" = 1'-0"

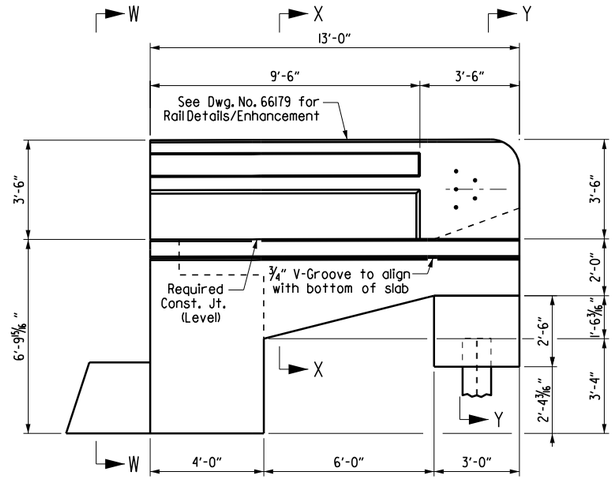

VIEW C-C

Scale: ⅜" = 1'-0"

① 5 - 1"ø formed holes for guard rail connection. See Std. Dwg. No. GR-10 for bolt spacing and additional connection details.

07.27.23

STATE OF ARKANSAS
LICENSED PROFESSIONAL ENGINEER
No. 19188
ERIC S. CHRISTIANSEN

Eric S. Christiansen

BRIDGE ENGINEER

SHEET 3 OF 3
BRIDGE B
DETAILS OF END BENT 4
HWY. 612 OVER HWY. 68

ROUTE 612 SEC. 1

ARKANSAS STATE HIGHWAY COMMISSION

LITTLE ROCK, ARK.

DRAWN BY: FAN DATE: 04-23 FILENAME: B012326bD_B43.DGN
CHECKED BY: DHP DATE: 04-23 SCALE: ⅜" = 1'-0"
DESIGNED BY: WKB DATE: 04-23

BRIDGE NO. B7613 DRAWING NO. 66173

Date Plotted: 7/27/2023

DATE REVISED	DATE FILMED	DATE REVISED	DATE FILMED	FED. ROAD DIST. NO.	STATE	FED. AID PROJ. NO.	SHEET NO.	TOTAL SHEETS
				6	ARK.		385	838
				JOB NO.		012326		
				(1) B7613		SPAN DETAILS		66174

(1) TOLERANCE: Minus = 1/4":
Plus equal to the amount of slab thickening used to meet the slab thickness tolerance. See "ADJUSTMENT FOR SLAB THICKNESS TOLERANCE" on Std. Dwg. No. 55007.

(2) See "ADJUSTMENT FOR SLAB THICKNESS TOLERANCE" on Std. Dwg. No. 55007.

(3) Field bend transverse bars in this area to provide minimum clearances.

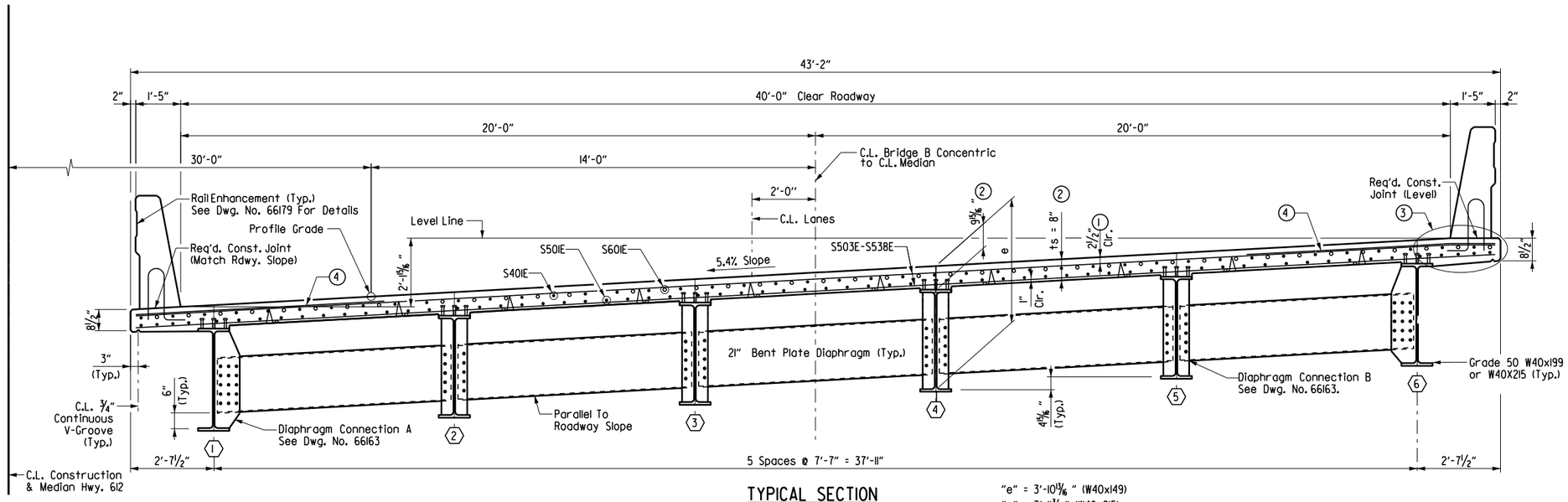

TYPICAL SECTION

(Looking Ahead)
Scale: 1/2" = 1'-0"

"e" = 3'-10 13/16" (W40x149)
"e" = 3'-11 3/16" (W40x215)
@ C.L. Beam & C.L. Bearing

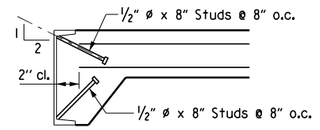

Note: As an alternate to 5/8" ø studs, 1/2" ø x 8" studs spaced as shown may be used. Use weight of 5/8" ø stud as basis of measurement of structural steel in anchors.

DETAIL OF ALTERNATE ANCHORS

No Scale

NOTES:

Class 2 Protective Surface Treatment shall be applied to the roadway surface and the top and roadway face of bridge traffic railing.

All bars designated with an "E" suffix are to be epoxy coated.

Bar positions or clearances from the forms shall be maintained by means of stays, ties, hangers or other approved devices per Subsection 804.06. Placement of slab bolsters or hi-chairs with full-length lower runners directly on removable deck forms will not be allowed.

EXPANSION DEVICE:

Roadway Channel C15x33.9 (ASTM A709, Gr. 50)
Connection ∠'s 7"x4"x1/2" x 8" Long
Detail Device 1/8" high & provide 1/4" shims using 1- 1/8" PL & 2 - 1/16" PL's

For details of Poured Silicone Joint, see Std. Dwg. No. 55008 & Dwg. No. 66178.

SLAB REINFORCING:

Transverse:
S503E @ 6" Centers (Top & Bottom)
S504E-S538E @ 6" Centers (Top & Bottom)
(4) S602E (Place as shown)
See DETAIL A on Dwg. No. 66175
Longitudinal:
S401E @ 12" Centers (Top)
S501E Place as shown (Bottom)
S601E @ 12" Centers (Top over Int. Bents)

For additional reinforcing details, see Dwg. No. 66175-66176.

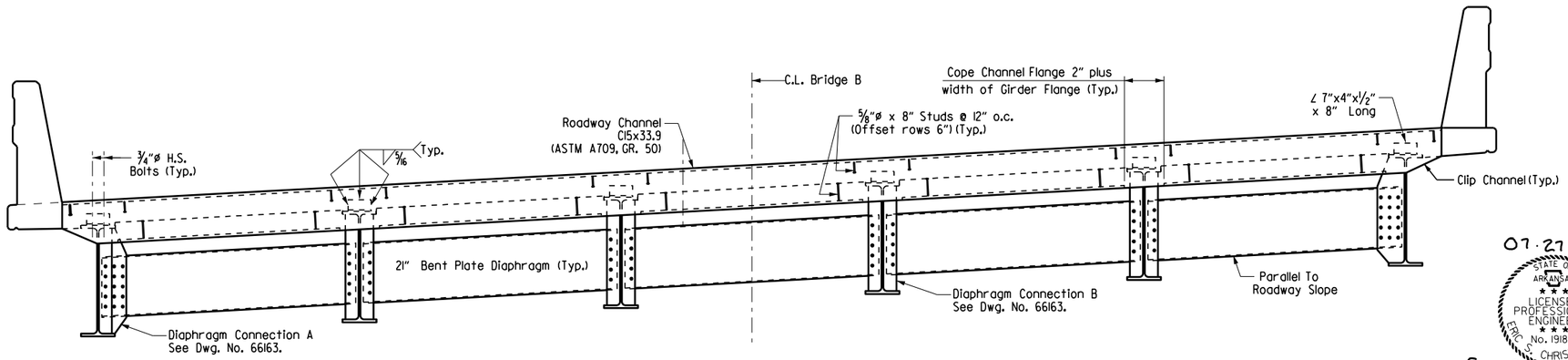

VIEW @ C.L. JOINT

(Looking Ahead)
Scale: 1/2" = 1'-0"

07-27-23
STATE OF ARKANSAS
LICENSED PROFESSIONAL ENGINEER
No. 19188
ERIC S. CHRISTIANSEN
Eric S. Christiansen
BRIDGE ENGINEER

SHEET 1 OF 4
BRIDGE B
DETAILS OF 234'-0"
CONTINUOUS W-BEAM UNIT
HWY. 612 OVER HWY. 68

ROUTE 612 SEC. 1

ARKANSAS STATE HIGHWAY COMMISSION
LITTLE ROCK, ARK.

DRAWN BY: FAN DATE: 04-23
CHECKED BY: DHP DATE: 04-23
DESIGNED BY: WKB DATE: 04-23
FILENAME: B012326bD_SI.DGN
SCALE: 1/2" = 1'-0"

BRIDGE NO. B7613 DRAWING NO. 66174

Date Plotted: 7/27/2023

DATE REVISED	DATE FILMED	DATE REVISED	DATE FILMED	FED. ROAD DIST. NO.	STATE	FED. AID PROJ. NO.	SHEET NO.	TOTAL SHEETS
				6	ARK.		386	838
				JOB NO.		012326		
				(1) B7613		SPAN DETAILS		66175

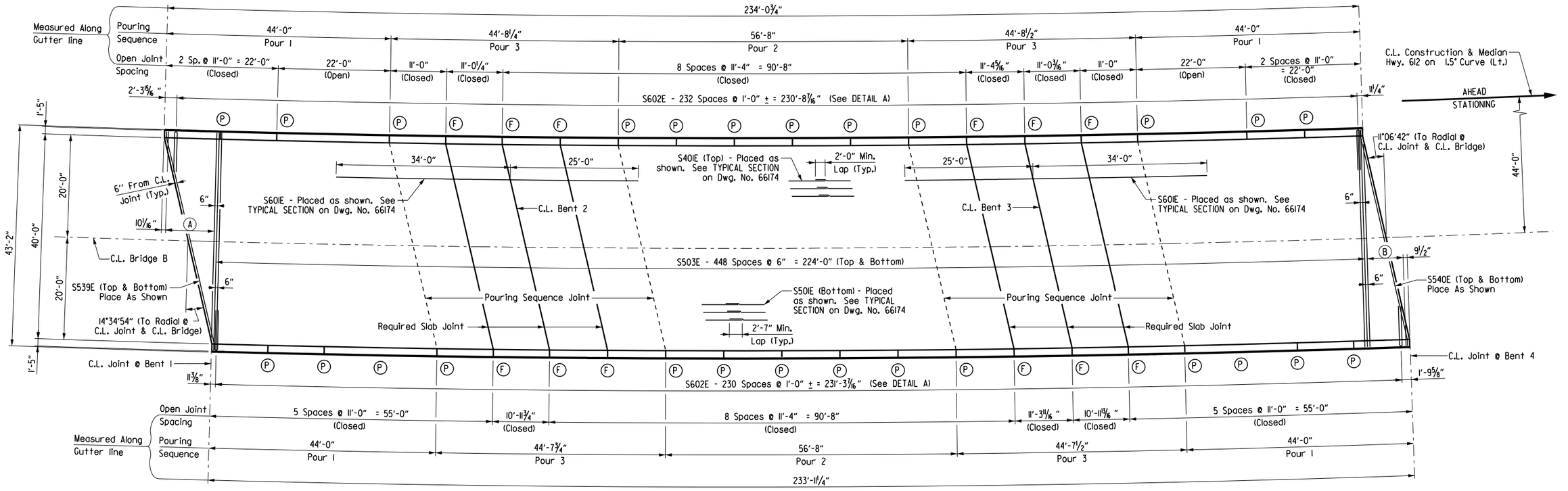

REINFORCING PLAN & POURING SEQUENCE

Scale: 1" = 10'-0"

Ⓐ 19 Spa. @ 6" = 9'-6"
S504E-S523E (Top & Bottom)

Ⓑ 14 Spa. @ 6" = 7'-0"
S524E-S538E (Top & bottom)

Ⓕ C.L. Full Depth Parapet Joint (¼" to 1" max.). Stop 6" from top of slab.

Ⓟ C.L. Partial Depth Parapet Joint (¼" to 1" max.). Stop 1'-4" from top of slab.

Note: See TYPICAL SECTION on Dwg. No. 66174 for placement of longitudinal reinforcing.

Note: For Bar List, see Dwg. No. 66176.

Note: All transverse reinforcing steel shall be placed on radial lines. Spacing is measured along C.L. Bridge, unless noted otherwise.

All longitudinal lines and longitudinal reinforcing steel shall be placed on curves concentric with C.L. Bridge.

The ½" x 1" Poured Joint Sealer (Type 3 or 4) in slab shall conform to subsection 501.02(h) and 501.05(j). Backer rod filler will not be required. The poured joint sealer shall be paid for as "CLASS SIAE) CONCRETE-BRIDGE". Slab joints shall extend to the outside edge of the deck slab. Slab joints shall be installed before the parapet railing is poured. If slab joints are to be sawed, they shall be sawed as soon as the concrete has sufficiently set to allow sawing of the joint without damage to the slab. Slab joints shall be placed at all Pouring Sequence Construction Joints and Required Slab Joint Locations.

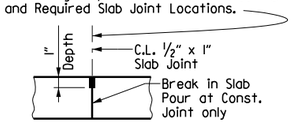

SLAB JOINT DETAIL

No Scale

Note: Pours with the same number may be placed simultaneously or separately. All Pours (1) must be placed before Pour (2) can be placed. Pour (2) must be placed before Pours (3) can be placed. 48 hours shall elapse before the end of a pour and the start of the next pour. 72 hours shall elapse between the end of a pour and the start of an adjacent pour. 72 hours shall elapse between the completion of the entire deck and the pouring of the parapet. Any railing pours made before the entire slab unit has been placed must be approved by the Engineer.

The Contractor must obtain approval from the Engineer for any deviations from the pouring sequence shown.

Concrete in bridge superstructure shall be consolidated for the entire pour before any concrete has taken its initial set. This may require the use of a retarding agent.

Note: Required slab joints and pouring sequence joints shall align with parapet open joint at the gutterline.

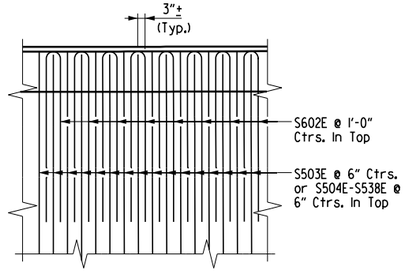

DETAIL A

Scale: ⅜" = 1'-0"

07.27.23

STATE OF ARKANSAS
LICENSED PROFESSIONAL ENGINEER
No. 19188
ERIC S. CHRISTIANSEN

BRIDGE ENGINEER

SHEET 2 OF 4
BRIDGE B
DETAILS OF 234'-0"
CONTINUOUS W-BEAM UNIT
HWY. 612 OVER HWY. 68

ROUTE 612 SEC. 1

ARKANSAS STATE HIGHWAY COMMISSION

LITTLE ROCK, ARK.

DRAWN BY: FAN DATE: 04-23
CHECKED BY: DHP DATE: 04-23
DESIGNED BY: WKB DATE: 04-23
FILENAME: B012326bD_S2.DGN
SCALE: ½" = 1'-0"

BRIDGE NO. B7613 DRAWING NO. 66175

Date Plotted: 7/27/2023

DATE REVISED	DATE FILMED	DATE REVISED	DATE FILMED	FED. ROAD DIST. NO.	STATE	FED. AID PROJ. NO.	SHEET NO.	TOTAL SHEETS
				6	ARK.		387	838
				JOB NO.		012326		
				(1)	B7613	SPAN DETAILS		66176

TABLE OF DEAD LOAD DEFLECTIONS (INCHES)

Camber for Dead Load Deflection plus vertical curve +/- 1/4" tolerance. Vertical curve corrections not included. Negative sign (-) indicates upward deflection. Deflections shown are off a chord from centerline bearing to centerline bearing.

Span	Point of Deflection	Stuctural Steel						Structural Steel + Slab						Structural Steel + Slab + Rail					
		Beam 1	Beam 2	Beam 3	Beam 4	Beam 5	Beam 6	Beam 1	Beam 2	Beam 3	Beam 4	Beam 5	Beam 6	Beam 1	Beam 2	Beam 3	Beam 4	Beam 5	Beam 6
Span 1	0	0	0	0	0	0	0	0	0	0	0	0	0	0	0	0	0	0	0
	0.1	0.021	0.028	0.028	0.028	0.027	0.020	0.073	0.094	0.096	0.095	0.092	0.072	0.089	0.103	0.104	0.103	0.101	0.088
	0.2	0.037	0.048	0.049	0.049	0.047	0.036	0.126	0.163	0.167	0.165	0.160	0.127	0.154	0.180	0.180	0.178	0.177	0.155
	0.3	0.046	0.060	0.061	0.060	0.058	0.042	0.153	0.201	0.204	0.202	0.196	0.150	0.189	0.222	0.220	0.219	0.217	0.186
	0.4	0.044	0.058	0.059	0.058	0.057	0.040	0.145	0.193	0.195	0.193	0.188	0.140	0.182	0.214	0.211	0.209	0.209	0.176
	0.5	0.032	0.045	0.045	0.044	0.044	0.028	0.104	0.146	0.145	0.143	0.141	0.097	0.136	0.163	0.158	0.156	0.158	0.129
	0.6	0.015	0.024	0.022	0.022	0.022	0.011	0.042	0.071	0.067	0.065	0.066	0.033	0.065	0.082	0.075	0.073	0.077	0.055
	0.7	-0.005	0.000	-0.003	-0.003	-0.001	-0.008	-0.024	-0.010	-0.018	-0.019	-0.015	-0.034	-0.013	-0.007	-0.016	-0.017	-0.012	-0.024
	0.8	-0.018	-0.018	-0.021	-0.021	-0.019	-0.021	-0.071	-0.071	-0.079	-0.080	-0.073	-0.079	-0.069	-0.074	-0.082	-0.083	-0.075	-0.078
	0.9	-0.021	-0.023	-0.025	-0.025	-0.024	-0.023	-0.077	-0.084	-0.091	-0.091	-0.086	-0.082	-0.082	-0.090	-0.096	-0.096	-0.091	-0.087
Span 2	0	0	0	0	0	0	0	0	0	0	0	0	0	0	0	0	0	0	0
	0.1	0.091	0.106	0.113	0.112	0.106	0.093	0.323	0.372	0.395	0.393	0.374	0.336	0.367	0.406	0.423	0.421	0.407	0.381
	0.2	0.215	0.251	0.267	0.266	0.251	0.219	0.760	0.879	0.931	0.930	0.885	0.791	0.863	0.958	0.997	0.996	0.963	0.898
	0.3	0.334	0.391	0.416	0.415	0.391	0.341	1.182	1.369	1.450	1.449	1.376	1.230	1.343	1.492	1.553	1.552	1.499	1.396
	0.4	0.426	0.498	0.530	0.529	0.498	0.434	1.503	1.742	1.848	1.845	1.753	1.565	1.707	1.899	1.979	1.976	1.910	1.776
	0.5	0.456	0.534	0.568	0.568	0.535	0.465	1.609	1.866	1.981	1.980	1.880	1.678	1.828	2.033	2.122	2.121	2.049	1.904
	0.6	0.425	0.497	0.529	0.530	0.498	0.434	1.499	1.737	1.845	1.847	1.753	1.565	1.703	1.892	1.976	1.978	1.911	1.776
	0.7	0.341	0.398	0.424	0.424	0.399	0.348	1.202	1.392	1.478	1.478	1.404	1.254	1.366	1.516	1.583	1.583	1.531	1.423
	0.8	0.222	0.259	0.275	0.275	0.259	0.226	0.782	0.903	0.960	0.960	0.912	0.816	0.888	0.983	1.028	1.028	0.995	0.926
	0.9	0.091	0.105	0.113	0.113	0.106	0.093	0.321	0.368	0.395	0.394	0.374	0.337	0.364	0.400	0.423	0.422	0.408	0.382
Span 3	0	0	0	0	0	0	0	0	0	0	0	0	0	0	0	0	0	0	0
	0.1	-0.021	-0.024	-0.026	-0.026	-0.024	-0.023	-0.076	-0.084	-0.091	-0.091	-0.086	-0.082	-0.081	-0.089	-0.096	-0.096	-0.092	-0.087
	0.2	-0.020	-0.020	-0.023	-0.023	-0.020	-0.022	-0.073	-0.073	-0.082	-0.084	-0.077	-0.082	-0.071	-0.075	-0.085	-0.087	-0.080	-0.081
	0.3	-0.006	-0.002	-0.004	-0.004	-0.002	-0.009	-0.026	-0.013	-0.020	-0.022	-0.018	-0.036	-0.014	-0.009	-0.018	-0.020	-0.016	-0.025
	0.4	0.014	0.023	0.021	0.021	0.022	0.011	0.043	0.072	0.069	0.066	0.066	0.033	0.067	0.084	0.077	0.074	0.076	0.056
	0.5	0.031	0.044	0.044	0.044	0.043	0.028	0.106	0.148	0.147	0.145	0.140	0.096	0.139	0.166	0.161	0.158	0.157	0.128
	0.6	0.043	0.058	0.058	0.058	0.057	0.040	0.147	0.195	0.197	0.195	0.188	0.139	0.184	0.217	0.214	0.211	0.209	0.176
	0.7	0.045	0.059	0.060	0.060	0.058	0.042	0.155	0.201	0.205	0.203	0.196	0.149	0.191	0.223	0.222	0.219	0.217	0.185
	0.8	0.037	0.048	0.049	0.049	0.048	0.036	0.130	0.167	0.170	0.169	0.163	0.126	0.159	0.184	0.184	0.182	0.180	0.155
	0.9	0.021	0.027	0.028	0.028	0.027	0.020	0.074	0.094	0.096	0.096	0.092	0.072	0.090	0.104	0.104	0.103	0.101	0.088
	0	0	0	0	0	0	0	0	0	0	0	0	0	0	0	0	0	0	0

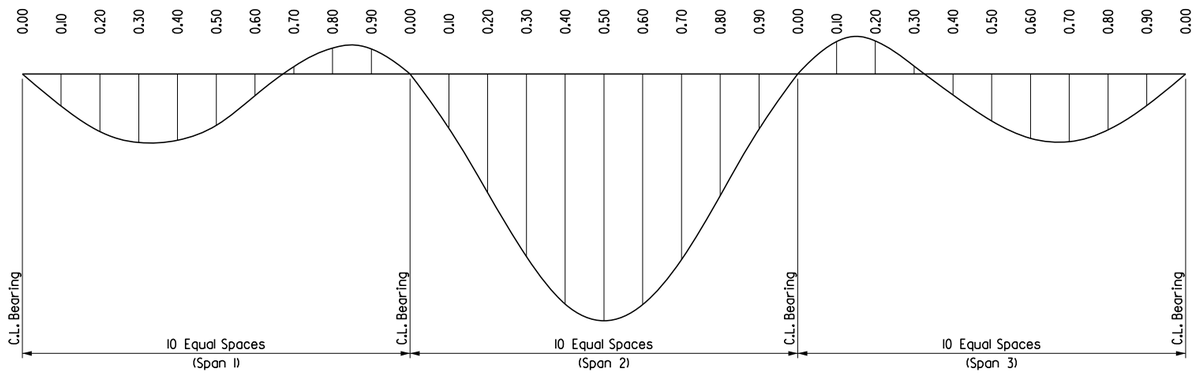

DEAD LOAD DEFLECTION DIAGRAM

Not to Scale

BRIDGE B - SUPERSTRUCTURE BAR LIST

Mark	Number Required	Length	Pin Dia.	Bending Diagrams (Dimensions are out to out of bars.)
S401E	301	35'-1"	Str.	
S501E	320	48'-10"	Str.	
S503E	898	42'-10"	Str.	
S504E to S523E	2 Each	40'-6" to 3'-11"	Str.	
S524E to S538E	2 Each	40'-1" to 4'-6"	Str.	
S539E	2	44'-9"	3 3/4"	
S540E	2	44'-3"	3 3/4"	
S601E	86	59'-0"	Str.	
S602E	464	16'-7"	5 1/8"	
R400E	16	6'-3	3"	
R401E	872	7'-6"	3"	
R402E	104	5'-6"	Str.	
R403E	872	3'-8"	6"	
R404E	4	3'-8"	8 1/2"	
R405E	32	15'-8"	Str.	
R406E	8	15'-8"	Str.	
R407E	4	6'-8"	3"	
R408E	4	5'-1"	3"	
R409E	200	10'-8"	Str.	
R410E	180	11'-0"	Str.	
R411E	20	21'-8"	Str.	

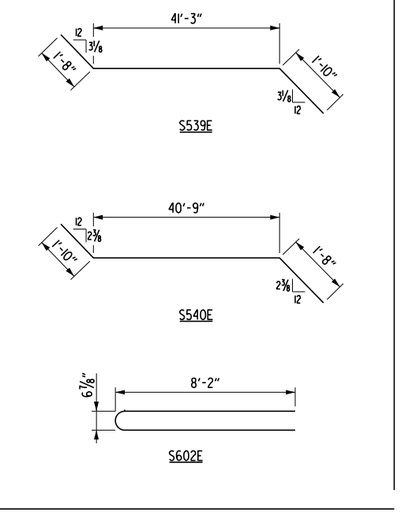

Note: See Dwg. No. 66179 For Bar Diagrams R400E - R408E.

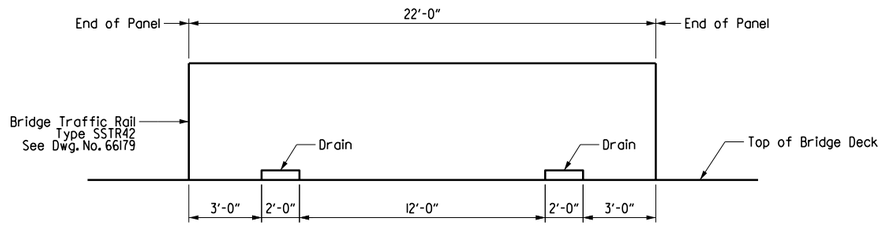

ELEVATION OF OPEN BRIDGE RAIL

No Scale

Table of Traffic Rail Variables

Closed Rail Panels			Open Rail Panels					
Panel Length	A	R4XXE	Panel Length	B	C	D	E	R4XXE
10'-11 3/4"	21	R409E	22'-0"	8	3	23	12	R411E
10'-11 13/16"	21	R409E						
11'-0"	22	R409E						
11'-0 3/16"	22	R409E						
11'-0 1/4"	22	R409E						
11'-3 11/16"	22	R410E						
11'-4"	22	R410E						
11'-4 5/16"	22	R410E						

07-27-23

STATE OF ARKANSAS
LICENSED PROFESSIONAL ENGINEER
No. 19188
ERIC S. CHRISTIANSEN

Eric S. Christiansen

BRIDGE ENGINEER

SHEET 3 OF 4
BRIDGE B
DETAILS OF 234'-0"
CONTINUOUS W-BEAM UNIT
HWY. 612 OVER HWY. 68

ROUTE 612 SEC. 1

ARKANSAS STATE HIGHWAY COMMISSION

LITTLE ROCK, ARK.

DRAWN BY: FAN DATE: 04-23
CHECKED BY: DHP DATE: 04-23
DESIGNED BY: WKB DATE: 04-23
FILENAME: B012326bD_S3.DGN
SCALE: 1/2" = 1'-0"

BRIDGE NO. B7613 DRAWING NO. 66176

Date Plotted: 7/21/2023

DATE REVISED	DATE FILMED	DATE REVISED	DATE FILMED	FED. ROAD DIST. NO.	STATE	FED. AID PROJ. NO.	SHEET NO.	TOTAL SHEETS
				6	ARK.		388	838
				JOB NO.		012326		
				(1) B7613		SPAN DETAILS		66177

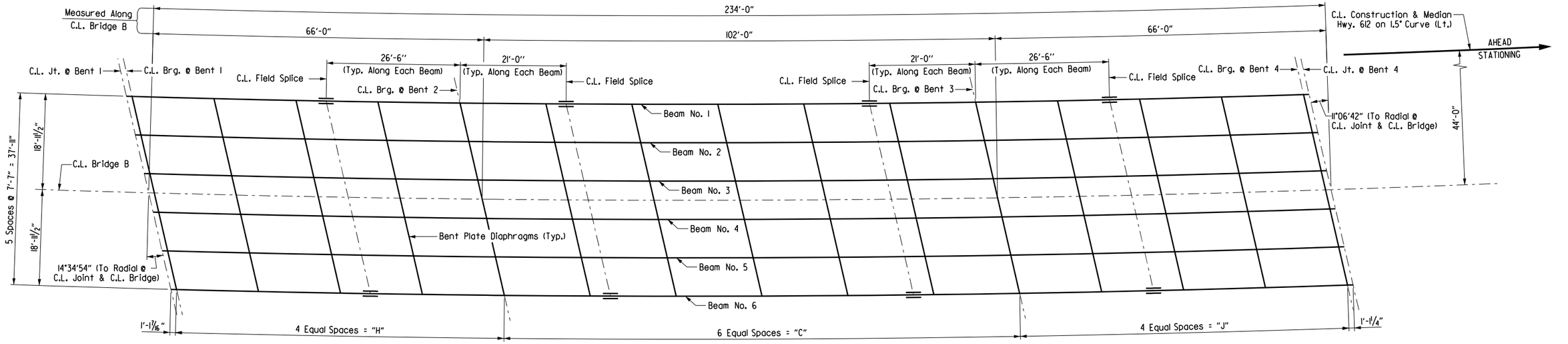

FRAMING PLAN

Scale: 1" = 10'-0"

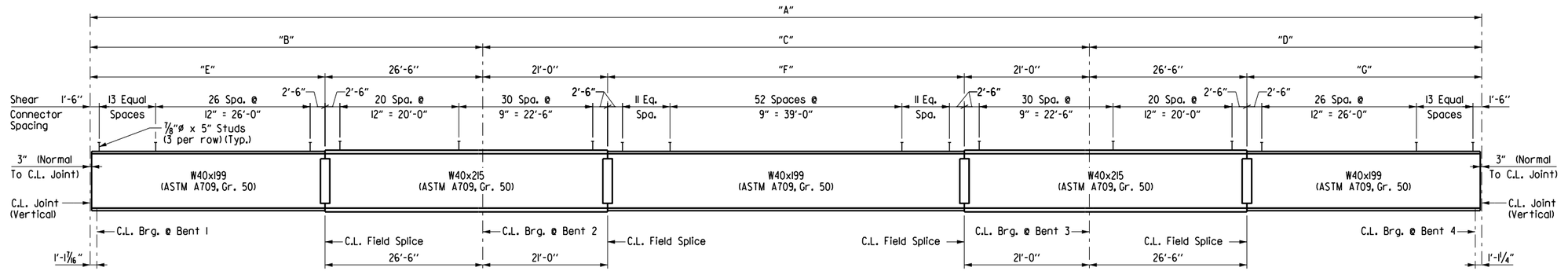

BEAM ELEVATION

Scale: 1" = 10'-0"

Note: All dimensions are taken along C.L. Beam, U.N.O.

TABLE OF BEAM VARIABLES

Beam No.	1	2	3	4	5	6
"A"	234'-0¾"	234'-0 7/16"	234'-0 1/16"	233'-11¾"	233'-11 9/16"	233'-11 3/16"
"B"	66'-0 3/16"	66'-0 1/8"	66'-0"	65'-11 5/16"	65'-11 7/16"	65'-11 11/16"
"C"	102'-0 3/8"	102'-0 3/16"	102'-0"	101'-11 5/16"	101'-11 3/16"	101'-11 1/16"
"D"	66'-0 3/16"	66'-0 1/16"	66'-0"	65'-11 5/16"	65'-11 7/16"	65'-11 9/16"
"E"	39'-6 3/16"	39'-6 1/8"	39'-6"	39'-5 5/16"	39'-5 7/16"	39'-5 5/16"
"F"	60'-0 3/8"	60'-0 3/16"	60'-0"	59'-11 5/16"	59'-11 3/16"	59'-11 1/16"
"G"	39'-6 3/16"	39'-6 1/16"	39'-6"	39'-5 5/16"	39'-5 7/16"	39'-5 5/16"
"H"	64'-10¾"	64'-10 11/16"	64'-10 9/16"	64'-10 1/2"	64'-10 7/16"	64'-10¼"
"J"	64'-10 5/16"	64'-10 13/16"	64'-10¾"	64'-10 11/16"	64'-10 5/8"	64'-10 9/16"
"K"	1 9/16"	1 9/16"	1 9/16"	1 9/16"	1½"	1½"
"L"	1 3/16"	1 3/16"	1 3/16"	1 3/16"	1⅛"	1⅛"

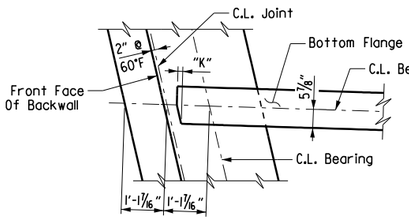

BEARING PLAN @ END BENT 1

Scale: ½" = 1'-0"

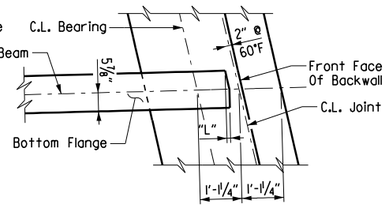

BEARING PLAN @ END BENT 4

Scale: ½" = 1'-0"

NOTES:

All longitudinal dimensions are taken along C.L. Beam, U.N.O.

Beams are curved and concectric to C.L. Bridge B.

For FIELD SPLICE DETAILS, see Dwg. No. 66163.

For BENT PLATE DIAPHRAGM DETAILS, see Dwg. No. 66163.

07.27.23

STATE OF ARKANSAS
LICENSED PROFESSIONAL ENGINEER
ERIC S. CHRISTIANSEN
No. 19188

Eric S. Christiansen

BRIDGE ENGINEER

SHEET 4 OF 4
BRIDGE B
DETAILS OF 234'-0" CONTINUOUS W-BEAM UNIT
HWY. 612 OVER HWY. 68

ROUTE 612 SEC. 1

ARKANSAS STATE HIGHWAY COMMISSION

LITTLE ROCK, ARK.

DRAWN BY: FAN DATE: 04-23
CHECKED BY: DHP DATE: 04-23
DESIGNED BY: WKB DATE: 04-23

FILENAME: B012326bD_S4.DGN
SCALE: ½" = 1'-0"

BRIDGE NO. B7613

DRAWING NO. 66177

Date Plotted: 7/21/2023

DATE REVISED	DATE FILMED	DATE REVISED	DATE FILMED	FED. ROAD DIST. NO.	STATE	FED. AID PROJ. NO.	SHEET NO.	TOTAL SHEETS
				6	ARK.		389	838
				JOB NO.		012326		
				①	A&B7613	JOINT DETAILS		66178

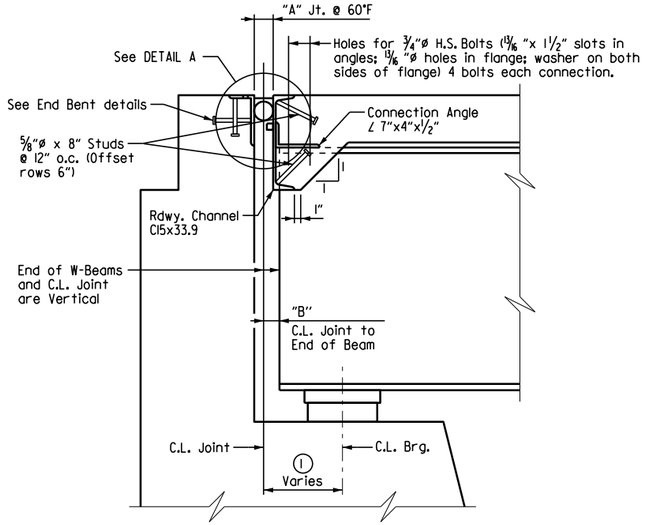

① Measured Along C.L. Beam. See details on Dwg. Nos. 66167.

SECTION THRU JOINT AT END BENTS

Scale: 1" = 1'-0"
Note: Sections thru Joints are taken normal to C.L. Joints

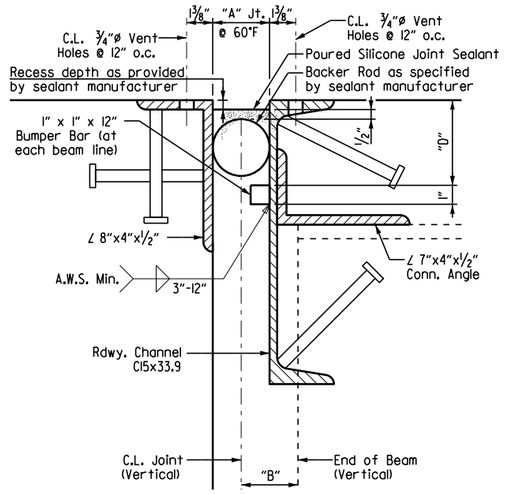

NOTE: Concrete shall be hand packed under the joint armor. Care shall be taken to ensure that concrete completely fills the areas below the top channel flange.

DETAIL A

Scale: 3" = 1'-0"

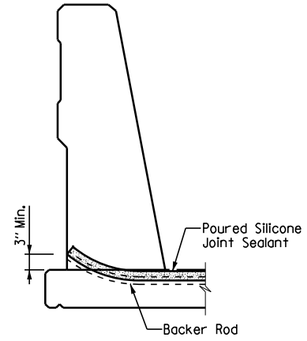

JOINT SEAL PLACEMENT AT CURB

Scale: ¾" = 1'-0"

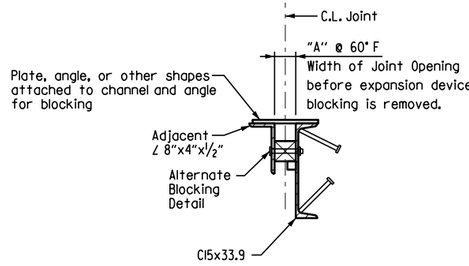

DETAILS FOR BLOCKING EXPANSION JOINT DEVICE

NOTE:
Each expansion joint device shall be blocked in the Shop by the Fabricator to the dimension shown, and the blocking details shall be shown on the Shop Drawings. Blocking shall be placed within 2 feet of each end of the device and with a maximum spacing of 8 feet.

EXPANSION DEVICE INSTALLATION AT END BENTS:

The contractor may elect to install the expansion device using one of the following two alternatives:

1) The concrete span pour adjacent to joint shall be placed before the end bent backwall is placed. After the end bent backwall forms are in place and the beams erected, the blocked expansion device shall be installed and adjusted for grade. All connection bolts shall be fully tightened prior to placing the deck concrete adjacent to the bent. Immediately prior to pouring the backwall concrete, the blocking shall be removed, the opening adjusted for temperature, and the backwall constructed.

2) The backwall shall be poured to the optional construction joint after beams are erected. The blocked expansion device shall be installed and adjusted for grade. All connection bolts shall be fully tightened prior to placing the deck concrete adjacent to the bent. Immediately prior to pouring the remainder of the backwall concrete, the blocking shall be removed and the opening adjusted for temperature.

Cleaning and painting of all exposed surfaces of the expansion joint device shall be in accordance with Section 638 and will not be paid for directly but will be considered subsidiary to STRUCTURAL STEEL IN BEAM SPANS (M270, GRADE 50). Structural steel completely embedded in concrete need not be painted.

SILICONE JOINT DATA

	Bent Number	"A" Width Perpendicular to Joint at 24 Hour Average Temperature ** of:			"B" Perpendicular to Joint at 60°F	Bumper Plate Size	"D"
		40° F	60° F	80° F			
Bridge A	1	2 3/16"	2"	1 13/16"	3" ±	1" x 1"	4½"
	4	2 3/16"	2"	1 13/16"	3" ±	1" x 1"	4½"
Bridge B	1	2 3/16"	2"	1 13/16"	3" ±	1" x 1"	4½"
	4	2 3/16"	2"	1 13/16"	3" ±	1" x 1"	4½"

** The temperature used to set the joint opening shall be the approximate average air temperature during the 24 hour period immediately before the bolts are tightened. The Engineer shall establish the temperature. Interpolation of the table may be necessary.

NOTES:
The temperature limitations recommended by the sealant manufacturer shall be observed.

The sealant shall be installed only when the average 24 hour air temperature is between 40°F and 80°F.

BACKER ROD NOTE:
Use an appropriately sized backer rod at the depth shown in the manufacturer's literature based on the joint width at the time of sealing.

Except as noted, do not install more backer rod than can be sealed in the same day.

The contractor shall verify separation of the backer rod from the joint material after the joint material has set.

07.27.23

STATE OF ARKANSAS
LICENSED PROFESSIONAL ENGINEER
No. 19188
ERIC S. CHRISTIANSEN

Eric S. Christiansen

BRIDGE ENGINEER

DETAILS OF POURED SILICONE JOINT HWY. 612 OVER HWY. 68

ROUTE 612 SEC. 1

ARKANSAS STATE HIGHWAY COMMISSION

LITTLE ROCK, ARK.

DRAWN BY: FAN DATE: 04-23 FILENAME: B012326mD_J.DGN
CHECKED BY: DHP DATE: 04-23 SCALE: No Scale
DESIGNED BY: WKB DATE: 04-23

BRIDGE NO. A&B7613 DRAWING NO. 66178

Date Plotted: 7/21/2023

DATE REVISED	DATE FILMED	DATE REVISED	DATE FILMED	FED. ROAD DIST. NO.	STATE	FED. AID PROJ. NO.	SHEET NO.	TOTAL SHEETS
				6	ARK.		390	838
				JOB NO.		012326		
				1	A&B7613	TRAFFIC RAIL		66179

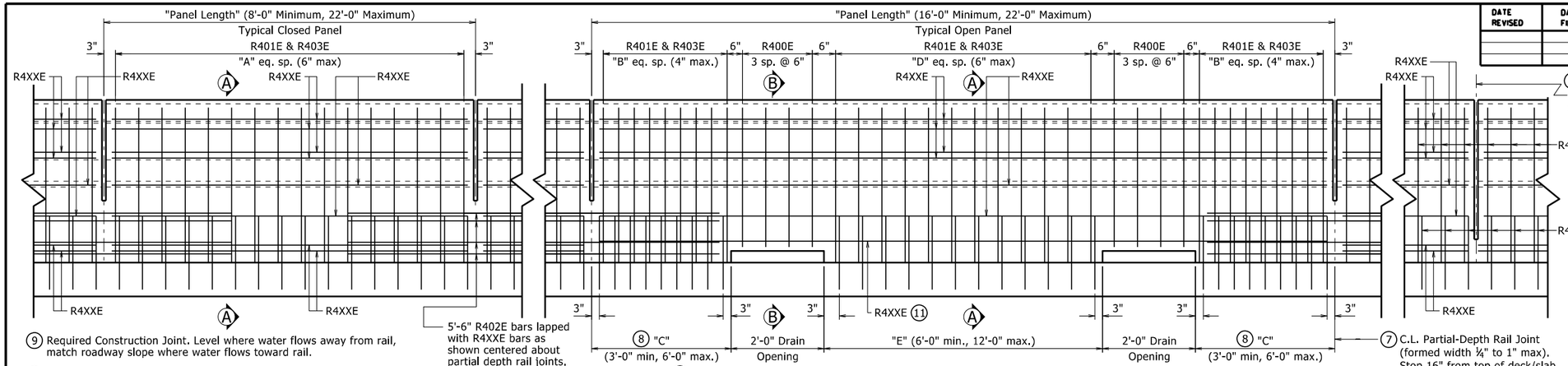

(1) ELEVATION - SINGLE SLOPE TRAFFIC RAIL

(9) Required Construction Joint. Level where water flows away from rail, match roadway slope where water flows toward rail.

(10) Top of Abutment Wing & Required Construction Joint (match bridge deck/slab construction joint slope). See Plans for Wing reinforcing.

(11) These bars shall be raised up over drain opening as shown in "SECTION B-B".

(7) C.L. Partial-Depth Rail Joint (formed width ¼" to 1" max). Stop 16" from top of deck/slab. Place at all remaining locations other than at intermediate bents.

(7) C.L. Full-Depth Rail Joint (formed width ¼" to 1" max). Stop 6" from top of deck/slab. Place at all intermediate bent locations where rail is continuous.

(1) All measurements shown are along gutterline at base of rail.

(2) Minimum embedment into deck/slab.

(3) Refer to Bridge General Notes for Textured Coating finish requirements.

(4) C.L. 1" ø formed holes for ⅞" ø bolts. See Standard Drawings GR-10 and GR-12 for additional information.

(5) These bars will not be included in the "TABLE OF VARIABLES", see plans for additional information.

(6) Field bend front leg of R401E bar as required to maintain minimum 1½" front face clearance within limits of taper.

(7) When optional slip forming is used: to control cracking, all rail joints must be V-grooved around the perimeter of the rail prior to concrete set and sawing. Depth of V-groove shall be ½". Sawing of the joints shall be done as soon as practical to a width of ¼", and must be controlled so it will follow the V-Groove.

(8) End posts shall be the same length within a panel.

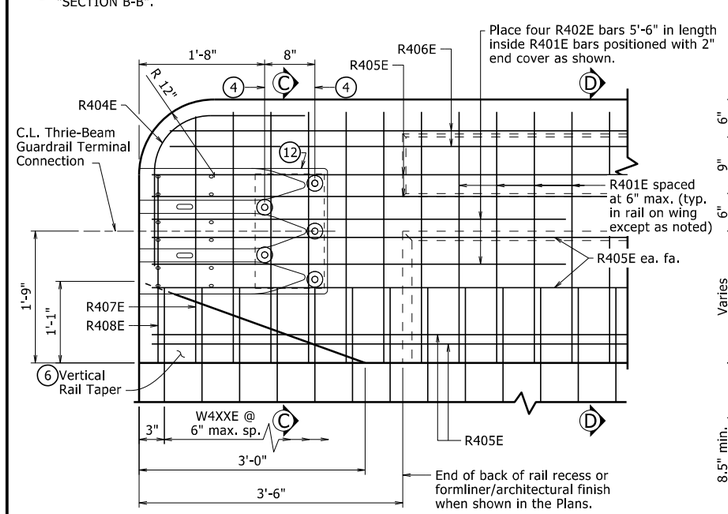

(1)(5) RAIL TERMINUS DETAIL

1" = 1'-0"

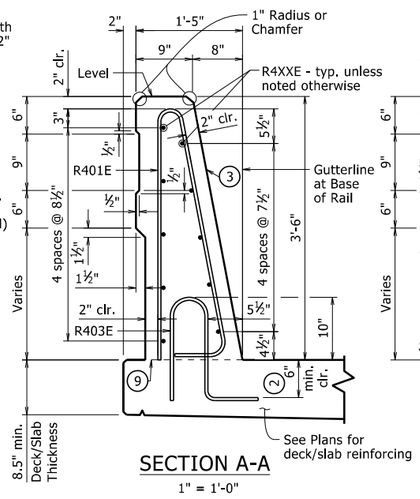

SECTION A-A

1" = 1'-0"

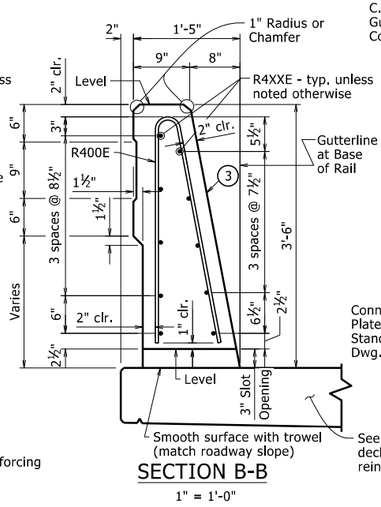

SECTION B-B

1" = 1'-0"

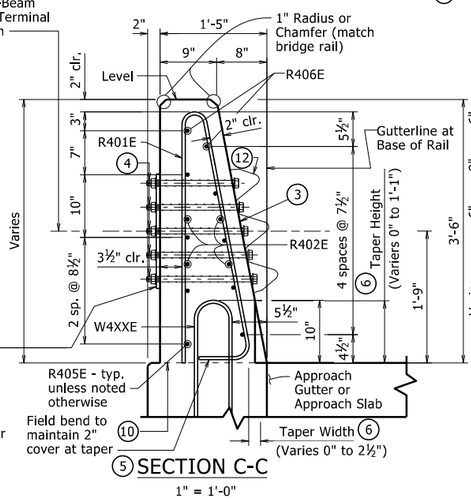

(5) SECTION C-C

1" = 1'-0"

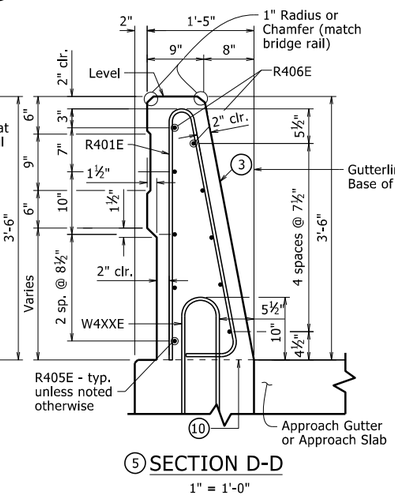

(5) SECTION D-D

1" = 1'-0"

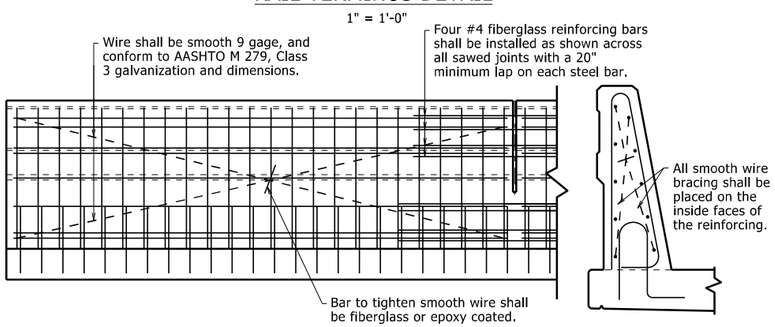

The extruded rail shall conform to the horizontal and vertical lines shown on the plans or as directed by the Engineer and shall present a smooth, uniform appearance and texture. Unless otherwise noted, exposed surfaces may be given a light brush finish or a Class 3, Textured Coating Finish in place of Class 2, Rubbed Finish.

All panels shall be braced as required to prevent racking.

Slip forming will not be allowed on bridges where formliner with architectural treatment is used unless approval from the Engineer is obtained.

DETAILS OF OPTIONAL SLIP FORMING OF BRIDGE TRAFFIC RAIL

No Scale

BENDING DIAGRAM

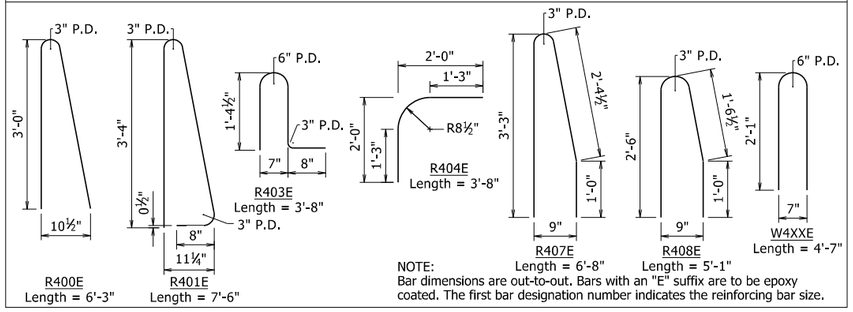

NOTE: Bar dimensions are out-to-out. Bars with an "E" suffix are to be epoxy coated. The first bar designation number indicates the reinforcing bar size.

GENERAL NOTES

This rail has been evaluated and accepted to be of equal strength to railings with similar geometry, which have been evaluated by full-scale crash test to meet MASH TL-4 criteria.

For Table of Variables, Rail Bar List, locations of Full and Partial Depth Rail Joints, and Wing & Rail Bar Lists, see Plans.

For location of drain openings, see Plans. Drain openings will not be allowed over Railroad Right of Way, travelled roadways, and protected waterways.

Rail Terminus details, including Rail Taper, are not applicable when bridge railing is continuous with roadway railing.

Scales shown are for full size 22"x34" drawings. When using 11"x17" drawings, reduce scale by one half.

(12) Bolt Special End Shoe to face of rail as shown. Tapered washers are not required between the head of the bolts and the sloped face of the rail. Tighten the five terminal connection bolts in a well distributed pattern to prevent damage or distortion of the thrie-beam connection. Cut bolts off after installation so as to extend no more than ¾" beyond nut. Paint ends of cut-off bolts with zinc-rich paint. This work and material will not be paid for directly but shall be considered subsidiary to associated contract items.

TABLE OF VARIABLES

Closed Rail Panels			Open Rail Panels					
Panel Length	A	R4XXE	Panel Length	B	C	D	E	R4XXE

See Dwg. No. 66161 & 66176 for table with values.

THESE DETAILS ARE APPLICABLE UNLESS OTHERWISE SHOWN IN THE PLAN DETAILS, SPECIAL PROVISIONS, OR SUPPLEMENTAL SPECIFICATIONS.

07·27·23

STATE OF ARKANSAS
LICENSED PROFESSIONAL ENGINEER
No. 19188
ERIC S. CHRISTIANSEN

Eric S. Christiansen

BRIDGE ENGINEER

DETAILS FOR MODIFIED BRIDGE TRAFFIC RAIL TYPE SSTR42

ROUTE 612 SEC. 1

ARKANSAS STATE HIGHWAY COMMISSION

LITTLE ROCK, ARK.

DRAWN BY: FAN DATE: 04-23
CHECKED BY: DHP DATE: 04-23
DESIGNED BY: WKB DATE: 04-23
FILENAME: B012326MD_S2.dgn
SCALE: AS NOTED

BRIDGE NO. A&B7613 DRAWING NO. 66179

Date Plotted: 7/27/2023

DATE REVISED	DATE FILMED	DATE REVISED	DATE FILMED	FED. ROAD DIST. NO.	STATE	FED. AID PROJ. NO.	SHEET NO.	TOTAL SHEETS
				6	ARK.		39	838
				JOB NO.		012326		
				① A&B7613		ELASTO. BEARINGS		66180

① Care shall be taken to ensure that the external load plate is in full and complete contact with the beam or girder flange before welding begins.

② C.L. Bearing shall align with C.L. Beam

Note: The direction of bevel of the external load plate may not be accurately depicted with respect to the Ta and Tb values shown in the Table of Fabricator Variables.

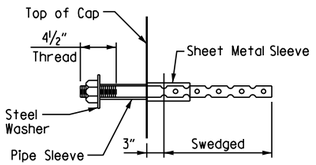

ANCHOR BOLT DETAIL

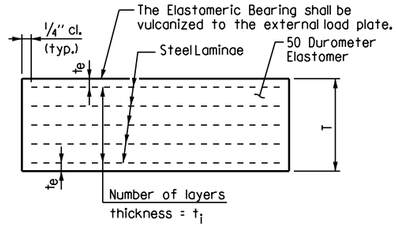

t_e = thickness of elastomer cover on top and bottom of pad

t_i = thickness of elastomer between steel laminae

N = number of elastomer layers of thickness t_i

ELASTOMERIC BEARING

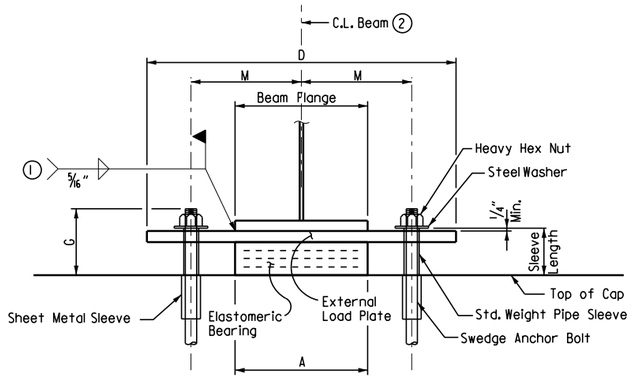

FRONT VIEW @ BENT NOS. 1 & 4

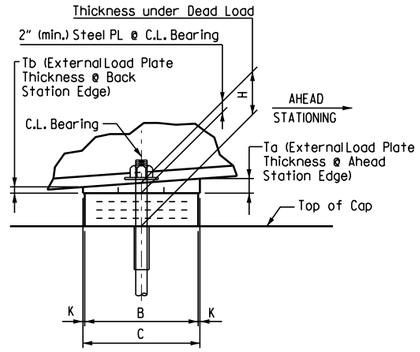

SIDE VIEW @ BENT NOS. 1 & 4

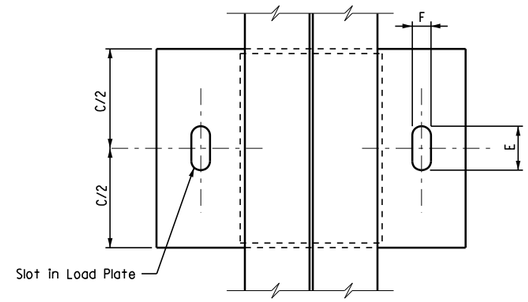

PLAN VIEW @ BENT NOS. 1 & 4

NOTE:
Anchor Bolts may be cast in place or drilled and grouted into place. If Anchor Bolts are to be cast in place, the Galvanized Sheet Metal Sleeves will not be required. If Anchor Bolts are to be drilled and grouted in place, the Galvanized Sheet Metal Sleeves shall be cast in place as shown. Sleeves shall be dry packed with styrofoam, urethane foam, or approved equal prior to pouring of concrete. After pouring of the cap and prior to erection of Structural Steel, the dry pack shall be removed and holes for the anchor bolts shall be accurately drilled into the concrete. Bolts placed in drilled holes shall be accurately set and fixed using a QPL-approved epoxy or non-shrink grout that completely fills the holes. Galvanized Sheet Metal Sleeves shall meet the requirements of ASTM A653, CS Type B or approved equivalent, be of minimum 16 gauge thickness, and be galvanized according to ASTM B695, Class 50. Galvanized Sheet Metal Sleeves will not be paid for directly, but will be considered subsidiary to the item "STRUCTURAL STEEL IN PLATE GIRDER SPANS, (M 270, Gr. 50)".

GENERAL NOTES

Elastomeric Bearings shall conform to Section 808 of the Standard Specifications and shall be paid for at the unit price bid for "ELASTOMERIC BEARINGS."

External load plates and shear blocks shall conform to AASHTO M 270, Grade 50. Pipe sleeves shall be ASTM A 53, Grade B, and shall be galvanized to conform to AASHTO M 232, Class C or ASTM B695, Class 50. External load plates (with shear blocks as applicable) shall be completely fabricated (including bevel and bolt holes) and shall be cleaned before vulcanizing to the elastomeric bearing. The surface in contact with the elastomeric bearing shall be cleaned in accordance with subsection 808.03. Other surfaces shall be blast cleaned in accordance with subsection 807.84(b) for painted steel.

Anchor Bolts, Washers, and Nuts shall conform to subsection 807.07 of the Standard Specifications. The anchor bolt grade of steel shall be as specified in the "Table of Fabricator Variables". Indentations shall be circular with rounded bottoms and staggered as shown in the details.

Pipe Sleeves, Anchor Bolts, Washers, and Nuts shall be paid for at the unit price bid for "STRUCTURAL STEEL IN BEAM SPANS (A709, Gr. 50)".

Unless otherwise approved by the Engineer, welding of the external load plate at expansion bearings to the beam will be allowed only when 1) the approximate average air temperature during the 24 hour period immediately preceding welding is between 40 F and 80 F; and 2) the slots in the external load plate are positioned to center on the anchor bolts; and 3) no horizontal deformation of the elastomeric pad is evident. If welding at other temperatures is required, the Engineer will provide adjustment data.

External load plates shall be painted in accordance with Section 807.75. Mask areas that are to be welded in the field.

Bearings shall be seated in accordance with Subsection 808.08. This work and materials are considered subsidiary to the item "Elastomeric Bearings" and will not be paid for directly.

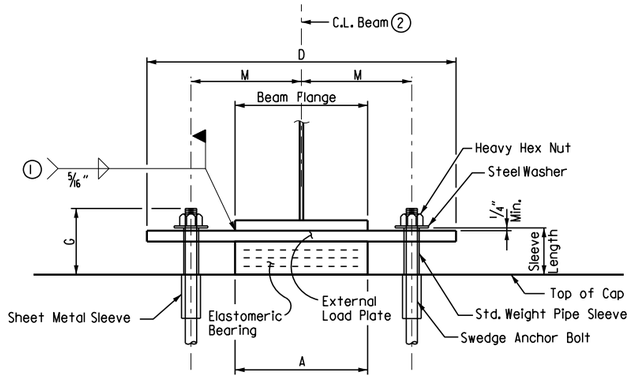

FRONT VIEW @ BENT NOS. 2 & 3

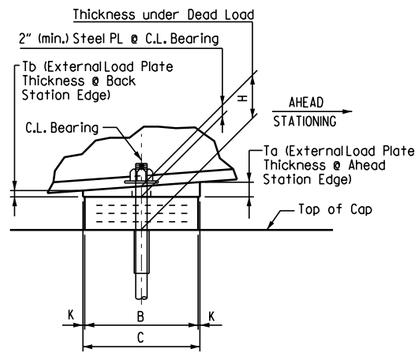

SIDE VIEW @ BENT NOS. 2 & 3

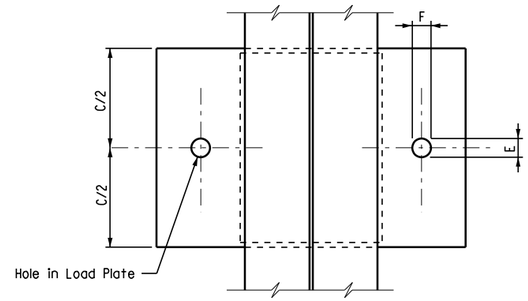

PLAN VIEW @ BENT NOS. 2 & 3

TABLE OF FABRICATOR VARIABLES

③ Maximum Design Load = Service I Limit State

LOCATION							ELASTOMERIC PAD							EXTERNAL LOAD PLATE								ANCHOR BOLT				
	BENT NO(S).	SPAN NO.	BEAM OR GIRDER NO.	BEARING TYPE	NO. of BEARINGS EACH BENT	③ MAXIMUM DESIGN LOAD (KIPS)	G	H	A	B	N	t_i	t_e	NO. & THICKNESS OF STEEL LAMINAE	T	C	D	E	F	K	M	T_a	T_b	ANCHOR BOLT (Ø x L)	ANCHOR BOLT GRADE	PIPE SLEEVE SIZE (Ø x L)	SHEET METAL SLEEVE SIZE (Ø x L)	STEEL WASHER SIZE (O.D.)
BRIDGE A	1	1	All	Exp.	6	83	9¼"	6¼"	12½"	10½"	6	½"	¼"	7 @ 12 Ga.	4¼"	11½"	23½"	4½"	2⅝"	½"	8¾"	2.05"	1.95"	1¾" x 30"	55	2" x 6½"	4" x 9"	3⅜"
	2	1 & 2	All	Fixed	6	239	9¾"	6¼"	16½"	14½"	6	½"	¼"	7 @ 12 Ga.	4¼"	15½"	28½"	3⅛"	3⅛"	½"	11"	2.04"	1.96"	2¼" x 35"	55	2½" x 6½"	4" x 9"	4"
	3	2 & 3	All	Fixed	6	239	9¾"	6¼"	16½"	14½"	6	½"	¼"	7 @ 12 Ga.	4¼"	15½"	28½"	3⅛"	3⅛"	½"	11"	2.02"	1.98"	2¼" x 35"	55	2½" x 6½"	4" x 9"	4"
	4	3	All	Exp.	6	83	9¼"	6¼"	12½"	10½"	6	½"	¼"	7 @ 12 Ga.	4¼"	11½"	23½"	4½"	2⅝"	½"	8¾"	2.01"	1.99"	1¾" x 30"	55	2" x 6½"	4" x 9"	3⅜"
BRIDGE B	1	1	All	Exp.	6	88	9¼"	6¼"	12½"	10½"	6	½"	¼"	7 @ 12 Ga.	4¼"	11½"	27½"	4⅝"	2⅝"	½"	10¾"	2.05"	1.95"	1¾" x 30"	55	2 x 6½"	4" x 9"	3⅜"
	2	1 & 2	All	Fixed	6	246	9¾"	6¼"	16½"	14½"	6	½"	¼"	7 @ 12 Ga.	4¼"	15½"	28½"	3⅛"	3⅛"	½"	11"	2.05"	1.95"	2¼" x 35"	55	2½" x 6½"	4" x 9"	4"
	3	2 & 3	All	Fixed	6	246	9¾"	6¼"	16½"	14½"	6	½"	¼"	7 @ 12 Ga.	4¼"	15½"	28½"	3⅛"	3⅛"	½"	11"	2.02"	1.98"	2¼" x 35"	55	2½" x 6½"	4" x 9"	4"
	4	3	All	Exp.	6	88	9¼"	6¼"	12½"	10½"	6	½"	¼"	7 @ 12 Ga.	4¼"	11½"	27½"	4⅝"	2⅝"	½"	10¾"	2.01"	1.99"	1¾" x 30"	55	2 x 6½"	4" x 9"	3⅜"

07-27-23

STATE OF ARKANSAS
LICENSED PROFESSIONAL ENGINEER
No. 19188
ERIC S. CHRISTIANSEN

Eric S. Christiansen

BRIDGE ENGINEER

DETAILS OF ELASTOMERIC BEARINGS HWY. 612 OVER HWY. 68

ROUTE 612 SEC. 1

ARKANSAS STATE HIGHWAY COMMISSION

LITTLE ROCK, ARK.

DRAWN BY: FAN DATE: 04-23
CHECKED BY: DHP DATE: 04-23
DESIGNED BY: WKB DATE: 04-23
FILENAME: B012326mD_E.DGN
SCALE: No Scale

BRIDGE NO. A&B7613 DRAWING NO. 66180

Date Plotted: 7/21/2023

DATE REVISED	DATE REVISED	FED. ROAD DIST. NO.	STATE	JOB NO.	SHEET NO.	TOTAL SHEETS
		6	ARK.	012326	392	838
		07614		LAYOUT		66181

FOR R/W DATA AND GUARDRAIL DETAILS, SEE ROADWAY PLANS

NOTES:
Use Type F Approach Slab at each end of bridge.
For details, see Std. Dwg. No. 55040FI.

Use Type F Approach Gutters at each end of bridge.
For details, see Std. Dwg. No. 55030F.

Use Type N-2 Drop Inlets at each end of bridge. See Std. Dwg. FPC-9N & Roadway plans.

For "GENERAL NOTES", see Dwg. No. 66183.

For "BORING LEGEND" and "N" VALUES, see Dwg. No. 66182.

For Retaining Wall Borings, See Dwg. No. 66336 & 66337.

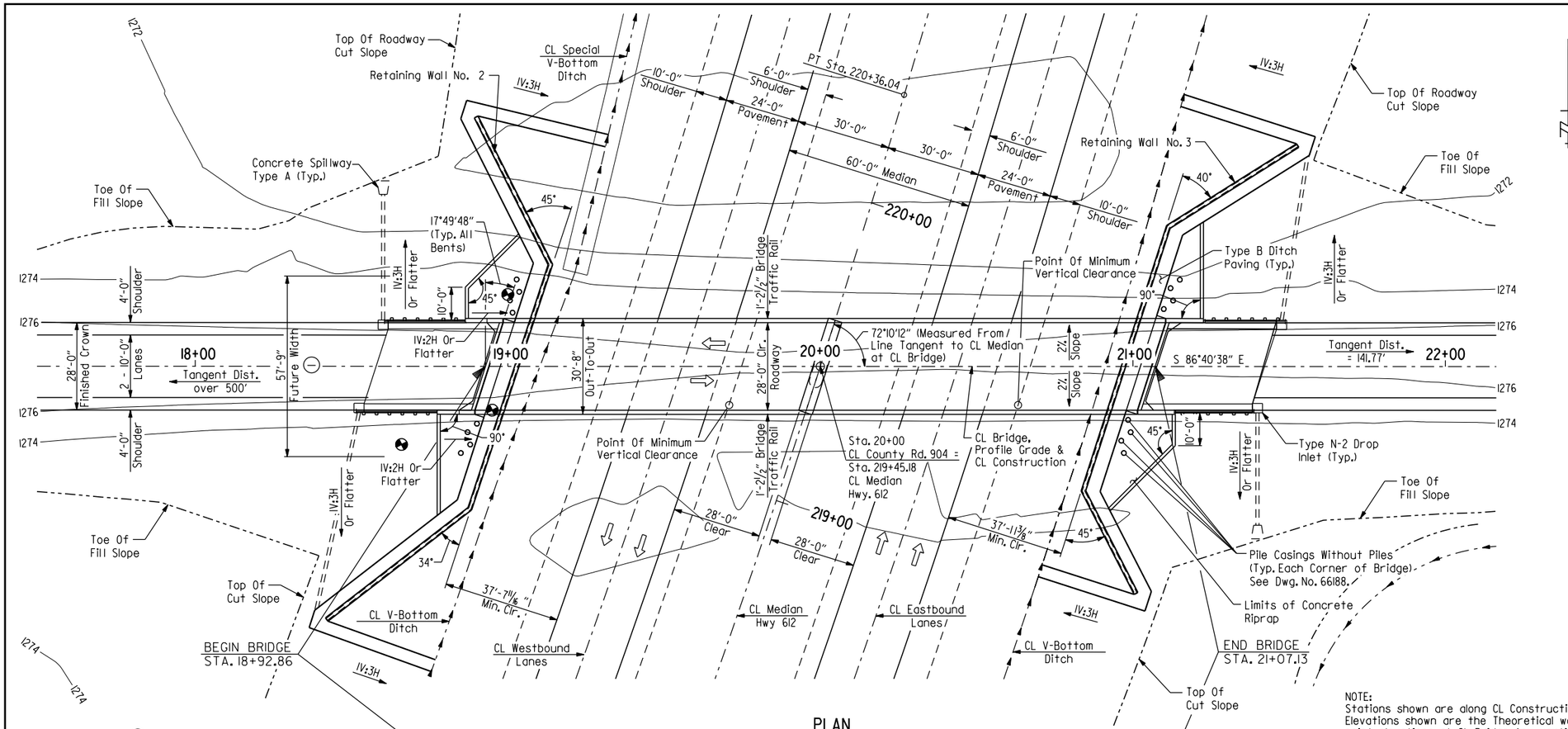

PLAN

(1) Retaining walls accommodate a future bridge width consisting of a 12' painted median and two 12' lanes with one 6'-6" sidewalk and one 12'-0" sidepath.

NOTE:
Stations shown are along CL Construction. Elevations shown are the Theoretical working point elevations at CL Bridge. Any vertical dimension referenced to CL Deck is based on Theoretical working point elevation at CL Bridge. See "ROUNDING DETAIL" on Std. Dwg. No. 55007 for additional information.

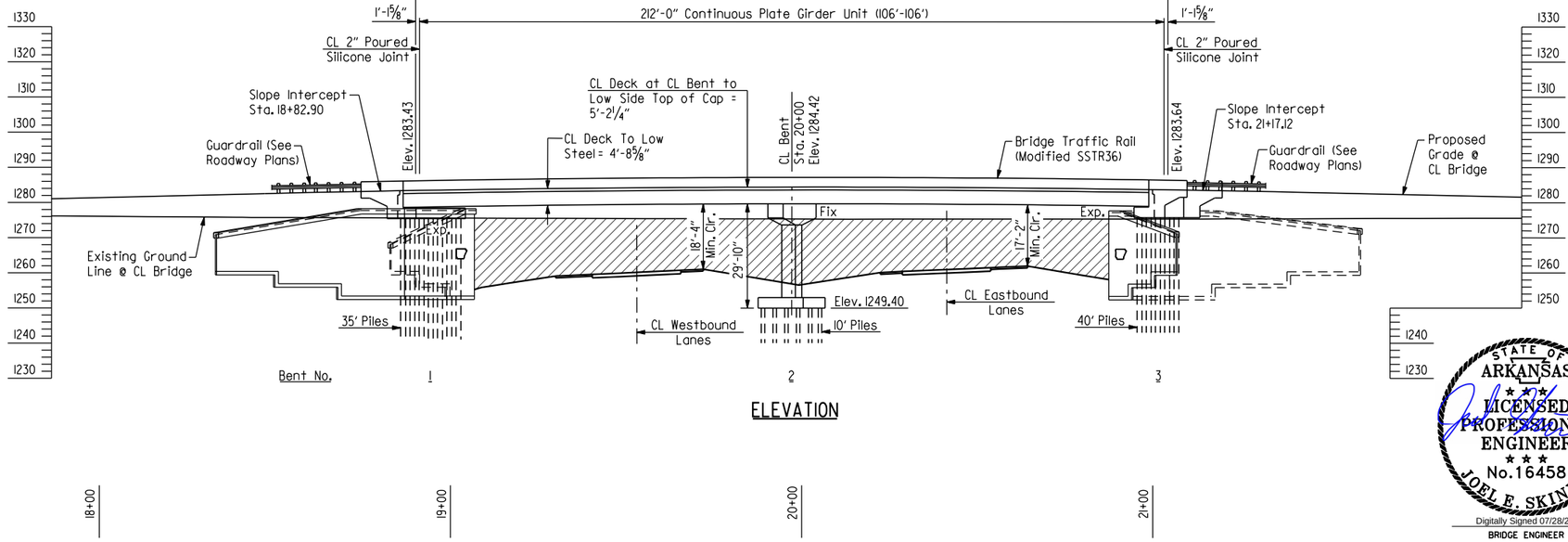

ELEVATION

CL MEDIAN CURVE DATA

PI = 199+99.50
Δ = 72°45'26.4" LT.
D = 01°30'00"
T = 2813.94
L = 4850.49
PC = 171+85.55
PT = 220+36.04
e = 0.054'/'
R = 3819.72'

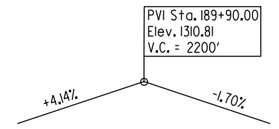

VERTICAL CURVE DATA

Highway 612
(Profile Grade Along Inside Edge Of Lane)

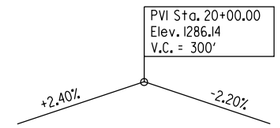

VERTICAL CURVE DATA

County Rd. 904
(Profile Grade Along CL County Rd. 904)

STATE OF ARKANSAS
LICENSED PROFESSIONAL ENGINEER
No. 16458
JOEL E. SKINNER
Digitally Signed 07/28/2023
BRIDGE ENGINEER

SHEET 1 OF 3
LAYOUT OF BRIDGE
COUNTY ROAD 904 (LIBERTY ROAD)
OVER HIGHWAY 612
HWY. 412 - HWY. 112
(SPRINGDALE BYPASS) (F)
WASHINGTON COUNTY

ROUTE 612 SEC. 1

ARKANSAS STATE HIGHWAY COMMISSION

LITTLE ROCK, ARK.

DRAWN BY: CWT DATE: JUNE 2022 FILENAME: b012326x3_11.dgn
CHECKED BY: JHR DATE: JUNE 2022 SCALE: 1"=20'
DESIGNED BY: MRA DATE: JUNE 2022

BRIDGE NO. 07614 DRAWING NO. 66181

JESkinner 7/28/2023 12:09:32 PM
WORKSPACE: ARDOT Bridge
\\garverinc.local\gdata\Projects\20IT\170I660 - ARDOT 012326 Hwy 412 - Hwy 112\Drawings\b012326x3_SI01-L0.dgn
REVISED DATE:

DATE REVISED	DATE REVISED	FED. ROAD DIST. NO.	STATE	JOB NO.	SHEET NO.	TOTAL SHEETS
		6	ARK.	012326	393	838
		07614		LAYOUT		66182

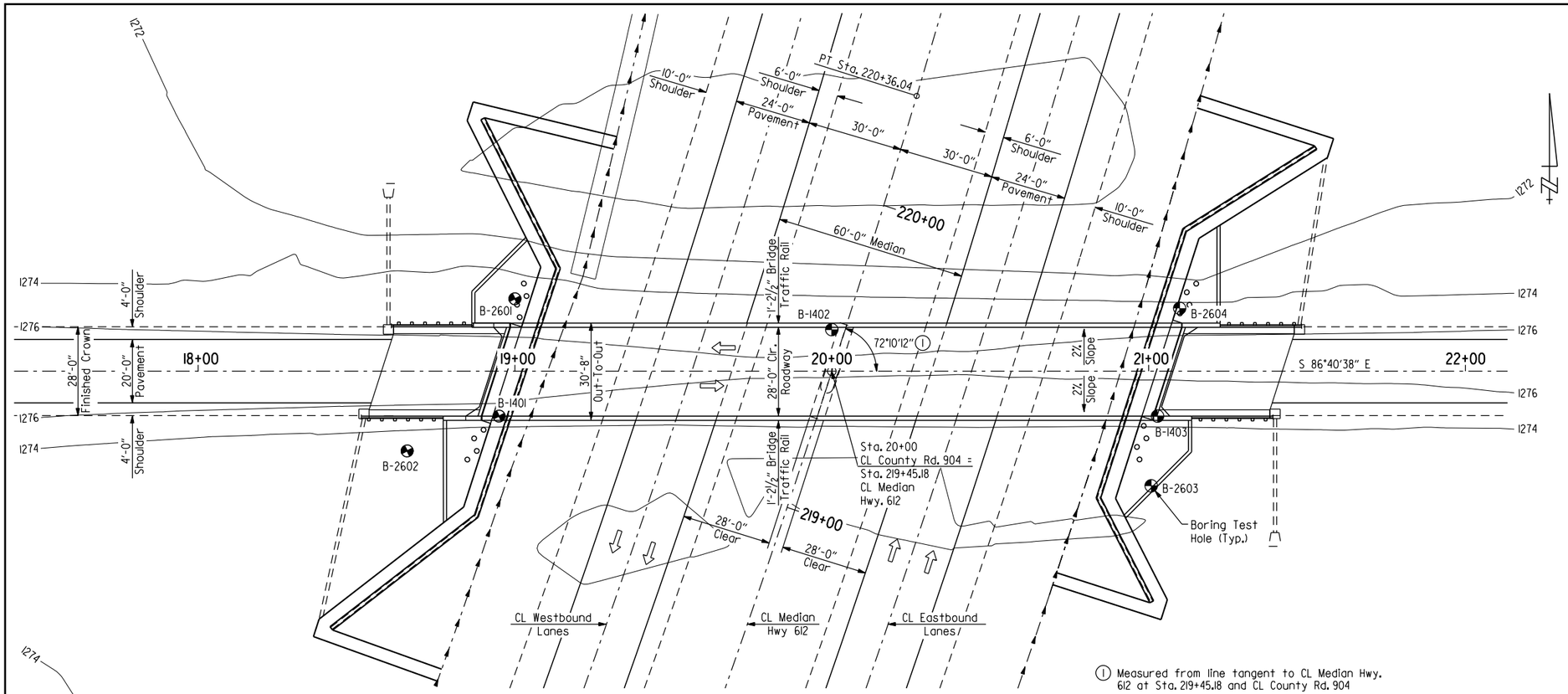

(1) Measured from line tangent to CL Median Hwy. 612 at Sta. 219+45.18 and CL County Rd. 904

PLAN

BORING LEGEND

A - Gray, dark brown, dark gray & brown, medium dense to very dense, clayey sand.
B - Dark gray & brown, medium stiff, lean clay with sand.
C - Brown, dark gray, yellowish orange, tan & black, medium dense to very dense, clayey sand.
D - Gray, stiff, lean clay with sand.
E - Gray, stiff, lean clay.
F - Beige, very stiff, sandy fat clay.
G - Gray, very stiff, lean clay.
H - Gray, dense to very dense, clayey sand with gravel.
I - Chert: White, lt. gray, moderately weathered.
J - Clay: Red, brown, with chert fragments.
K - Chert: White, lt. gray, moderately to severely weathered.
L - Chert: Lt. gray, slightly to intensely weathered.
M - Sand: Brown, red, grades coarser at depth, with clay and chert gravel.
N - Chert: White, lt. gray, slightly to intensely weathered.
O - Chert: Lt. gray, slightly to severely weathered.
P - Chert: Lt. gray, weathered.
Q - Chert: White, lt. gray, moderate to intense weathering.
R - Gray & brown clayey sand

NOTE:
For retaining wall borings, see Dwg. No. 66336 & 66337.

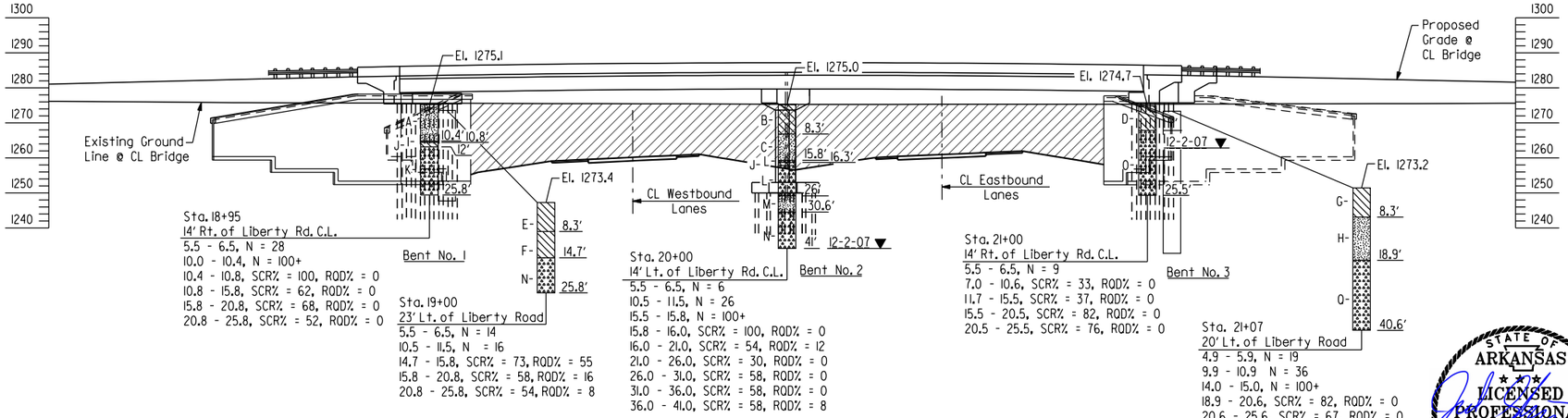

ELEVATION OF SOIL BORINGS

STATE OF ARKANSAS
LICENSED PROFESSIONAL ENGINEER
No. 16458
JOEL E. SKINNER
Digitally Signed 07/28/2023
BRIDGE ENGINEER

SHEET 2 OF 3
LAYOUT OF BRIDGE
COUNTY ROAD 904 (LIBERTY ROAD)
OVER HIGHWAY 612
HWY. 412 - HWY. 112
(SPRINGDALE BYPASS) (F)
WASHINGTON COUNTY

ROUTE 612 SEC. 1

ARKANSAS STATE HIGHWAY COMMISSION

LITTLE ROCK, ARK.

DRAWN BY: CWT DATE: JUNE 2022 FILENAME: b012326x3_12.dgn
CHECKED BY: JHR DATE: JUNE 2022 SCALE: 1"=20'
DESIGNED BY: MRA DATE: JUNE 2022

BRIDGE NO. 07614 DRAWING NO. 66182

JEskinner 7/28/2023 12:09:33 PM
WORKSPACE: ARDOT Bridge
\\garverinc.local\gdata\Projects\2017\17017660 - ARDOT 012326 Hwy 412 - Hwy 112\Drawings\b012326x3_S102-B0.dgn
REVISED DATE:

DATE REVISED	DATE REVISED	FED. ROAD DIST. NO.	STATE	JOB NO.	SHEET NO.	TOTAL SHEETS
		6	ARK.	012326	394	838
		07614		LAYOUT		66183

GENERAL NOTES

BENCH MARK: Vertical Control Data are shown on the Survey Control Data Sheets.

CONSTRUCTION SPECIFICATIONS: Arkansas State Highway and Transportation Department Standard Specifications for Highway Construction (2014 Edition) with applicable Supplemental Specifications and Special Provisions. Section and Subsection refer to the Standard Construction Specifications unless otherwise noted in the plans.

DESIGN SPECIFICATIONS: AASHTO LRFD Bridge Design Specifications 4th Edition (2007) with 2008 Interim Revisions.

LIVE LOADING: HL93

SEISMIC ZONE: 1 S_{D1} = 0.12g Site Class = D

SEISMIC OPERATIONAL CLASS: Other

MATERIALS AND STRENGTHS:

Class S(AE) Concrete (Superstructure)	f'c = 4,000 psi
Class S Concrete (Substructure)	f'c = 3,500 psi
Reinforcing Steel (AASHTO M 31 or M 322, Type A)	fy = 60,000 psi
Structural Steel (ASTM A709, GR. 50)	Fy = 50,000 psi
Structural Steel (ASTM A709, GR. 36)	Fy = 36,000 psi

BORING LOGS: Boring logs may be obtained from the Construction Contract Development Section of the Program Management Division.

PAINTING: All Grade 50 structural steel except galvanized members, some members in contact with concrete, and as otherwise noted, shall be painted as specified in Subsection 807.75. The color of the paint shall be Dark Brown and shall match Federal Standard 595B, Color Chip No. 20108.

STEEL PILING: Piling shall be HP12x53 (Grade 50) and shall be driven with an approved air, steam or diesel hammer to a minimum safe bearing capacity of 97 tons per pile and into material designated as Chert on the boring legend. Minimum penetration shall be 10' below natural ground for all piles Piling in end bents shall be driven after embankment to bottom of the cap is in place. Lengths of piling shown are for estimating quantities and for use in determining payment for cut-off and build-up in accordance with Section 805. Actual lengths are to be determined in the field. The Contractor shall use approved steel H-pile driving points on all piles.

PILE CASINGS: Pile casings are required for piling within MSE walls at Bent Nos. 1 & 3. Casings shall be installed prior to or during embankment construction and shall extend from top of leveling pad to bottom of cap. Pile casing material shall be of sufficient strength to retain its original form free from harmful distortions after compaction of the fill material surrounding it. The minimum inside diameter of the casings shall be 24". Piles shall be driven through the open casings after the embankment to the bottom of the cap is in place. After driving is complete, the pile casings shall be filled with Class S Concrete, an approved non-shrink grout, mixture used for Portland Cement Pavement, or other approved material in a single continuous operation to completely fill voids. Pile casings and concrete will not be paid for directly but shall be considered subsidiary to the item "STEEL PILING (HP12x53)".

PILE CASINGS WITHOUT PILES: Additional pile casings will be required in accordance with Dwg. No. 66188 to provide for future widening. These casings shall be installed during embankment construction and shall extend from top of leveling pad to approximately one foot below the finished ground. Pile casing diameter and material shall conform to the above. No piling shall be driven through these casings, but they shall be kept clean from debris and capped at the top with a durable waterproof material as approved by the Engineer. Payment for this work and materials shall be considered subsidiary to other contract items in the job.

EXPLORATORY HOLES: The Contractor shall drill exploratory holes at Bent No. 2 in accordance with Special Provision "EXPLORATORY HOLES". The actual locations, number, and depths of exploratory holes are to be determined in the field by the Engineer.

PREBORING: Preboring is required for all piles in Bent Nos. 1 and 3 and shall take place after excavation to the top of leveling pad is complete. The depth of preboring shall be to a 3' depth into material designated as Chert on the boring legend.

Preboring is required for piles in Bent No. 2 if exploratory holes indicate that the depth of rock is less than 8'. Preboring shall be to a 3' depth into material designated as Chert on the boring legend.

The actual size and depth of preboring are to be determined in the field by the Engineer. The Contractor shall be responsible for keeping the prebored holes free from debris prior to driving piles and backfilling which may require the use of temporary casings or other methods. After driving is completed, the prebored hole shall be backfilled with Class S Concrete to the top of rock and the remaining length of prebored hole shall be backfilled in accordance with Subsection 805.08(a). Any related cost to backfilling and temporary casing will not be paid for directly but shall be considered subsidiary to the item "PREBORING".

TEXTURED COATING FINISH: Class 3 Textured Coating Finish shall be applied to bridge and retaining wall surfaces as specified in Special Provision "TEXTURED COATING FINISH" and in accordance with Subsection 802.19(b)(3). Textured Coating Finish shall not be applied on surfaces where Class 2 Protective Surface Treatment is applied.

BRIDGE DECK: The concrete bridge deck shall be given a tine finish as specified for final finishing in Subsection 802.19 for Class 5 Tined Bridge Roadway Surface Finish.

PROTECTIVE SURFACE TREATMENT: Class 2 Protective Surface Treatment shall be applied to the roadway surface and to the roadway face and top of the concrete bridge rails in accordance with Section 803.

PILE FOOTING: The top of all bent footings shall be set a minimum of 2'-0" below finished ground. Foundations for footings shall be prepared in accordance with Section 801.04 and backfilled in accordance with Section 801.08 of the Standard Specification.

MAINTENANCE OF TRAFFIC: See roadway drawings.

DETAIL DRAWINGS:	DRAWING NO(S):
End Bents	66184-66188
Intermediate Bent	66189 & 66190
Elastomeric Bearings	66191
212' Continuous Plate Girder Unit	66192-66196
Retaining Walls	66336, 66337 & 66342-66344
Concrete Riprap	55002 & 66334
General Notes for Steel Bridge Structures	55006
Details for Steel Bridge Structures	55007
Poured Silicone Joints	55008
Steel H-Piling	55020
Type F Approach Gutters	55030F
Type F Approach Slab	55040FI
Bridge Traffic Rail	55070 & 66196

STATE OF ARKANSAS
LICENSED PROFESSIONAL ENGINEER
No. 16458
JOEL E. SKINNER
Digitally Signed 07/28/2023
BRIDGE ENGINEER

SHEET 3 OF 3
LAYOUT OF BRIDGE
COUNTY ROAD 904 (LIBERTY ROAD)
OVER HIGHWAY 612
HWY. 412 - HWY. 112
(SPRINGDALE BYPASS) (F)
WASHINGTON COUNTY
ROUTE 612 SEC. 1

ARKANSAS STATE HIGHWAY COMMISSION
LITTLE ROCK, ARK.

DRAWN BY: CWT DATE: JUNE 2022 FILENAME: b012326x3_l3.dgn
CHECKED BY: JHR DATE: JUNE 2022 SCALE: AS SHOWN
DESIGNED BY: MRA DATE: JUNE 2022
BRIDGE NO. 07614 DRAWING NO. 66183

JESkinner 7/28/2023 12:09:33 PM
WORKSPACE: ARDOT Bridge
\\garverinc.local\gdata\Projects\2017\17017660 - ARDOT 012326 Hwy 412 - Hwy 112\Drawings\b012326x3_S103-GN.dgn
REVISED DATE:

DATE REVISED	DATE REVISED	FED. ROAD DIST. NO.	STATE	JOB NO.	SHEET NO.	TOTAL SHEETS
		6	ARK.	012326	395	838
		07614		END BENT DETAILS		66184

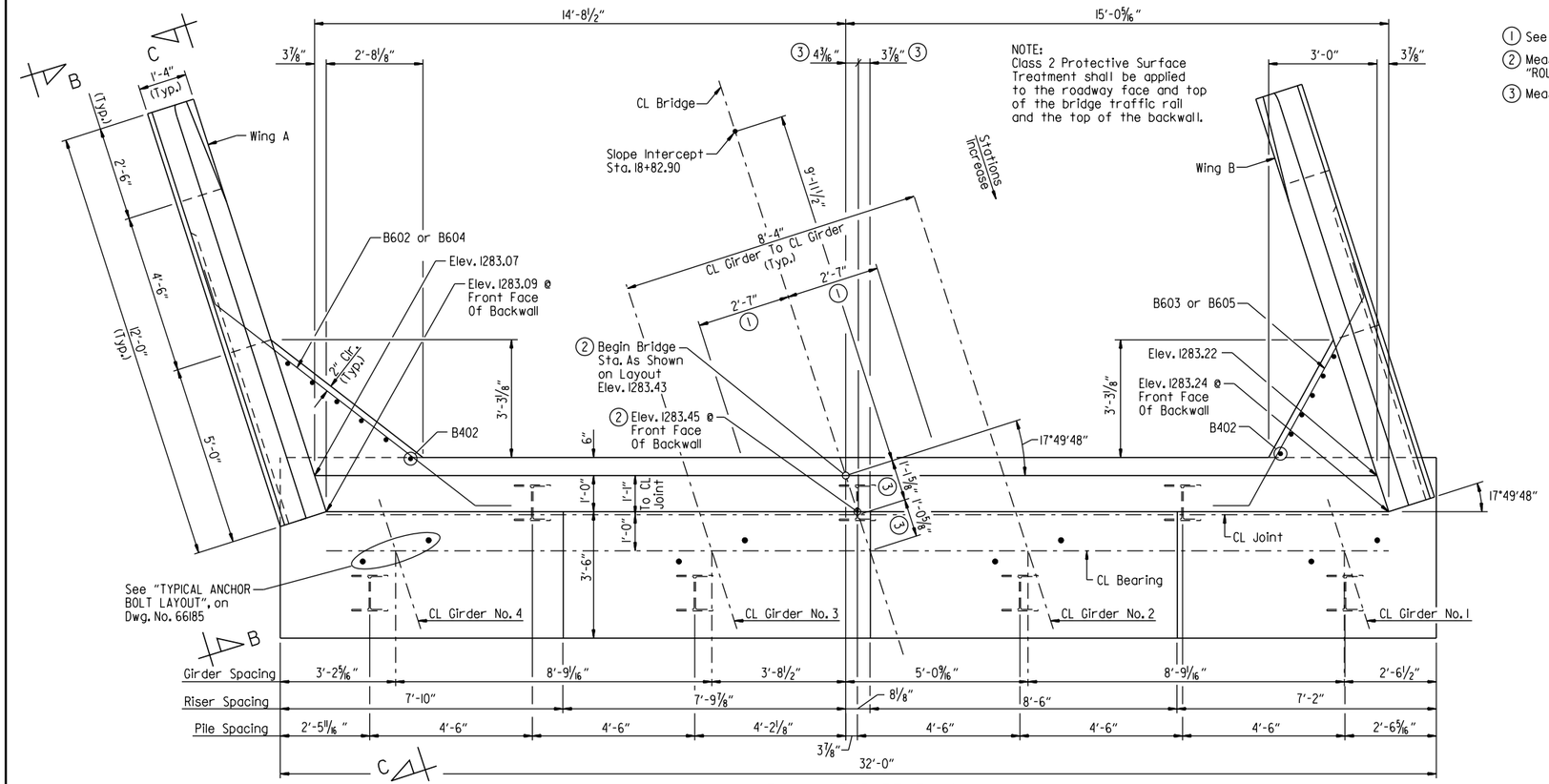

PLAN - END BENT NO. 1
Scale: ½" = 1'-0"

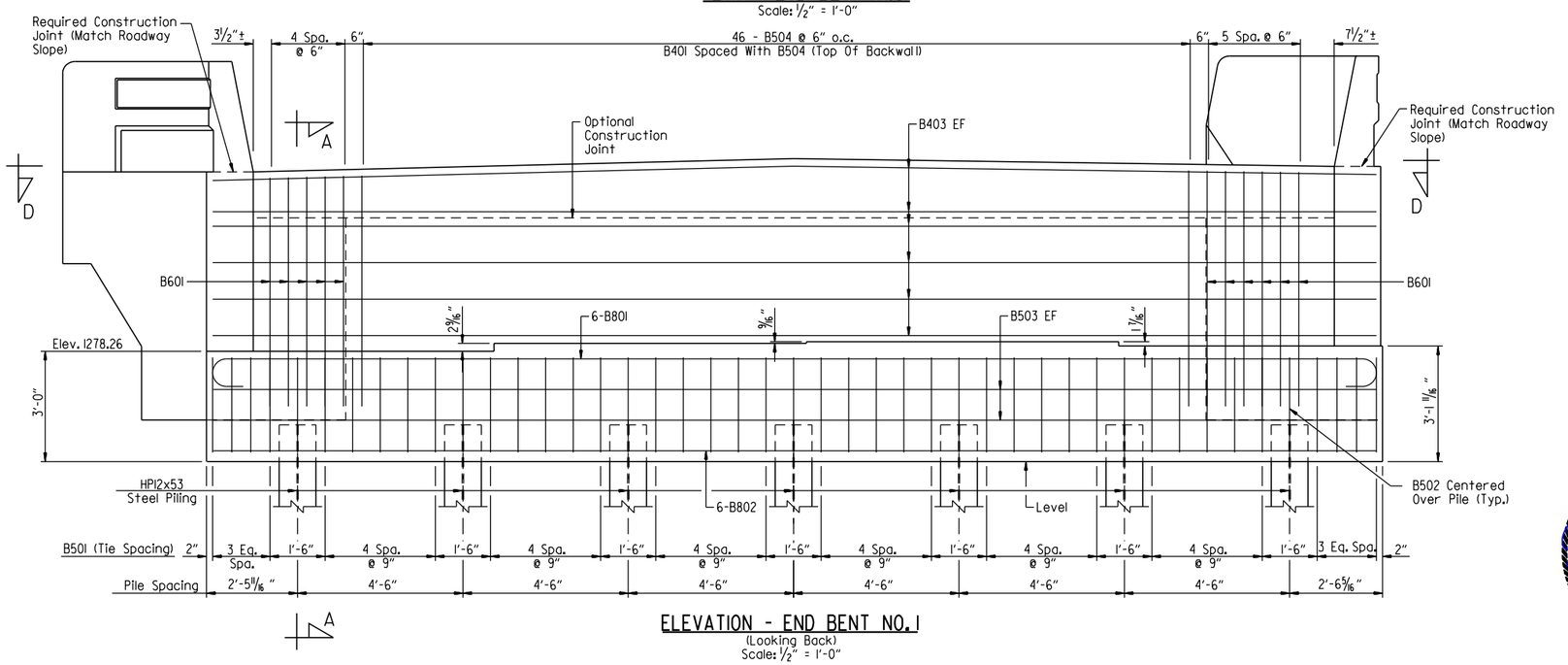

ELEVATION - END BENT NO. 1
(Looking Back)
Scale: ½" = 1'-0"

1. See "ROUNDING DETAIL" on Std. Dwg. No. 55007.
2. Measured to working point - see "ROUNDING DETAIL" on Std. Dwg. No. 55007.
3. Measured to CL Joint

NOTES:
For details of elastomeric bearing pads and anchor bolts, see Dwg. No. 66191.

For "VIEW D-D", "BAR LIST" & "BAR BENDING DIAGRAMS", see Dwg. No. 66187.

For "SECTION A-A", "VIEW B-B" & "VIEW C-C", see Dwg. No. 66186.

For "GENERAL NOTES", see Dwg. No. 66185.

LEGEND
EF = Each Face

STATE OF ARKANSAS
LICENSED PROFESSIONAL ENGINEER
No. 16458
JOEL E. SKINNER
Digitally Signed 07/28/2023
BRIDGE ENGINEER

SHEET 1 OF 5
DETAILS OF END BENTS
COUNTY ROAD 904 (LIBERTY ROAD)
ROUTE SEC.
ARKANSAS STATE HIGHWAY COMMISSION
LITTLE ROCK, ARK.

DRAWN BY: HEW DATE: MAR. 2011 FILENAME: b012326x3_a1.dgn
CHECKED BY: ABH DATE: MAR. 2011 SCALE: AS SHOWN
DESIGNED BY: PCC DATE: MAR. 2011
BRIDGE NO. 07614 DRAWING NO. 66184

JESkinner 7/28/2023 12:09:34 PM
WORKSPACE: ARDOT Bridge
\\garverinc.local\gdata\Projects\2017\17017660 - ARDOT 012326 Hwy 412 - Hwy 112\Drawings\b012326x3_S201-AB.dgn
REVISED DATE:

DATE REVISED	DATE REVISED	FED. ROAD DIST. NO.	STATE	JOB NO.	SHEET NO.	TOTAL SHEETS
		6	ARK.	012326	396	838
		07614		END BENT DETAILS		66185

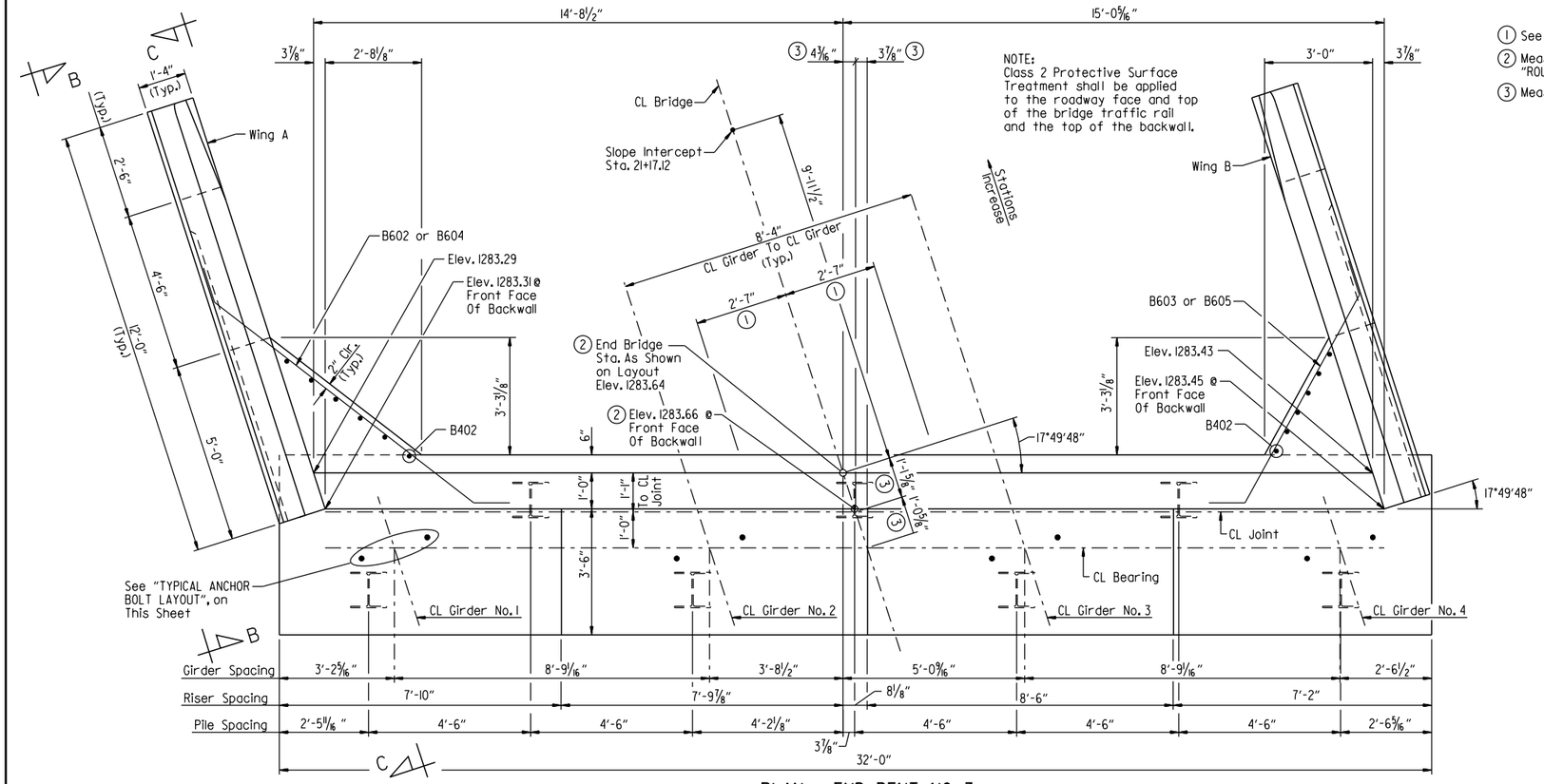

PLAN - END BENT NO. 3

Scale: ½" = 1'-0"

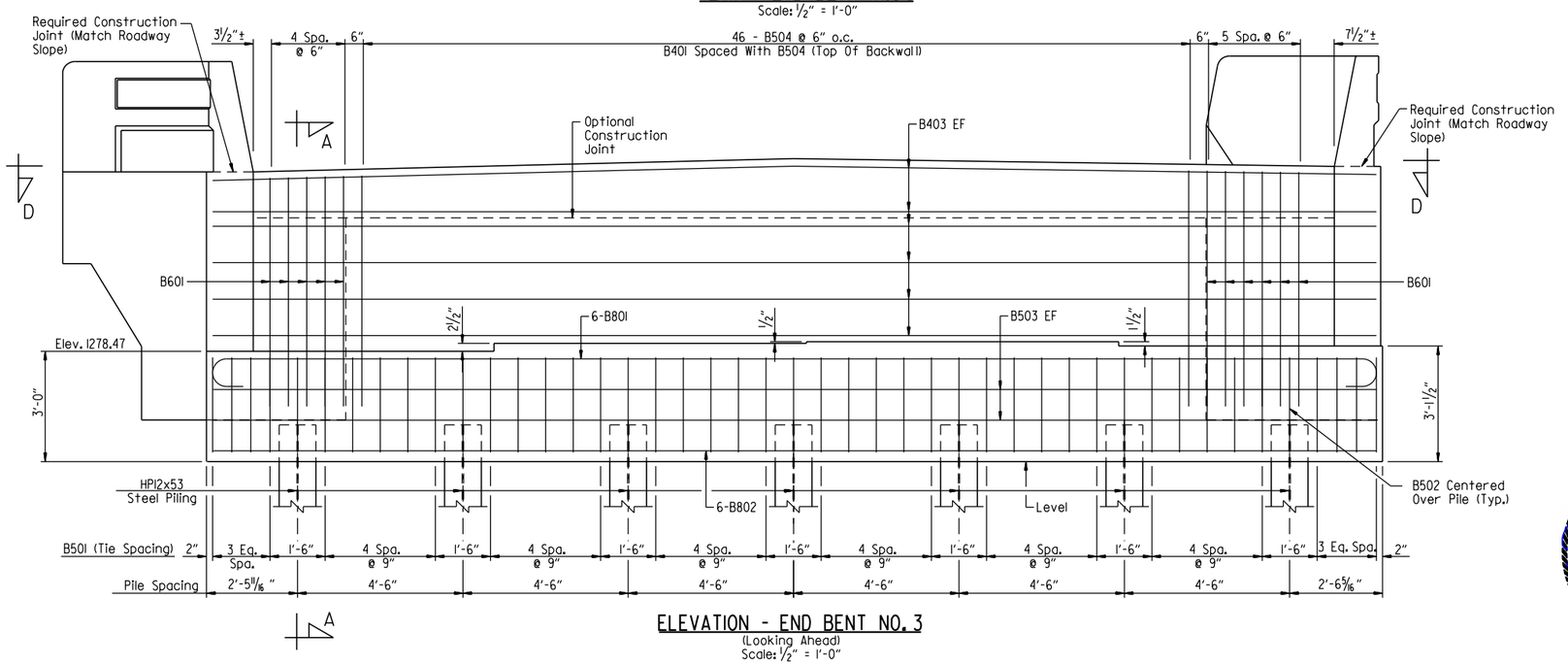

ELEVATION - END BENT NO. 3

(Looking Ahead)
Scale: ½" = 1'-0"

1. See "ROUNDING DETAIL" on Std. Dwg. No. 55007.
2. Measured to working point - see "ROUNDING DETAIL" on Std. Dwg. No. 55007.
3. Measured to CL Joint

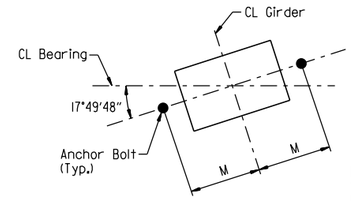

NOTE:
See Dwg. No. 66191 for Details of Elastomeric Bearings.

TYPICAL ANCHOR BOLT LAYOUT

No Scale

GENERAL NOTES

Concrete shall be Class "S" with a minimum 28 day compressive strength f'c = 3,500 psi and shall be poured in the dry. All exposed corners shall be chamfered ¾" unless otherwise noted.

All reinforcing steel shall be Grade 60 (yield strength = 60,000 psi) conforming to AASHTO M 31 or M 322, Type A, with mill test reports.

Structural steel in end bents shall be ASTM A709, Gr. 50 and shall be paid for as "STRUCTURAL STEEL IN PLATE GIRDER SPANS (ASTM A709, GR. 50)".

Class 3 Textured Coating Finish shall be applied to bridge surfaces as specified in Special Provision "TEXTURED COATING FINISH" and in accordance with Subsection 802.19(b)(3).

Top reinforcing bars in cap shall be properly placed to avoid interference with anchor bolts or sheet metal sleeves.

For additional information, See LAYOUT.

NOTES:
For details of elastomeric bearing, dimension M and anchor bolts, see Dwg. No. 66191.

For "VIEW D-D", "BAR LIST" & "BAR BENDING DIAGRAMS", see Dwg. No. 66187.

For "SECTION A-A", "VIEW B-B" & "VIEW C-C", see Dwg. No. 66186.

LEGEND

EF = Each Face

STATE OF ARKANSAS
LICENSED PROFESSIONAL ENGINEER
No. 16458
JOEL E. SKINNER
Digitally Signed 07/28/2023
BRIDGE ENGINEER

SHEET 2 OF 5
DETAILS OF END BENTS
COUNTY ROAD 904 (LIBERTY ROAD)
ROUTE SEC.
ARKANSAS STATE HIGHWAY COMMISSION
LITTLE ROCK, ARK.

DRAWN BY: HEW DATE: MAR. 2011 FILENAME: b012326x3_a2.dgn
CHECKED BY: ABH DATE: MAR. 2011 SCALE: AS SHOWN
DESIGNED BY: PCC DATE: MAR. 2011
BRIDGE NO. 07614 DRAWING NO. 66185

JESkinner 7/28/2023 12:09:34 PM
WORKSPACE: ARDOT Bridge
\\garverinc.local\data\Projects\2017\170176 60 - ARDOT 012326 Hwy 412 - Hwy 112\Drawings\b012326x3_S202-AB.dgn
REVISED DATE:

DATE REVISED	DATE REVISED	FED. ROAD DIST. NO.	STATE	JOB NO.	SHEET NO.	TOTAL SHEETS
		6	ARK.	012326	397	838
		07614		END BENT DETAILS		66186

(1) See "BRIDGE RAIL AESTHETIC DETAIL" on Dwg. No. 66196 for additional information.

(2) Class 3 Textured Coating Finish (Color = Light Brown, Color Chip No. 33522)

(3) Class 3 Textured Coating Finish (Color = Medium Brown, Color Chip No. 30219)

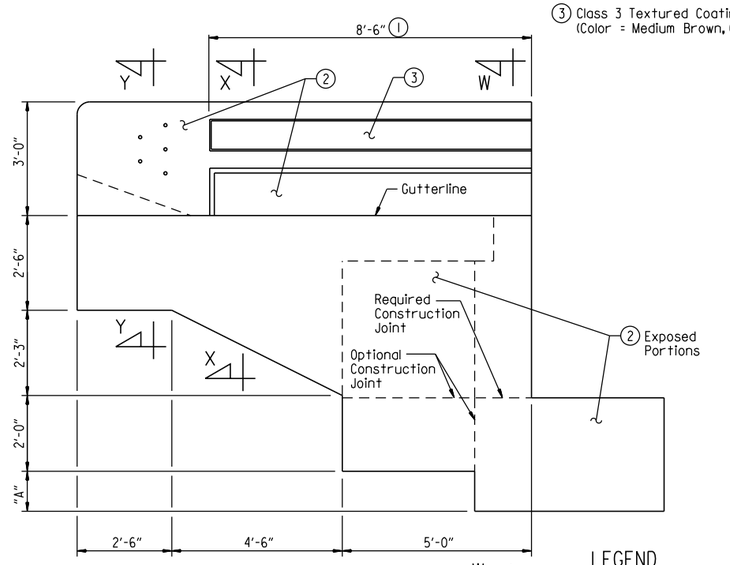

VIEW B-B
Scale: ½" = 1'-0"

NOTE:
See Std. Dwg. No. 55070 for additional details of rail.

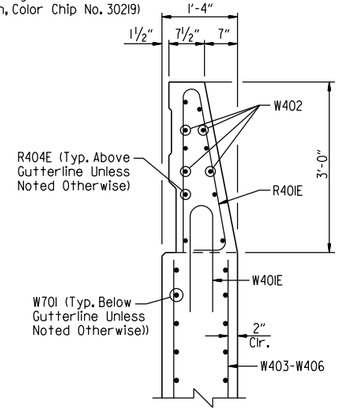

SECTION X-X
Scale: ¾" = 1'-0"

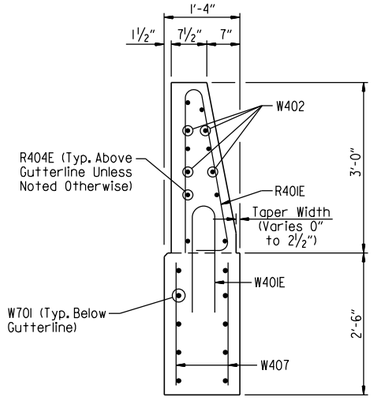

SECTION Y-Y
Scale: ¾" = 1'-0"

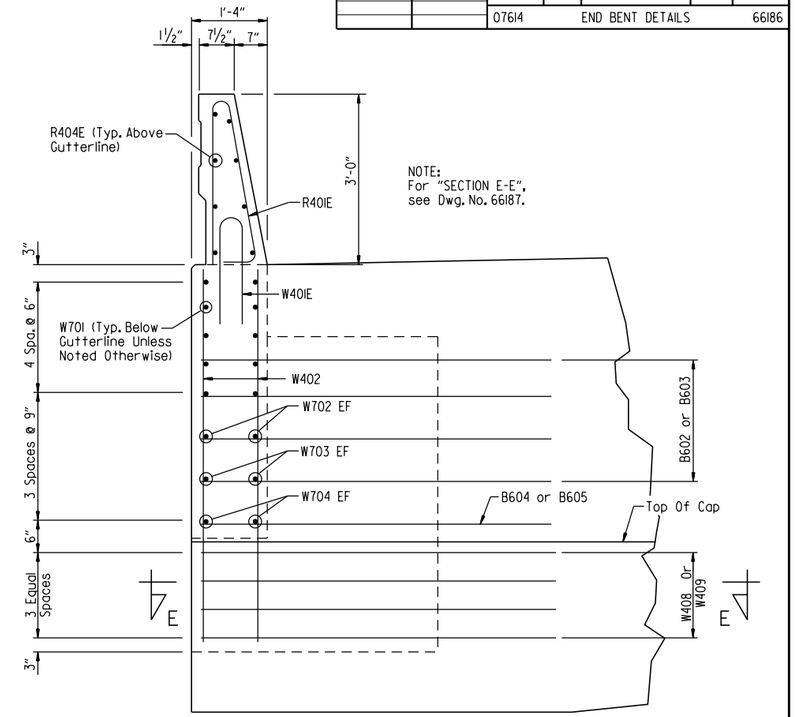

SECTION W-W
Scale: ¾" = 1'-0"

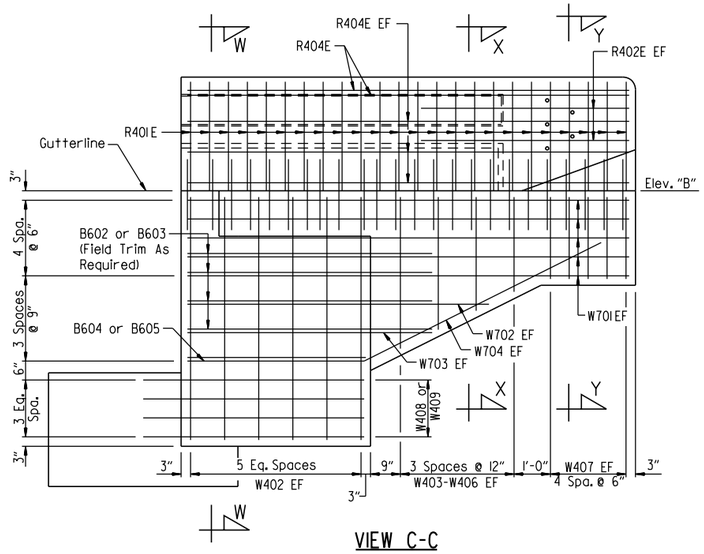

VIEW C-C
Scale: ½" = 1'-0"

LEGEND
EF = Each Face

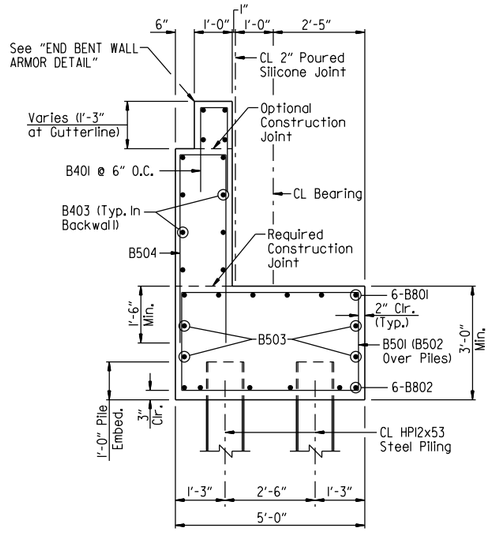

SECTION A-A
Scale: ½" = 1'-0"

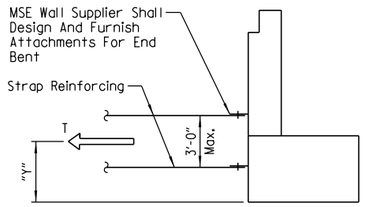

END BENT STRAP DETAIL

T = Resultant Force Required To Be Resisted By Strap Reinforcing

Y = Centroid Of Strap Reinforcing

LIMIT STATE	T (4)	Y
	Kips/Ft.	Ft.
Service	3.1	3
Strength	4.6	

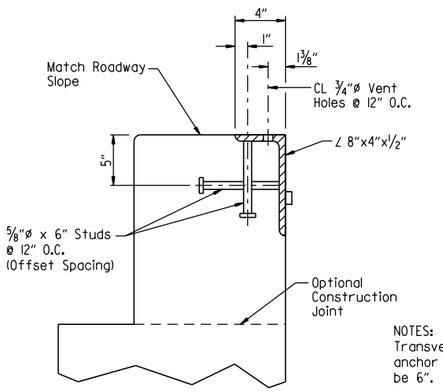

END BENT WALL ARMOR DETAIL
Scale: 2" = 1'-0"

NOTES:
Transverse spacing between vertical anchor studs and vent holes shall be 6".

Concrete shall be hand packed under joint armor.

For additional joint details, see Std. Dwg. No. 55008.

NOTE:
No portion of the backwall shall be poured before the girders are in place. The portion of the backwall above the optional construction joint at the paving bracket shall not be placed until the adjacent deck pour has been made. Refer to the "EXPANSION DEVICE INSTALLATION AT END BENTS" note on Std. Dwg. 55008. No heavy construction equipment shall be allowed within 10' of the backwall before the deck concrete placement for the adjacent span has been completed unless MSE strap reinforcing has been designed to accommodate these loads, see "END BENT STRAP DETAIL", on this Dwg.

TABLE OF VARIABLES

Bent No.	Wing	Dim. "A"	Elev. "B"
1	A	10 5/16"	1282.86
1	B	1'-0 5/16"	1283.03
3	A	10 11/16"	1283.11
3	B	1'-0 7/16"	1283.26

(4) The provided loads do not include any additional loadings due to heavy construction equipment such as cranes. If the Contractor anticipates bringing heavy construction equipment within 10' of the backwall, they shall coordinate with the MSE wall supplier to design strap reinforcing for the anticipated loadings. Tolerable horizontal backwall movement for all loading combinations is 0.2" at the Service Limit State. Design computations shall accompany the wall design submittal to review by the Engineer. See SP "Retaining Walls" for additional information.

STATE OF ARKANSAS
LICENSED PROFESSIONAL ENGINEER
No. 16458
JOEL E. SKINNER
Digitally Signed 07/28/2023
BRIDGE ENGINEER

SHEET 3 OF 5
DETAILS OF END BENTS
COUNTY ROAD 904 (LIBERTY ROAD)

ROUTE SEC.

ARKANSAS STATE HIGHWAY COMMISSION

LITTLE ROCK, ARK.

DRAWN BY: HEW DATE: MAR. 2011 FILENAME: b012326x3_a3.dgn
CHECKED BY: ABH DATE: MAR. 2011 SCALE: AS SHOWN
DESIGNED BY: PCC DATE: MAR. 2011

BRIDGE NO. 07614 DRAWING NO. 66186

JESkinner 7/28/2023 12:09:35 PM
WORKSPACE: ARDOT Bridge
\\garverinc.local\gdata\Projects\20IT\I70IT660 - ARDOT 012326 Hwy 412 - Hwy 112\Drawings\b012326x3_S203-SD.dgn
REVISED DATE:

DATE REVISED	DATE REVISED	FED. ROAD DIST. NO.	STATE	JOB NO.	SHEET NO.	TOTAL SHEETS
		6	ARK.	012326	398	838
		07614		END BENT DETAILS		66187

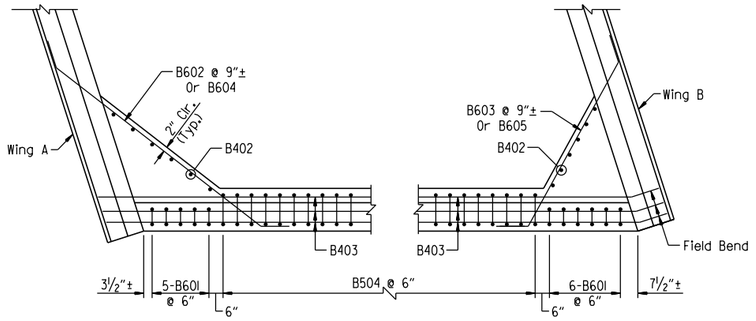

VIEW D-D
Scale: ⅜" = 1'-0"

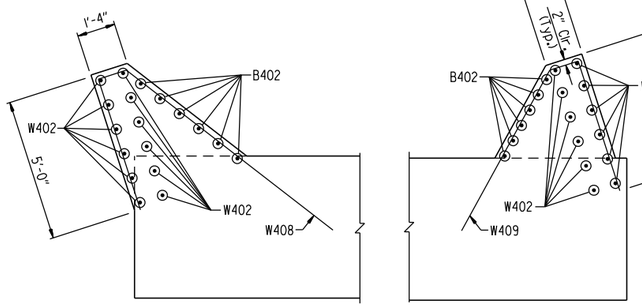

SECTION E-E (WING A)
Scale: ⅜" = 1'-0"

SECTION E-E (WING B)
Scale: ⅜" = 1'-0"

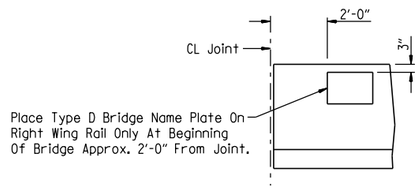

VIEW SHOWING LOCATION OF NAME PLATE
Scale: ½" = 1'-0"

BAR LIST

MARK	NO. REQ'D.	LENGTH	"A"	"B"	PIN DIA.
B401	58	5'-6"	8"	2'-6"	2"
B402	12	5'-2"			Str.
B403	12	31'-7"			Str.
B501	38	15'-0"			2½"
B502	7	9'-7½"	4'-8"	2'-7"	2½"
B503	4	31'-8"			Str.
B504	46	11'-3½"	1'-2"	5'-2"	2½"
B601	12	11'-2"	8"	5'-5"	4½"
B602	4	11'-1"			4½"
B603	4	8'-5"			4½"
B604	1	10'-1"			4½"
B605	1	7'-10"			4½"
B801	6	33'-6"			6"
B802	6	31'-8"			Str.
R401E	48	6'-4"			2½", 3"
R402E	8	5'-6"			Str.
R404E	16	11'-8"			Str.
W401E	48	3'-11"			3¾"
W402	24	6'-4"			Str.
W403 to W406	4 Each	4'-3" to 2'-3"			Str.
W407	20	2'-1"			Str.
W408	4	14'-10"			2"
W409	4	12'-4"			2"
W701	20	11'-8"			Str.
W702	4	7'-11"			Str.
W703	4	6'-5"			Str.
W704	4	11'-8"			5¼"

BAR BENDING DIAGRAMS

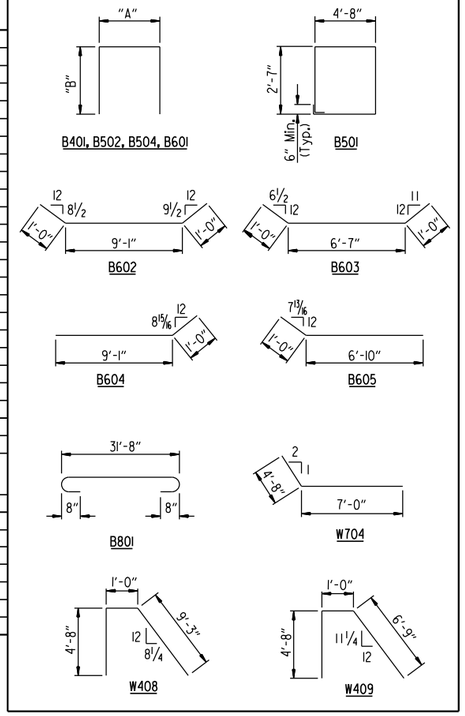

NOTES:
Dimensions of bars in bending diagrams are out-to-out.

Number of bars shown is for one bent only.

Bar designations ending with "E" indicate epoxy coated bars.

For bar bending diagrams of R401E & W401E, see Std. Dwg. No. 55070.

The first bar designation number indicates the reinforcing bar size.

STATE OF ARKANSAS
LICENSED PROFESSIONAL ENGINEER
No. 16458
JOEL E. SKINNER
Digitally Signed 07/28/2023
BRIDGE ENGINEER

SHEET 4 OF 5
DETAILS OF END BENTS
COUNTY ROAD 904 (LIBERTY ROAD)
ROUTE SEC.
ARKANSAS STATE HIGHWAY COMMISSION
LITTLE ROCK, ARK.

DRAWN BY: HEW DATE: MAR. 2011 FILENAME: b012326x3_a4.dgn
CHECKED BY: ABH DATE: MAR. 2011 SCALE: AS SHOWN
DESIGNED BY: PCC DATE: MAR. 2011
BRIDGE NO. 07614 DRAWING NO. 66187

JEskinner 7/28/2023 12:09:35 PM
WORKSPACE: ARDOT Bridge
\\garverinc.local\gdata\Projects\20IT\1701660 - ARDOT 012326 Hwy 412 - Hwy 112\Drawings\b012326x3_S204-BL.dgn
REVISED DATE:

DATE REVISED	DATE REVISED	FED. ROAD DIST. NO.	STATE	JOB NO.	SHEET NO.	TOTAL SHEETS
		6	ARK.	012326	399	838
		07614		END BENT DETAILS		66188

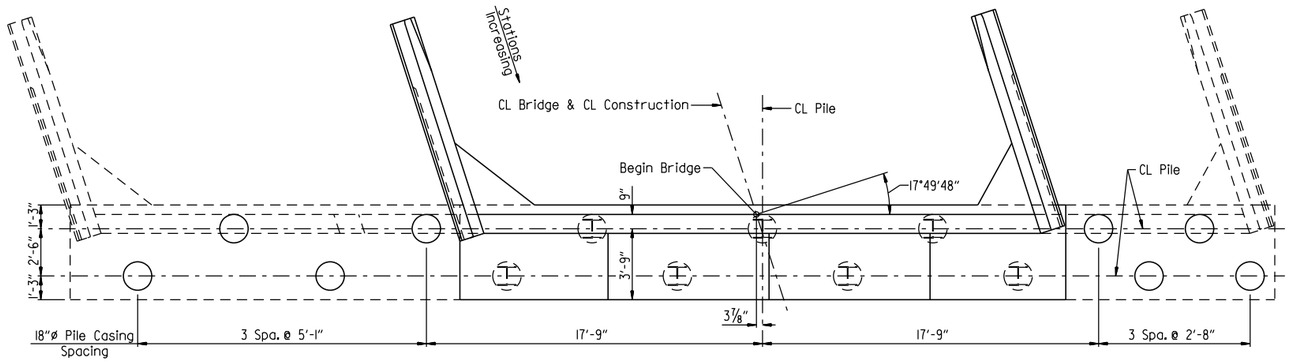

END BENT NO. 1 PILE CASING LAYOUT - PLAN

Scale: 1/4" = 1'-0"

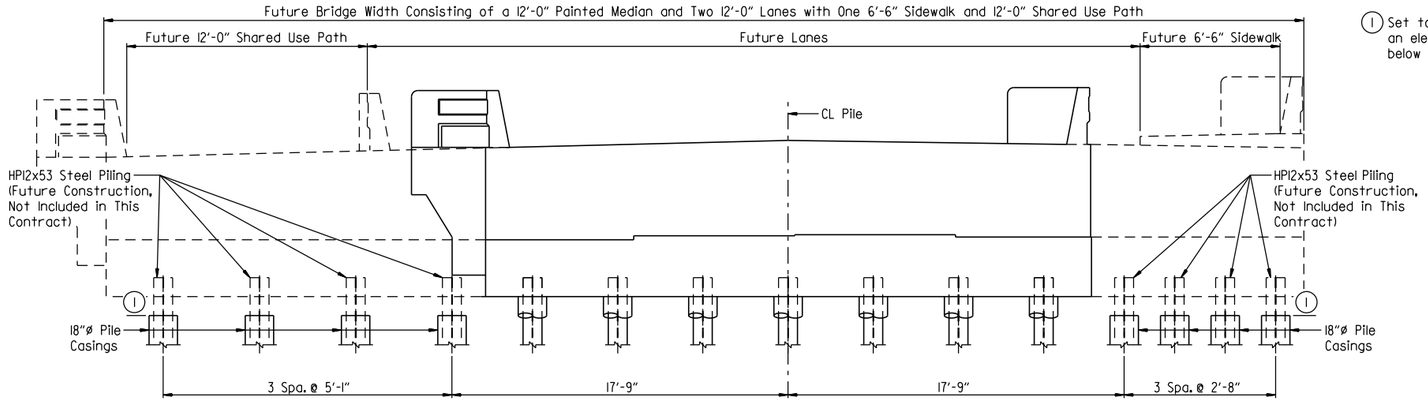

(1) Set top of casing at an elevation 1'-0" min. below finished ground.

PILE CASING LAYOUT - ELEVATION

(Looking Back @ Bent No. 1; End Bent No. 3 Similar)
Scale: 1/4" = 1'-0"

NOTE:
For more information concerning pile casings without piles, see "GENERAL NOTES" on Dwg. No. 66183.

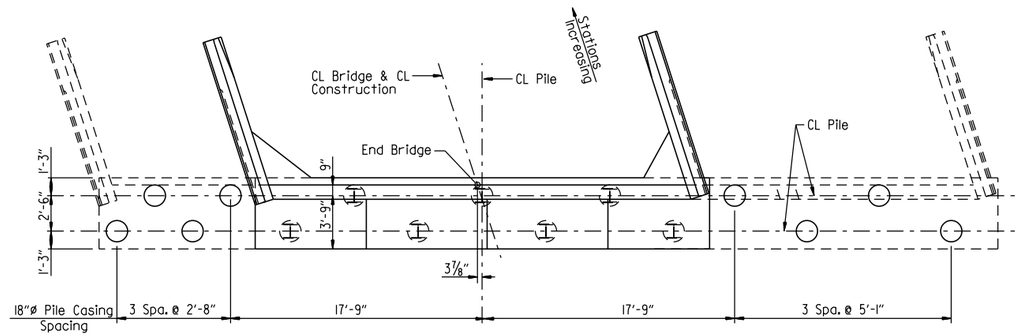

END BENT NO. 3 PILE CASING LAYOUT - PLAN

Scale: 3/16" = 1'-0"

STATE OF ARKANSAS
LICENSED PROFESSIONAL ENGINEER
No. 16458
JOEL E. SKINNER
Digitally Signed 07/28/2023
BRIDGE ENGINEER

SHEET 5 OF 5
DETAILS OF END BENTS
COUNTY ROAD 904 (LIBERTY ROAD)

ROUTE SEC.

ARKANSAS STATE HIGHWAY COMMISSION
LITTLE ROCK, ARK.

DRAWN BY: HEW DATE: MAR. 2011 FILENAME: b012326x3_a5.dgn
CHECKED BY: ABH DATE: MAR. 2011 SCALE: AS SHOWN
DESIGNED BY: PCC DATE: MAR. 2011

BRIDGE NO. 07614 DRAWING NO. 66188

JESkinner 7/28/2023 12:09:36 PM
WORKSPACE: ARDOT Bridge
L:\20T\1701660 - ARDOT 012326 Hwy 412 - Hwy 112\Drawings\b012326x3_5205-FS.dgn
REVISED DATE:

DATE REVISED	DATE REVISED	FED. ROAD DIST. NO.	STATE	JOB NO.	SHEET NO.	TOTAL SHEETS
		6	ARK.	012326	400	838
		07614		INT. BENT DETAILS		66189

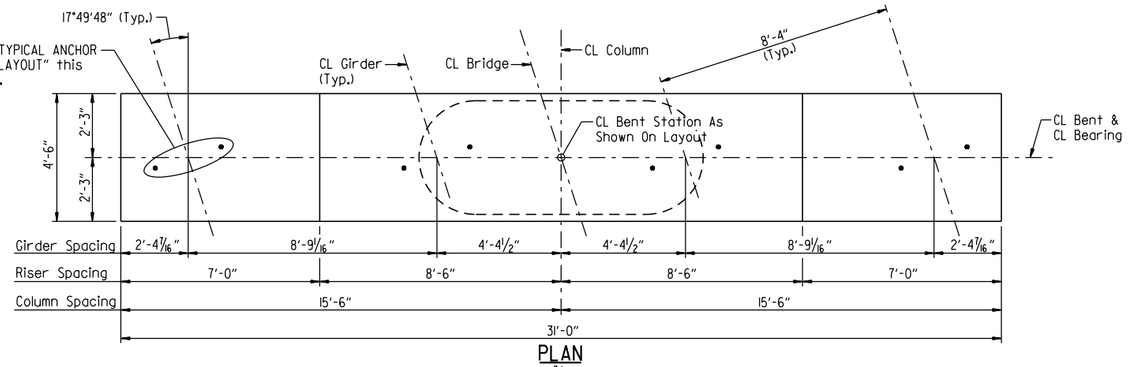

PLAN
Scale: 3/8" = 1'-0"

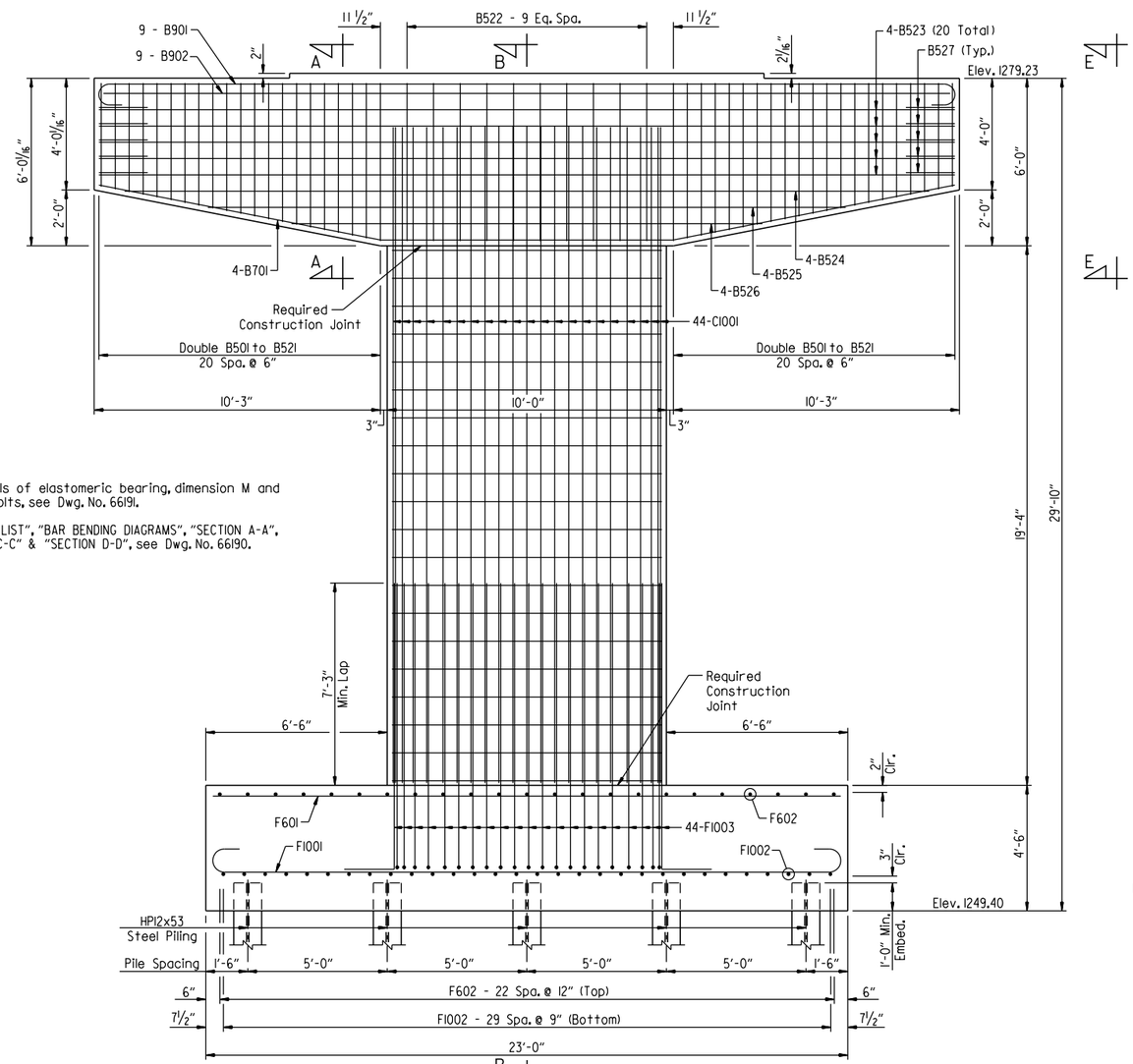

NOTES:
For details of elastomeric bearing, dimension M and anchor bolts, see Dwg. No. 66191.

For "BAR LIST", "BAR BENDING DIAGRAMS", "SECTION A-A", "SECTION C-C" & "SECTION D-D", see Dwg. No. 66190.

ELEVATION
Scale: 3/8" = 1'-0"

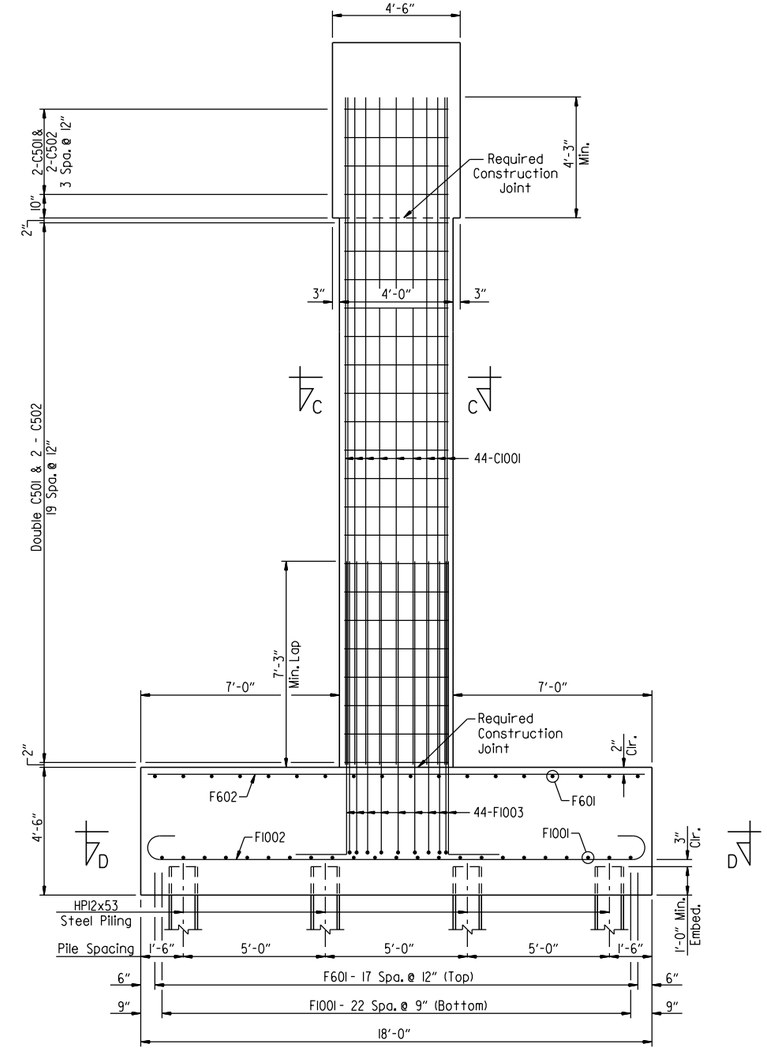

SECTION B-B
Scale: 3/8" = 1'-0"

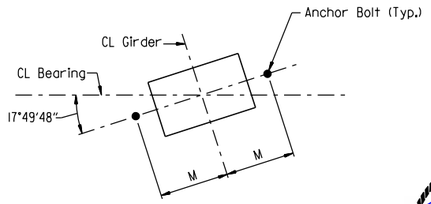

TYPICAL ANCHOR BOLT LAYOUT
No Scale

NOTE:
See Dwg. No. 66191 for details of Elastomeric Bearings.

STATE OF ARKANSAS
LICENSED PROFESSIONAL ENGINEER
No. 16458
JOEL E. SKINNER
Digitally Signed 07/28/2023
BRIDGE ENGINEER

SHEET 1 OF 2
DETAILS OF INTERMEDIATE BENT
COUNTY ROAD 904 (LIBERTY ROAD)
ROUTE SEC.
ARKANSAS STATE HIGHWAY COMMISSION
LITTLE ROCK, ARK.

DRAWN BY: HEW DATE: MAR. 2011 FILENAME: b012326x3_bi.dgn
CHECKED BY: ABH DATE: MAR. 2011 SCALE: AS SHOWN
DESIGNED BY: PCC DATE: MAR. 2011
BRIDGE NO. 07614 DRAWING NO. 66189

JESkinner 7/28/2023 12:09:36 PM
WORKSPACE: ARDOT Bridge
\\garverinc.local\gdata\Projects\20IT\170I7660 - ARDOT 012326 Hwy 412 - Hwy 112\Drawings\b012326x3_S206-BE.dgn
REVISED DATE:

DATE REVISED	DATE REVISED	FED. ROAD DIST. NO.	STATE	JOB NO.	SHEET NO.	TOTAL SHEETS
		6	ARK.	012326	401	838
		07614		INT. BENT DETAILS		66190

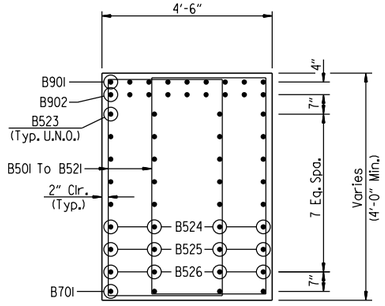

SECTION A-A
Scale: 1/2" = 1'-0"

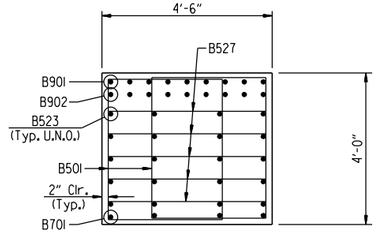

VIEW E-E
Scale: 1/2" = 1'-0"

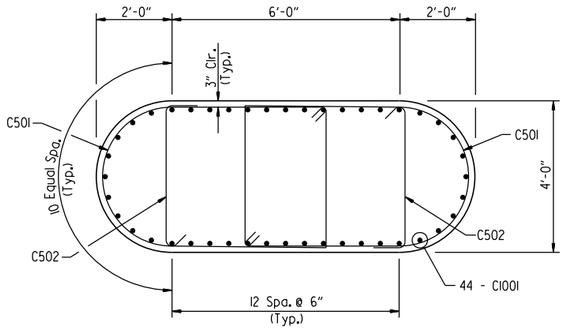

SECTION C-C
Scale: 1/2" = 1'-0"

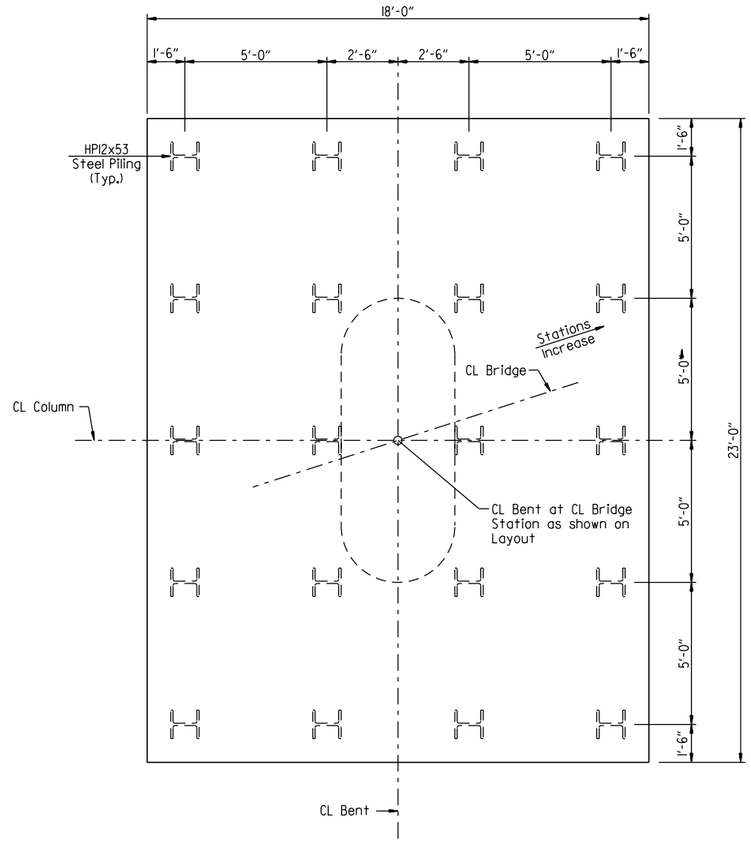

SECTION D-D
Scale: 3/8" = 1'-0"

BAR LIST					
MARK	NO. REQ'D.	LENGTH	"A"	"B"	P.D.
B501 To B521	4 Ea.	13'-11" To 17'-10"	3'-0"	3'-8½" To 5'-8"	2½"
B522	10	15'-3½"	4'-2"	5'-8"	2½"
B523	20	30'-8"			Str.
B524	4	28'-10"			Str.
B525	4	22'-10"			Str.
B526	4	26'-10"			Str.
B527	10	7'-11"	4'-1"	2'-0"	2½"
B701	4	31'-0"			5¼"
B901	9	33'-2"	30'-8"	10"	9"
B902	9	30'-4"			Str.
C501	48	18'-10"			3¾"
C502	48	4'-10"			3¾"
C1001	44	23'-5"			Str.
F601	18	22'-6"			Str.
F602	23	17'-6"			Str.
F1001	23	25'-4"	22'-6"	11½"	10"
F1002	30	20'-4"	17'-6"	11½"	10"
F1003	44	12'-0"			10"

BAR BENDING DIAGRAMS

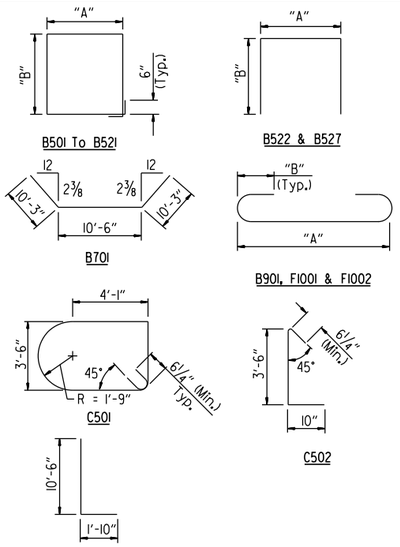

NOTE:
Dimensions of bars are out-to-out.

NOTE:
For General Notes, see Std. Dwg. No. 55006.

Class 3 Textured Coating Finish shall be applied to bridge surfaces as specified in Special Provision "TEXTURED COATING FINISH" and in accordance with Subsection 802.19(b)(3).

STATE OF ARKANSAS
LICENSED PROFESSIONAL ENGINEER
No. 16458
JOEL E. SKINNER
Digitally Signed 07/28/2023
BRIDGE ENGINEER

SHEET 2 OF 2
DETAILS OF INTERMEDIATE BENT
COUNTY ROAD 904 (LIBERTY ROAD)
ROUTE SEC.
ARKANSAS STATE HIGHWAY COMMISSION
LITTLE ROCK, ARK.

DRAWN BY: HEW DATE: MAR. 2011 FILENAME: b012326x3_b2.dgn
CHECKED BY: ABH DATE: MAR. 2011 SCALE: AS SHOWN
DESIGNED BY: PCC DATE: MAR. 2011
BRIDGE NO. 07614 DRAWING NO. 66190

JEskinner 7/28/2023 12:09:37 PM
WORKSPACE: ARDOT Bridge
\\garverinc.local\gdata\Projects\2017\170766O - ARDOT 012326 Hwy 412 - Hwy 112\Drawings\b012326x3_S207-MD.dgn
REVISED DATE:

DATE REVISED	DATE REVISED	FED. ROAD DIST. NO.	STATE	JOB NO.	SHEET NO.	TOTAL SHEETS
		6	ARK.	012326	402	838
		07614	ELASTOMERIC BEARINGS			66191

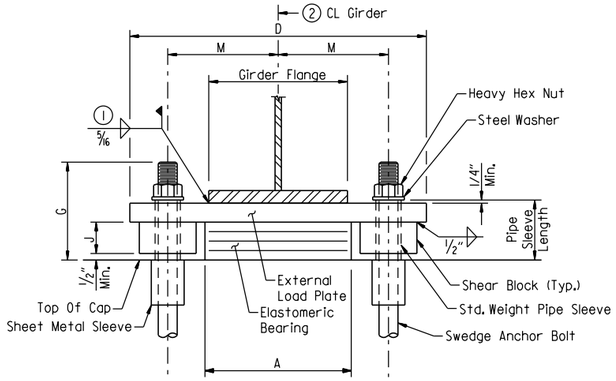

FRONT VIEW - AT BENT 2

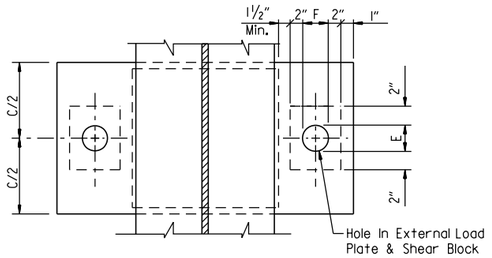

PLAN VIEW - AT BENT 2

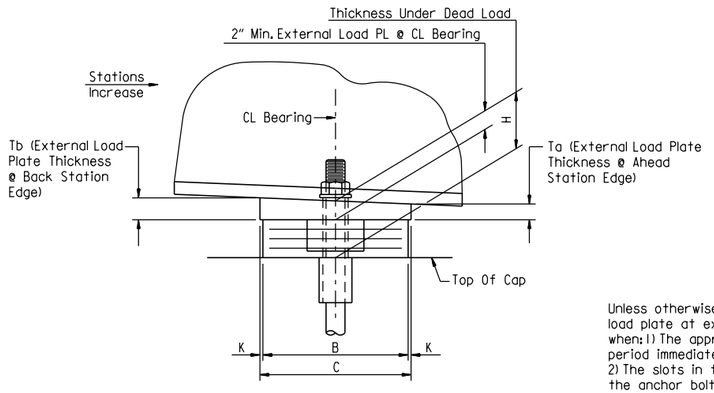

SIDE VIEW - AT BENT 2

① Care shall be taken to ensure that the external load plate is in full and complete contact with the girder flange before welding begins.

② Centerline elastomeric pad shall be aligned with centerline girder.

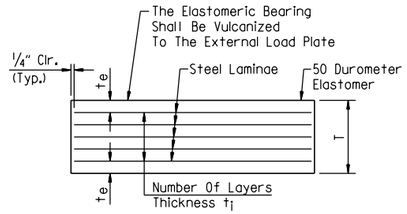

t_e = Thickness Of Elastomer Cover On Top And Bottom Of Pad
t_i = Thickness Of Elastomer Between Steel Laminae
N = Number Of Elastomer Layers Of Thickness t_i

ELASTOMERIC BEARING

Unless otherwise approved by the Engineer, welding of the external load plate at expansion bearings to the girder will be allowed only when: 1) The approximate average air temperature during the 24 hour period immediately preceding welding is between 40°F and 80°F: and 2) The slots in the external load plate are positioned to center on the anchor bolts: and 3) No horizontal deformation of the elastomeric pad is evident. If welding at other temperatures is required, the Engineer will provide adjustment data.

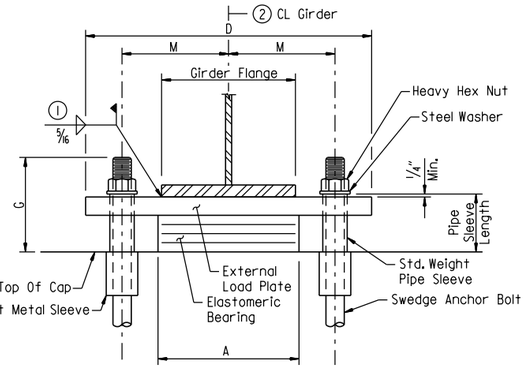

FRONT VIEW - AT BENTS 1 & 3

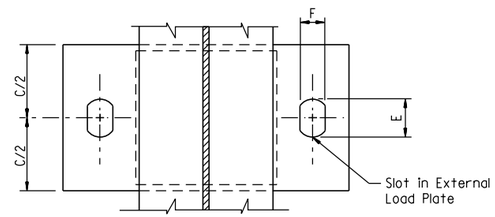

PLAN VIEW - AT BENTS 1 & 3

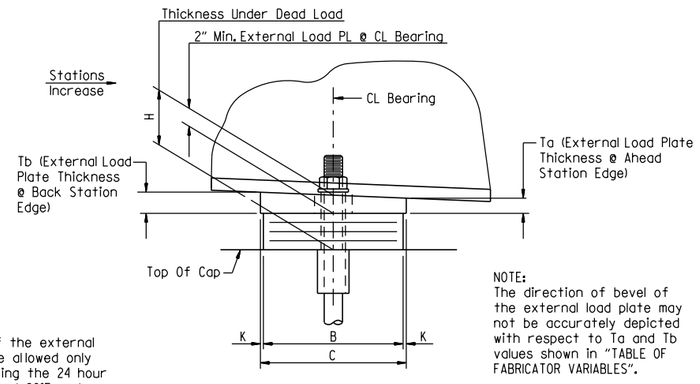

NOTE:
The direction of bevel of the external load plate may not be accurately depicted with respect to Ta and Tb values shown in "TABLE OF FABRICATOR VARIABLES".

SIDE VIEW - AT BENTS 1 & 3

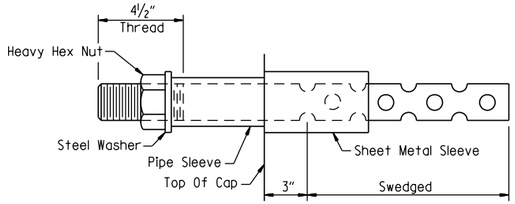

ANCHOR BOLT DETAIL

NOTES:
Anchor bolts may be cast in place or drilled and grouted into place. If anchor bolts are to be cast in place, the galvanized sheet metal sleeves will not be required.

If anchor bolts are to be drilled and grouted in place, the galvanized sheet metal sleeves shall be cast in place as shown. Sleeves shall be dry packed with styrofoam, urethane foam or approved equal prior to pouring of concrete. After pouring of the cap and prior to erection of structural steel, the dry pack shall be removed and holes for the anchor bolts shall be accurately drilled into the concrete. Bolts placed in drilled holes shall be accurately set and fixed using a OPL approved epoxy or non-shrink grout that completely fills the holes. Galvanized Sheet Metal Sleeves shall meet the requirments of ASTM A653, CS Type B or approved equivalent, be of minimum 16 gage thickness and be galvanized according to AASTM B695, Class 50. Sheet metal sleeves will not be paid for directly, but will be considered subsidiary to the item "STRUCTURAL STEEL IN PLATE GIRDER SPANS, (A709, GR. 50)"

GENERAL NOTES

Elastomeric bearings shall conform to Section 808 and shall be paid for at the unit price bid for "ELASTOMERIC BEARINGS."

External load plates and shear blocks shall conform to ASTM A709, Grade 50. Pipe sleeves shall be ASTM A500, Grade B, and shall be galvanized to conform to AASHTO M 232, Class C or ASTM B695, Class 50.

External load plates (with shear blocks as applicable) shall be completely fabricated (including bevel, bolt holes and all shop welding) and shall be cleaned before vulcanizing to the elastomeric bearing. The surfaces in contact with the elastomeric bearing shall be cleaned in accordance with Subsection 808.3. Other surfaces shall be blast cleaned in accordance with Subsection 807.84(b) for painted steel.

Anchor bolts, washers and nuts shall conform to Subsection 807.07. The anchor bolt grade of steel shall be as specified in the "TABLE OF FABRICATOR VARIABLES". Indentations shall be circular with rounded bottoms and staggered as shown in the details.

Pipe sleeves, anchor bolts, washers and nuts shall be paid for at the unit price bid for "STRUCTURAL STEEL IN PLATE GIRDER SPANS (A709, GR. 50)". External load plates and shear blocks will not be measured or paid for separately but will be considered included in the unit bid price for "ELASTOMERIC BEARINGS".

Bearings shall be seated in accordance with Subsection 808.08. This work and materials are considered subsidiary to the item "ELASTOMERIC BEARINGS" and will not be paid for directly.

Prior to erection of the girders, the Contractor shall verify the orientation of the bearing with respect to Ta and Tb.

TABLE OF FABRICATOR VARIABLES

Bridge No.	Location		Bearing Type	No. Of Bearings Each Bent	③ Maximum Design Load (Kips)	Elastomeric Pad								External Load Plate									Anchor Bolt				
	Bent No.(s)	Beam Or Girder No.				G	H	A	B	N	t_i	t_e	No. & Thickness Of Steel Laminate	T	C	D	E	F	J	K	M	T_a	T_b	Anchor Bolt (Dia. x L)	Grade	Pipe Sleeve Size (Dia. x L)	Sheet Metal Sleeve Size (Dia. x L)	Steel Washer Size (O.D.)
07614	1	All	Exp.	4	140	8 9/16"	5 9/16"	18"	10"	5	1/2"	1/4"	6 @ 12 Ga.	3 5/8"	11"	29"	4 1/2"	2 5/8"	-	1/2"	11 1/2"	2.09"	1.91"	1 3/4" x 29"	55	2" x 5 13/16"	4" x 7"	3 3/8"
	2	All	Fixed	4	366	8 9/16"	5 9/16"	20"	12"	5	1/2"	1/4"	6 @ 12 Ga.	3 5/8"	13"	38 1/4"	2 5/8"	2 5/8"	3"	1/2"	14 13/16"	2.01"	1.99"	1 3/4" x 29"	55	2" x 5 13/16"	4" x 7"	3 3/8"
	3	All	Exp.	4	140	8 9/16"	5 9/16"	18"	10"	5	1/2"	1/4"	6 @ 12 Ga.	3 5/8"	11"	29"	4 1/2"	2 5/8"	-	1/2"	11 1/2"	1.92"	2.08"	1 3/4" x 29"	55	2" x 5 13/16"	4" x 7"	3 3/8"

③ Maximum Design Load = Service Load

STATE OF ARKANSAS
LICENSED PROFESSIONAL ENGINEER
No. 16458
JOEL E. SKINNER
Digitally Signed 07/28/2023
BRIDGE ENGINEER

DETAILS OF ELASTOMERIC BEARINGS COUNTY ROAD 904 (LIBERTY ROAD)

ROUTE SEC.

ARKANSAS STATE HIGHWAY COMMISSION

LITTLE ROCK, ARK.

DRAWN BY: HEW DATE: JAN. 2011 FILENAME: b012326x3_el.dgn
CHECKED BY: ABH DATE: JULY 2011 SCALE: AS SHOWN
DESIGNED BY: WRF DATE: JAN. 2011

BRIDGE NO. 07614 DRAWING NO. 66191

JEskinner 7/28/2023 12:09:37 PM
WORKSPACE: ARDOT Bridge
\\garverinc.local\gdata\Projects\2017\17017660 - ARDOT 012326 Hwy 412 - Hwy 112\Drawings\b012326x3.530-B6.dgn
REVISED DATE:

DATE REVISED	DATE REVISED	FED. ROAD DIST. NO.	STATE	JOB NO.	SHEET NO.	TOTAL SHEETS
		6	ARK.	012326	403	838
		07614		212'-0" UNIT		66192

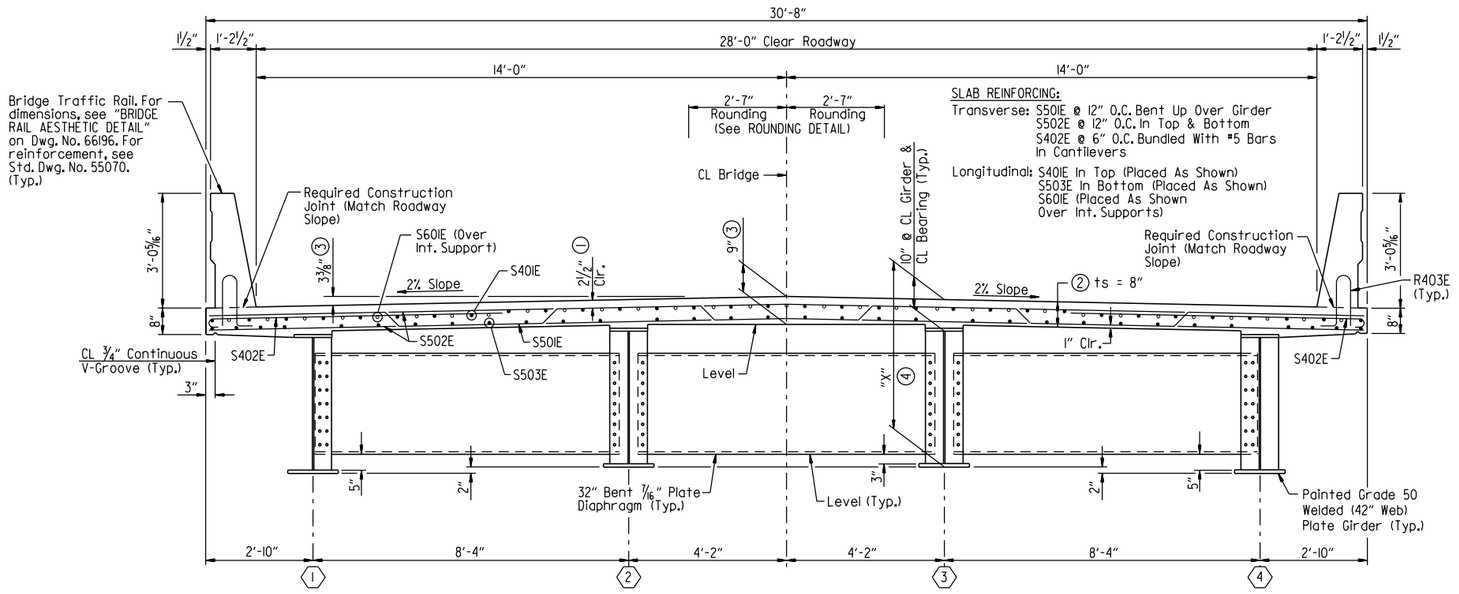

TYPICAL ROADWAY SECTION

Scale: ½" = 1'-0"

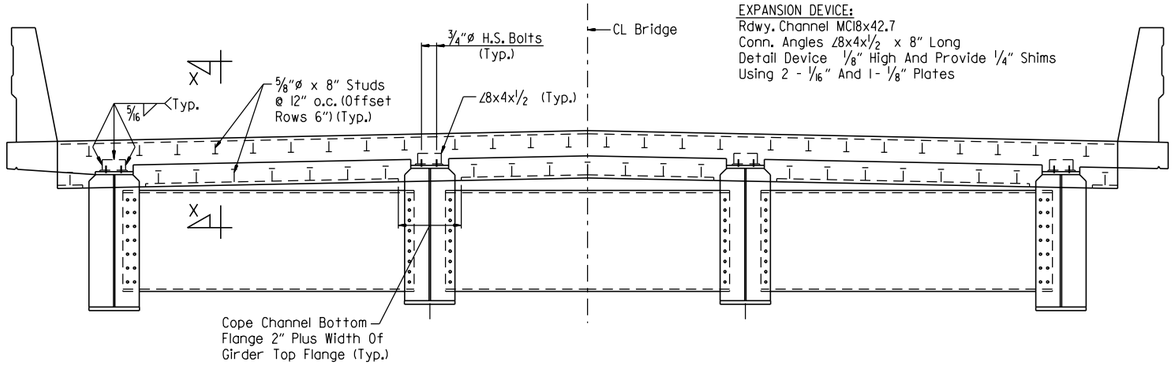

TYPICAL SECTION THRU JOINT

Looking Ahead - End Bent No. 1
Looking Back - End Bent No. 3
No Scale

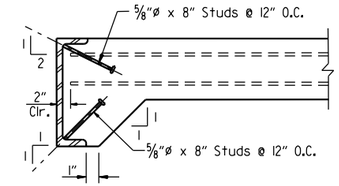

NOTE:
As an alternate to 5/8"ø studs, ½"ø x 8" studs spaced @ 8" o.c. may be used. Use weight of 5/8"ø stud as basis of measurement of structural steel in anchors.

SECTION X-X

No Scale

① TOLERANCE:
Minus = ¼"
Plus = Equal to amount of slab thickening used to meet slab thickness tolerance - see "ADJUSTMENT FOR SLAB THICKNESS TOLERANCE" on Std. Dwg. No. 55007.

② See "ADJUSTMENT FOR SLAB THICKNESS TOLERANCE" on Std. Dwg. No. 55007.

③ Measured to Working Point - see ROUNDING DETAIL on Std. Dwg. 55007.

④ "X" = 4'-4" + bottom flange thickness, measured at CL Bearing & CL Girder.

NOTES:
For Standard General Notes, see Std. Dwg. No. 55006.

For Standard Details, see Std. Dwg. No. 55007.

Class 2 protective surface treatment shall be applied to the roadway surface and the inside face and top of concrete bridge rail.

Class 3 Textured Coating Finish shall be applied to bridge surfaces as specified in Special Provision "TEXTURED COATING FINISH" and in accordance with Subsection 802.19(b)(3). Textured Coating Finish shall not be applied on surfaces where Class 2 Protective Surface Treatment is applied.

Bar positions and clearances from the forms shall be maintained by means of stays, ties, hangers or other approved devices per Subsection 804.06. Placement of slab bolsters or high-chairs with full-length lower runners directly on removable deck forms will not be allowed.

One epoxy-coated #5 bar in the top and one epoxy-coated #5 bar in the bottom may be substitued for each bar S501E. Payment will be based on the weight of bar S501E.

TABLE OF SILICONE JOINT DATA

Bent Nos.	"A" Width Perpendicular To Joint At 24 Hour Average Temperature ⑤ Of:			"B" Perpendicular To Joint At 60°F	Bumper Plate Size
	40°F	60°F	80°F		
1 & 3	2⅜"	2"	1Ⅼ⅛"	2¼"±	1" x 1" x 12"

⑤ The temperature used to set the joint opening shall be the approximate average air temperature during the 24 hour period immediately before the bolts are tightened. The Engineer shall establish the temperature. Interpolation of the table may be necessary.

NOTE:
For additional details of poured silicone joint, see Std. Dwg. No. 55008.

STATE OF ARKANSAS
LICENSED PROFESSIONAL ENGINEER
No. 16458
JOEL E. SKINNER
Digitally Signed 07/28/2023
BRIDGE ENGINEER

SHEET 1 OF 5
DETAILS OF 212'-0" CONTINUOUS PLATE GIRDER UNIT
COUNTY ROAD 904 (LIBERTY ROAD)

ROUTE SEC.

ARKANSAS STATE HIGHWAY COMMISSION
LITTLE ROCK, ARK.

DRAWN BY: HEW DATE: MAR. 2011 FILENAME: b012326x3_sl.dgn
CHECKED BY: ABH DATE: JULY 2011 SCALE: AS SHOWN
DESIGNED BY: WRF DATE: MAR. 2011

BRIDGE NO. 07614 DRAWING NO. 66192

JESkinner 7/28/2023 12:09:38 PM
WORKSPACE: ARDOT Bridge
\\garverinc.local\gdata\Projects\2017\17017660 - ARDOT 012326 Hwy 412 - Hwy 112\Drawings\b012326x3_S401-TS.dgn
REVISED DATE:

DATE REVISED	DATE REVISED	FED. ROAD DIST. NO.	STATE	JOB NO.	SHEET NO.	TOTAL SHEETS
		6	ARK.	012326	404	838
		07614		212'-0" UNIT		66193

(1) Parapet joints designated with symbol (F) shall be stopped 6" from top of slab. All other parapet joints with symbol (P) shall be partial depth joints stopped 16" from top of slab.

(2) Place as shown in "TYPICAL ROADWAY SECTION", on Dwg. No. 66192.

(3) See "TRANSVERSE SLAB JOINT DETAIL", on Std. Dwg. No. 55007

NOTE:
Required Slab Joints And Pouring Sequence Joints Shall Align With The Parapet Open Joints At The Gutterline.

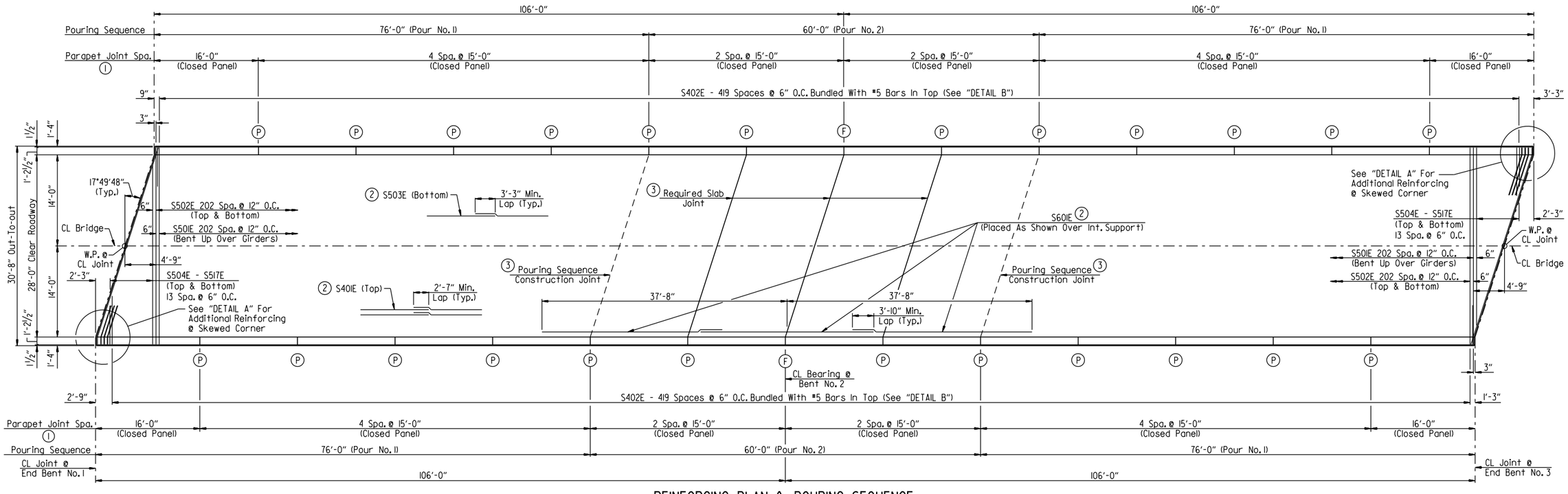

REINFORCING PLAN & POURING SEQUENCE

Scale: 1/8" = 1'-0"

NOTES:
Pours with the same number may be placed simultaneously or separately. All Pours (1) must be placed before Pour (2) can be placed. A minimum 48 hours shall elapse between the end of a pour and the start of the next pour. A minimum of 72 hours shall elapse between the end of a pour and the start of an adjacent pour.

Concrete in bridge superstructure shall be placed, consolidated, and screeded off for the entire pour between any concrete has taken its initial set. This may require the use of a retarding agent.

A minimum of 72 hours shall elapse between completion of the slab and the pouring of the bridge railing. Any railing pours made before the entire slab unit has been placed must be approved by the Engineer. The Contractor must obtain approval from the Engineer for any deviations from the pouring sequence(s) shown.

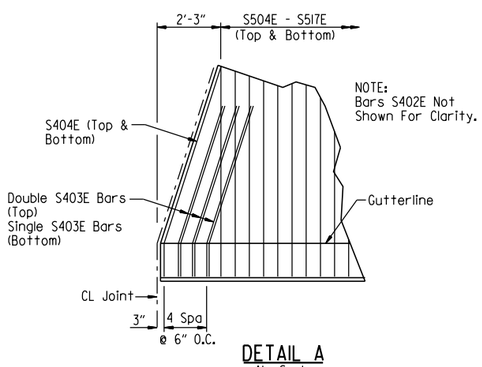

DETAIL A
No Scale

BAR LIST

Mark	No. Req'd.	Length	Pin. Dia.
S401E	192	37'-6"	STR.
S402E	840	6'-9"	3"
S403E	18	6'-3"	3"
S404E	4	31-9"	3"
S501E	203	30'-11½"	3"
S502E	406	30'-4"	STR.
S503E	128	55'-6"	STR.
S504E To S517E	4 Each	7'-4" To 27'-6"	STR.
S601E	93	27'-8"	STR.
R401E	848	6'-4"	2½", 3"
R402E	96	5'-6"	STR.
R403E	848	3'-6"	3", 3¾"
R404E	192	14'-8"	STR.
R405E	32	15'-8"	STR.

BENDING DIAGRAM

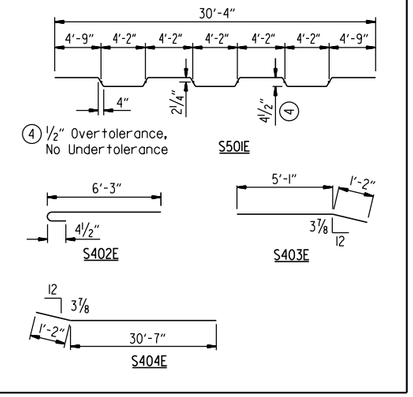

NOTES:
Dimensions of bars are out-to-out.

Bar designations ending with "E" indicate epoxy coated bars.

For bar bending diagrams of R401E & R403E, see Std. Dwg. No. 55070.

The first bar designation number indicates the reinforcing bar size.

TABLE OF VARIABLES		
CLOSED RAIL PANELS		
Panel Length	"A"	R4XXE
15'-0"	29	04
16'-0"	31	05

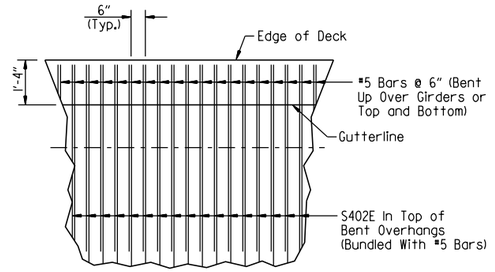

DETAIL B
No Scale

STATE OF ARKANSAS
LICENSED PROFESSIONAL ENGINEER
No. 16458
JOEL E. SKINNER
Digitally Signed 07/28/2023
BRIDGE ENGINEER

SHEET 2 OF 5
DETAILS OF 212'-0" CONTINUOUS PLATE GIRDER UNIT
COUNTY ROAD 904 (LIBERTY ROAD)
ROUTE SEC.
ARKANSAS STATE HIGHWAY COMMISSION
LITTLE ROCK, ARK.

DRAWN BY: HEW DATE: MAR. 2011 FILENAME: b012326x3_s2.dgn
CHECKED BY: ABH DATE: JULY 2011 SCALE: AS SHOWN
DESIGNED BY: WRF DATE: MAR. 2011
BRIDGE NO. 07614 DRAWING NO. 66193

JEskinner 7/28/2023 12:09:38 PM
WORKSPACE: ARDOT Bridge
\\garverinc.local\gdata\Projects\2017\17017660 - ARDOT 012326 Hwy 412 - Hwy 112\Drawings\b012326x3_S402-SB.dgn
REVISED DATE:

DATE REVISED	DATE REVISED	FED. ROAD DIST. NO.	STATE	JOB NO.	SHEET NO.	TOTAL SHEETS
		6	ARK.	012326	405	838
		07614		212'-0" UNIT		66194

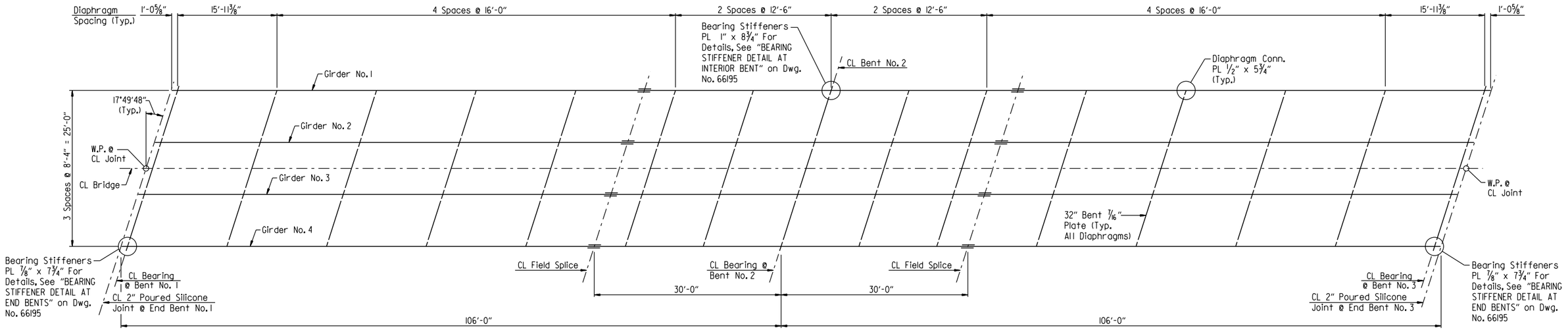

FRAMING PLAN

Scale: 1/8" = 1'-0"

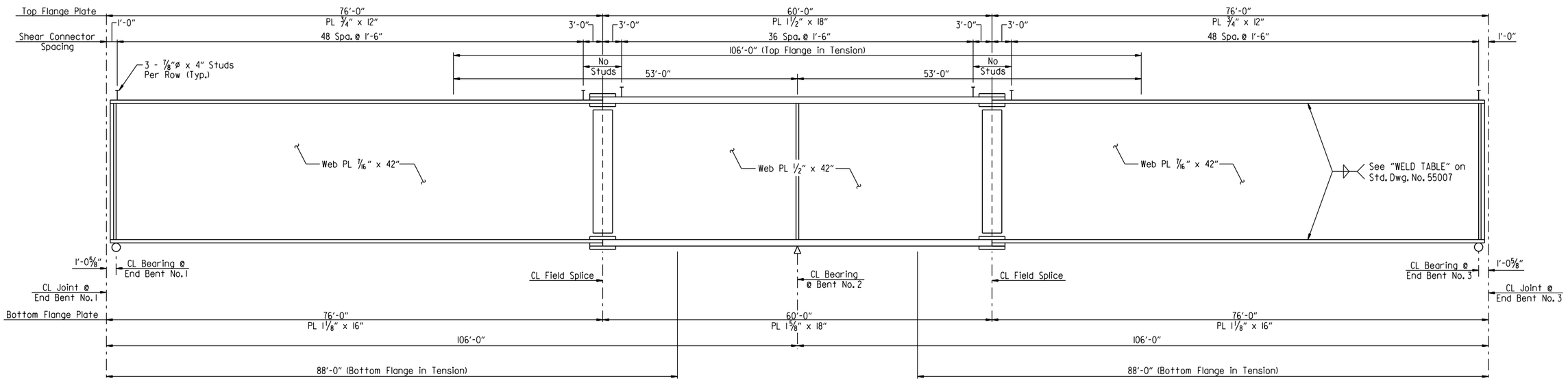

TYP. GIRDER ELEVATION

No Scale

NOTES:
For Standard General Notes, see Std. Dwg. No. 55006.

All structural steel shall be ASTM A709, Gr. 50 unless noted otherwise and shall be paid for at the unit price per pound bid for "STRUCTURAL STEEL IN PLATE GIRDER SPANS (A709, Gr. 50)".

Bolted field splices shown may be eliminated or shop welded splices may be substituted with approval of the Engineer. Payment will be made on the basis of Plan Quantities.

For "DETAILS OF WELDED SPLICES FOR PLATE GIRDERS" & "SHEAR CONNECTOR DETAIL", see Std. Dwg. No. 55007.

For diaphragm and stiffener details, see Dwg. No. 66195.

For details of field splices, see Dwg. No. 66196.

STATE OF ARKANSAS
LICENSED PROFESSIONAL ENGINEER
No. 16458
JOEL E. SKINNER
Digitally Signed 07/28/2023
BRIDGE ENGINEER

SHEET 3 OF 5
DETAILS OF 212'-0" CONTINUOUS PLATE GIRDER UNIT
COUNTY ROAD 904 (LIBERTY ROAD)

ROUTE SEC.

ARKANSAS STATE HIGHWAY COMMISSION

LITTLE ROCK, ARK.

DRAWN BY: HEW DATE: MAR. 2011 FILENAME: b012326x3_s3.dgn
CHECKED BY: ABH DATE: JULY 2011 SCALE: AS SHOWN
DESIGNED BY: WRF DATE: MAR. 2011

BRIDGE NO. 07614 DRAWING NO. 66194

JESkinner 7/28/2023 12:09:39 PM
WORKSPACE: ARDOT Bridge
\\garverinc.local\gdata\Projects\2017\17017660 - ARDOT 012326 Hwy 412 - Hwy 112\Drawings\b012326x3_S403-SF.dgn
REVISED DATE:

DATE REVISED	DATE REVISED	FED. ROAD DIST. NO.	STATE	JOB NO.	SHEET NO.	TOTAL SHEETS
		6	ARK.	012326	406	838
		07614		212'-0" UNIT		66195

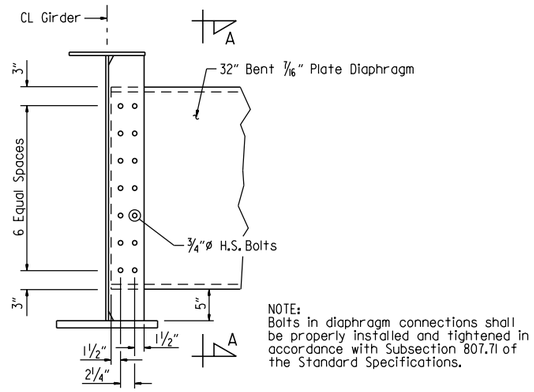

DIAPHRAGM CONNECTIONS AT EXTERIOR GIRDER
No Scale

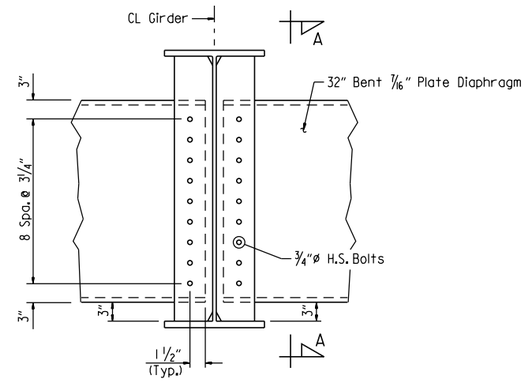

DIAPHRAGM CONNECTIONS AT INTERIOR GIRDER
No Scale

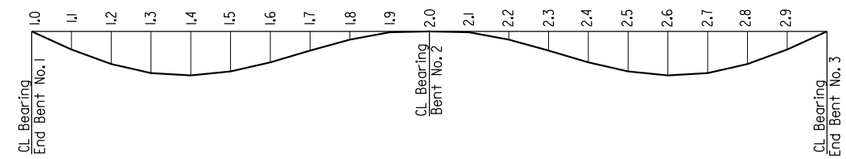

DEAD LOAD DEFLECTION
No Scale

NOTE:
Camber for dead load deflection plus vertical curve ± 1/4" tolerance deflections shown are from a chord from centerline bearing to centerline bearing. Vertical curve corrections not included. Negative sign (-) indicates point above chord.

TABLE OF DEAD LOAD DEFLECTIONS (Inches)			
Point Of Deflection	Wt. Of Girder And Crossframes	Wt. Of Girder, Crossframes And Slab	Wt. Of Girder, Crossframes, Slab And Parapet
1.0	0.00	0.00	0.00
1.1	0.16	0.82	0.90
1.2	0.29	1.49	1.64
1.3	0.38	1.92	2.12
1.4	0.41	2.07	2.29
1.5	0.39	1.93	2.14
1.6	0.31	1.56	1.73
1.7	0.21	1.06	1.18
1.8	0.11	0.56	0.62
1.9	0.03	0.16	0.18
2.0	0.00	0.00	0.00
2.1	0.03	0.16	0.18
2.2	0.11	0.56	0.62
2.3	0.21	1.06	1.18
2.4	0.31	1.56	1.73
2.5	0.39	1.93	2.14
2.6	0.41	2.07	2.29
2.7	0.38	1.92	2.12
2.8	0.29	1.49	1.64
2.9	0.16	0.82	0.90
3.0	0.00	0.00	0.00

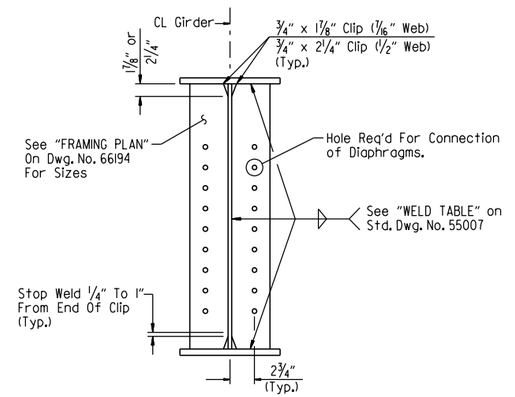

DIAPHRAGM CONNECTION PLATE DETAIL
No Scale

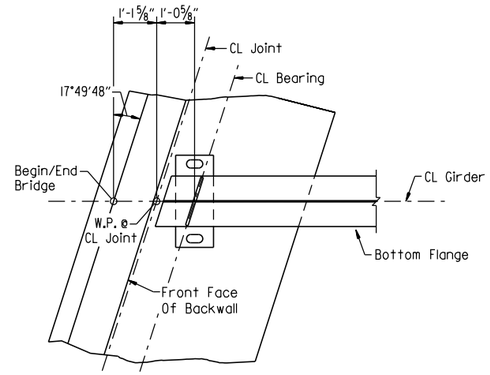

BEARING PLAN AT END BENT
Scale: 1/4" = 1'-0"

(1) If permanent steel bridge deck forms are used, the fabricator shall clip the plate as necessary to accomodate the deck form support.

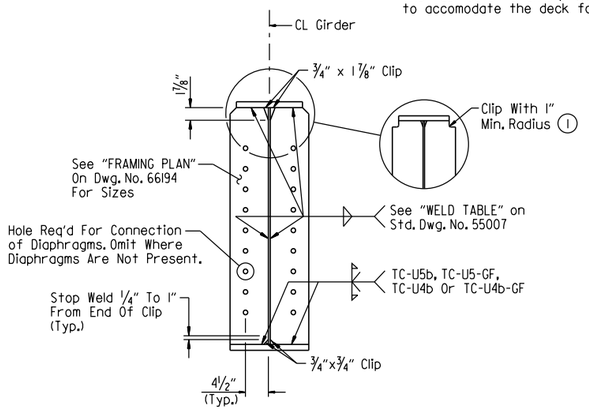

BEARING STIFFENER DETAIL AT END BENTS
No Scale

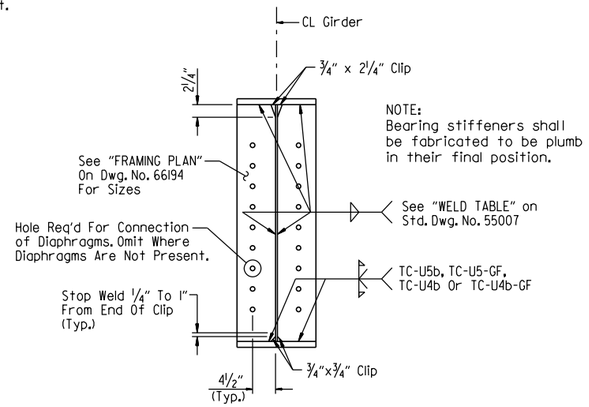

BEARING STIFFENER DETAIL AT INTERIOR BENT
No Scale

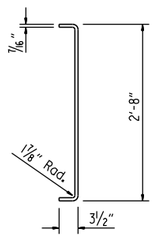

SECTION A-A
No Scale

STATE OF ARKANSAS
LICENSED PROFESSIONAL ENGINEER
No. 16458
JOEL E. SKINNER
Digitally Signed 07/28/2023
BRIDGE ENGINEER

SHEET 4 OF 5
DETAILS OF 212'-0" CONTINUOUS PLATE GIRDER UNIT
COUNTY ROAD 904 (LIBERTY ROAD)
ROUTE SEC.
ARKANSAS STATE HIGHWAY COMMISSION
LITTLE ROCK, ARK.

DRAWN BY: HEW DATE: MAR. 2011 FILENAME: b012326x3_s4.dgn
CHECKED BY: ABH DATE: JULY 2011 SCALE: AS SHOWN
DESIGNED BY: WRF DATE: MAR. 2011
BRIDGE NO. 07614 DRAWING NO. 66195

JESkinner 7/28/2023 12:09:39 PM
WORKSPACE: ARDOT Bridge
\\garverinc.local\data\Projects\2017\17017660 - ARDOT 012326 Hwy 412 - Hwy 112\Drawings\b012326x3_S404-MD.dgn
REVISED DATE:

DATE REVISED	DATE REVISED	FED. ROAD DIST. NO.	STATE	JOB NO.	SHEET NO.	TOTAL SHEETS
		6	ARK.	012326	407	838
		07614		212'-0" UNIT		66196

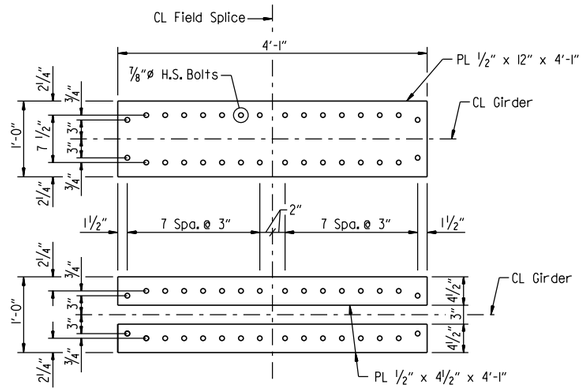

TOP FLANGE SPLICE

Scale: 1" = 1'-0"

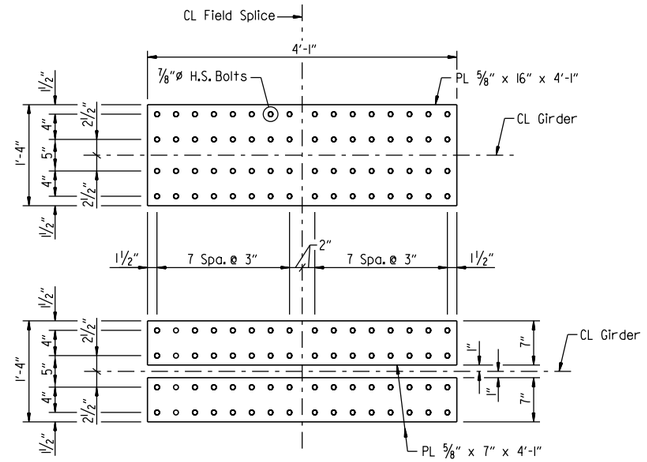

BOTTOM FLANGE SPLICE

Scale: 1" = 1'-0"

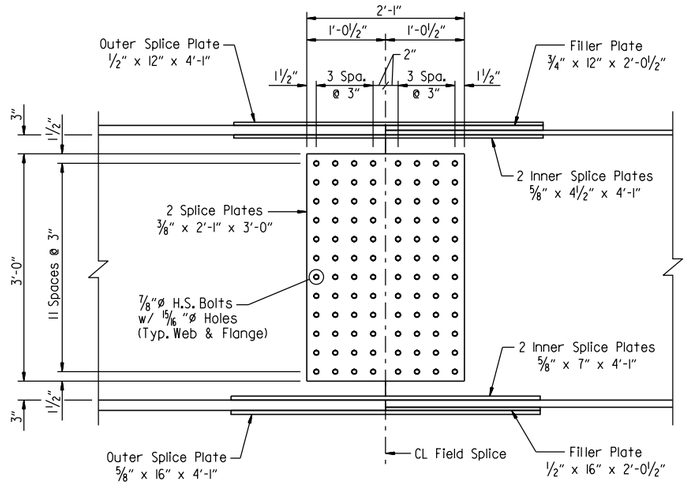

ELEVATION OF FIELD SPLICE

(Span No. 2 Field Splice Shown,
Span No. 1 Field Splice Similar By Orientation)
Scale: 1" = 1'-0"

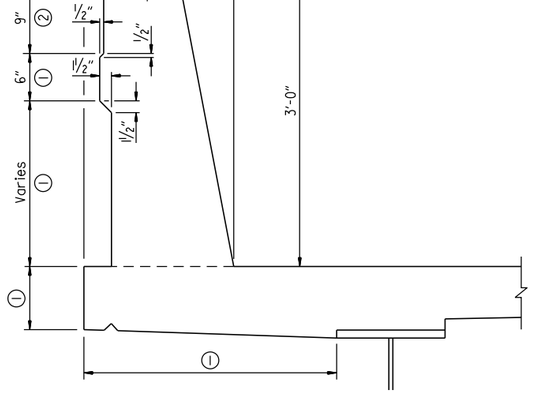

① Class 3 Textured Coating Finish
(Color - Light Brown, Color Chip No. 33522)

② Class 3 Textured Coating Finish
(Color - Medium Brown, Color Chip No. 30219)

BRIDGE RAIL AESTHETIC DETAIL

No Scale

STATE OF ARKANSAS
LICENSED PROFESSIONAL ENGINEER
No. 16458
JOEL E. SKINNER
Digitally Signed 07/28/2023
BRIDGE ENGINEER

SHEET 5 OF 5
DETAILS OF 212'-0" CONTINUOUS
PLATE GIRDER UNIT
COUNTY ROAD 904 (LIBERTY ROAD)

ROUTE SEC.

ARKANSAS STATE HIGHWAY COMMISSION
LITTLE ROCK, ARK.

DRAWN BY: HEW DATE: MAR. 2011 FILENAME: b012326x3_s5.dgn
CHECKED BY: ABH DATE: JULY 2011 SCALE: AS SHOWN
DESIGNED BY: WRF DATE: MAR. 2011
BRIDGE NO. 07614 DRAWING NO. 66196

JESkinner 7/28/2023 12:09:40 PM
WORKSPACE: ARDOT Bridge
\\garverinc.local\gdata\Projects\2017\17017660 - ARDOT 012326 Hwy 412 - Hwy 112\Drawings\b012326x3_S405-SD.dgn
REVISED DATE:

DATE REVISED	DATE REVISED	FED. ROAD DIST. NO.	STATE	JOB NO.	SHEET NO.	TOTAL SHEETS
		6	ARK.	012326	408	838
		A7615		LAYOUT		66197

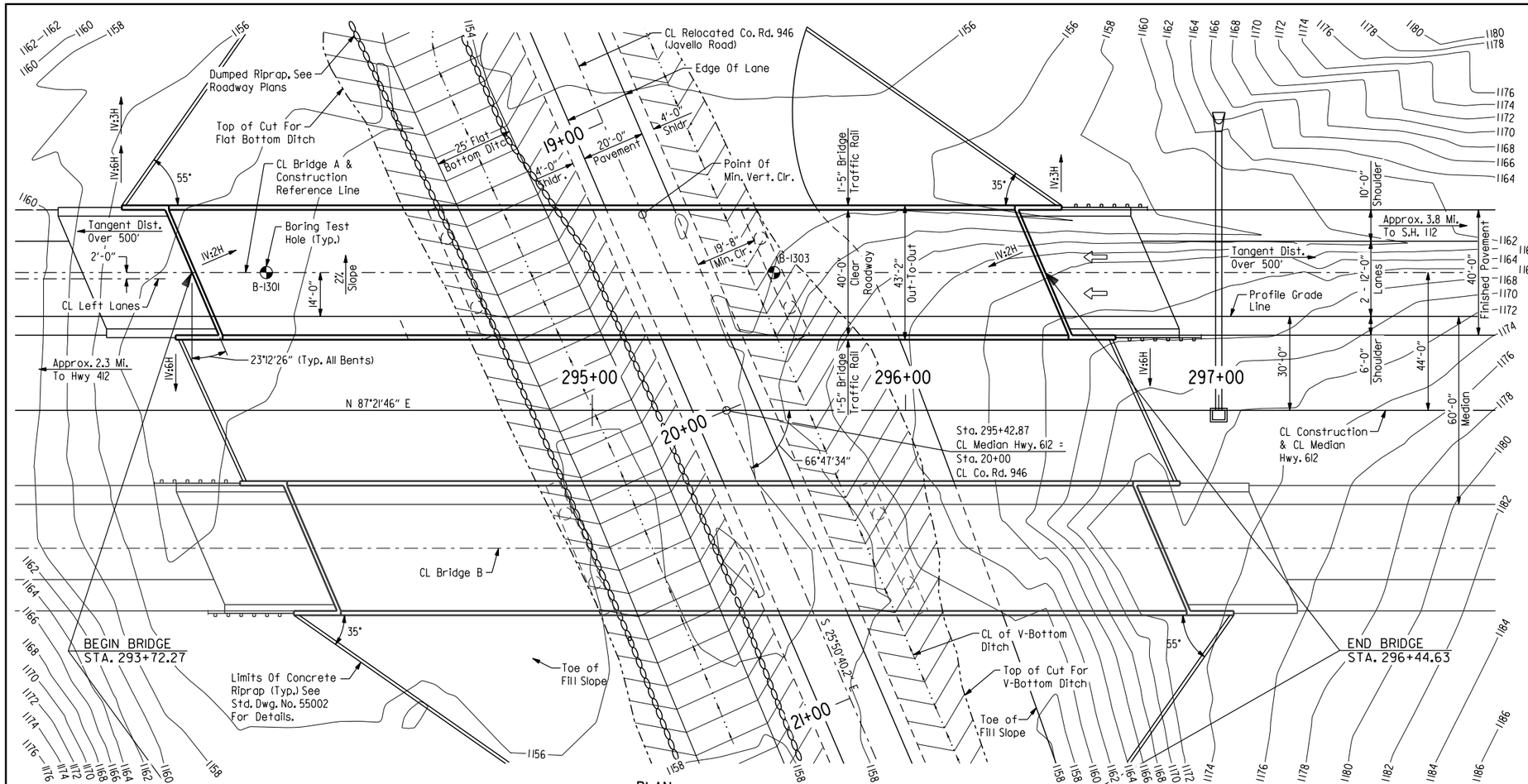

PLAN

NOTE:
Stations shown are along CL Construction. Elevations shown are actual top of deck elevations at CL Bridge. Any vertical dimension referenced to CL Deck is based on actual top of deck elevation at CL Bridge.

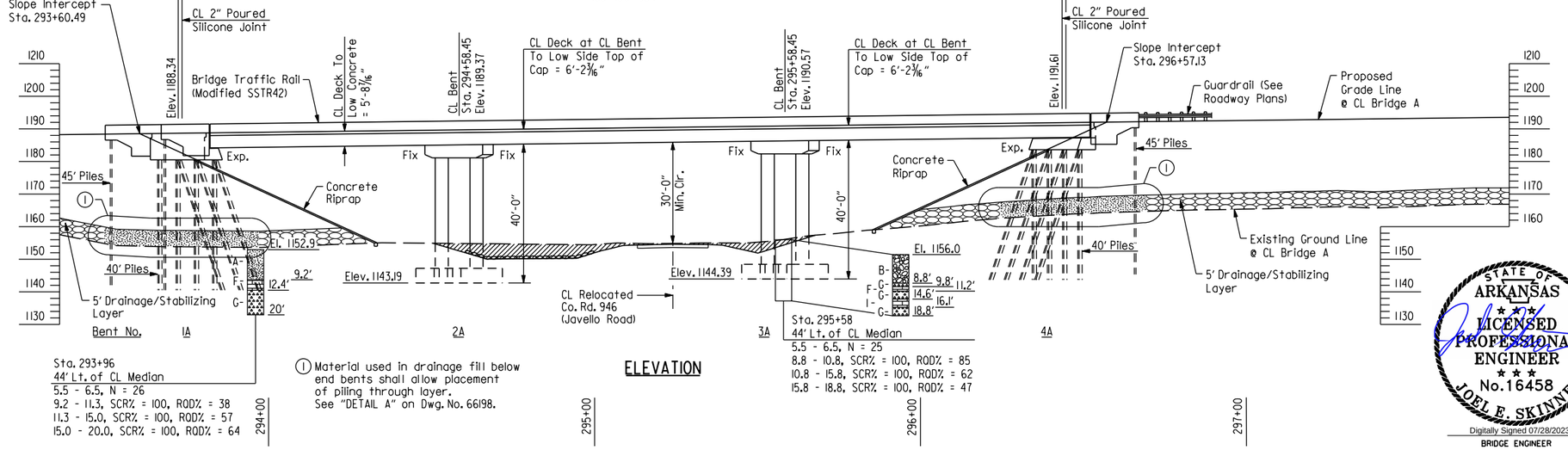

ELEVATION

(1) Material used in drainage fill below end bents shall allow placement of piling through layer. See "DETAIL A" on Dwg. No. 66198.

FOR R/W DATA, SEE ROADWAY PLANS

NOTES:
Use Type F Approach Slab at each end of bridge. See Std. Dwg. No. 55040FI.

Use Type F Approach Gutters at each end of bridge. See Std. Dwg. No. 55030F.

For GENERAL NOTES, see Dwg. No. 66199.

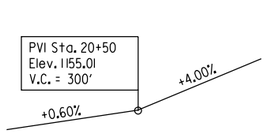

VERTICAL CURVE DATA
Co. Rd. 946
(Profile Grade Along CL Co. Rd. 946)

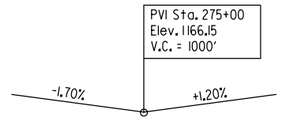

VERTICAL CURVE DATA
Highway 612
(Profile Grade Along Inside Edge of Lane)

NOTE:
For limits of fill slope and concrete riprap, see "LOCATION SKETCH" On Dwg. No. 66199.

BORING LEGEND

A - Copper & dark beige, medium dense sand with gravel.
B - Dark reddish brown & copper, medium dense clayey gravel with sand.
C - Dark brown & copper, medium dense clayey sand with gravel.
D - Brown, tan, dark tan & copper, medium dense to very dense clayey gravel with sand.
E - Tan, white & light gray, dense to very dense clayey gravel with sand.
F - Limestone: White, lt. gray, fresh to slightly weathered.
G - Chert: White, lt. gray, gray, fresh to slightly weathered.
H - Chert: White, lt. gray, gray, slightly weathered.
I - Limestone: White, lt. gray, fresh.
J - Chert: White, lt. gray, fresh to slightly weathered.
K - Chert: White, lt. gray, intermittent limestone.
L - Limestone: White, lt. gray, fresh, medium grain.
M - Chert: White, lt. gray, fresh to weathered.

STATE OF ARKANSAS
LICENSED PROFESSIONAL ENGINEER
No. 16458
JOEL E. SKINNER
Digitally Signed 07/28/2023
BRIDGE ENGINEER

SHEET 1 OF 3
LAYOUT OF BRIDGES
HIGHWAY 612 OVER
COUNTY ROAD 946 (JAVELLO ROAD)
HWY. 412 - HWY. 112
(SPRINGDALE BYPASS) (F)
WASHINGTON COUNTY

ROUTE 612 SEC. 1

ARKANSAS STATE HIGHWAY COMMISSION

LITTLE ROCK, ARK.

DRAWN BY: CWT DATE: JUNE 2022 FILENAME: b012326a4_11.dgn
CHECKED BY: JHR DATE: JUNE 2022 SCALE: 1"=20'
DESIGNED BY: WMM DATE: JUNE 2022

BRIDGE NO. A7615 DRAWING NO. 66197

JESkinner 7/28/2023 12:09:41 PM
WORKSPACE: ARDOT Bridge
\\garverfnc.local\gdata\Projects\2017\17017660 - ARDOT 012326 Hwy 412 - Hwy 112\Drawings\b012326x4_SI01-L0.dgn
REVISED DATE:

DATE REVISED	DATE REVISED	FED. ROAD DIST. NO.	STATE	JOB NO.	SHEET NO.	TOTAL SHEETS
		6	ARK.	012326	409	838
		B7615		LAYOUT		66198

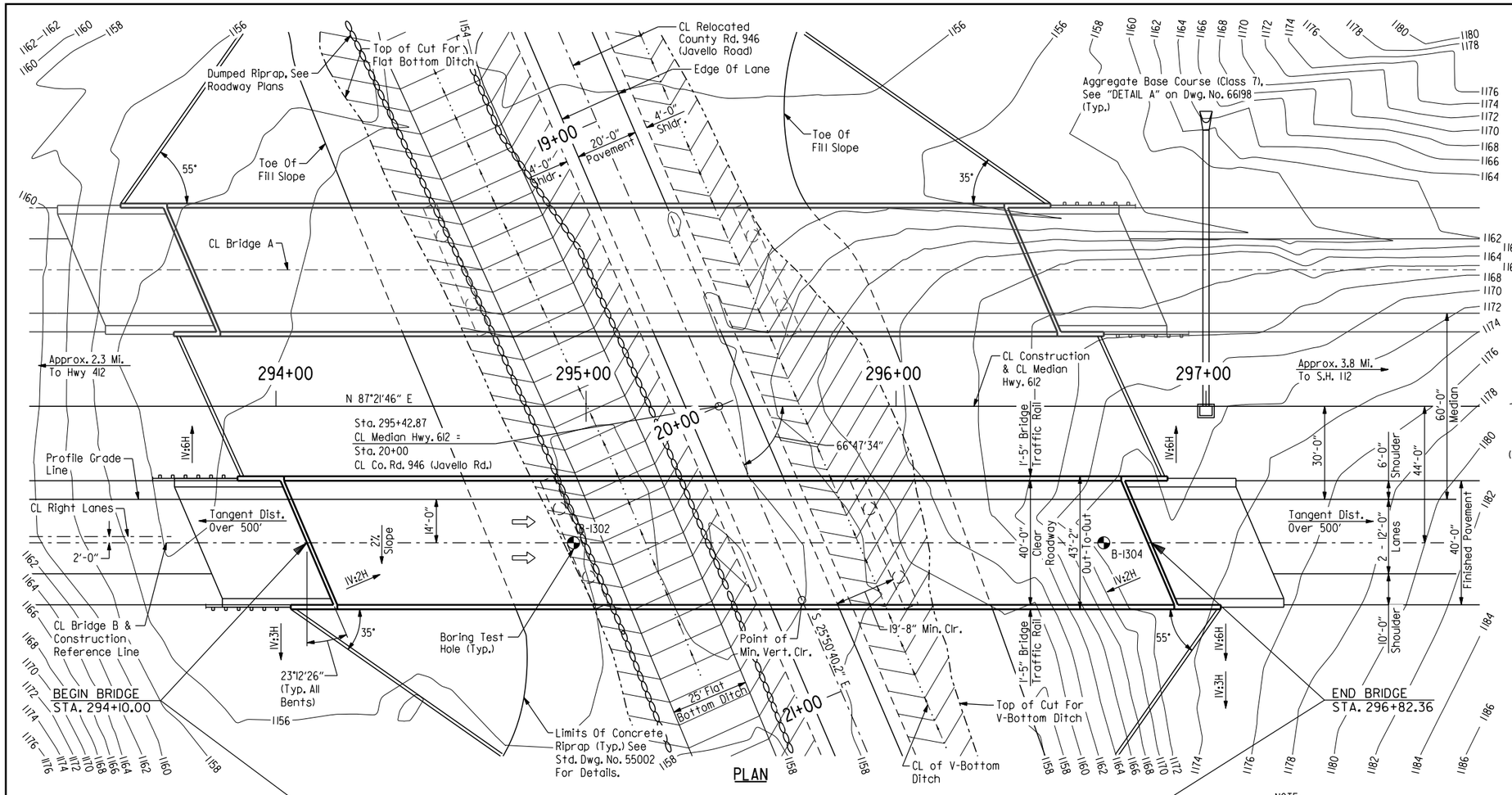

FOR R/W DATA,
SEE ROADWAY PLANS

NOTES:
Use Type F Approach Slab at each end of bridge.
See Std. Dwg. No. 55040F1.

Use Type F Approach Gutters at each end of bridge.
See Std. Dwg. No. 55030F.

For "GENERAL NOTES", see Dwg. No. 66199.

For "BORING LEGEND", see Dwg. No. 66197

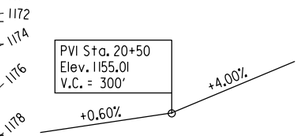

VERTICAL CURVE DATA
County Rd. 946
(Profile Grade Along CL County Rd. 946)

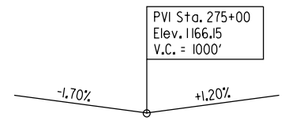

VERTICAL CURVE DATA
Highway 612
(Profile Grade Along Inside Edge of Lane)

NOTE:
For limits of fill slope and concrete riprap, see "LOCATION SKETCH" On Dwg. No. 66199.

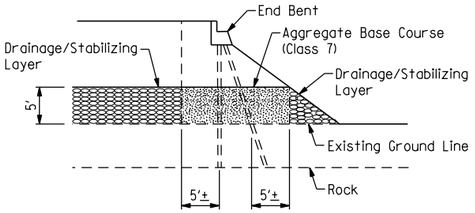

Where a drainage/stabilizing layer is required for embankment construction, aggregate base course (Class 7), in accordance with Section 303.02, shall be placed as shown in areas where piling will be located. Aggregate base course (Class 7) shall be paid for as "COMPACTED EMBANKMENT".

At the Contractor's option, preboring or other methods as approved by the Engineer may be used to facilitate pile installation through the aggregate base course (Class 7) material at these locations. Preboring or other methods used for installation of piles, where rock fill is used for embankment construction, will not be paid for separately but shall be included in Item "STEEL PILING (HP12x53)".

DETAIL A

NOTE:
Stations shown are along CL Construction. Elevations shown are actual top of deck elevations at CL Bridge. Any vertical dimension referenced to CL Deck is based on actual top of deck elevation at CL Bridge.

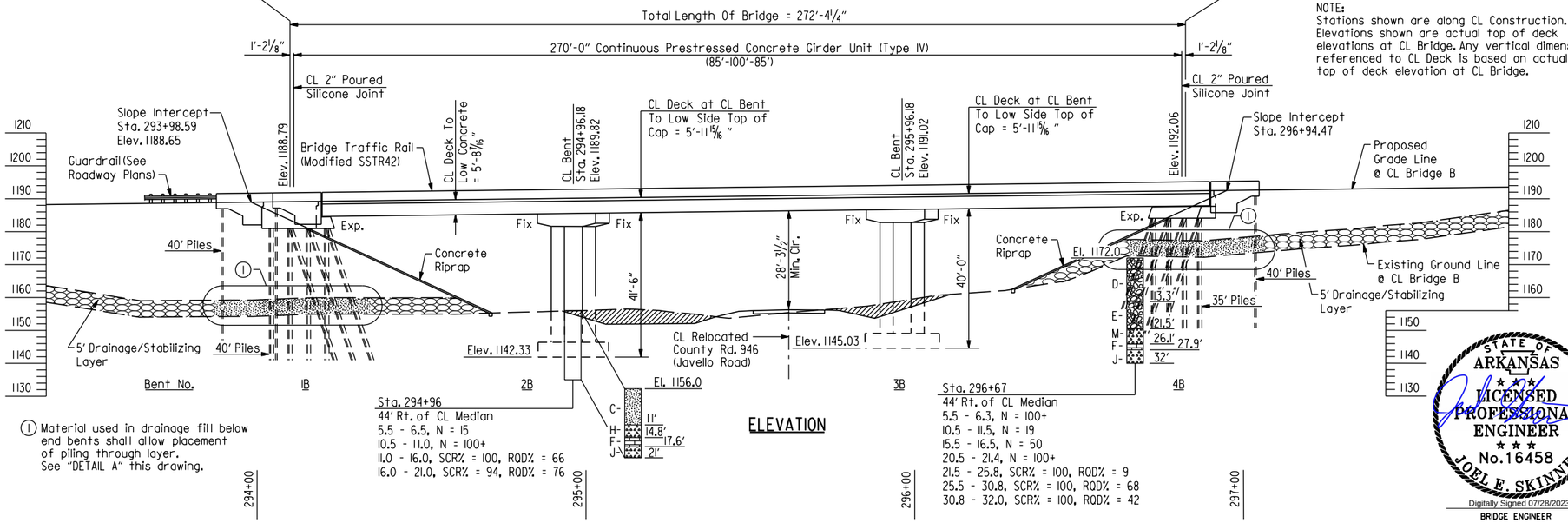

① Material used in drainage fill below end bents shall allow placement of piling through layer. See "DETAIL A" this drawing.

ELEVATION

STATE OF ARKANSAS
LICENSED PROFESSIONAL ENGINEER
No. 16458
JOEL E. SKINNER
Digitally Signed 07/28/2023
BRIDGE ENGINEER

SHEET 2 OF 3
LAYOUT OF BRIDGES
HIGHWAY 612 OVER
COUNTY ROAD 946 (JAVELLO ROAD)
HWY. 412 - HWY. 112
(SPRINGDALE BYPASS) (F)
WASHINGTON COUNTY

ROUTE 612 SEC. 1

ARKANSAS STATE HIGHWAY COMMISSION

LITTLE ROCK, ARK.

DRAWN BY: CWT DATE: JUNE 2022 FILENAME: b012326b4_12.dgn
CHECKED BY: JHR DATE: JUNE 2022 SCALE: 1"=20'
DESIGNED BY: WMM DATE: JUNE 2022

BRIDGE NO. B7615 DRAWING NO. 66198

JESkinner 7/28/2023 12:09:50 PM
WORKSPACE: ARDOT Bridge
\\garverinc.local\data\Projects\20IT\170T660 - ARDOT 012326 Hwy 412 - Hwy 112\Drawings\b012326x4_SI02-L0.dgn
REVISED DATE:

DATE REVISED	DATE REVISED	FED. ROAD DIST. NO.	STATE	JOB NO.	SHEET NO.	TOTAL SHEETS
		6	ARK.	012326	410	838
		A7615 & B7615		LAYOUT		66199

GENERAL NOTES

BENCH MARK: Vertical Control Data are shown on the Survey Control Data Sheets.

CONSTRUCTION SPECIFICATIONS: Arkansas State Highway and Transportation Department Standard Specifications for Highway Construction (2014 Edition) with applicable Supplemental Specifications and Special Provisions. Section and Subsection refer to the Standard Construction Specifications unless otherwise noted in the plans.

DESIGN SPECIFICATIONS: AASHTO LRFD Bridge Design Specifications 4th Edition (2007) with 2008 interim revisions.

LIVE LOADING: HL93

SEISMIC ZONE: 1 S_{D1} = 0.12g Site Class = D

SEISMIC OPERATIONAL CLASS: Other

MATERIALS AND STRENGTHS:

Class S(AE) Concrete (Superstructure)	f'c = 4,000 psi
Class S Concrete (Prestressed Girders)	f'c = 8,000 psi
Prestressing Strands (AASHTO M 203, Gr. 270)	fpu = 270,000 psi
Class S Concrete (Substructure)	f'c = 3,500 psi
Reinforcing Steel (AASHTO M 31 Or M 322, Type A)	fy = 60,000 psi
Structural Steel (ASTM A709, GR. 50W)	Fy = 50,000 psi
Structural Steel (ASTM A709, GR. 36)	Fy = 36,000 psi

BORING LOGS: Boring logs may be obtained from the Construction Contract Development Section of the Program Management Division.

STEEL PILING: All piling at end bents shall be HP12x53 (Grade 50) and shall be driven with an approved air, steam or diesel hammer to a minimum safe bearing capacity of 96 tons per pile and into material designated as Chert on the boring legend. Minimum penetration shall be 10' below natural ground for all piles. Piles in end bents shall be driven after embankment to bottom of cap is in place. Lengths of piling shown are for estimating quantities and for use in determining payment for cut-off and build-up in accordance with Section 805. Actual lengths are to be determined in the field. The Contractor shall use approved steel H-pile driving points on all piles.

SPREAD FOOTING: Footings at intermediate bents shall be set a minimum of 1'-6" into material designated as Chert or Limestone on the boring legend and shall have a minimum cover above top of footings of 2'-0" to finished ground surface. Foundations for footings shall be prepared in accordance with Subsection 801.04. Rock excavations shall be made to neat lines of the concrete footings. Care shall be exercised to avoid shattering of rock faces by excessive blasting. Concrete in footings shall be poured directly against excavated surfaces of rock. Excavations shall be backfilled and compacted to the level of the existing or finished ground in accordance with Section 801.08.

TEXTURED COATING FINISH: Class 3 Textured Coating Finish shall be applied to bridge surfaces as specified in Special Provision "TEXTURED COATING FINISH" and in accordance with Subsection 802.19(b)(3). Textured Coating Finish shall not be applied on surfaces where Class 2 Protective Surface Treatment is applied.

BRIDGE DECK: The concrete bridge deck shall be given a tine finish as specified for final finishing in Subsection 802.19 for Class 5 Tined Bridge Roadway Surface Finish.

PROTECTIVE SURFACE TREATMENT: Class 2 Protective Surface Treatment shall be applied to the roadway surface and to the roadway face and top of the concrete bridge rails in accordance with Section 803.

DETAIL DRAWINGS:	DRAWING NO(S):
End Bents	66200-66203
Intermediate Bents	66204-66206
Elastomeric Bearings	66207
270' Continuous Prestressed Concrete Girder Unit	66208-66216
Concrete Riprap	55002
Poured Silicone Joints	55008
Steel H-Piling	55020
Type F Approach Gutters	55030F
Type F Approach Slab	55040F1
Bridge Traffic Rail	66216 & 55071

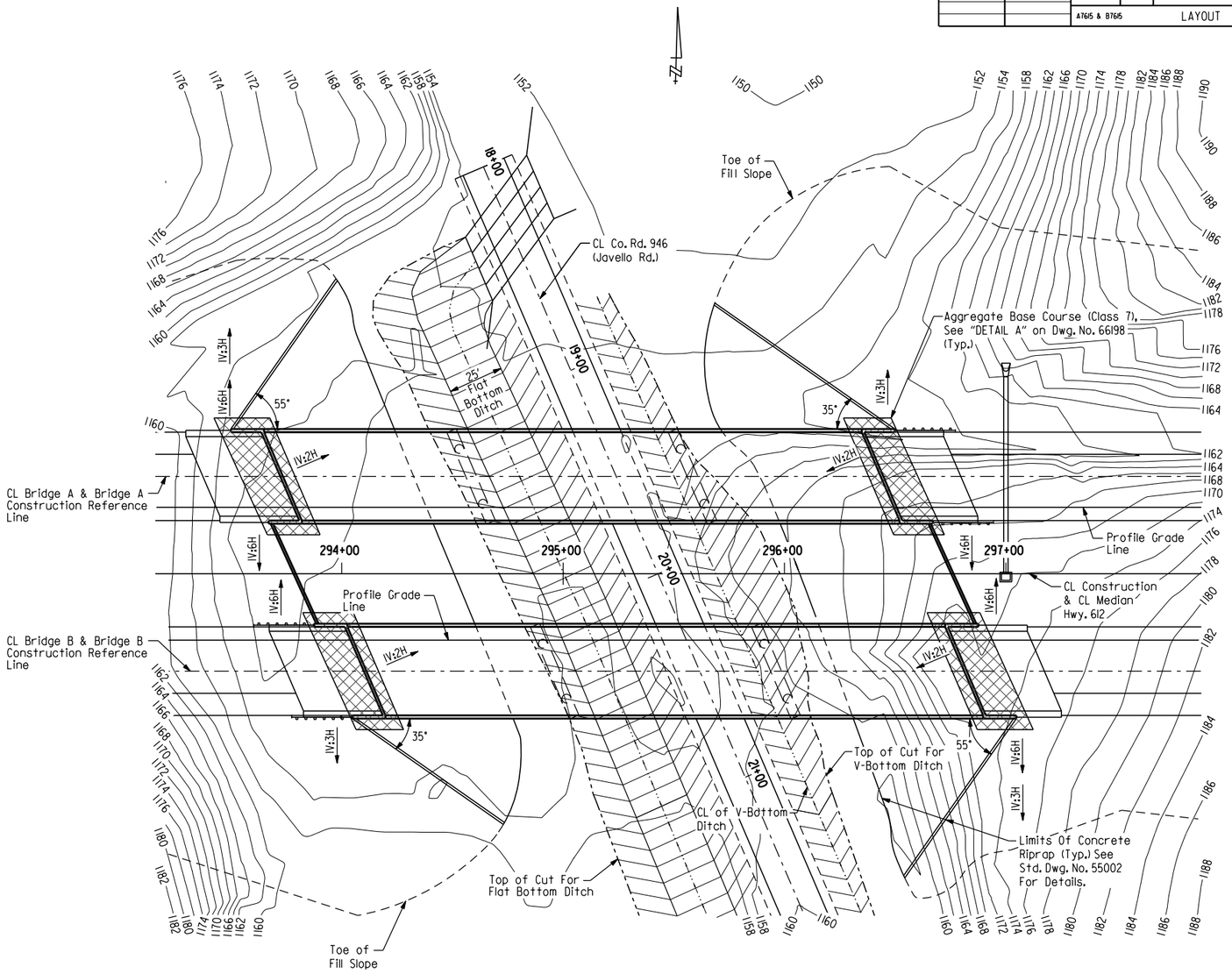

LOCATION SKETCH
Scale: 1" = 30'-0"

STATE OF ARKANSAS
LICENSED PROFESSIONAL ENGINEER
No. 16458
JOEL E. SKINNER
Digitally Signed 07/28/2023
BRIDGE ENGINEER

SHEET 3 OF 3
LAYOUT OF BRIDGES
HIGHWAY 612 OVER
COUNTY ROAD 946 (JAVELLO ROAD)
HWY. 412 - HWY. 112
(SPRINGDALE BYPASS) (F)
WASHINGTON COUNTY

ROUTE 612 SEC. 1

ARKANSAS STATE HIGHWAY COMMISSION

LITTLE ROCK, ARK.

DRAWN BY: CWT DATE: JUNE 2022 FILENAME: b012326m4_13.dgn
CHECKED BY: JHR DATE: JUNE 2022 SCALE: 1"=30'
DESIGNED BY: WMM DATE: JUNE 2022

BRIDGE NO. A7615 & B7615 DRAWING NO. 66199

JESkinner 7/28/2023 12:09:51 PM
WORKSPACE: ARDOT Bridge
\\garverinc.local\gdata\Projects\2017\17017660 - ARDOT 012326 Hwy 412 - Hwy 112\Drawings\b012326x4_SI03-LS.dgn
REVISED DATE:

DATE REVISED	DATE REVISED	FED. ROAD DIST. NO.	STATE	JOB NO.	SHEET NO.	TOTAL SHEETS
		6	ARK.	012326	411	838
		A7615 & B7615		END BENT DETAILS		66200

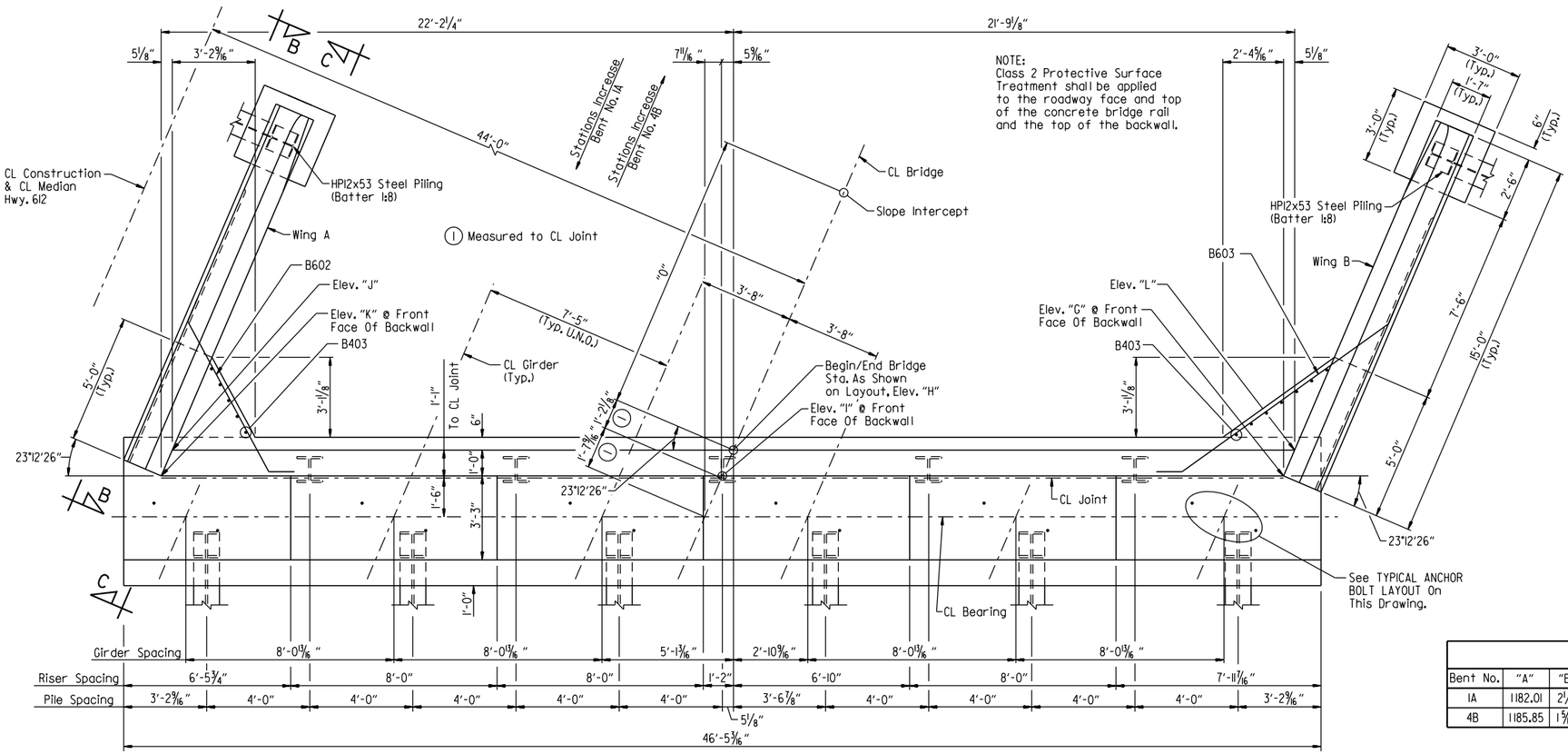

PLAN
(End Bent Nos. 1A & 4B)
Scale: ⅜" = 1'-0"

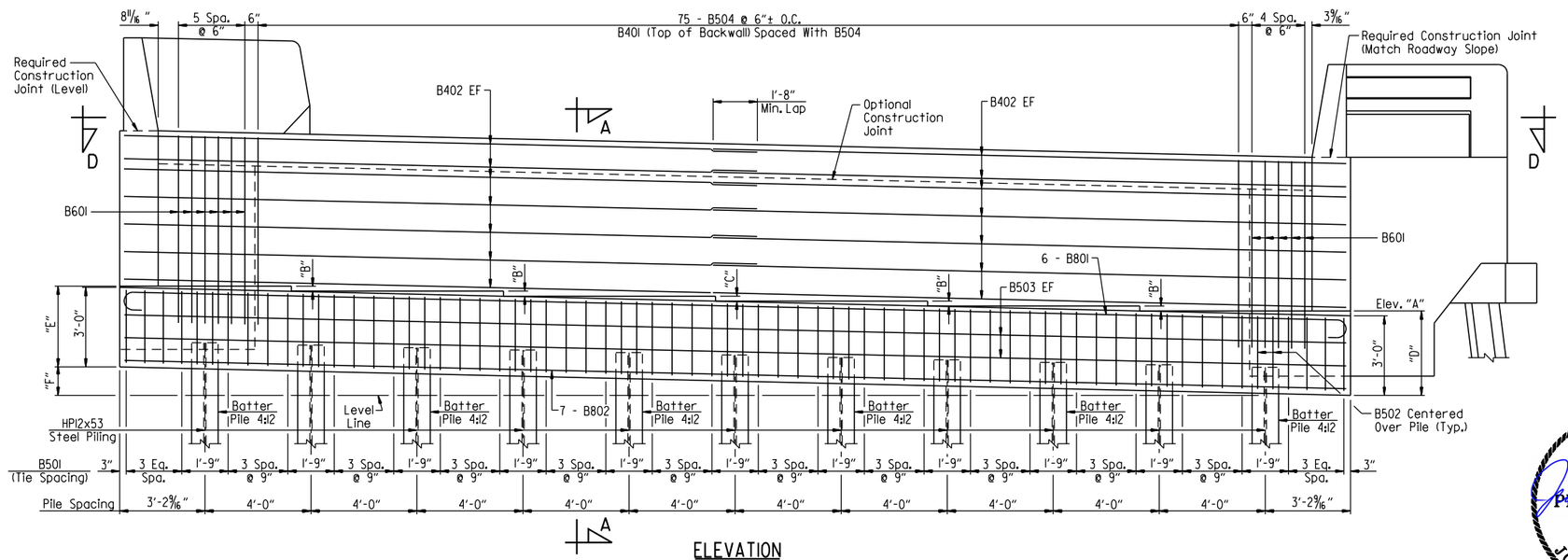

ELEVATION
(Bent No. 1A - Looking Back)
(Bent No. 4B - Looking Forward)
Scale: ⅜" = 1'-0"

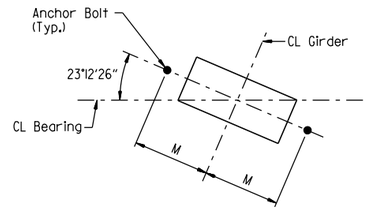

TYPICAL ANCHOR BOLT LAYOUT
No Scale

LEGEND
EF = Each Face

GENERAL NOTES

Concrete shall be Class "S" with a minimum 28 day compressive strength f'c = 3,500 psi and shall be poured in the dry. All exposed corners shall be chamfered ¾" unless otherwise noted.

All reinforcing steel shall be Grade 60 (yield strength = 60,000 psi) conforming to AASHTO M 31 or M 322, Type A, with mill test reports.

Class 3 Textured Coating Finish shall be applied to bridge surfaces as specified in Special Provision "TEXTURED COATING FINISH" and in accordance with Subsection 802.19(b)(3).

Structural steel in end bents shall be ASTM A709, Gr. 50W and shall be paid for as "STRUCTURAL STEEL IN BEAM SPANS (ASTM A709, GR. 50W)".

Top reinforcing bars in cap shall be properly placed to avoid interference with anchor bolts or sheet metal sleeves.

For additional information, see LAYOUT.

NOTES:
For details of elastomeric bearing, dimension M, and anchor bolts, see Dwg. No. 66207.

For "BAR LIST", VIEW D-D", & "BAR BENDING DIAGRAMS", see Dwg. No. 66203.

For "SECTION A-A", "VIEW B-B" & "SECTION C-C", see Dwg. No. 66202.

TABLE OF VARIABLES

Bent No.	"A"	"B"	"C"	"D"	"E"	"F"	"G"	"H"	"I"	"J"	"K"	"L"	"O"
1A	1182.01	2¼"	2⅜"	3'-2⅜"	3'-0½"	1'-0⅞"	1187.85	1188.34	1188.35	1188.84	1188.85	1187.83	11'-9⅜"
4B	1185.85	1⅝"	1⅝"	3'-1⅝"	3'-0⅝"	7⅝"	1191.75	1192.06	1192.05	1192.36	1192.34	1191.76	12'-1⅞"

STATE OF ARKANSAS
LICENSED PROFESSIONAL ENGINEER
No. 16458
JOEL E. SKINNER
Digitally Signed 07/28/2023
BRIDGE ENGINEER

SHEET 1 OF 4
DETAILS OF END BENTS
HIGHWAY 612 OVER
COUNTY ROAD 946 (JAVELLO ROAD)

ROUTE SEC.

ARKANSAS STATE HIGHWAY COMMISSION
LITTLE ROCK, ARK.

DRAWN BY: HEW DATE: AUG. 2011 FILENAME: b012326m4_al.dgn
CHECKED BY: WMM DATE: DEC. 2011 SCALE: AS SHOWN
DESIGNED BY: PCC DATE: AUG. 2011

BRIDGE NO. A7615 & B7615 DRAWING NO. 66200

JESkinner 7/28/2023 12:09:52 PM
WORKSPACE: ARDOT Bridge
\\garverinc.local\data\Projects\2017\17017660 - ARDOT 012326 Hwy 412 - Hwy 112\Drawings\b012326x4_S201-AB.dgn
REVISED DATE:

DATE REVISED	DATE REVISED	FED. ROAD DIST. NO.	STATE	JOB NO.	SHEET NO.	TOTAL SHEETS
		6	ARK.	012326	412	838
		A765 & B765		END BENT DETAILS		66201

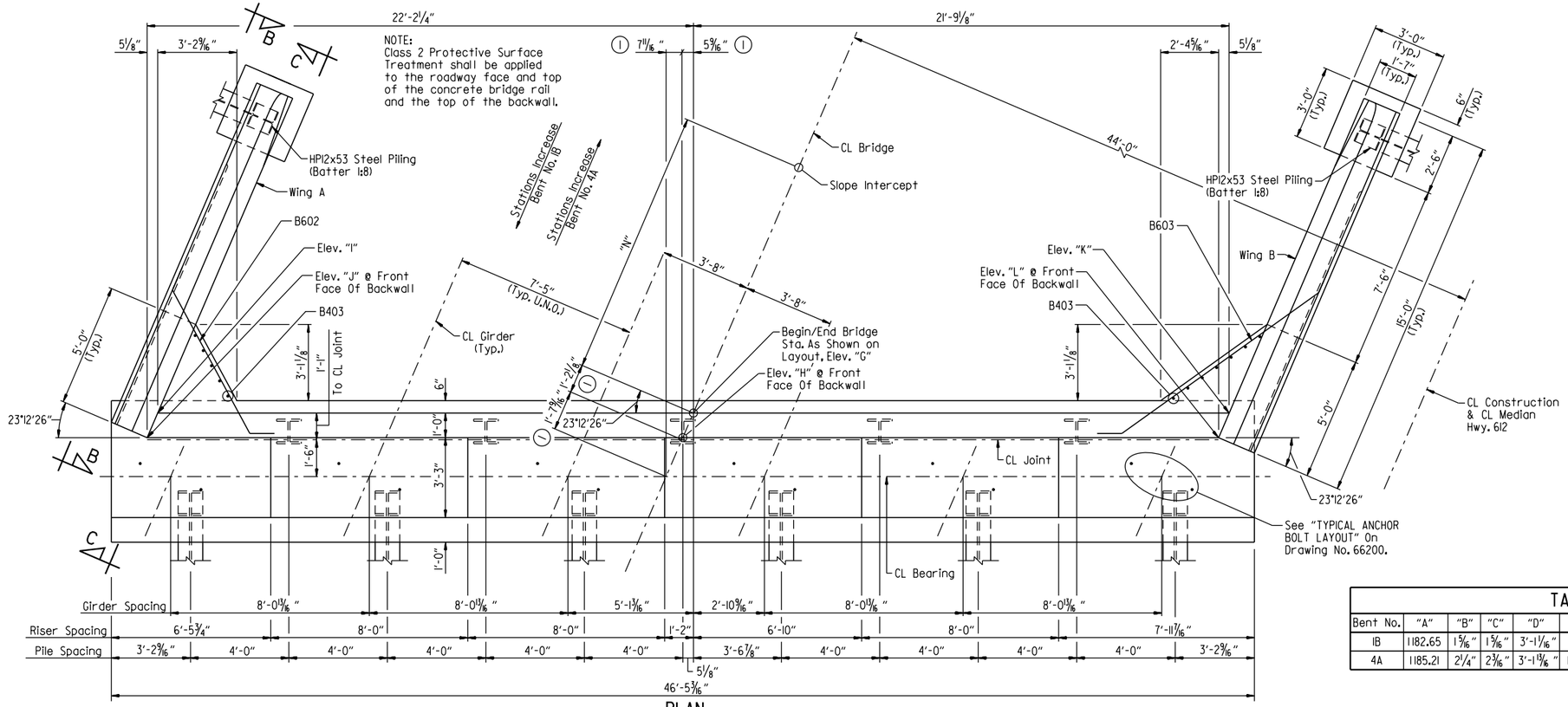

PLAN
(End Bent Nos. 4A & 1B)
Scale: ⅜" = 1'-0"

Ⓘ Measured to CL Joint

TABLE OF VARIABLES												
Bent No.	"A"	"B"	"C"	"D"	"E"	"G"	"H"	"I"	"J"	"K"	"L"	"N"
1B	1182.65	1⅝"	1⅝"	3'-1¹⁄₁₆"	7⅝"	1188.79	1188.80	1188.49	1188.51	1189.09	1189.10	11'-4¹⁵⁄₁₆"
4A	1185.21	2¼"	2⅜"	3'-1¹⁵⁄₁₆"	1'-0⅞"	1191.61	1191.59	1191.10	1191.09	1192.11	1192.10	12'-6"

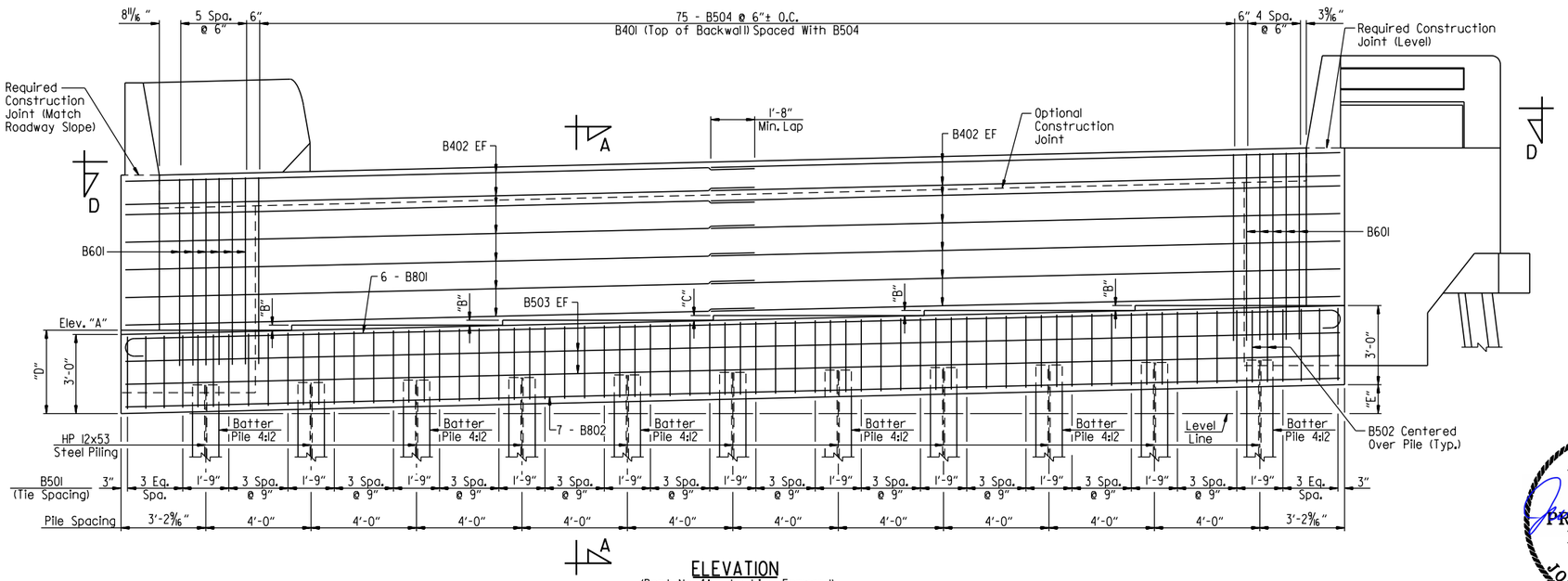

ELEVATION
(Bent No. 4A - Looking Forward)
(Bent No. 1B - Looking Back)
Scale: ⅜" = 1'-0"

NOTES:
For "BAR LIST", "VIEW D-D", & "BAR BENDING DIAGRAMS", see Dwg. No. 66203.

For GENERAL NOTES, see Dwg. No. 66200.

For details of elastomeric bearing and anchor bolts, see Dwg. No. 66207.

For "SECTION A-A", "VIEW B-B" & "SECTION C-C", see Dwg. No. 66202.

LEGEND
EF = Each Face

STATE OF ARKANSAS
LICENSED PROFESSIONAL ENGINEER
No. 16458
JOEL E. SKINNER
Digitally Signed 07/28/2023
BRIDGE ENGINEER

SHEET 2 OF 4
DETAILS OF END BENTS
HIGHWAY 612 OVER
COUNTY ROAD 946 (JAVELLO ROAD)
ROUTE SEC.
ARKANSAS STATE HIGHWAY COMMISSION
LITTLE ROCK, ARK.

DRAWN BY: HEW DATE: AUG. 2011 FILENAME: b012326m4_a2.dgn
CHECKED BY: WMM DATE: DEC. 2011
DESIGNED BY: PCC DATE: AUG. 2011 SCALE: AS SHOWN
BRIDGE NO. A7615 & B7615 DRAWING NO. 66201

JESkinner 7/28/2023 12:09:52 PM
WORKSPACE: ARDOT Bridge
\\garverinc.local\gdata\Projects\2017\17017660 - ARDOT 012326 Hwy 412 - Hwy 112\Drawings\b012326x4_S202-AB.dgn
REVISED DATE:

DATE REVISED	DATE REVISED	FED. ROAD DIST. NO.	STATE	JOB NO.	SHEET NO.	TOTAL SHEETS
		6	ARK.	012326	413	838
		A765 & B765		END BENT DETAILS		66202

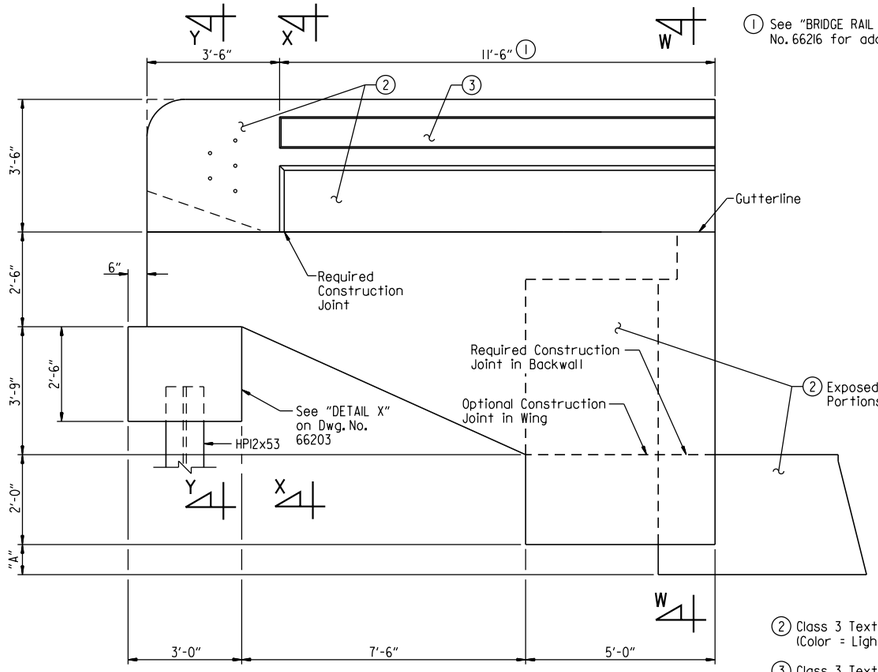

(1) See "BRIDGE RAIL AESTHETIC DETAIL" on Dwg. No. 66216 for additional information.

(2) Class 3 Textured Coating Finish (Color = Light Brown, Color Chip No. 33522)

(3) Class 3 Textured Coating Finish (Color = Medium Brown, Color Chip No. 30219)

LEGEND
FF = Front Face
BF = Back Face
EF = Each Face

VIEW B-B
Scale: ½" = 1'-0"

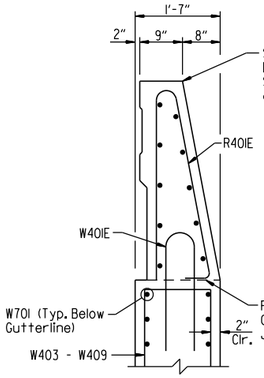

SECTION X-X
Scale: ¾" = 1'-0"

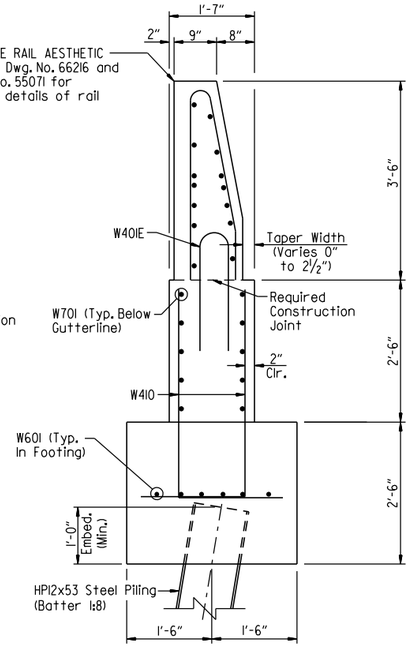

SECTION Y-Y
Scale: ¾" = 1'-0"

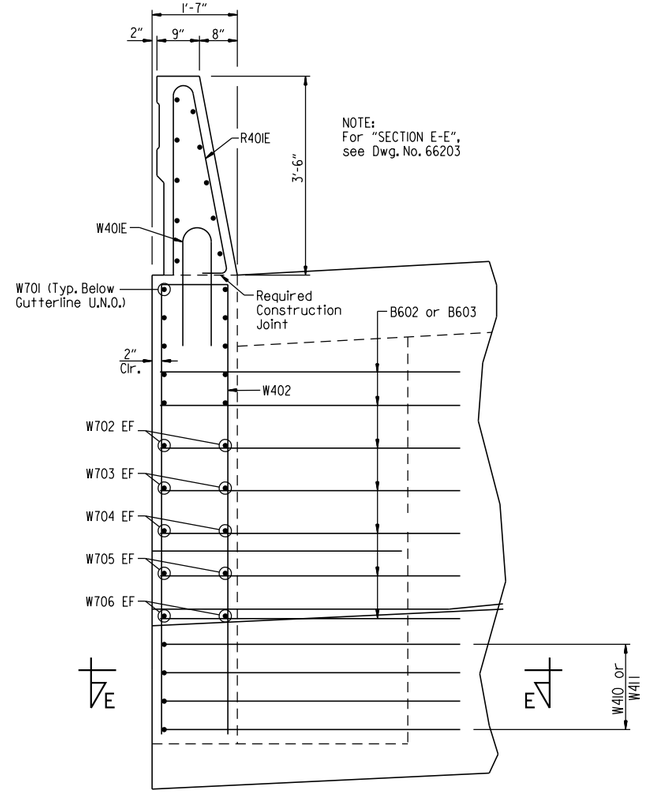

NOTE:
For "SECTION E-E", see Dwg. No. 66203

SECTION W-W
Scale: ¾" = 1'-0"

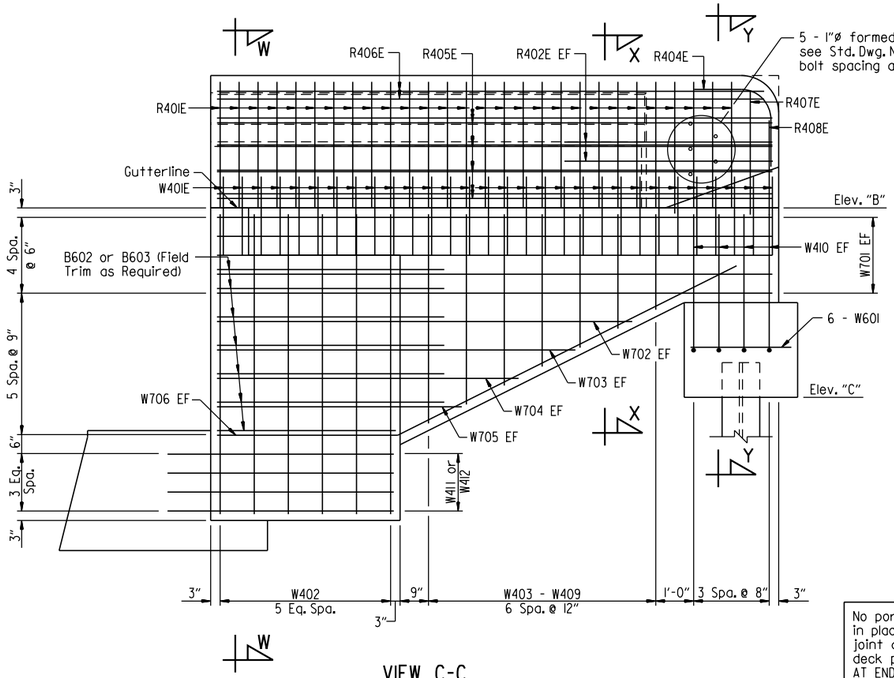

5 - 1"ø formed holes for ⅞"ø bolts, see Std. Dwg. Nos. GR-10 & GR-12 for bolt spacing and additional details

VIEW C-C
Scale: ½" = 1'-0"

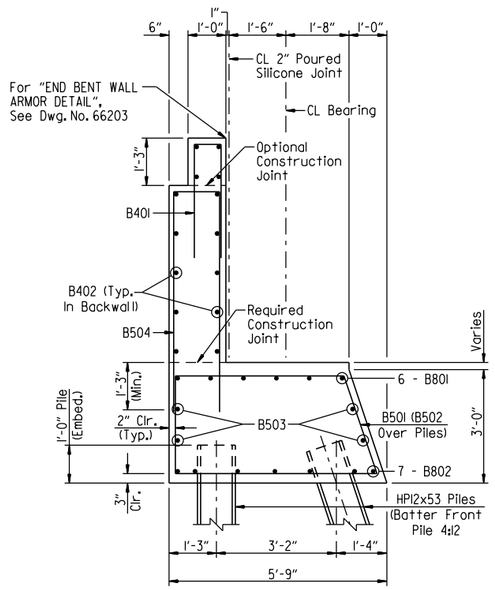

SECTION A-A
Scale: ½" = 1'-0"

No portion of the backwall shall be poured before the girders are in place. The portion of the backwall above the optional construction joint at the paving bracket shall not be placed until the adjacent deck pour has been made. Refer to the "EXPANSION DEVICE INSTALLATION AT END BENTS note on Std. Dwg. 55008. No heavy construction equipment shall be allowed within 10' of the backwall before the deck concrete placement for the adjacent span has been completed.

TABLE OF VARIABLES

Bent No.	Wing	"A"	Elev. "B"	Elev. "C"
1A	A	6⅜"	1188.67	1183.67
	B	6 13/16"	1187.66	1182.66
1B	A	7⅜"	1188.33	1183.33
	B	6¼"	1188.92	1183.92
4A	A	11⅛"	1191.27	1186.27
	B	10 5/16"	1192.28	1187.28
4B	A	10¼"	1192.52	1187.52
	B	11 1/16"	1191.93	1186.93

STATE OF ARKANSAS
LICENSED PROFESSIONAL ENGINEER
No. 16458
JOEL E. SKINNER
Digitally Signed 07/28/2023
BRIDGE ENGINEER

SHEET 3 OF 4
DETAILS OF END BENTS
HIGHWAY 612 OVER
COUNTY ROAD 946 (JAVELLO ROAD)
ROUTE SEC.
ARKANSAS STATE HIGHWAY COMMISSION
LITTLE ROCK, ARK.

DRAWN BY: HEW DATE: AUG. 2011 FILENAME: b012326m4_a3.dgn
CHECKED BY: WMM DATE: DEC. 2011 SCALE: AS SHOWN
DESIGNED BY: PCC DATE: AUG. 2011
BRIDGE NO. A7615 & B7615 DRAWING NO. 66202

JESkinner 7/28/2023 12:09:53 PM
WORKSPACE: ARDOT Bridge
\\garverinc.local\gdata\Projects\2017\17017660 - ARDOT 012326 Hwy 412 - Hwy 112\Drawings\b012326x4_5203-MD.dgn
REVISED DATE:

DATE REVISED	DATE REVISED	FED. ROAD DIST. NO.	STATE	JOB NO.	SHEET NO.	TOTAL SHEETS
		6	ARK.	012326	414	838
		A7615 & B7615		END BENT DETAILS		66203

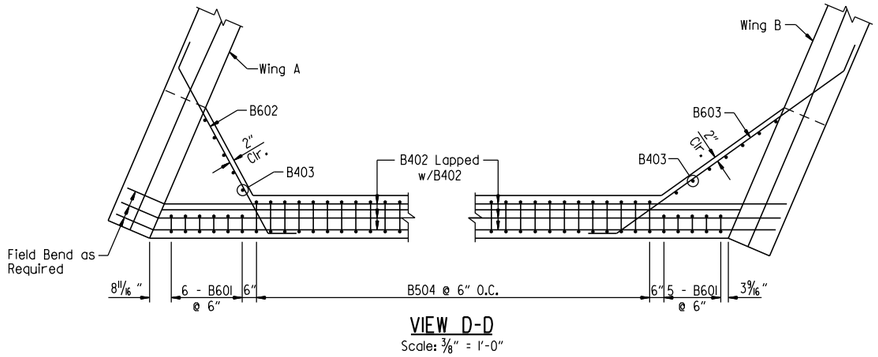

VIEW D-D
Scale: 3/8" = 1'-0"

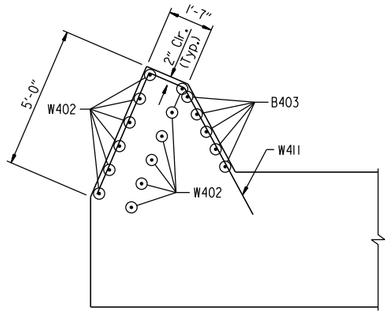

SECTION E-E (WING A)
Scale: 3/8" = 1'-0"

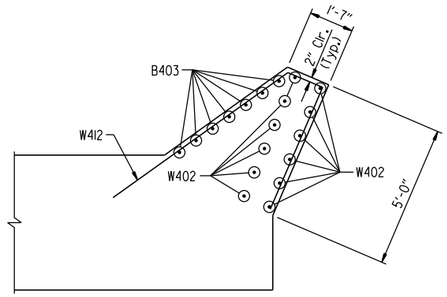

SECTION E-E (WING B)
Scale: 3/8" = 1'-0"

BAR LIST

MARK	NO. REQ'D.	LENGTH	"A"	"B"	PIN DIA.
B401	75	6'-6"	8"	3'-0"	2"
B402	28	23'-11"			Str.
B403	12	6'-8"			Str.
B501	48	15'-7"			2 1/2"
B502	22	9'-6 1/2"			2 1/2"
B503	4	46'-1"			Str.
B504	75	12'-7 1/2"	1'-2"	5'-10"	2 1/2"
B601	11	14'-6"	8"	7'-1"	4 1/2"
B602	7	8'-7"			4 1/2"
B603	7	11'-10"			4 1/2"
B801	6	47'-11"			6"
B802	7	46'-1"			Str.
R401E	56	7'-6"			3"
R402E	8	5'-6"			Str.
R404E	2	3'-8"			8 1/2"
R405E	16	14'-8"			Str.
R406E	4	14'-5"			Str.
R407E	2	6'-8"			3"
R408E	2	5'-1"			3"
W401E	60	4'-7"			6"
W402	12	16'-8 1/2"	1'-3"	7'-10"	3"
W403 To W409	2 Each	12'-0 1/2" To 6'-0 1/2"	1'-3"	5'-6" To 2'-6"	3"
W410	16	5'-4"			3"
W411	4	11'-0"			2"
W412	4	13'-6"			2"
W601	12	2'-8"			Str.
W701	20	14'-8"			Str.
W702	4	10'-11"			Str.
W703	4	9'-5"			Str.
W704	4	7'-11"			Str.
W705	4	6'-5"			Str.
W706	4	14'-10"			5 1/4"

NOTES:
Dimensions of bars in bending diagrams are out-to-out.

Number of bars shown is for one bent only.

Bar designations ending with "E" indicate epoxy coated bars.

For bar bending diagrams of R401E, R404E, R407E, R408E & W401E, see Std. Dwg. No. 55071.

The first bar designation number indicates the reinforcing bar size.

BAR BENDING DIAGRAMS

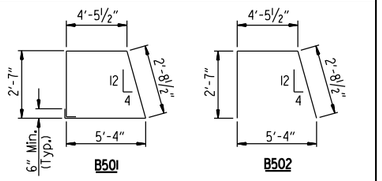

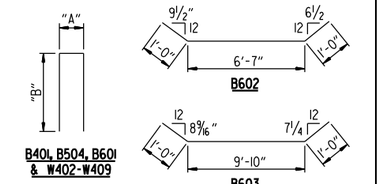

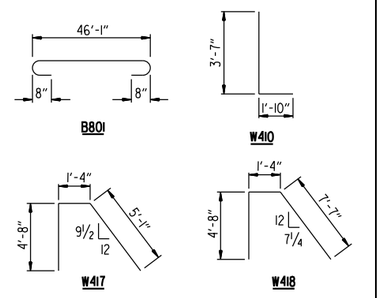

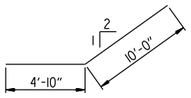

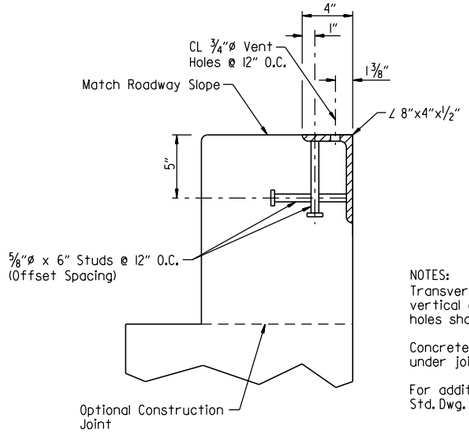

END BENT WALL ARMOR DETAIL
Scale: 2" = 1'-0"

NOTES:
Transverse spacing between vertical anchor studs and vent holes shall be 6".

Concrete shall be hand packed under joint armor.

For additional joint details, see Std. Dwg. No. 55008.

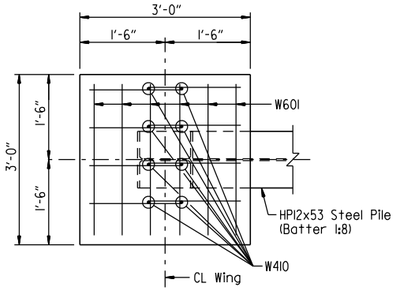

DETAIL X
(Plan Of Wing Pile Footing)
Scale: 3/8" = 1'-0"

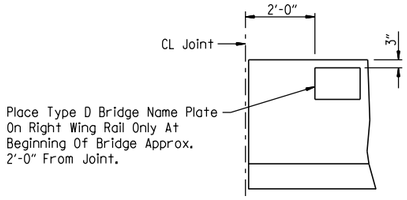

VIEW SHOWING LOCATION OF NAME PLATE
Scale: 1/2" = 1'-0"

STATE OF ARKANSAS
LICENSED PROFESSIONAL ENGINEER
No. 16458
JOEL E. SKINNER
Digitally Signed 07/28/2023
BRIDGE ENGINEER

SHEET 4 OF 4
DETAILS OF END BENTS
HIGHWAY 612 OVER
COUNTY ROAD 946 (JAVELLO ROAD)
ROUTE SEC.
ARKANSAS STATE HIGHWAY COMMISSION
LITTLE ROCK, ARK.

DRAWN BY: HEW DATE: AUG. 2011 FILENAME: b012326m4_a4.dgn
CHECKED BY: WMM DATE: DEC. 2011
DESIGNED BY: PCC DATE: AUG. 2011 SCALE: AS SHOWN
BRIDGE NO. A7615 & B7615 DRAWING NO. 66203

JESkinner 7/28/2023 12:09:53 PM
WORKSPACE: ARDOT Bridge
\\garverinc.local\data\Projects\2017\17017660 - ARDOT 012326 Hwy 412 - Hwy 112\Drawings\b012326x4_S204-BL.dgn
REVISED DATE:

DATE REVISED	DATE REVISED	FED. ROAD DIST. NO.	STATE	JOB NO.	SHEET NO.	TOTAL SHEETS
		6	ARK.	012326	415	838
		A7615		INT. BENT DETAILS		66204

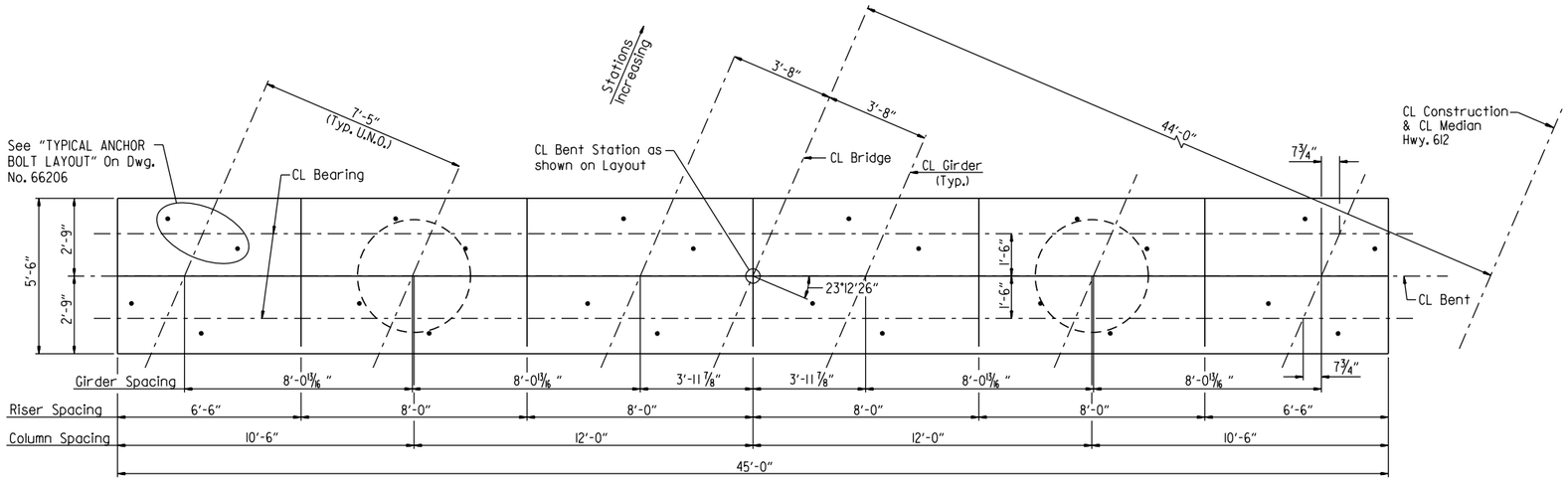

PLAN - BENT NOS. 2A & 3A

Scale: ⅜" = 1'-0"

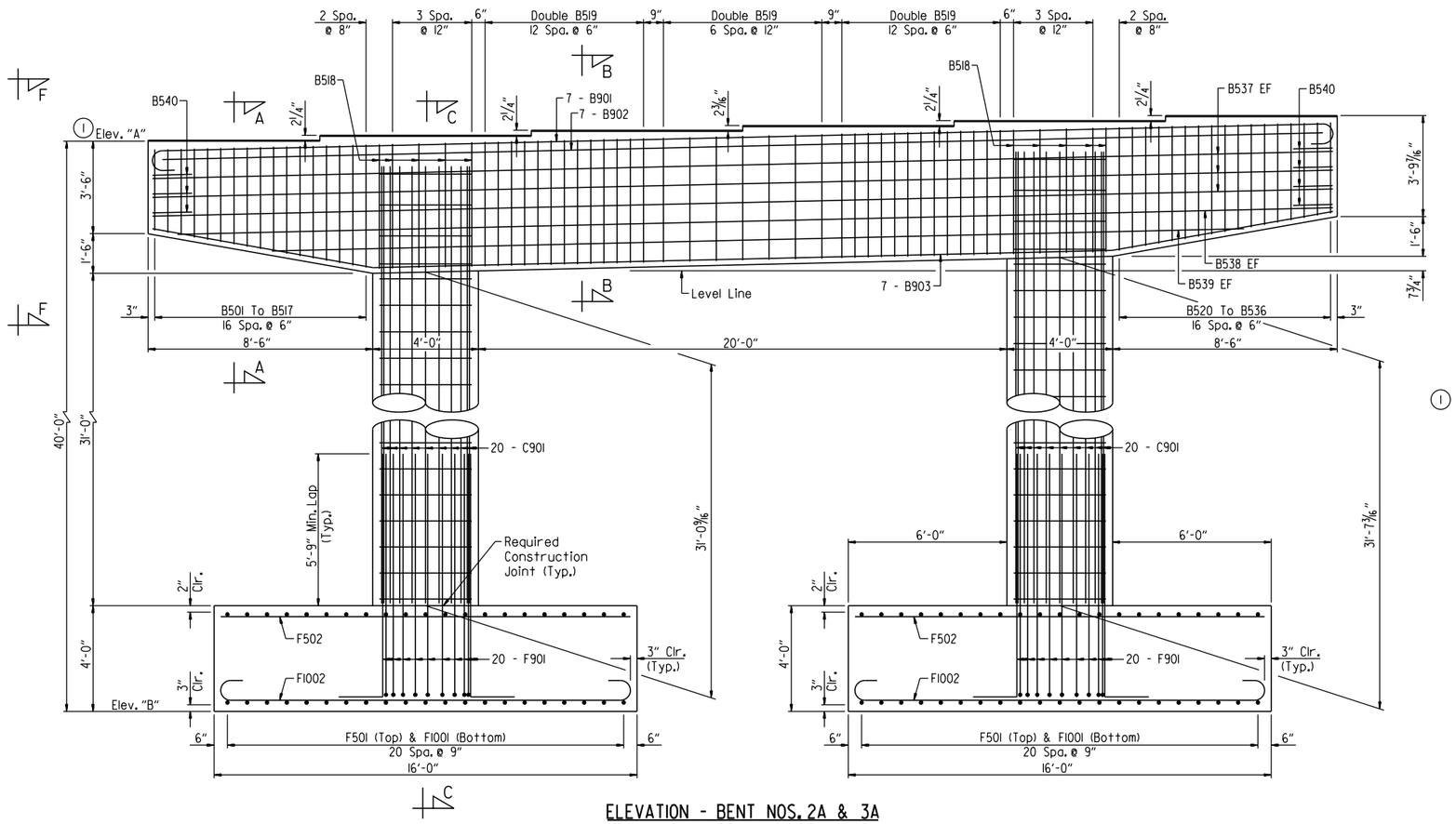

ELEVATION - BENT NOS. 2A & 3A

(Looking Ahead)
Scale: ⅜" = 1'-0"

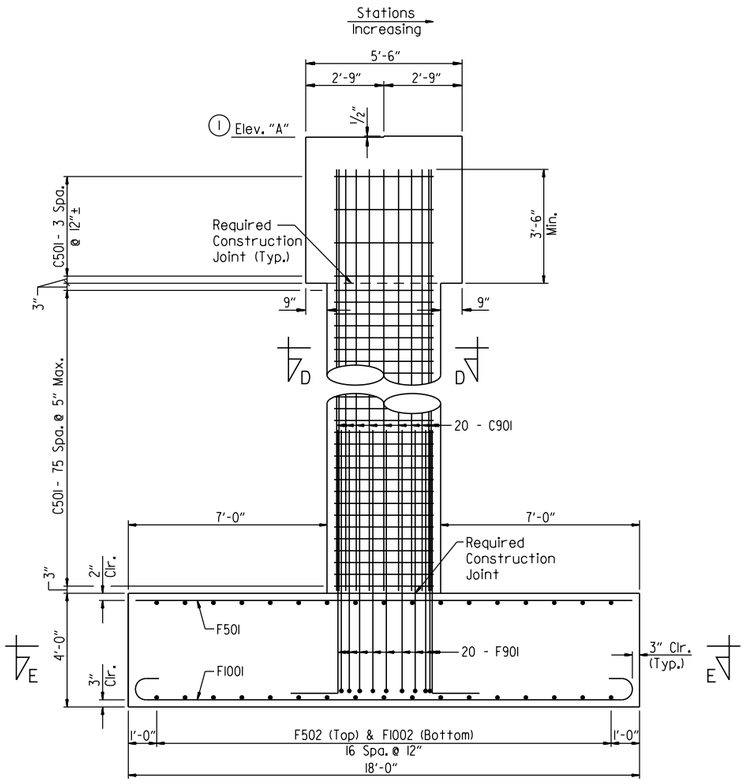

SECTION C-C

Scale: ⅜" = 1'-0"

(1) Elevation is taken from the back-station cap step

NOTES:
For "GENERAL NOTES", "SECTION A-A", "SECTION B-B", "SECTION D-D", "SECTION E-E", "BAR LIST - BRIDGE A" and "BAR BENDING DIAGRAMS", see Dwg. No. 66206.

TABLE OF VARIABLES		
Bent No.	"A"	"B"
2A	1183.19	1143.19
3A	1184.39	1144.39

STATE OF ARKANSAS
LICENSED PROFESSIONAL ENGINEER
No. 16458
JOEL E. SKINNER
Digitally Signed 07/28/2023
BRIDGE ENGINEER

SHEET 1 OF 3
DETAILS OF INTERMEDIATE BENTS HIGHWAY 612 OVER COUNTY ROAD 946 (JAVELLO ROAD)

ROUTE SEC.

ARKANSAS STATE HIGHWAY COMMISSION
LITTLE ROCK, ARK.

DRAWN BY: HEW DATE: AUG. 2011 FILENAME: b012326a4_bl.dgn
CHECKED BY: WMM DATE: DEC. 2011 SCALE: AS SHOWN
DESIGNED BY: PCC DATE: AUG. 2011
BRIDGE NO. A7615 DRAWING NO. 66204

JESkinner 7/28/2023 12:09:54 PM
WORKSPACE: ARDOT Bridge
\\garverinc.local\gdata\Projects\2017\17017660 - ARDOT 012326 Hwy 412 - Hwy 112\Drawings\b012326x4_S205-BE.dgn
REVISED DATE:

DATE REVISED	DATE REVISED	FED. ROAD DIST. NO.	STATE	JOB NO.	SHEET NO.	TOTAL SHEETS
		6	ARK.	012326	416	838
		B7615		INT. BENT DETAILS		66205

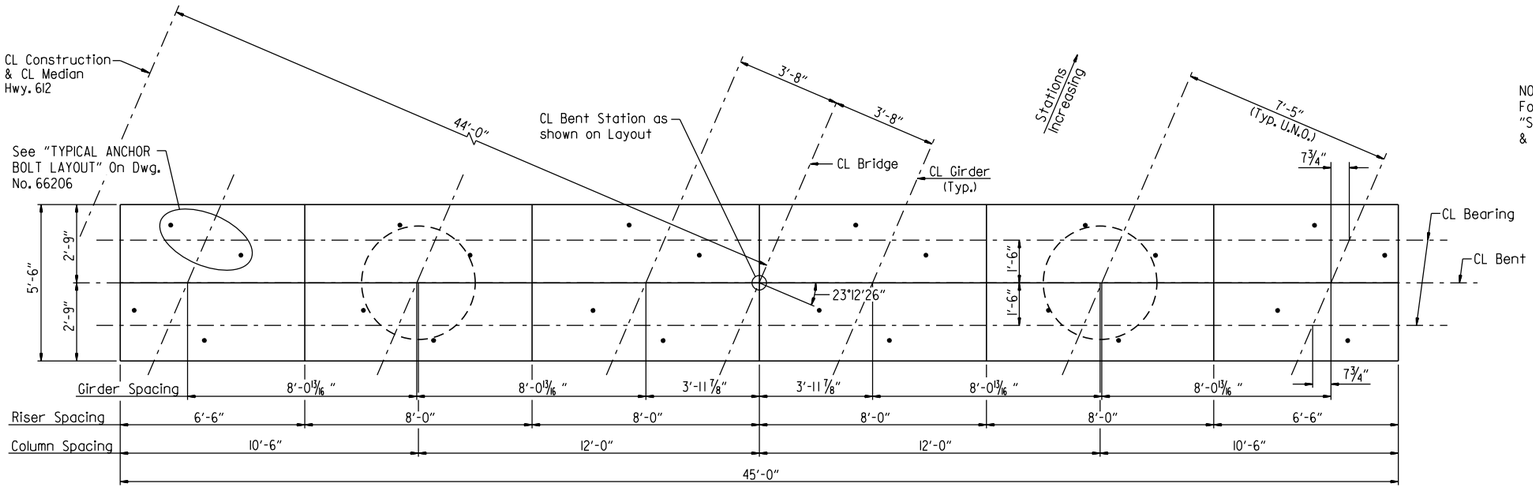

PLAN - BENT NOS. 2B & 3B

Scale: ⅜" = 1'-0"

NOTE:
For "GENERAL NOTES", "SECTION A-A", "SECTION B-B", "SECTION D-D", "SECTION E-E", "BAR LIST - BRIDGE B" & "BAR BENDING DIAGRAMS", see Dwg. No. 66206.

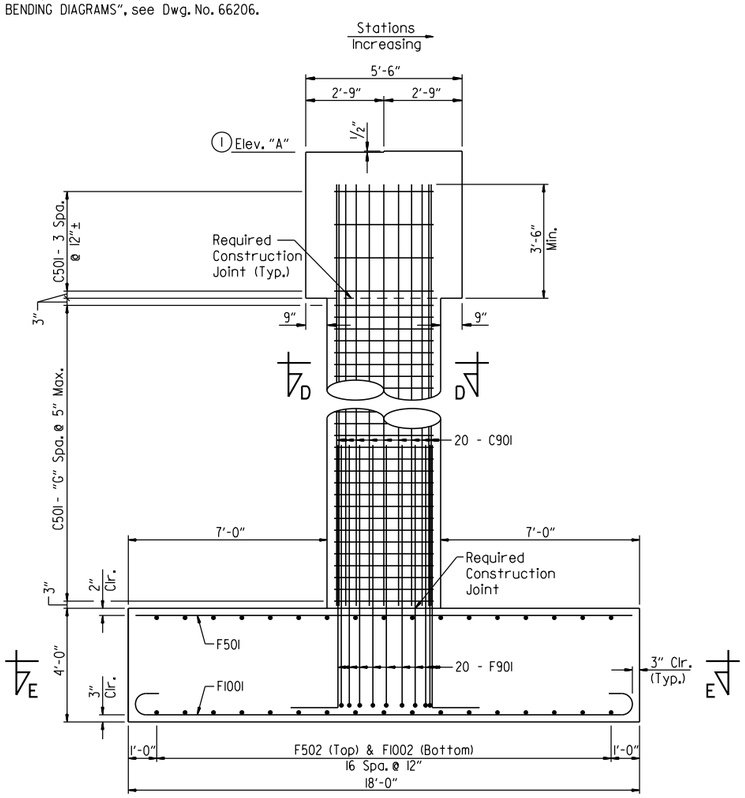

SECTION C-C

Scale: ⅜" = 1'-0"

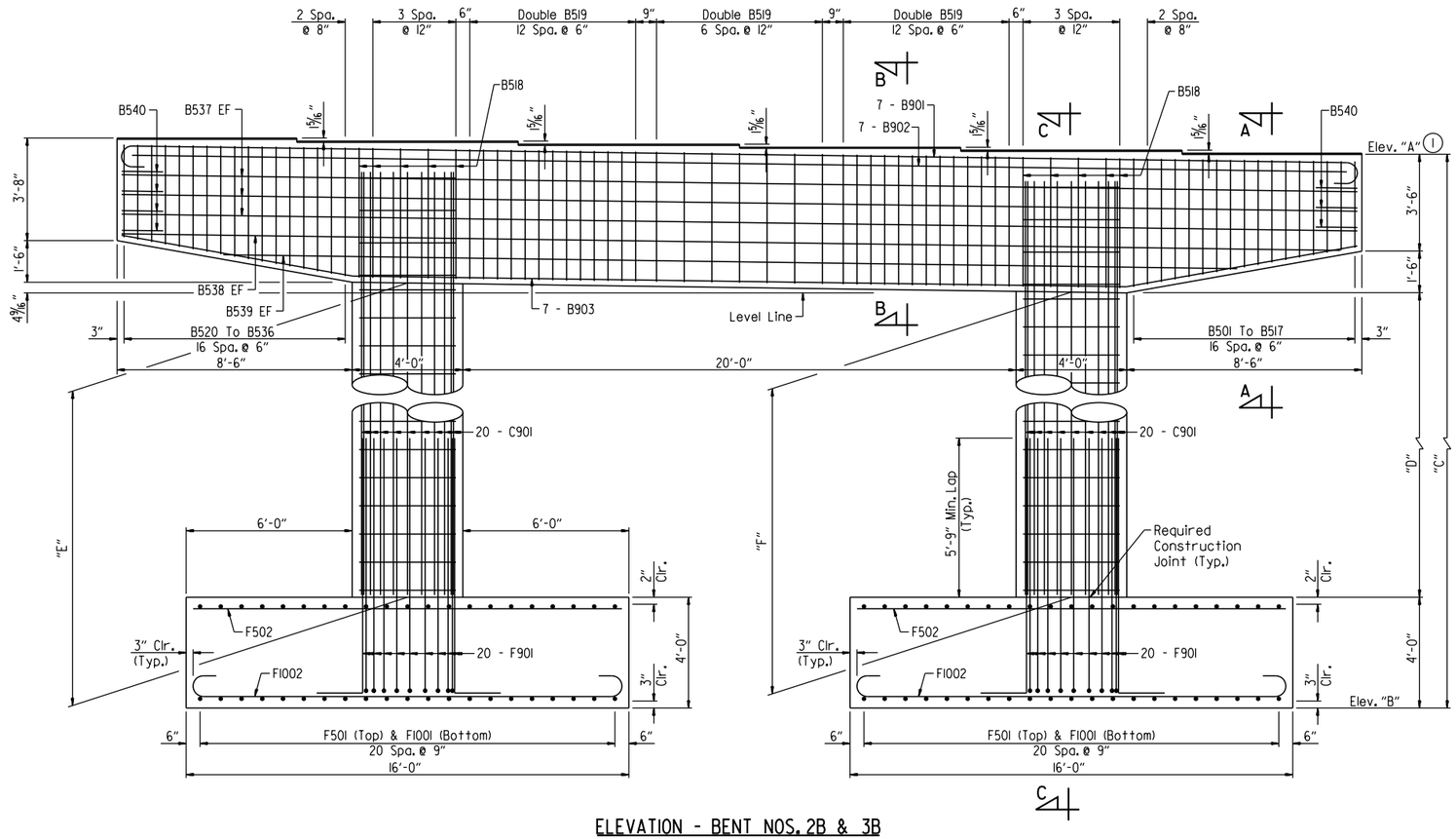

ELEVATION - BENT NOS. 2B & 3B

(Looking Ahead)

Scale: ⅜" = 1'-0"

① Elevation is taken from the back-station cap step

TABLE OF VARIABLES							
Bent No.	"A"	"B"	"C"	"D"	"E"	"F"	"G"
2B	1183.83	1142.33	41'-6"	32'-6"	32'-10⅜"	32'-6⅝"	78
3B	1185.03	1145.03	40'-0"	31'-0"	31'-4⅜"	31'-0⅝"	75

STATE OF ARKANSAS
LICENSED PROFESSIONAL ENGINEER
No. 16458
JOEL E. SKINNER
Digitally Signed 07/28/2023
BRIDGE ENGINEER

SHEET 2 OF 3
DETAILS OF INTERMEDIATE BENTS
HIGHWAY 612 OVER
COUNTY ROAD 946 (JAVELLO ROAD)

ROUTE SEC.

ARKANSAS STATE HIGHWAY COMMISSION

LITTLE ROCK, ARK.

DRAWN BY: HEW DATE: AUG. 2011 FILENAME: b012326b4_b2.dgn
CHECKED BY: WMM DATE: DEC. 2011 SCALE: AS SHOWN
DESIGNED BY: PCC DATE: AUG. 2011

BRIDGE NO. B7615 DRAWING NO. 66205

JESkinner 7/28/2023 12:09:54 PM
WORKSPACE: ARDOT Bridge
\\garverinc.local\gdata\Projects\2017\17017660 - ARDOT 012326 Hwy 412 - Hwy 112\Drawings\b012326x4_S206-BE.dgn
REVISED DATE:

DATE REVISED	DATE REVISED	FED. ROAD DIST. NO.	STATE	JOB NO.	SHEET NO.	TOTAL SHEETS
		6	ARK.	012326	417	838
		A7615 & B7615		INT. BENT DETAILS		66206

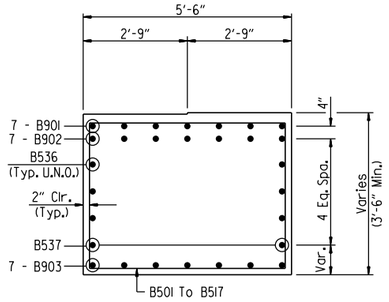

SECTION A-A
Scale: ½" = 1'-0"

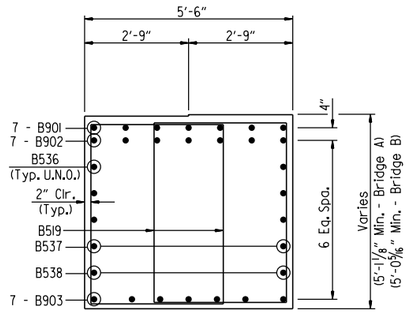

SECTION B-B
Scale: ½" = 1'-0"

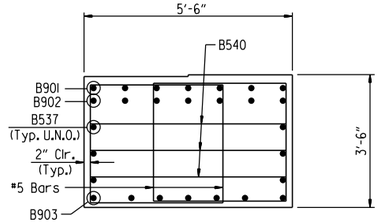

VIEW F-F
Scale: ½" = 1'-0"

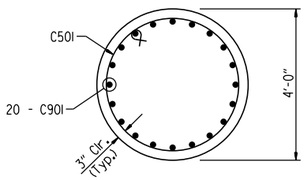

SECTION D-D
Scale: ½" = 1'-0"

GENERAL NOTES

All concrete shall be Class "S" with a minimum 28 day compressive strength f'c = 3,500 psi and shall be poured in the dry. All exposed corners to be chamfered ¾" unless otherwise noted.

All reinforcing steel shall be Grade 60 (yield strength = 60,000 psi) conforming to AASHTO M 31 or M322, Type A, with mill test reports.

Class 3 Textured Coating Finish shall be applied to bridge surfaces as specified in Special Provision "TEXTURED COATING FINISH" and in accordance with Subsection 802.19(b)(3).

Top reinforcing bars in cap shall be properly placed to avoid interference with anchor bolts or sheet metal sleeves.

For additional information, see Layout.

BAR LIST - BRIDGE A						BAR LIST - BRIDGE B					
MARK	NO. REQ'D.	LENGTH	"A"	"B"	P.D.	MARK	NO. REQ'D.	LENGTH	"A"	"B"	P.D.
B501 To B517	1 Ea.	17'-0" To 20'-2"	5'-2"	3'-1" To 4'-8"	2½"	B501 To B517	1 Ea.	17'-0" To 20'-2"	5'-2"	3'-1" To 4'-8"	2½"
B518	10	14'-5"	5'-2"	4'-8½"	2½"	B518	10	14'-5"	5'-2"	4'-8½"	2½"
B519	66	16'-11"	3'-6"	4'-8½"	2½"	B519	66	16'-11"	3'-6"	4'-8½"	2½"
B520 To B536	1 Ea.	17'-9" To 20'-2"	5'-2"	3'-5½" To 4'-8"	2½"	B520 To B536	1 Ea.	17'-6" To 20'-2"	5'-2"	3'-4" To 4'-8"	2½"
B537	6	44'-8"			Str.	B537	6	44'-8"			Str.
B538	2	43'-9"			Str.	B538	2	44'-0"			Str.
B539	2	36'-9"			Str.	B539	2	36'-8"			Str.
B540	7	7'-10"	5'-0½"	1'-6"	2½"	B540	7	7'-10"	5'-0½"	1'-6"	2½"
B901	7	47'-2"	44'-8"	10"	9"	B901	7	47'-2"	44'-8"	10"	9"
B902	7	43'-11"			Str.	B902	7	43'-11"			Str.
B903	7	44'-11"			9"	B903	7	44'-11"			9"
C501	160	12'-6"			3¾"	C501	"C"	12'-6"			3¾"
C901	40	35'-0"			Str.	C901	40	"D"			Str.
F501	42	17'-6"			Str.	F501	42	17'-6"			Str.
F502	34	15'-6"			Str.	F502	34	15'-6"			Str.
F901	40	10'-11"			9"	F901	40	10'-11"			9"
F1001	42	20'-4"	17'-6"	11½"	9"	F1001	42	20'-4"	17'-6"	11½"	9"
F1002	34	18'-4"	15'-6"	11½"	9"	F1002	34	18'-4"	15'-6"	11½"	9"

TABLE OF VARIABLES		
Bent No.	"C"	"D"
2B	166	36'-3"
3B	160	34'-9"

BAR BENDING DIAGRAMS

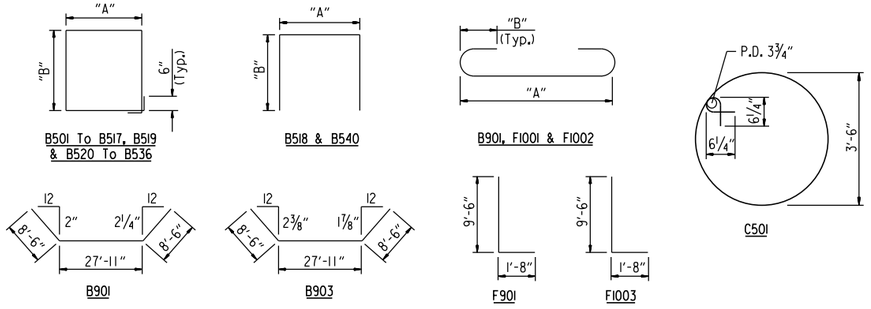

NOTE:
Dimension of bars are out-to-out.
Bars shown are for one bent only.

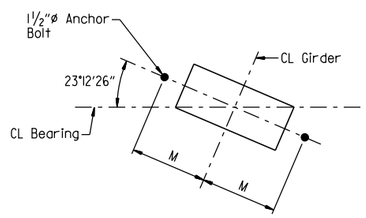

TYPICAL ANCHOR BOLT LAYOUT
No Scale

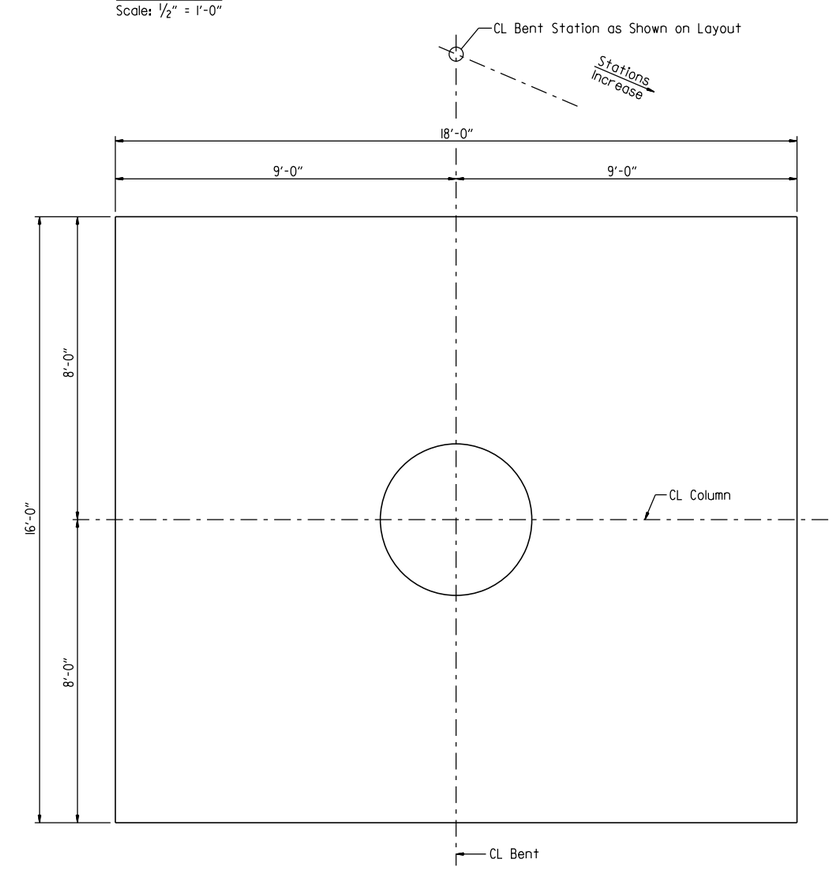

SECTION E-E
Scale: ⅜" = 1'-0"

STATE OF ARKANSAS
LICENSED PROFESSIONAL ENGINEER
No.16458
JOEL E. SKINNER
Digitally Signed 07/28/2023
BRIDGE ENGINEER

SHEET 3 OF 3
DETAILS OF INTERMEDIATE BENTS
HIGHWAY 612 OVER
COUNTY ROAD 946 (JAVELLO ROAD)
ROUTE SEC.
ARKANSAS STATE HIGHWAY COMMISSION
LITTLE ROCK, ARK.

DRAWN BY: HEW DATE: AUG. 2011 FILENAME: b012326m4_b3.dgn
CHECKED BY: WMM DATE: DEC. 2011 SCALE: AS SHOWN
DESIGNED BY: JES DATE: AUG. 2011
BRIDGE NO. A7615 & B7615 DRAWING NO. 66206

JESkinner 7/28/2023 12:09:55 PM
WORKSPACE: ARDOT Bridge
\\garverinc.local\data\Projects\2017\170766O - ARDOT 012326 Hwy 412 - Hwy 112\Drawings\b012326x4_S207-MD.dgn
REVISED DATE:

DATE REVISED	DATE REVISED	FED. ROAD DIST. NO.	STATE	JOB NO.	SHEET NO.	TOTAL SHEETS
		6	ARK.	012326	418	838
		A765 & B765	ELASTOMERIC BEARINGS			66207

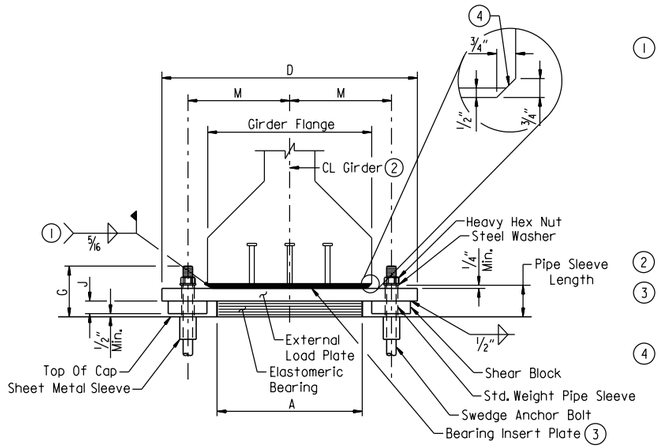

FRONT VIEW - AT BENT NOS. 2 & 3

1. Unless otherwise approved by the Engineer, welding of the external load plate at expansion bearings to the bearing insert plate will be allowed only when: 1) The approximate average air temperature during the 24 hour period immediately preceding welding is between 40°F and 80°F; and 2) The slots in the external load plate are positioned to center on the anchor bolts; and 3) No horizontal deformation of the elastomeric pad is evident. If welding at other temperatures is required, the Engineer will provide adjustment data.

   Care shall be taken to ensure that the external load plate is in full and complete contact with the bearing insert plate before welding begins.

2. Centerline elastomeric pad shall be aligned with centerline girder.

3. Bearing insert plates (A709, Gr. 50W) & studs shall be considered subsidiary to the item "PRESTRESSED CONCRETE GIRDERS (TYPE IV)". Studs shall conform to Subsection 807.08.

4. Bevel Bearing Insert Plate to conform to girder chamfer.

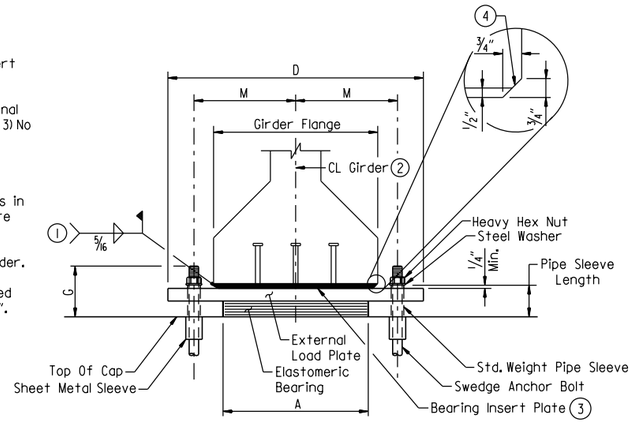

FRONT VIEW - AT BENT NOS. 1 & 4

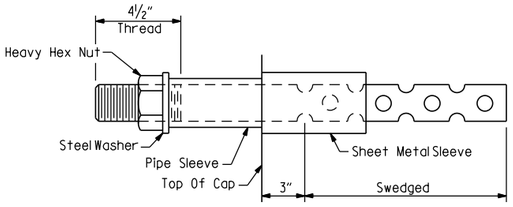

ANCHOR BOLT DETAIL

NOTES:
Anchor bolts may be cast in place or drilled and grouted into place. If anchor bolts are to be cast in place, the galvanized sheet metal sleeves will not be required.

If anchor bolts are to be drilled and grouted in place, the galvanized sheet metal sleeves shall be cast in place as shown. Sleeves shall be dry packed with styrofoam, urethane foam or approved equal prior to pouring of concrete. After pouring of the cap and prior to erection of the girder, the dry pack shall be removed and holes for the anchor bolts shall be accurately drilled into the concrete. Bolts placed in drilled holes shall be accurately set and fixed using a OPL approved epoxy or non-shrink grout that completely fills the holes. Galvanized sheet metal sleeves shall meet the requirements of ASTM A653, CS Type B or approved equivalent, be of minimum 16 gage thickness, and be galvanized according to ASTM B695, Class 50. Sheet metal sleeves will not be paid for directly, but will be considered subsidiary to the item "STRUCTURAL STEEL IN BEAM SPANS (A709, GR. 50W)".

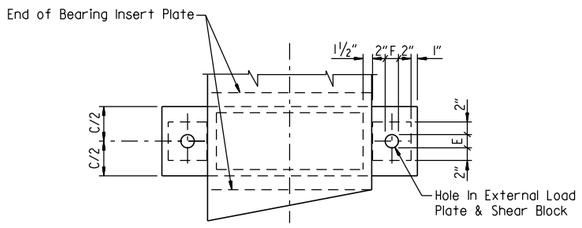

PLAN VIEW - AT BENT NOS. 2 & 3

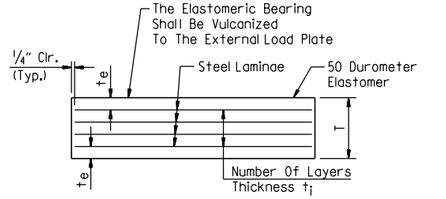

t_e = Thickness of elastomer cover on top and bottom of pad
t_i = Thickness of elastomer between steel laminae
N = Number of elastomer layers of thickness t_i

ELASTOMERIC BEARING

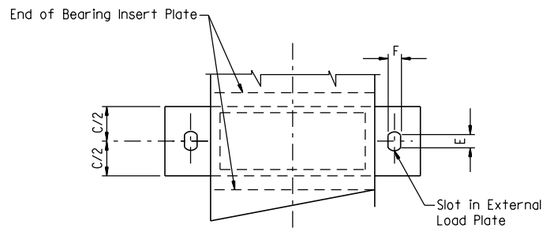

PLAN VIEW - AT BENT NOS. 1 & 4

NOTE:
The grade and direction of bevel of the external load plate may not be accurately depicted with respect to Ta and Tb values shown in "TABLE OF FABRICATOR VARIABLES".

Prior to erection of the girders, the Contractor shall verify the orientation of the bearings with respect to Ta and Tb.

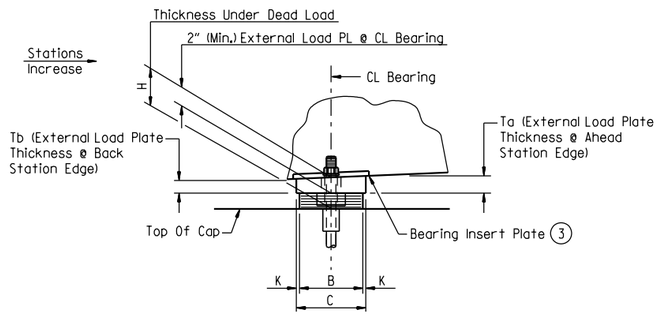

SIDE VIEW - AT BENT NOS. 2 & 3

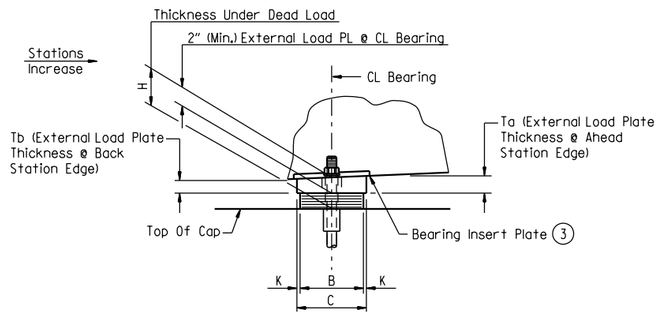

SIDE VIEW - AT BENT NOS. 1 & 4

GENERAL NOTES

Elastomeric bearings shall conform to Section 808 and shall be paid for at the unit price bid for "ELASTOMERIC BEARINGS".

External load plates and shear blocks shall conform to ASTM A709, Grade 50W. Pipe sleeves shall be ASTM A500, Grade B, and shall be galvanized to conform to AASHTO M232, Class C or ASTM B695, Class 50.

External load plates (with shear blocks as applicable) shall be completely fabricated (including bevel and bolt holes) and shall be cleaned before vulcanizing to the elastomeric bearing. The surface in contact with the elastomeric bearing shall be cleaned in accordance with Subsection 808.03. Other surfaces shall be blast cleaned in accordance with Subsection 807.84(b) for painted steel and 807.84(e) for unpainted Grade 50W steel.

Anchor bolts, washers and nuts shall conform to Subsection 807.07. The anchor bolt grade of steel shall be as specified in the "TABLE OF FABRICATOR VARIABLES". Indentations shall be circular with rounded bottoms and staggered as shown in the details.

Pipe sleeves, anchor bolts, washers and nuts shall be paid for at the unit price bid for "STRUCTURAL STEEL IN BEAM SPANS (A709, GR. 50W)". External load plates and shear blocks will not be measured or paid for separately but will be considered incidental to the unit price bid for "ELASTOMERIC BEARINGS".

Bearings shall be seated in accordance with Subsection 808.08. This work and materials are considered subsidiary to the item "ELASTOMERIC BEARINGS" and will not be paid for directly.

TABLE OF FABRICATOR VARIABLES

* Maximum Design Load = Service Load

Bridge No.	Location		Bearing Type	No. Of Bearings Each Bent	*Maximum Design Load (Kips)	Elastomeric Pad							External Load Plate									Anchor Bolt				
	Bent No.(s)	Beam Or Girder No.				G	H	A	B	N	t_i	t_e	No. & Thickness Of Steel Laminate	T	C	D	E	F	J	K	M	T_a	T_b	Anchor Bolt (Dia. x L)	Grade	Pipe Sleeve Size (Dia. x L)	Sheet Metal Sleeve Size (Dia. x L)	Steel Washer Size (O.D.)
A765 & B765	1	All	Exp.	6	154	9½"	6¾"	26"	10"	7	½"	¼"	8 @ 12 Ga.	4 1/16"	11"	36½"	4½"	2¼"	-	½"	15½"	2.08"	1.92"	1½" x 27"	55	1½" x 7"	3" x 7"	3"
	2	Back Sta.	Fixed	6	154	7⅛"	4⅜"	26"	10"	3	½"	¼"	4 @ 12 Ga.	2 7/16"	11"	43½"	2¼"	2¼"	1⅞"	½"	17⅝"	2.05"	1.95"	1½" x 25"	55	1½" x 4⅝"	3" x 11"	3"
	2	Fwd. Sta.	Fixed	6	200	7⅛"	4⅜"	26"	10"	3	½"	¼"	4 @ 12 Ga.	2 7/16"	11"	43½"	2¼"	2¼"	1⅞"	½"	17⅝"	2.10"	1.90"	1½" x 25"	55	1½" x 4⅝"	3" x 11"	3"
	3	Back Sta.	Fixed	6	200	7⅛"	4⅜"	26"	10"	3	½"	¼"	4 @ 12 Ga.	2 7/16"	11"	43½"	2¼"	2¼"	1⅞"	½"	17⅝"	2.04"	1.96"	1½" x 25"	55	1½" x 4⅝"	3" x 11"	3"
	3	Fwd. Sta.	Fixed	6	154	7⅛"	4⅜"	26"	10"	3	½"	¼"	4 @ 12 Ga.	2 7/16"	11"	43½"	2¼"	2¼"	1⅞"	½"	17⅝"	2.08"	1.92"	1½" x 25"	55	1½" x 4⅝"	3" x 11"	3"
	4	All	Exp.	6	154	9½"	6¾"	26"	10"	7	½"	¼"	8 @ 12 Ga.	4 1/16"	11"	36½"	4½"	2¼"	-	½"	15½"	2.05"	1.95"	1½" x 27"	55	1½" x 7"	3" x 7"	3"

STATE OF ARKANSAS
LICENSED PROFESSIONAL ENGINEER
No. 16458
JOEL E. SKINNER
Digitally Signed 07/28/2023
BRIDGE ENGINEER

DETAILS OF ELASTOMERIC BEARINGS
HIGHWAY 612 OVER
COUNTY ROAD 946 (JAVELLO ROAD)

ROUTE SEC.

ARKANSAS STATE HIGHWAY COMMISSION

LITTLE ROCK, ARK.

DRAWN BY: HEW DATE: MAY 2011 FILENAME: b012326m4_el.dgn
CHECKED BY: WMM DATE: NOV. 2011
DESIGNED BY: MRA DATE: MAY 2011 SCALE: AS SHOWN

BRIDGE NO. A765 & B765 DRAWING NO. 66207

JEskinner 7/28/2023 12:09:55 PM
WORKSPACE: ARDOT Bridge
\\garverinc.local\gdata\Projects\2017\7017660 - ARDOT 012326 Hwy 412 - Hwy 112\Drawings\b012326x4.530-B6.dgn
REVISED DATE:

DATE REVISED	DATE REVISED	FED. ROAD DIST. NO.	STATE	JOB NO.	SHEET NO.	TOTAL SHEETS
		6	ARK.	012326	419	838
		A765 & B765		270'-0" UNIT		66208

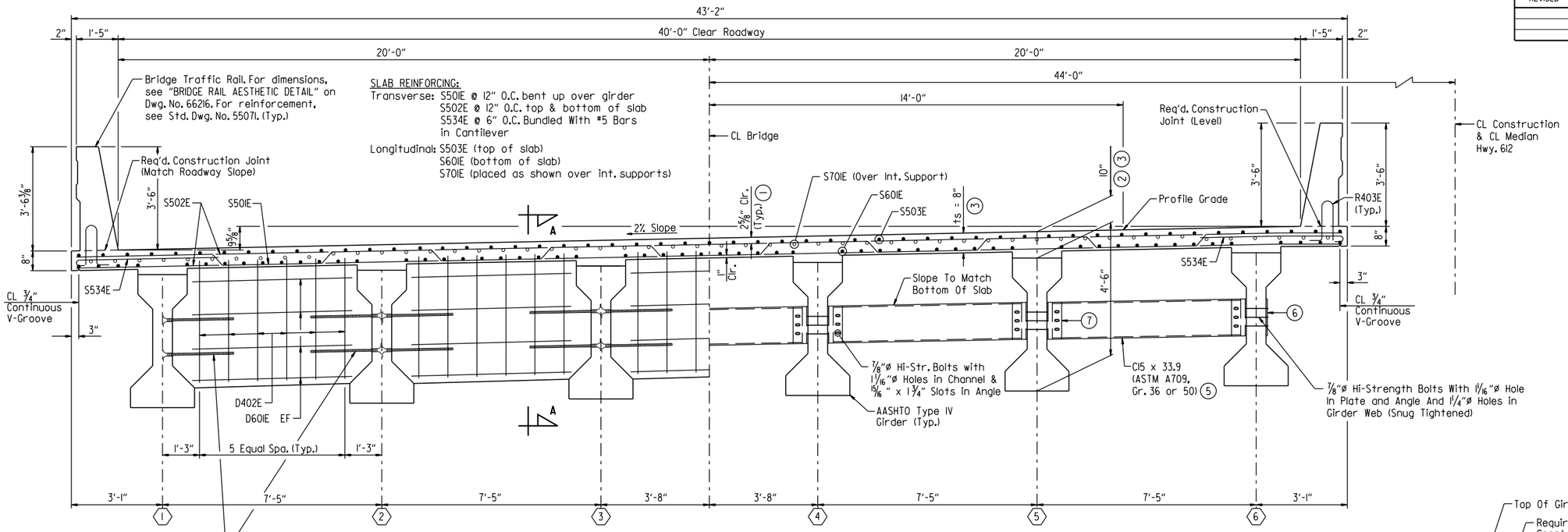

LEGEND
EF = Each Face

(4) Galvanized Threaded Inserts & 3/4"ø x 3'-6" Threaded Rods. For Number And Location, See "TYPICAL GIRDER ELEVATION" On Drawing Nos. 66213 & 66214.

INTERMEDIATE CONCRETE DIAPHRAGMS

(5) ALTERNATE STRUCTURAL STEEL DIAPHRAGMS

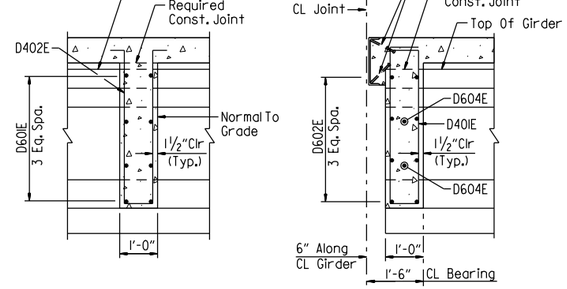

SECTION A-A
(Normal To Diaphragm)
Scale: 1/2" = 1'-0"

SECTION B-B
(Normal To Diaphragm)
Scale: 1/2" = 1'-0"

TYPICAL SECTION AT INTERMEDIATE DIAPHRAGMS

Bridge A Shown (Looking Ahead), Bridge B (Looking Back)
Scale: 1/2" = 1'-0"

(1) TOLERANCE:
Minus = 1/4"
Plus = Equal to amount af slab thickening used to meet slab thickness tolerance - see "ADJUSTMENT FOR SLAB THICKNESS TOLERANCE WHEN REMOVABLE DECK FORMING IS USED" on Dwg. No. 66209.

(2) This dimension taken at CL Girder @ CL Bearing

(3) See "ADJUSTMENT FOR SLAB THICKNESS TOLERANCE WHEN REMOVABLE DECK FORMING IS USED" on Dwg. No. 66209.

(4) Galvanized threaded inserts: Dayton-Richmond F-42 Loop Ferrule Insert or an approved equal. 3/4"ø galvanized threaded rods to be ASTM A709, Grade 36 or AASHTO M 31 or M 232, Class C or ASTM B695, Class 50. These items will not be paid for directly but shall be considered subsidiary to the item "PRESTRESSED CONCRETE GIRDERS (TYPE IV)". Galvanizing shall be in accordance with AASHTO M232 Class C or AASHTO M298 Class 50.

(5) Galvanized steel diaphragms may be used in place of concrete at intermediate diaphragms only. All components of the alternate steel diaphragms shall be galvanized. Galvanizing shall be in accordance with AASHTO M111. Payment will be based on concrete diaphragms.

(6) PL 1/2" x 4" x 15" (ASTM A709, Gr. 36 or 50) (Mask when applying textured coating finish to exterior girders.)

(7) L6" x 4" x 1/2" x 15" (ASTM A709, Gr. 36 or 50) center angle on web of girder. A standard washer shall be supplied for use under both the nut and the head of the 7/8"ø h.s. bolts. An additional plate washer shall cover the angle slots.

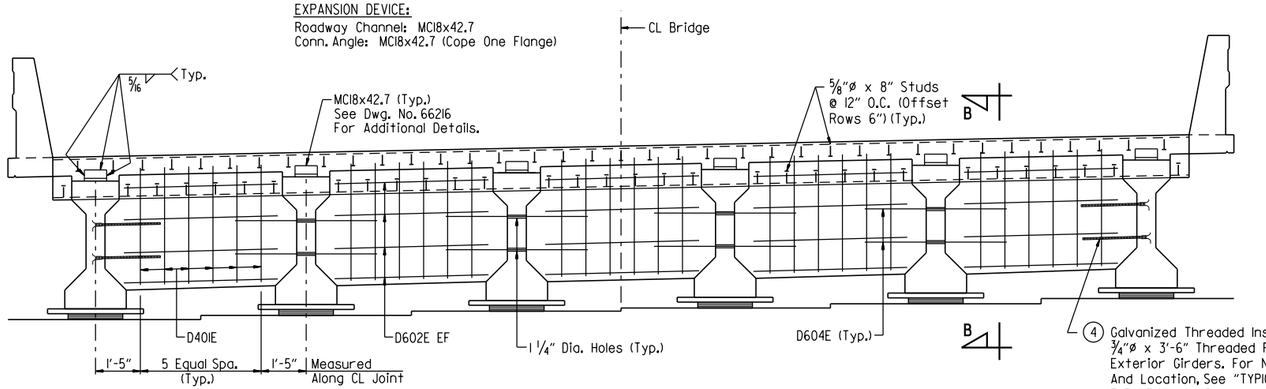

TYPICAL SECTION (END OF UNIT AT JOINT)

Bridge A (Looking Ahead), Bridge B (Looking Back)
No Scale

(4) Galvanized Threaded Inserts & 3/4"ø x 3'-6" Threaded Rods @ Exterior Girders. For Number And Location, See "TYPICAL GIRDER ELEVATION" On Dwg. Nos. 66213 & 66214. Threaded Rods Shall Be Bent As Required To Match Skew Of Diaphragms.

NOTES:
Class 2 Protective Surface Treatment shall be applied to the roadway surface and the face and top of concrete parapet rail.

Class 3 Textured Coating Finish shall be applied to bridge surfaces as specfied in Special Provision "TEXTURED COATING FINISH" and in accordance with Subsection 802.19(b)(3). Textured Coating Finish shall not be applied on surfaces where Class 2 Protective Surface Treatment is applied.

One epoxy-coated #5 bar in the top and one epoxy-coated #5 bar in the bottom may be substituted for each bar S501E. Payment will be based on the weight of bar S501E.

Bar positions or clearances from the forms shall be maintained by means of stays, ties, hangers or other approved devices per Subsection 804.06. Placement of bolster or high-chairs with full-length lower runners directly on removable deck forms will not be allowed.

All bars designated with an E suffix are to be epoxy coated.

STATE OF ARKANSAS
LICENSED PROFESSIONAL ENGINEER
No. 16458
JOEL E. SKINNER
Digitally Signed 07/28/2023
BRIDGE ENGINEER

SHEET 1 OF 9
DETAILS OF 270'-0" CONTINUOUS PRESTRESSED CONCRETE GIRDER UNIT
HIGHWAY 612 OVER
COUNTY ROAD 946 (JAVELLO ROAD)
ROUTE SEC.
ARKANSAS STATE HIGHWAY COMMISSION
LITTLE ROCK, ARK.

DRAWN BY: HEW DATE: MAY 2011 FILENAME: b012326m4_sl.dgn
CHECKED BY: WMM DATE: NOV. 2011 SCALE: AS SHOWN
DESIGNED BY: MRA DATE: MAY 2011
BRIDGE NO. A7615 & B7615 DRAWING NO. 66208

JESkinner 7/28/2023 12:09:56 PM
WORKSPACE: ARDOT Bridge
\\garverinc.local\gdata\Projects\2017\17017660 - ARDOT 012326 Hwy 412 - Hwy 112\Drawings\b012326x4_S401-TS.dgn
REVISED DATE:

DATE REVISED	DATE REVISED	FED. ROAD DIST. NO.	STATE	JOB NO.	SHEET NO.	TOTAL SHEETS
		6	ARK.	012326	420	838
		A765 & B765		270'-0" UNIT		66209

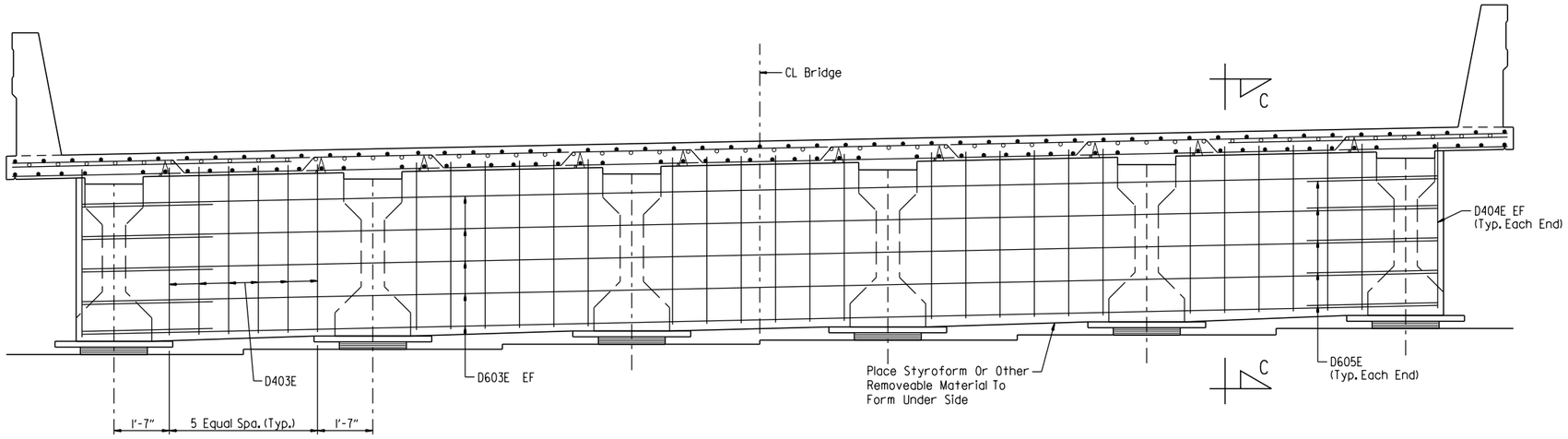

TYPICAL SECTION BETWEEN BEAMS AT INTERMEDIATE BENTS

(For Info Not Shown See "TYPICAL SECTION AT INTERMEDIATE DIAPHRAGMS")
No Scale

LEGEND

EF = Each Face

BAR BENDING DIAGRAMS

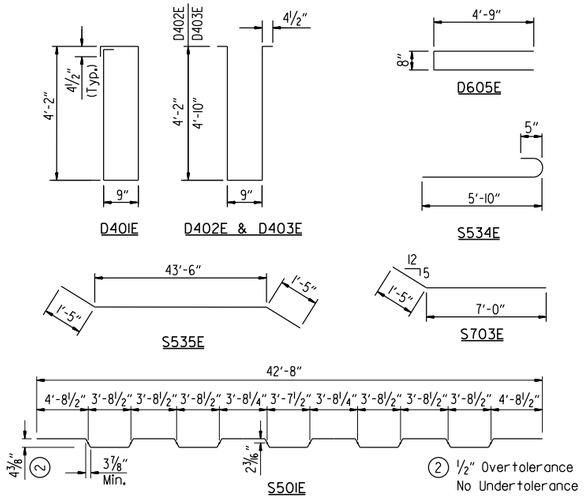

BAR LIST

Mark	No. Req'd.	Length	Pin. Dia.
D401E	60	10'-2"	2"
D402E	180	9'-6"	2"
D403E	60	10'-10"	2"
D404E	8	4'-10"	Str.
D601E	240	5'-3"	Str.
D602E	80	5'-9"	Str.
D603E	20	42'-3"	Str.
D604E	8	5'-0"	Str.
D605E	20	9'-10"	4½"
S501E	252	43'-8½"	3"
S502E	506	42'-10"	Str.
S503E	265	56'-8"	Str.
S504E To S533E	4 Series	6'-9" To 40'-7"	Str.
S534E	1070	6'-5"	3¾"
S535E	4	46'-4"	3¾"
S601E	265	57'-1"	Str.
S701E	104	40'-0"	Str.
S702E	12	8'-5"	5¼"
R400E	64	6'-3"	3"
R401E	1076	7'-6"	3"
R402E	112	5'-6"	Str.
R403E	1076	3'-8"	3", 6"
R409E	80	9'-8"	Str.
R410E	40	14'-8"	Str.
R411E	100	15'-8"	Str.
R412E	120	19'-8"	Str.

NOTES:
Dimension of bars are out-to-out.

Bar designations ending with "E" indicate epoxy coated bars.

Number of bars shown is for one 270' unit.

See Std. Dwg. No. 55071 for Bar Bending Diagrams of R400E, R401E & R403E.

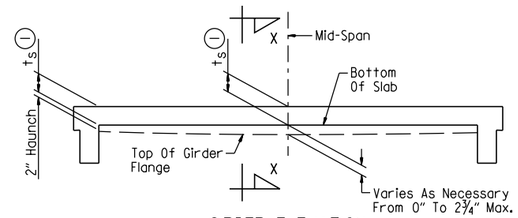

GIRDER ELEVATION

No Scale

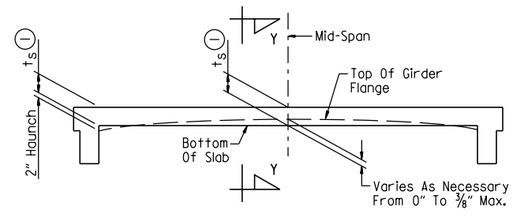

GIRDER ELEVATION

No Scale

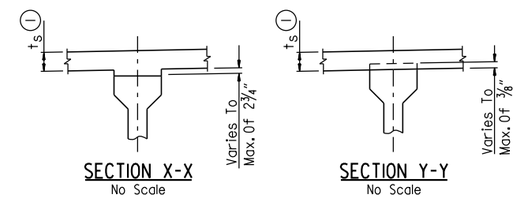

SECTION X-X

No Scale

SECTION Y-Y

No Scale

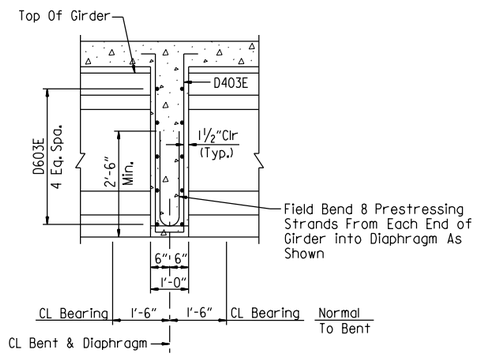

SECTION C-C

(Normal To Diaphragm)
Scale: ½" = 1'-0"

① Note: t_S = Slab Thickness As Shown On Superstructure Details See "TYPICAL SECTION AT INTERMEDIATE DIAPHRAGMS" on Dwg. No. 66208.

Tolerance when removable deck forming is used is +½", -¼". Haunch forming is required and shall be adjusted to maintain slab thickness tolerance. See Std. Dwg. No. 55005 for tolerances when permanent steel deck forms are used.

"GIRDER ELEVATION" sketches show the range of acceptability of the top of girder relative to bottom of slab after the placement of the slab. When the top of the girder projects more than a ⅜" into the slab, a raise in grade will be necessary. Girders shall be set in a sufficient number of spans over suitable increments so the revised grade line will provide a smooth riding surface. Variation of haunch height will be at the Contractor's expense.

ADJUSTMENT FOR SLAB THICKNESS TOLERANCE WHEN REMOVABLE DECK FORMING IS USED

STATE OF ARKANSAS
LICENSED PROFESSIONAL ENGINEER
No. 16458
JOEL E. SKINNER
Digitally Signed 07/28/2023
BRIDGE ENGINEER

SHEET 2 OF 9
DETAILS OF 270'-0" CONTINUOUS PRESTRESSED CONCRETE GIRDER UNIT HIGHWAY 612 OVER COUNTY ROAD 946 (JAVELLO ROAD)

ROUTE SEC.

ARKANSAS STATE HIGHWAY COMMISSION
LITTLE ROCK, ARK.

DRAWN BY: HEW DATE: MAY 2011 FILENAME: b012326m4_s2.dgn
CHECKED BY: WMM DATE: NOV. 2011 SCALE: AS SHOWN
DESIGNED BY: MRA DATE: MAY 2011

BRIDGE NO. A7615 & B7615 DRAWING NO. 66209

JESkinner 7/28/2023 12:09:56 PM
WORKSPACE: ARDOT Bridge
\\garverinc.local\data\Projects\2017\17017660 - ARDOT 012326 Hwy 412 - Hwy 112\Drawings\b012326x4_S402-TS.dgn
REVISED DATE:

DATE REVISED	DATE REVISED	FED. ROAD DIST. NO.	STATE	JOB NO.	SHEET NO.	TOTAL SHEETS
		6	ARK.	012326	421	838
		A765 & B765		270'-0" UNIT		66210

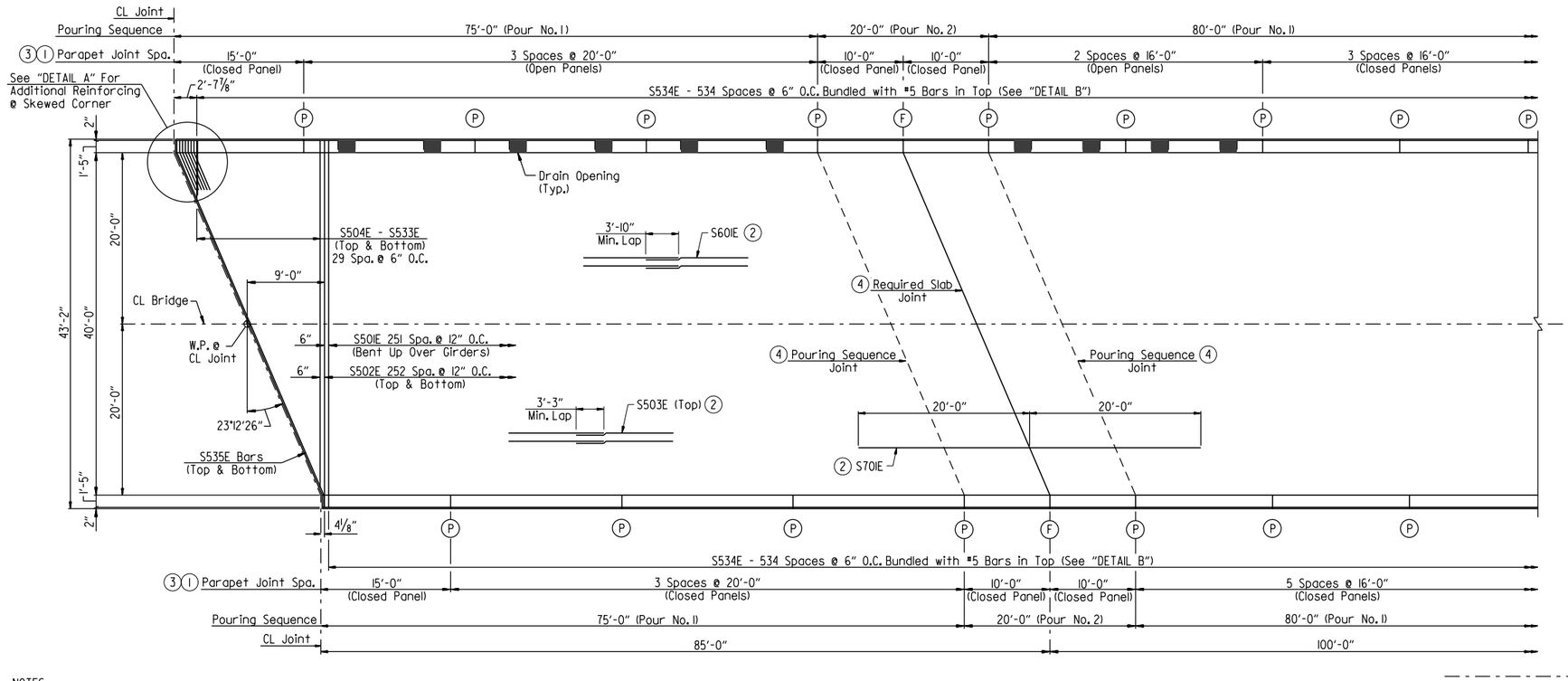

(1) Parapet joints designated with symbol (F) shall be stopped 6" from top of slab. All other parapet joints with symbol (P) shall be partial depth joints stopped 16" from top of slab.

(2) Refer to "TYPICAL SECTION AT INTERMEDIATE DIAPHRAGMS" on Dwg. 66208 for placement.

(3) Open panels are located on right side of Bridge B.

(4) See "TRANSVERSE SLAB JOINT DETAIL" on this Dwg.

NOTES:
Required slab joints and pouring sequence joints shall align with rail joints at the gutterline.

For additional rail reinforcing details, see Std. Dwg. No. 55071.

For "BAR LIST" and BAR BENDING DIAGRAMS", see Dwg. No. 66209.

For "SUPERSTRUCTURE GENERAL NOTES", see Dwg. No. 66215.

NOTES:
Pours with the same number may be placed simultaneously or separately. All pours (1) must be placed before pours (2) can be placed. A minimum of 48 hours shall elapse between the end of a pour and the start of the next pour. A minimum of 72 hours shall elapse between the end of a pour and the start of an adjacent pour.

Concrete in bridge superstructure shall be placed, consolidated, and screeded off for the entire pour before any concrete has taken its initial set. This may require the use of a retarding agent.

A minimum of 72 hours shall elapse between completion of the slab and the pouring of the bridge railing. Any railing pours made before the entire slab unit has been placed must be approved by the Engineer. The Contractor must obtain approval from the Engineer for any deviations from the pouring sequence(s) shown.

The slab and diaphragms shall not be poured prior to 90 days following release of prestressed girder strands.

Concrete diaphragms at intermediate bents shall be poured monolithically with the slab above the diaphragm.

All partial-depth and end bent diaphragms shall be cast in place and poured a minimum of 48 hours before the slab is poured.

Removable forms shall be used when pouring diaphragms.

REINFORCING PLAN & POURING SEQUENCE
(Bridge A Shown, Bridge B Is Similar Except As Noted.)
Scale: ⅛" = 1'-0"

TABLE OF VARIABLES								
CLOSED RAIL PANELS			OPEN RAIL PANELS					
Panel Length	"A"	R4XXE	Panel Length	"B"	"C"	"D"	"E"	R4XXE
10'-0"	19	09	16'-0"	8	3'-0"	11	6'-0"	11
15'-0"	29	10	20'-0"	11	4'-0"	15	8'-0"	12
16'-0"	31	11						
20'-0"	39	12						



NOTE:
Use Type 3 or 4 Joint Sealer. See Subsections 501.02(h) And 501.05(j). Backer Rod Filler will not be required. Joint Sealer shall be measured and paid for as "CLASS S(AE) CONCRETE-BRIDGE". Slab joints shall extend to the outside edge of the deck slab and shall align with open joints at the front face of the bridge traffic railing. Slab joints shall be installed before the bridge traffic railing is poured. If slab joints are to be sawed, they shall be sawed as soon as the concrete has sufficiently set to allow sawing of the joint without damage to the slab. Slab joints shall be placed at all pouring sequence construction joints and required slab joint locations. The joint sealer shall extend across the deck from gutterline to gutterline.

TRANSVERSE SLAB JOINT DETAIL
No Scale

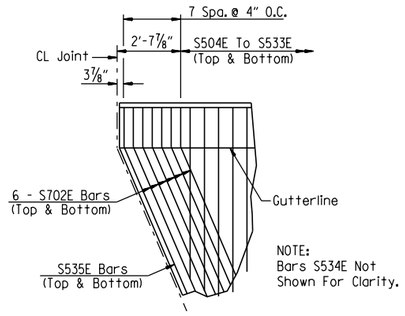

DETAIL A
No Scale

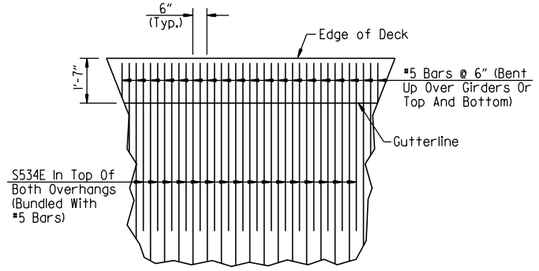

DETAIL B
No Scale

STATE OF ARKANSAS
LICENSED PROFESSIONAL ENGINEER
No. 16458
JOEL E. SKINNER
Digitally Signed 07/28/2023
BRIDGE ENGINEER

SHEET 3 OF 9
DETAILS OF 270'-0" CONTINUOUS PRESTRESSED CONCRETE GIRDER UNIT HIGHWAY 612 OVER COUNTY ROAD 946 (JAVELLO ROAD)

ROUTE SEC.

ARKANSAS STATE HIGHWAY COMMISSION
LITTLE ROCK, ARK.

DRAWN BY: HEW DATE: MAY 2011 FILENAME: b012326m4_s3.dgn
CHECKED BY: WMM DATE: NOV. 2011 SCALE: AS SHOWN
DESIGNED BY: MRA DATE: MAY 2011

BRIDGE NO. A7615 & B7615 DRAWING NO. 66210

JESkinner 7/28/2023 12:09:57 PM
WORKSPACE: ARDOT Bridge
\\garverinc.local\gdata\Projects\2017\17017660 - ARDOT 012326 Hwy 412 - Hwy 112\Drawings\b012326x4_5403-SB.dgn
REVISED DATE:

DATE REVISED	DATE REVISED	FED. ROAD DIST. NO.	STATE	JOB NO.	SHEET NO.	TOTAL SHEETS
		6	ARK.	012326	422	838
		A7615 & B7615		270'-0" UNIT		66211

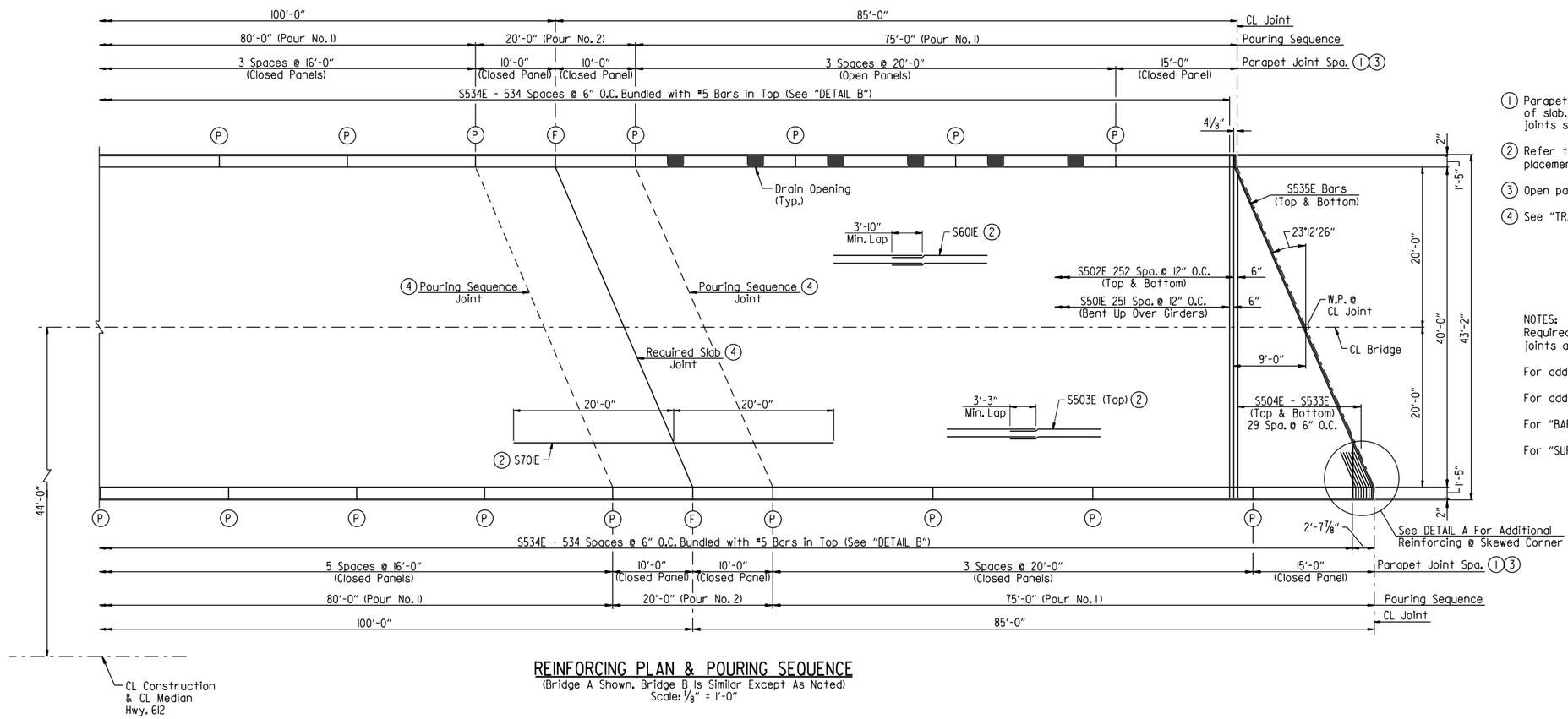

REINFORCING PLAN & POURING SEQUENCE

(Bridge A Shown, Bridge B Is Similar Except As Noted)
Scale: 1/8" = 1'-0"

(1) Parapet joints designated with symbol (F) shall be stopped 6" from top of slab. All other parapet joints with symbol (P) shall be partial depth joints stopped 16" from top of slab.

(2) Refer to "TYPICAL SECTION AT INTERMEDIATE DIAPHRAGMS" on Dwg. 66208 for placement.

(3) Open panels are located on right side of Bridge B.

(4) See "TRANSVERSE SLAB JOINT DETAIL" on Dwg. No. 66210.

NOTES:
Required slab joints and pouring sequence joints shall align with rail joints at the gutterline.

For additional rail reinforcing details, see Std. Dwg. No. 55071.

For additional pouring sequence information and notes, see Dwg. No. 66210.

For "BAR LIST" and BAR BENDING DIAGRAMS", see Dwg. No. 66209.

For "SUPERSTRUCTURE GENERAL NOTES", see Dwg. No. 66215.

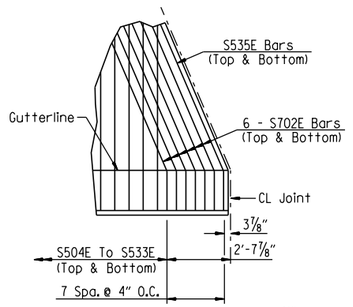

DETAIL A

No Scale

NOTE:
Bars S534E not shown for clarity.

STATE OF ARKANSAS
LICENSED PROFESSIONAL ENGINEER
No. 16458
JOEL E. SKINNER
Digitally Signed 07/28/2023
BRIDGE ENGINEER

SHEET 4 OF 9
DETAILS OF 270'-0" CONTINUOUS PRESTRESSED CONCRETE GIRDER UNIT HIGHWAY 612 OVER COUNTY ROAD 946 (JAVELLO ROAD)

ROUTE SEC.

ARKANSAS STATE HIGHWAY COMMISSION

LITTLE ROCK, ARK.

DRAWN BY: HEW DATE: MAY 2011 FILENAME: b012326m4_s4.dgn
CHECKED BY: WMM DATE: NOV. 2011 SCALE: AS SHOWN
DESIGNED BY: MRA DATE: MAY 2011

BRIDGE NO. A7615 & B7615 DRAWING NO. 66211

JEskinner 7/28/2023 12:09:57 PM
WORKSPACE: ARDOT Bridge
\\garverinc.local\gdata\Projects\2017\17017660 - ARDOT 012326 Hwy 412 - Hwy 112\Drawings\b012326x4_S404-SB.dgn
REVISED DATE:

DATE REVISED	DATE REVISED	FED. ROAD DIST. NO.	STATE	JOB NO.	SHEET NO.	TOTAL SHEETS
		6	ARK.	012326	423	838
		A7615 & B7615		270'-0" UNIT		66212

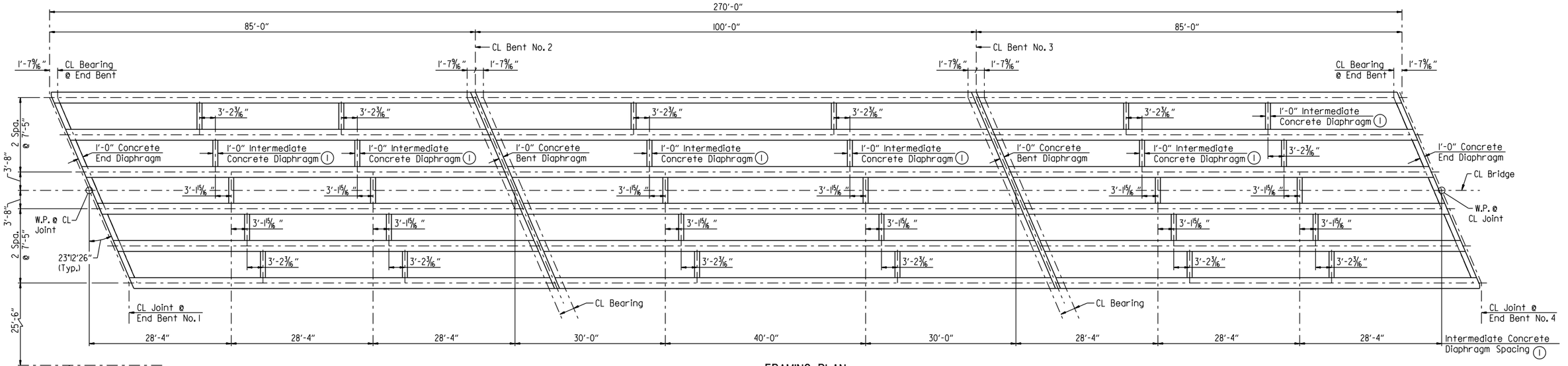

FRAMING PLAN

(Bridge "A" Shown, Bridge "B" Is Similar.)
Scale: 1" = 10'-0"

(1) Galvanized steel diaphragms may be used in place of concrete diaphragms at intermediate diaphragm locations only.

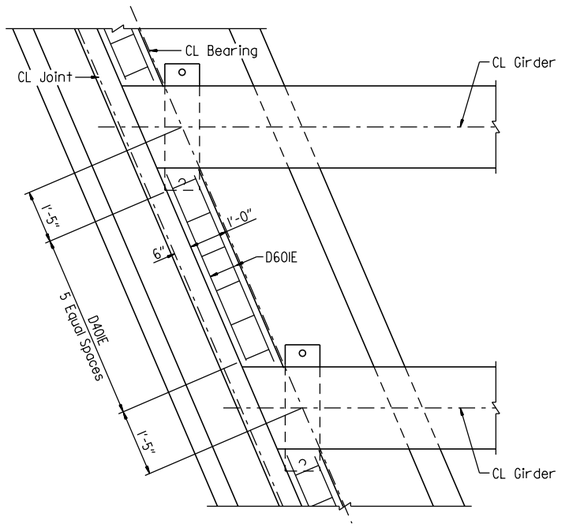

PLAN END DIAPHRAGM

Scale: 1/2" = 1'-0"

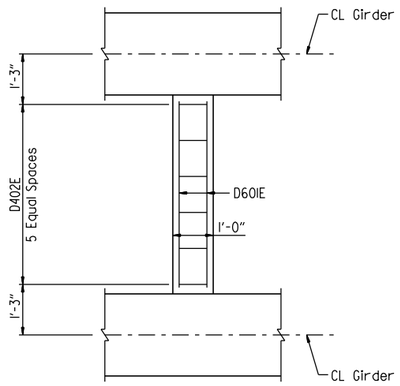

PLAN INTERMEDIATE DIAPHRAGM

Scale: 1/2" = 1'-0"

(2) Provide roofing felt to serve as a bond breaker where diaphragm overlaps external load plate.

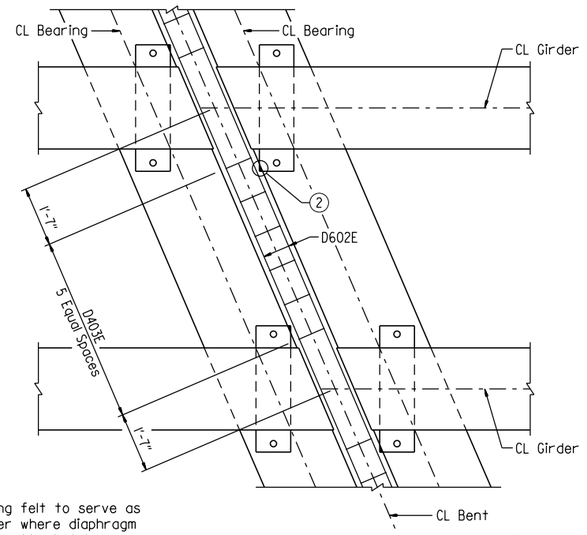

PLAN BENT DIAPHRAGM

Scale: 1/2" = 1'-0"

STATE OF ARKANSAS
LICENSED PROFESSIONAL ENGINEER
No. 16458
JOEL E. SKINNER
Digitally Signed 07/28/2023
BRIDGE ENGINEER

SHEET 5 OF 9
DETAILS OF 270'-0" CONTINUOUS PRESTRESSED CONCRETE GIRDER UNIT HIGHWAY 612 OVER COUNTY ROAD 946 (JAVELLO ROAD)

ROUTE SEC.

ARKANSAS STATE HIGHWAY COMMISSION

LITTLE ROCK, ARK.

DRAWN BY: HEW DATE: MAY 2011 FILENAME: b012326m4_s5.dgn
CHECKED BY: WMM DATE: NOV. 2011 SCALE: AS SHOWN
DESIGNED BY: MRA DATE: MAY 2011

BRIDGE NO. A7615 & B7615 DRAWING NO. 66212

JESkinner 7/28/2023 12:09:58 PM
WORKSPACE: ARDOT Bridge
\\garverinc.local\gdata\Projects\2017\17017660 - ARDOT 012326 Hwy 412 - Hwy 112\Drawings\b012326x4_S405-SF.dgn
REVISED DATE:

DATE REVISED	DATE REVISED	FED. ROAD DIST. NO.	STATE	JOB NO.	SHEET NO.	TOTAL SHEETS
		6	ARK.	012326	424	838
		A765 & B765		270'-0" UNIT		66213

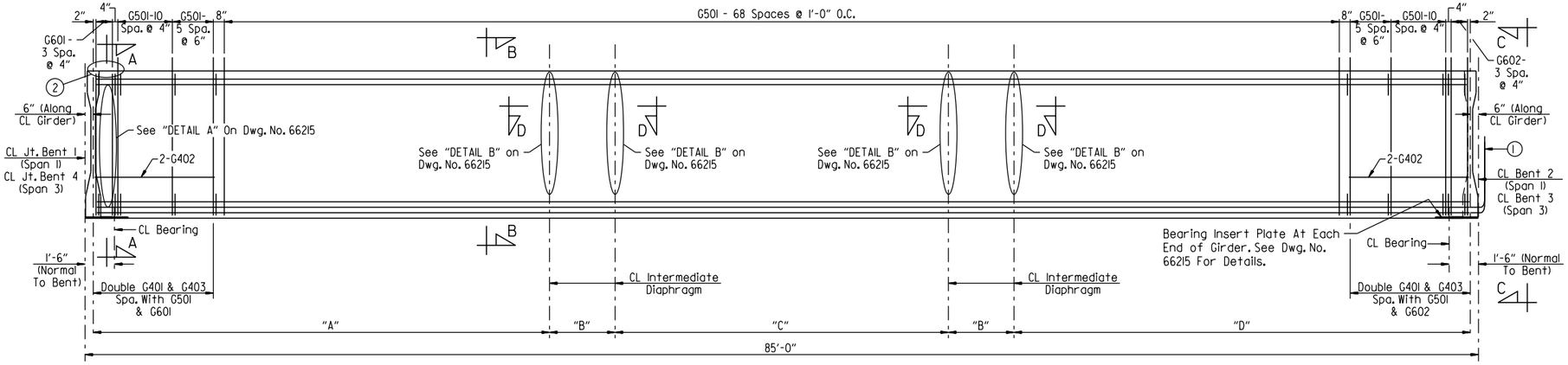

TYPICAL GIRDER ELEVATION (TYPE IV) - SPAN 1 OR 3

No Scale

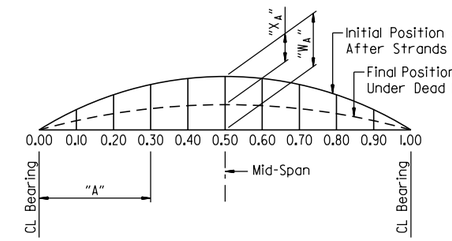

"W_A" is camber of girder (prestress + dead load of girder @ 90 days after release)

"X_A" is dead load deflection of slab + diaphragms + composite dead load.

③ CAMBER & DEFLECTIONS (INCHES)

③ Camber and Deflection Values shown are based on a concrete girder strength, f'c = 6,000 psi. Greater strengths may require adjustments. See "SPECIAL CAMBER NOTES" on Dwg. No. 66215.

	Girder	"A"	"B"	"C"	"D"
SPAN 1	1	29'-5 1/16"	0	28'-4"	26'-2 15/16"
	2	26'-2 15/16"	3'-2 3/16"	25'-1 13/16"	26'-2 15/16"
	3	26'-2 15/16"	3'-1 15/16"	25'-2 1/16"	26'-3 1/8"
	4	26'-3 1/8"	3'-1 15/16"	25'-2 1/16"	26'-2 15/16"
	5	26'-2 15/16"	3'-2 3/16"	25'-1 13/16"	26'-2 15/16"
	6	26'-2 15/16"	0	28'-4"	29'-5 1/16"
SPAN 3	1	26'-2 15/16"	0	28'-4"	29'-5 1/16"
	2	26'-2 15/16"	3'-2 3/16"	25'-1 13/16"	26'-2 15/16"
	3	26'-3 1/8"	3'-1 15/16"	25'-2 1/16"	26'-2 15/16"
	4	26'-2 15/16"	3'-1 15/16"	25'-2 1/16"	26'-3 1/8"
	5	26'-2 15/16"	3'-2 3/16"	25'-1 13/16"	26'-2 15/16"
	6	29'-5 1/16"	0	28'-4"	26'-2 15/16"

① Prestressing strands at CL Joint shall be sawn flush with the end of the girder. Prestressing strands at CL Bent shall be bent up into diaphragms as shown in "SECTION C-C" on Dwg. No. 66209.

② For "CHANNEL CONNECTION DETAIL", see Dwg. No. 66216.

NOTE:
For "SECTION D-D", see Dwg. No. 66215.

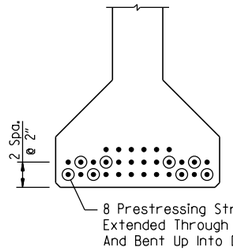

VIEW C-C

Scale: 1" = 1'-0"

NOTE:
For "SUPERSTRUCTURE GENERAL NOTES" and details of girder bevels, see Dwg No. 66215.

BAR LIST - PER GIRDER			
Mark	No. Req'd.	Length	Pin. Dia.
G301	24	5'-0"	Str.
G401	84	4'-2"	2"
G402	4	7'-4"	Str.
G403	42	3'-9"	3"
G404	2	84'-9"	Str.
G501	202	6'-3"	3 3/4"
G601	8	4'-7 1/2"	4 1/2"
G602	8	5'-3"	4 1/2"

BAR BENDING DIAGRAMS

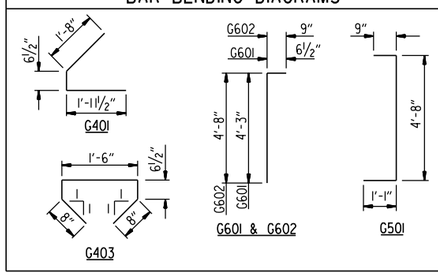

④ 8 required for exterior girder. 16 required for interior girder.

NOTES:
Dimensions of bars in bending diaphragm are out-to-out.

All bars in the "BAR LIST - PER GIRDER" will not be paid for directly, but will be considered subsidiary to the item "PRESTRESSED CONCRETE GIRDERS (TYPE IV)".

At the Contractor's option, 1/2"ø strands pulled to 2,000 lbs. may be substituted for bars G404.

At the Contractor's option, the two G401 bars may be furnished as one bar.

④ SPAN PT.	INCHES "W_A"	INCHES "X_A"
0.00	0.000	0.000
0.10	0.487	0.196
0.20	0.856	0.395
0.30	1.097	0.552
0.40	1.233	0.654
0.50	1.277	0.688

④ Symmetrical by 180° rotation

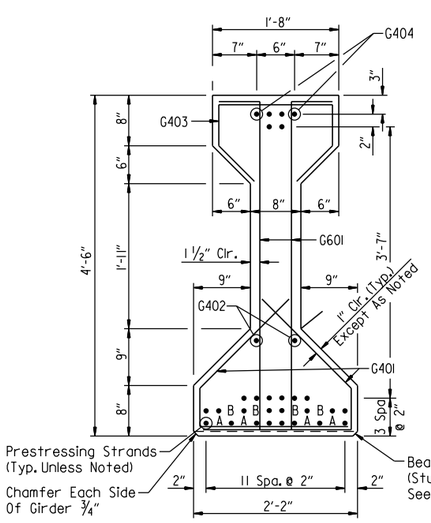

SECTION A-A

Scale: 1" = 1'-0"

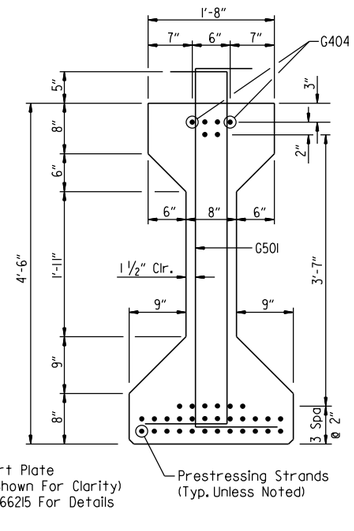

SECTION B-B

Scale: 1" = 1'-0"

DEBOND SCHEDULE	
Debond Pair	Debond Length From End Of Girder
A	6'-0"
B	9'-0"

STATE OF ARKANSAS
LICENSED PROFESSIONAL ENGINEER
No. 16458
JOEL E. SKINNER
Digitally Signed 07/28/2023
BRIDGE ENGINEER

SHEET 6 OF 9
DETAILS OF 270'-0" CONTINUOUS PRESTRESSED CONCRETE GIRDER UNIT HIGHWAY 612 OVER COUNTY ROAD 946 (JAVELLO ROAD)

ROUTE SEC.

ARKANSAS STATE HIGHWAY COMMISSION

LITTLE ROCK, ARK.

DRAWN BY: HEW DATE: MAY 2011 FILENAME: b012326m4_s6.dgn
CHECKED BY: WMM DATE: NOV. 2011 SCALE: AS SHOWN
DESIGNED BY: MRA DATE: MAY 2011

BRIDGE NO. A7615 & B7615 DRAWING NO. 66213

JEskinner 7/28/2023 12:09:58 PM
WORKSPACE: ARDOT Bridge
\\garverinc.local\gdata\Projects\20IT\I70I660 - ARDOT 012326 Hwy 412 - Hwy 112\Drawings\b012326x4_S406-BB.dgn
REVISED DATE:

DATE REVISED	DATE REVISED	FED. ROAD DIST. NO.	STATE	JOB NO.	SHEET NO.	TOTAL SHEETS
		6	ARK.	012326	425	838
		A765 & B765		270'-0" UNIT		66214

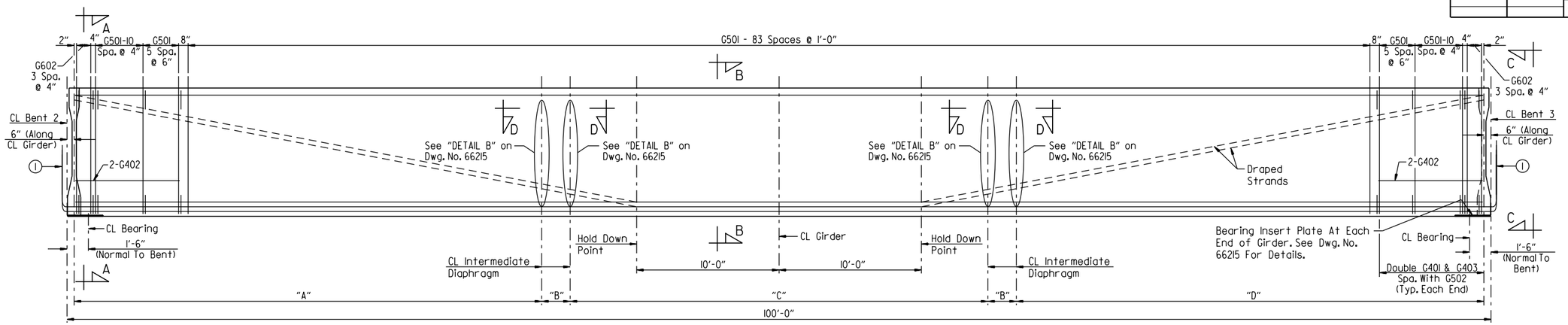

TYPICAL GIRDER ELEVATION (TYPE IV) - SPAN 2

No Scale

(1) Prestressing strands shall be bent up into diaphragms as shown in "SECTION C-C" on Dwg. No. 66209.

TABLE OF VARIABLES				
Girder	"A"	"B"	"C"	"D"
1	31'-1 1/16"	0	40'-0"	27'-10 5/16"
2	27'-10 5/16"	3'-2 3/16"	36'-9 13/16"	27'-10 5/16"
3	27'-10 5/16"	3'-1 5/16"	36'-10 1/16"	27'-1 1/8"
4	27'-1 1/8"	3'-1 5/16"	36'-10 1/16"	27'-10 5/16"
5	27'-10 5/16"	3'-2 3/16"	36'-9 13/16"	27'-10 5/16"
6	27'-10 5/16"	0	40'-0"	31'-1 1/16"

NOTE:
For "SECTION D-D", see Dwg. No. 66215.

(3)

SPAN PT.	INCHES	
	"W_A"	"X_A"
0.00	0.000	0.000
0.10	1.052	0.378
0.20	1.839	0.754
0.30	2.384	1.047
0.40	2.706	1.229
0.50	2.813	1.293

(3) Symmetrical by 180° rotation

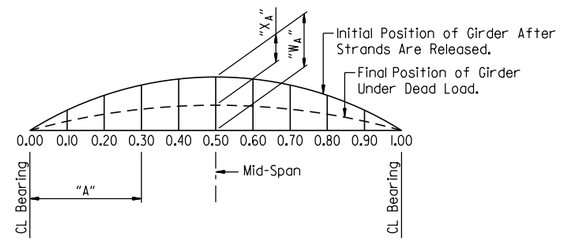

"W_A" is camber of girder (prestress + dead load of girder @ 90 days after release)

"X_A" is dead load deflection of slab + diaphragms + composite dead load.

(2) CAMBER & DEFLECTIONS (INCHES)

(2) Camber and Deflection Values shown on a concrete girder strength, f'c = 6,000 psi. Greater strengths may require adjustments. See "SPECIAL CAMBER NOTES" on Dwg. No. 66215.

BAR LIST - PER GIRDER			
Mark	No. Req'd.	Length	Pin. Dia.
G301	12	5'-0"	Str.
G401	84	4'-2"	2"
G402	4	7'-4"	Str.
G403	42	3'-9"	3"
G404	2	99'-9"	Str.
G405	4	10'-0"	Str.
G501	232	6'-3"	3 3/4"
G602	16	5'-3"	4 1/2"

BAR BENDING DIAGRAMS

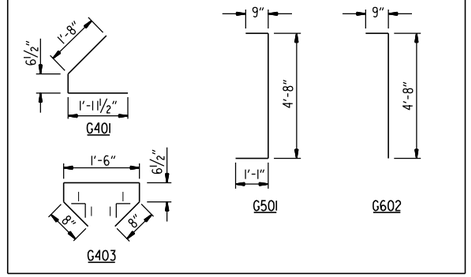

NOTES:
Dimensions of bars in bending diaphragm are out-to-out.

All bars in the "BAR LIST - PER GIRDER" will not be paid for directly, but will be considered subsidiary to the item "PRESTRESSED CONCRETE GIRDERS (TYPE IV)".

At the Contractor's option, 1/2"ø strands pulled to 2,000 lbs. may be substituted for bars G404.

At the Contractor's option, the two G401 bars may be furnished as one bar.

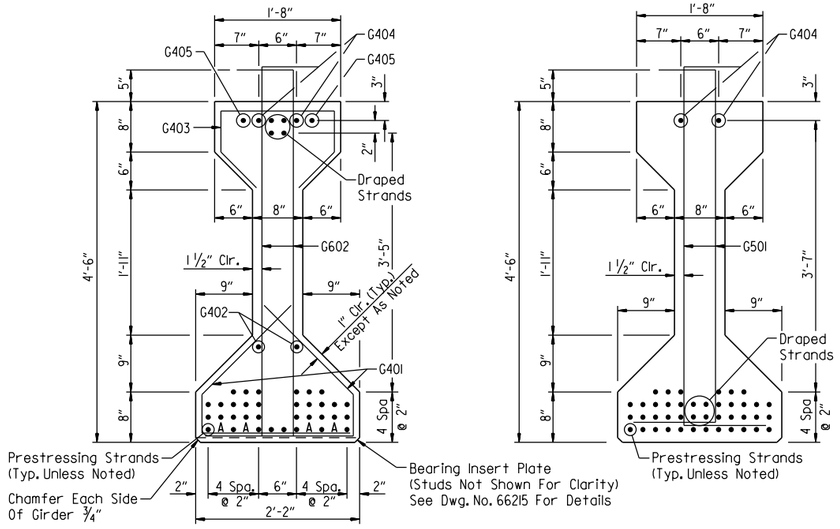

SECTION A-A

Scale: 1" = 1'-0"

SECTION B-B

Scale: 1" = 1'-0"

DEBOND SCHEDULE	
Debond Pair	Debond Length From End Of Girder
A	6'-0"

NOTE:
For "SUPERSTRUCTURE GENERAL NOTES" and details of girder bevel, see Dwg. No. 66215.

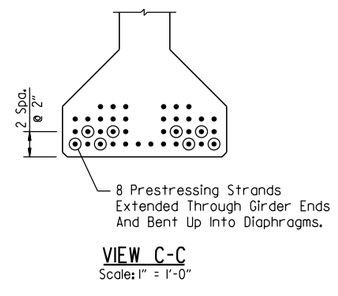

VIEW C-C

Scale: 1" = 1'-0"

STATE OF ARKANSAS
LICENSED PROFESSIONAL ENGINEER
No. 16458
JOEL E. SKINNER
Digitally Signed 07/28/2023
BRIDGE ENGINEER

SHEET 7 OF 9
DETAILS OF 270'-0" CONTINUOUS PRESTRESSED CONCRETE GIRDER UNIT HIGHWAY 612 OVER COUNTY ROAD 946 (JAVELLO ROAD)

ROUTE SEC.

ARKANSAS STATE HIGHWAY COMMISSION

LITTLE ROCK, ARK.

DRAWN BY: HEW DATE: JUNE 2011 FILENAME: b012326m4_s7.dgn
CHECKED BY: WMM DATE: NOV. 2011 SCALE: AS SHOWN
DESIGNED BY: MRA DATE: JUNE 2011

BRIDGE NO. A7615 & B7615 DRAWING NO. 66214

JESkinner 7/28/2023 12:09:59 PM
WORKSPACE: ARDOT Bridge
\\garverinc.local\gdata\Projects\2017\17017660 - ARDOT 012326 Hwy 412 - Hwy 112\Drawings\b012326x4_S407-BB.dgn
REVISED DATE:

DATE REVISED	DATE REVISED	FED. ROAD DIST. NO.	STATE	JOB NO.	SHEET NO.	TOTAL SHEETS
		6	ARK.	012326	426	838
		A765 & B765		270'-0" UNIT		66215

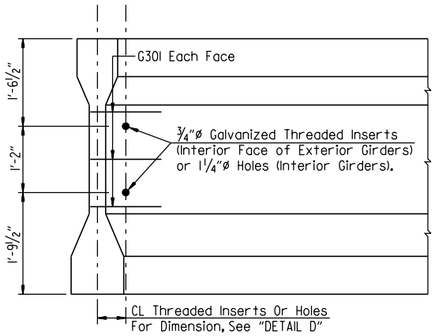

DETAIL A
Scale: ¾" = 1'-0"

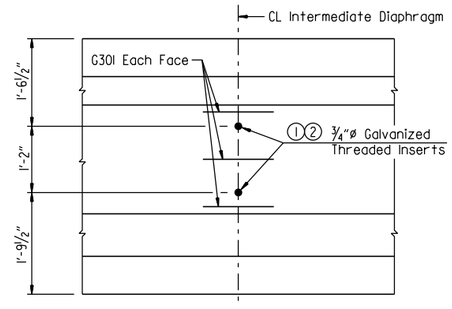

DETAIL B
Scale: ¾" = 1'-0"

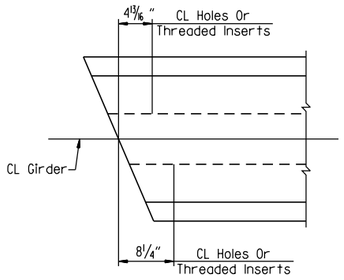

DETAIL D
Scale: 1" = 1'-0"

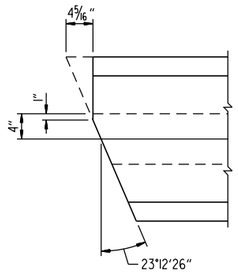

NOTE:
When acute corner of girder falls on exterior face at joints in bridge, fabricate girder end as shown.

All other girder ends at joints in bridge may be so fabricated at the Contractor's option.

FINISH FOR EXT. BEAM ENDS
No Scale

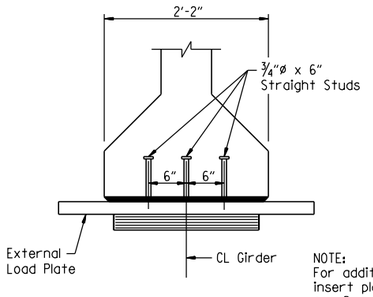

NOTE:
For additional bearing insert plate information, see Dwg. No. 66207.

FRONT VIEW
No Scale

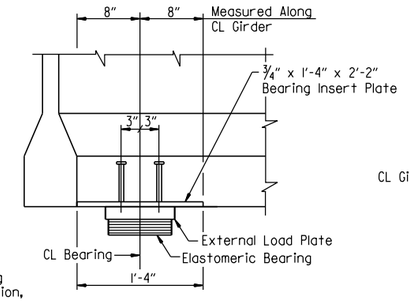

SIDE VIEW
No Scale

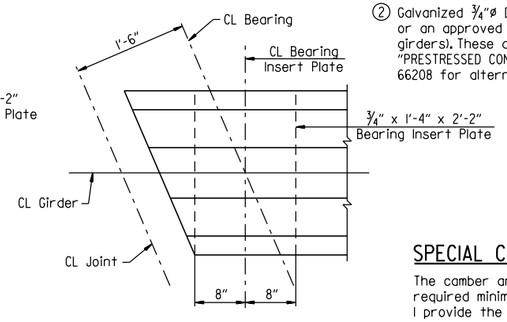

PLAN VIEW
No Scale

BEARING INSERT PLATE AND STUD DETAIL

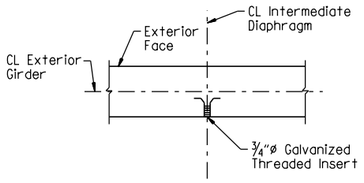

SECTION D-D
(At Exterior Girder)
No Scale

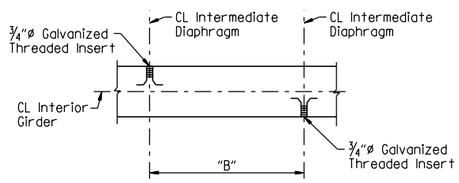

SECTION D-D
(At Interior Girder)
No Scale

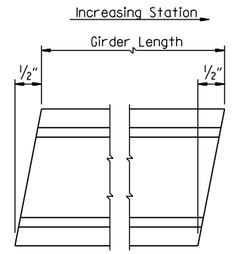

GIRDER BEVEL
No Scale

SUPERSTRUCTURE GENERAL NOTES:

CONCRETE:
Concrete shall be poured in the dry, and all exposed corners shall be chamfered ¾" unless otherwise noted. All concrete, except for prestressed girders, shall be Class S(AE) with a minimum 28 day compressive strength, f'c = 4,000 psi.

The superstructure details shown are for use when removable deck forming is used and are the basis for measurement of the item "CLASS S(AE) CONCRETE - BRIDGE". See Standard Drawing No. 55005 for allowable modifications and for tolerances when Permanent Steel Deck Forms are used.

The concrete deck (roadway surface) shall be given a tine finish in accordance with Subsection 802.19 for Class 5 Tined Bridge Roadway Surface Finish. Movement of the finishing machine across new concrete shall be on planks placed on the surface and shall be prohibited for 72 hours after finishing the pour. Sufficient concrete must be placed ahead of the strike-off to fully load the girder. When permitted, the use of a longitudinal strike-off will require that a vertical camber adjustment be made in the strike-off to account for the future dead load deflection due to any railings.

REINFORCING STEEL:
All reinforcing steel shall be Grade 60 (fy = 60,000 psi) conforming to AASHTO M 31 or M 322 Type A, with mill test reports and shall be epoxy coated. The reinforcing steel is to be accurately located in the forms and firmly held in place by steel wire supports, sufficient in number and size to prevent displacement during the course of construction. The wire supports will not be paid for directly, but will be considered subsidiary to the item "EPOXY COATED REINFORCING STEEL (GRADE 60)".

STRUCTURAL STEEL:
All structural steel shall be ASTM A709 with grade and payment as specified in the plans. Grade 50W steel shall not be painted and all exposed surfaces shall be cleaned in accordance with Subsection 807.84(e). Grade 36 and Grade 50 steel shall be painted unless otherwise noted and all exposed surfaces shall be cleaned in accordance with Subsection 807.84. Structural steel completely embedded in concrete may be ASTM A709, Gr. 36, Gr. 50 or Gr. 50W unless otherwise noted.

Requests for substitution of structural steel shapes shown with shapes of greater size must be submitted by the Contractor to the Engineer for approval. Steels of equal or greater strengths will be accepted only when shown on the approved shop drawings. Shapes and materials shown in the plans will be the basis of payment and no additional compensation will be made for any adjustments due to substitutions.

All welding that is to be done during fabrication of structural steel, including temporary welds, shall be detailed on the shop drawings and submitted for approval. If additional welds are required, whether permanent or temporary, a formal request with detailed drawings shall be submitted to the Engineer for approval. All welding shall conform to Subsection 807.26.

Plan drawings show general features of design only. Shop drawings shall be prepared in accordance with the specifications, submitted and approval secured before fabrication is begun.

① Inserts and holes shown are for intermediate concrete diaphragms, See Dwg. No. 66208 for alternate steel diaphragms.

② Galvanized ¾"ø Dayton-Richmond F-42 Loop Ferrule Insert or an approved equal (omit in exterior face of exterior girders). These are to be subsidiary to the item "PRESTRESSED CONCRETE GIRDERS (TYPE IV)". See Dwg. No. 66208 for alternate steel diaphragms.

PRESTRESSED CONCRETE GIRDERS:
Pretensioning steel shall be ½"ø Low Relaxation strands with a minimum ultimate strength of 270 ksi and shall conform to AASHTO M 203.

All girders shall be TYPE IV as shown on the details and shall be the standard prestressing sections adopted by the Joint Committee of AASHTO and the Prestressed Concrete Institute. All girders shall be cast in floored pallets and in metal forms. All work and materials shall be as specified in Subsection 802.22.

Concrete shall be Class "S" and shall have a minimum 28 day compressive strength f'c = 8,000 psi. The initial tensile force applied to each ½"ø strand shall be 31,000 pounds except as noted. Transfer of this tensioning load to the girder shall not be done until the compressive strength of the concrete is 6,000 psi.

Dimensions shown are to the center of strands.

The Contractor shall submit the method and sequence for release of strands to the Engineer for approval prior to casting of the girders.

The first 16" along the top of the girder at beginning and end of unit shall have a smooth finish. The tops of the remaining length of the girders shall be roughened to an amplitude of ¼" and shall be scrubbed transversely with a coarse wire brush to remove all laitance to produce an adequate surface for bonding the slab.

Girder lengths shown on the design plans are net lengths measured horizontally along girder centerlines. The girder manufacturer shall make the necessary allowances for grade and shortening due to elastic shortening, creep and shrinkage.

Extreme care shall be exercised in handling and moving precast, prestressed concrete girders. Girders must be maintained in an upright position at all times and must be picked up from points near the girder ends. Disregard of this requirement may lead to collapse of the girder. The Contractor's proposed lifting details shall be submitted on shop drawings to the Engineer for approval. The use of holes for lifting purposes will not be permitted.

The Contractor may submit alternate strand patterns with design calculations for review and approval in accordance with Subsection 802.22.

Reinforcing steel in Girders shall be Grade 60 (fy = 60,000 psi) conforming to AASHTO M 31 or M 322 Type A, with mill test reports.

Distances from the forms and spacing of the prestressing steel shall be maintained by stays, ties, hangers, spacers or other approved supports which shall be shown on the Shop Drawings.

The points of support and direction of reactions with respect to the member shall be approximately the same during transportation and storage as when member is in its final position.

Holes and inserts shall be cast into the girders. Field drilling of holes shall not be permitted.

After detensioning, saw cut, grind, or bend up strands as designated by the plans. Heat-cutting or bending methods shall not be used within 6" of the girder.

Plan drawings show general features of design only. Shop drawings shall be made in accordance with the specifications, submitted and approval secured before fabrication begins.

SPECIAL CAMBER NOTES
The camber and dead load deflection values shown on the plans are estimated based on the required minimum concrete strength for the prestressed concrete girders. The Contractor shal l provide the Engineer with the following information:

A. Actual 28-Day concrete strength of prestressed concrete girders

B. Actual concrete strength of prestressed concrete girders at time of release

C. Estimated age of prestressed concrete girders at time of erection

D. Profile of each girder under its own weight in final position

Following receipt of the above data, the Engineer will evaluate the dead load and, if necessary, will provide an updated deflection diagram to the Contractor.

STATE OF ARKANSAS
LICENSED PROFESSIONAL ENGINEER
No. 16458
JOEL E. SKINNER
Digitally Signed 07/28/2023
BRIDGE ENGINEER

SHEET 8 OF 9
DETAILS OF 270'-0" CONTINUOUS PRESTRESSED CONCRETE GIRDER UNIT HIGHWAY 612 OVER COUNTY ROAD 946 (JAVELLO ROAD)

ROUTE SEC.

ARKANSAS STATE HIGHWAY COMMISSION
LITTLE ROCK, ARK.

DRAWN BY: HEW DATE: JULY 2011 FILENAME: b012326m4_s8.dgn
CHECKED BY: WMM DATE: NOV. 2011 SCALE: AS SHOWN
DESIGNED BY: MRA DATE: JULY 2011

BRIDGE NO. A7615 & B7615 DRAWING NO. 66215

JESkinner 7/28/2023 12:09:59 PM
WORKSPACE: ARDOT Bridge
\\garverinc.local\gdata\Projects\20IT\I7017660 - ARDOT 012326 Hwy 412 - Hwy 112\Drawings\b012326x4_S408-GN.dgn
REVISED DATE:

DATE REVISED	DATE REVISED	FED. ROAD DIST. NO.	STATE	JOB NO.	SHEET NO.	TOTAL SHEETS
		6	ARK.	012326	427	838
		A7615 & B7615		270'-0" UNIT		66216

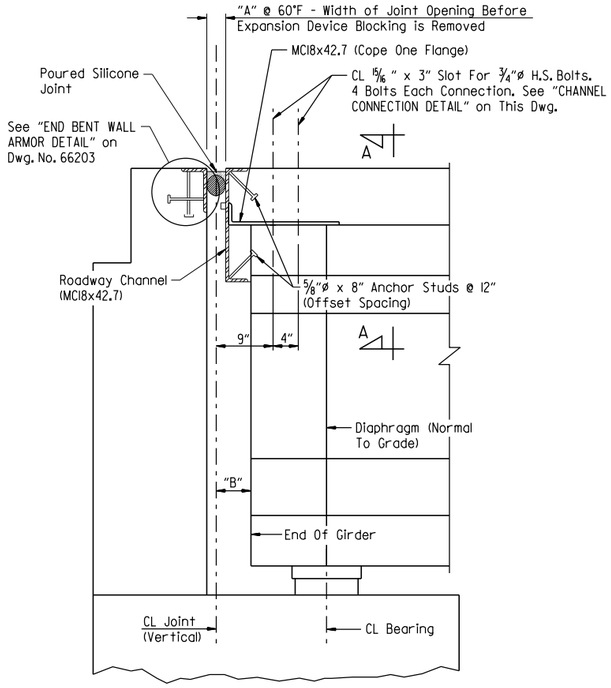

SECTION THRU JOINT AT END BENTS

(Section Taken Perpendicular To CL Joint)
No Scale

NOTE:
Concrete shall be hand packed under the roadway channel & joint armor in the backwall.

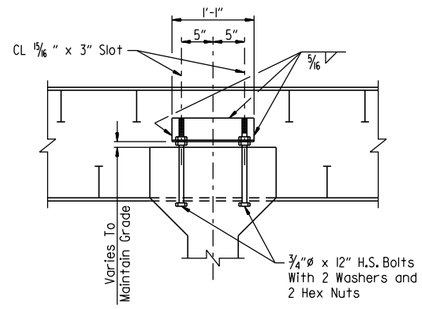

SECTION A-A

No Scale

NOTE:
Bolts, washers and hex nuts shall be considered subsidiary to the item "PRESTRESSED CONCRETE GIRDERS (TYPE IV)".

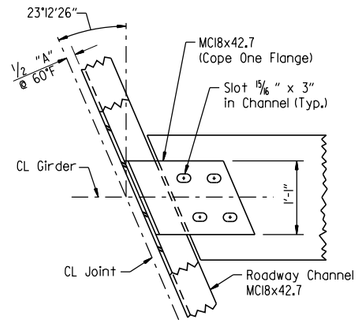

CHANNEL CONNECTION DETAIL

No Scale

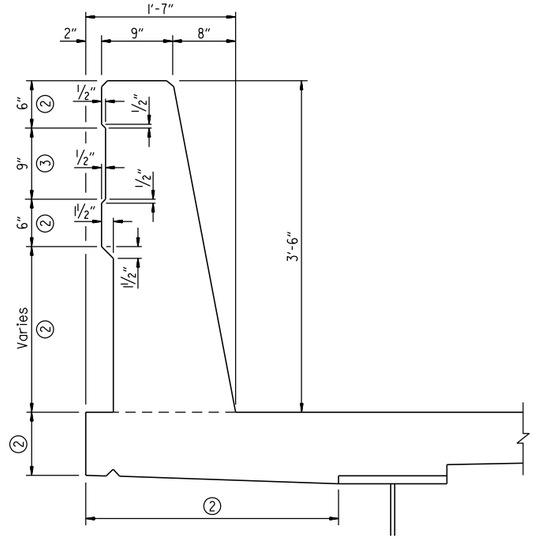

② Class 3 Textured Coating Finish (Color - Light Brown, Color Chip No. 33522)

③ Class 3 Textured Coating Finish (Color - Medium Brown, Color Chip No. 30219)

BRIDGE RAIL AESTHETIC DETAIL

No Scale

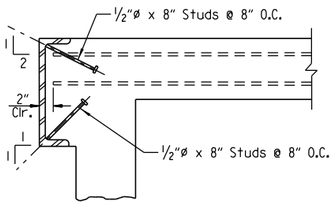

DETAIL OF ALTERNATE ANCHORS

No Scale

NOTE:
As an alternate to 5/8"ø studs, 1/2"ø x 8" studs spaced as shown may be used. Use weight of 5/8"ø stud as basis of measurement of Structural Steel in anchors.

TABLE OF SILICONE JOINT DATA

Bent No.	"A" Width Perpendicular To Joint At 24 Hour Average Temperature (1) Of:			"B" Perpendicular To Joint At 60°F	Bumper Plate Size
	40°F	60°F	80°F		
1 & 4	2 3/16"	2"	1 13/16"	5 1/2" ±	1" x 12"

(1) The temperature used to set the joint opening shall be the approximate average air temperature during the 24 hour period immediately before the bolts are tightened. The Engineer shall establish the temperature. Interpolation of the table may be necessary.

NOTE:
For "DETAIL OF POURED SILICONE JOINT," "JOINT SEAL PLACEMENT AT RAIL" and "DETAILS FOR BLOCKING EXPANSION JOINT DEVICE", see Std. Dwg. No. 55008.

STATE OF ARKANSAS
LICENSED PROFESSIONAL ENGINEER
No. 16458
JOEL E. SKINNER
Digitally Signed 07/28/2023
BRIDGE ENGINEER

SHEET 9 OF 9
DETAILS OF 270'-0" CONTINUOUS PRESTRESSED CONCRETE GIRDER UNIT
HIGHWAY 612 OVER
COUNTY ROAD 946 (JAVELLO ROAD)
ROUTE SEC.
ARKANSAS STATE HIGHWAY COMMISSION
LITTLE ROCK, ARK.

DRAWN BY: HEW DATE: MAY 2011 FILENAME: b012326m4_s9.dgn
CHECKED BY: WMM DATE: DEC. 2011 SCALE: AS SHOWN
DESIGNED BY: MRA DATE: MAY 2011
BRIDGE NO. A7615 & B7615 DRAWING NO. 66216

JEskinner 7/28/2023 12:09:59 PM
WORKSPACE: ARDOT Bridge
\\garverinc.local\data\Projects\2017\17017660 - ARDOT 012326 Hwy 412 - Hwy 112\Drawings\b012326x4_5409-MD.dgn
REVISED DATE:

DATE REVISED	DATE REVISED	FED. ROAD DIST. NO.	STATE	JOB NO.	SHEET NO.	TOTAL SHEETS
		6	ARK.	012326	428	838
		A7616		LAYOUT		66217

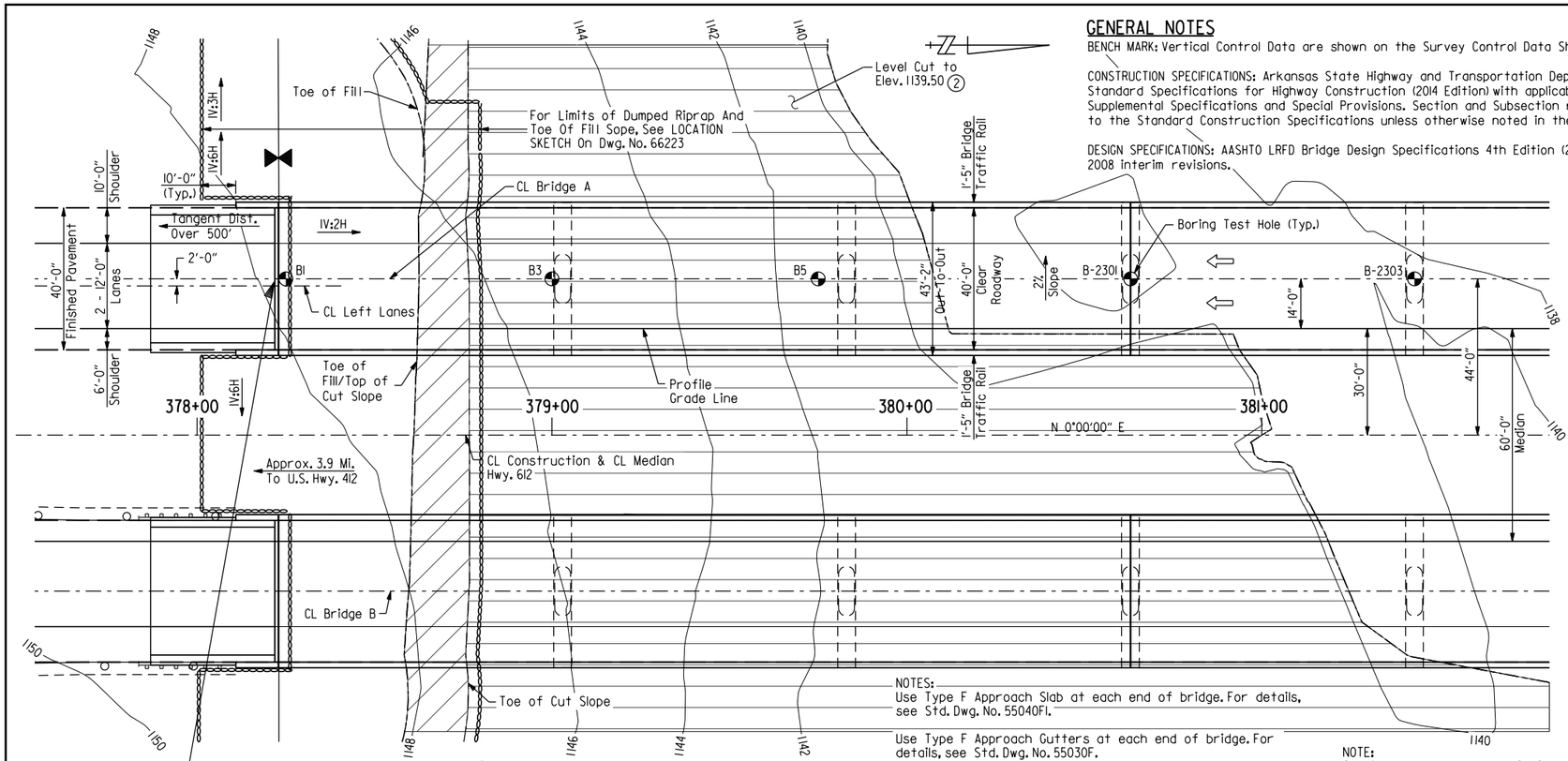

BEGIN BRIDGE
STA. 378+21.91

① Material used in drainage fill below end bents shall allow placement of piling through layer. See "DETAIL A" on Dwg. No. 66222.

② Excavate existing embankment at begin bridge as shown. Approx. 6,234 cubic yards of excavation.

PLAN - BRIDGE A

NOTES:
Use Type F Approach Slab at each end of bridge. For details, see Std. Dwg. No. 55040FI.

Use Type F Approach Gutters at each end of bridge. For details, see Std. Dwg. No. 55030F.

For HYDRAULIC DATA and VERTICAL CURVE DATA, see Dwg. No. 66218.

For BORING LEGEND, see Dwg. No. 66221.

NOTE:
Stations shown are along CL Construction. Elevations shown are actual top of deck elevations at CL Bridge. Any vertical dimension referenced to CL Deck is based on actual top of deck elevation at CL Bridge.

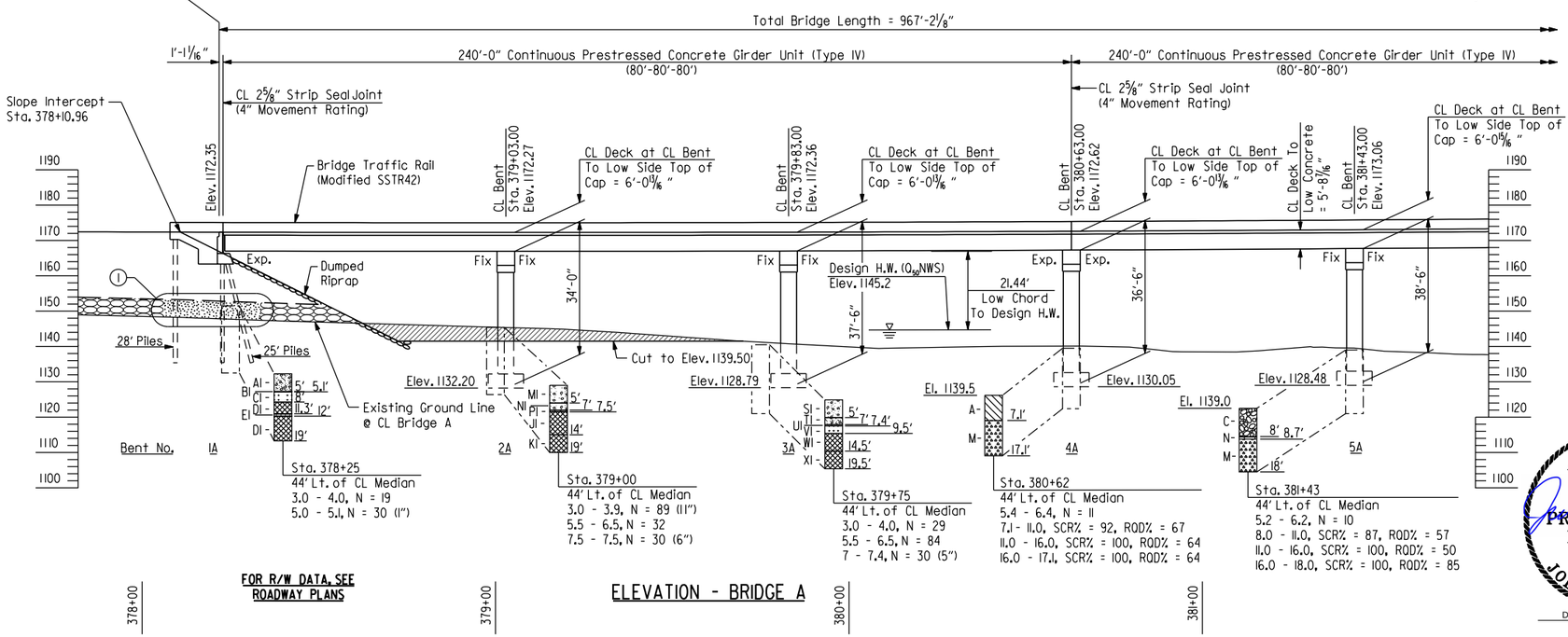

FOR R/W DATA, SEE ROADWAY PLANS

ELEVATION - BRIDGE A

GENERAL NOTES

BENCH MARK: Vertical Control Data are shown on the Survey Control Data Sheets.

CONSTRUCTION SPECIFICATIONS: Arkansas State Highway and Transportation Department Standard Specifications for Highway Construction (2014 Edition) with applicable Supplemental Specifications and Special Provisions. Section and Subsection refer to the Standard Construction Specifications unless otherwise noted in the plans.

DESIGN SPECIFICATIONS: AASHTO LRFD Bridge Design Specifications 4th Edition (2007) with 2008 interim revisions.

LIVE LOADING: HL-93

SEISMIC ZONE: 1 S_{D1} = 0.12g Site Class = D

SEISMIC OPERATIONAL CLASS: Other

MATERIALS AND STRENGTHS:

Class S(AE) Concrete (Superstructure)	f'c = 4,000 psi
Class S Concrete (Prestressed Girders)	f'c = 8,000 psi
Class S Concrete (Substructure)	f'c = 3,500 psi
Prestressing Strands (AASHTO M 203, GR. 270)	fpu = 270,000 psi
Reinforcing Steel (AASHTO M 31 Or M 322, Type A)	fy = 60,000 psi
Structural Steel (ASTM A709, GR. 50W)	Fy = 50,000 psi
Structural Steel (ASTM A709, GR. 36)	Fy = 36,000 psi

BORING LOGS: Boring logs may be obtained from the Construction Contract Development Section of the Program Management Division.

STEEL PILING: All piling at end bents shall be HP12x53 (Grade 50) and shall be driven with an approved air, steam or diesel hammer to a minimum safe bearing capacity of 97 tons and into material designated as Chert on the boring legend. Minimum penetration shall be 10' below natural ground for all piles. Piles in end bents shall be driven after embankment to bottom of cap is in place. Lengths of piling shown are for estimating quantities and for use in determining payment for cut-off and build-up in accordance with Section 805. Actual lengths are to be determined in the field. The Contractor shall use approved steel H-pile driving points on all piles.

PREBORING: Preboring is required for all piles in Bents 1A & 1B. The depth of preboring shall be to a depth sufficient to provide the specified minimum penetration and to a minimum 3" depth into material designated as Chert on the boring legend, whichever is lower. The actual size and depth of preboring shall be determined in the field by the Engineer. The Contractor shall be responsible for keeping prebored holes free of debris prior to driving piles and backfilling which may require the use of temporary casings or other approved methods. After driving is completed, the prebored hole shall be backfilled with Class S Concrete to the top of the rock and the remaining length backfilled in accordance with Subsection 805.08(a). Any related cost to backfill and temporary casing will not be paid for directly, but shall be considered subsidiary to the item "Preboring".

SPREAD FOOTINGS: Footings at intermediate bents shall be set a minimum of 2'-0" into material designated as Moderately Weathered, Slightly Weathered, or Unweathered Chert or Limestone on the boring legend and shall have a minimum cover above top of footings of 2'. Foundations for footings shall be prepared in accordance with Subsection 801.04. Rock excavations shall be made to neat lines of the concrete footings. Care shall be exercised to avoid shattering of rock faces by excessive blasting. Concrete in footings shall be poured directly against excavated surfaces of rock. Excavations shall be backfilled and compacted to the level of the existing or finished ground in accordance with Subsection 801.08.

TEXTURED COATING FINISH: Class 3 Textured Coating Finish shall be applied to bridge surfaces as specified in Special Provision "TEXTURED COATING FINISH" and in accordance with Subsection 802.19(b)(3). Textured Coating Finish shall not be applied on surfaces where Class 2 Protective Surface Treatment is applied.

BRIDGE DECK: The concrete bridge deck shall be given a tine finish as specified for final finishing in Subsection 802.19 for Class 5 Tined Bridge Roadway Surface Finish.

PROTECTIVE SURFACE TREATMENT: Class 2 Protective Surface Treatment shall be applied to the roadway surface and to the roadway face and top of the concrete bridge rails in accordance with Section 803.

DETAIL DRAWINGS:	DRAWING NO(S):
End Bents	66225-66228
Intermediate Bents	66229-66231
Elastomeric Bearings	66232 & 66233
240' Continuous Prestressed Concrete Girder Unit	66234-66239
245' Continuous Prestressed Concrete Girder Unit	66240-66246
Dumped Riprap	55001
Concrete Riprap	55002
Neoprene Strip Seal Joints	55009
Steel H-Piling	55020
Type F Approach Gutters	55030F
Type F Approach Slab	55040FI
Bridge Traffic Rail	55071& 66247

STATE OF ARKANSAS
LICENSED PROFESSIONAL ENGINEER
No. 16458
JOEL E. SKINNER
Digitally Signed 07/28/2023
BRIDGE ENGINEER

SHEET 1 OF 8
LAYOUT OF BRIDGES
HIGHWAY 612
OVER BRUSH CREEK
HWY. 412 - HWY. 112
(SPRINGDALE BYPASS) (F)
WASHINGTON COUNTY

ROUTE 612 SEC. 1

ARKANSAS STATE HIGHWAY COMMISSION
LITTLE ROCK, ARK.

DRAWN BY: CWT DATE: JULY 2022 FILENAME: b012326a5_11.dgn
CHECKED BY: BWD DATE: JULY 2022 SCALE: 1"=20'
DESIGNED BY: MJS DATE: JULY 2022
BRIDGE NO. A7616 DRAWING NO. 66217

JESkinner 7/28/2023 12:10:08 PM
WORKSPACE: ARDOT Bridge
\\garverinc.local\gdata\Projects\20IN\170I7660 - ARDOT 012326 Hwy 412 - Hwy 112\Drawings\b012326x5_SI01-L0.dgn
REVISED DATE:

DATE REVISED	DATE REVISED	FED. ROAD DIST. NO.	STATE	JOB NO.	SHEET NO.	TOTAL SHEETS
		6	ARK.	012326	429	838
		A7616		LAYOUT		66218

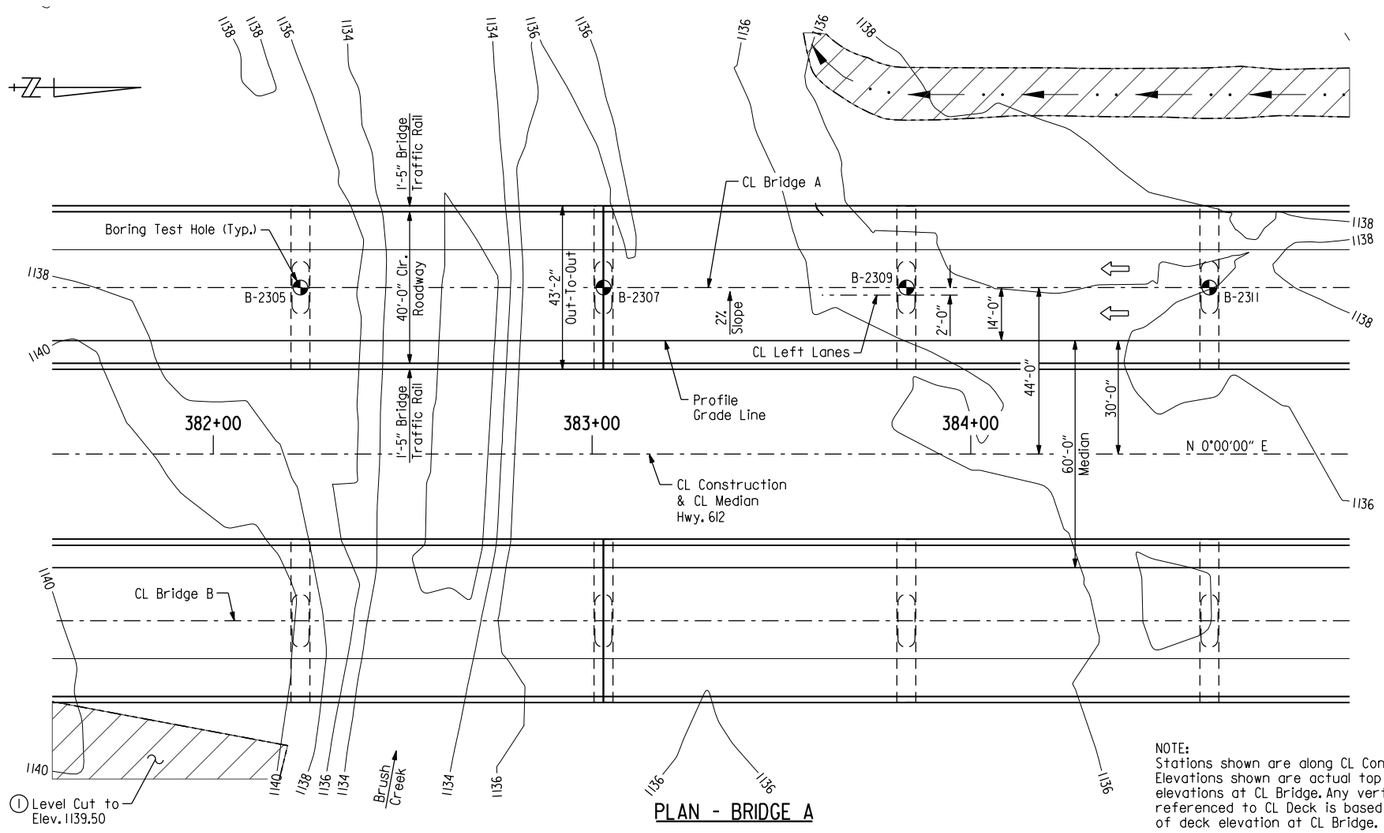

PLAN - BRIDGE A

1 Excavate existing embankment at begin bridge as shown. Approx. 6,234 cubic yards of excavation.

NOTE:
Stations shown are along CL Construction. Elevations shown are actual top of deck elevations at CL Bridge. Any vertical dimension referenced to CL Deck is based on actual top of deck elevation at CL Bridge.

FOR R/W DATA, SEE ROADWAY PLANS

NOTES:
For GENERAL NOTES, see Dwg. No. 66217.

For BORING LEGEND, see Dwg. No. 66221.

PVI Sta. 380+50.00
Elev. 1165.35
V.C. = 1500'
-1.60%
2.40%

VERTICAL CURVE DATA

Highway 612
(Profile Grade Along Inside Edge Of Lane)

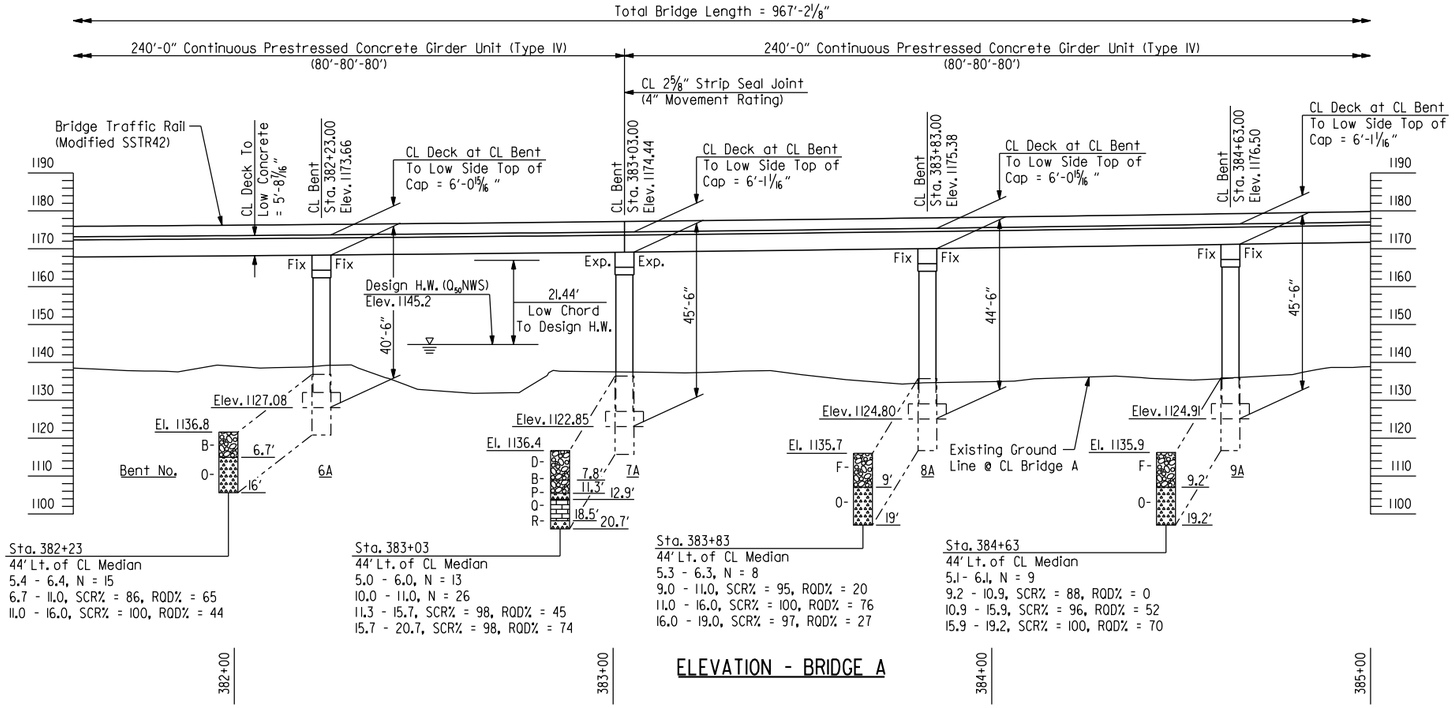

ELEVATION - BRIDGE A

HYDRAULIC DATA

FLOOD DESCRIPTION	FREQUENCY	DISCHARGE	* NATURAL WATER SURFACE ELEVATION	WATER SURFACE ELEVATION WITH BACKWATER
	YEARS	CFS	FEET	FEET
Design	50	15,094	1145.2	1145.1
Base	100	17,257	1145.8	1145.7
Extreme	500	22,534	1147.0	1147.0
Overtopping	N/A	N/A	N/A	N/A

Drainage Area = 15.4 Square Miles
Historical High Water Elev. = N/A

* Unconstricted water surface without structure or roadway approaches. Proposed Bridge Low Chord Elev. = 1166.64'

STATE OF ARKANSAS
LICENSED PROFESSIONAL ENGINEER
No. 16458
JOEL E. SKINNER
Digitally Signed 07/28/2023
BRIDGE ENGINEER

SHEET 2 OF 8
LAYOUT OF BRIDGES
HIGHWAY 612
OVER BRUSH CREEK
HWY. 412 - HWY. 112
(SPRINGDALE BYPASS) (F)
WASHINGTON COUNTY

ROUTE 612 SEC. 1

ARKANSAS STATE HIGHWAY COMMISSION
LITTLE ROCK, ARK.

DRAWN BY: CWT DATE: JULY 2022 FILENAME: b012326a5_l2.dgn
CHECKED BY: BWD DATE: JULY 2022 SCALE: 1"=20'
DESIGNED BY: MJS DATE: JULY 2022
BRIDGE NO. A7616 DRAWING NO. 66218

JESkinner 7/28/2023 12:10:09 PM
WORKSPACE: ARDOT Bridge
\\garverinc.local\gdata\Projects\2017\17017660 - ARDOT 012326 Hwy 412 - Hwy 112\Drawings\b012326x5_SI02-L0.dgn
REVISED DATE:

DATE REVISED	DATE REVISED	FED. ROAD DIST. NO.	STATE	JOB NO.	SHEET NO.	TOTAL SHEETS
10/23/2023		6	ARK.	012326	430	838
		A7616		LAYOUT		66219

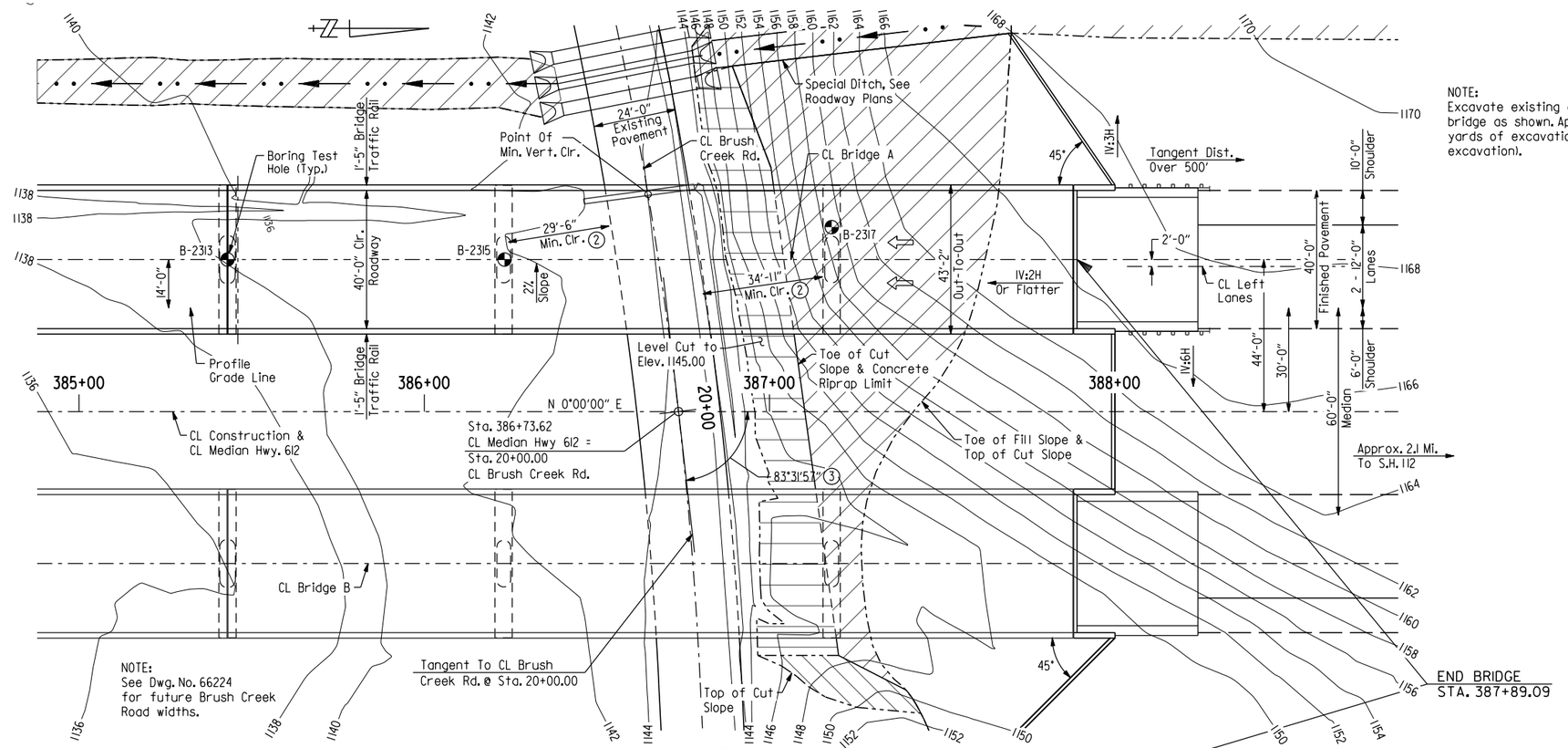

PLAN - BRIDGE A (1)

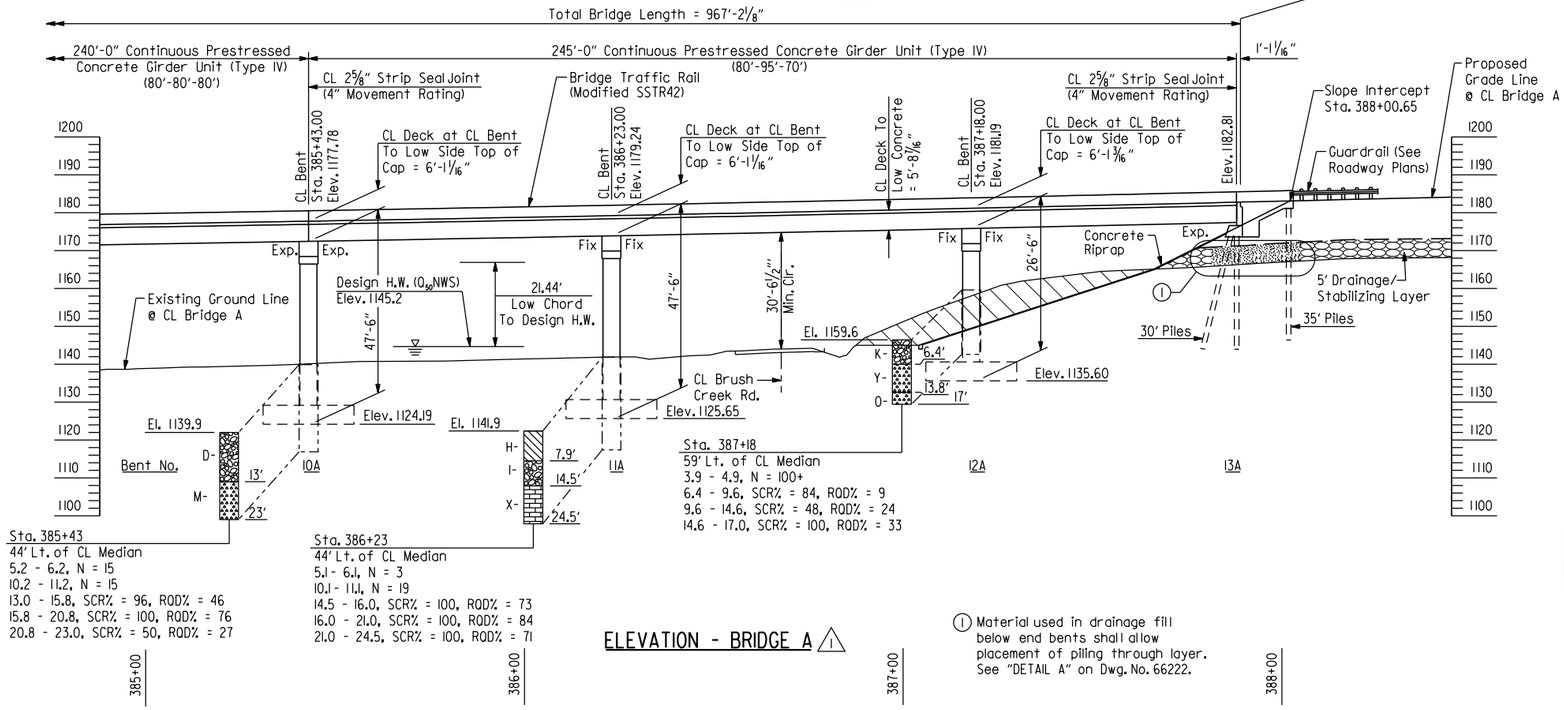

ELEVATION - BRIDGE A (1)

(1) Material used in drainage fill below end bents shall allow placement of piling through layer. See "DETAIL A" on Dwg. No. 66222.

NOTE:
Excavate existing embankment at end bridge as shown. Approx. 1,836 cubic yards of excavation (excluding ditch excavation).

FOR R/W DATA, SEE ROADWAY PLANS

NOTES:
Use Type F Approach Slab at each end of bridge.
For details, see Std. Dwg. No. 55040F1.

Use Type F Approach Gutters at each end of bridge.
For details, see Std. Dwg. No. 55030F.

For GENERAL NOTES, see Dwg. No. 66217.

For HYDRAULIC DATA and VERTICAL CURVE DATA, see Dwg. No. 66218.

For BORING LEGEND, see Dwg. No. 66221.

(2) Measured From Edge Of Lane

(3) Measured from line tangent to CL Brush Creek Rd. at Sta. 20+00.00 and CL Median Hwy. 612

NOTE:
Stations shown are along CL Construction. Elevations shown are actual top of deck elevations at CL Bridge. Any vertical dimension referenced to CL Deck is based on actual top of deck elevation at CL Bridge.

(1) Revised Plan And Elevation View To Match Details And Clarify Concrete Riprap Limits

Made By: JES Date: 10/23/2023
Checked By: CSW Date: 10/23/2023

STATE OF ARKANSAS
LICENSED PROFESSIONAL ENGINEER
No. 16458
JOEL E. SKINNER

DIGITALLY SIGNED 10/23/2023
BRIDGE ENGINEER

SHEET 3 OF 8
LAYOUT OF BRIDGES
HIGHWAY 612
OVER BRUSH CREEK
HWY. 412 - HWY. 112
(SPRINGDALE BYPASS) (F)
WASHINGTON COUNTY

ROUTE 612 SEC. 1

ARKANSAS STATE HIGHWAY COMMISSION
LITTLE ROCK, ARK.

DRAWN BY: CWT DATE: JULY 2022 FILENAME: b012326a5_13.dgn
CHECKED BY: BWD DATE: JULY 2022 SCALE: 1"=20'
DESIGNED BY: MJS DATE: JULY 2022
BRIDGE NO. A7616 DRAWING NO. 66219

JESkinner 10/20/2023 10:09:06 AM
WORKSPACE: ARDOT Bridge
\\garverinc.local\data\Projects\2017\17017660 - ARDOT 012326 Hwy 412 - Hwy 112\Drawings\b012326x5_SI03-L0.dgn
REVISED DATE:

DATE REVISED	DATE REVISED	FED. ROAD DIST. NO.	STATE	JOB NO.	SHEET NO.	TOTAL SHEETS
		6	ARK.	012326	431	838
		B7616		LAYOUT		66220

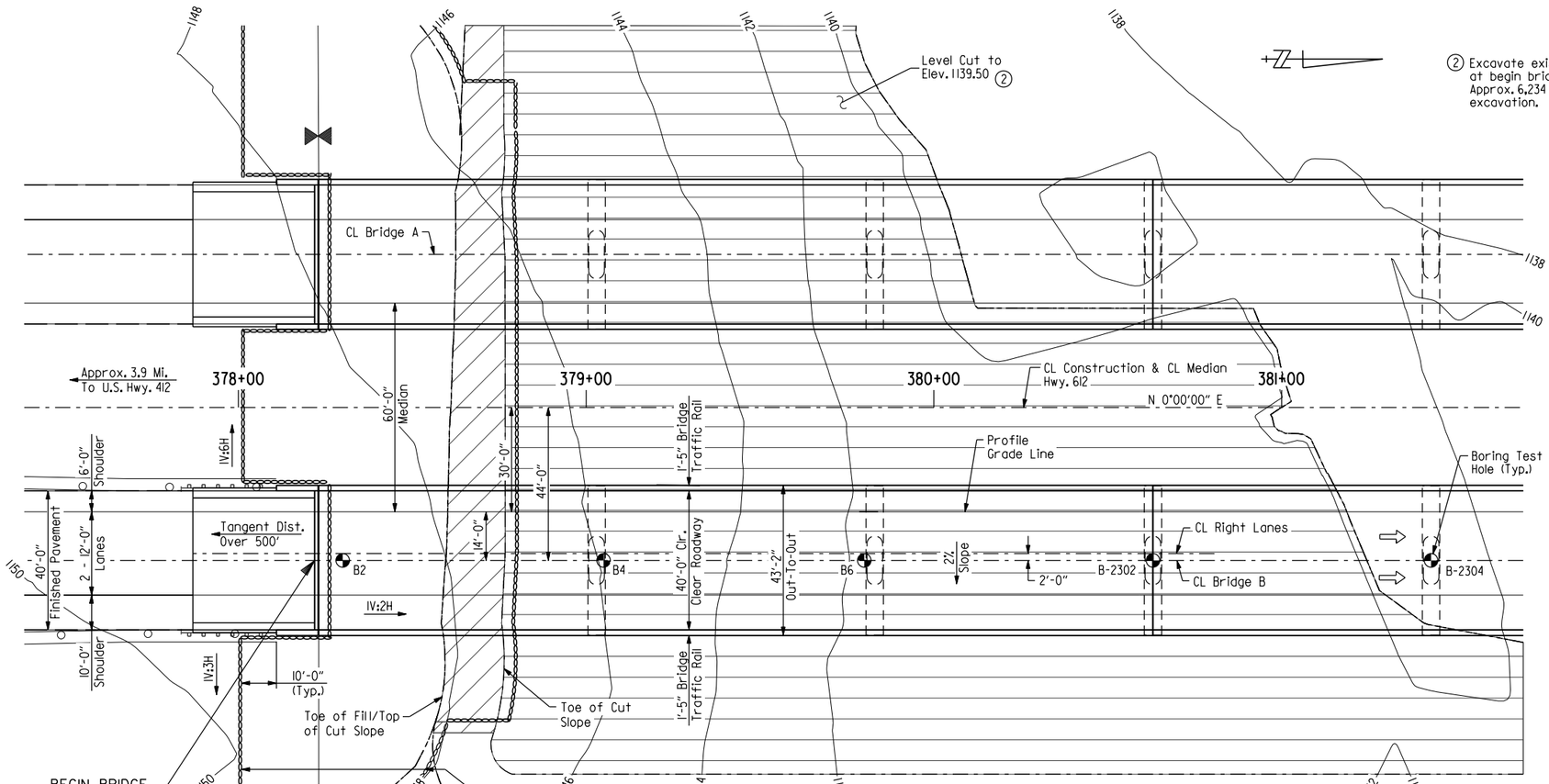

PLAN - BRIDGE B

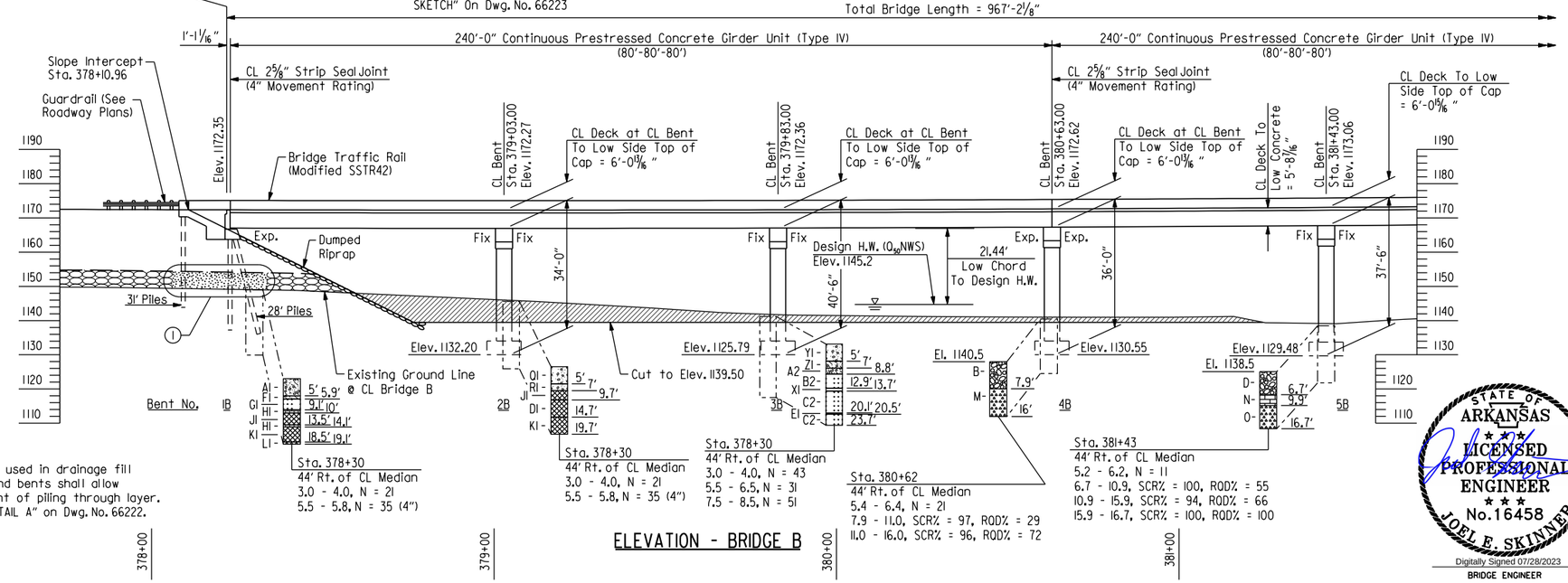

ELEVATION - BRIDGE B

FOR R/W DATA, SEE ROADWAY PLANS

NOTES:
Use Type F Approach Slab at each end of bridge. For details, see Std. Dwg. No. 55040F1.

Use Type F Approach Gutters at each end of bridge. For details, see Std. Dwg. No. 55030F.

For GENERAL NOTES, see Dwg. No. 66217.

For HYDRAULIC DATA, see Dwg. No. 66218.

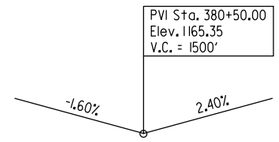

VERTICAL CURVE DATA
Highway 612
(Profile Grade Along Inside Edge of Lane)

NOTE:
Stations shown are along CL Construction. Elevations shown are actual top of deck elevations at CL Bridge. Any vertical dimension referenced to CL Deck is based on actual top of deck elevation at CL Bridge.

STATE OF ARKANSAS
LICENSED PROFESSIONAL ENGINEER
No. 16458
JOEL E. SKINNER
Digitally Signed 07/28/2023
BRIDGE ENGINEER

SHEET 4 OF 8
LAYOUT OF BRIDGES
HIGHWAY 612
OVER BRUSH CREEK
HWY. 412 - HWY. 112
(SPRINGDALE BYPASS) (F)
WASHINGTON COUNTY

ROUTE 612 SEC. 1

ARKANSAS STATE HIGHWAY COMMISSION
LITTLE ROCK, ARK.

DRAWN BY: CWT DATE: JULY 2022 FILENAME: b012326b5_l4.dgn
CHECKED BY: BWD DATE: JULY 2022 SCALE: 1"=20'
DESIGNED BY: MJS DATE: JULY 2022

BRIDGE NO. B7616 DRAWING NO. 66220

JESkinner 7/28/2023 12:40:10 PM
WORKSPACE: ARDOT Bridge
\\garverinc.local\gdata\Projects\2017\17017660 - ARDOT 012326 Hwy 412 - Hwy 112\Drawings\b012326x5.SI04-L0.dgn
REVISED DATE:

DATE REVISED	DATE REVISED	FED. ROAD DIST. NO.	STATE	JOB NO.	SHEET NO.	TOTAL SHEETS
		6	ARK.	012326	432	838
		B7616		LAYOUT		66221

NOTES:
For GENERAL NOTES, see Dwg. No. 66217.

For HYDRAULIC DATA, see Dwg. No. 66218.

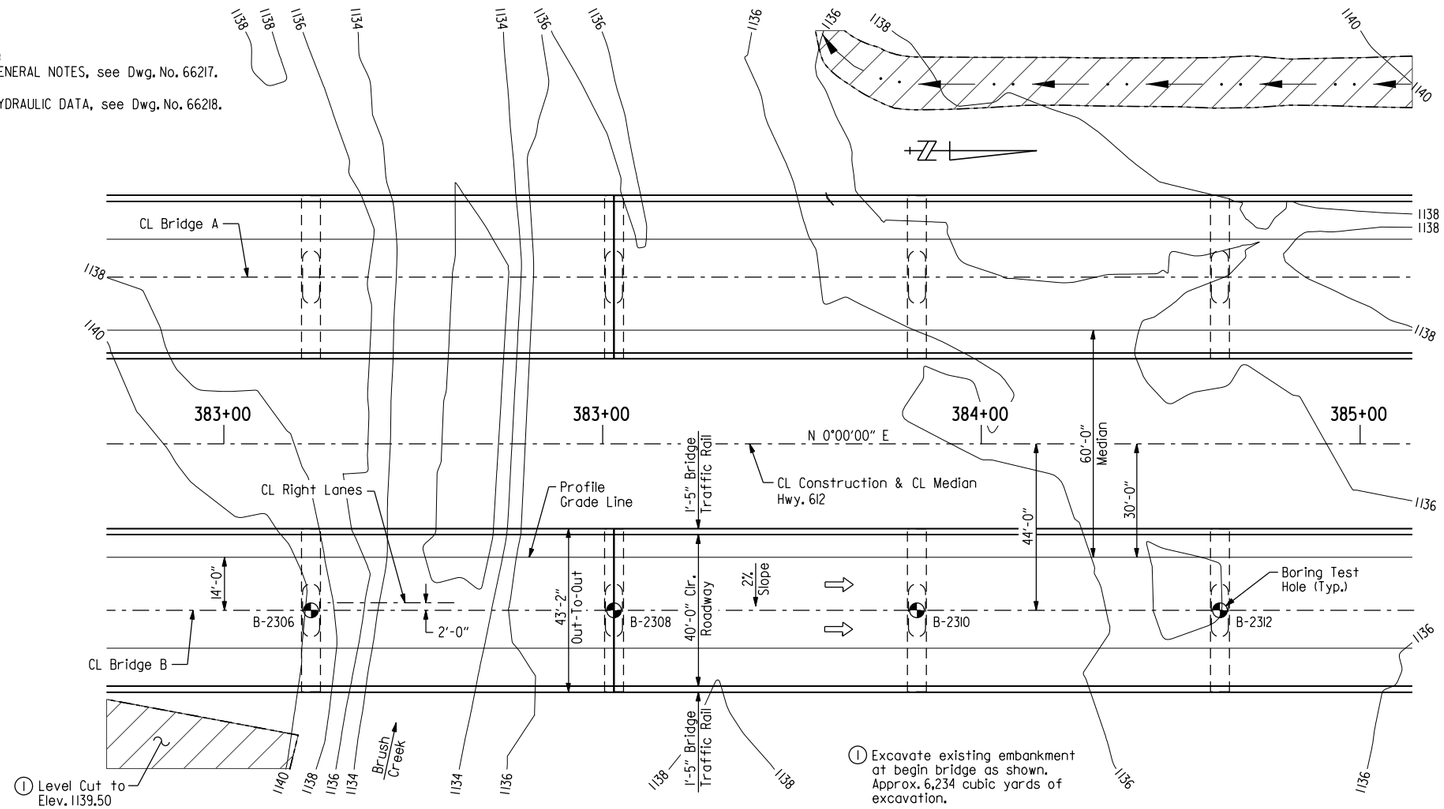

PLAN - BRIDGE B

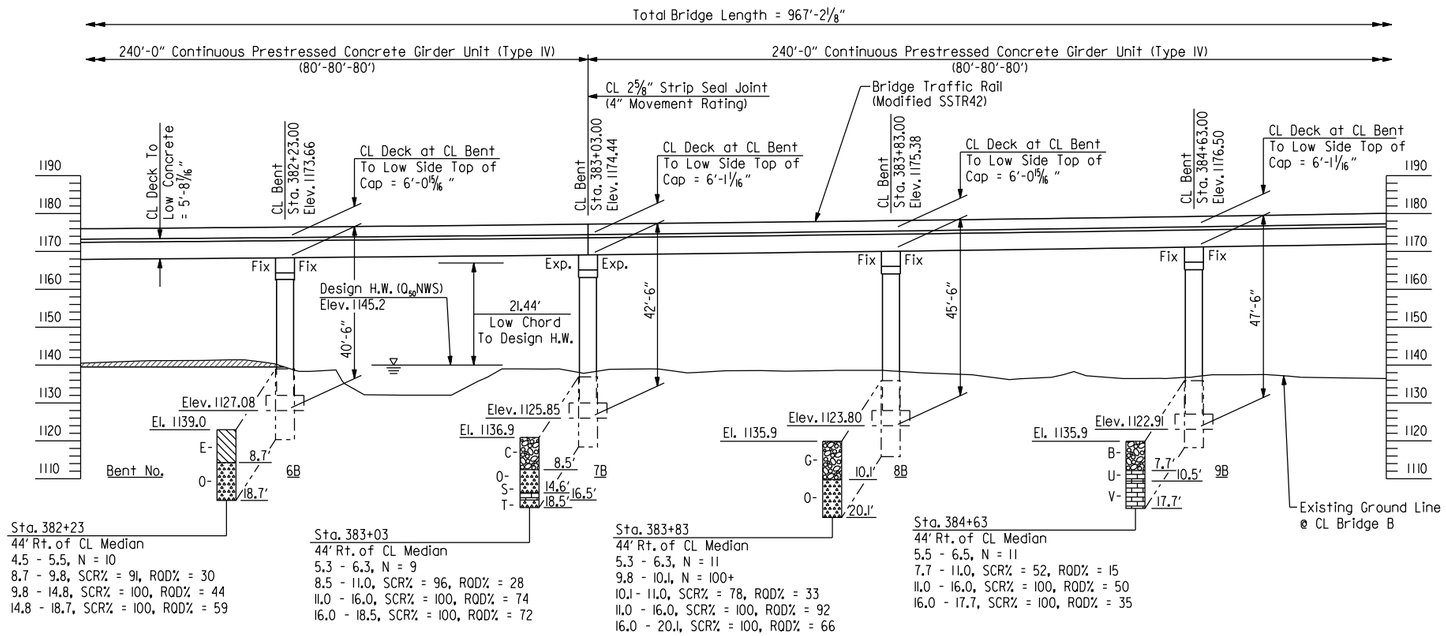

FOR R/W DATA, SEE ROADWAY PLANS

382+00 383+00 384+00 385+00

ELEVATION - BRIDGE B

NOTE:
Stations shown are along CL Construction. Elevations shown are actual top of deck elevations at CL Bridge. Any vertical dimension referenced to CL Deck is based on actual top of deck elevation at CL Bridge.

BORING LEGEND

A - Gray, stiff, gravelly lean clay.
B - Brown, medium dense, well-graded gravel with silt and sand.
C - Brown, loose, clayey gravel with sand.
D - Brown, medium dense, clayey gravel with sand.
E - Brown, stiff, gravelly lean clay.
F - Brown, loose, well-graded gravel with silt and sand.
G - Brown, medium dense to very dense, well-graded gravel with silt and sand.
H - Gray, soft, gravelly lean clay.
I - Gray, medium dense, well-graded gravel with silt and sand.
J - Brown, loose to medium dense, clayey gravel with sand.
K - Beige, very dense, clayey gravel with sand.
L - Beige, loose to medium dense, clayey gravel with sand.
M - Chert: White, lt. gray, gray, fresh to slightly weathered.
N - Limestone: Lt. gray, gray, fine to medium grain.
O - Chert: White, lt. gray, gray, fresh to moderately weathered.
P - Chert: White, lt. gray, gray, slightly weathered.
Q - Limestone: White, lt. gray, gray, fine grain, slightly weathered.
R - Chert: White, lt. gray, gray, with intermittent limestone.
S - Limestone: White, lt. gray, gray, fresh.
T - Chert: White, lt. gray, gray, fresh.
U - Limestone: White, lt. gray, gray, jointed.
V - Limestone: White, gray to lt. gray. fine grain, fresh with slight weathering.
W - Limestone: Lt. gray, gray, fine grain, fresh with slight weathering.
X - Limestone: White, lt. gray, gray, fine grain, fresh with slight weathering.
Y - Chert: White, lt. gray, gray, fresh to intensely weathered.
AI - Moist, Medium Dense, Reddish Brown Clayey Gravel with Sand
BI - Moist, Very Hard, Reddish Brown Gravelly Clay with Sand
CI - CHERT - Highly Weathered to Weathered, Moderately Hard, Light Gray
DI - CHERT WITH OCCASIONAL LIMESTONE LAYERS - Slightly Weathered, Moderately Hard to Hard, Light Gray
EI - LIMESTONE - Unweathered, Moderately Hard, Gray
FI - Moist, Very Dense, Reddish Brown Clayey Gravel with Sand
GI - CHERT - Highly Weathered, Moderately Hard to Hard, Light Gray
HI - LIMESTONE - Slightly Weathered, Moderately Hard, Gray
JI - CHERT WITH FREQUENT LIMESTONE LAYERS - Slightly Weathered, Moderately Hard to Hard, Light Gray
KI - CHERT WITH FREQUENT LIMESTONE LAYERS - Unweathered, Moderately Hard to Hard, Light Gray
LI - CHERT - Unweathered, Hard, Light Gray
MI - Moist, Very Dense, Light Brown Gravel with Sand
NI - Moist, Dense, Light Brown Sandy Gravel
PI - Moist, Very Hard, Reddish Brown Sandy Clay with Some Gravel
QI - Moist, Dense, Light Brown Gravel with Sand
RI - Moist, Medium Dense, Light Brown Gravel with Sand
SI - Moist, Medium Dense, White Gravel and Sand
TI - Moist, Very Dense, Brown and White Gravel and Sand with Clay Seams
UI - Wet, Very Dense, White Gravel with Sand
VI - CHERT - Highly Weathered, Moderately Hard, Light Gray
WI - CHERT WITH FREQUENT LIMESTONE LAYERS - Unweathered, Hard, Light Gray
XI - CHERT WITH OCCASIONAL LIMESTONE LAYERS - Unweathered, Hard, Light Gray
YI - Moist, Dense, Brown and White Gravel with Sand
ZI - Moist, Dense, Light Gray Gravel with Sand Interbedded with Hard, Reddish Brown Clay
A2 - Wet, Very Dense, Brown Gravel with Sand and Clay Seams
B2 - CHERT - Weathered with Occasional Highly Weathered Seams, Hard, Light Gray
C2 - CHERT - Unweathered, Hard, Light Gray

SHEET 5 OF 8
LAYOUT OF BRIDGES
HIGHWAY 612
OVER BRUSH CREEK
HWY. 412 - HWY. 112
(SPRINGDALE BYPASS) (F)
WASHINGTON COUNTY

ROUTE 612 SEC. 1

ARKANSAS STATE HIGHWAY COMMISSION
LITTLE ROCK, ARK.

STATE OF ARKANSAS
LICENSED PROFESSIONAL ENGINEER
No. 16458
JOEL E. SKINNER
Digitally Signed 07/28/2023
BRIDGE ENGINEER

DRAWN BY: CWT DATE: JULY 2022 FILENAME: b012326b5_15.dgn
CHECKED BY: BWD DATE: JULY 2022
DESIGNED BY: MJS DATE: JULY 2022 SCALE: 1"=20'
BRIDGE NO. B7616 DRAWING NO. 66221

JESkinner 7/28/2023 12:10:12 PM
WORKSPACE: ARDOT Bridge
\\garver-inc.local\data\Projects\2017\17017660 - ARDOT 012326 Hwy 412 - Hwy 112\Drawings\b012326x5_SU05-L0.dgn
REVISED DATE:

DATE REVISED	DATE REVISED	FED. ROAD DIST. NO.	STATE	JOB NO.	SHEET NO.	TOTAL SHEETS
10/23/2023		6	ARK.	012326	433	838
		B7616		LAYOUT		66222

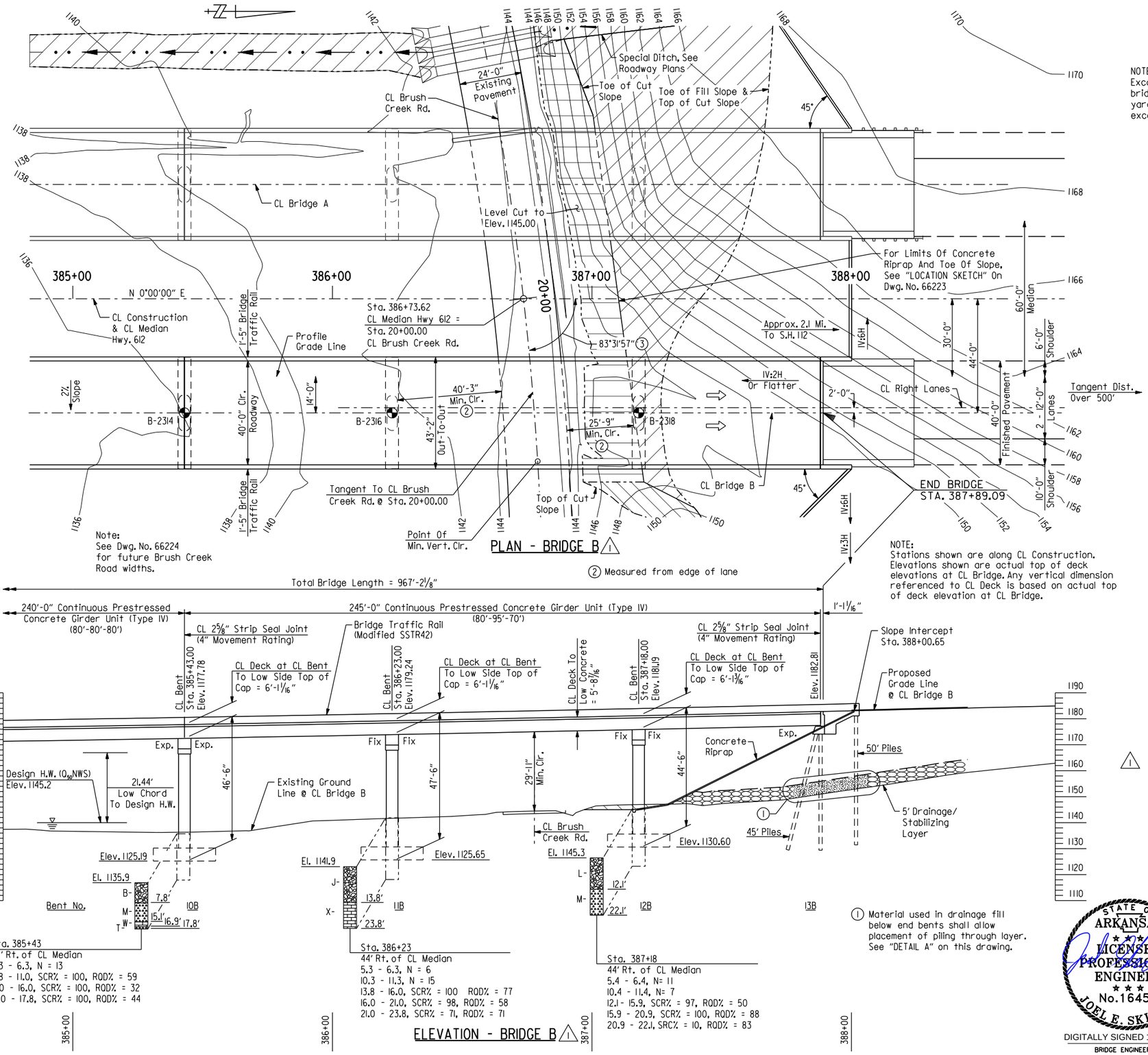

NOTE:
Excavate existing embankment at end bridge as shown. Approx. 1,836 cubic yards of excavation (excluding ditch excavation).

FOR R/W DATA, SEE ROADWAY PLANS

NOTES:
Use Type F Approach Slab at each end of bridge. For details, see Std. Dwg. No. 55040F1.

Use Type F Approach Gutters at each end of bridge. For details, see Std. Dwg. No. 55030F.

For GENERAL NOTES, see Dwg. No. 66217.

For HYDRAULIC DATA, see Dwg. No. 66218.

For BORING LEGEND, see Dwg. No. 66221.

For VERTICAL CURVE DATA, see Dwg. No. 66220.

③ Measured from line tangent to CL Brush Creek Rd. at Sta. 20+00.00 and CL Median Hwy. 612

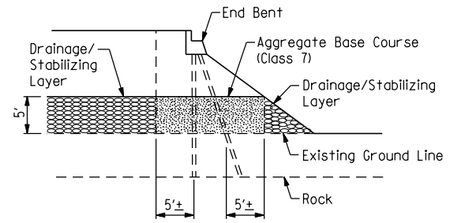

Where a drainage/stabilizing layer is required for embankment construction, aggregate base course (Class 7), in accordance with Section 303.02, shall be placed as shown in areas where piling will be located. Aggregate base course (Class 7) shall be paid for as "COMPACTED EMBANKMENT".

At the Contractor's option, preboring or other methods as approved by the Engineer may be used to facilitate pile installation through the aggregate base course (Class 7) material at these locations. Preboring or other methods used for installation of piles, where rock fill is used for embankment construction, will not be paid for separately but shall be included in item "STEEL PILING".

DETAIL A

① Revised Plan And Elevation View To Match Details And Clarify Concrete Riprpap Limits

Made By: JES Date: 10/23/2023
Ckecked By: CSW Date: 10/23/2023

STATE OF ARKANSAS
LICENSED PROFESSIONAL ENGINEER
No. 16458
JOEL E. SKINNER

DIGITALLY SIGNED 10/23/2023
BRIDGE ENGINEER

SHEET 6 OF 8
LAYOUT OF BRIDGES
HIGHWAY 612
OVER BRUSH CREEK
HWY. 412 - HWY. 112
(SPRINGDALE BYPASS) (F)
WASHINGTON COUNTY

ROUTE 612 SEC. 1

ARKANSAS STATE HIGHWAY COMMISSION
LITTLE ROCK, ARK.

DRAWN BY: CWT DATE: JULY 2022 FILENAME: b012326b5_16.dgn
CHECKED BY: BWD DATE: JULY 2022 SCALE: 1"=20'
DESIGNED BY: MJS DATE: JULY 2022

BRIDGE NO. B7616 DRAWING NO. 66222

JESkinner
10/20/2023 10:09:07 AM
WORKSPACE: ARDOT Bridge
\\garverinc.local\gdata\Projects\2017\17017660 - ARDOT 012326 Hwy 412 - Hwy 112\Drawings\b012326x5_S06-L0.dgn
REVISED DATE:

DATE REVISED	DATE REVISED	FED. ROAD DIST. NO.	STATE	JOB NO.	SHEET NO.	TOTAL SHEETS
10/23/2023		6	ARK.	012326	434	838
		A7616 & B7616		LAYOUT		66223

NOTE:
Excavate existing embankment at end bridge as shown. Approx. 1,836 cubic yards of excavation (excluding ditch excavation).

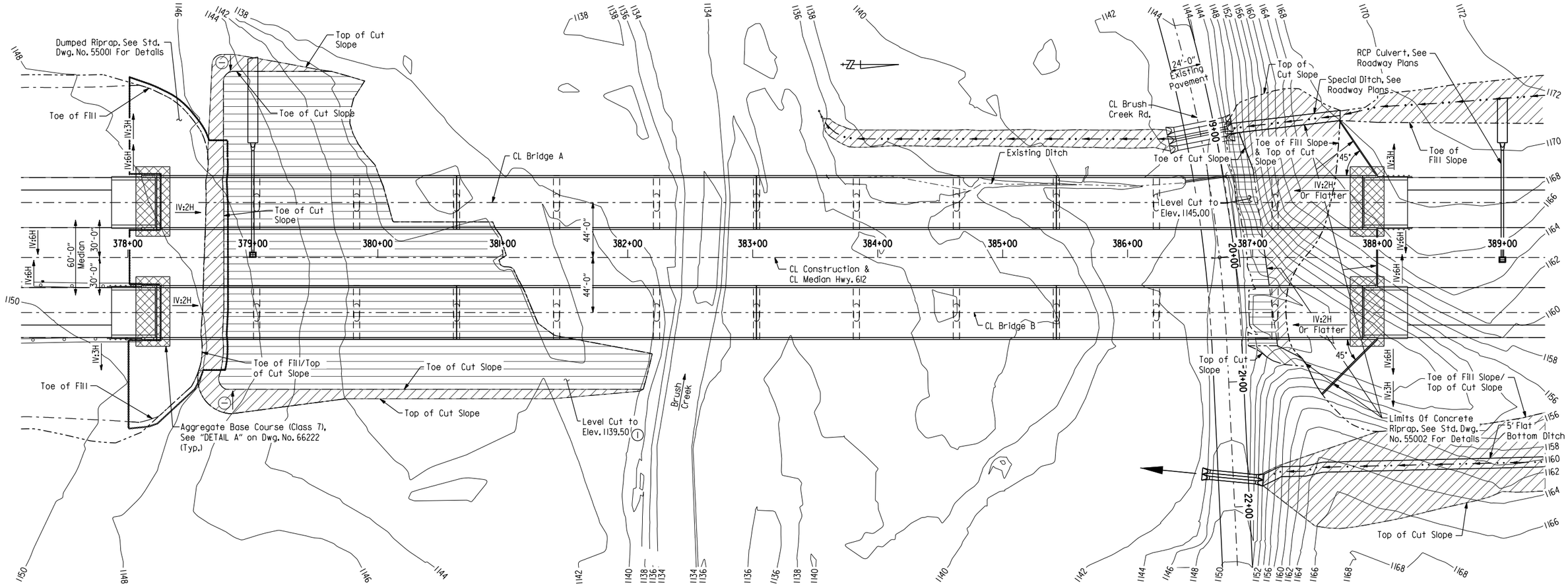

(1) 1V:3H

LOCATION SKETCH (1)
Scale: 1" = 40'-0"

(1) Excavate existing embankment at begin bridge as shown. Approx. 6,234 cubic yards of excavation.

(1) Revised Deatils And Callouts To Clarify Concrete Riprap Limits

Made By: JES Date: 10/23/2023
Ckecked By: CSW Date: 10/23/2023

STATE OF ARKANSAS
LICENSED PROFESSIONAL ENGINEER
No. 16458
JOEL E. SKINNER

DIGITALLY SIGNED 10/23/2023
BRIDGE ENGINEER

SHEET 7 OF 8
LAYOUT OF BRIDGES
HIGHWAY 612
OVER BRUSH CREEK
HWY. 412 - HWY. 112
(SPRINGDALE BYPASS) (F)
WASHINGTON COUNTY

ROUTE 612 SEC. 1

ARKANSAS STATE HIGHWAY COMMISSION
LITTLE ROCK, ARK.

DRAWN BY: CWT DATE: JULY 2022 FILENAME: b012326m5_17.dgn
CHECKED BY: BWD DATE: JULY 2022 SCALE: 1"=40'
DESIGNED BY: MJS DATE: JULY 2022
BRIDGE NO. A7616 & B7616 DRAWING NO. 66223

JESkinner 10/20/2023 10:09:16 AM
WORKSPACE: ARDOT Bridge
\\garverinc.local\gdata\Projects\2017\17017660 - ARDOT 012326 Hwy 412 - Hwy 112\Drawings\b012326x5_SI07-LS.dgn
REVISED DATE:

DATE REVISED	DATE REVISED	FED. ROAD DIST. NO.	STATE	JOB NO.	SHEET NO.	TOTAL SHEETS
		6	ARK.	012326	435	838
		A7616 & B7616		LAYOUT		66224

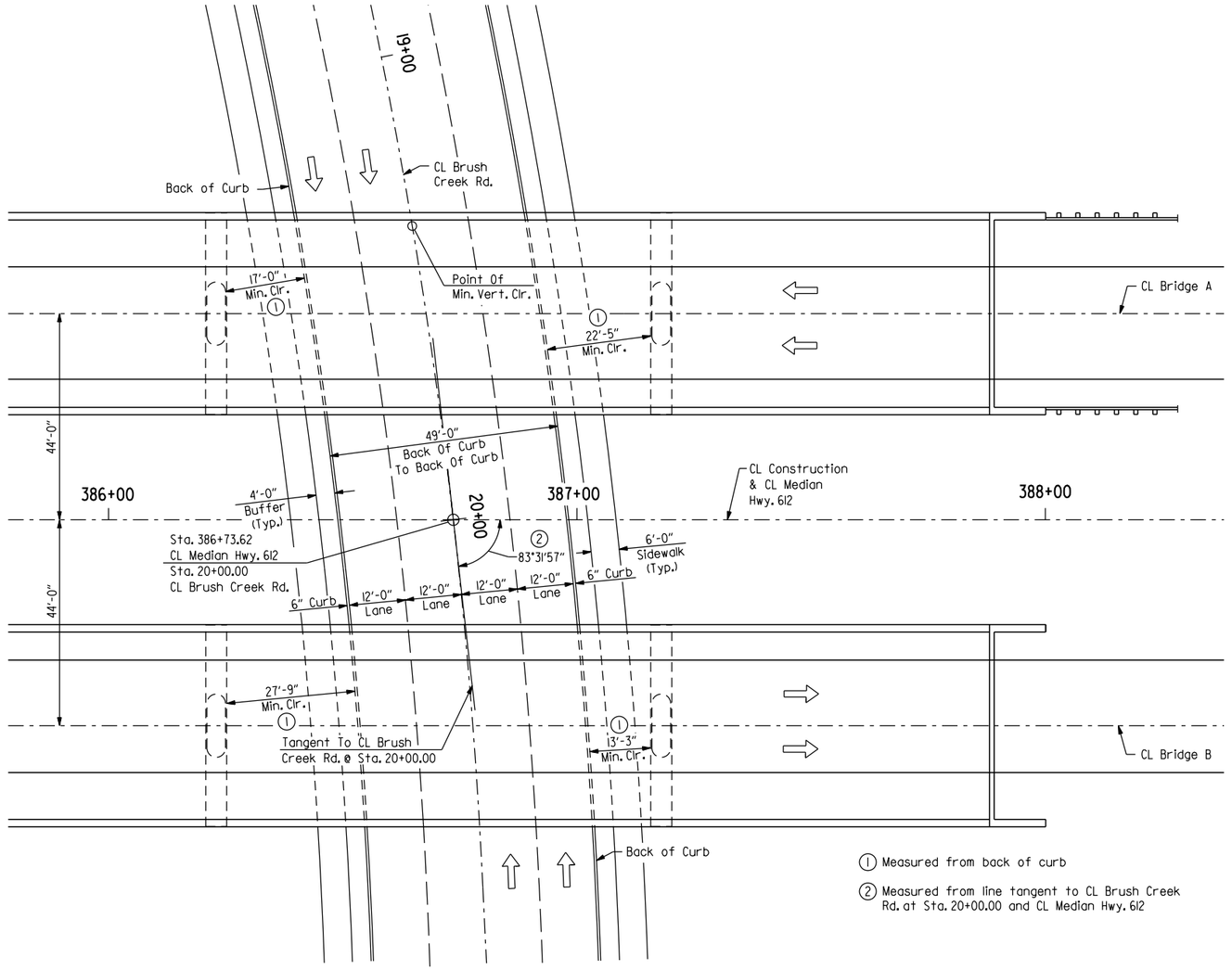

(1) Measured from back of curb

(2) Measured from line tangent to CL Brush Creek Rd. at Sta. 20+00.00 and CL Median Hwy. 612

PLAN VIEW

(Showing Horizontal Clearances With Future Improvements To Brush Creek Road)

STATE OF ARKANSAS
LICENSED PROFESSIONAL ENGINEER
No. 16458
JOEL E. SKINNER

Digitally Signed 07/28/2023

BRIDGE ENGINEER

SHEET 8 OF 8
LAYOUT OF BRIDGES
HIGHWAY 612
OVER BRUSH CREEK
HWY. 412 - HWY. 112
(SPRINGDALE BYPASS) (F)
WASHINGTON COUNTY

ROUTE 612 SEC. 1

ARKANSAS STATE HIGHWAY COMMISSION

LITTLE ROCK, ARK.

DRAWN BY: CWT DATE: JULY 2022 FILENAME: b012326m5_18.dgn
CHECKED BY: BWD DATE: JULY 2022 SCALE: 1"=15'
DESIGNED BY: MJS DATE: JULY 2022

BRIDGE NO. A7616 & B7616 DRAWING NO. 66224

JEskinner 7/28/2023 12:01:16 PM
WORKSPACE: ARDOT Bridge
\\garverinc.local\gdata\Projects\2017\17017660 - ARDOT 012326 Hwy 412 - Hwy 112\Drawings\b012326x5_SI08-FS.dgn
REVISED DATE:

DATE REVISED	DATE REVISED	FED. ROAD DIST. NO.	STATE	JOB NO.	SHEET NO.	TOTAL SHEETS
		6	ARK.	012326	436	838
		A7616 & B7616		END BENT DETAILS		66225

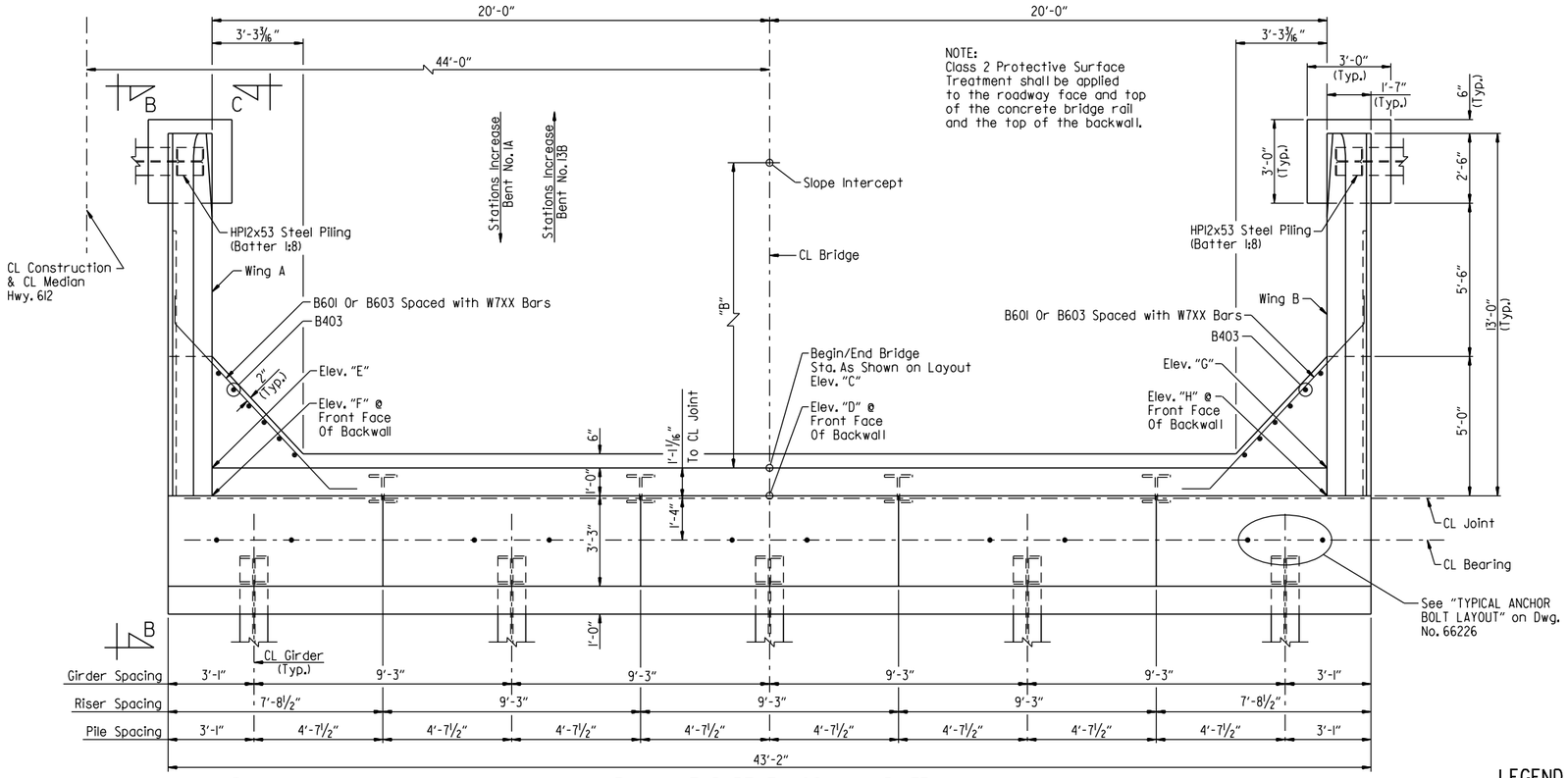

PLAN - END BENT NOS. 1A AND 13B

Scale: 3/8" = 1'-0"

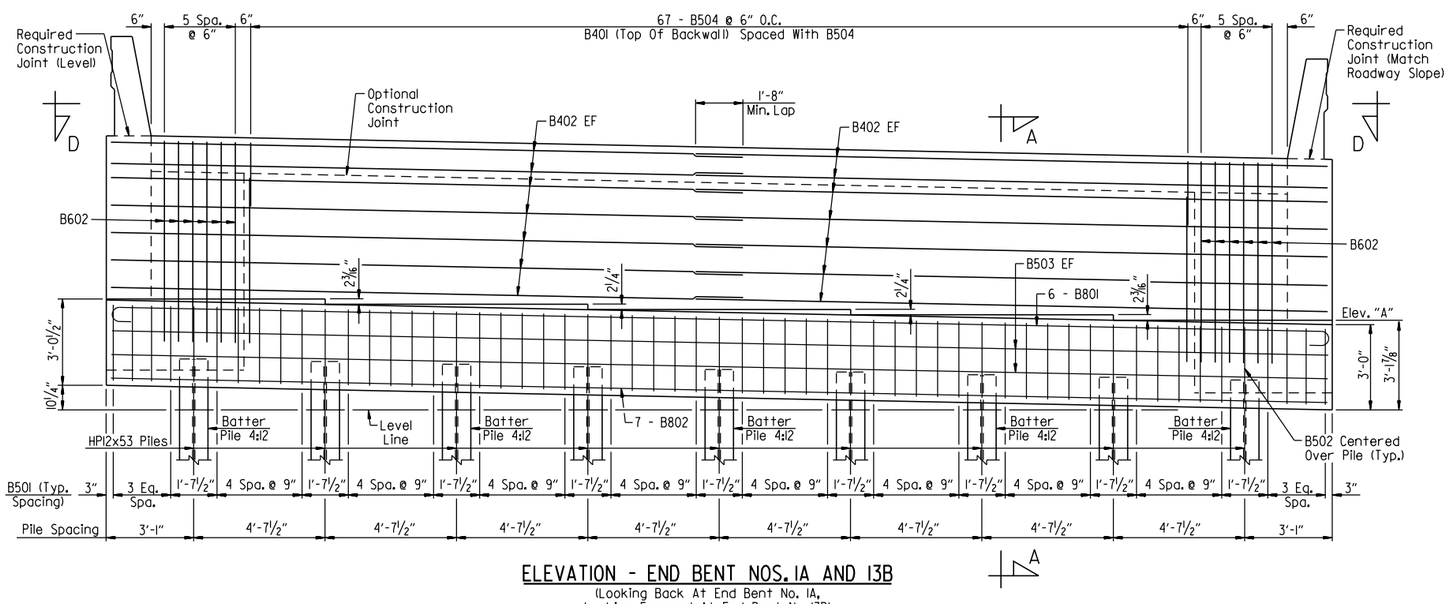

ELEVATION - END BENT NOS. 1A AND 13B

(Looking Back At End Bent No. 1A, Looking Forward At End Bent No. 13B)
Scale: 3/8" = 1'-0"

TABLE OF VARIABLES (END BENT NOS. 1A AND 13B)

Location	Elev. "A"	"B"	Elev. "C"	Elev. "D"	Elev. "E"	Elev. "F"	Elev. "G"	Elev. "H"
End Bent No. 1A	1166.28	11'-0"	1172.35	1172.35	1172.75	1172.75	1171.95	1171.95
End Bent No. 13B	1176.69	11'-7"	1182.81	1182.78	1183.21	1183.19	1182.41	1182.39

LEGEND

EF = Each Face

GENERAL NOTES

Concrete shall be Class "S" with a minimum 28 day compressive strength f'c = 3,500 psi and shall be poured in the dry. All exposed corners shall be chamfered 3/4" unless otherwise noted.

All reinforcing steel shall be Grade 60 (yield strength = 60,000 psi) conforming to AASHTO M 31 or M 322, Type A, with mill test reports.

Structural steel in end bents shall be ASTM A709, Gr. 50W and shall be paid for as "STRUCTURAL STEEL IN BEAM SPANS (ASTM A709, GR. 50W)".

Class 3 Textured Coating Finish shall be applied to bridge surfaces as specified in Special Provision "TEXTURED COATING FINISH" and in accordance with Subsection 802.19(b)(3).

Top reinforcing bars in cap shall be properly placed to avoid interference with anchor bolts or sheet metal sleeves.

For additional information, see LAYOUT.

NOTES:
For details of elastomeric bearing and anchor bolts, see Dwg. Nos. 66232 & 66233.

For "SECTION A-A", "VIEW B-B", "VIEW C-C" & "VIEW D-D", see Dwg. No. 66227.

For "BAR LIST" & "BAR BENDING DIAGRAMS", see Dwg. No. 66228.

STATE OF ARKANSAS
LICENSED PROFESSIONAL ENGINEER
No. 16458
JOEL E. SKINNER
Digitally Signed 07/28/2023
BRIDGE ENGINEER

SHEET 1 OF 4
DETAILS OF END BENTS
BRUSH CREEK

ROUTE SEC.

ARKANSAS STATE HIGHWAY COMMISSION

LITTLE ROCK, ARK.

DRAWN BY: CWT DATE: JULY 2011 FILENAME: b012326m5_al.dgn
CHECKED BY: WMM DATE: DEC. 2011 SCALE: AS SHOWN
DESIGNED BY: SFH/JES DATE: JULY 2011

BRIDGE NO. A7616 & B7616 DRAWING NO. 66225

JESkinner 7/28/2023 12:10:17 PM
WORKSPACE: ARDOT Bridge
\\garverinc.local\gdata\Projects\2017\17017660 - ARDOT 012326 Hwy 412 - Hwy 112\Drawings\b012326x5_520i-AB.dgn
REVISED DATE:

DATE REVISED	DATE REVISED	FED. ROAD DIST. NO.	STATE	JOB NO.	SHEET NO.	TOTAL SHEETS
		6	ARK.	012326	437	838
		A7616 & B7616		END BENT DETAILS		66226

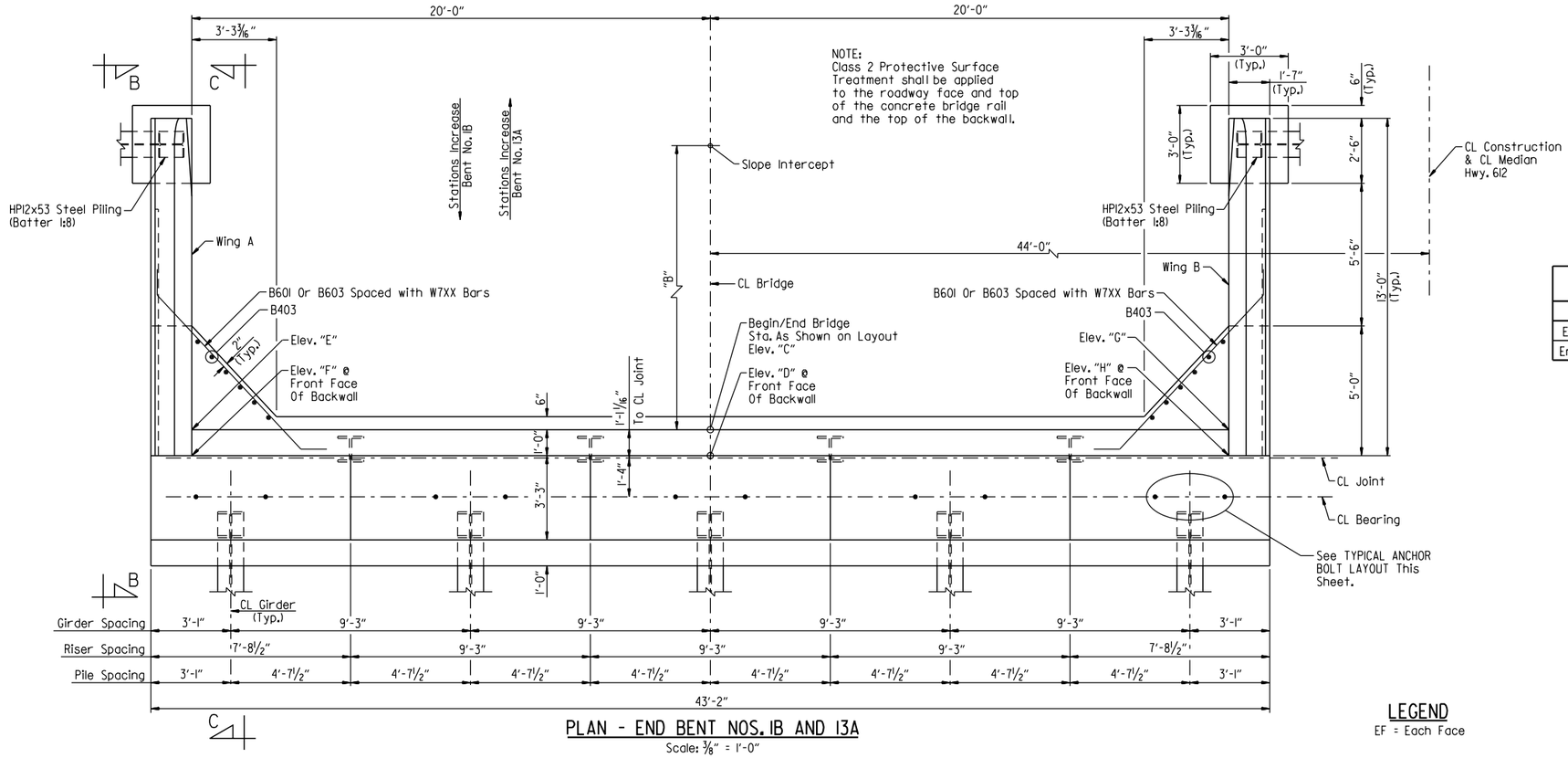

PLAN - END BENT NOS. 1B AND 13A

Scale: 3/8" = 1'-0"

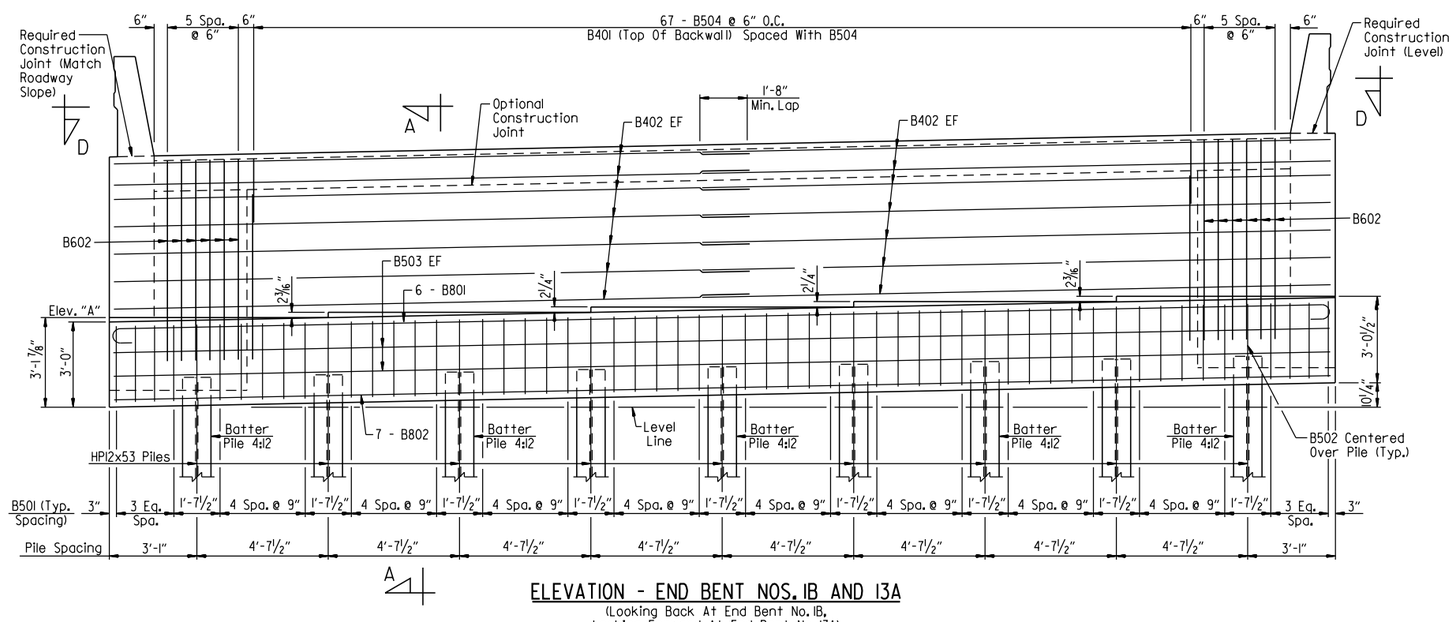

ELEVATION - END BENT NOS. 1B AND 13A

(Looking Back At End Bent No. 1B, Looking Forward At End Bent No. 13A)

Scale: 3/8" = 1'-0"

TABLE OF VARIABLES (END BENT NOS. 1B AND 13A)								
Location	Elev. "A"	"B"	Elev. "C"	Elev. "D"	Elev. "E"	Elev. "F"	Elev. "G"	Elev. "H"
End Bent No. 1B	1166.28	11'-0"	1172.35	1172.35	1171.95	1171.95	1172.75	1172.75
End Bent No. 13A	1176.69	11'-7"	1182.81	1182.78	1182.41	1182.39	1183.21	1183.19

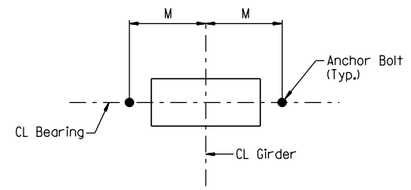

TYPICAL ANCHOR BOLT LAYOUT

No Scale

LEGEND

EF = Each Face

NOTES:

For "GENERAL NOTES", see Dwg. No. 66225.

For details of elastomeric bearing, anchor bolts, and dimension M, see Dwg. Nos. 66232 & 66233.

For "SECTION A-A", "VIEW B-B", "VIEW C-C" & "VIEW D-D, see Dwg. No. 66227.

For "BAR LIST" & "BAR BENDING DIAGRAMS", see Dwg. No. 66228.

STATE OF ARKANSAS
LICENSED PROFESSIONAL ENGINEER
No. 16458
JOEL E. SKINNER

Digitally Signed 07/28/2023

BRIDGE ENGINEER

SHEET 2 OF 4

DETAILS OF END BENTS

BRUSH CREEK

ROUTE SEC.

ARKANSAS STATE HIGHWAY COMMISSION

LITTLE ROCK, ARK.

DRAWN BY: HEW DATE: JULY 2011 FILENAME: b012326m5_a2.dgn

CHECKED BY: WMM DATE: DEC. 2011 SCALE: AS SHOWN

DESIGNED BY: SFH/JES DATE: JULY 2011

BRIDGE NO. A7616 & B7616 DRAWING NO. 66226

JEskinner 7/28/2023 12:10:17 PM
WORKSPACE: ARDOT Bridge
\\garverinc.local\data\Projects\2017\17017660 - ARDOT 012326 Hwy 412 - Hwy 112\Drawings\b012326x5_5202-AB.dgn
REVISED DATE:

DATE REVISED	DATE REVISED	FED. ROAD DIST. NO.	STATE	JOB NO.	SHEET NO.	TOTAL SHEETS
		6	ARK.	012326	438	838
		A7616 & B7616	END BENT DETAILS			66227

(1) See "BRIDGE RAIL AESTHETIC DETAIL" on Dwg. No. 66247 for additional information.

(2) Class 3 Textured Coating Finish (Color = Light Brown, Color Chip No. 33522)

(3) Class 3 Textured Coating Finish (Color = Medium Brown, Color Chip No. 30219)

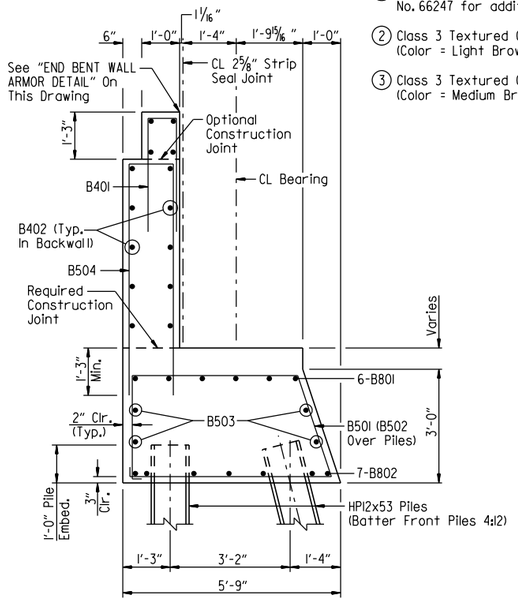

SECTION A-A
Scale: 1/4" = 1'-0"

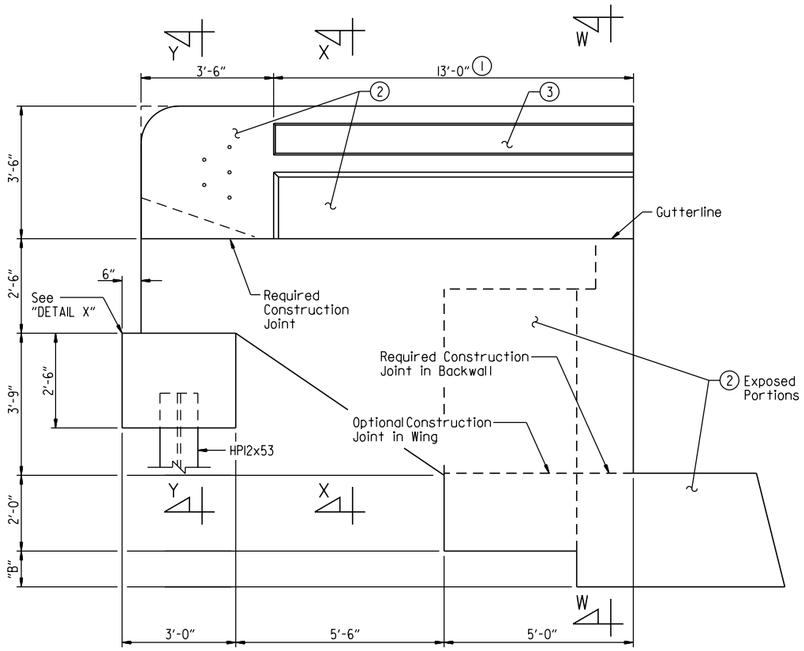

VIEW B-B
Scale: 1/2" = 1'-0"

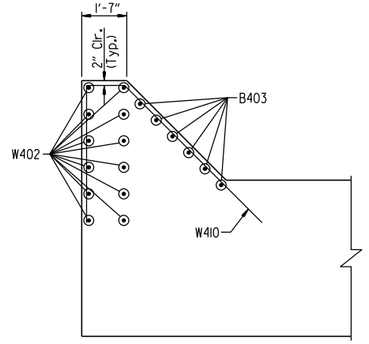

SECTION E-E
(Shown for Wing A, Wing B Similar)
Scale: 3/8" = 1'-0"

NOTES:
Transverse spacing between sloped anchor studs and vent holes shall be 6"

Concrete shall be hand packed under joint armor

For additional joint details, see Std. Dwg. No. 55009

LEGEND
FF = Front Face
BF = Back Face
EF = Each Face

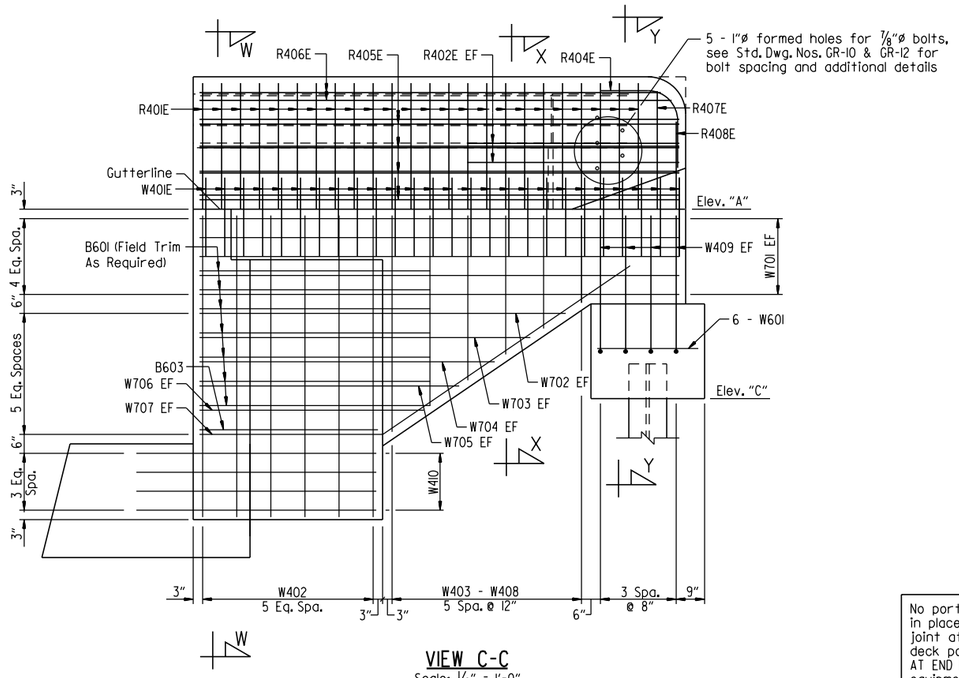

VIEW C-C
Scale: 1/2" = 1'-0"

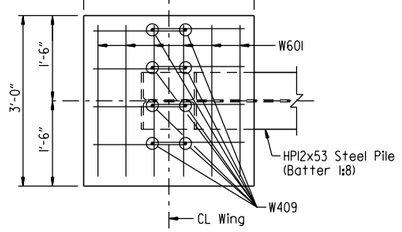

DETAIL X
(Plan Of Wing Pile Footing)
Scale: 3/8" = 1'-0"

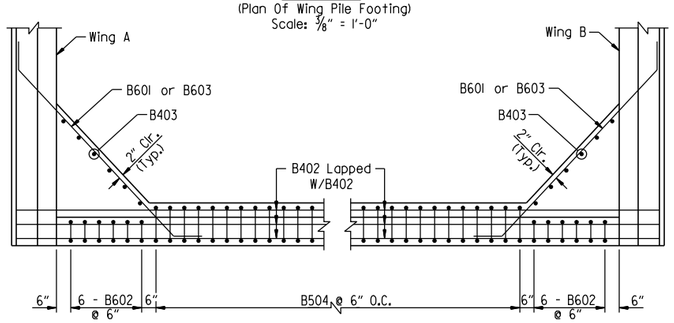

VIEW D-D
Scale: 3/8" = 1'-0"

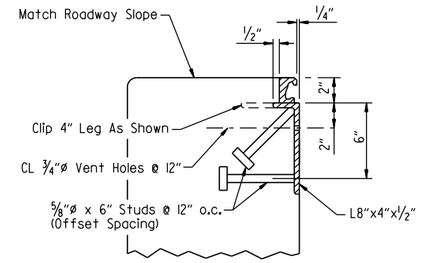

END BENT WALL ARMOR DETAIL
No Scale

No portion of the backwall shall be poured before the girders are in place. The portion of the backwall above the optional construction joint at the paving bracket shall not be placed until the adjacent deck pour has been made. Refer to the "EXPANSION DEVICE INSTALLATION AT END BENTS" note on Std. Dwg. 55009. No heavy construction equipment shall be allowed within 10' of the backwall before the deck concrete placement for the adjacent span has been completed.

TABLE OF VARIABLES

Bent No.	Wing	"A"	"B"	"C"
1A	A	1172.78	6 5/8"	1167.78
1A	B	1171.98	7 7/16"	1166.98
1B	A	1171.98	7 7/16"	1166.98
1B	B	1172.78	6 5/8"	1167.78
13A	A	1182.70	11"	1177.70
13A	B	1183.50	10 3/8"	1178.50
13B	A	1183.50	10 3/8"	1178.50
13B	B	1182.70	11"	1177.70

STATE OF ARKANSAS
LICENSED PROFESSIONAL ENGINEER
No. 16458
JOEL E. SKINNER
Digitally Signed 07/28/2023
BRIDGE ENGINEER

SHEET 3 OF 4
DETAILS OF END BENTS
BRUSH CREEK
ROUTE SEC.

ARKANSAS STATE HIGHWAY COMMISSION
LITTLE ROCK, ARK.

DRAWN BY: CWT DATE: JULY 2011 FILENAME: b012326m5_a3.dgn
CHECKED BY: WMM DATE: DEC. 2011 SCALE: AS SHOWN
DESIGNED BY: SFH/JES DATE: JULY 2011
BRIDGE NO. A7616 & B7616 DRAWING NO. 66227

JESkinner 7/28/2023 12:08:18 PM
WORKSPACE: ARDOT Bridge
\\garverinc.local\data\Projects\2017\17017660 - ARDOT 012326 Hwy 412 - Hwy 112\Drawings\b012326x5_5203-MD.dgn
REVISED DATE:

DATE REVISED	DATE REVISED	FED. ROAD DIST. NO.	STATE	JOB NO.	SHEET NO.	TOTAL SHEETS
		6	ARK.	012326	439	838
		A7616 & B7616		END BENT DETAILS		66228

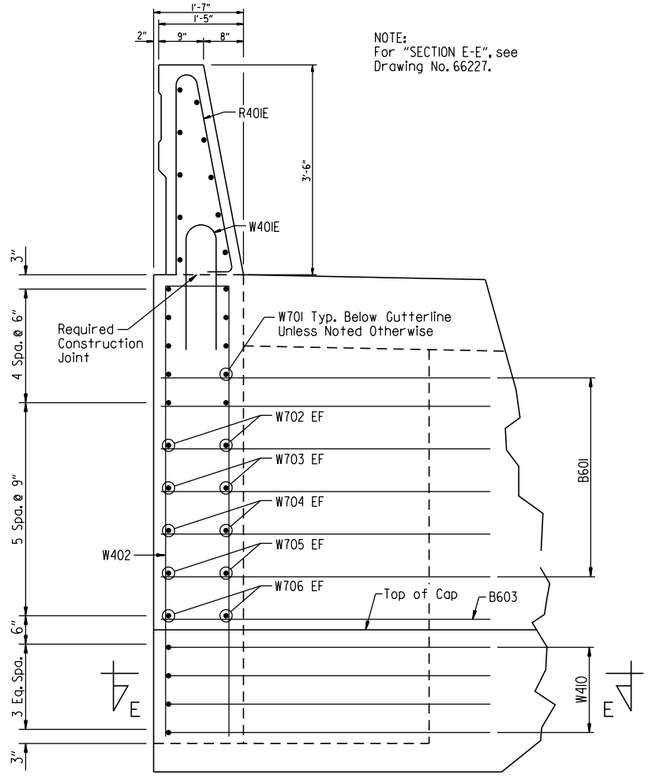

NOTE:
For "SECTION E-E", see Drawing No. 66227.

SECTION W-W
Scale: 3/4" = 1'-0"

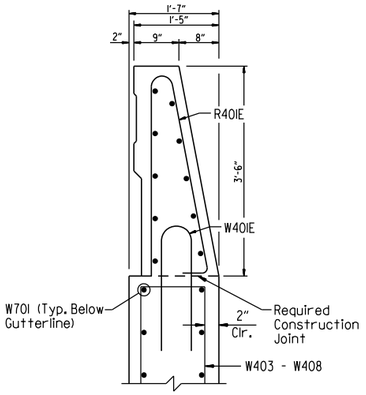

SECTION X-X
Scale: 3/4" = 1'-0"

VIEW SHOWING LOCATION OF NAME PLATE
Scale: 1/2" = 1'-0"

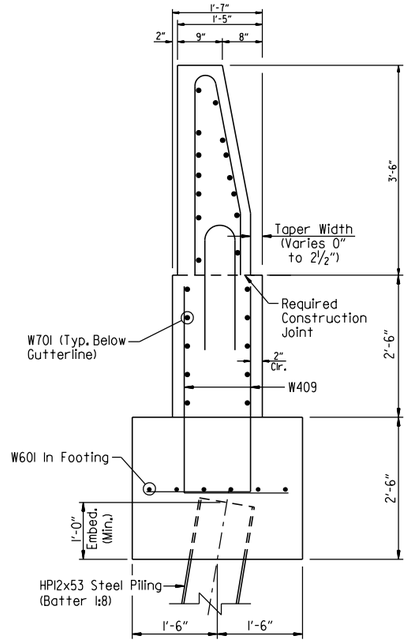

SECTION Y-Y
Scale: 3/4" = 1'-0"

BAR LIST

MARK	NO. REQ'D.	LENGTH	"A"	"B"	PIN DIA.
B401	68	6'-6"	8"	3'-0"	2"
B402	28	22'-3"			Str.
B403	12	6'-8"			Str.
B501	48	15'-7"			2 1/2"
B502	9	9'-6 1/2"			2 1/2"
B503	4	42'-10"			Str.
B504	67	12'-7 1/2"	1'-2"	5'-10"	2 1/2"
B601	12	10'-1"			4 1/2"
B602	12	12'-0"	8"	5'-10"	4 1/2"
B603	2	7'-4"			4 1/2"
B801	6	44'-8"			6"
B802	7	42'-10"			Str.
R401E	48	7'-6"			3"
R402E	8	5'-6"			Str.
R404E	2	3'-8"			8 1/2"
R405E	16	12'-8"			Str.
R406E	4	12'-5"			Str.
R407E	2	6'-8"			3"
R408E	2	5'-1"			3"
W401E	52	4'-7"			6"
W402	12	16'-8 1/2"	1'-3"	7'-10"	3"
W403 To W408	2 Each	12'-4 1/2" To 6'-4 1/2"	1'-3"	5'-8" To 2'-8"	3"
W409	16	5'-4"			3"
W410	8	11'-10"			2"
W701	20	12'-8"			Str.
W702	4	9'-2"			Str.
W703	4	8'-4"			Str.
W704	4	7'-7"			Str.
W705	4	6'-9"			Str.
W706	4	12'-10"			5 1/4"

BAR BENDING DIAGRAMS

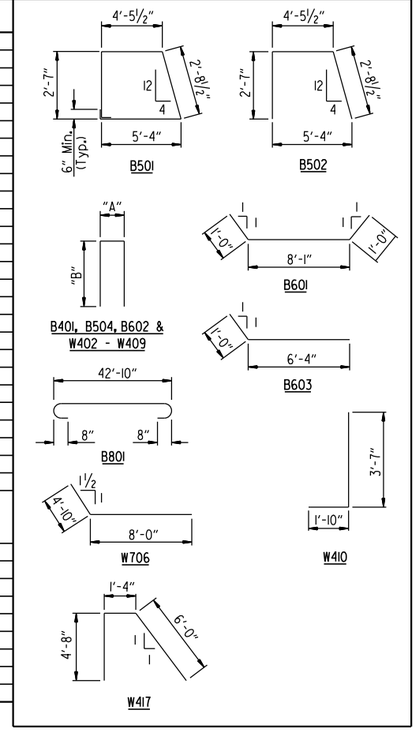

NOTES:
Dimensions of bars in bending diagrams are out-to-out.

Number of bars shown is for one bent only.

Bar designations ending with "E" indicate epoxy coated bars.

For bar bending diagrams of R401E, R404E, R407E, R408E & W401E, See Std. Dwg. No. 55071.

The first bar designation number indicates the reinforcing bar size.

STATE OF ARKANSAS
LICENSED PROFESSIONAL ENGINEER
No. 16458
JOEL E. SKINNER
Digitally Signed 07/28/2023
BRIDGE ENGINEER

SHEET 4 OF 4
DETAILS OF END BENTS
BRUSH CREEK
ROUTE SEC.
ARKANSAS STATE HIGHWAY COMMISSION
LITTLE ROCK, ARK.

DRAWN BY: HEW DATE: JULY 2011 FILENAME: b012326m5_a4.dgn
CHECKED BY: WMM DATE: DEC. 2011
DESIGNED BY: SFH/JES DATE: JULY 2011 SCALE: AS SHOWN
BRIDGE NO. A7616 & B7616 DRAWING NO. 66228

JEskinner 7/28/2023 12:40:18 PM
WORKSPACE: ARDOT Bridge
\\garverinc.local\gdata\Projects\2017\17017660 - ARDOT 012326 Hwy 412 - Hwy 112\Drawings\b012326x5_5204-MD.dgn
REVISED DATE:

DATE REVISED	DATE REVISED	FED. ROAD DIST. NO.	STATE	JOB NO.	SHEET NO.	TOTAL SHEETS
		6	ARK.	012326	440	838
		A7616		INT. BENT DETAILS		66229

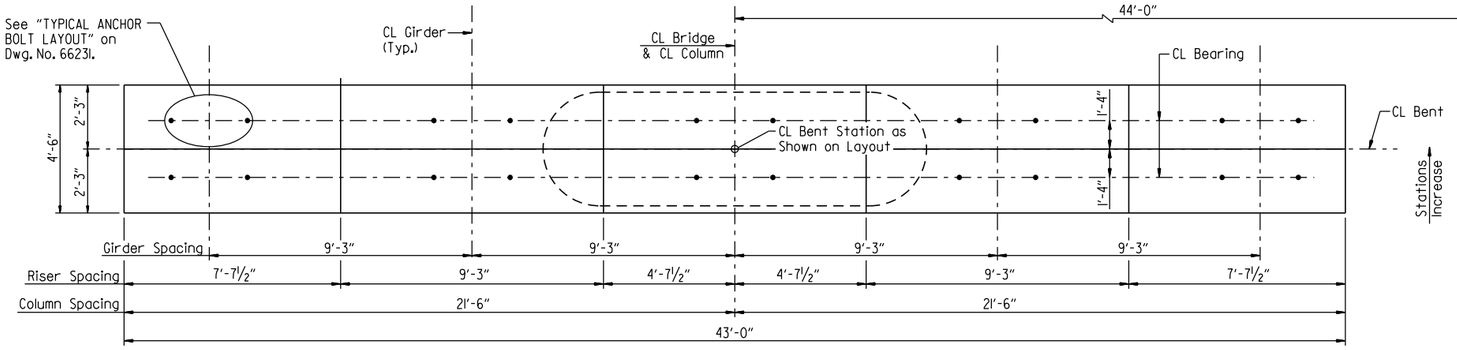

PLAN - BENT NOS. 2A THRU 12A

Scale: 3/8" = 1'-0"

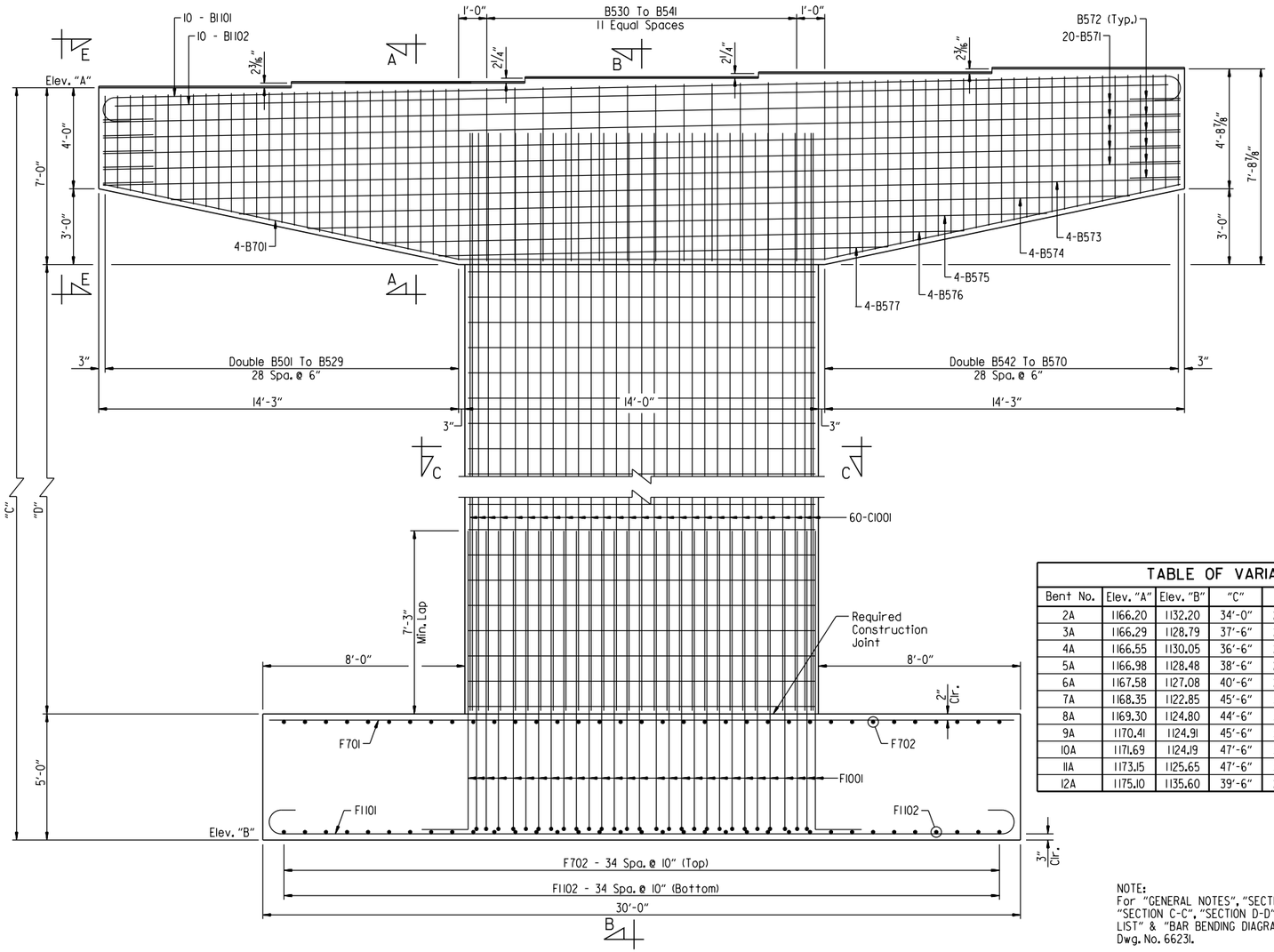

ELEVATION - BENT NOS. 2A THRU 12A

(Looking Ahead)
Scale: 3/8" = 1'-0"

TABLE OF VARIABLES						
Bent No.	Elev. "A"	Elev. "B"	"C"	"D"	"E"	"F"
2A	1166.20	1132.20	34'-0"	22'-0"	22	0
3A	1166.29	1128.79	37'-6"	25'-6"	25	0
4A	1166.55	1130.05	36'-6"	24'-6"	24	0
5A	1166.98	1128.48	38'-6"	26'-6"	26	0
6A	1167.58	1127.08	40'-6"	28'-6"	28	0
7A	1168.35	1122.85	45'-6"	33'-6"	33	3/8"
8A	1169.30	1124.80	44'-6"	32'-6"	32	7/16"
9A	1170.41	1124.91	45'-6"	33'-6"	33	1/2"
10A	1171.69	1124.19	47'-6"	35'-6"	35	9/16"
11A	1173.15	1125.65	47'-6"	35'-6"	35	5/8"
12A	1175.10	1135.60	39'-6"	27'-6"	27	11/16"

NOTE:
For "GENERAL NOTES", "SECTION A-A", "SECTION C-C", "SECTION D-D", "BAR LIST" & "BAR BENDING DIAGRAMS", see Dwg. No. 66231.

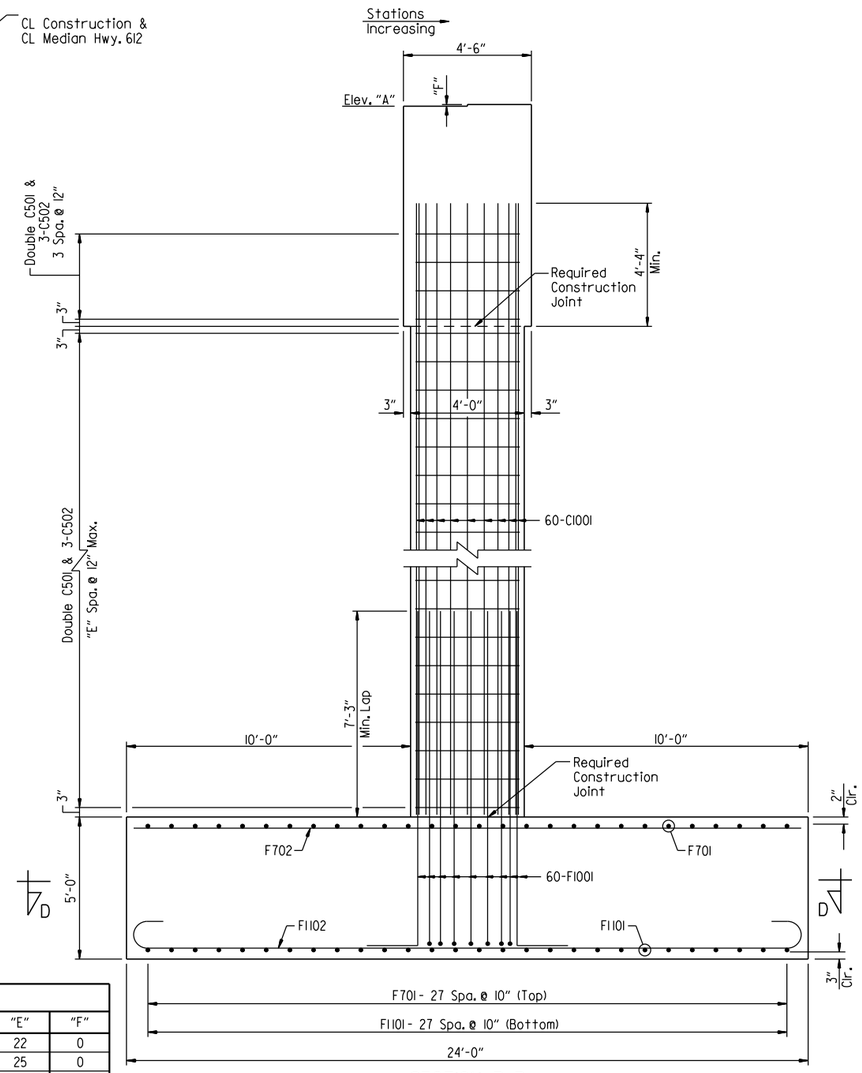

SECTION B-B

Scale: 3/8" = 1'-0"

STATE OF ARKANSAS
LICENSED PROFESSIONAL ENGINEER
No. 16458
JOEL E. SKINNER
Digitally Signed 07/28/2023
BRIDGE ENGINEER

SHEET 1 OF 3
DETAILS OF INTERMEDIATE BENTS
BRUSH CREEK

ROUTE SEC.

ARKANSAS STATE HIGHWAY COMMISSION

LITTLE ROCK, ARK.

DRAWN BY: HEW DATE: APR. 2011 FILENAME: b012326m5_bl.dgn
CHECKED BY: WMM DATE: NOV. 2011 SCALE: AS SHOWN
DESIGNED BY: PCC DATE: APR. 2011

BRIDGE NO. A7616 DRAWING NO. 66229

JESkinner 7/28/2023 12:10:19 PM
WORKSPACE: ARDOT Bridge
\\garverinc.local\gdata\Projects\2017\170176\60 - ARDOT 012326 Hwy 412 - Hwy 112\Drawings\b012326x5_S205-BE.dgn
REVISED DATE:

DATE REVISED	DATE REVISED	FED. ROAD DIST. NO.	STATE	JOB NO.	SHEET NO.	TOTAL SHEETS
		6	ARK.	012326	441	838
		B7616		INT. BENT DETAILS		66230

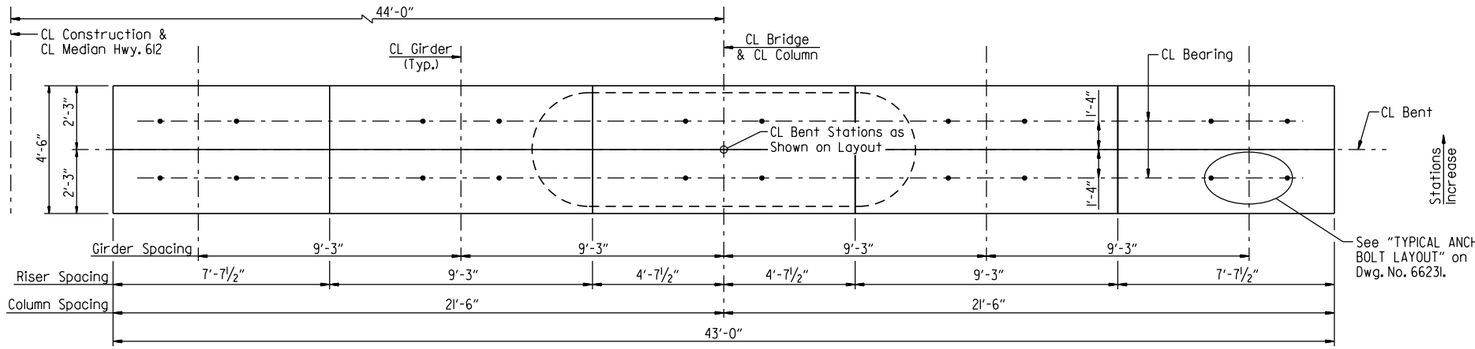

PLAN - BENT NOS. 2B THRU 12B

Scale: ⅜" = 1'-0"

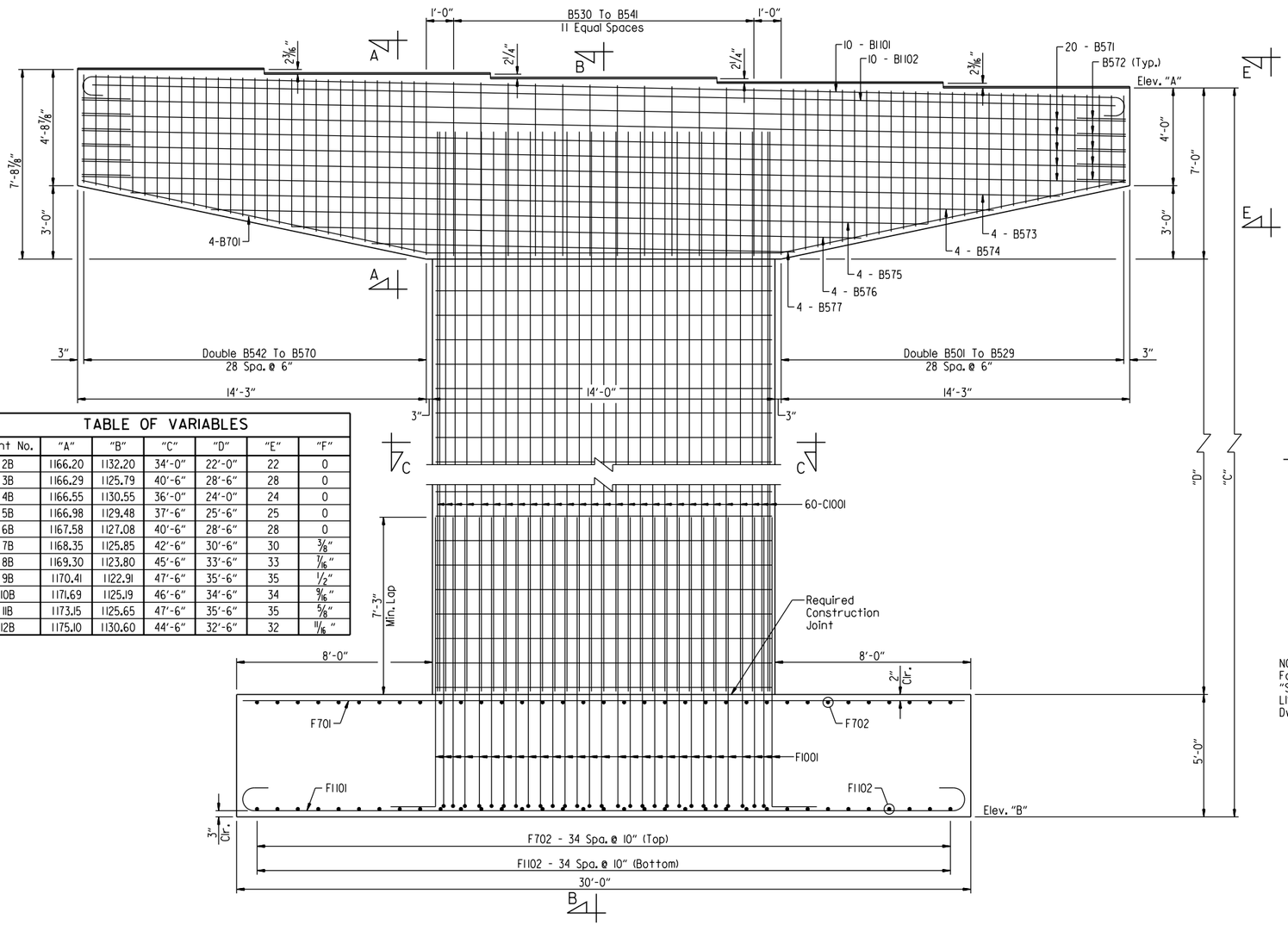

ELEVATION - BENT NOS. 2B THRU 12B

(Looking Ahead)

Scale: ⅜" = 1'-0"

TABLE OF VARIABLES						
Bent No.	"A"	"B"	"C"	"D"	"E"	"F"
2B	1166.20	1132.20	34'-0"	22'-0"	22	0
3B	1166.29	1125.79	40'-6"	28'-6"	28	0
4B	1166.55	1130.55	36'-0"	24'-0"	24	0
5B	1166.98	1129.48	37'-6"	25'-6"	25	0
6B	1167.58	1127.08	40'-6"	28'-6"	28	0
7B	1168.35	1125.85	42'-6"	30'-6"	30	⅜"
8B	1169.30	1123.80	45'-6"	33'-6"	33	7/16"
9B	1170.41	1122.91	47'-6"	35'-6"	35	½"
10B	1171.69	1125.19	46'-6"	34'-6"	34	9/16"
11B	1173.15	1125.65	47'-6"	35'-6"	35	5/8"
12B	1175.10	1130.60	44'-6"	32'-6"	32	11/16"

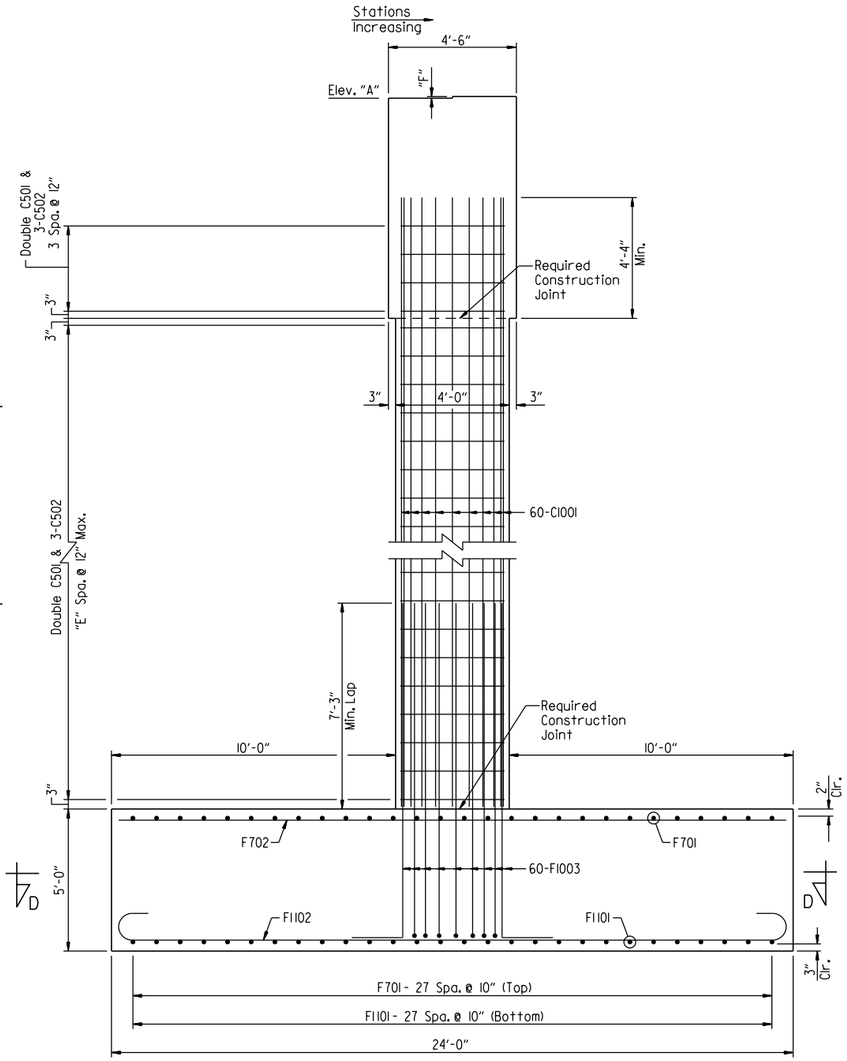

SECTION B-B

Scale: ⅜" = 1'-0"

NOTE:
For "GENERAL NOTES", "SECTION A-A", "SECTION C-C", "SECTION D-D", "BAR LIST" & "BAR BENDING DIAGRAMS", see Dwg. No. 66231.

STATE OF ARKANSAS
LICENSED PROFESSIONAL ENGINEER
No. 16458
JOEL E. SKINNER
Digitally Signed 07/28/2023
BRIDGE ENGINEER

SHEET 2 OF 3
DETAILS OF INTERMEDIATE BENTS
BRUSH CREEK

ROUTE SEC.

ARKANSAS STATE HIGHWAY COMMISSION

LITTLE ROCK, ARK.

DRAWN BY: HEW DATE: APR. 2011 FILENAME: b012326m5_b2.dgn
CHECKED BY: WMM DATE: NOV. 2011 SCALE: AS SHOWN
DESIGNED BY: PCC DATE: APR. 2011

BRIDGE NO. B7616 DRAWING NO. 66230

JEskinner 7/28/2023 12:10:19 PM
WORKSPACE: ARDOT Bridge
\\garverinc.local\gdata\Projects\2017\17017660 - ARDOT 012326 Hwy 412 - Hwy 112\Drawings\b012326x5_5206-BE.dgn
REVISED DATE:

DATE REVISED	DATE REVISED	FED. ROAD DIST. NO.	STATE	JOB NO.	SHEET NO.	TOTAL SHEETS
		6	ARK.	012326	442	838
		A7616 & B7616		INT. BENT DETAILS		66231

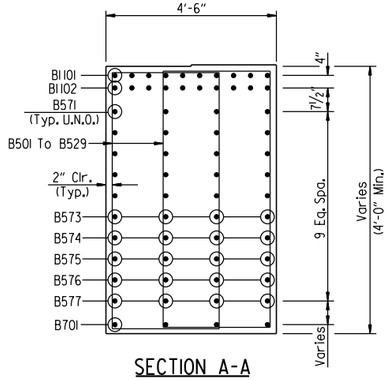

SECTION A-A
Scale: ½" = 1'-0"

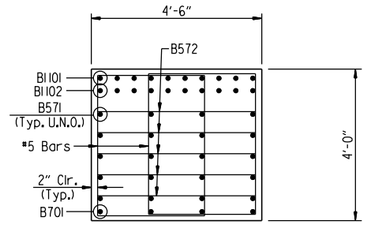

VIEW E-E
(Longitudinal Step Not Shown)
Scale: ½" = 1'-0"

TABLE OF VARIABLES			
Bent No.	"C"	"D"	"E"
2A	54	26'-4"	81
3A	60	29'-10"	90
4A	58	28'-10"	87
5A	62	30'-10"	93
6A	66	32'-10"	99
7A	76	37'-10"	114
8A	74	36'-10"	111
9A	76	37'-10"	114
10A	80	39'-10"	120
11A	80	39'-10"	120
12A	64	31'-10"	96
2B	54	26'-4"	81
3B	66	32'-10"	99
4B	58	28'-4"	87
5B	60	29'-10"	90
6B	66	32'-10"	99
7B	70	34'-10"	105
8B	76	37'-10"	114
9B	80	39'-10"	120
10B	78	38'-10"	117
11B	80	39'-10"	120
12B	74	36'-10"	111

BAR LIST					
MARK	NO. REQ'D.	LENGTH	"A"	"B"	P.D.
B501 To B529	2 Ea.	13'-4" To 19'-10"	2'-10"	3'-7" To 6'-10"	2½"
B530 To B541	1 Ea.	17'-7½" To 18'-1½"	4'-2"	6'-10" To 7'-1"	2½"
B542 To B570	2 Ea.	15'-0" To 20'-4"	2'-10"	4'-5" To 7'-1"	2½"
B571	20	42'-8"			Str.
B572	11	7'-10½"	4'-1"	2'-0"	2½"
B573	4	40'-0"			Str.
B574	4	35'-3"			Str.
B575	4	29'-4"			Str.
B576	4	24'-4"			Str.
B577	4	17'-10"			Str.
B701	4	43'-4"			5¼"
B1101	10	45'-8"	42'-8"	1'-0½"	11¼"
B1102	10	41'-9"			Str.
C501	"C"	23'-0"			3¾"
C502	"E"	4'-10"			3¾"
C1001	60	"D"			Str.
F701	28	31'-4"	29'-8"	7"	5¼"
F702	35	25'-4"	23'-8"	7"	5¼"
F1001	60	13'-5"			10"
F1101	28	32'-8"	29'-8"	1'-0½"	11¼"
F1102	35	26'-8"	23'-8"	1'-0½"	11¼"

BAR BENDING DIAGRAMS

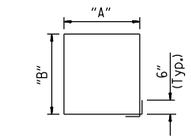

B501 To B529 & B542 To B570

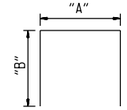

B530 To B541, B572 & B578

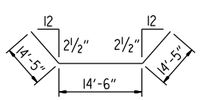

B701

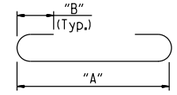

B1101, F701, F702, F1101 & F1102

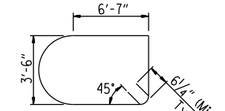

C501

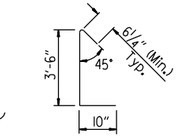

C502

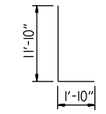

F1003

NOTES:
Dimension of bars are out-to-out.

Bars shown are for one bent only.

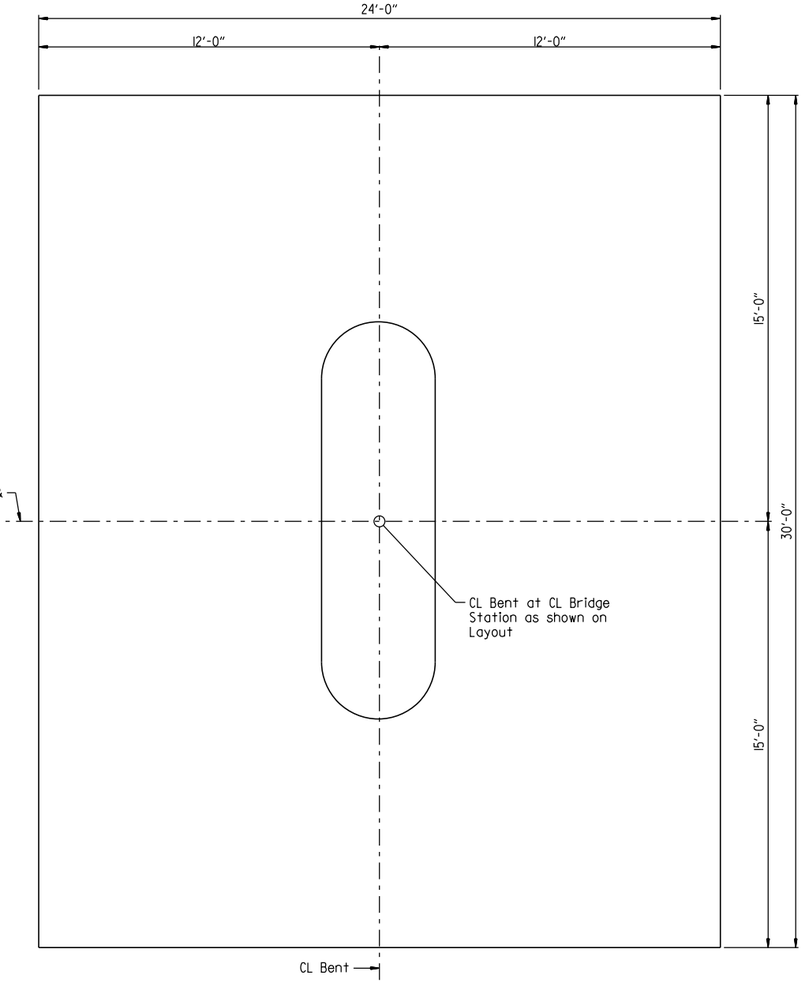

SECTION D-D
Scale: ⅜" = 1'-0"

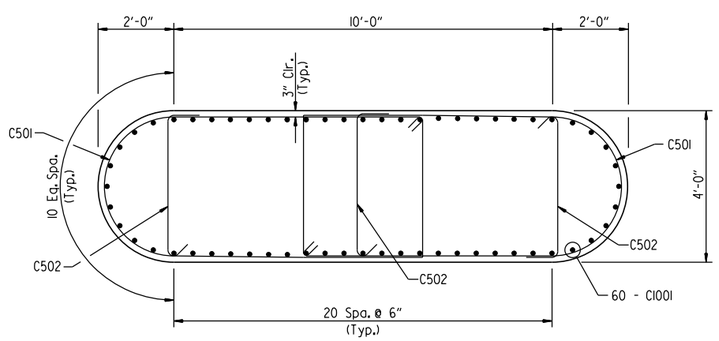

SECTION C-C
Scale: ½" = 1'-0"

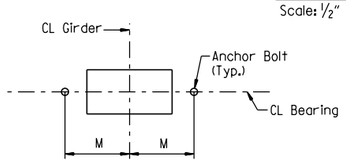

TYPICAL ANCHOR BOLT LAYOUT
No Scale

NOTE:
For anchor bolt size, M dimensions and other details of elastomeric bearings, see Dwg. Nos. 66232 & 66233.

GENERAL NOTES

All concrete shall be Class "S" with a minimum 28 day compressive strength f'c = 3,500 psi and shall be poured in the dry. All exposed corners to be chamfered ¾" unless otherwise noted.

All reinforcing steel shall be Grade 60 (yield strength = 60,000 psi) conforming to AASHTO M 31 or M322, Type A, with mill test reports.

Class 3 Textured Coating Finish shall be applied to bridge surfaces as specificed in Special Provision "TEXTURED COATING FINISH" and in accordance with Subsection 802.19(b)(3).

Top reinforcing bars in cap shall be properly placed to avoid interference with anchor bolts or sheet metal sleeves.

For additional information, see Layout.

STATE OF ARKANSAS
LICENSED PROFESSIONAL ENGINEER
No. 16458
JOEL E. SKINNER
Digitally Signed 07/28/2023
BRIDGE ENGINEER

SHEET 3 OF 3
DETAILS OF INTERMEDIATE BENTS
BRUSH CREEK
ROUTE SEC.
ARKANSAS STATE HIGHWAY COMMISSION
LITTLE ROCK, ARK.

DRAWN BY: HEW DATE: APR. 2011 FILENAME: b012326m5_b3.dgn
CHECKED BY: WMM DATE: JULY 2011 SCALE: AS SHOWN
DESIGNED BY: PCC DATE: APR. 2011
BRIDGE NO. A7616 & B7616 DRAWING NO. 66231

JESkinner 7/28/2023 12:10:20 PM
WORKSPACE: ARDOT Bridge
\\garverinc.local\gdata\Projects\2017\17017660 - ARDOT 02326 Hwy 412 - Hwy 112\Drawings\b012326x5_S207-MD.dgn
REVISED DATE:

DATE REVISED	DATE REVISED	FED. ROAD DIST. NO.	STATE	JOB NO.	SHEET NO.	TOTAL SHEETS
		6	ARK.	012326	443	838
		A7616 & B7616	ELASTOMERIC BEARINGS			66232

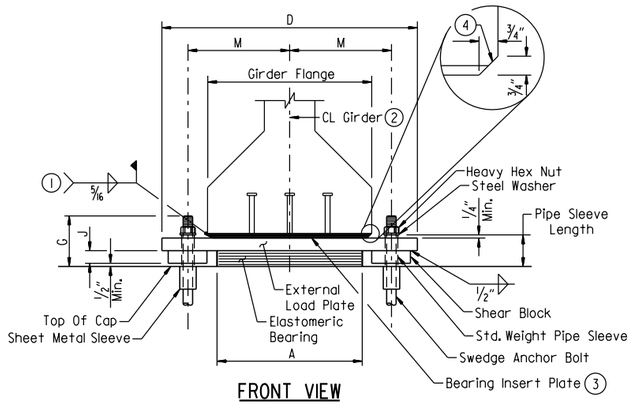

FRONT VIEW

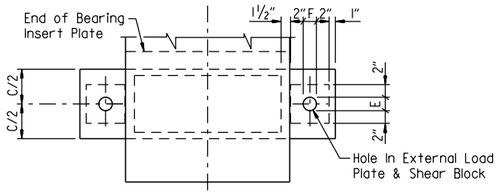

PLAN VIEW - AT BENT NOS. 2, 3, 5, 6, 8, 9, 11, & 12

(1) Unless otherwise approved by the Engineer, welding of the external load plate at expansion bearings to the bearing insert plate will be allowed only when: 1) The approximate average air temperature during the 24 hour period immediately preceding welding is between 40°F and 80°F; and 2) The slots in the external load plate are positioned to center on the anchor bolts; and 3) No horizontal deformation of the elastomeric pad is evident. If welding at other temperatures is required, the Engineer will provide adjustment data.

Care shall be taken to ensure that the external load plate is in full and complete contact with the bearing insert plate before welding begins.

(2) Centerline elastomeric pad shall be aligned with centerline girder.

(3) Bearing insert plates (A709, GR. 50W) & studs shall be considered subsidiary to the item "PRESTRESSED CONCRETE GIRDERS (TYPE IV)". Studs shall conform to Subsection 807.08.

(4) Bevel Bearing Insert Plate to conform to girder chamfer.

NOTE:
The grade and direction of bevel of the external load plate may not be accurately depicted with respect to Ta and Tb values shown in "TABLE OF FABRICATOR VARIABLES".

Prior to erection of the girders, the Contractor shall verify the orientation of the bearings with respect to Ta and Tb.

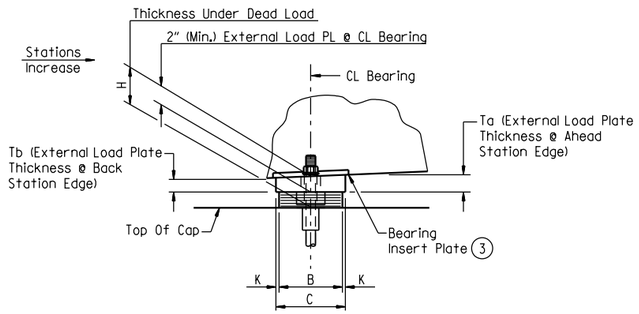

SIDE VIEW

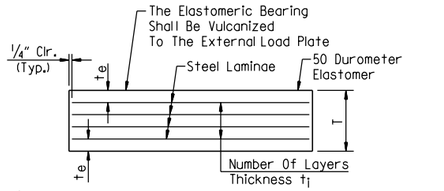

t_e = Thickness of elastomer cover on top and bottom of pad
t_i = Thickness of elastomer between steel laminae
N = Number of elastomer layers of thickness t_i

ELASTOMERIC BEARING

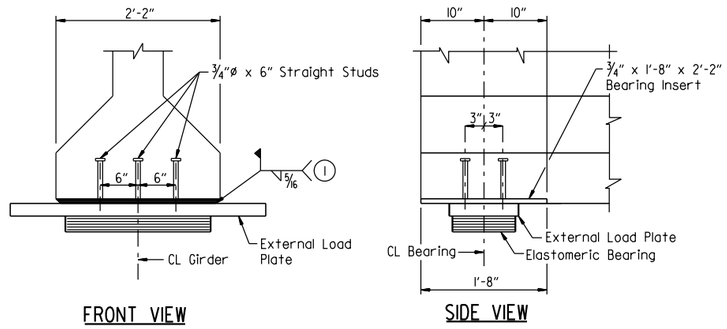

FRONT VIEW SIDE VIEW

BEVELED ANCHOR AND EXTERNAL LOAD PLATE DETAILS

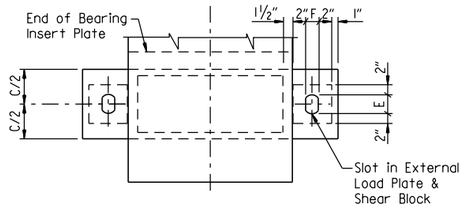

PLAN VIEW - AT BENT NOS. 1, 4, 7, 10 & 13

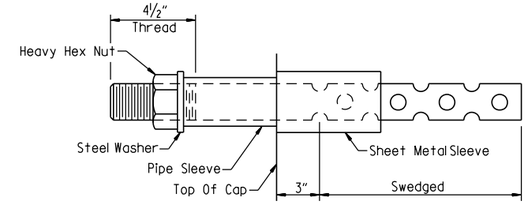

ANCHOR BOLT DETAIL

NOTES:
Anchor bolts may be cast in place or drilled and grouted into place. If anchor bolts are to be cast in place, the galvanized sheet metal sleeves will not be required.

If anchor bolts are to be drilled and grouted in place, the galvanized sheet metal sleeves shall be cast in place as shown. Sleeves shall be dry packed with styrofoam, urethane foam or approved equal prior to pouring of concrete. After pouring of the cap and prior to erection of the girder, the dry pack shall be removed and holes for the anchor bolts shall be accurately drilled into the concrete. Bolts placed in drilled holes shall be accurately set and fixed using a OPL approved epoxy or non-shrink grout that completely fills the holes. Galvanized sheet metal sleeves shall meet the requirements of ASTM A653, CS Type B or approved equivalent, be of minimum 16 gage thickness, and be galvanized according to ASTM B695, Class 50. Sheet metal sleeves will not be paid for directly, but will be considered subsidiary to the item "STRUCTURAL STEEL IN BEAM SPANS (A709, GR. 50W)".

GENERAL NOTES

Elastomeric bearings shall conform to Section 808 and shall be paid for at the unit price bid for "ELASTOMERIC BEARINGS".

External load plates and shear blocks shall conform to ASTM A709, Grade 50W. Pipe sleeves shall be ASTM A500, Grade B, and shall be galvanized to conform to AASHTO M232, Class C or ASTM B695, Class 50.

External load plates (with shear blocks as applicable) shall be completely fabricated (including bevel and bolt holes) and shall be cleaned before vulcanizing to the elastomeric bearing. The surface in contact with the elastomeric bearing shall be cleaned in accordance with Subsection 808.03. Other surfaces shall be blast cleaned in accordance with Subsection 807.84(b) for painted steel and 807.84(e) for unpainted Grade 50W steel.

Anchor bolts, washers and nuts shall conform to Subsection 807.07. The anchor bolt grade of steel shall be as specified in the "TABLE OF FABRICATOR VARIABLES". Indentations shall be circular with rounded bottoms and staggered as shown in the details.

Pipe sleeves, anchor bolts, washers and nuts shall be paid for at the unit price bid for "STRUCTURAL STEEL IN BEAM SPANS (A709, GR. 50W)". External load plates and shear blocks will not be measured or paid for separately but will be considered incidental to the unit price bid for "ELASTOMERIC BEARINGS".

Bearings shall be seated in accordance with Subsection 808.08. This work and materials are considered subsidiary to the item "ELASTOMERIC BEARINGS" and will not be paid for directly.

STATE OF ARKANSAS
LICENSED PROFESSIONAL ENGINEER
No. 16458
JOEL E. SKINNER
Digitally Signed 07/28/2023
BRIDGE ENGINEER

SHEET 1 OF 2
DETAILS OF ELASTOMERIC BEARINGS
BRUSH CREEK
ROUTE SEC.
ARKANSAS STATE HIGHWAY COMMISSION
LITTLE ROCK, ARK.

DRAWN BY: HEW DATE: MAY 2011 FILENAME: b012326m5_el.dgn
CHECKED BY: WMM DATE: NOV. 2011 SCALE: AS SHOWN
DESIGNED BY: MRA DATE: MAY 2011
BRIDGE NO. A7616 & B7616 DRAWING NO. 66232

JESkinner 7/28/2023 12:10:20 PM
WORKSPACE: ARDOT Bridge
\\garverinc.local\gdata\Projects\2017\17017660 - ARDOT 012326 Hwy 412 - Hwy 112\Drawings\b012326x5_S30i-BG.dgn
REVISED DATE:

DATE REVISED	DATE REVISED	FED. ROAD DIST. NO.	STATE	JOB NO.	SHEET NO.	TOTAL SHEETS
		6	ARK.	012326	444	838
		A7616 & B7616	ELASTOMERIC BEARINGS			66233

TABLE OF FABRICATOR VARIABLES

* Maximum Design Load = Service Load

Bridge Nos.	Location		Bearing Type	No. Of Bearings Each Bent	*Maximum Design Load (Kips)	G	H	Elastomeric Pad							External Load Plate									Anchor Bolt				
	Bent No.(s)	Beam Or Girder No.						A	B	N	t_i	t_e	No. & Thickness Of Steel Laminate	T	C	D	E	F	J	K	M	T_a	T_b	Anchor Bolt (Dia. x L)	Anchor Bolt Grade	Pipe Sleeve Size (Dia. x L)	Sheet Metal Sleeve Size (Dia. x L)	Steel Washer Size (O.D.)
A7616 & B7616	1	All	Exp.	5	164	7 1/8"	4 3/8"	26"	10"	3	1/2"	1/4"	4 @ 12 Ga.	2 7/16"	11"	43 1/2"	4 1/4"	2 1/4"	1 7/8"	1/2"	17 5/8"	2.02"	1.98"	1 1/2" x 24"	55	1 1/2" x 4 5/8"	3" x 7"	3"
	2	Back Sta.	Fixed	5	196	7 1/8"	4 3/8"	26"	10"	3	1/2"	1/4"	4 @ 12 Ga.	2 7/16"	11"	43 1/2"	2 1/4"	2 1/4"	1 7/8"	1/2"	17 5/8"	1.97"	2.03"	1 1/2" x 25"	55	1 1/2" x 4 5/8"	3" x 11"	3"
	2	Fwd. Sta.	Fixed	5	196	7 1/8"	4 3/8"	26"	10"	3	1/2"	1/4"	4 @ 12 Ga.	2 7/16"	11"	43 1/2"	2 1/4"	2 1/4"	1 7/8"	1/2"	17 5/8"	2.03"	1.97"	1 1/2" x 25"	55	1 1/2" x 4 5/8"	3" x 11"	3"
	3	Back Sta.	Fixed	5	196	7 1/8"	4 3/8"	26"	10"	3	1/2"	1/4"	4 @ 12 Ga.	2 7/16"	11"	43 1/2"	2 1/4"	2 1/4"	1 7/8"	1/2"	17 5/8"	1.99"	2.01"	1 1/2" x 25"	55	1 1/2" x 4 5/8"	3" x 11"	3"
	3	Fwd. Sta.	Fixed	5	196	7 3/16"	4 7/16"	26"	10"	3	1/2"	1/4"	4 @ 12 Ga.	2 7/16"	11"	43 1/2"	2 1/4"	2 1/4"	1 7/8"	1/2"	17 5/8"	2.11"	2.03"	1 1/2" x 25"	55	1 1/2" x 4 11/16"	3" x 11"	3"
	4	Back Sta.	Exp.	5	164	7 1/8"	4 3/8"	26"	10"	3	1/2"	1/4"	4 @ 12 Ga.	2 7/16"	11"	43 1/2"	4 1/4"	2 1/4"	1 7/8"	1/2"	17 5/8"	2.00"	2.00"	1 1/2" x 25"	55	1 1/2" x 4 5/8"	3" x 11"	3"
	4	Fwd. Sta.	Exp.	5	164	7 1/4"	4 1/2"	26"	10"	3	1/2"	1/4"	4 @ 12 Ga.	2 7/16"	11"	43 1/2"	4 1/4"	2 1/4"	1 7/8"	1/2"	17 5/8"	2.19"	2.09"	1 1/2" x 26"	55	1 1/2" x 4 3/4"	3" x 11"	3"
	5	Back Sta.	Fixed	5	196	7 1/8"	4 3/8"	26"	10"	3	1/2"	1/4"	4 @ 12 Ga.	2 7/16"	11"	43 1/2"	2 1/4"	2 1/4"	1 7/8"	1/2"	17 5/8"	2.01"	1.99"	1 1/2" x 25"	55	1 1/2" x 4 5/8"	3" x 11"	3"
	5	Fwd. Sta.	Fixed	5	196	7 5/16"	4 9/16"	26"	10"	3	1/2"	1/4"	4 @ 12 Ga.	2 7/16"	11"	43 1/2"	2 1/4"	2 1/4"	1 7/8"	1/2"	17 5/8"	2.27"	2.15"	1 1/2" x 26"	55	1 1/2" x 4 11/16"	3" x 11"	3"
	6	Back Sta.	Fixed	5	196	7 1/8"	4 3/8"	26"	10"	3	1/2"	1/4"	4 @ 12 Ga.	2 7/16"	11"	43 1/2"	2 1/4"	2 1/4"	1 7/8"	1/2"	17 5/8"	2.02"	1.98"	1 1/2" x 25"	55	1 1/2" x 4 5/8"	3" x 11"	3"
	6	Fwd. Sta.	Fixed	5	196	7 7/16"	4 11/16"	26"	10"	3	1/2"	1/4"	4 @ 12 Ga.	2 7/16"	11"	43 1/2"	2 1/4"	2 1/4"	1 7/8"	1/2"	17 5/8"	2.35"	2.21"	1 1/2" x 26"	55	1 1/2" x 4 6/16"	3" x 11"	3"
	7	Back Sta.	Exp.	5	164	7 1/8"	4 3/8"	26"	10"	3	1/2"	1/4"	4 @ 12 Ga.	2 7/16"	11"	43 1/2"	4 1/4"	2 1/4"	1 7/8"	1/2"	17 5/8"	2.03"	1.97"	1 1/2" x 25"	55	1 1/2" x 4 5/8"	3" x 11"	3"
	7	Fwd. Sta.	Exp.	5	164	7 1/8"	4 3/8"	26"	10"	3	1/2"	1/4"	4 @ 12 Ga.	2 7/16"	11"	43 1/2"	4 1/4"	2 1/4"	1 7/8"	1/2"	17 5/8"	2.09"	1.91"	1 1/2" x 25"	55	1 1/2" x 4 5/8"	3" x 11"	3"
	8	Back Sta.	Fixed	5	196	7 1/8"	4 3/8"	26"	10"	3	1/2"	1/4"	4 @ 12 Ga.	2 7/16"	11"	43 1/2"	2 1/4"	2 1/4"	1 7/8"	1/2"	17 5/8"	2.04"	1.96"	1 1/2" x 25"	55	1 1/2" x 4 5/8"	3" x 11"	3"
	8	Fwd. Sta.	Fixed	5	196	7 1/8"	4 3/8"	26"	10"	3	1/2"	1/4"	4 @ 12 Ga.	2 7/16"	11"	43 1/2"	2 1/4"	2 1/4"	1 7/8"	1/2"	17 5/8"	2.10"	1.90"	1 1/2" x 25"	55	1 1/2" x 4 5/8"	3" x 11"	3"
	9	Back Sta.	Fixed	5	196	7 1/8"	4 3/8"	26"	10"	3	1/2"	1/4"	4 @ 12 Ga.	2 7/16"	11"	43 1/2"	2 1/4"	2 1/4"	1 7/8"	1/2"	17 5/8"	2.06"	1.94"	1 1/2" x 25"	55	1 1/2" x 4 5/8"	3" x 11"	3"
	9	Fwd. Sta.	Fixed	5	196	7 1/8"	4 3/8"	26"	10"	3	1/2"	1/4"	4 @ 12 Ga.	2 7/16"	11"	43 1/2"	2 1/4"	2 1/4"	1 7/8"	1/2"	17 5/8"	2.11"	1.89"	1 1/2" x 25"	55	1 1/2" x 4 5/8"	3" x 11"	3"
	10	Back Sta.	Exp.	5	164	7 1/8"	4 3/8"	26"	10"	3	1/2"	1/4"	4 @ 12 Ga.	2 7/16"	11"	43 1/2"	4 1/2"	2 1/4"	1 7/8"	1/2"	17 5/8"	2.07"	1.93"	1 1/2" x 25"	55	1 1/2" x 4 5/8"	3" x 11"	3"
	10	Fwd. Sta.	Exp.	5	164	7 1/8"	4 3/8"	26"	10"	3	1/2"	1/4"	4 @ 12 Ga.	2 7/16"	11"	43 1/2"	4 3/4"	2 1/4"	1 7/8"	1/2"	17 5/8"	2.12"	1.88"	1 1/2" x 25"	55	1 1/2" x 4 5/8"	3" x 11"	3"
	11	Back Sta.	Fixed	5	200	7 1/8"	4 3/8"	26"	10"	3	1/2"	1/4"	4 @ 12 Ga.	2 7/16"	11"	43 1/2"	2 1/4"	2 1/4"	1 7/8"	1/2"	17 5/8"	2.08"	1.92"	1 1/2" x 25"	55	1 1/2" x 4 5/8"	3" x 11"	3"
	11	Fwd. Sta.	Fixed	5	219	7 1/8"	4 3/8"	26"	10"	3	1/2"	1/4"	4 @ 12 Ga.	2 7/16"	11"	43 1/2"	2 1/4"	2 1/4"	1 7/8"	1/2"	17 5/8"	2.15"	1.85"	1 1/2" x 25"	55	1 1/2" x 4 5/8"	3" x 11"	3"
	12	Back Sta.	Fixed	5	216	7 1/8"	4 3/8"	26"	10"	3	1/2"	1/4"	4 @ 12 Ga.	2 7/16"	11"	43 1/2"	2 1/4"	2 1/4"	1 7/8"	1/2"	17 5/8"	2.08"	1.92"	1 1/2" x 25"	55	1 1/2" x 4 5/8"	3" x 11"	3"
	12	Fwd. Sta.	Fixed	5	184	7 1/8"	4 3/8"	26"	10"	3	1/2"	1/4"	4 @ 12 Ga.	2 7/16"	11"	43 1/2"	2 1/4"	2 1/4"	1 7/8"	1/2"	17 5/8"	2.14"	1.86"	1 1/2" x 25"	55	1 1/2" x 4 5/8"	3" x 11"	3"
	13	All	Exp.	5	149	7 1/8"	4 3/8"	26"	10"	3	1/2"	1/4"	4 @ 12 Ga.	2 7/16"	11"	43 1/2"	4 1/4"	2 1/4"	1 7/8"	1/2"	17 5/8"	2.11"	1.89"	1 1/2" x 24"	55	1 1/2" x 4 5/8"	3" x 7"	3"

STATE OF ARKANSAS
LICENSED PROFESSIONAL ENGINEER
No. 16458
JOEL E. SKINNER
Digitally Signed 07/28/2023
BRIDGE ENGINEER

SHEET 2 OF 2
DETAILS OF ELASTOMERIC BEARINGS
BRUSH CREEK
ROUTE SEC.
ARKANSAS STATE HIGHWAY COMMISSION
LITTLE ROCK, ARK.

DRAWN BY: HEW DATE: MAR. 2023 FILENAME: b012326m5_e2.dgn
CHECKED BY: JES DATE: APR. 2023 SCALE: AS SHOWN
DESIGNED BY: CSW DATE: MAR. 2023
BRIDGE NO. A7616 & B7616 DRAWING NO. 66233

JESkinner 7/28/2023 12:02:21PM
WORKSPACE: ARDOT Bridge
\\garverinc.local\gdata\Projects\2017\17017660 - ARDOT 012326 Hwy 412 - Hwy 112\Drawings\b012326x5_5302-BG.dgn
REVISED DATE:

DATE REVISED	DATE REVISED	FED. ROAD DIST. NO.	STATE	JOB NO.	SHEET NO.	TOTAL SHEETS
		6	ARK.	012326	445	838
		A7616 & B7616		240'-0" UNIT		66234

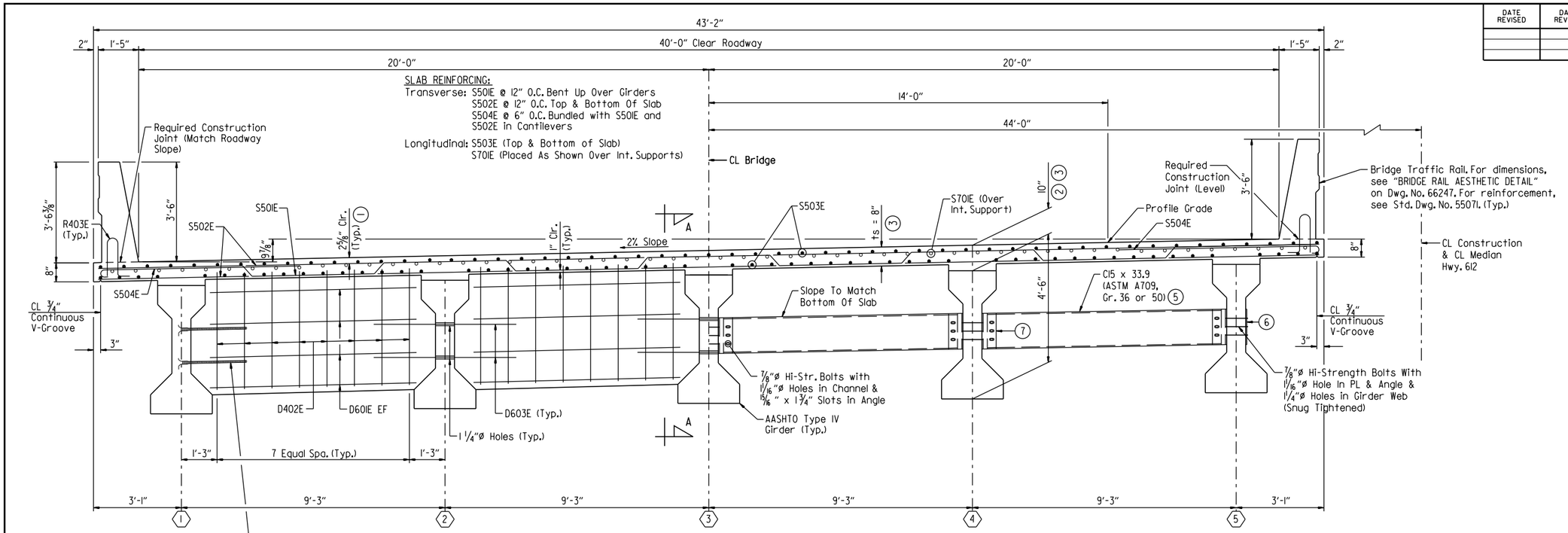

(4) Galvanized Threaded Inserts & 3/4"ø x 3'-6" Threaded Rods @ Exterior Beams. For Number And Location, See "TYPICAL GIRDER ELEVATION" On Dwg. Nos. 66238 & 66239.

INTERMEDIATE CONCRETE DIAPHRAGMS

(5) ALTERNATE STRUCTURAL STEEL DIAPHRAGMS

TYPICAL SECTION AT INTERMEDIATE DIAPHRAGMS

Bridge A Shown (Looking Ahead), Bridge B (Looking Back)
Scale: 1/2" = 1'-0"

(1) TOLERANCE:
Minus = 1/4"
Plus = Equal to amount of slab thickening used to meet slab thickness tolerance - see "ADJUSTMENT FOR SLAB THICKNESS TOLERANCE WHEN REMOVABLE DECK FORMING IS USED" on Dwg. No. 66247.

(2) This dimension taken at CL Girder @ CL Bearing

(3) See "ADJUSTMENT FOR SLAB THICKNESS TOLERANCE WHEN REMOVABLE DECK FORMING IS USED" on Dwg. No. 66247.

(4) Galvanized threaded inserts: Dayton-Richmond F-42 Loop Ferrule Insert or an approved equal. 3/4"ø galvanized threaded rods to be ASTM A709, Grade 36 or AASHTO M 31 or M 232, Class C or ASTM B695, Class 50. These items will not be paid for directly but shall be considered subsidiary to the item "PRESTRESSED CONCRETE GIRDERS (TYPE IV)". Galvanizing shall be in accordance with AASHTO M 232 Class C or AASHTO M 298 Class 50.

(5) Galvanized steel diaphragms may be used in place of concrete at intermediate diaphragms only. All components of the alternate steel diaphragms shall be galvanized. Galvanizing shall be in accordance with AASHTO M111. Payment will be based on concrete diaphragms.

(6) PL 1/2" x 4" x 15" (ASTM A709, Gr. 36 or 50) (Mask when applying textured coating finish to exterior girders.)

(7) L6" x 4" x 1/2" x 15" (ASTM A709, Gr. 36 or 50), center angle on web of girder. A standard washer shall be supplied for use under both the nut and the head of the 7/8"ø h.s. bolts. An additional plate washer shall cover the angle slots.

EXPANSION DEVICE:
Roadway Channel: MC18x42.7
Conn. Angle: MC18x42.7 (Cope One Flange)

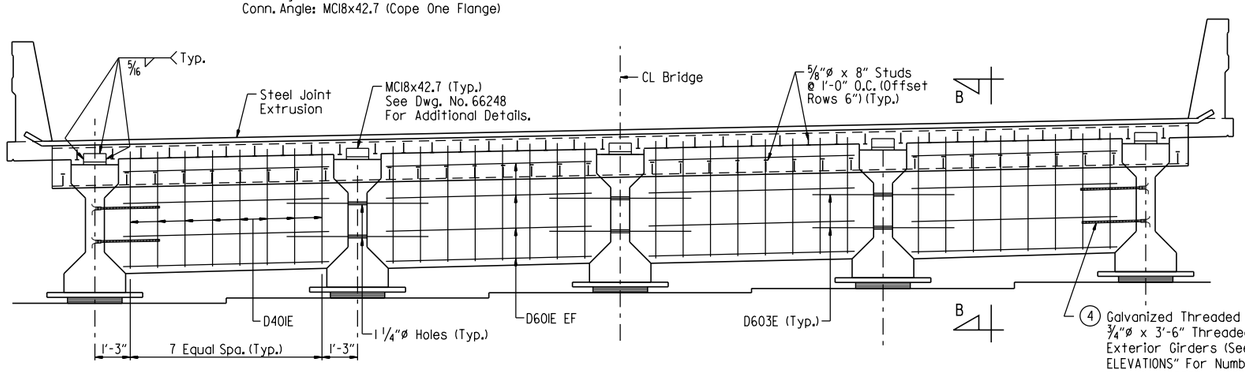

(4) Galvanized Threaded Inserts & 3/4"ø x 3'-6" Threaded Rods @ Exterior Girders (See "TYPICAL GIRDER ELEVATIONS" For Number And Location Dwg. Nos. 66238 & 66239.

TYPICAL SECTION (END OF UNIT AT JOINT)

Bridge A (Looking Ahead), Bridge B (Looking Back)
Scale: 3/8" = 1'-0"

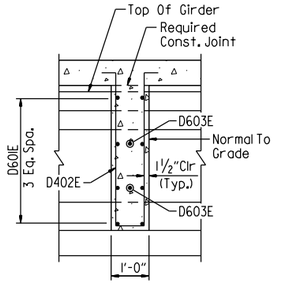

SECTION A-A

(Normal To Diaphragm)
Scale: 1/2" = 1'-0"

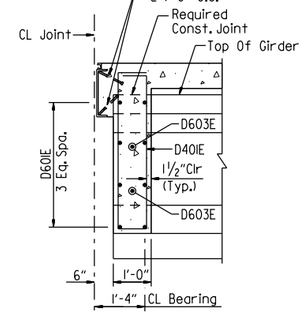

SECTION B-B

(Normal To Diaphragm)
Scale: 1/2" = 1'-0"

NOTES:
Class 2 Protective Surface Treatment shall be applied to the roadway surface and the face and top of bridge traffic rail.

Class 3 Textured Coating Finish shall be applied to bridge surfaces in Special Provision "TEXTURED COATING FINISH" and in accordance with Subsection 802.19(b)(3). Textured Coating Finish shall not be applied on surfaces where Class 2 Protective Surface Treatment is applied.

One epoxy-coated #5 bar in the top and one epoxy-coated #5 bar in the bottom may be substituted for each bar S501E. Payment will be based on the weight of bar S501E.

Bar positions or clearances from the forms shall be maintained by means of stays, ties, hangers or other approved devices per Subsection 804.06. Placement of slab bolster or high-chairs with full-length lower runners directly on removable deck forms will not be allowed.

All bars designated with an "E" suffix are to be epoxy coated.

LEGEND
EF = Each Face

STATE OF ARKANSAS
LICENSED PROFESSIONAL ENGINEER
No. 16458
JOEL E. SKINNER
Digitally Signed 07/28/2023
BRIDGE ENGINEER

SHEET 1 OF 6
DETAILS OF 240'-0" CONTINUOUS PRESTRESSED CONCRETE GIRDER UNIT
BRUSH CREEK

ROUTE SEC.

ARKANSAS STATE HIGHWAY COMMISSION
LITTLE ROCK, ARK.

DRAWN BY: HEW DATE: APR. 2011 FILENAME: b012326m5_sl.dgn
CHECKED BY: WMM DATE: DEC. 2011 SCALE: AS SHOWN
DESIGNED BY: MRA DATE: APR. 2011

BRIDGE NO. A7616 & B7616 DRAWING NO. 66234

JESkinner 7/28/2023 12:10:21 PM
WORKSPACE: ARDOT Bridge
\\garverinc.local\data\Projects\2017\170176 - ARDOT 02326 Hwy 412 - Hwy 112\Drawings\b012326x5_S401-TS.dgn
REVISED DATE:

DATE REVISED	DATE REVISED	FED. ROAD DIST. NO.	STATE	JOB NO.	SHEET NO.	TOTAL SHEETS
		6	ARK.	012326	446	838
		A7616 & B7616		240'-0" UNIT		66235

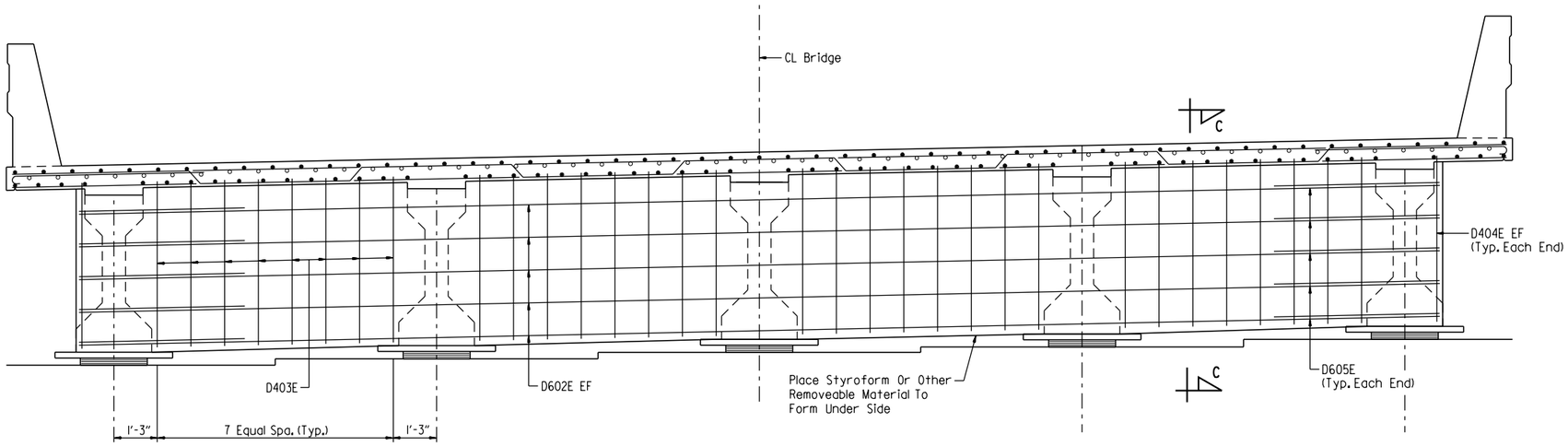

TYPICAL SECTION BETWEEN GIRDERS AT INTERIOR BENTS

(For Info Not Shown See "TYPICAL SECTION AT INTERMEDIATE DIAPHRAGMS" on Dwg. No. 66234)
Scale: ½" = 1'-0"

LEGEND

EF = Each Face

BAR BENDING DIAGRAMS

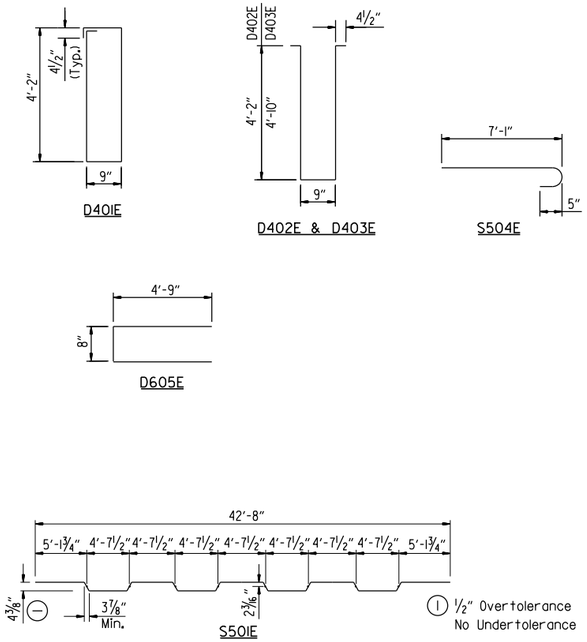

BAR LIST

Mark	No. Req'd.	Length	Pin. Dia.
D401E	64	10'-2"	2"
D402E	96	9'-6"	2"
D403E	64	10'-10"	2"
D404E	8	4'-10"	STR.
D601E	160	7'-1"	STR.
D602E	20	38'-10"	STR.
D603E	30	5'-0"	STR.
D604E	8	5'-0"	STR.
D605E	20	9'-10"	4½"
S501E	239	43'-6"	3"
S502E	480	42'-10"	STR.
S503E	545	50'-8"	STR.
S504E	958	7'-8"	3¾"
S701E	104	32'-0"	STR.
R400E	72	6'-3"	3"
R401E	960	7'-6"	3"
R402E	96	5'-6"	STR.
R403E	960	3'-8"	6"
R409E	120	9'-8"	STR.
R410E	180	19'-8"	STR.

NOTES:
Dimension of bars are out-to-out.

Bar designations ending with "E" indicate epoxy coated bars.

Numbers of bars shown is for One 240' Unit.

See Std. Dwg. No. 55071 for Bar Bending Diagrams of R400E, R401E & R403E.

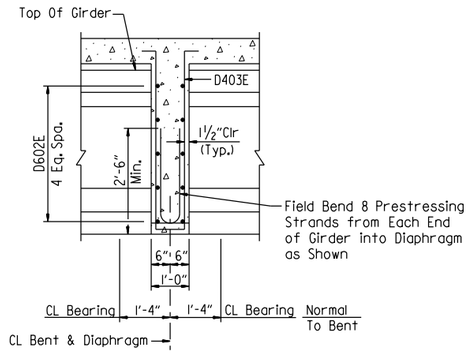

SECTION C-C

(Normal To Diaphragm)
Scale: ½" = 1'-0"

STATE OF ARKANSAS
LICENSED PROFESSIONAL ENGINEER
No. 16458
JOEL E. SKINNER
Digitally Signed 07/28/2023
BRIDGE ENGINEER

SHEET 2 OF 6
DETAILS OF 240'-0" CONTINUOUS PRESTRESSED CONCRETE GIRDER UNIT
BRUSH CREEK

ROUTE SEC.

ARKANSAS STATE HIGHWAY COMMISSION

LITTLE ROCK, ARK.

DRAWN BY: HEW DATE: APR. 2011 FILENAME: b012326m5_s2.dgn
CHECKED BY: WMM DATE: DEC. 2011 SCALE: AS SHOWN
DESIGNED BY: MRA DATE: APR. 2011

BRIDGE NO. A7616 & B7616 DRAWING NO. 66235

JESkinner 7/28/2023 12:10:22 PM
WORKSPACE: ARDOT Bridge
\\garverinc.local\gdata\Projects\2017\17017660 - ARDOT 012326 Hwy 412 - Hwy 112\Drawings\b012326x5_S402-TS.dgn
REVISED DATE:

DATE REVISED	DATE REVISED	FED. ROAD DIST. NO.	STATE	JOB NO.	SHEET NO.	TOTAL SHEETS
		6	ARK.	012326	447	838
		A7616 & B7616		240'-0" UNIT		66236

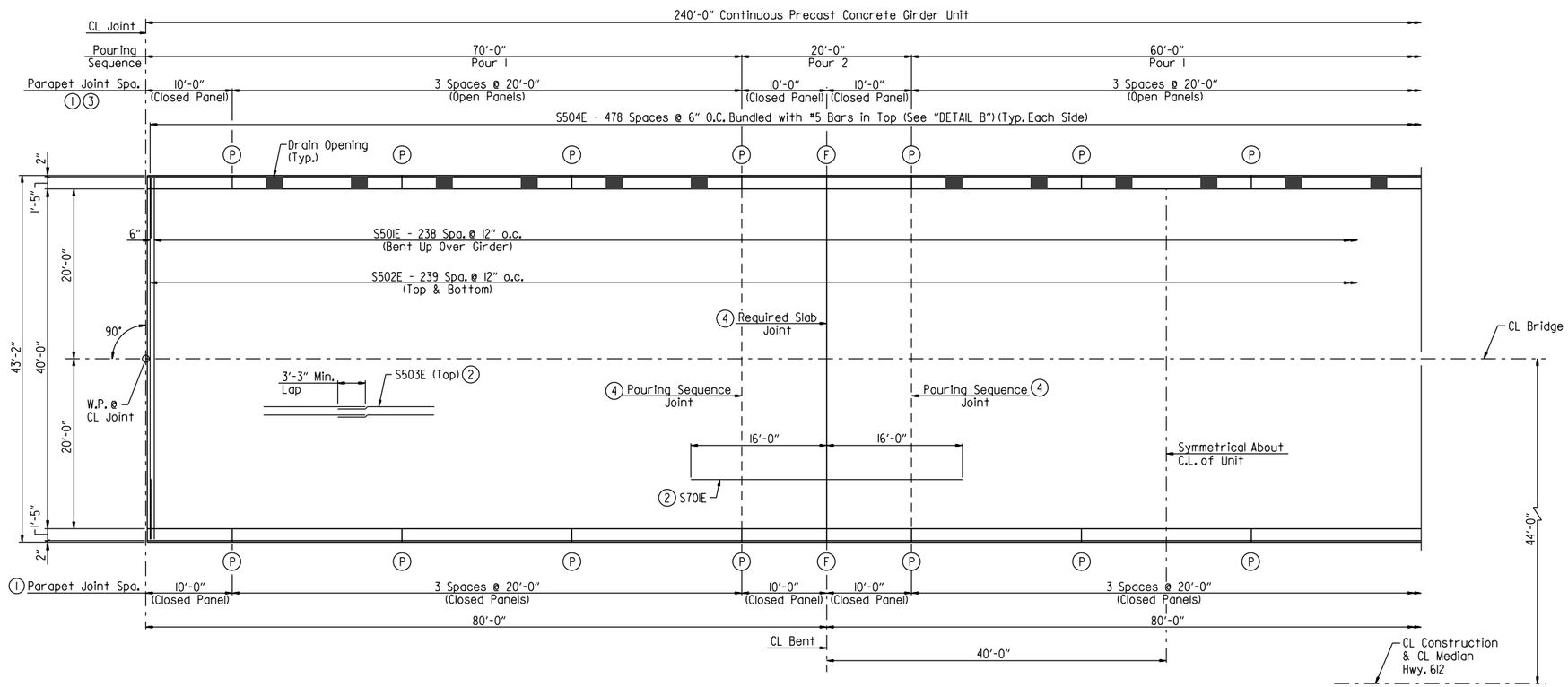

REINFORCING PLAN & POURING SEQUENCE

(Bridge A Shown, Bridge B Is Symmetrical About CL Median)
Scale: 1/8" = 1'-0"

(1) Parapet joints designated with symbol (F) shall be stopped 6" from top of slab. All other parapet joints with symbol (P) shall be partial depth joints stopped 16" from top of slab.

(2) Refer to "TYPICAL SECTION AT INTERMEDIATE DIAPHRAGMS" on Dwg. No. 66234 for placement.

(3) Open panels are located on right side of Bridge B.

(4) See "TRANSVERSE SLAB JOINT DETAIL" on Dwg. No. 66247.

NOTES:
Required slab joints and pouring sequence joints shall align with rail joints at the gutterline.

For additional rail reinforcing details, see Std. Dwg. No. 55071.

For "BAR LIST" and "BAR BENDING DIAGRAMS", see Dwg. No. 66235.

For "SUPERSTRUCTURE GENERAL NOTES", see Dwg. No. 66247.

TABLE OF VARIABLES								
CLOSED RAIL PANELS			OPEN RAIL PANELS					
Panel Length	"A"	R4XXE	Panel Length	"B"	"C"	"D"	"E"	R4XXE
10'-0"	19	9	20'-0"	11	4'-0"	15	8'-0"	10
20'-0"	39	10						

NOTES:
Pours with the same number may be placed simultaneously or separately. All pours (1) must be placed before pours (2) can be placed. A minimum of 48 hours shall elapse between the end of a pour and the start of the next pour. A minimum of 72 hours shall elapse between the end of a pour and the start of an adjacent pour.

Concrete in bridge superstructure shall be placed, consolidated, and screeded off for the entire pour before any concrete has taken its initial set. This may require the use of a retarding agent.

A minimum of 72 hours shall elapse between completion of the slab and the pouring of the bridge railing. Any railing pours made before the entire slab unit has been placed must be approved by the Engineer. The Contractor must obtain approval from the Engineer for any deviations from the pouring sequence(s) shown.

The slab and diaphragms shall not be poured prior to 90 days following release of prestressed girder strands.

Concrete diaphragms at intermediate bents shall be poured monolithically with the slab above the diaphragm.

All partial-depth and end bent diaphragms shall be cast in place and poured a minimum of 48 hours before the slab is poured.

Removable forms shall be used when pouring diaphragms.

STATE OF ARKANSAS
LICENSED PROFESSIONAL ENGINEER
No. 16458
JOEL E. SKINNER
Digitally Signed 07/28/2023
BRIDGE ENGINEER

SHEET 3 OF 6
DETAILS OF 240'-0" CONTINUOUS PRESTRESSED CONCRETE GIRDER UNIT
BRUSH CREEK

ROUTE SEC.

ARKANSAS STATE HIGHWAY COMMISSION
LITTLE ROCK, ARK.

DRAWN BY: HEW DATE: APR. 2011 FILENAME: b012326m5_s3.dgn
CHECKED BY: WMM DATE: DEC. 2011 SCALE: AS SHOWN
DESIGNED BY: MRA DATE: APR. 2011

BRIDGE NO. A7616 & B7616 DRAWING NO. 66236

JESkinner 7/28/2023 12:10:22 PM
WORKSPACE: ARDOT Bridge
\\garverinc.local\gdata\Projects\20IT\170I660 - ARDOT 012326 Hwy 412 - Hwy 112\Drawings\b012326x5_S403-SB.dgn
REVISED DATE:

DATE REVISED	DATE REVISED	FED. ROAD DIST. NO.	STATE	JOB NO.	SHEET NO.	TOTAL SHEETS
		6	ARK.	012326	448	838
		A7616 & B7616		240'-0" UNIT		66237

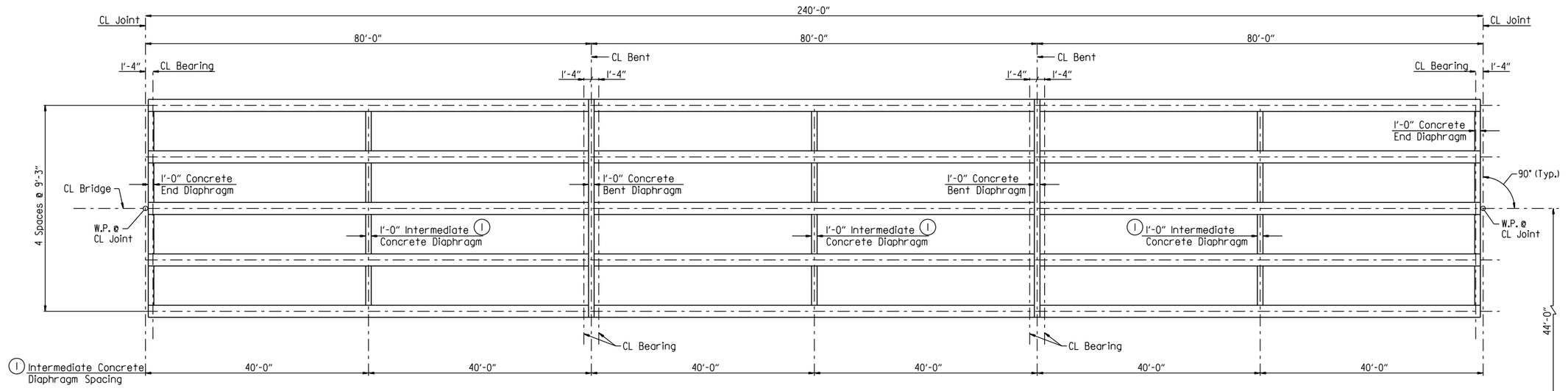

(1) Galvanized steel diaphragms may be used in place of concrete diaphragms at intermediate diaphragm locations only.

FRAMING PLAN

(Bridge A Shown. Bridge B Is Symmetrical About CL Median)
Scale: 1" = 10'-0"

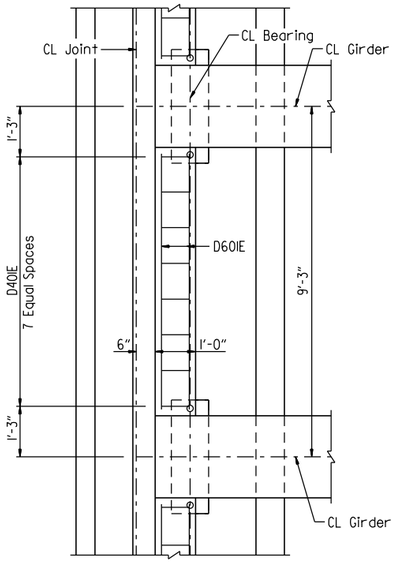

PLAN END BENT DIAPHRAGM

Scale: ½" = 1'-0"

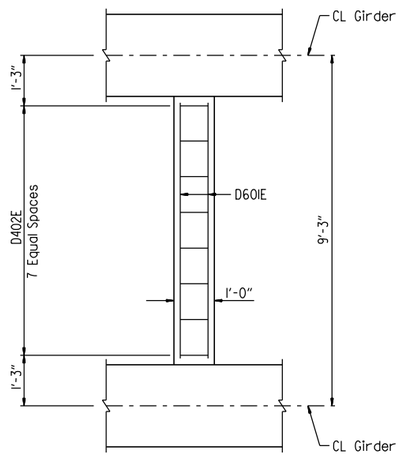

PLAN INTERMEDIATE DIAPHRAGM

Scale: ½" = 1'-0"

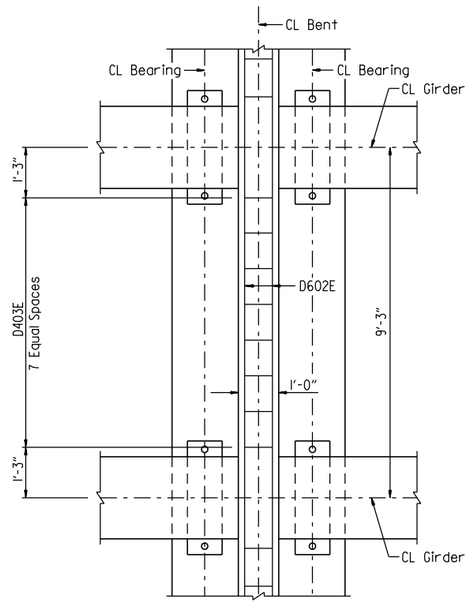

PLAN BENT DIAPHRAGM

Scale: ½" = 1'-0"

STATE OF ARKANSAS
LICENSED PROFESSIONAL ENGINEER
No. 16458
JOEL E. SKINNER
Digitally Signed 07/28/2023
BRIDGE ENGINEER

SHEET 4 OF 6
DETAILS OF 240'-0" CONTINUOUS PRESTRESSED CONCRETE GIRDER UNIT
BRUSH CREEK

ROUTE SEC.

ARKANSAS STATE HIGHWAY COMMISSION

LITTLE ROCK, ARK.

DRAWN BY: HEW DATE: APR. 2011 FILENAME: b012326m5_s4.dgn
CHECKED BY: WMM DATE: DEC. 2011 SCALE: AS SHOWN
DESIGNED BY: MRA DATE: APR. 2011

BRIDGE NO. A7616 & B7616 DRAWING NO. 66237

JESkinner 7/28/2023 12:10:22 PM
WORKSPACE: ARDOT Bridge
\\garverinc.local\gdata\Projects\20I7\I7017660 - ARDOT 012326 Hwy 412 - Hwy 112\Drawings\b012326x5_S404-SF.dgn
REVISED DATE:

DATE REVISED	DATE REVISED	FED. ROAD DIST. NO.	STATE	JOB NO.	SHEET NO.	TOTAL SHEETS
		6	ARK.	012326	449	838
		A7616 & B7616		240'-0" UNIT		66238

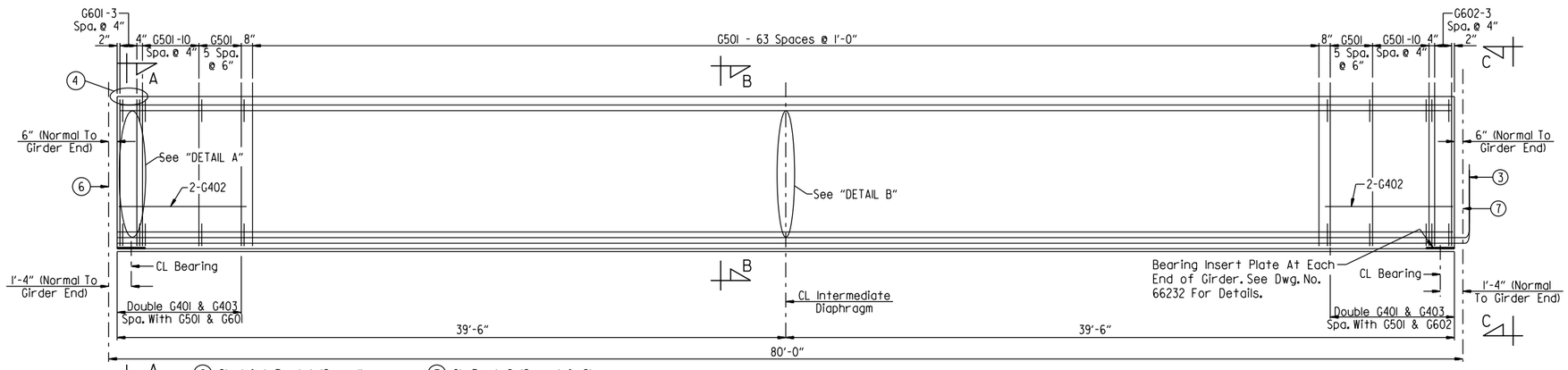

TYPICAL GIRDER ELEVATION (TYPE IV) - SPAN NOS. 1, 3, 4, 6, 7 & 9

No Scale

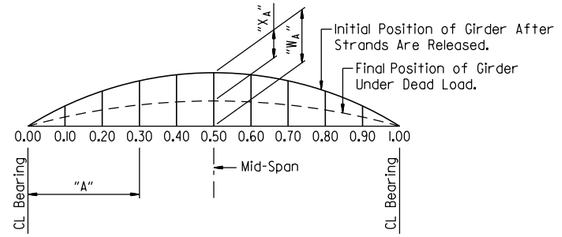

"W_A" is camber of girder (prestress + dead load of girder @ 90 days after release)

"X_A" is dead load deflection of slab + diaphragms + composite dead load.

⑥ CL Joint Bent 1 (Span 1)
CL Joint Bent 4 (Span 3 & 4)
CL Joint Bent 7 (Span 6 & 7)
CL Joint Bent 10 (Span 9)

⑦ CL Bent 2 (Span 1 & 2)
CL Bent 3 (Span 2 & 3)
CL Bent 5 (Span 4 & 5)
CL Bent 6 (Span 5 & 6)
CL Bent 8 (Span 7 & 8)
CL Bent 9 (Span 8 & 9)
CL Bent 11 (Span 10)

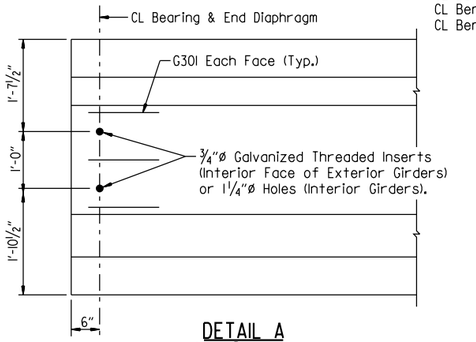

DETAIL A
Scale: ¾" = 1'-0"

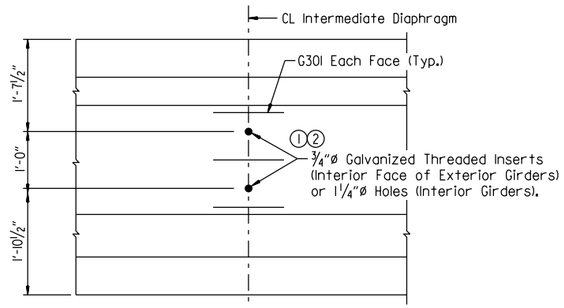

DETAIL B
Scale: ¾" = 1'-0"

④ SPAN PT.	INCHES	
	"W_A"	"X_A"
0.00	0.000	0.000
0.10	0.513	0.185
0.20	0.914	0.368
0.30	1.182	0.513
0.40	1.335	0.605
0.50	1.385	0.639

④ Symmetrical by 180° rotation

⑤ CAMBER & DEFLECTIONS (INCHES)

⑤ Camber and Deflection Values shown are based on a concrete girder strength, f'c = 8,000 psi. Greater strengths may require adjustments. See "SPECIAL CAMBER NOTES" on Dwg. No. 66247.

① Inserts and holes shown are for intermediate diaphragms, see Dwg. No. 66234 for alternate steel diaphragms.

③ Prestressing strands at CL Joint shall be sawn flush with the end of the girder. Prestressing strands at CL Bent shall be bent up into diaphragms as shown in "SECTION C-C" on Dwg. No. 66235.

② Galvanized ¾"ø Dayton-Richmond F-42 Loop Ferrule Insert or an approved equal at interior face of exterior girders. These are to be subsidiary to the item "PRESTRESSED CONCRETE GIRDERS (TYPE IV)". See Dwg. No. 66234 for alternate steel diaphragms.

④ For "CHANNEL CONNECTION DETAIL", see Dwg. No. 66248.

BAR LIST - PER GIRDER			
Mark	No. Req'd.	Length	Pin. Dia.
G301	12	2'-0"	Str.
G401	80	4'-2"	2"
G402	4	7'-4"	Str.
G403	42	3'-9"	3"
G404	2	78'-8"	Str.
G501	192	6'-3"	3¾"
G601	8	4'-7½"	4½"
G602	8	5'-3"	4½"

BAR BENDING DIAGRAMS

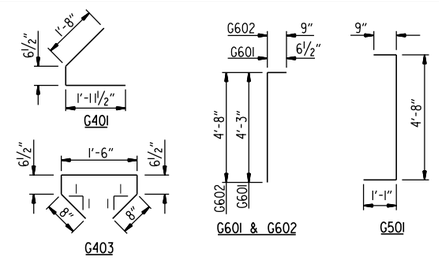

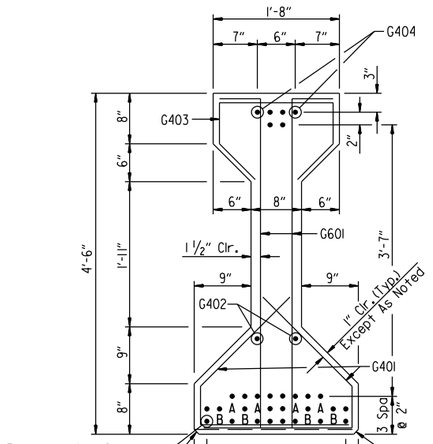

SECTION A-A
Scale: 1" = 1'-0"

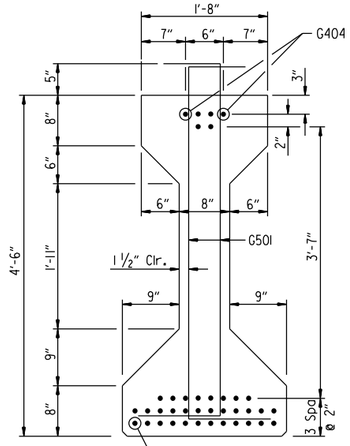

SECTION B-B
Scale: 1" = 1'-0"

NOTES:
For details of girder bevels, see Dwg. No. 66239.

For "SUPERSTRUCTURE GENERAL NOTES", see Dwg. No. 66247.

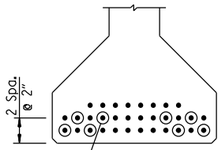

VIEW C-C
Scale: 1" = 1'-0"

DEBOND SCHEDULE	
Debond Pair	Debond Length From End Of Girder
A	9'-0"
B	6'-0"

NOTES:
Dimensions of bars in bending diaphragm are out-to-out.

All bars in the "BAR LIST - PER GIRDER" will not be paid for directly, but willbe considered subsidiary to the item "PRESTRESSED CONCRETE GIRDERS (TYPE IV)".

At the Contractor's option, ½"ø strands pulled to 2,000 lbs. may be substituted for bars G404.

At the Contractor's option, the two G401 bars may be furnished as one bar.

STATE OF ARKANSAS
LICENSED PROFESSIONAL ENGINEER
No. 16458
JOEL E. SKINNER
Digitally Signed 07/28/2023
BRIDGE ENGINEER

SHEET 5 OF 6
DETAILS OF 240'-0" CONTINUOUS PRESTRESSED CONCRETE GIRDER UNIT
BRUSH CREEK

ROUTE SEC.

ARKANSAS STATE HIGHWAY COMMISSION

LITTLE ROCK, ARK.

DRAWN BY: HEW DATE: APR. 2011 FILENAME: b012326m5_s5.dgn
CHECKED BY: WMM DATE: DEC. 2011 SCALE: AS SHOWN
DESIGNED BY: MRA DATE: APR. 2011

BRIDGE NO. A7616 & B7616 DRAWING NO. 66238

JESkinner 7/28/2023 12:10:23 PM
WORKSPACE: ARDOT Bridge
\\garverfnc.local\gdata\Projects\2017\170660 - ARDOT 012326 Hwy 412 - Hwy 112\Drawings\b012326x5_S405-BB.dgn
REVISED DATE:

DATE REVISED	DATE REVISED	FED. ROAD DIST. NO.	STATE	JOB NO.	SHEET NO.	TOTAL SHEETS
		6	ARK.	012326	450	838
		A7616 & B7616		240'-0" UNIT		66239

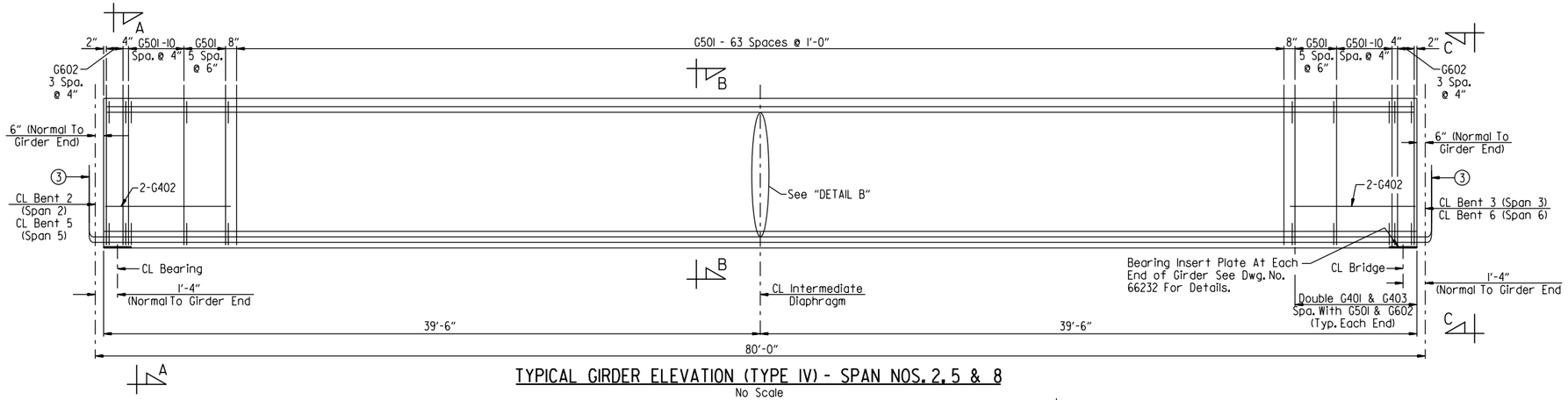

TYPICAL GIRDER ELEVATION (TYPE IV) - SPAN NOS. 2, 5 & 8

No Scale

1. Inserts and holes shown are for intermediate diaphragms, See Dwg. No. 66234 for alternate steel diaphragms.
2. Galvanized ¾"ø Dayton-Richmond F-42 Loop Ferrule Insert or an approved equal at interior face of exterior beams. These are to be subsidiary to the Item "PRESTRESSED CONCRETE GIRDERS (TYPE IV)". See Dwg. No. 66234 for alternate steel diaphragms.
3. Prestressing strands shall be bent up into diaphragms as shown in "SECTION C-C" on Dwg. No. 66235.

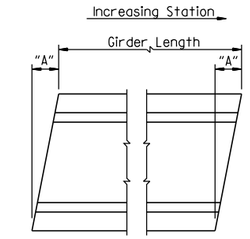

GIRDER BEVEL

No Scale

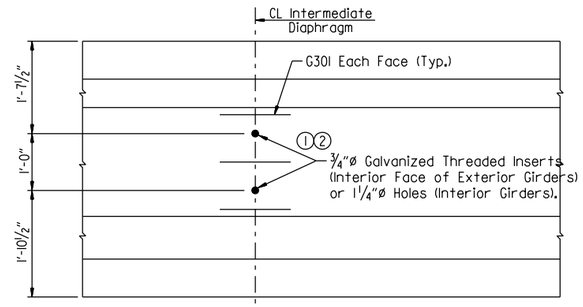

DETAIL B

Scale: ¾" = 1'-0"

④ SPAN PT.	INCHES "W_A"	INCHES "X_A"
0.00	0.000	0.000
0.10	0.513	0.185
0.20	0.914	0.368
0.30	1.182	0.513
0.40	1.335	0.605
0.50	1.385	0.639

④ Symmetrical by 180° rotation

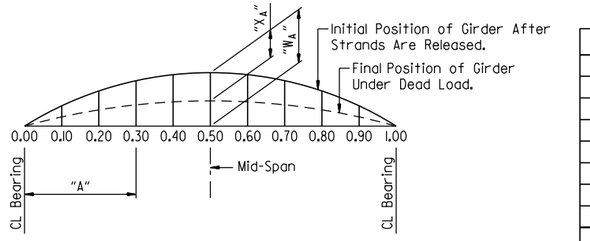

"W_A" is camber of girder (prestress + dead load of girder @ 90 days after release)

"X_A" is dead load deflection of slab + diaphragms + composite dead load.

⑤ CAMBER & DEFLECTIONS (INCHES)

⑤ Camber and Deflection Values shown are based on a concrete girder strength, f'c = 8,000 psi. Greater strengths may require adjustments. See "SPECIAL CAMBER NOTES" on Dwg. No. 66247.

BAR LIST - PER GIRDER			
Mark	No. Req'd.	Length	Pin. Dia.
G301	6	2'-0"	Str.
G401	80	4'-2"	2"
G402	4	7'-4"	Str.
G403	42	3'-9"	3"
G404	2	78'-8"	Str.
G501	192	6'-3"	3¾"
G602	16	5'-3"	4½"

BAR BENDING DIAGRAMS

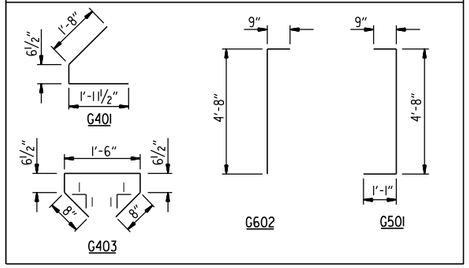

TABLE OF GIRDER BEVELS	
Span	"A"
1	0
2	0
3	½"
4	½"
5	1"
6	1"

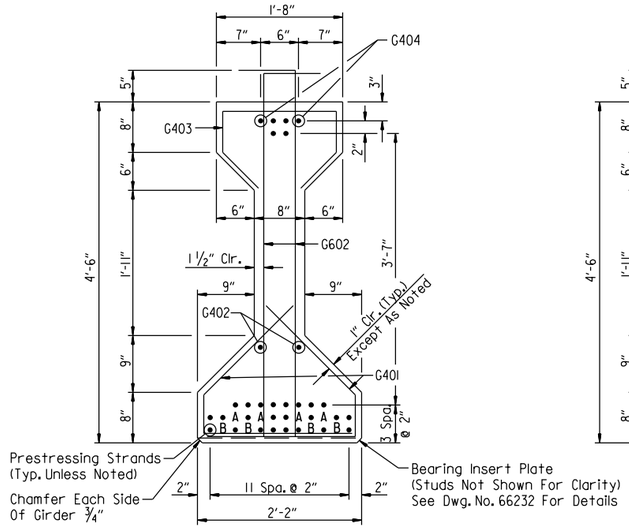

SECTION A-A

Scale: 1" = 1'-0"

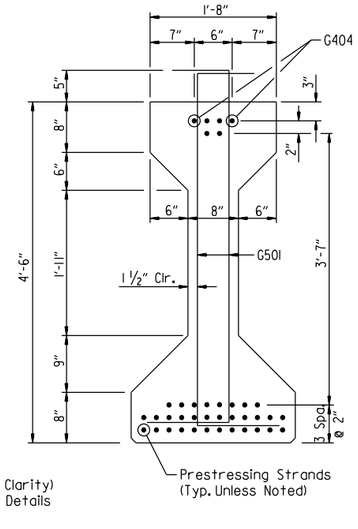

SECTION B-B

Scale: 1" = 1'-0"

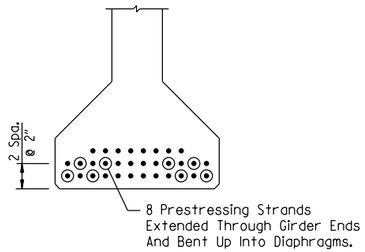

VIEW C-C

Scale: 1" = 1'-0"

DEBOND SCHEDULE	
Debond Pair	Debond Length From End Of Girder
A	9'-0"
B	6'-0"

NOTES:
Dimensions of bars in bending diaphragm are out-to-out.

All bars in the "BAR LIST - PER GIRDER" will not be paid for directly, but will be considered subsidiary to the item "PRESTRESSED CONCRETE GIRDERS (TYPE IV)".

At the Contractor's option, ½"ø strands pulled to 2,000 lbs. may be substituted for bars G404.

At the Contractor's option, the two G401 bars may be furnished as one bar.

NOTE:
For "SUPERSTRUCTURE GENERAL NOTES", see Dwg. No. 66247.

STATE OF ARKANSAS
LICENSED PROFESSIONAL ENGINEER
No. 16458
JOEL E. SKINNER
Digitally Signed 07/28/2023
BRIDGE ENGINEER

SHEET 6 OF 6
DETAILS OF 240'-0" CONTINUOUS PRESTRESSED CONCRETE GIRDER UNIT
BRUSH CREEK
ROUTE SEC.
ARKANSAS STATE HIGHWAY COMMISSION
LITTLE ROCK, ARK.

DRAWN BY: HEW DATE: APR. 2011 FILENAME: b012326m5_s6.dgn
CHECKED BY: WMM DATE: DEC. 2011 SCALE: AS SHOWN
DESIGNED BY: MRA DATE: APR. 2011
BRIDGE NO. A7616 & B7616 DRAWING NO. 66239

JESkinner 7/28/2023 12:10:23 PM
WORKSPACE: ARDOT Bridge
\\garverinc.local\gdata\Projects\2017\17017660 - ARDOT 02326 Hwy 412 - Hwy 112\Drawings\b012326x5_S406-BB.dgn
REVISED DATE:

DATE REVISED	DATE REVISED	FED. ROAD DIST. NO.	STATE	JOB NO.	SHEET NO.	TOTAL SHEETS
		6	ARK.	012326	451	838
		A7616 & B7616		245'-0" UNIT		66240

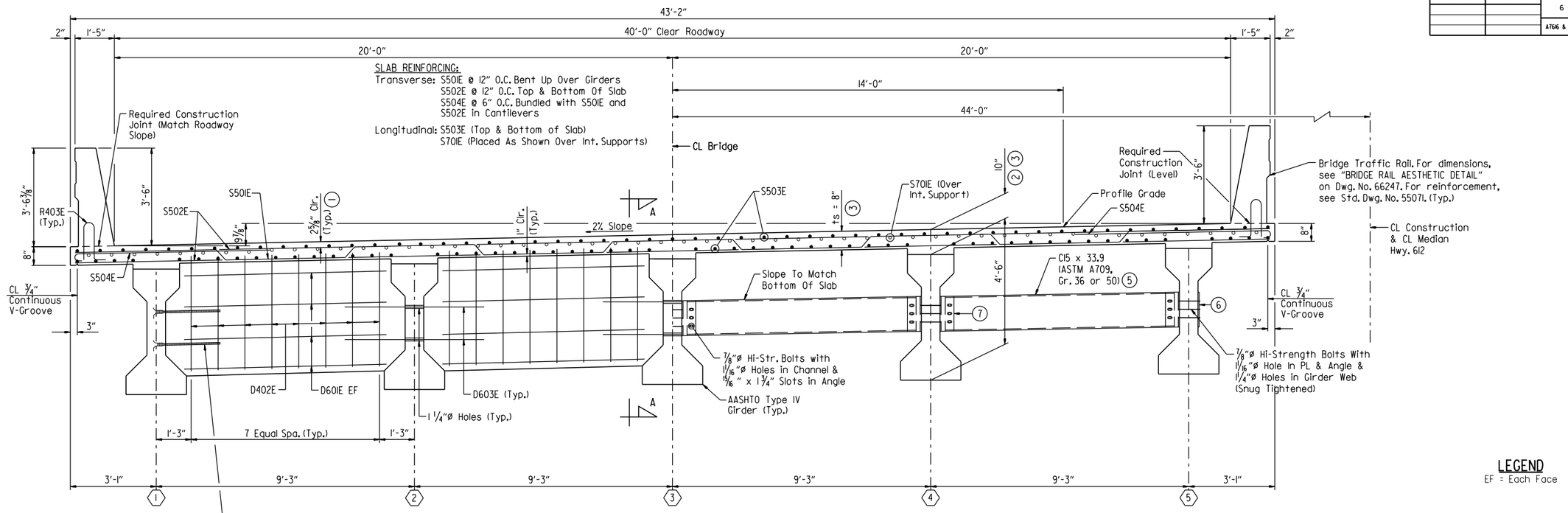

LEGEND
EF = Each Face

(4) Galvanized Threaded Inserts & ¾"ø x 3'-6" Threaded Rods @ Exterior Beams. For Number And Location, See "TYPICAL GIRDER ELEVATION" On Dwg. Nos. 66244 - 66246.

INTERMEDIATE CONCRETE DIAPHRAGMS

(5) ALTERNATE STRUCTURAL STEEL DIAPHRAGMS

TYPICAL SECTION AT INTERMEDIATE DIAPHRAGMS

Bridge A Shown (Looking Ahead), Bridge B (Looking Back)
Scale: ½" = 1'-0"

(1) TOLERANCE:
Minus = ¼"
Plus = Equal to amount of slab thickening used to meet slab thickness tolerance - see "ADJUSTMENT FOR SLAB THICKNESS TOLERANCE WHEN REMOVABLE DECK FORMING IS USED" on Dwg. No. 66247.

(2) This dimension taken at CL Girder @ CL Bearing

(3) See "ADJUSTMENT FOR SLAB THICKNESS TOLERANCE WHEN REMOVABLE DECK FORMING IS USED" on Dwg. No. 66247.

(4) Galvanized threaded inserts: Dayton-Richmond F-42 Loop Ferrule Insert or an approved equal. ¾"ø galvanized threaded rods to be ASTM A709, Grade 36 or AASHTO M 31 or M 232, Class C or ASTM B695, Class 50. These items will not be paid for directly but shall be considered subsidiary to the item "PRESTRESSED CONCRETE GIRDERS (TYPE IV)". Galvanizing shall be in accordance with AASHTO M 232 Class C or AASHTO M 298 Class 50.

(5) Galvanized steel diaphragms may be used in place of concrete at intermediate diaphragms only. All components of the alternate steel diaphragms shall be galvanized. Galvanizing shall be in accordance with AASHTO M111. Payment will be based on concrete diaphragms.

(6) PL ½" x 4" x 15" (ASTM A709, Gr. 36 or 50) (Mask when applying textured coating finish to exterior girders.)

(7) L6" x 4" x ½" x 15" (ASTM A709, Gr. 36 or 50), center angle on web of girder. A standard washer shall be supplied for use under both the nut and the head of the ⅞"ø h.s. bolts. An additional plate washer shall cover the angle slots.

NOTES:
Class 2 Protective Surface Treatment shall be applied to the roadway surface and the face and top of bridge traffic rail.

Class 3 Textured Coating Finish shall be applied to bridge surfaces as specified in Special Provision "TEXTURED COATING FINISH" and in accordance with Subsection 802.19(b)(3). Textured Coating Finish shall not be applied on surfaces where Class 2 Protective Surface Treatment is applied.

One epoxy-coated #5 bar in the top and one epoxy-coated #5 bar in the bottom may be substituted for each bar S501E. Payment will be based on the weight of bar S501E.

Bar positions or clearances from the forms shall be maintained by means of stays, ties, hangers or other approved devices per Subsection 804.06. Placement of slab bolster or high-chairs with full-length lower runners directly on removable deck forms will not be allowed.

All bars designated with an "E" suffix are to be epoxy coated.

EXPANSION DEVICE:
Roadway Channel: MC18x42.7
Conn. Angle: MC18x42.7 (Cope One Flange)

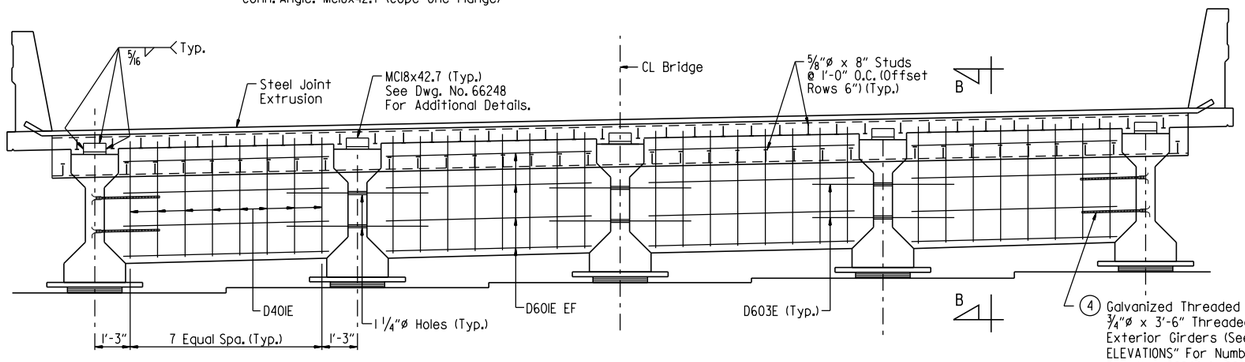

TYPICAL SECTION (END OF UNIT AT JOINT)

Bridge A (Looking Ahead), Bridge B (Looking Back)
Scale: ⅜" = 1'-0"

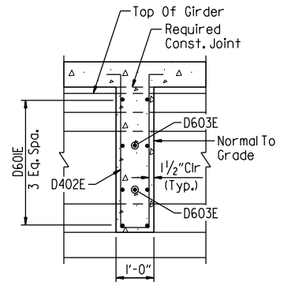

SECTION A-A

(Normal To Diaphragm)
Scale: ½" = 1'-0"

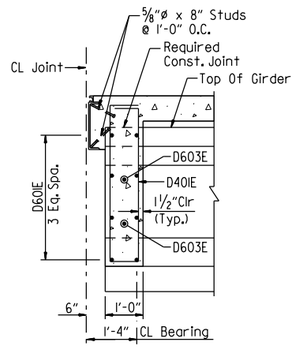

SECTION B-B

(Normal To Diaphragm)
Scale: ½" = 1'-0"

STATE OF ARKANSAS
LICENSED PROFESSIONAL ENGINEER
No. 16458
JOEL E. SKINNER
Digitally Signed 07/28/2023
BRIDGE ENGINEER

SHEET 1 OF 7
DETAILS OF 245'-0" CONTINUOUS PRESTRESSED CONCRETE GIRDER UNIT
BRUSH CREEK

ROUTE SEC.

ARKANSAS STATE HIGHWAY COMMISSION

LITTLE ROCK, ARK.

DRAWN BY: HEW DATE: APR. 2011 FILENAME: b012326m5_s7.dgn
CHECKED BY: WMM DATE: DEC. 2011 SCALE: AS SHOWN
DESIGNED BY: MRA DATE: APR. 2011

BRIDGE NO. A7616 & B7616 DRAWING NO. 66240

JESkinner 7/28/2023 12:10:24 PM
WORKSPACE: ARDOT Bridge 7/28/2023 12:10:24 PM
\\Workspace\ardot_bridge\Projects\20IT\T017660 - ARDOT 012326 Hwy 412 - Hwy 112\Drawings\b012326x5_S407-TS.dgn
REVISED DATE:

DATE REVISED	DATE REVISED	FED. ROAD DIST. NO.	STATE	JOB NO.	SHEET NO.	TOTAL SHEETS
		6	ARK.	012326	452	838
		A7616 & B7616		245'-0" UNIT		66241

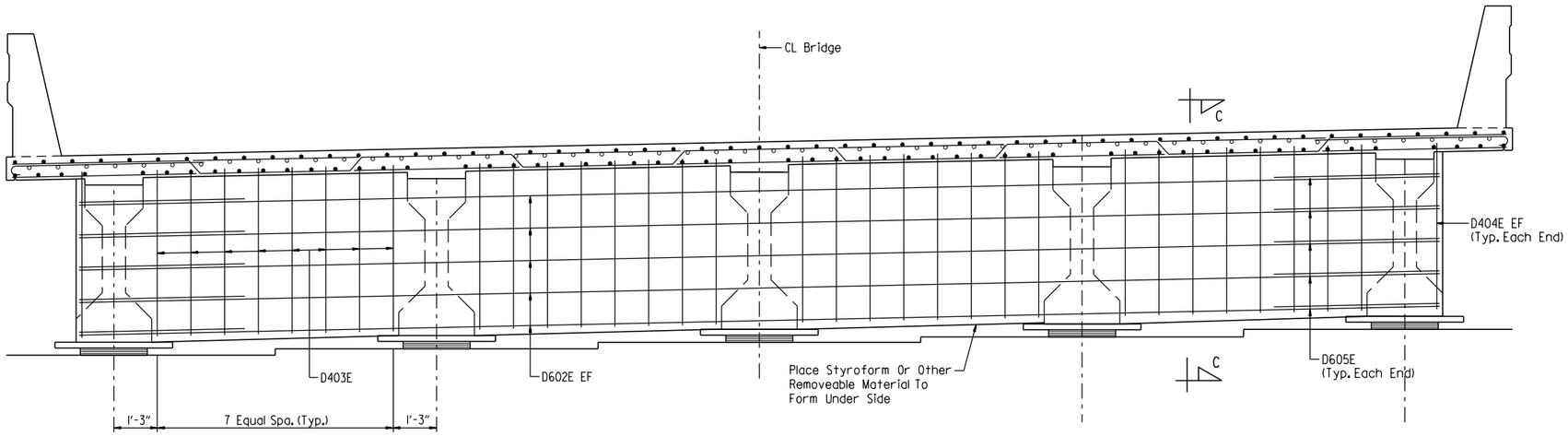

TYPICAL SECTION BETWEEN GIRDERS AT INTERIOR BENTS

(For Info Not Shown See "TYPICAL SECTION AT INTERMEDIATE DIAPHRAGMS" on Dwg. No. 66240)
Scale: 1/2" = 1'-0"

LEGEND

EF = Each Face

BAR BENDING DIAGRAMS

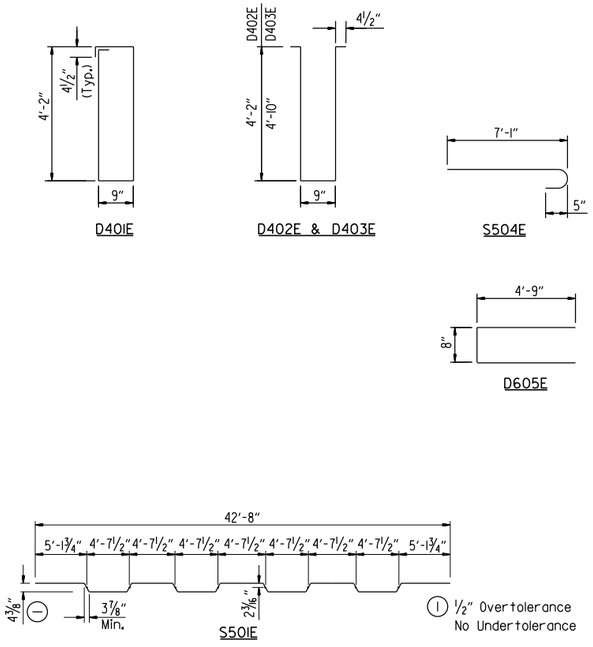

BAR LIST

Mark	No. Req'd.	Length	Pin. Dia.
D401E	64	10'-2"	2"
D402E	128	9'-6"	2"
D403E	64	10'-10"	2"
D404E	8	4'-10"	STR.
D601E	192	7'-1"	STR.
D602E	20	38'-10"	STR.
D603E	36	5'-0"	STR.
D604E	8	5'-0"	STR.
D605E	20	9'-10"	4 1/2"
S501E	244	43'-6"	3"
S502E	490	42'-10"	STR.
S503E	545	51'-8"	STR.
S504E	978	7'-8"	3 3/4"
S701E	104	32'-0"	STR.
R400E	48	6'-3"	3"
R401E	978	7'-6"	3"
R402E	104	5'-6"	STR.
R403E	978	3'-8"	6"
R409E	100	9'-8"	STR.
R410E	20	11'-8"	STR.
R411E	60	15'-8"	STR.
R412E	80	18'-5"	STR.
R413E	60	19'-8"	STR.

NOTES:
Dimension of bars are out-to-out.

Bar designations ending with "E" indicate epoxy coated bars.

Numbers of bars shown is for One 245' Unit.

See Std. Dwg. No. 55071 for Bar Bending Diagrams of R400E, R401E & R403E.

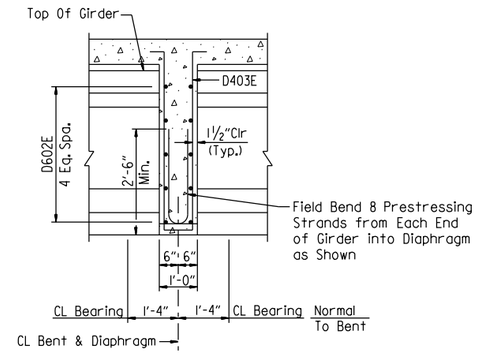

SECTION C-C

(Normal To Diaphragm)
Scale: 1/2" = 1'-0"

STATE OF ARKANSAS
LICENSED PROFESSIONAL ENGINEER
No. 16458
JOEL E. SKINNER
Digitally Signed 07/28/2023
BRIDGE ENGINEER

SHEET 2 OF 7
DETAILS OF 245'-0" CONTINUOUS PRESTRESSED CONCRETE GIRDER UNIT
BRUSH CREEK

ROUTE SEC.

ARKANSAS STATE HIGHWAY COMMISSION

LITTLE ROCK, ARK.

DRAWN BY: HEW DATE: APR. 2011 FILENAME: b012326m5_s8.dgn
CHECKED BY: WMM DATE: DEC. 2011 SCALE: AS SHOWN
DESIGNED BY: MRA DATE: APR. 2011

BRIDGE NO. A7616 & B7616 DRAWING NO. 66241

JESkinner 7/28/2023 12:10:24 PM
WORKSPACE: ARDOT Bridge
\\garverinc.local\gdata\Projects\2017\17017660 - ARDOT 012326 Hwy 412 - Hwy 112\Drawings\b012326x5_S408-TS.dgn
REVISED DATE:

DATE REVISED	DATE REVISED	FED. ROAD DIST. NO.	STATE	JOB NO.	SHEET NO.	TOTAL SHEETS
		6	ARK.	012326	453	838
		A7616 & B7616		245'-0" UNIT		66242

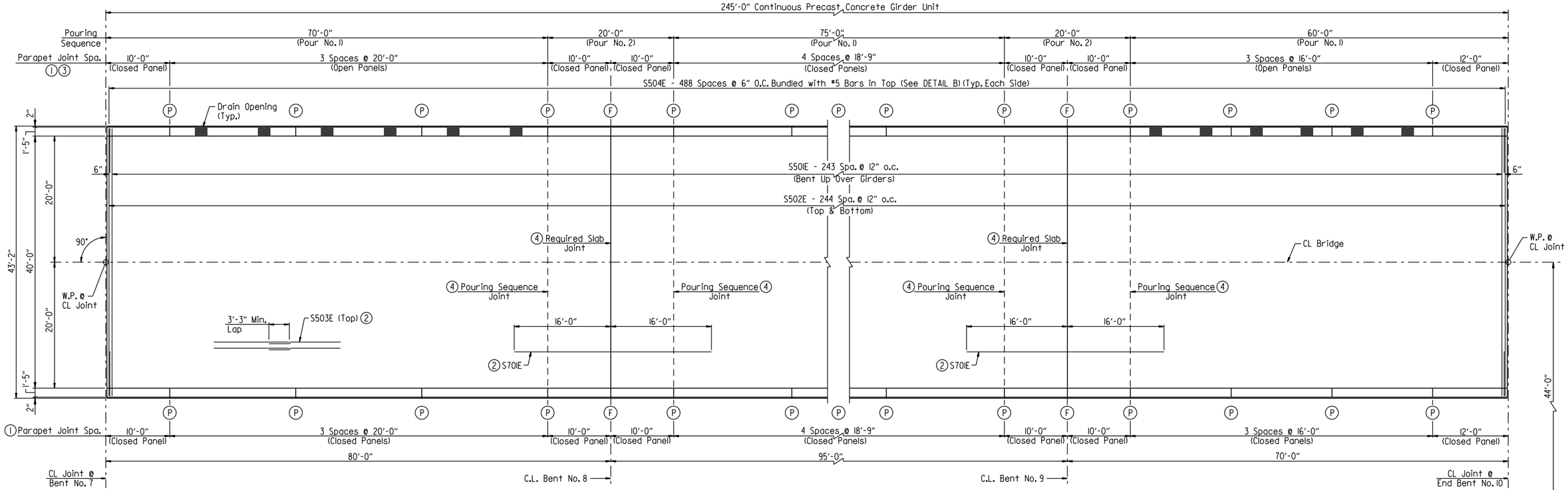

REINFORCING PLAN & POURING SEQUENCE

(Bridge A Shown, Bridge B Is Symmetrical About CL Median)
Scale: 1/8" = 1'-0"

TABLE OF VARIABLES								
CLOSED RAIL PANELS			OPEN RAIL PANELS					
Panel Length	"A"	R4XXE	Panel Length	"B"	"C"	"D"	"E"	R4XXE
10'-0"	19	9	16'-0"	8	3'-0"	11	6'-0"	11
12'-0"	23	10	20'-0"	11	4'-0"	15	8'-0"	13
16'-0"	31	11						
18'-9"	37	12						
20'-0"	39	13						

NOTES:
Required slab joints and pouring sequence joints shall align with rail joints at the gutterline.

For additional rail reinforcing details, see Std. Dwg. No. 55071.

For "BAR LIST" and "BAR BENDING DIAGRAMS", see Dwg. No. 66241

For "SUPERSTRUCTURE GENERAL NOTES", see Dwg. No. 66247

NOTES:
Pours with the same number may be placed simultaneously or separately. All pours (1) must be placed before pours (2) can be placed. A minimum of 48 hours shall elapse between the end of a pour and the start of the next pour. A minimum of 72 hours shall elapse between the end of a pour and the start of an adjacent pour.

Concrete in bridge superstructure shall be placed, consolidated, and screeded off for the entire pour before any concrete has taken its initial set. This may require the use of a retarding agent.

A minimum of 72 hours shall elapse between completion of the slab and the pouring of the bridge railing. Any railing pours made before the entire slab unit has been placed must be approved by the Engineer. The Contractor must obtain approval from the Engineer for any deviations from the pouring sequence(s) shown.

The slab and diaphragms shall not be poured prior to 90 days following release of prestressed girder strands.

Concrete diaphragms at intermediate bents shall be poured monolithically with the slab above the diaphragm.

All partial-depth and end bent diaphragms shall be cast in place and poured a minimum of 48 hours before the slab is poured.

Removable forms shall be used when pouring diaphragms.

(1) Parapet joints designated with symbol (F) shall be stopped 6" from top of slab. All other parapet joints with symbol (P) shall be partial depth joints stopped 16" from top of slab.

(2) Refer to "TYPICAL SECTION AT INTERMEDIATE DIAPHRAGMS" on Dwg. 66240 for placement.

(3) Open panels are located on right side of Bridge B

(4) See "TRANSVERSE SLAB JOINT DETAIL" on Dwg. No. 66247

STATE OF ARKANSAS
LICENSED PROFESSIONAL ENGINEER
No. 16458
JOEL E. SKINNER
Digitally Signed 07/28/2023
BRIDGE ENGINEER

SHEET 3 OF 7
DETAILS OF 245'-0" CONTINUOUS PRESTRESSED CONCRETE GIRDER UNIT
BRUSH CREEK

ROUTE SEC.

ARKANSAS STATE HIGHWAY COMMISSION

LITTLE ROCK, ARK.

DRAWN BY: CWT DATE: APR. 2011 FILENAME: b012326m5_s9.dgn
CHECKED BY: WMM DATE: DEC. 2011
DESIGNED BY: MRA DATE: APR. 2011 SCALE: AS SHOWN

BRIDGE NO. A7616 & B7616 DRAWING NO. 66242

JESkinner 7/28/2023 12:10:25 PM
WORKSPACE: ARDOT Bridge
\\garverinc.local\gdata\Projects\2017\17017660 - ARDOT 012326 Hwy 412 - Hwy 112\Drawings\b012326x5_5409-SB.dgn
REVISED DATE:

DATE REVISED	DATE REVISED	FED. ROAD DIST. NO.	STATE	JOB NO.	SHEET NO.	TOTAL SHEETS
		6	ARK.	012326	454	838
		A7616 & B7616		245'-0" UNIT		66243

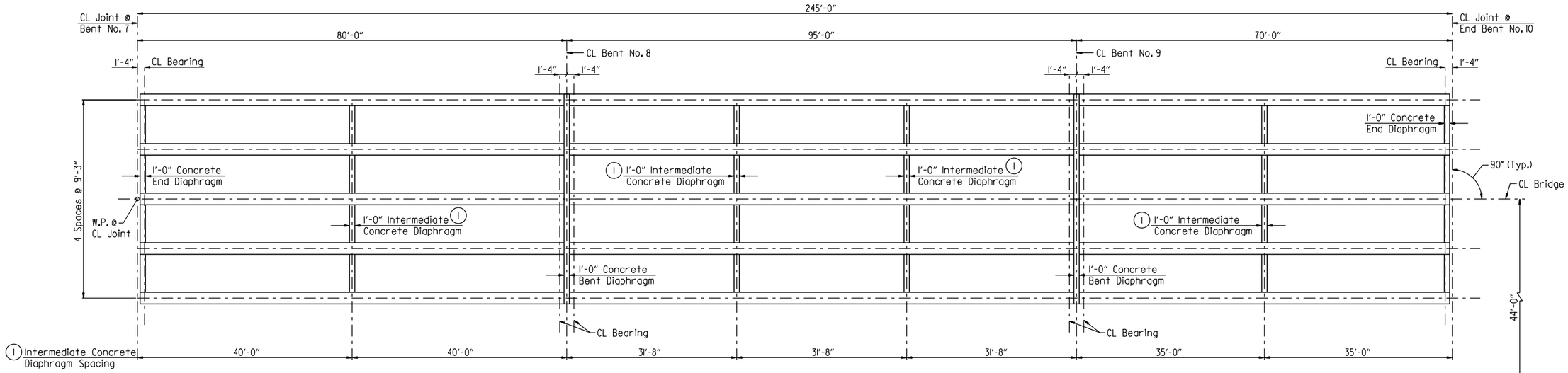

(1) Galvanized steel diaphragms may be used in place of concrete diaphragms at intermediate diaphragm locations only.

FRAMING PLAN

(Bridge A Shown. Bridge B Is Symmetrical About CL Median)
Scale: 1" = 10'-0"

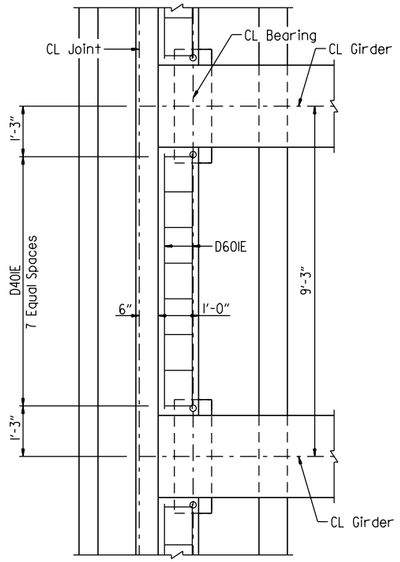

PLAN END BENT DIAPHRAGM

Scale: ½" = 1'-0"

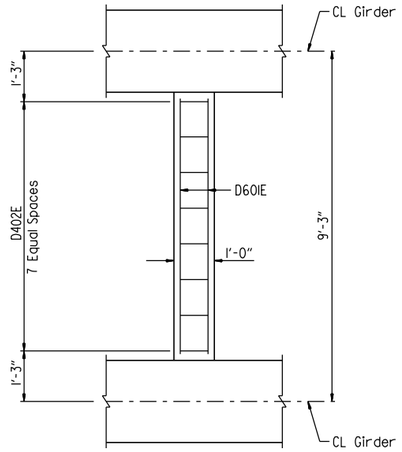

PLAN INTERMEDIATE DIAPHRAGM

Scale: ½" = 1'-0"

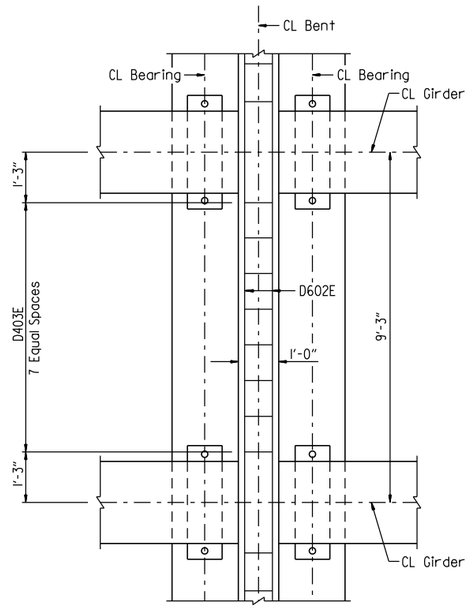

PLAN BENT DIAPHRAGM

Scale: ½" = 1'-0"

STATE OF ARKANSAS
LICENSED PROFESSIONAL ENGINEER
No. 16458
JOEL E. SKINNER
Digitally Signed 07/28/2023
BRIDGE ENGINEER

SHEET 4 OF 7
DETAILS OF 245'-0" CONTINUOUS PRESTRESSED CONCRETE GIRDER UNIT BRUSH CREEK

ROUTE SEC.

ARKANSAS STATE HIGHWAY COMMISSION

LITTLE ROCK, ARK.

DRAWN BY: HEW DATE: APR. 2011 FILENAME: b012326m5_sl0.dgn
CHECKED BY: WMM DATE: DEC. 2011 SCALE: AS SHOWN
DESIGNED BY: MRA DATE: APR. 2011

BRIDGE NO. A7616 & B7616 DRAWING NO. 66243

JESkinner 7/28/2023 12:10:25 PM
WORKSPACE: ARDOT Bridge
\\garverinc.local\gdata\Projects\2017\17017660 - ARDOT 012326 Hwy 412 - Hwy 112\Drawings\b012326x5_S410-SF.dgn
REVISED DATE:

DATE REVISED	DATE REVISED	FED. ROAD DIST. NO.	STATE	JOB NO.	SHEET NO.	TOTAL SHEETS
		6	ARK.	012326	455	838
		A7616 & B7616		245'-0" UNIT		66244

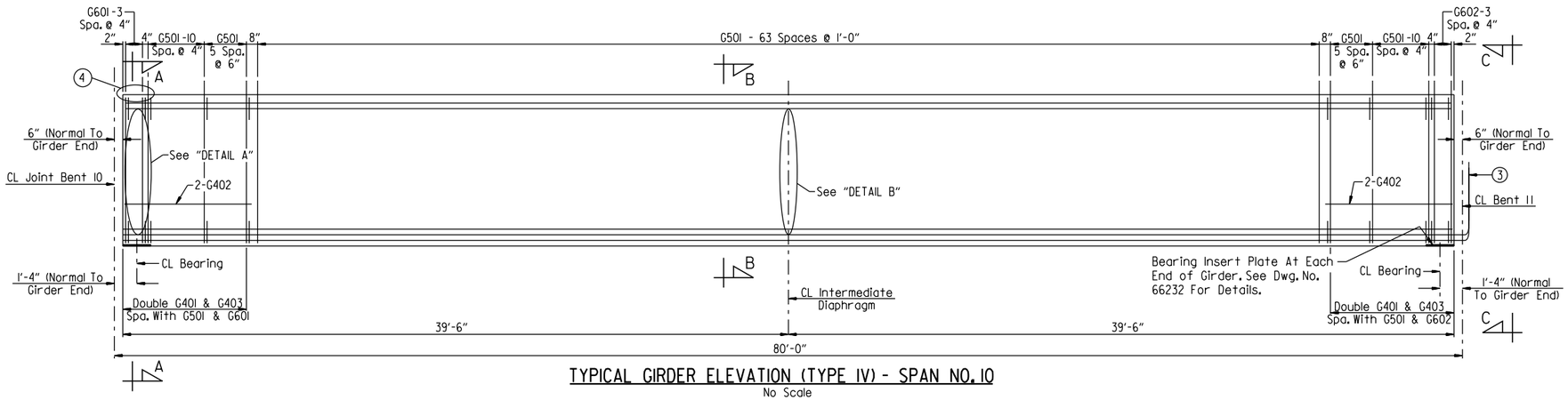

TYPICAL GIRDER ELEVATION (TYPE IV) - SPAN NO. 10
No Scale

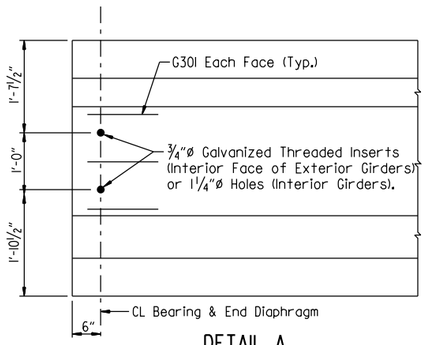

DETAIL A
Scale: ¾" = 1'-0"

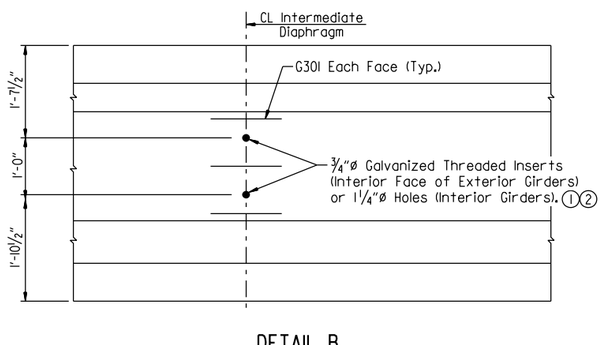

DETAIL B
Scale: ¾" = 1'-0"

1 Inserts and holes shown are for intermediate diaphragms, see Dwg. No. 66240 for alternate steel diaphragms.

3 Prestressing strands at CL Joint shall be sawn flush with the end of the girder. Prestressing strands at CL Bent shall be bent up into diaphragms as shown in "SECTION C-C" on Dwg. No. 66241.

2 Galvanized ¾"ø Dayton-Richmond F-42 Loop Ferrule Insert or an approved equal at interior face of exterior girders. These are to be subsidiary to the item "PRESTRESSED CONCRETE GIRDERS (TYPE IV)". See Dwg. No. 66240 for alternate steel diaphragms.

4 For "CHANNEL CONNECTION DETAIL", see Dwg. No. 66248.

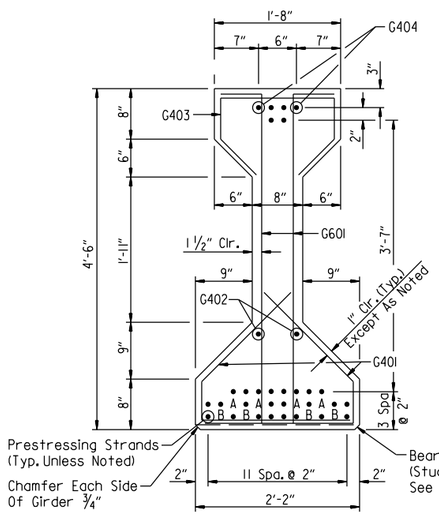

SECTION A-A
Scale: 1" = 1'-0"

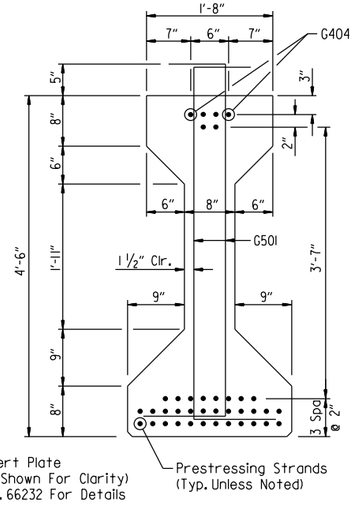

SECTION B-B
Scale: 1" = 1'-0"

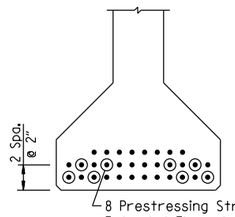

VIEW C-C
Scale: 1" = 1'-0"

DEBOND SCHEDULE

Debond Pair	Debond Length From End Of Girder
A	9'-0"
B	6'-0"

BAR LIST - PER GIRDER

Mark	No. Req'd.	Length	Pin. Dia.
G401	80	4'-2"	2"
G402	4	7'-4"	Str.
G403	42	3'-9"	3"
G404	2	78'-8"	Str.
G501	192	6'-3"	3¾"
G601	8	4'-7½"	4½"
G602	8	5'-3"	4½"

BAR BENDING DIAGRAMS

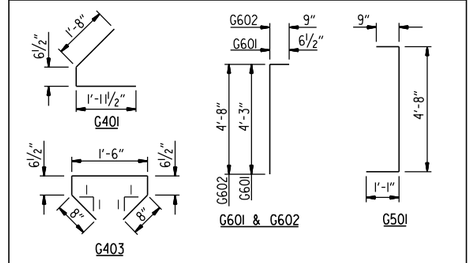

NOTES:
Dimensions of bars in bending diaphragm are out-to-out.

All bars in the "BAR LIST - PER GIRDER" will not be paid for directly, but willbe considered subsidiary to the item "PRESTRESSED CONCRETE GIRDERS (TYPE IV)".

At the Contractor's option, ½"ø strands pulled to 2,000 lbs. may be substituted for bars G404.

At the Contractor's option, the two G401 bars may be furnished as one bar.

NOTE:
For "SUPERSTRUCTURE GENERAL NOTES", see Dwg. No. 66247.



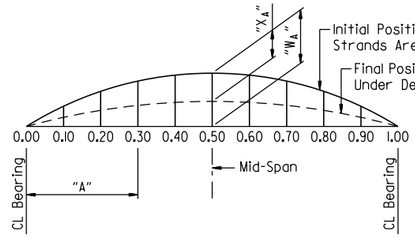

"W_A" is camber of girder (prestress + dead load of girder @ 90 days after release)

"X_A" is dead load deflection of slab + diaphragms + composite dead load.

5 CAMBER & DEFLECTIONS (INCHES)

5 Camber and Deflection Values shown are based on a concrete girder strength, f'c = 8,000 psi. Greater strengths may require adjustments. See "SPECIAL CAMBER NOTES" on Dwg. No. 66247.

4 SPAN PT.	INCHES	
	"W_A"	"X_A"
0.00	0.000	0.000
0.10	0.513	0.185
0.20	0.914	0.368
0.30	1.182	0.513
0.40	1.335	0.605
0.50	1.385	0.639

4 Symmetrical by 180° rotation

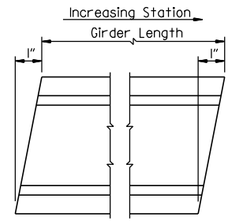

GIRDER BEVEL
No Scale

SHEET 5 OF 7
DETAILS OF 245'-0" CONTINUOUS PRESTRESSED CONCRETE GIRDER UNIT BRUSH CREEK

ROUTE SEC.

ARKANSAS STATE HIGHWAY COMMISSION

LITTLE ROCK, ARK.

DRAWN BY: HEW DATE: APR. 2011 FILENAME: b012326m5_sll.dgn
CHECKED BY: WMM DATE: DEC. 2011
DESIGNED BY: MRA DATE: APR. 2011 SCALE: AS SHOWN

BRIDGE NO. A7616 & B7616 DRAWING NO. 66244

JESkinner 7/28/2023 12:10:26 PM
WORKSPACE: ARDOT Bridge
\\garverinc.local\data\Projects\2017\170660 - ARDOT 012326 Hwy 412 - Hwy 112\Drawings\b012326x5_S4ll-BB.dgn
REVISED DATE:

DATE REVISED	DATE REVISED	FED. ROAD DIST. NO.	STATE	JOB NO.	SHEET NO.	TOTAL SHEETS
		6	ARK.	012326	456	838
		A7616 & B7616		245'-0" UNIT		66245

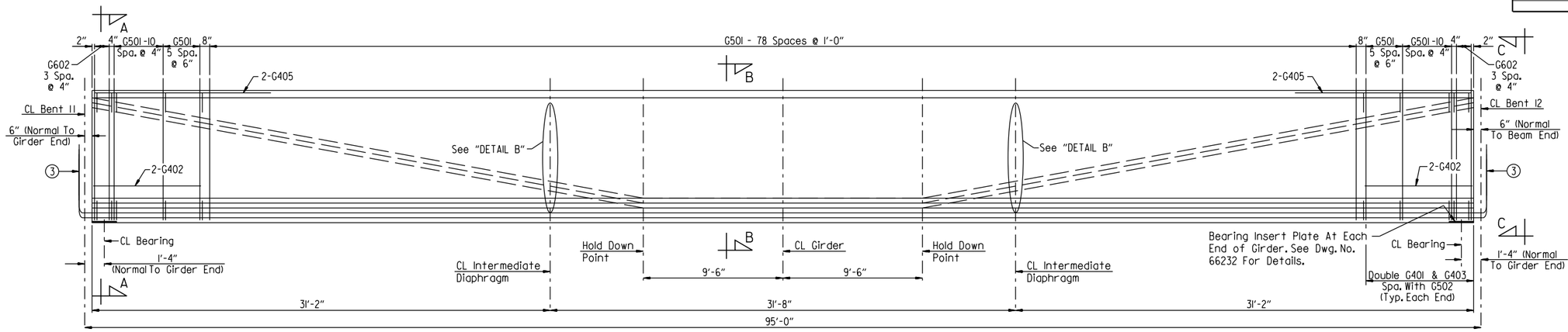

TYPICAL GIRDER ELEVATION (TYPE IV) - SPAN NO. 11

No Scale

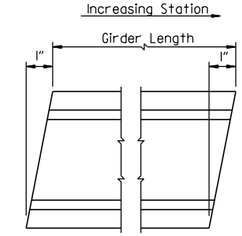

GIRDER BEVEL

No Scale

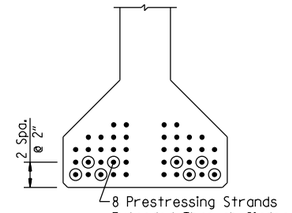

8 Prestressing Strands Extended Through Girder Ends And Bent Up Into Diaphragms.

VIEW C-C

Scale: 1" = 1'-0"

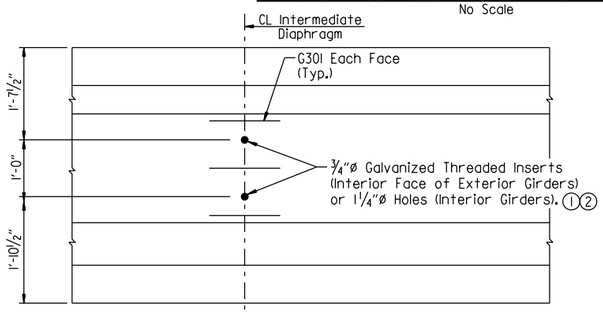

DETAIL B

Scale: ¾" = 1'-0"

(1) Inserts and holes shown are for intermediate diaphragms, see Dwg. No. 66240 for alternate steel diaphragms.

(3) Prestressing strands shall be bent up into diaphragms as shown in "SECTION C-C" on Dwg. No. 66241.

NOTE:
For "SUPERSTRUCTURE GENERAL NOTES", see Dwg. No. 66247.

(2) Galvanized ¾"ø Dayton-Richmond F-42 Loop Ferrule Insert or an approved equal at interior face of exterior girders. These are to be subsidiary to the item "PRESTRESSED CONCRETE GIRDERS (TYPE IV)". See Dwg. No. 66240 for alternate steel diaphragms.

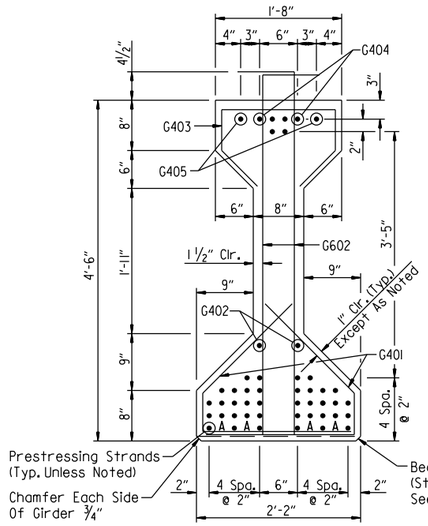

SECTION A-A

Scale: 1" = 1'-0"

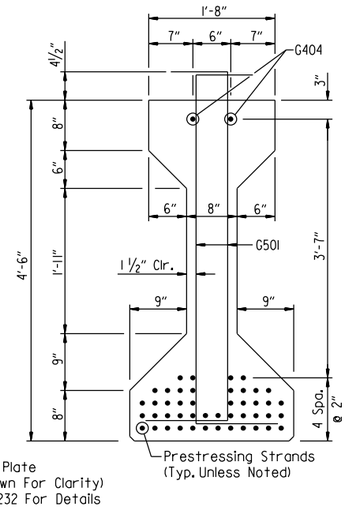

SECTION B-B

Scale: 1" = 1'-0"

(4) SPAN PT.	INCHES	
	"W_A"	"X_A"
0.00	0.000	0.000
0.10	1.110	0.386
0.20	1.957	0.760
0.30	2.549	1.051
0.40	2.902	1.232
0.50	3.019	1.297

(4) Symmetrical by 180° rotation

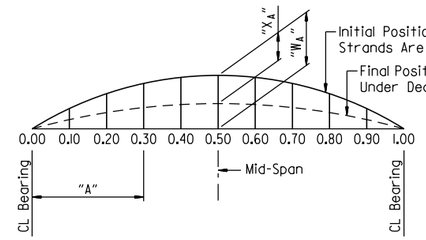

"W_A" is camber of girder (prestress + dead load of girder @ 90 days after release)

"X_A" is dead load deflection of slab + diaphragms + composite dead load.

(5) CAMBER & DEFLECTIONS (INCHES)

(5) Camber and Deflection Values shown are based on a concrete girder strength, f'c = 8,000 psi. Greater strengths may require adjustments. See "SPECIAL CAMBER NOTES" on Dwg. No. 66247.

DEBOND SCHEDULE	
Debond Pair	Debond Length From End Of Girder
A	6'-0"

BAR LIST - PER GIRDER			
Mark	No. Req'd.	Length	Pin. Dia.
G301	12	2'-0"	Str.
G401	80	4'-2"	2"
G402	4	7'-4"	Str.
G403	42	3'-9"	3"
G404	2	93'-8"	Str.
G405	4	10'-0"	Str.
G501	222	6'-3"	3¾"
G602	16	5'-3"	4½"

BAR BENDING DIAGRAMS

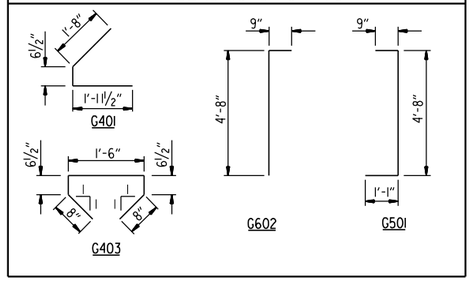

NOTES:
Dimensions of bars in bending diaphragm are out-to-out.

All bars in the "BAR LIST - PER GIRDER" will not be paid for directly, but willbe considered subsidiary to the item "PRESTRESSED CONCRETE GIRDERS (TYPE IV)".

At the Contractor's option, ½"ø strands pulled to 2,000 lbs. may be substituted for bars G404.

At the Contractor's option, the two G401 bars may be furnished as one bar.

STATE OF ARKANSAS
LICENSED PROFESSIONAL ENGINEER
No. 16458
JOEL E. SKINNER
Digitally Signed 07/28/2023
BRIDGE ENGINEER

SHEET 6 OF 7
DETAILS OF 245'-0" CONTINUOUS PRESTRESSED CONCRETE GIRDER UNIT
BRUSH CREEK

ROUTE SEC.

ARKANSAS STATE HIGHWAY COMMISSION

LITTLE ROCK, ARK.

DRAWN BY: HEW DATE: APR. 2011 FILENAME: b012326m5_sl2.dgn
CHECKED BY: WMM DATE: DEC. 2011 SCALE: AS SHOWN
DESIGNED BY: MRA DATE: APR. 2011

BRIDGE NO. A7616 & B7616 DRAWING NO. 66245

JESkinner 7/28/2023 12:10:26 PM
WORKSPACE: ARDOT Bridge
\\garverinc.local\gdata\Projects\2017\17017660 - ARDOT 012326 Hwy 412 - Hwy 112\Drawings\b012326x5_5412-BB.dgn
REVISED DATE:

DATE REVISED	DATE REVISED	FED. ROAD DIST. NO.	STATE	JOB NO.	SHEET NO.	TOTAL SHEETS
		6	ARK.	012326	457	838
		A7616 & B7616		245'-0" UNIT		66246

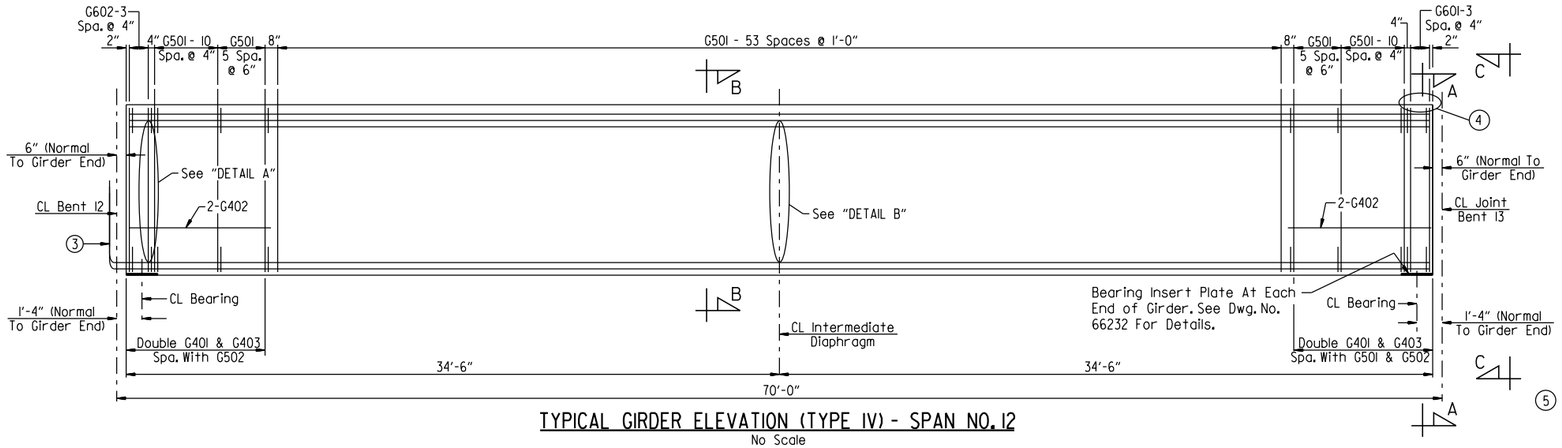

TYPICAL GIRDER ELEVATION (TYPE IV) - SPAN NO. 12

No Scale

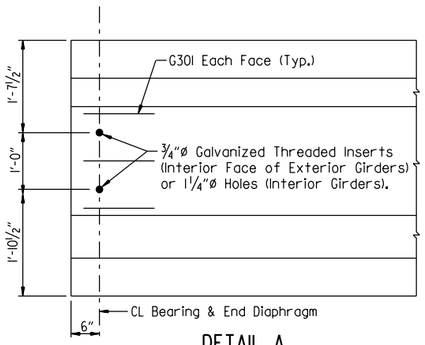

DETAIL A

Scale: ¾" = 1'-0"

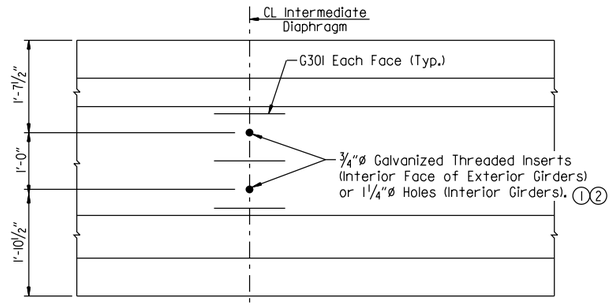

DETAIL B

Scale: ¾" = 1'-0"

NOTE:
For "SUPERSTRUCTURE GENERAL NOTES", see Dwg. No. 66247.

(5)

SPAN PT.	INCHES	
	"W_A"	"X_A"
0.00	0.000	0.000
0.10	0.261	0.107
0.20	0.446	0.216
0.30	0.569	0.301
0.40	0.638	0.356
0.50	0.661	0.374

(5) Symmetrical by 180° rotation

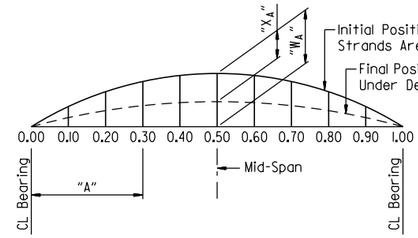

"W_A" is camber of girder (prestress + dead load of girder @ 90 days after release)

"X_A" is dead load deflection of slab + diaphragms + composite dead load.

(6) CAMBER & DEFLECTIONS (INCHES)

(6) Camber and Deflection Values shown are based on a concrete girder strength, f'c = 8,000 psi. Greater strengths may require adjustments. See "SPECIAL CAMBER NOTES" on Dwg. No. 66247.

(1) Inserts and holes shown are for intermediate diaphragms, see Dwg. No. 66240 for alternate steel diaphragms.

(3) Prestressing strands at CL Joint shall be sawn flush with the end of the girder. Prestressing strands at CL Bent shall be bent up into diaphragms as shown in "SECTION C-C" on Dwg. No. 66241.

(2) Galvanized ¾"ø Dayton-Richmond F-42 Loop Ferrule Insert or an approved equal at interior face of exterior girders. These are to be subsidiary to the item "PRESTRESSED CONCRETE GIRDERS (TYPE IV)". See Dwg. No. 66240 for alternate steel diaphragms.

(4) For "CHANNEL CONNECTION DETAIL", see Dwg. No. 66248.

BAR LIST - PER GIRDER

Mark	No. Req'd.	Length	Pin. Dia.
G301	12	2'-0"	Str.
		4'-2"	
G401	80		2"
G402	4	7'-4"	Str.
G403	42	3'-9"	3"
G404	2	68'-8"	Str.
G501	174	6'-3"	3¾"
G601	8	4'-7½"	4½"
G602	8	5'-3"	4½"

BAR BENDING DIAGRAMS

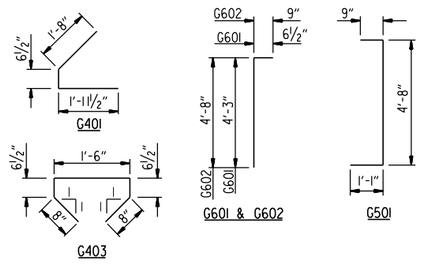

NOTES:
Dimensions of bars in bending diaphragm are out-to-out.

All bars in the "BAR LIST - PER GIRDER" will not be paid for directly, but will be considered subsidiary to the item "PRESTRESSED CONCRETE GIRDERS (TYPE IV)".

At the Contractor's option, ½"ø strands pulled to 2,000 lbs. may be substituted for bars G404.

At the Contractor's option, the two G401 bars may be furnished as one bar.

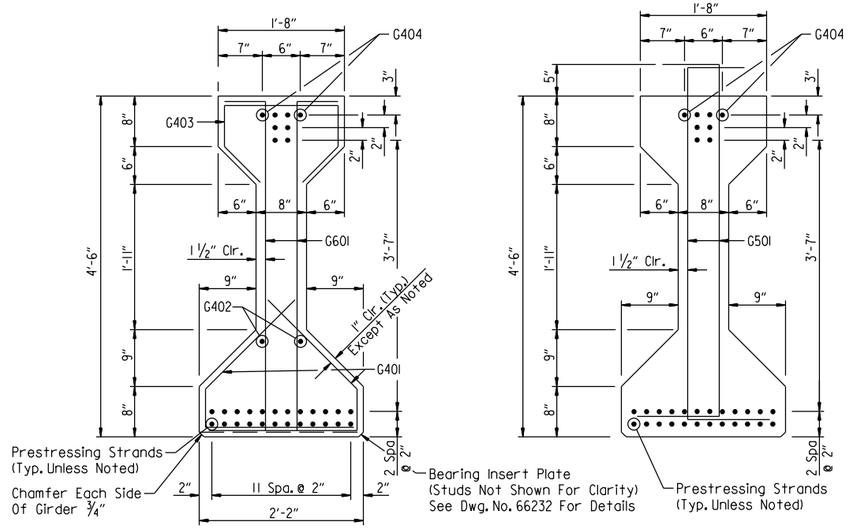

SECTION A-A

Scale: 1" = 1'-0"

SECTION B-B

Scale: 1" = 1'-0"

VIEW C-C

Scale: 1" = 1'-0"

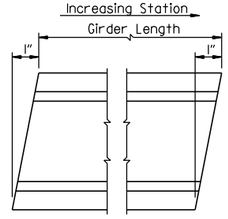

GIRDER BEVEL

No Scale

STATE OF ARKANSAS
LICENSED PROFESSIONAL ENGINEER
No. 16458
JOEL E. SKINNER
Digitally Signed 07/28/2023
BRIDGE ENGINEER

SHEET 7 OF 7
DETAILS OF 245'-0" CONTINUOUS PRESTRESSED CONCRETE GIRDER UNIT
BRUSH CREEK
ROUTE SEC.
ARKANSAS STATE HIGHWAY COMMISSION
LITTLE ROCK, ARK.

DRAWN BY: HEW DATE: APR. 2011 FILENAME: b012326m5_sl3.dgn
CHECKED BY: WMM DATE: DEC. 2011 SCALE: AS SHOWN
DESIGNED BY: MRA DATE: APR. 2011
BRIDGE NO. A7616 & B7616 DRAWING NO. 66246

JEskinner 7/28/2023 12:10:27 PM
WORKSPACE: ARDOT Bridge
\\garverinc.local\data\Projects\2017\17017660 - ARDOT 012326 Hwy 412 - Hwy 112\Drawings\b012326x5_5413-BB.dgn
REVISED DATE:

DATE REVISED	DATE REVISED	FED. ROAD DIST. NO.	STATE	JOB NO.	SHEET NO.	TOTAL SHEETS
		6	ARK.	012326	458	838
		A7616 & B7616		COMMON DETAILS		66247

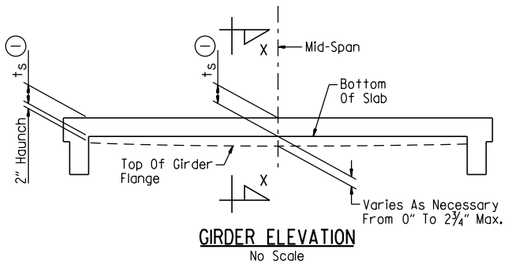

GIRDER ELEVATION
No Scale

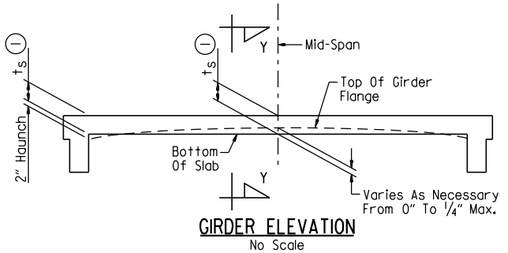

GIRDER ELEVATION
No Scale

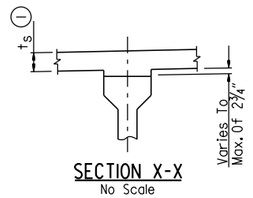

SECTION X-X
No Scale

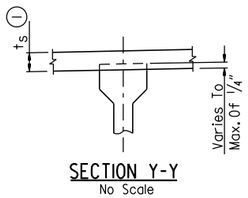

SECTION Y-Y
No Scale

Note: t_S = Slab Thickness As Shown On Superstructure Details See "TYPICAL SECTION AT INTERMEDIATE DIAPHRAGMS" On Dwg. Nos. 66234 & 66240.

(1) Tolerance when removable deck forming is used is +½", -¼". Haunch forming is required and shall be adjusted to maintain slab thickness tolerance. See Std. Dwg. No. 55005 for tolerances when permanent steel deck forms are used.

"GIRDER ELEVATION" sketches show the range of acceptability of the top of girder relative to bottom of slab after the placement of the slab. When the top of the girder projects more than a ¼" into the slab, a raise in grade will be necessary. Girders shall be set in a sufficient number of spans over suitable increments so the revised grade line will provide a smooth riding surface. Variation of haunch height will be at the Contractor's expense.

ADJUSTMENT FOR SLAB THICKNESS TOLERANCE WHEN REMOVABLE DECK FORMING IS USED

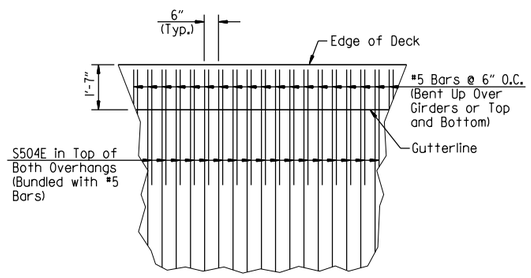

DETAIL B
No Scale

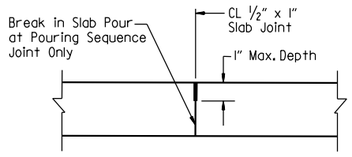

NOTE:
Use Type 3 or 4 Joint Sealer. See Subsections 501.02(h) and 501.05(j). Backer Rod Filler will not be required. Joint Sealer shall be measured and paid for as "CLASS S(AE) CONCRETE-BRIDGE". Slab joints shall extend to the outside edge of the deck slab and shall align with open joints at the front face of the bridge traffic railing. Slab joints shall be installed before the bridge traffic railing is poured. If slab joints are to be sawed, they shall be sawed as soon as the concrete has sufficiently set to allow sawing of the joint without damage to the slab. Slab joints shall be placed at all pouring sequence construction joints and required slab joint locations. The joint sealer shall extend across the deck from gutterline to gutterline.

TRANSVERSE SLAB JOINT DETAIL
No Scale

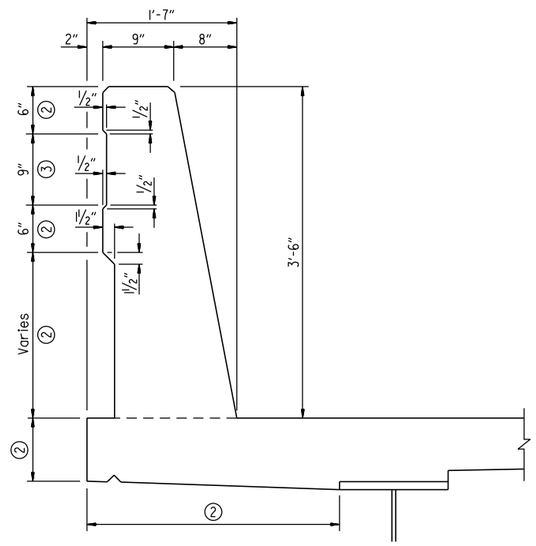

(2) Class 3 Textured Coating Finish (Color - Light Brown, Color Chip No. 33522)

(3) Class 3 Textured Coating Finish (Color - Medium Brown, Color Chip No. 30219)

BRIDGE RAIL AESTHETIC DETAIL
No Scale

SUPERSTRUCTURE GENERAL NOTES:

CONCRETE:

Concrete shall be poured in the dry, and all exposed corners shall be chamfered ¾" unless otherwise noted. All concrete, except for prestressed girders, shall be Class S(AE) with a minimum 28 day compressive strength, f'c = 4,000 psi.

The superstructure details shown are for use when removable deck forming is used and are the basis for measurement of the item "CLASS S(AE) CONCRETE - BRIDGE". See Standard Drawing No. 55005 for allowable modifications and for tolerances when Permanent Steel Deck Forms are used.

The concrete deck (roadway surface) shall be given a tine finish in accordance with subsection 802.19 for Class 5 Tined Bridge Roadway Surface Finish. Movement of the finishing machine across new concrete shall be on planks placed on the surface and shall be prohibited for 72 hours after finishing the pour. Sufficient concrete must be placed ahead of the strike-off to fully load the girder. When permitted, the use of a longitudinal strike-off will require that a vertical camber adjustment be made in the strike-off to account for the future dead load deflection due to any railings.

REINFORCING STEEL:

All reinforcing steel shall be Grade 60 (fy = 60,000 psi) conforming to AASHTO M 31 or M 322 Type A, with mill test reports and shall be epoxy coated. The reinforcing steel is to be accurately located in the forms and firmly held in place by steel wire supports, sufficient in number and size to prevent displacement during the course of construction. The wire supports will not be paid for directly, but will be considered subsidiary to the item "EPOXY COATED REINFORCING STEEL (GRADE 60)".

STRUCTURAL STEEL:

All structural steel shall be ASTM A709 with grade and payment as specified in the plans. Grade 50W steel shall not be painted and all exposed surfaces shall be cleaned in accordance with Subsection 807.84(e). Grade 36 and Grade 50 steel shall be painted unless otherwise noted and all exposed surfaces shall be cleaned in accordance with Subsection 807.84. Structural steel completely embedded in concrete may be ASTM A709, Gr. 36, Gr. 50 or Gr. 50W unless otherwise noted.

Requests for substitution of structural steel shapes shown with shapes of greater size must be submitted by the Contractor to the Engineer for approval. Steels of equal or greater strengths will be accepted only when shown on the approved shop drawings. Shapes and materials shown in the plans will be the basis of payment and no additional compensation will be made for any adjustments due to substitutions.

All welding that is to be done during fabrication of structural steel, including temporary welds, shall be detailed on the shop drawings and submitted for approval. If additional welds are required, whether permanent or temporary, a formal request with detailed drawings shall be submitted to the Engineer for approval. All welding shall conform to subsection 807.26.

Plan drawings show general features of design only. Shop drawings shall be prepared in accordance with the specifications, submitted and approval secured before fabrication is begun.

SPECIAL CAMBER NOTES

The camber and dead load deflection values shown on the plans are estimated based on the required minimum concrete strength for the prestressed concrete girders. The Contractor shall provide the Engineer with the following information:

A. Actual 28-Day concrete strength of prestressed concrete girders

B. Actual concrete strength of prestressed concrete girders at time of release

C. Estimated age of prestressed concrete girders at time of erection

D. Profile of each girder under its own weight in final position

Following receipt of the above data, the Engineer will evaluate the dead load and, if necessary, will provide an updated deflection diagram to the Contractor.

PRESTRESSED CONCRETE GIRDERS:

Pretensioning steel shall be ½"ø Low Relaxation strands with a minimum ultimate strength of 270 ksi and shall conform to AASHTO M 203.

All girders shall be TYPE IV as shown on the details and shall be the standard prestressing sections adopted by the Joint Committee of AASHTO and the Prestressed Concrete Institute. All girders shall be cast in floored pallets and in metal forms. All work and materials shall be as specified in Subsection 802.22.

Concrete shall be Class "S" and shall have a minimum 28 day compressive strength f'c = 8,000 psi. The initial tensile force applied to each ½"ø strand shall be 31,000 pounds except as noted. Transfer of this tensioning load to the girder shall not be done until the compressive strength of the concrete is 6,000 psi.

Dimensions shown are to the center of strands.

The Contractor shall submit the method and sequence for release of strands to the Engineer for approval prior to casting of the girders.

The first 16" along the top of the girder at beginning and end of unit shall have a smooth finish. The tops of the remaining length of the girders shall be roughened to an amplitude of ¼" and shall be scrubbed transversely with a coarse wire brush to remove all laitance to produce an adequate surface for bonding the slab.

Girder lengths shown on the design plans are net lengths measured horizontally along girder centerlines. The girder manufacturer shall make the necessary allowances for grade and shortening due to elastic shortening, creep and shrinkage.

Extreme care shall be exercised in handling and moving precast, prestressed concrete girders. Girders must be maintained in an upright position at all times and must be picked up from points near the girder ends. Disregard of this requirement may lead to collapse of the girder. The Contractor's proposed lifting details shall be submitted on shop drawings to the Engineer for approval. The use of holes for lifting purposes will not be permitted.

The Contractor may submit alternate strand patterns with design calculations for review and approval in accordance with Subsection 802.22.

Reinforcing steel in Girders shall be Grade 60 (fy = 60,000 psi) conforming to AASHTO M 31 or M 322 Type A, with mill test reports.

Distances from the forms and spacing of the prestressing steel shall be maintained by stays, ties, hangers, spacers or other approved supports which shall be shown on the Shop Drawings.

The points of support and direction of reactions with respect to the member shall be approximately the same during transportation and storage as when member is in its final position.

Holes and inserts shall be cast into the girders. Field drilling of holes shall not be permitted.

After detensioning, saw cut, grind, or bend up strands as designated by the plans. Heat-cutting or bending methods shall not be used within 6" of the girder.

Plan drawings show general features of design only. Shop drawings shall be made in accordance with the specification, submitted, and approval secured before fabrication begins.

STATE OF ARKANSAS
LICENSED PROFESSIONAL ENGINEER
No. 16458
JOEL E. SKINNER
Digitally Signed 07/28/2023
BRIDGE ENGINEER

SHEET 1 OF 2
COMMON SUPERSTRUCTURE DETAILS
BRUSH CREEK
ROUTE SEC.
ARKANSAS STATE HIGHWAY COMMISSION
LITTLE ROCK, ARK.

DRAWN BY: HEW DATE: JAN. 2023 FILENAME: b012326m5_sl4.dgn
CHECKED BY: JES DATE: MAR. 2023 SCALE: AS SHOWN
DESIGNED BY: CSW DATE: JAN. 2023
BRIDGE NO. A7616 & B7616 DRAWING NO. 66247

JESkinner 7/28/2023 12:10:27 PM
WORKSPACE: ARDOT Bridge
\\garverinc.local\gdata\Projects\2017\17017660 - ARDOT 012326 Hwy 412 - Hwy 112\Drawings\b012326x5_Sl14-GN.dgn
REVISED DATE:

DATE REVISED	DATE REVISED	FED. ROAD DIST. NO.	STATE	JOB NO.	SHEET NO.	TOTAL SHEETS
		6	ARK.	012326	459	838
		A7616 & B7616		COMMON DETAILS		66248

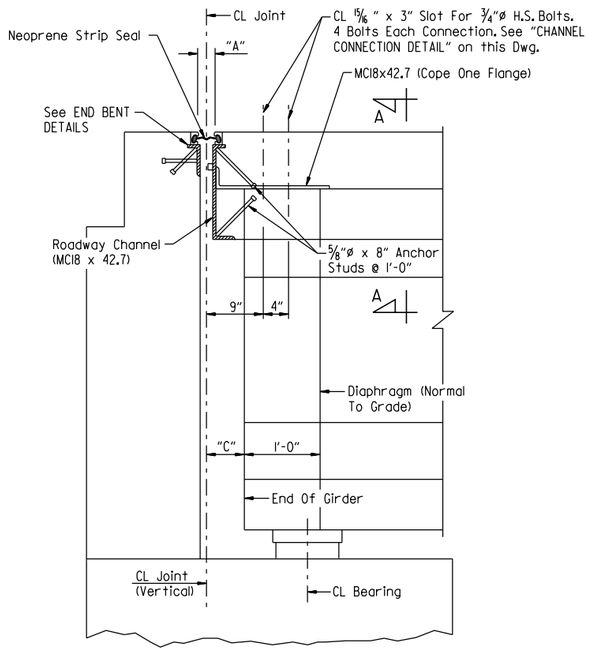

SECTION THRU JOINT AT END BENTS
(Section Taken Perpendicular To CL Joint)
No Scale

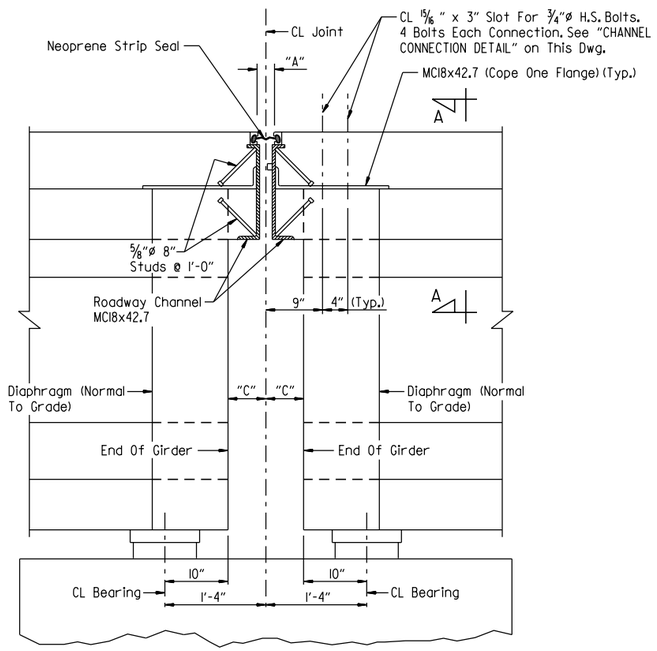

SECTION THRU JOINT AT INTERMEDIATE BENTS
(Section Taken Perpendicular To CL Joint)
No Scale

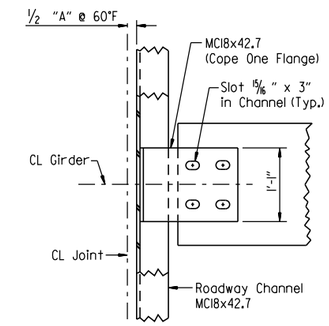

CHANNEL CONNECTION DETAIL
No Scale

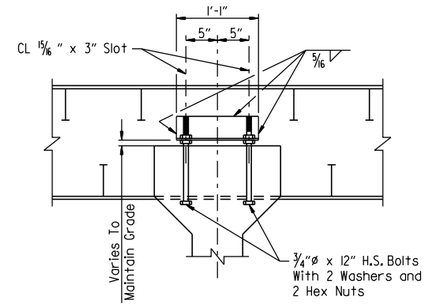

SECTION A-A
No Scale

NOTE:
Bolts, washers and hex nuts shall be considered subsidiary to the item "PRESTRESSED CONCRETE GIRDERS (TYPE IV)".

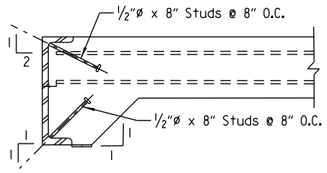

DETAIL OF ALTERNATE ANCHORS
No Scale

NOTE:
As an alternate to 5/8"ø studs, 1/2"ø x 8" studs spaced as shown may be used. Use weight of 5/8"ø stud as basis of measurement of Structural Steel in anchors.

TABLE OF STRIP SEAL JOINT DATA

Bent No.	Movement Rating (inch)	"A" Width Perpendicular To Joint At 24 Hour Average Temperature (1) Of:			"B" Width Perpendicular To Joint At 24 Hour Average Temperature (1) Of:			"C" Perpendicular To Joint At 24 Hour Average Temperature Of 60°F
		40°F	60°F	80°F	40°F	60°F	80°F	
1 & 13	4"	3"	2 5/8"	2 1/4"	2 1/2"	2 1/8"	1 3/4"	6"
4, 7 & 10	4"	2 13/16"	2 5/8"	2 7/16"	2 5/16"	2 1/8"	1 5/16"	6"

(1) The temperature used to set the joint opening shall be the approximate average air temperature during the 24 hour period immediately before the bolts are tightened. The Engineer shall establish the temperature. Interpolation of the table may be necessary.

NOTE:
Installation is limited to 40 degrees fahrenheit min. and 80 degrees fahrenheit max. interpolation of the table may be necessary. The temperature limitations of the lubricant-adhesive manufacturer shall be observed.

STATE OF ARKANSAS
LICENSED PROFESSIONAL ENGINEER
No. 16458
JOEL E. SKINNER
Digitally Signed 07/28/2023
BRIDGE ENGINEER

SHEET 2 OF 2
COMMON SUPERSTRUCTURE DETAILS
BRUSH CREEK
ROUTE SEC.
ARKANSAS STATE HIGHWAY COMMISSION
LITTLE ROCK, ARK.

DRAWN BY: HEW DATE: JAN. 2023 FILENAME: b012326m5_sl5.dgn
CHECKED BY: JES DATE: MAR. 2023 SCALE: AS SHOWN
DESIGNED BY: CSW DATE: JAN. 2023
BRIDGE NO. A7616 & B7616 DRAWING NO. 66248

JESkinner 7/28/2023 12:10:27 PM
WORKSPACE: ARDOT Bridge
\\garverinc.local\gdata\Projects\2017\17017660 - ARDOT 012326 Hwy 412 - Hwy 112\Drawings\b012326x5_S415-MD.dgn
REVISED DATE:

DATE REVISED	DATE REVISED	FED. ROAD DIST. NO.	STATE	JOB NO.	SHEET NO.	TOTAL SHEETS
		6	ARK.	012326	460	838
		A7617		LAYOUT		66249

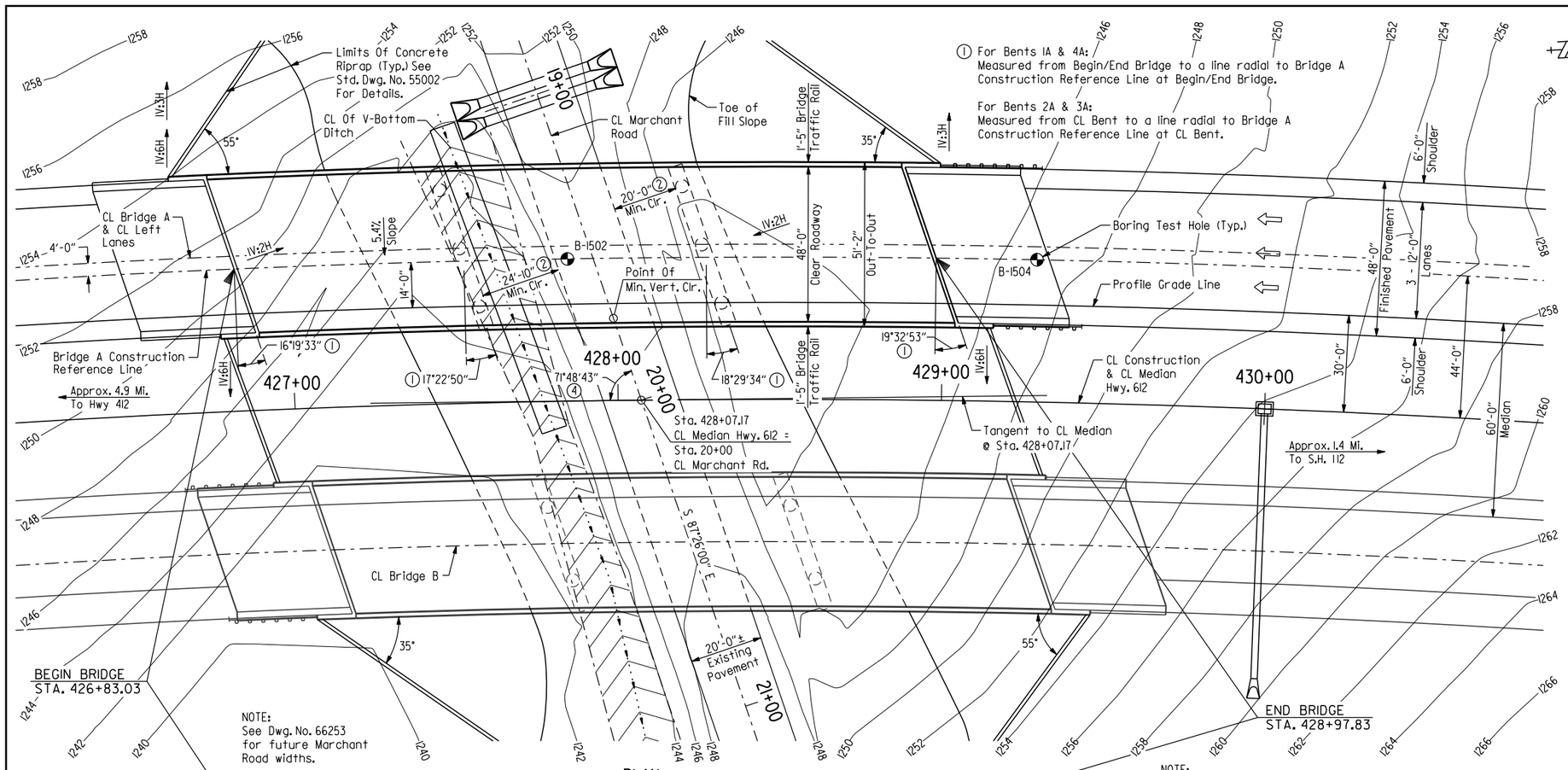

PLAN

① For Bents 1A & 4A: Measured from Begin/End Bridge to a line radial to Bridge A Construction Reference Line at Begin/End Bridge.

For Bents 2A & 3A: Measured from CL Bent to a line radial to Bridge A Construction Reference Line at CL Bent.

② Measured from edge of lane

④ Measured from line tangent to CL Median Hwy. 612 at Sta. 428+07.17 and CL Marchant Rd.

FOR R/W DATA, SEE ROADWAY PLANS

NOTES:
Use Type F Approach Gutters & Type F Approach Slab at each end of bridge. See Std. Dwg. No. 55030F for details of Type F Approach Gutters. For details of approach slab, see Std. Dwg. No. 55040F1.

For "GENERAL NOTES", see Dwg. No. 66251.

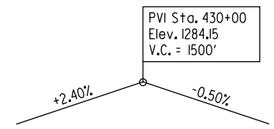

VERTICAL CURVE DATA
Highway 612
(Profile Grade Along Inside Edge of Lane)

CL MEDIAN CURVE DATA
PI = 454+00.41
Δ = 92°18'35" Rt.
D = 1°30'00"
T = 3976.89'
L = 6153.98'
e = .054 Ft./Ft.
R = 3819.72'

NOTE:
For limits of fill slope and concrete riprap, see "LOCATION SKETCH" on Dwg. No. 66251.

CL Construction is on a 1°30'00" curve right. The longitudinal lines of both the bridge and approach slabs shall be constructed on curves concentric with CL Construction. For more information, see "STAKING DIAGRAM" on Dwg. No. 66252.

NOTE:
Stationing is along CL Median. Stations shown in "ELEVATION" are determined by a radial projection from Bridge A Construction Reference Line to CL Median. For more information refer to "STAKING DIAGRAM" on Dwg. No. 66252. Elevations shown are actual top of deck elevations at Bridge A Construction Reference Line. Any vertical dimension to CL Deck is based on actual top of deck elevation at Bridge A Construction Reference Line.

BORING LEGEND

A - Tan, Medium Dense to Very Dense Silty Sand with Gravel.
B - Copper & Dark Brown, Medium Dense to Dense Clayey Sand with Gravel.
C - Dark Brown, Very Dense Silty Gravel with Sand.
D - Brown & Light Brown, Very Dense Silty Sand with Gravel.
E - Copper, Medium Stiff Silt.
F - Dark Tan, Medium Dense Silty Sand with Gravel.
G - Brown & Tan, Very Dense Clayey Sand with Gravel.
H - Copper & Tan, Medium Stiff Silt.
I - Brown & Tan, Medium Dense to Very Dense Silty Sand with Gravel.
J - Brown, Loose Clayey Sand with Gravel.
K - Dark Brown & Light Gray, Medium Dense Silty Gravel with Sand.
L - Brown, Tan & Dark Tan, Dense Silty Gravel with Sand.
M - Brown, Very Stiff Fat Clay with Sand.
N - Tan & Brown, Very Stiff Gravelly Silt with Sand.
O - Chert: White, lt. gray, moderately to intensely weathered.
P - Chert: White, lt. gray, gray, fresh to slightly weathered.
Q - Limestone: Lt. gray, gray, fresh.
R - Chert: White, lt. gray, gray, moderately to intensely weathered.

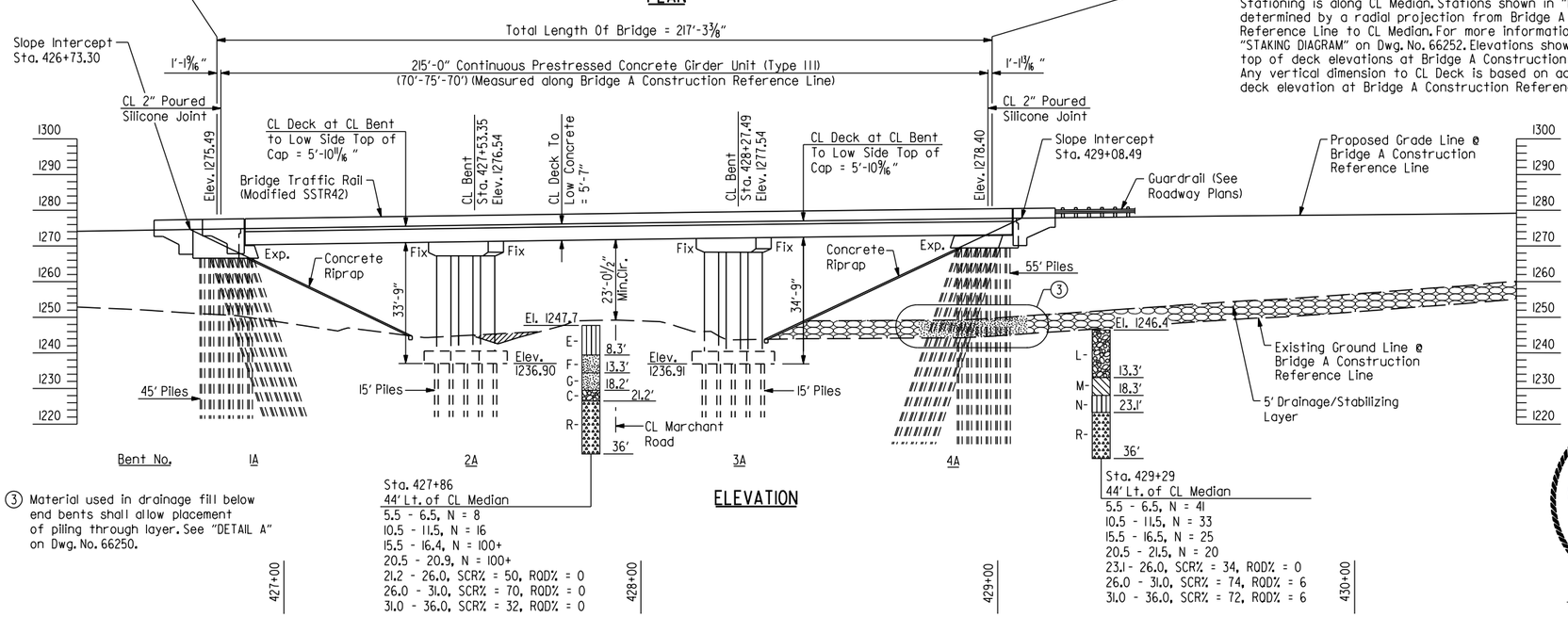

ELEVATION

③ Material used in drainage fill below end bents shall allow placement of piling through layer. See "DETAIL A" on Dwg. No. 66250.

Sta. 427+86
44' Lt. of CL Median
5.5 - 6.5, N = 8
10.5 - 11.5, N = 16
15.5 - 16.4, N = 100+
20.5 - 20.9, N = 100+
21.2 - 26.0, SCR% = 50, ROD% = 0
26.0 - 31.0, SCR% = 70, ROD% = 0
31.0 - 36.0, SCR% = 32, ROD% = 0

Sta. 429+29
44' Lt. of CL Median
5.5 - 6.5, N = 41
10.5 - 11.5, N = 33
15.5 - 16.5, N = 25
20.5 - 21.5, N = 20
23.1 - 26.0, SCR% = 34, ROD% = 0
26.0 - 31.0, SCR% = 74, ROD% = 6
31.0 - 36.0, SCR% = 72, ROD% = 6

427+00 428+00 429+00 430+00

STATE OF ARKANSAS
LICENSED PROFESSIONAL ENGINEER
No. 21243
COLTON S. WYLIE
Digitally Signed 07/28/2023
BRIDGE ENGINEER

SHEET 1 OF 5
LAYOUT OF BRIDGES
HIGHWAY 612 OVER MARCHANT ROAD
HWY. 412 - HWY. 112
(SPRINGDALE BYPASS) (F)
BENTON COUNTY

ROUTE 612 SEC. 2

ARKANSAS STATE HIGHWAY COMMISSION

LITTLE ROCK, ARK.

DRAWN BY: CWT DATE: JUNE 2022 FILENAME: b012326a6_11.dgn
CHECKED BY: JHR DATE: JUNE 2022 SCALE: 1"=20'
DESIGNED BY: WMM DATE: JUNE 2022

BRIDGE NO. A7617 DRAWING NO. 66249

JEskinner 7/28/2023 12:10:34 PM
WORKSPACE: ARDOT Bridge
\\garverinc.local\gdata\Projects\20IT\I7017660 - ARDOT 012326 Hwy 412 - Hwy 112\Drawings\b012326a6.SI01-L0.dgn
REVISED DATE:

DATE REVISED	DATE REVISED	FED. ROAD DIST. NO.	STATE	JOB NO.	SHEET NO.	TOTAL SHEETS
		6	ARK.	012326	461	838
		B7617		LAYOUT		66250

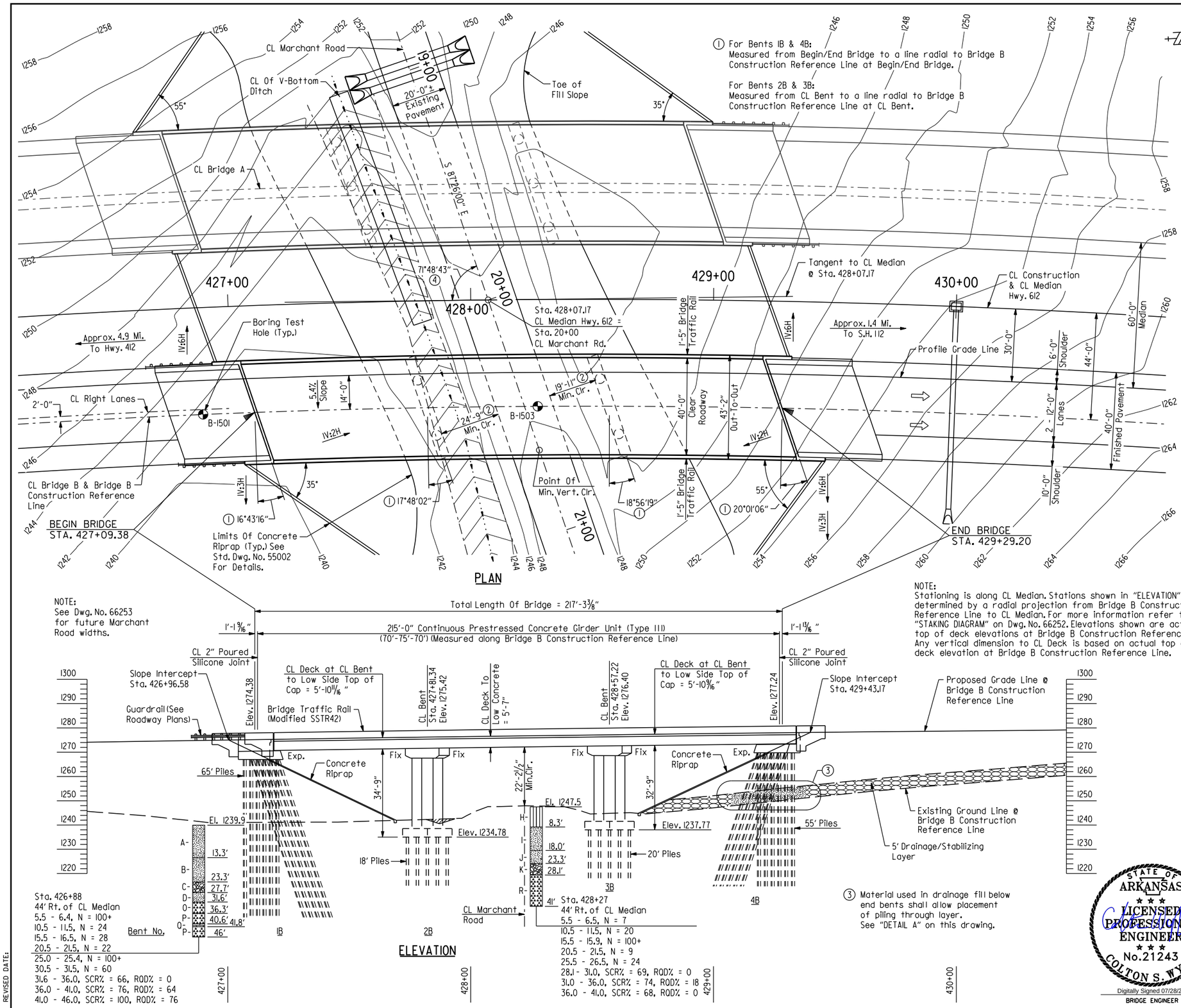

PLAN

① For Bents 1B & 4B:
Measured from Begin/End Bridge to a line radial to Bridge B Construction Reference Line at Begin/End Bridge.

For Bents 2B & 3B:
Measured from CL Bent to a line radial to Bridge B Construction Reference Line at CL Bent.

② Measured from edge of lane

④ Measured from line tangent to CL Median Hwy. 612 at Sta. 428+07.17 and CL Marchant Rd.

FOR R/W DATA, SEE ROADWAY PLANS

NOTES:
Use Type F Approach Gutters & Type F Approach Slab at each end of bridge. See Std. Dwg. No. 55030F for details of Type F Approach Gutters. For details of approach slab, see Std. Dwg. No. 55040FI.

For "BORING LEGEND", see Dwg. No. 66249.

For "GENERAL NOTES", see Dwg. No. 66251.

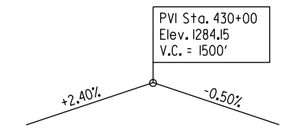

VERTICAL CURVE DATA
Highway 612
(Profile Grade Along Inside Edge of Lane)

CL MEDIAN CURVE DATA
PI = 454+00.41
Δ = 92°18'35" Rt.
D = 1°30'00"
T = 3976.89'
L = 6153.98'
e = .054 Ft./Ft.
R = 3819.72'

CL Construction is on a 1°30'00" curve right. The longitudinal lines of both the bridge and approach slabs shall be constructed on curves concentric with CL Construction. For more information, see "STAKING DIAGRAM" on Dwg. No. 66252.

NOTE:
For limits of fill slope and concrete riprap, see "LOCATION SKETCH" on Dwg. No. 66251.

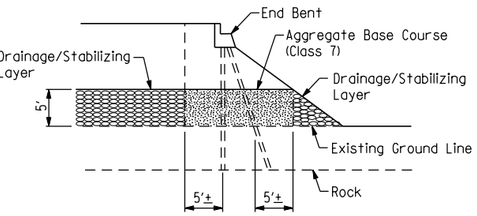

Where a drainage/stabilizing layer is required for embankment construction, aggregate base course (Class 7), in accordance with Section 303.02, shall be placed as shown in areas where piling will be located. Aggregate base course (Class 7) shall be paid for as "COMPACTED EMBANKMENT".

At the Contractor's option, preboring or other methods as approved by the Engineer may be used to facilitate pile installation through the aggregate base course (Class 7) material at these locations. Preboring or other methods used for installation of piles, where rock fill is used for embankment construction, will not be paid for separately but shall be included in Item "STEEL PILING".

DETAIL A

NOTE:
Stationing is along CL Median. Stations shown in "ELEVATION" are determined by a radial projection from Bridge B Construction Reference Line to CL Median. For more information refer to "STAKING DIAGRAM" on Dwg. No. 66252. Elevations shown are actual top of deck elevations at Bridge B Construction Reference Line. Any vertical dimension to CL Deck is based on actual top of deck elevation at Bridge B Construction Reference Line.

NOTE:
See Dwg. No. 66253 for future Marchant Road widths.

Sta. 426+88
44' Rt. of CL Median
5.5 - 6.4, N = 100+
10.5 - 11.5, N = 24
15.5 - 16.5, N = 28
20.5 - 21.5, N = 22
25.0 - 25.4, N = 100+
30.5 - 31.5, N = 60
31.6 - 36.0, SCR% = 66, RQD% = 0
36.0 - 41.0, SCR% = 76, RQD% = 64
41.0 - 46.0, SCR% = 100, RQD% = 76

Sta. 428+27
44' Rt. of CL Median
5.5 - 6.5, N = 7
10.5 - 11.5, N = 20
15.5 - 15.9, N = 100+
20.5 - 21.5, N = 9
25.5 - 26.5, N = 24
28.1 - 31.0, SCR% = 69, RQD% = 0
31.0 - 36.0, SCR% = 74, RQD% = 18
36.0 - 41.0, SCR% = 68, RQD% = 0

ELEVATION

③ Material used in drainage fill below end bents shall allow placement of piling through layer. See "DETAIL A" on this drawing.

STATE OF ARKANSAS
LICENSED PROFESSIONAL ENGINEER
No. 21243
COLTON S. WYLIE
Digitally Signed 07/28/2023
BRIDGE ENGINEER

SHEET 2 OF 5
LAYOUT OF BRIDGES
HIGHWAY 612 OVER MARCHANT ROAD
HWY. 412 - HWY. 112
(SPRINGDALE BYPASS) (F)
BENTON COUNTY
ROUTE 612 SEC. 2

ARKANSAS STATE HIGHWAY COMMISSION
LITTLE ROCK, ARK.

DRAWN BY: CWT DATE: JUNE 2022 FILENAME: b012326b6_l2.dgn
CHECKED BY: JHR DATE: JUNE 2022 SCALE: 1"=20'
DESIGNED BY: WMM DATE: JUNE 2022
BRIDGE NO. B7617 DRAWING NO. 66250

7/28/2023 12:10:36 PM
JESkinner
WORKSPACE: ARDOT Bridge
\\garverinc.local\data\Projects\2017\17017660 - ARDOT 012326 Hwy 412 - Hwy 112\Drawings\b012326x6_SH02-L0.dgn
REVISED DATE:

DATE REVISED	DATE REVISED	FED. ROAD DIST. NO.	STATE	JOB NO.	SHEET NO.	TOTAL SHEETS
		6	ARK.	012326	462	838
		A7617 & B7617		LAYOUT		66251

GENERAL NOTES

BENCH MARK: Vertical Control Data are shown on the Survey Control Data Sheets.

CONSTRUCTION SPECIFICATIONS: Arkansas State Highway and Transportation Department Standard Specifications for Highway Construction (2014 Edition) with applicable Supplemental Specifications and Special Provisions. Unless otherwise noted in the plans, Section and Subsection refer to the Standard Construction Specifications.

DESIGN SPECIFICATIONS: AASHTO LRFD Bridge Design Specifications 4th Edition (2007) with 2008 interim revisions.

LIVE LOADING: HL93

SEISMIC ZONE: 1 SD_1 = 0.12g Site Class = D

SEISMIC OPERATIONAL CLASS: Other

MATERIALS AND STRENGTHS:

Class S(AE) Concrete (Superstructure)	f'c = 4000 psi
Class S Concrete (Prestressed Girders)	f'c = 8000 psi
Class S Concrete (Substructure)	f'c = 3500 psi
Reinforcing Steel (AASHTO M 31 Or M 322, Type A)	fy = 60,000 psi
Structural Steel (ASTM A709, GR. 50W)	Fy = 50,000 psi
Structural Steel (ASTM A709, GR. 36)	Fy = 36,000 psi

BORING LOGS: Boring logs may be obtained from the Construction Contract Procurement Section of the Program Management Division.

STEEL PILING: All piling shall be HP12x53 (Grade 50) and shall be driven with an approved air, steam or diesel hammer to a minimum safe bearing capacity of 97 tons per pile. Drive all piles in Bents 1A, 1B, 4A & 4B to a minimum penetration of 10' below existing ground. Piles in Bents 1A, 1B, 4A & 4B shall be driven after embankment to bottom of cap is in place. Lengths of piling shown are for estimating quantities and for use in determining payment for cut-off and build-up in accordance with Section 805. Actual lengths are to be determined in the field. The Contractor shall use QPL-approved steel H-pile driving points on all piles.

EXPLORATORY HOLES: The Contractor shall drill exploratory holes at Bents 2A, 2B, 3A & 3B in accordance with SP "EXPLORATORY HOLES". The quantities of exploratory holes shown are for bidding purposes only. The actual locations, number and depths of exploratory holes are to be determined in the field by the Engineer.

PREBORING: Preboring is required for all piling in Bents 2A, 2B, 3A & 3B if exploratory holes indicate that the depth to rock is less than 8'. Preboring shall be to a 3' depth into material designated as Chert on the boring legend. The actual size and depths of preboring are to be determined in the field by the Engineer. The Contractor shall be responsible for keeping prebored holes free from debris prior to driving piles and backfilling which may require the use of temporary casings or other approved methods. After driving is completed, the prebored hole shall be backfilled with Class S Concrete to the top of rock and the remaining length of prebored hole backfilled in accordance with Section 805.08(a) to completely fill voids. Any related cost for backfilling and temporary casing will not be paid for directly but shall be considered subsidiary to the item "PREBORING".

PILE FOOTING: The top of the footings at Bents 2A, 2B, 3A & 3B shall be set a minimum of 2'-0" below natural ground or the elevations shown on the plans, whichever is lower. Foundations for footings shall be prepared in accordance with Subsection 801.04. Foundation piles shall not be driven until after the excavation to bottom of footings is complete. Excavations shall be backfilled and compacted to the level of the existing ground in accordance with Subsection 801.08.

TEXTURED COATING FINISH: Class 3 Textured Coating Finish shall be applied to bridge surfaces as specified in Special Provision "TEXTURED COATING FINISH" and in accordance with Subsection 802.19(b)(3). Textured Coating Finish shall not be applied on surfaces where Class 2 Protective Surface Treatment is applied.

BRIDGE DECK: The concrete bridge deck shall be given a tine finish as specified for final finishing in Subsection 802.19 for Class 5 Tined Bridge Roadway Surface Finish.

PROTECTIVE SURFACE TREATMENT: Class 2 Protective Surface Treatment shall be applied to the roadway surface and to the roadway face and top of the bridge traffic rail in accordance with Section 803.

DETAIL DRAWINGS:	DRAWING NO(S):
End Bents	66254-66259
Intermediate Bents	66260-66262
Elastomeric Bearings	66263
215' Cont. Prestressed Conc. Girder Unit	66264-66278
Concrete Riprap	55002
Poured Silicone Joint	55008
Steel Piling	55020
Type F Approach Gutters	55030F
Type F Approach Slab	55040FI
Bridge Traffic Rail	55071 & 66278

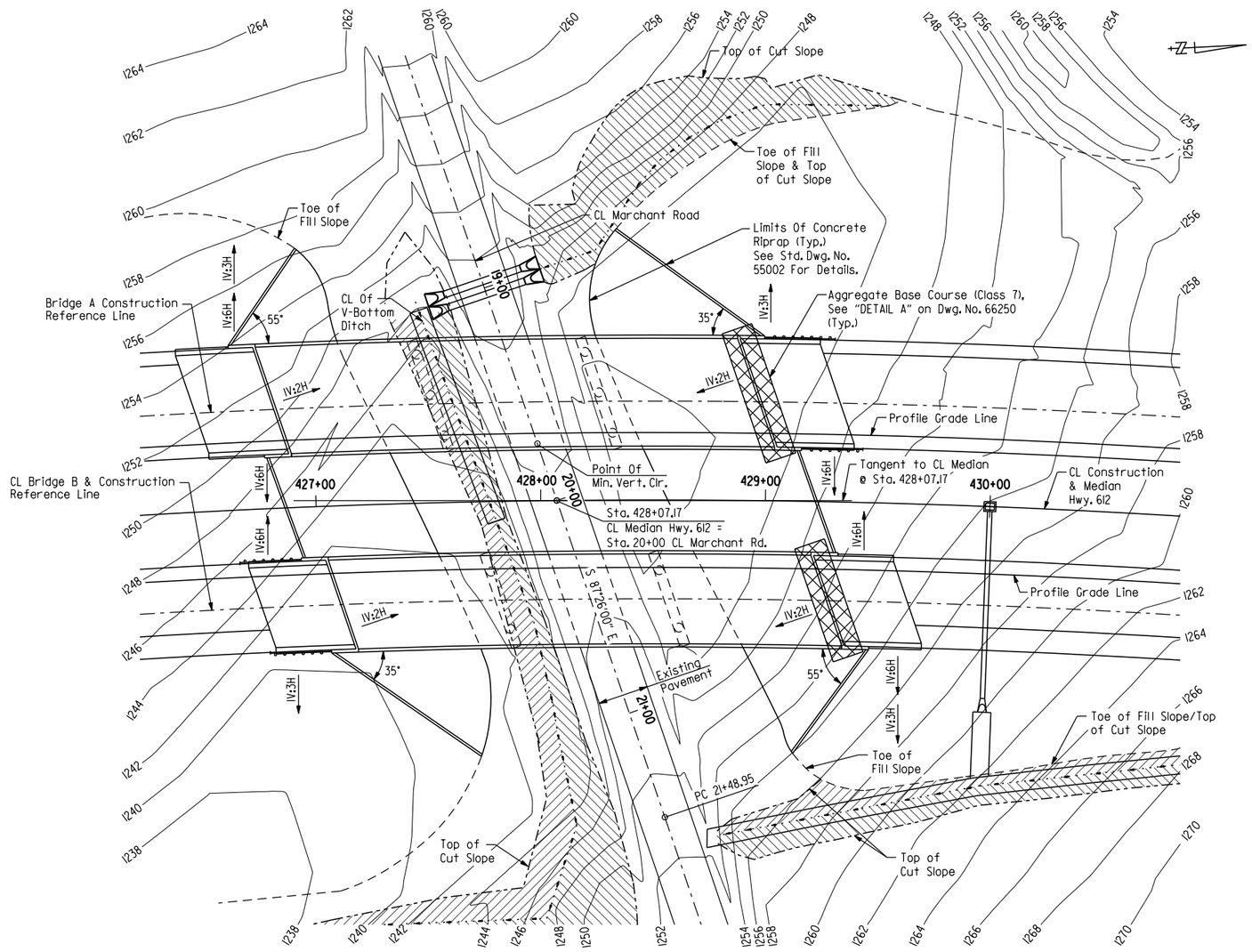

LOCATION SKETCH

STATE OF ARKANSAS
LICENSED PROFESSIONAL ENGINEER
No.21243
COLTON S. WYLIE
Digitally Signed 07/28/2023
BRIDGE ENGINEER

SHEET 3 OF 5
LAYOUT OF BRIDGES
HIGHWAY 612 OVER MARCHANT ROAD
HWY. 412 - HWY. 112
(SPRINGDALE BYPASS) (F)
BENTON COUNTY
ROUTE 612 SEC. 2
ARKANSAS STATE HIGHWAY COMMISSION
LITTLE ROCK, ARK.

DRAWN BY: CWT DATE: JUNE 2022 FILENAME: b012326m6_13.dgn
CHECKED BY: JHR DATE: JUNE 2022 SCALE: 1"=30'
DESIGNED BY: WMM DATE: JUNE 2022
BRIDGE NO. A7617 & B7617 DRAWING NO. 66251

JEskinner 7/28/2023 12:10:37 PM
WORKSPACE: ARDOT Bridge
\\garverinc.local\gdata\Projects\2017\17017660 - ARDOT 012326 Hwy 412 - Hwy 112\Drawings\b012326x6.5103-GN.dgn
REVISED DATE:

DATE REVISED	DATE REVISED	FED. ROAD DIST. NO.	STATE	JOB NO.	SHEET NO.	TOTAL SHEETS
		6	ARK.	012326	463	838
		A7617 & B7617		LAYOUT		66252

① For Bents 1A & 4A:
Measured from Begin/End Bridge to a line radial to Bridge A Construction Reference Line at Begin/End Bridge.

For Bents 2A & 3A:
Measured from CL Bent to a line radial to Bridge A Construction Reference Line at CL Bent.

For Bents 1B & 4B:
Measured from Begin/End Bridge to a line radial to Bridge B Construction Reference Line at Begin/End Bridge.

For Bents 2B & 3B:
Measured from CL Bent to a line radial to Bridge B Construction Reference Line at CL Bent.

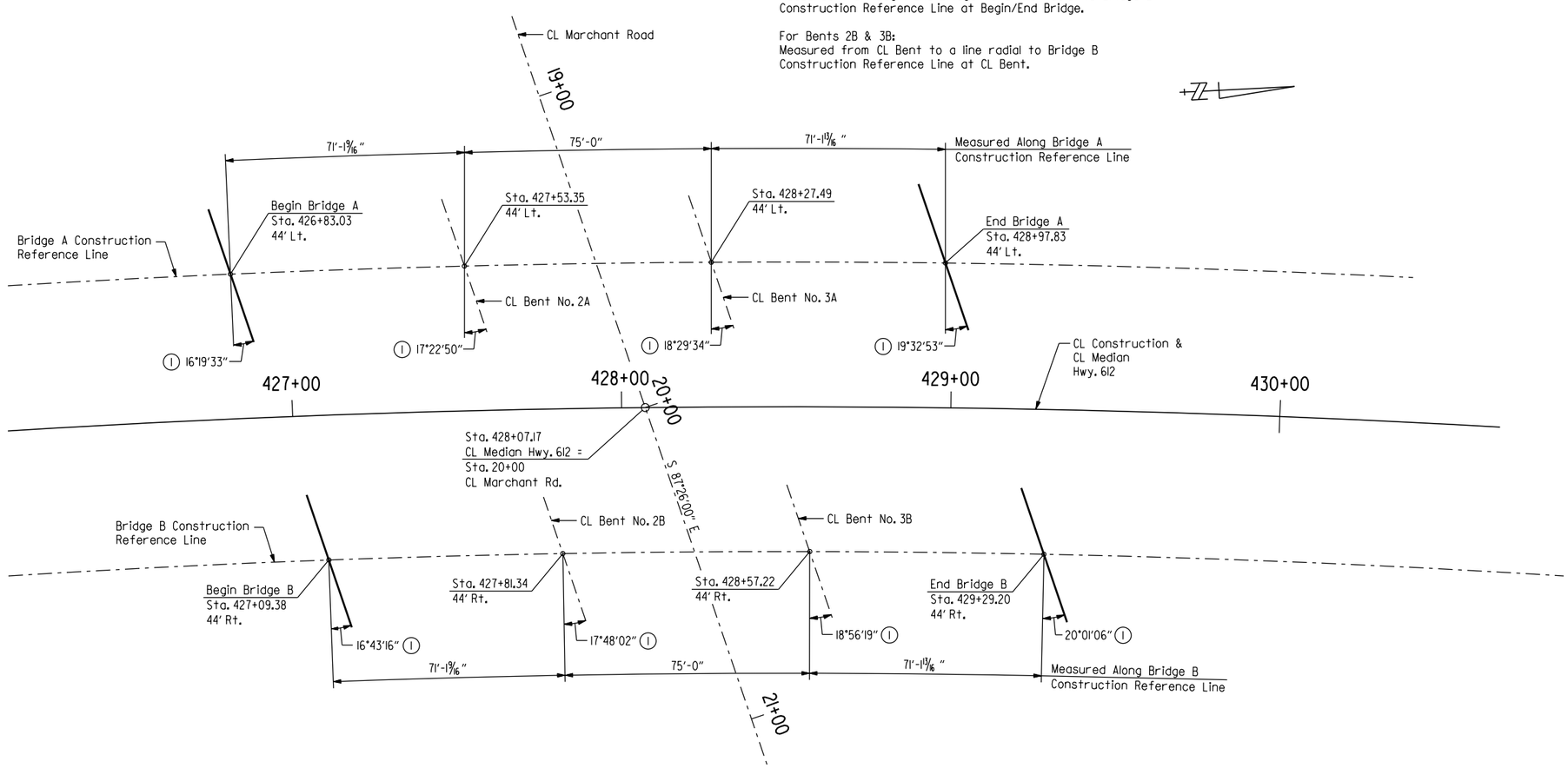

STAKING DIAGRAM

PVI Sta. 430+00
Elev. 1284.15
V.C. = 1500'
+2.40%
-0.50%

VERTICAL CURVE DATA
Highway 612
(Profile Grade Along Inside Edge of Lane)

CL MEDIAN CURVE DATA
PI = 454+00.41
Δ = 92°18'35" Rt.
D = 1°30'00"
T = 3976.89'
L = 6153.98'
e = .054 Ft./Ft.
R = 3819.72'

NOTE:
Stationing for the project is along CL Median and CL Construction. Bridge Construction Reference Line is on a horizontal curve concentric to CL Median. The bent stations shown are determined by projecting a radial line from CL Median to Bridge Construction Reference Line. The offsets shown are measured along radial lines. The total Bridge length, span lengths, and CL joint to beginning and end of bridge dimensions are measured along Bridge Construction Reference Line. Deck elevations are at Bridge Construction Reference Line. All bents are constructed along lines skewed from radial lines.

STATE OF ARKANSAS
LICENSED PROFESSIONAL ENGINEER
No. 21243
COLTON S. WYLIE
Digitally Signed 07/28/2023
BRIDGE ENGINEER

SHEET 4 OF 5
LAYOUT OF BRIDGES
HIGHWAY 612 OVER MARCHANT ROAD
HWY. 412 - HWY. 112
(SPRINGDALE BYPASS) (F)
BENTON COUNTY
ROUTE 612 SEC. 2

ARKANSAS STATE HIGHWAY COMMISSION
LITTLE ROCK, ARK.

DRAWN BY: CWT DATE: JUNE 2022 FILENAME: b012326m6_14.dgn
CHECKED BY: JHR DATE: JUNE 2022 SCALE: 1"=20'
DESIGNED BY: WMM DATE: JUNE 2022
BRIDGE NO. A7617 & B7617 DRAWING NO. 66252

JEskinner 7/28/2023 12:10:37 PM
WORKSPACE: ARDOT Bridge
\\garverinc.local\gdata\Projects\2017\17017660 - ARDOT 012326 Hwy 412 - Hwy 112\Drawings\b012326x6_S104-ST.dgn
REVISED DATE:

DATE REVISED	DATE REVISED	FED. ROAD DIST. NO.	STATE	JOB NO.	SHEET NO.	TOTAL SHEETS
		6	ARK.	012326	464	838
		A7617 & B7617		LAYOUT		66253

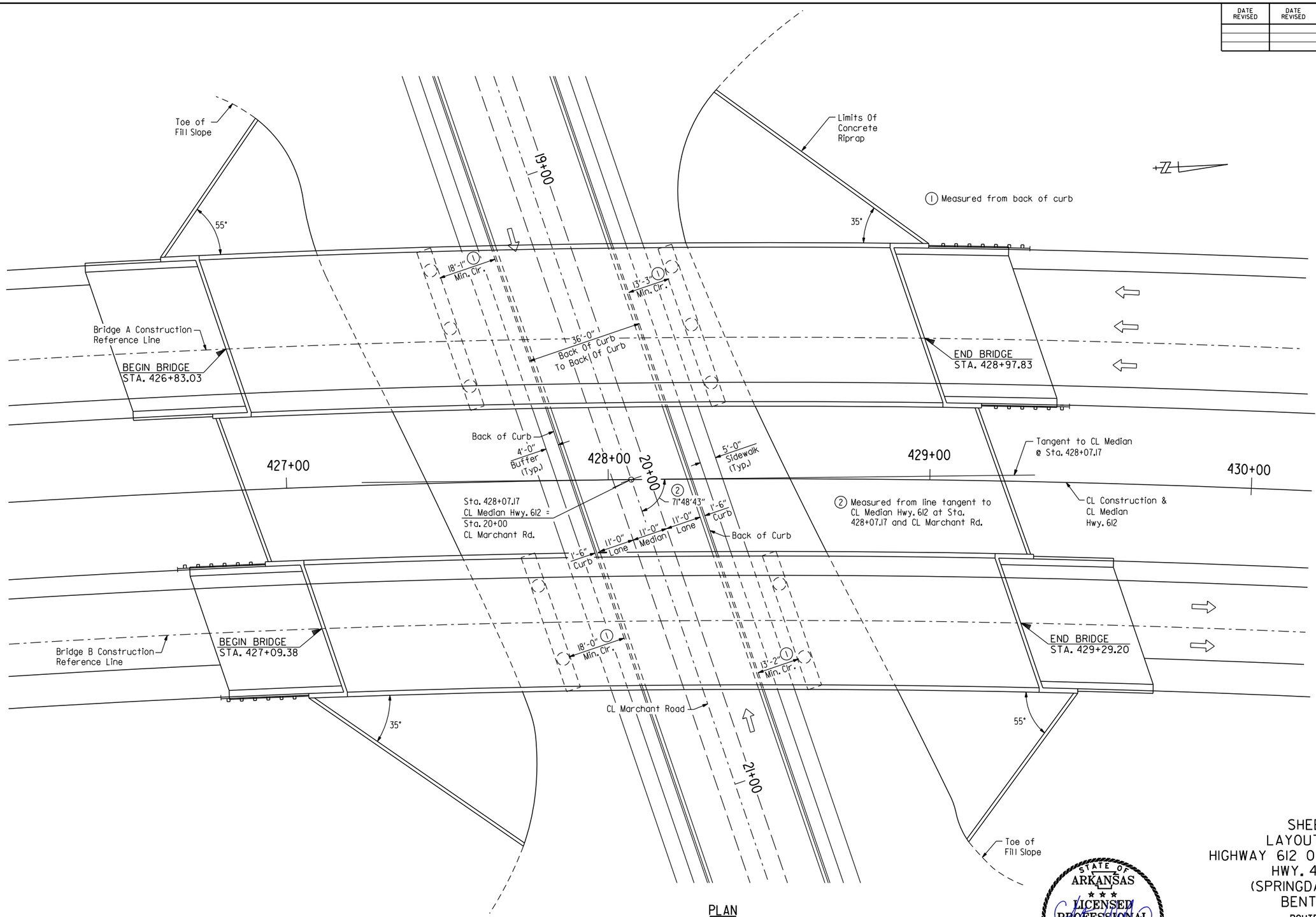

PLAN

(Showing Horizontal Clearances With Future Improvements To Marchant Road)

STATE OF ARKANSAS
LICENSED PROFESSIONAL ENGINEER
No. 21243
COLTON S. WYLIE

Digitally Signed 07/28/2023

BRIDGE ENGINEER

SHEET 5 OF 5
LAYOUT OF BRIDGES
HIGHWAY 612 OVER MARCHANT ROAD
HWY. 412 - HWY. 112
(SPRINGDALE BYPASS) (F)
BENTON COUNTY

ROUTE 612 SEC. 2

ARKANSAS STATE HIGHWAY COMMISSION

LITTLE ROCK, ARK.

DRAWN BY: CWT DATE: JUNE 2022 FILENAME: b012326m5_15.dgn
CHECKED BY: JHR DATE: JUNE 2022 SCALE: 1"=15'
DESIGNED BY: WMM DATE: JUNE 2022

BRIDGE NO. A7617 & B7617 DRAWING NO. 66253

JEskinner 7/28/2023 12:10:38 PM
WORKSPACE: ARDOT Bridge
\\garverinc.local\gdata\Projects\2017\17017660 - ARDOT 012326 Hwy 412 - Hwy 112\Drawings\b012326x6_SI05-FU.dgn
REVISED DATE:

DATE REVISED	DATE REVISED	FED. ROAD DIST. NO.	STATE	JOB NO.	SHEET NO.	TOTAL SHEETS
		6	ARK.	012326	465	838
		A7617		END BENT DETAILS		66254

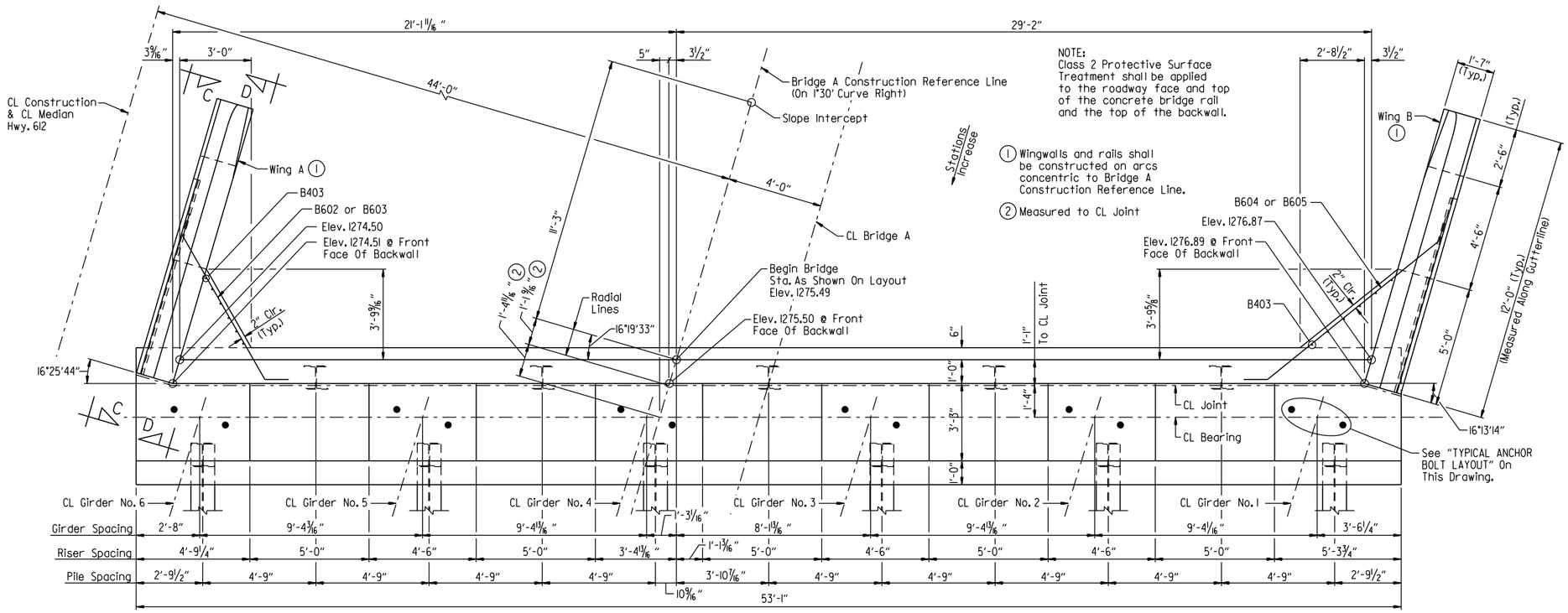

PLAN - END BENT NO. IA

Scale: 3/8" = 1'-0"

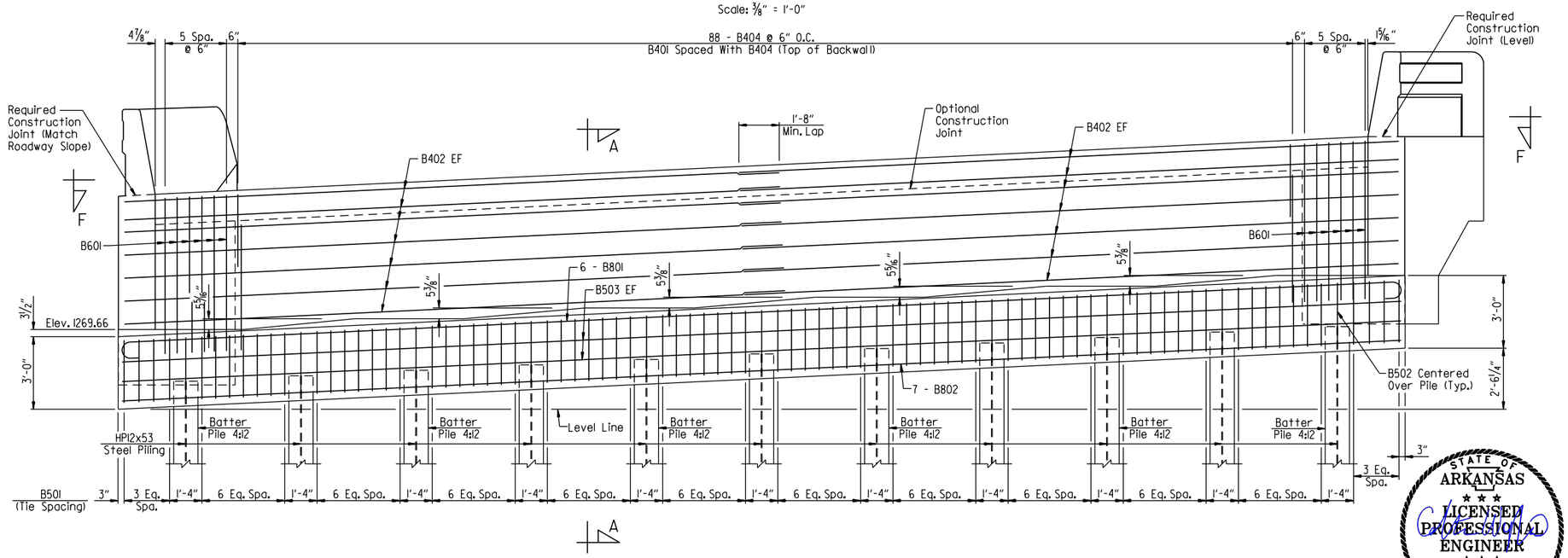

ELEVATION - END BENT NO. IA

(Looking Back)
Scale: 3/8" = 1'-0"

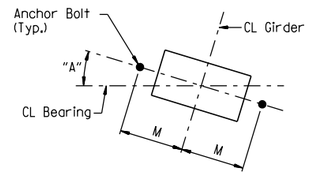

TYPICAL ANCHOR BOLT LAYOUT

No Scale

GENERAL NOTES

Concrete shall be Class "S" with a minimum 28 day compressive strength f'c = 3,500 psi and shall be poured in the dry. All exposed corners shall be chamfered 3/4" unless otherwise noted.

All reinforcing steel shall be Grade 60 (yield strength = 60,000 psi) conforming to AASHTO M 31 or M 322, Type A, with mill test reports.

Class 3 Textured Coating Finish shall be applied to bridge surfaces as specified in Special Provision "TEXTURED COATING FINISH" and in accordance with Subsection 802.19(b)(3).

Structural steel in end bents shall be ASTM A709, Gr. 50W and shall be paid for as "STRUCTURAL STEEL IN BEAM SPANS (ASTM A709, GR. 50W)".

Top reinforcing bars in cap shall be properly placed to avoid interference with anchor bolts or sheet metal sleeves.

For additional information, see LAYOUT.

NOTES:
For "SECTION A-A", "VIEW C-C" & "VIEW D-D", see Dwg. No. 66258.

For "BAR LIST", "BAR BENDING DIAGRAMS" & "VIEW F-F" see Dwg. No. 66259.

For details of elastomeric bearing, anchor bolts, and dimension M, see Dwg. No. 66263.

LEGEND

EF = Each Face

TABLE OF VARIABLES		
Bent No.	Girder No.	"A"
1A	1	16°44'36"
	2	16°50'37"
	3	16°50'37"
	4	16°50'37"
	5	16°50'37"
	6	16°56'43"
4A	1	18°52'39"
	2	18°59'30"
	3	18°59'30"
	4	18°59'30"
	5	18°59'30"
	6	19°06'25"

STATE OF ARKANSAS
LICENSED PROFESSIONAL ENGINEER
No. 21243
COLTON S. WYLIE
Digitally Signed 07/28/2023
BRIDGE ENGINEER

SHEET 1 OF 6
DETAILS OF END BENTS
HIGHWAY 612 OVER MARCHANT ROAD

ROUTE SEC.

ARKANSAS STATE HIGHWAY COMMISSION

LITTLE ROCK, ARK.

DRAWN BY: CSW DATE: JAN. 2023 FILENAME: b012326a6_a1.dgn
CHECKED BY: JES DATE: MAR. 2023 SCALE: AS SHOWN
DESIGNED BY: CSW DATE: JAN. 2023

BRIDGE NO. A7617 DRAWING NO. 66254

JESkinner 7/28/2023 12:10:40 PM
WORKSPACE: ARDOT Bridge
\\garverinc.local\gdata\Projects\20IT\170I660 - ARDOT 012326 Hwy 412 - Hwy 112\Drawings\b012326x6_S201-AB.dgn
REVISED DATE:

DATE REVISED	DATE REVISED	FED. ROAD DIST. NO.	STATE	JOB NO.	SHEET NO.	TOTAL SHEETS
		6	ARK.	012326	466	838
		A7617	END BENT DETAILS			66255

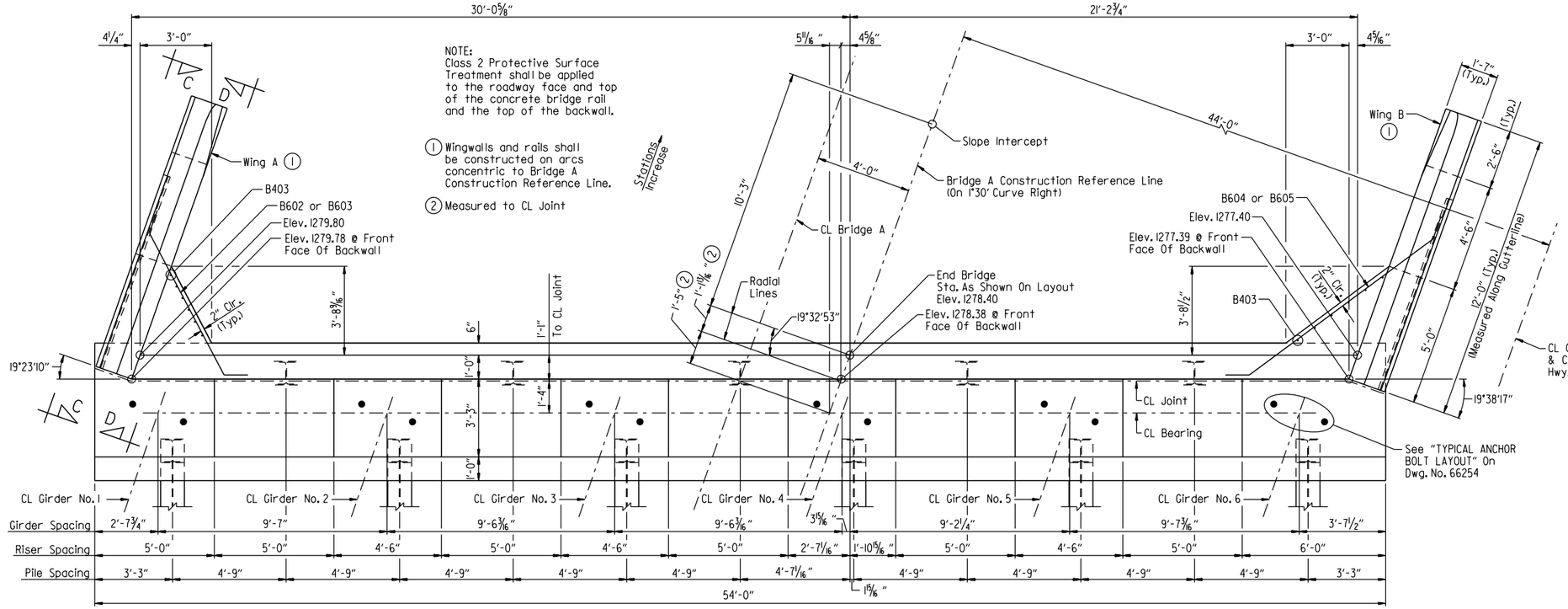

PLAN - END BENT NO. 4A

Scale: 3/8" = 1'-0"

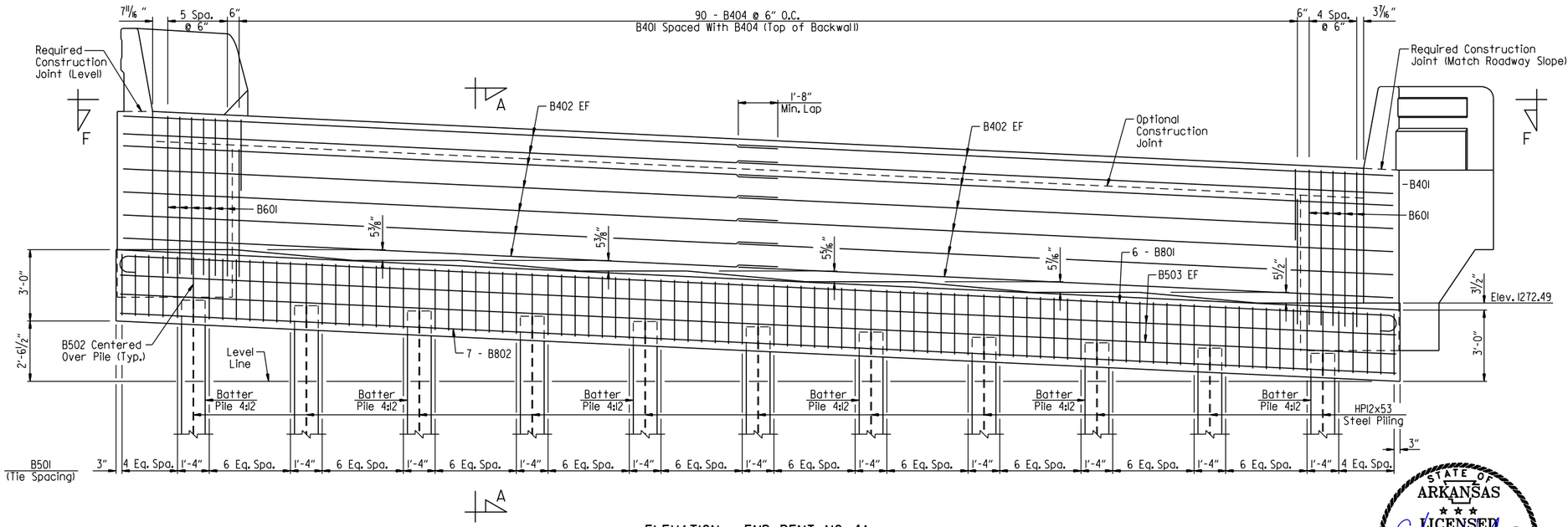

ELEVATION - END BENT NO. 4A

(Looking Forward)
Scale: 3/8" = 1'-0"

NOTES
For "GENERAL NOTES", see Dwg. No. 66254.

For "SECTION A-A", "VIEW C-C" & "VIEW D-D", see Dwg. No. 66258.

For "BAR LIST", "BAR BENDING DIAGRAMS" & "VIEW F-F", see Dwg. No. 66259.

For details of elastomeric bearing and anchor bolts, see Dwg. No. 66263.

LEGEND

EF = Each Face

STATE OF ARKANSAS
LICENSED PROFESSIONAL ENGINEER
No. 21243
COLTON S. WYLIE
Digitally Signed 07/28/2023
BRIDGE ENGINEER

SHEET 2 OF 6
DETAILS OF END BENTS
HIGHWAY 612 OVER MARCHANT ROAD

ROUTE SEC.

ARKANSAS STATE HIGHWAY COMMISSION
LITTLE ROCK, ARK.

DRAWN BY: CSW DATE: JAN. 2023 FILENAME: b012326a6_a2.dgn
CHECKED BY: JES DATE: MAR. 2023 SCALE: AS SHOWN
DESIGNED BY: CSW DATE: JAN. 2023

BRIDGE NO. A7617 DRAWING NO. 66255

JESkinner 7/28/2023 12:10:40 PM
WORKSPACE: ARDOT Bridge
\\garverinc.local\gdata\Projects\20IT\170I660 - ARDOT 012326 Hwy 412 - Hwy 112\Drawings\b012326x6_S202-AB.dgn
REVISED DATE:

DATE REVISED	DATE REVISED	FED. ROAD DIST. NO.	STATE	JOB NO.	SHEET NO.	TOTAL SHEETS
		6	ARK.	012326	467	838
		B7617		END BENT DETAILS		66256

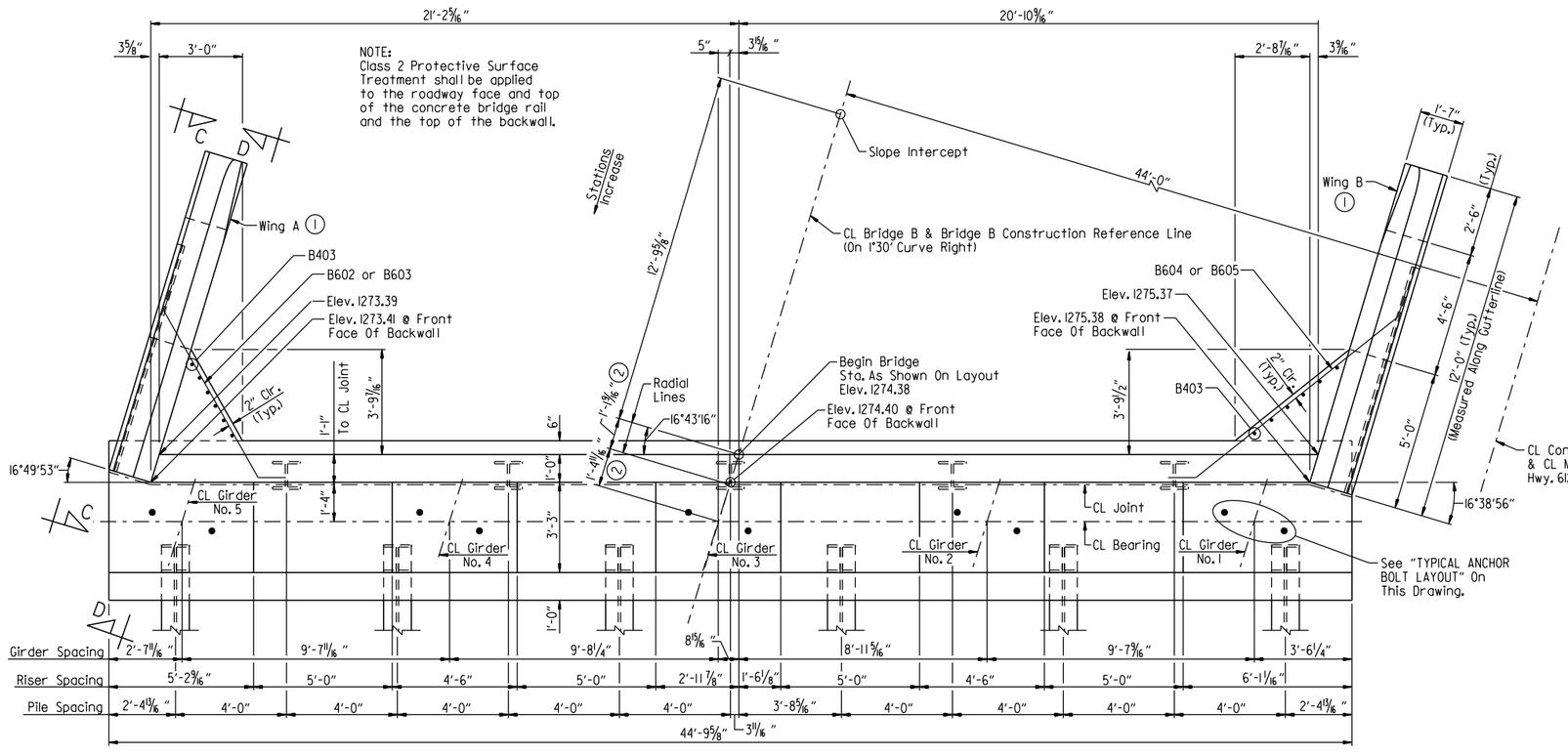

PLAN - END BENT NO. 1B
Scale: 3/8" = 1'-0"

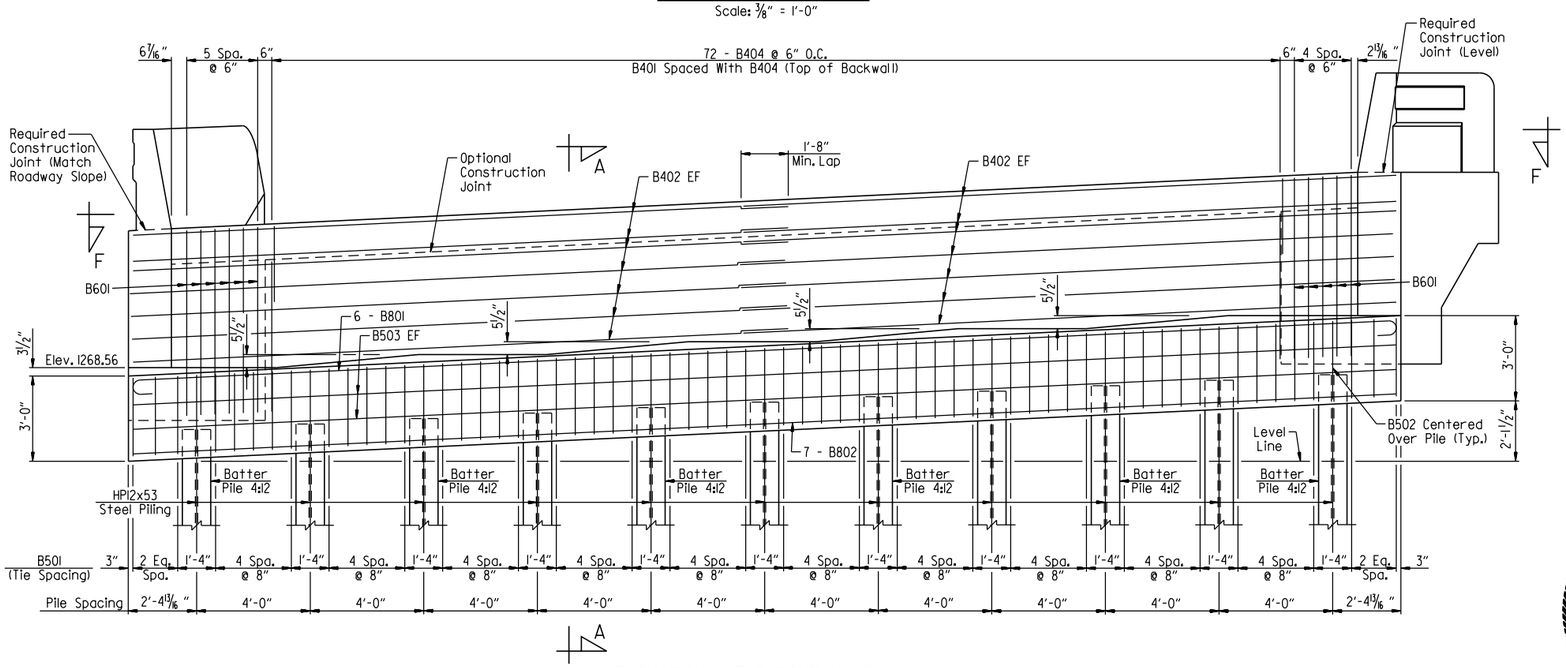

ELEVATION - END BENT NO. 1B
(Looking Back)
Scale: 3/8" = 1'-0"

(1) Wingwalls and rails shall be constructed on arcs concentric to CL Bridge B.

(2) Measured to CL Joint

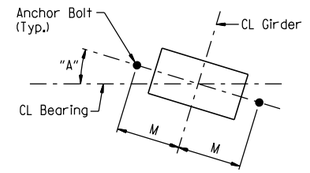

TYPICAL ANCHOR BOLT LAYOUT
No Scale

NOTES:
For "GENERAL NOTES", see Dwg. No. 66254.

For "SECTION A-A", "VIEW C-C" & "VIEW D-D", see Dwg. No. 66258.

For "BAR LIST", "BAR BENDING DIAGRAMS" & "VIEW F-F", see Dwg. No. 66259.

For details of elastomeric bearing, anchor bolts, and dimension M, see Dwg. No. 66263.

LEGEND
EF = Each Face

TABLE OF VARIABLES

Bent No.	Girder No.	"A"
1B	1	17°10'57"
	2	17°16'10"
	3	17°16'10"
	4	17°16'10"
	5	17°21'26"
4B	1	19°22'16"
	2	19°28'11"
	3	19°28'11"
	4	19°28'11"
	5	19°34'10"

STATE OF ARKANSAS
LICENSED PROFESSIONAL ENGINEER
No. 21243
COLTON S. WYLIE
Digitally Signed 07/28/2023
BRIDGE ENGINEER

SHEET 3 OF 6
DETAILS OF END BENTS
HIGHWAY 612 OVER MARCHANT ROAD
ROUTE SEC.
ARKANSAS STATE HIGHWAY COMMISSION
LITTLE ROCK, ARK.

DRAWN BY: HEW DATE: AUG. 2011 FILENAME: b012326b6_a3.dgn
CHECKED BY: AJK DATE: JAN. 2012 SCALE: AS SHOWN
DESIGNED BY: JES DATE: AUG. 2011
BRIDGE NO. B7617 DRAWING NO. 66256

JESkinner 7/28/2023 12:10:41 PM
WORKSPACE: ARDOT Bridge
\\garverinc.local\gdata\Projects\2017\17017660 - ARDOT 012326 Hwy 412 - Hwy 112\Drawings\b012326x6.S203-AB.dgn
REVISED DATE:

DATE REVISED	DATE REVISED	FED. ROAD DIST. NO.	STATE	JOB NO.	SHEET NO.	TOTAL SHEETS
		6	ARK.	012326	468	838
		B7617		END BENT DETAILS		66257

(1) Wingwalls and rails shall be constructed on arcs concentric to CL Bridge B.

(2) Measured to CL Joint

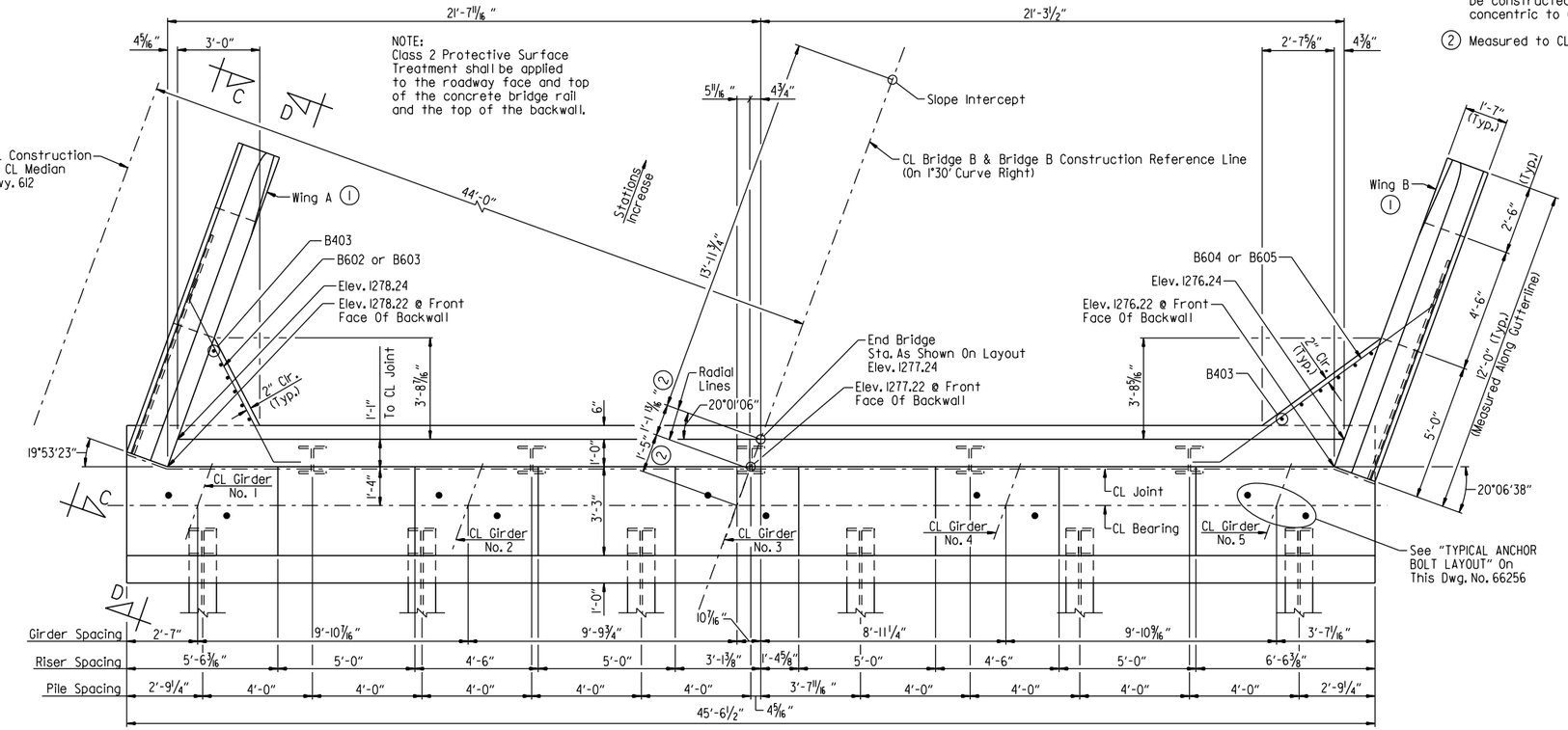

PLAN - END BENT NO. 4B

Scale: 3/8" = 1'-0"

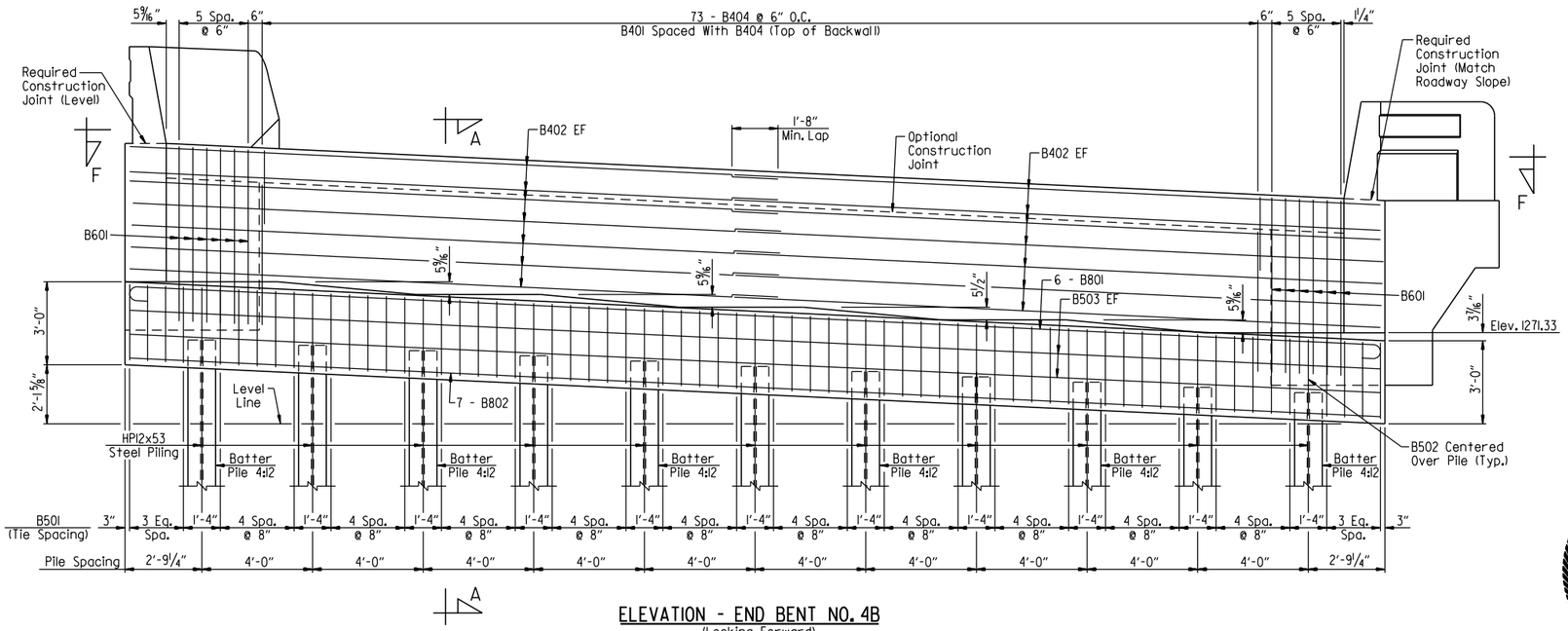

ELEVATION - END BENT NO. 4B

(Looking Forward)
Scale: 3/8" = 1'-0"

NOTES:
For "GENERAL NOTES", see Dwg. No. 66254.

For "SECTION A-A", "VIEW C-C" & "VIEW D-D", see Dwg. No. 66258.

For "BAR LIST", "BAR BENDING DIAGRAMS", & "VIEW F-F", see Dwg. No. 66259.

For details of elastomeric bearing and anchor bolts, see Dwg. No. 66263.

LEGEND

EF = Each Face

STATE OF ARKANSAS
LICENSED PROFESSIONAL ENGINEER
No. 21243
COLTON S. WYLIE
Digitally Signed 07/28/2023
BRIDGE ENGINEER

SHEET 4 OF 6
DETAILS OF END BENTS
HIGHWAY 612 OVER MARCHANT ROAD

ROUTE SEC.

ARKANSAS STATE HIGHWAY COMMISSION

LITTLE ROCK, ARK.

DRAWN BY: HEW DATE: AUG. 2011 FILENAME: b012326b6_a4.dgn
CHECKED BY: AJK DATE: JAN. 2012 SCALE: AS SHOWN
DESIGNED BY: JES DATE: AUG. 2011

BRIDGE NO. B7617 DRAWING NO. 66257

JESkinner 7/28/2023 12:10:41PM
WORKSPACE: ARDOT Bridge
\\garverinc.local\gdata\Projects\2017\17017660 - ARDOT 012326 Hwy 412 - Hwy 112\Drawings\b012326x6_5204-AB.dgn
REVISED DATE:

DATE REVISED	DATE REVISED	FED. ROAD DIST. NO.	STATE	JOB NO.	SHEET NO.	TOTAL SHEETS
		6	ARK.	012326	469	838
		A7617 & B7617		END BENT DETAILS		66258

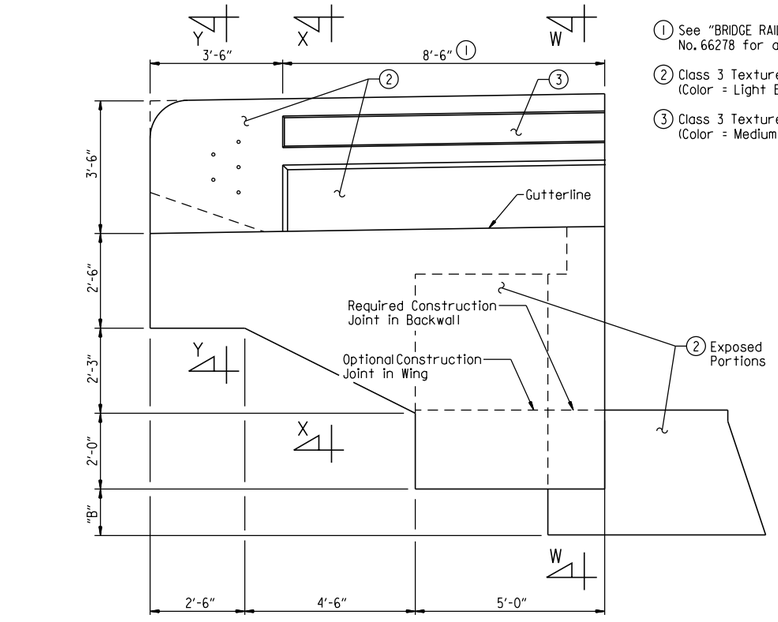

VIEW C-C
Scale: 1/2" = 1'-0"

(1) See "BRIDGE RAIL AESTHETIC DETAIL" on Dwg. No. 66278 for additional information.

(2) Class 3 Textured Coating Finish (Color = Light Brown, Color Chip No. 33522)

(3) Class 3 Textured Coating Finish (Color = Medium Brown, Color Chip No. 30219)

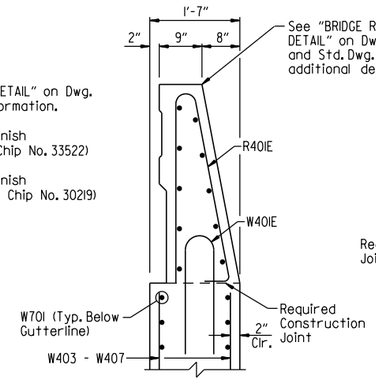

SECTION X-X
Scale: 3/4" = 1'-0"

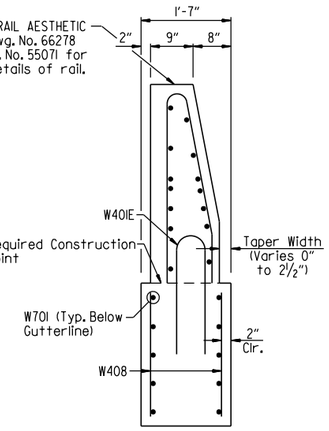

SECTION Y-Y
Scale: 3/4" = 1'-0"

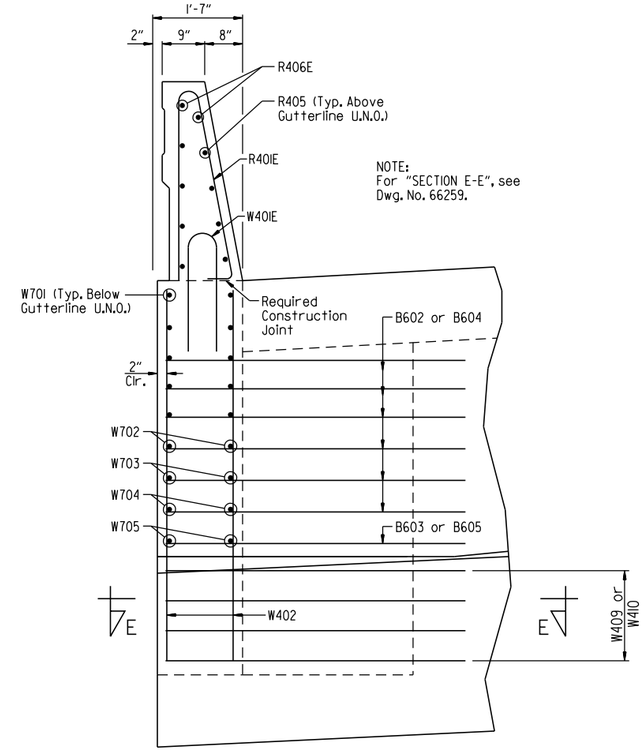

SECTION W-W
Scale: 3/4" = 1'-0"

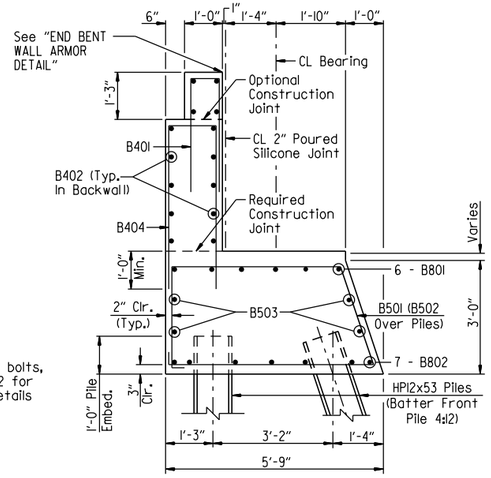

SECTION A-A
Scale: 1/2" = 1'-0"

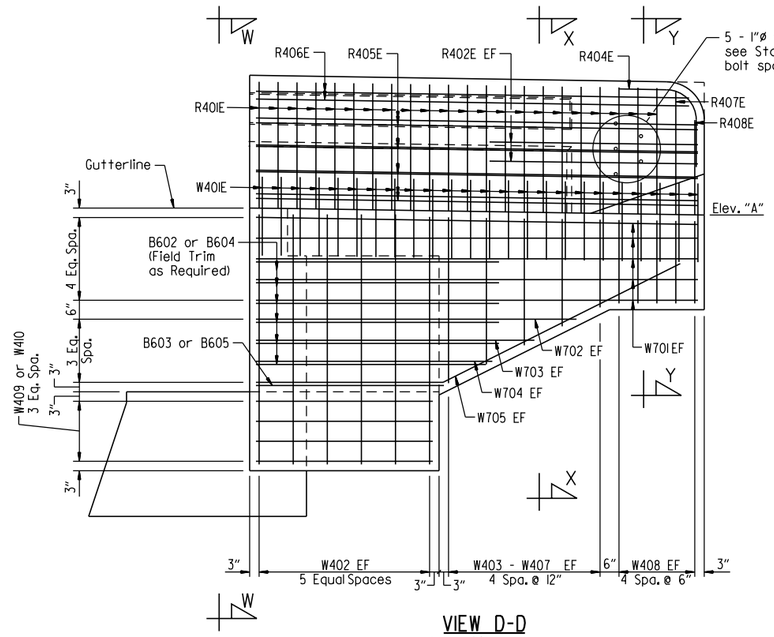

VIEW D-D
Scale: 1/2" = 1'-0"

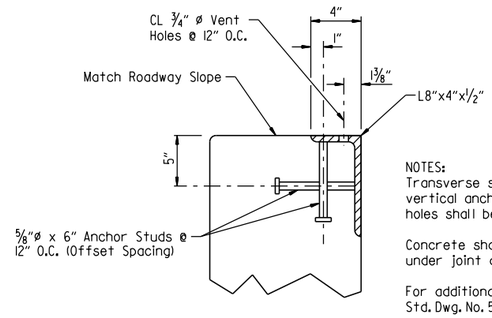

NOTES:
Transverse spacing between vertical anchor studs and vent holes shall be 6".

Concrete shall be hand packed under joint armor.

For additional joint details, see Std. Dwg. No. 55008.

END BENT WALL ARMOR DETAIL
No Scale

NOTE:
No portion of the backwall shall be poured before the girders are in place. The portion of the backwall above the optional construction joint at the paving bracket shall not be placed until the adjacent deck pour has been made. Refer to the "EXPANSION DEVICE INSTALLATION AT END BENTS" note on Std. Dwg. 55008. No heavy construction equipment shall be allowed within 10' of the backwall before the deck concrete placement for the adjacent span has been completed.

TABLE OF VARIABLES

Bent No.	Wing	Elev. "A"	"B"
1A	A	1274.33	1'-3 1/2"
	B	1276.71	1'-0"
4A	A	1279.92	1'-0"
	B	1277.52	1'-3 1/2"
1B	A	1273.20	1'-3 11/16"
	B	1275.23	1'-1 5/8"
4B	A	1278.39	1'-4 5/16"
	B	1276.32	1'-5 1/16"

LEGEND
EF = Each Face
U.N.O. = Unless Noted Otherwise

STATE OF ARKANSAS
LICENSED PROFESSIONAL ENGINEER
No.21243
COLTON S. WYLIE
Digitally Signed 07/28/2023
BRIDGE ENGINEER

SHEET 5 OF 6
DETAILS OF END BENTS
HIGHWAY 612 OVER MARCHANT ROAD
ROUTE SEC.
ARKANSAS STATE HIGHWAY COMMISSION
LITTLE ROCK, ARK.

DRAWN BY: HEW DATE: SEPT. 2011 FILENAME: b012326m6_a5.dgn
CHECKED BY: AJK DATE: JAN. 2012 SCALE: AS SHOWN
DESIGNED BY: JES DATE: SEPT. 2011
BRIDGE NO. A7617 & B7617 DRAWING NO. 66258

JESkinner 7/28/2023 12:10:42 PM
WORKSPACE: ARDOT Bridge
\\garverinc.local\data\Projects\2017\170176\0 - ARDOT 012326 Hwy 412 - Hwy 112\Drawings\b012326x6_S205-MD.dgn
REVISED DATE:

DATE REVISED	DATE REVISED	FED. ROAD DIST. NO.	STATE	JOB NO.	SHEET NO.	TOTAL SHEETS
		6	ARK.	012326	470	838
		A7617 & B7617		END BENT DETAILS		66259

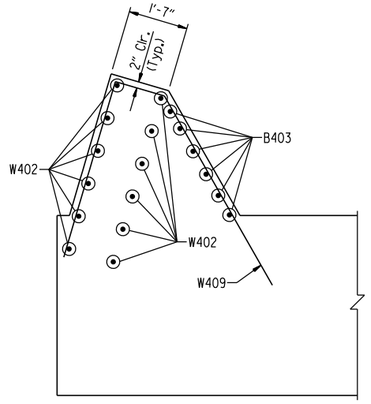

SECTION E-E (WING A)
Scale: 1/2" = 1'-0"

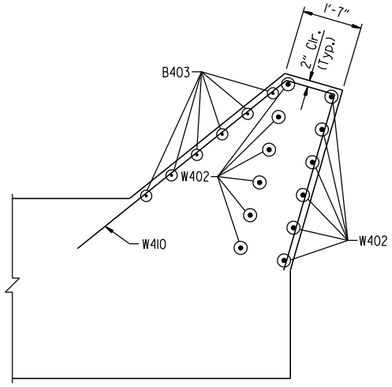

SECTION E-E (WING B)
Scale: 1/2" = 1'-0"

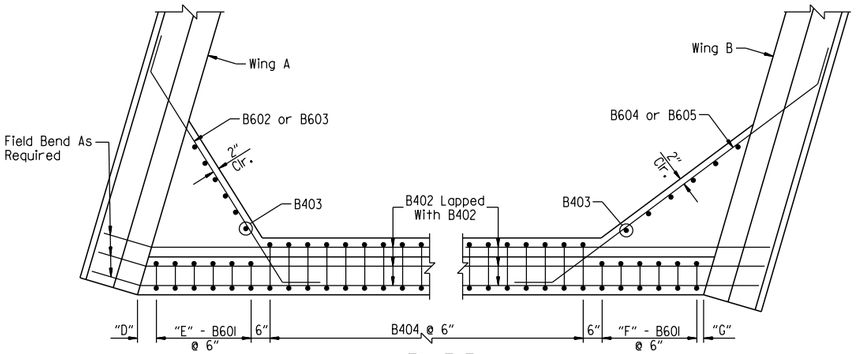

VIEW F-F
Scale: 1/2" = 1'-0"

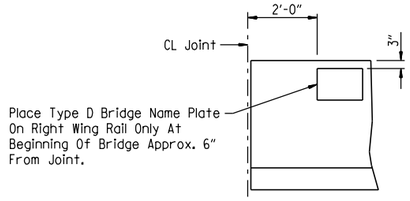

VIEW SHOWING LOCATION OF NAME PLATE
Scale: 1/2" = 1'-0"

BAR LIST - BRIDGE A

	MARK	NO. REQ'D.	LENGTH	"A"	"B"	PIN DIA.
BENT NO. 1A	B401	88	6'-6"	8"	3'-0"	2"
	B402	28	27'-2"			Str.
	B403	12	5'-2"			Str.
	B404	88	11'-8"	1'-2"	5'-4"	2"
	B501	78	15'-7"			2½"
	B502	11	9'-6½"			2½'
	B503	4	52'-9"			Str.
	B601	12	12'-10"	8"	6'-3"	4½"
	B602	6	9'-0"	7'-0"		4½"
	B603	1	7'-4"	5'-4"		4½"
	B604	6	11'-4"	9'-4"		4½"
	B605	1	9'-3"	7'-3"		4½"
	B801	6	54'-7"	52'-9"		6"
	B802	7	52'-9"			Str.
	W402	24	6'-6"			Str.
BENT NO. 4A	B401	90	6'-6"	8"	3'-0"	2"
	B402	28	27'-7"			Str.
	B403	12	4'-11"			Str.
	B404	90	11'-8"	1'-2"	5'-4"	2"
	B501	80	15'-7"			2½"
	B502	11	9'-6½"			2½'
	B503	4	53'-8"			Str.
	B601	11	12'-10"	8"	6'-3"	4½"
	B602	6	8'-8½"	6'-8½"		4½"
	B603	1	6'-2"	5'-2"		4½"
	B604	6	11'-8½"	9'-8½"		4½"
	B605	1	8'-6"	7'-6"		4½"
	B801	6	55'-6"	53'-8"		6"
	B802	7	53'-8"			Str.
	W402	24	6'-2"			Str.
COMMON BARS	R401E	44	7'-6"			3"
	R402E	8	5'-6"			Str.
	R404E	2	3'-8"			8½"
	R405E	16	11'-8"			Str.
	R406E	4	11'-5"			Str.
	R407E	2	6'-8"			3"
	R408E	2	5'-1"			3"
	W401E	24	4'-7"			6"
	W403 To W407	2 ea.	4'-4" to 2'-3"			Str.
	W408	10	2'-1"			Str.
	W409	4	11'-9"			3"
	W410	4	13'-1"			3"
	W701	20	11'-8"			Str.
	W702	4	8'-5½"			Str.
	W703	4	7'-4"			Str.
	W704	4	6'-2"			Str.
	W705	4	11'-10"			5¼"

BAR LIST - BRIDGE B

	MARK	NO. REQ'D.	LENGTH	"A"	"B"	PIN DIA.
BENT NO. 1B	B401	72	6'-6"	8"	3'-0"	2"
	B402	28	23'-1"			Str.
	B403	12	5'-2"			Str.
	B404	72	11'-8"	1'-2"	5'-4"	2"
	B501	56	15'-7"			2½"
	B502	11	9'-6½"			2½'
	B503	4	44'-6"			Str.
	B601	11	12'-10"	8"	6'-3"	4½"
	B602	6	9'-0"	7'-0"		4½"
	B603	1	6'-4"	5'-4"		4½"
	B604	6	11'-5"	9'-5"		4½"
	B605	1	8'-4"	7'-4"		4½"
	B801	6	46'-4"	44'-6"		6"
	B802	7	44'-6"			Str.
	W402	24	6'-6"			Str.
BENT NO. 4B	B401	73	6'-6"	8"	3'-0"	2"
	B402	28	23'-6"			Str.
	B403	12	4'-11"			Str.
	B404	73	11'-8"	1'-2"	5'-4"	2"
	B501	58	15'-7"			2½"
	B502	11	9'-6½"			2½'
	B503	4	45'-3"			Str.
	B601	12	12'-10"	8"	6'-3"	4½"
	B602	6	8'-9"	6'-9"		4½"
	B603	1	6'-2"	5'-2"		4½"
	B604	6	11'-8"	9'-8"		4½"
	B605	1	8'-6"	7'-6"		4½"
	B801	6	47'-1"	45'-3"		6"
	B802	7	45'-3"			Str.
	W402	24	6'-2"			Str.
COMMON BARS	R401E	44	7'-6"			3"
	R402E	8	5'-6"			Str.
	R404E	2	3'-8"			8½"
	R405E	16	11'-8"			Str.
	R406E	4	11'-5"			Str.
	R407E	2	6'-8"			3"
	R408E	2	5'-1"			3"
	W401E	24	4'-7"			6"
	W403 To W407	2 ea.	4'-4" to 2'-3"			Str.
	W408	10	2'-1"			Str.
	W409	4	11'-9"			3"
	W410	4	13'-1"			3"
	W701	20	11'-8"			Str.
	W702	4	8'-5½"			Str.
	W703	4	7'-4"			Str.
	W704	4	6'-2"			Str.
	W705	4	11'-10"			5¼"

BAR BENDING DIAGRAMS

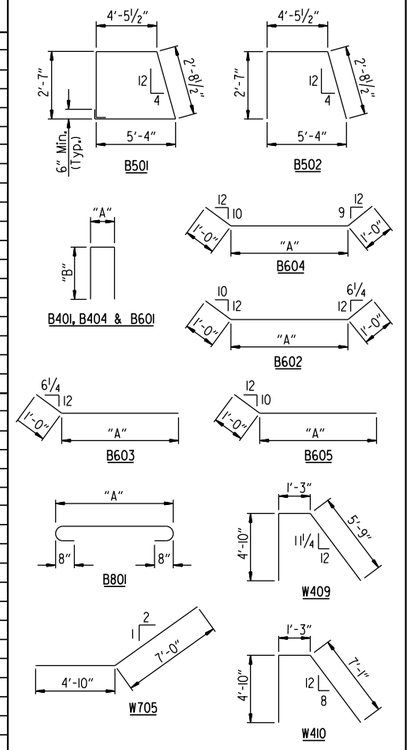

NOTES:
Dimensions of bars in bending diagrams are out-to-out.

Number of common bars shown is for one bent only.

Bar designations ending with "E" indicate epoxy coated bars.

For bar bending diagrams of R401E, R404E, R407E, R408E & W401E, see Std. Dwg. No. 55071.

The first bar designation number indicates the reinforcing bar size.

TABLE OF VARIABLES

Bent No.	"D"	"E"	"F"	"G"
1A	4⅞"	5"	5"	1⅝"
4A	7¹¹⁄₁₆"	5"	4"	3⅞"
1B	6⅞"	5"	4"	2¹³⁄₁₆"
4B	5⅝"	5"	5"	1¼"

STATE OF ARKANSAS
LICENSED PROFESSIONAL ENGINEER
No. 21243
COLTON S. WYLIE
Digitally Signed 07/28/2023
BRIDGE ENGINEER

SHEET 6 OF 6
DETAILS OF END BENTS
HIGHWAY 612 OVER MARCHANT ROAD
ROUTE SEC.
ARKANSAS STATE HIGHWAY COMMISSION
LITTLE ROCK, ARK.

DRAWN BY: HEW DATE: SEPT. 2011 FILENAME: b012326m6_a6.dgn
CHECKED BY: JES DATE: MAR. 2023 SCALE: AS SHOWN
DESIGNED BY: JES DATE: SEPT. 2011
BRIDGE NO. A7617 & B7617 DRAWING NO. 66259

JESkinner 7/28/2023 12:10:43 PM
WORKSPACE: ARDOT Bridge
\\garverinc.local\data\Projects\2017\17017660 - ARDOT 012326 Hwy 412 - Hwy 112\Drawings\b012326x6_S206-BL.dgn
REVISED DATE:

DATE REVISED	DATE REVISED	FED. ROAD DIST. NO.	STATE	JOB NO.	SHEET NO.	TOTAL SHEETS
		6	ARK.	012326	471	838
		A7617		INT. BENT DETAILS		66260

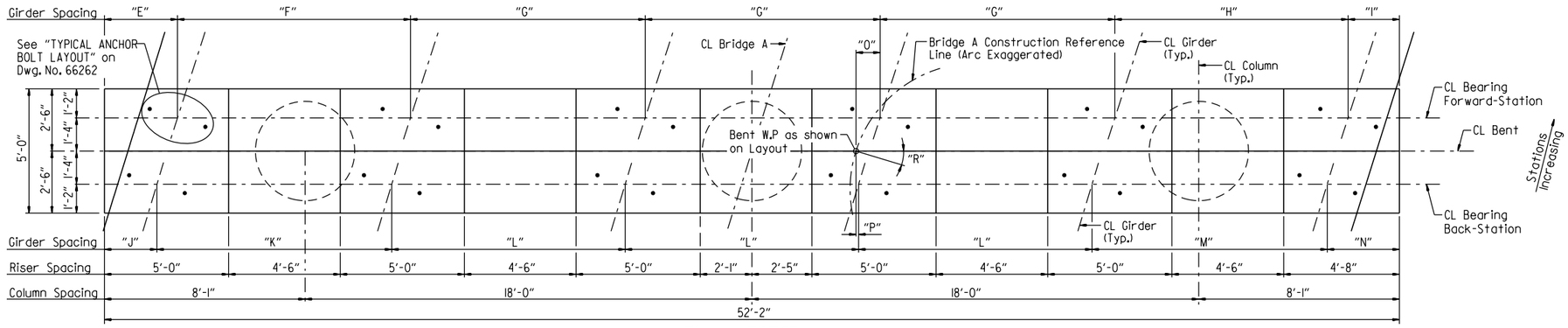

PLAN - BRIDGE A

Scale: 3/8" = 1'-0"

TABLE OF VARIABLES																			
Bent No.	Elev. "A"	Elev. "B"	"C"	"D"	"E"	"F"	"G"	"H"	"I"	"J"	"K"	"L"	"M"	"N"	"O"	"P"	"Q"	"R"
2A	1270.65	1236.90	24'-9"	33'-9"	2'-11 5/16"	9'-4 5/8"	9'-5 1/2"	9'-4 3/4"	2'-0 11/16"	2'-1 1/16"	9'-5 1/2"	9'-4 1/16"	9'-5 11/16"	2'-10 15/16"	11 5/8"	1 5/16"	1/2"	17°22'50"
3A	1271.66	1236.91	25'-9"	34'-9"	2'-9 7/8"	9'-5 5/16"	9'-6 3/16"	9'-5 1/2"	1'-10 3/4"	1'-11 1/4"	9'-6 5/16"	9'-5 1/2"	9'-6 1/2"	2'-9 7/16"	1'-0"	1"	7/16"	18°29'34"

NOTES:
For "GENERAL NOTES", "BAR LIST - BRIDGE A", "BAR BENDING DIAGRAMS", "SECTION A-A", "SECTION C-C", "SECTION D-D", "SECTION E-E", and "TYPICAL ANCHOR BOLT LAYOUT", see Dwg. No. 66262.

For details of elastomeric bearing and anchor bolts, see Dwg. No. 66263.

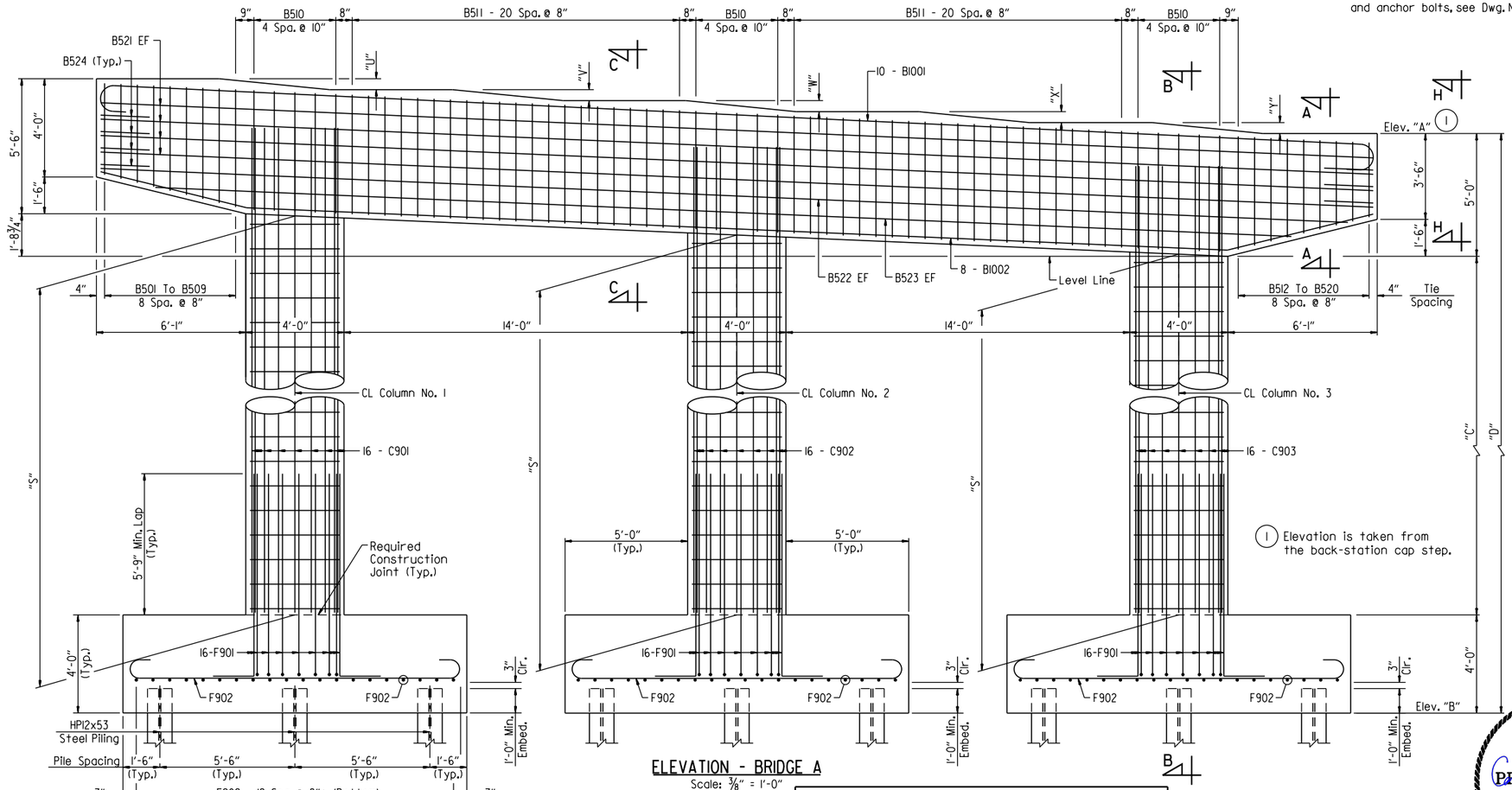

ELEVATION - BRIDGE A

Scale: 3/8" = 1'-0"

TABLE OF VARIABLES							
Bent No.	Station	"U"	"V"	"W"	"X"	"Y"
2A	Back	5 3/8"	5 5/16"	5 5/16"	5 5/16"	5 3/8"
	Forward	5 5/16"	5 3/8"	5 3/8"	5 3/8"	5 5/16"
3A	Back	5 3/8"	5 3/8"	5 3/8"	5 1/4"	5 3/8"
	Forward	5 3/8"	5 3/8"	5 3/8"	5 3/8"	5 3/8"

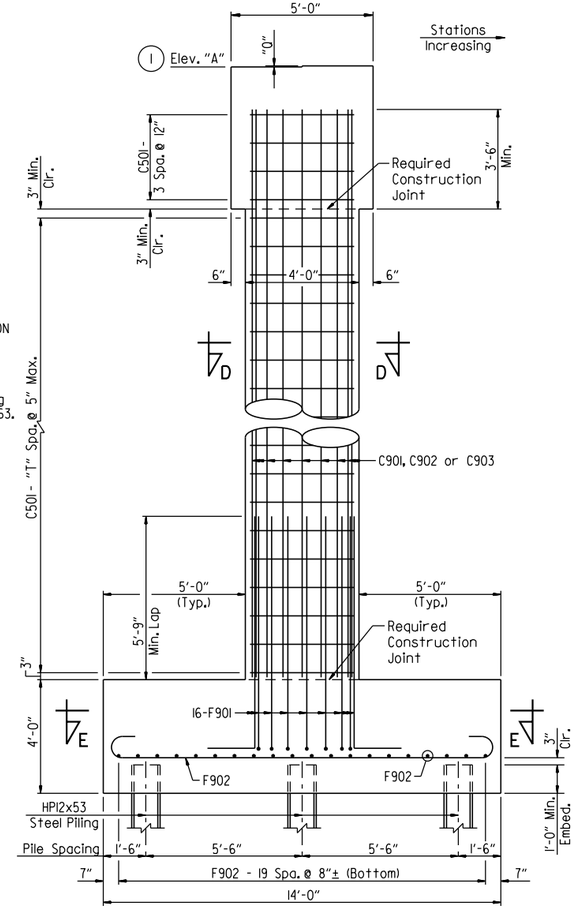

SECTION B-B

Scale: 3/8" = 1'-0"

TABLE OF VARIABLES			
Bent No.	Column	"S"	"T"
2A	No. 1	26'-4 11/16"	63
	No. 2	25'-7 3/8"	61
	No. 3	24'-10 1/16"	59
3A	No. 1	27'-4 11/16"	65
	No. 2	26'-7 3/8"	63
	No. 3	25'-10 1/16"	61

1 Elevation is taken from the back-station cap step.

LEGEND

EF = Each Face

STATE OF ARKANSAS
LICENSED PROFESSIONAL ENGINEER
No. 21243
COLTON S. WYLIE

Digitally Signed 07/28/2023
BRIDGE ENGINEER

SHEET 1 OF 3
DETAILS OF INTERMEDIATE BENTS
HIGHWAY 612 OVER MARCHANT ROAD

ROUTE SEC.

ARKANSAS STATE HIGHWAY COMMISSION

LITTLE ROCK, ARK.

DRAWN BY: CSW DATE: JAN. 2023 FILENAME: b012326a6_bi.dgn
CHECKED BY: AJK DATE: MAR. 2023 SCALE: AS SHOWN
DESIGNED BY: CSW DATE: JAN. 2023

BRIDGE NO. A7617 DRAWING NO. 66260

JEskinner 7/28/2023 12:10:43 PM
WORKSPACE: ARDOT Bridge
\\garverinc.local\gdata\Projects\2017\17017660 - ARDOT 012326 Hwy 412 - Hwy 112\Drawings\b012326a6_5207-BE.dgn
REVISED DATE:

DATE REVISED	DATE REVISED	FED. ROAD DIST. NO.	STATE	JOB NO.	SHEET NO.	TOTAL SHEETS
		6	ARK.	012326	472	838
		B7617		INT. BENT DETAILS		66261

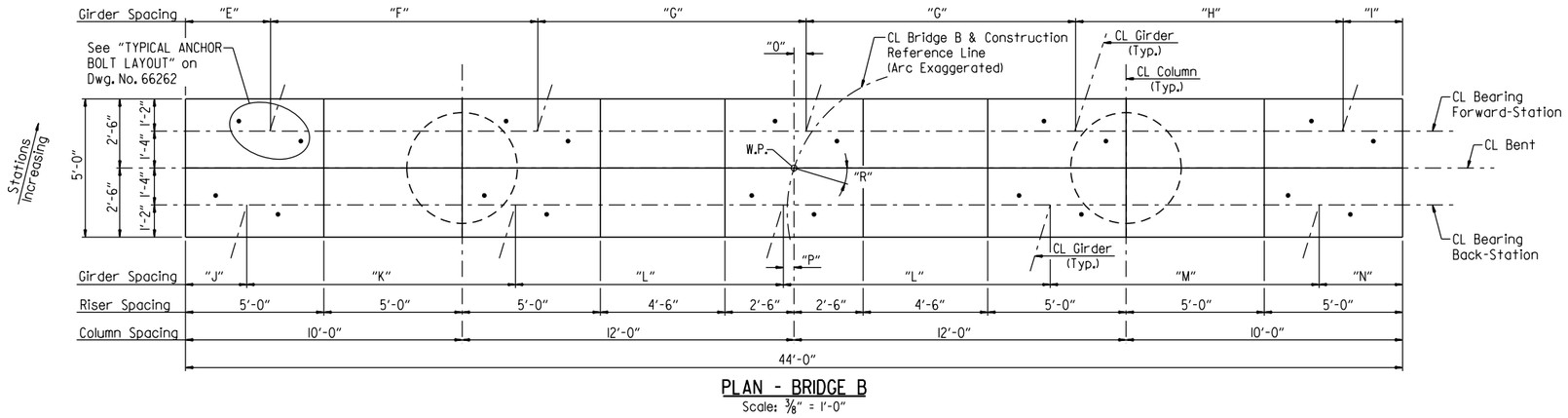

PLAN - BRIDGE B

Scale: 3/8" = 1'-0"

TABLE OF VARIABLES																						
Bent No.	Elev. "A"	Elev. "B"	"C"	"D"	"E"	"F"	"G"	"H"	"I"	"J"	"K"	"L"	"M"	"N"	"O"	"P"	"Q"	"R"	"U"	"V"	"W"
2B	1269.53	1234.78	25'-9"	34'-9"	3'-0 3/16"	9'-8 3/16"	9'-8 15/16"	9'-8 5/16"	2'-1 7/16"	2'-1 5/16"	9'-8 13/16"	9'-8 1/4"	9'-8 15/16"	2'-11 3/4"	5 5/16"	5"	4'-0"	17°48'02"	5'-6"	5 1/2"	5 1/2"
3B	1270.52	1237.77	23'-9"	32'-9"	2'-11"	9'-8 5/16"	9'-9 3/4"	9'-9 1/16"	1'-11 15/16"	2'-0 1/16"	9'-9 5/8"	9'-8 5/16"	9'-9 1/16"	2'-10 5/16"	5 11/16"	5 5/16"	4'-0 1/8"	18°56'19"	5'-6 1/8"	5 5/16"	5 5/16"

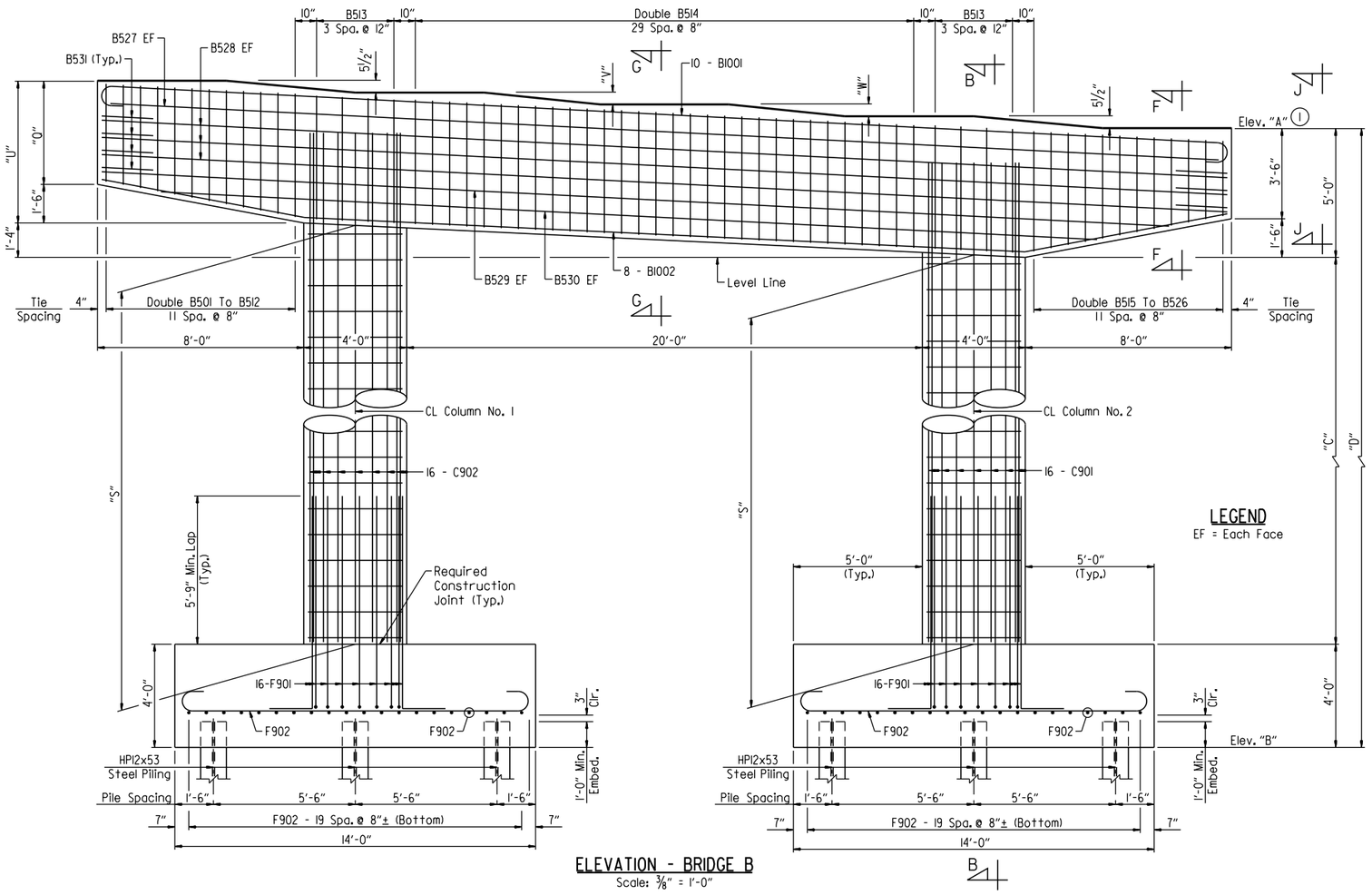

ELEVATION - BRIDGE B

Scale: 3/8" = 1'-0"

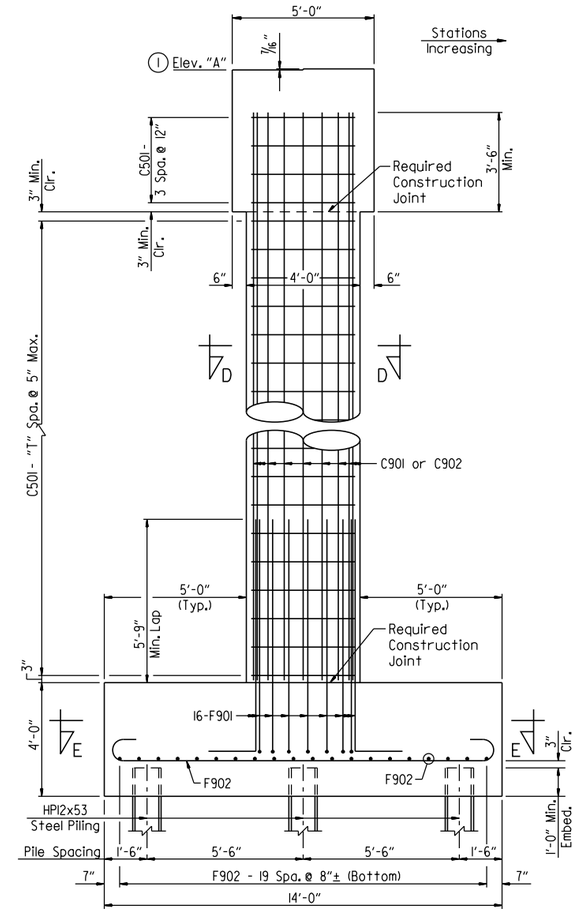

SECTION B-B

Scale: 3/8" = 1'-0"

NOTES:
For "GENERAL NOTES", "BAR LIST - BRIDGE B", "BAR BENDING DIAGRAMS", "SECTION F-F", "SECTION G-G", "SECTION D-D", "SECTION E-E", and "TYPICAL ANCHOR BOLT LAYOUT", see Dwg. No. 66262.

For details of elastomeric bearing and anchor bolts, see Dwg. No. 66263.

(1) Elevation is taken from the back-station cap step.

TABLE OF VARIABLES			
Bent No.	Column	"S"	"T"
2B	No. 1	26'-11 1/8"	64
	No. 2	25'-10 1/8"	62
3B	No. 1	24'-11 1/8"	59
	No. 2	23'-10 1/8"	57

LEGEND

EF = Each Face

STATE OF ARKANSAS
LICENSED PROFESSIONAL ENGINEER
No. 21243
COLTON S. WYLIE
Digitally Signed 07/28/2023
BRIDGE ENGINEER

SHEET 2 OF 3
DETAILS OF INTERMEDIATE BENTS
HIGHWAY 612 OVER MARCHANT ROAD

ROUTE SEC.

ARKANSAS STATE HIGHWAY COMMISSION

LITTLE ROCK, ARK.

DRAWN BY: HEW DATE: AUG. 2011 FILENAME: b012326b6_b2.dgn
CHECKED BY: AJK DATE: JAN. 2012 SCALE: AS SHOWN
DESIGNED BY: JES DATE: AUG. 2011

BRIDGE NO. B7617 DRAWING NO. 66261

JEskinner 7/28/2023 12:10:44 PM
WORKSPACE: ARDOT Bridge
\\garverinc.local\gdata\Projects\2017\17017660 - ARDOT 012326 Hwy 412 - Hwy 112\Drawings\b012326x6_5208-BE.dgn
REVISED DATE:

DATE REVISED	DATE REVISED	FED. ROAD DIST. NO.	STATE	JOB NO.	SHEET NO.	TOTAL SHEETS
		6	ARK.	012326	473	838
		A7617 & B7617		INT. BENT DETAILS		66262

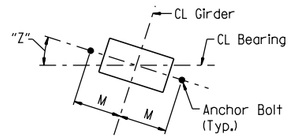

TYPICAL ANCHOR BOLT LAYOUT
No Scale

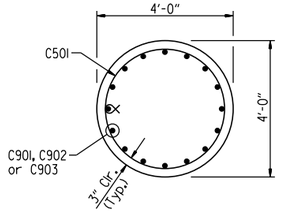

SECTION D-D
Scale: ½" = 1'-0"

TABLE OF VARIABLES			
Bent No.	Station	Girder No.	"Z"
2A	Back	1	16°44'36"
		2-5	16°50'37"
		6	16°56'42"
	Forward	1	17°48'37"
		2-5	17°55'03"
		6	18°01'33"
3A	Back	1	17°48'37"
		2-5	17°55'03"
		6	18°01'33"
	Forward	1	18°52'39"
		2-5	18°59'29"
		6	19°06'25"
2B	Back	1	17°10'57"
		2-4	17°16'10"
		5	17°21'26"
	Forward	1	18°16'37"
		2-4	18°22'11"
		5	18°27'48"
3B	Back	1	18°16'37"
		2-4	18°22'11"
		5	18°27'48"
	Forward	1	19°22'16"
		2-4	19°28'11"
		5	19°34'10"

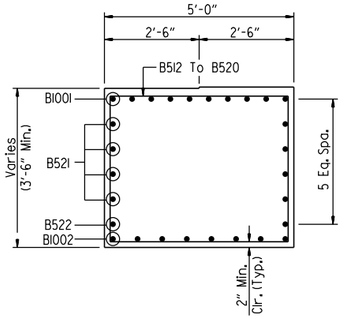

SECTION A-A
Scale: ½" = 1'-0"

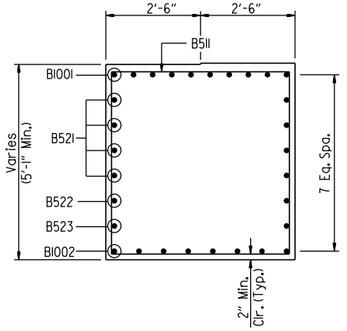

SECTION C-C
Scale: ½" = 1'-0"

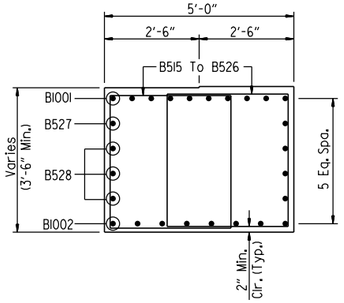

SECTION F-F
Scale: ½" = 1'-0"

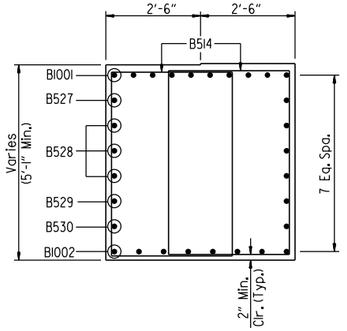

SECTION G-G
Scale: ½" = 1'-0"

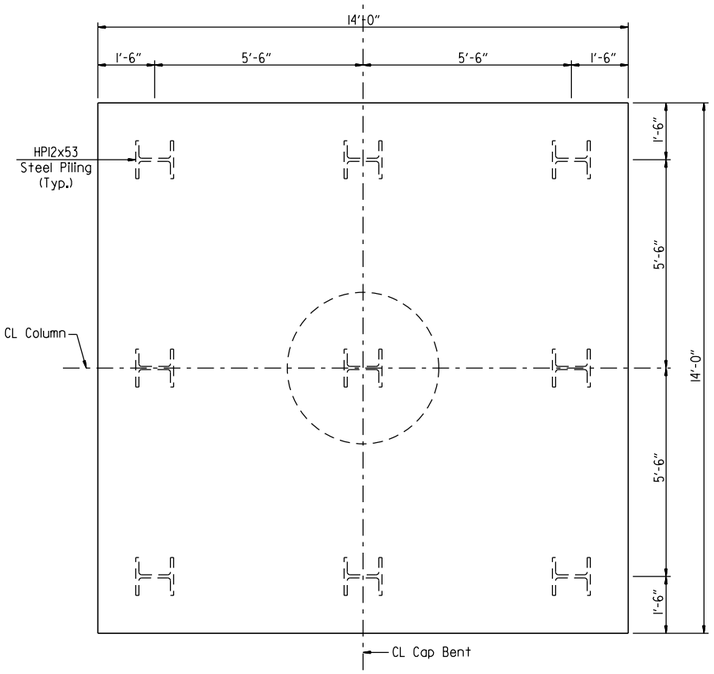

SECTION E-E
Scale: ½" = 1'-0"

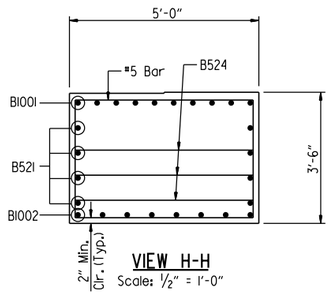

VIEW H-H
Scale: ½" = 1'-0"

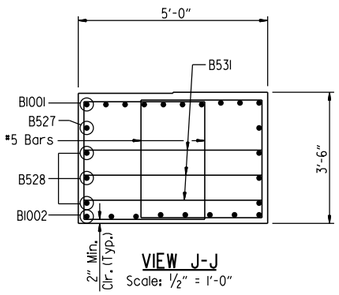

VIEW J-J
Scale: ½" = 1'-0"

BAR LIST - BRIDGE A

	MARK	NO. REQ'D.	LENGTH	"A"	"B"	P.D.
Bent 2A	C501	198	12'-4"			3¾"
	C901	16	30'-2"			Str.
	C902	16	29'-5"			Str.
	C903	16	28'-7"			Str.
Bent 3A	C501	204	12'-4"			3¾"
	C901	16	31'-2"			Str.
	C902	16	30'-5"			Str.
	C903	16	29'-7"			Str.
Common Bars	B501 To B509	1 Ea.	17'-3½" To 19'-5"		3'-8¾" To 4'-9½"	2½"
	B510	15	13'-11½"	4'-8"	4'-9"	2½"
	B511	42	19'-5"		4'-9½"	2½"
	B512 To B520	1 Ea.	19'-0½" To 15'-11"		4'-7¼" To 3'-0½"	2½"
	B521	8	51'-10½"			Str.
	B522	2	50'-10"			Str.
	B523	2	46'-3½"			Str.
	B524	7	8'-4½"	4'-7"	2'-0"	2½"
	B1001	10	54'-6"	51'-8"	11½"	10"
	B1002	8	52'-2"			10"
	F901	48	10'-2"			9"
	F902	120	16'-0"	13'-6"	10"	9"

BAR BENDING DIAGRAMS

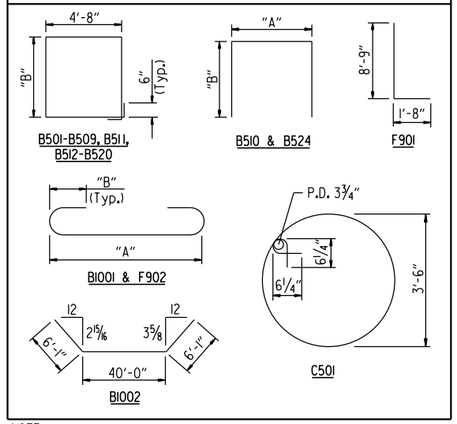

NOTE:
Dimension of bars are out-to-out.
Bars shown are for one bent only.

BAR LIST - BRIDGE B

	MARK	NO. REQ'D.	LENGTH	"A"	"B"	P.D.
Bent 2B	C501	136	12'-4"			3¾"
	C901	16	29'-7"			Str.
	C902	16	30'-8"			Str.
Bent 3B	C501	126	12'-4"			3¾"
	C901	16	27'-7"			Str.
	C902	16	28'-8"			Str.
Common Bars	B501 To B512	2 Ea.	14'-5" To 16'-6"	3'-3"	3'-8½" To 4'-9"	2½"
	B513	8	13'-11½"	4'-8"	4'-9"	2½"
	B514	60	16'-7"	3'-3"	4'-9½"	2½"
	B515 To B526	2 Ea.	13'-0" To 16'-5"	3'-3"	3'-0" To 4'-8½"	2½"
	B527	2	43'-1"			Str.
	B528	6	43'-8½"			Str.
	B529	2	41'-9"			Str.
	B530	2	36'-3"			Str.
	B531	7	8'-4½"	4'-7"	2'-0"	2½"
	B1001	10	46'-6"	43'-8"	11½"	10"
	B1002	8	44'-0"			10"
	F901	32	10'-2"			9"
	F902	80	16'-0"	13'-6"	10"	9"

BAR BENDING DIAGRAMS

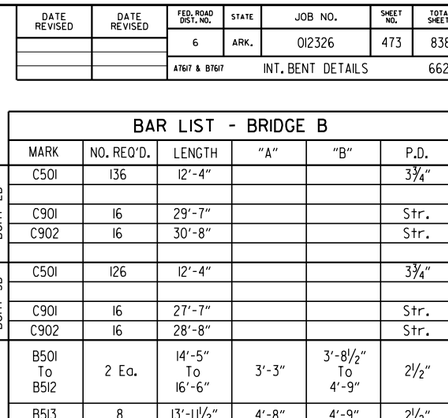

NOTE:
Dimension of bars are out-to-out.
Bars shown are for one bent only.

GENERAL NOTES

Concrete shall be Class "S" with a minimum 28 day compressive strength f'c = 3,500 psi.

All reinforcing steel shall be Grade 60 (yield strength = 60,000 psi) conforming to AASHTO M 31 or M 322, Type A, with mill test reports.

Class 3 Textured Coating Finish shall be applied to bridge surfaces as specified in Special Provision "TEXTURED COATING FINISH" and in accordance with Subsection 802.19(b)(3).

Top reinforcing bars in cap shall be properly placed to avoid interference with anchor bolts or sheet metal sleeves.

For additional information, see LAYOUT.

STATE OF ARKANSAS
LICENSED PROFESSIONAL ENGINEER
No. 21243
COLTON S. WYLIE
Digitally Signed 07/28/2023
BRIDGE ENGINEER

SHEET 3 OF 3
DETAILS OF INTERMEDIATE BENTS
HIGHWAY 612 OVER MARCHANT ROAD
ROUTE SEC.
ARKANSAS STATE HIGHWAY COMMISSION
LITTLE ROCK, ARK.

DRAWN BY: HEW DATE: AUG. 2011 FILENAME: b012326m6_b3.dgn
CHECKED BY: AJK DATE: JAN. 2012 SCALE: AS SHOWN
DESIGNED BY: JES DATE: AUG. 2011
BRIDGE NO. A7617 & B7617 DRAWING NO. 66262

JESkinner
WORKSPACE: ARDOT Bridge
\\garverinc.local\gdata\Projects\2017\17017660 - ARDOT 012326 Hwy 412 - Hwy 112\Drawings\b012326x6_S209-MD.dgn
7/28/2023 12:10:44 PM
REVISED DATE:

DATE REVISED	DATE REVISED	FED. ROAD DIST. NO.	STATE	JOB NO.	SHEET NO.	TOTAL SHEETS
		6	ARK.	012326	474	838
		A7617 & B7617	ELASTOMERIC BEARINGS			66263

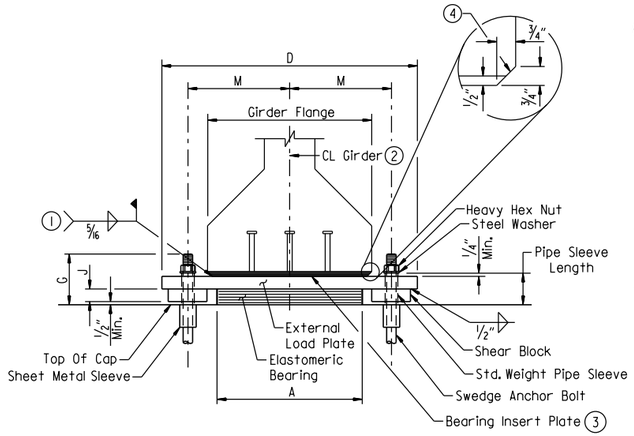

FRONT VIEW - AT BENT NOS. 2 & 3

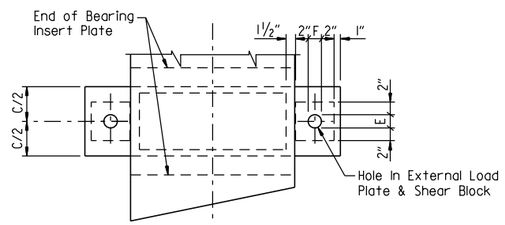

PLAN VIEW - AT BENT NOS. 2 & 3

(1) Unless otherwise approved by the Engineer, welding of the external load plate at expansion bearings to the bearing insert plate will be allowed only when: 1) The approximate average air temperature during the 24 hour period immediately preceding welding is between 40°F and 80°F; and 2) The slots in the external load plate are positioned to center on the anchor bolts; and 3) No horizontal deformation of the elastomeric pad is evident. If welding at other temperatures is required, the Engineer will provide adjustment data. Care shall be taken to ensure that the external load plate is in full and complete contact with the bearing insert plate before welding begins.

(2) Centerline elastomeric pad shall be aligned with centerline girder.

(3) Bearing insert plates (A709, GR. 50W) & studs shall be considered subsidiary to the item "PRESTRESSED CONCRETE GIRDERS (TYPE III)". Studs shall conform to Subsection 807.08

(4) Bevel Bearing Insert Plate to conform to girder chamfer.

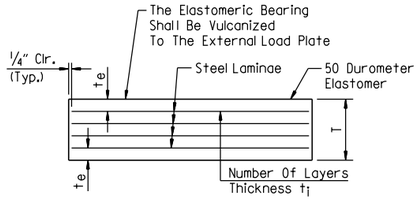

$+e$ = Thickness of elastomer cover on top and bottom of pad
t_i = Thickness of elastomer between steel laminae
N = Number of elastomer layers of thickness t_i

ELASTOMERIC BEARING

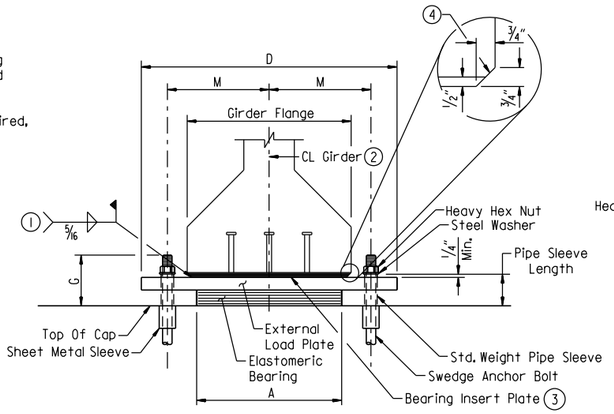

FRONT VIEW - AT BENT NOS. 1 & 4

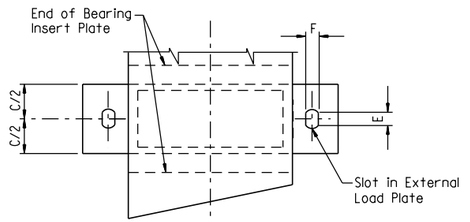

PLAN VIEW - AT BENT NOS. 1 & 4

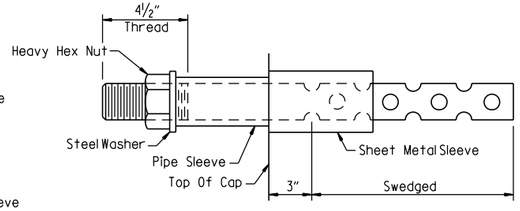

ANCHOR BOLT DETAIL

NOTES:
Anchor bolts may be cast in place or drilled and grouted into place. If anchor bolts are to be cast in place, the galvanized sheet metal sleeves will not be required.

If anchor bolts are to be drilled and grouted in place, the galvanized sheet metal sleeves shall be cast in place as shown. Sleeves shall be dry packed with styrofoam, urethane foam or approved equal prior to pouring of concrete. After pouring of the cap and prior to erection of the girder, the dry pack shall be removed and holes for the anchor bolts shall be accurately drilled into the concrete. Bolts placed in drilled holes shall be accurately set and fixed using a OPL approved epoxy or non-shrink grout that completely fills the holes. Galvanized sheet metal sleeves shall meet the requirements of ASTM A653, CS Type B or approved equivalent, be of minimum 16 gage thickness and be galvanized according to ASTM B695, Class 50. Sheet metal sleeves will not be paid for directly, but will be considered subsidiary to the item "STRUCTURAL STEEL IN BEAM SPANS (A709, Gr. 50W)"

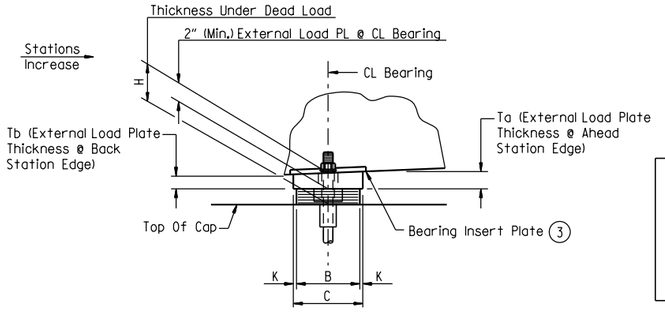

SIDE VIEW - AT BENT NOS. 2 & 3

NOTES:
The direction of bevel of the external load plate may not be accurately depicted with respect to Ta and Tb values shown in "TABLE OF FABRICATOR VARIABLES".

Prior to the erection of the girders, the Contractor shall verify the orientation of the bearings with respect to Ta and Tb.

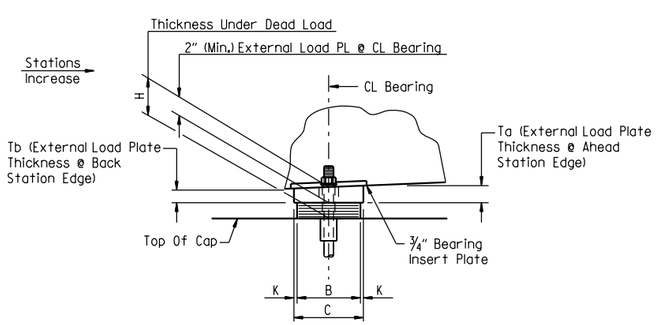

SIDE VIEW - AT BENT NOS. 1 & 4

GENERAL NOTES

Elastomeric bearings shall conform to Section 808 and shall be paid for at the unit price bid for "ELASTOMERIC BEARINGS".

External load plates and shear blocks shall conform to ASTM A709, Grade 50W. Pipe sleeves shall be ASTM A500, Grade B, and shall be galvanized to conform to AASHTO M232, Class C or ASTM B695, Class 50.

External load plates (with shear blocks as applicable) shall be completely fabricated (including bevel and bolt holes) and shall be cleaned before vulcanizing to the elastomeric bearing. The surface in contact with the elastomeric bearing shall be cleaned in accordance with Section 808.03. Other surfaces shall be blast cleaned in accordance with Subsection 807.84(b) for painted steel and 807.84(e) for unpainted Grade 50W steel.

Anchor bolts, washers and nuts shall conform to Subsection 807.07. The anchor bolt grade of steel shall be as specified in the "TABLE OF FABRICATOR VARIABLES". Indentations shall be circular with rounded bottoms and staggered as shown in the details.

Pipe sleeves, anchor bolts, washers and nuts shall be paid for at the unit price bid for "STRUCTURAL STEEL IN BEAM SPANS (A709, GR. 50W)". External load plates and shear blocks will not be measured or paid for separately but will be considered incidental to the unit price bid for "ELASTOMERIC BEARINGS".

Bearings shall be seated in accordance with Subsection 808.08. This work and materials are considered subsidiary to the item "ELASTOMERIC BEARINGS" and will not be paid for directly.

TABLE OF FABRICATOR VARIABLES

(5) Maximum Design Load = Service Load

Bridge Nos.	Location		Bearing Type	No. Of Bearings Each Bent	(5) Maximum Design Load (Kips)	G	H	Elastomeric Pad						External Load Plate								Anchor Bolt				
	Bent No.(s)	Beam Or Girder No.						A	B	N	t_i	t_e	No. & Thickness Of Steel Laminate	T	C	D	E	F	J	K	M	T_a	T_b	Anchor Bolt (Dia. x L)	Anchor Bolt Grade	Pipe Sleeve Size (Dia. x L)	Sheet Metal Sleeve Size (Dia. x L)	Steel Washer Size (O.D.)
A7617	1	All	Exp.	6	151	7 1/8"	4 3/8"	22"	10"	3	1/2"	1/4"	4 @ 12 Ga.	2 7/16"	11"	32 1/2"	4"	2 1/4"	-	1/2"	13 1/2"	2.11"	1.89"	1 1/2" x 25"	55	1 1/2" x 4 5/8"	3" x 10"	3"
	2	Back Sta.	Fixed	6	151	7 1/8"	4 3/8"	22"	10"	3	1/2"	1/4"	4 @ 12 Ga.	2 7/16"	11"	39 1/2"	2 1/4"	2 1/4"	1 7/8"	1/2"	15 5/8"	2.05"	1.95"	1 1/2" x 25"	55	1 1/2" x 4 5/8"	3" x 10"	3"
	2	Fwd. Sta.	Fixed	6	165	7 1/8"	4 3/8"	22"	10"	3	1/2"	1/4"	4 @ 12 Ga.	2 7/16"	11"	39 1/2"	2 1/4"	2 1/4"	1 7/8"	1/2"	15 5/8"	2.11"	1.89"	1 1/2" x 25"	55	1 1/2" x 4 5/8"	3" x 10"	3"
	3	Back Sta.	Fixed	6	165	7 1/8"	4 3/8"	22"	10"	3	1/2"	1/4"	4 @ 12 Ga.	2 7/16"	11"	39 1/2"	2 1/4"	2 1/4"	1 7/8"	1/2"	15 5/8"	2.04"	1.96"	1 1/2" x 25"	55	1 1/2" x 4 5/8"	3" x 10"	3"
	3	Fwd. Sta.	Fixed	6	151	7 1/8"	4 3/8"	22"	10"	3	1/2"	1/4"	4 @ 12 Ga.	2 7/16"	11"	39 1/2"	2 1/4"	2 1/4"	1 7/8"	1/2"	15 5/8"	2.09"	1.91"	1 1/2" x 25"	55	1 1/2" x 4 5/8"	3" x 10"	3"
	4	All	Exp.	6	151	7 1/8"	4 3/8"	22"	10"	3	1/2"	1/4"	4 @ 12 Ga.	2 7/16"	11"	32 1/2"	4"	2 1/4"	-	1/2"	13 1/2"	2.04"	1.96"	1 1/2" x 25"	55	1 1/2" x 4 5/8"	3" x 10"	3"
B7617	1	All	Exp.	5	152	7 1/8"	4 3/8"	22"	10"	3	1/2"	1/4"	4 @ 12 Ga.	2 7/16"	11"	32 1/2"	4"	2 1/4"	-	1/2"	13 1/2"	2.11"	1.89"	1 1/2" x 25"	55	1 1/2" x 4 5/8"	3" x 10"	3"
	2	Back Sta.	Fixed	5	152	7 1/8"	4 3/8"	22"	10"	3	1/2"	1/4"	4 @ 12 Ga.	2 7/16"	11"	39 1/2"	2 1/4"	2 1/4"	1 7/8"	1/2"	15 5/8"	2.05"	1.95"	1 1/2" x 25"	55	1 1/2" x 4 5/8"	3" x 10"	3"
	2	Fwd. Sta.	Fixed	5	183	7 1/8"	4 3/8"	22"	10"	3	1/2"	1/4"	4 @ 12 Ga.	2 7/16"	11"	39 1/2"	2 1/4"	2 1/4"	1 7/8"	1/2"	15 5/8"	2.11"	1.89"	1 1/2" x 25"	55	1 1/2" x 4 5/8"	3" x 10"	3"
	3	Back Sta.	Fixed	5	183	7 1/8"	4 3/8"	22"	10"	3	1/2"	1/4"	4 @ 12 Ga.	2 7/16"	11"	39 1/2"	2 1/4"	2 1/4"	1 7/8"	1/2"	15 5/8"	2.04"	1.96"	1 1/2" x 25"	55	1 1/2" x 4 5/8"	3" x 10"	3"
	3	Fwd. Sta.	Fixed	5	152	7 1/8"	4 3/8"	22"	10"	3	1/2"	1/4"	4 @ 12 Ga.	2 7/16"	11"	39 1/2"	2 1/4"	2 1/4"	1 7/8"	1/2"	15 5/8"	2.09"	1.91"	1 1/2" x 25"	55	1 1/2" x 4 5/8"	3" x 10"	3"
	4	All	Exp.	5	152	7 1/8"	4 3/8"	22"	10"	3	1/2"	1/4"	4 @ 12 Ga.	2 7/16"	11"	32 1/2"	4"	2 1/4"	-	1/2"	13 1/2"	2.04"	1.96"	1 1/2" x 25"	55	1 1/2" x 4 5/8"	3" x 10"	3"

STATE OF ARKANSAS
LICENSED PROFESSIONAL ENGINEER
No. 21243
COLTON S. WYLIE
Digitally Signed 07/28/2023
BRIDGE ENGINEER

DETAILS OF ELASTOMERIC BEARINGS HIGHWAY 612 OVER MARCHANT ROAD

ROUTE SEC.

ARKANSAS STATE HIGHWAY COMMISSION

LITTLE ROCK, ARK.

DRAWN BY: HEW DATE: JULY 2011 FILENAME: b012326m6_el.dgn
CHECKED BY: AJK DATE: JAN. 2012 SCALE: AS SHOWN
DESIGNED BY: MRA DATE: JULY 2011

BRIDGE NO. A7617 & B7617 DRAWING NO. 66263

JESkinner 7/28/2023 12:10:45 PM
WORKSPACE: ARDOT Bridge
\\garverinc.local\gdata\Projects\2017\17017660 - ARDOT 012326 Hwy 412 - Hwy 112\Drawings\b012326x6_S30I-BG.dgn
REVISED DATE:

DATE REVISED	DATE REVISED	FED. ROAD DIST. NO.	STATE	JOB NO.	SHEET NO.	TOTAL SHEETS
		6	ARK.	012326	475	838
		A7617		215'-0" UNIT		66264

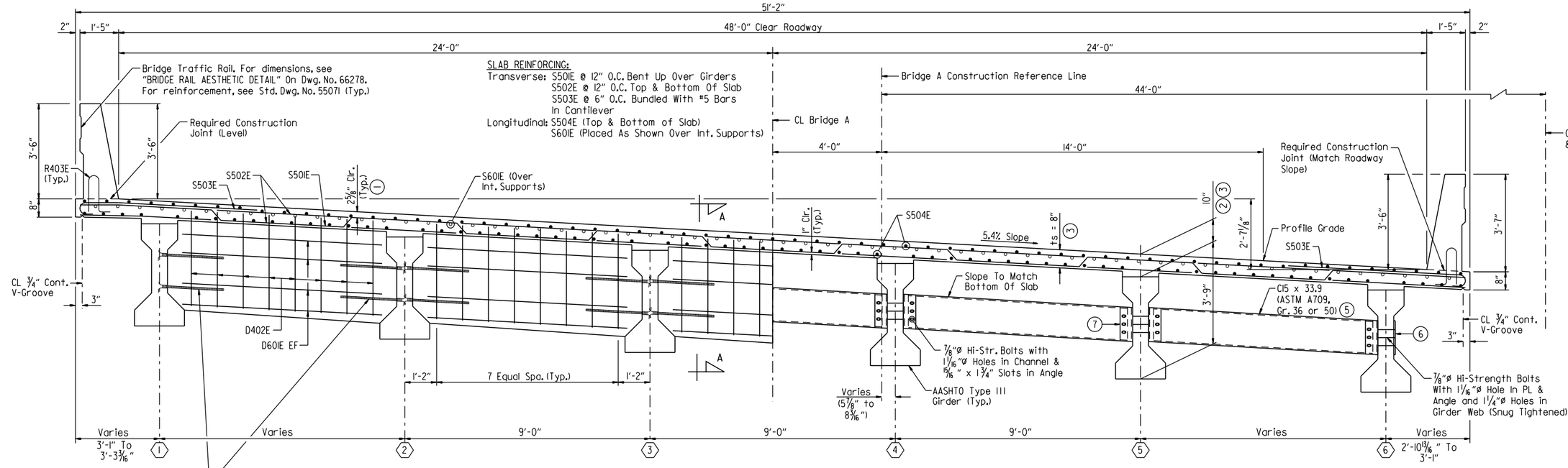

LEGEND

EF = Each Face

(4) Galvanized Threaded Inserts & ¾"ø x 3'-6" Threaded Rods. For Number And Location, See "TYPICAL GIRDER ELEVATION" On Drawing Nos. 66268 & 66269.

INTERMEDIATE CONCRETE DIAPHRAGMS

(1) TOLERANCE:
Minus = ¼"
Plus = Equal to amount of slab thickening used to meet slab thickness tolerance - see "ADJUSTMENT FOR SLAB THICKNESS TOLERANCE WHEN REMOVABLE DECK FORMING IS USED" on Dwg. No. 66278.

(2) This dimension taken at CL Girder @ CL Bearing

(3) See "ADJUSTMENT FOR SLAB THICKNESS TOLERANCE WHEN REMOVABLE DECK FORMING IS USED" on Dwg. No. 66278.

TYPICAL SECTION AT INTERMEDIATE DIAPHRAGMS

(Looking Ahead)
Scale: ½" = 1'-0"

(4) Galvanized threaded inserts: Dayton-Richmond F-42 Loop Ferrule Insert or an approved equal. ¾"ø galvanized threaded rods to be ASTM A709, Grade 36 or AASHTO M 31 or M 232, Class C or ASTM B695, Class 50. These items will not be paid for directly but shall be considered subsidiary to the item "PRESTRESSED CONCRETE GIRDERS (TYPE III). Galvanizing shall be in accordance with AASHTO M232 Class C or AASHTO M298 Class 50.

(5) Galvanized steel diaphragms may be used in place of concrete at intermediate diaphragms only. All components of the alternate steel diaphragms shall be galvanized. Galvanizing shall be in accordance with AASHTO M111. Payment will be based on concrete diaphragms.

(6) PL ½" x 4" x 15" (ASTM A709, Gr. 36 or 50) (Mask when applying textured coating finish to exterior girders.)

(7) L6" x 4" x ½" x 15" (ASTM A709, Gr. 36 or 50), center angle on web of girder. A standard washer shall be supplied for use under both the nut and the head of the ⅞"ø h.s. bolts. An additional plate washer shall cover the angle slots.

(5) ALTERNATE STRUCTURAL STEEL DIAPHRAGMS

NOTES:
Class 2 Protective Surface Treatment shall be applied to the roadway surface and the face and top of bridge traffic railing.

Class 3 Textured Coating Finish shall be applied to bridge surfaces as specified in Special Provision "TEXTURED COATING FINISH" and in accordance with Subsection 802.19(b)(3). Textured Coating Finish shall not be applied on surfaces where Class 2 Protective Surface Treatment is applied.

One epoxy-coated #5 bar in the top and one epoxy-coated #5 bar in the bottom may be substituted for each bar S501E. Payment will be based on the weight of bar S501E.

Bar positions or clearances from the forms shall be maintained by means of stays, ties, hangers or other approved devices per Subsection 804.06. Placement of slab bolster or high-chairs with full-length lower runners directly on removable deck forms will not be allowed.

All bars designated with an "E" suffix are to be epoxy coated.

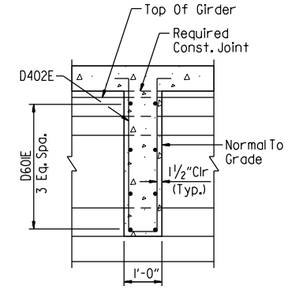

SECTION A-A

(Normal To Diaphragm)
Scale: ½" = 1'-0"

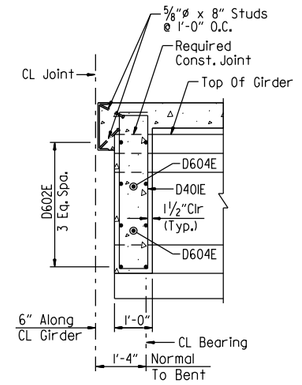

SECTION B-B

(Normal To Diaphragm)
Scale: ½" = 1'-0"

EXPANSION DEVICE:
Roadway Channel: MC18x42.7
Conn. Angle: MC18x42.7 (Cope One Flange)

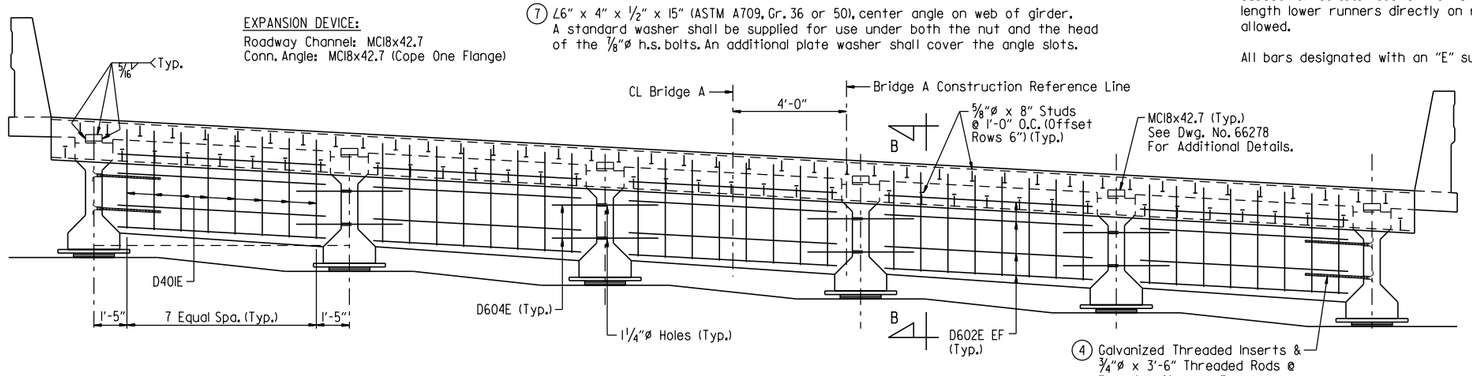

TYPICAL SECTION (END OF UNIT AT JOINT)

(Looking Ahead)
No Scale

(4) Galvanized Threaded Inserts & ¾"ø x 3'-6" Threaded Rods @ Exterior Girders. For Number And Location, See "TYPICAL GIRDER ELEVATION" On Dwg. Nos. 66268 & 66269. Threaded Rods Shall Be Bent As Required To Match Skew Of Diaphragms.

STATE OF ARKANSAS
LICENSED PROFESSIONAL ENGINEER
No. 21243
COLTON S. WYLIE
Digitally Signed 07/28/2023
BRIDGE ENGINEER

SHEET 1 OF 6
DETAILS OF 215'-0" CONTINUOUS PRESTRESSED CONCRETE GIRDER UNIT BRIDGE A
HIGHWAY 612 OVER MARCHANT ROAD

ROUTE SEC.

ARKANSAS STATE HIGHWAY COMMISSION
LITTLE ROCK, ARK.

DRAWN BY: CWT DATE: OCT. 2022 FILENAME: b012326a6_sl.dgn
CHECKED BY: JES DATE: MAR. 2023 SCALE: AS SHOWN
DESIGNED BY: CSW DATE: OCT. 2022

BRIDGE NO. A7617 DRAWING NO. 66264

JESkinner 7/28/2023 12:10:45 PM
WORKSPACE: ARDOT Bridge
\\garverfnc.local\gdata\Projects\2017\17017660 - ARDOT 012326 Hwy 412 - Hwy 112\Drawings\b012326x6_S401-TS.dgn
REVISED DATE:

DATE REVISED	DATE REVISED	FED. ROAD DIST. NO.	STATE	JOB NO.	SHEET NO.	TOTAL SHEETS
		6	ARK.	012326	476	838
		A7617		215'-0" UNIT		66265

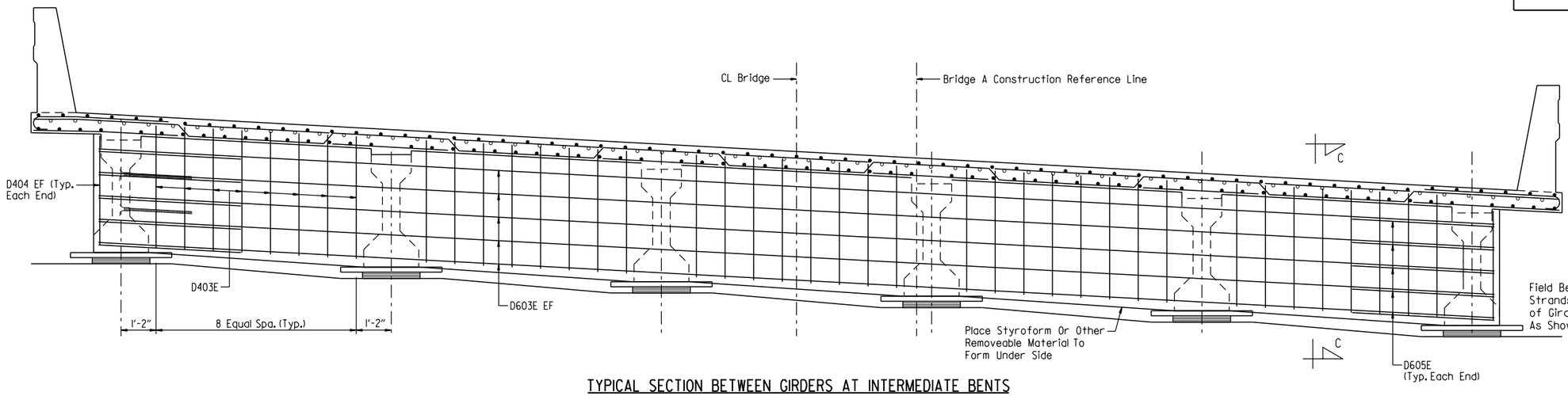

TYPICAL SECTION BETWEEN GIRDERS AT INTERMEDIATE BENTS

(For Info Not Shown See "TYPICAL SECTION AT INTERMEDIATE DIAPHRAGMS")
No Scale

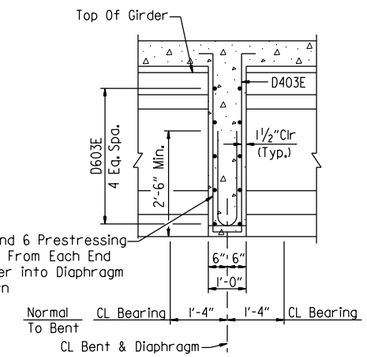

SECTION C-C

(Normal To Diaphragm)
Scale: ½" = 1'-0"

LEGEND

EF = Each Face

BAR BENDING DIAGRAMS

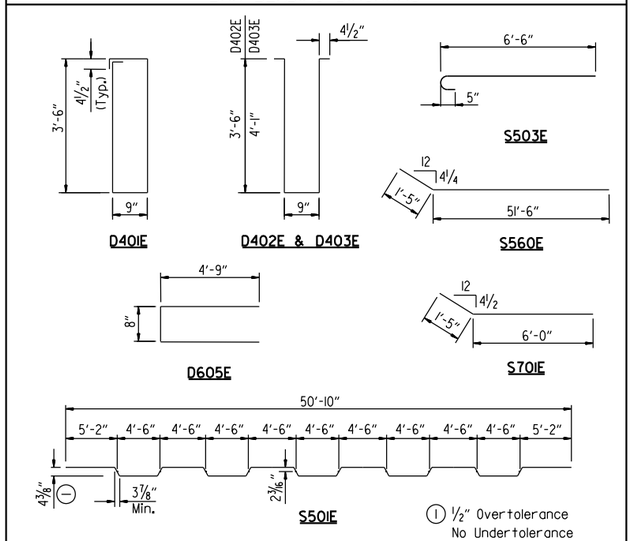

① ½" Overtolerance
No Undertolerance

BAR LIST

Mark	No. Req'd.	Length	Pin. Dia.
D401E	80	8'-10"	2"
D402E	120	8'-2"	2"
D403E	90	9'-6"	2"
D404E	8	4'-1"	Str.
D601E	120	7'-0"	Str.
D602E	80	7'-2"	Str.
D603E	20	48'-2"	Str.
D604E	16	6'-0"	Str.
D605E	20	9'-10"	4½"
R400E	32	6'-3"	3"
R401E	868	7'-6"	3"
R402E	80	5'-6"	Str.
R403E	868	3'-8"	3",6"
R409E	80	9'-8"	Str.
R410E	60	17'-11"	Str.
R411E	120	19'-7"	Str.
S501E	199	51'-10½"	3"
S502E	400	50'-10"	Str.
S503E	853	7'-1"	3¾"
S504E	524	56'-6"	Str.
S505E TO S529E	2 Ea.	7'-3" TO 47'-11½"	Str.
S530E TO S559E	2 Ea.	48'-0½" TO 7'-3½"	Str.
S560E	4	52'-11"	Str.
S601E	124	30'-0"	Str.
S701E	18	7'-5"	5¼"

NOTES:
Dimension of bars are out-to-out.

Bar designations ending with "E" indicate epoxy coated bars.

See Std. Dwg. No. 55071 for Bar Bending Diaphragms of R400E, R401E & R403E.

STATE OF ARKANSAS
LICENSED PROFESSIONAL ENGINEER
No.21243
COLTON S. WYLIE
Digitally Signed 07/28/2023
BRIDGE ENGINEER

SHEET 2 OF 6
DETAILS OF 215'-0" CONTINUOUS PRESTRESSED CONCRETE GIRDER UNIT
BRIDGE A
HIGHWAY 612 OVER MARCHANT ROAD
ROUTE SEC.
ARKANSAS STATE HIGHWAY COMMISSION
LITTLE ROCK, ARK.

DRAWN BY: HEW DATE: JUNE 2011 FILENAME: b012326a6_s2.dgn
CHECKED BY: JES DATE: MAR. 2023 SCALE: AS SHOWN
DESIGNED BY: MRA DATE: JUNE 2011
BRIDGE NO. A7617 DRAWING NO. 66265

JESkinner 7/28/2023 12:10:46 PM
WORKSPACE: ARDOT Bridge
\\garverinc.local\gdata\Projects\2017\17017660 - ARDOT 012326 Hwy 412 - Hwy 112\Drawings\b012326a6_S402-TS.dgn
REVISED DATE:

DATE REVISED	DATE REVISED	FED. ROAD DIST. NO.	STATE	JOB NO.	SHEET NO.	TOTAL SHEETS
		6	ARK.	012326	477	838
		A7617		215'-0" UNIT		66266

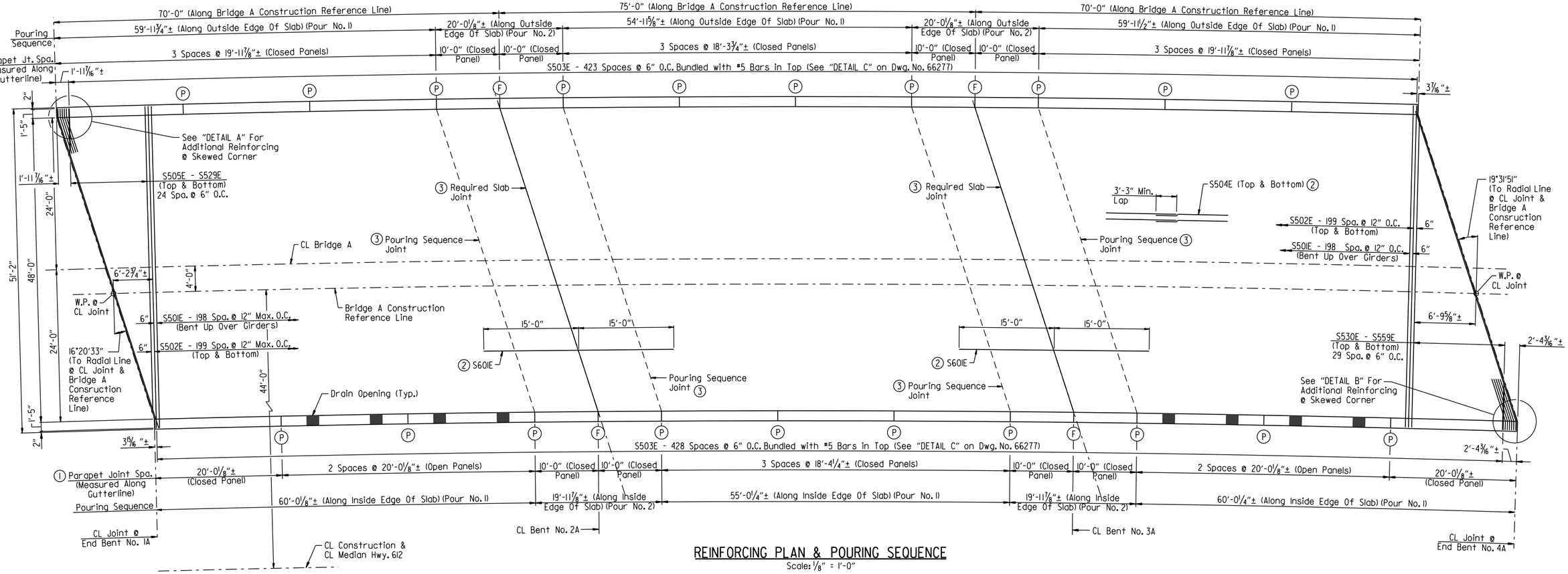

REINFORCING PLAN & POURING SEQUENCE

Scale: ⅛" = 1'-0"

(1) Parapet joints designated with symbol (F) shall be stopped 6" from top of slab. All other parapet joints with symbol (P) shall be partial depth joints stopped 16" from top of slab.

(2) Refer to "TYPICAL SECTION AT INTERMEDIATE DIAPHRAGMS" on Dwg. No. 66264 for placement.

(3) See "TRANSVERSE SLAB JOINT DETAIL", on Dwg. No. 66277.

NOTES:
Pours with the same number may be placed simultaneously or separately. All pours (1) must be placed before pours (2) can be placed. A minimum of 48 hours shall elapse between the end of a pour and the start of the next pour. A minimum of 72 hours shall elapse between the end of a pour and the start of an adjacent pour.

Concrete in bridge superstructure shall be placed, consolidated, and screeded off for the entire pour before any concrete has taken its initial set. This may require the use of a retarding agent.

A minimum of 72 hours shall elapse between completion of the slab and the pouring of the bridge railing. Any railing pours made before the entire slab unit has been placed must be approved by the Engineer. The Contractor must obtain approval from the Engineer for any deviations from the pouring sequence(s) shown.

The slab and diaphragms shall not be poured prior to 90 days following release of prestressed girder strands.

Concrete diaphragms at intermediate bents shall be poured monoithically with the slab above the diaphragm.

All partial-depth and end bent diaphragms shall be cast in place and poured a minimum of 48 hours before the slab is poured.

Removable forms shall be used when pouring diaphragms.

Required slab joints and pouring sequence joints shall align with rail open joints at the gutterline.

Transverse slab reinforcing is placed on radial lines and spaced along left edge of slab.

Longitudinal slab reinforcing is placed with same degree of curvature as slab.

Edges of slab are concentric to 1°30'00" curve @ CL Median.

All transverse lines are radial to CL Median.

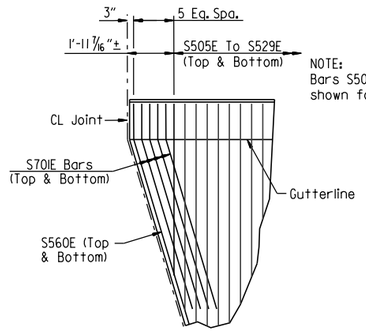

DETAIL A
No Scale

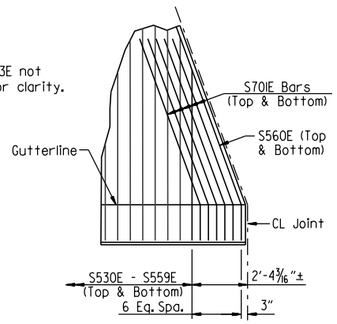

DETAIL B
No Scale

TABLE OF VARIABLES

CLOSED RAIL PANELS			OPEN RAIL PANELS					
Panel Length	"A"	R4XXE	Panel Length	"B"	"C"	"D"	"E"	R4XXE
10'-0"	19	09	20'-0⅛"	11	4'-0"	16	8'-0⅛"	11
18'-3¾"	36	10						
18'-4¼"	36	10						
19'-11⅞"	39	11						
20'-0⅛"	40	11						

STATE OF ARKANSAS
LICENSED PROFESSIONAL ENGINEER
No. 21243
COLTON S. WYLIE
Digitally Signed 07/28/2023
BRIDGE ENGINEER

SHEET 3 OF 6
DETAILS OF 215'-0" CONTINUOUS PRESTRESSED CONCRETE GIRDER UNIT BRIDGE A
HIGHWAY 612 OVER MARCHANT ROAD

ROUTE SEC.

ARKANSAS STATE HIGHWAY COMMISSION
LITTLE ROCK, ARK.

DRAWN BY: HEW DATE: JUNE 2011 FILENAME: b012326a6_s3.dgn
CHECKED BY: JES DATE: MAR. 2023 SCALE: AS SHOWN
DESIGNED BY: MRA DATE: JUNE 2011

BRIDGE NO. A7617 DRAWING NO. 66266

JESkinner 7/28/2023 12:10:46 PM
WORKSPACE: ARDOT Bridge
\\garverinc.local\gdata\Projects\2017\17017660 - ARDOT 012326 Hwy 412 - Hwy 112\Drawings\b012326x6_S403-SB.dgn
REVISED DATE:

DATE REVISED	DATE REVISED	FED. ROAD DIST. NO.	STATE	JOB NO.	SHEET NO.	TOTAL SHEETS
		6	ARK.	012326	478	838
		A7617		215'-0" UNIT		66267

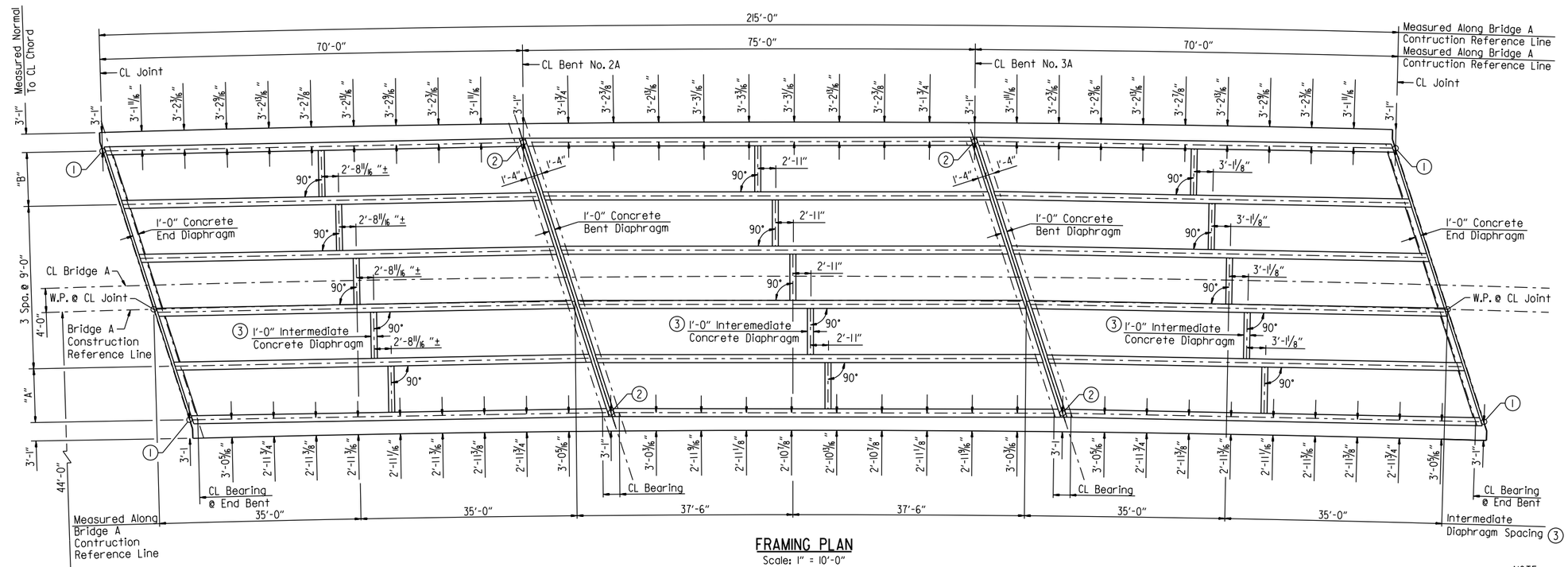

FRAMING PLAN
Scale: 1" = 10'-0"

NOTE:
All cantilever dimensions are measured at tenth points along edges of slab and normal to exterior girders.

1. Intersection of CL Girder & CL Joint
2. Intersection CL Girder & CL Bent
3. Galvanized steel diaphragms may be used in place of concrete diaphragms at intermediate diaphragm locations only.
4. Provide roofing felt to serve as a bond breaker where diaphragm overlaps external load plate.

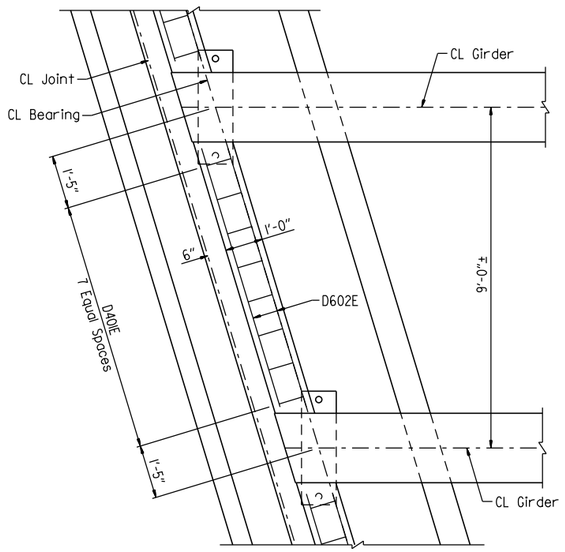

PLAN END DIAPHRAGM
Scale: 1/2" = 1'-0"

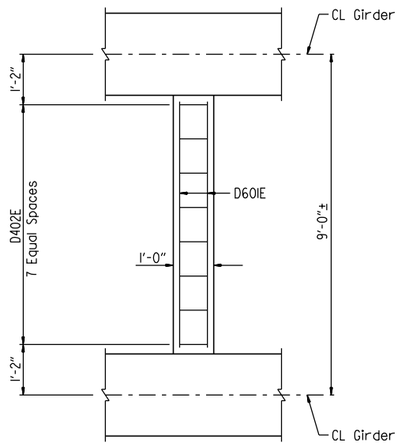

PLAN INTERMEDIATE DIAPHRAGM
Scale: 1/2" = 1'-0"

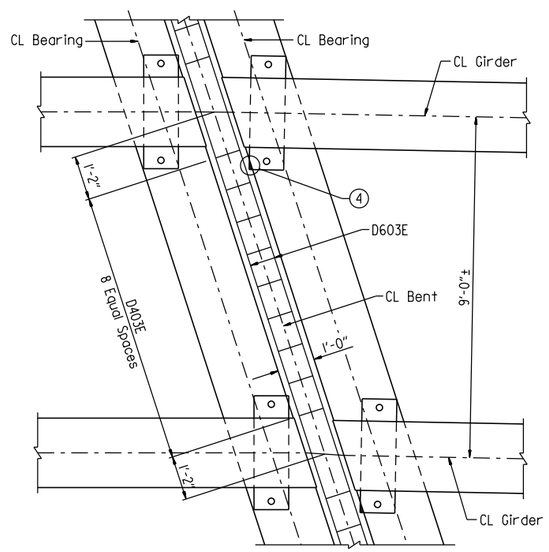

PLAN BENT DIAPHRAGM
Scale: 1/2" = 1'-0"

TABLE OF VARIABLES		
Location	"A"	"B"
Bent 1	8'-11 5/16" ±	8'-11 3/16" ±
Bent 2 - Span 1	9'-0 1/16" ±	9'-0 11/16" ±
Bent 2 - Span 2	8'-11 1/4" ±	8'-11 1/16" ±
Bent 3 - Span 2	9'-0 5/16" ±	9'-0 3/4" ±
Bent 3 - Span 3	8'-11 1/4" ±	8'-11 1/16" ±
Bent 4	9'-0 5/16" ±	9'-0 3/4" ±

STATE OF ARKANSAS
LICENSED PROFESSIONAL ENGINEER
No. 21243
COLTON S. WYLIE
Digitally Signed 07/28/2023
BRIDGE ENGINEER

SHEET 4 OF 6
DETAILS OF 215'-0" CONTINUOUS PRESTRESSED CONCRETE GIRDER UNIT BRIDGE A
HIGHWAY 612 OVER MARCHANT ROAD

ROUTE SEC.

ARKANSAS STATE HIGHWAY COMMISSION
LITTLE ROCK, ARK.

DRAWN BY: CSW DATE: JAN. 2023 FILENAME: b012326a6_s4.dgn
CHECKED BY: JES DATE: MAR. 2023 SCALE: AS SHOWN
DESIGNED BY: MJS DATE: JAN. 2023

BRIDGE NO. A7617 DRAWING NO. 66267

JESkinner 7/28/2023 12:10:47 PM
WORKSPACE: ARDOT Bridge
\\garverinc.local\gdata\Projects\2017\17017660 - ARDOT 012326 Hwy 412 - Hwy 112\Drawings\b012326x6_S404-SF.dgn
REVISED DATE:

DATE REVISED	DATE REVISED	FED. ROAD DIST. NO.	STATE	JOB NO.	SHEET NO.	TOTAL SHEETS
		6	ARK.	012326	479	838
		A7617		215'-0" UNIT		66268

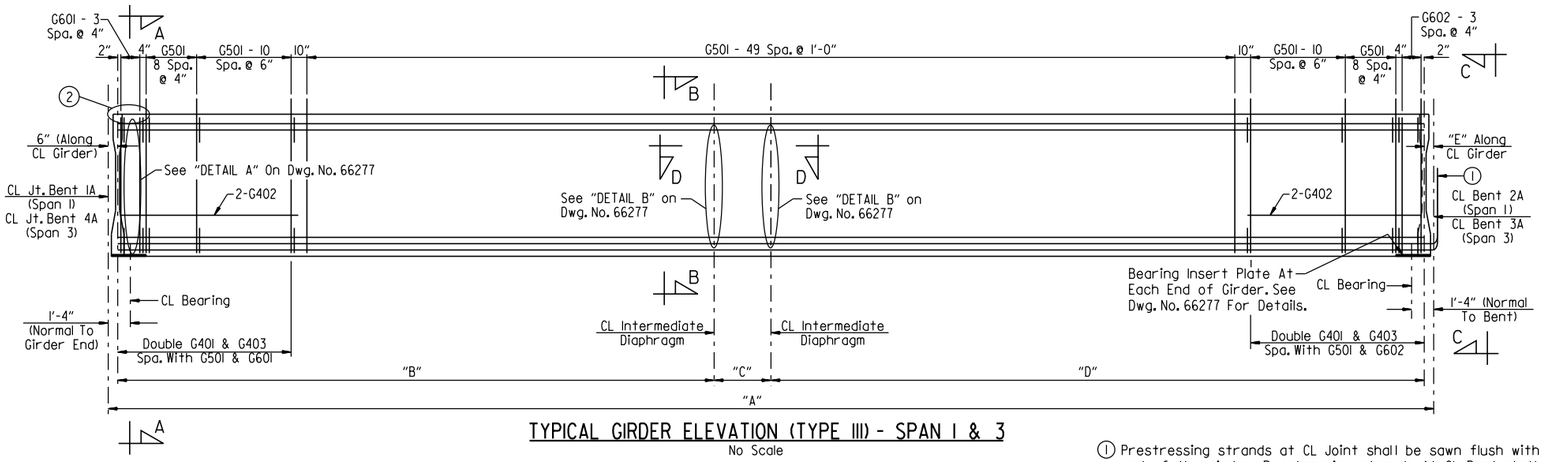

TYPICAL GIRDER ELEVATION (TYPE III) - SPAN 1 & 3

No Scale

(1) Prestressing strands at CL Joint shall be sawn flush with the end of the girder. Prestressing strands At CL Bent shall be bent up into diaphragms as shown in "SECTION C-C" on Dwg. No. 66265.

(2) For "CHANNEL CONNECTION DETAIL", see Dwg. No. 66278.

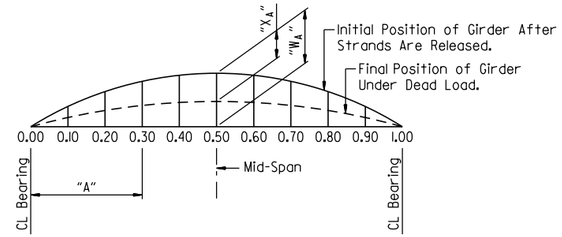

"W_A" is camber of girder (prestress + dead load of girder @ 90 days after release)

"X_A" is dead load deflection of slab + diaphragms + composite dead load.

(3) CAMBER & DEFLECTIONS (INCHES)

(3) Camber and Deflection Values shown are based on a concrete girder strength, f'c = 8,000 psi. Greater strengths may require adjustments. See "SPECIAL CAMBER NOTES" on Dwg. No. 66276.

(4)

SPAN PT.	INCHES	
	"W_A"	"X_A"
0.00	0.000	0.000
0.10	0.638	0.214
0.20	1.116	0.433
0.30	1.441	0.606
0.40	1.630	0.716
0.50	1.691	0.754

(4) Symmetrical by 180° rotation

TABLE OF VARIABLES

	Girder	"A"	"B"	"C"	"D"	"E"
SPAN 1	1	69'-11 1/2"	35'-10 5/16"	0"	33'-1 11/16"	5 1/2"
	2-5	69'-11 7/8"	33'-1 11/16"	2'-8 11/16"	33'-1 5/8"	5 7/8"
	6	70'-0 3/8"	33'-1 5/8"	0"	35'-10 3/8"	6 3/8"
SPAN 3	1	69'-11 3/8"	32'-11 7/16"	0"	36'-0 9/16"	5 3/8"
	2-5	69'-11 7/8"	32'-11 7/16"	3'-1 1/8"	32'-11 7/16"	5 7/8"
	6	70'-0 1/2"	36'-0 5/8"	0"	32'-11 3/8"	6 1/2"

BAR LIST - PER GIRDER

Mark	No. Req'd.	Length	Pin. Dia.
G301	12	5'-0"	Str.
G401	92	3'-3 1/2"	2"
G402	4	9'-2"	Str.
G403	46	2'-11"	3"
G404	2	68'-8"	Str.
G501	176	5'-2"	3 3/4"
G602	8	3'-9"	4 1/2"
G602	8	4'-4"	4 1/2"

BAR BENDING DIAGRAMS

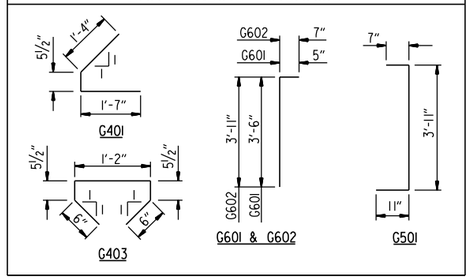

NOTES:
Dimensions of bars in bending diaphragm are out-to-out.

All bars in the "BAR LIST - PER GIRDER" will not be paid for directly, but willbe considered subsidiary to the item "PRESTRESSED CONCRETE GIRDERS (TYPE III)".

At the Contractor's option, 1/2"ø strands pulled to 2,000 lbs. may be substituted for bars G404.

At the Contractor's option, the two G401 bars may be furnished as one bar.

DEBOND SCHEDULE

Debond Pair	Debond Length From End Of Girder
A	5'-0"

NOTES:
For "SUPERSTRUCTURE GENERAL NOTES", see Dwg. No. 66276.

For details of girder bevels & "SECTION D-D", see Dwg. No. 66277.

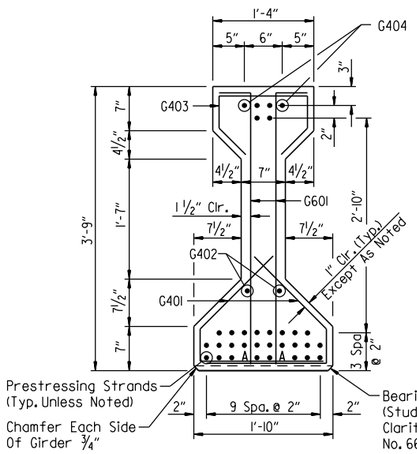

SECTION A-A

Scale: 1" = 1'-0"

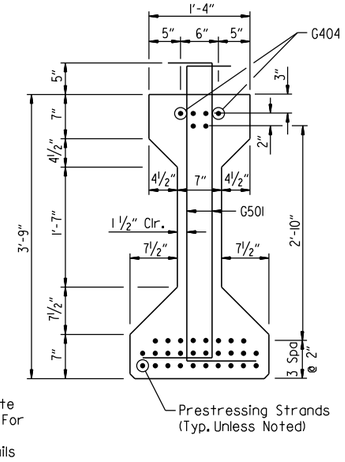

SECTION B-B

Scale: 1" = 1'-0"

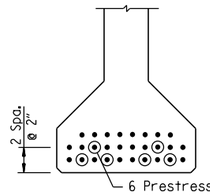

VIEW C-C

Scale: 1" = 1'-0"

STATE OF ARKANSAS
LICENSED PROFESSIONAL ENGINEER
No. 21243
COLTON S. WYLIE
Digitally Signed 07/28/2023
BRIDGE ENGINEER

SHEET 5 OF 6
DETAILS OF 215'-0" CONTINUOUS PRESTRESSED CONCRETE GIRDER UNIT BRIDGE A
HIGHWAY 612 OVER MARCHANT ROAD

ROUTE SEC.

ARKANSAS STATE HIGHWAY COMMISSION

LITTLE ROCK, ARK.

DRAWN BY: HEW DATE: JUNE 2011 FILENAME: b012326a6_s5.dgn
CHECKED BY: JES DATE: MAR. 2023 SCALE: AS SHOWN
DESIGNED BY: MRA DATE: JUNE 2011

BRIDGE NO. A7617 DRAWING NO. 66268

JESkinner 7/28/2023 12:10:47 PM
WORKSPACE: ARDOT Bridge
\\garverinc.local\gdata\Projects\2017\17017660 - ARDOT 012326 Hwy 412 - Hwy 112\Drawings\b012326x6_S405-BB.dgn
REVISED DATE:

DATE REVISED	DATE REVISED	FED. ROAD DIST. NO.	STATE	JOB NO.	SHEET NO.	TOTAL SHEETS
		6	ARK.	012326	480	838
		A7617		215'-0" UNIT		66269

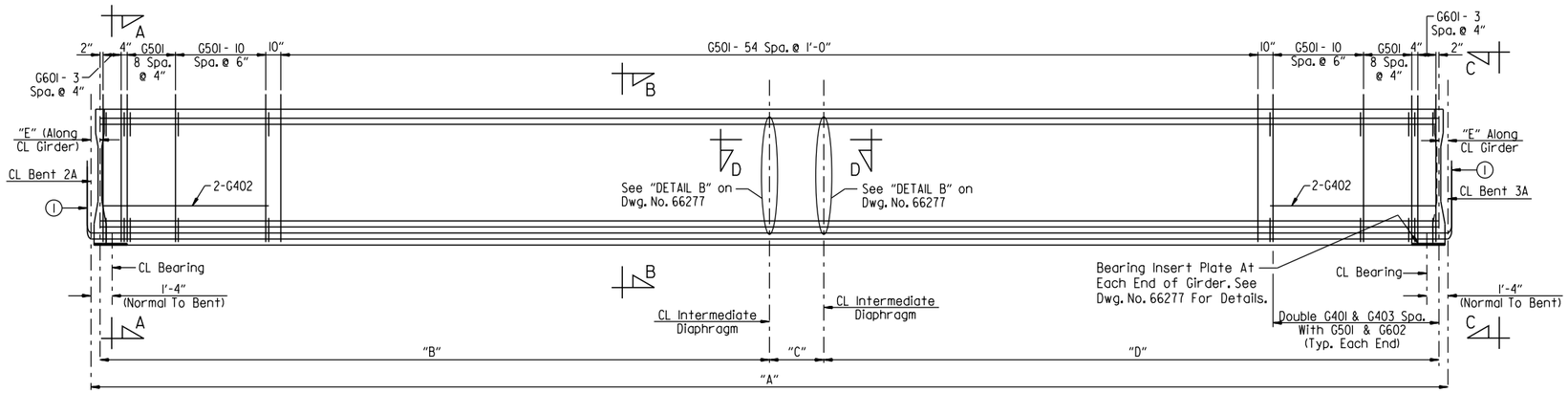

TYPICAL GIRDER ELEVATION (TYPE III) - SPAN 2

No Scale

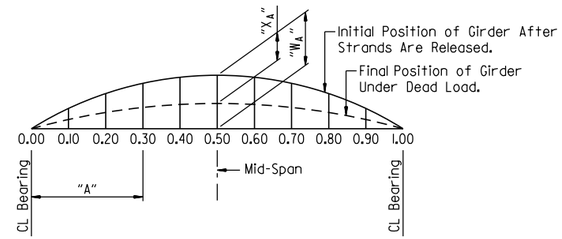

"W_A" is camber of girder (prestress + dead load of girder @ 90 days after release)

"X_A" is dead load deflection of slab + diaphragms + composite dead load.

TABLE OF VARIABLES					
Girder	"A"	"B"	"C"	"D"	"E"
1	74'-11 3/8"	38'-5 7/16"	0"	35'-6 9/16"	5 11/16"
2-5	74'-11 7/8"	35'-6 9/16"	2'-11"	35'-6 7/16"	5 5/16"
6	75'-0 1/2"	35'-6 1/2"	0"	38'-5 1/2"	6 1/4"

(1) Prestressing strands At CL bent shall be bent up into diaphragms as shown in "SECTION C-C" on Dwg. No. 66265.

BAR LIST - PER GIRDER			
Mark	No. Req'd.	Length	Pin. Dia.
G301	6	5'-0"	Str.
G401	92	3'-3 1/2"	2"
G402	4	9'-2"	Str.
G403	46	2'-11"	3"
G404	2	73'-8"	Str.
G501	186	5'-2"	3 3/4"
G601	16	4'-4"	4 1/2"

(2) CAMBER & DEFLECTIONS (INCHES)

(2) Camber and Deflection Values shown are based on a concrete girder strength, f'c = 8,000 psi. Greater strengths may require adjustments. See "SPECIAL CAMBER NOTES" on Dwg. No. 66276.

(3) SPAN PT.	INCHES	
	"W_A"	"X_A"
0.00	0.000	0.000
0.10	0.807	0.287
0.20	1.423	0.577
0.30	1.843	0.806
0.40	2.085	0.953
0.50	2.165	1.003

(3) Symmetrical by 180° rotation

DEBOND SCHEDULE	
Debond Pair	Debond Length From End Of Girder
A	5'-0"
B	8'-0"

BAR BENDING DIAGRAMS

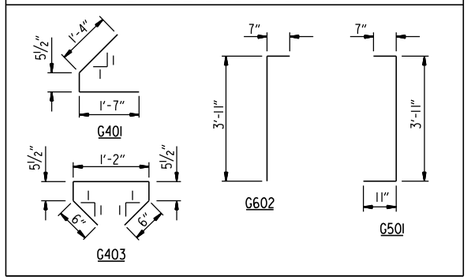

NOTES:
Dimensions of bars in bending diaphragm are out-to-out.

All bars in the "BAR LIST - PER GIRDER" will not be paid for directly, but willbe considered subsidiary to the item "PRESTRESSED CONCRETE GIRDERS (TYPE III)".

At the Contractor's option, 1/2"ø strands pulled to 2,000 lbs. may be substituted for bars G404.

At the Contractor's option, the two G401 bars may be furnished as one bar.

NOTES:
For "SUPERSTRUCTURE GENERAL NOTES", see Dwg. No. 66276.

For details of girder bevels & "SECTION D-D", see Dwg. No. 66277.

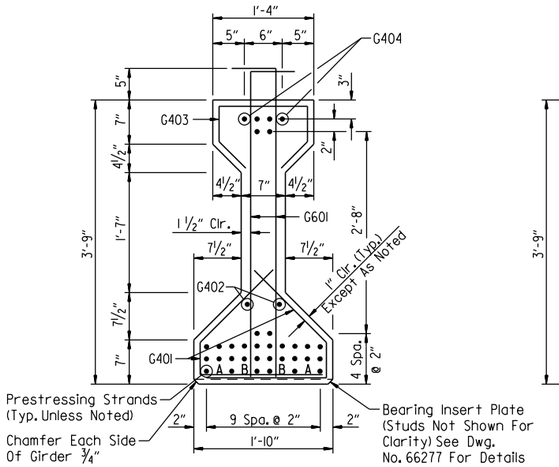

SECTION A-A
Scale: 1" = 1'-0"

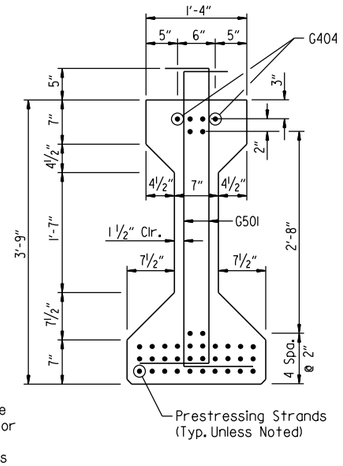

SECTION B-B
Scale: 1" = 1'-0"

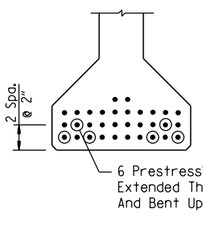

VIEW C-C
Scale: 1" = 1'-0"

STATE OF ARKANSAS
LICENSED PROFESSIONAL ENGINEER
No.21243
COLTON S. WYLIE
Digitally Signed 07/28/2023
BRIDGE ENGINEER

SHEET 6 OF 6
DETAILS OF 215'-0" CONTINUOUS PRESTRESSED CONCRETE GIRDER UNIT
BRIDGE A
HIGHWAY 612 OVER MARCHANT ROAD
ROUTE SEC.
ARKANSAS STATE HIGHWAY COMMISSION
LITTLE ROCK, ARK.

DRAWN BY: HEW DATE: JUNE 2011 FILENAME: b012326a6_s6.dgn
CHECKED BY: JES DATE: MAR. 2023 SCALE: AS SHOWN
DESIGNED BY: MRA DATE: JUNE 2011
BRIDGE NO. A7617 DRAWING NO. 66269

JESkinner 7/28/2023 12:10:48 PM
WORKSPACE: ARDOT Bridge
\\garverinc.local\gdata\Projects\2017\17017660 - ARDOT 012326 Hwy 412 - Hwy 112\Drawings\b012326x6_S406-BB.dgn
REVISED DATE:

DATE REVISED	DATE REVISED	FED. ROAD DIST. NO.	STATE	JOB NO.	SHEET NO.	TOTAL SHEETS
		6	ARK.	012326	481	838
		B7617		215'-0" UNIT		66270

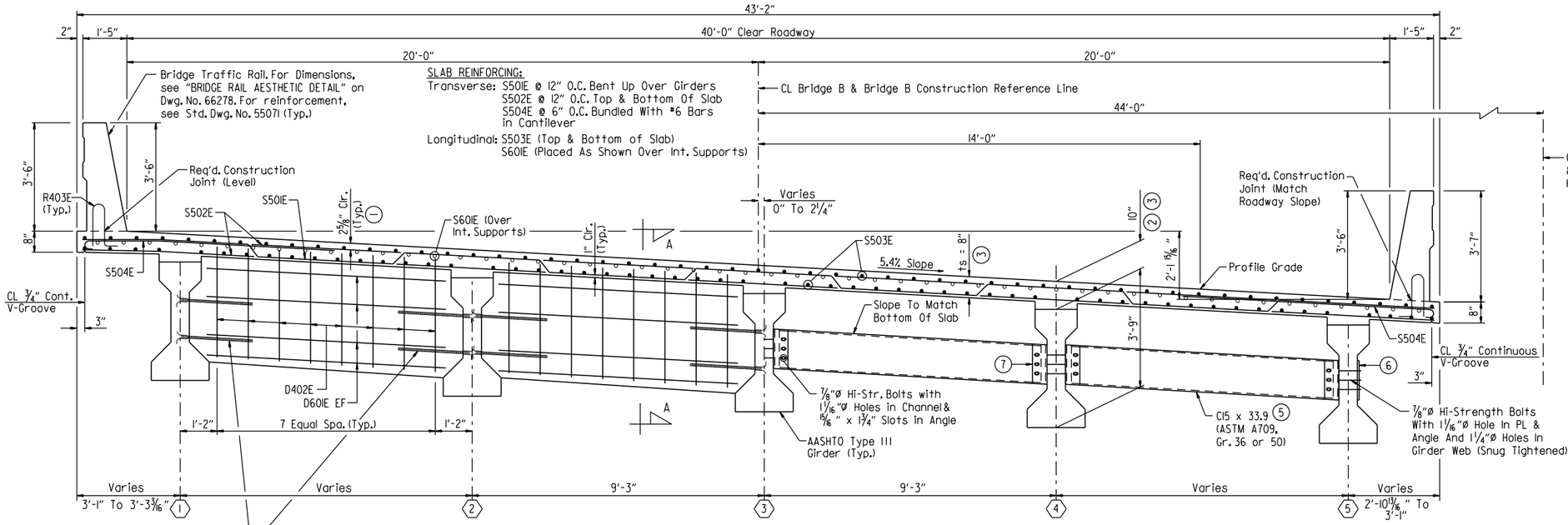

(4) Galvanized Threaded Inserts & ¾"ø x 3'-6" Threaded Rods. For Number And Location, See "TYPICAL GIRDER ELEVATION (TYPE III)" On Drawing Nos. 66274 & 66275.

INTERMEDIATE CONCRETE DIAPHRAGMS

(5) ALTERNATE STRUCTURAL STEEL DIAPHRAGMS

TYPICAL SECTION AT INTERMEDIATE DIAPHRAGMS

(Looking Ahead)
Scale: ½" = 1'-0"

(1) TOLERANCE:
Minus = ¼"
Plus = Equal to amount af slab thickening used to meet slab thickness tolerance - see "ADJUSTMENT FOR SLAB THICKNESS TOLERANCE WHEN REMOVABLE DECK FORMING IS USED" on Dwg. No. 66278.

(2) This dimension taken at CL Girder @ CL Bearing

(3) See "ADJUSTMENT FOR SLAB THICKNESS TOLERANCE WHEN REMOVABLE DECK FORMING IS USED" on Dwg. No. 66278.

(4) Galvanized threaded inserts: Dayton-Richmond F-42 Loop Ferrule Insert or an approved equal. ¾"ø galvanized threaded rods to be ASTM A709, Grade 36 or AASHTO M 31 or M 232, Class C or ASTM B695, Class 50. These items will not be paid for directly but shall be considered subsidiary to the item "PRESTRESSED CONCRETE GIRDERS (TYPE III)". Galvanizing shall be in accordance with AASHTO M232 Class C or AASHTO M298 Class 50.

(5) Galvanized steel diaphragms may be used in place of concrete at intermediate diaphragms only. All components of the alternate steel diaphragms shall be galvanized. Galvanizing shall be in accordance with AASHTO M111. Payment will be based on concrete diaphragms.

(6) PL ½" x 4" x 15" (ASTM A709, Gr. 36 or 50) (Mask when applying textured coating finish to exterior girders.)

(7) L6" x 4" x ½" x 15" (ASTM A709, Gr. 36 or 50) center angle on web of girder. A standard washer shall be supplied for use under both the nut and the head of the 7/8"ø h.s. bolts. An additional plate washer shall cover the angle slots.

EXPANSION DEVICE:
Roadway Channel: MC18x42.7
Conn. Angle: MC18x42.7 (Cope One Flange)

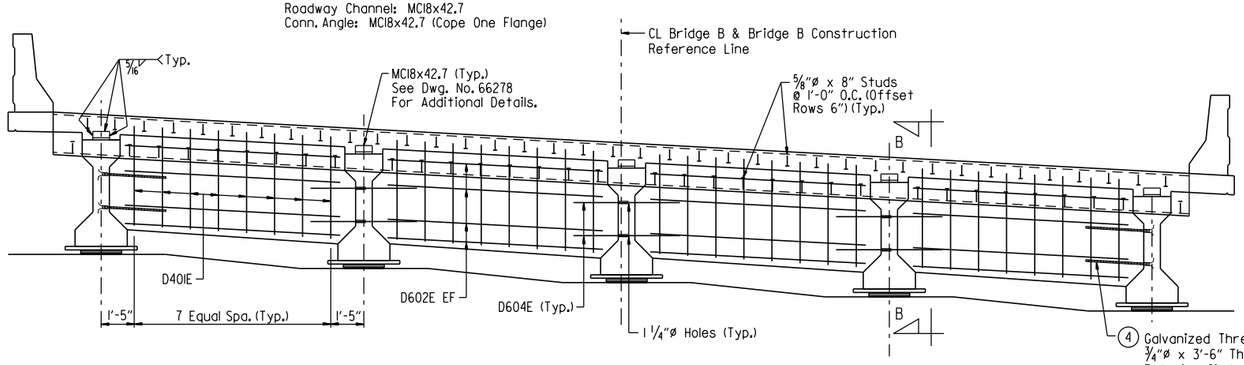

TYPICAL SECTION (END OF UNIT AT JOINT)

(Looking Ahead)
No Scale

(4) Galvanized Threaded Inserts & ¾"ø x 3'-6" Threaded Rods @ Exterior Girders. For Number And Location, See "TYPICAL GIRDER ELEVATION" On Dwg. Nos. 66274 & 66275. Threaded Rods Shall Be Bent As Required To Match Skew Of Diaphragms.

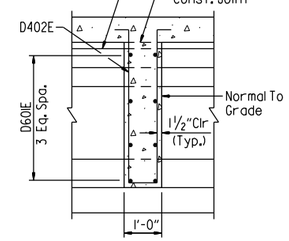

SECTION A-A

(Normal To Diaphragm)
Scale: ½" = 1'-0"

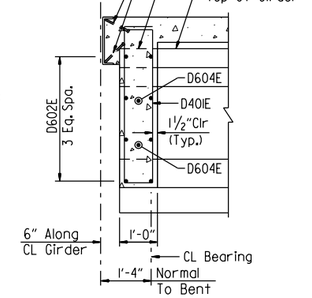

SECTION B-B

(Normal To Diaphragm)
Scale: ½" = 1'-0"

NOTES:
Class 2 Protective Surface Treatment shall be applied to the roadway surface and the face and top of bridge traffic rail.

Class 3 Textured Coating Finish shall be applied to bridge surfaces as specified in Special Provision "TEXTURED COATING FINISH" and in accordance with Subsection 802.19(b)(3). Textured Coating Finish shall not be applied on surfaces where Class 2 Protective Surface Treatment is applied.

One epoxy-coated #5 bar in the top and one epoxy-coated #5 bar in the bottom may be substituted for each bar S501E. Payment will be based on the weight of bar S501E.

Bar positions or clearances from the forms shall be maintained by means of stays, ties, hangers or other approved devices per Subsection 804.06. Placement of slab bolster or high-chairs with full-length lower runners directly on removable deck forms will not be allowed.

All bars designated with an "E" suffix are to be epoxy coated.

STATE OF ARKANSAS
LICENSED PROFESSIONAL ENGINEER
No. 21243
COLTON S. WYLIE
Digitally Signed 07/28/2023
BRIDGE ENGINEER

LEGEND
EF = Each Face

SHEET 1 OF 6
DETAILS OF 215'-0" CONTINUOUS PRESTRESSED CONCRETE GIRDER UNIT BRIDGE B
HIGHWAY 612 OVER MARCHANT ROAD

ROUTE SEC.

ARKANSAS STATE HIGHWAY COMMISSION
LITTLE ROCK, ARK.

DRAWN BY: HEW DATE: JUNE 2011 FILENAME: b012326b6_s7.dgn
CHECKED BY: AJK DATE: JAN. 2012 SCALE: AS SHOWN
DESIGNED BY: MRA DATE: JUNE 2011

BRIDGE NO. B7617 DRAWING NO. 66270

JESkinner 7/28/2023 12:10:48 PM
WORKSPACE: ARDOT Bridge
\\garverinc.local\gdata\Projects\2017\17017660 - ARDOT 012326 Hwy 412 - Hwy 112\Drawings\b012326x6_S407-TS.dgn
REVISED DATE:

DATE REVISED	DATE REVISED	FED. ROAD DIST. NO.	STATE	JOB NO.	SHEET NO.	TOTAL SHEETS
		6	ARK.	012326	482	838
		B7617		215'-0" UNIT		66271

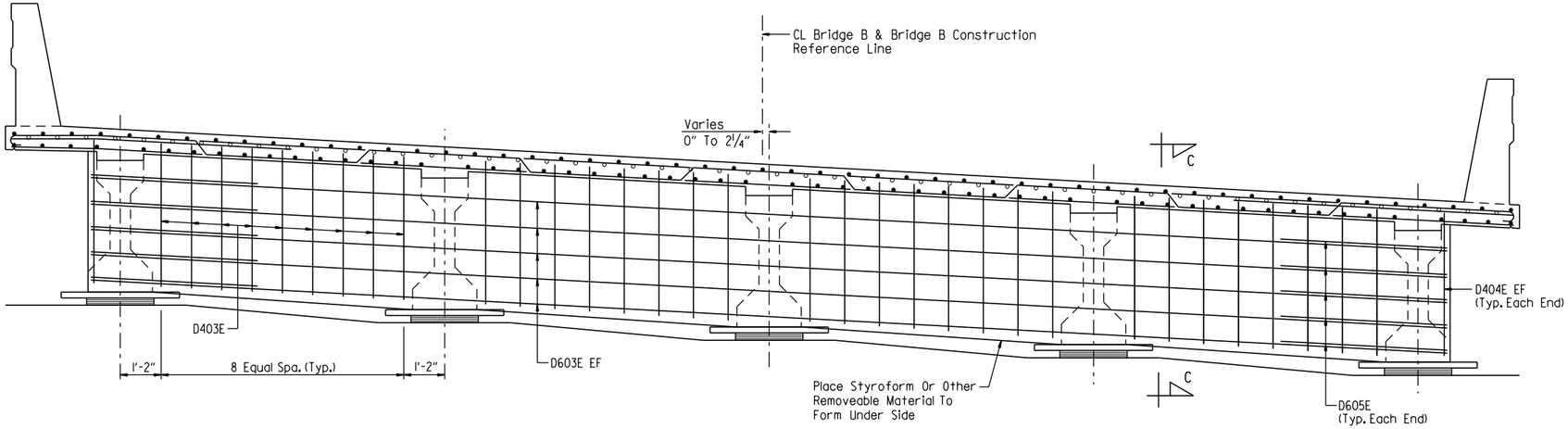

TYPICAL SECTION BETWEEN GIRDERS AT INTERIOR BENTS

(For Info Not Shown See "TYPICAL SECTION AT INTERMEDIATE DIAPHRAGMS")
No Scale

LEGEND

EF = Each Face

BAR BENDING DIAGRAMS

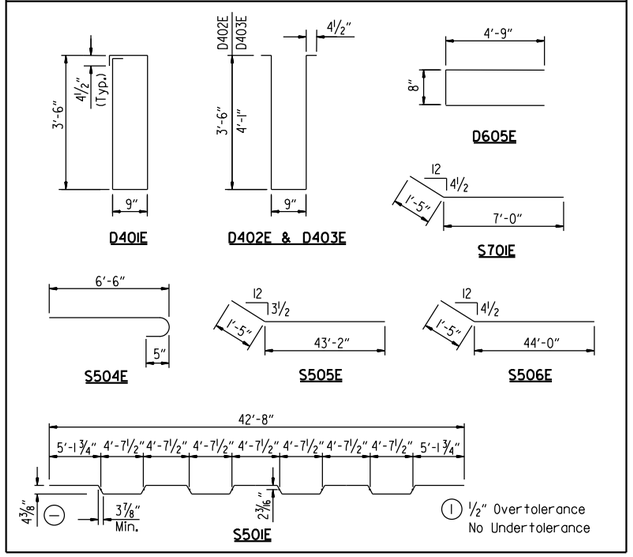

BAR LIST

Mark	No. Req'd.	Length	Pin. Dia.
D401E	64	8'-10"	2"
D402E	96	8'-2"	2"
D403E	72	9'-6"	2"
D404E	8	4'-1"	STR.
D601E	96	7'-7"	STR.
D602E	64	7'-11"	STR.
D603E	20	40'-4"	STR.
D604E	12	5'-0"	STR.
D605E	20	9'-10"	4½"
R400E	32	6'-3"	3"
R401E	868	7'-6"	3"
R402E	80	5'-6"	STR.
R403E	868	3'-8"	3", 6"
R409E	80	9'-8"	STR.
R410E	60	17'-11"	STR.
R411E	120	19'-7"	STR.
S501E	202	43'-6"	3"
S502E	406	42'-10"	STR.
S503E	436	56'-6"	STR.
S504E	856	7'-1"	3¾"
S505E	2	44'-7"	3¾"
S506E	2	45'-5"	3¾"
S507E TO S527E	2 Each	7'-3½" TO 40'-3½"	STR.
S528E TO S552E	2 Each	40'-5½" TO 7'-7½"	STR.
S601E	104	30'-0"	STR.
S701E	20	8'-5"	5¼"

NOTES:
Dimension of bars are out-to-out.

Bar designations ending with "E" indicate epoxy coated bars.

See Std. Dwg. No. 55071 for Bar Bending Diaphragms of R400E, R401E & R403E.

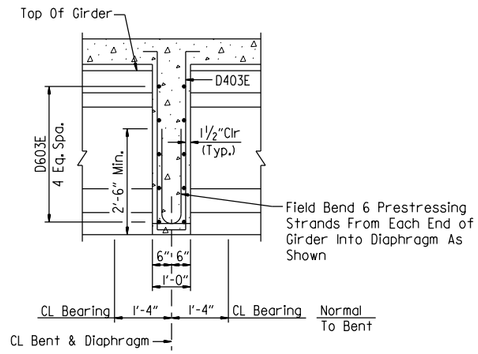

SECTION C-C

(Normal To Diaphragm)
Scale: ½" = 1'-0"

STATE OF ARKANSAS
LICENSED PROFESSIONAL ENGINEER
No. 21243
COLTON S. WYLIE
Digitally Signed 07/28/2023
BRIDGE ENGINEER

SHEET 2 OF 6
DETAILS OF 215'-0" CONTINUOUS PRESTRESSED CONCRETE GIRDER UNIT BRIDGE B
HIGHWAY 612 OVER MARCHANT ROAD

ROUTE SEC.

ARKANSAS STATE HIGHWAY COMMISSION
LITTLE ROCK, ARK.

DRAWN BY: HEW DATE: JUNE 2011 FILENAME: b012326b6_s8.dgn
CHECKED BY: AJK DATE: JAN. 2012 SCALE: AS SHOWN
DESIGNED BY: MRA DATE: JUNE 2011
BRIDGE NO. B7617 DRAWING NO. 66271

JESkinner 7/28/2023 12:10:49 PM
WORKSPACE: ARDOT Bridge
\\garverinc.local\data\Projects\2017\170760 - ARDOT 012326 Hwy 412 - Hwy 112\Drawings\b012326x6_S408-TS.dgn
REVISED DATE:

DATE REVISED	DATE REVISED	FED. ROAD DIST. NO.	STATE	JOB NO.	SHEET NO.	TOTAL SHEETS
		6	ARK.	012326	483	838
		B7617		215'-0" UNIT		66272

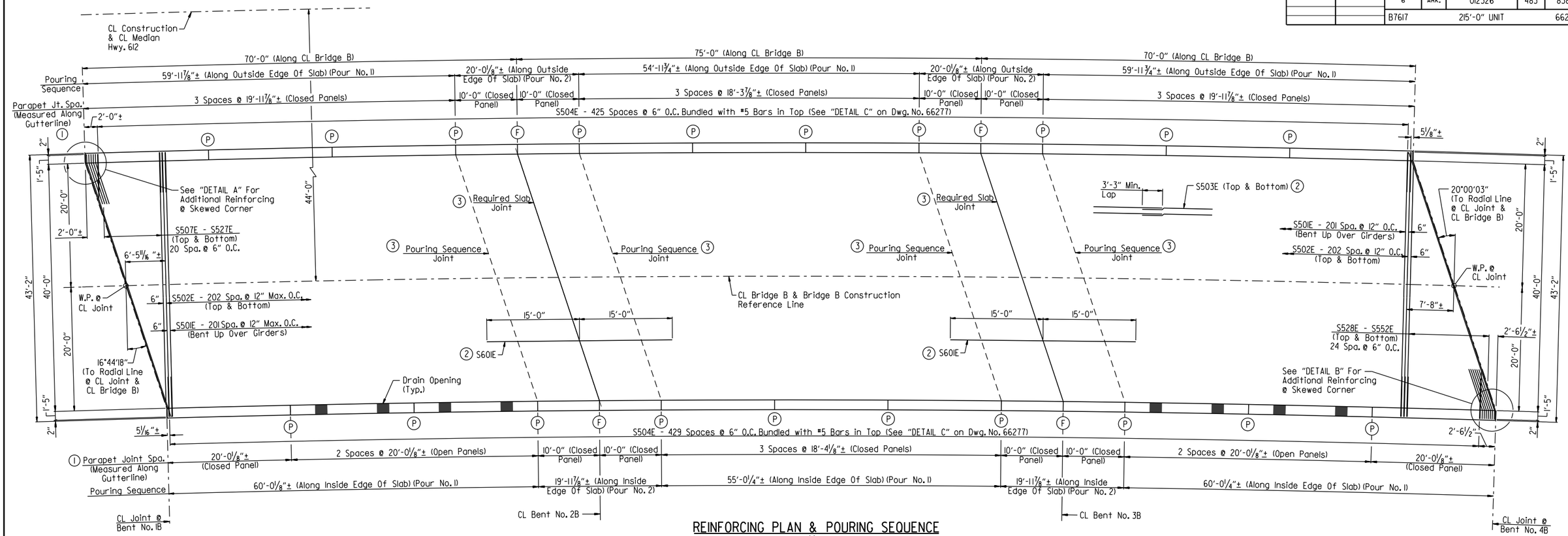

REINFORCING PLAN & POURING SEQUENCE

Scale: 1/8" = 1'-0"

NOTES:
Pours with the same number may be placed simultaneously or separately. All pours (1) must be placed before pours (2) can be placed. A minimum of 48 hours shall elapse between the end of a pour and the start of the next pour. A minimum of 72 hours shall elapse between the end of a pour and the start of an adjacent pour.

Concrete in bridge superstructure shall be placed, consolidated, and screeded off for the entire pour before any concrete has taken its initial set. This may require the use of a retarding agent.

A minimum of 72 hours shall elapse between completion of the slab and the pouring of the bridge railing. Any railing pours made before the entire slab unit has been placed must be approved by the Engineer. The Contractor must obtain approval from the Engineer for any deviations from the pouring sequence(s) shown.

The slab and diaphragms shall not be poured prior to 90 days following release of prestressed girder strands.

Concrete diaphragms at intermediate bents shall be poured monolithically with the slab above the diaphragm.

All partial-depth and end bent diaphragms shall be cast in place and poured a minimum of 48 hours before the slab is poured.

Removable forms shall be used when pouring diaphragms.

Required slab joints and pouring sequence joints shall align with rail joints at the gutterline.

Transverse slab reinforcing is placed on radial lines and spaced along left edge of slab.

Longitudinal slab reinforcing is placed with same degree of curvature as slab.

Edges of slab are concentric to 1°30'00" curve @ CL Median.

All transverse lines are radial to CL Median.

(1) Parapet joints designated with symbol (F) shall be stopped 6" from top of slab. All other parapet joints with symbol (P) shall be partial depth joints stopped 16" from top of slab.

(2) Refer to "TYPICAL SECTION AT INTERMEDIATE DIAPHRAGMS" on Dwg. No. 66270 for placement.

(3) See "TRANSVERSE SLAB JOINT DETAIL", on Dwg. No. 66277.

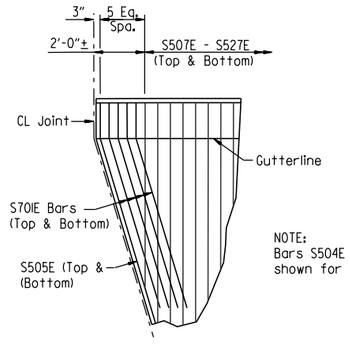

DETAIL A
No Scale

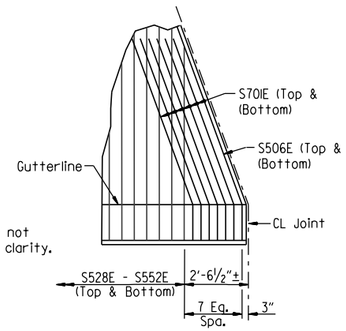

NOTE:
Bars S504E not shown for clarity.

DETAIL B
No Scale

TABLE OF VARIABLES								
CLOSED RAIL PANELS			OPEN RAIL PANELS					
PANEL LENGTH	"A"	R4XXE	PANEL LENGTH	"B"	"C"	"D"	"E"	R4XXE
10'-0"	19	9	20'-0 1/8"	11	4'-0"	16	8'-0 1/8"	11
18'-3 7/8"	36	10						
18'-4 1/8"	36	10						
19'-11 7/8"	39	11						
20'-0 1/8"	40	11						

STATE OF ARKANSAS
LICENSED PROFESSIONAL ENGINEER
No. 21243
COLTON S. WYLIE
Digitally Signed 07/28/2023
BRIDGE ENGINEER

SHEET 3 OF 6
DETAILS OF 215'-0" CONTINUOUS PRESTRESSED CONCRETE GIRDER UNIT BRIDGE B
HIGHWAY 612 OVER MARCHANT ROAD

ROUTE SEC.

ARKANSAS STATE HIGHWAY COMMISSION

LITTLE ROCK, ARK.

DRAWN BY: HEW DATE: JUNE 2011 FILENAME: b012326b6_s9.dgn
CHECKED BY: AJK DATE: JAN. 2012 SCALE: AS SHOWN
DESIGNED BY: MRA DATE: JUNE 2011

BRIDGE NO. B7617 DRAWING NO. 66272

JEskinner 7/28/2023 12:10:49 PM
WORKSPACE: ARDOT Bridge
\\garverinc.local\data\Projects\2017\17017660 - ARDOT 012326 Hwy 412 - Hwy 112\Drawings\b012326x6_5409-SB.dgn
REVISED DATE:

DATE REVISED	DATE REVISED	FED. ROAD DIST. NO.	STATE	JOB NO.	SHEET NO.	TOTAL SHEETS
		6	ARK.	012326	484	838
		B7617		215'-0" UNIT		66273

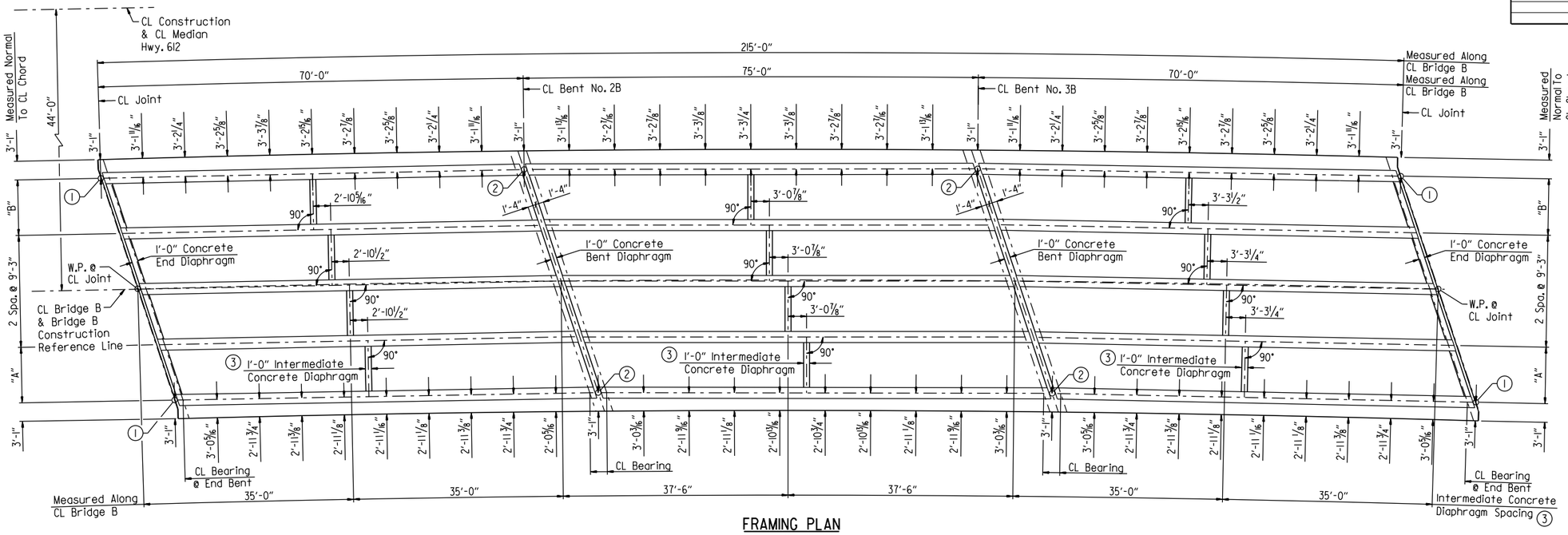

FRAMING PLAN
Scale: 1" = 10'-0"

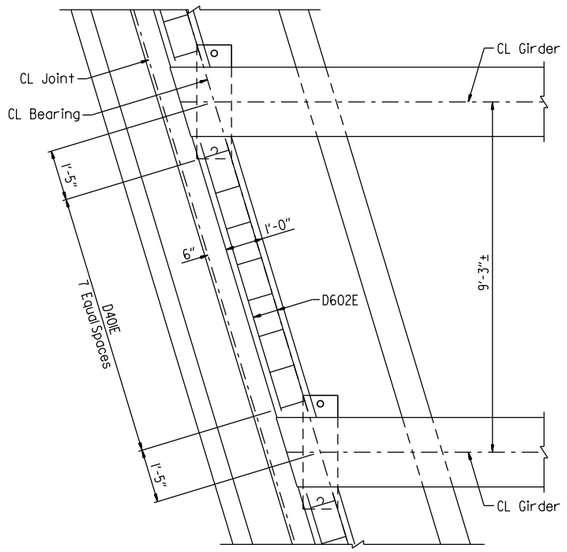

PLAN END DIAPHRAGM
Scale: ½" = 1'-0"

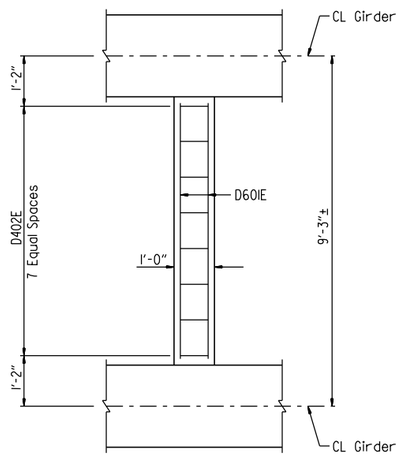

PLAN INTERMEDIATE DIAPHRAGM
Scale: ½" = 1'-0"

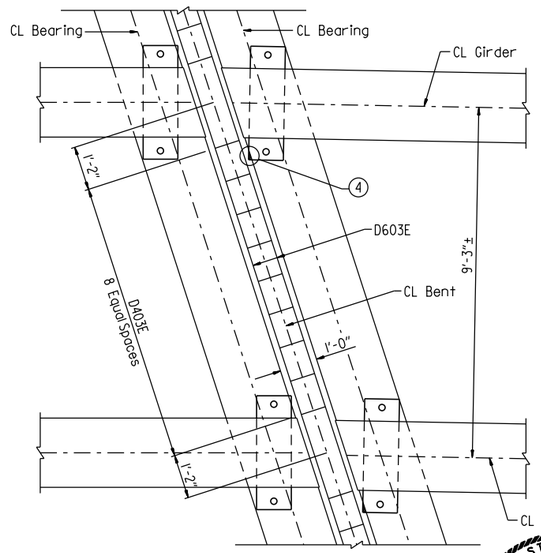

PLAN BENT DIAPHRAGM
Scale: ½" = 1'-0"

NOTE:
All cantilever dimensions are measured at tenth points along edges of slab and normal to exterior girders.

(1) Intersection of CL Girder & CL Joint

(2) Intersection CL Girder & CL Bent

(3) Galvanized steel diaphragms may be used in place of concrete diaphragms at intermediate diaphragm locations only.

(4) Provide roofing felt to serve as a bond breaker where diaphragm overlaps external load plate.

TABLE OF VARIABLES		
Location	"A"	"B"
Bent 1	9'-2 1/16"±	9'-2 5/16"±
Bent 2 - Span 1	9'-3 1/16"±	9'-3 5/8"±
Bent 2 - Span 2	9'-2 5/16"±	9'-2 1/4"±
Bent 3 - Span 2	9'-3 1/8"±	9'-3 1/16"±
Bent 3 - Span 3	9'-2 3/8"±	9'-2 1/4"±
Bent 4	9'-3 1/16"±	9'-3 1/16"±

STATE OF ARKANSAS
LICENSED PROFESSIONAL ENGINEER
No. 21243
COLTON S. WYLIE
Digitally Signed 07/28/2023
BRIDGE ENGINEER

SHEET 4 OF 6
DETAILS OF 215'-0" CONTINUOUS PRESTRESSED CONCRETE GIRDER UNIT BRIDGE B
HIGHWAY 612 OVER MARCHANT ROAD
ROUTE SEC.

ARKANSAS STATE HIGHWAY COMMISSION
LITTLE ROCK, ARK.

DRAWN BY: HEW DATE: JULY 2011 FILENAME: b012326b6_sl0.dgn
CHECKED BY: AJK DATE: JAN. 2012 SCALE: AS SHOWN
DESIGNED BY: MRA DATE: JULY 2011
BRIDGE NO. B7617 DRAWING NO. 66273

JESkinner 7/28/2023 12:10:50 PM
WORKSPACE: ARDOT Bridge
\\garverinc.local\gdata\Projects\20IT\170I7660 - ARDOT 012326 Hwy 412 - Hwy 112\Drawings\b012326x6_S410-SF.dgn
REVISED DATE:

DATE REVISED	DATE REVISED	FED. ROAD DIST. NO.	STATE	JOB NO.	SHEET NO.	TOTAL SHEETS
		6	ARK.	012326	485	838
		B7617		215'-0" UNIT		66274

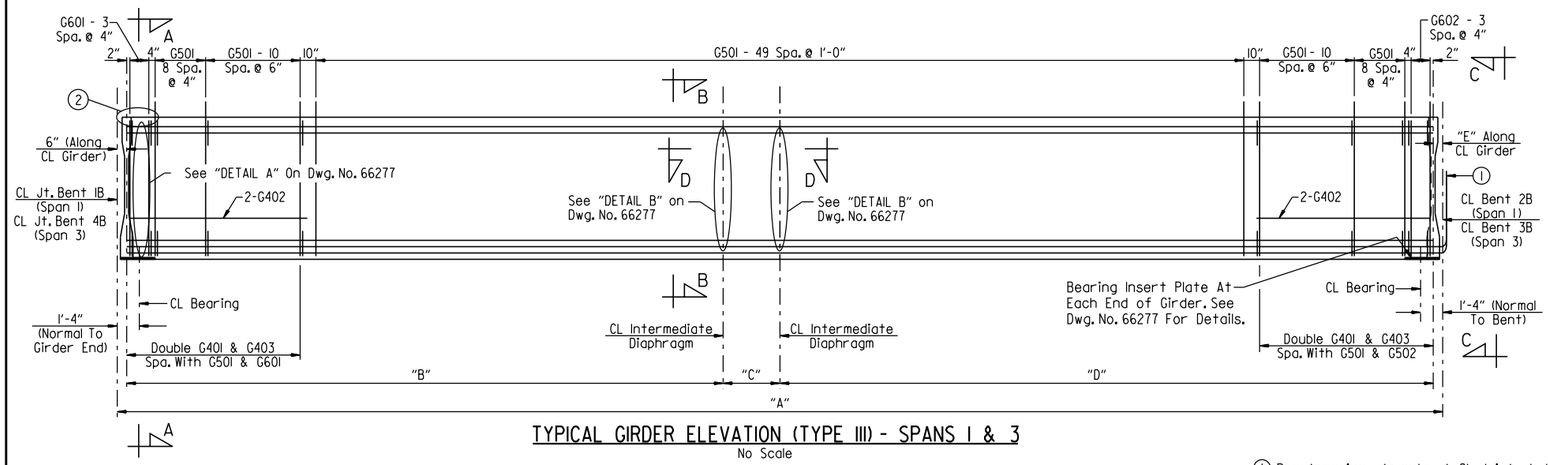

TYPICAL GIRDER ELEVATION (TYPE III) - SPANS 1 & 3

No Scale

	Girder	"A"	"B"	"C"	"D"	"E"
SPAN 1	1	69'-11 9/16"	34'-6"	0"	34'-6"	5 9/16"
	2	70'-0"	31'-7 11/16"	2'-10 5/16"	34'-6"	6"
	3	70'-0"	31'-7 1/2"	2'-10 1/2"	34'-6"	6"
	4	70'-0"	31'-7 1/2"	2'-10 1/2"	34'-6"	6"
	5	70'-0 3/8"	31'-7 11/16"	0"	37'-4 5/16"	6 3/8"
SPAN 3	1	69'-11 1/2"	34'-6"	0"	34'-6"	5 1/2"
	2	70'-0"	34'-6"	3'-3 1/2"	31'-2 1/2"	6"
	3	70'-0"	34'-6"	3'-3 1/4"	31'-2 3/4"	6"
	4	70'-0"	34'-6"	3'-3 1/4"	31'-2 3/4"	6"
	5	70'-0 1/2"	37'-9 1/2"	0"	31'-2 1/2"	6 1/2"

TABLE OF VARIABLES

(1) Prestressing strands at CL Joint shall be sawn flush with the end of the girder. Prestressing strands At CL Bent shall be bent up into diaphragms as shown in "SECTION C-C" on Dwg. No. 66271.

(2) For "CHANNEL CONNECTION DETAIL", see Dwg. No. 66278.

BAR LIST - PER GIRDER			
Mark	No. Req'd.	Length	Pin. Dia.
G301	12	5'-0"	Str.
G401	92	3'-3 1/2"	2"
G402	4	9'-2"	Str.
G403	46	2'-11"	3"
G404	2	68'-8"	Str.
G501	176	5'-2"	3 3/4"
G602	8	3'-9"	4 1/2"
G602	8	4'-4"	4 1/2"

BAR BENDING DIAGRAMS

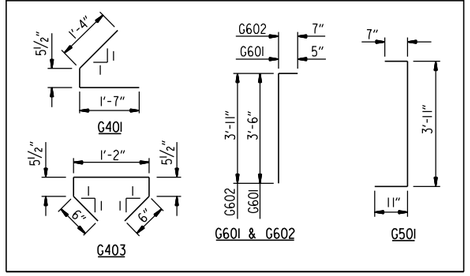

NOTES:
Dimensions of bars in bending diaphragm are out-to-out.

All bars in the "BAR LIST - PER GIRDER" will not be paid for directly, but willbe considered subsidiary to the item "PRESTRESSED CONCRETE GIRDERS (TYPE III)".

At the Contractor's option, 1/2"ø strands pulled to 2,000 lbs. may be substituted for bars G404.

At the Contractor's option, the two G401 bars may be furnished as one bar.

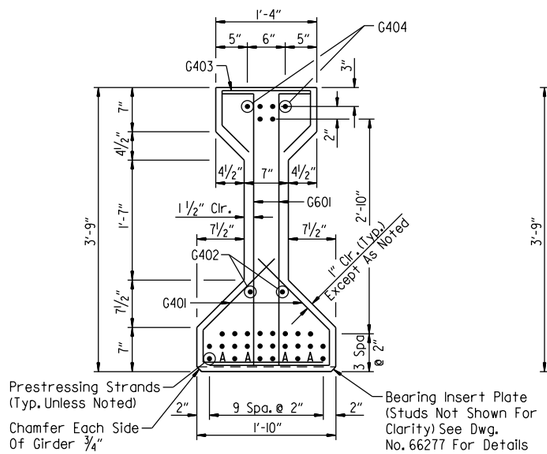

SECTION A-A
Scale: 1" = 1'-0"

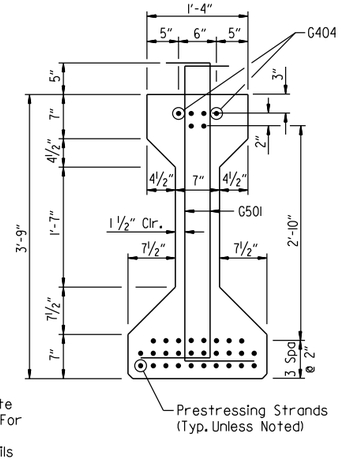

SECTION B-B
Scale: 1" = 1'-0"

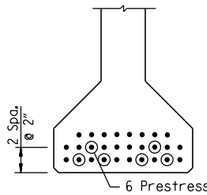

VIEW C-C
Scale: 1" = 1'-0"

DEBOND SCHEDULE	
Debond Pair	Debond Length From End Of Girder
A	6'-0"

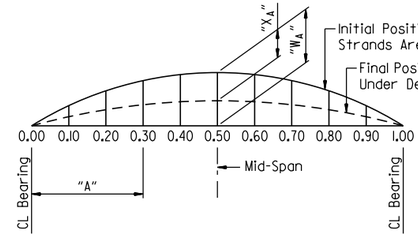

"W_A" is camber of girder (prestress + dead load of girder @ 90 days after release)

"X_A" is dead load deflection of slab + diaphragms + composite dead load.

(3) CAMBER & DEFLECTIONS (INCHES)

(3) Camber and Deflection Values shown are based on a concrete girder strength, f'c = 8,000 psi. Greater strengths may require adjustments. See "SPECIAL CAMBER NOTES" on Dwg. No. 66276.

(4)

SPAN PT.	INCHES	
	"W_A"	"X_A"
0.00	0.000	0.000
0.10	0.622	0.211
0.20	1.100	0.426
0.30	1.425	0.596
0.40	1.614	0.704
0.50	1.676	0.742

(4) Symmetrical by 180° rotation

NOTES:
For "SUPERSTRUCTURE GENERAL NOTES", see Dwg. No. 66276.

For details of girder bevels & "SECTION D-D", see Dwg. No. 66277.

STATE OF ARKANSAS
LICENSED PROFESSIONAL ENGINEER
No. 21243
COLTON S. WYLIE
Digitally Signed 07/28/2023
BRIDGE ENGINEER

SHEET 5 OF 6
DETAILS OF 215'-0" CONTINUOUS PRESTRESSED CONCRETE GIRDER UNIT BRIDGE B
HIGHWAY 612 OVER MARCHANT ROAD

ROUTE SEC.

ARKANSAS STATE HIGHWAY COMMISSION

LITTLE ROCK, ARK.

DRAWN BY: HEW DATE: JUNE 2011 FILENAME: b012326b6_sll.dgn
CHECKED BY: AJK DATE: JAN. 2012 SCALE: AS SHOWN
DESIGNED BY: MRA DATE: JUNE 2011
BRIDGE NO. B7617 DRAWING NO. 66274

JEStinner 7/28/2023 12:10:50 PM
WORKSPACE: ARDOT Bridge
\\garverinc.local\gdata\Projects\2017\17017660 - ARDOT 012326 Hwy 412 - Hwy 112\Drawings\b012326x6_Sll-BB.dgn
REVISED DATE:

DATE REVISED	DATE REVISED	FED. ROAD DIST. NO.	STATE	JOB NO.	SHEET NO.	TOTAL SHEETS
		6	ARK.	012326	486	838
		B7617		215'-0" UNIT		66275

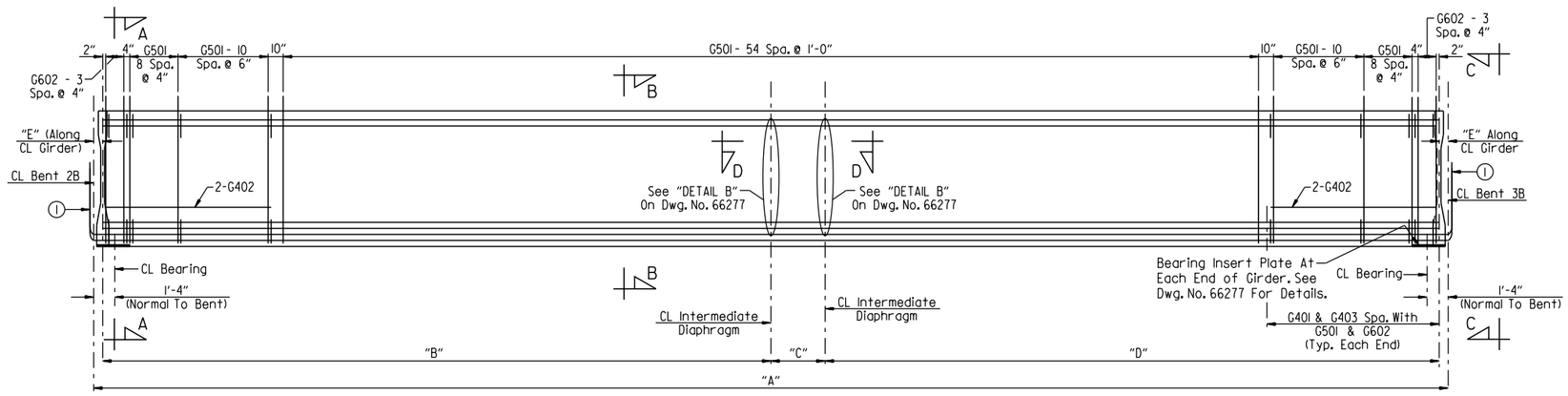

TYPICAL GIRDER ELEVATION (TYPE III) - SPAN 2

No Scale

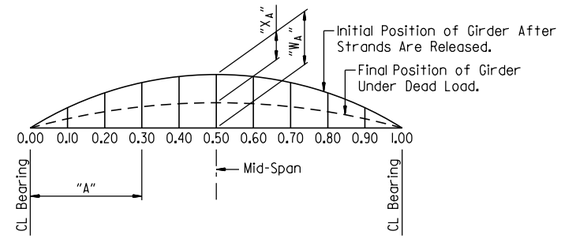

"W_A" is camber of girder (prestress + dead load of girder @ 90 days after release)

"X_A" is dead load deflection of slab + diaphragms + composite dead load.

TABLE OF VARIABLES					
Girder	"A"	"B"	"C"	"D"	"E"
1	74'-11 1/2"	37'-0"	0"	37'-0"	5 3/4"
2	75'-0"	33'-11 1/8"	3'-0 7/8"	37'-0"	6"
3	75'-0"	33'-11 1/8"	3'-0 7/8"	37'-0"	6"
4	75'-0"	33'-11 1/8"	3'-0 7/8"	37'-0"	6"
5	75'-0 1/2"	33'-11 1/8"	0"	40'-0 7/8"	6 1/4"

(1) Prestressing strands At CL bent shall be bent up into diaphragms as shown in "SECTION C-C" on Dwg. No. 66271.

BAR LIST - PER GIRDER			
Mark	No. Req'd.	Length	Pin. Dia.
G301	6	5'-0"	Str.
G401	92	3'-3 1/2"	2"
G402	4	9'-2"	Str.
G403	46	2'-11"	3"
G404	2	73'-8"	Str.
G501	186	5'-2"	3 3/4"
G602	16	4'-4"	4 1/2"

BAR BENDING DIAGRAMS

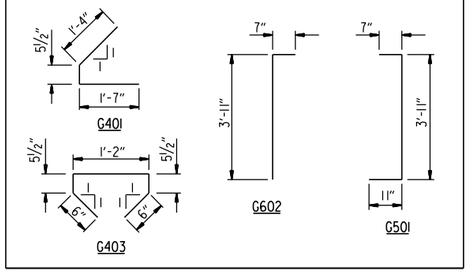

NOTES:
Dimensions of bars in bending diaphragm are out-to-out.

All bars in the "BAR LIST - PER GIRDER" will not be paid for directly, but willbe considered subsidiary to the item "PRESTRESSED CONCRETE GIRDERS (TYPE III)".

At the Contractor's option, 1/2"ø strands pulled to 2,000 lbs. may be substituted for bars G404.

At the Contractor's option, the two G401 bars may be furnished as one bar.

(2) CAMBER & DEFLECTIONS (INCHES)

(2) Camber and Deflection Values shown are based on a concrete girder strength, f'c = 8,000 psi. Greater strengths may require adjustments. See "SPECIAL CAMBER NOTES" on Dwg. No. 66276.

(3) SPAN PT.	INCHES	
	"W_A"	"X_A"
0.00	0.000	0.000
0.10	0.843	0.280
0.20	1.504	0.562
0.30	1.956	0.786
0.40	2.218	0.929
0.50	2.304	0.979

(3) Symmetrical by 180° rotation

NOTES:
For "SUPERSTRUCTURE GENERAL NOTES", see Dwg. No. 66276.

For details of girder bevels & "SECTION D-D", see Dwg. No. 66277.

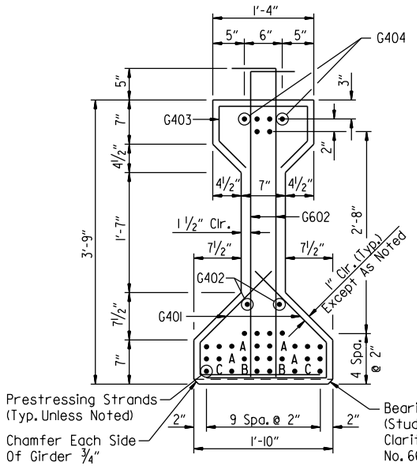

SECTION A-A
Scale: 1" = 1'-0"

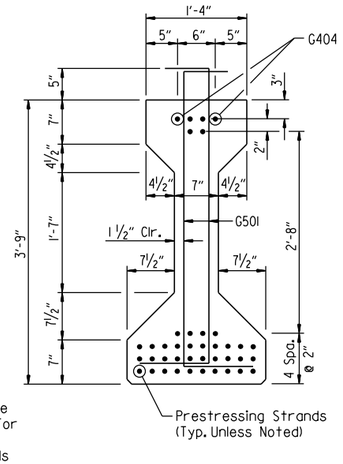

SECTION B-B
Scale: 1" = 1'-0"

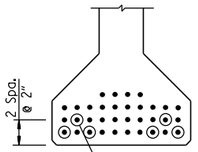

VIEW C-C
Scale: 1" = 1'-0"

DEBOND SCHEDULE	
Debond Pair	Debond Length From End Of Girder
A	6'-0"
B	12'-0"
C	9'-0"

STATE OF ARKANSAS
LICENSED PROFESSIONAL ENGINEER
No.21243
COLTON S. WYLIE
Digitally Signed 07/28/2023
BRIDGE ENGINEER

SHEET 6 OF 6
DETAILS OF 215'-0" CONTINUOUS PRESTRESSED CONCRETE GIRDER UNIT
BRIDGE B
HIGHWAY 612 OVER MARCHANT ROAD
ROUTE SEC.
ARKANSAS STATE HIGHWAY COMMISSION
LITTLE ROCK, ARK.

DRAWN BY: HEW DATE: JUNE 2011 FILENAME: b012326b6_sl2.dgn
CHECKED BY: AJK DATE: JAN. 2012 SCALE: AS SHOWN
DESIGNED BY: MRA DATE: JUNE 2011
BRIDGE NO. B7617 DRAWING NO. 66275

JESkinner 7/28/2023 12:10:55 PM
WORKSPACE: ARDOT Bridge
\\garverinc.local\data\Projects\2017\170176\60 - ARDOT 012326 Hwy 412 - Hwy 112\Drawings\b012326x6.S412-BB.dgn
REVISED DATE:

DATE REVISED	DATE REVISED	FED. ROAD DIST. NO.	STATE	JOB NO.	SHEET NO.	TOTAL SHEETS
		6	ARK.	012326	487	838
		A7617 & B7617		COMMON DETAILS		66276

PRESTRESSED CONCRETE GIRDERS:

Pretensioning steel shall be 1/2"ø Low Relaxation strands with a minimum ultimate strength of 270 ksi and shall conform to AASHTO M 203.

All girders shall be TYPE III as shown on the details and shall be the standard prestressing sections adopted by the Joint Committee of AASHTO and the Prestressed Concrete Institude. All girders shall be cast in floored pallets and in metal forms. All work and materials shall be as specified in Subsection 802.22.

Concrete shall be Class "S" and shall have a minimum 28 day compressive strength f'c = 8,000 psi. The initial tensile force applied to each 1/2"ø strand shall be 31,000 pounds except as noted. Transfer of this tensioning load to the girder shall not be done until the compressive strength of the concrete is 6,000 psi.

Dimensions shown are to the center of strands.

The Contractor shall submit the method and sequence for release of strands to the Engineer for approval prior to casting of the girders.

The first 16" along the top of the girder at beginning and end of unit shall have a smooth finish. The tops of the remaining length of the girders shall be roughened to an amplitude of 1/4" and shall be scrubbed transversely with a coarse wire brush to remove all laitance to produce an adequate surface for bonding the slab.

Girder lengths shown on the design plans are net lengths measured horizontally along girder centerlines. The girder manufacturer shall make the necessary allowances for grade and shortening due to elastic shortening, creep and shrinkage.

Extreme care shall be exercised in handling and moving precast, prestressed concrete girders. Girders must be maintained in an upright position at all times and must be picked up from points near the girder ends. Disregard of this requirement may lead to collapse of the girder. The Contractor's proposed lifting details shall be submitted on shop drawings to the Engineer for approval. The use of holes for lifting purposes will not be permitted.

The Contractor may submit alternate strand patterns with design calculations for review and approval in accordance with Subsection 802.22..

Reinforcing steel in Girders shall be Grade 60 (fy = 60,000 psi.) conforming to M 31 or M 322 Type A, with mill test reports.

Distances from the forms and spacing of the prestressing steel shall be maintained by stays, ties, hangers, spacers or other approved supports which shall be shown on the Shop Drawings.

The points of support and direction of reactions with respect to the member shall be approximately the same during transportation and storage as when member is in its final position.

Holes and inserts shall be cast into the girders. Field drilling of holes shall be permitted.

After dimensioning, saw cut, grind or bend up strands as designated by the plans. Heat-cutting or bending methods shall not be used within 6" on the girder.

Plan drawings show general features of design only. Shop drawings shall be made in accordance with the specifications, submitted and approval secured before fabrication begins.

SUPERSTRUCTURE GENERAL NOTES:

CONCRETE:

Concrete shall be poured in the dry, and all exposed corners shall be chamfered 3/4" unless noted. All concrete, except for prestressed girders, shall be Class S(AE) with a minimum 28 day compressive strength, f'c = 4,000 psi.

The superstructure details shown are for use when removable deck forming is used and are the basis for measurement of the item "CLASS S(AE) CONCRETE-BRIDGE". See Standard Drawing No. 55005 for allowable modifications and for tolerances when Permanent Steel Deck Forms are used.

The concrete deck (roadway surface) shall be given a tine finish in accordance with Subsection 802.19 for Class 5 Tined Bridge Roadway Surface Finish. Movement of the finishing machine across new concrete shall be on planks placed on the surface and shall be prohibited for 72 hours after finishing the pour. Sufficient concrete must be placed ahead of the strike-off to fully load the girder. When permitted, the use of a longitudinal strike-off will require that a vertical camber adjustment be made in the strike-off to account for the future dead load deflection due to any railings.

REINFORCING STEEL:

All reinforcing steel shall be Grade 60 (fy = 60'000 psi) conforming to AASHTO M 31 or M 322 Type A, with mill test reports and shall be epoxy coated. The reinforcing steel is to be accurately located in the forms and firmly held in place by steel wire supports, sufficient in number and size to prevent displacement during the course of construction. The wire supports will not be paid for directly, but will be considered subsidiary to the item "EPOXY COATED REINFORCING STEEL (GRADE 60)".

STRUCTURAL STEEL:

All structural steel shall be ASTM A709 with grade and payment as specified in the plans. Grade 50W steel shall not be painted and all exposed surfaces shall be cleaned in accordance with Subsection 807.84(e). Grade 36 and Grade 50 steel shall be painted unless otherwise noted and all exposed surfaces shall be cleaned in accordance with Subsection 807.84. Structural steel completely embedded in concrete may be ASTM A709, Gr. 36, Gr. 50 or Gr. 50W unless otherwise noted.

Requests for substitution of structural steel shapes shown with shapes of greater size must be submitted by the Contractor to the Engineer for approval. Steels of equal or greater strengths will be accepted only when shown on the approved shop drawings. Shapes and materials shown in the plans will be the basis of payment and no additional compensation will be made for any adjustments due to substitutions.

All welding that is to be done during fabrication of structural steel, including temporary welds, shall be detailed on the shop drawings and submitted for approval. If additional welds are required, whether permanent or temporary, a formal request with detailed drawings shall be submitted to the Engineer for approval. All welding shall conform to Subsection 807.26.

Plan drawings show general features of design only. Shop drawings shall be prepared in accordance with the specifications, submitted and approval secured before fabrication is begun.

SPECIAL CAMBER NOTES

The camber and dead load deflection values shown on the plans are estimated based on the required minimum concrete strength for the prestressed concrete girders. The Contractor shall provide the Engineer with the following information:

A. Actual 28-Day concrete strength of prestressed concrete girders

B. Actual concrete strength of prestressed concrete girders at time of release

C. Estimated age of prestressed concrete girders at time of erection

D. Profile of each girder under its own weight in final position

Following receipt of the above data, the Engineer will evaluate the dead load and, if necessary, will provide an updated deflection diagram to the Contractor.

STATE OF ARKANSAS
LICENSED PROFESSIONAL ENGINEER
No.21243
COLTON S. WYLIE
Digitally Signed 07/28/2023
BRIDGE ENGINEER

SHEET 1 OF 3
COMMON SUPERSTRUCTURE DETAILS
HIGHWAY 612 OVER MARCHANT ROAD
ROUTE SEC.
ARKANSAS STATE HIGHWAY COMMISSION
LITTLE ROCK, ARK.

DRAWN BY: CSW DATE: MAR. 2023 FILENAME: b012326m6_sl3.dgn
CHECKED BY: JES DATE: MAR. 2023 SCALE: AS SHOWN
DESIGNED BY: CSW DATE: MAR. 2023
BRIDGE NO. A7617 & B7617 DRAWING NO. 66276

JEskinner 7/28/2023 12:10:55 PM
WORKSPACE: ARDOT Bridge
\\garverinc.local\gdata\Projects\2017\170766O - ARDOT 012326 Hwy 412 - Hwy 112\Drawings\b012326x6.S413-GN.dgn
REVISED DATE:

DATE REVISED	DATE REVISED	FED. ROAD DIST. NO.	STATE	JOB NO.	SHEET NO.	TOTAL SHEETS
		6	ARK.	012326	488	838
		A7617 & B7617		COMMON DETAILS		66277

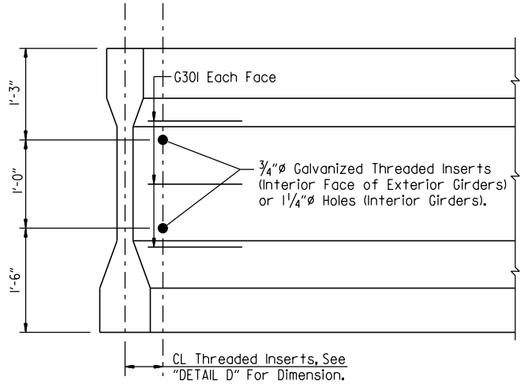

DETAIL A
Scale: 1" = 1'-0"

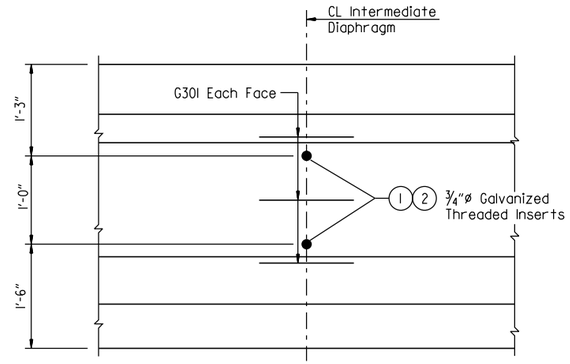

DETAIL B
Scale: 1" = 1'-0"

1 Inserts and holes shown are for intermediate concrete diaphragms, See Dwg. Nos. 66264 & 66270 for alternate steel diaphragms.

2 Galvanized 3/4"ø Dayton-Richmond F-42 Loop Ferrule Insert or an approved equal (omit in exterior face of exterior girders). These are to be subsidiary to the item "PRESTRESSED CONCRETE GIRDERS (TYPE III)". See Dwg. Nos. 66264 & 66270 for alternate steel diaphragms.

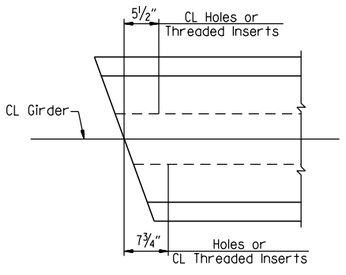

DETAIL D
Scale: 1" = 1'-0"

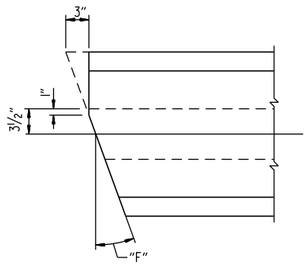

FINISH FOR EXT. BEAM ENDS
No Scale

		TABLE OF VARIABLES		
		Span 1	Span 2	Span 3
BRIDGE A	"F"	16°45'00"	17°45'00"	19°00'00"
BRIDGE B	"F"	17°00'00"	18°00'00"	19°00'00"

NOTE:
When acute corner of girder falls on exterior face at joints in bridge, fabricate girder end as shown.

All other girder ends at joints in bridge may be so fabricated at the Contractor's option.

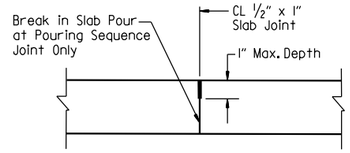

NOTE:
Use Type 3 or 4 Joint Sealer. See Subsections 501.02(h) and 501.05(j). Backer Rod Filler will not be required. Joint Sealer shall be measured and paid for as "CLASS S(AE) CONCRETE-BRIDGE". Slab joints shall extend to the outside edge of the deck slab and shall align with open joints at the front face of the bridge traffic railing. Slab joints shall be installed before the bridge traffic railing is poured. If slab joints are to be sawed, they shall be sawed as soon as the concrete has sufficiently set to allow sawing of the joint without damage to the slab. Slab joints shall be placed at all pouring sequence construction joints and required slab joint locations. The joint sealer shall extend across the deck from gutterline to gutterline.

TRANSVERSE SLAB JOINT DETAIL
No Scale

NOTE:
For additional bearing insert plate information, see Dwg. No. 66263.

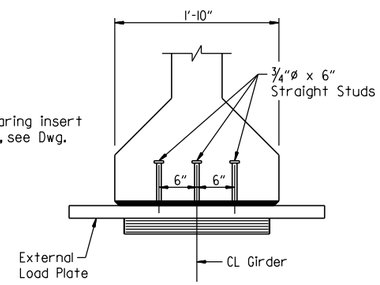

FRONT VIEW
No Scale

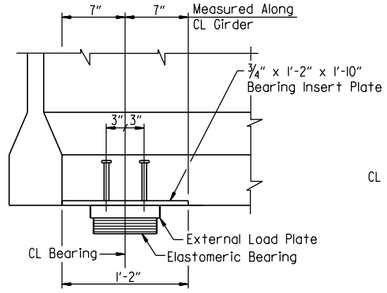

SIDE VIEW
No Scale

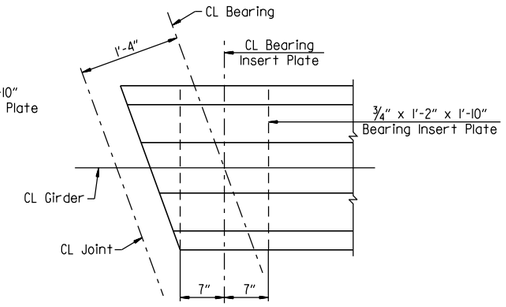

PLAN VIEW
No Scale

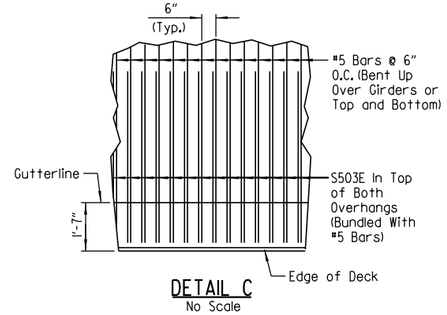

DETAIL C
No Scale

BEVELED ANCHOR AND EXTERNAL LOAD PLATE DETAILS

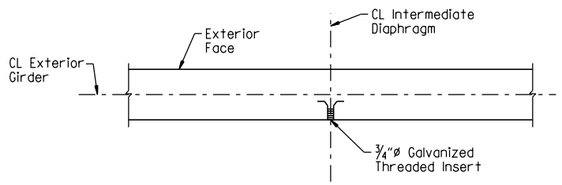

SECTION D-D
(At Exterior Girder)
No Scale

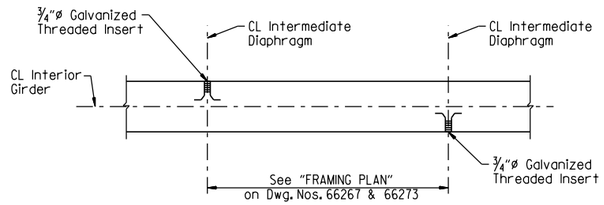

SECTION D-D
(At Interior Girder)
No Scale

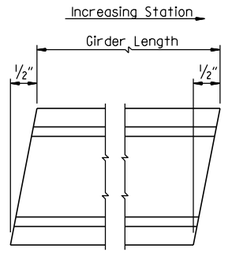

GIRDER BEVEL
No Scale

STATE OF ARKANSAS
LICENSED PROFESSIONAL ENGINEER
No. 21243
COLTON S. WYLIE
Digitally Signed 07/28/2023
BRIDGE ENGINEER

SHEET 2 OF 3
COMMON SUPERSTRUCTURE DETAILS
HIGHWAY 612 OVER MARCHANT ROAD
ROUTE SEC.
ARKANSAS STATE HIGHWAY COMMISSION
LITTLE ROCK, ARK.

DRAWN BY: HEW DATE: JUNE 2011 FILENAME: b012326m6_sl4.dgn
CHECKED BY: AJK DATE: JAN. 2012 SCALE: AS SHOWN
DESIGNED BY: MRA DATE: JUNE 2011
BRIDGE NO. A7617 & B7617 DRAWING NO. 66277

JEskinner 7/28/2023 12:10:56 PM
WORKSPACE: ARDOT Bridge
\\garverinc.local\gdata\Projects\2017\17017660 - ARDOT 012326 Hwy 412 - Hwy 112\Drawings\b012326x6_S414-MD.dgn
REVISED DATE:

DATE REVISED	DATE REVISED	FED. ROAD DIST. NO.	STATE	JOB NO.	SHEET NO.	TOTAL SHEETS
		6	ARK.	012326	489	838
		A7617 & B7617		COMMON DETAILS		66278

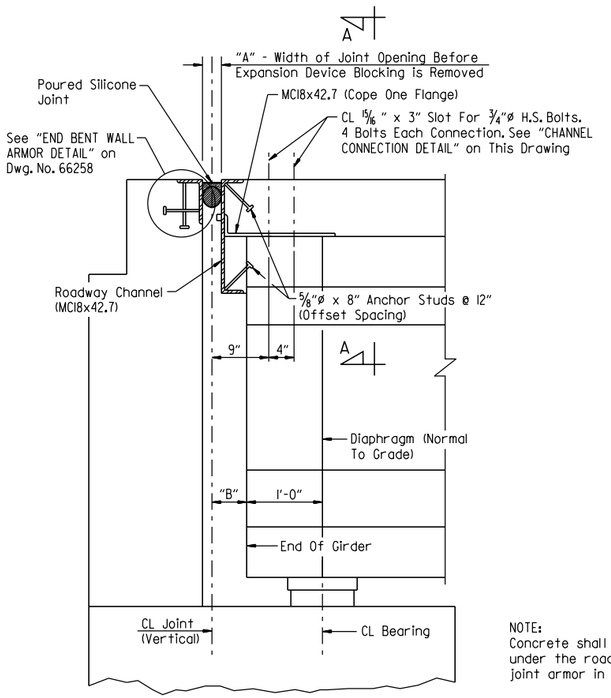

SECTION THRU JOINT AT END BENTS
(Section Taken Perpendicular To CL Joint)
No Scale

NOTE:
Concrete shall be hand packed under the roadway channel & joint armor in the backwall.

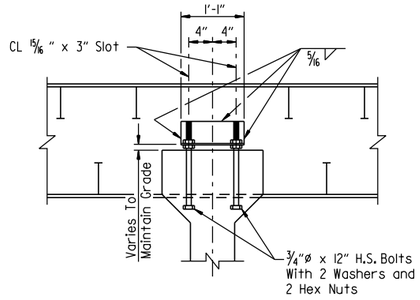

SECTION A-A
No Scale

NOTE:
Bolts, washers and hex nuts shall be considered subsidiary to the item "PRESTRESSED CONCRETE GIRDERS (TYPE III)".

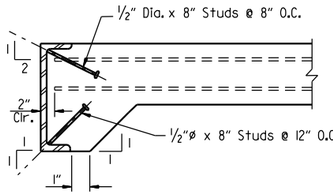

NOTE:
As An Alternate To 5/8"ø Studs, 1/2"ø x 8" Studs Spaced As Shown May Be Used. Use Weight Of 5/8"ø Stud As Basis Of Measurement Of Structural Steel In Anchors

DETAILS OF ALTERNATE ANCHORS
No Scale

TABLE OF SILICONE JOINT DATA					
Bent No.	"A" Width Perpendicular To Joint At 24 Hour Average Temperature (1) Of:			"B" Perpendicular To Joint At 60°F	Bumper Plate Size
	40°F	60°F	80°F		
1 & 4	2 1/8"	2"	1 7/8"	5 3/4" ±	1" x 1" x 12"

(1) The temperature used to set the joint opening shall be the approximate average air temperature during the 24 hour period immediately before the bolts are tightened. The Engineer shall establish the temperature. Interpolation of the table may be necessary.

NOTE:
For "DETAIL OF POURED SILICONE JOINT", "JOINT SEAL PLACEMENT AT RAIL" and "DETAILS FOR BLOCKING EXPANSION JOINT DEVICE", see Std. Dwg. No. 55008.

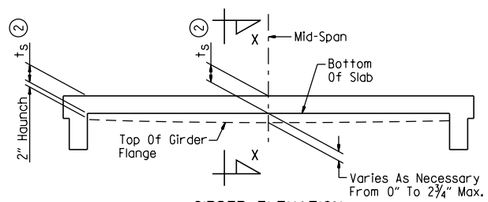

GIRDER ELEVATION
No Scale

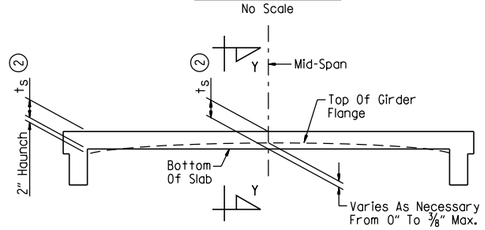

GIRDER ELEVATION
No Scale

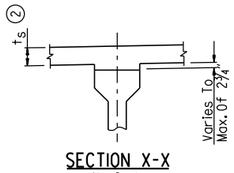

SECTION X-X
No Scale

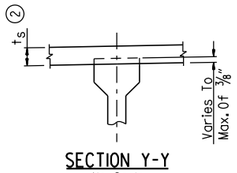

SECTION Y-Y
No Scale

Note: t_S = Slab Thickness As Shown On Superstructure Details See "TYPICAL SECTION AT INTERMEDIATE DIAPHRAGMS".

(2) Tolerance when removable deck forming is used is +1/2", -1/4". Haunch forming is required and shall be adjusted to maintain slab thickness tolerance. See Std. Dwg. No. 55005 for tolerances when permanent steel deck forms are used.

"GIRDER ELEVATION" Sketches show the range of acceptability of the top of girder relative to bottom of slab after the placement of the slab. When the top of the girder projects more than a 3/8" into the slab, a raise in grade will be necessary. Girders shall be set in a sufficient number of spans over suitable increments so the revised grade line will provide a smooth riding surface. Variation of haunch height will be at the Contractor's expense.

ADJUSTMENT FOR SLAB THICKNESS TOLERANCE WHEN REMOVABLE DECK FORMING IS USED

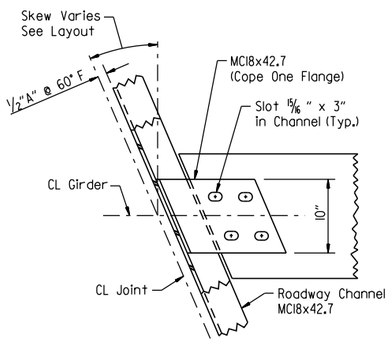

CHANNEL CONNECTION DETAIL
No Scale

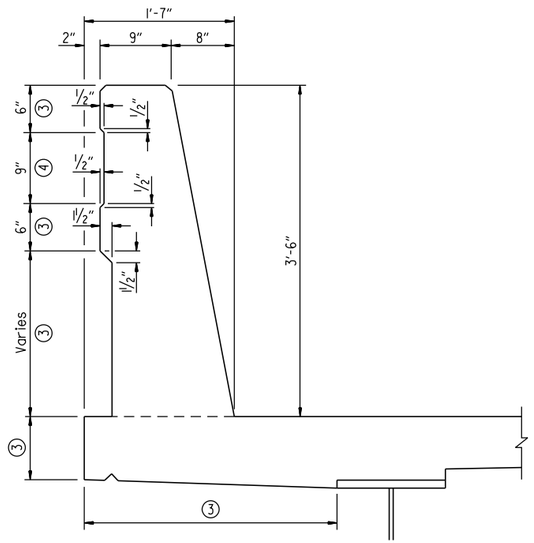

(3) Class 3 Textured Coating Finish (Color - Light Brown, Color Chip No. 33522)

(4) Class 3 Textured Coating Finish (Color - Medium Brown, Color Chip No. 30219)

BRIDGE RAIL AESTHETIC DETAIL
No Scale

STATE OF ARKANSAS
LICENSED PROFESSIONAL ENGINEER
No. 21243
COLTON S. WYLIE
Digitally Signed 07/28/2023
BRIDGE ENGINEER

SHEET 3 OF 3
COMMON SUPERSTRUCTURE DETAILS
HIGHWAY 612 OVER MARCHANT ROAD
ROUTE SEC.
ARKANSAS STATE HIGHWAY COMMISSION
LITTLE ROCK, ARK.

DRAWN BY: HEW DATE: JULY 2011 FILENAME: b012326m6_sl5.dgn
CHECKED BY: AJK DATE: JAN. 2012 SCALE: AS SHOWN
DESIGNED BY: MRA DATE: JULY 2011
BRIDGE NO. A7617 & B7617 DRAWING NO. 66278

JESkinner 7/28/2023 12:10:56 PM
WORKSPACE: ARDOT Bridge
\\garverinc.local\gdata\Projects\20IT\17017660 - ARDOT 012326 Hwy 412 - Hwy 112\Drawings\b012326x6_S415-MD.dgn
REVISED DATE:

DATE REVISED	DATE REVISED	FED. ROAD DIST. NO.	STATE	JOB NO.	SHEET NO.	TOTAL SHEETS
		6	ARK.	012326	490	838
		07618		LAYOUT		66279

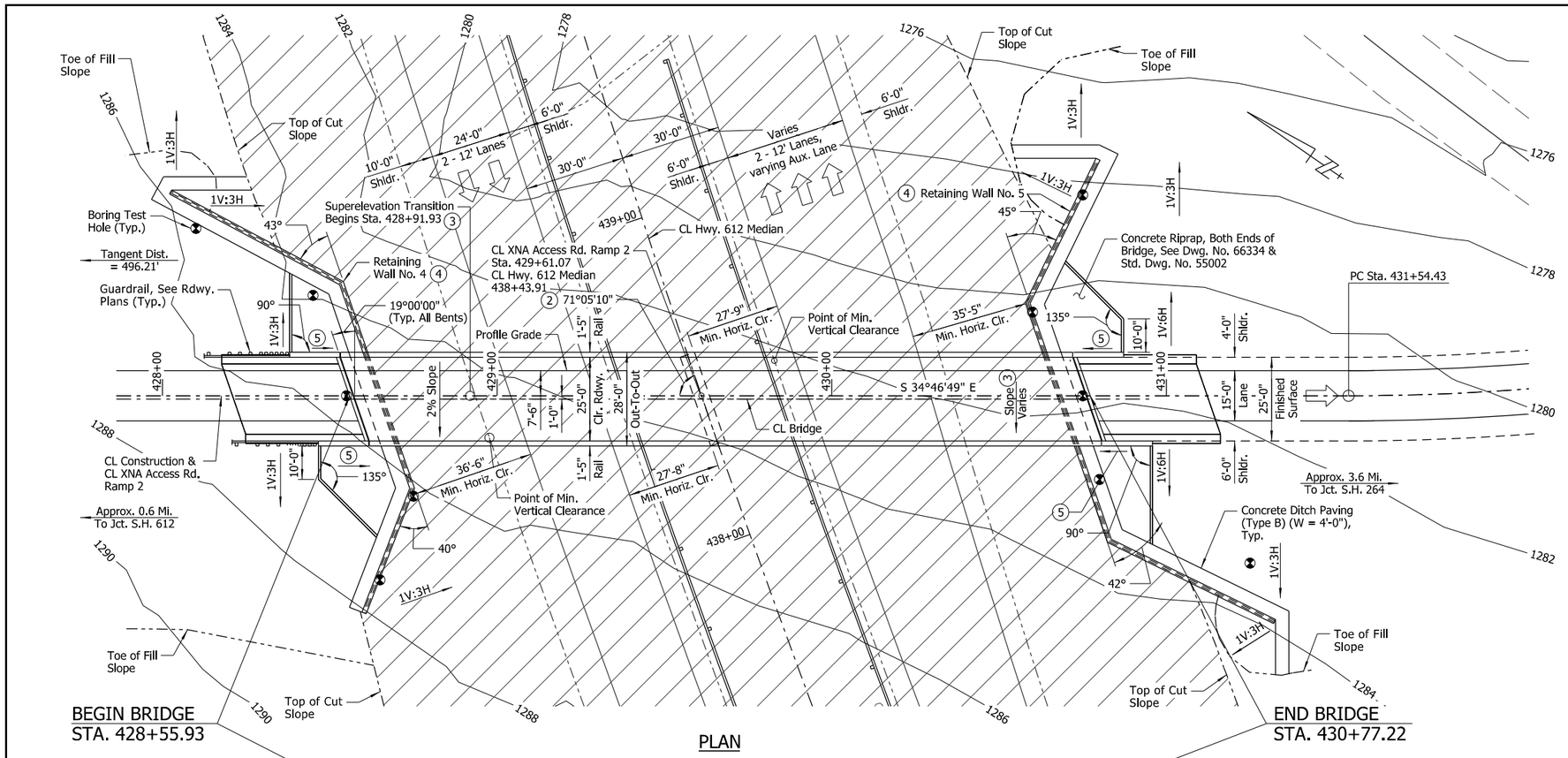

BEGIN BRIDGE
STA. 428+55.93

PLAN

END BRIDGE
STA. 430+77.22

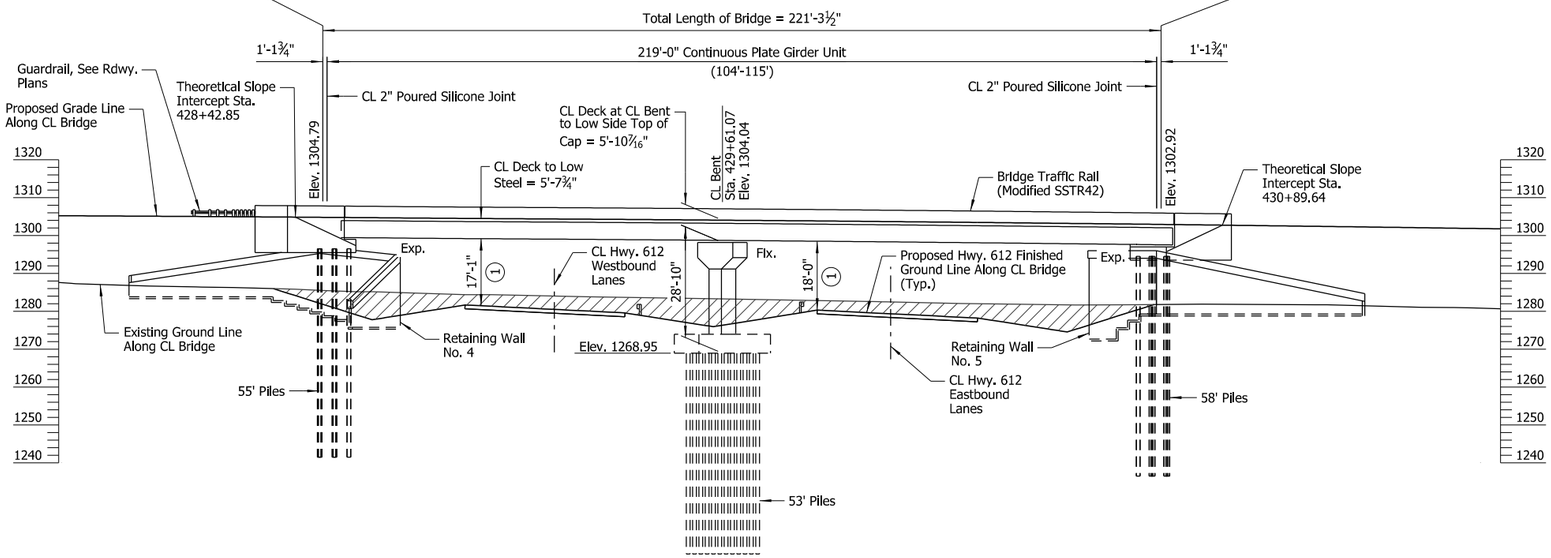

ELEVATION

FOR R/W DATA, SEE ROADWAY PLANS

NOTE:
Stations shown are along CL Construction. Elevations shown are actual top of deck elevations at CL Bridge. Any vertical dimension referenced to CL Deck is based on actual top of deck elevation at CL Bridge.

LEGEND

Cut Slope

NOTES:
Use Type F Approach Slab at each end of bridge, see Std. Dwg. No. 55040F1.

Use Type F Approach Gutters at each end of bridge, see Std. Dwg. No. 55030F.

For "ELEVATION OF SOIL BORINGS", "N-VALUES", "BORING LEGEND", and "GENERAL NOTES", see Dwg. No. 66280.

PVI Sta. 427+00.00
Elev. 1309.77
V.C. = 1000'
+1.41%
-1.85%

VERTICAL CURVE DATA

XNA Access Rd. Ramp 2
(Profile Grade 7'-6" Left of CL Construction)

(1) Point of Minimum Vertical Clearance

(2) Angle measured between a line tangent to CL Hwy. 612 Median at Sta. 438+43.91 and CL XNA Access Rd. Ramp 2

(3) See "SUPERELEVATION TRANSITION SKETCH" on Dwg. No. 66280.

(4) For details of Retaining Wall Nos. 4 & 5, see Dwg. Nos. 66338 & 66339.

(5) 1V:2H Or Flatter

STATE OF ARKANSAS
LICENSED PROFESSIONAL ENGINEER
No.16458
JOEL E. SKINNER
Digitally Signed 07/28/2023
BRIDGE ENGINEER

SHEET 1 OF 2
LAYOUT OF BRIDGE
XNA ACCESS RD. RAMP 2 OVER HWY. 612
HWY. 412 - HWY. 112
(SPRINGDALE BYPASS) (F)
BENTON COUNTY

ROUTE 612 SEC. 2

ARKANSAS STATE HIGHWAY COMMISSION

LITTLE ROCK, ARK.

DRAWN BY: CSW DATE: MAR. 2023 FILENAME: b012326x7_l1.dgn
CHECKED BY: JES DATE: MAR. 2023 SCALE: 1" = 20'-0"
DESIGNED BY: CSW DATE: MAR. 2023

BRIDGE NO. 07618 DRAWING NO. 66279

JESkinner 7/28/2023 12:11:10 PM
WORKSPACE: ARDOT Bridge (2019)
USERNAME: J:\Bridge\Projects\2017\17017660 - ARDOT 012326 Hwy 412 - Hwy 112\Drawings\b012326x7_SI01_LO.dgn
REVISED DATE:

DATE REVISED	DATE REVISED	FED. ROAD DIST. NO.	STATE	JOB NO.	SHEET NO.	TOTAL SHEETS
		6	ARK.	012326	491	838
		07618		LAYOUT		66280

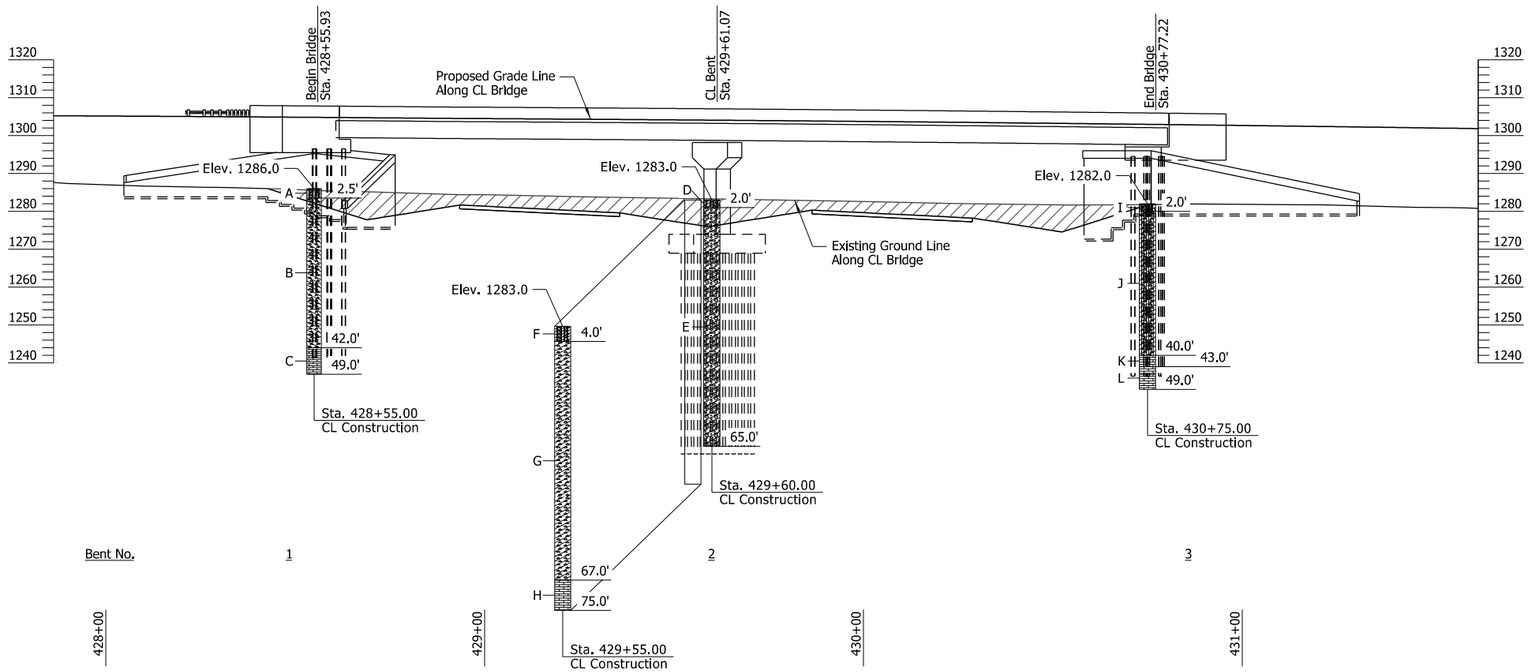

ELEVATION OF SOIL BORINGS

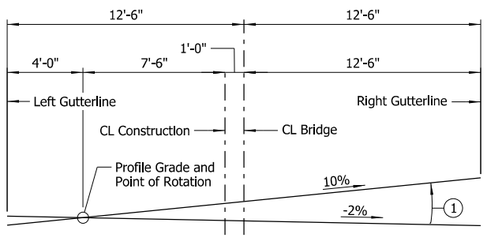

SUPERELEVATION TRANSITION SKETCH

(Looking Ahead)

(1) Cross slope varies from 2% down from Profile Grade (Sta. 428+91.93) to 10% up from Profile Grade (Sta. 432+41.93)

N-VALUES

Sta. 428+55.00 CL Construction

0.5-1.5, N=19
2.5-3.5, N=50/11"
4.5-5.5, N=50/8"
6.5-7.5, N=50/5"
8.5-9.0, N=50/4"
14.0-15.0, N=50
19.0-20.0, N=37
24.0-25.0, N=50/9"
29.0-30.0, N=26
34.0-35.0, N=27
39.0-40.0, N=37

Sta. 429+55.00 CL Construction

4.5-5.5, N=50/11"
9.0-10.0, N=42
14.0-15.0, N=23
19.0-20.0, N=34
24.0-25.0, N=25
29.0-30.0, N=20
34.0-35.0, N=50/9"
39.0-40.0, N=26
44.0-45.0, N=13
49.0-50.0, N=10
54.0-55.0, N=25
59.0-60.0, N=7
64.0-65.0, N=30
68.0-69.0, N=25/0"
74.0-75.0, N=25/0"

Sta. 429+60.00 CL Construction

0.5-1.5, N=7
2.5-3.5, N=50/9"
4.5-5.5, N=50/9"
6.5-7.5, N=50/8"
9.0-10.0, N=49
14.0-15.0, N=40
19.0-20.0, N=36
24.0-25.0, N=31
29.0-30.0, N=42
34.0-35.0, N=36
39.0-40.0, N=43
44.0-45.0, N=15
49.0-50.0, N=36
54.0-55.0, N=50/9"
59.0-60.0, N=17
64.0-65.0, N=50/3"

Sta. 430+75.00 CL Construction

0.5-1.5, N=6
2.5-3.5, N=39
4.5-5.5, N=50/11"
6.5-7.5, N=45
9.0-10.0, N=28
14.0-15.0, N=22
19.0-20.0, N=35
24.0-25.0, N=21
29.0-30.0, N=19
34.0-35.0, N=28
39.0-40.0, N=50/7"

BORING LEGEND

A - Medium dense tan fine sandy silt w/chert fragments
B - Very stiff reddish brown clay w/numerous chert nodules and fragments and discontinuous chert seams and layers
C - Hard gray limestone, arenaceous w/occasional chert nodules
D - Firm tan clayey silt w/chert fragments
E - Very stiff reddish brown clay w/numerous chert and limestone nodules and fragments
F - Firm to stiff tan clayey silt, sandy w/chert fragments
G - Very stiff reddish brown and red clay w/numerous chert fragments
H - Moderately hard gray limestone, arenaceous w/chert nodules
I - Soft tan clayey silt w/some chert fragments and rootlets
J - Very stiff reddish brown silty clay w/numerous chert fragments and nodules and occasional discontinuous chert seams and layers
K - Moderately hard gray weathered limestone, arenaceous w/some chert nodules
L - Moderately hard to hard gray limestone, arenaceous w/occasional stylolites

GENERAL NOTES

BENCHMARK: Vertical Control Data are shown on the Survey Control Data Sheets.

CONSTRUCTION SPECIFICATIONS: Arkansas State Highway and Transportation Department Standard Specifications for Highway Construction (2014 edition) with applicable Supplemental Specifications and Special Provisions. Unless otherwise noted in the plans, Section and Subsection refer to the Standard Construction Specifications.

DESIGN SPECIFICATIONS: AASHTO LRFD Bridge Design Specifications (2017, 8th Edition).

LIVE LOADING: HL-93

SEISMIC ZONE: 1 S_{D1}: 0.087g SITE CLASS: C

SEISMIC OPERATIONAL CLASSIFICATION: Essential

MATERIALS AND STRENGTHS:

Class S(AE) Concrete (Superstructure)	f'c = 4,000 psi
Class S Concrete (Substructure)	f'c = 3,500 psi
Reinforcing Steel (AASHTO M 31 or M 322, Type A)	fy = 60,000 psi
Structural Steel (ASTM A709, Gr. 50)	Fy = 50,000 psi
Structural Steel (ASTM A709, Gr. 36)	Fy = 36,000 psi

BORING LOGS: Boring logs may be obtained from the Construction Contract Development Section of the Program Management Division.

STEEL PILING: All piling at end bents shall be HP 12x53 (Grade 50) and shall be driven with an approved air, steam, or diesel hammer to a minimum safe bearing capacity of 96 tons per pile and into the material designated as moderately hard to hard limestone on the boring legend. All piling at the intermediate bent shall be HP 14x73 (Grade 50) and shall be driven with an approved air, steam, or diesel hammer to a minimum safe bearing capacity of 133 tons per pile and into the material designated as moderately hard to hard limestone on the boring legend. Minimum penetration shall be 10' below either top of leveling pad or bottom of any required undercut, whichever is lower, for all piles in Bents 1 and 3, and 15' below bottom of footing for all piles in Bent 2. Piling in end bents shall be driven after embankment to bottom of cap is in place. Lengths shown are for estimating quantities and for use in determining payment for cut-off and build-up in accordance with Section 805. The Contractor shall use QPL-approved steel H-Pile driving points on all piles.

PILE CASINGS: Pile casings are required for piling within MSE walls at end bents. Casings shall be installed prior to or during the embankment construction and shall extend from top of leveling pad or bottom of any required undercut, whichever is lower, to bottom of cap. Pile casing material shall be of sufficient strength to retain its original form free from harmful distortions after compaction of the fill material surrounding it. The minimum inside diameter of the casing shall be at least 24". Piles shall be driven through the open casings after embankment to bottom of cap is in place. After driving is complete, the pile casings shall be filled with Class S Concrete, an approved non-shrink grout, mixture used for Portland Cement Concrete Pavement, or other approved material in a single continuous operation to completely fill voids. Pile casings and concrete will not be paid for directly but shall be considered subsidiary to the item "STEEL PILING (HP 12x53)".

PILE FOOTINGS: The top of the footing at Bent 2 shall be set a minimum of 2' below finished ground or at the elevations shown on the plans, whichever is lower. Foundation for footing shall be prepared in accordance with Subsection 801.04. Foundation piles shall not be driven until after the excavation to bottom of footing is complete. Excavations shall be backfilled and compacted to the level of the finished ground in accordance with Subsection 801.08.

PAINTING: All Grade 50 structural steel, except galvanized members and surfaces in contact with concrete, shall be painted as specified in Subsection 807.75. The color of paint shall be Dark Brown and shall match Federal Standard 595B, Color Chip No. 20108.

TEXTURED COATING FINISH: Class 3 Textured Coating Finish shall be applied to bridge and retaining wall surfaces as specified in Special Provision "TEXTURED COATING FINISH" and in accordance with Subsection 802.19(b)(3). Textured Coating Finish shall not be applied on surfaces where Class 2 Protective Surface Treatment is applied.

BRIDGE DECK: The concrete bridge deck shall be given a tine finish as specified for final finishing in Subsection 802.19 for Class 5 Tined Bridge Roadway Surface Finish.

PROTECTIVE SURFACE TREATMENT: Class 2 Protective Surface Treatment shall be applied to the roadway surface and to the roadway face and top of the concrete bridge rails in accordance with Section 803.

DETAIL DRAWINGS:	DRAWING NO(S).
End Bents	66281 - 66284
Intermediate Bent	66285 - 66286
Elastomeric Bearings	66287
219' Continuous Plate Girder Unit	66288 - 66291
Retaining Walls	66338, 66339 & 66342 - 66344
Details for Concrete Riprap	66334
General Notes For Steel Bridge Structures	55006
Details For Steel Bridge Structures	55007
Poured Silicone Joints	55008
Steel H-Piling	55020
Type F Approach Gutters	55030F
Type F Approach Slab	55040F1 & 55040F2
Bridge Traffic Rail	55071 & 66291

STATE OF ARKANSAS
LICENSED PROFESSIONAL ENGINEER
No.16458
JOEL E. SKINNER
Digitally Signed 07/28/2023
BRIDGE ENGINEER

SHEET 2 OF 2
LAYOUT OF BRIDGE
XNA ACCESS RD. RAMP 2 OVER HWY. 612
HWY. 412 - HWY. 112
(SPRINGDALE BYPASS) (F)
BENTON COUNTY
ROUTE 612 SEC. 2

ARKANSAS STATE HIGHWAY COMMISSION
LITTLE ROCK, ARK.

DRAWN BY: CSW DATE: MAR. 2023 FILENAME: b012326x7_l2.dgn
CHECKED BY: JES DATE: MAR. 2023 SCALE: 1" = 20'-0"
DESIGNED BY: CSW DATE: MAR. 2023

BRIDGE NO. 07618 DRAWING NO. 66280

JESkinner 7/28/2023 12:11:11 PM
WORKSPACE: ARDOT Bridge (2019)
Workspace: C:\Users\jeskinner\Desktop\Projects\2017\170175560 - ARDOT 012326 Hwy 412 - Hwy 112\Drawings\b012326x7_S102_LO.dgn
REVISED DATE:

DATE REVISED	DATE REVISED	FED. ROAD DIST. NO.	STATE	JOB NO.	SHEET NO.	TOTAL SHEETS
		6	ARK.	012326	492	838
		07618		END BENTS		66281

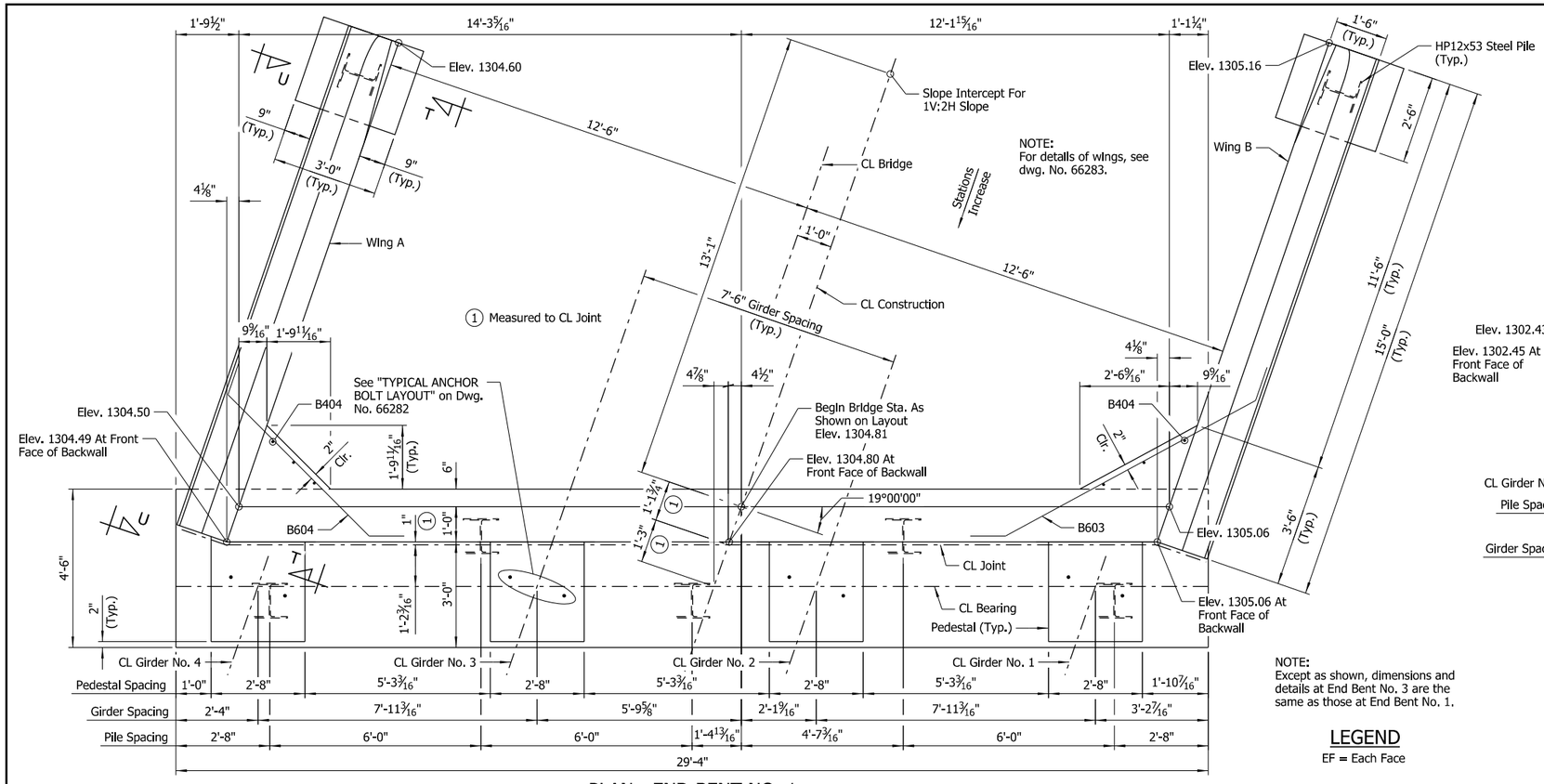

PLAN - END BENT NO. 1

Scale: ½" = 1'-0"

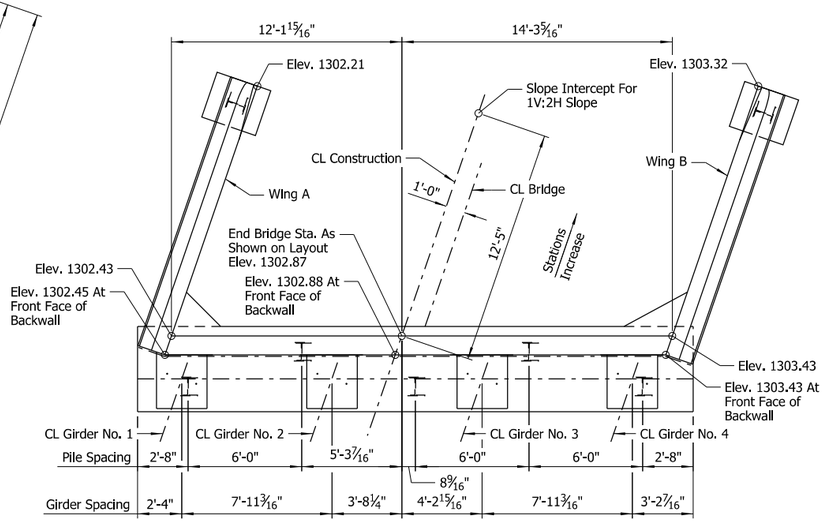

PLAN - END BENT NO. 3

Scale: ¼" = 1'-0"

NOTE:
Except as shown, dimensions and details at End Bent No. 3 are the same as those at End Bent No. 1.

LEGEND

EF = Each Face

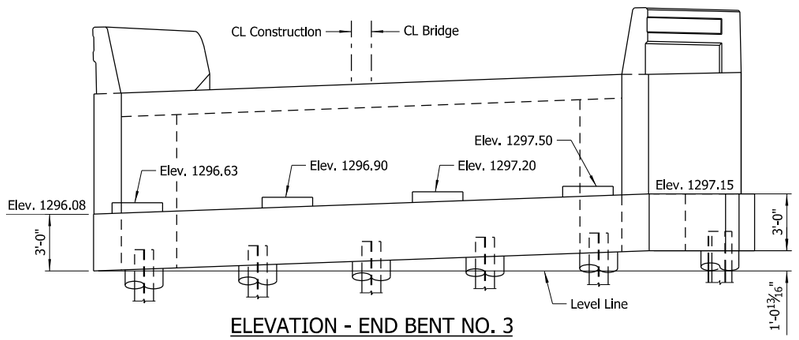

ELEVATION - END BENT NO. 3

(Looking Ahead)
Scale: ¼" = 1'-0"

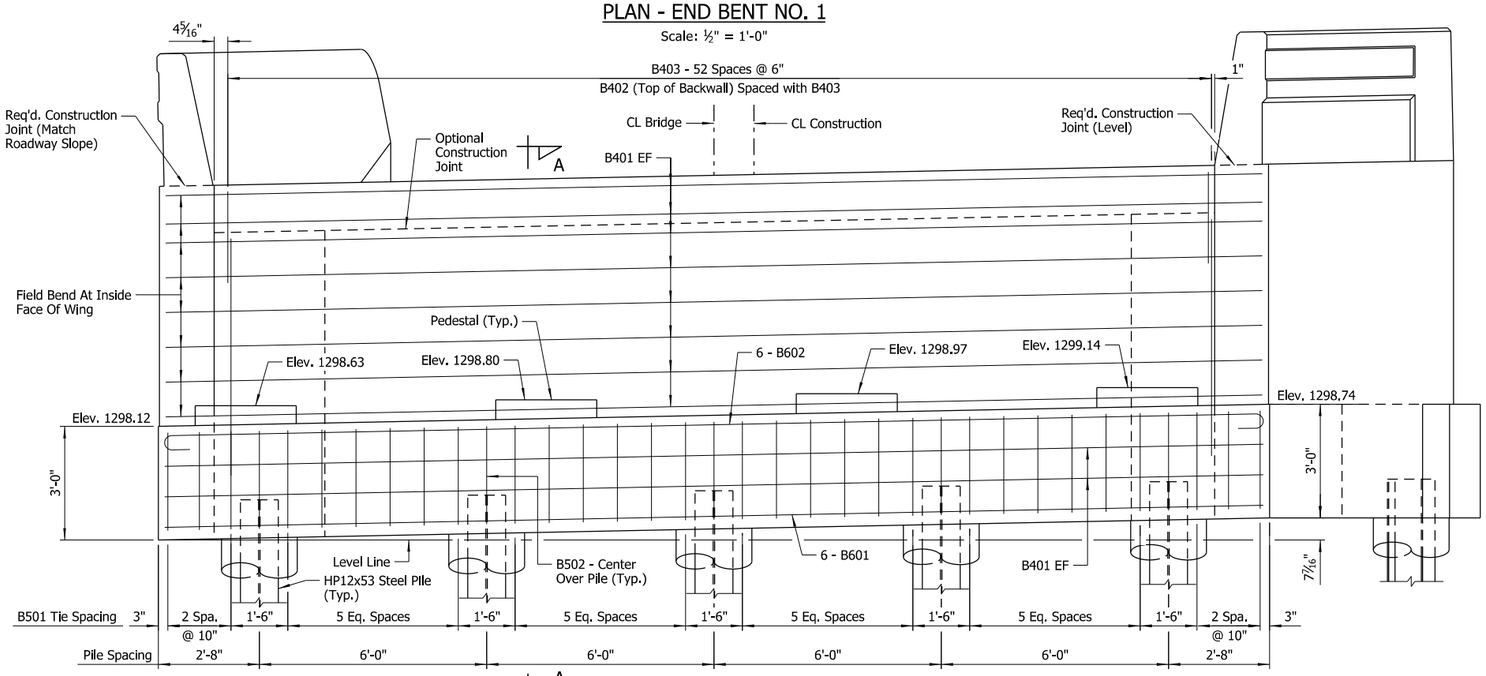

A ELEVATION - END BENT NO. 1

(Looking Back)
Scale: ½" = 1'-0"

GENERAL NOTES

Finish top of backwall to match the bridge deck.

For Standard General Notes, see Std. Dwg. No. 55006.

All piles shall be HP12x53 (ASTM A709, Gr. 50).

Class 3 Textured Coating Finish shall be applied to bridge surfaces as specified in Special Provision "TEXTURED COATING FINISH" and in accordance with Subsection 802.19(b)(3).

Structural steel in end bents shall be ASTM A709, Gr. 50 and shall be paid for as "STRUCTURAL STEEL IN PLATE GIRDER SPANS (A709, GR. 50)".

For additional information, see Layout.

NOTES:
For "SECTION A-A" and "TYPICAL PEDESTAL DETAIL", see Dwg. No. 66282.

For "SECTION T-T" and "VIEW U-U", see Dwg. No. 66283.

For bar list and bar bending diagrams, see Dwg. No. 66284.

Class 2 Protective Surface Treatment shall be applied to the top of the backwall and to the roadway face and top of the wing rails.

NOTE:
No portion of the backwall shall be poured before girders are in place. The portion of the backwall above the optional construction joint at the paving bracket shall not be placed until the adjacent deck pour has been made. Refer to the "EXPANSION DEVICE INSTALLATION AT END BENTS" note on Std. Dwg. No. 55008.

No heavy construction equipment shall be allowed within 10' of the backwall until the deck concrete placement for the adjacent span has been completed unless MSE strap reinforcing has been designed to accommodate these loads. See "END BENT STRAP DETAIL" on Dwg. No. 66282.

STATE OF ARKANSAS
LICENSED PROFESSIONAL ENGINEER
No.14498
ADAM B. HALL
Digitally Signed 07/28/2023
BRIDGE ENGINEER

SHEET 1 OF 4
DETAILS OF END BENTS
XNA ACCESS RD. RAMP 2

ROUTE SEC.

ARKANSAS STATE HIGHWAY COMMISSION

LITTLE ROCK, ARK.

DRAWN BY: SJV DATE: FEB. 2023 FILENAME: b012326x7_a1.dgn
CHECKED BY: ABH DATE: MAR. 2023 SCALE: As Shown
DESIGNED BY: SJV DATE: OCT. 2022

BRIDGE NO. 07618 DRAWING NO. 66281

JEStilmer 7/28/2023 12:11:13 PM
WORKSPACE: ARDOT Bridge (2019)
USER NAME: Adam Hall
REVISED DATE:
C:\Users\Adam.Hall\Desktop\Projects\2017\0.7017660 - ARDOT 012326 Hwy 412 - Hwy 112\Drawings\b012326x7_S201_AB.dgn

DATE REVISED	DATE REVISED	FED. ROAD DIST. NO.	STATE	JOB NO.	SHEET NO.	TOTAL SHEETS
		6	ARK.	012326	493	838
		07618		END BENTS		66282

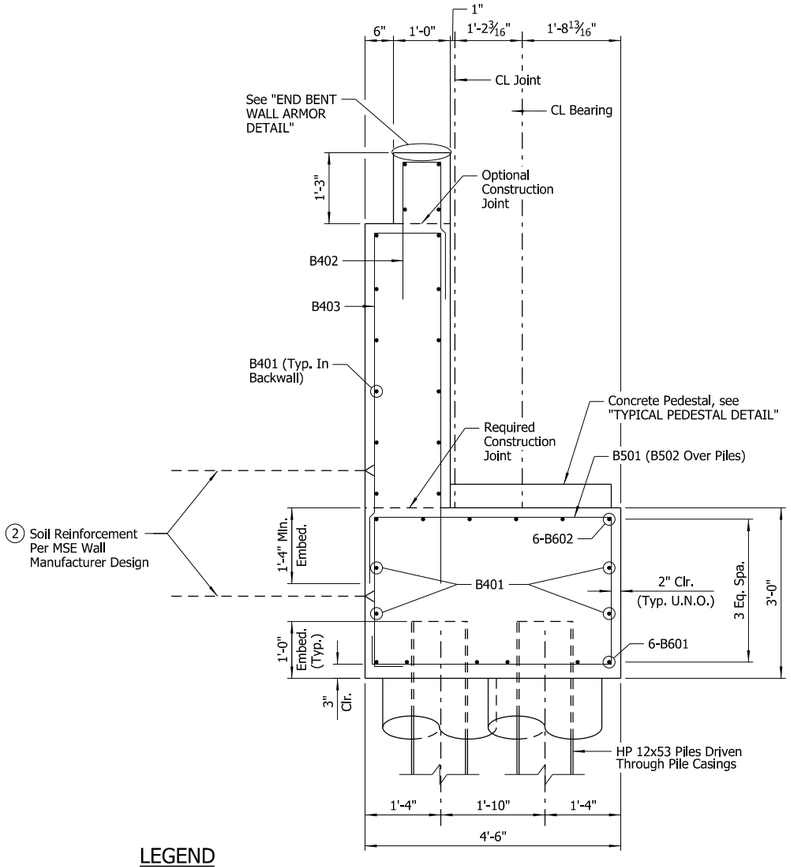

LEGEND

U.N.O. = Unless Noted Otherwise

SECTION A-A

Scale: ¾" = 1'-0"

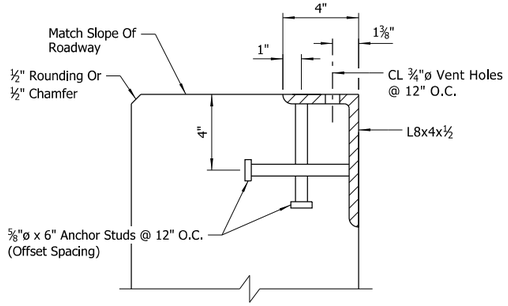

END BENT WALL ARMOR DETAIL

No Scale

NOTES:
Transverse spacing between vertical anchor studs and vent holes shall be 6".

Concrete shall be hand packed under joint armor.

Special care shall taken to properly and thoroughly consolidate the concrete in the vicinity of the expansion joint device in the backwall. See Subsection 802.09(a)(3).

The profile of the end bent wall armor shall be established based on the vertical curve in conjunction with the skew angle as shown on the layout.

(2) Soil reinforcement shall be attached to the back of the end bents. Type, size and spacing of soil reinforcement shall be designed by the Contractor. The design details and computations shall accompany the wall design submittal for review by the Engineer. Cost shall be subsidiary to the Item "RETAINING WALL". See "END BENT STRAP DETAIL" for additional information.

(3) Adjust bar spacing as needed to avoid anchor bolt.

(4) See Dwg. No. 66281 for pedestal elevations.

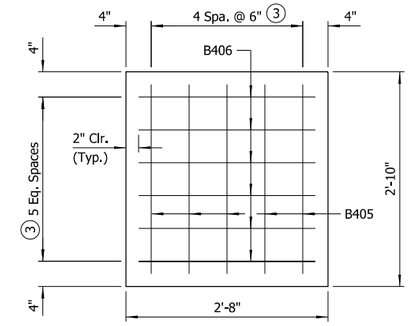

PEDESTAL PLAN

Scale: 1" = 1'-0"

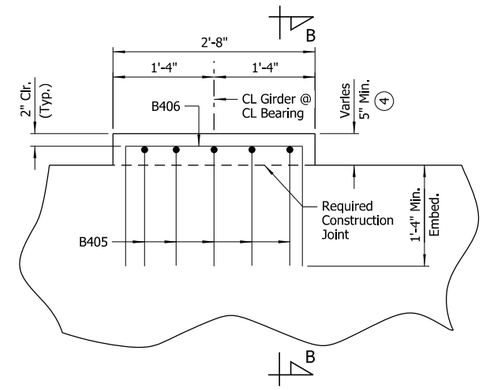

TYPICAL PEDESTAL DETAIL

Scale: 1" = 1'-0"

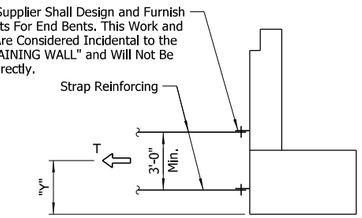

END BENT STRAP DETAIL

No Scale

T = Resultant Force required to be resisted by strap reinforcing

Y = Centroid of Resultant Force

LIMIT STATE	(1) T	"Y"
	Kips/Ft.	Ft.
Service	3.0	4.0
Strength	4.0	4.3

(1) The provided loads do not include any additional loadings due to heavy construction equipment such as cranes. If the Contractor anticipates bringing heavy construction equipment within 10' of the backwall, they shall coordinate with the MSE wall supplier to design strap reinforcing for the anticipated loadings. Tolerable horizontal backwall movement for all loading combinations is ½" at the Service Limit State. Design computations shall accompany the wall design submittal for review by the Engineer. See Special Provision "RETAINING WALLS" for additional information.

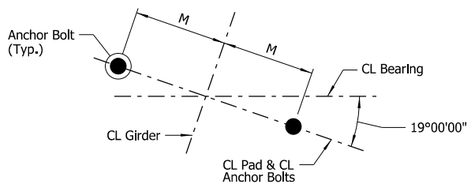

TYPICAL ANCHOR BOLT LAYOUT

No Scale

NOTE:
For details of Elastomeric Bearings, dimension M, and anchor bolts, see Dwg. No. 66287.

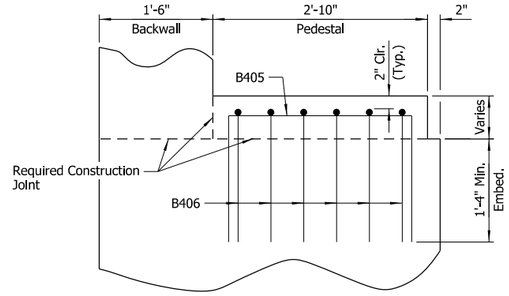

SECTION B-B

Scale: 1" = 1'-0"

STATE OF ARKANSAS
LICENSED PROFESSIONAL ENGINEER
No.14498
ADAM B. HALL

Digitally Signed 07/28/2023
BRIDGE ENGINEER

SHEET 2 OF 4
DETAILS OF END BENTS
XNA ACCESS RD. RAMP 2

ROUTE SEC.

ARKANSAS STATE HIGHWAY COMMISSION

LITTLE ROCK, ARK.

DRAWN BY: SJV DATE: FEB. 2023 FILENAME: b012326x7_a2.dgn
CHECKED BY: ABH DATE: MAR. 2023 SCALE: As Shown
DESIGNED BY: SJV DATE: OCT. 2022

BRIDGE NO. 07618 DRAWING NO. 66282

JESchnerWORKSPACE: ARDOT BridgeUNIVERSE: ArkansasProjects2017\17017660 - ARDOT 012326 Hwy 412 - Hwy 112\Drawings\b012326x7_S202_A6.dgn
7/28/2023 12:11:15 PM
REVISED DATE:

DATE REVISED	DATE REVISED	FED. ROAD DIST. NO.	STATE	JOB NO.	SHEET NO.	TOTAL SHEETS
		6	ARK.	012326	494	838
		07618		END BENTS		66283

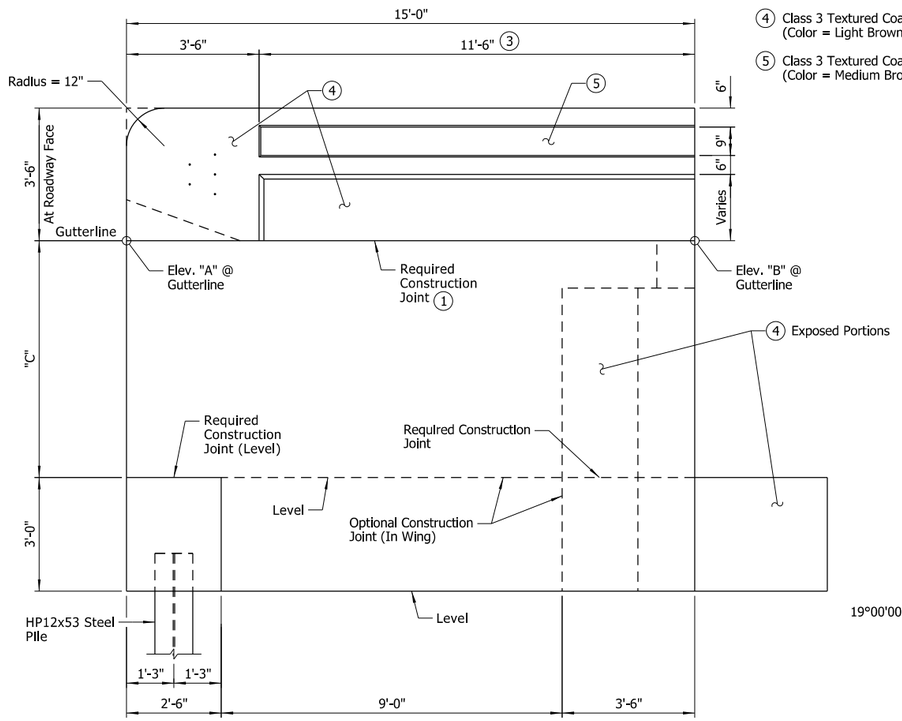

VIEW U-U

Scale: ½" = 1'-0"

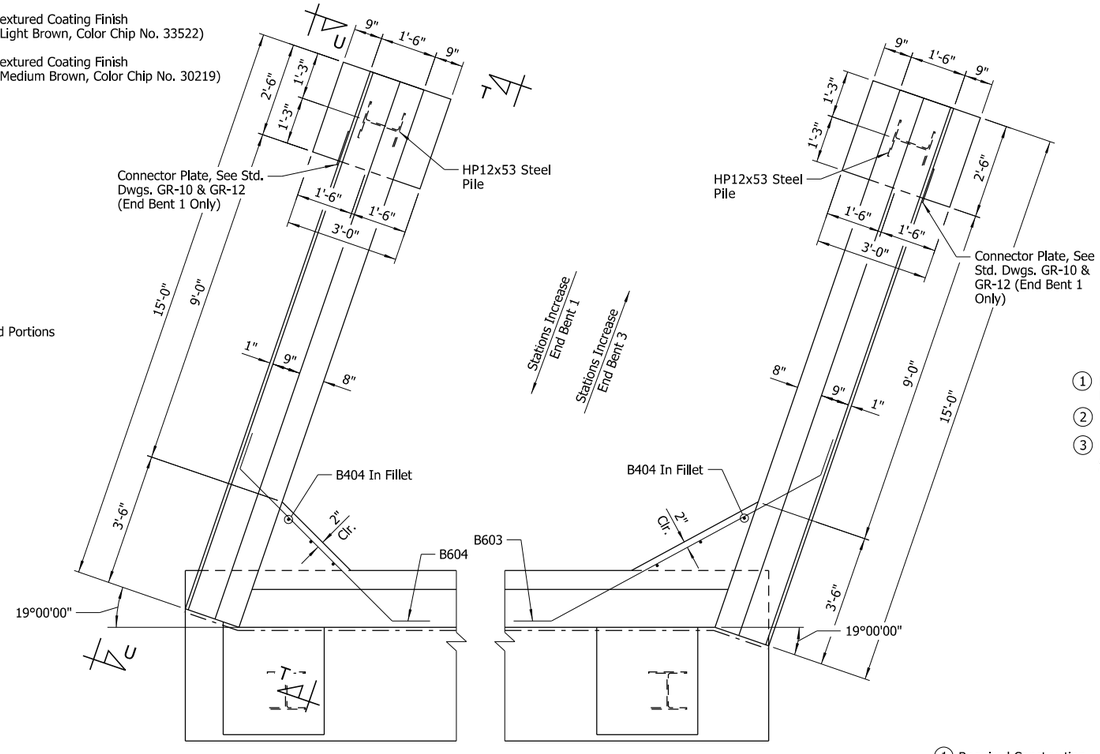

PLAN OF RAIL

Scale: ½" = 1'-0"

TABLE OF VARIABLES				
Bent No.	Location	Elev. "A"	Elev. "B"	Dim. "C"
1	Wing A	1304.60	1304.49	6'-5¾"
1	Wing B	1305.16	1305.06	6'-5 1/16"
3	Wing A	1302.21	1302.45	6'-1 9/16"
3	Wing B	1303.32	1303.43	6'-2 1/16"

(1) High Side - Level
Low Side - Match Roadway Slope

(2) Place Inside R401E bars positioned with 2" end cover as shown.

(3) Bridge Traffic Rail (Type SSTR42). For dimensions, see "BRIDGE RAIL AESTHETIC DETAIL" on Dwg. No. 66291. For reinforcement, see "SECTION D-D" on Std. Dwg. No. 55071.

NOTE:
For reinforcement details, rail terminus details and other information for the Bridge Traffic Rail, see Std. Dwg. No. 55071. See Roadway Plans for Guardrail locations.

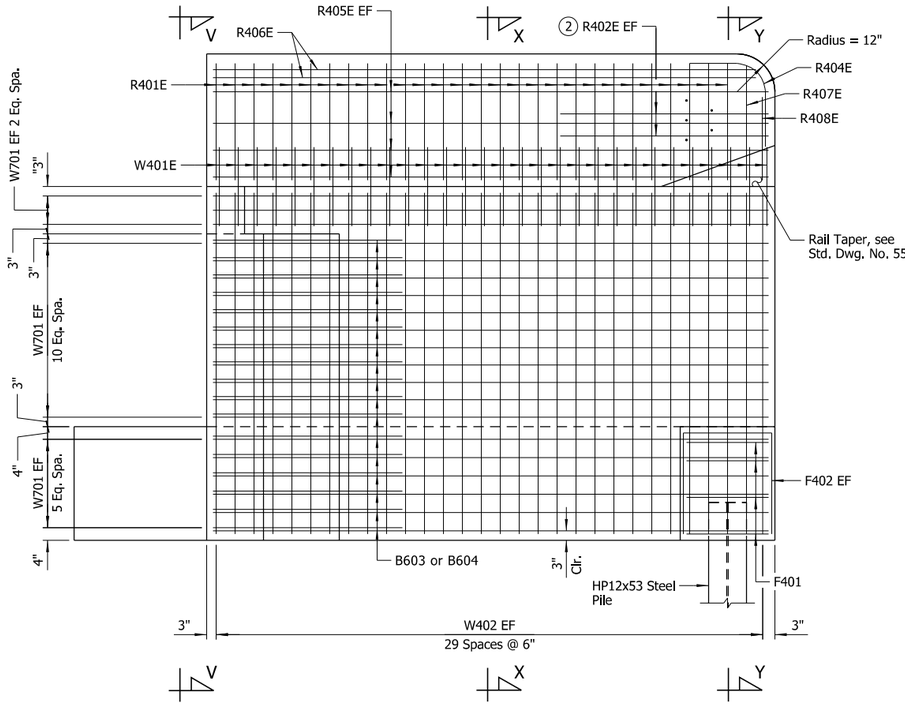

SECTION T-T

Scale: ½" = 1'-0"

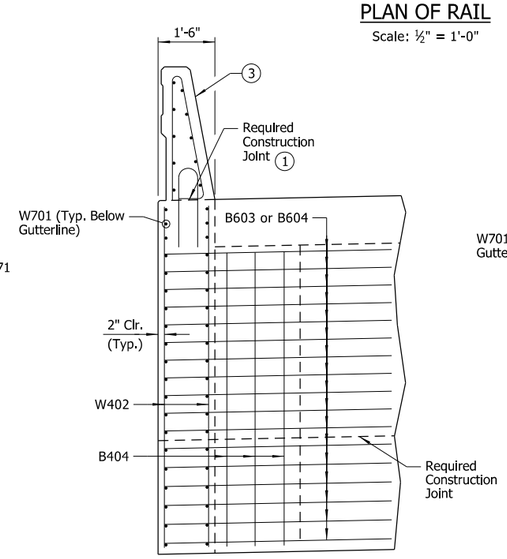

VIEW V-V

Scale: ½" = 1'-0"

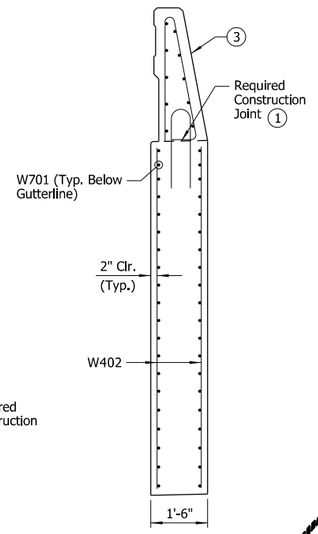

SECTION X-X

Scale: ½" = 1'-0"

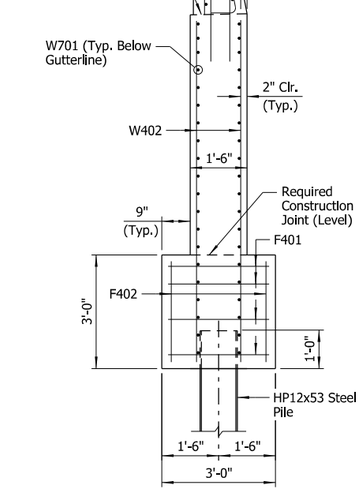

SECTION Y-Y

Scale: ½" = 1'-0"

LEGEND

EF = Each Face

STATE OF ARKANSAS
LICENSED PROFESSIONAL ENGINEER
No.14498
ADAM B. HALL
Digitally Signed 07/28/2023
BRIDGE ENGINEER

SHEET 3 OF 4
DETAILS OF END BENTS
XNA ACCESS RD. RAMP 2

ROUTE SEC.

ARKANSAS STATE HIGHWAY COMMISSION
LITTLE ROCK, ARK.

DRAWN BY: SJV DATE: FEB. 2023 FILENAME: b012326x7_a3.dgn
CHECKED BY: ABH DATE: MAR. 2023 SCALE: As Shown
DESIGNED BY: SJV DATE: OCT. 2022

BRIDGE NO. 07618 DRAWING NO. 66283

JESchmer 7/28/2023 12:11:16 PM
WORKSPACE: ARDOT Bridge (2019)
USER NAME: Adam.Hall
REVISED DATE:

DATE REVISED	DATE REVISED	FED. ROAD DIST. NO.	STATE	JOB NO.	SHEET NO.	TOTAL SHEETS
		6	ARK.	012326	495	838
		07618		END BENTS		66284

BAR LIST (PER END BENT)

MARK	NO. REQ'D	LENGTH	"A"	"B"	P.D.
B401	20	29'-0"			Str.
B402	53	5'-4"	8"	2'-5"	2"
B403	53	13'-8"	1'-2"	6'-4"	2"
B404	6	7'-7"			Str.
B405	20	5'-8"	2'-6"	1'-8"	2"
B406	24	5'-6"	2'-4"	1'-8"	2"
B501	30	14'-0"	4'-2"	2'-7"	2½"
B502	5	9'-2"	4'-2"	2'-7"	2½"
B601	6	29'-0"			Str.
B602	6	30'-4"			4½"
B603	17	10'-0"			4½"
B604	17	8'-0"			4½"
R401E	56	7'-6"			3"
R402E	8	5'-6"			Str.
R404E	2	3'-8"			1'-7"
R405E	16	14'-8"			Str.
R406E	4	14'-4"			Str.
R407E	2	6'-8"			3"
R408E	2	5'-1"			3"
W401E	60	4'-7"			6"
W402	120	8'-10"			Str.
W701	80	14'-8"			Str.
F401	8	10'-0"	2'-2"	2'-8"	2"
F402	4	7'-1"	2'-1"	2'-7"	2"

BAR BENDING DIAGRAMS

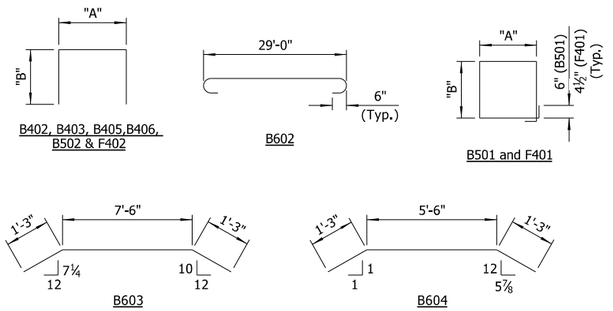

NOTES:
Dimensions of bars are out-to-out.

Bars designated with "E" suffix shall be epoxy coated.

See Std. Dwg. No. 55071 for Bar Bending Diagrams of R401E, R404E, R407E, R408E and W401E.

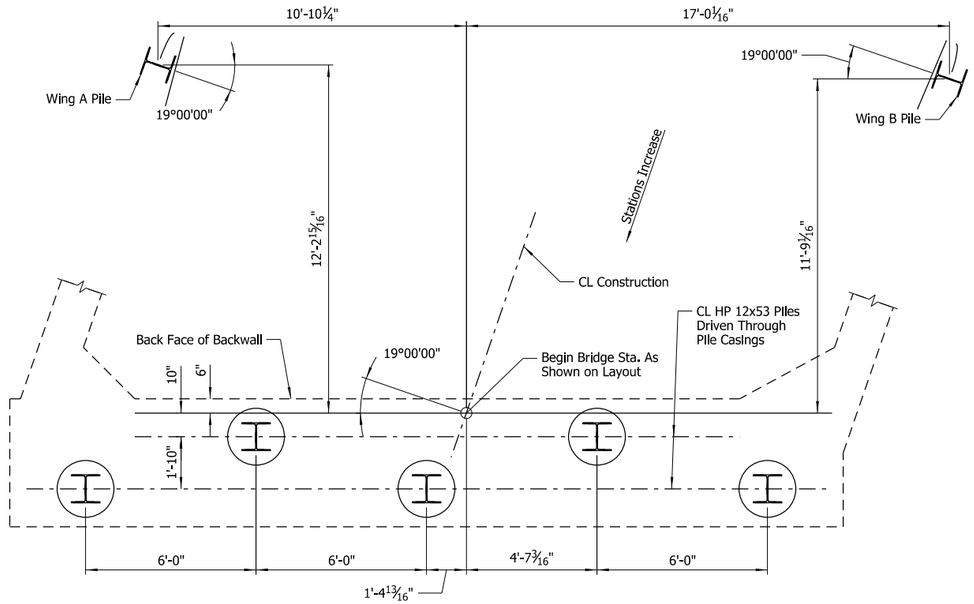

FOUNDATION PLAN - END BENT NO. 1

Scale: ⅜" = 1'-0"

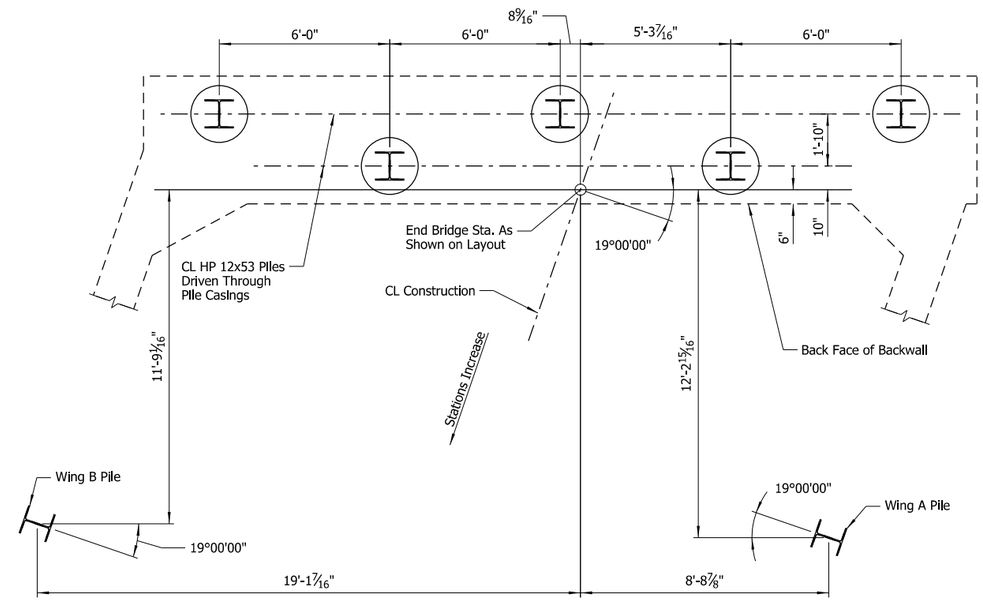

FOUNDATION PLAN - END BENT NO. 3

Scale: ⅜" = 1'-0"

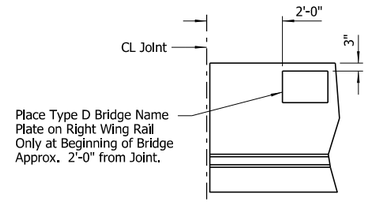

VIEW SHOWING LOCATION OF NAME PLATE

Scale: ½" = 1'-0"

STATE OF ARKANSAS
LICENSED PROFESSIONAL ENGINEER
No. 14498
ADAM B. HALL
Digitally Signed 07/28/2023
BRIDGE ENGINEER

SHEET 4 OF 4
DETAILS OF END BENTS
XNA ACCESS RD. RAMP 2

ROUTE SEC.

ARKANSAS STATE HIGHWAY COMMISSION

LITTLE ROCK, ARK.

DRAWN BY:	SJV	DATE:	FEB. 2023	FILENAME:	b012326x7_a4.dgn
CHECKED BY:	ABH	DATE:	MAR. 2023	SCALE:	As Shown
DESIGNED BY:	SJV	DATE:	OCT. 2022		

BRIDGE NO. 07618 DRAWING NO. 66284

JESkinner 7/28/2023 12:11:17 PM
WORKSPACE: ARDOT Bridge (2019)
\\ganverinc.local\gdata\Projects\2017\17017660 - ARDOT 012326 Hwy 412 - Hwy 112\Drawings\b012326x7_S204_A8.dgn
REVISED DATE:

DATE REVISED	DATE REVISED	FED. ROAD DIST. NO.	STATE	JOB NO.	SHEET NO.	TOTAL SHEETS
		6	ARK.	012326	496	838
		07618		INT. BENTS		66285

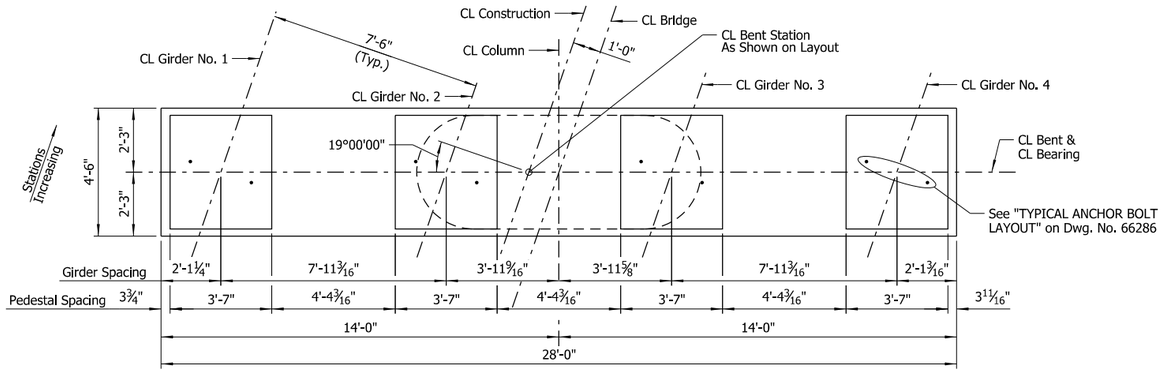

PLAN - BENT NO. 2

Scale: ⅜" = 1'-0"

NOTE:
For pedestal details, see "TYPICAL PEDESTAL DETAIL" on Dwg. No. 66286.

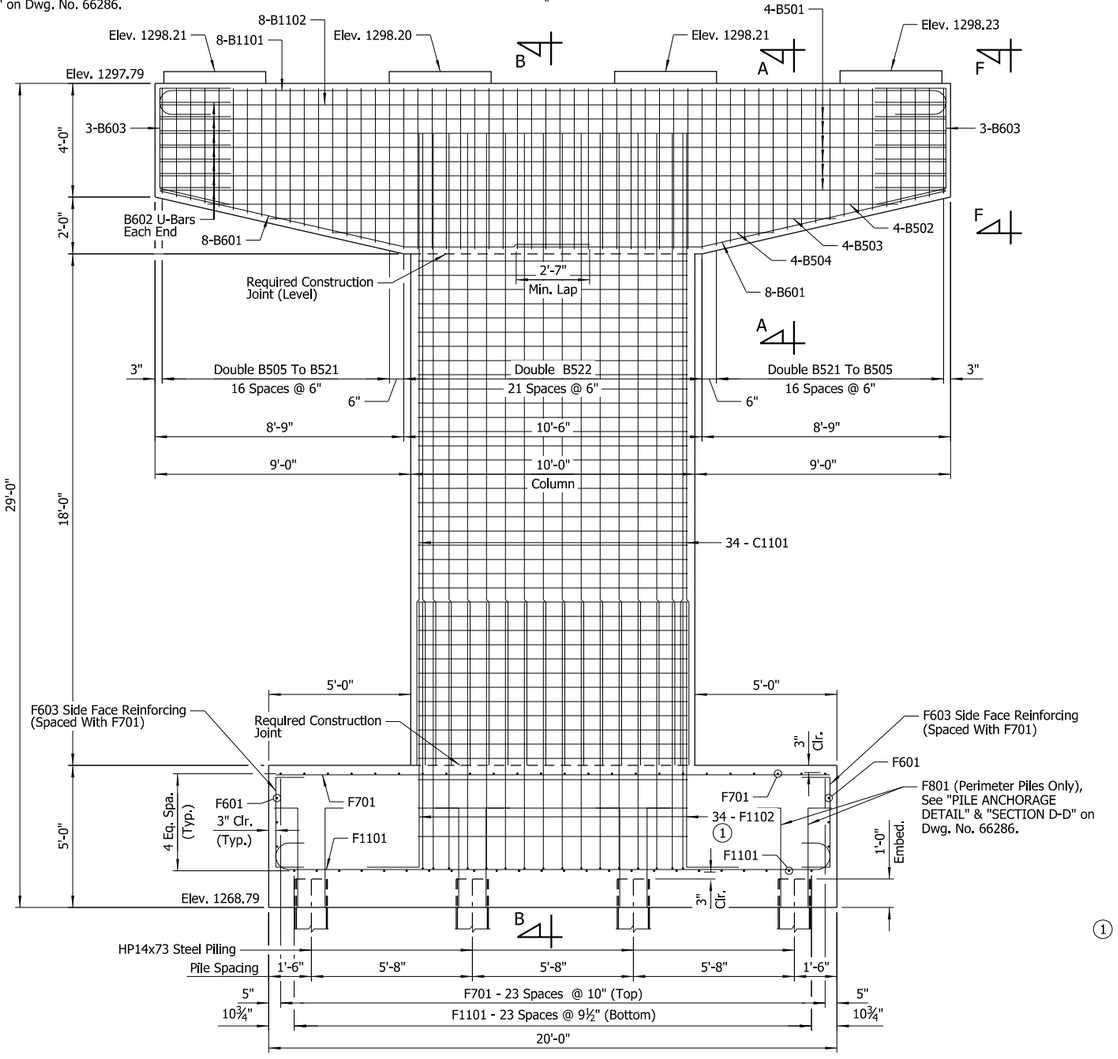

ELEVATION - BENT NO. 2

(Looking Ahead)
Scale: ⅜" = 1'-0"

NOTES:
For Standard General Notes, see Std. Dwg. No. 55006.

For "BAR LIST", "BAR BENDING DIAGRAMS", "SECTION A-A", "SECTION C-C", "SECTION D-D" and "VIEW F-F", see Dwg. No. 66286.

For additional information, see layout.

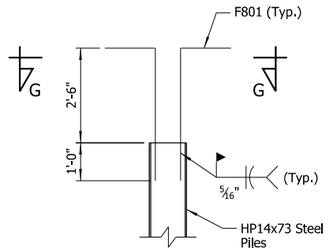

PILE ANCHORAGE DETAIL

No Scale

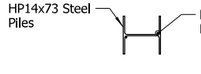

SECTION G-G

No Scale

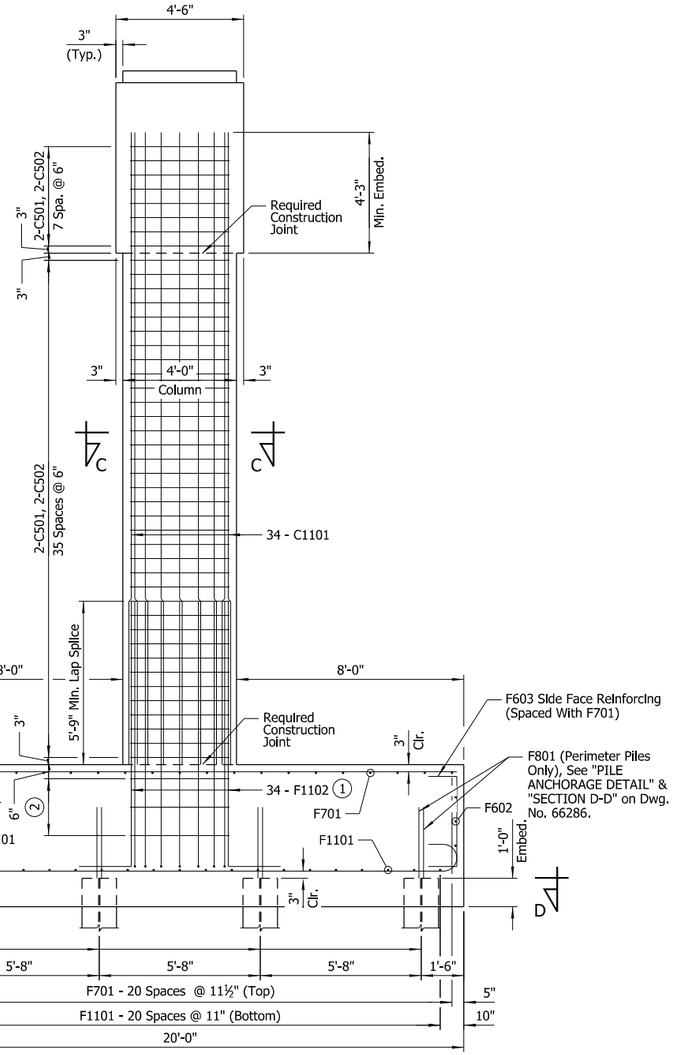

SECTION B-B

Scale: ⅜" = 1'-0"

(2) 2-C501, 2-C502
2 Spa. @ 1'-0"

(1) F1102 bars to rest on footing mat of reinforcing steel as shown.

STATE OF ARKANSAS
LICENSED PROFESSIONAL ENGINEER
No.16458
JOEL E. SKINNER
Digitally Signed 07/28/2023
BRIDGE ENGINEER

SHEET 1 OF 2
DETAILS OF INTERMEDIATE BENT
XNA ACCESS RD. RAMP 2

ROUTE SEC.

ARKANSAS STATE HIGHWAY COMMISSION

LITTLE ROCK, ARK.

DRAWN BY: HEW DATE: MAR. 2023 FILENAME: b012326x7_b1.dgn
CHECKED BY: RLW DATE: MAR. 2023 SCALE: As Shown
DESIGNED BY: RAK DATE: MAR. 2023

BRIDGE NO. 07618 DRAWING NO. 66285

JESkinner 7/28/2023 12:11:18 PM
WORKSPACE: ARDOT Bridge (2019)
Workspace Path: C:\Projects\2017\17660 - ARDOT 012326 Hwy 412 - Hwy 112\Drawings\b012326x7_S211_BE.dgn
REVISED DATE:

DATE REVISED	DATE REVISED	FED. ROAD DIST. NO.	STATE	JOB NO.	SHEET NO.	TOTAL SHEETS
		6	ARK.	012326	497	838
		07618		INT. BENTS		66286

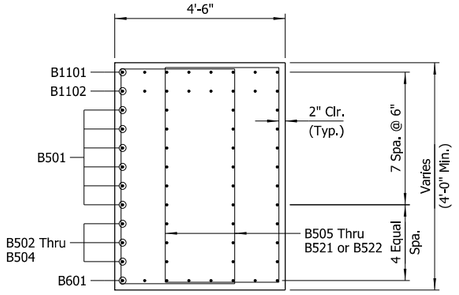

SECTION A-A

Scale: ½" = 1'-0"

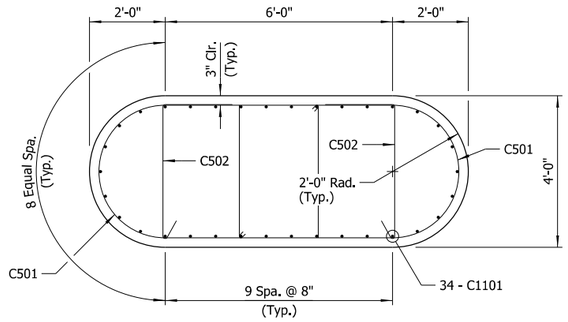

SECTION C-C

Scale: ½" = 1'-0"

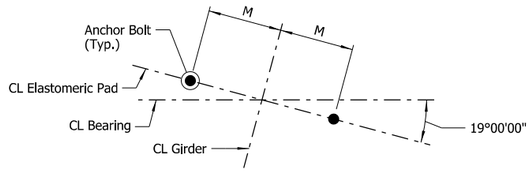

TYPICAL ANCHOR BOLT LAYOUT

No Scale

NOTE:
For details of elastomeric bearings, anchor bolts, and dimension M, see Dwg. No. 66287.

GENERAL NOTES

All concrete shall be Class "S" with a minimum 28 day compressive strength f'c = 3,500 psi and shall be poured in the dry. All exposed corners shall be chamfered ¾" unless noted otherwise.

All reinforcing steel shall be Grade 60 (yield strength = 60,000 psi) conforming to AASHTO M 31 or M 322, Type A, with mill test reports.

Top reinforcing bars in cap shall be properly placed to avoid interference with anchor bolts or sheet metal sleeves.

For additional information, see Layout.

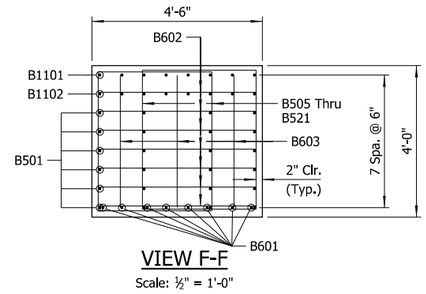

VIEW F-F

Scale: ½" = 1'-0"

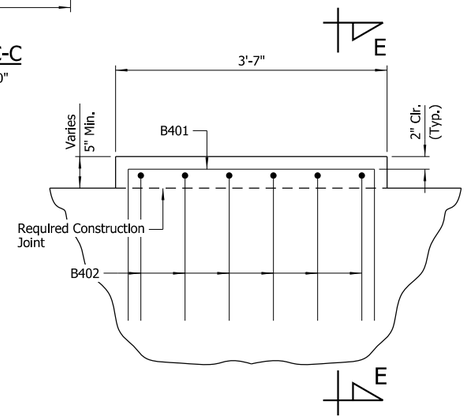

TYPICAL PEDESTAL DETAIL

Scale: 1" = 1'-0"

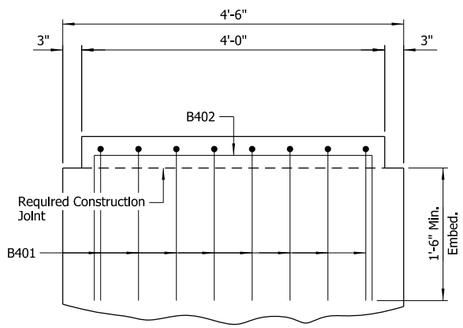

SECTION E-E

Scale: 1" = 1'-0"

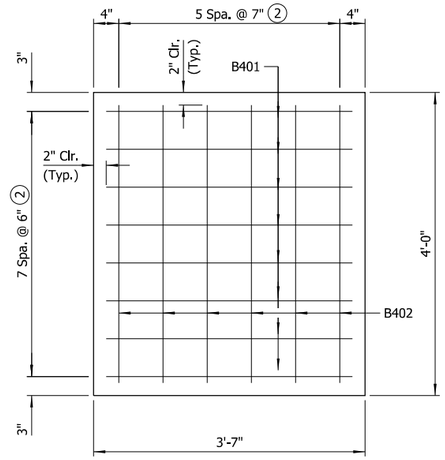

PEDESTAL PLAN

Scale: 1" = 1'-0"

(2) B401 and B402 locations may be adjusted as necessary to avoid interference with anchor bolts or sheet metal sleeves.

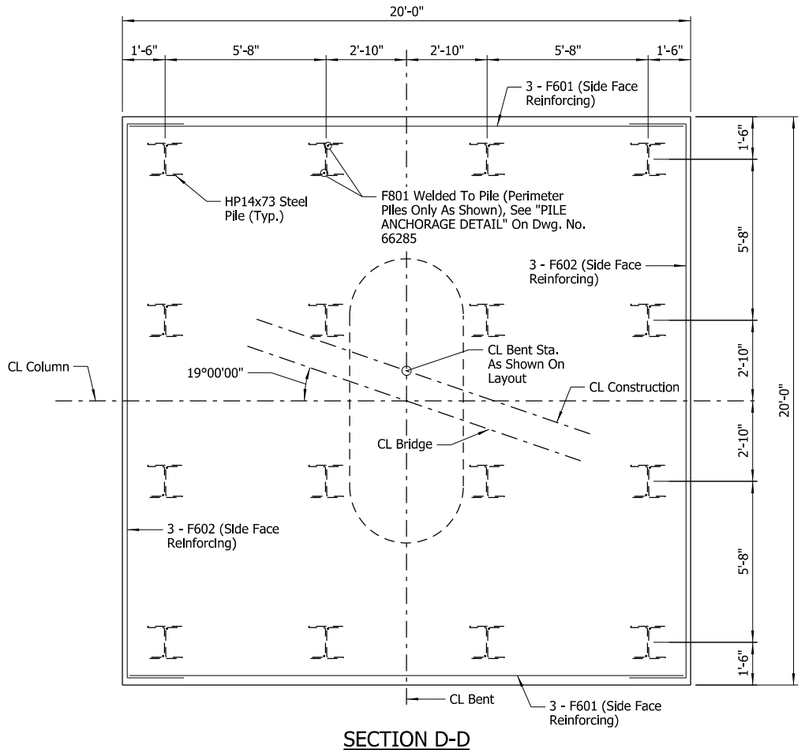

SECTION D-D

Scale: ⅜" = 1'-0"

BAR LIST

MARK	NO. REQ'D	LENGTH	"A"	"B"	P.D.
B401	32	6'-9"	1'-10"	3'-3"	2"
B402	24	7'-0"	1'-9"	3'-8"	2"
B501	24	27'-8"			Str.
B502	4	24'-4"			Str.
B503	4	19'-11"			Str.
B504	4	15'-7"			Str.
B505 To B521	4 Each	14'-0" To 17'-6"	3'-9" To 5'-6"	3'-0"	2½"
B522	44	14'-2"	5'-8"	3'-0"	2½"
B601	16	15'-5"			4½"
B602	14	8'-9"	2'-6"	4'-0½"	4½"
B603	6	8'-2"			4½"
B1101	8	30'-8"	27'-8"		11¼"
B1102	8	27'-8"			Str.
C501	94	17'-8"			3¾"
C502	94	4'-8"			3¾"
C1101	34	22'-3"			Str.
F601	6	19'-6"			Str.
F602	6	23'-2"	2'-0"	19'-6"	4½"
F603	90	6'-9"	2'-0"	3'-1"	4½"
F701	45	19'-6"			Str.
(1) F801	24	4'-8"			6"
F1101	45	22'-6"	19'-6"		11¼"
F1102	34	10'-10"			11¼"

BAR BENDING DIAGRAMS

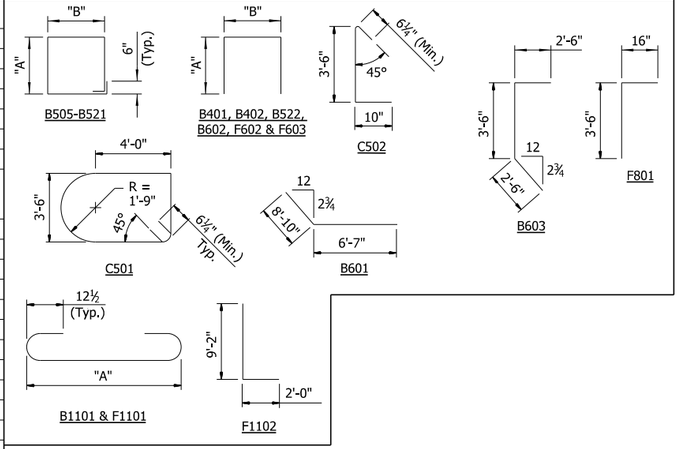

NOTE:
Dimensions of bars are out-to-out.

(1) F801 Bars must be a weldable grade meeting the requirements of ASTM A706 (Gr. 60)

STATE OF ARKANSAS
LICENSED PROFESSIONAL ENGINEER
No.16458
JOEL E. SKINNER
Digitally Signed 07/28/2023
BRIDGE ENGINEER

SHEET 2 OF 2
DETAILS OF INTERMEDIATE BENT
XNA ACCESS RD. RAMP 2

ROUTE SEC.

ARKANSAS STATE HIGHWAY COMMISSION

LITTLE ROCK, ARK.

DRAWN BY: CWT DATE: MAR. 2023 FILENAME: b012326x7_b2.dgn
CHECKED BY: RLW DATE: MAR. 2023 SCALE: As Shown
DESIGNED BY: RAK DATE: MAR. 2023

BRIDGE NO. 07618 DRAWING NO. 66286

JEKidmer 7/28/2023 12:11:19 PM
WORKSPACE: ARDOT B4Spe (2019)
USER NAME: JEKidmer Model: Default
REVISED DATE:
C:\Users\JEKidmer\Desktop\Projects\2017\17017660 - ARDOT 012326 Hwy 412 - Hwy 112\Drawings\b012326x7_S212_BE.dgn

TABLE OF FABRICATOR VARIABLES

Bridge No.	Location		Bearing Type	No. Of Bearings Each Bent	③ Maximum Design Load (Kips)	Elastomeric Pad							External Load Plate									Anchor Bolt				
	Bent No.	Girder No.				G	H	A	B	N	t_i	t_e	No. & Thickness Of Steel Laminae	T	C	D	E	F	J	K	M	T_a	T_b	Anchor Bolt (Dia. x L)	Anchor Bolt Grade	Pipe Sleeve Size (Dia. x L)	Sheet Metal Sleeve Size (Dia. x L)	Steel Washer Size (O.D.)
07618	1	All	Exp.	4	144	8 9/16"	5 9/16"	14"	12"	5	½"	¼"	6 @ 12 Ga.	3⅜"	13"	25½"	4½"	2⅝"	-	½"	9¾"	1.95"	2.05"	1.75" x 30"	55	2" x 5 13/16"	4" x 11"	3.375"
	2	1 & 2	Fixed	2	371	7⅛"	4⅜"	18"	14"	3	½"	¼"	4 @ 12 Ga.	2 7/16"	15	35½"	2¼"	2¼"	1⅞"	½"	13⅝"	1.92"	2.08"	1.5" x 25"	55	1½" x 4⅝"	3" x 11"	3"
	2	3 & 4	Fixed	2	371	7⅛"	4⅜"	18"	14"	3	½"	¼"	4 @ 12 Ga.	2 7/16"	15	35½"	2¼"	2¼"	1⅞"	½"	13⅝"	1.96"	2.04"	1.5" x 25"	55	1½" x 4⅝"	3" x 11"	3"
	3	1 & 2	Exp.	2	144	8 9/16"	5 9/16"	14"	12"	5	½"	¼"	6 @ 12 Ga.	3⅜"	13"	25½"	4½"	2⅝"	-	½"	9¾"	1.91"	2.09"	1.75" x 30"	55	2" x 5 13/16"	4" x 11"	3.375"
	3	3 & 4	Exp.	2	144	8 9/16"	5 9/16"	14"	12"	5	½"	¼"	6 @ 12 Ga.	3⅜"	13"	25½"	4½"	2⅝"	-	½"	9¾"	1.94"	2.06"	1.75" x 30"	55	2" x 5 13/16"	4" x 11"	3.375"
07619	1	All	Exp.	4	136	7 15/16"	4 15/16"	14"	12"	4	½"	¼"	5 @ 12 Ga.	3"	13"	25½"	4½"	2⅝"	-	½"	9¾"	2.13"	1.87"	1.75" x 29"	55	2" x 5⅜"	4" x 11"	3.375"
	2	All	Fixed	4	349	6½"	3¾"	18"	15"	2	½"	¼"	3 @ 12 Ga.	1 13/16"	16"	35½"	2¼"	2¼"	1¼"	½"	13⅜"	2.13"	1.87"	1.5" x 26"	55	1½" x 4"	3" x 15"	3"
	3	All	Exp.	4	123	7 1/16"	4 15/16"	14"	12"	4	½"	¼"	5 @ 12 Ga.	3"	13"	24½"	3¾"	2¼"	-	½"	9½"	2.08"	1.92"	1.5" x 26"	55	1½" x 5⅜"	3" x 11"	3"

DATE REVISED	DATE REVISED	FED. ROAD DIST. NO.	STATE	JOB NO.	SHEET NO.	TOTAL SHEETS
		6	ARK.	012326	498	838
		07618 & 07619	ELASTOMERIC BEARINGS			66287

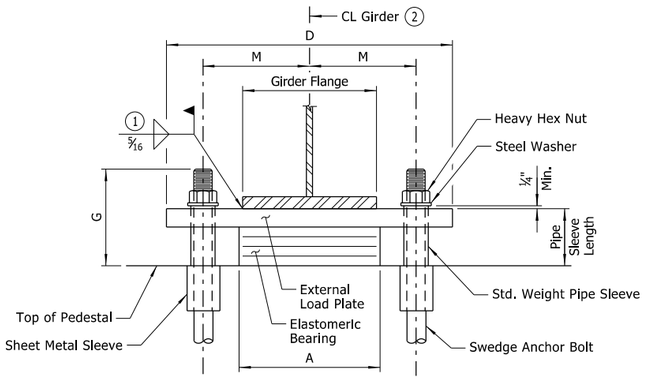

FRONT VIEW - AT BENT NOS. 1 & 3

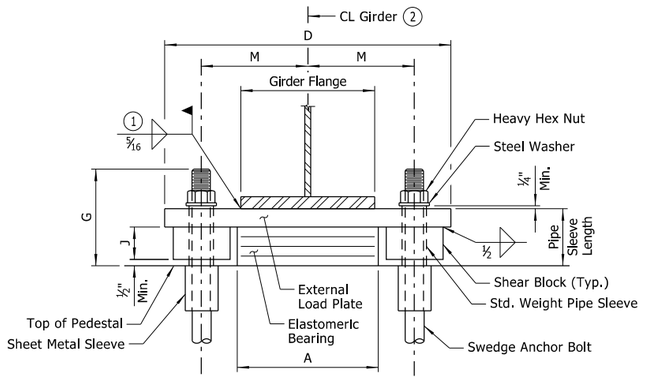

FRONT VIEW - AT BENT NO. 2

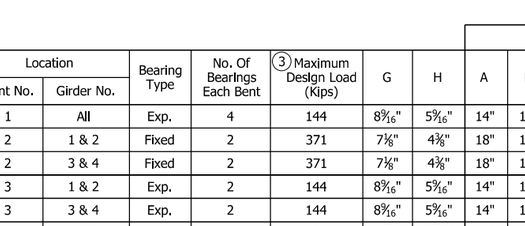

PLAN VIEW - AT BENT NOS. 1 & 3

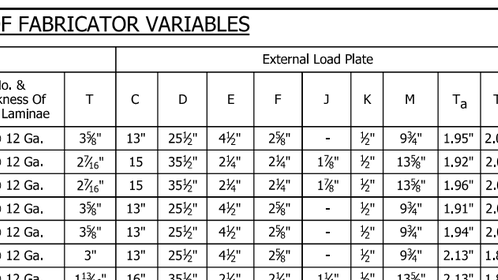

PLAN VIEW - AT BENT NO. 2

The direction of the bevel of the external load plate may not be accurately depicted with respect to Ta and Tb values shown in "TABLE OF FABRICATOR VARIABLES".

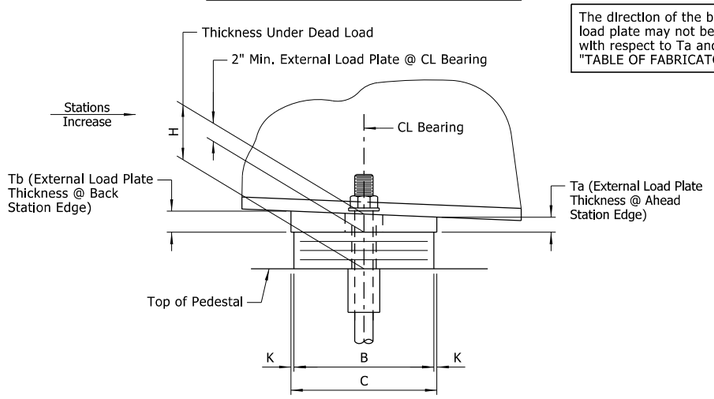

SIDE VIEW - AT BENT NOS. 1 & 3

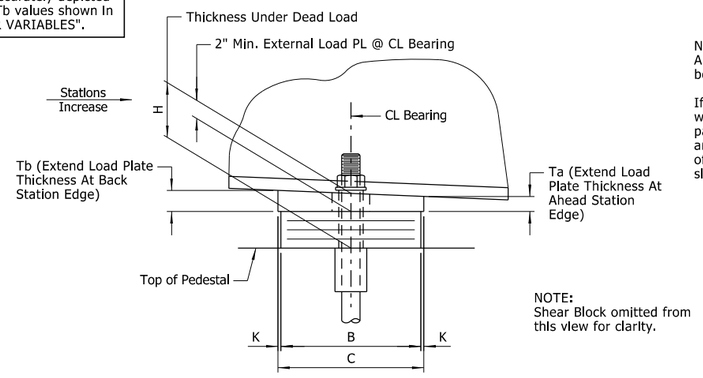

NOTE:
Shear Block omitted from this view for clarity.

SIDE VIEW - AT BENT NO. 2

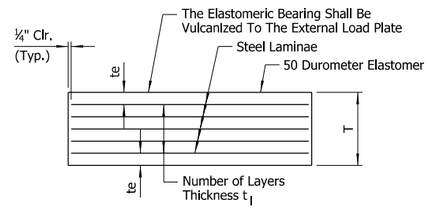

t_e = Thickness Of Elastomer Cover On Top And Bottom Of Pad
t_i = Thickness Of Elastomer Between Steel Laminae
N = Number Of Elastomer Layers Of Thickness t_i

ELASTOMERIC BEARING

① Care shall be taken to ensure that the external load plate is in full and complete contact with the girder flange before welding begins. Unless otherwise approved by the Engineer, welding of the external load plate at expansion bearings to the girder will be allowed only when: 1) the approximate average air temperature during the 24 hour period immediately preceding welding is between 40°F and 80°F; and 2) the slots in the external load plate are positioned to center on the anchor bolts; and 3) no horizontal deformation of the elastomeric pad is evident. If welding at other temperatures is required, the Engineer will provide adjustment data.

② CL elastomeric pad shall be aligned with CL girder.

③ Maximum Design Load = Service I Limit State

GENERAL NOTES

Elastomeric bearings shall conform to Section 808 and shall be paid for at the unit price bid for "ELASTOMERIC BEARINGS".

External load plates shall conform to ASTM A709, Grade 50. Pipe sleeves shall be ASTM A500, Grade B, and shall be galvanized to conform to AASHTO M 232, Class C or ASTM B695, Class 50.

External load plates shall be completely fabricated (including bevel, bolt holes and all shop welding) and shall be cleaned before vulcanizing to the elastomeric bearing. The surfaces in contact with the elastomeric bearing shall be cleaned in accordance with Subsection 808.03. Other surfaces shall be blast cleaned in accordance with Subsection 807.84(b) for painted steel and 807.84(e) for unpainted Grade 50W steel.

Anchor bolts, washers and nuts shall conform to Subsection 807.07. The anchor bolt grade of steel shall be as specified in the "TABLE OF FABRICATOR VARIABLES". Indentations shall be circular with rounded bottoms and staggered as shown in the details.

Pipe sleeves, anchor bolts, washers and nuts shall be paid for at the unit price bid for "STRUCTURAL STEEL IN PLATE GIRDER SPANS (A709, GR. 50)". External load plates will not be measured or paid for separately but will be considered subsidiary to the unit price bid for "ELASTOMERIC BEARINGS".

Bearings shall be seated in accordance with Subsection 808.08. This work and materials are considered subsidiary to the item "ELASTOMERIC BEARINGS" and will not be paid for directly.

Prior to erection of the girder, the Contractor shall verify the orientation of the bearings with respect to Ta and Tb.

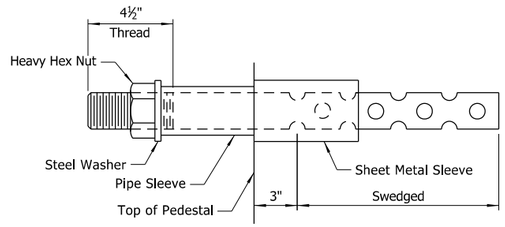

ANCHOR BOLT DETAIL

NOTES:
Anchor bolts may be cast in place or drilled and grouted into place. If anchor bolts are to be cast in place, the galvanized sheet metal sleeves will not be required.

If anchor bolts are to be drilled and grouted in place, the galvanized sheet metal sleeves shall be cast in place as shown. Sleeves shall be dry packed with styrofoam, urethane foam or approved equal prior to pouring of concrete. After pouring of the cap and prior to erection of structural steel, the dry pack shall be removed and holes for the anchor bolts shall be accurately drilled into the concrete. Bolts placed in drilled holes shall be accurately set and fixed using a QPL approved epoxy or non-shrink grout that completely fills the holes. Galvanized sheet metal sleeves shall meet the requirements of ASTM 653, CS Type B or approved equivalent, be of minimum 16 gage thickness, and be galvanized according to ASTM B695, Class 50. Sheet metal sleeves will not be paid for directly but will be considered subsidiary to the item "STRUCTURAL STEEL IN PLATE GIRDER SPANS (A709, GR. 50)".

STATE OF ARKANSAS
LICENSED PROFESSIONAL ENGINEER
No.8017
JOHN H. RUDDELL
Digitally Signed 07/28/2023
BRIDGE ENGINEER

DETAILS OF ELASTOMERIC BEARINGS

ROUTE SEC.

ARKANSAS STATE HIGHWAY COMMISSION

LITTLE ROCK, ARK.

DRAWN BY: HEW DATE: MAR. 2023 FILENAME: b012326x7_e1.dgn
CHECKED BY: JHR DATE: APR. 2023 SCALE: As Shown
DESIGNED BY: MJS DATE: MAR. 2023

BRIDGE NO. 07618 & 07619 DRAWING NO. 66287

JEShimer 7/28/2023 12:11:20 PM
WORKSPACE: ARDOT Bridge (2019)
USER NAME: Agadata\Projects\2017\7017660 - ARDOT 012326 Hwy 412 - Hwy 112\Drawings\b012326x7_S301_BG.dgn
REVISED DATE:

DATE REVISED	DATE REVISED	FED. ROAD DIST. NO.	STATE	JOB NO.	SHEET NO.	TOTAL SHEETS
		6	ARK.	012326	499	838
		07618		219'-0" UNIT		66288

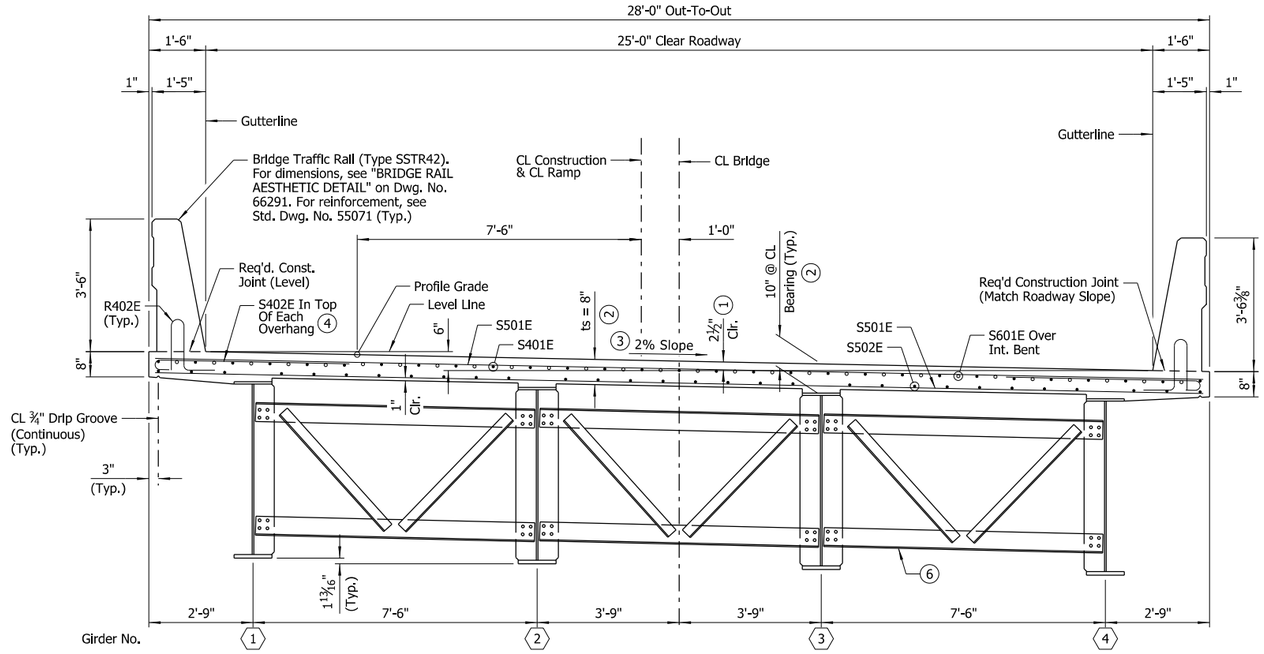

(8) TYPICAL ROADWAY SECTION - BEGIN BRIDGE TO STA. 428+91.93

(Looking Ahead)
Scale: ½" = 1'-0"

SLAB REINFORCING:

Transverse: S501E @ 6" O.C. Top & Bottom
S402E @ 6" O.C. In Top of Overhangs (Bundled w/ S501E)

Longitudinal: S401E In Top As Shown
S502E In Bottom As Shown
S601E In Top As Shown Over Int. Bent — (5)

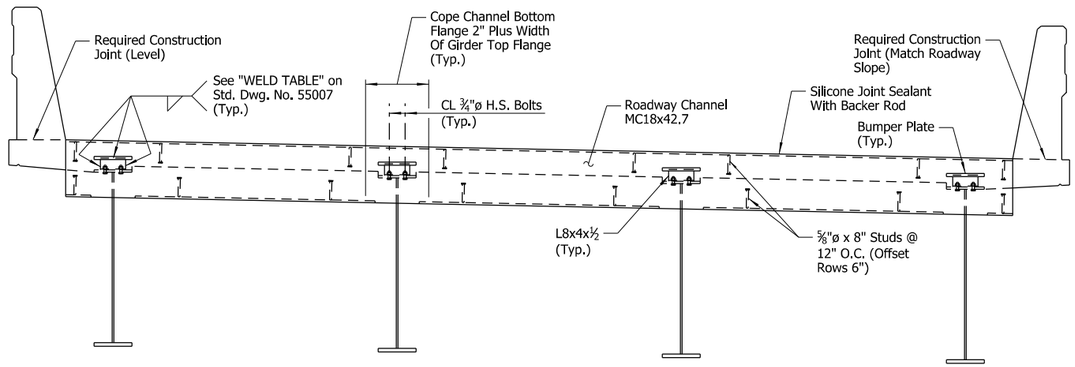

EXPANSION DEVICE:

Rdwy. Channel: MC18x42.7
Conn. Angles: L8x4x½
Detail device ⅛" high and provide ¼" shims using 2 - 1⁄16" and 1 - ⅛" plates

TYPICAL SECTION THRU - END BENT NO. 1

(Looking Ahead)
No Scale

NOTE:
Details of joint at End Bent No. 3 are similar.

(1) TOLERANCE:
Minus = ¼"
Plus = Amount of slab thickening used to meet slab thickness tolerance - See "ADJUSTMENT FOR SLAB THICKNESS TOLERANCE" on Std. Dwg. No. 55007.

(2) See "ADJUSTMENT FOR SLAB THICKNESS TOLERANCE" on Std. Dwg. No. 55007.

(3) See "SUPERELEVATION TRANSITION SKETCH" on Dwg. No. 66280.

(4) Bundle with S501E bars in top. Rotate as needed to avoid interference with bottom mat of deck reinforcement.

(5) See "REINFORCING PLAN & DECK POURING SEQUENCE" on Dwg. No. 66291.

(6) See Dwg. No. 66290 for cross-frame details.

(7) Superelevation Point of Rotation.

(8) See "SCHEMATIC SECTIONS VIEWS" for modifications beyond Sta. 428+91.93

NOTES:
For Standard General Notes and details, see Std. Dwg. Nos. 55006 & 55007.

Class 2 Protective Surface Treatment shall be applied to the roadway surface and roadway face and top of the bridge traffic rails.

Class 3 Textured Coating Finish shall be applied to bridge surfaces as specified in Special Provision "TEXTURED COATING FINISH" and in accordance with Subsection 802.19(b)(3). Textured Coating Finish shall not be applied on surfaces where Class 2 Protective Surface Treatment is applied.

Bar positions and clearances from the forms shall be maintained by means of stays, ties, hangers or other approved devices sufficient in size and number to prevent displacement during construction, per Subsection 804.06. Placement of slab bolsters or hi-chairs with full-length lower runners directly on removable deck forms will not be allowed.

For "BAR LIST" and "BAR BENDING DIAGRAMS", see Dwg. No. 66291.

For additional details of poured silicone joints, see Std. Dwg. No. 55008.

For "SCREED RAIL SUPPORT FOR PLATE GIRDERS", see Std. Dwg. No. 55007.

The profile of the Roadway Channel shall be established based on the vertical curve in conjunction with the skew.

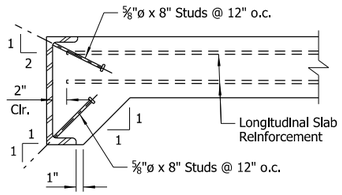

DETAIL OF ANCHORS & PLACEMENT OF LONGITUDINAL REINFORCEMENT

No Scale

NOTE:
As an alternate to ⅝"ø studs, ½"ø x 8" studs spaced @ 8" o.c. may be used. Use weight of ⅝"ø stud as basis of measurement of Structural Steel in anchors.

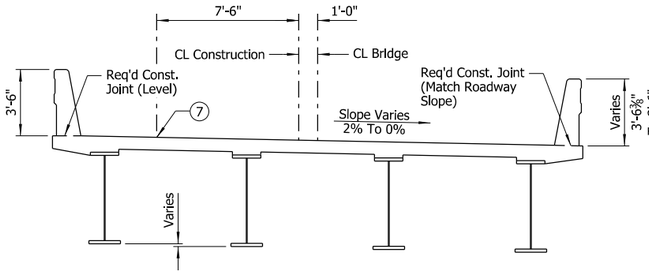

(3) STA. 428+91.93 TO STA. 429+50.26

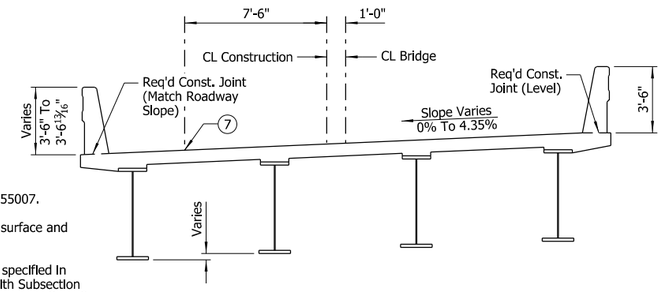

(3) STA. 429+50.26 TO END BRIDGE

SCHEMATIC SECTION VIEWS

(Looking Ahead)
Scale: ¼" = 1'-0"

TABLE OF SILICONE JOINT DATA

Bent No(s).	"A" Width Perpendicular To Joint At 24 Hour Average Temperature (9) Of:			"B" Perpendicular To Joint At 60°F	Bumper Plate Size
	40°F	60°F	80°F		
1 & 3	2 3⁄16"	2"	1 1⁄16"	2¼"±	1" x 1" x 12"

(9) The temperature used to set the joint opening shall be the approximate average air temperature during the 24-hour period immediately before the bolts are tightened. The Engineer shall establish the temperature. Interpolation of the table may be necessary.

STATE OF ARKANSAS
LICENSED PROFESSIONAL ENGINEER
No.8017
JOHN H. RUDDELL
Digitally Signed 07/28/2023
BRIDGE ENGINEER

SHEET 1 OF 4
DETAILS OF 219'-0" CONTINUOUS PLATE GIRDER UNIT
XNA ACCESS RD. RAMP 2

ROUTE SEC.

ARKANSAS STATE HIGHWAY COMMISSION

LITTLE ROCK, ARK.

DRAWN BY: CWT DATE: FEB. 2023 FILENAME: b012326x7_s1.dgn
CHECKED BY: JHR DATE: MAR. 2023 SCALE: As Shown
DESIGNED BY: RAK DATE: FEB. 2023
BRIDGE NO. 07618 DRAWING NO. 66288

JEskinner 7/28/2023 12:11:21 PM
WORKSPACE - ARDOT Bridge (2019)
Users\jeskinner\Bridge\Projects\2017\17017660 - ARDOT 012326 Hwy 412 - Hwy 112\Drawings\b012326x7_S401_SX.dgn
REVISED DATE:

DATE REVISED	DATE REVISED	FED. ROAD DIST. NO.	STATE	JOB NO.	SHEET NO.	TOTAL SHEETS
		6	ARK.	012326	500	838
		07618		219'-0" UNIT		66289

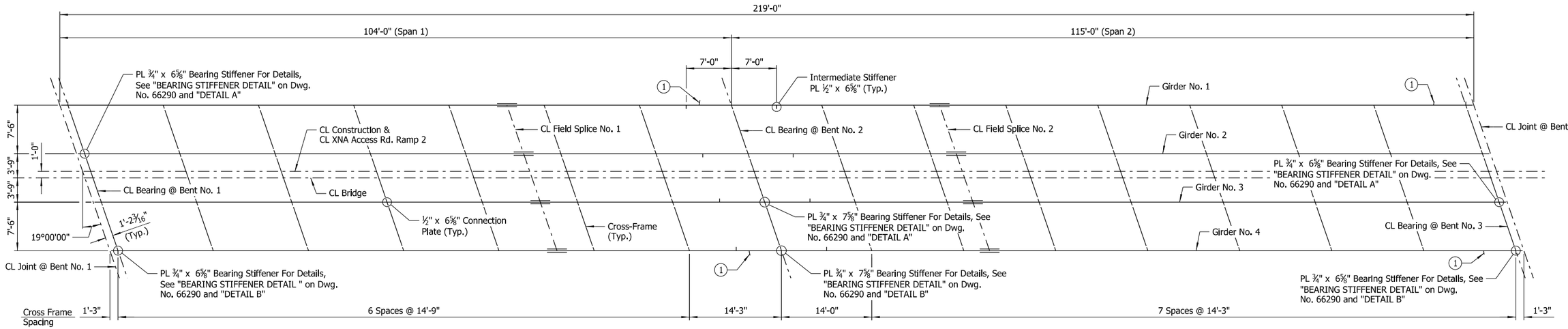

FRAMING PLAN

Scale: ⅛" = 1'-0"

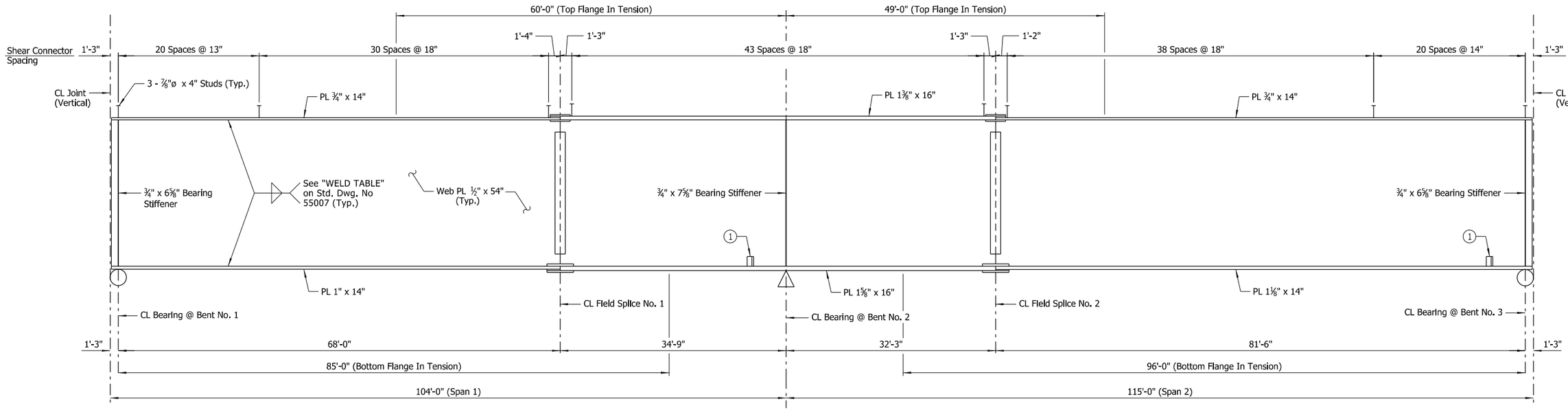

GIRDER ELEVATION

No Scale

NOTES:
For "GENERAL NOTES", see Dwg. No. 55006.

All structural steel shall be ASTM A709, Gr. 50 unless noted otherwise and shall be paid for at the unit price per pound bid for "STRUCTURAL STEEL IN PLATE GIRDER SPANS (A709, GR. 50)".

Bolted Field Splices shown may be eliminated or shop welded splices may be substituted with approval of the Engineer. Payment will be made on the basis of the Plan Quantities.

The Contractor shall ensure that girders are stable throughout the erection process. The Contractor will be responsible for providing temporary bracing or stiffening devices to accommodate handling stresses in individual members or segments of the structure during erection.

For "SHEAR CONNECTOR DETAIL", "SCREED RAIL SUPPORT FOR PLATE GIRDERS" & "DETAILS OF WELDED SPLICES FOR PLATE GIRDERS", see Std. Dwg. No. 55007.

For details of field splices, see Dwg. No. 66290.

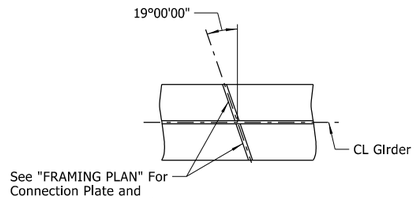

DETAIL A
Scale: 1"=1'-0"

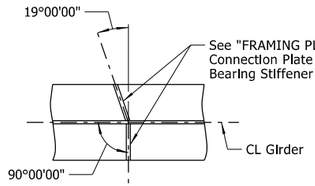

DETAIL B
Scale: 1"=1'-0"

(1) Drip plate welded to the outer side of the bottom flange of the exterior girders. Locate drip plates 5'-0" from CL Bearing at locations shown in "FRAMING PLAN". See "BOTTOM FLANGE DRIP PLATE" on Std. Dwg. No. 55007 for additional details. Stop drip plate weld 1" from face of web.

STATE OF ARKANSAS
LICENSED PROFESSIONAL ENGINEER
No.8017
JOHN H. RUDDELL
Digitally Signed 07/28/2023
BRIDGE ENGINEER

SHEET 2 OF 4
DETAILS OF 219'-0" CONTINUOUS PLATE GIRDER UNIT XNA ACCESS RD. RAMP 2

ROUTE SEC.

ARKANSAS STATE HIGHWAY COMMISSION

LITTLE ROCK, ARK.

DRAWN BY: HEW DATE: FEB. 2023 FILENAME: b012326x7_s2.dgn
CHECKED BY: JHR DATE: MAR. 2023 SCALE: As Shown
DESIGNED BY: BWD DATE: FEB. 2023

BRIDGE NO. 07618 DRAWING NO. 66289

JESchner 7/28/2023 12:11:22 PM
WORKSPACE: ARDOT Bridge (2019)
USER NAME: jeschner Model: Projects\2017\17017660 - ARDOT 012326 Hwy 412 - Hwy 112\Drawings\b012326x7_S402_SF.dgn
REVISED DATE:

DATE REVISED	DATE REVISED	FED. ROAD DIST. NO.	STATE	JOB NO.	SHEET NO.	TOTAL SHEETS
		6	ARK.	012326	501	838
		07618		219'-0" UNIT		66290

NOTES:
Cross-Frames at end bents shall be fabricated such that the horizontal legs of chord members point away from CL Joint.

Bearing stiffeners shall be fabricated to be vertical in their final positions. Bearing stiffeners are to be placed on both sides of all girder webs at bent locations. See "DETAIL A" & "DETAIL B" on Dwg. No. 66289 for more information.

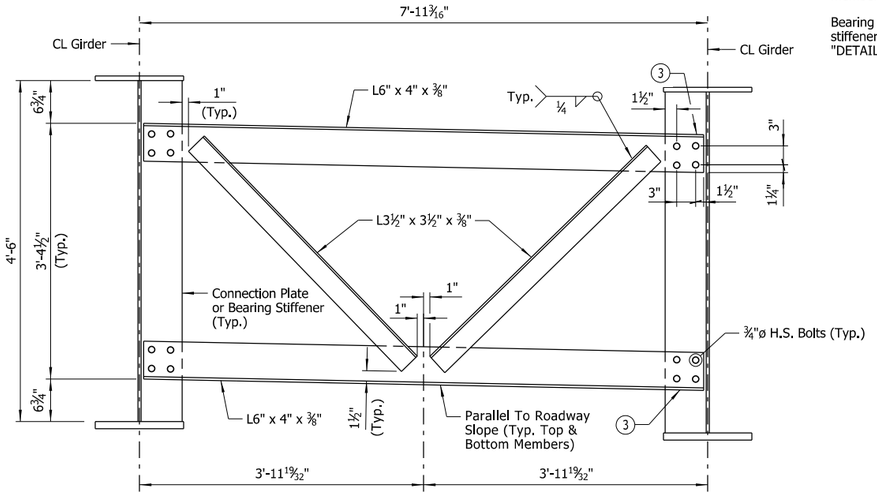

CROSS-FRAME DETAIL
Scale: None

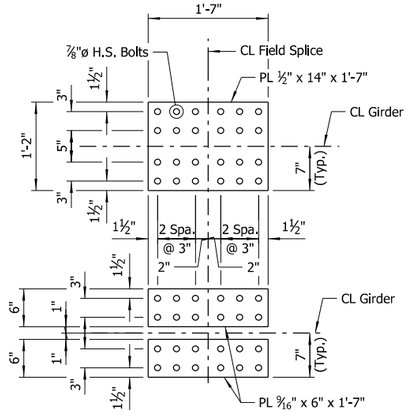

TOP FLANGE FIELD SPLICE NOS. 1 & 2
Scale: 1" = 1'-0"

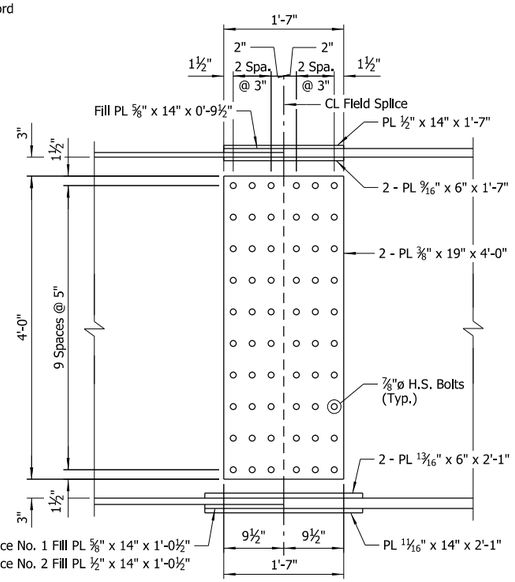

ELEVATION OF FIELD SPLICE NOS. 1 & 2
Scale: 1" = 1'-0"

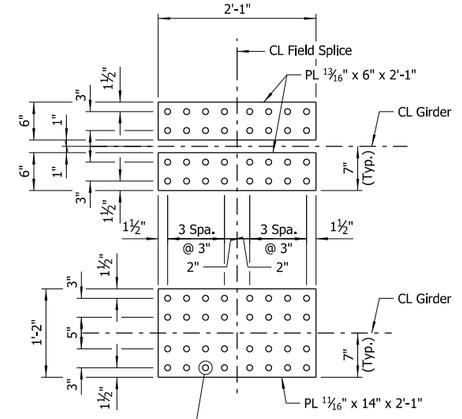

BOTTOM FLANGE FIELD SPLICE NOS. 1 & 2
Scale: 1" = 1'-0"

TABLE OF DEAD LOAD DEFLECTIONS (Inches)			
Point Of Deflection	Wt. Of Girder And Cross-Frames	Wt. Of Girder, Cross-Frames And Slab	Wt. Of Girder, Cross-Frames, Slab And Railing
1.0	0.000	0.000	0.000
1.1	0.087	0.411	0.473
1.2	0.158	0.746	0.859
1.3	0.203	0.953	1.098
1.4	0.216	1.008	1.163
1.5	0.198	0.915	1.057
1.6	0.155	0.705	0.816
1.7	0.099	0.437	0.507
1.8	0.044	0.183	0.213
1.9	0.004	0.009	0.011
2.0	0.000	0.000	0.000
2.1	0.052	0.252	0.291
2.2	0.143	0.687	0.793
2.3	0.248	1.188	1.369
2.4	0.343	1.646	1.895
2.5	0.405	1.950	2.243
2.6	0.422	2.028	2.331
2.7	0.383	1.845	2.119
2.8	0.293	1.410	1.618
2.9	0.159	0.766	0.879
3.0	0.00	0.000	0.000

(1) See "WELD TABLE" on Std. Dwg. No. 55007 for minimum weld size.

(2) Stop weld ¼" to 1" from end of clip (Typ.)

(3) Clip horizontal leg of angle parallel to girder web at acute connection plate locations.

NOTES:
All field splice bolts shall be ⅞" dia. high strength bolts.

All holes for field splice bolts shall be 15/16" dia.

All field splice plates shall be ASTM A709, Gr. 50.

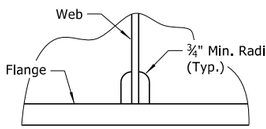

Height and width of clip shall be as noted in other details.

ALTERNATE CLIP DETAIL
(For Bearing Stiffeners and Cross-frame Connection Plates)
No Scale

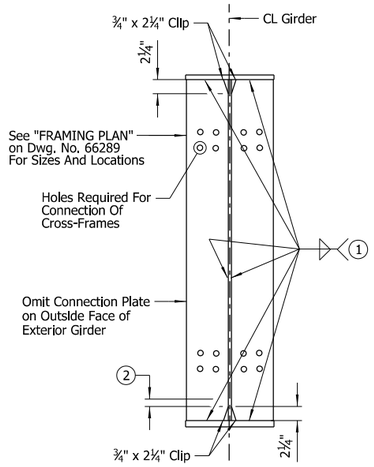

CONNECTION PLATE DETAIL
Scale: 1" = 1'-0"

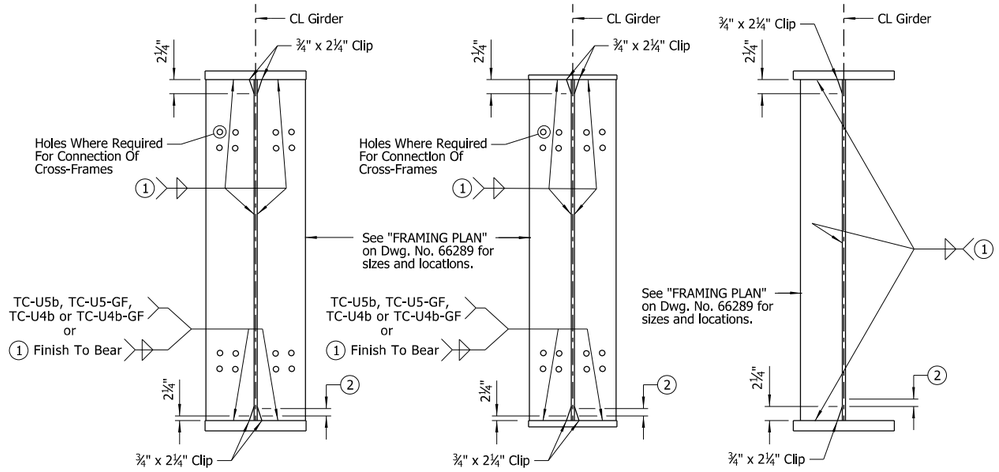

BENT 2

BENT 1 & 3

BEARING STIFFENER DETAIL
Scale: 1" = 1'-0"

INTERMEDIATE TRANSVERSE STIFFENER DETAIL
Scale: 1" = 1'-0"

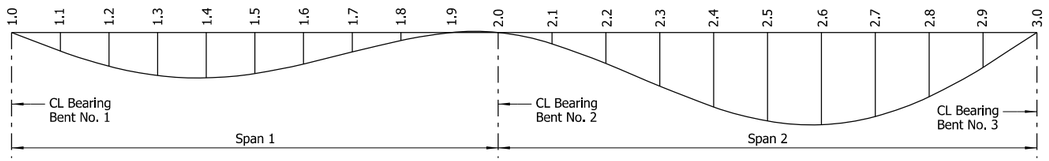

DEAD LOAD DEFLECTION DIAGRAM
No Scale

NOTES:
Camber for dead load deflection plus vertical curve +/- ¼" tolerance. Deflections shown are along CL Girder from a chord from CL Bearing to CL Bearing. Negative sign (-) indicates a point above chord. Vertical curve corrections are not included. Superelevation transition corrections not included.

Dead load deflections shown include an assumed loading of 18 psf to account for stay-in-place metal deck forms.

Revision to the deflection tables may be necessary upon review of the Contractor's submitted forming details.

STATE OF ARKANSAS
LICENSED PROFESSIONAL ENGINEER
No.8017
JOHN H. RUDDELL
Digitally Signed 07/28/2023
BRIDGE ENGINEER

SHEET 3 OF 4
DETAILS OF 219'-0" CONTINUOUS PLATE GIRDER UNIT
XNA ACCESS RD. RAMP 2
ROUTE SEC.
ARKANSAS STATE HIGHWAY COMMISSION
LITTLE ROCK, ARK.

DRAWN BY: HEW DATE: FEB. 2023 FILENAME: b012326x7_s3.dgn
CHECKED BY: JHR DATE: MAR. 2023 SCALE: As Shown
DESIGNED BY: BWD DATE: FEB. 2023
BRIDGE NO. 07618 DRAWING NO. 66290

JESchiner 7/28/2023 12:11:23 PM
WORKSPACE: ARDOT Bridge (2019)
USER NAME: Administrator(Project)(2017)(7017660 - ARDOT 012326 Hwy 412 - Hwy 112\Drawings\b012326x7_S403_SD.dgn
REVISED DATE:

DATE REVISED	DATE REVISED	FED. ROAD DIST. NO.	STATE	JOB NO.	SHEET NO.	TOTAL SHEETS
		6	ARK.	012326	502	838
		07618		219'-0" UNIT		66291

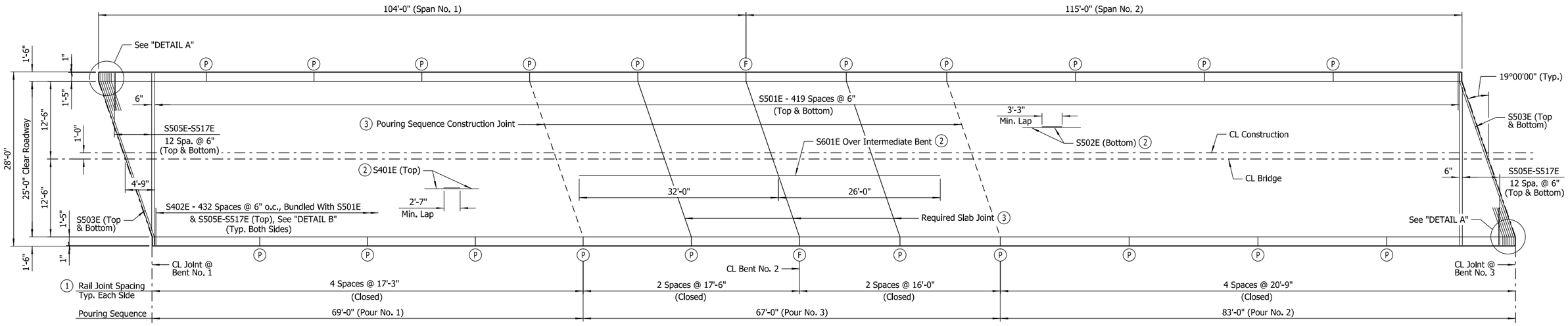

REINFORCING PLAN & DECK POURING SEQUENCE

Scale: ⅛" = 1'-0"

BAR LIST

MARK	NO. REQ'D	LENGTH	P.D.
S401E	174	38'-8"	Str.
S402E	866	7'-0"	3"
S501E	840	27'-8"	Str.
S502E	120	57'-2"	Str.
S503E	4	29'-1"	3¾"
S504E	20	6'-4"	3¾"
S505E to S517E	4 Ea.	7'-11" to 25'-4"	Str.
S601E	28	58'-0"	Str.
R401E	884	7'-6"	3"
R402E	80	5'-6"	Str.
R403E	884	3'-8"	3", 6"
R409E	40	15'-8"	Str.
R410E	80	16'-11"	Str.
R411E	40	17'-2"	Str.
R412E	80	20'-5"	Str.

BAR BENDING DIAGRAMS

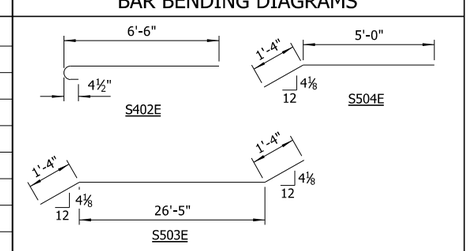

NOTES:
Dimensions of bars are out-to-out.

Bar designations ending with "E" indicate epoxy coated bars.

See Std. Dwg. No. 55071 for Bending Diaphragms of R401E & R403E.

1. Rail joints designated with symbol (F) shall be stopped 6" from top of slab. All other rail joints with symbol (P) shall be partial depth joints stopped 16" from top of slab.
2. Place as shown in "TYPICAL ROADWAY SECTION - BEGIN BRIDGE TO STA. 428+91.93" on Dwg. No. 66288.
3. See "TRANSVERSE SLAB JOINT DETAIL" on Std. Dwg. No. 55007.

TABLE OF VARIABLES

CLOSED RAIL PANELS		
PANEL LENGTH	"A"	R4XXE
16'-0"	31	09
17'-3"	34	10
17'-6"	34	11
20'-9"	41	12

NOTES:
All Pours (1) must be placed before Pours (2) can be placed. All Pours (2) must be placed before Pours (3) can be placed. 48 hours shall elapse between the end of a pour and the start of the next pour. 72 hours shall elapse between adjacent pours.

Concrete in bridge superstructure shall be placed, consolidated and screeded off for the entire pour before any concrete has taken its initial set. This may require the use of a retarding agent.

72 hours shall elapse between the completion of the entire deck slab and the start of a railing pour. Any railing pours made before the entire slab unit has been placed must be approved by the Engineer.

No deviations from the pouring sequence shown will be allowed.

Required slab joints and pouring sequence joints shall align with rail joints at gutterline.

For "STANDARD GENERAL NOTES", see Std. Dwg. No. 55006.

For traffic rail reinforcing details and details of partial-depth and full-depth rail joints, see Std. Dwg. No. 55071.

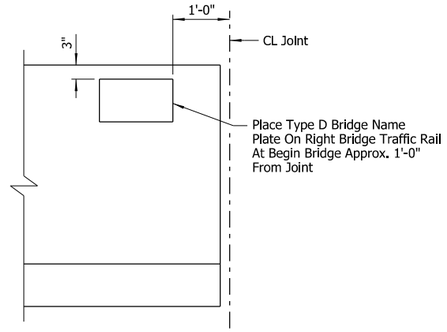

VIEW SHOWING LOCATION OF NAME PLATE

(Showing Inside Face Of Bridge Traffic Rail)
No Scale

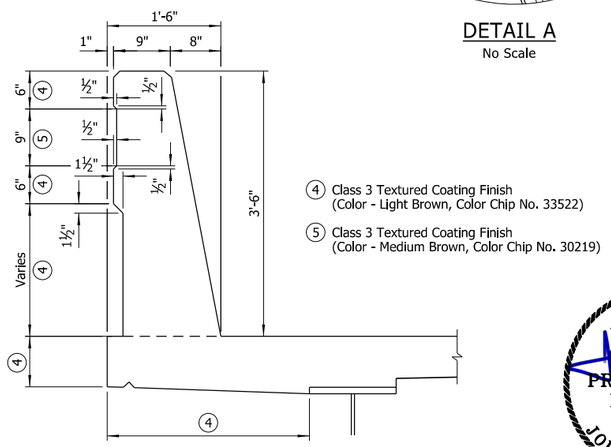

BRIDGE RAIL AESTHETIC DETAIL

Scale: 1" = 1'-0"

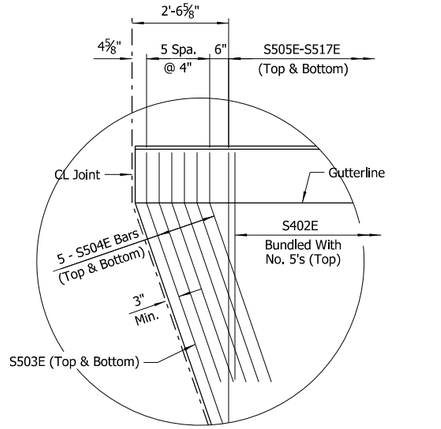

DETAIL A

No Scale

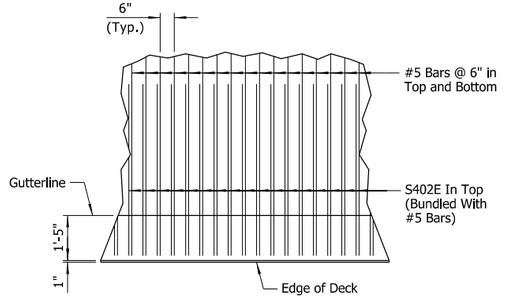

DETAIL B

No Scale

STATE OF ARKANSAS
LICENSED PROFESSIONAL ENGINEER
No.8017
JOHN H. RUDDELL
Digitally Signed 07/28/2023
BRIDGE ENGINEER

SHEET 4 OF 4
DETAILS OF 219'-0" CONTINUOUS PLATE GIRDER UNIT
XNA ACCESS RD. RAMP 2

ROUTE SEC.

ARKANSAS STATE HIGHWAY COMMISSION

LITTLE ROCK, ARK.

DRAWN BY: HEW DATE: FEB. 2023 FILENAME: b012326x7_s4.dgn
CHECKED BY: JHR DATE: MAR. 2023 SCALE: As Shown
DESIGNED BY: BWD DATE: FEB. 2023

BRIDGE NO. 07618 DRAWING NO. 66291

JESkinner 7/28/2023 12:11:24 PM
WORKSPACE: ARDOT Bridge (2019)
USER NAME: jeskinner C:\Users\jeskinner\Jagada\Projects\2021\10\7017660 - ARDOT 012326 Hwy 412 - Hwy 112\Drawings\b012326x7_S404_SB.dgn
REVISED DATE:

DATE REVISED	DATE REVISED	FED. ROAD DIST. NO.	STATE	JOB NO.	SHEET NO.	TOTAL SHEETS
		6	ARK.	012326	503	838
		07619		LAYOUT		66292

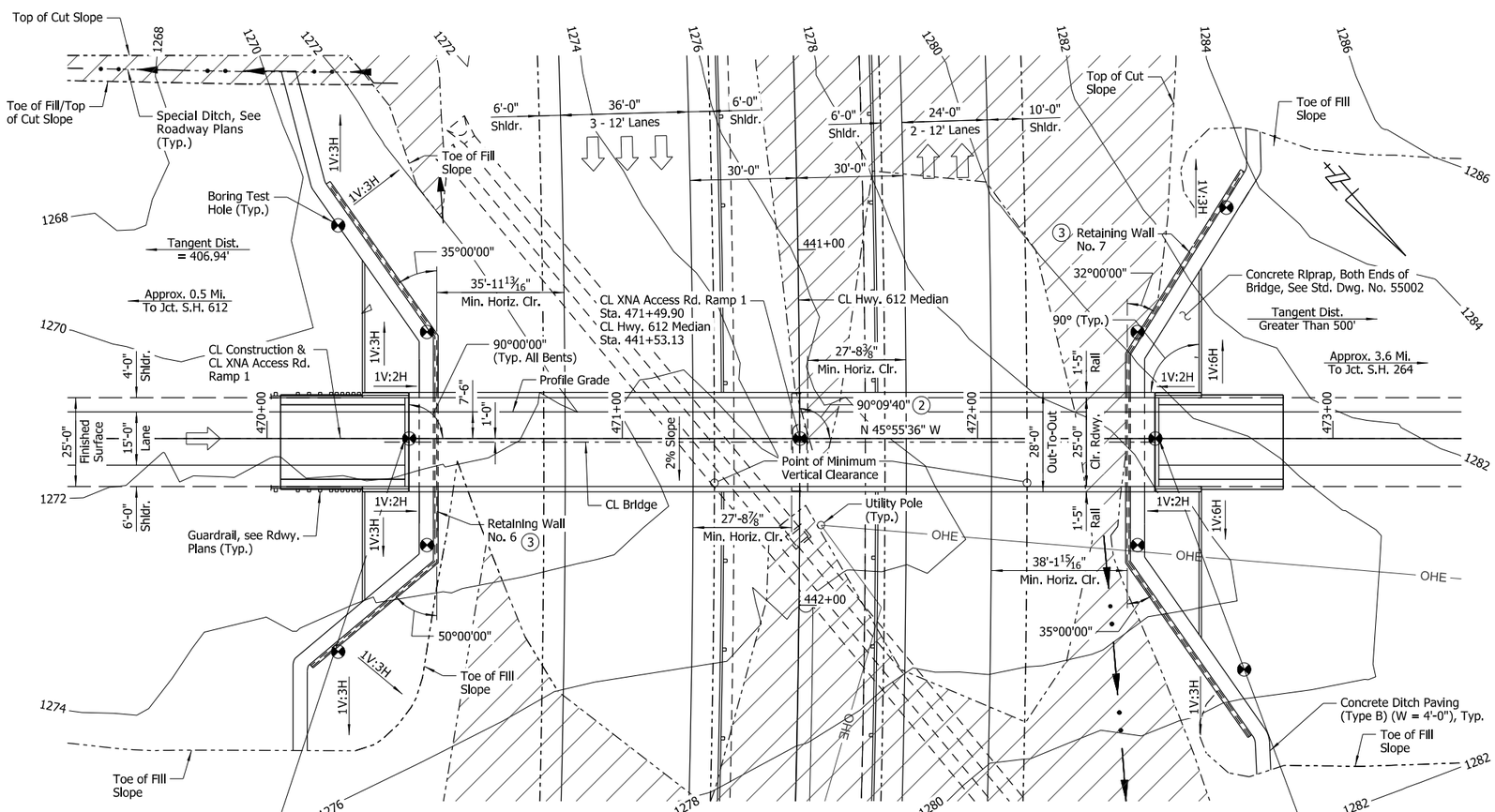

PLAN

BEGIN BRIDGE
STA. 470+38.82

END BRIDGE
STA. 472+50.99

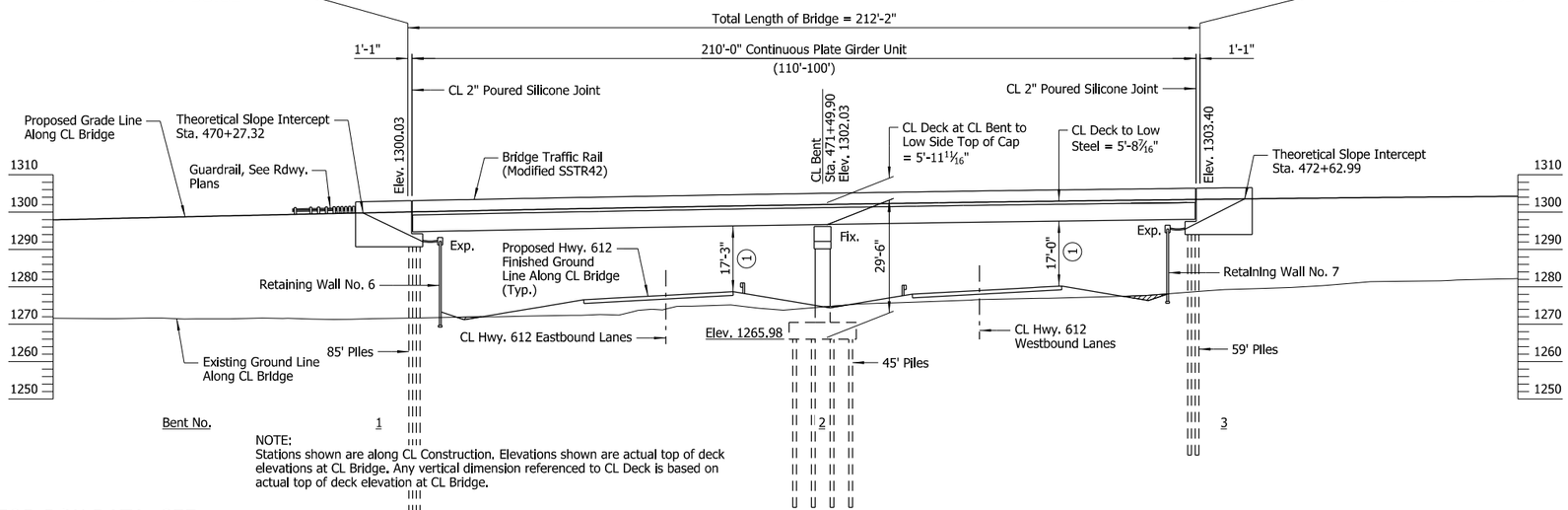

NOTE:
Stations shown are along CL Construction. Elevations shown are actual top of deck elevations at CL Bridge. Any vertical dimension referenced to CL Deck is based on actual top of deck elevation at CL Bridge.

ELEVATION

FOR R/W DATA, SEE ROADWAY PLANS

NOTES:
Use Type F Approach Slabs at each end of bridge, see Std. Dwg. No. 55040F1.

Use Type F Approach Gutters at each end of bridge, see Std. Dwg. No. 55030F.

LEGEND

Cut Slope

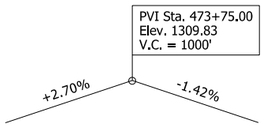

VERTICAL CURVE DATA

XNA Access Rd. Ramp 1
(Profile Grade 7'-6" Left of CL Construction)

EXISTING UTILITIES LEGEND

OHE = Overhead Electric Utility

NOTE:
Utilities shown are based on locations at time of survey and do not reflect any potential utility relocations prior to construction.

NOTE:
For "ELEVATION OF SOIL BORINGS", "N-VALUES", "BORING LEGEND", and "GENERAL NOTES", see Dwg. No. 66293.

(1) Point of Minimum Vertical Clearance

(2) Angle measured between a line tangent to CL Hwy. 612 Median at Sta. 441+53.13 and CL XNA Access Rd. Ramp 1

(3) For details of Retaining Wall Nos. 6 & 7, see Dwg. Nos. 66340 & 66341.

STATE OF ARKANSAS
LICENSED PROFESSIONAL ENGINEER
No.16458
JOEL E. SKINNER
Digitally Signed 07/28/2023
BRIDGE ENGINEER

SHEET 1 OF 2
LAYOUT OF BRIDGE
XNA ACCESS RD. RAMP 1 OVER HWY. 612
HWY. 412 - HWY. 112
(SPRINGDALE BYPASS) (F)
BENTON COUNTY

ROUTE 612 SEC. 2

ARKANSAS STATE HIGHWAY COMMISSION

LITTLE ROCK, ARK.

DRAWN BY: CSW DATE: MAR. 2023 FILENAME: b012326x8_L1.dgn
CHECKED BY: JES DATE: MAR. 2023 SCALE: 1" = 20'-0"
DESIGNED BY: CSW DATE: MAR. 2023

BRIDGE NO. 07619 DRAWING NO. 66292

JES&hner
7/28/2023 12:11:30 PM
WORKSPACE: ARDOT Bridge (2019)
USER NAME: Joel.Skinner
REVISED DATE:
J:\Bridge\Projects\2017\17017660 - ARDOT 012326 Hwy 412 - Hwy 112\Drawings\b012326x8_S101_LO.dgn

DATE REVISED	DATE REVISED	FED. ROAD DIST. NO.	STATE	JOB NO.	SHEET NO.	TOTAL SHEETS
		6	ARK.	012326	504	838
		07619		LAYOUT		66293

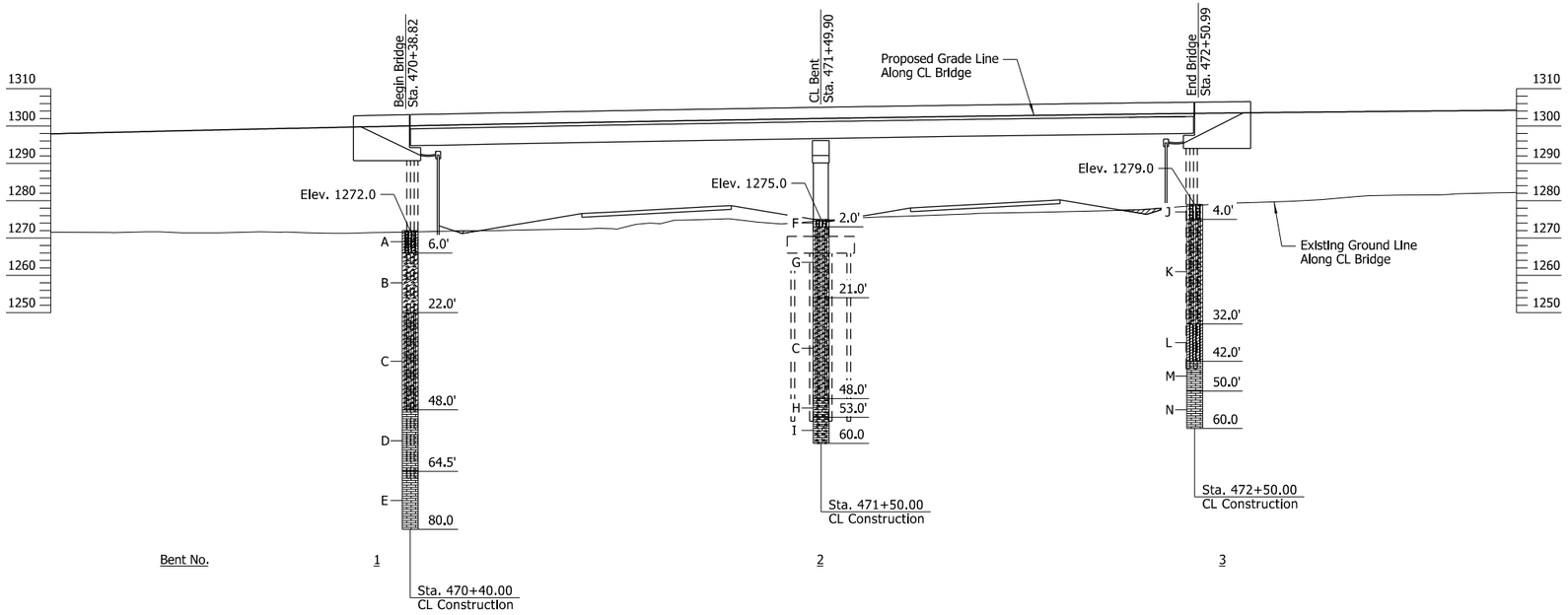

ELEVATION OF SOIL BORINGS

BORING LEGEND

A - Stiff tan clayey silt w/numerous chert and limestone fragments
B - Very stiff reddish brown clay w/numerous chert and limestone fragments and discontinuous chert seams and layers
C - Stiff reddish tan and tan silty clay, sandy w/chert and limestone fragments
D - Low hardness light tan gray w/reddish tan highly weathered limestone w/silty clay seams and layers
E - Moderately hard light gray and gray cherty limestone w/very close rehealed fractures
F - Dense tan silt w/chert and limestone fragments, dry
G - Very stiff reddish tan w/reddish brown silty clay w/numerous chert and limestone fragments
H - Low hardness light gray highly weathered cherty limestone, heavily fractured w/some silty clay seams and clay filled fractures
I - Moderately hard gray weathered cherty limestone with close silty clay seams
J - Medium dense tan silt, slightly clayey w/chert and limestone fragments
K - Very stiff reddish brown silty clay w/chert fragments and discontinuous chert seams and layers
L - Stiff light reddish tan clayey silt w/clay seams and layers (completely weathered limestone)
M - Moderately hard light gray slightly weathered cherty limestone
N - Moderately hard to hard light gray cherty limestone

N-VALUES

Sta. 470+40.00 CL Construction	Sta. 471+50.00 CL Construction	Sta. 472+50.00 CL Construction
0.5-1.5, N=22	0.5-1.5, N=31	0.5-1.5, N=27
2.5-3.5, N=31	2.5-3.5, N=25	2.5-3.5, N=50/7"
4.5-5.5, N=50/9"	4.5-5.5, N=29	4.5-5.5, N=50/6"
6.5-7.5, N=50/11"	6.5-7.5, N=32	6.5-7.5, N=31
9.0-10.0, N=50/11"	9.0-10.0, N=50/7"	9.0-10.0, N=17
14.0-15.0, N=47	14.0-15.0, N=18	14.0-15.0, N=34
19.0-20.0, N=30	19.0-20.0, N=27	19.0-20.0, N=36
24.0-25.0, N=15	24.0-25.0, N=12	24.0-25.0, N=31
29.0-30.0, N=11	29.0-30.0, N=16	29.0-30.0, N=36
34.0-35.0, N=24	34.0-35.0, N=19	34.0-35.0, N=21
39.0-40.0, N=50/11"	39.0-40.0, N=21	39.0-40.0, N=18
44.0-45.0, N=21	44.0-45.0, N=17	44.0-45.0, N=50/4"
49.0-50.0, N=27	49.0-50.0, N=25	
54.0-55.0, N=25	54.0-55.0, N=50/3"	
59.0-60.0, N=23	59.0-60.0, N=50/3"	
64.0-65.0, N=50/3"		

GENERAL NOTES

BENCHMARK: Vertical Control Data are shown on the Survey Control Data Sheets.

CONSTRUCTION SPECIFICATIONS: Arkansas State Highway and Transportation Department Standard Specifications for Highway Construction (2014 edition) with applicable Supplemental Specifications and Special Provisions. Unless otherwise noted in the plans, Section and Subsection refer to the Standard Construction Specifications.

DESIGN SPECIFICATIONS: AASHTO LRFD Bridge Design Specifications (2017, 8th Edition).

LIVE LOADING: HL-93

SEISMIC ZONE: 1 S_{D1}: 0.087g SITE CLASS: C

SEISMIC OPERATIONAL CLASSIFICATION: Essential

MATERIALS AND STRENGTHS:

Class S(AE) Concrete (Superstructure)	f'c = 4,000 psi
Class S Concrete (Substructure)	f'c = 3,500 psi
Reinforcing Steel (AASHTO M 31 or M 322, Type A)	fy = 60,000 psi
Structural Steel (ASTM A709, Gr. 50)	Fy = 50,000 psi
Structural Steel (ASTM A709, Gr. 36)	Fy = 36,000 psi

BORING LOGS: Boring logs may be obtained from the Construction Contract Development Section of the Program Management Division.

STEEL PILING: All piling at end bents shall be HP 12x53 (Grade 50) and shall be driven with an approved air, steam, or diesel hammer to a minimum safe bearing capacity of 96 tons per pile and into the material designated as moderately hard to hard limestone/cherty limestone on the boring legend. All piling at the intermediate bent shall be HP 14x73 (Grade 50) and shall be driven with an approved air, steam, or diesel hammer to a minimum safe bearing capacity of 133 tons per pile and into the material designated as moderately hard to hard limestone/cherty limestone on the boring legend. Minimum penetration shall be 10' below ether top of leveling pad or bottom of any required undercut, whichever is lower, for all piles in Bents 1 and 3, and 17' below bottom of footing for all piles in Bent 2. Piling in end bents shall be driven after embankment to bottom of cap is in place. Lengths shown are for estimating quantities and for use in determining payment for cut-off and build-up in accordance with Section 805. The Contractor shall use QPL-approved steel H-Pile driving points on all piles.

PILE CASINGS: Pile casings are required for piling within MSE walls at end bents. Casings shall be installed prior to or during the embankment construction and shall extend from top of leveling pad or bottom of any required undercut, whichever is lower, to bottom of cap. Pile casing material shall be of sufficient strength to retain its original form free from harmful distortions after compaction of the fill material surrounding it. The minimum inside diameter of the casing shall be at least 24". Piles shall be driven through the open casings after embankment to bottom of cap is in place. After driving is complete, the pile casings shall be filled with Class S Concrete, an approved non-shrink grout, mixture used for Portland Cement Concrete Pavement, or other approved material in a single continuous operation to completely fill voids. Pile casings and concrete will not be paid for directly but shall be considered subsidiary to the item "STEEL PILING (HP 12x53)".

PILE FOOTINGS: The top of the footing at Bent 2 shall be set a minimum of 2' below finished or natural ground or at the elevations shown on the plans, whichever is lower. Foundation for footing shall be prepared in accordance with Subsection 801.04. Foundation piles shall not be driven until after the excavation to bottom of footing is complete. Excavations shall be backfilled and compacted to the level of the finished or existing ground in accordance with Subsection 801.08.

PAINTING: All Grade 50 structural steel, except galvanized members and surfaces in contact with concrete, shall be painted as specified in Subsection 807.75. The color of paint shall be Dark Brown and shall match Federal Standard 595B, Color Chip No. 20108.

TEXTURED COATING FINISH: Class 3 Textured Coating Finish shall be applied to bridge and retaining wall surfaces as specified in Special Provision "TEXTURED COATING FINISH" and in accordance with Subsection 802.19(b)(3). Textured Coating Finish shall not be applied on surfaces where Class 2 Protective Surface Treatment is applied.

BRIDGE DECK: The concrete bridge deck shall be given a tine finish as specified for final finishing in Subsection 802.19 for Class 5 Tined Bridge Roadway Surface Finish.

PROTECTIVE SURFACE TREATMENT: Class 2 Protective Surface Treatment shall be applied to the roadway surface and to the roadway face and top of the concrete bridge rails in accordance with Section 803.

DETAIL DRAWINGS:	DRAWING NO(S).
End Bents	66294 - 66296
Intermediate Bent	66297 - 66298
Elastomeric Bearings	66287
210' Continuous Plate Girder Unit	66299 - 66303
Retaining Walls	66340 - 66344
Details for Concrete Riprap	55002 & 66334
General Notes For Steel Bridge Structures	55006
Details For Steel Bridge Structures	55007
Poured Silicone Joints	55008
Steel H-Piling	55020
Type F Approach Gutters	55030F
Type F Approach Slab	55040F1
Bridge Traffic Rail	55071 & 66302

STATE OF ARKANSAS
LICENSED PROFESSIONAL ENGINEER
No.16458
JOEL E. SKINNER
Digitally Signed 07/28/2023
BRIDGE ENGINEER

SHEET 2 OF 2
LAYOUT OF BRIDGE
XNA ACCESS RD. RAMP 1 OVER HWY. 612
HWY. 412 - HWY. 112
(SPRINGDALE BYPASS) (F)
BENTON COUNTY
ROUTE 612 SEC. 2
ARKANSAS STATE HIGHWAY COMMISSION
LITTLE ROCK, ARK.

DRAWN BY: CSW DATE: MAR. 2023 FILENAME: b012326x8_l2.dgn
CHECKED BY: JES DATE: MAR. 2023 SCALE: 1" = 20'-0"
DESIGNED BY: CSW DATE: MAR. 2023
BRIDGE NO. 07619 DRAWING NO. 66293

JESkinner 7/28/2023 12:11:31 PM
WORKSPACE: ARDOT Bridge (2019)
USERNAME: Kingsdad/ProSheets/2017/17017660 - ARDOT 012326 Hwy 412 - Hwy 112\Drawings\b012326x8_S102_LO.dgn
REVISED DATE:

DATE REVISED	DATE REVISED	FED. ROAD DIST. NO.	STATE	JOB NO.	SHEET NO.	TOTAL SHEETS
		6	ARK.	012326	505	838
		07619		END BENTS		66294

NOTE:
For details of wings, see Dwg. No. 66295.

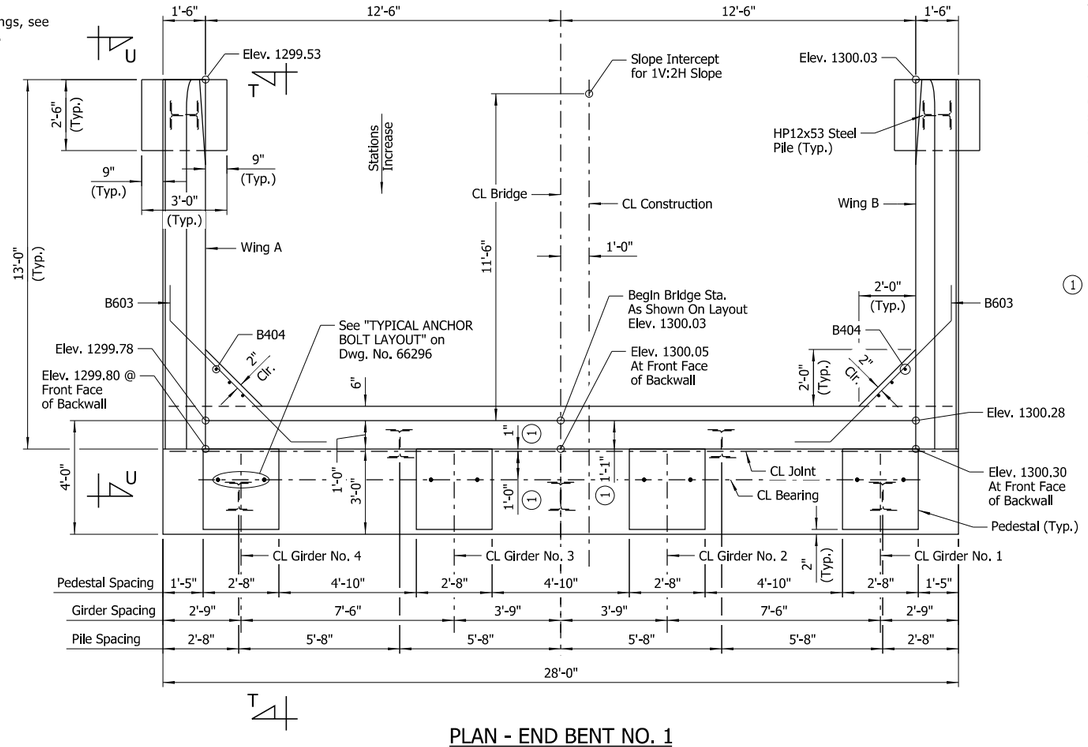

PLAN - END BENT NO. 1

Scale: ⅜" = 1'-0"

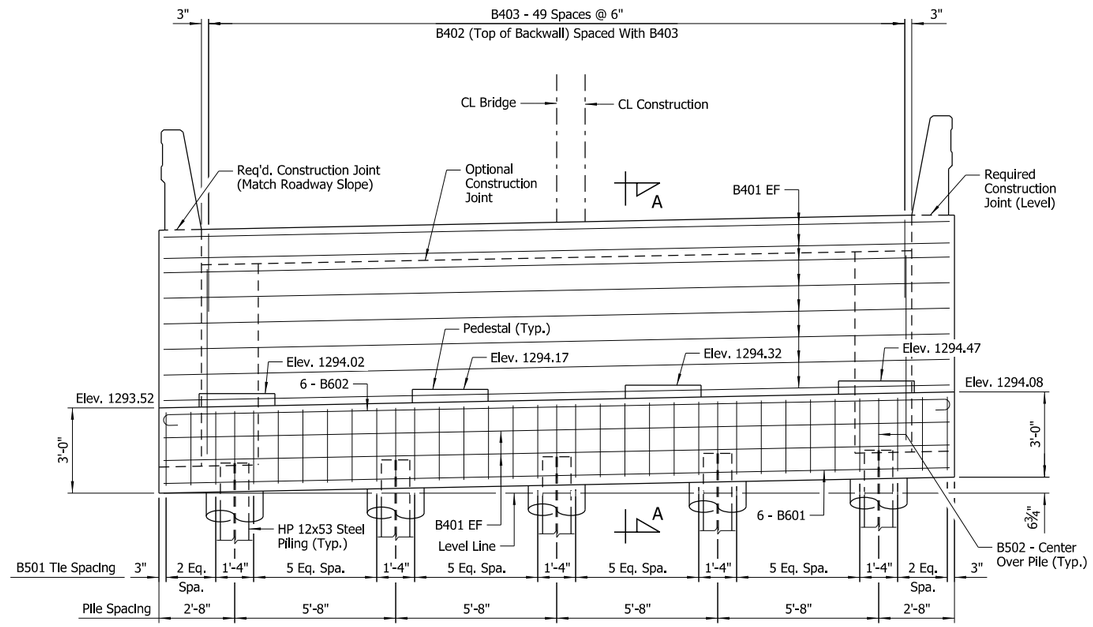

ELEVATION - END BENT NO. 1

(Looking Back)
Scale: ⅜" = 1'-0"

GENERAL NOTES

Finish top of backwall to match the bridge deck.

For Standard General Notes, see Std. Dwg. No. 55006.

All piles shall be HP12x53 (ASTM A709, Gr. 50).

Class 3 Textured Coating Finish shall be applied to bridge surfaces as specified in Special Provision "TEXTURED COATING FINISH" and in accordance with Subsection 802.19(b)(3).

Structural steel in end bents shall be ASTM A709, Gr. 50 and shall be paid for as "STRUCTURAL STEEL IN PLATE GIRDER SPANS (A709, GR. 50)".

For additional information, see Layout.

(1) Measured to CL Joint

NOTES:
For "SECTION T-T", "VIEW U-U" and "TYPICAL PEDESTAL DETAIL", see Dwg. No. 66295.

For "SECTION A-A", bar list and bar bending diagrams, see Dwg. No. 66296.

Class 2 Protective Surface Treatment shall be applied to the top of the backwall and to the roadway face and top of the wing rails.

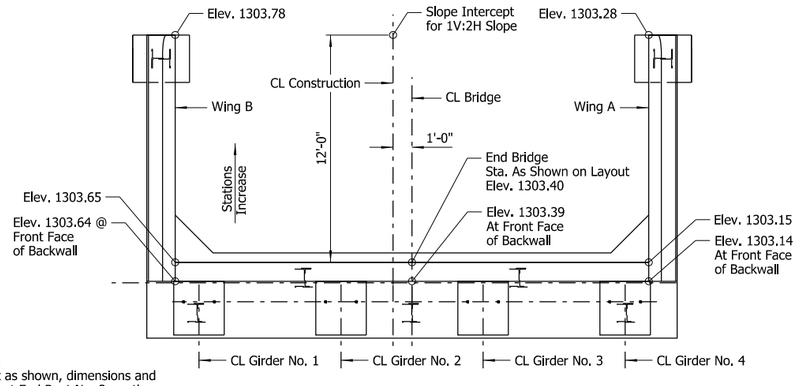

NOTE:
Except as shown, dimensions and details at End Bent No. 3 are the same as those at End Bent No. 1.

PLAN - END BENT NO. 3

Scale: ¼" = 1'-0"

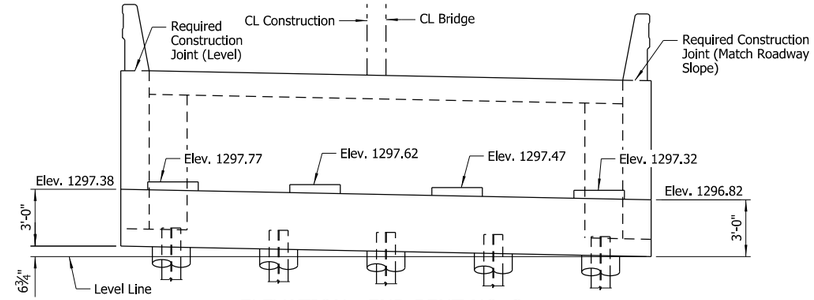

ELEVATION - END BENT NO. 3

(Looking Ahead)
Scale: ¼" = 1'-0"

NOTE:
No portion of the backwall shall be poured before girders are in place. The portion of the backwall above the optional construction joint at the paving bracket shall not be placed until the adjacent deck pour has been made. Refer to the "EXPANSION DEVICE INSTALLATION AT END BENTS" note on Std. Dwg. No. 55008.

No heavy construction equipment shall be allowed within 10' of the backwall until the deck concrete placement for the adjacent span has been completed unless MSE strap reinforcing has been designed to accommodate these loads. See "END BENT STRAP DETAIL" on Dwg. No. 66296.

LEGEND

EF = Each Face

STATE OF ARKANSAS
LICENSED PROFESSIONAL ENGINEER
No.14498
ADAM B. HALL
Digitally Signed 07/28/2023
BRIDGE ENGINEER

SHEET 1 OF 3
DETAILS OF END BENTS
XNA ACCESS RD. RAMP 1

ROUTE SEC.

ARKANSAS STATE HIGHWAY COMMISSION

LITTLE ROCK, ARK.

DRAWN BY: HEW DATE: JAN. 2023 FILENAME: b012326x8_b1.dgn
CHECKED BY: ABH DATE: MAR. 2023 SCALE: As Shown
DESIGNED BY: MJS DATE: NOV. 2022

BRIDGE NO. 07619 DRAWING NO. 66294

JESchiner 7/28/2023 12:11:33 PM
WORKSPACE: ARDOT BMSpe (2019)
USER NAME: ...\Highroad\Projects\2017\17017660 - ARDOT 012326 Hwy 412 - Hwy 112\Drawings\b012326x8_S201_A8.dgn
REVISED DATE:

DATE REVISED	DATE REVISED	FED. ROAD DIST. NO.	STATE	JOB NO.	SHEET NO.	TOTAL SHEETS
		6	ARK.	012326	506	838
		07619		END BENTS		66295

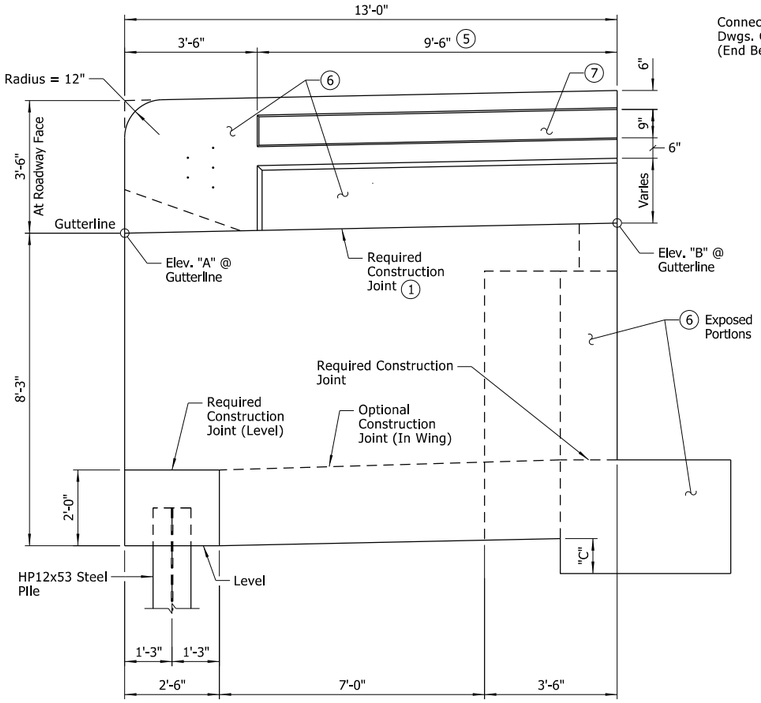

VIEW U-U

Scale: ½" = 1'-0"

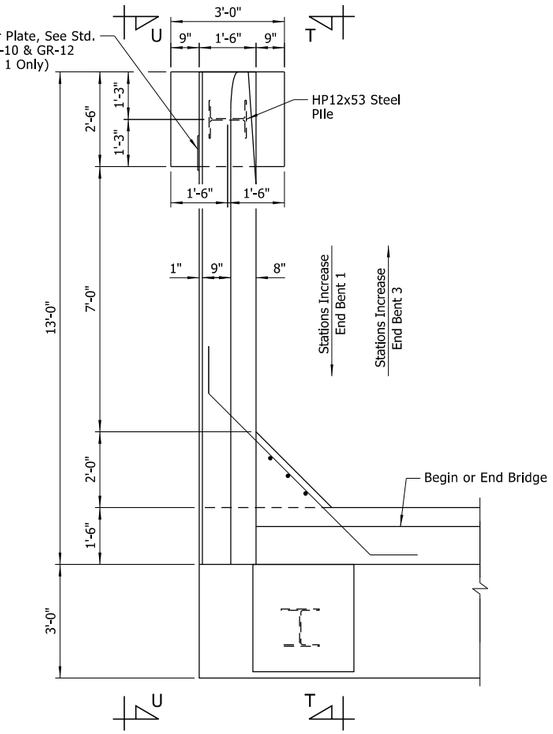

PLAN OF RAIL

Scale: ½" = 1'-0"

TABLE OF VARIABLES				
Bent No.	Location	Elev. "A"	Elev. "B"	Dim. "C"
1	Wing A	1299.53	1299.80	9⅛"
1	Wing B	1300.03	1300.30	8⅞"
3	Wing A	1303.28	1303.14	1'-2½"
3	Wing B	1303.78	1303.64	1'-1 13/16"

1. High Side - Level
   Low Side - Match Roadway Slope
2. 3 Equal Spaces - B603 Lapped with W701
3. Place inside R401E bars positioned with 2" end cover as shown
4. Adjust bar spacing as needed to avoid anchor bolt
5. Bridge Traffic Rail (Type SSTR42). For dimensions, see "BRIDGE RAIL AESTHETIC DETAIL" on Dwg. No. 66302. For reinforcement, see "SECTION D-D" on Std. Dwg. No. 55071.

NOTE:
For reinforcement details, rail terminus details and other information for the Bridge Traffic Rail, see Std. Dwg. No. 55071. See Roadway Plans for Guardrail locations.

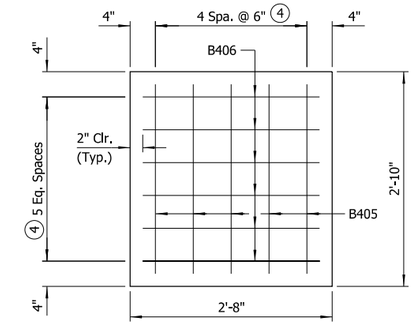

PEDESTAL PLAN

Scale: 1" = 1'-0"

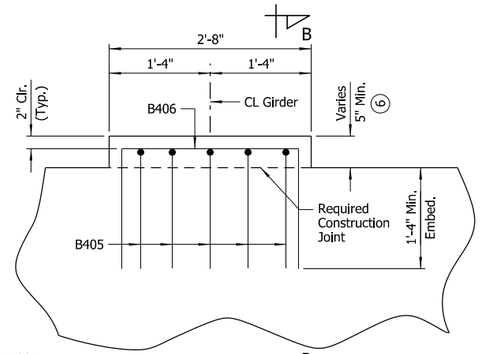

6 See Dwg. No. 66294 for pedestal elevations.

TYPICAL PEDESTAL DETAIL

Scale: 1" = 1'-0"

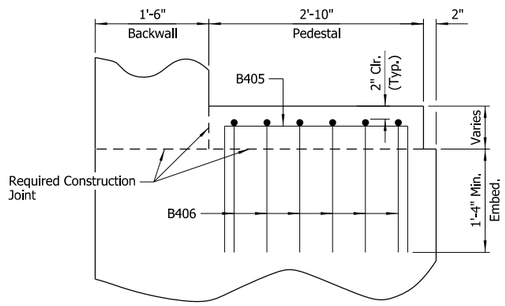

SECTION B-B

Scale: 1" = 1'-0"

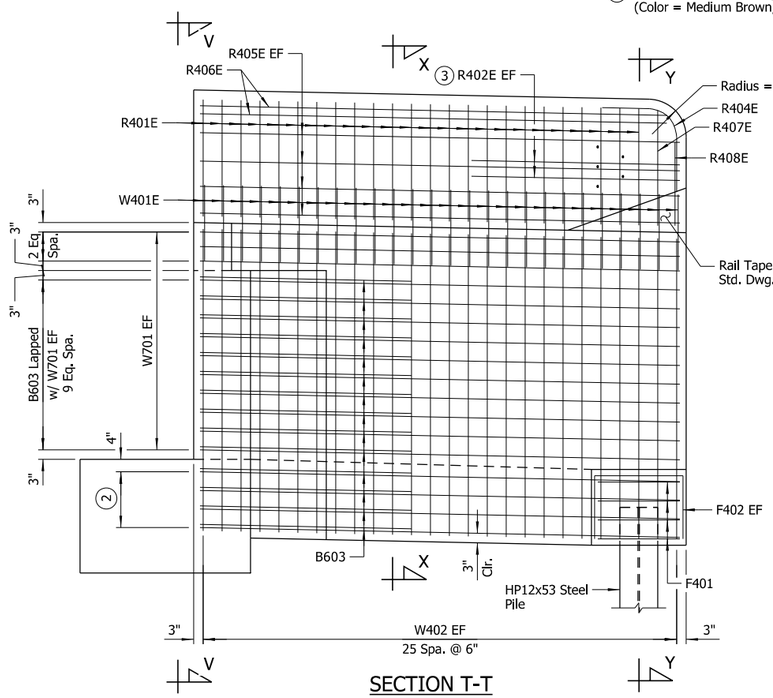

SECTION T-T

Scale: ½" = 1'-0"

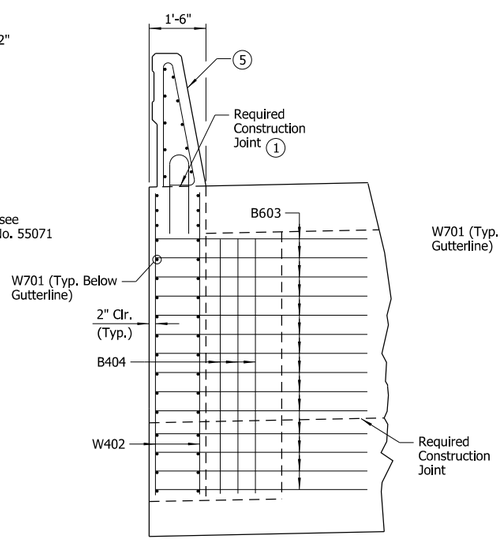

VIEW V-V

Scale: ½" = 1'-0"

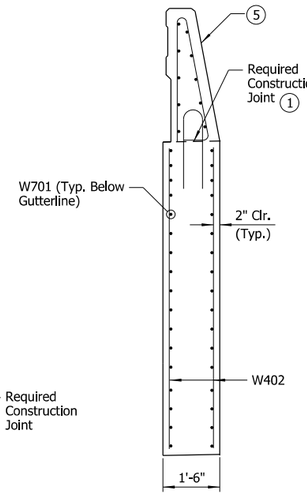

SECTION X-X

Scale: ½" = 1'-0"

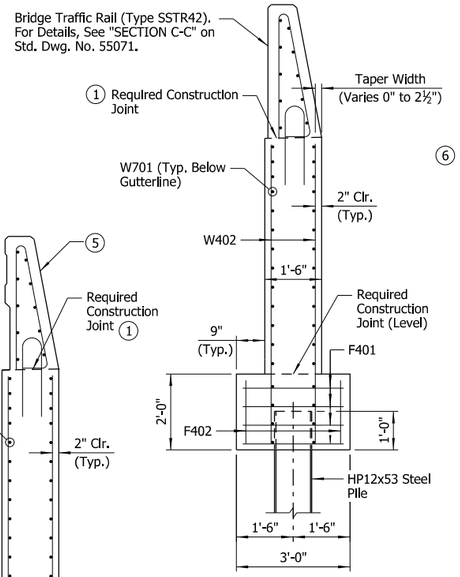

SECTION Y-Y

Scale: ½" = 1'-0"

LEGEND

EF = Each Face

STATE OF ARKANSAS
LICENSED PROFESSIONAL ENGINEER
No.14498
ADAM B. HALL
Digitally Signed 07/28/2023
BRIDGE ENGINEER

SHEET 2 OF 3
DETAILS OF END BENTS
XNA ACCESS RD. RAMP 1
ROUTE SEC.
ARKANSAS STATE HIGHWAY COMMISSION
LITTLE ROCK, ARK.

DRAWN BY: HEW DATE: JAN. 2023 FILENAME: b012326x8_b2.dgn
CHECKED BY: ABH DATE: MAR. 2023 SCALE: As Shown
DESIGNED BY: MJS DATE: NOV. 2022
BRIDGE NO. 07619 DRAWING NO. 66295

JESdnner 7/28/2023 12:11:35 PM
WORKSPACE: ARDOT Bridge (2019)
Workspace: ...Projects\2017\17017560 - ARDOT 012326 Hwy 412 - Hwy 112\Drawings\b012326x8_S202_A8.dgn
REVISED DATE:

DATE REVISED	DATE REVISED	FED. ROAD DIST. NO.	STATE	JOB NO.	SHEET NO.	TOTAL SHEETS
		6	ARK.	012326	507	838
		07619		END BENTS		66296

BAR LIST (PER END BENT)

MARK	NO. REQ'D	LENGTH	"A"	"B"	P.D.
B401	20	27'-8"			Str.
B402	50	5'-4"	8"	2'-5"	2"
B403	50	13'-6"	1'-2"	6'-3"	2"
B404	6	6'-7"			Str.
B405	20	5'-8"	2'-6"	1'-8"	2"
B406	24	5'-6"	2'-4"	1'-8"	2"
B501	30	14'-0"	4'-2"	2'-7"	2½"
B502	5	9'-2"	4'-2"	2'-7"	2½"
B601	6	27'-8"			Str.
B602	6	29'-0"			4½"
B603	28	8'-6"			4½"
R401E	48	7'-6"			3"
R402E	8	5'-6"			Str.
R404E	2	3'-8"			1'-7"
R405E	16	12'-8"			Str.
R406E	4	12'-4"			Str.
R407E	2	6'-8"			3"
R408E	2	5'-1"			3"
W401E	52	4'-7"			6"
W402	104	7'-10"			Str.
W701	68	12'-8"			Str.
F401	8	10'-0"	2'-8"	2'-2"	2"
F402	4	5'-1"	2'-1"	1'-7"	2"

BAR BENDING DIAGRAMS

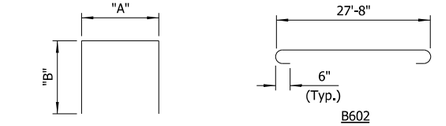

NOTES:
Dimensions of bars are out-to-out.

Bars designated with "E" suffix shall be epoxy coated.

See Std. Dwg. No. 55071 for Bar Bending Diagrams of R401E, R404E, R407E, R408E and W401E.

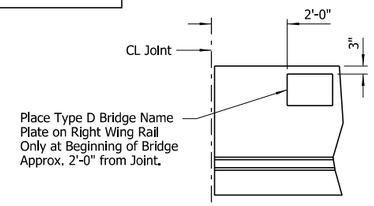

VIEW SHOWING LOCATION OF NAME PLATE

Scale: ½" = 1'-0"

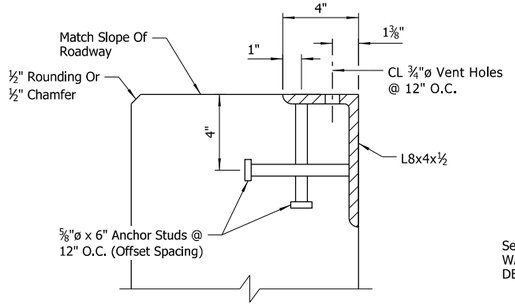

END BENT WALL ARMOR DETAIL

No Scale

NOTES:
Transverse spacing between vertical anchor studs and vent holes shall be 6".

Concrete shall be hand packed under joint armor.

Special care shall taken to properly and thoroughly consolidate the concrete in the vicinity of the expansion joint device in the backwall. See Subsection 802.09(a)(3).

The profile of the end bent wall armor shall be established based on the vertical curve as shown on the layout.

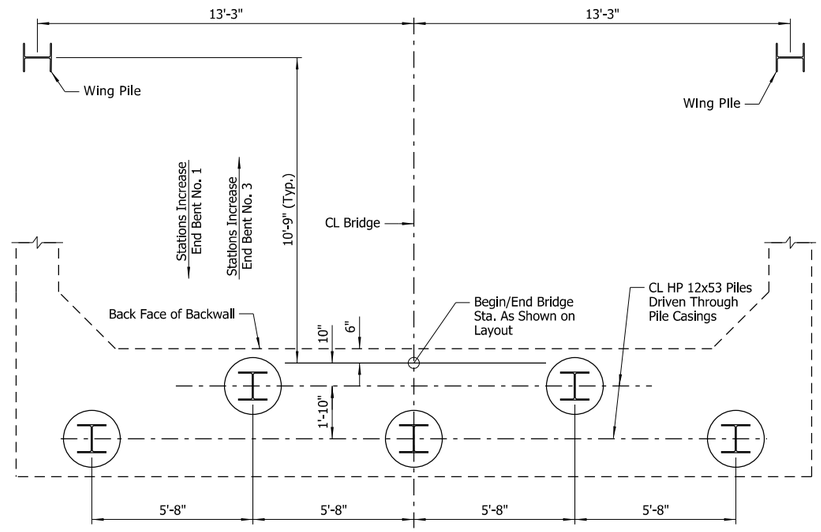

FOUNDATION PLAN

Scale: ⅜" = 1'-0"

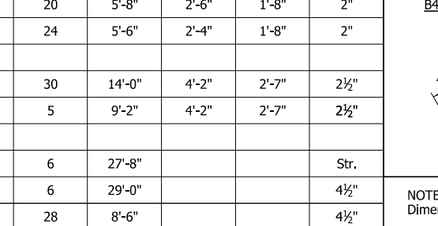

END BENT STRAP DETAIL

No Scale

T = Resultant Force required to be resisted by strap reinforcing

Y = Centroid of Resultant Force

LIMIT STATE	(1) T	"Y"
	Kips/Ft.	Ft.
Service	3.0	3.0
Strength	4.2	3.2

(1) The provided loads do not include any additional loadings due to heavy construction equipment such as cranes. If the Contractor anticipates bringing heavy construction equipment within 10' of the backwall, they shall coordinate with the MSE wall supplier to design strap reinforcing for the anticipated loadings. Tolerable horizontal backwall movement for all loading combinations is ½" at the Service Limit State. Design computations shall accompany the wall design submittal for review by the Engineer. See Special Provision "RETAINING WALLS" for additional information.

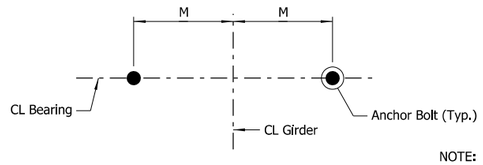

TYPICAL ANCHOR BOLT LAYOUT

No Scale

NOTE:
For details of Elastomeric Bearings, dimension M, and anchor bolts, see Dwg. No. 66287.

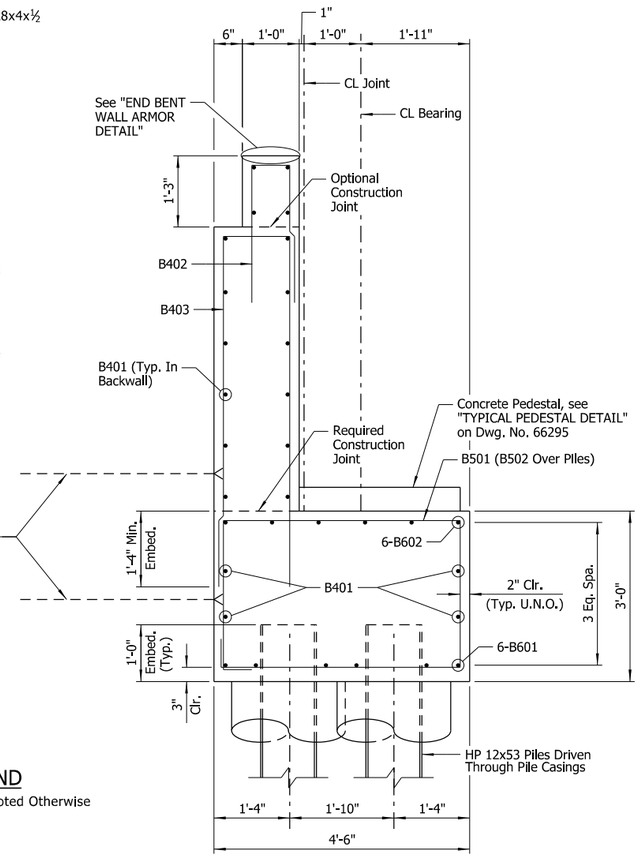

SECTION A-A

Scale: ¾" = 1'-0"

LEGEND

U.N.O. = Unless Noted Otherwise

(2) Soil reinforcement shall be attached to the back of the end bents. Type, size and spacing of soil reinforcement shall be designed by the Contractor. The design details and computations shall accompany the wall design submittal for review by the Engineer. Cost shall be subsidiary to the item "RETAINING WALL". See "END BENT STRAP DETAIL" for additional information.

STATE OF ARKANSAS
LICENSED PROFESSIONAL ENGINEER
No. 14498
ADAM B. HALL
Digitally Signed 07/28/2023
BRIDGE ENGINEER

SHEET 3 OF 3
DETAILS OF END BENTS
XNA ACCESS RD. RAMP 1

ROUTE SEC.

ARKANSAS STATE HIGHWAY COMMISSION

LITTLE ROCK, ARK.

DRAWN BY: HEW DATE: JAN. 2023 FILENAME: b012326x8_b3.dgn
CHECKED BY: ABH DATE: MAR. 2023 SCALE: As Shown
DESIGNED BY: MJS DATE: NOV. 2022

BRIDGE NO. 07619 DRAWING NO. 66296

JESkinner 7/28/2023 12:11:36 PM
WORKSPACE: ARDOT Bridge (2019)
Library Path: J:\global\Projects\2017\TI\7017660 - ARDOT 012326 Hwy 412 - Hwy 112\Dsn\fngs\b012326x8_S303_AB.dgn
REVISED DATE:

DATE REVISED	DATE REVISED	FED. ROAD DIST. NO.	STATE	JOB NO.	SHEET NO.	TOTAL SHEETS
		6	ARK.	012326	508	838
		07619		INT. BENTS		66297

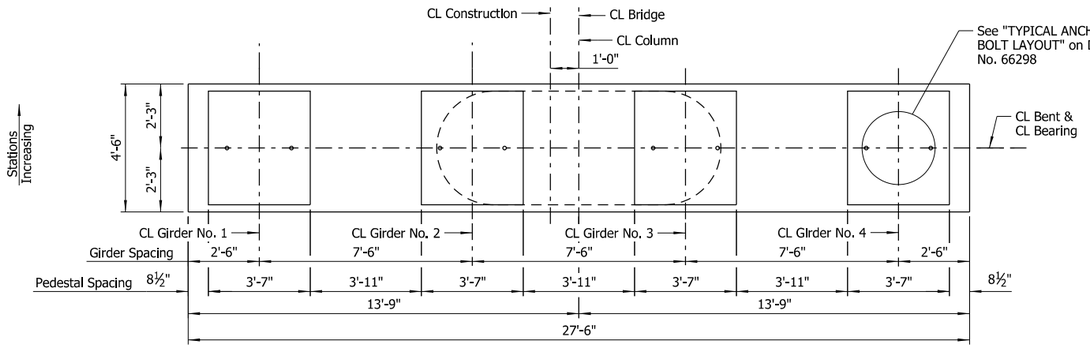

PLAN - BENT NO. 2

Scale: ⅜" = 1'-0"

NOTE:
For pedestal details, see "TYPICAL PEDESTAL DETAIL" on Dwg. No. 66298.

NOTES:
For Standard General Notes, see Std. Dwg. No. 55006.

For "BAR LIST", "BAR BENDING DIAGRAMS", "SECTION A-A", "SECTION C-C", "SECTION D-D" & "VIEW F-F" see Dwg. No. 66298.

For additional information, see layout.

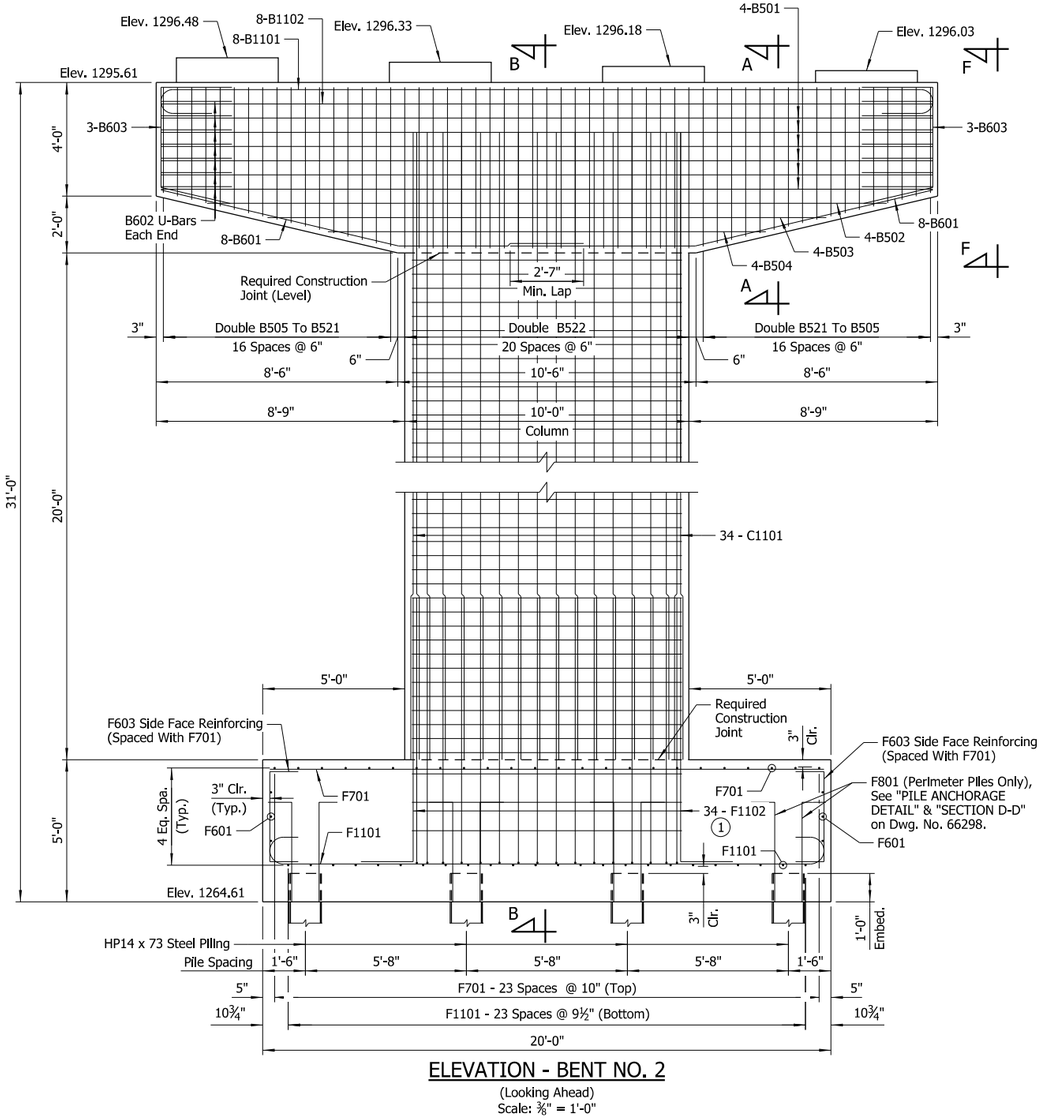

ELEVATION - BENT NO. 2

(Looking Ahead)
Scale: ⅜" = 1'-0"

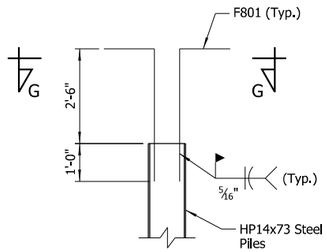

PILE ANCHORAGE DETAIL

No Scale

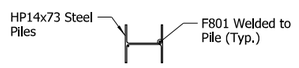

SECTION G-G

No Scale

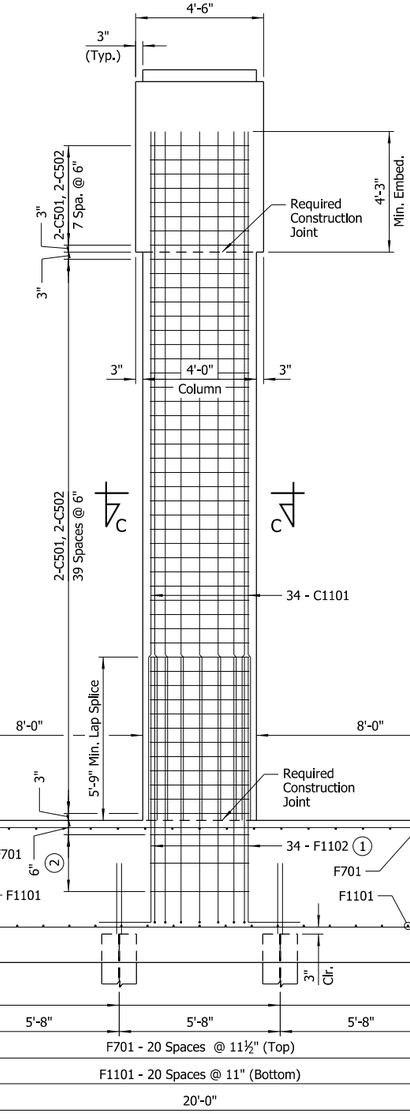

SECTION B-B

Scale: ⅜" = 1'-0"

(1) F1102 bars to rest on footing mat of reinforcing steel as shown.

(2) 2-C501, 2-C502 2 Spa. @ 1'-0"

STATE OF ARKANSAS
LICENSED PROFESSIONAL ENGINEER
No.16458
JOEL E. SKINNER
Digitally Signed 07/28/2023
BRIDGE ENGINEER

SHEET 1 OF 2
DETAILS OF INTERMEDIATE BENT
XNA ACCESS RD. RAMP 1

ROUTE SEC.

ARKANSAS STATE HIGHWAY COMMISSION

LITTLE ROCK, ARK.

DRAWN BY: CWT DATE: MAR. 2023 FILENAME: b012326x8_b1.dgn
CHECKED BY: RLW DATE: MAR. 2023 SCALE: As Shown
DESIGNED BY: MJS DATE: MAR. 2023

BRIDGE NO. 07619 DRAWING NO. 66297

JESdrner 7/28/2023 12:11:38 PM
WORKSPACE: ARDOT Bridge (2019)
Universal Model: Applied\Projects\2017\17017660 - ARDOT 012326 Hwy 412 - Hwy 112\Drawings\sb012326x8_S211_BE.dgn
REVISED DATE:

DATE REVISED	DATE REVISED	FED. ROAD DIST. NO.	STATE	JOB NO.	SHEET NO.	TOTAL SHEETS
		6	ARK.	012326	509	838
		07619		INT. BENTS		66298

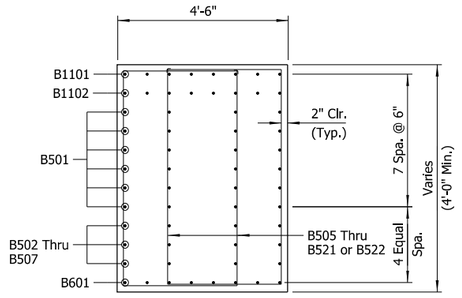

SECTION A-A

Scale: ½" = 1'-0"

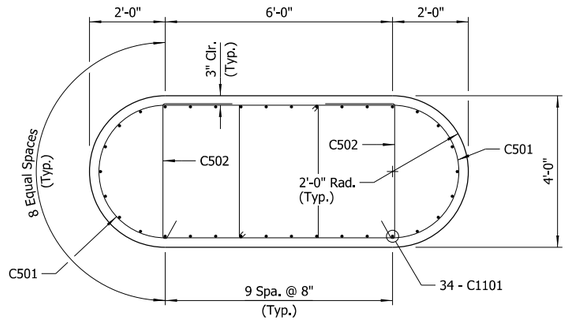

SECTION C-C

Scale: ½" = 1'-0"

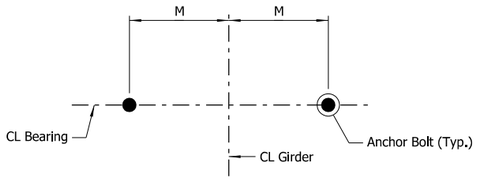

TYPICAL ANCHOR BOLT LAYOUT

No Scale

NOTE:
For details of Elastomeric Bearings, dimension M, and anchor bolts, see Dwg. No. 66287.

GENERAL NOTES

Class 3 Textured Coating Finish shall be applied to bridge surfaces as specified in Special Provision "TEXTURED COATING FINISH" and in accordance with Subsection 802.19(b)(3).

For additional general notes, see Std. Dwg. No. 55006.

Top reinforcing bars in cap shall be properly placed to avoid interference with anchor bolts or sheet metal sleeves.

For additional information, see Layout.

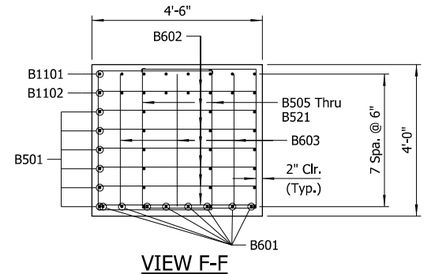

VIEW F-F

Scale: ½" = 1'-0"

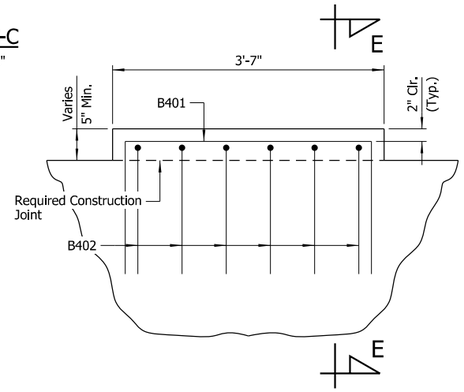

TYPICAL PEDESTAL DETAIL

Scale: 1" = 1'-0"

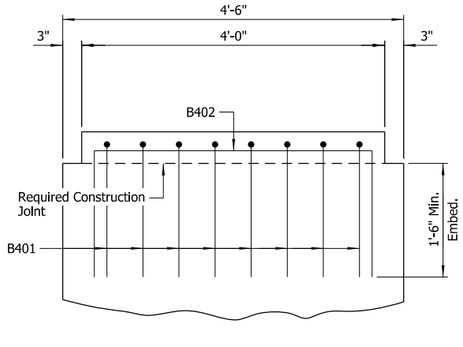

SECTION E-E

Scale: 1" = 1'-0"

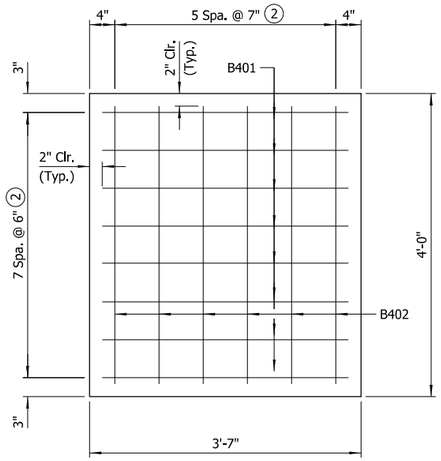

PEDESTAL PLAN

Scale: 1" = 1'-0"

(1) F801 Bars must be a weldable grade meeting the requirements of ASTM A706 (Gr. 60)

(2) B401 and B402 locations may be adjusted as necessary to avoid interference with anchor bolts or sheet metal sleeves.

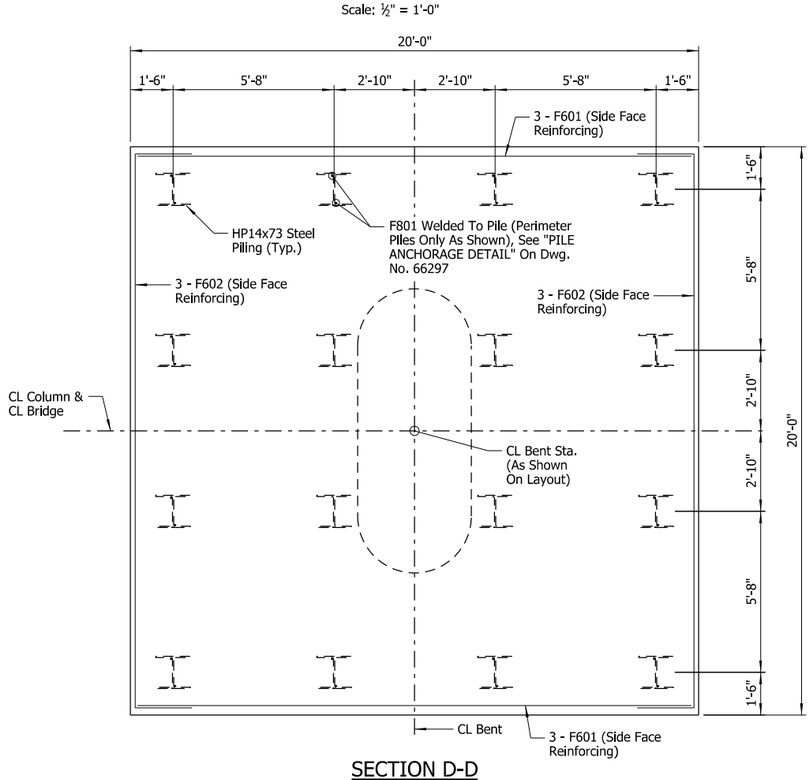

SECTION D-D

Scale: ⅜" = 1'-0"

BAR LIST

MARK	NO. REQ'D	LENGTH	"A"	"B"	P.D.
B401	32	7'-7"	2'-3"	3'-3"	2"
B402	24	7'-10"	2'-2"	3'-8"	2"
B501	24	27'-2"			Str.
B502	4	23'-11"			Str.
B503	4	19'-8"			Str.
B504	4	15'-5"			Str.
B505 To B521	4 Each	14'-0" To 17'-8"	3'-9" To 5'-7"	3'-0"	2½"
B522	42	14'-2"	5'-8"	3'-0"	2½"
B601	16	15'-2"			4½"
B602	14	8'-9"	2'-6"	4'-0½"	4½"
B603	6	8'-2"			4½"
B1101	8	30'-2"	27'-2"		11¼"
B1102	8	27'-2"			Str.
C501	102	17'-8"			3¾"
C502	102	4'-8"			3¾"
C1101	34	24'-3"			Str.
F601	6	19'-6"			Str.
F602	6	23'-3"	2'-0"	19'-6"	4½"
F603	90	6'-10"	2'-0"	3'-1"	4½"
F701	45	19'-6"			Str.
(1) F801	24	4'-8"			6"
F1101	45	22'-6"	19'-6"		11¼"
F1102	34	10'-10"			11¼"

BAR BENDING DIAGRAM

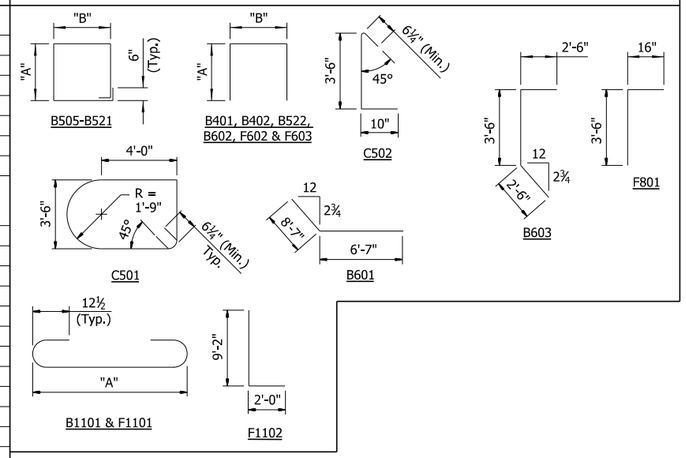

NOTE:
Dimensions of bars are out-to-out.

STATE OF ARKANSAS
LICENSED PROFESSIONAL ENGINEER
No.16458
JOEL E. SKINNER
Digitally Signed 07/28/2023
BRIDGE ENGINEER

SHEET 2 OF 2
DETAILS OF INTERMEDIATE BENT
XNA ACCESS RD. RAMP 1
ROUTE SEC.

ARKANSAS STATE HIGHWAY COMMISSION
LITTLE ROCK, ARK.

DRAWN BY: CWT DATE: MAR. 2023 FILENAME: b012326x8_b2.dgn
CHECKED BY: RLW DATE: MAR. 2023 SCALE: As Shown
DESIGNED BY: MJS DATE: MAR. 2023

BRIDGE NO. 07619 DRAWING NO. 66298

JESdnner 7/28/2023 12:11:39 PM
WORKSPACE: ARDOT Bridge (2019)
USER NAME: J:\Projects\2017\17017560 - ARDOT 012326 Hwy 412 - Hwy 112\Drawings\b012326x8_S212_BE.dgn
REVISED DATE:

DATE REVISED	DATE REVISED	FED. ROAD DIST. NO.	STATE	JOB NO.	SHEET NO.	TOTAL SHEETS
		6	ARK.	012326	510	838
		07619		210' PL GIRDER UNIT		66299

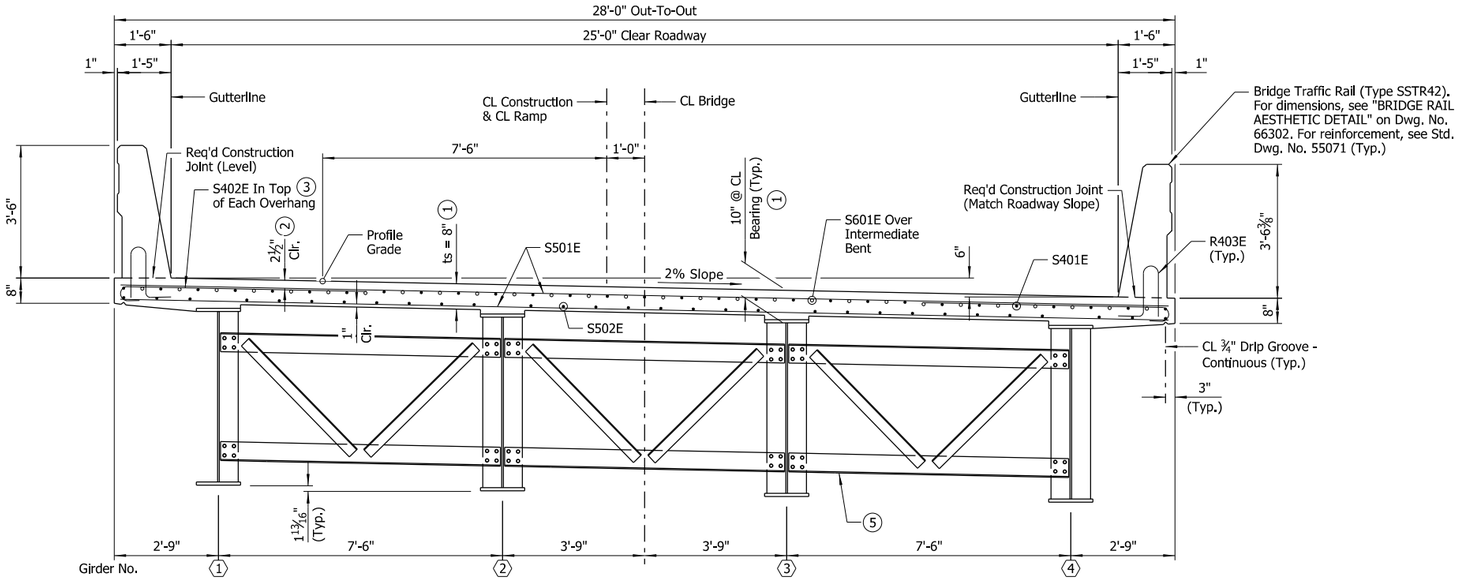

TYPICAL ROADWAY SECTION

(Looking Ahead)
Scale: ½" = 1'-0"

EXPANSION DEVICE:
Rdwy. Channel: MC18x42.7
Conn. Angle: L8x4x½
Detail device ⅛" high and provide ¼" shims using 2-1/16" and 1-⅛" plates

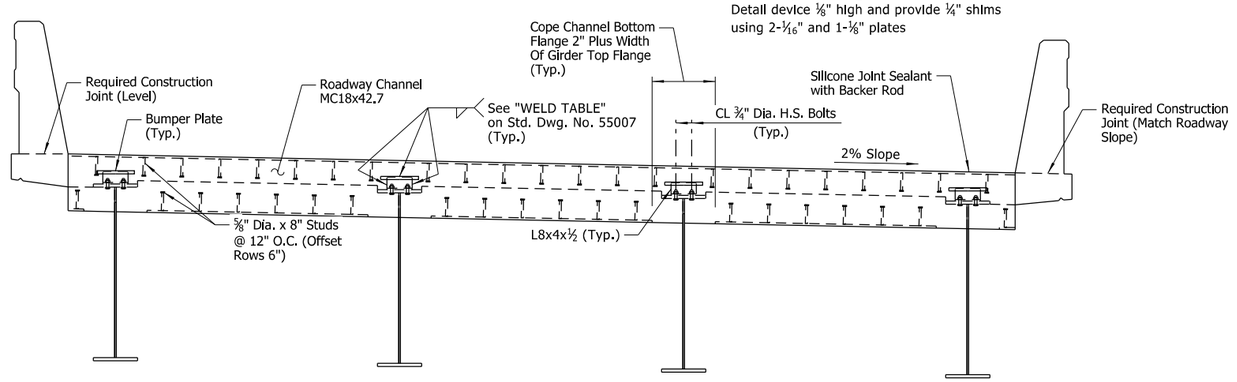

TYPICAL SECTION THRU JOINT

(Looking Ahead - Bent No. 1)
Scale: ½" = 1'-0"

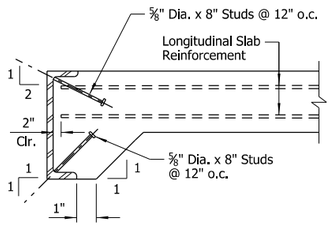

DETAIL OF ANCHORS & PLACEMENT OF LONGITUDINAL SLAB REINFORCING

No Scale

NOTE:
As an alternate to ⅝" Dia. studs, ½" Dia. x 8" studs spaced @ 8" o.c. may be used. Use weight of ⅝" Dia. stud as basis of measurement of Structural Steel in anchors.

SLAB REINFORCING:
Transverse: S501E @ 6" O.C. Top & Bottom
S402E @ 6" O.C. In Top of Overhangs (Bundled w/ S501E)

Longitudinal: S401E In Top As Shown
S502E In Bottom As Shown
S601E In Top As Shown Over Int. Bent — (4)

(1) See "ADJUSTMENT FOR SLAB THICKNESS TOLERANCE on Std. Dwg. No. 55007.

(2) Tolerance: Minus = ¼"
Plus = to the amount of slab thickening used to meet slab thickness tolerance. See "ADJUSTMENT FOR SLAB THICKNESS TOLERANCE" on Std. Dwg No. 55007.

(3) Bundle with S501E bars in top. Rotate as needed to avoid interference with bottom mat of deck reinforcement.

(4) See "REINFORCING PLAN & DECK POURING SEQUENCE" on Dwg. No. 66302.

(5) See Dwg. No. 66302 for cross-frame details.

NOTES:
For Standard General Notes and details, see Std. Dwg. Nos. 55006 & 55007.

Class 2 Protective Surface Treatment shall be applied to the roadway surface and roadway face and top of the bridge traffic rails.

Class 3 Textured Coating Finish shall be applied to bridge surfaces as specified in Special Provision "TEXTURED COATING FINISH" and in accordance with Subsection 802.19(b)(3). Textured Coating Finish shall not be applied on surfaces where Class 2 Protective Surface Treatment is applied.

Bar positions and clearances from the forms shall be maintained by means of stays, ties, hangers or other approved devices sufficient in size and number to prevent displacement during construction, per Subsection 804.06. Placement of slab bolsters or hi-chairs with full-length lower runners directly on removable deck forms will not be allowed.

For "BAR LIST" and "BAR BENDING DIAGRAMS", see Dwg. No. 66302.

For additional details of poured silicone joints, see Std. Dwg. No. 55008.

For "SCREED RAIL SUPPORT FOR PLATE GIRDERS", see Std. Dwg. No. 55007.

TABLE OF SILICONE JOINT DATA

Bent No(s).	"A" Width Perpendicular To Joint At 24 Hour Average Temperature Of: (6)			"B" Perpendicular To Joint At 60°F	Bumper Plate Size
	40°F	60°F	80°F		
1 & 3	2 3/16"	2"	1 13/16"	2¼"±	1" x 1" x 12"

(6) The temperature used to set the joint opening shall be the approximate average air temperature during the 24-hour period immediately before the bolts are tightened. The Engineer shall establish the temperature. Interpolation of the table may be necessary.

STATE OF ARKANSAS
LICENSED PROFESSIONAL ENGINEER
No.8017
JOHN H. RUDDELL
Digitally Signed 07/28/2023
BRIDGE ENGINEER

SHEET 1 OF 5
DETAILS OF 210'-0" CONTINUOUS PLATE GIRDER UNIT XNA ACCESS RD. RAMP 1

ROUTE SEC.

ARKANSAS STATE HIGHWAY COMMISSION
LITTLE ROCK, ARK.

DRAWN BY: CWT DATE: OCT. 2022 FILENAME: b012326x1_s1.dgn
CHECKED BY: JHR DATE: MAR. 2023 SCALE: As Shown
DESIGNED BY: MJS DATE: OCT. 2022

BRIDGE NO. 07619 DRAWING NO. 66299

JESshrer 7/28/2023 12:11:41 PM
WORKSPACE: ARDOT Bridge (2019)
USER NAME: Matt Sloan Projects
REVISED DATE:
C:\Users\mjsloan\Projects\2017\017660 - ARDOT 012326 Hwy 412 - Hwy 112\Drawings\b012326x6_5401_SX.dgn

DATE REVISED	DATE REVISED	FED. ROAD DIST. NO.	STATE	JOB NO.	SHEET NO.	TOTAL SHEETS
		6	ARK.	012326	511	838
		07619	210' PL GIRDER UNIT			66300

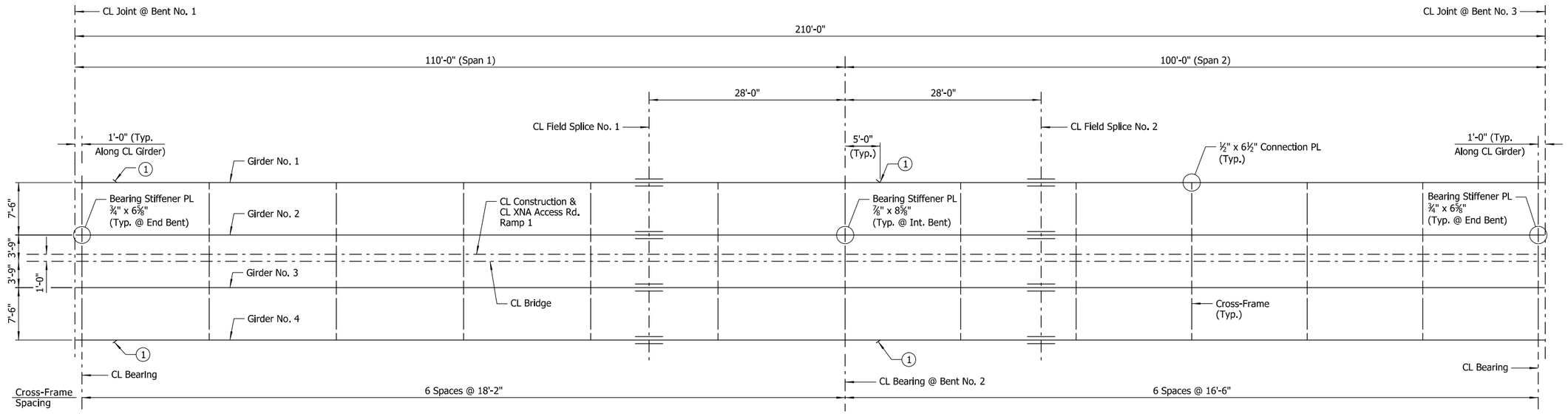

FRAMING PLAN

Scale: ⅛" = 1'-0"

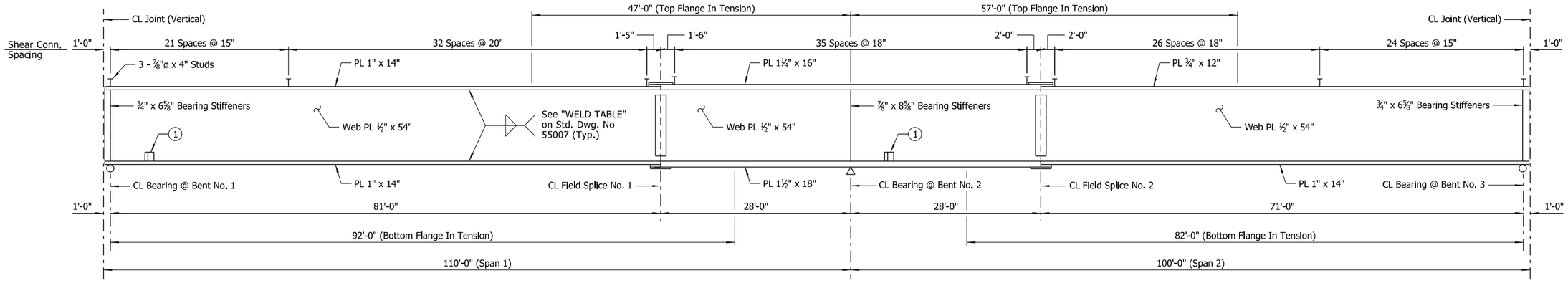

GIRDER ELEVATION

(Dimensions Measured Along CL Girder)
No Scale

NOTES:
For "GENERAL NOTES", see Std. Dwg. No. 55006.

All structural steel shall be ASTM A709, Gr. 50 unless noted otherwise and shall be paid for at the unit price per pound bid for "STRUCTURAL STEEL IN PLATE GIRDER SPANS (A709, GR. 50)".

Bolted Field Splices shown may be eliminated or shop welded splices may be substituted with approval of the Engineer. Payment will be made on the basis of the Plan Quantities.

For "DETAILS OF WELDED SPLICES FOR PLATE GIRDERS", "SCREED RAIL SUPPORT FOR PLATE GIRDERS" and "SHEAR CONNECTOR DETAIL", see Std. Dwg. No. 55007.

For details of cross-frames, connection plates and bearing stiffeners, see Dwg. No. 66303.

For details of field splices, see Dwg. No. 66301.

(1) Drip plate welded to the outer side of the bottom flange of the exterior girders. Locate drip plates 5'-0" from CL Bearing at locations shown. See "BOTTOM FLANGE DRIP PLATE" on Std. Dwg. No. 55007 for additional details. Stop drip plate weld 1" from face of web.

STATE OF ARKANSAS
LICENSED PROFESSIONAL ENGINEER
No.8017
JOHN H. RUDDELL
Digitally Signed 07/28/2023
BRIDGE ENGINEER

SHEET 2 OF 5
DETAILS OF 210'-0" CONTINUOUS PLATE GIRDER UNIT
XNA ACCESS RD. RAMP 1

ROUTE SEC.

ARKANSAS STATE HIGHWAY COMMISSION
LITTLE ROCK, ARK.

DRAWN BY: CWT DATE: OCT. 2022 FILENAME: b012326x1_s2.dgn
CHECKED BY: JHR DATE: MAR. 2023 SCALE: As Shown
DESIGNED BY: MJS DATE: OCT. 2022

BRIDGE NO. 07619 DRAWING NO. 66300

JESSnner 7/28/2023 12:11:41 PM
WORKSPACE: ARDOT Bridge (2019)
WORKSET: Master\Projects\2017\017660 - ARDOT 012326 Hwy 412 - Hwy 112\Drawings\b012326x6_5402_Sf.dgn
REVISED DATE:

DATE REVISED	DATE REVISED	FED. ROAD DIST. NO.	STATE	JOB NO.	SHEET NO.	TOTAL SHEETS
		6	ARK.	012326	512	838
		07619		210' PL GIRDER UNIT		66301

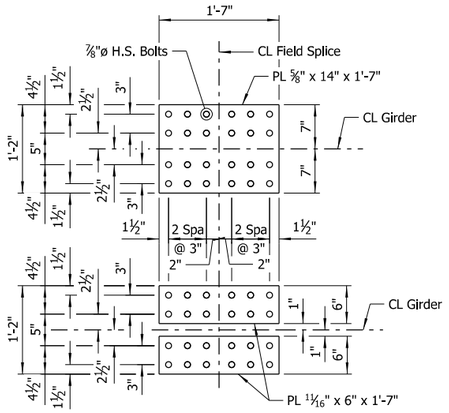

TOP FLANGE FIELD SPLICE NO. 1

Scale: 1" = 1'-0"

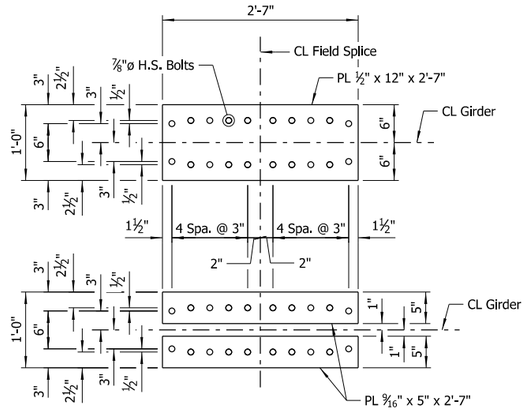

TOP FLANGE FIELD SPLICE NO. 2

Scale: 1" = 1'-0"

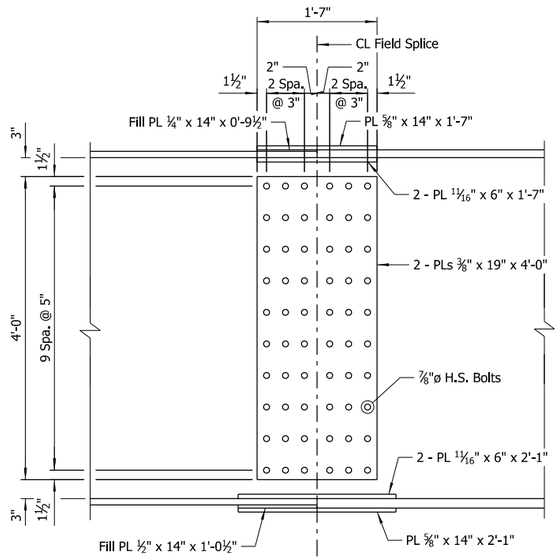

ELEVATION OF FIELD SPLICE NO. 1

Scale: 1" = 1'-0"

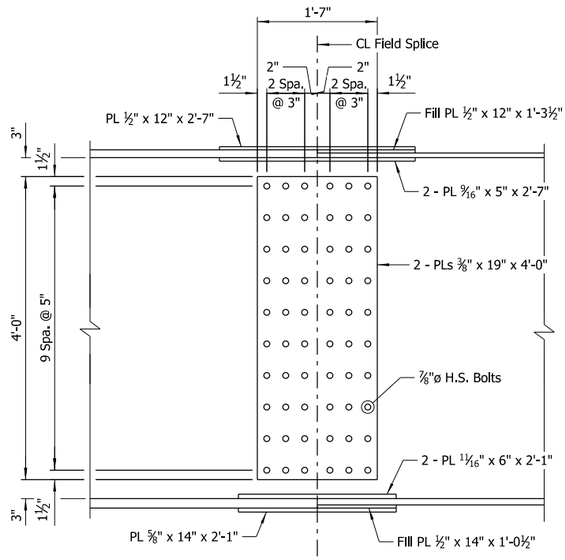

ELEVATION OF FIELD SPLICE NO. 2

Scale: 1" = 1'-0"

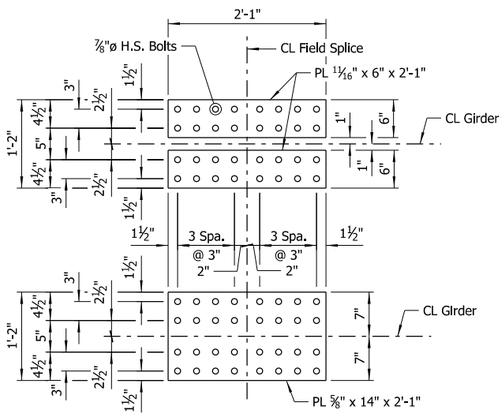

BOTTOM FLANGE FIELD SPLICE NOS. 1 & 2

Scale: 1" = 1'-0"

NOTES:
All field splice bolts shall be ⅞" dia. high strength bolts.

All holes for field splice bolts shall be 15/16" dia.

All field splice plates shall be ASTM A709, Gr. 50.

TABLE OF DEAD LOAD DEFLECTIONS (Inches)

Point Of Deflection	Wt. Of Girder And Cross-Frames	Wt. Of Girder, Cross-Frames And Slab	Wt. Of Girder, Cross-Frames, Slab And Railing
1.0	0.00	0.00	0.00
1.1	0.13	0.62	0.71
1.2	0.25	1.14	1.31
1.3	0.33	1.49	1.72
1.4	0.36	1.64	1.90
1.5	0.35	1.58	1.83
1.6	0.30	1.34	1.55
1.7	0.22	0.97	1.12
1.8	0.13	0.56	0.65
1.9	0.05	0.20	0.23
2.0	0.00	0.00	0.00
2.1	0.00	0.02	0.02
2.2	0.03	0.18	0.21
2.3	0.07	0.42	0.48
2.4	0.12	0.66	0.76
2.5	0.16	0.85	0.98
2.6	0.17	0.93	1.07
2.7	0.16	0.88	1.00
2.8	0.13	0.69	0.79
2.9	0.07	0.38	0.43
3.0	0.00	0.00	0.00

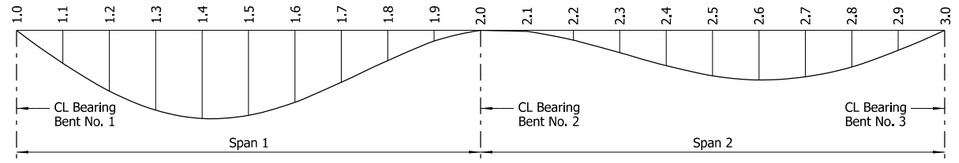

DEAD LOAD DEFLECTION DIAGRAM

No Scale

NOTES:
Camber for dead load deflection plus vertical curve +/- ¼" tolerance. Deflections shown are along CL Girder from a chord from CL Bearing to CL Bearing. Negative sign (-) indicates a point above chord. Vertical curve corrections are not included.

Dead load deflections shown include an assumed loading of 18 psf to account for stay-in-place metal deck forms.

Revision to the deflection tables may be necessary upon review of the Contractor's submitted forming details.

STATE OF ARKANSAS
LICENSED PROFESSIONAL ENGINEER
No.8017
JOHN H. RUDDELL
Digitally Signed 07/28/2023
BRIDGE ENGINEER

SHEET 3 OF 5
DETAILS OF 210'-0" CONTINUOUS PLATE GIRDER UNIT
XNA ACCESS RD. RAMP 1

ROUTE SEC.

ARKANSAS STATE HIGHWAY COMMISSION
LITTLE ROCK, ARK.

DRAWN BY: HEW DATE: JAN. 2023 FILENAME: b012326x1_s3.dgn
CHECKED BY: JHR DATE: MAR. 2023 SCALE: As Shown
DESIGNED BY: MJS DATE: JAN. 2023

BRIDGE NO. 07619 DRAWING NO. 66301

JESSnner
WORKSPACE: ARDOT Bridge (2019)
WORKSET: Default
REVISED DATE: 7/28/2023 12:11:42 PM
Project\Projects\2017\17017560 - ARDOT 012326 Hwy 412 - Hwy 112\Drawings\b012326x6_S403_SD.dgn

DATE REVISED	DATE REVISED	FED. ROAD DIST. NO.	STATE	JOB NO.	SHEET NO.	TOTAL SHEETS
		6	ARK.	012326	513	838
		07619		210' PL GIRDER UNIT		66302

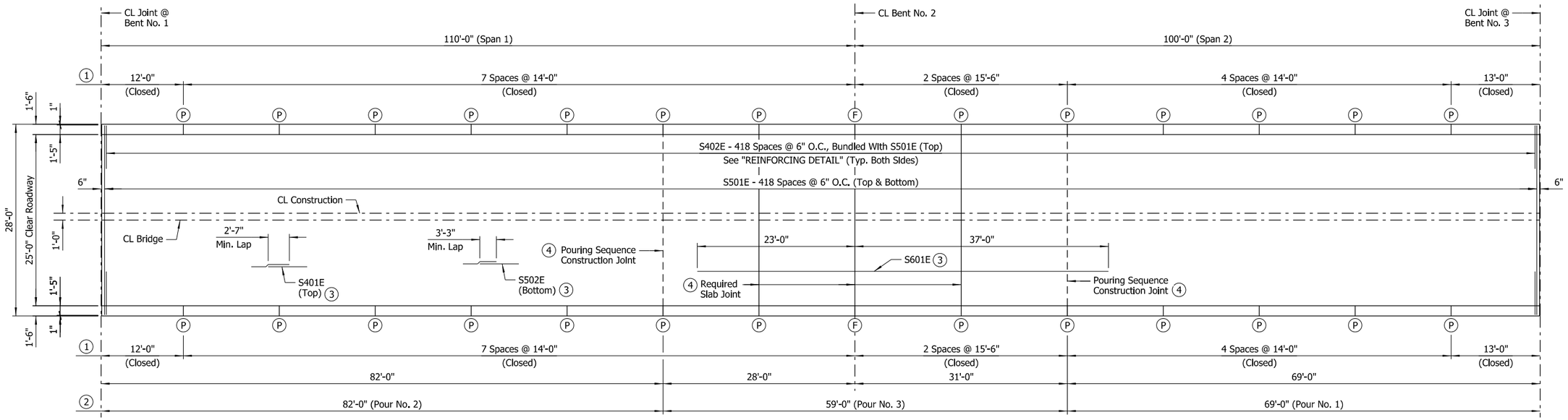

REINFORCING PLAN & DECK POURING SEQUENCE

Scale: ⅛" = 1'-0"

(1) Traffic rail joint spacing (measured along gutterline) - Rail joints designated with symbol (F) shall be stopped 6" from top of slab. All other rail joints with symbol (P) shall be partial depth joints stopped 16" from top of slab.

(2) Pouring Sequence (Measured Along CL Bridge)

(3) Place as shown in "TYPICAL ROADWAY SECTION" on Dwg. No. 66299.

(4) See "TRANSVERSE SLAB JOINT DETAIL" on Std. Dwg. No. 55007.

NOTES:
Pours (1) and (2) may be placed simultaneously or separately. Pour (1) must be placed before Pour (2) can be placed. Pour (2) must be placed before Pour (3) can be placed. 48 hours shall elapse between the end of a pour and the start of the next pour. 72 hours shall elapse between adjacent pours.

Concrete in bridge superstructure shall be placed, consolidated and screeded off for the entire pour before any concrete has taken its initial set. This may require the use of a retarding agent.

72 hours shall elapse between the completion of the entire deck slab and the start of a railing pour. Any railing pours made before the entire slab unit has been placed must be approved by the Engineer.

No deviations from the pouring sequence shown will be allowed.

Required slab joints and pouring sequence joints shall align with rail joints at gutterline.

For "STANDARD GENERAL NOTES", see Std. Dwg. No. 55006.

For traffic rail reinforcing details and details of partial-depth and full-depth rail joints, see Std. Dwg. No. 55071.

BAR LIST			
MARK	NO. REQ'D	LENGTH	P.D.
R401E	840	7'-6"	3"
R402E	104	5'-6"	Str.
R403E	840	3'-8"	6", 3"
R409E	20	11'-8"	Str.
R410E	20	12'-8"	Str.
R411E	220	13'-8"	Str.
R412E	40	15'-2"	Str.
S401E	174	37'-2"	Str.
S402E	838	7'-0"	3"
S501E	838	27'-8"	Str.
S502E	120	55'-0"	Str.
S601E	28	60'-0"	Str.

BAR BENDING DIAGRAMS

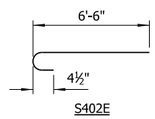

S402E

NOTES:
Dimensions of bars are out-to-out.

Bar designations ending with "E" indicate epoxy coated bars.

See Std. Dwg. No. 55071 for Bar Bending Diagrams of R401E & R403E.

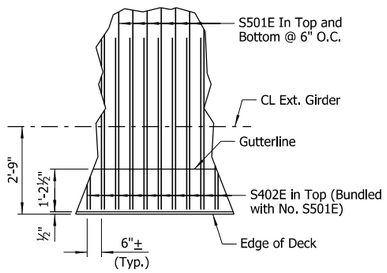

REINFORCING DETAIL

No Scale

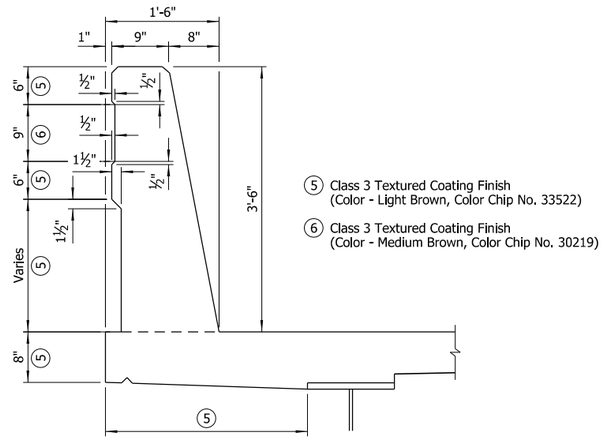

BRIDGE RAIL AESTHETIC DETAIL

Scale: 1" = 1'-0"

TABLE OF VARIABLES		
CLOSED RAIL PANELS		
PANEL LENGTH	"A"	R4XXE
12'-0"	23	09
13'-0"	25	10
14'-0"	27	11
15'-6"	30	12

STATE OF ARKANSAS
LICENSED PROFESSIONAL ENGINEER
No.8017
JOHN H. RUDDELL
Digitally Signed 07/28/2023
BRIDGE ENGINEER

SHEET 4 OF 5
DETAILS OF 210'-0" CONTINUOUS PLATE GIRDER UNIT XNA ACCESS RD. RAMP 1

ROUTE SEC.

ARKANSAS STATE HIGHWAY COMMISSION

LITTLE ROCK, ARK.

DRAWN BY: HEW DATE: JAN. 2023 FILENAME: b012326x8_s4.dgn
CHECKED BY: JHR DATE: MAR, 2023 SCALE: As Shown
DESIGNED BY: MJS DATE: DEC, 2022
BRIDGE NO. 07619 DRAWING NO. 66302

JESkinner 7/28/2023 12:11:43 PM
WORKSPACE: ARDOT Bridge (2019)
Users\JeffS_Projects\2017\7017660 - ARDOT 012326 Hwy 412 - Hwy 112\Drawings\b012326x8_S404_SB.dgn
REVISED DATE:

DATE REVISED	DATE REVISED	FED. ROAD DIST. NO.	STATE	JOB NO.	SHEET NO.	TOTAL SHEETS
		6	ARK.	012326	514	838
		07619		210' PL GIRDER UNIT		66303

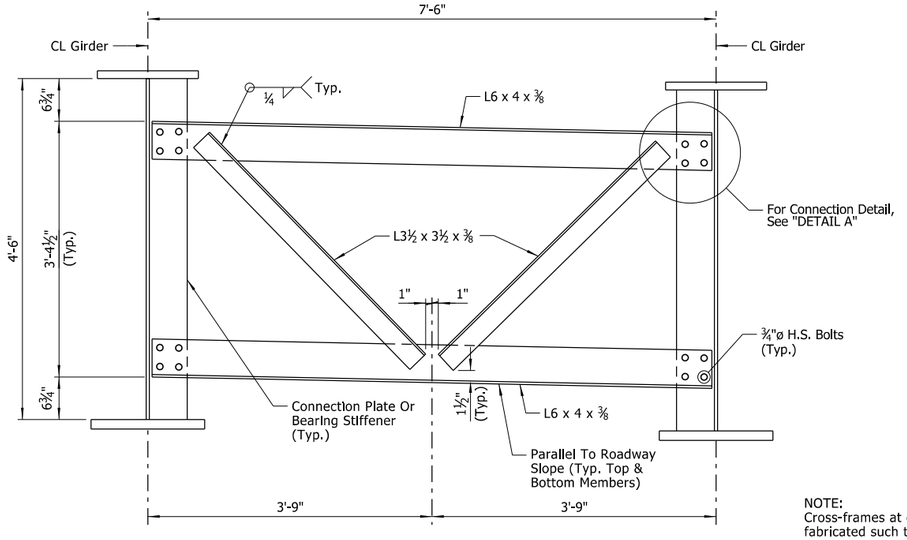

CROSS-FRAME DETAIL

Scale: 1" = 1'-0"

NOTE:
Cross-frames at end bents shall be fabricated such that the horizontal legs of L6 x 4 x ⅜ chord members point away from CL joint.

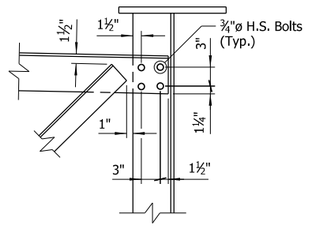

DETAIL A

Scale: 1" = 1'-0"

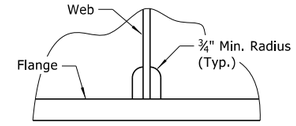

Height and width of clip shall be as noted in other details.

ALTERNATE CLIP DETAIL

(For Bearing Stiffeners and Cross-frame Connection Plates)
No Scale

1. See "WELD TABLE" on Std. Dwg. No. 55007 for minimum weld size.
2. Stop weld ¼" to 1" from end of clip (Typ.)
3. If permanent deck forms are used, the fabricator shall clip the plate as necessary to accommodate the deck form supports.

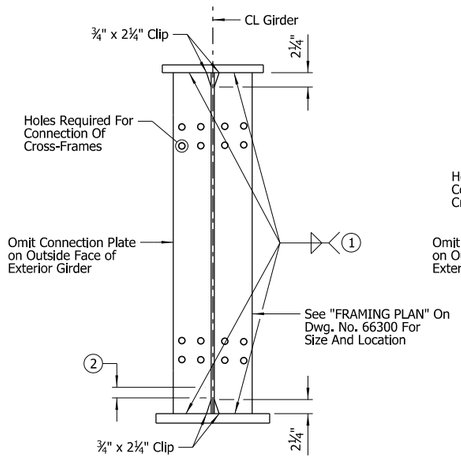

GIRDER WITH 14" OR 16" TOP FLANGE

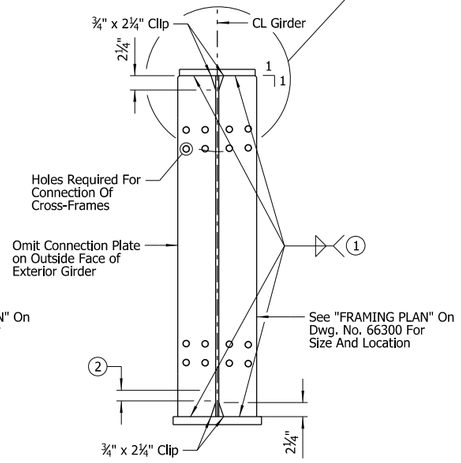

GIRDER WITH 12" TOP FLANGE

CONNECTION PLATE DETAIL

Scale: 1" = 1'-0"

Bent 2 & 3

Bent 1

BEARING STIFFENER DETAIL

Scale: 1" = 1'-0"

NOTE:
Bearing Stiffeners shall be fabricated to be vertical in their final positions. Bearing stiffeners are to be placed on both sides of girder webs at bent locations.

STATE OF ARKANSAS
LICENSED PROFESSIONAL ENGINEER
No.8017
JOHN H. RUDDELL
Digitally Signed 07/28/2023
BRIDGE ENGINEER

SHEET 5 OF 5
DETAILS OF 210'-0" CONTINUOUS PLATE GIRDER UNIT
XNA ACCESS RD. RAMP 1

ROUTE SEC.

ARKANSAS STATE HIGHWAY COMMISSION

LITTLE ROCK, ARK.

DRAWN BY:	CWT	DATE:	DEC. 2022	FILENAME:	b012326x1_s5.dgn
CHECKED BY:	JHR	DATE:	MAR. 2023	SCALE:	As Shown
DESIGNED BY:	MJS	DATE:	DEC. 2022		

BRIDGE NO. 07619 DRAWING NO. 66303

JESchroer 7/28/2023 12:11:44 PM
WORKSPACE: ARDOT Bridge (2019)
USER NAME: Default ProjectS (2017) (1017560 - ARDOT 012326 Hwy 412 - Hwy 112\Drawings\b012326x6_S405_MD.dgn
REVISED DATE:

DATE REVISED	DATE REVISED	FED. ROAD DIST. NO.	STATE	JOB NO.	SHEET NO.	TOTAL SHEETS
		6	ARK.	012326	515	838
		A7620		LAYOUT		66304

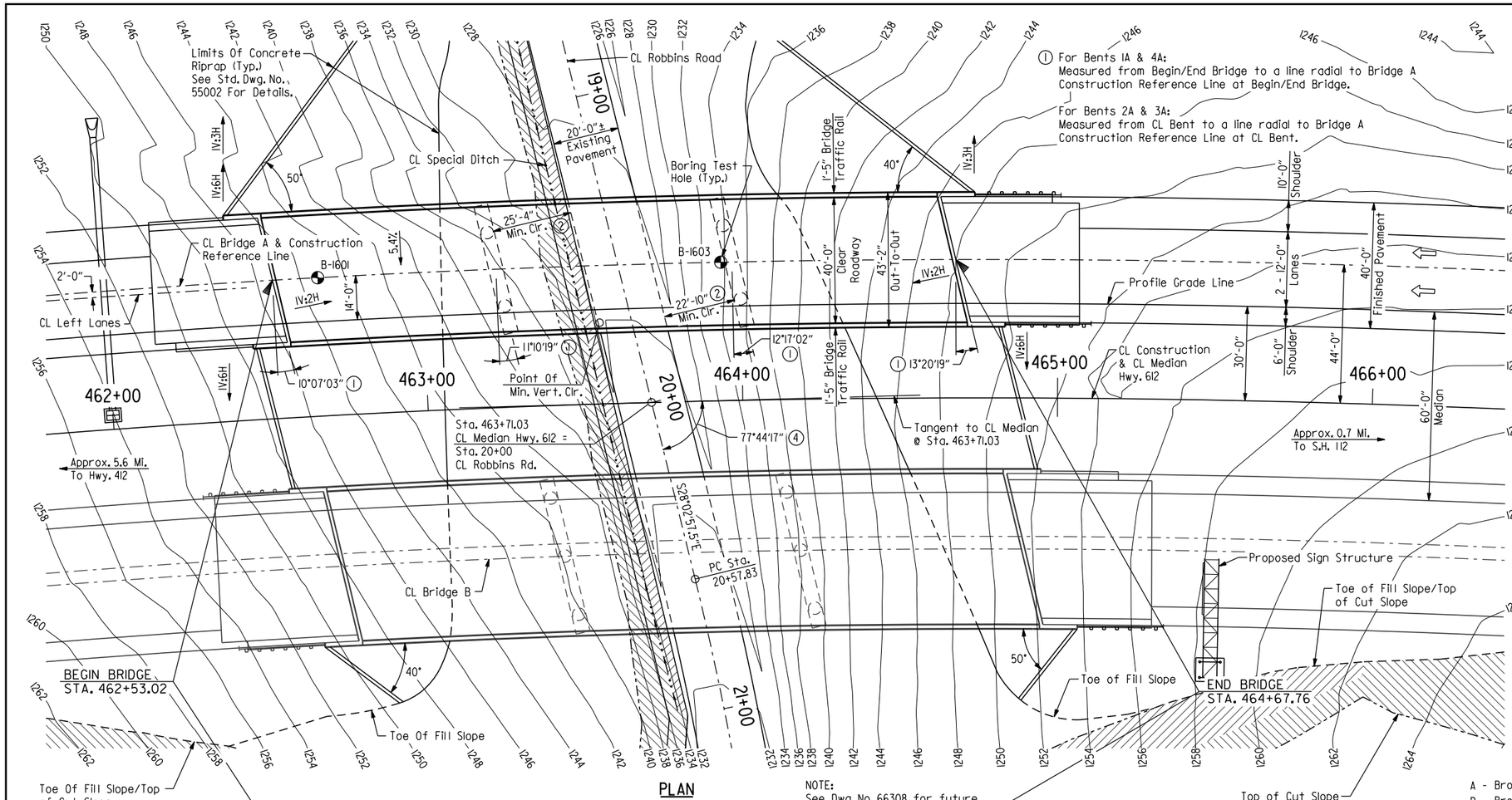

PLAN

NOTE:
See Dwg. No. 66308 for future Robbins Road width.

NOTE:
Stationing is along CL Median. Stations shown in "ELEVATION" are determined by a radial projection from Bridge A Construction Reference Line to CL Median. For more information refer to "STAKING DIAGRAM" on Dwg. No. 66307. Elevations shown are actual top of deck elevations at Bridge A Construction Reference Line. Any vertical dimension to CL Deck is based on actual top of deck elevation at Bridge A Construction Reference Line.

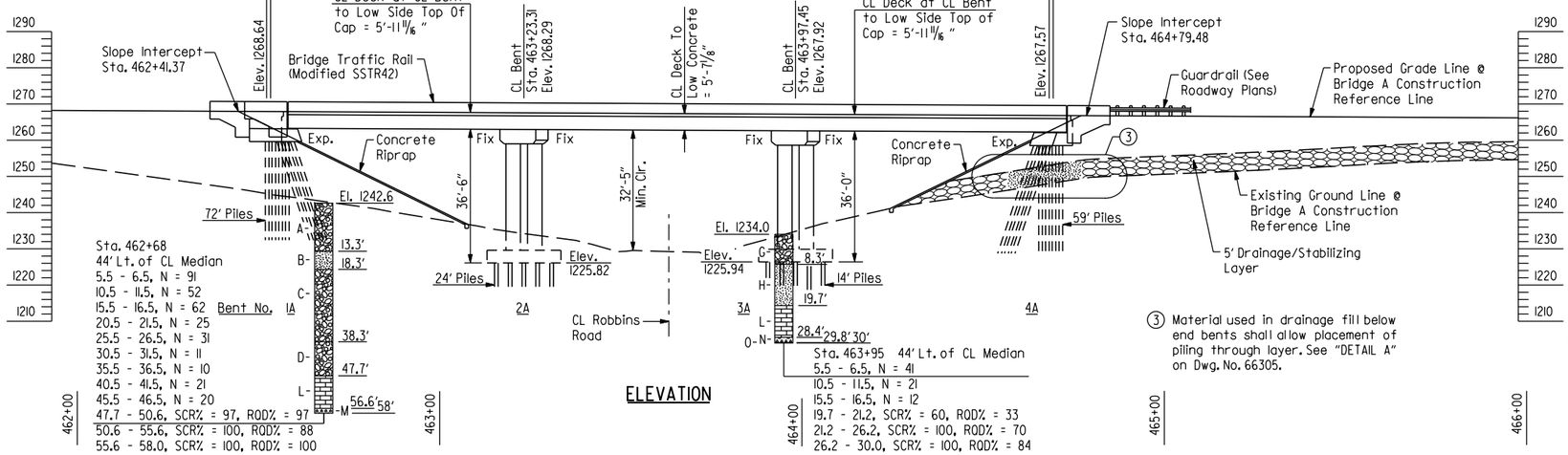

ELEVATION

(3) Material used in drainage fill below end bents shall allow placement of piling through layer. See "DETAIL A" on Dwg. No. 66305.

(2) Measured from edge of lane

(4) Measured from line tangent to CL Median Hwy. 612 at Sta. 463+71.03 and CL Robbins Rd.

FOR R/W DATA, SEE ROADWAY PLANS

NOTES:
Use Type F Approach Gutters & Type F Approach Slab at each end of bridge. See Std. Dwg. No. 55030F for details of Type F Approach Gutters. For details of approach slab, see Std. Dwg. No. 55040FI.

For "GENERAL NOTES", see Dwg. No. 66306.

CL Construction is on a 1°30'00" curve right. The longitudinal lines of both the bridge and approach slabs shall be constructed on curves concentric with CL Construction. For more information, see "STAKING DIAGRAM" on Dwg. No. 66307.

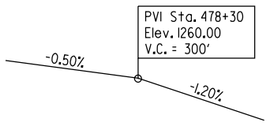

VERTICAL CURVE DATA

Highway 612
(Profile Grade Along Inside Edge of Lane)

CL MEDIAN CURVE DATA

PI = 454+00.41
Δ = 92°18'35" Rt.
D = 1°30'00"
T = 3976.89'
L = 6153.98'
e = .054 Ft./Ft.
R = 3819.72'

BORING LEGEND

A - Brown, Very Dense Silty Gravel with Sand.
B - Brown & Beige, Very Dense Silty Sand with Gravel.
C - Dark Brown, Tan & Brown, Loose to Dense Silty Gravel with Sand.
D - Tan, Dark Brown, Copper & Light Beige, Medium Dense Clayey Gravel with Sand.
E - Brownish Gray, Tan & Brown, Very Dense Silty Gravel with Sand.
F - Brown, Light Beige & Copper, Loose to Medium Dense Silty Sand with Gravel.
G - Tan, Dense Silty Gravel with Sand.
H - Light Beige & Copper, Medium Dense Silty Sand with Gravel.
I - Brown & Tan, Dense to Very Dense Silty Gravel with Sand.
J - Dark Brown, White & Brown, Medium Dense to Dense Silty Sand with Gravel.
K - Copper, Dark Brown & Light Brown, Very Loose to Medium Dense Clayey Gravel with Sand.
L - Limestone: White, Lt. Gray, Gray, Fine to Medium Grain, Fresh with Slight Weathering.
M - Chert: White, Lt. Gray, Gray, Fresh.
N - Chert: White, Lt. Gray, Gray, Fresh to Slightly Weathered.
O - Limestone
P - Chert: White, Lt. Gray, Gray, Fresh.
Q - Limestone Bed.

STATE OF ARKANSAS
LICENSED PROFESSIONAL ENGINEER
No. 21243
COLTON S. WYLIE
Digitally Signed 07/28/2023
BRIDGE ENGINEER

SHEET 1 OF 5
LAYOUT OF BRIDGES
HIGHWAY 612 OVER ROBBINS ROAD
HWY. 412 - HWY. 112
(SPRINGDALE BYPASS) (F)
BENTON COUNTY

ROUTE SEC.

ARKANSAS STATE HIGHWAY COMMISSION
LITTLE ROCK, ARK.

DRAWN BY: CWT DATE: JUNE 2022 FILENAME: b012326a9_L1.dgn
CHECKED BY: JHR DATE: JUNE 2022 SCALE: 1"=20'
DESIGNED BY: WMM DATE: JUNE 2022

BRIDGE NO. A7620 DRAWING NO. 66304

JESkinner 7/28/2023 12:11:55 PM
WORKSPACE: ARDOT Bridge
\\garverfnc.local\gdata\Projects\2017\17017660 - ARDOT 012326 Hwy 412 - Hwy 112\Drawings\b012326a9.S101-L0.dgn
REVISED DATE:

DATE REVISED	DATE REVISED	FED. ROAD DIST. NO.	STATE	JOB NO.	SHEET NO.	TOTAL SHEETS
		6	ARK.	012326	516	838
		B7620		LAYOUT		66305

Limits Of Concrete Riprap (Typ.) See Std. Dwg. No. 55002 For Details

CL Robbins Road

CL Special Ditch

20'-0"± Existing Pavement

CL Bridge A

S28°02'51.5"E

50°

40°

19+00

20+00

21+00

462+00

463+00

464+00

465+00

466+00

Sta. 463+71.03
CL Median Hwy. 612 =
Sta. 20+00
CL Robbins Rd.

77°44'17" ④

Tangent to CL Median @ Sta. 463+71.03

CL Construction & Median Hwy. 612

Approx. 0.7 Mi. To S.H. 112

Approx. 5.6 Mi. To Hwy. 412

Bridge B Construction Reference Line

CL Right Lanes

4'-0"

1V:6H

1V:2H

1V:3H

5.4%

14'-0"

B-1602

B-1604

Boring Test Hole (Typ.)

② 25'-10" Min. Clr.

② 22'-3" Min. Clr.

PC Sta. 20+57.83

11°26'11" ①

10°21'26" ①

12°34'28" ①

13°39'13" ①

1'-5" Bridge Traffic Rail

48'-0" Clear Roadway

51'-2" Out-To-Out

Profile Grade Line

30'-0"

6'-0" Shoulder

44'-0"

60'-0" Median

3 - 12'-0" Lanes

48'-0" Finished Pavement

6'-0" Shoulder

Proposed Sign Structure

Toe of Fill Slope/ Top of Cut Slope

Toe of Fill Slope

Point Of Min. Vert. Cir.

BEGIN BRIDGE STA. 462+69.01

END BRIDGE STA. 464+88.75

Top of Cut Slope

① For Bents 1B & 4B:
Measured from Begin/End Bridge to a line radial to Bridge B Construction Reference Line at Begin/End Bridge.

For Bents 2B & 3B:
Measured from CL Bent to a line radial to Bridge B Construction Reference Line at CL Bent.

② Measured from edge of lane

④ Measured from line tangent to CL Median Hwy. 612 at Sta. 463+71.03 and CL Robbins Rd.

PLAN

NOTE:
See Dwg. No. 66308 for future Robbins Road width.

FOR R/W DATA AND GUARDRAIL DETAILS, SEE ROADWAY PLANS

NOTES:
Use Type F Approach Gutters & Type F Approach Slab at each end of bridge. See Std. Dwg. No. 55030F for details of Type F Approach Gutters. For details of approach slab, see Std. Dwg. No. 55040F1.

For "GENERAL NOTES", see Dwg. No. 66306.

For "BORING LEGEND", see Dwg. No. 66304

PVI Sta. 478+30
Elev. 1260.00
V.C. = 300'
-0.50%
-1.20%

CL MEDIAN CURVE DATA

PI = 454+00.41
Δ = 92°18'35" Rt.
D = 1°30'00"
T = 3976.89'
L = 6153.98'
e = .054 Ft./Ft.
R = 3819.72'

VERTICAL CURVE DATA

Highway 612
(Profile Grade Along Inside Edge of Lane)

CL Construction is on a 1°30'00" curve right. The longitudinal lines of both the bridge and approach slabs shall be constructed on curves concentric with CL Construction. For more information, see "STAKING DIAGRAM" on Dwg. No. 66307.

Total Length Of Bridge = 217'-2⅜"

1'-1⅜" | 215'-0" Continuous Prestressed Concrete Girder Unit (Type III) (70'-75'-70') (Measured along Bridge B Construction Reference Line) | 1'-1⅜"

CL 2" Poured Silicone Joint

CL 2" Poured Silicone Joint

Slope Intercept Sta. 462+57.35

Slope Intercept Sta. 465+00.49

Guardrail (See Roadway Plans)

Bridge Traffic Rail (Modified SSTR42)

Elev. 1267.05

CL Deck at CL Bent to Low Side Top of Cap = 5'-11 11/16"

CL Bent Sta. 463+40.94 Elev. 1266.69

CL Deck To Low Concrete = 5'-7⅛"

CL Bent Sta. 464+16.81 Elev. 1266.31

CL Deck at CL Bent to Low Side Top of Cap = 5'-11 11/16"

Elev. 1265.95

Proposed Grade Line @ Bridge B Construction Reference Line

Existing Ground Line @ Bridge B Construction Reference Line

5' Drainage/Stabilizing Layer

Exp. | Fix | Fix | Fix | Fix | Exp.

Concrete Riprap

Concrete Riprap

28'-9"

27'-8" Min. Cir.

32'-6"

El. 1249.7

65' Piles

Elev. 1231.53

18' Piles

El. 1239.0

13.3'

22.6

30.7

21' Piles

Elev. 1227.39

12.3'

62' Piles

27.3'

47.2'

55.6'

57.7'

58.0'

Bent No. 1B 2B 3B

Sta. 463+46
44' Rt. of CL Median
5.5 - 6.5, N = 72
10.5 - 11.5, N = 54
15.5 - 16.5, N = 18
20.5 - 21.5, N = 10
22.6 - 25.7, SCR% = 94, ROD% = 94
25.7 - 30.7, SCR% = 76, ROD% = 34

Sta. 464+79
44' Rt. of CL Median
4.5 - 5.5, N = 83
9.5 - 10.5, N = 43
14.5 - 15.5, N = 35
19.5 - 20.5, N = 25
24.5 - 25.5, N = 22
29.5 - 30.5, N = 10
34.5 - 35.5, N = 4
39.5 - 40.5, N = 5
44.5 - 45.5, N = 11
47.2 - 50.0, SCR% = 100, ROD% = 86
50.0 - 55.0, SCR% = 100, ROD% = 100
55.0 - 58.0, SCR% = 100, ROD% = 60

CL Robbins Road

ELEVATION

NOTE:
Stationing is along CL Median. Stations shown in "ELEVATION" are determined by a radial projection from Bridge B Construction Reference Line to CL Median. For more information refer to "STAKING DIAGRAM" on Dwg. No. 66307. Elevations shown are actual top of deck elevations at Bridge B Construction Reference Line. Any vertical dimension to CL Deck is based on actual top of deck elevation at Bridge B Construction Reference Line.

③ Material used in drainage fill below end bents shall allow placement of piling through layer. See DETAIL A this drawing.

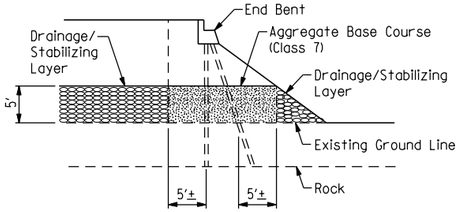

Where a drainage/stabilizing layer is required for embankment construction, aggregate base course (Class 7), in accordance with Section 303.02, shall be placed as shown in areas where piling will be located. Aggregate base course (Class 7) shall be paid for as "COMPACTED EMBANKMENT".

At the Contractor's option, preboring or other methods as approved by the Engineer may be used to facilitate pile installation through the aggregate base course (Class 7) material at these locations. Preboring or other methods used for installation of piles, where rock fill is used for embankment construction, will not be paid for separately but shall be included in Item "STEEL PILING".

DETAIL A

STATE OF ARKANSAS
LICENSED PROFESSIONAL ENGINEER
No. 21243
COLTON S. WYLIE
Digitally Signed 07/28/2023
BRIDGE ENGINEER

SHEET 2 OF 5
LAYOUT OF BRIDGES
HIGHWAY 612 OVER ROBBINS ROAD
HWY. 412 - HWY. 112
(SPRINGDALE BYPASS) (F)
BENTON COUNTY

ROUTE SEC.

ARKANSAS STATE HIGHWAY COMMISSION
LITTLE ROCK, ARK.

DRAWN BY: CWT DATE: JUNE 2022 FILENAME: b012326b9_L2.dgn
CHECKED BY: JHR DATE: JUNE 2022 SCALE: 1"=20'
DESIGNED BY: WMM DATE: JUNE 2022

BRIDGE NO. B7620 DRAWING NO. 66305

JEskinner 7/28/2023 12:11:56 PM
WORKSPACE: ARDOT Bridge
\\garverinc.local\gdata\Projects\2017\17017660 - ARDOT 012326 Hwy 412 - Hwy 112\Drawings\b012326x9_SI02-1_0.dgn
REVISED DATE:

DATE REVISED	DATE REVISED	FED. ROAD DIST. NO.	STATE	JOB NO.	SHEET NO.	TOTAL SHEETS
		6	ARK.	012326	517	838
		A7620 & B7620		LAYOUT		66306

GENERAL NOTES

BENCH MARK: Vertical Control Data are shown on the Survey Control Data Sheets.

CONSTRUCTION SPECIFICATIONS: Arkansas State Highway and Transportation Department Standard Specifications for Highway Construction (2014 Edition) with applicable Supplemental Specifications and Special Provisions. Unless otherwise noted in the plans, Section and Subsection refer to the Standard Construction Specifications.

DESIGN SPECIFICATIONS: AASHTO LRFD Bridge Design Specifications 4th Edition (2007) with 2008 interim revisions.

LIVE LOADING: HL93

SEISMIC ZONE: I SD_1 = 0.12g Site Class = D

SEISMIC OPERATIONAL CLASS: Other

MATERIALS AND STRENGTHS:

Class S(AE) Concrete (Superstructure)	f'c = 4000 psi
Class S Concrete (Prestressed Girders)	f'c = 7000 psi
Class S Concrete (Substructure)	f'c = 3500 psi
Reinforcing Steel (AASHTO M 31 Or M 322, Type A)	fy = 60,000 psi
Structural Steel (ASTM A709, GR. 50W)	Fy = 50,000 psi
Structural Steel (ASTM A709, GR. 36)	Fy = 36,000 psi

BORING LOGS: Boring logs may be obtained from the Construction Contract Procurement Section of the Program Management Division.

STEEL PILING: All piling shall be HP12x53 (Grade 50) and shall be driven with an approved air, steam or diesel hammer to a minimum safe bearing capacity of 97 tons per pile. Drive all piles in Bents 1A, 1B, 4A & 4B to a minimum penetration of 10' below existing ground. Piles in Bents 1A, 1B, 4A & 4B shall be driven after embankment to bottom of cap is in place. Lengths of piling shown are for estimating quantities and for use in determining payment for cut-off and build-up in accordance with Section 805. Actual lengths are to be determined in the field. The Contractor shall use QPL-approved steel H-pile driving points on all piles.

EXPLORATORY HOLES: The Contractor shall drill exploratory holes at Bents 2A, 2B, 3A & 3B in accordance with SP "EXPLORATORY HOLES". The quantities of exploratory holes shown are for bidding purposes only. The actual locations, number and depths of exploratory holes are to be determined in the field by the Engineer.

PREBORING: Preboring is required for all piling in Bents 2A, 2B, 3A & 3B if exploratory holes indicate that the depth to rock is less than 8'. Preboring shall be to a 3' depth into material designated as Chert on the boring legend. The actual size and depths of preboring are to be determined in the field by the Engineer. The Contractor shall be responsible for keeping prebored holes free from debris prior to driving piles and backfilling which may require the use of temporary casings or other approved methods. After driving is completed, the prebored hole shall be backfilled with Class S Concrete to the top of rock and the remaining length of prebored hole backfilled in accordance with Section 805.08(a) to completely fill voids. Any related cost for backfilling and temporary casing will not be paid for directly but shall be considered subsidiary to the item "PREBORING".

PILE FOOTING: The top of the footings at Bents 2A, 2B, 3A & 3B shall be set a minimum of 2'-0" below natural ground or the elevations shown on the plans, whichever is lower. Foundations for footings shall be prepared in accordance with Subsection 801.04. Foundation piles shall not be driven until after the excavation to bottom of footings is complete. Excavations shall be backfilled and compacted to the level of the existing ground in accordance with Subsection 801.08.

TEXTURED COATING FINISH: Class 3 Textured Coating Finish shall be applied to bridge surfaces as specified in Special Provision "TEXTURED COATING FINISH" and in accordance with Subsection 802.19(b)(3). Textured Coating Finish shall not be applied on surfaces where Class 2 Protective Surface Treatment is applied.

BRIDGE DECK: The concrete bridge deck shall be given a tine finish as specified for final finishing in Subsection 802.19 for Class 5 Tined Bridge Roadway Surface Finish.

PROTECTIVE SURFACE TREATMENT: Class 2 Protective Surface Treatment shall be applied to the roadway surface and to the roadway face and top of the bridge traffic rail in accordance with Section 803.

DETAIL DRAWINGS:	DRAWING NO(S):
End Bents	66309-66314
Intermediate Bents	66315-66317
Elastomeric Bearings	66318
215' Cont. Prestressed Conc. Girder Unit	66319-66333
Concrete Riprap	55002
Poured Silicone Joint	55008
Steel H-Piling	55020
Type F Approach Gutters	55030F
Type F Approach Slab	55040FI
Bridge Traffic Rail	55071 & 66333

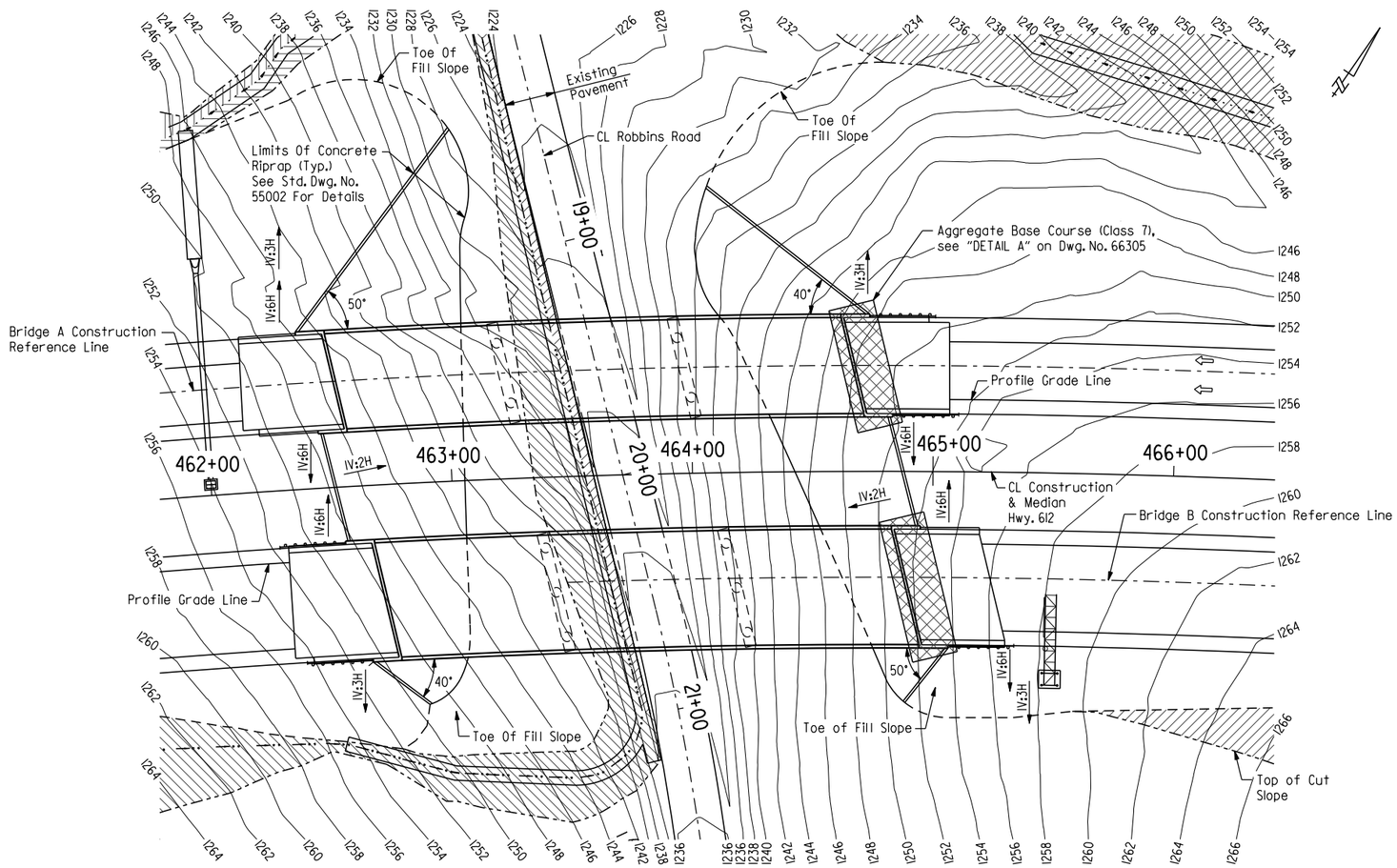

LOCATION SKETCH
Scale: 1"=30'-0"

STATE OF ARKANSAS
LICENSED PROFESSIONAL ENGINEER
No.21243
COLTON S. WYLIE
Digitally Signed 07/28/2023
BRIDGE ENGINEER

SHEET 3 OF 5
LAYOUT OF BRIDGES
HIGHWAY 612 OVER ROBBINS ROAD
HWY. 412 - HWY. 112
(SPRINGDALE BYPASS) (F)
BENTON COUNTY
ROUTE SEC.
ARKANSAS STATE HIGHWAY COMMISSION
LITTLE ROCK, ARK.

DRAWN BY: CWT DATE: JUNE 2022 FILENAME: b012326m9_L3.dgn
CHECKED BY: JHR DATE: JUNE 2022 SCALE: 1"=30'
DESIGNED BY: WMM DATE: JUNE 2022
BRIDGE NO. A7620 & B7620 DRAWING NO. 66306

JEskinner 7/28/2023 12:56 PM
WORKSPACE: ARDOT Bridge
\\garverinc.local\data\Projects\2017\170766O - ARDOT 012326 Hwy 412 - Hwy 112\Drawings\b012326x9_SI03-GN.dgn
REVISED DATE:

DATE REVISED	DATE REVISED	FED. ROAD DIST. NO.	STATE	JOB NO.	SHEET NO.	TOTAL SHEETS
		6	ARK.	012326	518	838
		A7620 & B7620		LAYOUT		66307

(1) For Bents 1A & 4A:
Measured from Begin/End Bridge to a line radial to Bridge A Construction Reference Line at Begin/End Bridge.

For Bents 2A & 3A:
Measured from CL Bent to a line radial to Bridge A Construction Reference Line at CL Bent.

For Bents 1B & 4B:
Measured from Begin/End Bridge to a line radial to Bridge B Construction Reference Line at Begin/End Bridge.

For Bents 2B & 3B:
Measured from CL Bent to a line radial to Bridge B Construction Reference Line at CL Bent.

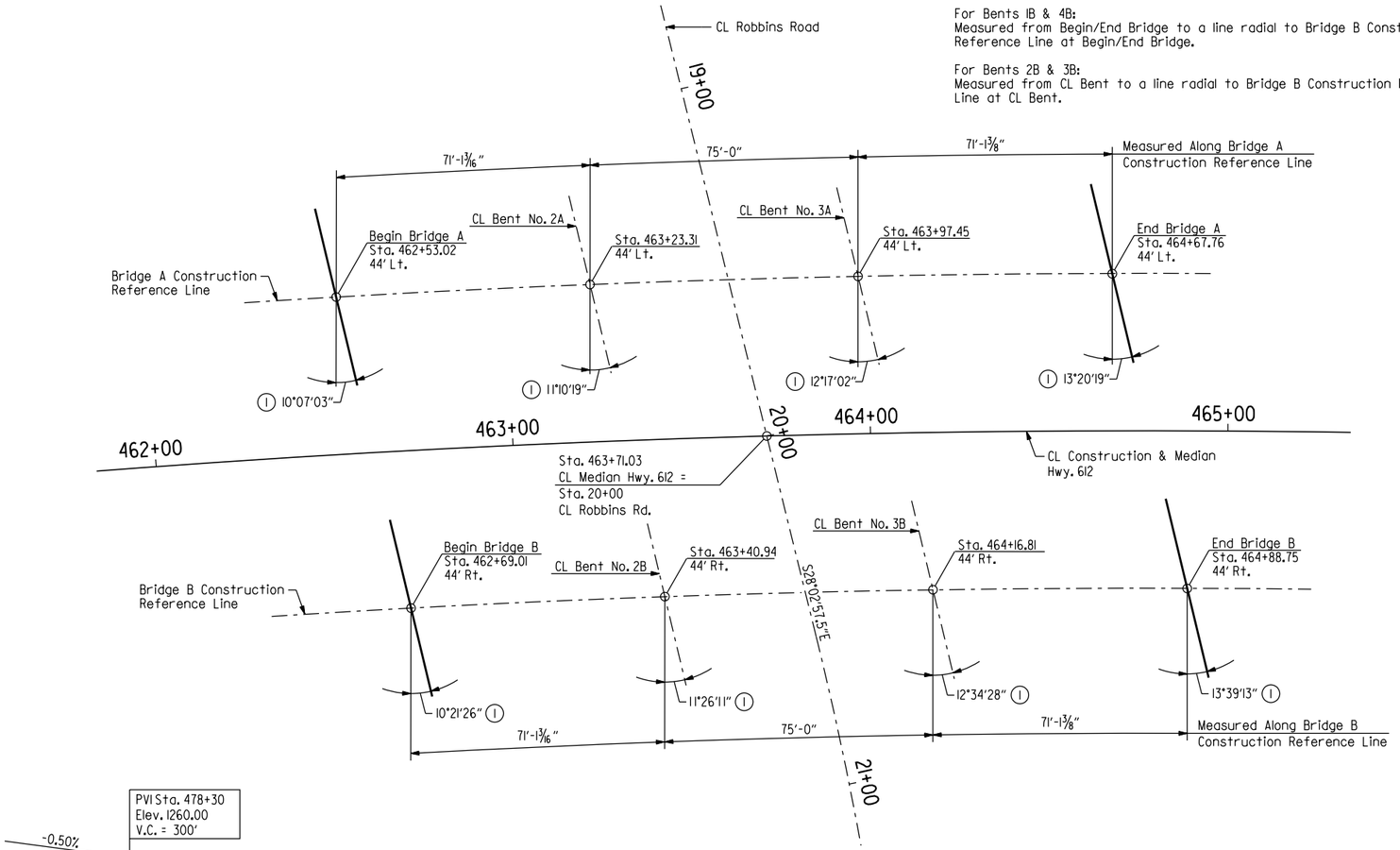

VERTICAL CURVE DATA

Highway 612
(Profile Grade Along
Inside Edge of Lane)

CL MEDIAN CURVE DATA

PI = 454+00.41
Δ = 92°18'35" Rt.
D = 1°30'00"
T = 3976.89'
L = 6153.98'
e = .054 Ft./Ft.
R = 3819.72'

STAKING DIAGRAM

NOTE:
Stationing for the project is along CL Median and CL Construction. Bridge Construction Reference Line is on a horizontal curve concentric to CL Median. The bent stations shown are determined by projecting a radial line from CL Median to Bridge Construction Reference Line. The offsets shown are measured along radial lines. The total bridge length, span lengths, and CL joint to beginning and end of bridge dimensions are measured along Bridge Construction Reference Line. Deck elevations are at Bridge Construction Reference Line. All bents are constructed along lines skewed from radial lines.

STATE OF ARKANSAS
LICENSED PROFESSIONAL ENGINEER
No. 21243
COLTON S. WYLIE
Digitally Signed 07/28/2023
BRIDGE ENGINEER

SHEET 4 OF 5
LAYOUT OF BRIDGES
HIGHWAY 612 OVER ROBBINS ROAD
HWY. 412 - HWY. 112
(SPRINGDALE BYPASS) (F)
BENTON COUNTY
ROUTE SEC.

ARKANSAS STATE HIGHWAY COMMISSION
LITTLE ROCK, ARK.

DRAWN BY: CWT DATE: JUNE 2022 FILENAME: b012326m9_L4.dgn
CHECKED BY: JHR DATE: JUNE 2022 SCALE: 1"=20'
DESIGNED BY: WMM DATE: JUNE 2022
BRIDGE NO. A7620 & B7620 DRAWING NO. 66307

JESkinner 7/28/2023 12:11:57 PM
WORKSPACE: ARDOT Bridge
\\garverinc.local\gdata\Projects\2017\17017660 - ARDOT 02326 Hwy 412 - Hwy 112\Drawings\b012326x9_S104-ST.dgn
REVISED DATE:

DATE REVISED	DATE REVISED	FED. ROAD DIST. NO.	STATE	JOB NO.	SHEET NO.	TOTAL SHEETS
		6	ARK.	012326	519	838
		A7620 & B7620		LAYOUT		66308

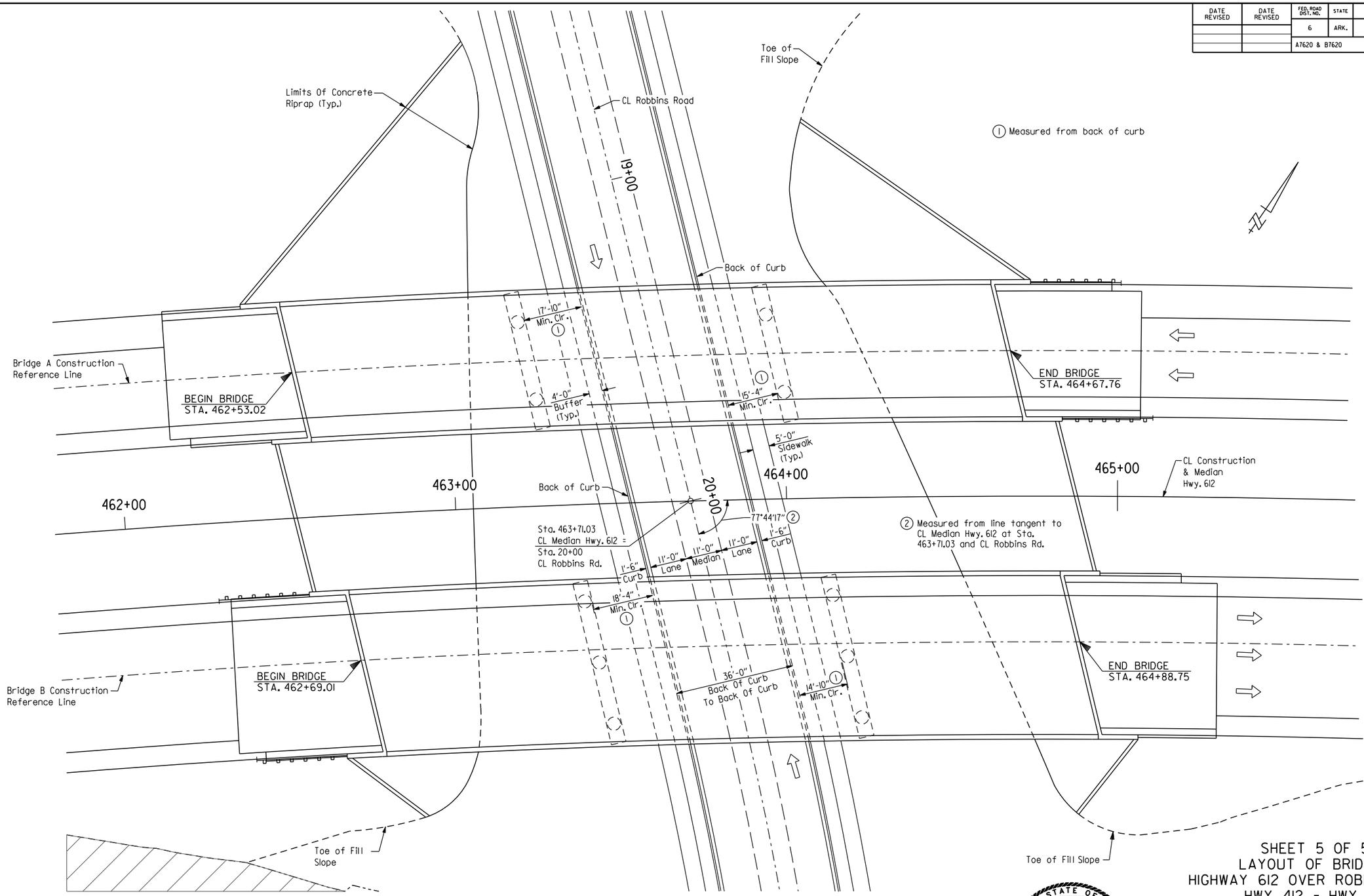

PLAN
(Showing Horizontal Clearances With Future Improvements To Robbins Road)

STATE OF ARKANSAS
LICENSED PROFESSIONAL ENGINEER
No.21243
COLTON S. WYLIE

Digitally Signed 07/28/2023
BRIDGE ENGINEER

SHEET 5 OF 5
LAYOUT OF BRIDGES
HIGHWAY 612 OVER ROBBINS ROAD
HWY. 412 - HWY. 112
(SPRINGDALE BYPASS) (F)
BENTON COUNTY
ROUTE SEC.
ARKANSAS STATE HIGHWAY COMMISSION
LITTLE ROCK, ARK.

DRAWN BY: CWT DATE: JUNE 2022 FILENAME: b012326m9_L5.dgn
CHECKED BY: JHR DATE: JUNE 2022 SCALE: 1"=15'
DESIGNED BY: WMM DATE: JUNE 2022
BRIDGE NO. A7620 & B7620 DRAWING NO. 66308

JEskinner 7/28/2023 12:57 PM
WORKSPACE: ARDOT Bridge
\\garverinc.local\gdata\Projects\2017\17017660 - ARDOT 012326 Hwy 412 - Hwy 112\Drawings\b012326x9_SI05-FU.dgn
REVISED DATE:

DATE REVISED	DATE REVISED	FED. ROAD DIST. NO.	STATE	JOB NO.	SHEET NO.	TOTAL SHEETS
		6	ARK.	012326	520	838
		A7620		END BENT DETAILS		66309

(1) Wingwalls and rails shall be constructed on arcs concentric to CL Bridge A

(2) Measured to CL Joint

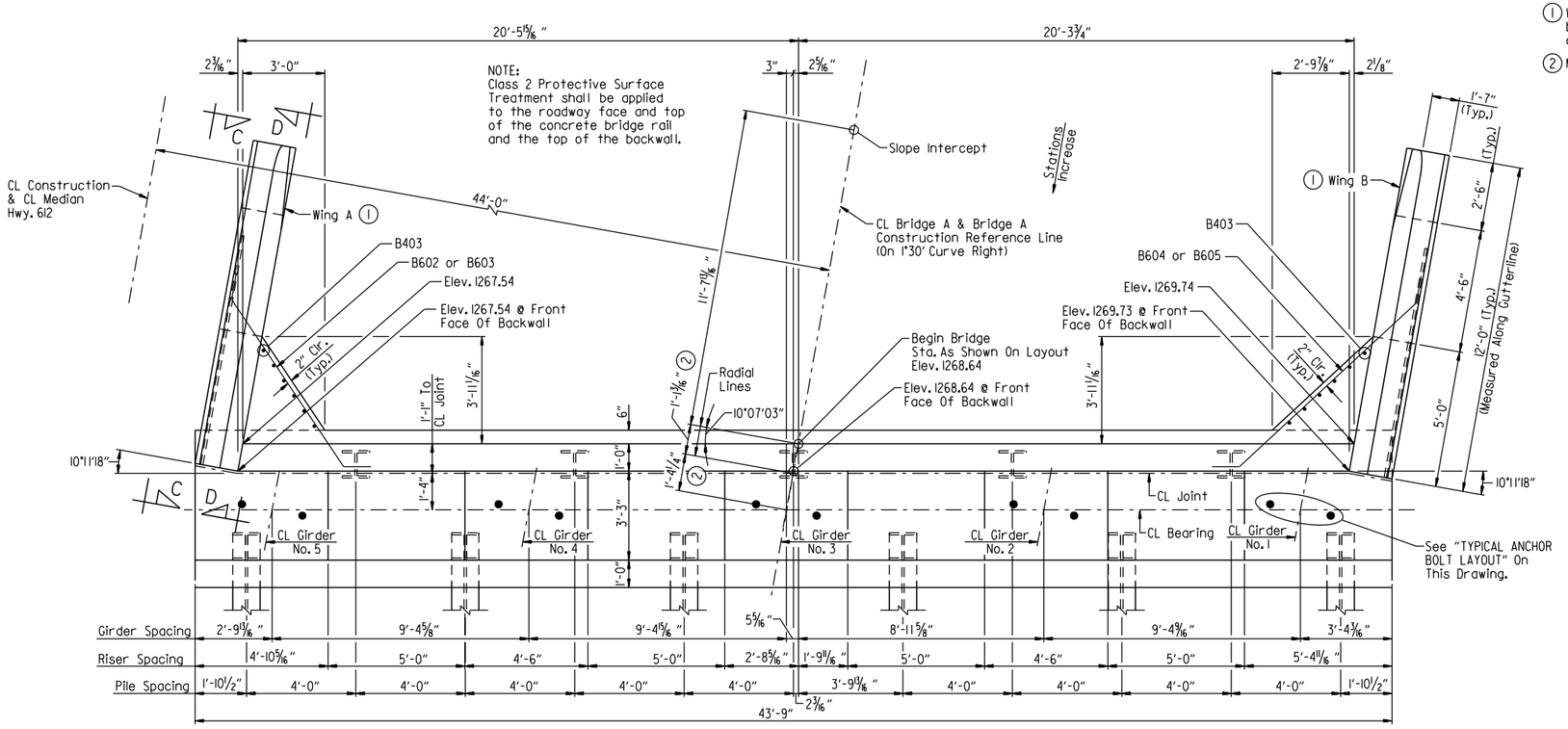

PLAN - END BENT NO. 1A

Scale: 3/8" = 1'-0"

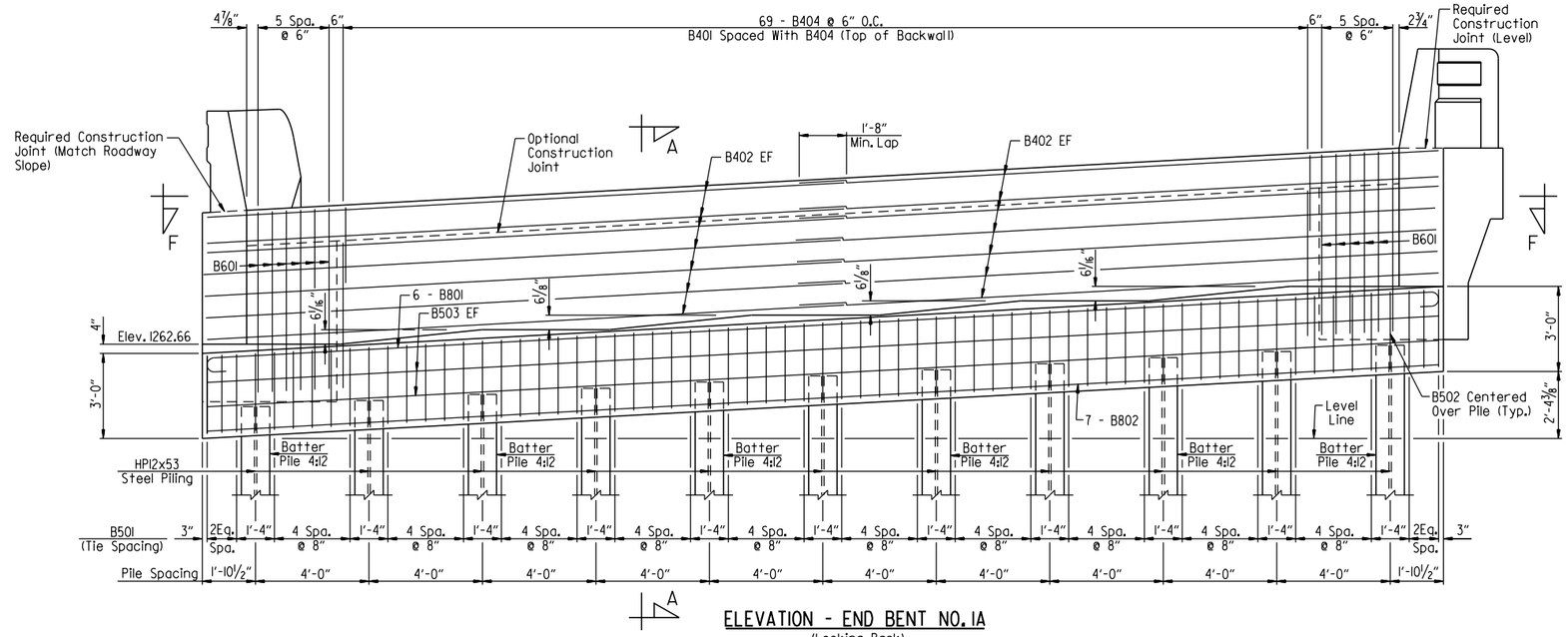

ELEVATION - END BENT NO. 1A

(Looking Back)
Scale: 3/8" = 1'-0"

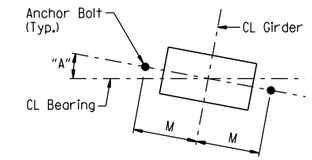

TYPICAL ANCHOR BOLT LAYOUT

No Scale

GENERAL NOTES

Concrete shall be Class "S" with a minimum 28 day compressive strength f'c = 3,500 psi and shall be poured in the dry. All exposed corners shall be chamfered 3/4" unless otherwise noted.

All reinforcing steel shall be Grade 60 (yield strength = 60,000 psi) conforming to AASHTO M 31 or M322 Type A, with mill test reports.

Class 3 Textured Coating Finish shall be applied to bridge surfaces as specified in Special Provision "TEXTURED COATING FINISH" and in accordance with Subsection 802.19(b)(3).

Structural steel in end bents shall be ASTM A709, Gr. 50W and shall be paid for as "STRUCTURAL STEEL IN BEAM SPANS (ASTM A709, GR. 50W)".

Top reinforcing bars in cap shall be properly placed to avoid interference with anchor bolts or sheet metal sleeves.

For additional information, see LAYOUT.

NOTES:
For details of elastomeric bearing, dimension M and anchor bolts, see Dwg. No. 66318.

For "SECTION A-A", "VIEW C-C" & "VIEW D-D", see Dwg. No. 66313.

For "BAR LIST", "BAR BENDING DIAGRAM" & "VIEW F-F", see Dwg. No. 66314.

LEGEND

EF = Each Face

TABLE OF VARIABLES

Bent No.	Girder No.	"A"
1A	1	10°36'05"
	2	10°39'10"
	3	10°39'10"
	4	10°39'10"
	5	10°42'17"
4A	1	12°44'28"
	2	12°48'11"
	3	12°48'11"
	4	12°48'11"
	5	12°51'56"

STATE OF ARKANSAS
LICENSED PROFESSIONAL ENGINEER
No. 21243
COLTON S. WYLIE
Digitally Signed 07/28/2023
BRIDGE ENGINEER

SHEET 1 OF 6
DETAILS OF END BENTS
HIGHWAY 612 OVER ROBBINS ROAD

ROUTE SEC.

ARKANSAS STATE HIGHWAY COMMISSION

LITTLE ROCK, ARK.

DRAWN BY: HEW DATE: SEPT. 2011 FILENAME: b012326a9_al.dgn
CHECKED BY: AJK DATE: APR. 2012 SCALE: AS SHOWN
DESIGNED BY: JES DATE: SEPT. 2011

BRIDGE NO. A7620 DRAWING NO. 66309

JESkinner 7/28/2023 12:11:58 PM
WORKSPACE: ARDOT Bridge
\\garverinc.local\gdata\Projects\20I7\I7017660 - ARDOT 012326 Hwy 412 - Hwy 112\Drawings\b012326a9_S201-AB.dgn
REVISED DATE:

DATE REVISED	DATE REVISED	FED. ROAD DIST. NO.	STATE	JOB NO.	SHEET NO.	TOTAL SHEETS
		6	ARK.	012326	521	838
		A7620		END BENT DETAILS		66310

(1) Wingwalls and rails shall be constructed on arcs concentric to CL Bridge A

(2) Measured to CL Joint

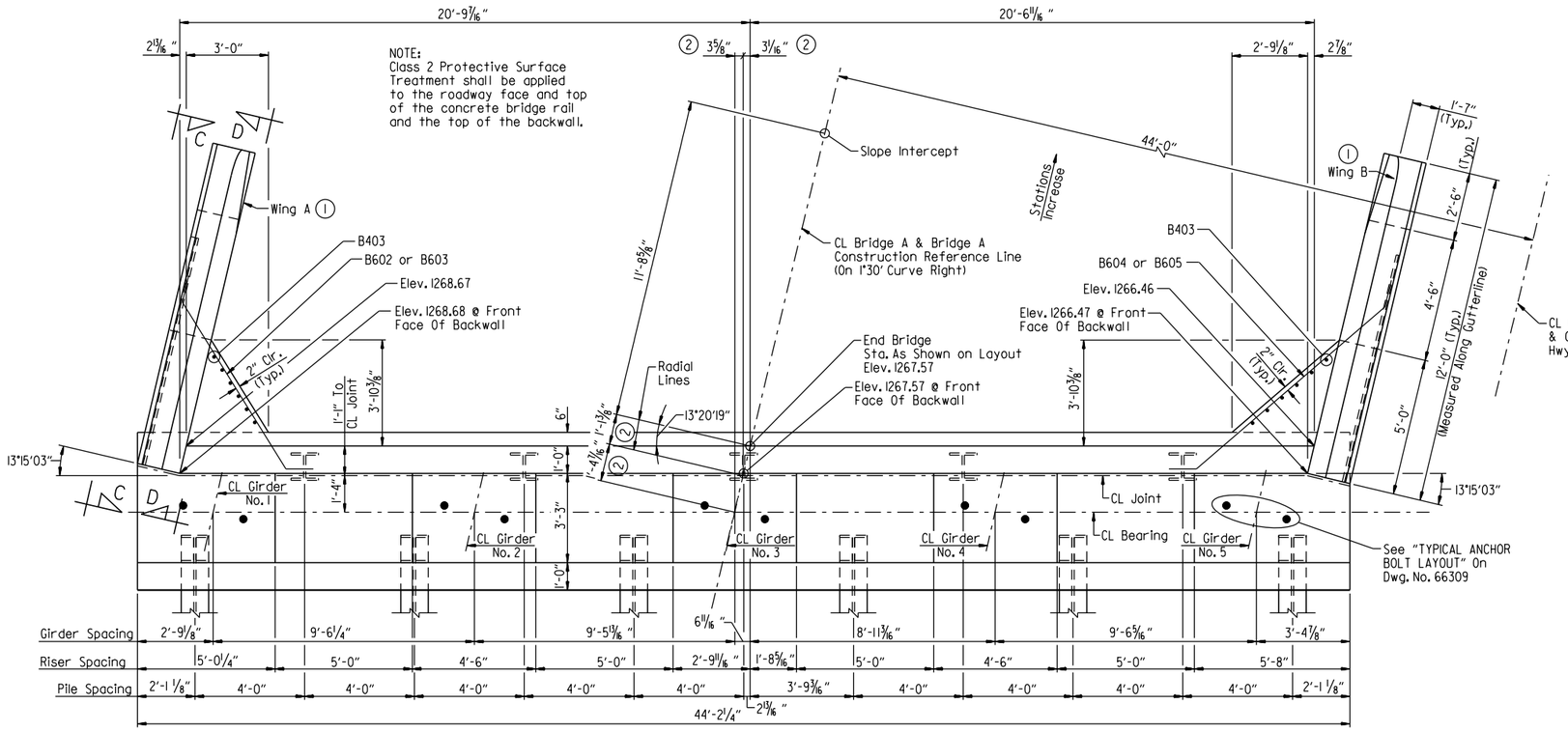

PLAN - END BENT NO. 4A

Scale: 3/8" = 1'-0"

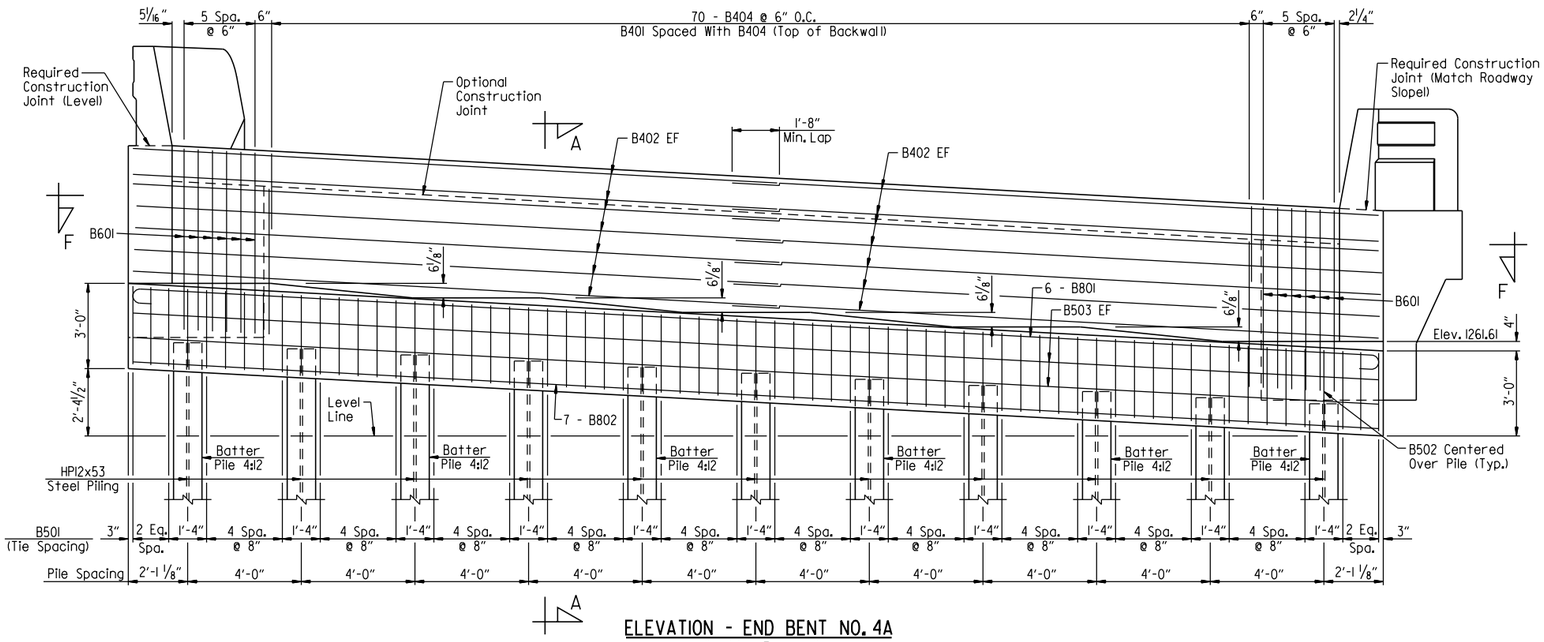

ELEVATION - END BENT NO. 4A

(Looking Forward)
Scale: 3/8" = 1'-0"

LEGEND

EF = Each Face

NOTES:
For "BAR LIST", "BAR BENDING DIAGRAMS" & "VIEW F-F", see Dwg. No. 66314.

For "GENERAL NOTES", see Dwg. No. 66309.

For "SECTION A-A", "VIEW C-C" & "VIEW D-D", see Dwg. No. 66313.

For details of elastomeric bearing and anchor bolts, see Dwg. No. 66318.

STATE OF ARKANSAS
LICENSED PROFESSIONAL ENGINEER
No. 21243
COLTON S. WYLIE
Digitally Signed 07/28/2023
BRIDGE ENGINEER

SHEET 2 OF 6
DETAILS OF END BENTS
HIGHWAY 612 OVER ROBBINS ROAD

ROUTE SEC.

ARKANSAS STATE HIGHWAY COMMISSION

LITTLE ROCK, ARK.

DRAWN BY: HEW DATE: SEPT. 2011 FILENAME: b012326a9_a2.dgn
CHECKED BY: AJK DATE: APR. 2012 SCALE: AS SHOWN
DESIGNED BY: JES DATE: SEPT. 2011

BRIDGE NO. A7620 DRAWING NO. 66310

JESkinner 7/28/2023 12:11:58 PM
WORKSPACE: ARDOT Bridge
\\garverinc.local\gdata\Projects\2017\17017660 - ARDOT 012326 Hwy 412 - Hwy 112\Drawings\b012326a9_S202-AB.dgn
REVISED DATE:

DATE REVISED	DATE REVISED	FED. ROAD DIST. NO.	STATE	JOB NO.	SHEET NO.	TOTAL SHEETS
		6	ARK.	012326	522	838
		B7620	END BENT DETAILS			66311

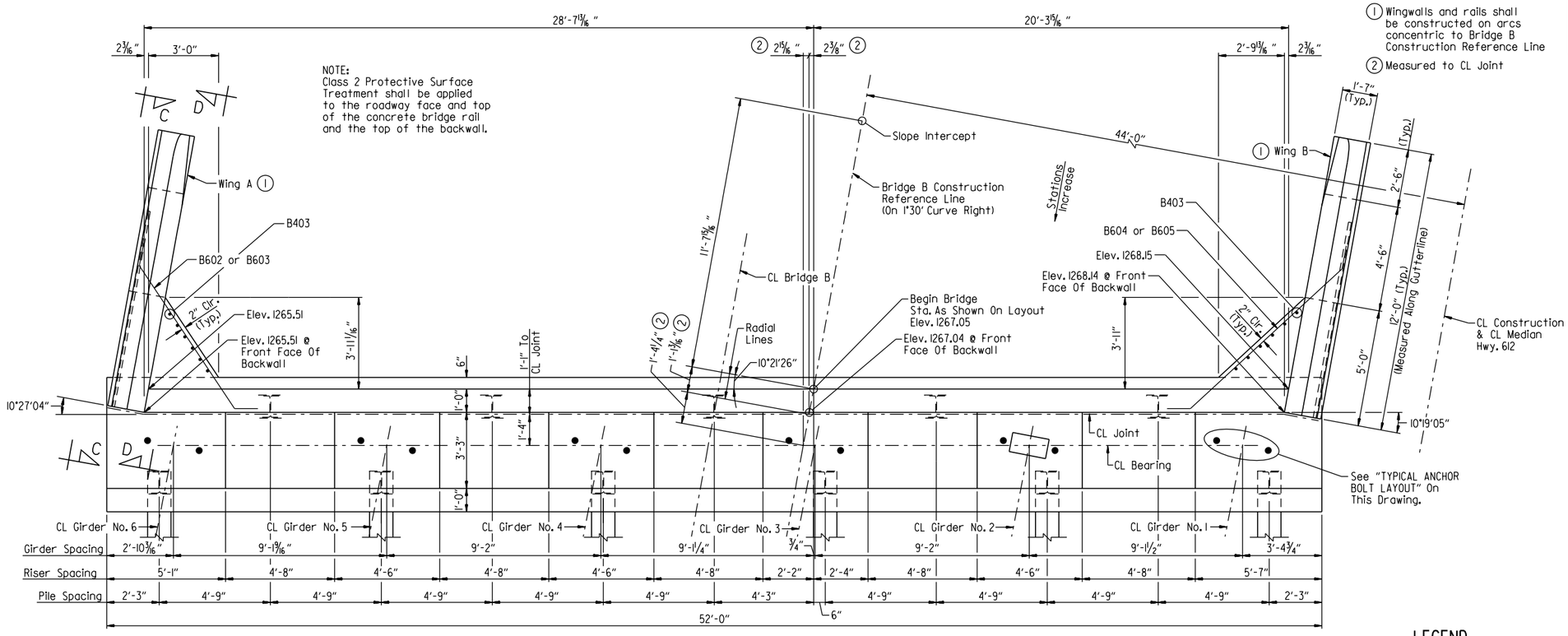

PLAN - END BENT NO. 1B

Scale: 3/8" = 1'-0"

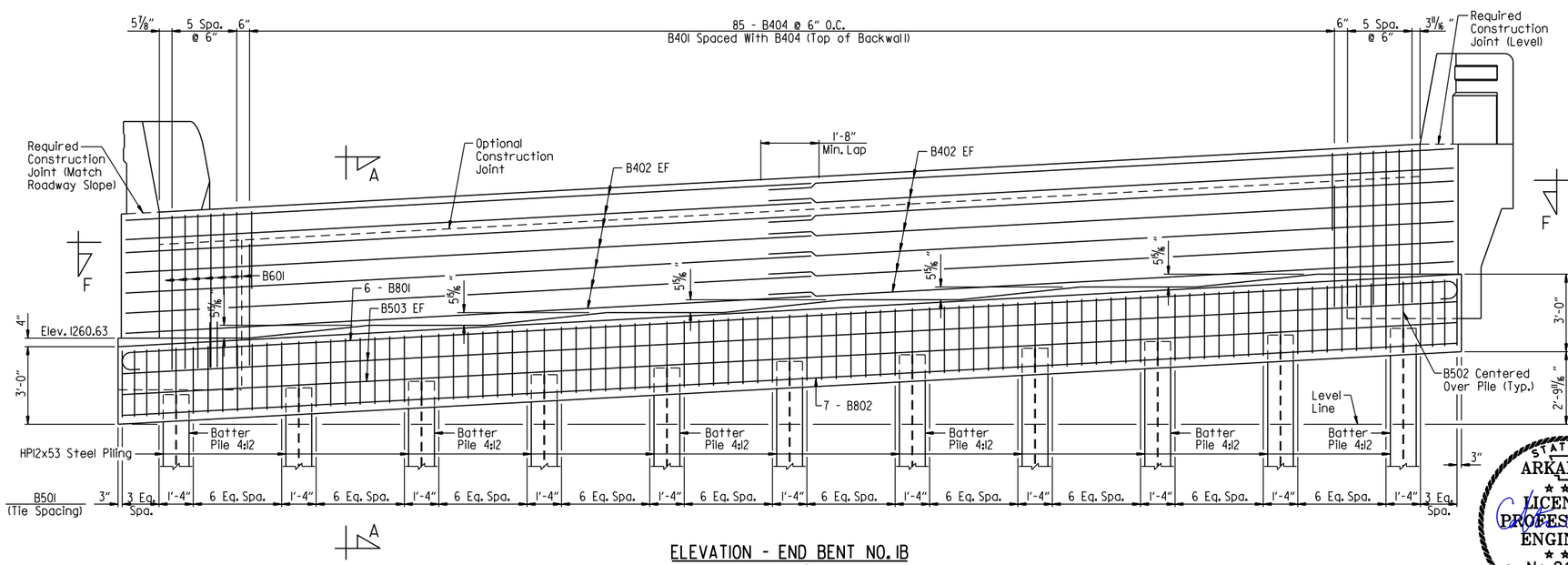

ELEVATION - END BENT NO. 1B

(Looking Back)
Scale: 3/8" = 1'-0"

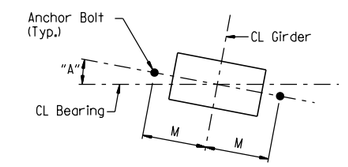

TYPICAL ANCHOR BOLT LAYOUT

No Scale

NOTES:
For GENERAL NOTES, see Dwg. No. 66309.

For "SECTION A-A", "VIEW C-C" & "VIEW D-D", see Dwg. No. 66313.

For "BAR LIST", "BAR BENDING DIAGRAMS" & "VIEW F-F", see Dwg. No. 66314.

For details of elastomeric bearing, dimension M and anchor bolts, see Dwg. No. 66318.

LEGEND

EF = Each Face

TABLE OF VARIABLES		
Bent No.	Girder No.	"A"
1B	1	10°51'04"
	2	10°55'00"
	3	10°55'00"
	4	10°55'00"
	5	10°55'00"
	6	10°58'59"
4B	1	13°02'26"
	2	13°07'11"
	3	13°07'11"
	4	13°07'11"
	5	13°07'11"
	6	13°12'00"

STATE OF ARKANSAS
LICENSED PROFESSIONAL ENGINEER
No. 21243
COLTON S. WYLIE
Digitally Signed 07/28/2023
BRIDGE ENGINEER

SHEET 3 OF 6
DETAILS OF END BENTS
HIGHWAY 612 OVER ROBBINS ROAD

ROUTE SEC.

ARKANSAS STATE HIGHWAY COMMISSION

LITTLE ROCK, ARK.

DRAWN BY: CSW DATE: JAN. 2023 FILENAME: b012326b9_a3.dgn
CHECKED BY: JES DATE: MAR. 2023 SCALE: AS SHOWN
DESIGNED BY: CSW DATE: JAN. 2023

BRIDGE NO. B7620 DRAWING NO. 66311

JEskinner 7/28/2023 12:45:59 PM
WORKSPACE: ARDOT Bridge
\\garverinc.local\gdata\Projects\2017\17017660 - ARDOT 012326 Hwy 412 - Hwy 112\Drawings\b012326x9.5203-AB.dgn
REVISED DATE:

DATE REVISED	DATE REVISED	FED. ROAD DIST. NO.	STATE	JOB NO.	SHEET NO.	TOTAL SHEETS
		6	ARK.	012326	523	838
		B7620		END BENT DETAILS		66312

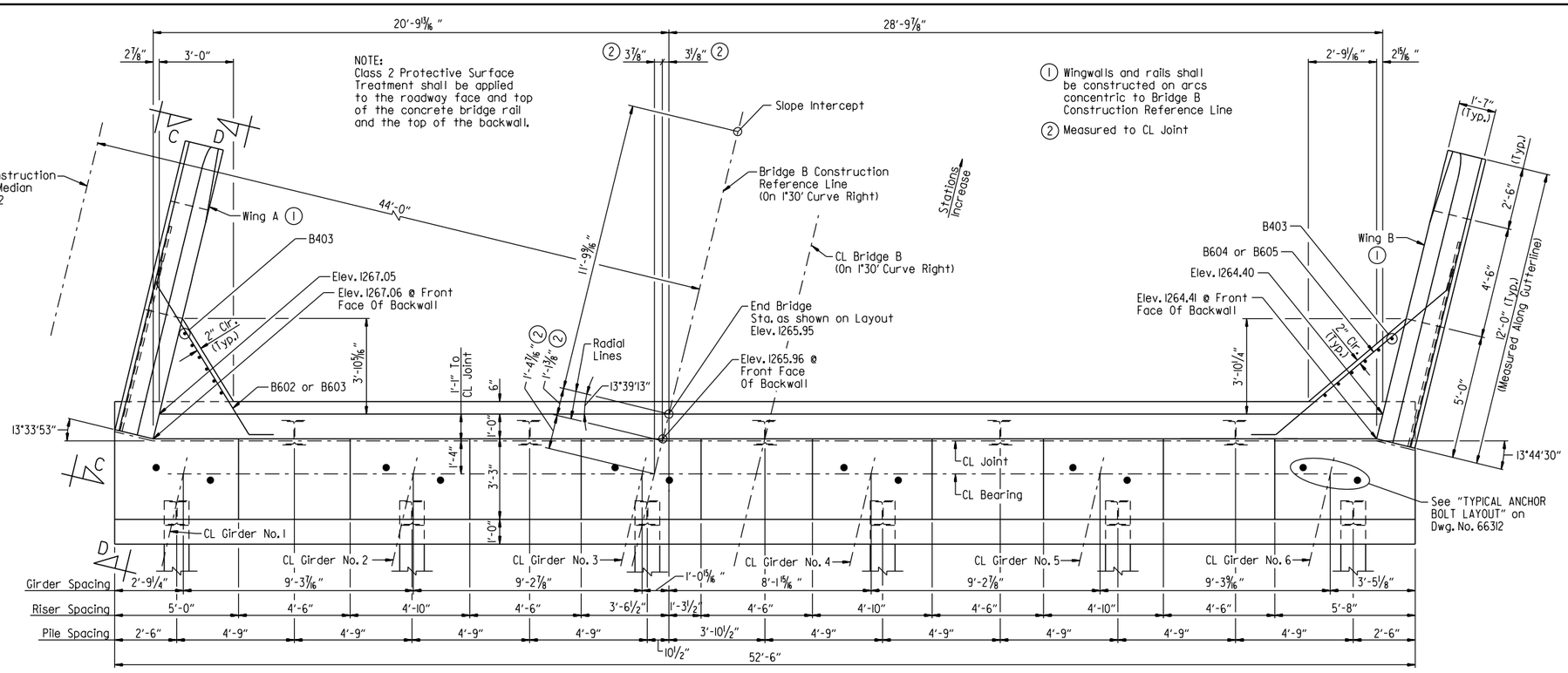

PLAN - END BENT NO. 4B
Scale: 3/8" = 1'-0"

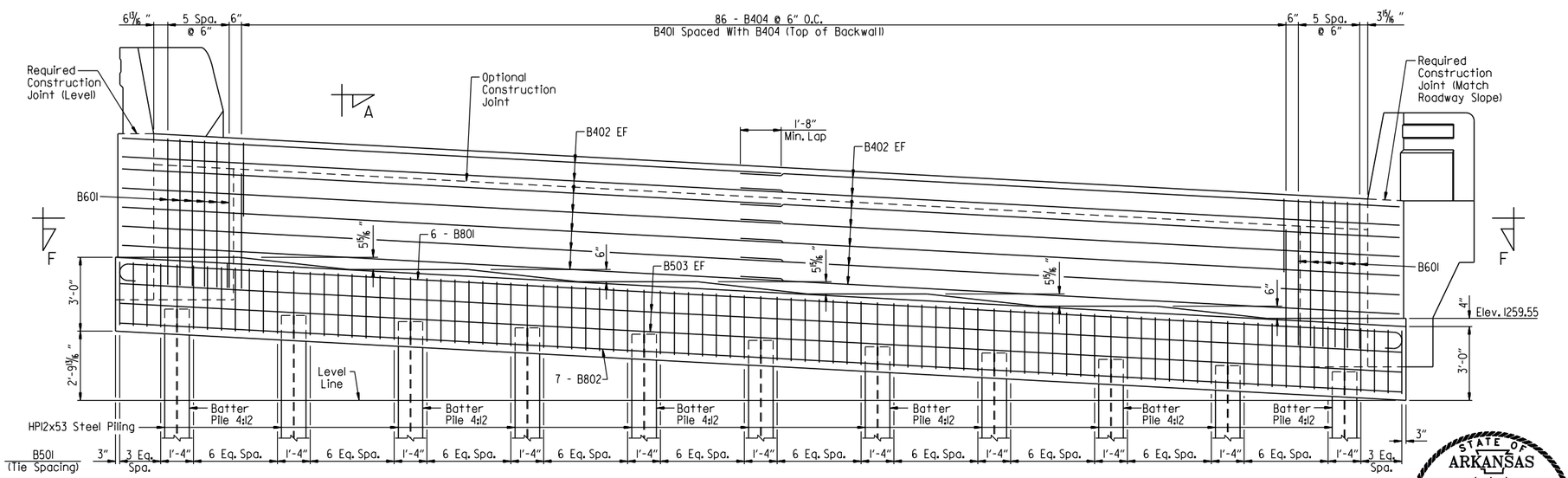

ELEVATION - END BENT NO. 4B
(Looking Forward)
Scale: 3/8" = 1'-0"

NOTES:
For GENERAL NOTES, see Dwg. No. 66309.

For "SECTION A-A", "VIEW C-C" & "VIEW D-D", see Dwg. No. 66313.

For "BAR LIST", "BAR BENDING DIAGRAMS" & "VIEW F-F", see Dwg. No. 66314.

For details of elastomeric bearing and anchor bolts, see Dwg. No. 66318.

LEGEND
EF = Each Face

STATE OF ARKANSAS
LICENSED PROFESSIONAL ENGINEER
No. 21243
COLTON S. WYLIE
Digitally Signed 07/28/2023
BRIDGE ENGINEER

SHEET 4 OF 6
DETAILS OF END BENTS
HIGHWAY 612 OVER ROBBINS ROAD
ROUTE SEC.
ARKANSAS STATE HIGHWAY COMMISSION
LITTLE ROCK, ARK.

DRAWN BY: CWT DATE: JAN. 2023 FILENAME: b012326b9_a4.dgn
CHECKED BY: JES DATE: MAR. 2023 SCALE: AS SHOWN
DESIGNED BY: CSW DATE: JAN. 2023
BRIDGE NO. B7620 DRAWING NO. 66312

JESkinner 7/28/2023 12:32:03 PM
WORKSPACE: ARDOT Bridge
L:\2017\17017660 - ARDOT 012326 Hwy 412 - Hwy 112\Drawings\b012326x9_S204-AB.dgn
REVISED DATE:

DATE REVISED	DATE REVISED	FED. ROAD DIST. NO.	STATE	JOB NO.	SHEET NO.	TOTAL SHEETS
		6	ARK.	012326	524	838
		A7620 & B7620		END BENT DETAILS		66313

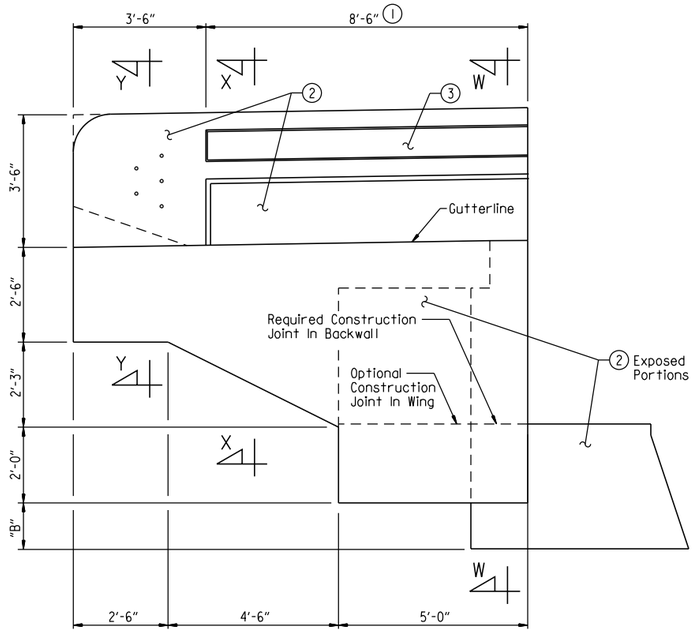

VIEW C-C
Scale: 1/2" = 1'-0"

LEGEND
EF = Each Face
U.N.O. = Unless Noted Otherwise

(1) See "BRIDGE RAIL AESTHETIC DETAIL" on Dwg. No. 66333 for additional information.

(2) Class 3 Textured Coating Finish (Color = Light Brown, Color Chip No. 33522)

(3) Class 3 Textured Coating Finish (Color = Medium Brown, Color Chip No. 30219)

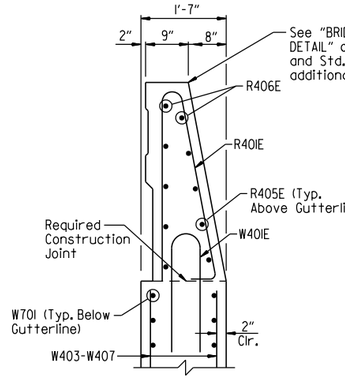

SECTION X-X
Scale: 3/4" = 1'-0"

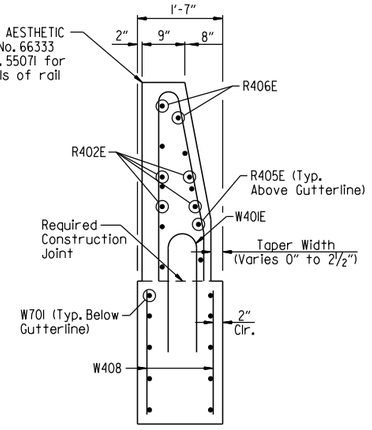

SECTION Y-Y
Scale: 3/4" = 1'-0"

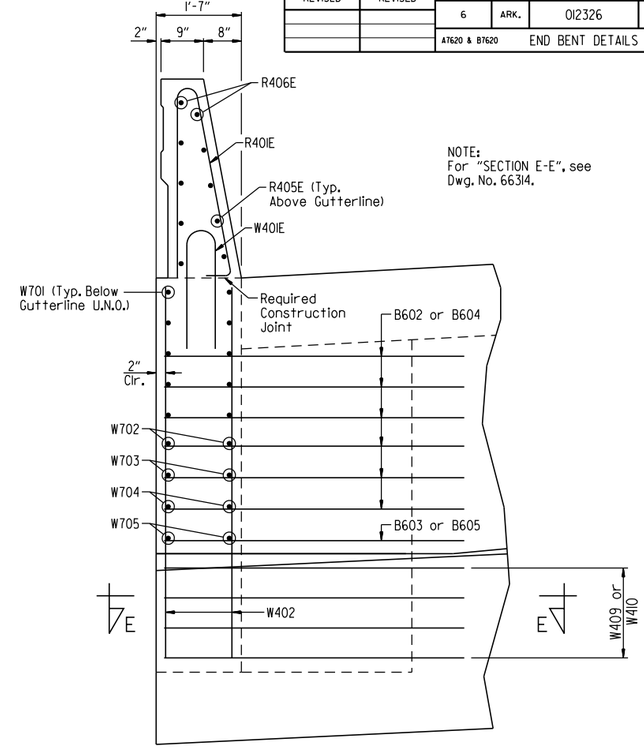

NOTE:
For "SECTION E-E", see Dwg. No. 66314.

SECTION W-W
Scale: 3/4" = 1'-0"

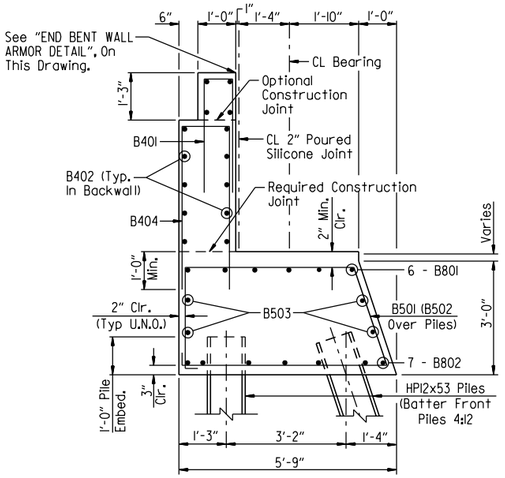

SECTION A-A
Scale: 1/2" = 1'-0"

TABLE OF VARIABLES			
Bent No.	Wing	Elev. "A"	"B"
1A	A	1267.57	1'-5 7/8"
	B	1269.82	1'-4 5/8"
4A	A	1268.65	1'-2 5/8"
	B	1266.38	1'-4 1/4"
1B	A	1265.57	1'-4"
	B	1268.20	1'-3 1/2"
4B	A	1267.00	1'-3 1/2"
	B	1264.35	1'-4"

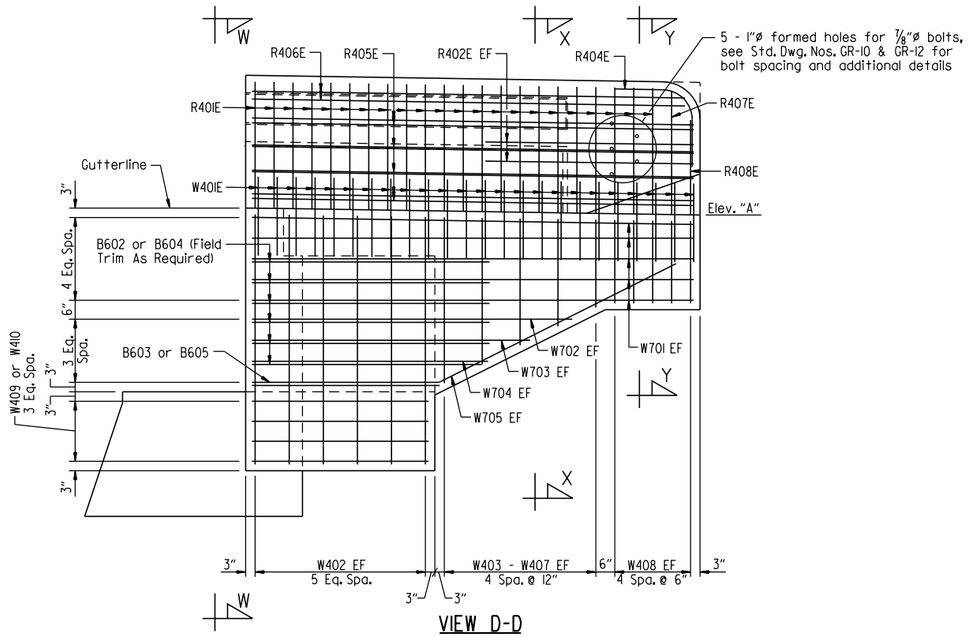

VIEW D-D
Scale: 1/2" = 1'-0"

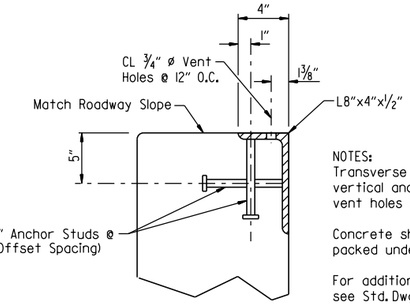

NOTES:
Transverse spacing between vertical anchor studs and vent holes shall be 6".

Concrete shall be hand packed under joint armor.

For additional joint details, see Std. Dwg. No. 55008.

END BENT WALL ARMOR DETAIL
No Scale

Note:
The backwall above the required construction joint shall not be poured until the girders are in place. Backwall may be placed prior to placing the adjacent concrete deck only if the optional backwall construction joint is used. No heavy construction equipment shall be allowed directly behind the backwall until the concrete for the span has been completed. See DETAILS FOR BLOCKING EXPANSION JOINT DEVICE on Std. Dwg. No. 55008 for additional information.

STATE OF ARKANSAS
LICENSED PROFESSIONAL ENGINEER
No. 21243
COLTON S. WYLIE
Digitally Signed 07/28/2023
BRIDGE ENGINEER

SHEET 5 OF 6
DETAILS OF END BENTS
HIGHWAY 612 OVER ROBBINS ROAD
ROUTE SEC.

ARKANSAS STATE HIGHWAY COMMISSION
LITTLE ROCK, ARK.

DRAWN BY: HEW DATE: SEPT. 2011 FILENAME: b012326m9_a5.dgn
CHECKED BY: AJK DATE: APR. 2012 SCALE: AS SHOWN
DESIGNED BY: JES DATE: SEPT. 2011
BRIDGE NO. A7620 & B7620 DRAWING NO. 66313

JESkinner 7/28/2023 12:12:00 PM
WORKSPACE: ARDOT Bridge
\\garverinc.local\gdata\Projects\2017\17017660 - ARDOT 012326 Hwy 412 - Hwy 112\Drawings\b012326x9_5205-MD.dgn
REVISED DATE:

DATE REVISED	DATE REVISED	FED. ROAD DIST. NO.	STATE	JOB NO.	SHEET NO.	TOTAL SHEETS
		6	ARK.	012326	525	838
		A7620 & B7620		END BENT DETAILS		66314

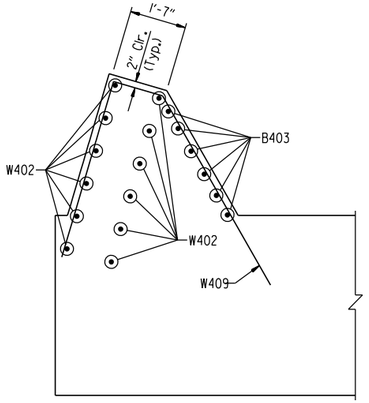

SECTION E-E (WING A)
Scale: 1/2" = 1'-0"

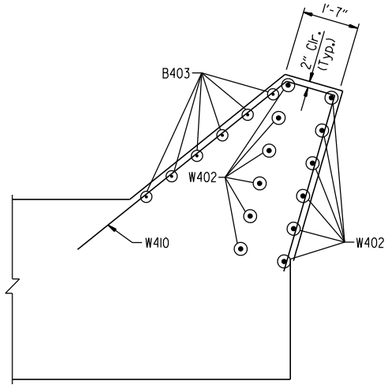

SECTION E-E (WING B)
Scale: 1/2" = 1'-0"

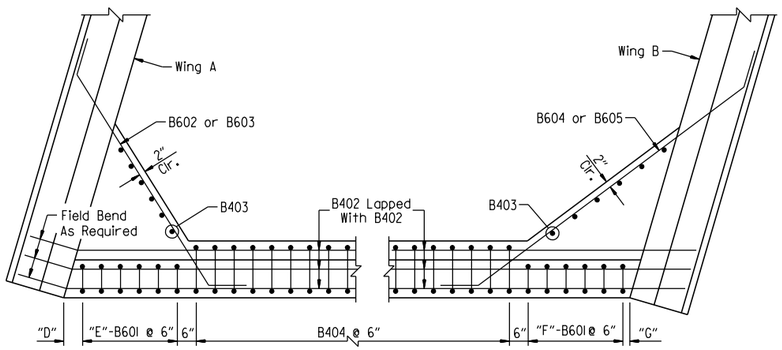

VIEW F-F
Scale: 1/2" = 1'-0"

TABLE OF VARIABLES				
Bent No.	"D"	"E"	"F"	"G"
1A	4 7/8"	6"	6"	2 3/4"
4A	5 1/16"	6"	6"	2 1/4"
1B	5 7/8"	6"	6"	3 11/16"
4B	6 1/16"	6"	6"	3 5/16"

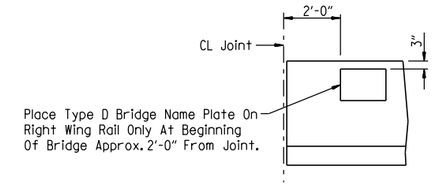

VIEW SHOWING LOCATION OF NAME PLATE
Scale: 1/2" = 1'-0"

BAR LIST - BRIDGE A

	MARK	NO. REQ'D.	LENGTH	"A"	"B"	PIN DIA.
BENT NO. 1A	B401	69	6'-6"	8"		2"
	B402	28	22'-7"			Str.
	B403	12	5'-1"			Str.
	B404	69	10'-6"	1'-2"	4'-9"	2"
	B501	56	15'-7"			2 1/2"
	B502	11	9'-6 1/2"			2 1/2'
	B503	4	43'-5"			Str.
	B601	12	12'-4"	8"	6'-0"	4 1/2"
	B602	6	9'-4"	7'-4"		4 1/2"
	B603	1	6'-9"	5'-9"		4 1/2"
	B604	6	10'-9"	8'-9"		4 1/2"
	B605	1	7'-11"	6'-11"		4 1/2"
	B801	6	45'-4"	43'-6"		6"
	B802	7	43'-6"			Str.
BENT NO. 4A	B401	70	6'-6"	8"	3'-0"	2"
	B402	28	22'-10"			Str.
	B403	12	5'-1"			Str.
	B404	70	10'-6"	1'-2"	4'-9"	2"
	B501	56	15'-7"			2 1/2"
	B502	11	9'-6 1/2"			2 1/2'
	B503	4	43'-11"			Str.
	B601	12	12'-4"	8"	6'-0"	4 1/2"
	B602	6	9'-1"	7'-1"		4 1/2"
	B603	1	6'-7"	5'-7"		4 1/2"
	B604	6	11'-0"	9'-0"		4 1/2"
	B605	1	8'-1"	7'-1"		4 1/2"
	B801	6	45'-9"	43'-11"		6"
	B802	7	43'-11"			Str.
COMMON BARS	R401E	44	7'-6"			3"
	R402E	8	5'-6"			Str.
	R404E	2	3'-8"			8 1/2"
	R405E	16	11'-8"			Str.
	R406E	4	11'-5"			Str.
	R407E	2	6'-8"			3"
	R408E	2	5'-1"			3"
	W401E	24	4'-7"			6"
	W402	24	6'-4"			Str.
	W403 To W407	2 ea.	4'-4" to 2'-3"			Str.
	W408	10	2'-1"			Str.
	W409	4	11'-9"			3"
	W410	4	13'-1"			3"
	W701	20	11'-8"			Str.
	W702	4	8'-5 1/2"			Str.
	W703	4	7'-4"			Str.
	W704	4	6'-2"			Str.
	W705	4	11'-10"			5 1/4"

BAR LIST - BRIDGE B

	MARK	NO. REQ'D.	LENGTH	"A"	"B"	PIN DIA.
BENT NO. 1B	B401	85	6'-6"	8"	3'-0"	2"
	B402	28	26'-11"			Str.
	B403	12	5'-1"			Str.
	B404	85	10'-6"	1'-2"	4'-9"	2"
	B501	78	15'-7"			2 1/2"
	B502	11	9'-6 1/2"			2 1/2'
	B503	4	51'-9"			Str.
	B601	12	12'-4"	8"	6'-0"	4 1/2"
	B602	6	9'-4"	7'-4"		4 1/2"
	B603	1	6'-9"	5'-9"		4 1/2"
	B604	6	10'-9"	8'-9"		4 1/2"
	B605	1	7'-11"	6'-11"		4 1/2"
	B801	6	53'-7"	51'-9"		6"
	B802	7	51'-9"			Str.
BENT NO. 4B	B401	86	6'-6"	8"	3'-0"	2"
	B402	28	26'-10"			Str.
	B403	12	5'-1"			Str.
	B404	86	10'-6"	1'-2"	4'-9"	2"
	B501	78	15'-7"			2 1/2"
	B502	11	9'-6 1/2"			2 1/2'
	B503	4	52'-3"			Str.
	B601	12	12'-4"	8"	6'-0"	4 1/2"
	B602	6	9'-1"	7'-1"		4 1/2"
	B603	1	6'-6"	5'-6"		4 1/2"
	B604	6	11'-0"	9'-0"		4 1/2"
	B605	1	8'-2"	7'-2"		4 1/2"
	B801	6	54'-1"	52'-3"		6"
	B802	7	52'-3"			Str.
COMMON BARS	R401E	44	7'-6"			3"
	R402E	8	5'-6"			Str.
	R404E	2	3'-8"			8 1/2"
	R405E	16	11'-8"			Str.
	R406E	4	11'-5"			Str.
	R407E	2	6'-8"			3"
	R408E	2	5'-1"			3"
	W401E	24	4'-7"			6"
	W402	24	6'-4"			Str.
	W403 To W407	2 ea.	4'-4" to 2'-3"			Str.
	W408	10	2'-1"			Str.
	W409	4	11'-9"			3"
	W410	4	13'-1"			3"
	W701	20	11'-8"			Str.
	W702	4	8'-5 1/2"			Str.
	W703	4	7'-4"			Str.
	W704	4	6'-2"			Str.
	W705	4	11'-10"			5 1/4"

BAR BENDING DIAGRAMS

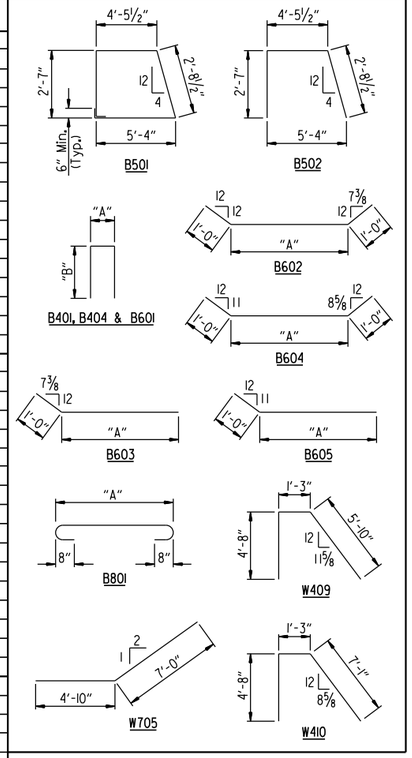



BRIDGE ENGINEER

SHEET 6 OF 6
DETAILS OF END BENTS
HIGHWAY 612 OVER ROBBINS ROAD
ROUTE SEC.
ARKANSAS STATE HIGHWAY COMMISSION
LITTLE ROCK, ARK.

DRAWN BY: CSW DATE: JAN. 2023 FILENAME: b012326m9_a6.dgn
CHECKED BY: JES DATE: APR. 2023 SCALE: AS SHOWN
DESIGNED BY: CSW DATE: JAN. 2023
BRIDGE NO. A7620 & B7620 DRAWING NO. 66314

JEskinner 7/28/2023 12:12:01 PM
WORKSPACE: ARDOT Bridge
\\garverinc.local\gdata\Projects\2017\17017660 - ARDOT 012326 Hwy 412 - Hwy 112\Drawings\b012326x9_5206-BL.dgn
REVISED DATE:

DATE REVISED	DATE REVISED	FED. ROAD DIST. NO.	STATE	JOB NO.	SHEET NO.	TOTAL SHEETS
		6	ARK.	012326	526	838
		A7620		INT. BENT DETAILS		66315

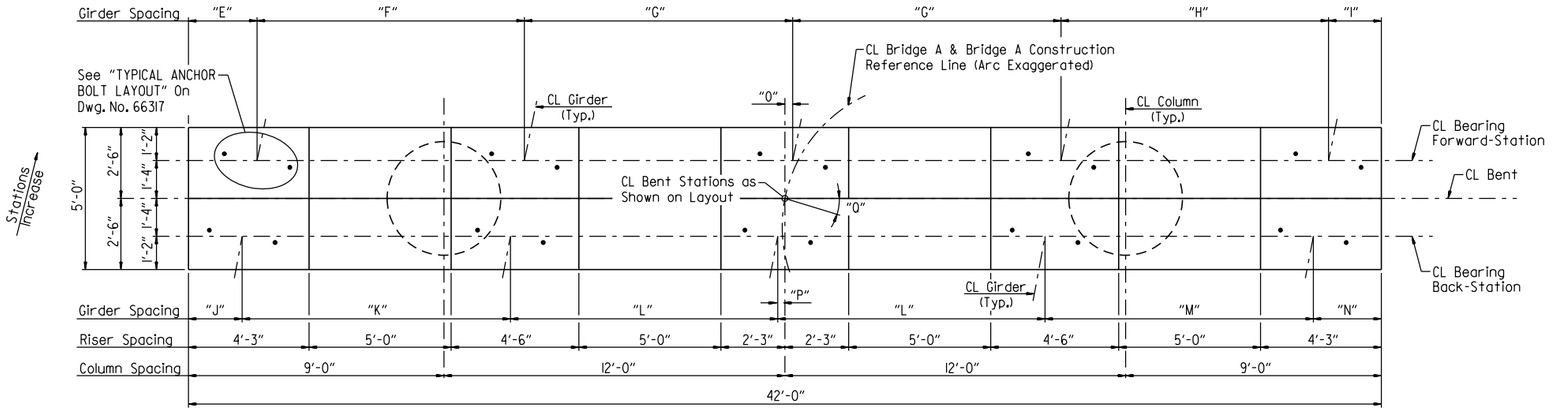

PLAN - BRIDGE A

Scale: 3/8" = 1'-0"

TABLE OF VARIABLES

Bent No.	Elev. "A"	Elev. "B"	"C"	"D"	"E"	"F"	"G"	"H"	"I"	"J"	"K"	"L"	"M"	"N"	"O"	"P"	"Q"	"R"	"U"	"V"	"W"
2A	1262.32	1225.82	27'-6"	36'-6"	2'-5 1/16"	9'-4 15/16"	9'-5 3/8"	9'-4 15/16"	1'-10 3/8"	1'-10 3/4"	9'-5 5/16"	9'-4 15/16"	9'-5 3/8"	2'-4 11/16"	3 5/16"	3"	11°10'19"	4'-0 3/8"	5'-6 3/8"	6 1/16"	6 1/16"
3A	1261.94	1225.94	27'-0"	36'-0"	2'-4 1/16"	9'-5 3/8"	9'-5 11/16"	9'-5 15/16"	1'-9 1/8"	1'-9 1/2"	9'-5 11/16"	9'-5 3/8"	9'-5 7/8"	2'-4 1/8"	3 5/8"	3 15/16"	12°17'02"	4'-0 1/2"	5'-6 1/2"	6 1/8"	6 1/8"

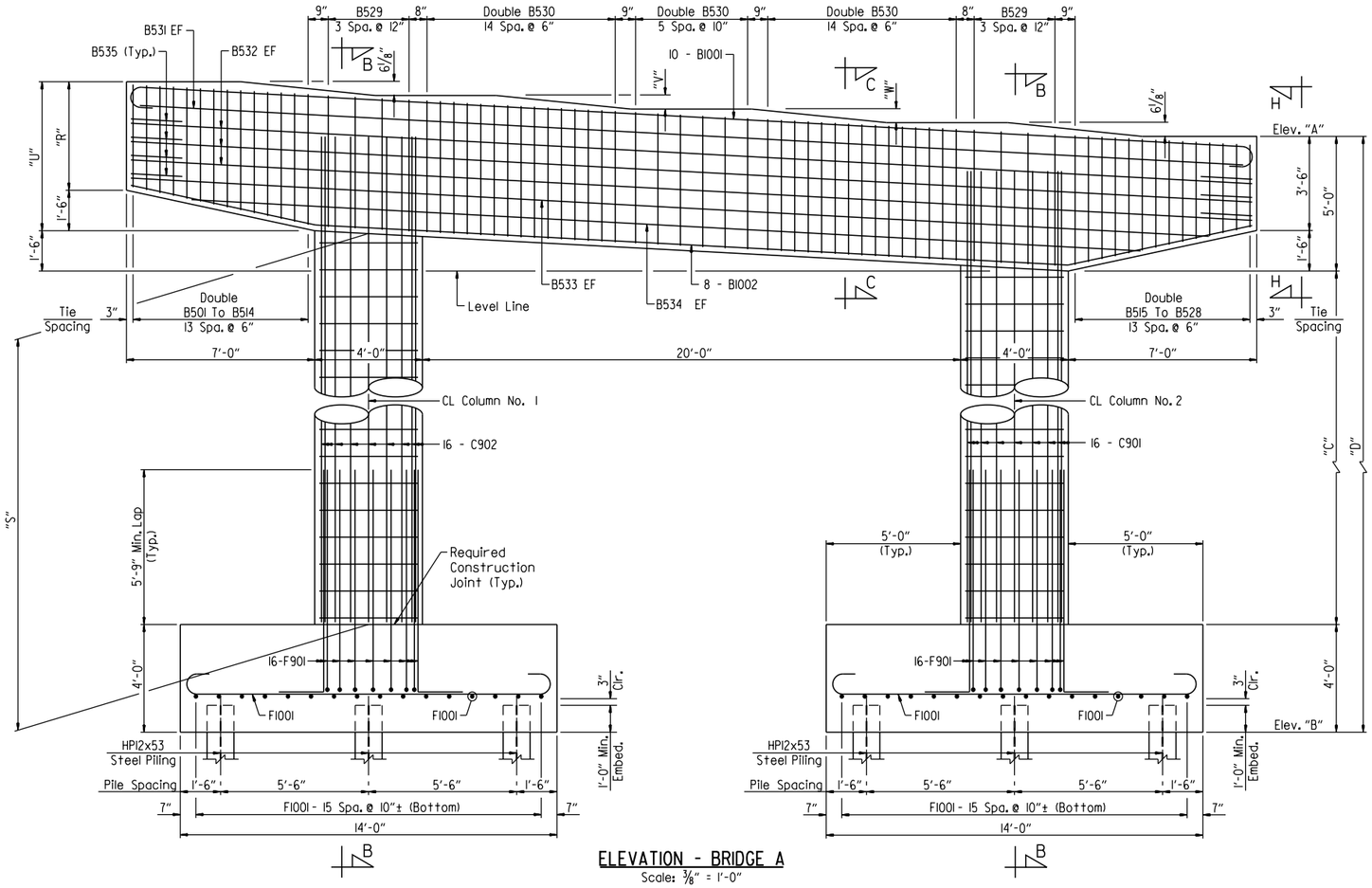

ELEVATION - BRIDGE A

Scale: 3/8" = 1'-0"

LEGEND

EF = Each Face

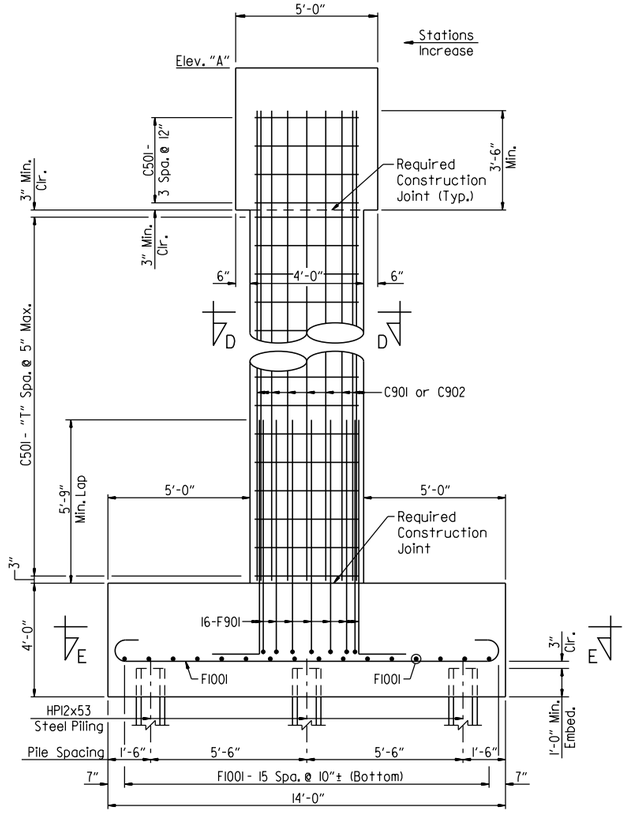

SECTION B-B

Scale: 3/8" = 1'-0"

NOTES:
For details of elastomeric bearing and anchor bolts, see Dwg. No. 66318.

For "GENERAL NOTES", "BAR LIST - BRIDGE A", "BAR BENDING DIAGRAM", "SECTION A-A", "SECTION C-C", "SECTION D-D", "SECTION E-E", & "VIEW H-H", see Dwg. No. 66317.

TABLE OF VARIABLES

Bent No.	Column	"S"	"T"
2A	No. 1	28'-10 5/8"	69
	No. 2	27'-7 1/4"	65
3A	No. 1	28'-4 5/8"	67
	No. 2	27'-1 1/4"	64

STATE OF ARKANSAS
LICENSED PROFESSIONAL ENGINEER
No. 21243
COLTON S. WYLIE
Digitally Signed 07/28/2023
BRIDGE ENGINEER

SHEET 1 OF 3
DETAILS OF INTERMEDIATE BENTS
HIGHWAY 612 OVER ROBBINS ROAD

ROUTE SEC.

ARKANSAS STATE HIGHWAY COMMISSION

LITTLE ROCK, ARK.

DRAWN BY: HEW DATE: SEPT. 2011 FILENAME: b012326a9_bi.dgn
CHECKED BY: AJK DATE: APR. 2012 SCALE: AS SHOWN
DESIGNED BY: JES DATE: SEPT. 2011

BRIDGE NO. A7620 DRAWING NO. 66315

JESkinner 7/28/2023 12:20:01 PM
WORKSPACE: ARDOT Bridge
\\garverinc.local\gdata\Projects\2017\17017660 - ARDOT 012326 Hwy 412 - Hwy 112\Drawings\b012326x9_S207-BE.dgn
REVISED DATE:

DATE REVISED	DATE REVISED	FED. ROAD DIST. NO.	STATE	JOB NO.	SHEET NO.	TOTAL SHEETS
		6	ARK.	012326	527	838
		B7620		INT. BENT DETAILS		66316

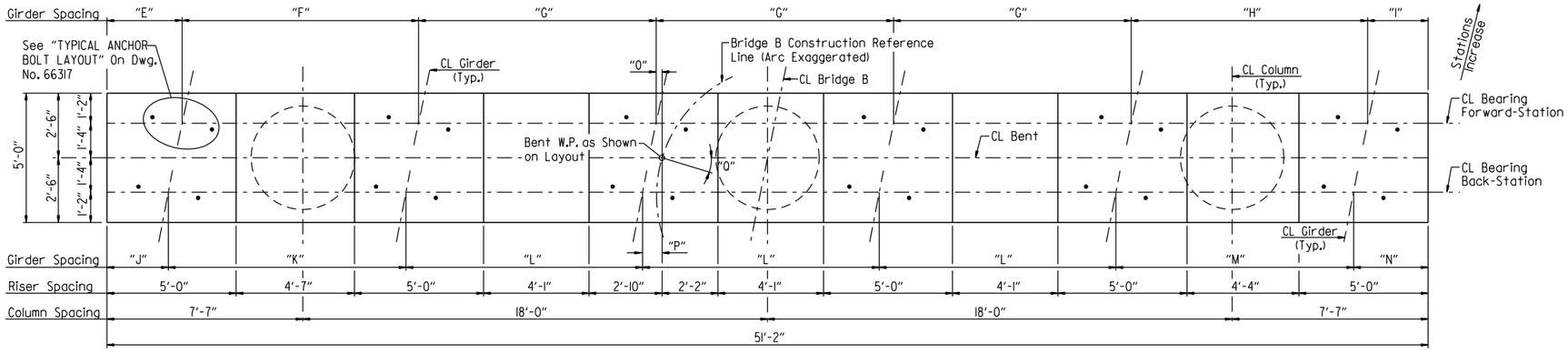

PLAN - BRIDGE B
Scale: 3/8" = 1'-0"

LEGEND
EF = Each Face

TABLE OF VARIABLES																	
Bent No.	Elev. "A"	Elev. "B"	"C"	"D"	"E"	"F"	"G"	"H"	"I"	"J"	"K"	"L"	"M"	"N"	"O"	"P"	"O"
2B	1260.28	1231.53	19'-9"	28'-9"	2'-10 5/16"	9'-1 13/16"	9'-2 7/16"	9'-1 7/8"	2'-4 1/16"	2'-4 1/2"	9'-2 7/16"	9'-2"	9'-2 1/2"	2'-10 9/16"	2 5/16"	9 1/8"	11°26'11"
3B	1259.89	1227.39	23'-6"	32'-6"	2'-10 1/8"	9'-2 5/16"	9'-2 1/8"	9'-2 3/8"	2'-2 9/16"	2'-3"	9'-2 7/8"	9'-2 1/16"	9'-3 1/16"	2'-9 3/4"	2 5/16"	9 1/16"	12°34'28"

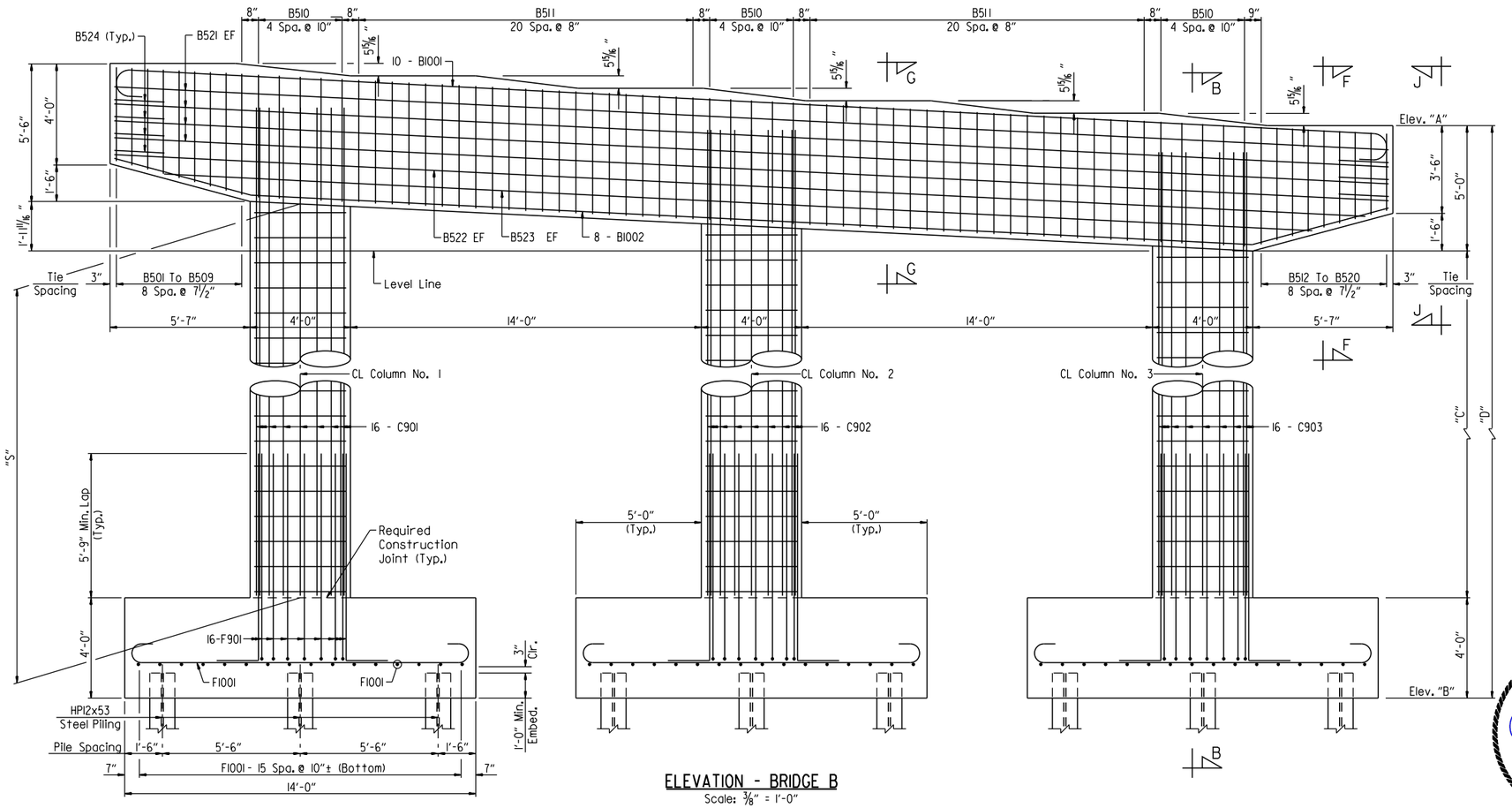

ELEVATION - BRIDGE B
Scale: 3/8" = 1'-0"

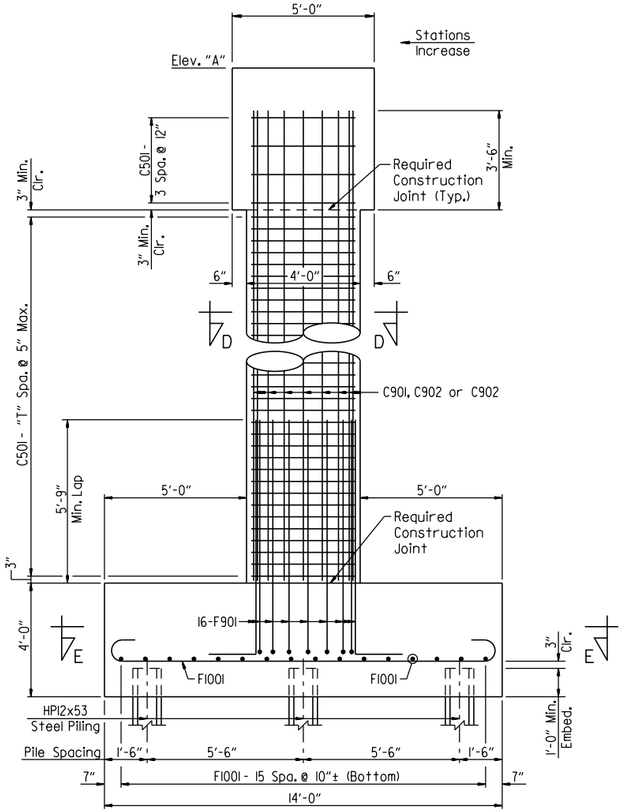

SECTION B-B
Scale: 3/8" = 1'-0"

TABLE OF VARIABLES			
Bent No.	Column	"S"	"T"
2B	No. 1	21'-7 1/2"	51
	No. 2	20'-8 7/8"	49
	No. 3	19'-10 5/16"	47
3B	No. 1	25'-4 1/2"	60
	No. 2	24'-5 7/8"	58
	No. 3	23'-7 5/16"	56

NOTES:
For details of elastomeric bearing and anchor bolts, see Dwg. No. 66318.

For "GENERAL NOTES", "BAR LIST - BRIDGE B", "BAR BENDING DIAGRAM", "SECTION D-D", "SECTION E-E", "SECTION F-F", "SECTION G-G", & "VIEW H-H", see Dwg. No. 66317.

STATE OF ARKANSAS
LICENSED PROFESSIONAL ENGINEER
No. 21243
COLTON S. WYLIE
Digitally Signed 07/28/2023
BRIDGE ENGINEER

SHEET 2 OF 3
DETAILS OF INTERMEDIATE BENTS
HIGHWAY 612 OVER ROBBINS ROAD
ROUTE SEC.
ARKANSAS STATE HIGHWAY COMMISSION
LITTLE ROCK, ARK.

DRAWN BY: CWT DATE: JAN. 2023 FILENAME: b012326b9_b2.dgn
CHECKED BY: AJK DATE: APR. 2023 SCALE: AS SHOWN
DESIGNED BY: CSW DATE: JAN. 2023
BRIDGE NO. B7620 DRAWING NO. 66316

JESkinner 7/28/2023 12:12:02 PM
WORKSPACE: ARDOT Bridge
\\garver1nc.local\gdata\Projects\2017\17017660 - ARDOT 012326 Hwy 412 - Hwy 112\Drawings\b012326x9_S208-BE.dgn
REVISED DATE:

DATE REVISED	DATE REVISED	FED. ROAD DIST. NO.	STATE	JOB NO.	SHEET NO.	TOTAL SHEETS
		6	ARK.	012326	528	838
		A7620 & B7620		INT. BENT DETAILS		66317

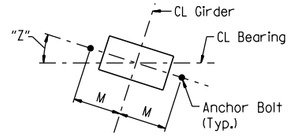

TYPICAL ANCHOR BOLT LAYOUT
No Scale

NOTE:
For details of elastomeric bearing, dimension M and anchor bolts, see Dwg. No. 66318.

TABLE OF VARIABLES			
Bent No.	Station	Girder No.	"Z"
2A	Back	1	10°36'05"
		2-4	10°39'10"
		5	10°42'17"
	Forward	1	11°40'15"
		2-4	11°43'41"
		5	11°47'07"
3A	Back	1	11°40'16"
		2-4	11°43'41"
		5	11°47'07"
	Forward	1	12°44'27"
		2-4	12°48'11"
		5	12°51'56"
2B	Back	1	10°51'05"
		2-5	10°55'01"
		6	10°59'00"
	Forward	1	11°56'46"
		2-5	12°01'06"
		6	12°05'30"
3B	Back	1	11°56'46"
		2-5	12°01'06"
		6	12°05'30"
	Forward	1	13°02'26"
		2-5	13°07'11"
		6	13°12'00"

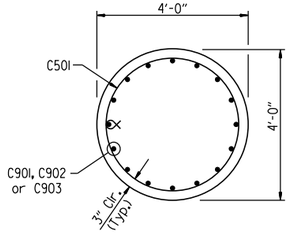

SECTION D-D
Scale: 1/2" = 1'-0"

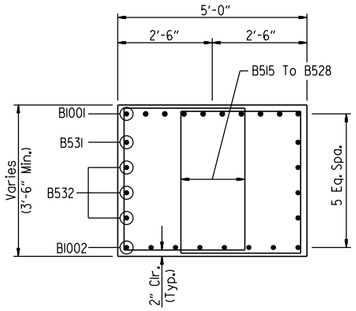

SECTION A-A
Scale: 1/2" = 1'-0"

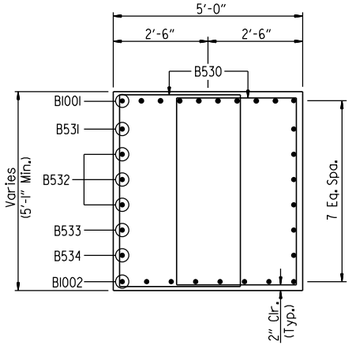

SECTION C-C
Scale: 1/2" = 1'-0"

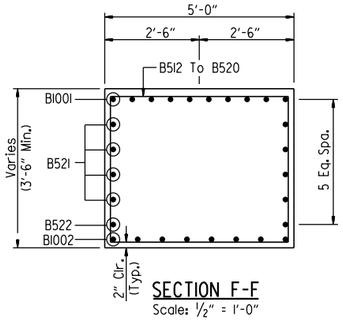

SECTION F-F
Scale: 1/2" = 1'-0"

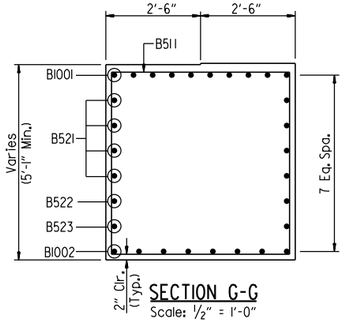

SECTION G-G
Scale: 1/2" = 1'-0"

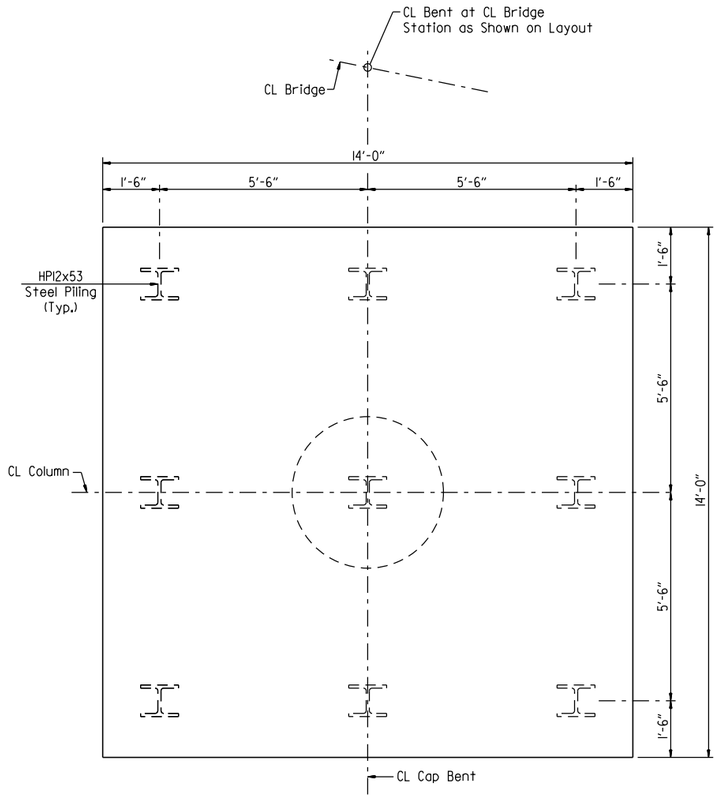

SECTION E-E
Scale: 1/2" = 1'-0"

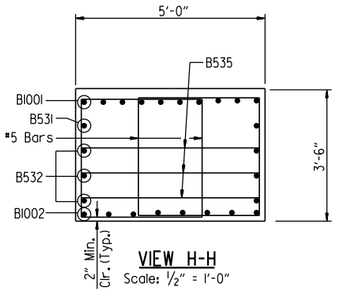

VIEW H-H
Scale: 1/2" = 1'-0"

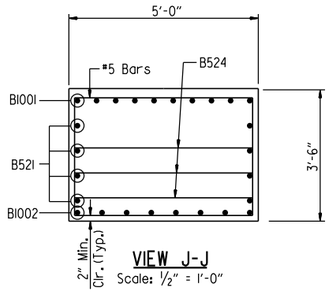

VIEW J-J
Scale: 1/2" = 1'-0"

GENERAL NOTES

All concrete shall be Class "S" with a minimum 28-day compressive strength f'c = 3500 psi.

All reinforcing steel shall be Grade 60 (yield strength = 60,000 psi) conforming to AASHTO M 31 or M 322, Type A, with mill test reports.

Class 3 Textured Coating Finish shall be applied to bridge surfaces as specified in Special Provision "TEXTURED COATING FINISH" and in accordance with Subsection 802.19(b)(3).

Top reinforcing bars in cap shall be properly placed to avoid interference with anchor bolts or sheet metal sleeves.

For additional information, see LAYOUT.

BAR LIST - BRIDGE A

	MARK	NO. REQ'D.	LENGTH	"A"	"B"	P.D.
BENT NO. 2A	C501	144	12'-4"			3¾"
BENT NO. 3A	C901	16	31'-3"			Str.
	C902	16	32'-6"			Str.
	C501	141	12'-4"			3¾"
BENT NO. 3B	C901	16	30'-9"			Str.
	C902	16	32'-0"			Str.
COMMON BARS	B501 To B514	2 Ea.	14'-5" To 16'-6"	3'-3"	3'-8½" To 4'-9"	2½"
	B515 To B528	2 Ea.	13'-0" To 16'-6"	3'-3"	3'-0" To 4'-9"	2½"
	B529	8	13'-11½"	4'-8"	4'-9"	2½"
	B530	72	16'-7"	3'-3"	4'-9½"	2½"
	B531	2	41'-0"			Str.
	B532	6	41'-8½"			Str.
	B533	2	40'-1"			Str.
	B534	2	35'-2"			Str.
	B535	7	8'-4½"	4'-7"	2'-0"	2½"
	B1001	10	44'-6"	41'-8"	11½"	10"
	B1002	8	41'-8"			Str.
	F901	32	10'-2"			9"
	F1001	64	16'-4"	13'-6"	11½"	10"

BAR BENDING DIAGRAMS

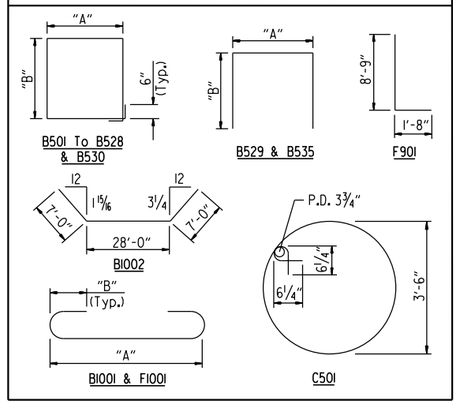

NOTES:
Dimensions of bars are out-to-out.

Common Bars shown are for one bent only.

BAR LIST - BRIDGE B

	MARK	NO. REQ'D.	LENGTH	"A"	"B"	P.D.
BENT NO. 2B	C501	162	12'-4"			3¾"
BENT NO. 3B	C901	16	25'-3"			Str.
	C902	16	24'-4"			Str.
	C903	16	23'-6"			Str.
	C501	189	12'-4"			3¾"
	C901	16	29'-0"			Str.
	C902	16	28'-1"			Str.
	C903	16	27'-3"			Str.
COMMON BARS	B501 to B509	1 Ea.	17'-4" To 19'-6"		3'-9" To 4'-10"	2½"
	B510	15	14'-0"	4'-8"	4'-9½"	2½"
	B511	42	19'-5"		4'-9½"	2½"
	B512 to B520	1 Ea.	19'-2" To 16'-0"		4'-8" To 3'-1"	2½"
	B521	8	50'-10"			Str.
	B522	2	50'-0"			Str.
	B523	2	45'-10"			Str.
	B524	7	8'-4½"	4'-7"	2'-0"	2½"
	B1001	10	53'-8"	50'-10"	11½"	10"
	B1002	8	51'-2"			10"
	F901	48	10'-2"			9"
	F1001	96	16'-4"	13'-6"	11½"	10"

BAR BENDING DIAGRAMS

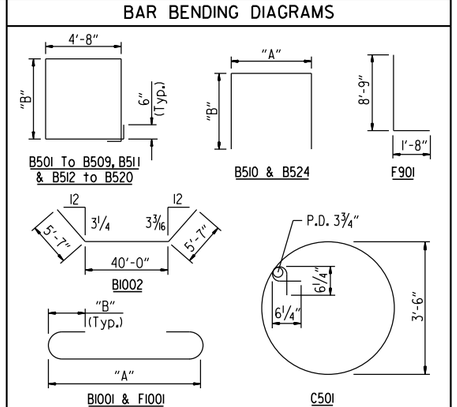

NOTES:
Dimensions of bars are out-to-out.

Common Bars shown are for one bent only.

STATE OF ARKANSAS
LICENSED PROFESSIONAL ENGINEER
No.21243
COLTON S. WYLIE
Digitally Signed 07/28/2023
BRIDGE ENGINEER

SHEET 3 OF 3
DETAILS OF INTERMEDIATE BENTS
HIGHWAY 612 OVER ROBBINS ROAD
ROUTE SEC.

ARKANSAS STATE HIGHWAY COMMISSION
LITTLE ROCK, ARK.

DRAWN BY: HEW DATE: AUG. 2011 FILENAME: b012326m9_b3.dgn
CHECKED BY: AJK DATE: APR. 2012 SCALE: AS SHOWN
DESIGNED BY: JES DATE: AUG. 2011

BRIDGE NO. A7620 & B7620 DRAWING NO. 66317

JESkinner 7/28/2023 12:12:03 PM
WORKSPACE: ARDOT Bridge
\\garverinc.local\gdata\Projects\2017\17017660 - ARDOT 012326 Hwy 412 - Hwy 112\Drawings\b012326x9_5209-MD.dgn
REVISED DATE:

DATE REVISED	DATE REVISED	FED. ROAD DIST. NO.	STATE	JOB NO.	SHEET NO.	TOTAL SHEETS
		6	ARK.	012326	529	838
		A7620 & B7620 ELASTOMERIC BEARINGS				66318

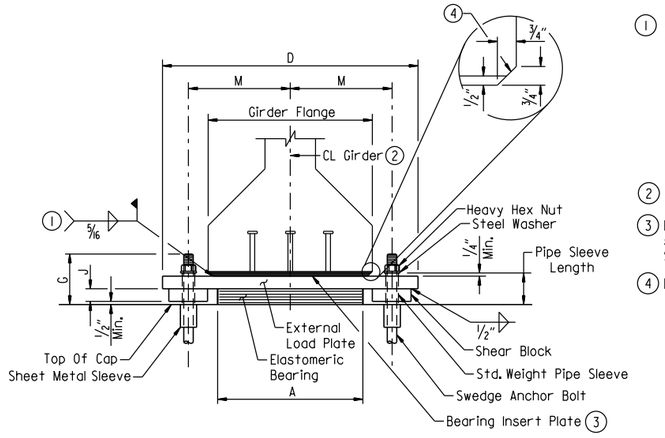

FRONT VIEW - AT BENT NOS. 2 & 3

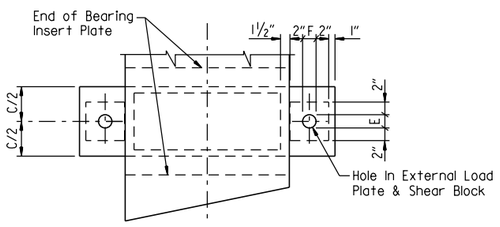

PLAN VIEW - AT BENT NOS. 2 & 3

(1) Unless otherwise approved by the Engineer, welding of the external load plate at expansion bearings to the bearing insert plate will be allowed only when: 1) The approximate average air temperature during the 24 hour period immediately preceding welding is between 40°F and 80°F; and 2) The slots in the externalload plate are positioned to center on the anchor bolts; and 3) No horizontal deformation of the elastomeric pad is evident. If welding at other temperatures is required, the Engineer will provide adjustment data. Care shall be taken to ensure that the external load plate is in full and complete contact with the bearing insert plate before welding begins.

(2) Centerline elastomeric pad shall be aligned with centerline girder.

(3) Bearing insert plates (A709, GR. 50W) & studs shall be considered subsidiary to the item "PRESTRESSED CONCRETE GIRDERS (TYPE III)". Studs shall conform to Subsection 807.08

(4) Bevel Bearing Insert Plate to conform to girder chamfer.

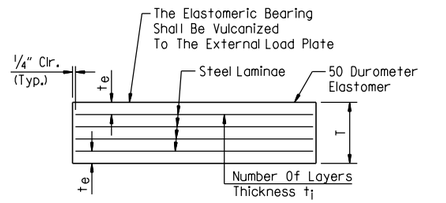

t_e = Thickness Of Elastomer Cover On Top And Bottom Of Pad
t_i = Thickness Of Elastomer Between Steel Laminae
N = Number Of Elastomer Layers Of Thickness t_i

ELASTOMERIC BEARING

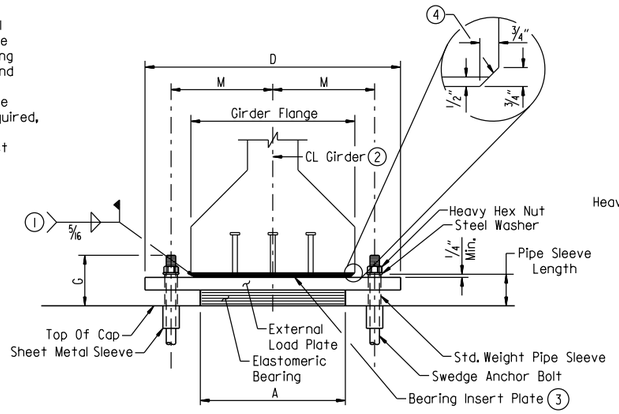

FRONT VIEW - AT BENT NOS. 1 & 4

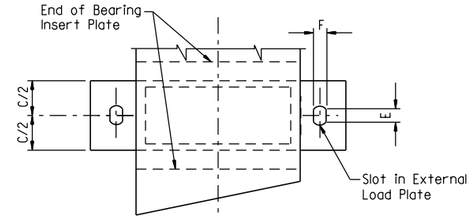

PLAN VIEW - AT BENT NOS. 1 & 4

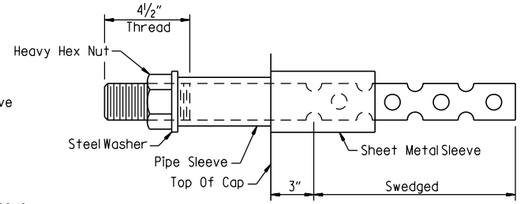

ANCHOR BOLT DETAIL

NOTES:
Anchor bolts may be cast in place or drilled and grouted into place. If anchor bolts are to be cast in place, the galvanized sheet metal sleeves will not be required.

If anchor bolts are to be drilled and grouted in place, the galvanized sheet metal sleeves shall be cast in place as shown. Sleeves shall be dry packed with styrofoam, urethane foam or approved equal prior to pouring of concrete. After pouring of the cap and prior to erection of the girder, the dry pack shall be removed and holes for the anchor bolts shall be accurately drilled into the concrete. Bolts placed in drilled holes shall be accurately set and fixed using a OPL approved epoxy or non-shrink grout that completely fills the holes. Galvanized sheet metal sleeves shall meet the requirements of ASTM A653, CS Type B or approved equivalent, be of minimum 16 gage thickness and be galvanized according to ASTM B695, Class 50. Sheet metal sleeves will not be paid for directly, but will be considered subsidiary to the item "STRUCTURAL STEEL IN BEAM SPANS (A709, Gr. 50W)"

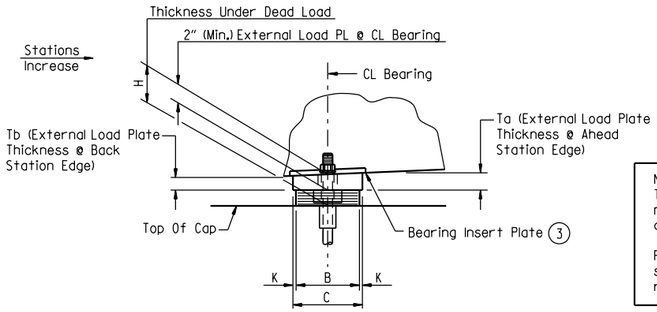

SIDE VIEW - AT BENT NOS. 2 & 3

NOTES:
The direction of bevel of the external load plate may not be accurately depicted with respect to Ta and Tb values shown in "TABLE OF FABRICATOR VARIABLES".

Prior to the erection of the girders, the Contractor shall verify the orientation of the bearings with respect to Ta and Tb.

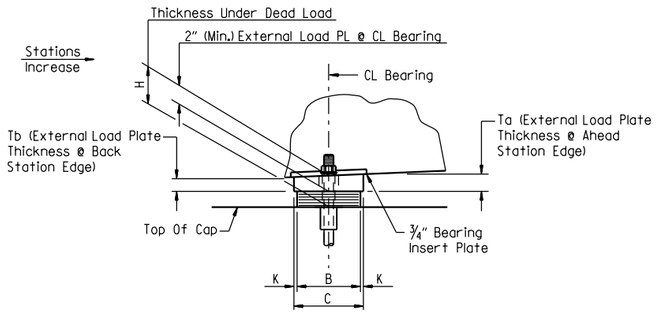

SIDE VIEW - AT BENT NOS. 1 & 4

GENERAL NOTES

Elastomeric bearings shall conform to Section 808 and shall be paid for at the unit price bid for "ELASTOMERIC BEARINGS".

External load plates and shear blocks shall conform to ASTM A709, Grade 50W. Pipe sleeves shall be ASTM A500, Grade B, and shall be galvanized to conform to AASHTO M232, Class C or ASTM B695, Class 50.

External load plates (with shear blocks as applicable) shall be completely fabricated (including bevel and bolt holes) and shall be cleaned before vulcanizing to the elastomeric bearing. The surface in contact with the elastomeric bearing shall be cleaned in accordance with Section 808.03. Other surfaces shall be blast cleaned in accordance with Subsection 807.84(b) for painted steel and 807.84(e) for unpainted Grade 50W steel.

Anchor bolts, washers and nuts shall conform to Subsection 807.07. The anchor bolt grade of steel shall be as specified in the "TABLE OF FABRICATOR VARIABLES". Indentations shall be circular with rounded bottoms and staggered as shown in the details.

Pipe sleeves, anchor bolts, washers and nuts shall be paid for at the unit price bid for "STRUCTURAL STEEL IN BEAM SPANS (A709, GR. 50W)". External load plates and shear blocks will not be measured or paid for separately but will be considered incidental to the unit price bid for "ELASTOMERIC BEARINGS".

Bearings shall be seated in accordance with Subsection 808.08. This work and materials are considered subsidiary to the item "ELASTOMERIC BEARINGS" and will not be paid for directly.

TABLE OF FABRICATOR VARIABLES

(5) Maximum Design Load = Service Load

Bridge Nos.	Location		Bearing Type	No. Of Bearings Each Bent	(5) Maximum Design Load (Kips)	Elastomeric Pad							External Load Plate									Anchor Bolt				
	Bent No.(s)	Beam Or Girder No.				G	H	A	B	N	t_i	t_e	No. & Thickness Of Steel Laminate	T	C	D	E	F	J	K	M	T_a	T_b	Anchor Bolt (Dia. x L)	Anchor Bolt Grade	Pipe Sleeve Size (Dia. x L)	Sheet Metal Sleeve Size (Dia. x L)	Steel Washer Size (O.D.)
A7620	1	All	Exp.	5	152	7 1/8"	4 3/8"	22"	10"	3	1/2"	1/4"	4 @ 12 Ga.	2 7/16"	11"	32 1/2"	4"	2 1/4"	-	1/2"	13 1/2"	2.00"	2.00"	1 1/2" x 25"	55	1 1/2" x 4 5/8"	3" x 10"	3"
	2	Back Sta.	Fixed	5	152	7 5/16"	4 9/16"	22"	10"	3	1/2"	1/4"	4 @ 12 Ga.	2 7/16"	11"	39 1/2"	2 1/4"	2 1/4"	1 7/8"	1/2"	15 5/8"	2.11"	2.21"	1 1/2" x 25"	55	1 1/2" x 4 11/16"	3" x 10"	3"
	2	Fwd. Sta.	Fixed	5	183	7 1/8"	4 3/8"	22"	10"	3	1/2"	1/4"	4 @ 12 Ga.	2 7/16"	11"	39 1/2"	2 1/4"	2 1/4"	1 7/8"	1/2"	15 5/8"	2.01"	1.99"	1 1/2" x 25"	55	1 1/2" x 4 5/8"	3" x 10"	3"
	3	Back Sta.	Fixed	5	183	7 5/16"	4 9/16"	22"	10"	3	1/2"	1/4"	4 @ 12 Ga.	2 7/16"	11"	39 1/2"	2 1/4"	2 1/4"	1 7/8"	1/2"	15 5/8"	2.10"	2.22"	1 1/2" x 25"	55	1 1/2" x 4 11/16"	3" x 10"	3"
	3	Fwd. Sta.	Fixed	5	152	7 1/8"	4 3/8"	22"	10"	3	1/2"	1/4"	4 @ 12 Ga.	2 7/16"	11"	39 1/2"	2 1/4"	2 1/4"	1 7/8"	1/2"	15 5/8"	2.00"	2.00"	1 1/2" x 25"	55	1 1/2" x 4 5/8"	3" x 10"	3"
	4	All	Exp.	5	152	7 1/8"	4 3/8"	22"	10"	3	1/2"	1/4"	4 @ 12 Ga.	2 7/16"	11"	32 1/2"	4"	2 1/4"	-	1/2"	13 1/2"	1.95"	2.05"	1 1/2" x 25"	55	1 1/2" x 4 5/8"	3" x 10"	3"
B7620	1	All	Exp.	6	151	7 1/8"	4 3/8"	22"	10"	3	1/2"	1/4"	4 @ 12 Ga.	2 7/16"	11"	32 1/2"	4"	2 1/4"	-	1/2"	13 1/2"	2.00"	2.00"	1 1/2" x 25"	55	1 1/2" x 4 5/8"	3" x 10"	3"
	2	Back Sta.	Fixed	6	151	7 5/16"	4 9/16"	22"	10"	3	1/2"	1/4"	4 @ 12 Ga.	2 7/16"	11"	39 1/2"	2 1/4"	2 1/4"	1 7/8"	1/2"	15 5/8"	2.11"	2.21"	1 1/2" x 25"	55	1 1/2" x 4 11/16"	3" x 10"	3"
	2	Fwd. Sta.	Fixed	6	165	7 1/8"	4 3/8"	22"	10"	3	1/2"	1/4"	4 @ 12 Ga.	2 7/16"	11"	39 1/2"	2 1/4"	2 1/4"	1 7/8"	1/2"	15 5/8"	2.01"	1.99"	1 1/2" x 25"	55	1 1/2" x 4 5/8"	3" x 10"	3"
	3	Back Sta.	Fixed	6	165	7 5/16"	4 9/16"	22"	10"	3	1/2"	1/4"	4 @ 12 Ga.	2 7/16"	11"	39 1/2"	2 1/4"	2 1/4"	1 7/8"	1/2"	15 5/8"	2.10"	2.22"	1 1/2" x 25"	55	1 1/2" x 4 11/16"	3" x 10"	3"
	3	Fwd. Sta.	Fixed	6	151	7 1/8"	4 3/8"	22"	10"	3	1/2"	1/4"	4 @ 12 Ga.	2 7/16"	11"	39 1/2"	2 1/4"	2 1/4"	1 7/8"	1/2"	15 5/8"	2.00"	2.00"	1 1/2" x 25"	55	1 1/2" x 4 5/8"	3" x 10"	3"
	4	All	Exp.	6	151	7 1/8"	4 3/8"	22"	10"	3	1/2"	1/4"	4 @ 12 Ga.	2 7/16"	11"	32 1/2"	4"	2 1/4"	-	1/2"	13 1/2"	1.95"	2.05"	1 1/2" x 25"	55	1 1/2" x 4 5/8"	3" x 10"	3"

STATE OF ARKANSAS
LICENSED PROFESSIONAL ENGINEER
No. 21243
COLTON S. WYLIE
Digitally Signed 07/28/2023
BRIDGE ENGINEER

DETAILS OF ELASTOMERIC BEARINGS
HIGHWAY 612 OVER ROBBINS ROAD

ROUTE SEC.

ARKANSAS STATE HIGHWAY COMMISSION

LITTLE ROCK, ARK.

DRAWN BY: HEW DATE: JULY 2011 FILENAME: b012326m9_el.dgn
CHECKED BY: AJK DATE: APR. 2012 SCALE: AS SHOWN
DESIGNED BY: MRA DATE: JULY 2011

BRIDGE NO. A7620 & B7620 DRAWING NO. 66318

JEskinner 7/28/2023 12:12:03 PM
WORKSPACE: ARDOT Bridge
\\garverinc.local\data\Projects\2017\17017660 - ARDOT 012326 Hwy 412 - Hwy 112\Drawings\b012326x9_S30i-BG.dgn
REVISED DATE:

DATE REVISED	DATE REVISED	FED. ROAD DIST. NO.	STATE	JOB NO.	SHEET NO.	TOTAL SHEETS
		6	ARK.	012326	530	838
		A7620		215'-0" UNIT		66319

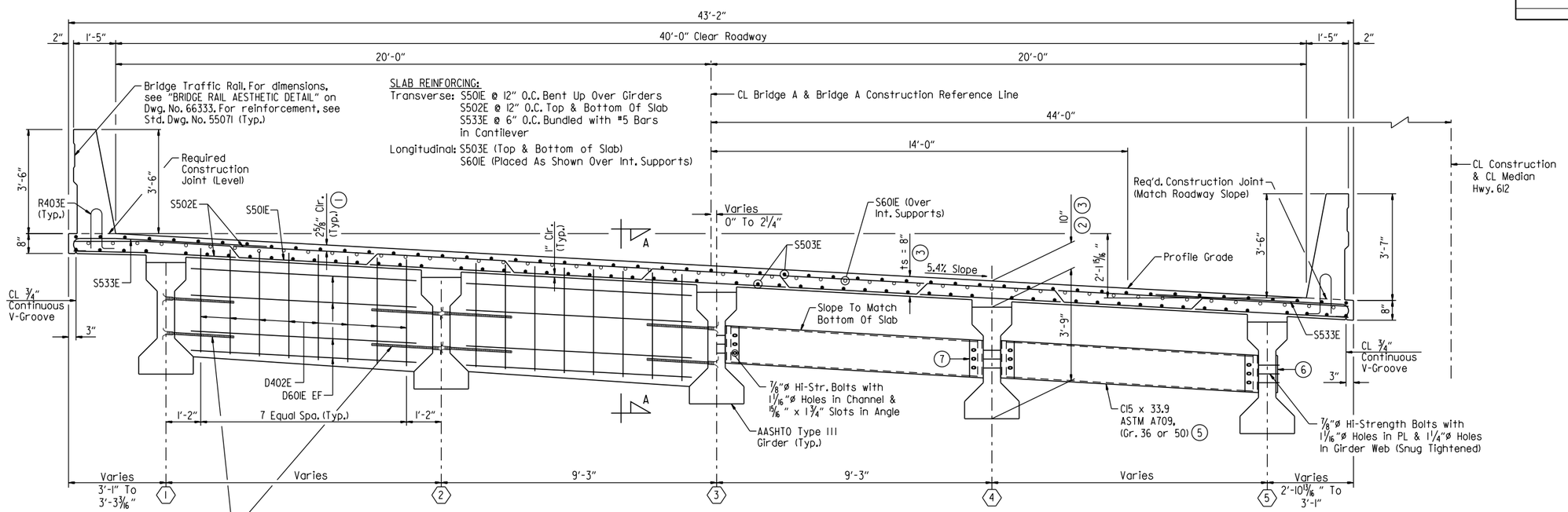

(4) Galvanized Threaded Inserts & ¾"ø x 3'-6" Threaded Rods. For Number And Location, See TYPICAL GIRDER ELEVATION (Type III) on Dwg. Nos. 66323 & 66324.

INTERMEDIATE CONCRETE DIAPHRAGMS

(5) ALTERNATE STRUCTURAL STEEL DIAPHRAGMS

TYPICAL SECTION AT INTERMEDIATE DIAPHRAGMS

(Looking Ahead)
Scale: ½" = 1'-0"

(1) TOLERANCE:
Minus = ¼"
Plus = Equal to amount of slab thickening used to meet slab thickness tolerance - see "ADJUSTMENT FOR SLAB THICKNESS TOLERANCE WHEN REMOVABLE DECK FORMING IS USED" on Dwg. No. 66333.

(2) This dimension taken at CL Girder & CL Bearing

(3) See "ADJUSTMENT FOR SLAB THICKNESS TOLERANCE WHEN REMOVABLE DECK FORMING IS USED" on Dwg. No. 66333.

(4) Galvanized threaded inserts: Dayton-Richmond F-42 Loop Ferrule Insert or an approved equal. ¾"ø galvanized threaded rods to be ASTM A709, Grade 36 or AASHTO M31 or M232, Class C or ASTM B695, Class 50. These items will not be paid for directly but shall be considered subsidiary to the item "PRESTRESSED CONCRETE GIRDERS (TYPE III)". Galvanizing shall be in accordance with AASHTO M232 Class C or AASHTO M298 Class 50.

(5) Galvanized steel diaphragms may be used in place of concrete at intermediate diaphragms only. All components of the alternate steel diaphragms shall be galvanized. Galvanizing shall be in accordance with AASHTO M111. Payment will be based on concrete diaphragms.

(6) PL ½" x 4" x 15" (ASTM A709, Gr. 36 or 50) (Mask when applying textured coating finish to exterior girders.)

(7) L6" x 4" x ½" x 15" (ASTM A709, Gr. 36 or 50) center angle on web of girder. A standard washer shall be supplied for use under both the nut and the head of the ⅞"ø h.s. bolts. An additional plate washer shall cover the angle slots.

NOTES:
Class 2 Protective Surface Treatment shall be applied to the roadway surface and the face and top of concrete bridge rail.

Class 3 Textured Coating Finish shall be applied to bridge surfaces as specified in Special Provision "TEXTURED COATING FINISH" and in accordance with Subsection 802.19(b)(3). Textured Coating Finish shall not be applied on surfaces where Class 2 Protective Surface Treatment is applied.

One epoxy-coated #5 bar in the top and one epoxy-coated #5 bar in the bottom may be substituted for each bar S501E. Payment will be based on the weight of bar S501E.

Bar positions or clearances from the forms shall be maintained by means of stays, ties, hangers or other approved devices per Subsection 804.06. Placement of slab bolster or high-chairs with full-length lower runners directly on removable deck forms will not be allowed.

All bars designated with an "E" suffix are to be epoxy coated.

EXPANSION DEVICE:
Roadway Channel: MC18x42.7
Conn. Angle: MC18x42.7 (Cope One Flange)

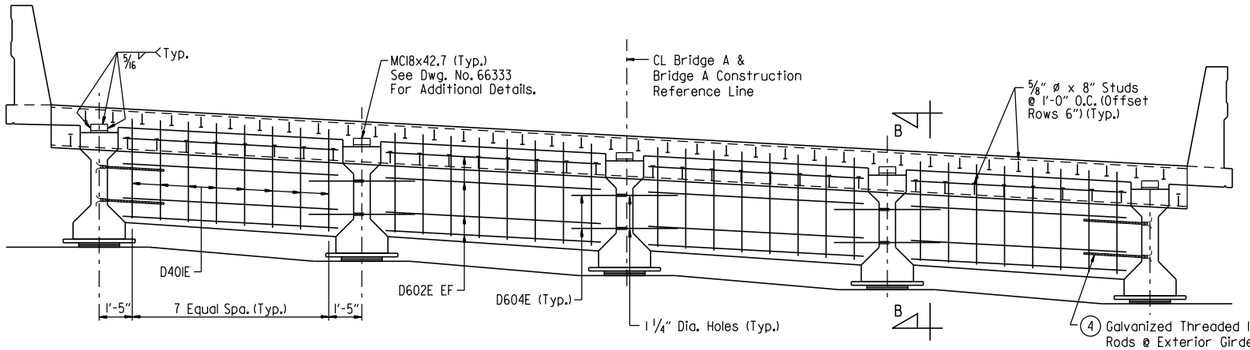

TYPICAL SECTION (END OF UNIT AT JOINT)

(Looking Ahead)
No Scale

(4) Galvanized Threaded Inserts & ¾"ø x 3'-6" Threaded Rods @ Exterior Girders. For Number And Location, See "TYPICAL GIRDER ELEVATION" On Dwg. Nos. 66323 & 66324. Threaded Rods Shall Be Bent As Required To Match Skew Of Diaphragms.

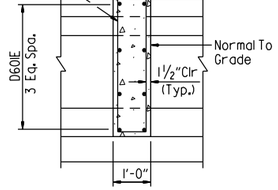

SECTION A-A

(Normal To Diaphragm)
Scale: ½" = 1'-0"

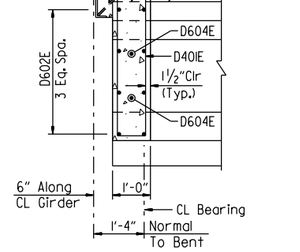

SECTION B-B

(Normal To Diaphragm)
Scale: ½" = 1'-0"

STATE OF ARKANSAS
LICENSED PROFESSIONAL ENGINEER
No. 21243
COLTON S. WYLIE
Digitally Signed 07/28/2023
BRIDGE ENGINEER

SHEET 1 OF 6
DETAILS OF 215'-0" CONTINUOUS PRESTRESSED CONCRETE GIRDER UNIT BRIDGE A
HIGHWAY 612 OVER ROBBINS ROAD

ROUTE SEC.

ARKANSAS STATE HIGHWAY COMMISSION
LITTLE ROCK, ARK.

DRAWN BY: HEW DATE: JULY 2011 FILENAME: b012326a9_sl.dgn
CHECKED BY: AJK DATE: APR. 2012 SCALE: AS SHOWN
DESIGNED BY: MRA DATE: JULY 2011

BRIDGE NO. A7620 DRAWING NO. 66319

JESkinner 7/28/2023 12:12:04 PM
WORKSPACE: ARDOT Bridge
\\garverinc.local\gdata\Projects\2017\17017660 - ARDOT 012326 Hwy 412 - Hwy 112\Drawings\b012326a9_S401-TS.dgn
REVISED DATE:

DATE REVISED	DATE REVISED	FED. ROAD DIST. NO.	STATE	JOB NO.	SHEET NO.	TOTAL SHEETS
		6	ARK.	012326	531	838
		A7620		215'-0" UNIT		66320

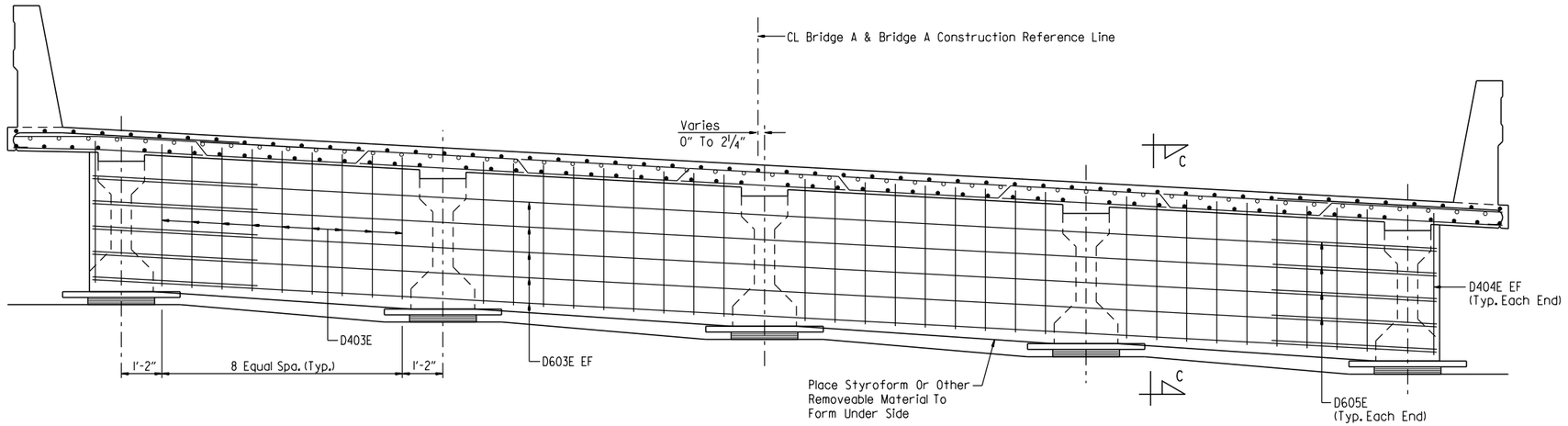

TYPICAL SECTION BETWEEN GIRDERS AT INTERIOR BENTS

(For Info Not Shown See "TYPICAL SECTION AT INTERMEDIATE DIAPHRAGMS")
No Scale

LEGEND

EF = Each Face

BAR BENDING DIAGRAMS

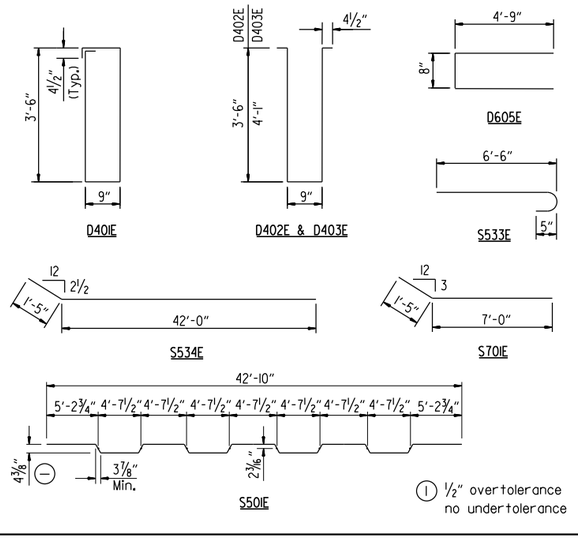

BAR LIST

Mark	No. Req'd.	Length	Pin. Dia.
D401E	64	8'-10"	2"
D402E	96	8'-2"	2"
D403E	72	9'-6"	2"
D404E	8	4'-1"	STR.
D601E	96	7'-7"	STR.
D602E	64	7'-9"	STR.
D603E	20	39'-2"	STR.
D604E	12	5'-0"	STR.
D605E	20	9'-10"	4½"
R400E	32	6'-3"	3"
R401E	868	7'-6"	3"
R402E	80	5'-6"	STR.
R403E	868	3'-8"	3", 6"
R409E	80	9'-8"	STR.
R410E	60	17'-11"	STR.
R411E	120	19'-7"	STR.
S501E	207	43'-8"	3"
S502E	416	42'-10"	STR.
S503E	436	56'-6"	STR.
S504E To S515E	2 Ea.	9'-0" To 39'-6½"	STR.
S516E To S532E	2 Ea.	6'-4" To 40'-0"	STR.
S533E	859	7'-1"	3¾"
S534E	4	43'-5"	3¾"
S601E	104	30'-0"	STR.
S70IE	12	8'-5"	5¼"

NOTES:
Dimension of bars are out-to-out.

Bar designations ending with "E" indicate epoxy coated bars.

See Std. Dwg. No. 55071 for Bar Bending Diagrams of R400E, R401E & R403E.

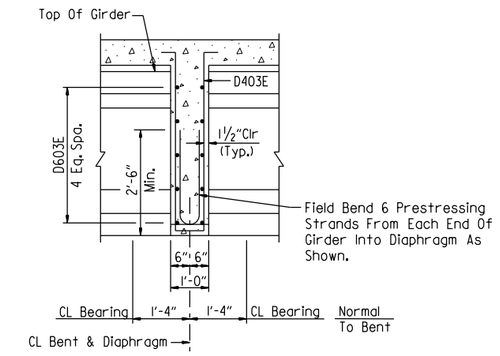

SECTION C-C

(Normal To Diaphragm)
Scale: ½" = 1'-0"

STATE OF ARKANSAS
LICENSED PROFESSIONAL ENGINEER
No. 21243
COLTON S. WYLIE
Digitally Signed 07/28/2023
BRIDGE ENGINEER

SHEET 2 OF 6
DETAILS OF 215'-0" CONTINUOUS PRESTRESSED CONCRETE GIRDER UNIT BRIDGE A
HIGHWAY 612 OVER ROBBINS ROAD

ROUTE SEC.

ARKANSAS STATE HIGHWAY COMMISSION
LITTLE ROCK, ARK.

DRAWN BY: HEW DATE: JULY 2011 FILENAME: b012326a9_s2.dgn
CHECKED BY: AJK DATE: APR. 2012 SCALE: AS SHOWN
DESIGNED BY: MRA DATE: JULY 2011

BRIDGE NO. A7620 DRAWING NO. 66320

JESkinner 7/28/2023 12:12:04 PM
WORKSPACE: ARDOT Bridge
\\garverinc.local\data\Projects\2017\17017660 - ARDOT 012326 Hwy 412 - Hwy 112\Drawings\b012326x9_5402-TS.dgn
REVISED DATE:

DATE REVISED	DATE REVISED	FED. ROAD DIST. NO.	STATE	JOB NO.	SHEET NO.	TOTAL SHEETS
		6	ARK.	012326	532	838
		A7620		215'-0" UNIT		66321

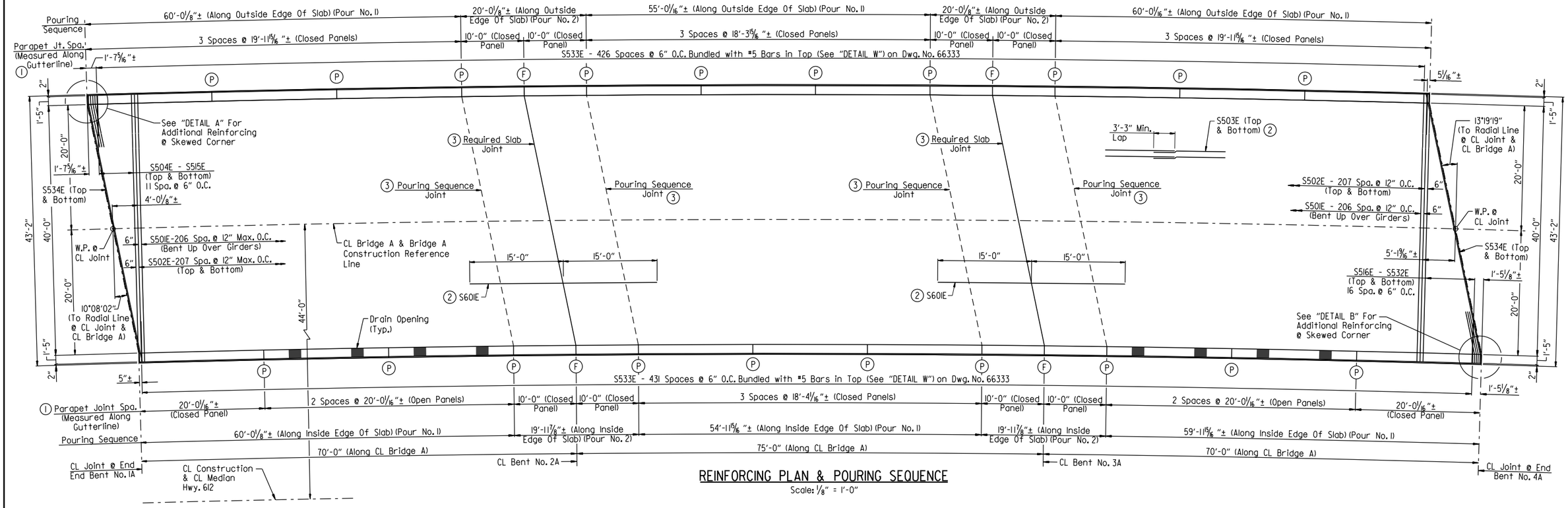

REINFORCING PLAN & POURING SEQUENCE

Scale: 1/8" = 1'-0"

NOTES:
Pours with the same number may be placed simultaneously or separately. All pours (1) must be placed before pours (2) can be placed. A minimum of 48 hours shall elapse between the end of a pour and the start of the next pour. A minimum of 72 hours shall elapse between the end of a pour and the start of an adjacent pour.

Concrete in bridge superstructure shall be placed, consolidated, and screeded off for the entire pour before any concrete has taken its initial set. This may require the use of a retarding agent.

A minimum of 72 hours shall elapse between completion of the slab and the pouring of the bridge railing. Any railing pours made before the entire slab unit has been placed must be approved by the Engineer. The Contractor must obtain approval from the Engineer for any deviations from the pouring sequence(s) shown.

The slab and diaphragms shall not be poured prior to 90 days following release of prestressed girder strands.

Concrete diaphragms at intermediate bents shall be poured monolithically with the slab above the diaphragm.

All partial-depth and end bent diaphragms shall be cast-in-place and poured a minimum of 48 hours before the slab is poured.

Removable forms shall be used when pouring diaphragms.

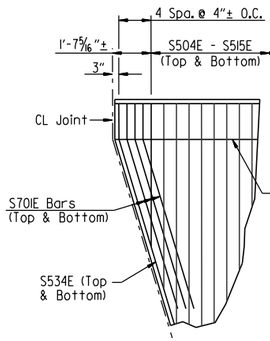

NOTE:
Bars S533E not shown for clarity.

DETAIL A
No Scale

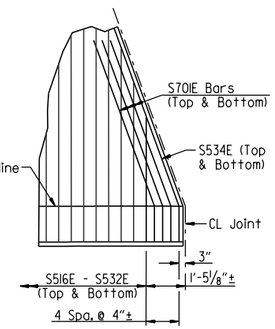

DETAIL B
No Scale

TABLE OF VARIABLES									
CLOSED RAIL PANELS			OPEN RAIL PANELS						
Panel Length	"A"	R4XXE	Panel Length	"B"	"C"	"D"	"E"	R4XXE
10'-0"	19	9	20'-0 1/16"	11	4'-0"	16	8'-0 1/16"	11
18'-3 15/16"	36	10						
18'-4 1/16"	36	10						
19'-11 15/16"	39	11						
20'-0 1/16"	40	11						

1 Parapet joints designated with symbol (F) shall be stopped 6" from top of slab. All other parapet joints with symbol (P) shall be partial depth joints stopped 16" from top of slab.

2 Refer to "TYPICAL SECTION AT INTERMEDIATE DIAPHRAGMS" on Dwg. No. 66319 for placement.

3 See "TRANSVERSE SLAB JOINT DETAIL" on Dwg. No. 66332.

NOTES:
Required slab joints and pouring sequence joints shall align with rail joints at the gutterline.

Transverse slab reinforcing is placed on radial lines and spaced along left edge of slab.

Longitudinal slab reinforcing is placed with same degree of curvature as slab.

Edges of slab are concentric to 1°30'00" curve @ CL Median.

All transverse lines are radial to CL Median.

STATE OF ARKANSAS
LICENSED PROFESSIONAL ENGINEER
No. 21243
COLTON S. WYLIE
Digitally Signed 07/28/2023
BRIDGE ENGINEER

SHEET 3 OF 6
DETAILS OF 215'-0" CONTINUOUS PRESTRESSED CONCRETE GIRDER UNIT BRIDGE A
HIGHWAY 612 OVER ROBBINS ROAD

ROUTE SEC.

ARKANSAS STATE HIGHWAY COMMISSION
LITTLE ROCK, ARK.

DRAWN BY: HEW DATE: JULY 2011 FILENAME: b012326a9_s3.dgn
CHECKED BY: AJK DATE: APR. 2012 SCALE: AS SHOWN
DESIGNED BY: MRA DATE: JULY 2011
BRIDGE NO. A7620 DRAWING NO. 66321

JESkinner 7/28/2023 12:12:05 PM
WORKSPACE: ARDOT Bridge
\\garverinc.local\gdata\Projects\2017\17017660 - ARDOT 02326 Hwy 412 - Hwy 112\Drawings\b012326a9_S403-SB.dgn
REVISED DATE:

DATE REVISED	DATE REVISED	FED. ROAD DIST. NO.	STATE	JOB NO.	SHEET NO.	TOTAL SHEETS
		6	ARK.	012326	533	838
		A7620		215'-0" UNIT		66322

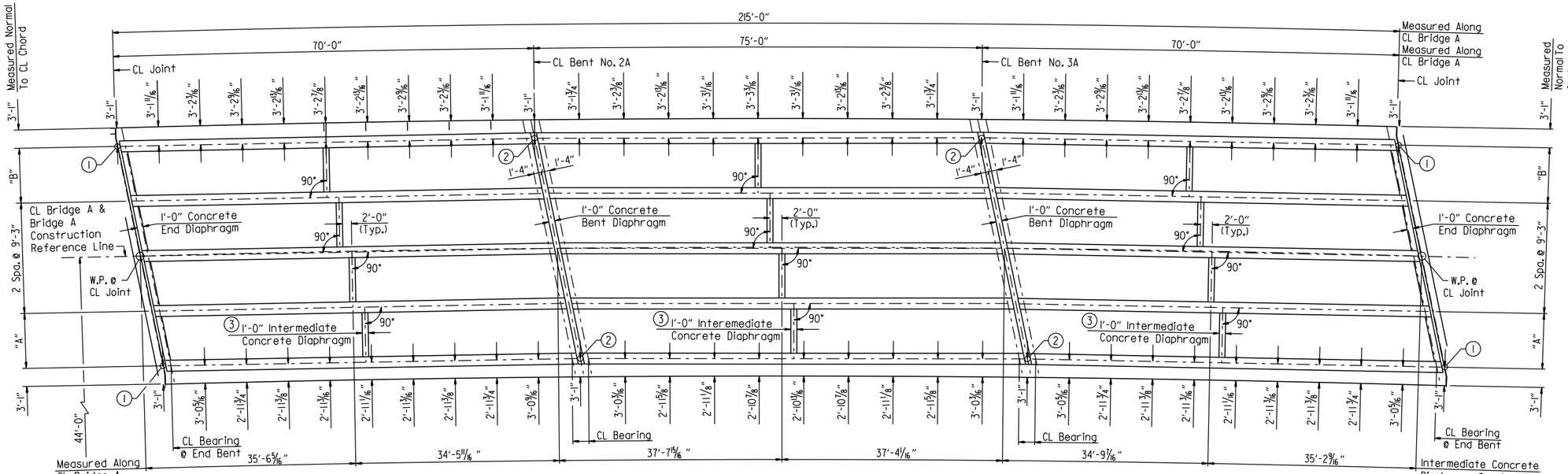

FRAMING PLAN
Scale: 1" = 10'-0"

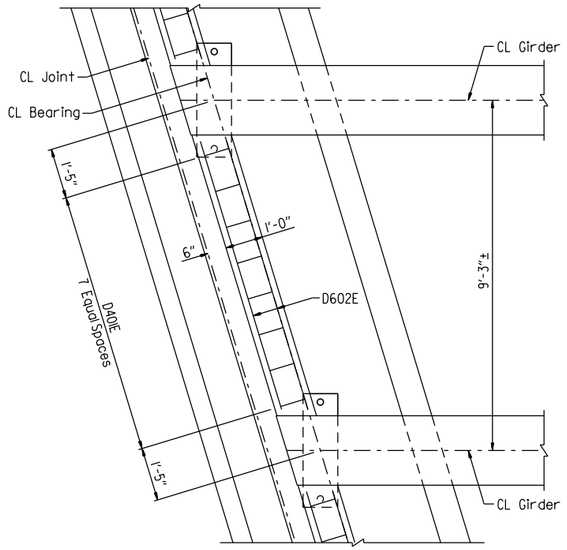

PLAN END DIAPHRAGM
Scale: 1/2" = 1'-0"

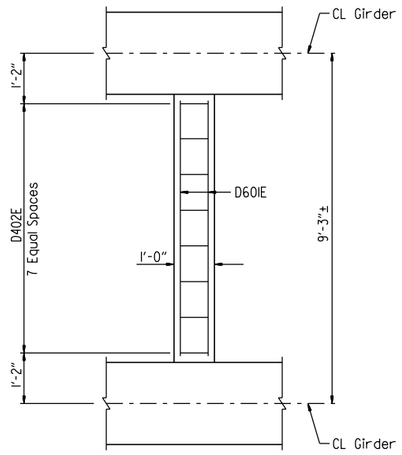

PLAN INTERMEDIATE DIAPHRAGM
Scale: 1/2" = 1'-0"

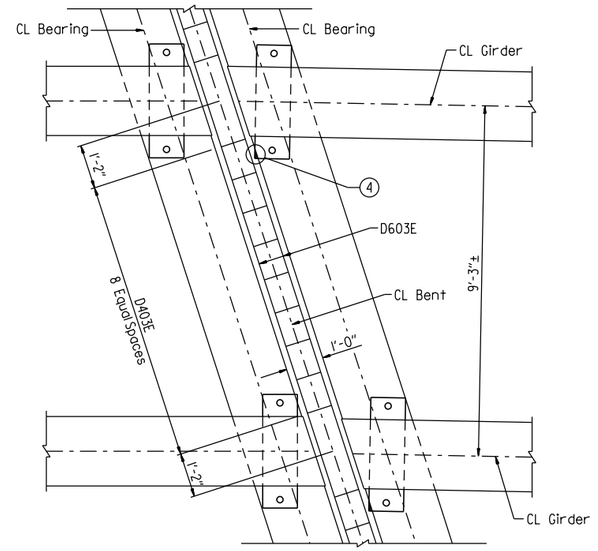

PLAN BENT DIAPHRAGM
Scale: 1/2" = 1'-0"

NOTE:
All cantilever dimensions are measured at tenth points along edges of slab and normal to exterior girders.

(1) Intersection of CL Girder & CL Joint

(2) Intersection CL Girder & CL Bent

(3) Galvanized steel diaphragms may be used in place of concrete diaphragms at intermediate diaphragm locations only.

TABLE OF VARIABLES		
Location	"A"	"B"
Bent 1	9'-2 5/8"±	9'-2 3/8"±
Bent 2 - Span 1	9'-3 3/8"±	9'-3 3/8"±
Bent 2 - Span 2	9'-2 9/16"±	9'-2 9/16"±
Bent 3 - Span 2	9'-3 1/2"±	9'-3 7/16"±
Bent 3 - Span 3	9'-2 9/16"±	9'-2 1/2"±
Bent 4	9'-3 1/2"±	9'-3 7/16"±

(4) Provide roofing felt to serve as a bond breaker where diaphragm overlaps external load plate.

STATE OF ARKANSAS
LICENSED PROFESSIONAL ENGINEER
No. 21243
COLTON S. WYLIE
Digitally Signed 07/28/2023
BRIDGE ENGINEER

SHEET 4 OF 6
DETAILS OF 215'-0" CONTINUOUS PRESTRESSED CONCRETE GIRDER UNIT
BRIDGE A
HIGHWAY 612 OVER ROBBINS ROAD
ROUTE SEC.
ARKANSAS STATE HIGHWAY COMMISSION
LITTLE ROCK, ARK.

DRAWN BY: HEW DATE: JULY 2011 FILENAME: b012326a9_s4.dgn
CHECKED BY: AJK DATE: APR. 2012 SCALE: AS SHOWN
DESIGNED BY: MRA DATE: JULY 2011
BRIDGE NO. A7620 DRAWING NO. 66322

JESkinner 7/28/2023 12:12:05 PM
WORKSPACE: ARDOT Bridge
\\garverinc.local\gdata\Projects\2017\17017660 - ARDOT 012326 Hwy 412 - Hwy 112\Drawings\b012326x9_S404-SF.dgn
REVISED DATE:

DATE REVISED	DATE REVISED	FED. ROAD DIST. NO.	STATE	JOB NO.	SHEET NO.	TOTAL SHEETS
		6	ARK.	012326	534	838
		A7620		215'-0" UNIT		66323

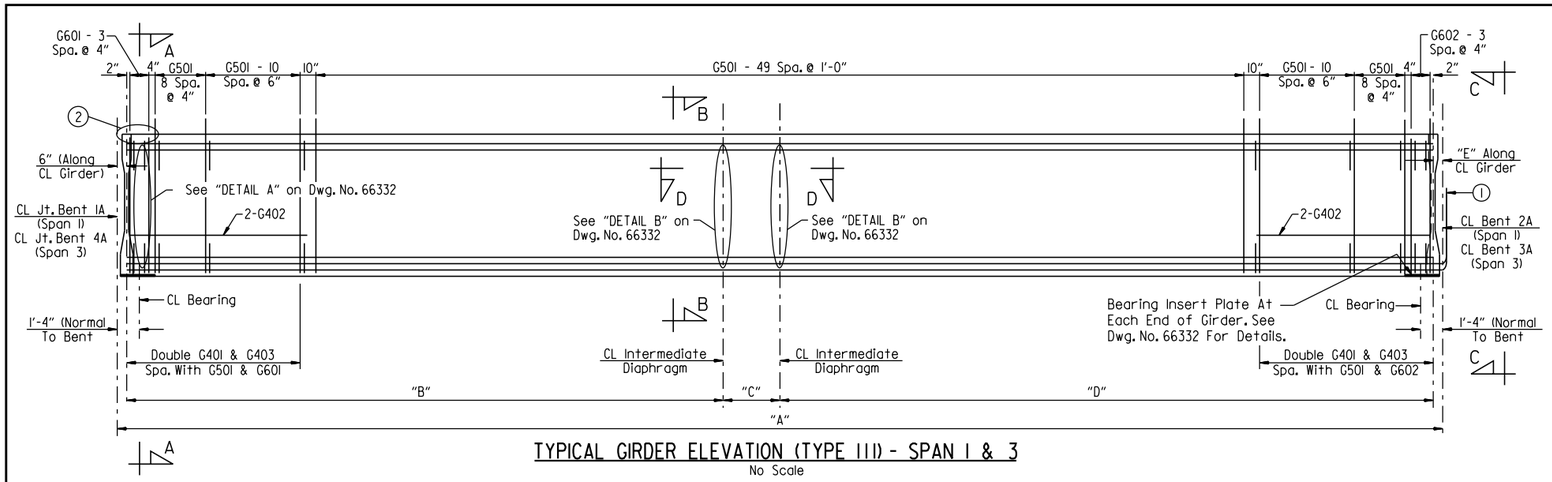

TYPICAL GIRDER ELEVATION (TYPE III) - SPAN 1 & 3

No Scale

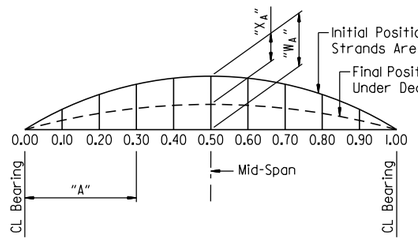

"W_A" is camber of girder (prestress + dead load of girder @ 90 days after release)

"X_A" is dead load deflection of slab + diaphragms + composite dead load.

③ CAMBER & DEFLECTIONS (INCHES)

④ SPAN PT.	INCHES	
	"W_A"	"X_A"
0.00	0.000	0.000
0.10	0.622	0.211
0.20	1.099	0.426
0.30	1.425	0.596
0.40	1.613	0.704
0.50	1.675	0.742

④ Symmetrical by 180° rotation

BAR LIST - PER GIRDER			
Mark	No. Req'd.	Length	Pin. Dia.
G301	12	5'-0"	Str.
G401	92	3'-3½"	2"
G402	4	9'-2"	Str.
G403	46	2'-11"	3"
G404	2	68'-7"	Str.
G501	176	5'-2"	3¾"
G601	8	3'-9"	4½"
G602	8	4'-4"	4½"

BAR BENDING DIAGRAMS

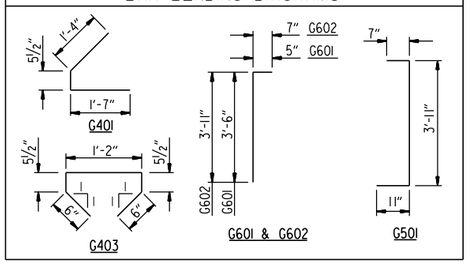

NOTES:
Dimensions of bars in bending diaphragm are out-to-out.

At the Contractor's option, ½"ø strands pulled to 2,000 lbs. may be substituted for bars G404.

All bars in the "BAR LIST - PER GIRDER" will not be paid for directly, but will be considered subsidiary to the item "PRESTRESSED CONCRETE GIRDERS (TYPE III)".

At the Contractor's option, the two G401 bars may be furnished as one bar.

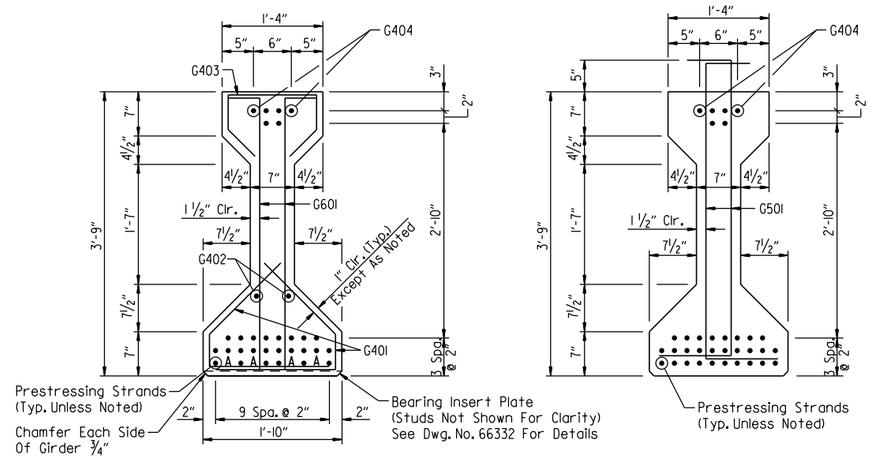

SECTION A-A

Scale: 1" = 1'-0"

SECTION B-B

Scale: 1" = 1'-0"

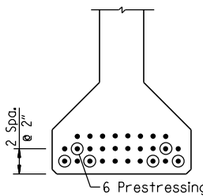

VIEW C-C

Scale: 1" = 1'-0"

DEBOND SCHEDULE	
Debond Pair	Debond Length From End Of Girder
A	6'-0"

① Prestressing strands at CL Joint shall be sawn flush with the end of the girder. Prestressing strands At CL Bent shall be bent up into diaphragms as shown in "SECTION C-C" on Dwg. No. 66320

② For "CHANNEL CONNECTION DETAIL", see Dwg. No. 66333.

③ Camber and Deflection Values shown are based on a concrete girder strength, f'c = 8,000 psi. Greater strengths may require adjustments. See "SPECIAL CAMBER NOTES" on Dwg. No. 66331.

TABLE OF VARIABLES						
	Girder	"A"	"B"	"C"	"D"	"E"
SPAN 1	1	69'-11⅞"	34'-6"	0"	34'-6"	5⅞"
	2	70'-0"	32'-9⅜"	2'-0"	34'-2⅝"	6"
	3	70'-0"	33'-0⅝"	2'-0"	33'-11⅛"	6"
	4	70'-0"	33'-3⅛"	2'-0"	33'-8⅜"	6"
	5	70'-0⅛"	33'-6⅝"	0"	35'-5⅜"	6⅛"
SPAN 3	1	69'-11⅛"	34'-6"	0"	34'-6"	5⅛"
	2	70'-0"	34'-7⅝"	2'-0"	32'-4⅛"	6"
	3	70'-0"	34'-8⅜"	2'-0"	32'-3⅛"	6"
	4	70'-0"	34'-9¾"	2'-0"	32'-2¼"	6"
	5	70'-0⅜"	36'-1⅛"	0"	32'-0⅞"	6⅜"

NOTES:
For "SUPERSTRUCTURE GENERAL NOTES", see Dwg. No. 66331.

For "SECTION D-D", see Drawing No. 66332.

STATE OF ARKANSAS
LICENSED PROFESSIONAL ENGINEER
No. 21243
COLTON S. WYLIE
Digitally Signed 07/28/2023
BRIDGE ENGINEER

SHEET 5 OF 6
DETAILS OF 215'-0" CONTINUOUS PRESTRESSED CONCRETE GIRDER UNIT BRIDGE A
HIGHWAY 612 OVER ROBBINS ROAD

ROUTE SEC.

ARKANSAS STATE HIGHWAY COMMISSION

LITTLE ROCK, ARK.

DRAWN BY: HEW DATE: JUNE 2011 FILENAME: b012326a9_s5.dgn
CHECKED BY: AJK DATE: APR. 2012 SCALE: AS SHOWN
DESIGNED BY: MRA DATE: JUNE 2011

BRIDGE NO. A7620 DRAWING NO. 66323

JESkinner 7/28/2023 12:12:06 PM
WORKSPACE: ARDOT Bridge
\\garvernc.local\gdata\Projects\20\T\170\T660 - ARDOT 012326 Hwy 412 - Hwy 112\Drawings\b012326x9_S405-BB.dgn
REVISED DATE:

DATE REVISED	DATE REVISED	FED. ROAD DIST. NO.	STATE	JOB NO.	SHEET NO.	TOTAL SHEETS
		6	ARK.	012326	535	838
		A7620		215'-0" UNIT		66324

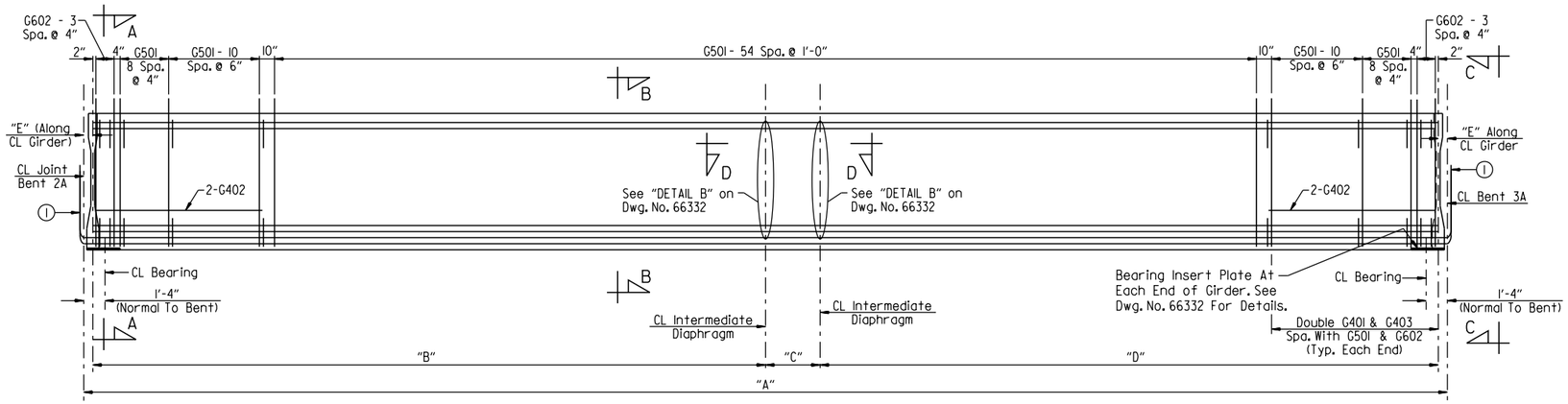

TYPICAL GIRDER ELEVATION (TYPE III) - SPAN 2

No Scale

TABLE OF VARIABLES					
Girder	"A"	"B"	"C"	"D"	"E"
1	74'-11 3/4"	37'-0"	0"	37'-0"	5 7/8"
2	75'-0"	35'-0 15/16"	2'-0"	36'-11 1/16"	6"
3	75'-0"	35'-11 5/16"	2'-0"	36'-10 1/16"	6"
4	75'-0"	35'-2 7/8"	2'-0"	36'-9 1/8"	6"
5	75'-0 3/16"	35'-3 1/16"	0"	38'-8 3/16"	6 1/16"

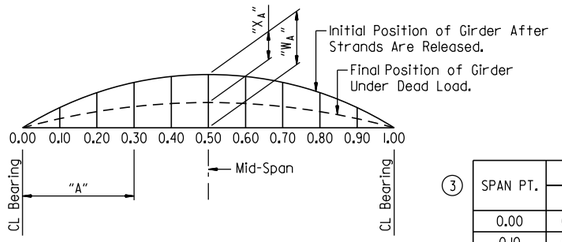

"W_A" is camber of girder (prestress + dead load of girder @ 90 days after release)

"X_A" is dead load deflection of slab + diaphragms + composite dead load.

② CAMBER & DEFLECTIONS (INCHES)

③ SPAN PT.	INCHES "W_A"	INCHES "X_A"
0.00	0.000	0.000
0.10	0.842	0.280
0.20	1.504	0.562
0.30	1.956	0.786
0.40	2.218	0.929
0.50	2.304	0.979

③ Symmetrical by 180° rotation

BAR LIST - PER GIRDER			
Mark	No. Req'd.	Length	Pin. Dia.
G301	6	5'-0"	Str.
G401	92	3'-3 1/2"	2"
G402	4	9'-2"	Str.
G403	46	2'-11"	3"
G404	2	73'-7"	Str.
G501	186	5'-2"	3 3/4"
G602	16	4'-4"	4 1/2"

BAR BENDING DIAGRAMS

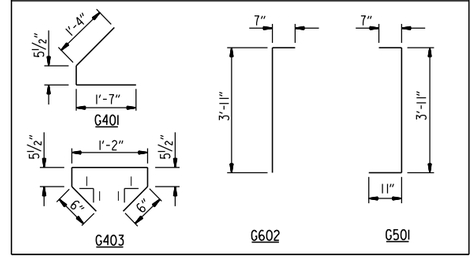

NOTES:
Dimensions of bars in bending diaphragm are out-to-out.

At the Contractor's option, 1/2"ø strands pulled to 2,000 lbs. may be substituted for bars G404.

All bars in the "BAR LIST - PER GIRDER" will not be paid for directly, but will be considered subsidiary to the item "PRESTRESSED CONCRETE GIRDERS (TYPE III)".

At the Contractor's option, the two G401 bars may be furnished as one bar.

① Prestressing strands At CL Bent shall be bent up into diaphragms as shown in "SECTION C-C" on Drawing No. 66320.

② Camber and Deflection Values shown are based on a concrete girder strength, f'c = 8,000 psi. Greater strengths may require adjustments. See "SPECIAL CAMBER NOTES" on Dwg. No. 66331.

DEBOND SCHEDULE	
Debond Pair	Debond Length From End Of Girder
A	6'-0"
B	12'-0"
C	9'-0"

NOTES:
For "SUPERSTRUCTURE GENERAL NOTES", see Dwg. No. 66331.

For "SECTION D-D", see Dwg. No. 66332.

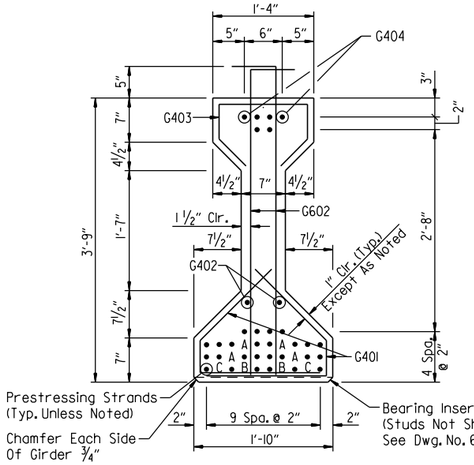

SECTION A-A
Scale: 1" = 1'-0"

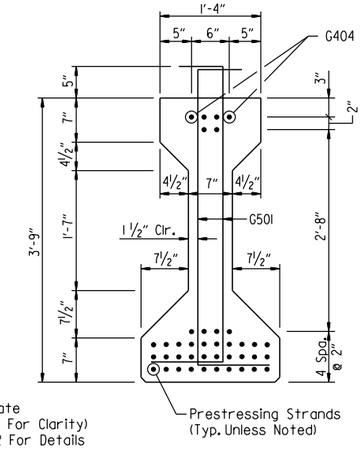

SECTION B-B
Scale: 1" = 1'-0"

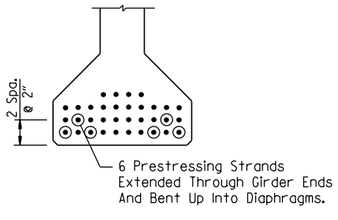

VIEW C-C
Scale: 1" = 1'-0"

STATE OF ARKANSAS
LICENSED PROFESSIONAL ENGINEER
No. 21243
COLTON S. WYLIE
Digitally Signed 07/28/2023
BRIDGE ENGINEER

SHEET 6 OF 6
DETAILS OF 215'-0" CONTINUOUS PRESTRESSED CONCRETE GIRDER UNIT BRIDGE A
HIGHWAY 612 OVER ROBBINS ROAD

ROUTE SEC.

ARKANSAS STATE HIGHWAY COMMISSION

LITTLE ROCK, ARK.

DRAWN BY: HEW DATE: JUNE 2011 FILENAME: b012326a9_s6.dgn
CHECKED BY: AJK DATE: APR. 2012 SCALE: AS SHOWN
DESIGNED BY: MRA DATE: JUNE 2011

BRIDGE NO. A7620 DRAWING NO. 66324

JEskinner 7/28/2023 12:12:07 PM
WORKSPACE: ARDOT Bridge
\\garverinc.local\data\Projects\2017\17017660 - ARDOT 012326 Hwy 412 - Hwy 112\Drawings\b012326x9_s406-BB.dgn
REVISED DATE:

DATE REVISED	DATE REVISED	FED. ROAD DIST. NO.	STATE	JOB NO.	SHEET NO.	TOTAL SHEETS
		6	ARK.	012326	536	838
		B7620		215'-0" UNIT		66325

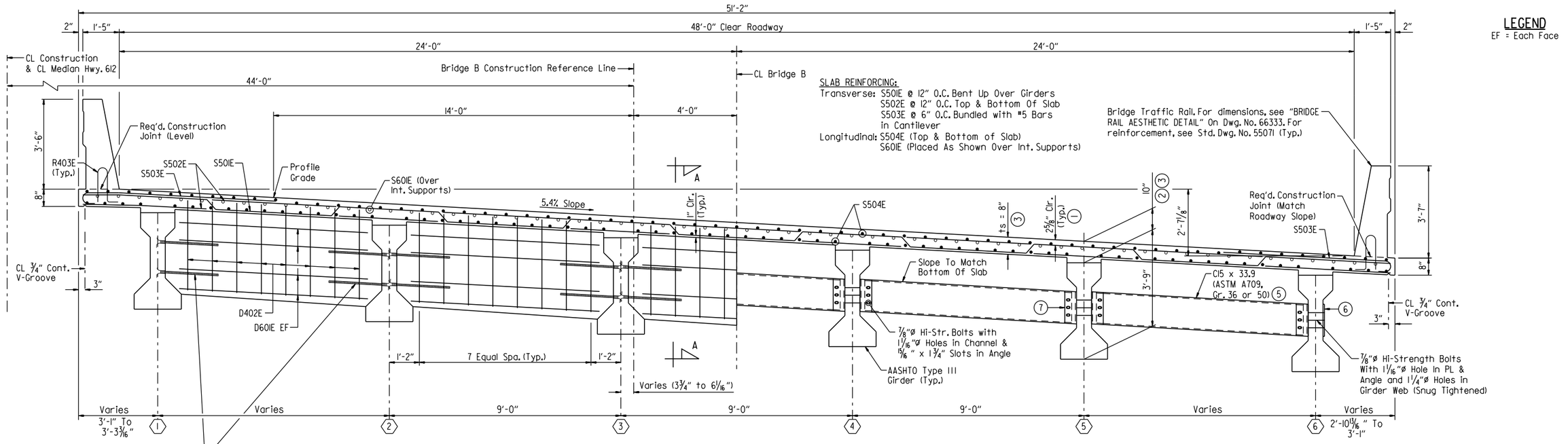

LEGEND

EF = Each Face

SLAB REINFORCING:
Transverse: S501E @ 12" O.C. Bent Up Over Girders
S502E @ 12" O.C. Top & Bottom Of Slab
S503E @ 6" O.C. Bundled with #5 Bars in Cantilever
Longitudinal: S504E (Top & Bottom of Slab)
S601E (Placed As Shown Over Int. Supports)

Bridge Traffic Rail. For dimensions, see "BRIDGE RAIL AESTHETIC DETAIL" On Dwg. No. 66333. For reinforcement, see Std. Dwg. No. 55071 (Typ.)

INTERMEDIATE CONCRETE DIAPHRAGMS

(4) Galvanized Threaded Inserts & ¾"ø x 3'-6" Threaded Rods. For Number And Location, See "TYPICAL GIRDER ELEVATION" On Drawing Nos. 66329 & 66330.

(5) ALTERNATE STRUCTURAL STEEL DIAPHRAGMS

TYPICAL SECTION AT INTERMEDIATE DIAPHRAGMS

(Looking Ahead)
Scale: ½" = 1'-0"

(1) TOLERANCE:
Minus = ¼"
Plus = Equal to amount of slab thickening used to meet slab thickness tolerance - see "ADJUSTMENT FOR SLAB THICKNESS TOLERANCE WHEN REMOVABLE DECK FORMING IS USED" on Dwg. No. 66333.

(2) This dimension taken at CL Girder @ CL Bearing

(3) See "ADJUSTMENT FOR SLAB THICKNESS TOLERANCE WHEN REMOVABLE DECK FORMING IS USED" on Dwg. No. 66333.

EXPANSION DEVICE:
Roadway Channel: MC18x42.7
Conn. Angle: MC18x42.7 (Cope One Flange)

(4) Galvanized threaded inserts: Dayton-Richmond F-42 Loop Ferrule Insert or an approved equal. ¾"ø galvanized threaded rods to be ASTM A709, Grade 36 or AASHTO M 31or M 232, Class C or ASTM B695, Class 50. These items will not be paid for directly but shall be considered subsidiary to the item "PRESTRESSED CONCRETE GIRDERS (TYPE III). Galvanizing shall be in accordance with AASHTO M232 Class C or AASHTO M298 Class 50.

(5) Galvanized steel diaphragms may be used in place of concrete at intermediate diaphragms only. All components of the alternate steel diaphragms shall be galvanized. Galvanizing shall be in accordance with AASHTO M111. Payment will be based on concrete diaphragms.

(6) PL ½" x 4" x 15" (ASTM A709, Gr. 36 or 50) (Mask when applying textured coating finish to exterior girders.)

(7) L6" x 4" x ½" x 15" (ASTM A709, Gr. 36 or 50), center angle on web of girder. A standard washer shall be supplied for use under both the nut and the head of the ⅞"ø h.s. bolts. An additional plate washer shall cover the angle slots.

NOTES:
Class 2 Protective Surface Treatment shall be applied to the roadway surface and the face and top of bridge traffic railing.

Class 3 Textured Coating Finish shall be applied to bridge surfaces as specified in Special Provision "TEXTURED COATING FINISH" and in accordance with Subsection 802.19(b)(3). Textured Coating Finish shall not be applied on surfaces where Class 2 Protective Surface Treatment is applied.

One epoxy-coated #5 bar in the top and one epoxy-coated #5 bar in the bottom may be substituted for each bar S501E. Payment will be based on the weight of bar S501E.

Bar positions or clearances from the forms shall be maintained by means of stays, ties, hangers or other approved devices per Subsection 804.06. Placement of slab bolster or high-chairs with full- length lower runners directly on removable deck forms will not be allowed.

All bars designated with an "E" suffix are to be epoxy coated.

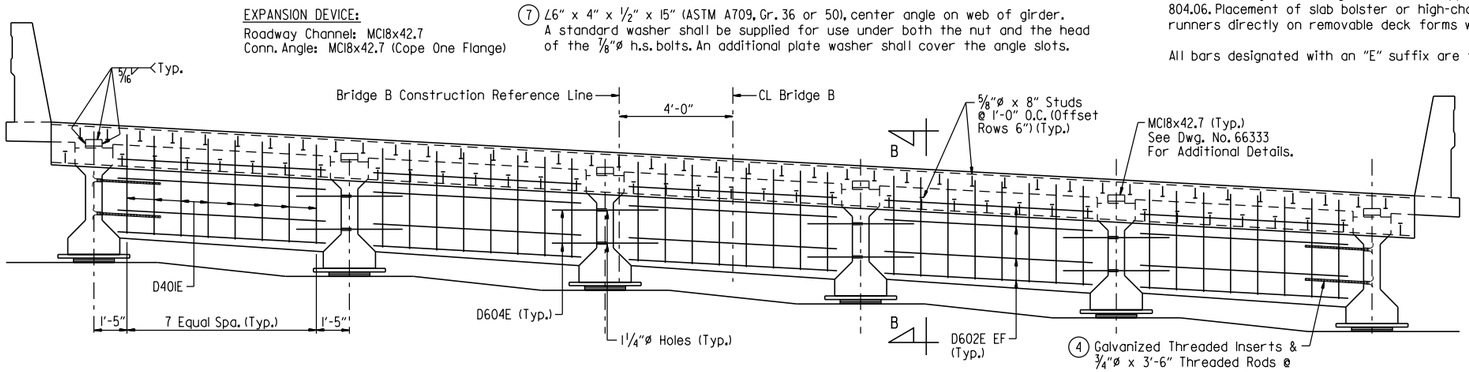

TYPICAL SECTION (END OF UNIT AT JOINT)

(Looking Ahead)
No Scale

(4) Galvanized Threaded Inserts & ¾"ø x 3'-6" Threaded Rods @ Exterior Girders. For Number And Location, See "TYPICAL GIRDER ELEVATION" On Dwg. Nos. 66329 & 66330. Threaded Rods Shall Be Bent As Required To Match Skew Of Diaphragms.

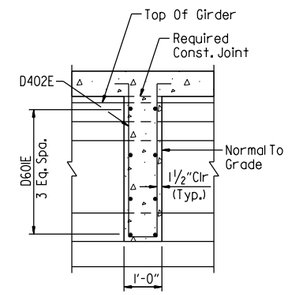

SECTION A-A

(Normal To Diaphragm)
Scale: ½" = 1'-0"

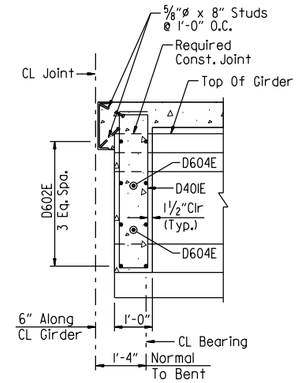

SECTION B-B

(Normal To Diaphragm)
Scale: ½" = 1'-0"

STATE OF ARKANSAS
LICENSED PROFESSIONAL ENGINEER
No. 21243
COLTON S. WYLIE
Digitally Signed 07/28/2023
BRIDGE ENGINEER

SHEET 1 OF 6
DETAILS OF 215'-0" CONTINUOUS PRESTRESSED CONCRETE GIRDER UNIT BRIDGE B
HIGHWAY 612 OVER ROBBINS ROAD

ROUTE SEC.

ARKANSAS STATE HIGHWAY COMMISSION
LITTLE ROCK, ARK.

DRAWN BY: HEW DATE: JUNE 2011 FILENAME: b012326b9_s7.dgn
CHECKED BY: AJK DATE: JAN. 2012 SCALE: AS SHOWN
DESIGNED BY: MRA DATE: JUNE 2011
BRIDGE NO. B7620 DRAWING NO. 66325

JESkinner 7/28/2023 12:12:07 PM
WORKSPACE: ARDOT Bridge
\\garverinc.local\gdata\Projects\2017\170766 - ARDOT 012326 Hwy 412 - Hwy 112\Drawings\b012326x9_S407-TS.dgn
REVISED DATE:

DATE REVISED	DATE REVISED	FED. ROAD DIST. NO.	STATE	JOB NO.	SHEET NO.	TOTAL SHEETS
		6	ARK.	012326	537	838
		B7620		215'-0" UNIT		66326

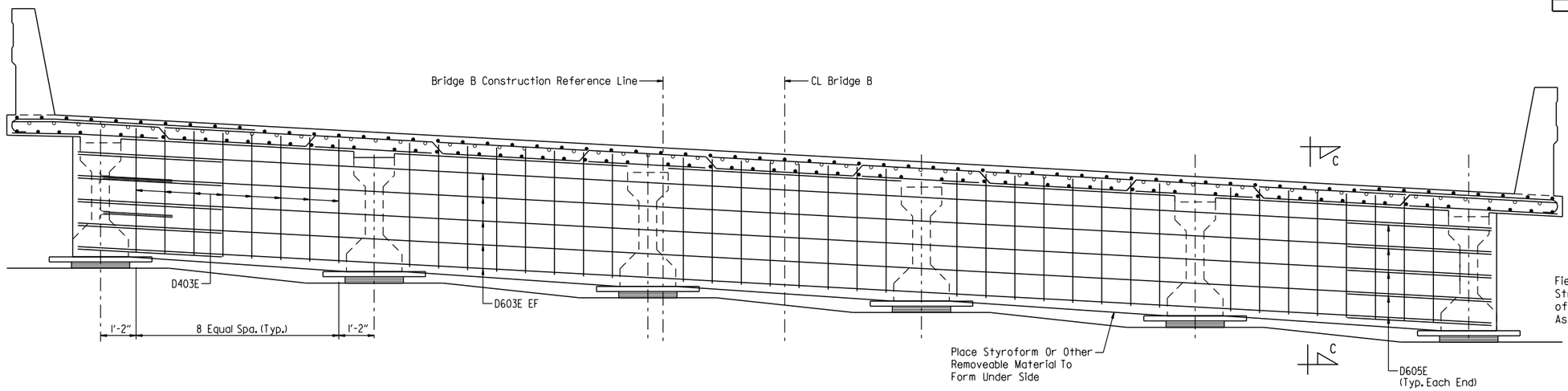

TYPICAL SECTION BETWEEN GIRDERS AT INTERMEDIATE BENTS

(For Info Not Shown See "TYPICAL SECTION AT INTERMEDIATE DIAPHRAGMS")
No Scale

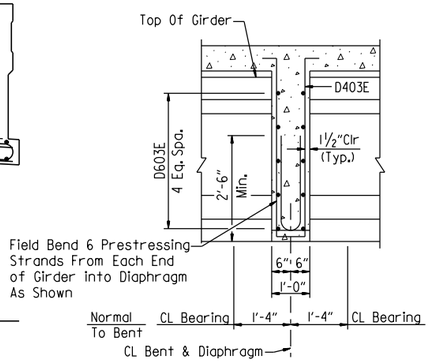

Note:
SECTION C-C Is Cut Normal To Diaphragm.

SECTION C-C

(Normal To Grade)
Scale: ½" = 1'-0"

LEGEND
EF = Each Face

BAR BENDING DIAGRAMS

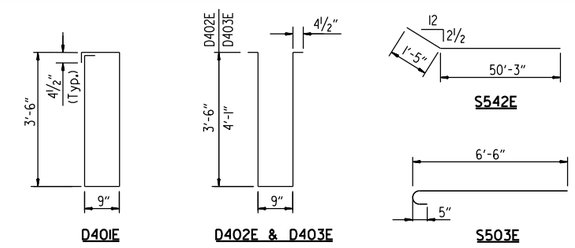

① ½" Overtolerance
No Undertolerance

BAR LIST

Mark	No. Req'd.	Length	Pin. Dia.
D401E	80	8'-10"	2"
D402E	120	8'-2"	2"
D403E	90	9'-6"	2"
D404E	8	4'-1"	STR.
D601E	120	7'-0"	STR.
D602E	80	7'-4"	STR.
D603E	20	46'-11"	STR.
D604E	16	6'-0"	STR.
D605E	20	9'-10"	4½"
R400E	32	6'-3"	3"
R401E	868	7'-6"	3"
R402E	80	5'-6"	STR.
R403E	868	3'-8"	3", 6"
R409E	80	9'-8"	STR.
R410E	60	17'-11"	STR.
R411E	120	19'-7"	STR.
S501E	206	51'-10½"	3"
S502E	414	50'-10"	STR.
S503E	863	7'-1"	STR.
S504E	524	56'-6"	STR.
S505E TO S520E	2 Ea.	6'-7" TO 47'-1"	STR.
S521E TO S541E	2 Ea.	47'-7" TO 6'-9"	STR.
S542E	4	51'-8"	3"
S601E	124	30'-0"	STR.
S701E	16	7'-5"	5¼"

NOTES:
Dimension of bars are out-to-out.

Bar designations ending with "E" indicate epoxy coated bars.

See Std. Dwg. No. 55071 for Bar Bending Diagrams of R400E, R401E & R403E

STATE OF ARKANSAS
LICENSED PROFESSIONAL ENGINEER
No. 21243
COLTON S. WYLIE
Digitally Signed 07/28/2023
BRIDGE ENGINEER

SHEET 2 OF 6
DETAILS OF 215'-0" CONTINUOUS PRESTRESSED CONCRETE GIRDER UNIT BRIDGE B
HIGHWAY 612 OVER ROBBINS ROAD

ROUTE SEC.

ARKANSAS STATE HIGHWAY COMMISSION
LITTLE ROCK, ARK.

DRAWN BY: HEW DATE: JUNE 2011 FILENAME: b012326b9_s8.dgn
CHECKED BY: AJK DATE: JAN. 2012 SCALE: AS SHOWN
DESIGNED BY: MRA DATE: JUNE 2011
BRIDGE NO. B7620 DRAWING NO. 66326

JESkinner 7/28/2023 12:12:08 PM
WORKSPACE: ARDOT Bridge
\\garverinc.local\gdata\Projects\2017\17017660 - ARDOT 012326 Hwy 412 - Hwy 112\Drawings\b012326x9_S408-TS.dgn
REVISED DATE:

DATE REVISED	DATE REVISED	FED. ROAD DIST. NO.	STATE	JOB NO.	SHEET NO.	TOTAL SHEETS
		6	ARK.	012326	538	838
		B7620		215'-0" UNIT		66327

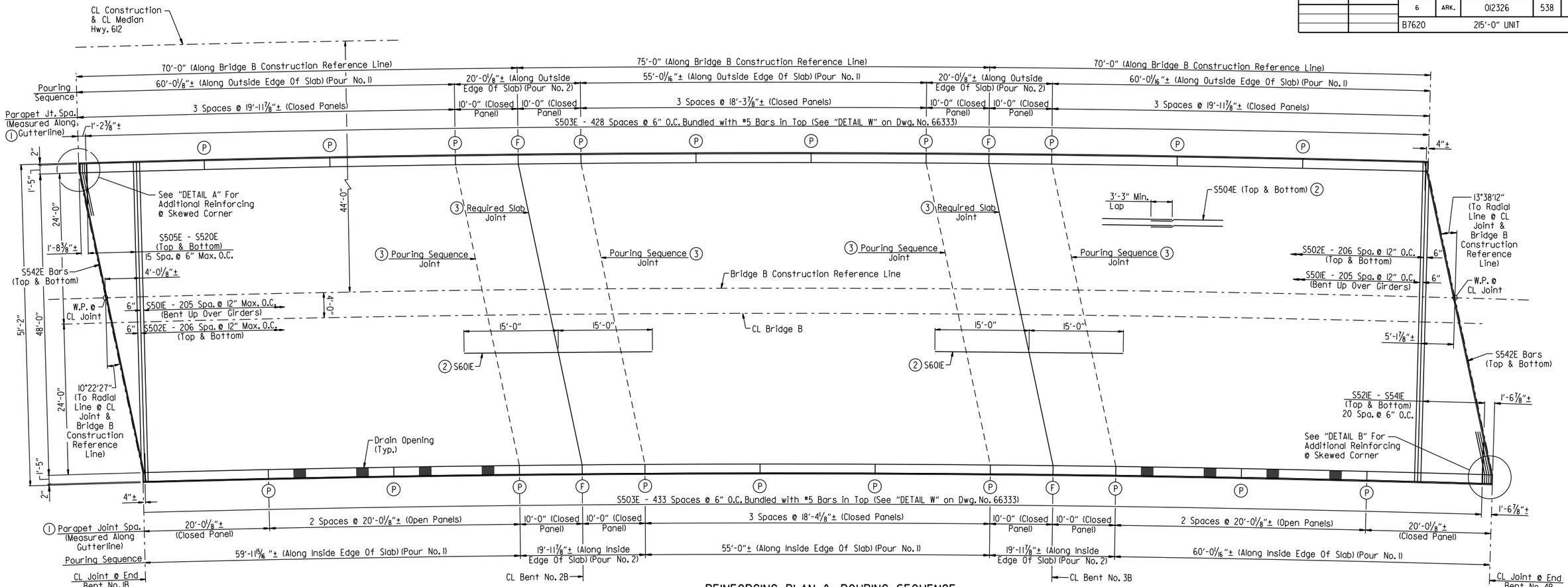

REINFORCING PLAN & POURING SEQUENCE

Scale: 1/8" = 1'-0"

(1) Parapet joints designated with symbol (F) shall be stopped 6" from top of slab. All other parapet joints with symbol (P) shall be partial depth joints stopped 16" from top of slab.

(2) Refer To "TYPICAL SECTION AT INTERMEDIATE DIAPHRAGMS" on Drawing No. 66325 for placement.

(3) See "TRANSVERSE SLAB JOINT DETAIL" on Dwg. No. 66332

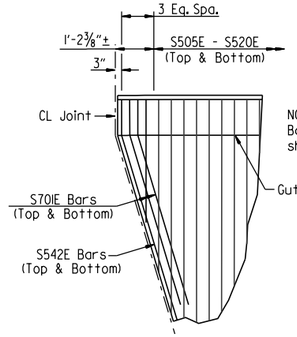

DETAIL A
No Scale

NOTE:
Bars S503E not shown for clarity.

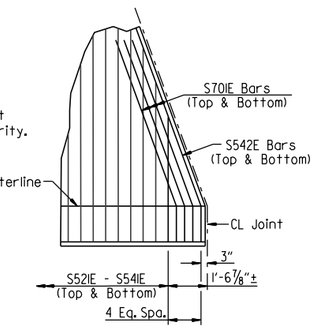

DETAIL B
No Scale

TABLE OF VARIABLES								
CLOSED RAIL PANELS			OPEN RAIL PANELS					
Panel Length	"A"	R4XXE	Panel Length	"B"	"C"	"D"	"E"	R4XXE
10'-0"	19	09	20'-0 1/8"	11	4'-0"	16	8'-0 1/8"	11
18'-3 7/8"	36	10						
18'-4 1/8"	36	10						
19'-11 7/8"	39	11						
20'-0 1/8"	40	11						

NOTES:
Required slab joints and pouring sequence joints shall align with rail open joint at the gutterline.

Transverse slab reinforcing is placed on radial lines and spaced along left edge of slab.

Longitudinal slab reinforcing is placed with same degree of curvature as slab.

Edges of slab are concentric to 1°30'00" curve @ CL Median.

All transverse lines are radial to CL Median.

For "TRANSVERSE SLAB JOINT DETAIL", see Dwg. No. 66332.

STATE OF ARKANSAS
LICENSED PROFESSIONAL ENGINEER
No. 21243
COLTON S. WYLIE
Digitally Signed 07/28/2023
BRIDGE ENGINEER

SHEET 3 OF 6
DETAILS OF 215'-0" CONTINUOUS PRESTRESSED CONCRETE GIRDER UNIT BRIDGE B
HIGHWAY 612 OVER ROBBINS ROAD

ROUTE SEC.

ARKANSAS STATE HIGHWAY COMMISSION

LITTLE ROCK, ARK.

DRAWN BY: CWT DATE: NOV. 2022 FILENAME: b012326b9_s9.dgn
CHECKED BY: AJK DATE: NOV. 2022 SCALE: AS SHOWN
DESIGNED BY: CSW DATE: NOV. 2022

BRIDGE NO. B7620 DRAWING NO. 66327

JEskinner 7/28/2023 12:12:08 PM
WORKSPACE: ARDOT Bridge
\\garverinc.local\gdata\Projects\2017\170766 - ARDOT 012326 Hwy 412 - Hwy 112\Drawings\b012326x9_S409-SB.dgn
REVISED DATE:

DATE REVISED	DATE REVISED	FED. ROAD DIST. NO.	STATE	JOB NO.	SHEET NO.	TOTAL SHEETS
		6	ARK.	012326	539	838
		B7620		215'-0" UNIT		66328

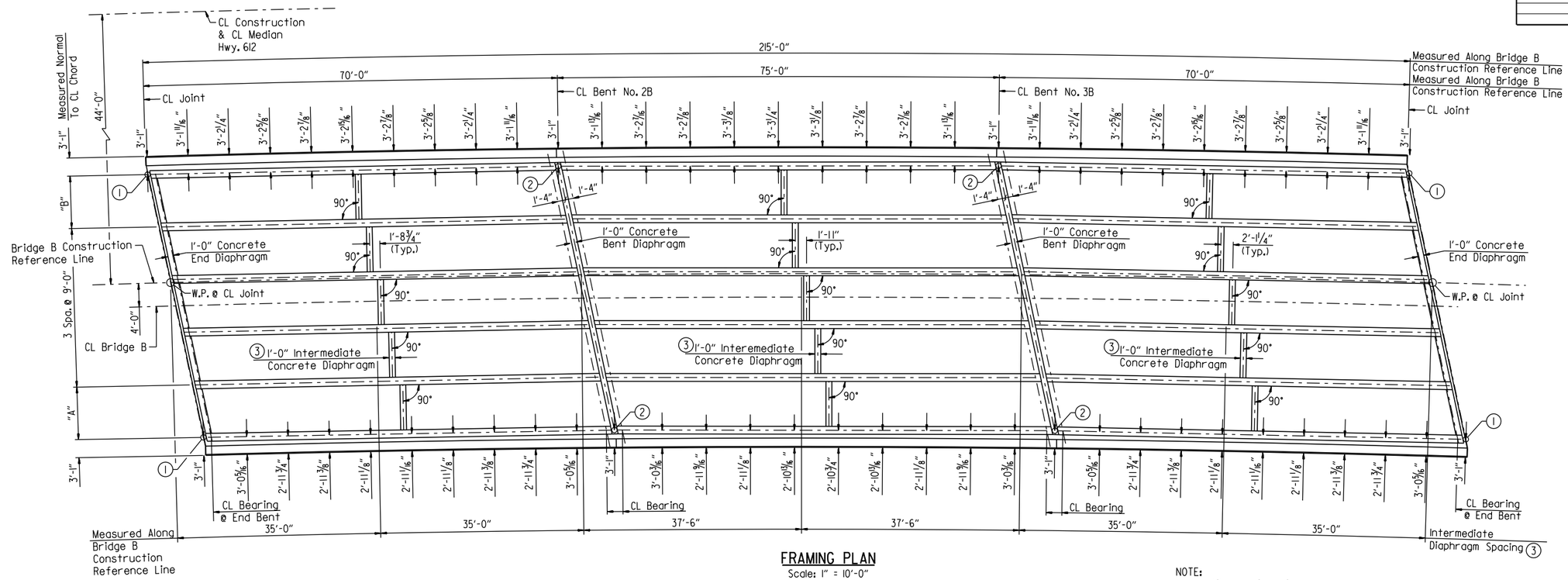

FRAMING PLAN

Scale: 1" = 10'-0"

NOTE:
All cantilever dimensions are measured at tenth points along edges of slab and normal to exterior girders.

1. Intersection of CL Girder & CL Joint
2. Intersection CL Girder & CL Bent
3. Galvanized steel diaphragms may be used in place of concrete diaphragms at intermediate diaphragm locations only.
4. Provide roofing felt to serve as a bond breaker where diaphragm overlaps external load plate.

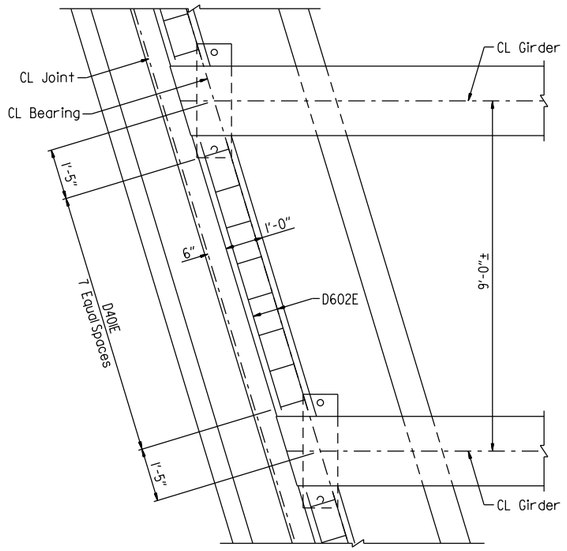

PLAN END DIAPHRAGM

Scale: ½" = 1'-0"

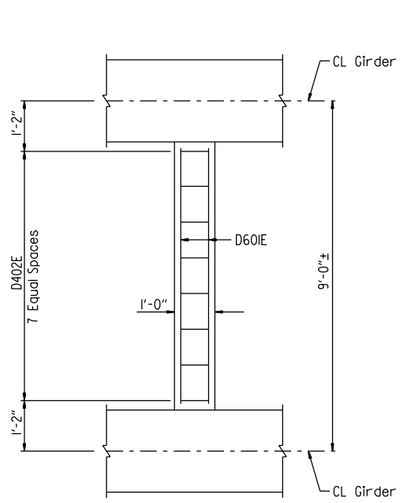

PLAN INTERMEDIATE DIAPHRAGM

Scale: ½" = 1'-0"

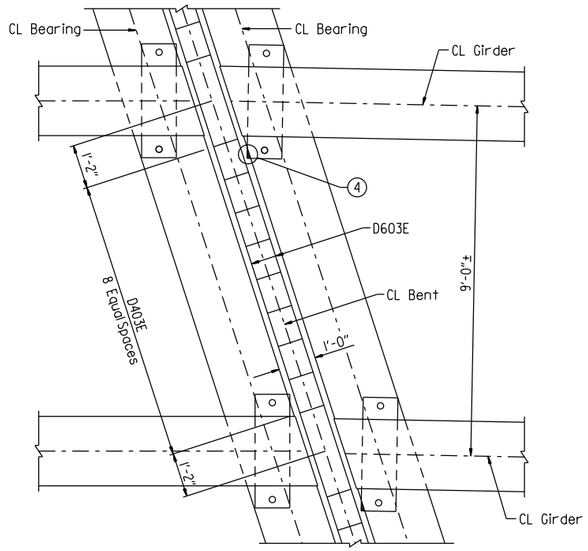

PLAN BENT DIAPHRAGM

Scale: ½" = 1'-0"

TABLE OF VARIABLES		
Location	"A"	"B"
Bent 1	8'-11 9/16"±	8'-11 1/2"±
Bent 2 - Span 1	9'-0 1/2"±	9'-0 1/2"±
Bent 2 - Span 2	8'-11 1/16"±	8'-11 1/16"±
Bent 3 - Span 2	9'-0 5/8"±	9'-0 9/16"±
Bent 3 - Span 3	8'-11 1/16"±	8'-11 1/16"±
Bent 4	9'-0 5/8"±	9'-0 9/16"±

STATE OF ARKANSAS
LICENSED PROFESSIONAL ENGINEER
No. 21243
COLTON S. WYLIE
Digitally Signed 07/28/2023
BRIDGE ENGINEER

SHEET 4 OF 6
DETAILS OF 215'-0" CONTINUOUS PRESTRESSED CONCRETE GIRDER UNIT BRIDGE B
HIGHWAY 612 OVER ROBBINS ROAD

ROUTE SEC.

ARKANSAS STATE HIGHWAY COMMISSION
LITTLE ROCK, ARK.

DRAWN BY: HEW DATE: JULY 2011 FILENAME: b012326b9_sl0.dgn
CHECKED BY: AJK DATE: APR. 2012 SCALE: AS SHOWN
DESIGNED BY: MRA DATE: JULY 2011

BRIDGE NO. B7620 DRAWING NO. 66328

JESkinner 7/28/2023 12:12:09 PM
WORKSPACE: ARDOT Bridge
\\garverinc.local\gdata\Projects\20IT\170I7660 - ARDOT 012326 Hwy 412 - Hwy 112\Drawings\b012326x9_S410-SF.dgn
REVISED DATE:

DATE REVISED	DATE REVISED	FED. ROAD DIST. NO.	STATE	JOB NO.	SHEET NO.	TOTAL SHEETS
		6	ARK.	012326	540	838
		B7620		215'-0" UNIT		66329

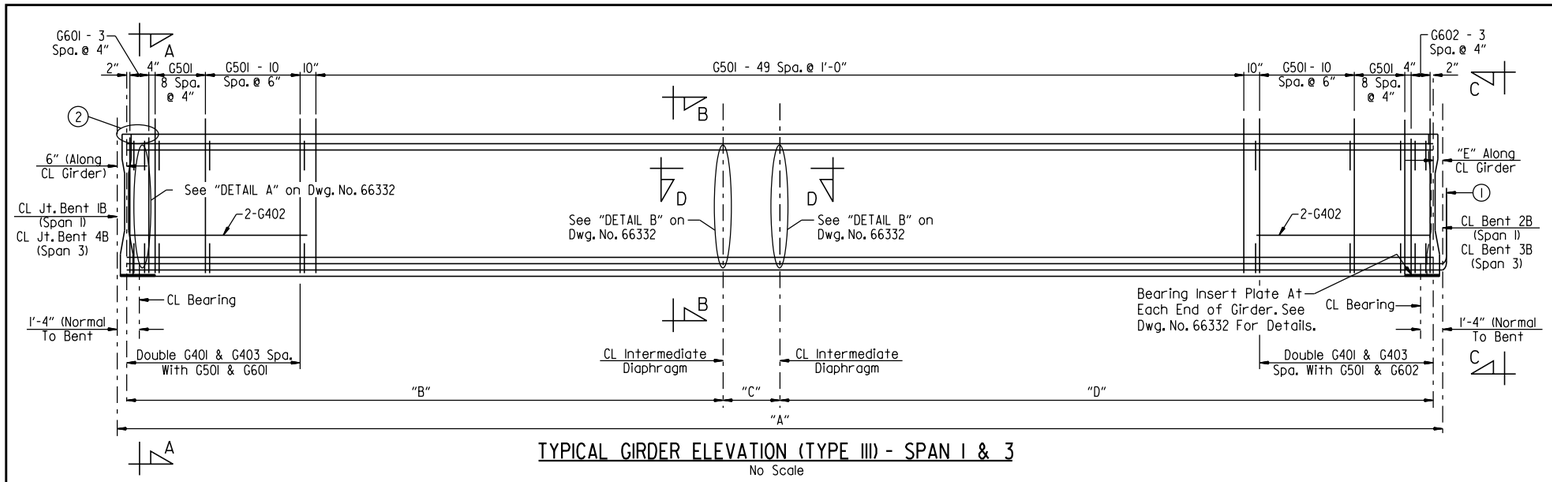

TYPICAL GIRDER ELEVATION (TYPE III) - SPAN 1 & 3

No Scale

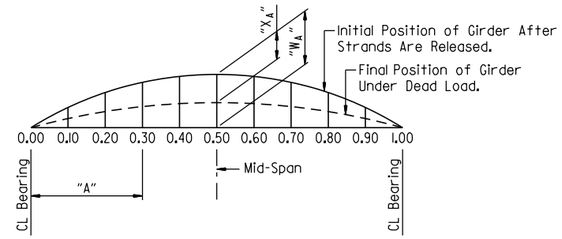

"W_A" is camber of girder (prestress + dead load of girder @ 90 days after release)

"X_A" is dead load deflection of slab + diaphragms + composite dead load.

(3) CAMBER & DEFLECTIONS (INCHES)

(3) Camber and Deflection Values shown are based on a concrete girder strength, f'c = 8,000 psi. Greater strengths may require adjustments. See "SPECIAL CAMBER NOTES" on Dwg. No. 66331.

(4)

SPAN PT.	INCHES	
	"W_A"	"X_A"
0.00	0.000	0.000
0.10	0.638	0.214
0.20	1.116	0.433
0.30	1.441	0.606
0.40	1.630	0.716
0.50	1.691	0.754

(4) Symmetrical by 180° rotation

TABLE OF VARIABLES						
	Girder	"A"	"B"	"C"	"D"	"E"
SPAN 1	1	69'-11 13/16"	35'-4 3/8"	0"	33'-7 5/8"	5 13/16"
	2-5	70'-0"	33'-7 11/16"	1-8 3/4"	33'-7 7/16"	6"
	6	70'-0 3/16"	33'-7 5/8"	0"	35'-4 3/8"	6 3/16"
SPAN 3	1	69'-11 3/4"	33'-5 3/8"	0"	35'-6 5/8"	5 3/4"
	2-5	70'-0 1/16"	33'-5 7/16"	2'-1 1/4"	33'-5 5/16"	6 1/16"
	6	70'-0 5/16"	35'-6 5/8"	0"	33'-5 3/8"	6 5/16"

(1) Prestressing strands at CL Joint shall be sawn flush with the end of the girder. Prestressing strands At CL Bent shall be bent up into diaphragms as shown in "SECTION C-C" on Dwg. No. 66326.

(2) For "CHANNEL CONNECTION DETAIL", see Dwg. No. 66333.

BAR LIST - PER GIRDER			
Mark	No. Req'd.	Length	Pin. Dia.
G301	12	5'-0"	Str.
G401	92	3'-3 1/2"	2"
G402	4	9'-2"	Str.
G403	46	2'-11"	3"
G404	2	68'-8"	Str.
G501	176	5'-2"	3 3/4"
G601	8	3'-9"	4 1/2"
G602	8	4'-4"	4 1/2"

BAR BENDING DIAGRAMS

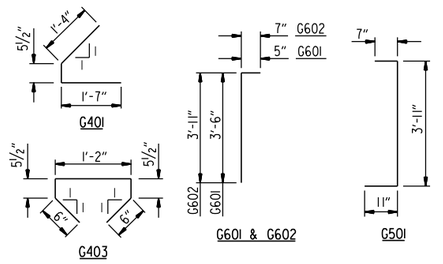

DEBOND SCHEDULE	
Debond Pair	Debond Length From End Of Girder
A	5'-0"

NOTES:
Dimensions of bars in bending diaphragm are out-to-out.

All bars in the "BAR LIST - PER GIRDER" will not be paid for directly, but willbe considered subsidiary to the item "PRESTRESSED CONCRETE GIRDERS (TYPE III)".

At the Contractor's option, 1/2"Ø strands pulled to 2,000 lbs. may be substituted for bars G404.

At the Contractor's option, the two G401 bars may be furnishied as one bar.

NOTES:
For "SUPERSTRUCTURE GENERAL NOTES", see Dwg. No. 66331.

For "SECTION D-D", see Dwg. No. 66332.

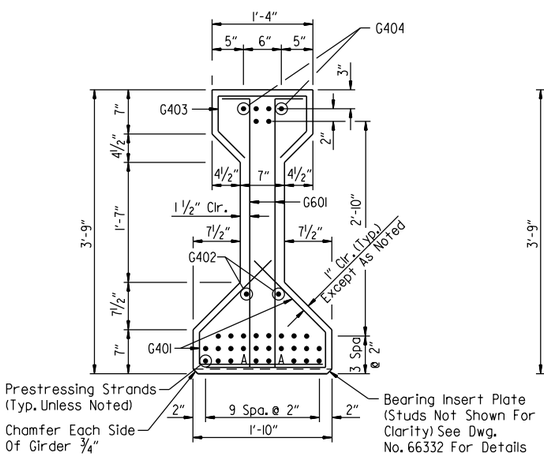

SECTION A-A
Scale: 1" = 1'-0"

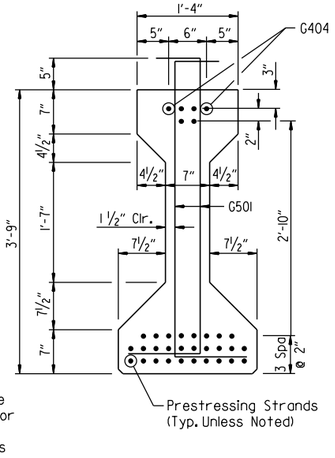

SECTION B-B
Scale: 1" = 1'-0"

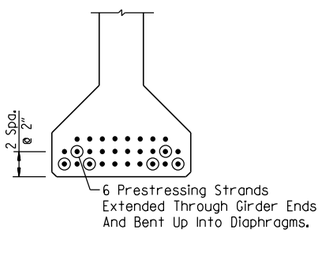

VIEW C-C
Scale: 1" = 1'-0"

STATE OF ARKANSAS
LICENSED PROFESSIONAL ENGINEER
No. 21243
COLTON S. WYLIE
Digitally Signed 07/28/2023
BRIDGE ENGINEER

SHEET 5 OF 6
DETAILS OF 215'-0" CONTINUOUS PRESTRESSED CONCRETE GIRDER UNIT
BRIDGE B
HIGHWAY 612 OVER ROBBINS ROAD

ROUTE SEC.

ARKANSAS STATE HIGHWAY COMMISSION
LITTLE ROCK, ARK.

DRAWN BY: HEW DATE: JUNE 2011 FILENAME: b012326b9_sh1.dgn
CHECKED BY: AJK DATE: APR. 2012 SCALE: AS SHOWN
DESIGNED BY: MRA DATE: JUNE 2011
BRIDGE NO. B7620 DRAWING NO. 66329

JESkinner 7/28/2023 12:12:09 PM
WORKSPACE: ARDOT Bridge
\\garverinc.local\gdata\Projects\2017\17017660 - ARDOT 012326 Hwy 412 - Hwy 112\Drawings\b012326x9_S4ii-BB.dgn
REVISED DATE:

DATE REVISED	DATE REVISED	FED. ROAD DIST. NO.	STATE	JOB NO.	SHEET NO.	TOTAL SHEETS
		6	ARK.	012326	541	838
		B7620		215'-0" UNIT		66330

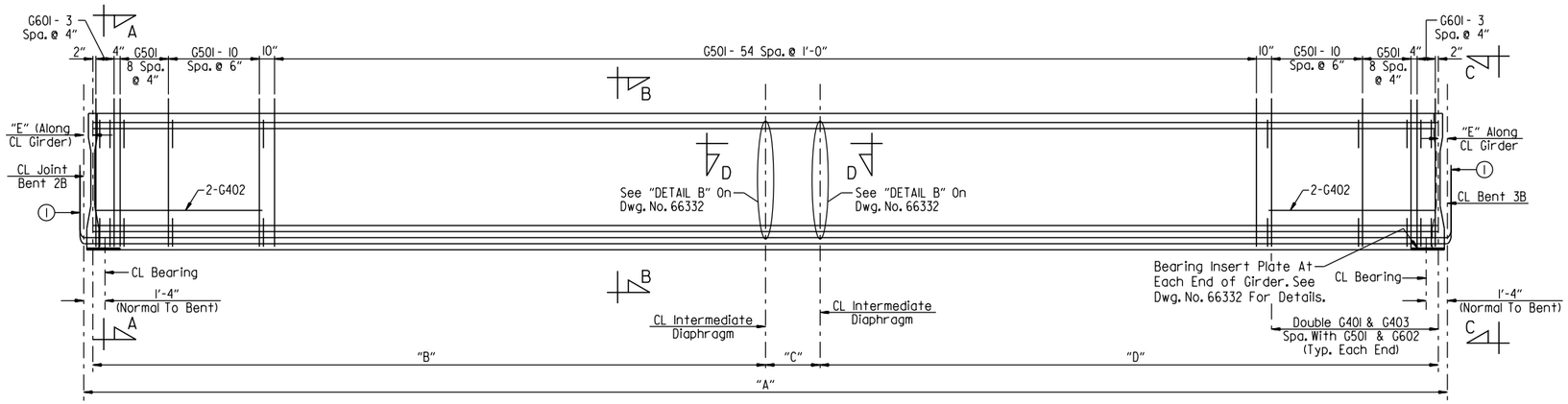

TYPICAL GIRDER ELEVATION (TYPE III) - SPAN 2

No Scale

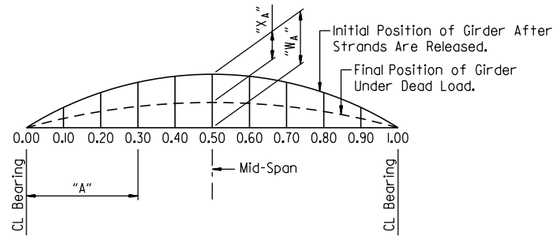

"W_A" is camber of girder (prestress + dead load of girder @ 90 days after release)

"X_A" is dead load deflection of slab + diaphragms + composite dead load.

(2) CAMBER & DEFLECTIONS (INCHES)

(2) Camber and Deflection Values shown are based on a concrete girder strength, f'c = 8,000 psi. Greater strengths may require adjustments. See "SPECIAL CAMBER NOTES" on Dwg. No. 66331.

(3) SPAN PT.	INCHES	
	"W_A"	"X_A"
0.00	0.000	0.000
0.10	0.807	0.287
0.20	1.423	0.577
0.30	1.843	0.806
0.40	2.085	0.953
0.50	2.165	1.003

(3) Symmetrical by 180° rotation

TABLE OF VARIABLES					
Girder	"A"	"B"	"C"	"D"	"E"
1	74'-11 3/4"	37'-11 1/2"	0"	36'-0 1/2"	5 7/8"
2-5	75'-0"	35'-0 1/2"	1'-11"	36'-0 1/2"	6"
6	75'-0 1/4"	36'-0 1/2"	0"	37'-11 1/2"	6 1/8"

(1) Prestressing strands At CL bent shall be bent up into diaphragms as shown in "SECTION C-C" on Dwg. No. 66326.

BAR LIST - PIER GIRDER			
Mark	No. Req'd.	Length	Pin. Dia.
G301	6	5'-0"	Str.
G401	92	3'-3 1/2"	2"
G402	4	9'-2"	Str.
G403	46	2'-11"	3"
G404	2	73'-8"	Str.
G501	186	5'-2"	3 3/4"
G601	16	4'-4"	4 1/2"

BAR BENDING DIAGRAMS

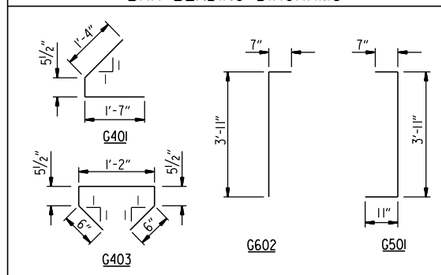

NOTES:
Dimensions of bars in bending diaphragm are out-to-out.

All bars in the "BAR LIST - PER GIRDER" will not be paid for directly, but willbe considered subsidiary to the item "PRESTRESSED CONCRETE GIRDERS (TYPE III)".

At the Contractor's option, 1/2"ø strands pulled to 2,000 lbs. may be substituted for bars G404.

At the Contractor's option, the two G401 bars may be furnished as one bar.

DEBOND SCHEDULE	
Debond Pair	Debond Length From End Of Girder
A	5'-0"
B	8'-0"

NOTES:
For "SUPERSTRUCTURE GENERAL NOTES", see Dwg. No. 66331.

For SECTION D-D, see Dwg. No. 66332.

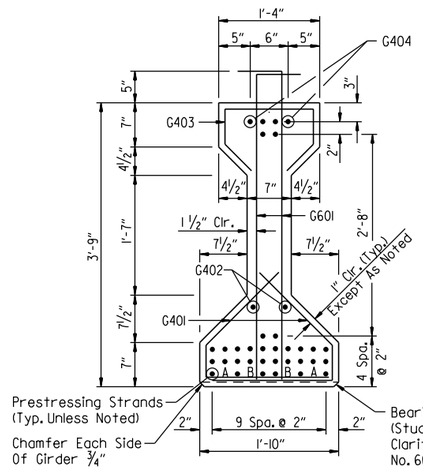

SECTION A-A
Scale: 1" = 1'-0"

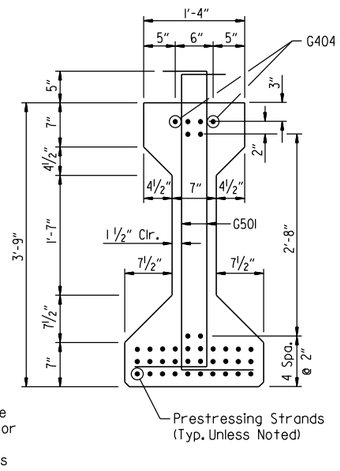

SECTION B-B
Scale: 1" = 1'-0"

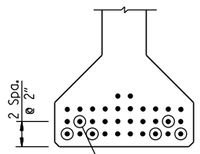

VIEW C-C
Scale: 1" = 1'-0"

STATE OF ARKANSAS
LICENSED PROFESSIONAL ENGINEER
No. 21243
COLTON S. WYLIE
Digitally Signed 07/28/2023
BRIDGE ENGINEER

SHEET 6 OF 6
DETAILS OF 215'-0" CONTINUOUS PRESTRESSED CONCRETE GIRDER UNIT BRIDGE B
HIGHWAY 612 OVER ROBBINS ROAD

ROUTE SEC.

ARKANSAS STATE HIGHWAY COMMISSION

LITTLE ROCK, ARK.

DRAWN BY: HEW DATE: JUNE 2011 FILENAME: b012326b9_sl2.dgn
CHECKED BY: AJK DATE: APR. 2012 SCALE: AS SHOWN
DESIGNED BY: MRA DATE: JUNE 2011

BRIDGE NO. B7620 DRAWING NO. 66330

JEskinner 7/28/2023 12:12:09 PM
WORKSPACE: ARDOT Bridge
\\garverinc.local\data\Projects\2017\17017660 - ARDOT 012326 Hwy 412 - Hwy 112\Drawings\b012326x9.542-BB.dgn
REVISED DATE:

DATE REVISED	DATE REVISED	FED. ROAD DIST. NO.	STATE	JOB NO.	SHEET NO.	TOTAL SHEETS
		6	ARK.	012326	542	838
		A7620 & B7620		COMMON DETAILS		66331

SUPERSTRUCTURE GENERAL NOTES:

CONCRETE:

Concrete shall be poured in the dry, and all exposed corners shall be chamfered ¾" unless noted. All concrete, except for prestressed girders, shall be Class S(AE) with a minimum 28 day compressive strength, f'c = 4,000 psi.

The superstructure details shown are for use when removable deck forming is used and are the basis for measurement of the item "CLASS S(AE) CONCRETE-BRIDGE". See Standard Drawing No. 55005 for allowable modifications and for tolerances when Permanent Steel Deck Forms are used.

The concrete deck (roadway surface) shall be given a tine finish in accordance with Subsection 802.19 for Class 5 Tined Bridge Roadway Surface Finish. Movement of the finishing machine across new concrete shall be on planks placed on the surface and shall be prohibited for 72 hours after finishing the pour. Sufficient concrete must be placed ahead of the strike-off to fully load the girder. When permitted, the use of a longitudinal strike-off will require that a vertical camber adjustment be made in the strike-off to account for the future dead load deflection due to any railings.

REINFORCING STEEL:

All reinforcing steel shall be Grade 60 (fy = 60'000 psi) conforming to AASHTO M 31 or M 322 Type A, with mil test reports and shall be epoxy coated. The reinforcing steel is to be accurately located in the forms and firmly held in place by steel wire supports, sufficient in number and size to prevent displacement during the course of construction. The wire supports will not be paid for directly, but will be considered subsidiary to the item "EPOXY COATED REINFORCING STEEL (GRADE 60)".

STRUCTURAL STEEL:

All structural steel shall be ASTM A709 with grade and payment as specified in the plans. Grade 50W steel shall not be painted and all exposed surfaces shall be cleaned in accordance with Subsection 807.84(e). Grade 36 and Grade 50 steel shall be painted unless otherwise noted and all exposed surfaces shall be cleaned in accordance with Subsection 807.84. Structural steel completely embedded in concrete may be ASTM A709, Gr. 36, Gr. 50 or Gr. 50W unless otherwise noted.

Requests for substitution of structural steel shapes shown with shapes of greater size must be submitted by the Contractor to the Engineer for approval. Steels of equal or greater strengths will be accepted only when shown on the approved shop drawings. Shapes and materials shown in the plans will be the basis of payment and no additional compensation will be made for any adjustments due to substitutions.

All welding that is to be done during fabrication of structural steel, including temporary welds, shall be detailed on the shop drawings and submitted for approval. If additional welds are required, whether permanent or temporary, a formal request with detailed drawings shall be submitted to the Engineer for approval. All welding shall conform to Subsection 807.26.

Plan drawings show general features of design only. Shop drawings shall be prepared in accordance with the specifications, submitted and approval secured before fabrication is begun.

SPECIAL CAMBER NOTES

The camber and dead load deflection values shown on the plans are estimated based on the required minimum concrete strength for the prestressed concrete girders. The Contractor shal l provide the Engineer with the following information:

A. Actual 28-Day concrete strength of prestressed concrete girders

B. Actual concrete strength of prestressed concrete girders at time of release

C. Estimated age of prestressed concrete girders at time of erection

D. Profile of each girder under its own weight in final position

Following receipt of the above data, the Engineer will evaluate the dead load and, if necessary, will provide an updated deflection diagram to the Contractor.

PRESTRESSED CONCRETE GIRDERS:

Pretensioning steel shall be ½"ø Low Relaxation strands with a minimum ultimate strength of 270 ksi and shall conform to AASHTO M 203.

All girders shall be TYPE III as shown on the details and shall be the standard prestressing sections adopted by the Joint Committee of AASHTO and the Prestressed Concrete Institute. All girders shall be cast in floored pallets and in metal forms. All work and materials shall be as specified in Subsection 802.22.

Concrete shall be Class "S" and shall have a minimum 28 day compressive strength f'c = 8,000 psi. The initial tensile force applied to each ½"ø strand shall be 31,000 pounds except as noted. Transfer of this tensioning load to the girder shall not be done until the compressive strength of the concrete is 6,000 psi.

Dimensions shown are to the center of strands.

The Contractor shall submit the method and sequence for release of strands to the Engineer for approval prior to casting of the girders.

The first 16" along the top of the girder at beginning and end of unit shall have a smooth finish. The tops of the remaining length of the girders shall be roughened to an amplitude of ¼" and shall be scrubbed transversely with a coarse wire brush to remove all laitance to produce an adequate surface for bonding the slab.

Girder lengths shown on the design plans are net lengths measured horizontally along girder centerlines. The girder manufacturer shall make the necessary allowances for grade and shortening due to elastic shortening, creep and shrinkage.

Extreme care shall be exercised in handling and moving precast, prestressed concrete girders. Girders must be maintained in an upright position at all times and must be picked up from points near the girder ends. Disregard of this requirement may lead to collapse of the girder. The Contractor's proposed lifting details shall be submitted on shop drawings to the Engineer for approval. The use of holes for lifting purposes will not be permitted.

The Contractor may submit alternate strand patterns with design calculations for review and approval in accordance with Subsection 802.22.

Reinforcing steel in Girders shall be Grade 60 (fy = 60,000 psi) conforming to AASHTO M 31 or M 322 Type A, with mill test reports.

Distances from the forms and spacing of the prestressing steel shall be maintained by stays, ties, hangers, spacers or other approved supports which shall be shown on the Shop Drawings.

The points of support and direction of reactions with respect to the member shall be approximately the same during transportation and storage as when member is in its final position.

Holes and inserts shall be cast into the girders. Field drilling of holes shall not be permitted.

After detensioning, saw cut, grind, or bend up strands as designated by the plans. Heat-cutting or bending methods shall not be used within 6" of the girder.

Plan drawings show general features of design only. Shop drawings shall be made in accordance with the specification, submitted, and approval secured before fabrication begins.

STATE OF ARKANSAS
LICENSED PROFESSIONAL ENGINEER
No. 21243
COLTON S. WYLIE
Digitally Signed 07/28/2023
BRIDGE ENGINEER

SHEET 1 OF 3
COMMON SUPERSTRUCTURE DETAILS
HIGHWAY 612 OVER ROBBINS ROAD
ROUTE SEC.
ARKANSAS STATE HIGHWAY COMMISSION
LITTLE ROCK, ARK.

DRAWN BY: HEW DATE: JUNE 2011 FILENAME: b012326m9_sl3.dgn
CHECKED BY: AJK DATE: APR. 2012 SCALE: AS SHOWN
DESIGNED BY: MRA DATE: JUNE 2011
BRIDGE NO. A7620 & B7620 DRAWING NO. 66331

JESkinner 7/28/2023 12:12:10 PM
WORKSPACE: ARDOT Bridge
\\garverinc.local\data\Projects\2017\17017660 - ARDOT 012326 Hwy 412 - Hwy 112\Drawings\b012326x9_sl3-GN.dgn
REVISED DATE:

DATE REVISED	DATE REVISED	FED. ROAD DIST. NO.	STATE	JOB NO.	SHEET NO.	TOTAL SHEETS
		6	ARK.	012326	543	838
		A7620 & B7620		COMMON DETAILS		66332

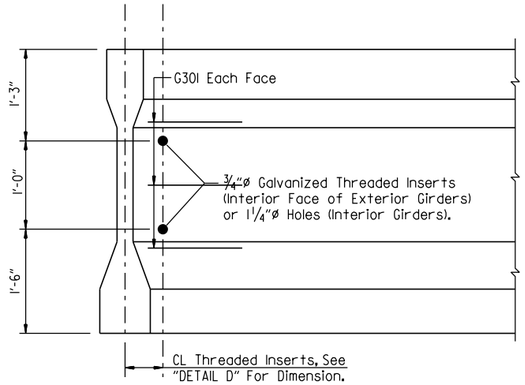

DETAIL A
Scale: 1" = 1'-0"

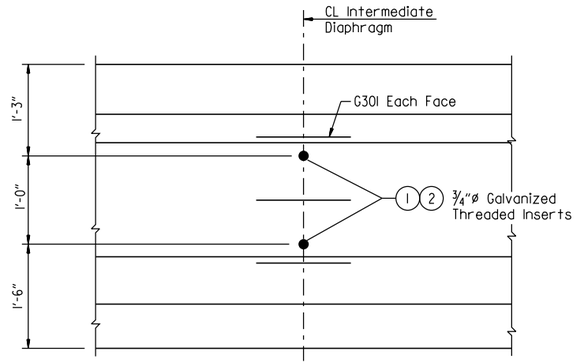

DETAIL B

(1) Inserts and holes shown are for intermediate concrete diaphragms, See Dwg. Nos. 66319 & 66325 for alternate steel diaphragms.

(2) Galvanized 3/4"ø Dayton-Richmond F-42 Loop Ferrule Insert or an approved equal (omit in exterior face of exterior girders). These are to be subsidiary to the item "PRESTRESSED CONCRETE GIRDERS (TYPE III)". See Dwg. Nos. 66319 & 66325 for alternate steel diaphragms.

TABLE OF VARIABLES

		Span 1	Span 2	Span 3
BRIDGE A	"F"	10°45'00"	11°45'00"	12°45'00"
BRIDGE B	"F"	10°45'00"	12°00'00"	13°00'00"

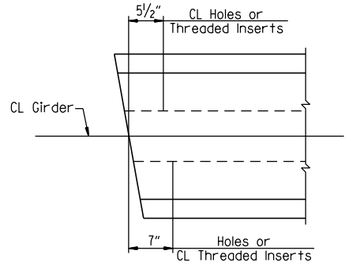

DETAIL D
Scale: 1" = 1'-0"

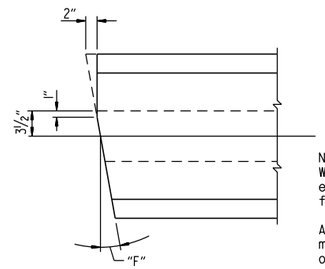

NOTE:
When acute corner of girder falls on exterior face at joints in bridge, fabricate girder end as shown.

All other girder ends at joints in bridge may be so fabricated at the Contractor's option.

FINISH FOR EXT. BEAM ENDS
No Scale

NOTE:
For additional bearing insert plate information, see Dwg. No. 66318.

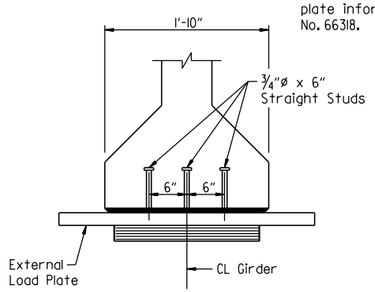

FRONT VIEW
No Scale

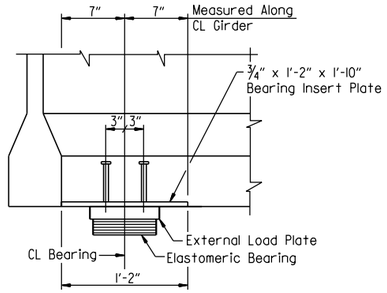

SIDE VIEW
No Scale

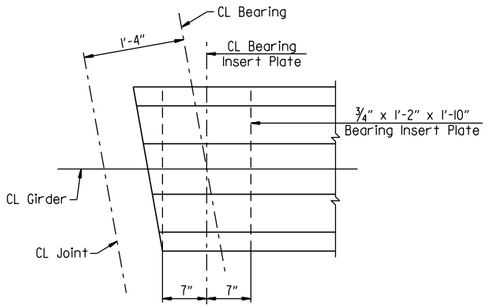

PLAN VIEW
No Scale

BEVELED ANCHOR AND EXTERNAL LOAD PLATE DETAILS

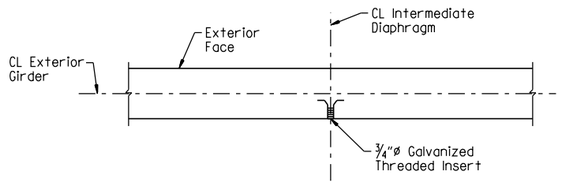

SECTION D-D
(At Exterior Girder)
No Scale

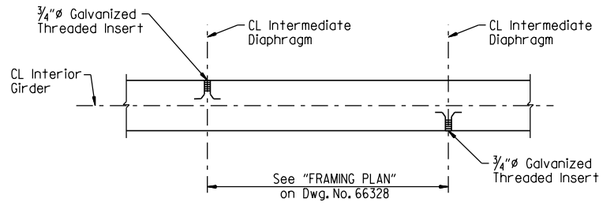

SECTION D-D
(At Interior Girder)
No Scale

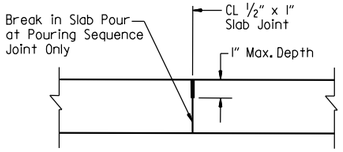

NOTE:
Use Type 3 or 4 Joint Sealer. See Subsections 501.02(h) and 501.05(j). Backer Rod Filler will not be required. Joint Sealer shall be measured and paid for as "CLASS S(AE) CONCRETE-BRIDGE". Slab joints shall extend to the outside edge of the deck slab and shall align with open joints at the front face of the bridge traffic railing. Slab joints shall be installed before the bridge traffic railing is poured. If slab joints are to be sawed, they shall be sawed as soon as the concrete has sufficiently set to allow sawing of the joint without damage to the slab. Slab joints shall be placed at all pouring sequence construction joints and required slab joint locations. The joint sealer shall extend across the deck from gutterline to gutterline.

TRANSVERSE SLAB JOINT DETAIL
No Scale

STATE OF ARKANSAS
LICENSED PROFESSIONAL ENGINEER
No. 21243
COLTON S. WYLIE
Digitally Signed 07/28/2023
BRIDGE ENGINEER

SHEET 2 OF 3
COMMON SUPERSTRUCTURE DETAILS
HIGHWAY 612 OVER ROBBINS ROAD
ROUTE SEC.
ARKANSAS STATE HIGHWAY COMMISSION
LITTLE ROCK, ARK.

DRAWN BY: HEW DATE: JUNE 2011 FILENAME: b012326m9_sl4.dgn
CHECKED BY: AJK DATE: APR. 2012 SCALE: AS SHOWN
DESIGNED BY: MRA DATE: JUNE 2011
BRIDGE NO. A7620 & B7620 DRAWING NO. 66332

JEskinner 7/28/2023 12:12:10 PM
WORKSPACE: ARDOT Bridge
\\garverinc.local\gdata\Projects\2017\17017660 - ARDOT 012326 Hwy 412 - Hwy 112\Drawings\b012326x9_S4f4-MD.dgn
REVISED DATE:

DATE REVISED	DATE REVISED	FED. ROAD DIST. NO.	STATE	JOB NO.	SHEET NO.	TOTAL SHEETS
		6	ARK.	012326	544	838
		A7620 & B7620		COMMON DETAILS		66333

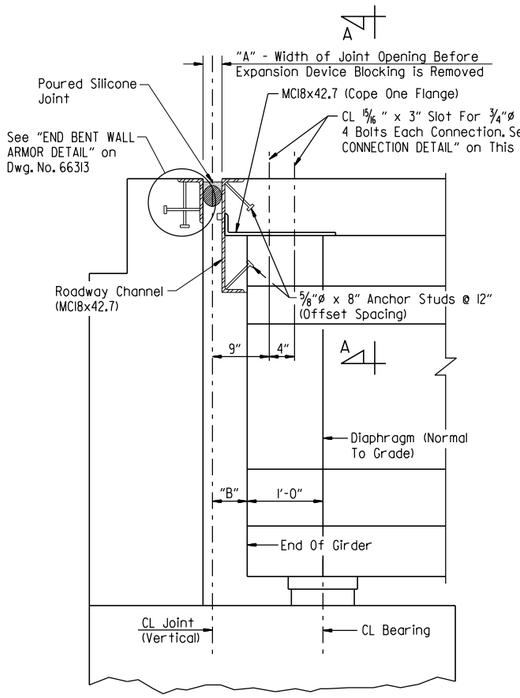

SECTION THRU JOINT AT END BENTS
(Section Taken Perpendicular To CL Joint)
No Scale

NOTE:
Concrete shall be hand packed under the roadway channel & joint armor in the backwall.

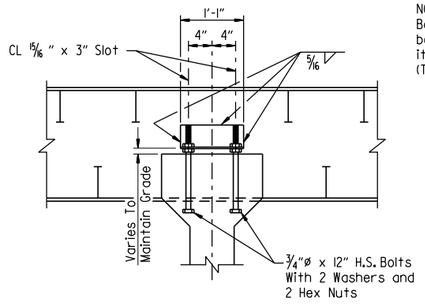

SECTION A-A
No Scale

NOTE:
Bolts, washers and hex nuts shall be considered subsidiary to the item "PRESTRESSED CONCRETE GIRDERS (TYPE III)".

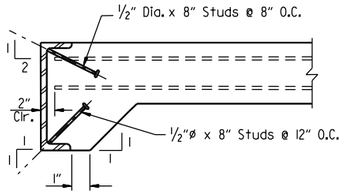

NOTE:
As An Alternate To 5/8"ø Studs, 1/2"ø x 8" Studs Spaced As Shown May Be Used. Use Weight Of 5/8"ø Stud As Basis Of Measurement Of Structural Steel In Anchors

DETAILS OF ALTERNATE ANCHORS
No Scale

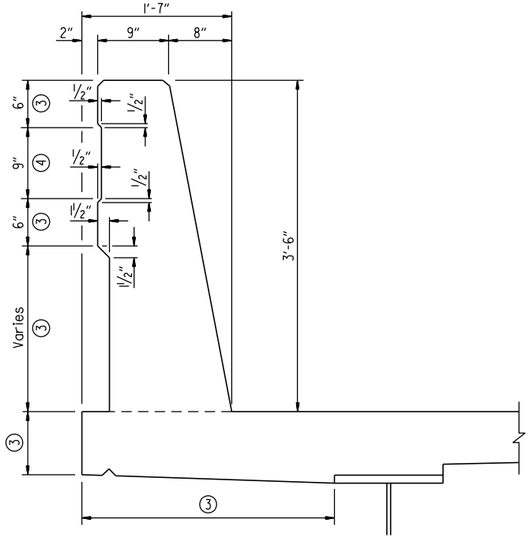

3 Class 3 Textured Coating Finish (Color - Light Brown, Color Chip No. 33522)

4 Class 3 Textured Coating Finish (Color - Medium Brown, Color Chip No. 30219)

BRIDGE RAIL AESTHETIC DETAIL
No Scale

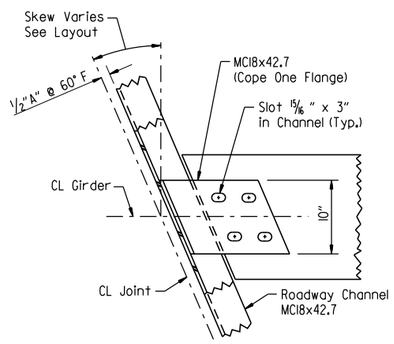

CHANNEL CONNECTION DETAIL
No Scale

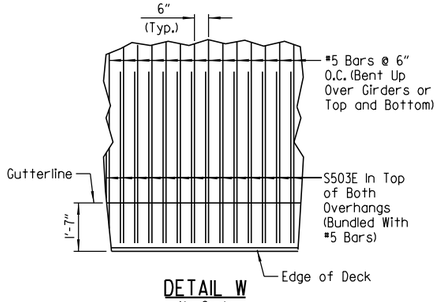

DETAIL W
No Scale

TABLE OF SILICONE JOINT DATA					
Bent No.	"A" Width Perpendicular To Joint At 24 Hour Average Temperature (1) Of:			"B" Perpendicular To Joint At 60°F	Bumper Plate Size
	40°F	60°F	80°F		
1 & 4	2 1/8"	2"	1 7/8"	5 3/4" ±	1" x 1" x 12"

(1) The temperature used to set the joint opening shall be the approximate average air temperature during the 24 hour period immediately before the bolts are tightened. The Engineer shall establish the temperature. Interpolation of the table may be necessary.

NOTE:
For "DETAIL OF POURED SILICONE JOINT", "JOINT SEAL PLACEMENT AT RAIL" and "DETAILS FOR BLOCKING EXPANSION JOINT DEVICE", see Std. Dwg. No. 55008.

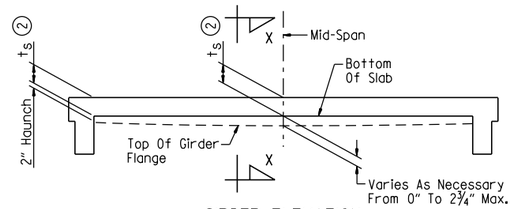

GIRDER ELEVATION
No Scale

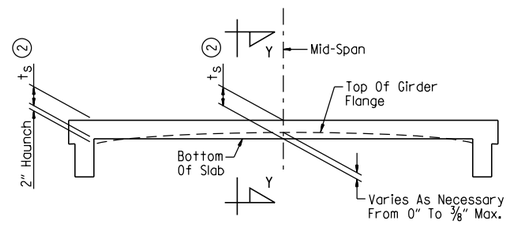

GIRDER ELEVATION
No Scale

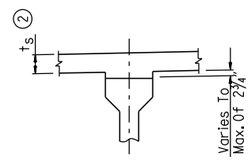

SECTION X-X
No Scale

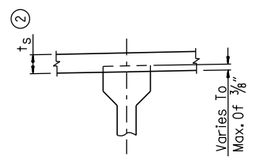

SECTION Y-Y
No Scale

Note: t_s = Slab Thickness As Shown On Superstructure Details See "TYPICAL SECTION AT INTERMEDIATE DIAPHRAGMS".

(2) Tolerance when removable deck forming is used is +1/2", -1/4". Haunch forming is required and shall be adjusted to maintain slab thickness tolerance. See Std. Dwg. No. 55005 for tolerances when permanent steel deck forms are used.

"GIRDER ELEVATION" Sketches show the range of acceptability of the top of girder relative to bottom of slab after the placement of the slab. When the top of the girder projects more than a 3/8" into the slab, a raise in grade will be necessary. Girders shall be set in a sufficient number of spans over suitable increments so the revised grade line will provide a smooth riding surface. Variation of haunch height will be at the Contractor's expense.

ADJUSTMENT FOR SLAB THICKNESS TOLERANCE WHEN REMOVABLE DECK FORMING IS USED

STATE OF ARKANSAS
LICENSED PROFESSIONAL ENGINEER
No.21243
COLTON S. WYLIE
Digitally Signed 07/28/2023
BRIDGE ENGINEER

SHEET 3 OF 3
COMMON SUPERSTRUCTURE DETAILS
HIGHWAY 612 OVER ROBBINS ROAD
ROUTE SEC.
ARKANSAS STATE HIGHWAY COMMISSION
LITTLE ROCK, ARK.

DRAWN BY: HEW DATE: JULY 2011 FILENAME: b012326m9_sl5.dgn
CHECKED BY: AJK DATE: APR. 2012 SCALE: AS SHOWN
DESIGNED BY: MRA DATE: JULY 2011
BRIDGE NO. A7620 & B7620 DRAWING NO. 66333

JESkinner 7/28/2023 12:12:11 PM
WORKSPACE: ARDOT Bridge
\\garverinc.local\gdata\Projects\2017\17017660 - ARDOT 012326 Hwy 412 - Hwy 112\Drawings\b012326x9_S415-MD.dgn
REVISED DATE:

DATE REVISED	DATE REVISED	FED. ROAD DIST. NO.	STATE	JOB NO.	SHEET NO.	TOTAL SHEETS
		6	ARK.	012326	545	838
		SEE TABLE		CONCRETE RIPRAP		66334

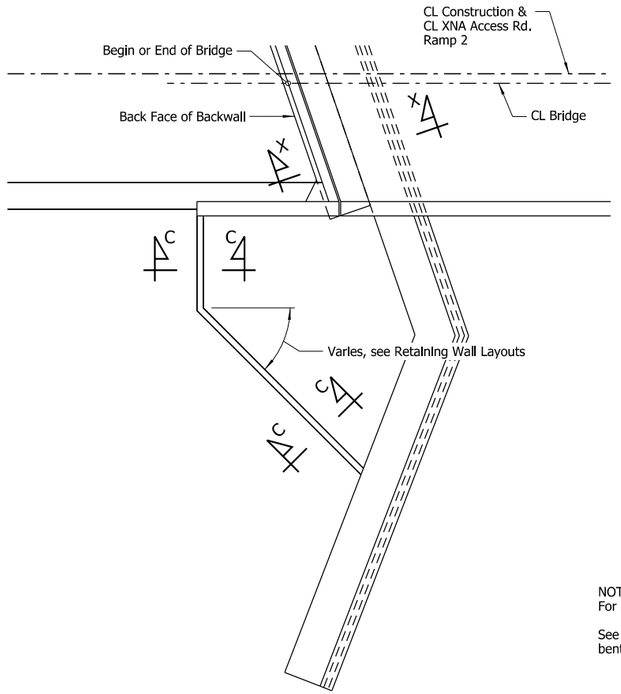

PLAN
No Scale

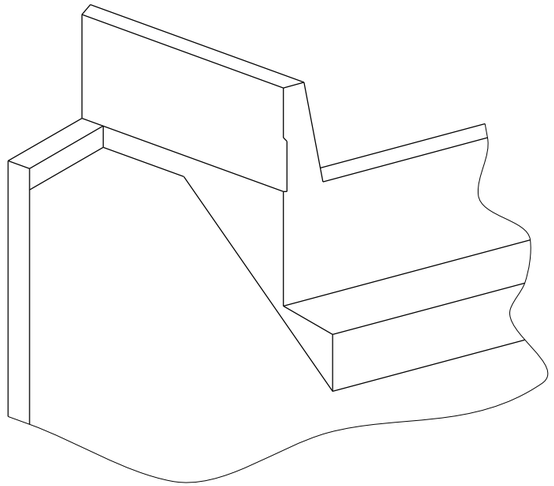

THREE DIMENSIONAL VIEW OF CONCRETE RIPRAP
No Scale

NOTES:
For Section C-C, see Std. Dwg. No. 55002.

See Std. Dwg. No. 55002, layouts, and end bent details for additional information.

BRIDGE NUMBERS	
BRIDGE NUMBERS	WALL NUMBERS
A7612	1
07614	2 & 3
07618	4 & 5
07619	6 & 7

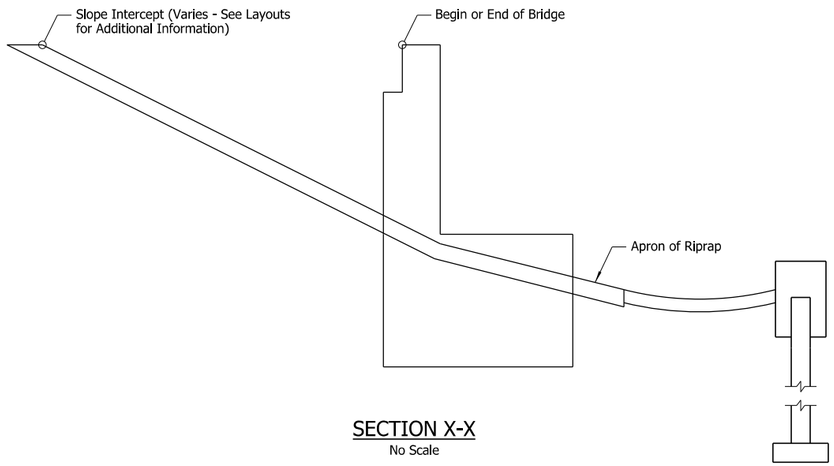

SECTION X-X
No Scale

STATE OF ARKANSAS
LICENSED PROFESSIONAL ENGINEER
No. 16458
JOEL E. SKINNER
Digitally Signed 07/28/2023
BRIDGE ENGINEER

SUPPLEMENTAL DETAILS OF
CONCRETE RIPRAP
ROUTE SEC.
ARKANSAS STATE HIGHWAY COMMISSION
LITTLE ROCK, ARK.

DRAWN BY: CWT DATE: MAR. 2023 FILENAME: b012326_cr1.dgn
CHECKED BY: JES DATE: MAR. 2023 SCALE: As Shown
DESIGNED BY: JME DATE: MAR. 2023
BRIDGE NO. SEE TABLE DRAWING NO. 66334

JESkinner 7/28/2023 12:12:17 PM
WORKSPACE: ARDOT Bridge (2019)
\\ganverinc.local\gdata\Projects\2017\17017660 - ARDOT 012326 Hwy 412 - Hwy 112\Drawings\b012326x99_CONCRETE RIPRAP.dgn
REVISED DATE:

DATE REVISED	DATE REVISED	FED. ROAD DIST. NO.	STATE	JOB NO.	SHEET NO.	TOTAL SHEETS
		6	ARK.	012326	546	838
		SEE TABLE		APPROACH SLAB		66334A

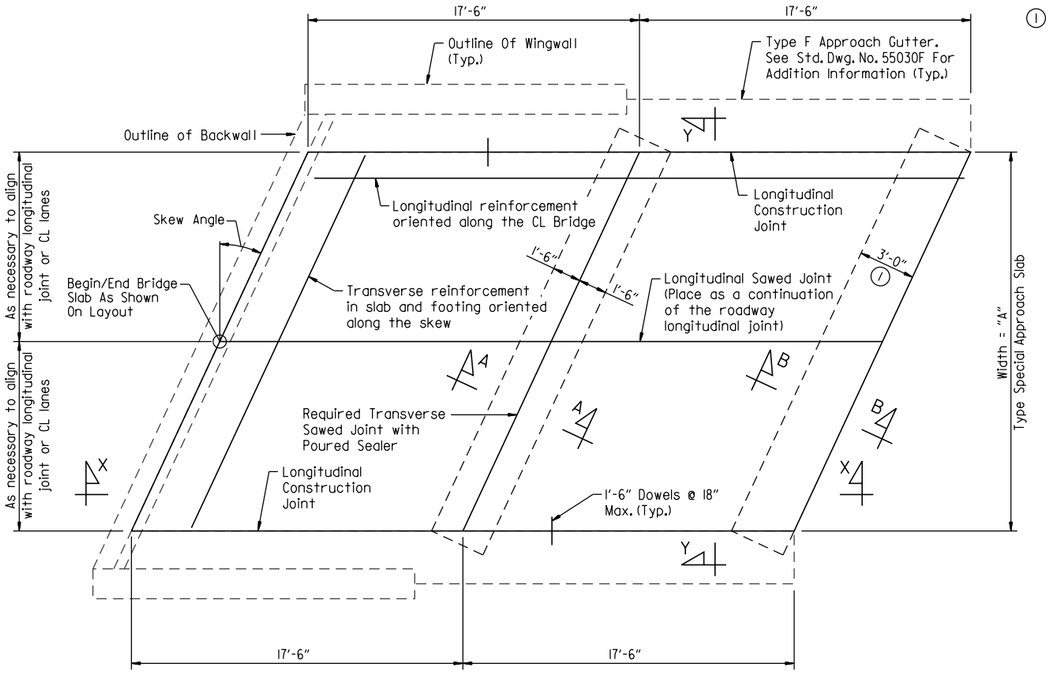

PLAN - SKEWED APPROACH SLAB WITH APPROACH GUTTERS

No Scale

(1) Shown for asphalt approach pavement. See "SECTION B-B" on Std. Dwg. No. 5540Cl for more information.

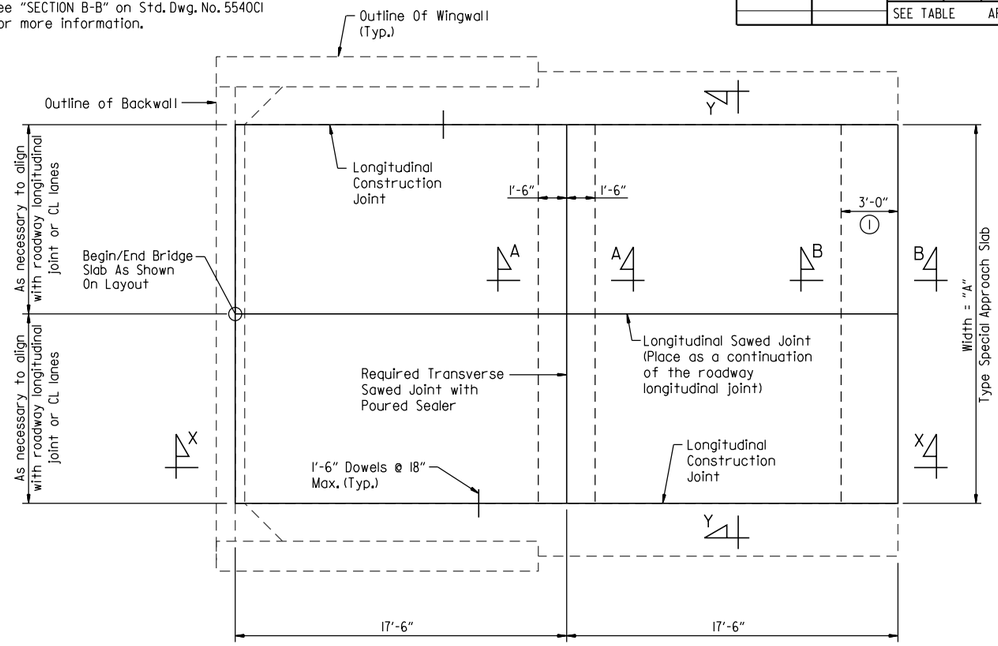

PLAN - SQUARE APPROACH SLAB WITH APPROACH GUTTERS

No Scale

TABLE OF QUANTITIES

(FOR INFORMATION ONLY)

	BRIDGE NO.	LOCATION	"A"	SKEW ANGLE	REINFORCING STEEL (LBS.)	CONCRETE (CU. YDS.)
	A7612	Begin Bridge	36'-0"	45°53'37"	7,483	78.80
		End Bridge	36'-0"	41°15'55"	7,209	76.90
	B7612	Begin Bridge	36'-0"	44°27'58"	7,409	78.23
		End Bridge	36'-0"	40°09'07"	7,146	76.52
	A7613	Begin Bridge	36'-0"	14°53'28"	6,391	71.91
		End Bridge	36'-0"	11°24'45"	6,344	71.58
	B7613	Begin Bridge	36'-0"	14°35'54"	6,388	71.91
		End Bridge	36'-0"	11°05'43"	6,341	71.54
(2)	07614	Begin & End Bridge	24'-0"	17°49'48"	5,869	48.26
(2)	A7615 & B7615	Begin & End Bridge	36'-0"	23°12'26"	8,854	72.87
(2)	A7616 & B7616	Begin & End Bridge	36'-0"	0°00'00"	8,600	71.06
	A7617	Begin Bridge	44'-0"	16°18'03"	10,662	87.93
		End Bridge	44'-0"	19°31'37"	10,716	88.41
	B7617	Begin Bridge	36'-0"	16°43'16"	8,730	71.94
		End Bridge	36'-0"	21°01'06"	8,817	72.57
(2)	07618	Begin & End Bridge	21'-0"	19°00'00"	5,159	42.36
(2)	07619	Begin & End Bridge	21'-0"	0°00'00"	5,049	41.45
	A7620	Begin Bridge	36'-0"	10°08'05"	8,661	71.49
		End Bridge	36'-0"	13°20'16"	8,687	71.77
	B7620	Begin Bridge	44'-0"	10°22'06"	10,585	87.35
		End Bridge	44'-0"	13°40'06"	10,637	87.69

(2) Estimated quantity shown for one slab

NOTE:
For reinforcement size and spacing, "SECTION A-A", "SECTION B-B", "SECTION X-X", "SECTION Y-Y", "DETAILS OF LONGITUDINAL CONSTRUCTION JOINT" and additional information, see Std. Dwg. 55040Cl.

GENERAL NOTES

All concrete shall be Class S (AE) with a minimum 28-day compressive strength f'c = 4,000 psi and shall be poured in the dry.

All reinforcing steel shall be Grade 60 (yield strength = 60,000 psi) conforming to AASHTO M 31 or M 322, Type A, with mill test reports.

Approach Slabs will be measured and paid for in accordance with Section 504.

The surface finish for Approach Slabs shall shall match that used on the bridge deck.

All longitudinal lines within the limits of horizontal curves shall be on curves concentric to CL Bridge. Adjustment to longitudinal bar lengths may be required. Transverse reinforcing shall be placed on radial lines to CL Bridge.

Reinforcement for Approach Slabs are based on Type Cl Approach Slab and modified as shown in these details. Adjust reinforcement, as necessary, for skewed transverse reinforcement and modified approach slab width and length.

STATE OF ARKANSAS
LICENSED PROFESSIONAL ENGINEER
No. 16458
JOEL E. SKINNER
Digitally Signed 07/28/2023
BRIDGE ENGINEER

DETAILS OF TYPE SPECIAL APPROACH SLABS

ROUTE SEC.

ARKANSAS STATE HIGHWAY COMMISSION

LITTLE ROCK, ARK.

DRAWN BY: HEW DATE: JULY 2023 FILENAME: b012326_as.dgn
CHECKED BY: JES DATE: JULY 2023 SCALE: AS SHOWN
DESIGNED BY: RAK DATE: JULY 2023

BRIDGE NO. SEE TABLE DRAWING NO. 66334A

JESkinner 7/28/2023 12:22:21 PM
WORKSPACE: ARDOT Bridge
L:\20TV10T660 - ARDOT 012326 Hwy 412 - Hwy 112\Drawings\b012326x10_550i-AS.dgn
REVISED DATE:

DATE REVISED	DATE FILMED	DATE REVISED	DATE FILMED	FED. ROAD DIST. NO.	STATE	FED. AID PROJ. NO.	SHEET NO.	TOTAL SHEETS
10/26/2023				6	ARK.		547	838
				JOB NO.		012326		
				(1) A1		RETAINING WALL		66335

For sections, general notes and coping detail, See Dwg. No. 66342 - 66344.

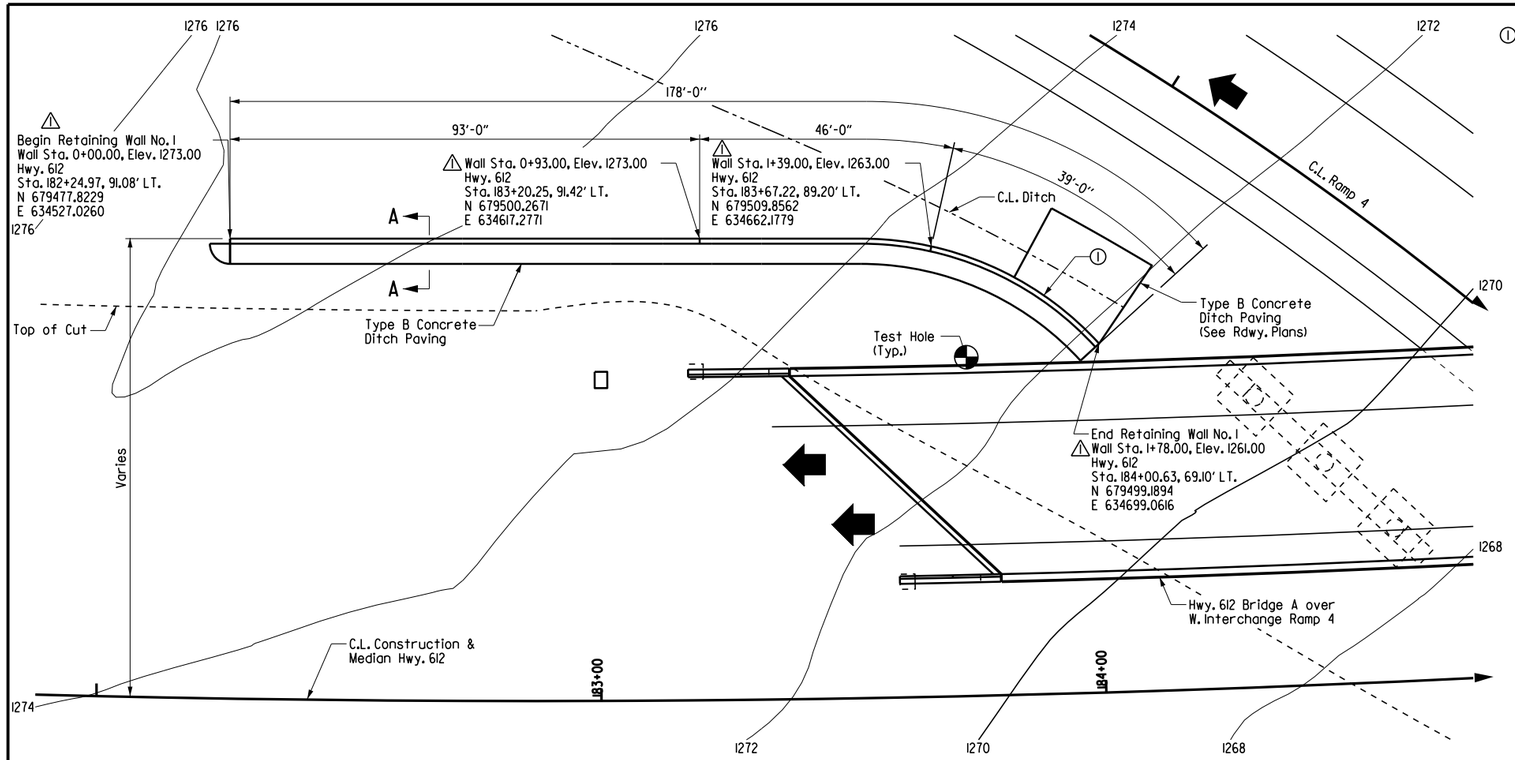

① PI Sta = 183+81.84, 90.40' LT.
PC Sta = 183+53.00, 91.00' LT.
PT Sta = 184+00.62, 69.10' LT.
R = 63.78'

PLAN
Scale: 1" = 15'-0"

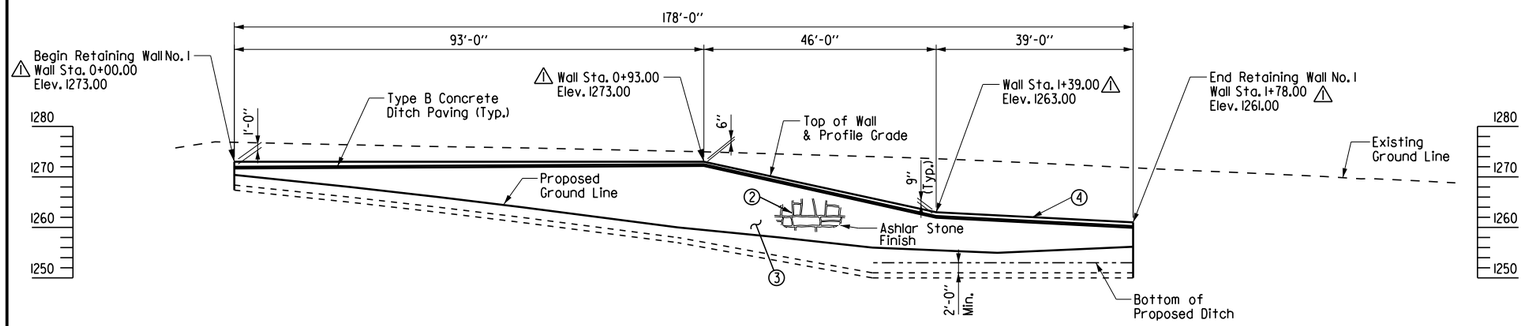

ELEVATION
Scale: 1" = 15'-0"
(Viewed From Fill Side)

1+00 1+00 2+00

Boring Legend

A - Orange & brown, dense to very dense, clayey gravel with sand.
B - Orange & brown, very dense, clayey gravel with sand.
C - Orange & brown, very dense, clayey gravel with sand.
D - Orange & brown, very dense, clayey gravel with sand.
E - Orange & brown, medium dense to dense, clayey gravel with sand.
F - Dark tan, very dense, clayey sand with gravel.
G - Dark tan & reddish brown, dense to very dense, clayey gravel with sand.
H - Tan, yellowish orange, reddish brown & reddish, dense to very dense, silty sand with gravel.
I - Brown, tan, light gray, light brown, white, gray & dark brown, medium dense to very dense, clayey gravel with sand.
J - Dark beige & dark tan, very dense, clayey gravel with sand.
K - Tan & black, dense to very dense, clayey sand with gravel.
L - Brown & tan, medium dense to dense, clayey gravel with sand.
M - Brown, dark brown & copper, loose to medium dense, clayey gravel with sand.
N - Brown & tan, medium dense, silty sand with gravel.
O - Dark brown & tan, loose to very dense, clayey gravel with sand.
P - Chert Fragments in Clay: Gray, moderately to severely weathered, vugular.
Q - Limestone: White, fine grain, chalky, severely weathered, fossiliferous.
R - Limestone: White to light gray, fine grain, chalky, severely weathered, fossiliferous.

RETAINING WALL NO. 1		
WALL STA.	FINISHED GRADE ELEV.	EXIST. GROUND ELEV.
0+00.00	1270.39	1276.85
0+88.13	1260.00	1275.08
0+93.00	1259.49	1274.96
1+26.34	1256.00	1274.01
1+39.00	1255.48	1273.60
1+78.00	1256.16	1271.81

Note:
Stations and offsets shown are measured along C.L. Construction. Offsets are shown to the outside vertical face of MSE retaining wall. Elevations shown are profile grade at top of coping.

For "SECTION A-A", See Dwg. No. 66342.

② Ashlar Stone Finish SP Job No. 012326 "ARCHITECTURAL FINISH."

③ Class 3 Textured Coating Finish (Color = Medium Brown, Color Chip 30219).

④ Class 3 Textured Coating Finish (Color = Light Brown, Color Chip 33522).

⚠ Revised Sheet to Include Retaining Wall Elevations Table and Wall Stationing.
By: WKB Date: 10/26/2023
Checked By: FAN Date: 10/26/2023

10-26-23
STATE OF ARKANSAS
LICENSED PROFESSIONAL ENGINEER
No. 19188
ERIC S. CHRISTIANSEN
Eric S. Christiansen
BRIDGE ENGINEER

DETAILS OF RETAINING WALL NO. 1

ROUTE 612 SEC. 1

ARKANSAS STATE HIGHWAY COMMISSION

LITTLE ROCK, ARK.

DRAWN BY: FAN DATE: 04-23 FILENAME: B012326aC_W1.dgn
CHECKED BY: DHP DATE: 04-23 SCALE: AS SHOWN
DESIGNED BY: WKB DATE: 04-23

BRIDGE NO. A1 DRAWING NO. 66335

Date Plotted: 10/26/2023

DATE REVISED	DATE REVISED	FED. ROAD DIST. NO.	STATE	JOB NO.	SHEET NO.	TOTAL SHEETS
10/26/2023		6	ARK.	012326	548	838
		07614		RETAINING WALLS		66336

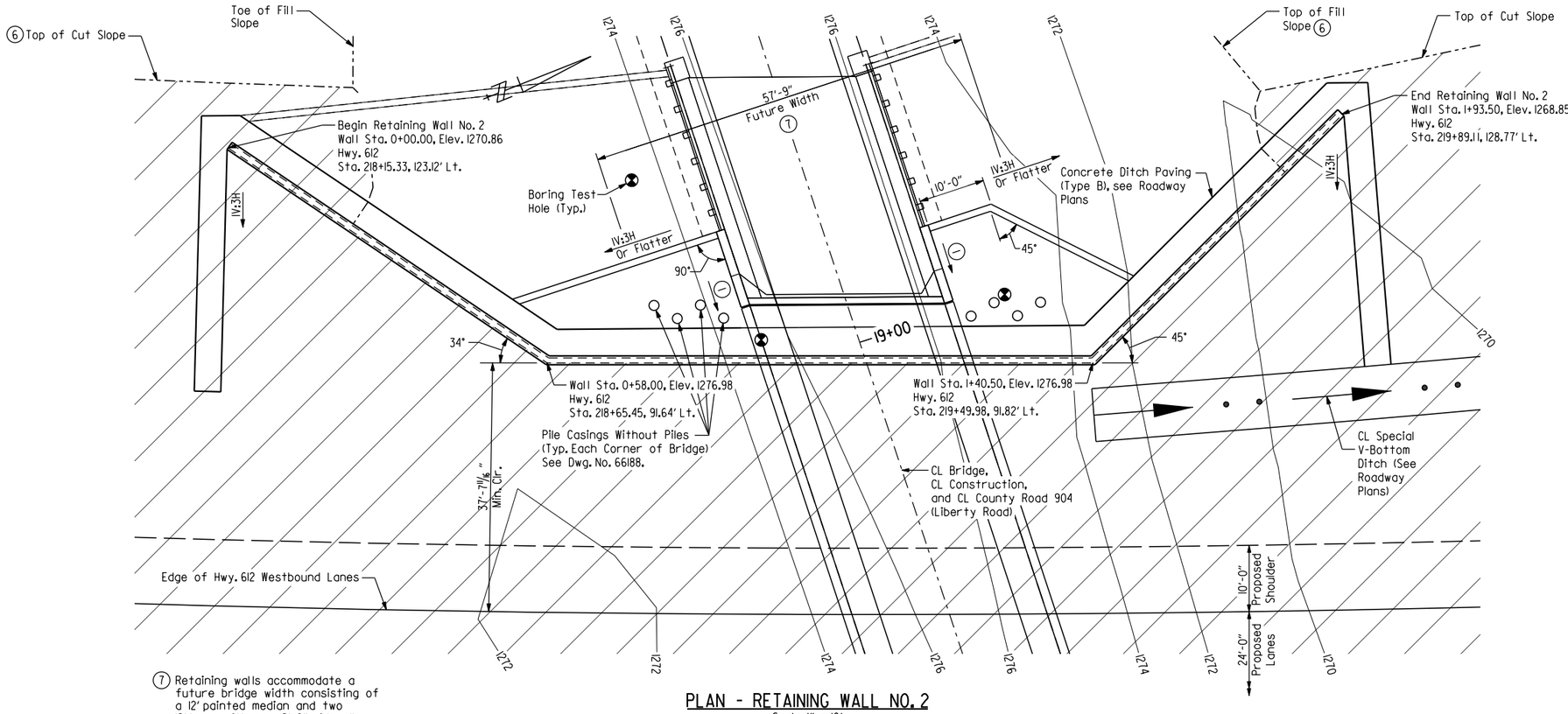

PLAN - RETAINING WALL NO. 2

Scale: 1" = 10'

⑦ Retaining walls accommodate a future bridge width consisting of a 12' painted median and two 12' lanes with one 6'-6" sidewalk and one 12'-0" sidepath.

NOTES:
For "SECTION A-A" & "SECTION B-B", see Dwg. No. 66342.

Offset dimensions for Retaining Wall No. 2 are measured from CL Hwy. 612 to outside vertical face of Retaining Wall.

For "FORM INSERT DETAILS ON MSE WALLS", see Dwg. No. 66343.

For "GENERAL NOTES" and "TABLE OF QUANTITIES", see Dwg. No. 66344.

BORING LEGEND

A - Gray, dark brown, dark gray & brown, medium dense to very dense, clayey sand.
B - Gray & brown clayey sand
C - Chert: White, lt. gray, moderate to intense weathering.
D - Gray, stiff, lean clay with sand.
E - Gray, stiff, lean clay.
F - Beige, very stiff, sandy fat clay.
G - Gray, very stiff, lean clay.
H - Gray, dense to very dense, clayey sand with gravel.
I - Chert: White, lt. gray, moderately weathered.
J - Clay: Red, brown, with chert fragments.
K - Chert: White, lt. gray, moderately to severely weathered.
L - Chert: Lt. gray, weathered.
M - Chert: Lt. gray, slightly to severely weathered.
N - Chert: White, lt. gray, slightly to intensely weathered.

RETAINING WALL NO. 2 DESIGN PARAMETERS

Factored Bearing Resistance (KSF)	Minimum Strap Length (FT)
22.0	0.7H

NOTE:
"H" shall be measured from the top of leveling pad elevation to the finished surface.

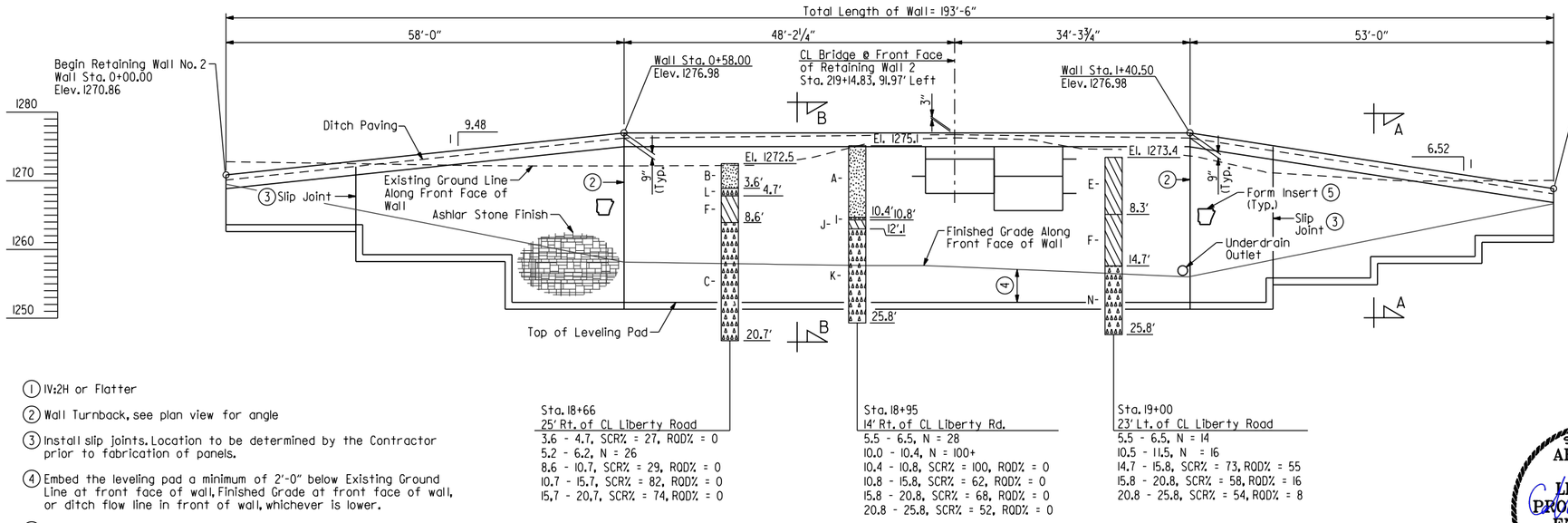

ELEVATION - RETAINING WALL NO. 2

(Looking At Front Face of Wall)
No Scale

⚠ RETAINING WALL NO. 2 ELEVATIONS

WALL STA.	FINISHED GROUND	DITCH FLOWLINE ELEVATION
0+00.00	1269.49	-
0+58.00	-	1256.42
1+06.19	-	1255.65
1+40.50	-	1254.94
1+93.50	1267.96	-

① 1V:2H or Flatter

② Wall Turnback, see plan view for angle

③ Install slip joints. Location to be determined by the Contractor prior to fabrication of panels.

④ Embed the leveling pad a minimum of 2'-0" below Existing Ground Line at front face of wall, Finished Grade at front face of wall, or ditch flow line in front of wall, whichever is lower.

⑤ Class 3 Textured Coating Finish (Color = Medium Brown, Color Chip No. 30219)

⑥ See Roadway Plans for more information regarding cut of existing ground.

Sta. 18+66
25' Rt. of CL Liberty Road
3.6 - 4.7, SCR% = 27, RQD% = 0
5.2 - 6.2, N = 26
8.6 - 10.7, SCR% = 29, RQD% = 0
10.7 - 15.7, SCR% = 82, RQD% = 0
15.7 - 20.7, SCR% = 74, RQD% = 0

Sta. 18+95
14' Rt. of CL Liberty Rd.
5.5 - 6.5, N = 28
10.0 - 10.4, N = 100+
10.4 - 10.8, SCR% = 100, RQD% = 0
10.8 - 15.8, SCR% = 62, RQD% = 0
15.8 - 20.8, SCR% = 68, RQD% = 0
20.8 - 25.8, SCR% = 52, RQD% = 0

Sta. 19+00
23' Lt. of CL Liberty Road
5.5 - 6.5, N = 14
10.5 - 11.5, N = 16
14.7 - 15.8, SCR% = 73, RQD% = 55
15.8 - 20.8, SCR% = 58, RQD% = 16
20.8 - 25.8, SCR% = 54, RQD% = 8

⚠ Revised Sheet to include Retaining Wall Elevations Table

Made By: CSW Date: 10/26/2023
Checked By: JES Date: 10/26/2023

STATE OF ARKANSAS
LICENSED PROFESSIONAL ENGINEER
No. 21243
COLTON S. WYLIE

DIGITALLY SIGNED 10/26/2023
BRIDGE ENGINEER

SHEET 1 OF 2
DETAILS OF RETAINING WALL NOS. 2 & 3

ROUTE SEC.

ARKANSAS STATE HIGHWAY COMMISSION
LITTLE ROCK, ARK.

DRAWN BY: CWT DATE: MAR. 2023 FILENAME: b012326_RW2.dgn
CHECKED BY: JES DATE: APR. 2023 SCALE: AS SHOWN
DESIGNED BY: CSW DATE: MAR. 2023
BRIDGE NO. 07614 DRAWING NO. 66336

JESkinner 10/25/2023 11:51:20 PM
WORKSPACE: ARDOT Bridge
\\garverinc.local\gdata\Projects\2017\170176\60 - ARDOT 02326 Hwy 412 - Hwy 112\Drawings\b012326xRW_SIG-RW2.dgn
REVISED DATE:

DATE REVISED	DATE REVISED	FED. ROAD DIST. NO.	STATE	JOB NO.	SHEET NO.	TOTAL SHEETS
10/26/2023		6	ARK.	012326	549	838
		07614		RETAINING WALLS		66337

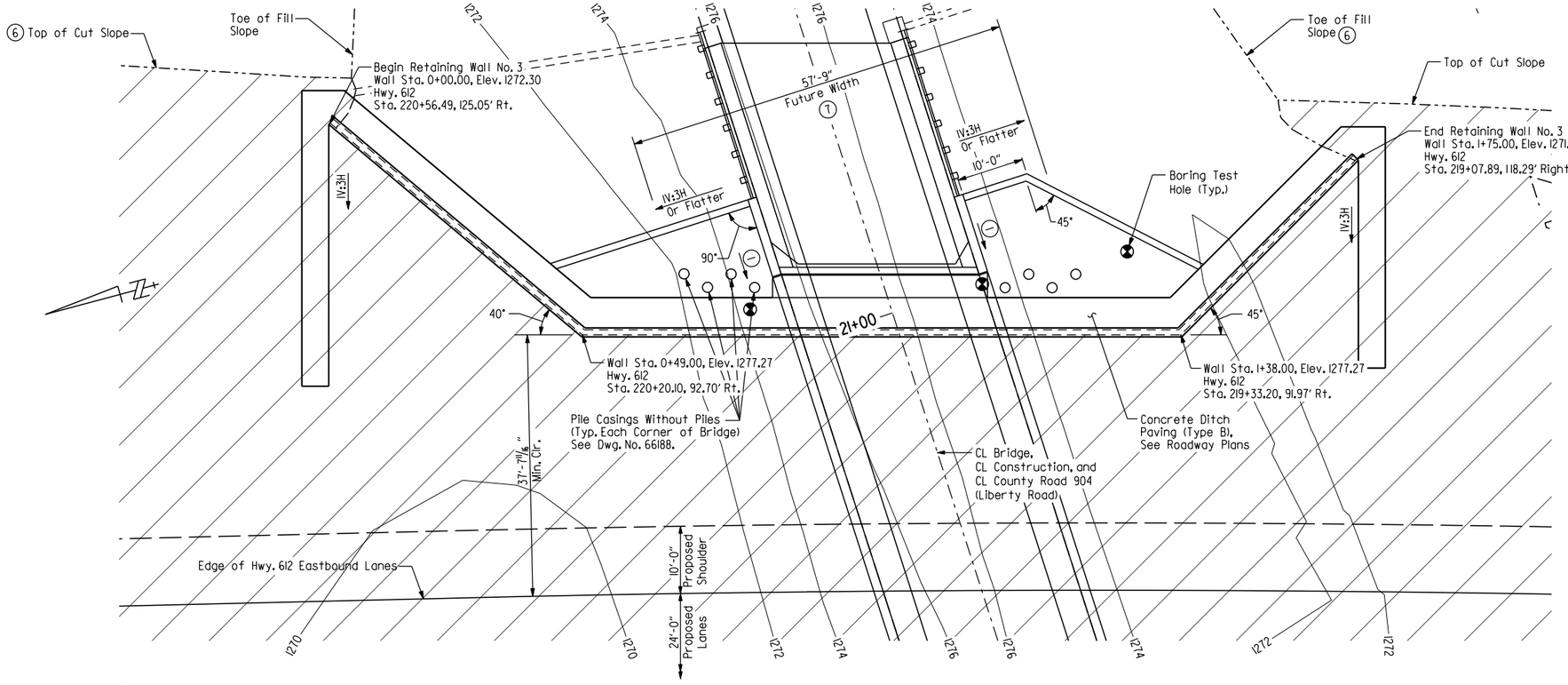

PLAN - RETAINING WALL NO. 3

Scale: 1" = 10'

⑦ Retaining walls accommodate a future bridge width consisting of a 12' painted median and two 12' lanes with one 6'-6" sidewalk and one 12'-0" sidepath.

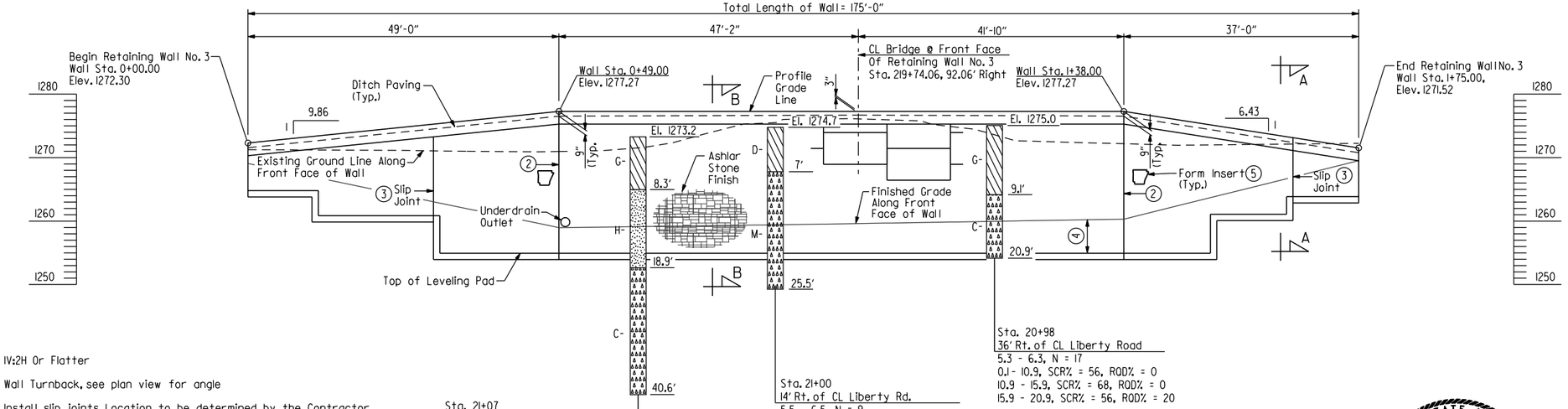

ELEVATION - RETAINING WALL NO. 3

(Looking At Front Face of Wall)
No Scale

① IV:2H Or Flatter

② Wall Turnback, see plan view for angle

③ Install slip joints. Location to be determined by the Contractor prior to fabrication of panels.

④ Embed the leveling pad a minimum of 2'-0" below Existing Ground Line at front face of wall, Finished Grade at front face of wall, or ditch flow line in front of wall, whichever is lower.

⑤ Class 3 Textured Coating Finish (Color = Medium Brown, Color Chip No. 30219)

⑥ See Roadway Plans for more information regarding cut of existing ground.

NOTES:
For "SECTION A-A" & "SECTION B-B", see Dwg. No. 66342.

Offset dimensions for Retaining Wall No. 3 are measured from CL Hwy. 612 to outside vertical face of Retaining Wall.

For "FORM INSERT DETAILS ON MSE WALLS", see Dwg. No. 66343.

For "BORING LEGEND", see Dwg. No. 66336.

For "GENERAL NOTES" and "TABLE OF QUANTITIES", see Dwg. No. 66344.

LEGEND

U.N.O - Unless Noted Otherwise

RETAINING WALL NO. 3 DESIGN PARAMETERS

Factored Bearing Resistance (KSF)	Minimum Strap Length (FT)
22.0	0.7H

NOTE:
"H" shall be measured from the top of leveling pad elevation to the finished surface.

⚠ RETAINING WALL NO. 3 ELEVATIONS

WALL STA.	FINISHED GROUND	DITCH FLOWLINE ELEVATION
0+00.00	1269.01	-
0+49.00	-	1256.87
0+96.16	-	1257.92
1+38.00	-	1258.74
1+75.00	1269.44	-

⚠1 Revised Sheet to include Retaining Wall Elevations Table

Made By: CSW Date: 10/26/2023
Checked By: JES Date: 10/26/2023

STATE OF ARKANSAS
LICENSED PROFESSIONAL ENGINEER
No. 21243
COLTON S. WYLIE

DIGITALLY SIGNED 10/26/2023
BRIDGE ENGINEER

SHEET 2 OF 2
DETAILS OF RETAINING WALL NOS. 2 & 3

ROUTE SEC.

ARKANSAS STATE HIGHWAY COMMISSION
LITTLE ROCK, ARK.

DRAWN BY: CWT DATE: MAR. 2023 FILENAME: b012326_RW3.dgn
CHECKED BY: JES DATE: APR. 2023 SCALE: AS SHOWN
DESIGNED BY: CSW DATE: MAR. 2023
BRIDGE NO. 07614 DRAWING NO. 66337

JESkinner 10/25/2023 11:51:23 PM
WORKSPACE: ARDOT Bridge
\\garverinc.local\gdata\Projects\2017\17017660 - ARDOT 012326 Hwy 412 - Hwy 112\Drawings\b012326xRW_SH02-RW3.dgn
REVISED DATE:

DATE REVISED	DATE REVISED	FED. ROAD DIST. NO.	STATE	JOB NO.	SHEET NO.	TOTAL SHEETS
		6	ARK.	012326	550	838
		07618		RETAINING WALLS		66338

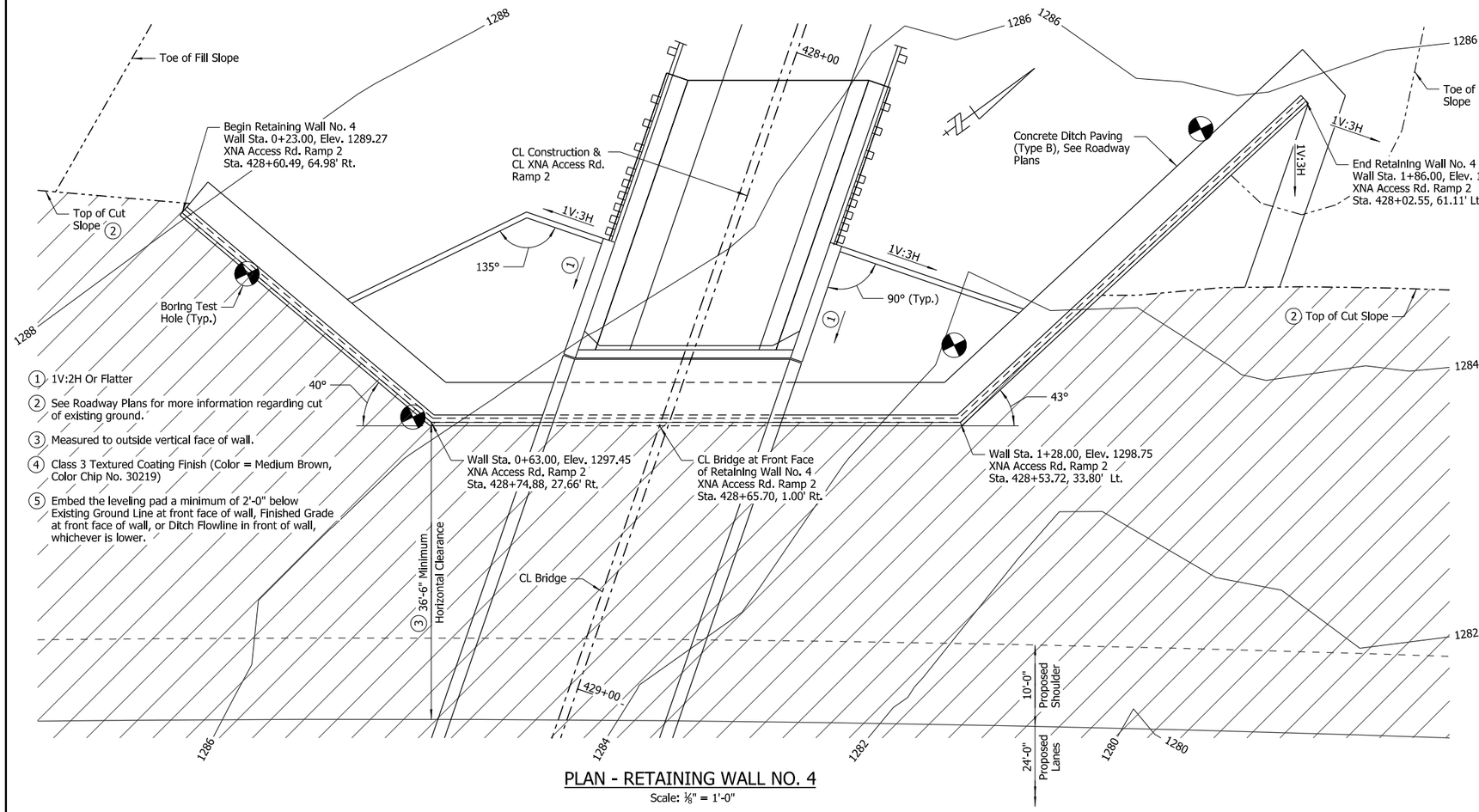

1. 1V:2H Or Flatter
2. See Roadway Plans for more information regarding cut of existing ground.
3. Measured to outside vertical face of wall.
4. Class 3 Textured Coating Finish (Color = Medium Brown, Color Chip No. 30219)
5. Embed the leveling pad a minimum of 2'-0" below Existing Ground Line at front face of wall, Finished Grade at front face of wall, or Ditch Flowline in front of wall, whichever is lower.

PLAN - RETAINING WALL NO. 4

Scale: ⅛" = 1'-0"

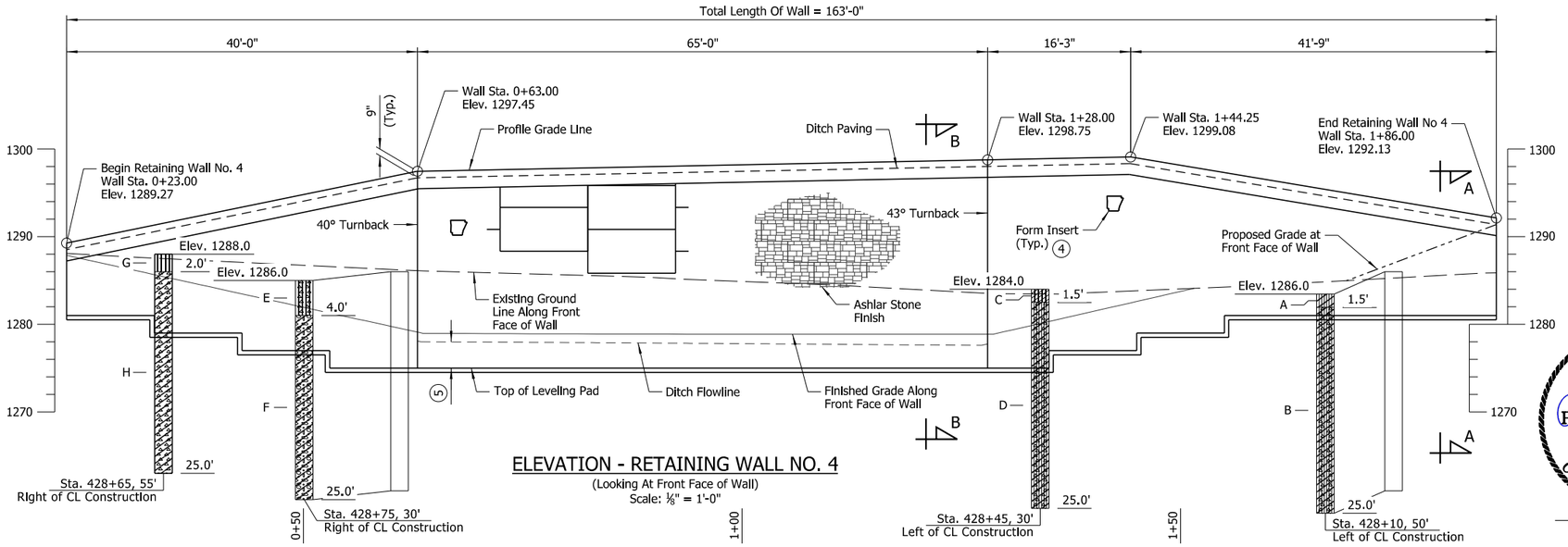

ELEVATION - RETAINING WALL NO. 4

(Looking At Front Face of Wall)
Scale: ⅛" = 1'-0"

NOTES:
Offset dimensions for Retaining Wall No. 4 are measured from CL Construction & CL XNA Access Rd. Ramp 2 to outside vertical face of Retaining Wall.

Wall stationing shown is taken along outside vertical face of Retaining Wall.

Wall Elevations shown are measured along Profile Grade Line at top of coping.

For "SECTION A-A" and "SECTION B-B", see Dwg. No. 66342.

For FORM INSERT DETAILS, see Dwg. No. 66343.

For "GENERAL NOTES" and "TABLE OF QUANTITIES", see Dwg. No. 66344.

RETAINING WALL NO. 4 ELEVATIONS

WALL STA.	FINISHED GRADE ELEV.	DITCH FLOWLINE ELEV.	EXIST. GROUND ELEV.
0+23.00	1287.72	-	1288.04
0+63.00	1278.96	1277.88	1286.09
1+28.00	1278.87	1277.56	1283.48
1+50.95	1284.11	-	1284.11
1+74.00	-	-	1285.25
1+86.00	-	-	1285.86

RETAINING WALL NO. 4 DESIGN PARAMETERS

Factored Bearing Resistance (KSF)	Minimum Strap Length (FT)
10.0	0.7H

NOTE:
"H" shall be measured from the top of levelling pad elevation to the finished surface.

N-VALUES

Sta. 428+10, 50' Left of CL Construction	Sta. 428+45, 30' Left of CL Construction	Sta. 428+75, 30' Right of CL Construction	Sta. 428+65, 55' Right of CL Construction
0.5-1.5, N=7	0.5-1.5, N=8	0.5-1.5, N=11	0.5-1.5, N=10
2.5-3.5, N=22	2.5-3.5, N=44	2.5-3.5, N=49	2.5-3.5, N=50/9"
4.5-5.5, N=50/8"	4.5-5.5, N=50/7"	4.5-5.5, N=37	4.5-5.5, N=50/10"
6.5-7.5, N=50	6.5-7.5, N=50/9"	6.5-7.5, N=50/7"	6.5-7.5, N=50/10"
9.0-10.0, N=50/10"	9.0-10.0, N=50/10"	9.0-10.0, N=50/11"	9.0-10.0, N=27
14.0-15.0, N=50/8"	14.0-15.0, N=32	14.0-15.0, N=50/6"	14.0-15.0, N=50/6"
19.0-20.0, N=50/8"	19.0-20.0, N=37	19.0-20.0, N=31	19.0-20.0, N=29
24.0-25.0, N=50/7"	24.0-25.0, N=36	24.0-25.0, N=12	24.0-25.0, N=38

BORING LEGEND

A - Firm tan silty clay w/ occasional chert fragments
B - Stiff reddish brown and gray silty clay w/ numerous chert nodules and fragments
C - Firm tan clayey silt w/ occasional chert fragments
D - Very stiff reddish brown silty clay w/ numerous chert nodules and fragments
E - Medium dense tan silt w/ occasional rootlets and chert fragments
F - Very stiff reddish brown clay w/ numerous chert nodules and fragments
G - Loose to medium dense tan silt
H - Very stiff reddish brown clay w/ chert nodules and fragments and discontinuous chert seams and layers

STATE OF ARKANSAS
LICENSED PROFESSIONAL ENGINEER
No.21243
COLTON S. WYLIE
Digitally Signed 07/28/2023
BRIDGE ENGINEER

SHEET 1 OF 4
DETAILS OF RETAINING WALL NOS. 4-7

ROUTE SEC.

ARKANSAS STATE HIGHWAY COMMISSION

LITTLE ROCK, ARK.

DRAWN BY: CWT DATE: FEB. 2023 FILENAME: b012326_RW4.dgn
CHECKED BY: CSW DATE: MAR. 2023 SCALE: As Shown
DESIGNED BY: JME DATE: FEB. 2023

BRIDGE NO. 07618 DRAWING NO. 66338

JESchnerWORKSPACE: ARDOT Bridge (2019)USERNAME: JeffreyMSchnerPROJECT: 012326 Hwy 412 - Hwy 112\Drawings\b012326RW_S201_RW4.dgnREVISED DATE: 7/28/2023 12:12:38 PM

DATE REVISED	DATE REVISED	FED. ROAD DIST. NO.	STATE	JOB NO.	SHEET NO.	TOTAL SHEETS
		6	ARK.	012326	551	838
		07618		RETAINING WALLS		66339

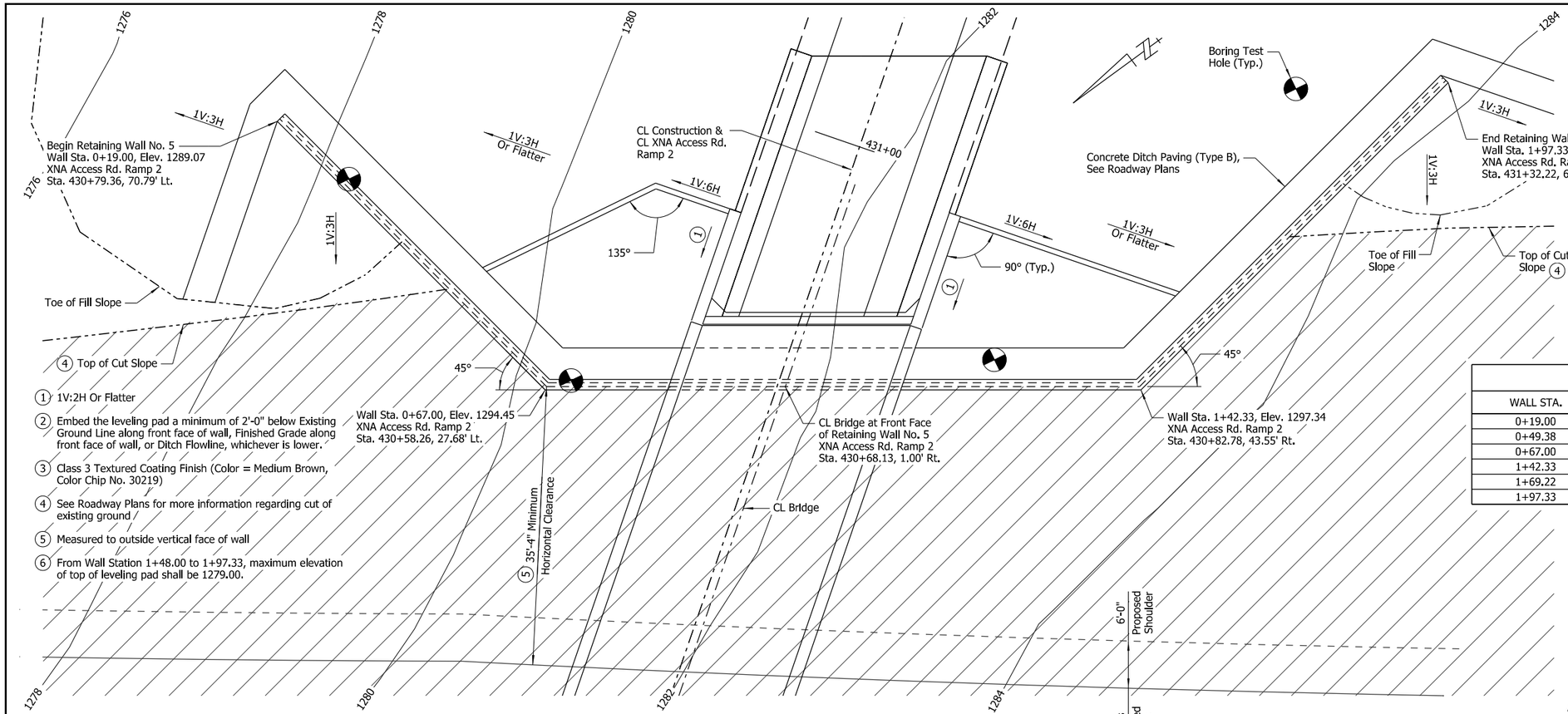

1. 1V:2H Or Flatter
2. Embed the leveling pad a minimum of 2'-0" below Existing Ground Line along front face of wall, Finished Grade along front face of wall, or Ditch Flowline, whichever is lower.
3. Class 3 Textured Coating Finish (Color = Medium Brown, Color Chip No. 30219)
4. See Roadway Plans for more information regarding cut of existing ground
5. Measured to outside vertical face of wall
6. From Wall Station 1+48.00 to 1+97.33, maximum elevation of top of leveling pad shall be 1279.00.

PLAN - RETAINING WALL NO. 5

Scale: ⅛" = 1'-0"

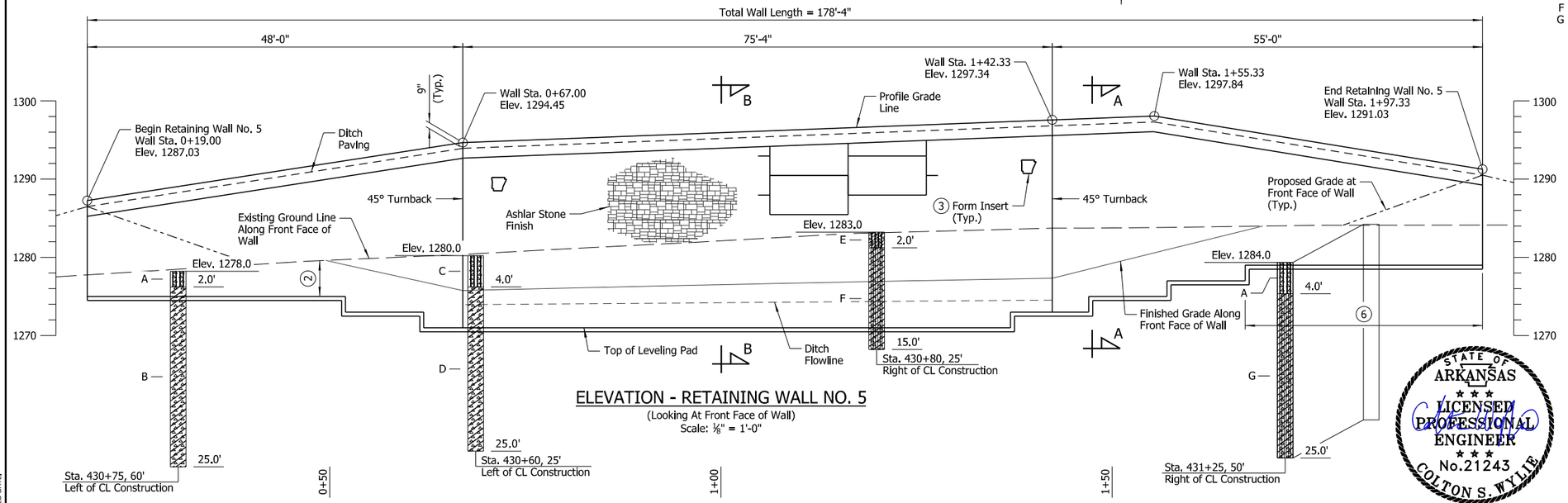

ELEVATION - RETAINING WALL NO. 5

(Looking At Front Face of Wall)
Scale: ⅛" = 1'-0"

NOTES:
Offset dimensions for Retaining Wall No. 5 are measured from CL Construction & CL XNA Access Rd. Ramp 2 to outside vertical face of Retaining Wall.

Wall stationing shown is taken along outside vertical face of Retaining Wall.

Wall Elevations shown are measured along Profile Grade Line at top of coping.

For "SECTION A-A" and "SECTION B-B", see Dwg. No. 66342.

For FORM INSERT DETAILS, see Dwg. No. 66343.

For "GENERAL NOTES" and "TABLE OF QUANTITIES", see Dwg. No. 66344.

RETAINING WALL NO. 5 ELEVATIONS

WALL STA.	FINISHED GRADE ELEV.	DITCH FLOWLINE ELEV.	EXIST. GROUND ELEV.
0+19.00	-	-	1277.51
0+49.38	1279.39	-	1279.39
0+67.00	1275.53	1273.72	1280.19
1+42.33	1277.10	1274.30	1283.53
1+69.22	1283.76	-	1283.76
1+97.33	-	-	1283.85

RETAINING WALL NO. 5 DESIGN PARAMETERS

Factored Bearing Resistance (KSF)	Minimum Strap Length (FT)
10.0	0.7H

NOTE:
"H" shall be measured from the top of leveling pad elevation to the finished surface.

BORING LEGEND

A - Loose tan silt w/ occasional rootlets and chert fragments
B - Very stiff reddish brown clay w/ numerous chert nodules and fragments
C - Medium dense tan silt w/ numerous chert fragments and occasional rootlets
D - Very stiff reddish brown clay w/ numerous chert nodules and fragments and discontinuous chert seams and layers
E - Firm tan clayey silt w/ chert fragments
F - Very stiff reddish brown silty clay w/ numerous chert nodules and fragments
G - Very stiff reddish brown silty clay w/ numerous chert fragments

N-VALUES

Sta. 430+75, 60' Left of CL Construction	Sta. 430+60, 25' Left of CL Construction
0.5-1.5, N=7	0.5-1.5, N=14
2.5-3.5, N=47	2.5-3.5, N=40
4.5-5.5, N=27	4.5-5.5, N=50/10"
6.5-7.5, N=50/8"	6.5-7.5, N=49
9.0-10.0, N=50/6"	9.0-10.0, N=50/1"
14.0-15.0, N=50/7"	14.0-15.0, N=25
19.0-20.0, N=30	19.0-20.0, N=38
24.0-25.0, N=44	24.0-25.0, N=39

Sta. 430+80, 25' Right of CL Construction	Sta. 431+25, 50' Right of CL Construction
0.5-1.5, N=8	0.5-1.5, N=9
2.5-3.5, N=50	2.5-3.5, N=50/10"
4.5-5.5, N=50/4"	4.5-5.5, N=32
6.5-7.5, N=50/6"	6.5-7.5, N=42
9.0-10.0, N=44	9.0-10.0, N=24
14.0-15.0, N=41	14.0-15.0, N=50/11"
	19.0-20.0, N=19
	24.0-25.0, N=19

STATE OF ARKANSAS
LICENSED PROFESSIONAL ENGINEER
No.21243
COLTON S. WYLIE
Digitally Signed 07/28/2023
BRIDGE ENGINEER

SHEET 2 OF 4
DETAILS OF RETAINING WALL NOS. 4-7

ROUTE SEC.

ARKANSAS STATE HIGHWAY COMMISSION
LITTLE ROCK, ARK.

DRAWN BY: CWT DATE: FEB. 2023 FILENAME: b012326_RW5.dgn
CHECKED BY: CSW DATE: MAR. 2023 SCALE: As Shown
DESIGNED BY: JME DATE: FEB. 2023

BRIDGE NO. 07618 DRAWING NO. 66339

JESkinner 7/28/2023 12:12:40 PM
WORKSPACE: ARDOT Bridge (2019)
USER NAME: C:\Digital Projects\2017\17017660 - ARDOT 012326 Hwy 412 - Hwy 112\Drawings\b012326xRW_S202_RW5.dgn
REVISED DATE:

DATE REVISED	DATE REVISED	FED. ROAD DIST. NO.	STATE	JOB NO.	SHEET NO.	TOTAL SHEETS
		6	ARK.	012326	552	838
		07619		RETAINING WALLS		66340

(1)

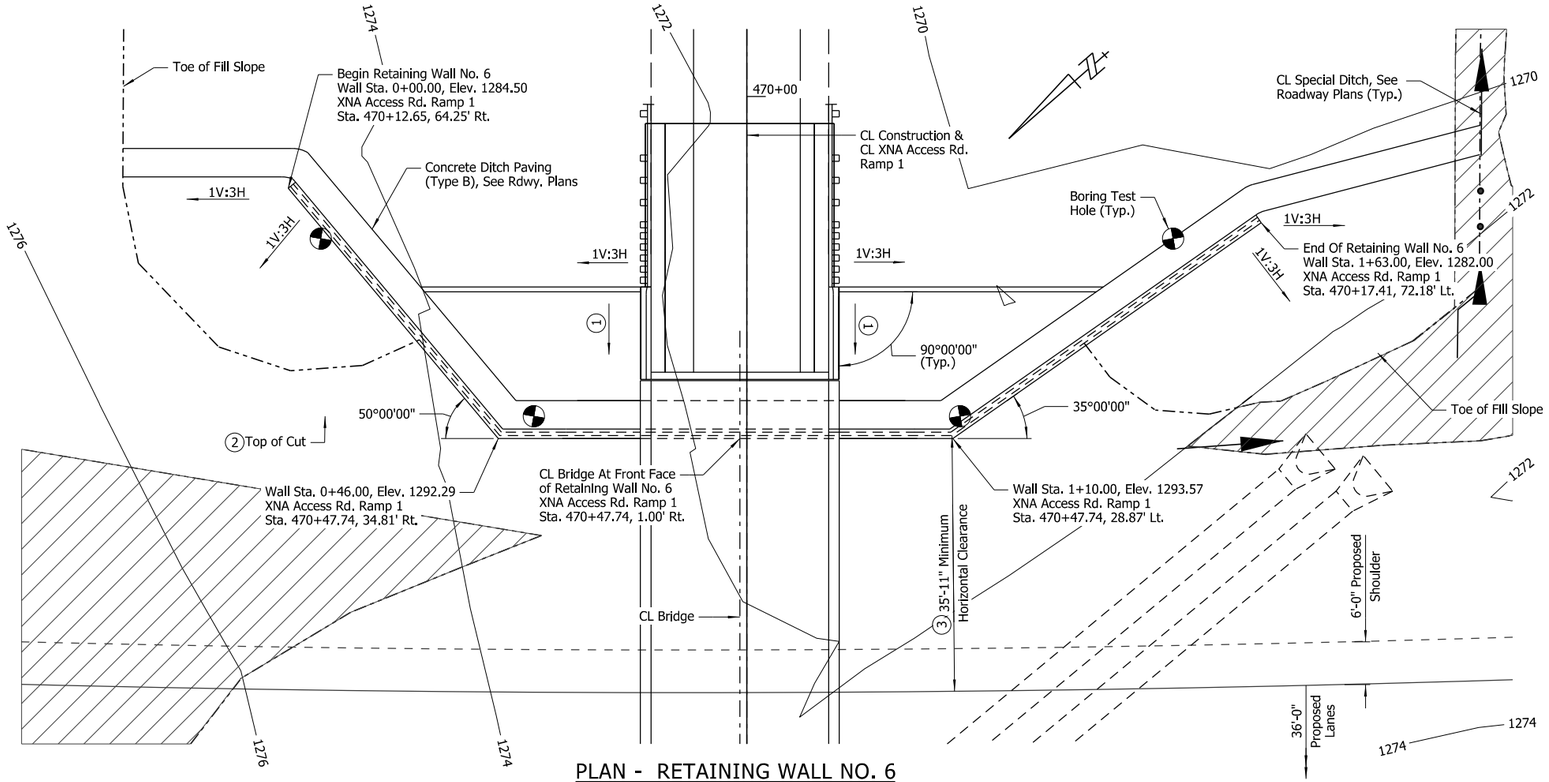

PLAN - RETAINING WALL NO. 6

Scale: 3/32" = 1'-0"

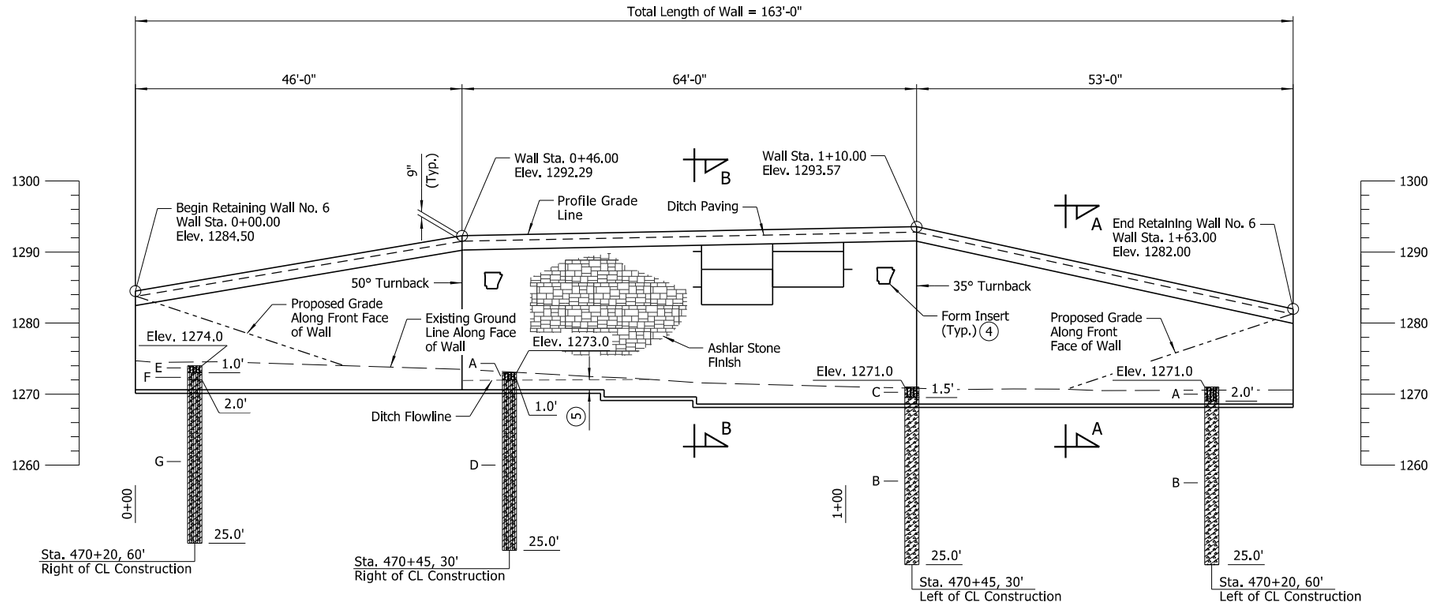

ELEVATION - RETAINING WALL NO. 6

(Looking At Front Face of Wall)
Scale: 3/32" = 1'-0"

(1) 1V:2H Or Flatter

(2) See Roadway Plans for more information regarding cut of existing ground.

(3) Measured to outside vertical face of wall.

(4) Class 3 Textured Coating Finish (Color = Medium Brown, Color Chip No. 30219)

(5) Embed the leveling pad a minimum of 2'-0" below Existing Ground Line at front face of wall or Ditch Flowline in front of wall, whichever is lower.

NOTES:
Offset dimensions for Retaining Wall No. 6 are measured from CL Construction & CL XNA Access Rd. Ramp 1 to outside vertical face of Retaining Wall.

Wall stationing shown is taken along front face of top of coping.

Wall Elevations shown are measured along Profile Grade Line at top of coping.

For "SECTION A-A" and "SECTION B-B", see Dwg. No. 66342.

For FORM INSERT DETAILS, see Dwg. No. 66343.

For "GENERAL NOTES" and "TABLE OF QUANTITIES", see Dwg. No. 66344.

RETAINING WALL NO. 6 ELEVATIONS

WALL STATION	DITCH FLOWLINE ELEV.	EXIST. GROUND ELEV.
0+00.00	-	1274.67
0+46.00	1271.91	1273.50
0+72.36	1272.07	1272.07
1+10.00	-	1270.81
1+36.50	-	1270.50
1+63.00	-	1270.58

RETAINING WALL NO. 6 DESIGN PARAMETERS

Factored Bearing Resistance (KSF)	Minimum Strap Length (FT)
10.0	0.7H

NOTE:
"H" shall be measured from the top of leveling pad elevation to the finished surface of the roadway.

BORING LEGEND

A - Soft brown clayey silt w/ chert fragments
B - Very stiff reddish brown clay w/ numerous chert fragments and discontinuous chert seams and layers
C - Firm to stiff brown clayey silt w/ chert fragments
D - Stiff to very stiff reddish brown silty clay w/ chert fragments
E - Firm brown clayey silt w/ occasional cherty limestone fragments
F - Firm to stiff reddish tan silty clay w/ some chert fragments
G - Very stiff reddish brown silty clay w/ chert fragments and discontinuous chert seams and layers

N-VALUES

Sta. 470+20, 60' Right of CL Construction	Sta. 470+45, 30' Right of CL Construction
0.5-1.5, N=8	0.5-1.5, N=6
2.5-3.5, N=29	2.5-3.5, N=23
4.5-5.5, N=50/7"	4.5-5.5, N=50/9"
6.5-7.5, N=50/9"	6.5-7.5, N=35
9.0-10.0, N=50/10"	9.0-10.0, N=50
14.0-15.0, N=35	14.0-15.0, N=22
19.0-20.0, N=50/11"	19.0-20.0, N=20
24.0-25.0, N=44	24.0-25.0, N=50/11"

Sta. 470+45, 30' Left of CL Construction	Sta. 470+20, 60' Left of CL Construction
0.5-1.5, N=10	0.5-1.5, N=5
2.5-3.5, N=44	2.5-3.5, N=50/9"
4.5-5.5, N=33	4.5-5.5, N=44
6.5-7.5, N=44	6.5-7.5, N=50/11"
9.0-10.0, N=50/6"	9.0-10.0, N=42
14.0-15.0, N=50/11"	14.0-15.0, N=50/11"
19.0-20.0, N=50/9"	19.0-20.0, N=50/9"
24.0-25.0, N=36	24.0-25.0, N=50/4"

STATE OF ARKANSAS
LICENSED PROFESSIONAL ENGINEER
No.21243
COLTON S. WYLIE

Digitally Signed 07/28/2023
BRIDGE ENGINEER

SHEET 3 OF 4
DETAILS OF RETAINING WALL NOS. 4-7

ROUTE SEC.

ARKANSAS STATE HIGHWAY COMMISSION

LITTLE ROCK, ARK.

DRAWN BY: MJS DATE: MAR. 2023 FILENAME: b012326_RW6.dgn
CHECKED BY: CSW DATE: MAR. 2023 SCALE: As Shown
DESIGNED BY: MJS DATE: MAR. 2023

BRIDGE NO. 07619 DRAWING NO. 66340

JESOnner 7/28/2023 12:12:42 PM
WORKSPACE: ARDOT Bridge (2019)
USERNAME: M:\Projects\2017\17017560 - ARDOT 012326 Hwy 412 - Hwy 112\Drawings\b012326RW_S203_RW6.dgn
REVISED DATE:

DATE REVISED	DATE REVISED	FED. ROAD DIST. NO.	STATE	JOB NO.	SHEET NO.	TOTAL SHEETS
		6	ARK.	012326	553	838
		07619		RETAINING WALLS		66341

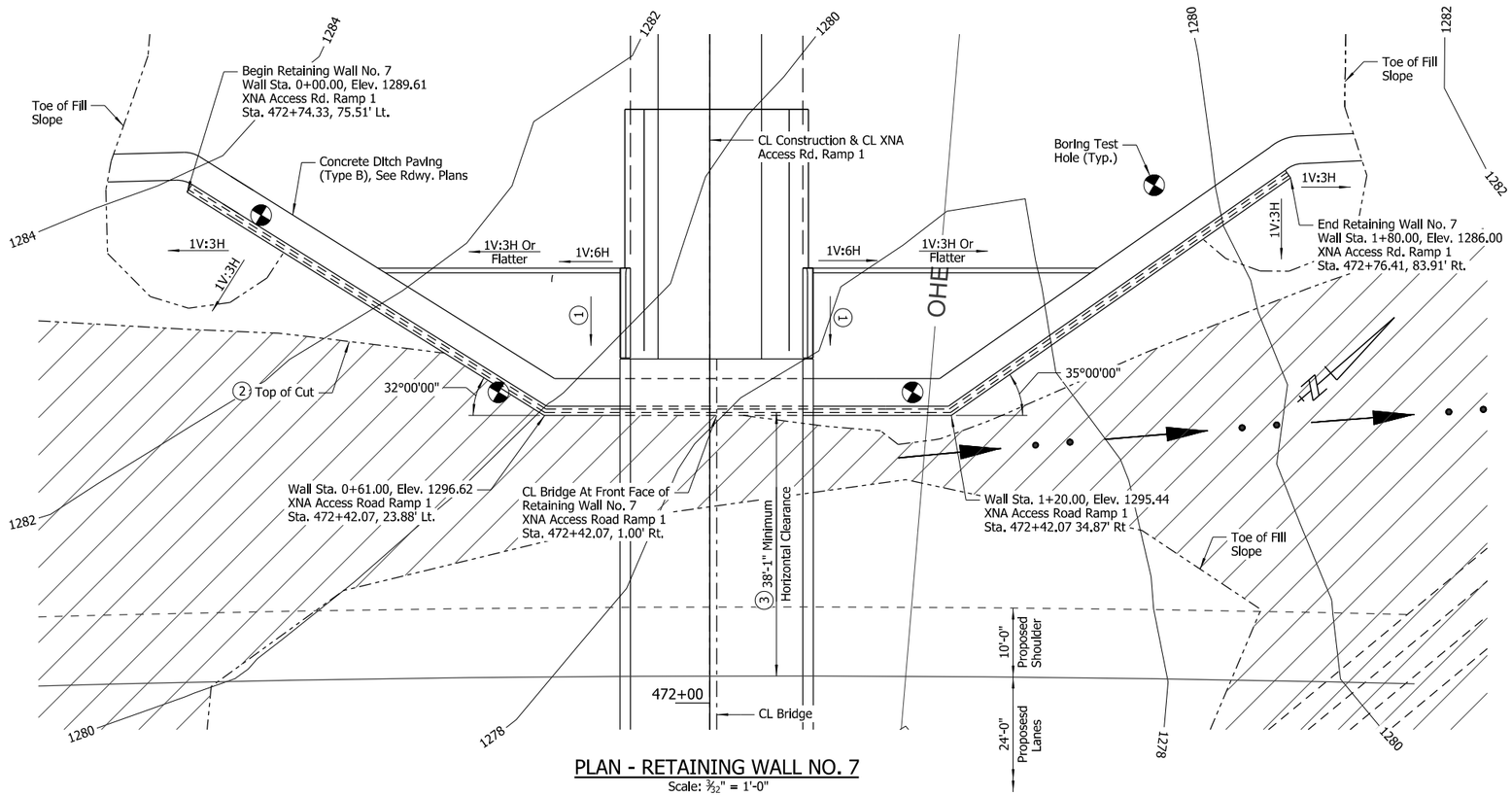

PLAN - RETAINING WALL NO. 7

Scale: 3/32" = 1'-0"

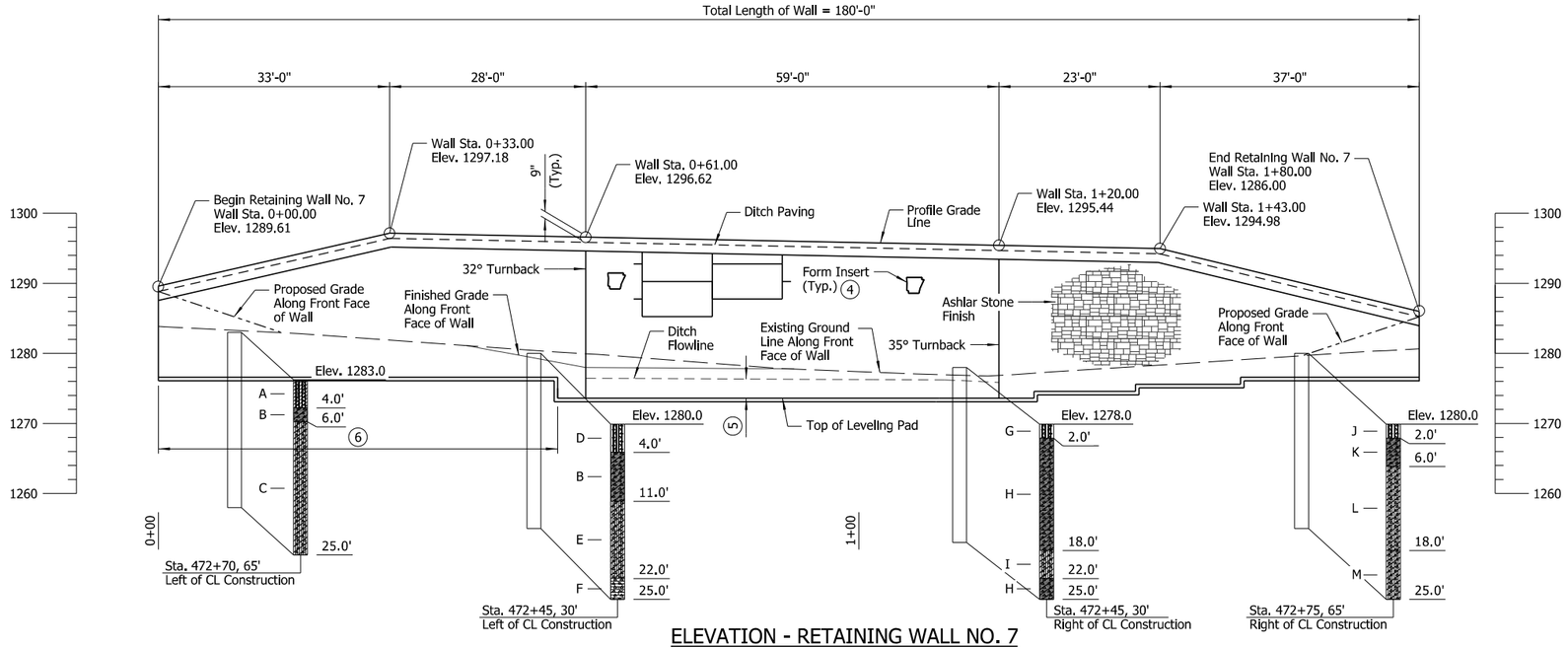

ELEVATION - RETAINING WALL NO. 7

(Looking At Front Face of Wall)

Scale: 3/32" = 1'-0"

1 1V:2H Or Flatter

2 See Roadway Plans for more information regarding cut of existing ground.

3 Measured to outside vertical face of wall.

4 Class 3 Textured Coating Finish (Color = Medium Brown, Color Chip No. 30219)

5 Embed the leveling pad a minimum of 2'-0" below Existing Ground Line at front face of wall, Finished Grade at front face of wall, or Ditch Flowline in front of wall, whichever is lower.

6 From Wall Station 0+00.00 to 0+57.00, maximum elevation of top of leveling pad shall be 1277.00.

NOTES:
Offset dimensions for Retaining Wall No. 7 are measured from CL Construction & CL XNA Access Rd. Ramp 1 to outside vertical face of Retaining Wall.

Wall stationing shown is taken along front face of top of coping.

Wall Elevations shown are measured along Profile Grade Line at top of coping.

For "SECTION A-A" and "SECTION B-B", see Dwg. No. 66342.

For FORM INSERT DETAILS, see Dwg. No. 66343.

For "GENERAL NOTES" and "TABLE OF QUANTITIES", see Dwg. No. 66344.

RETAINING WALL NO. 7 ELEVATIONS

WALL STA.	FINISHED GRADE ELEV.	DITCH FLOWLINE ELEV.	EXIST. GROUND ELEV.
0+00.00	-	-	1283.85
0+43.94	1281.13	-	1281.13
0+61.00	1278.00	1276.46	1279.95
1+20.00	-	1275.85	1276.86
1+50.00	-	-	1278.78
1+80.00	-	-	1280.65

RETAINING WALL NO. 7 DESIGN PARAMETERS

Factored Bearing Resistance (KSF)	Minimum Strap Length (FT)
10.0	0.7H

NOTE:
"H" shall be measured from the top of leveling pad elevation to the finished surface.

BORING LEGEND

A - Stiff brownish tan clayey silt w/ numerous chert and limestone fragments
B - Very stiff reddish brown fine sandy clay w/ numerous chert and limestone fragments and discontinuous chert seams
C - Very stiff reddish brown silty clay w/ numerous chert fragments and discontinuous chert seams and layers
D - Medium dense brownish tan silt, slightly clayey w/ cherty limestone and chert fragments
E - Very stiff reddish brown silty clay w/ chert fragments
F - Moderately hard light gray w/ reddish tan weathered cherty limestone
G - Very loose to loose tan silt w/ cherty limestone fragments
H - Very stiff reddish brown fine sandy clay w/ numerous chert and limestone fragments
I - Very stiff reddish tan silty clay w/ numerous cherty limestone fragments
J - Very loose to loose tan silt w/ chert and limestone fragments
K - Very stiff reddish brown fine sandy clay w/ numerous chert fragments
L - Very stiff reddish brown silty clay w/ chert and limestone fragments and discontinuous chert seams and layers
M - Stiff reddish tan silty clay w/ numerous chert and limestone fragments

EXISTING UTILITIES LEGEND

OHE = Overhead Electric Utility

NOTE:
Utilities shown are based on locations at time of survey and do not reflect any potential utility relocations prior to construction.

N-VALUES

Sta. 472+70, 65' Left of CL Construction	Sta. 472+45, 30' Left of CL Construction
0.5-1.5, N=16	0.5-1.5, N=18
2.5-3.5, N=50/10"	2.5-3.5, N=50/11"
4.5-5.5, N=50/11"	4.5-5.5, N=50/10"
6.5-7.5, N=50/10"	6.5-7.5, N=50/6"
9.0-10.0, N=46	9.0-10.0, N=50/11"
14.0-15.0, N=40	14.0-15.0, N=44
19.0-20.0, N=50/2"	19.0-20.0, N=40
24.0-25.0, N=25	24.0-25.0, N=50/11"

Sta. 472+45, 30' Right of CL Construction	Sta. 472+75, 65' Right of CL Construction
0.5-1.5, N=4	0.5-1.5, N=4
2.5-3.5, N=26	2.5-3.5, N=50/9"
4.5-5.5, N=26	4.5-5.5, N=50/6"
6.5-7.5, N=37	6.5-7.5, N=49
9.0-10.0, N=48	9.0-10.0, N=50/10"
14.0-15.0, N=26	14.0-15.0, N=50/10"
19.0-20.0, N=31	19.0-20.0, N=16
24.0-25.0, N=50/10"	24.0-25.0, N=17

STATE OF ARKANSAS
LICENSED PROFESSIONAL ENGINEER
No.21243
COLTON S. WYLIE
Digitally Signed 07/28/2023
BRIDGE ENGINEER

SHEET 4 OF 4
DETAILS OF RETAINING WALL NOS. 4-7

ROUTE SEC.

ARKANSAS STATE HIGHWAY COMMISSION

LITTLE ROCK, ARK.

DRAWN BY: MJS DATE: MAR. 2023 FILENAME: b012326_RW7.dgn
CHECKED BY: CSW DATE: APR. 2023 SCALE: As Shown
DESIGNED BY: MJS DATE: MAR. 2023

BRIDGE NO. 07619 DRAWING NO. 66341

JEStribner 7/28/2023 12:12:43 PM
WORKSPACE: ARDOT Bridge (2019)
Users and Applications\Projects\2017\10.7017660 - ARDOT 012326 Hwy 412 - Hwy 112\Drawings\b012326sht_S304_RW7.dgn
REVISED DATE:

DATE REVISED	DATE REVISED	FED. ROAD DIST. NO.	STATE	JOB NO.	SHEET NO.	TOTAL SHEETS
		6	ARK.	012326	554	838
		SEE TABLE		RETAINING WALLS		66342

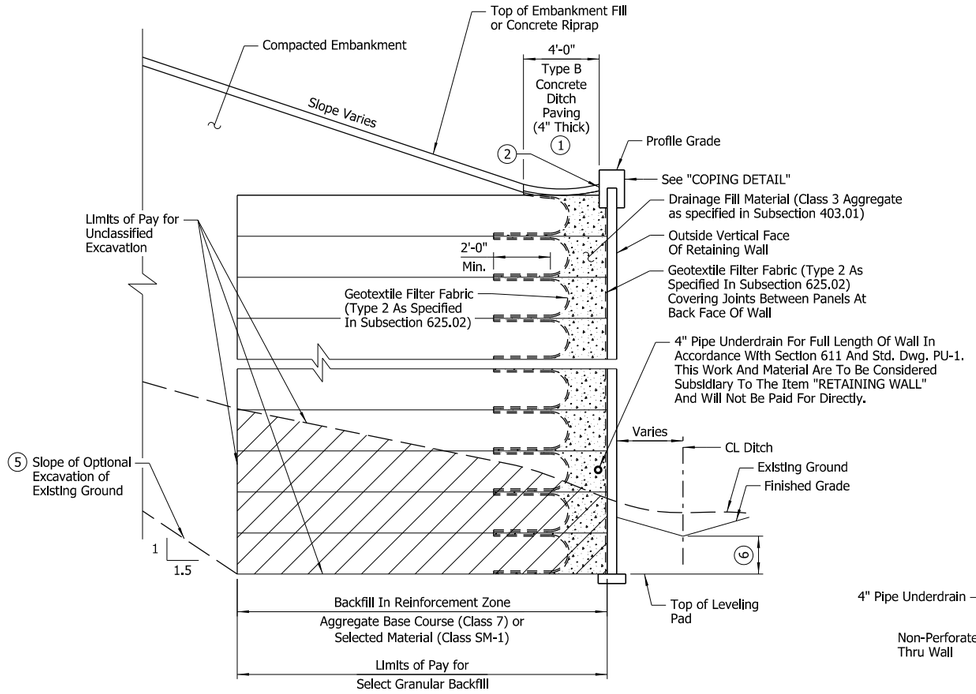

SECTION A-A (BACKFILL METHOD A)

No Scale

BRIDGE NUMBERS

BRIDGE NUMBERS	WALL NUMBERS
A7612	1
07614	2 & 3
07618	4 & 5
07619	6 & 7

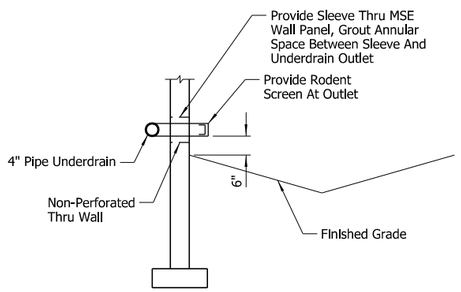

OUTLET DETAIL

No Scale

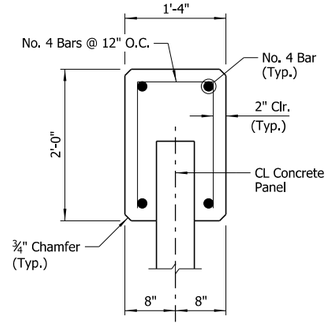

COPING DETAIL

No Scale

NOTES:
Reinforcing steel and Class S(AE) concrete for coping shall not be paid for directly, but will be considered subsidiary to the item "RETAINING WALL."

Precast coping may be substituted for cast-in-place coping shown.

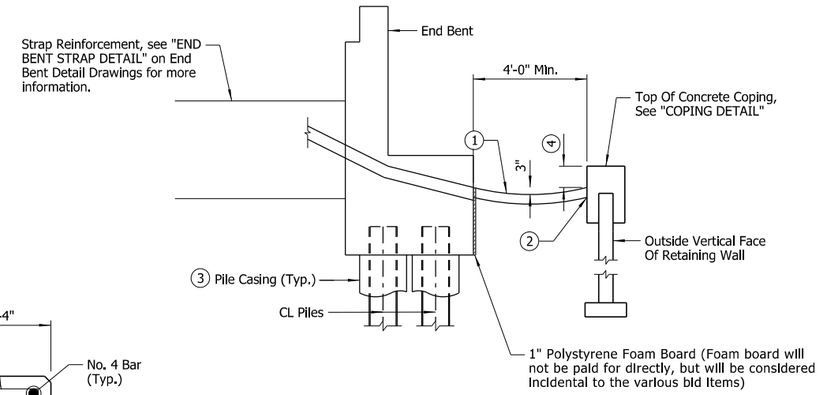

SECTION B-B

No Scale

NOTE:
Details not shown of Filter Fabric, Drainage Fill, and Backfill are similar to "SECTION A-A"

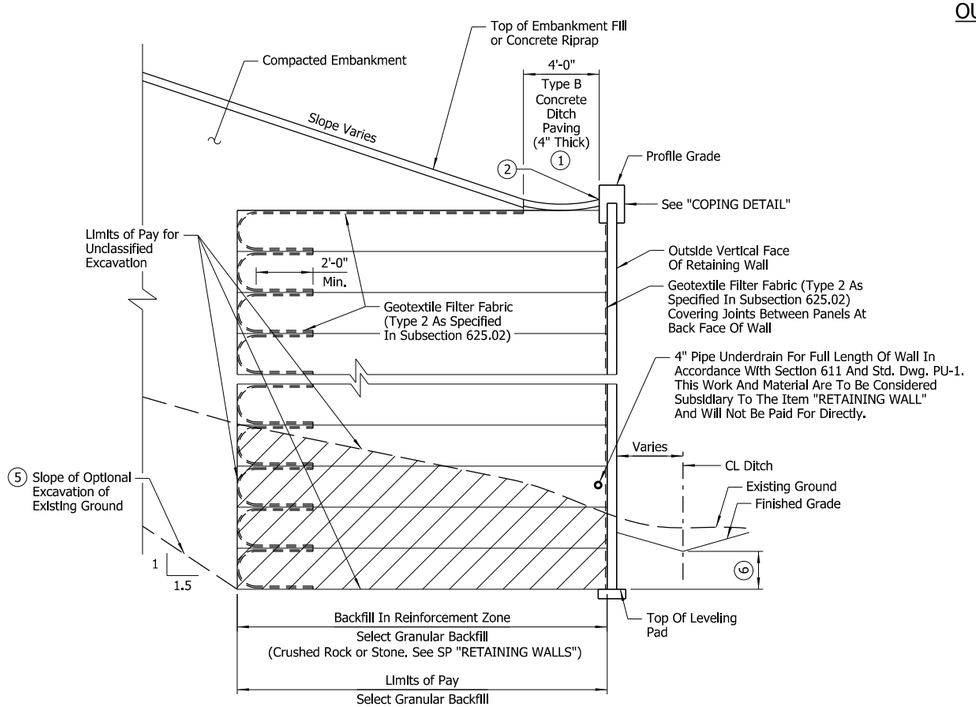

SECTION A-A (BACKFILL METHOD B)

No Scale

1. The 4'-0" concrete ditch paving shall be constructed without the 3" weep holes. See Std. Dwg. No. CDP-1 For ditch paving details.
2. ½" Preformed Joint Filler (AASHTO M 153, Type 1) per Subsection 501.02(h)(1). Seal with ½" x 1" Type 3 or 4 Joint Sealer per Subsection 501.02(h)(2).
3. Casings shall be placed after excavation to top of leveling pad is completed. For locations of casings, see End Bent Detail drawings.
4. Varies, See WALL ELEVATION VIEWS.
5. The Contractor shall have the option of using a cut slope or shoring to maintain stability of the cut. Any excavation beyond the limits of the reinforcement zone or any shoring used will not be paid for directly, but shall be considered incidental to the item "RETAINING WALL". See SP "RETAINING WALLS" for additional information.
6. Pipe underdrain shall extend to daylight towards CL Ditch.
7. See WALL ELEVATION VIEWS for embedment requirements.

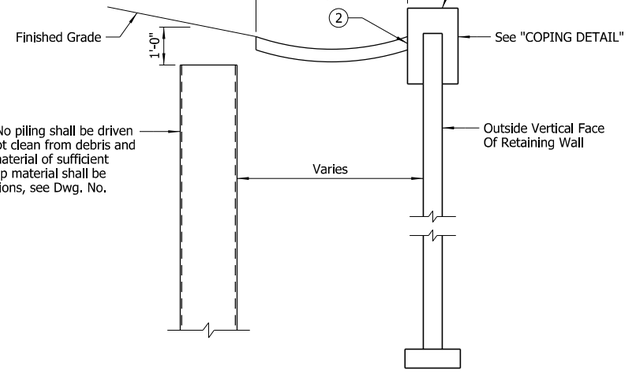

18"ø Pile Casing for Future Bridge. No piling shall be driven through casing. Casings shall be kept clean from debris and capped with a durable waterproof material of sufficient strength to prevent collapse. The cap material shall be approved by the Engineer. For locations, see Dwg. No. 66188

FUTURE BRIDGE PILE CASING BEHIND MSE RETAINING WALL DETAIL

(Walls 2 & 3)
No Scale

STATE OF ARKANSAS
LICENSED PROFESSIONAL ENGINEER
No.21243
COLTON S. WYLIE
Digitally Signed 07/28/2023
BRIDGE ENGINEER

SHEET 1 OF 3
COMMON DETAILS OF RETAINING WALLS

ROUTE SEC.

ARKANSAS STATE HIGHWAY COMMISSION
LITTLE ROCK, ARK.

DRAWN BY: CWT DATE: MAR. 2023 FILENAME: b012326_RW8.dgn
CHECKED BY: CSW DATE: MAR. 2023 SCALE: As Shown
DESIGNED BY: JME DATE: MAR. 2023
BRIDGE NO. SEE TABLE DRAWING NO. 66342

JESkinner 7/28/2023 12:12:45 PM
WORKSPACE: ARDOT Bridge (2019)
USER PATH: J:\Global\Projects\2017\17017660 - ARDOT 012326 Hwy 412 - Hwy 112\Drawings\b012326xRW_S301_MD.dgn
REVISED DATE:

DATE REVISED	DATE REVISED	FED. ROAD DIST. NO.	STATE	JOB NO.	SHEET NO.	TOTAL SHEETS
		6	ARK.	012326	555	838
		SEE TABLE		RETAINING WALLS		66343

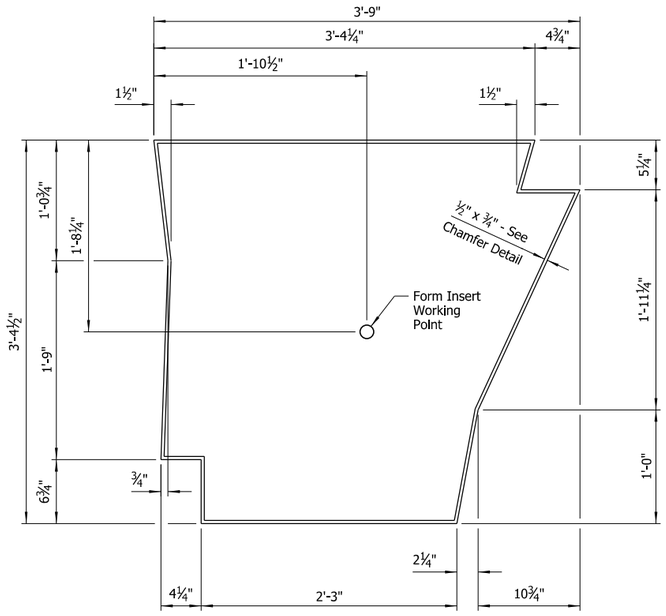

FORM INSERT DETAILS ON MSE WALLS

No Scale

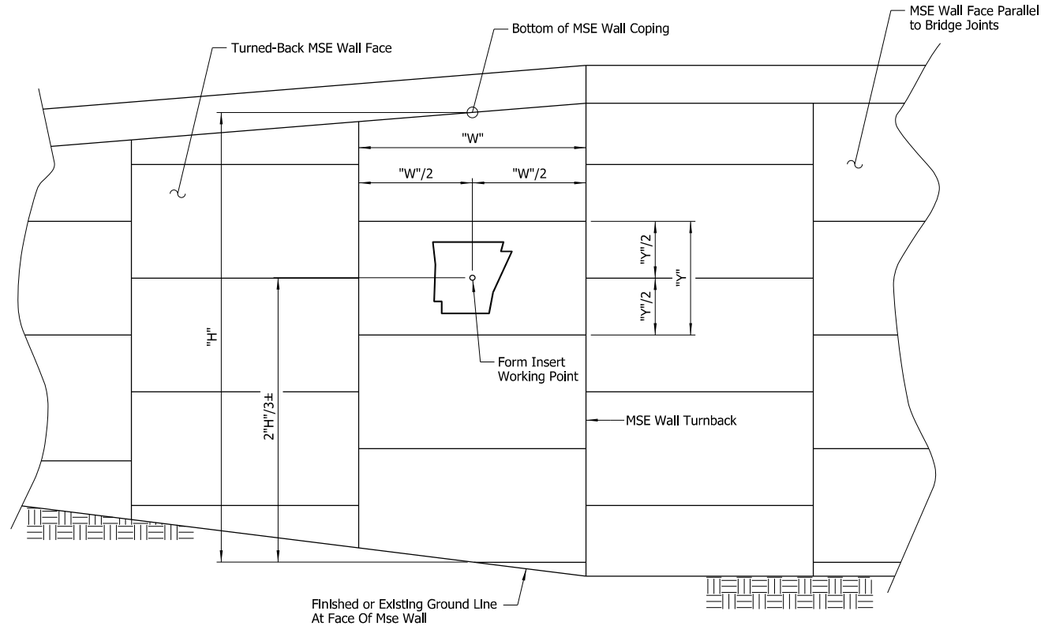

PLACEMENT AT MSE WALLS

No Scale

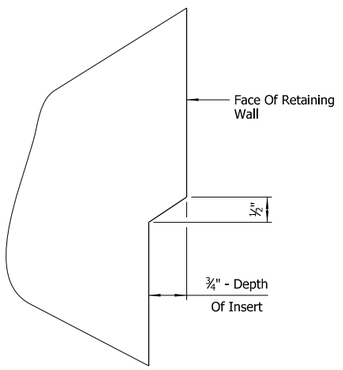

CHAMFER DETAIL

No Scale

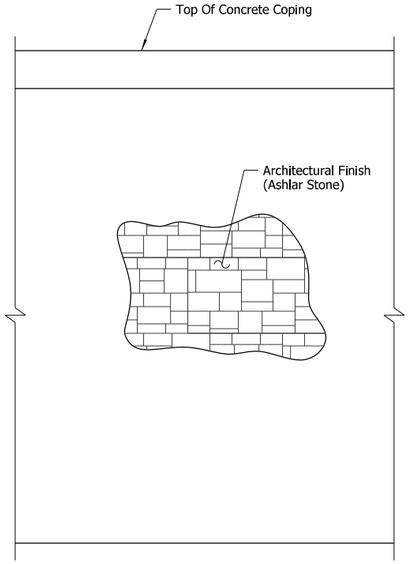

ARCHITECTURAL FINISH DETAIL

No Scale

NOTES:
See "LOCATION OF FORM INSERTS" for form insert locations.

Fabricate form insert as a one piece unit, without the use of splices, joints or glue.

Wash and clean multi-use form inserts before each use.

All work and materials for inserts shall be included in the unit price bid for the item "RETAINING WALL".

Damaged or worn form inserts shall be replaced at the Contractor's expense.

The form insert shall be approved by the Engineer before its use.

Recessed image (including chamfers) of State of Arkansas insert shall be given a Class 3 textured coating finish as specified in Special Provision "TEXTURED COATING FINISH".

LOCATION OF FORM INSERTS

Location	Alignment	Station (1)
Wall No. 2	Hwy. 612	218+61.16 and 219+53.45
Wall No. 3	Hwy. 612	219+29.76 and 220+23.77
Wall No. 4	Hwy. 612	438+41.91 and 439+12.65
Wall No. 5	Hwy. 612	437+57.38 and 438+42.08
Wall No. 6	Hwy. 612	441+18.99 and 441+91.99
Wall No. 7	Hwy. 612	441+25.90 and 441+91.35

(1) Station corresponds to intersection of Form Insert Working Point and line perpendicular to alignment shown.

BRIDGE NUMBERS

BRIDGE NUMBERS	WALL NUMBERS
A7612	1
07614	2 & 3
07618	4 & 5
07619	6 & 7

STATE OF ARKANSAS
LICENSED PROFESSIONAL ENGINEER
No.21243
COLTON S. WYLIE
Digitally Signed 07/28/2023
BRIDGE ENGINEER

SHEET 2 OF 3
COMMON DETAILS OF RETAINING WALLS
ROUTE SEC.
ARKANSAS STATE HIGHWAY COMMISSION
LITTLE ROCK, ARK.

DRAWN BY: CWT DATE: MAR. 2023 FILENAME: b012326_RW9.dgn
CHECKED BY: CSW DATE: MAR. 2023 SCALE: As Shown
DESIGNED BY: JME DATE: MAR. 2023
BRIDGE NO. SEE TABLE DRAWING NO. 66343

JESchmer 7/28/2023 12:12:46 PM
WORKSPACE: ARDOT Bridge (2019)
USER INPUT: N:\Roadway Projects\501710\17660 - ARDOT 012326 Hwy 412 - Hwy 112\Drawings\b012326rRW_S302_MD.dgn
REVISED DATE:

DATE REVISED	DATE REVISED	FED. ROAD DIST. NO.	STATE	JOB NO.	SHEET NO.	TOTAL SHEETS
		6	ARK.	012326	556	838
		SEE TABLE		RETAINING WALLS		66344

GENERAL NOTES:

DESIGN SPECIFICATIONS: AASHTO LRFD Bridge Design Specifications (2017, 8th Edition)

SEISMIC ZONE: 1 S_{D1}= 0.12g Site Class = D (Wall Nos. 1-3)

SEISMIC ZONE: 1 S_{D1}= 0.09g Site Class = C (Wall Nos. 4-7)

4" Pipe underdrains shall be used for the full length of wall. Underdrain outlet shall penetrate front face of Retaining Wall to drain.

Elevations are approximate. Wall dimensions may vary depending on wall design selected.

Reinforcement placement and details for retaining walls may be affected by end bent construction and proposed roadway drainage structures. See End Bent Dwg. Nos. 66114-66116, 66184-66188, 66281-66284, 66294-66296 for pile locations, cap details and wingwall details. See Roadway Plans for locations and details of drainage structures.

For ditch paving, see Std. Dwg. CDP-1.

See Special Provision "RETAINING WALLS" for additional information.

Boring logs may be obtained from the Construction Contract Development Section of the Program Management Division.

Preformed joint filler, joint sealer, polystyrene foam board, and pipe underdrains will not be paid for directly, but will be considered subsidiary to the item "RETAINING WALL".

An Architectural Finish (Ashlar Stone or approved equivalent) shall be applied to the face of the retaining walls. See Special Provision "RETAINING WALLS".

A Class 3 Textured Coating Finish shall be applied to the exposed surfaces of the form inserts only as specified in Special Provision "TEXTURED COATING FINISH" and in accordance with Subsection 802.19(b)(3).

TABLE OF QUANTITIES

(FOR INFORMATION ONLY)

ITEM NO.	210	605	SP JOB 012326	SP JOB 012326	SP JOB 012326
ITEM / UNIT	UNCLASSIFIED EXCAVATION	CONCRETE DITCH PAVING (TYPE B)	SELECT GRANULAR BACKFILL	RETAINING WALL	TEXTURED COATING FINISH
	CU. YD.	SQ. YD.	CU. YD.	SQ. FT.	SQ. YD.
Wall No. 1	1,141	79	929	2,210	264
Wall No. 2	1,903	130	2,167	3,739	358
Wall No. 3	1,474	119	1,792	3,283	314
Wall No. 4	928	84	2,006	3,120	299
Wall No. 5	1,009	99	2,405	3,639	335
Wall No. 6	1,036	100	2,103	3,338	327
Wall No. 7	363	89	1,864	3,317	334

BRIDGE NUMBERS

BRIDGE NUMBERS	WALL NUMBERS
A7612	1
07614	2 & 3
07618	4 & 5
07619	6 & 7

STATE OF ARKANSAS
LICENSED PROFESSIONAL ENGINEER
No.21243
COLTON S. WYLIE
Digitally Signed 07/28/2023
BRIDGE ENGINEER

SHEET 3 OF 3
COMMON DETAILS OF RETAINING WALLS
ROUTE SEC.
ARKANSAS STATE HIGHWAY COMMISSION
LITTLE ROCK, ARK.

DRAWN BY: CWT DATE: MAR. 2023 FILENAME: b012326_RW10.dgn
CHECKED BY: CSW DATE: MAR. 2023 SCALE: As Shown
DESIGNED BY: JME DATE: MAR. 2023
BRIDGE NO. SEE TABLE DRAWING NO. 66344

JESkinner 7/28/2023 12:12:46 PM
WORKSPACE: ARDOT Bridge (2019)
\\ganverinc.local\gdata\Projects\2017\17017660 - ARDOT 012326 Hwy 412 - Hwy 112\Drawings\b012326xRW_S303_MD.dgn
REVISED DATE:

DATE REVISED	DATE REVISED	FED. ROAD DIST. NO.	STATE	JOB NO.	SHEET NO.	TOTAL SHEETS
		6	ARK.	012326	557	838
		SEE TABLE - OH SIGN STR. (86'-100') - 66345				

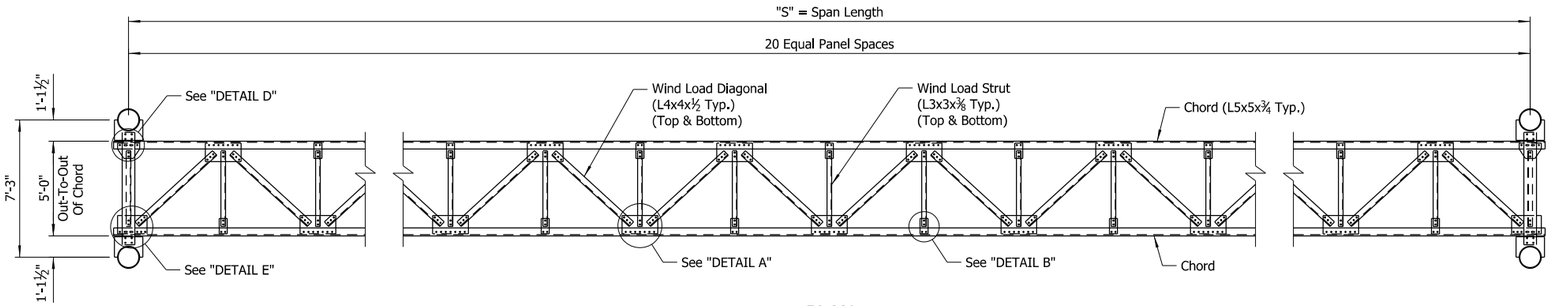

PLAN
No Scale

LEGEND
NS = Near Side
FS = Far Side

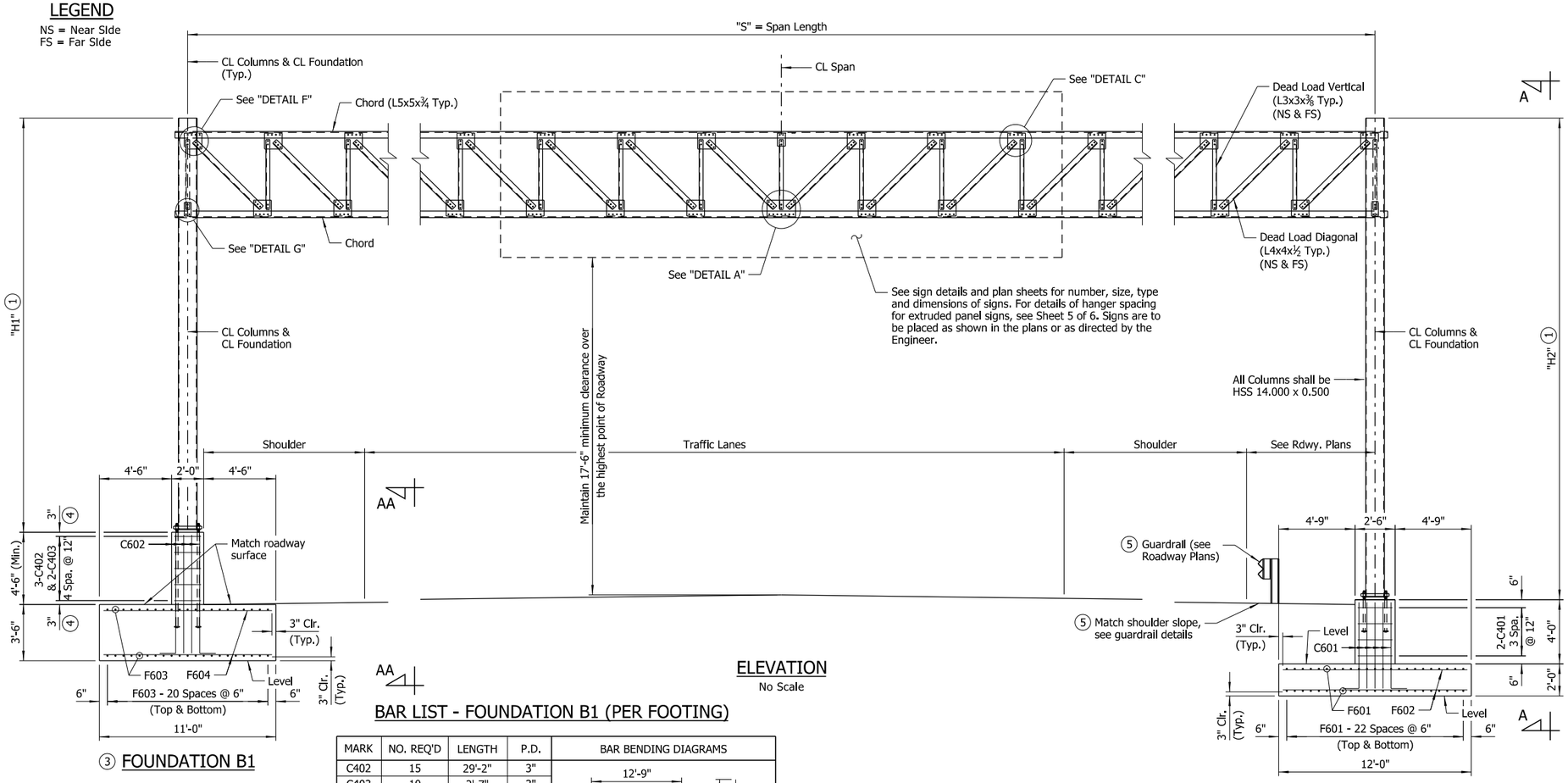

ELEVATION
No Scale

③ FOUNDATION B1

② FOUNDATION A1

NOTES:
For "VIEW A-A", see Sheet 2 of 6.

For "DETAIL A" thru "DETAIL G", see Sheet 3 of 6.

For "VIEW AA-AA", see Sheet 4 of 6.

BAR LIST - FOUNDATION B1 (PER FOOTING)

MARK	NO. REQ'D	LENGTH	P.D.	BAR BENDING DIAGRAMS
C402	15	29'-2"	3"	
C403	10	2'-7"	3"	
C602	124	8'-2"	4½"	
F603	42	29'-6"	Str.	
F604	118	10'-6"	Str.	

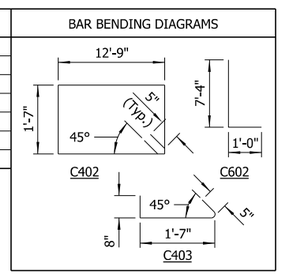

NOTE:
Dimensions of bars are out-to-out.

APPROXIMATE QUANTITIES FOR FOUNDATION B1 PER FOOTING (FOR INFORMATION ONLY)

CLASS S CONCRETE (CU. YDS.)	REINFORCING STEEL (LBS.)	EXCAVATION (CU. YDS.)
52.78	5,553	60

1. The Contractor shall make field measurements to determine the column heights "H1" and "H2" that are required to maintain the minimum vertical clearance with the centerline of the sign located at the centerline of the truss. These column heights shall be shown on the shop drawings with a note stating that the Contractor has made the required field measurements. If the structure height ("H1" or "H2") exceeds 30'-0", contact the Engineer. The Contractor shall also verify that the variable span length (86'-0" to 100'-0") is sufficient to meet the minimum clearances and to fit the new structure to the existing and/or proposed conditions.
2. Foundation A1 allowed only when foundation is outside clear zone or is protected by guardrail or barrier. For alternate drilled shaft foundation (Foundation A2), see Sheet 6 of 6.
3. Foundation B1 is required when the foundation is located in a median, within the clear zone, and is not protected by guardrail or barrier. Foundation B1 requires adjacent Roadway Median Barrier to transition to match the ends of the pedestal. For alternate drilled shaft foundation (Foundation B2), see Sheet 6 of 6.
4. Minor adjustments are allowed to maintain C402 and C403 12" spacing for foundations located in longitudinal grades.
5. Guardrail present on median side of Structure Nos. OH-412-72-002 and OH-612-72-001 only. See Roadway Plans.

STRUCTURE NO.	SPAN LENGTH "S"	FOUNDATION TYPE	
		MEDIAN	OUTSIDE SHLDR.
OH-412-72-002	95'-0"	A1 or A2	A1 or A2
OH-612-72-001	86'-0"	A1 or A2	A1 or A2
OH-612-04-001	95'-0"	A1 or A2	A1 or A2

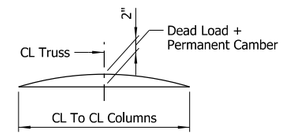

TRUSS CAMBER DIAGRAM
No Scale

BAR LIST - FOUNDATION A1 (PER FOOTING)

MARK	NO. REQ'D	LENGTH	P.D.	BAR BENDING DIAGRAMS
C401	8	18'-2"	3"	
C601	46	6'-3"	4½"	
F601	46	25'-6"	Str.	
F602	102	11'-6"	Str.	

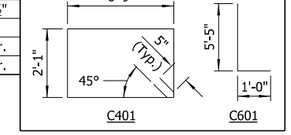

NOTE:
Dimensions of bars are out-to-out.

APPROXIMATE QUANTITIES FOR FOUNDATION A1 PER FOOTING (FOR INFORMATION ONLY)

CLASS S CONCRETE (CU. YDS.)	REINFORCING STEEL (LBS.)	EXCAVATION (CU. YDS.)
26.81	4,053	89

STATE OF ARKANSAS
LICENSED PROFESSIONAL ENGINEER
No.14498
ADAM B. HALL
Digitally Signed 07/28/2023
BRIDGE ENGINEER

SHEET 1 OF 6
DETAILS OF 86' TO 100'
STEEL OVERHEAD SIGN STRUCTURE

ROUTE SEC.

ARKANSAS STATE HIGHWAY COMMISSION
LITTLE ROCK, ARK.

DRAWN BY: CWT DATE: JAN. 2023 FILENAME: b012326_oh1.dgn
CHECKED BY: ABH DATE: JAN. 2023 SCALE: As Shown
DESIGNED BY: JME DATE: JAN. 2023
STR. NO. SEE TABLE DRAWING NO. 66345

JESkinner 7/28/2023 12:12:47 PM
WORKSPACE: ARDOT Bridge (2019)
Users\jeskinner\Appdata\Projects\2017\17017660 - ARDOT 012326 Hwy 412 - Hwy 112\Drawings\b012326ASS_S201_OH (86'-100').dgn
REVISED DATE:

DATE REVISED	DATE REVISED	FED. ROAD DIST. NO.	STATE	JOB NO.	SHEET NO.	TOTAL SHEETS
		6	ARK.	012326	558	838
		SEE TABLE - OH SIGN STR. (86'-100') - 66346				

NOTE:
For "VIEW C-C", see Sheet 3 of 6.

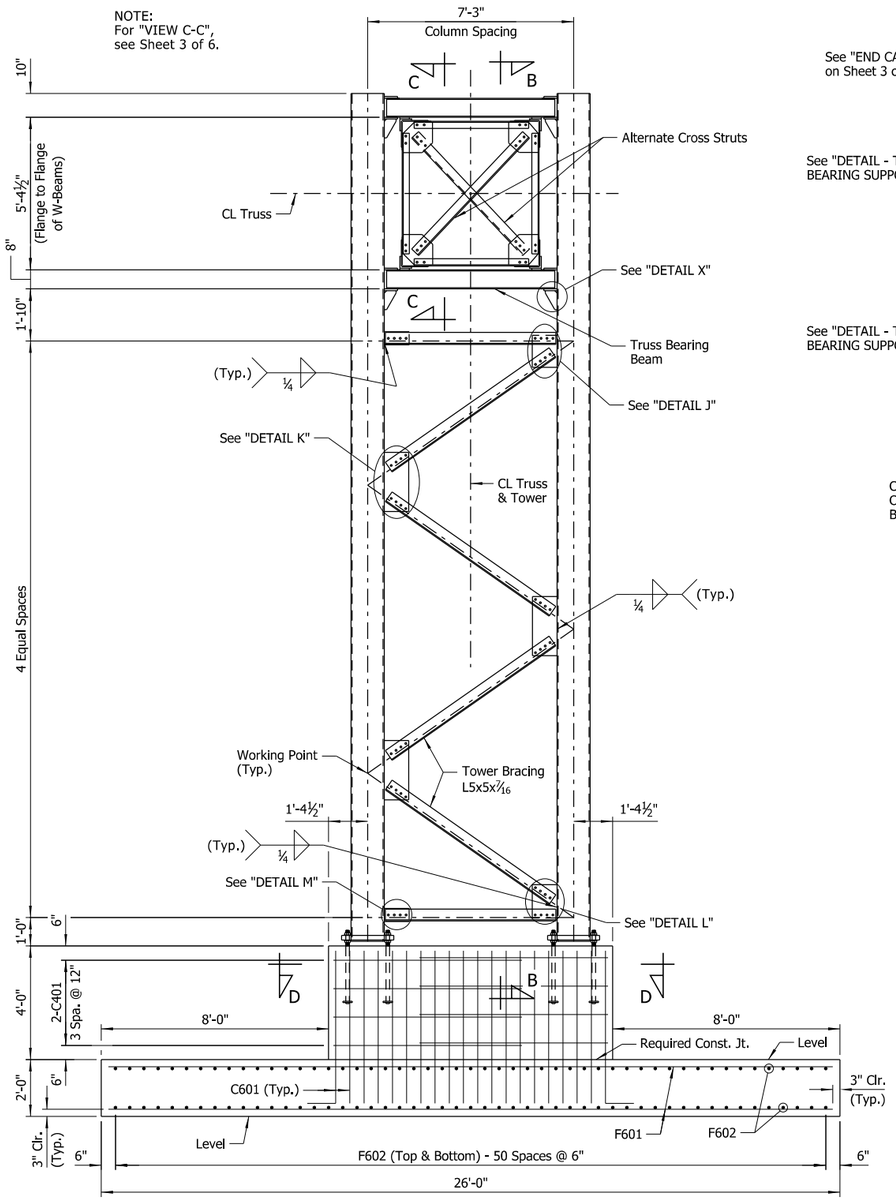

VIEW A-A
No Scale

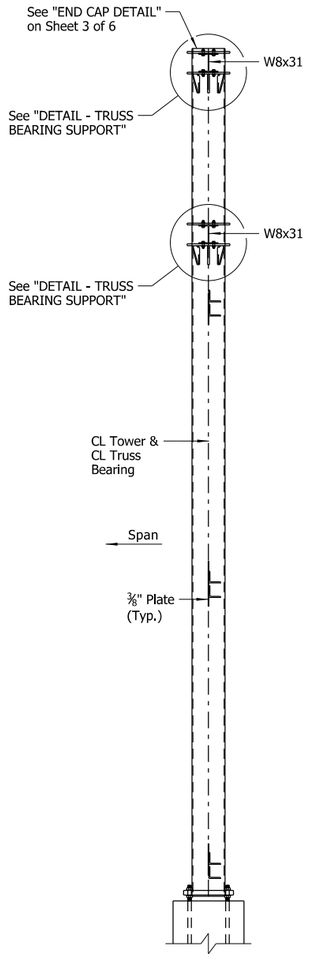

VIEW B-B
No Scale

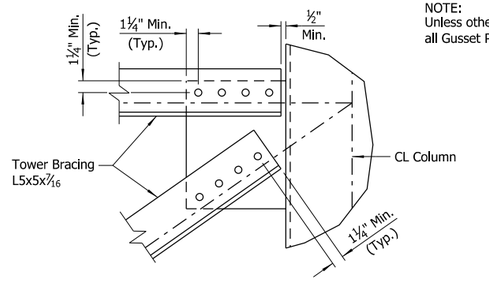

DETAIL J
No Scale

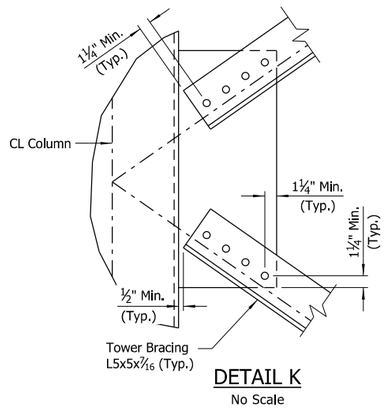

DETAIL K
No Scale

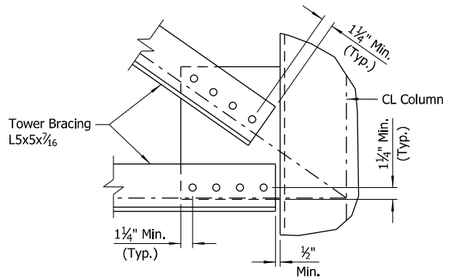

DETAIL L
No Scale

NOTE:
Unless otherwise noted, thickness of all Gusset Plates shall be ⅜".

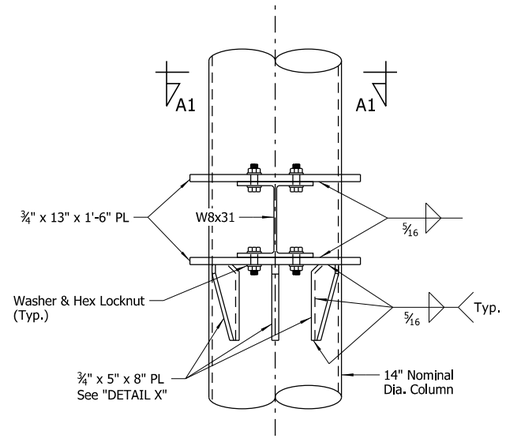

DETAIL - TRUSS BEARING SUPPORT
Scale: 1½" = 1'-0"

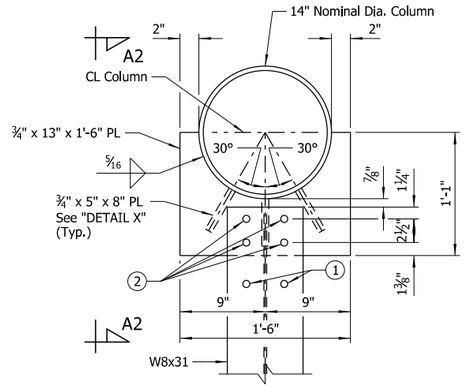

VIEW A1-A1
Scale: 1½" = 1'-0"

DETAIL L
No Scale

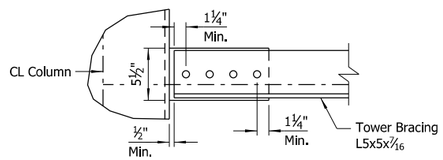

DETAIL M
No Scale

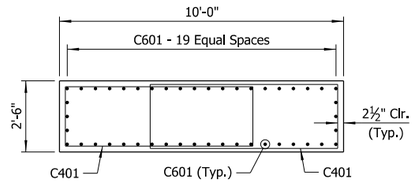

SECTION D-D
Scale: ⅜" = 1'-0"

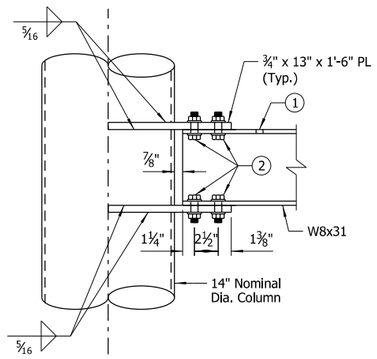

VIEW A2-A2
Scale: 1½" = 1'-0"
(¾" x 5" x 8" Plate not shown for clarity)

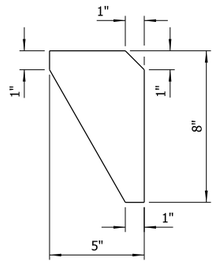

DETAIL X
Scale: 3" = 1'-0"

1. Bolts shall be ¾"ø. Provide 13/16" x 2" slotted hole in gusset plate and chord angle. Use plate washer on gusset plate side. Provide 13/16"ø holes in ¾" shim plate and top or bottom beam flanges as required.
2. Bolts shall be ¾"ø. Provide 13/16"ø holes at top and bottom beam flanges and connection plates.

STATE OF ARKANSAS
LICENSED PROFESSIONAL ENGINEER
No.14498
ADAM B. HALL
Digitally Signed 07/28/2023
BRIDGE ENGINEER

SHEET 2 OF 6
DETAILS OF 86' TO 100'
STEEL OVERHEAD SIGN STRUCTURE
ROUTE SEC.
ARKANSAS STATE HIGHWAY COMMISSION
LITTLE ROCK, ARK.

DRAWN BY: CWT DATE: JAN. 2023 FILENAME: b012326_oh2.dgn
CHECKED BY: ABH DATE: JAN. 2023 SCALE: As Shown
DESIGNED BY: JME DATE: JAN. 2023
STR. NO. SEE TABLE DRAWING NO. 66346

JESkinner 7/28/2023 12:12:48 PM
WORKSPACE: ARDOT Bridge (2019)
USERNAME: jeskinner@ARDOT.GOV
REVISED DATE:
I:\Bridge\Projects\012326\SS_S202_OH (86'-100').dgn

DATE REVISED	DATE REVISED	FED. ROAD DIST. NO.	STATE	JOB NO.	SHEET NO.	TOTAL SHEETS
		6	ARK.	012326	559	838
		SEE TABLE - OH SIGN STR. (86'-100') - 66347				

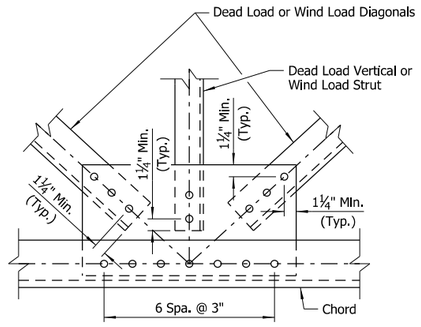

DETAIL A
No Scale

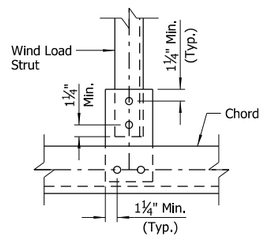

DETAIL B
No Scale

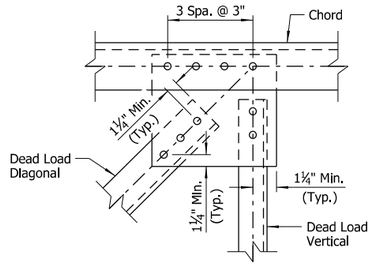

DETAIL C
No Scale

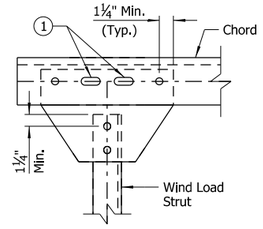

DETAIL D
No Scale

NOTE:
Unless otherwise noted, thickness of all Gusset Plates shall be ⅜".

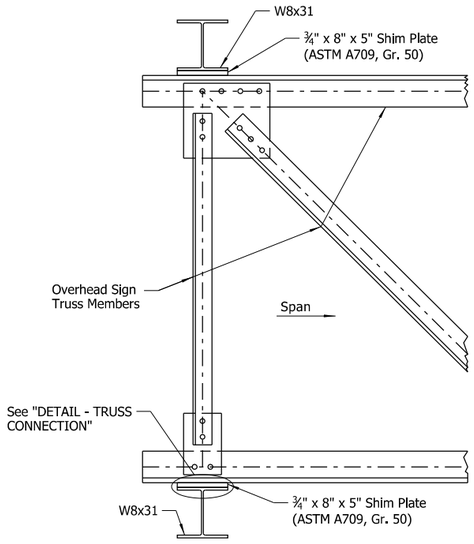

VIEW C-C
No Scale

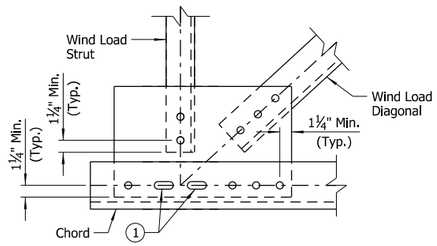

DETAIL E
No Scale

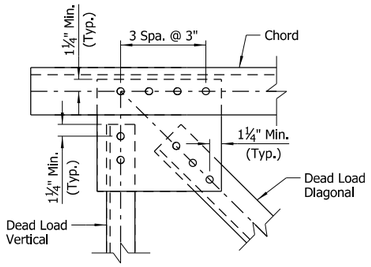

DETAIL F
No Scale

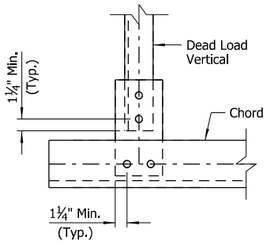

DETAIL G
No Scale

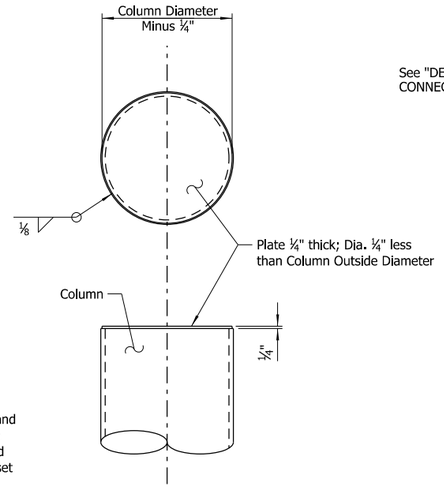

END CAP DETAIL
Scale: 1½" = 1'-0"

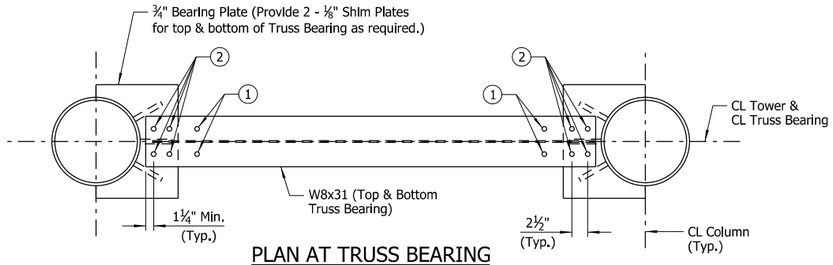

PLAN AT TRUSS BEARING
Scale: 1" = 1'-0"

1. Bolts shall be ¾"ø. Provide $^{13}/_{16}$" x 2" slotted holes in gusset plate and chord angle. Clearance between end of slot and adjacent bolt hole shall be no less than 1½". Provide $^{13}/_{16}$"ø holes In ¾" shim plate and top or bottom beam flanges as required. Use plate washer on gusset plate side.
2. Bolts shall be ¾"ø. Provide $^{13}/_{16}$"ø holes at top and bottom beam flanges and connection plates.

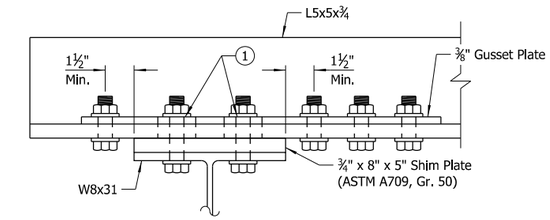

DETAIL - TRUSS CONNECTION
No Scale

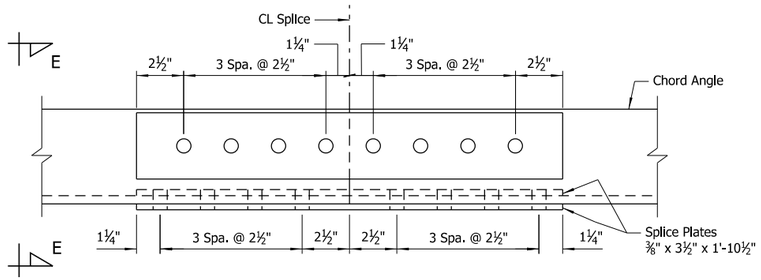

CHORD SPLICE
Scale: 3" = 1'-0"

NOTE:
Chord angles may be spliced in convenient lengths for galvanizing and sign placement.

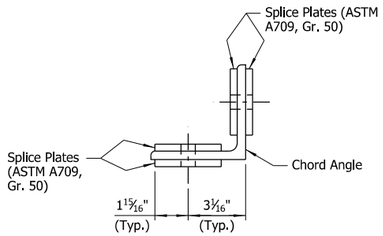

VIEW E-E
Scale: 3" = 1'-0"

STATE OF ARKANSAS
LICENSED PROFESSIONAL ENGINEER
No.14498
ADAM B. HALL
Digitally Signed 07/28/2023
BRIDGE ENGINEER

SHEET 3 OF 6
DETAILS OF 86' TO 100'
STEEL OVERHEAD SIGN STRUCTURE
ROUTE SEC.
ARKANSAS STATE HIGHWAY COMMISSION
LITTLE ROCK, ARK.

DRAWN BY: CWT DATE: JAN. 2023 FILENAME: b012326_oh3.dgn
CHECKED BY: ABH DATE: JAN. 2023 SCALE: As Shown
DESIGNED BY: JME DATE: JAN. 2023
STR. NO. SEE TABLE DRAWING NO. 66347

JESkilner 7/28/2023 12:12:49 PM
WORKSHEET: ARDOT Bridge (2019)
Universal Expression: Default
REVISED DATE:
I:\Projects\012326\S\Plans\Bridge\b012326oSS_S203_OH (86'-100').dgn - ARDOT 012326 Hwy 412 - Hwy 112\Drawings\b012326oSS_S203_OH (86'-100').dgn

DATE REVISED	DATE REVISED	FED. ROAD DIST. NO.	STATE	JOB NO.	SHEET NO.	TOTAL SHEETS
		6	ARK.	012326	560	838
		SEE TABLE - OH SIGN STR. (86'-100') - 66348				

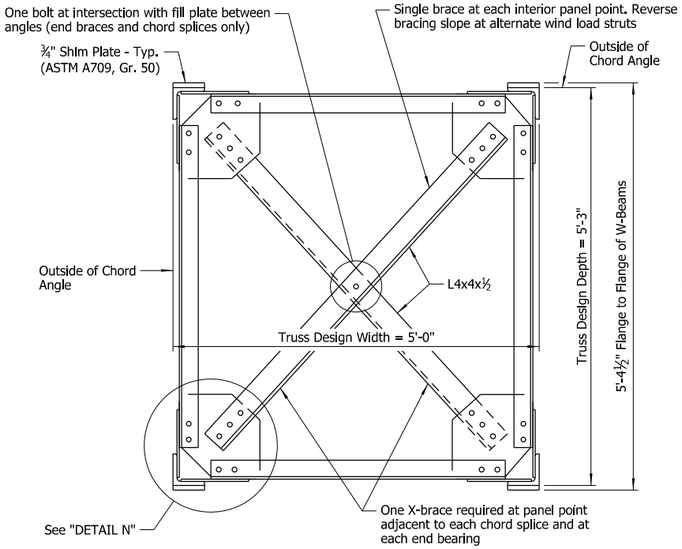

TRUSS SECTION

Scale: 1" = 1'-0"

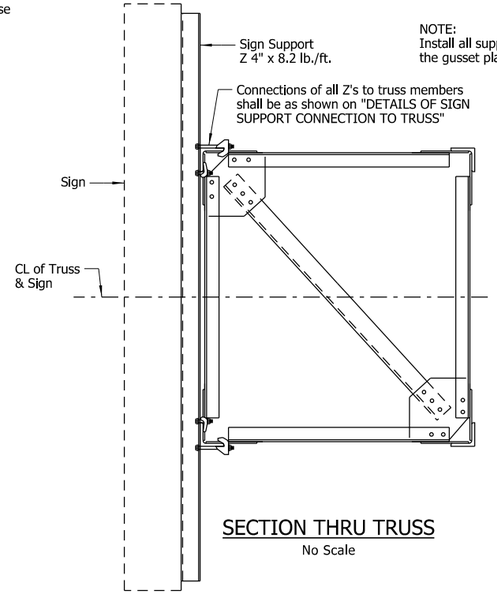

SECTION THRU TRUSS

No Scale

NOTE:
Install all support connectors clear of the gusset plates and splice locations.

NOTE:
Unless otherwise noted, thickness of all Gusset Plates shall be ⅜".

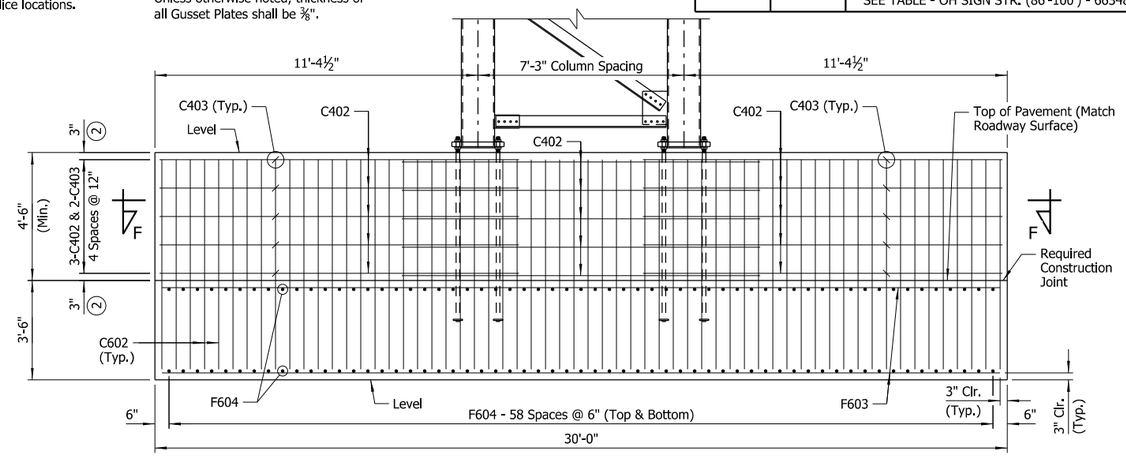

VIEW AA-AA

(Foundation B1)
Scale: ⅜" = 1'-0"

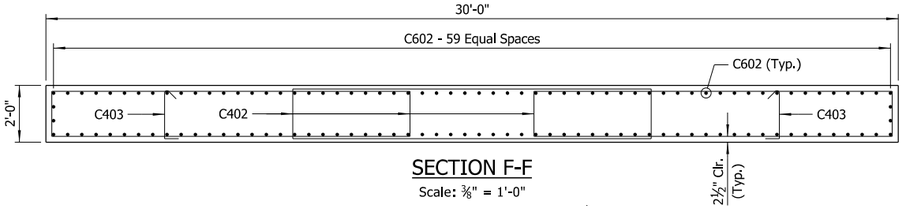

SECTION F-F

Scale: ⅜" = 1'-0"

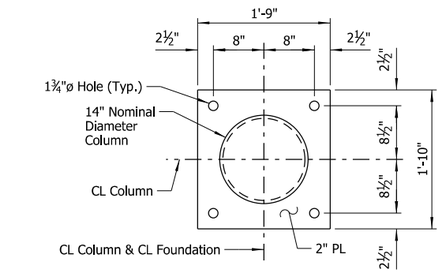

PLAN - COLUMN BASE

Scale: 1" = 1'-0"

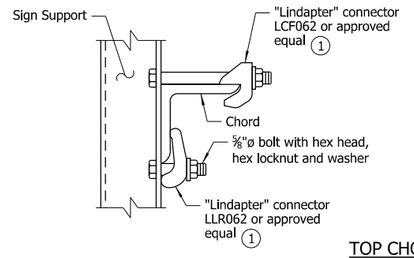

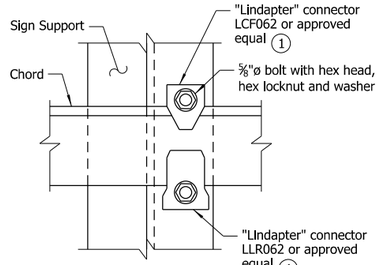

TOP CHORD

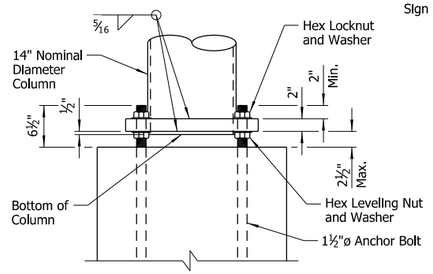

NOTE:
Diameter of hole in base plate to be ⅛" larger than column diameter.

ELEVATION - COLUMN BASE

Scale: 1" = 1'-0"

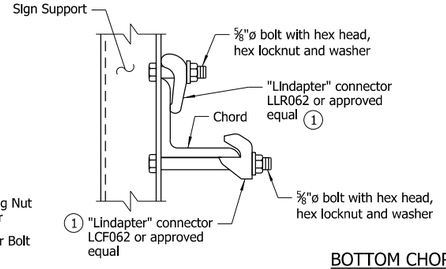

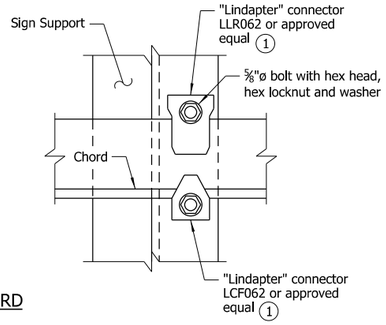

BOTTOM CHORD

DETAILS OF SIGN SUPPORT CONNECTION TO TRUSS

No Scale

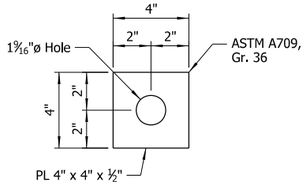

NOTE:
Structural Z Support may be fabricated from angles as shown.

DETAILS OF ALTERNATE Z SUPPORT

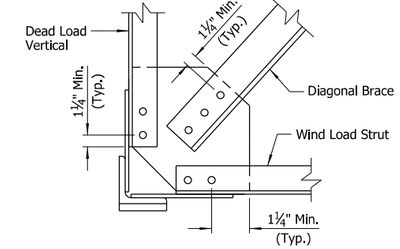

DETAIL N

Scale: 1½" = 1'-0"

(2) Minor adjustments are allowed to maintain C402 and C403 12" spacing for foundations located in longitudinal grades.

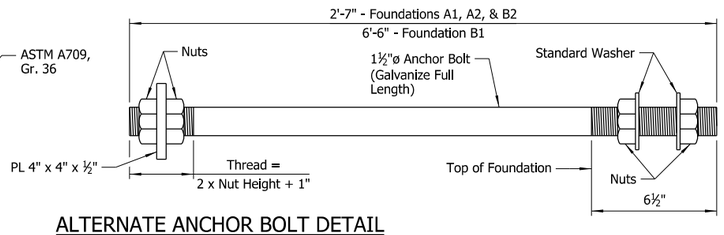

ALTERNATE ANCHOR BOLT DETAIL

No Scale

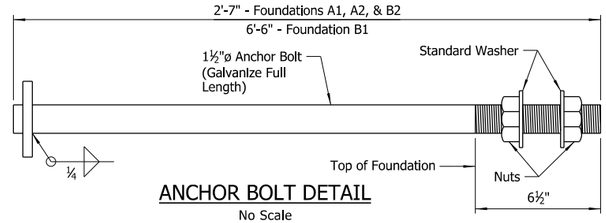

ANCHOR BOLT DETAIL

No Scale

(1) All "Lindapter" connectors or approved equal shall be installed according to Manufacturer's recommendations. All connectors, bolts, nuts and washers shall be galvanized.

NOTE:
Anchor bolts shall comply with AASHTO M 314, Grade 55 with Supplementary Requirement S1, and shall be galvanized according to Subsection 807.07. Nuts for bolts shall be as specified in Subsection 807.07.

STATE OF ARKANSAS
LICENSED PROFESSIONAL ENGINEER
No.14498
ADAM B. HALL

Digitally Signed 07/28/2023
BRIDGE ENGINEER

SHEET 4 OF 6
DETAILS OF 86' TO 100'
STEEL OVERHEAD SIGN STRUCTURE

ROUTE SEC.

ARKANSAS STATE HIGHWAY COMMISSION

LITTLE ROCK, ARK.

DRAWN BY: CWT DATE: JAN. 2023 FILENAME: b012326_oh4.dgn
CHECKED BY: ABH DATE: JAN. 2023 SCALE: As Shown
DESIGNED BY: JME DATE: JAN. 2023

STR. NO. SEE TABLE DRAWING NO. 66348

JESchiner
7/28/2023 12:12:50 PM
WORKSPACE: ARDOT Bridge (2019)
Used Files: Highroad Projects\2017\17017660 - ARDOT 012326 Hwy 412 - Hwy 112\Drawings\b012326s6S_S204_OH (86'-100').dgn
REVISED DATE:

DATE REVISED	DATE REVISED	FED. ROAD DIST. NO.	STATE	JOB NO.	SHEET NO.	TOTAL SHEETS
		6	ARK.	012326	561	838
		SEE TABLE - OH SIGN STR. (86'-100') - 66349				

GENERAL NOTES:

CONSTRUCTION SPECIFICATIONS: Arkansas State Highway and Transportation Department Standard Specifications for Highway Construction, 2014 Edition, with applicable Supplemental Specifications and Special Provisions. Section and Subsection refer to the Specifications unless otherwise noted in the plans.

DESIGN SPECIFICATIONS: AASHTO LRFD Specifications for Structural Supports for Highway Signs, Luminaires, and Traffic Signals, First Edition, 2015 with current Interim revisions

Basic Wind Speed = 120 mph
Fatigue Category: I

This structure is approved for a maximum sign area equal to 75% of the span length times a sign height of 15 feet. This structure is approved for a maximum sign weight (total of all signs) of 5,985 lbs. Use of additional sign area or a heavier sign must be approved by the Engineer. If the structure height ("H1" or "H2") exceeds 30'-0", contact the Engineer.

FOUNDATION MATERIALS AND STRENGTHS:
Class S Concrete f'c = 3,500 psi
Reinforcing Steel (Gr. 60, AASHTO M 31 or M 322, Type A) fy = 60,000 psi

Spread footings for the structure have been designed assuming a factored bearing resistance of 2.0 ksf. Contractor shall be responsible for evaluating and verifying that the foundation soils are adequate to achieve the assumed factored bearing capacity, utilizing SPT (Standard Penetration Test), CPT (Cone Penetration Test), DCP (Dynamic Cone Penetration) test, or other suitable means, prior to or after footing excavation, whichever is appropriate. If the foundation soils are verified to be adequate, then the footing shall be constructed in accordance with the planned dimensions. Otherwise, the Design Engineer shall be contacted. Costs for foundation soil evaluation and verification shall be included in the item "STEEL OVERHEAD SIGN STRUCTURE".

Structural steel sign support members shall comply with the following specifications:

Angles:	ASTM A709, Gr. 36 (Fy = 36,000 psi)
Plate, W-Section:	ASTM A709, Gr. 50 (Fy = 50,000 psi)
(1) Pipe:	ASTM A139, Gr. C, straight-seam welded (Fy = 42,000 psi), ASTM A500, Gr. B (Fy = 42,000 psi), ASTM A501, Gr. B (Fy = 50,000 psi)
Z-Shapes:	ASTM A709, Grade 36 (Fy = 36,000 psi)
Shim Plates:	ASTM A1011, SS, Grade 36, Type 2, or Grade 40
Bolts:	ASTM F3125, Grade A325, Type 1
Locknuts - Approved Type:	ASTM A563, Grade DH or AASHTO M 292, Grade 2H
Washers:	ASTM F436
Nuts:	ASTM A563, Grade DH or AASHTO M 292, Grade 2H

The Contractor shall make check measurements in the field and make any adjustments necessary to meet the required clearances and to fit the new structure to the existing and/or proposed conditions.

Drawings show general features of design only. Shop drawings shall be made in accordance with Subsection 807.04, submitted, and approval secured before fabrication is begun.

Requests for substitution of structural steel shapes shown with shapes of greater size must be submitted by the Contractor to the Engineer for approval. Steels of equal or greater strengths will be accepted only when shown on the approved shop drawings. Shapes and materials shown in the plans will be the basis of payment and no additional compensation will be made for any adjustments due to substitutions.

All steel shall be galvanized according to Subsection 807.19. Steel completely encased in concrete may not be galvanized. Galvanized coating damaged during transport, handling or erection shall be field repaired in accordance with Subsection 807.88.

All main load carrying tension members greater than ½" in thickness shall conform to the requirements of the Longitudinal Charpy V-Notch test specified for Zone 1 minimum service temperature. This work and materials shall be paid for in accordance with Special Provision "STEEL SIGN STRUCTURES".

Field splices shall be located in order to avoid sign panel connections. There shall be a maximum of two field splices, and they shall be spaced a minimum of 15 feet apart.

Truss field sections shall be shop assembled. Entire truss shall be fully assembled and lifted into place as one unit on to tower supports. All truss member connections shall be bolted connections.

All welding that is to be done during fabrication of structural steel, including temporary welds, shall be detailed on the shop drawings and submitted for approval. If additional welds are required, whether temporary or permanent, a formal request with detailed drawings shall be submitted to the Engineer for approval. All welding shall conform to Subsection 807.26 except welding of tubular sections shall conform to AWS D1.1 Structural Welding Code.

No circumferential butt welds will be allowed in any pipe sections.

All fillet welds of critical members shall be tested according to AWS D1.1 Structural Welding Code - Steel using the magnetic particle method. Critical welds shall include: column to base plate and truss bottom support to column.

Connections shall be bolted with high-strength bolts. Unless otherwise noted, bolts shall be ¾" diameter and open holes shall be $^{13}/_{16}$" diameter. Bolt spacing shall be 2½" for ¾" diameter bolts unless otherwise noted. Bolts shall be placed with heads on the outside face of all members.

All truss frame bolts shall comply with ASTM F3125, Grade A325, Type 1, galvanized according to Subsection 807.06. Nuts and washers for ASTM F3125, Grade A325, Type 1 bolts shall be furnished and galvanized in accordance with Subsection 807.06.

Locknuts shall be equipped with nylon locking inserts or other approved type locking system. Locknuts shall be installed according to Manufacturer's recommendations.

Anchor bolts shall comply with AASHTO M 314, Grade 55, including Supplementary Requirement S1, and shall be galvanized according to Subsection 807.07. Nuts and washers for anchor bolts shall be furnished and galvanized in accordance with Subsection 807.07. Anchor bolts shall be pretensioned in accordance with Special Provision "STEEL SIGN STRUCTURES."

Shoring may be required to protect existing shoulders or other elements during excavation. Any shoring required shall not be paid for directly, but shall be considered incidental to the item "STEEL OVERHEAD SIGN STRUCTURE." The excavations for the footings shall be backfilled before the structure is attached to the foundations.

For location of each 86' to 100' overhead sign structure to be used, refer to Sign Plans.

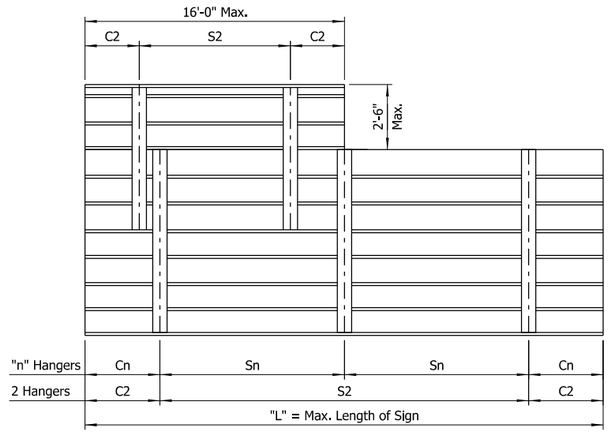

NOTE:
See sign details and plan sheets for number, size and dimensions of signs.

HANGER SPACING DETAILS FOR EXTRUDED PANEL SIGNS

No Scale

HANGER VARIABLES

(For Extruded Panel Signs)

Max. Length of Sign = "L"	"n" Hangers	Cantilever Length "Cn"	Hanger Spacing "Sn"
15'-0"	2 Hangers	0.21 x "L"	0.58 x "L"
30'-0"	3 Hangers	0.145 x "L"	0.355 x "L"
45'-0"	4 Hangers	0.107 x "L"	0.262 x "L"

NOTE:
Hanger spacing and cantilever length shall be rounded to the nearest inch.

(1) In addition to material requirements, all pipe used for welded applications shall have a maximum carbon equivalency (CE) of 0.4 using the following equation:
CE = %C + %Mn/6 + %Cu/40 + %Ni/20 + %Cr/10 - %Mo/50 - %V/10

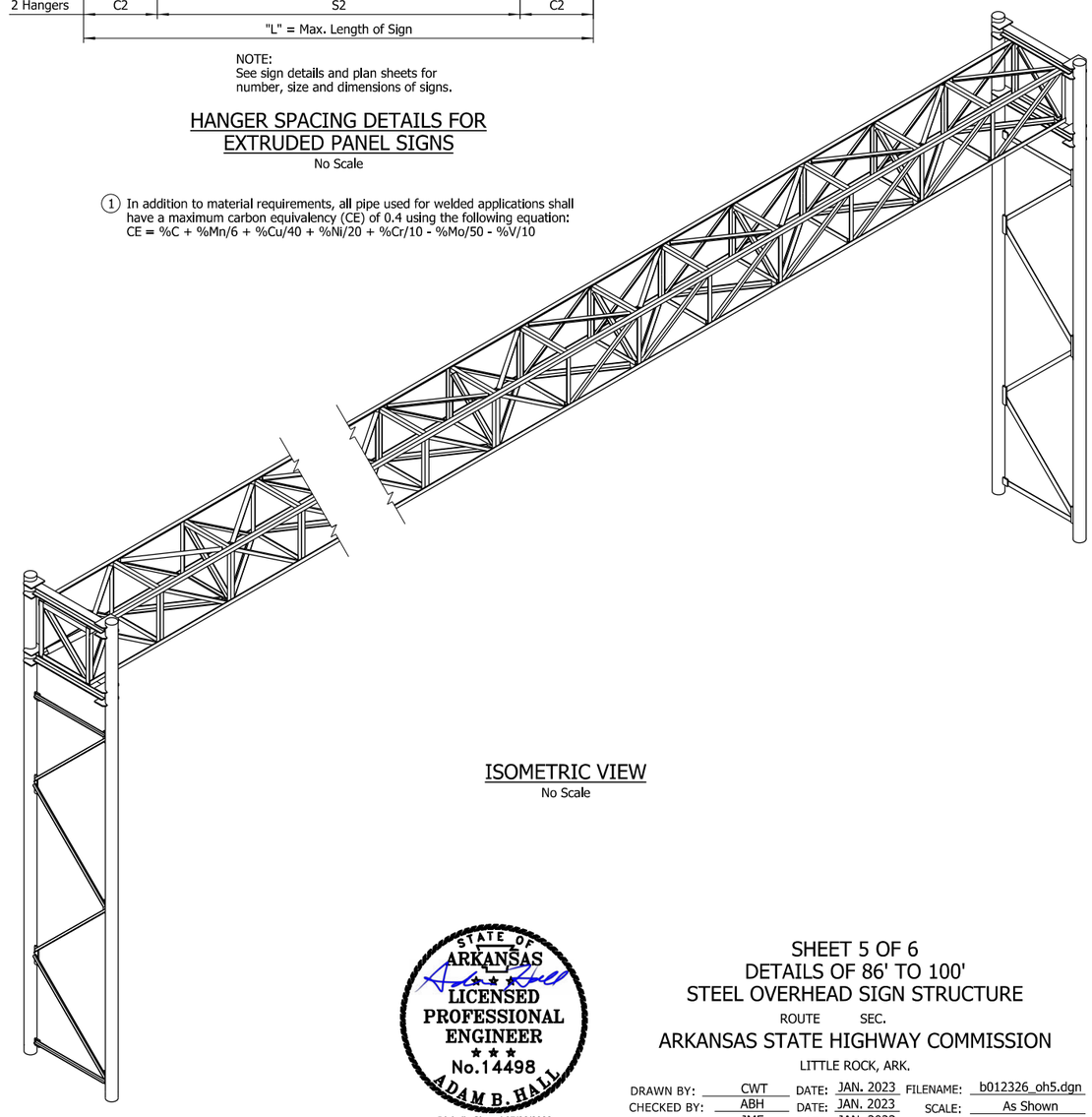

ISOMETRIC VIEW

No Scale

STATE OF ARKANSAS
LICENSED PROFESSIONAL ENGINEER
No.14498
ADAM B. HALL
Digitally Signed 07/28/2023
BRIDGE ENGINEER

SHEET 5 OF 6
DETAILS OF 86' TO 100'
STEEL OVERHEAD SIGN STRUCTURE
ROUTE SEC.
ARKANSAS STATE HIGHWAY COMMISSION
LITTLE ROCK, ARK.

DRAWN BY: CWT DATE: JAN. 2023 FILENAME: b012326_oh5.dgn
CHECKED BY: ABH DATE: JAN. 2023 SCALE: As Shown
DESIGNED BY: JME DATE: JAN. 2023
STR. NO. SEE TABLE DRAWING NO. 66349

JESdinner 7/28/2023 12:12:51 PM
WORKSPACE: ARDOT Bridge (2019)
Workset: Default Project(s):2017\170176S0 - ARDOT 012326 Hwy 412 - Hwy 112\Drawings\b012326oSS_S205_OH (86'-100').dgn
REVISED DATE:

DATE REVISED	DATE REVISED	FED. ROAD DIST. NO.	STATE	JOB NO.	SHEET NO.	TOTAL SHEETS
		6	ARK.	012326	562	838
		SEE TABLE - OH SIGN STR. (86'-100') - 66350				

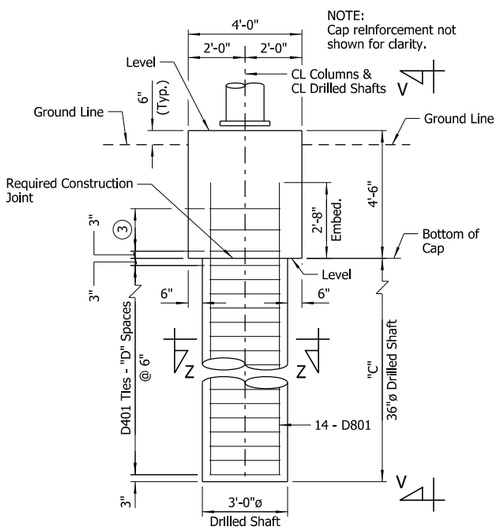

ELEVATION - FOUNDATION A2 ①

Scale: ⅜" = 1'-0"

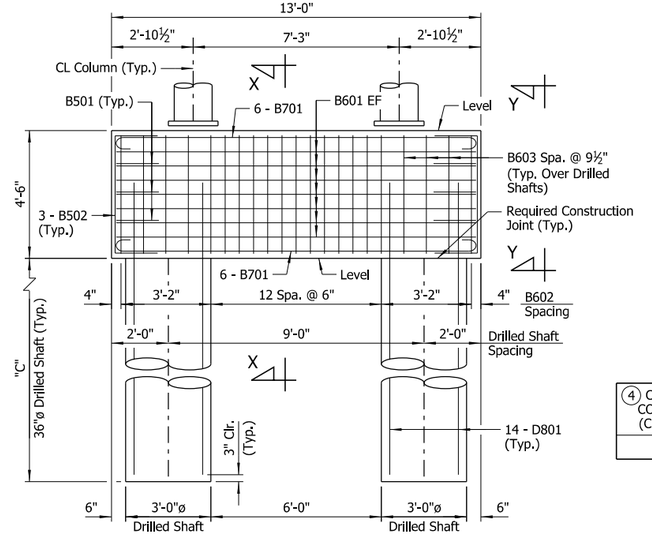

VIEW V-V

Scale: ⅜" = 1'-0"

① Foundation A2 allowed only when foundation is outside clear zone or is protected by guardrail or barrier.

② Foundation B2 is required when the foundation is located in a median, within the clear zone, and is not protected by guardrail or barrier. Foundation B2 requires adjacent Roadway Median Barrier to transition to match the ends of the cap. See Roadway Plans for additional information.

③ C401 Ties - 2 Spaces @ 9"

APPROX. QUANTITIES FOR FOUNDATION A2 (FOR INFORMATION ONLY)

④ CLASS S CONCRETE (CU. YDS.)	⑤ REINFORCING STEEL (LBS.)	EXCAVATION (CU. YDS.)	DRILLED SHAFT (36" DIA.) (LIN. FT.)	CROSSHOLE SONIC LOGGING (36" DIA.) (EACH)
8.67	1,221	17	"G"	1

APPROX. QUANTITIES FOR FOUNDATION B2 (FOR INFORMATION ONLY)

④ CLASS S CONCRETE (CU. YDS.)	⑤ REINFORCING STEEL (LBS.)	DRILLED SHAFT (36" DIA.) (LIN. FT.)	CROSSHOLE SONIC LOGGING (36" DIA.) (EACH)
8.67	1,221	"G"	1

④ Does not include Class S Concrete for Drilled Shafts

⑤ Does not include D401 and D801 Bars in Drilled Shafts

⑥ Tabulated SPT N60 values are raw SPT N values corrected by SPT hammer efficiency and represent average values along the plan shaft penetration. If the SPT N60 values in the foundation soils within 2 shaft diameters below the plan tip elevation are less than the average SPT N60 values along the plan shaft penetration, the Engineer shall be contacted.

DRILLED SHAFT NOTES (FOUNDATIONS A2 & B2)

Drilled shafts shall conform to Special Provision "DRILLED SHAFT FOUNDATIONS FOR STEEL SIGN STRUCTURES". Drilled shafts will not be paid for directly but shall be considered subsidiary to the unit price bid for "STEEL OVERHEAD SIGN STRUCTURE". Temporary casing may be required. Unless approved by the Engineer, permanent steel casing shall not be used.

Crosshole Sonic Logging (CSL) shall be performed on one drilled shaft at each foundation and as directed by the Engineer. Testing shall be performed in accordance with Special Provision "NONDESTRUCTIVE TESTING OF DRILLED SHAFTS FOR STEEL SIGN STRUCTURES".

Concrete and reinforcing steel placed in drilled shafts will not be paid for directly but shall be considered subsidiary to the unit price bid for "STEEL OVERHEAD SIGN STRUCTURE". No additional payment shall be made for spacers, additional splices or bracing needed for assembly, shipping, handling or erecting.

Concrete in drilled shafts shall be Class "S" as modified by Special Provision "DRILLED SHAFT FOUNDATIONS FOR STEEL SIGN STRUCTURES".

Drilled shaft lengths shall be determined based on the results of exploratory borings, which shall be performed by the Contractor prior to shaft excavation.

If competent rock is not encountered in the exploratory boring, the Standard Penetration Test (SPT) blow count corrected by the hammer efficiency, N60, shall be used to determine shaft lengths. See "TABLE OF VARIABLES".

If competent rock is encountered in the exploratory boring within 25'-0" of planned top of drilled shaft, the shafts shall be founded a minimum of 3'-0" into rock and have a minimum length of 25'-0".

If competent rock is encountered in the exploratory boring below 25'-0" from planned top of drilled shaft, the shafts shall be founded a minimum of 3'-0" into rock or to the depth based on the SPT N60 value and associated shaft length in the "TABLE OF VARIABLES", whichever is shallower.

Testing results shall be submitted to the Engineer for review. Final drilled shaft lengths shall be approved by the Engineer prior to construction.

The cost of performing exploratory borings and in-situ strength testing shall be included in the item "STEEL OVERHEAD SIGN STRUCTURE".

TABLE OF VARIABLES ⑦

SPT N60 ⑥ (blows/ft.)	Min. Depth of Exploratory Boring	Drilled Shaft Length, "C"	"D"	"E"	"F" ⑧	"G"
<5	-	Contact Engineer	-	-	-	-
5 To 7	107'-0"	101'-0"	201	404	103'-5"	202'-0"
7 To 9	90'-0"	84'-0"	167	336	86'-5"	168'-0"
9 To 11	67'-0"	61'-0"	121	244	63'-5"	122'-0"
11 To 13	53'-0"	47'-0"	93	188	49'-5"	94'-0"
>13	44'-0"	38'-0"	75	152	40'-5"	76'-0"

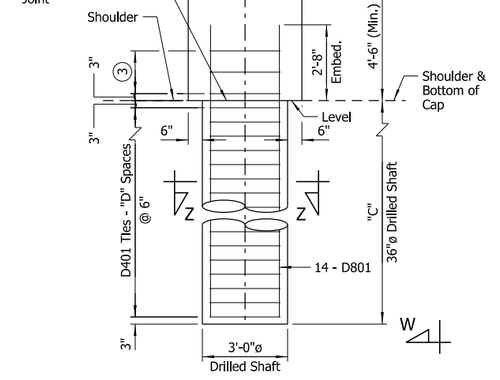

ELEVATION - FOUNDATION B2 ②

Scale: ⅜" = 1'-0"

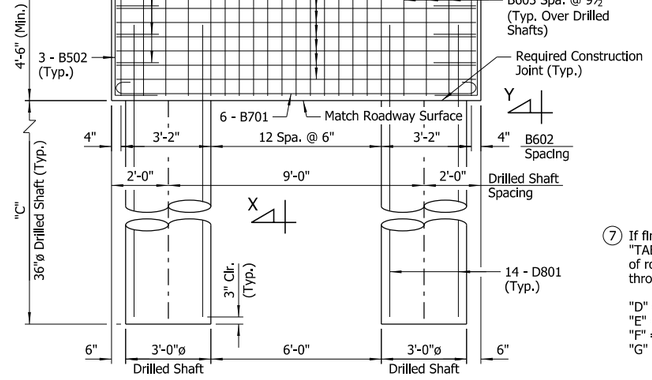

VIEW W-W

Scale: ⅜" = 1'-0"

⑦ If final drilled shaft length is not shown in "TABLE OF VARIABLES" due to the presence of rock or other factors, variables "D" through "G" shall be determined as follows:

"D" = (Shaft Length in Ft. - 0.5) / 0.5
"E" = Shaft Length in Ft. x 4
"F" = Shaft Length + 2'-5"
"G" = Shaft Length x 2

⑧ If "F" exceeds 60'-0", a lap splice is required for each D801 bar at the midpoint of the drilled shaft. Min. lap splice length for D801 bar = 3'-6". Length shown in table does not include the additional length required for a lap splice.

BAR LIST - FOUNDATION A2 OR B2

MARK	NO. REQ'D	LENGTH	"A"	"B"	P.D.
B501	6	6'-4"	3'-6"	1'-6"	2½"
B502	6	6'-10"	4'-0"	1'-6"	2½"
B601	14	12'-8"			Str.
B602	15	16'-10"			4½"
B603	6	11'-8"	3'-8"	4'-2"	4½"
B701	12	14'-4"			5¼"
C401	6	8'-11"			3"
D401	"E"	8'-11"			3"
D801	28	"F"			Str.

BAR BENDING DIAGRAMS

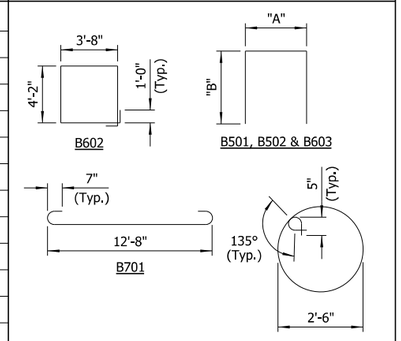

NOTES:
Dimensions of bars are out-to-out.

Number of bars shown is for one Foundation A2 or one Foundation B2

SECTION X-X

Scale: ½" = 1'-0"

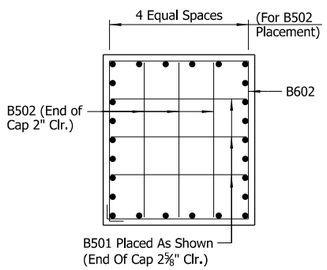

VIEW Y-Y

Scale: ½" = 1'-0"

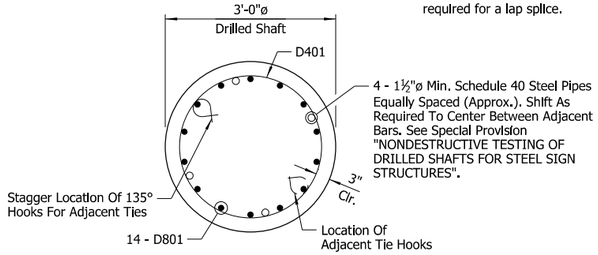

SECTION Z-Z

Scale: ¾" = 1'-0"

LEGEND

U.N.O. = Unless Noted Otherwise
EF = Each Face

STATE OF ARKANSAS
LICENSED PROFESSIONAL ENGINEER
No.14498
ADAM B. HALL
Digitally Signed 07/28/2023
BRIDGE ENGINEER

SHEET 6 OF 6
DETAILS OF 86' TO 100'
STEEL OVERHEAD SIGN STRUCTURE

ROUTE SEC.

ARKANSAS STATE HIGHWAY COMMISSION
LITTLE ROCK, ARK.

DRAWN BY: CWT DATE: JAN. 2023 FILENAME: b012326_oh6.dgn
CHECKED BY: ABH DATE: JAN. 2023 SCALE: As Shown
DESIGNED BY: JME DATE: JAN. 2023
STR. NO. SEE TABLE DRAWING NO. 66350

JESkinner 7/28/2023 12:12:51 PM
WORKSPACE: ARDOT Bridge (2019)
USER NAME = jeskinner C:\Users\jeskinner\Desktop\Projects\2017\17017660 - ARDOT 012326 Hwy 412 - Hwy 112\Drawings\b012326ss_5206_OH (86'-100').dgn
REVISED DATE:

DATE REVISED	DATE REVISED	FED. ROAD DIST. NO.	STATE	JOB NO.	SHEET NO.	TOTAL SHEETS
		6	ARK.	012326	563	838
		SEE TABLE - OC SIGN STR. (35') - 66351				

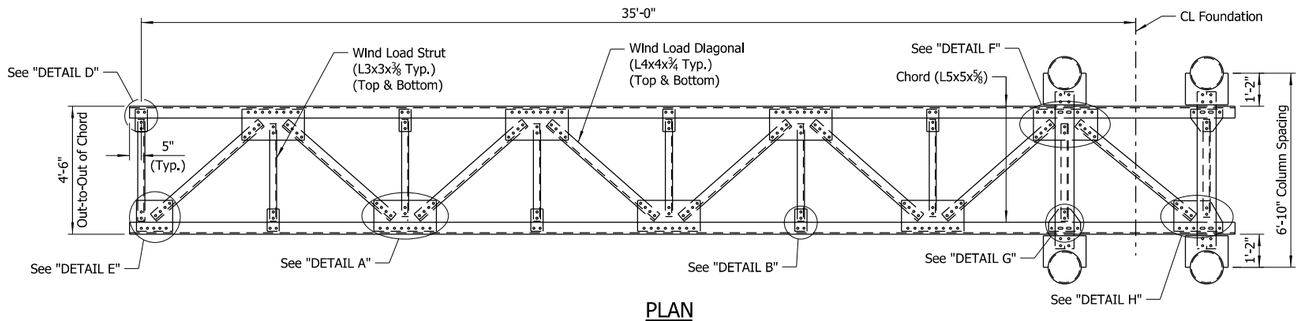

PLAN

Scale: ⅜" = 1'-0"

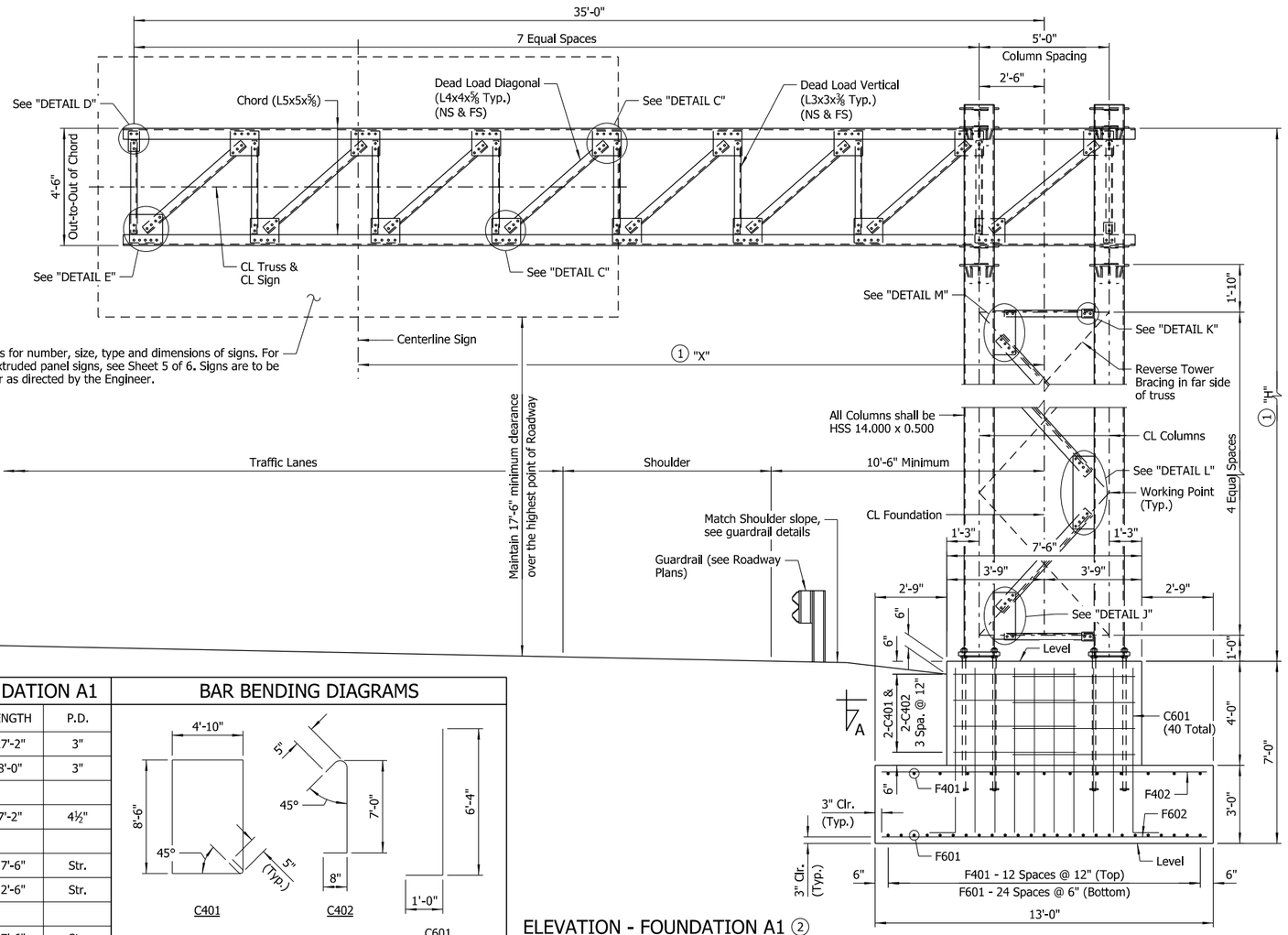

ELEVATION - FOUNDATION A1 ②

No Scale

See sign details and plan sheets for number, size, type and dimensions of signs. For details of hanger spacing for extruded panel signs, see Sheet 5 of 6. Signs are to be placed as shown in the plans or as directed by the Engineer.

BAR LIST - FOUNDATION A1			
MARK	NO. REQ'D	LENGTH	P.D.
C401	8	27'-2"	3"
C402	8	8'-0"	3"
C601	40	7'-2"	4½"
F401	13	17'-6"	Str.
F402	18	12'-6"	Str.
F601	25	17'-6"	Str.
F602	35	12'-6"	Str.

BAR BENDING DIAGRAMS

NOTE:
Dimensions of bars are out-to-out.

① The Contractor shall make field measurements to determine the following:

1) To verify that dimension "X" is sufficient to center the sign over the intended lane while maintaining minimum horizontal clearances.

2) To determine the column height "H" required to maintain the minimum vertical clearance with the centerline of the sign located at the CL of the truss. If the structure height "H" exceeds 30'-0", contact the Engineer.

These verifications and measurements are required prior to submittal of the shop drawings. The column height "H" shall be shown on the shop drawings with a note stating that the Contractor has made the required field measurements.

② Foundation A1 allowed only when foundation is outside clear zone or is protected by guardrail or barrier. For alternate drilled shaft foundation (Foundation A2), see Sheet 6 of 6.

NOTES:
For "VIEW B-B" and "DETAIL J" thru "DETAIL M", see Sheet 2 of 6.

For "DETAIL A" thru "DETAIL H", see Sheet 3 of 6.

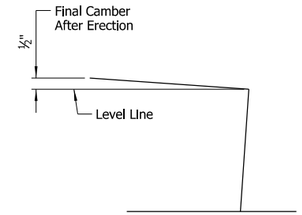

TRUSS CAMBER DIAGRAM

No Scale

B

STRUCTURE NO.	"X"	FOUNDATION TYPE
OC-612-04-002	26'-0"	A1 or A2
OC-612-04-003	26'-0"	A1 or A2
OC-612-04-004	26'-0"	A1 or A2

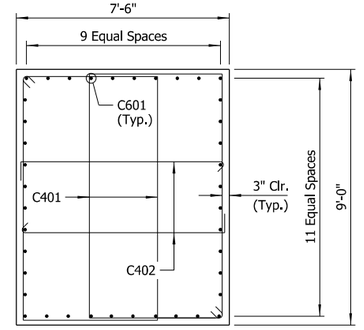

SECTION A-A

Scale: ⅜" = 1'-0"

LEGEND

NS = Near Side
FS = Far Side

APPROXIMATE QUANTITES FOR FOUNDATION A1
(FOR INFORMATION ONLY)

CLASS S CONCRETE (CU. YDS.)	REINFORCING STEEL (LBS.)	EXCAVATION (CU. YDS.)
36.00	2,235	81

STATE OF ARKANSAS
ADAM B. HALL
LICENSED PROFESSIONAL ENGINEER
No.14498
Digitally Signed 07/28/2023
BRIDGE ENGINEER

SHEET 1 OF 6
DETAILS OF 35' STEEL
CANTILEVER SIGN STRUCTURE

ROUTE SEC.

ARKANSAS STATE HIGHWAY COMMISSION
LITTLE ROCK, ARK.

DRAWN BY: CSW DATE: DEC. 2022 FILENAME: b012326_oc1.dgn
CHECKED BY: ABH DATE: FEB. 2023 SCALE: As Shown
DESIGNED BY: CSW DATE: DEC. 2022
STR. NO. SEE TABLE DRAWING NO. 66351

JEshriner 7/28/2023 12:12:52 PM
WORKSPACE: ARDOT Bridge (2019)
Workspace Location: C:\Users\jeshriner\Projects\2021\170176\60 - ARDOT 012326 Hwy 412 - Hwy 112\Drawings\b012326oc6SS_S301_OC (35').dgn
REVISED DATE:

DATE REVISED	DATE REVISED	FED. ROAD DIST. NO.	STATE	JOB NO.	SHEET NO.	TOTAL SHEETS
		6	ARK.	012326	564	838
		SEE TABLE - OC SIGN STR. (35') - 66352				

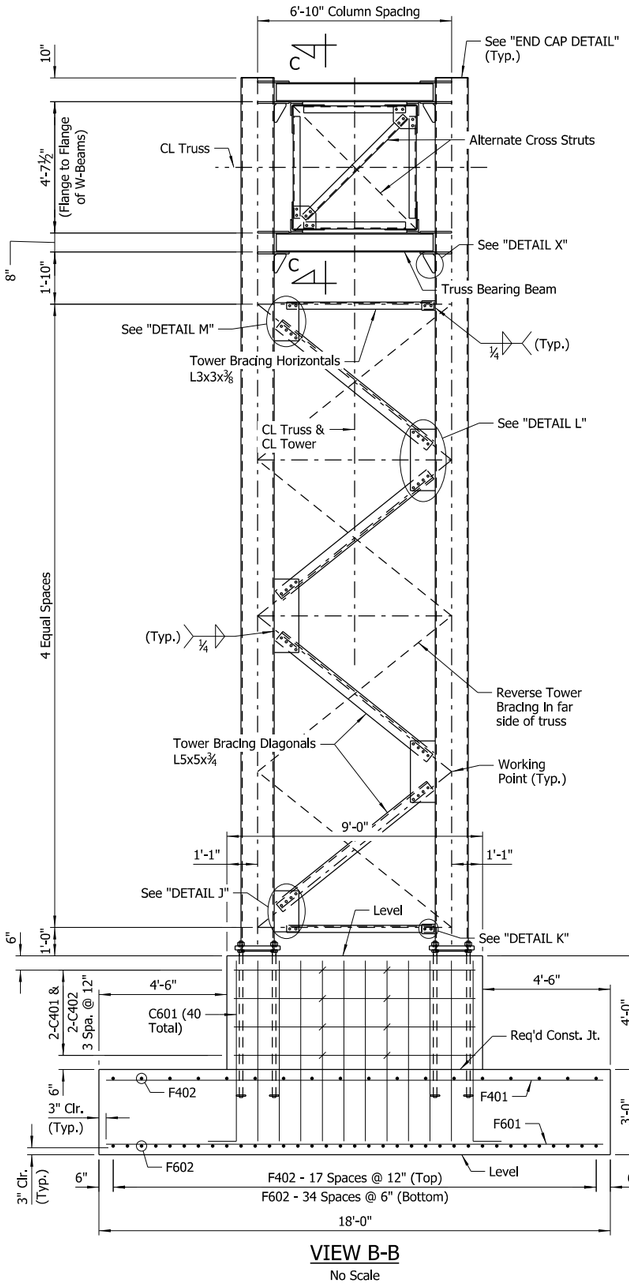

VIEW B-B
No Scale

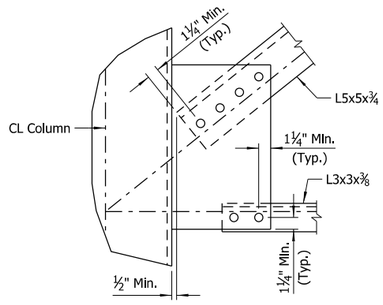

DETAIL J
No Scale

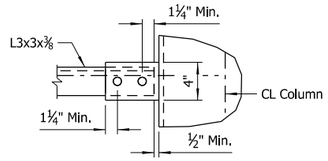

DETAIL K
No Scale

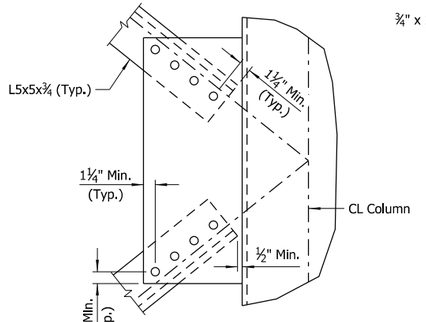

DETAIL L
No Scale

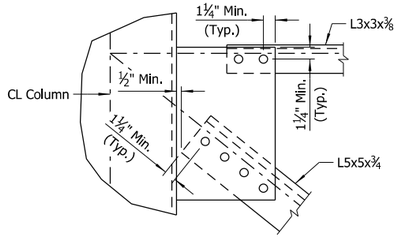

DETAIL M
No Scale

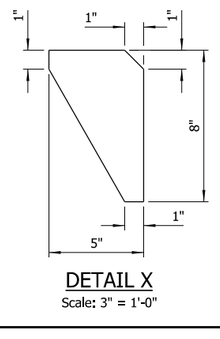

DETAIL X
Scale: 3" = 1'-0"

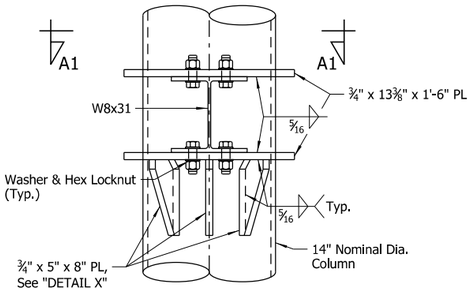

DETAIL - TRUSS BEARING SUPPORT
Scale: 1½" = 1'-0"

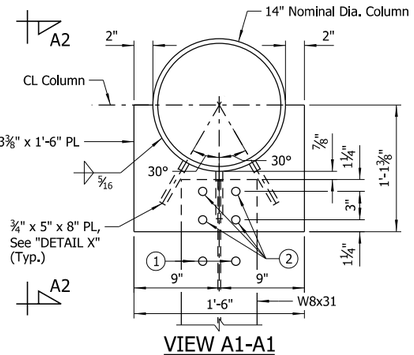

VIEW A1-A1
Scale: 1½" = 1'-0"

NOTE:
Unless noted otherwsie, thickness of all Gusset Plates shall be ⅜".

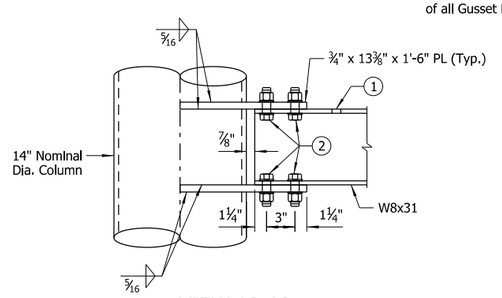

VIEW A2-A2
Scale: 1½" = 1'-0"
(¾" x 5" x 8" Plate not shown for clarity)

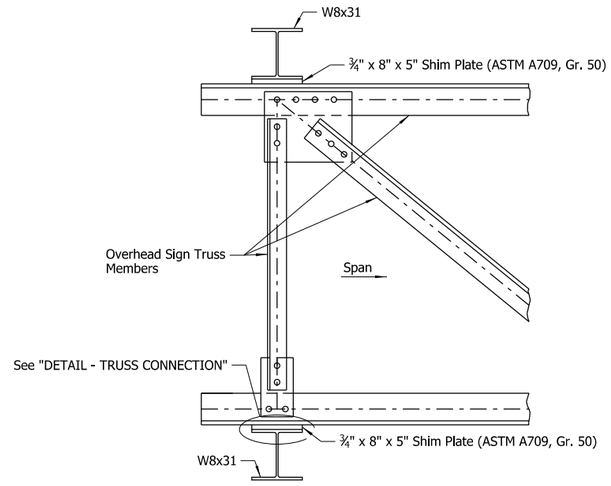

VIEW C-C
No Scale

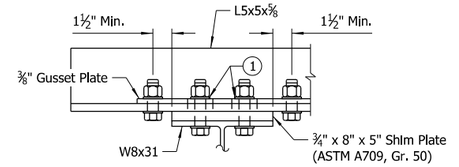

DETAIL - TRUSS CONNECTION
No Scale

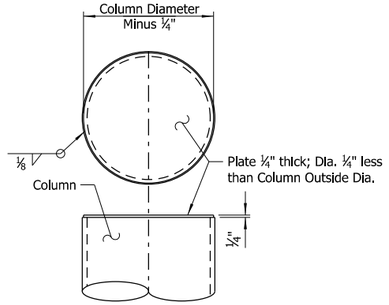

END CAP DETAIL
Scale: 1½" = 1'-0"

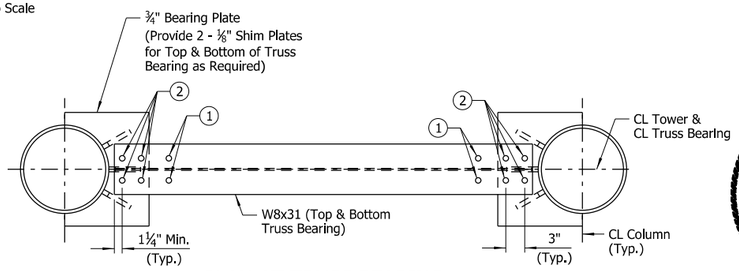

PLAN AT TRUSS BEARING
Scale: 1" = 1'-0"

(1) Bolts shall be ⅞"ø. Provide 15/16" x 2" slotted hole in gusset plate and chord angle. Use plate washer on gusset plate side. Provide 15/16"ø holes in ¾" shim plate and top or bottom beam flanges as required.

(2) Bolts shall be ⅞"ø. Provide 15/16"ø holes at top and bottom beam flanges and connection plates.

STATE OF ARKANSAS
LICENSED PROFESSIONAL ENGINEER
No.14498
ADAM B. HALL
Digitally Signed 07/28/2023
BRIDGE ENGINEER

SHEET 2 OF 6
DETAILS OF 35' STEEL CANTILEVER SIGN STRUCTURE
ROUTE SEC.
ARKANSAS STATE HIGHWAY COMMISSION
LITTLE ROCK, ARK.

DRAWN BY: CSW DATE: DEC. 2022 FILENAME: b012326_oc2.dgn
CHECKED BY: ABH DATE: FEB. 2023 SCALE: As Shown
DESIGNED BY: CSW DATE: DEC. 2022
STR. NO. SEE TABLE DRAWING NO. 66352

JES\$ñmer 7/28/2023 12:12:53 PM
WORKSPACE: ARDOT Bridge (2019)
USING: Microstation Modules (V8i) (1701660) - ARDOT 012326 Hwy 412 - Hwy 112\Drawings\b012326SS_S302_OC (35').dgn
REVISED DATE:

DATE REVISED	DATE REVISED	FED. ROAD DIST. NO.	STATE	JOB NO.	SHEET NO.	TOTAL SHEETS
		6	ARK.	012326	565	838
		SEE TABLE - OC SIGN STR. (35') - 66353				

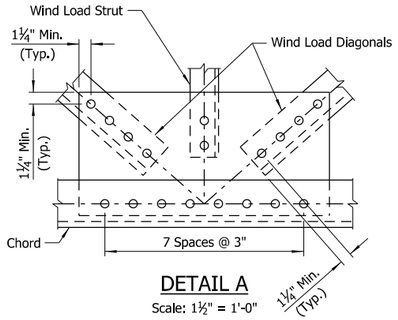

DETAIL A
Scale: 1½" = 1'-0"

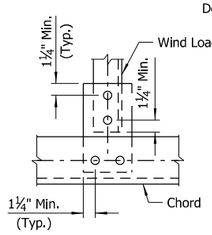

DETAIL B
Scale: 1½" = 1'-0"

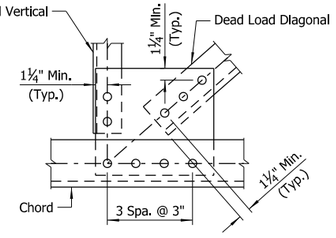

DETAIL C
Scale: 1½" = 1'-0"

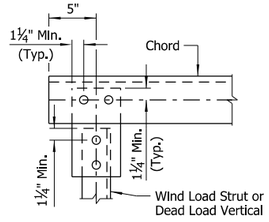

DETAIL D
Scale: 1½" = 1'-0"

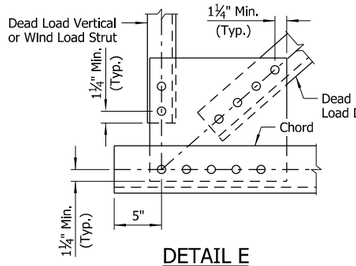

DETAIL E
Scale: 1½" = 1'-0"

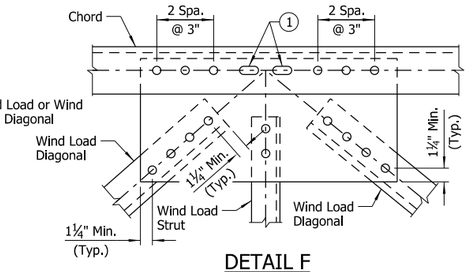

DETAIL F
Scale: 1½" = 1'-0"

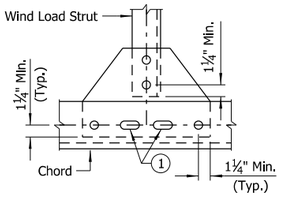

DETAIL G
Scale: 1½" = 1'-0"

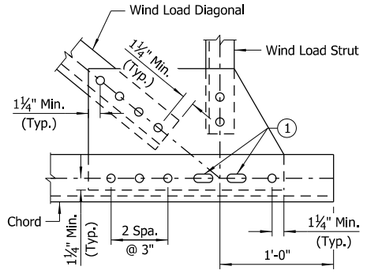

DETAIL H
Scale: 1½" = 1'-0"

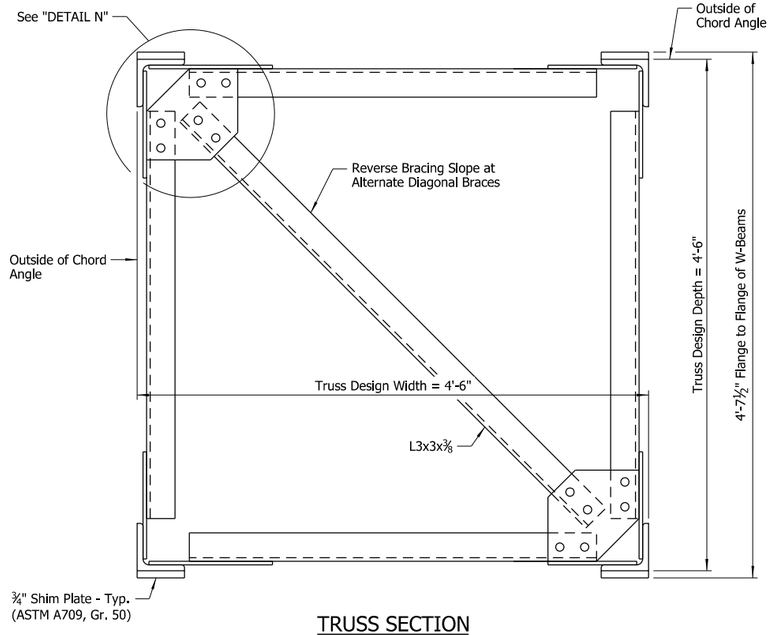

TRUSS SECTION
Scale: 1½" = 1'-0"

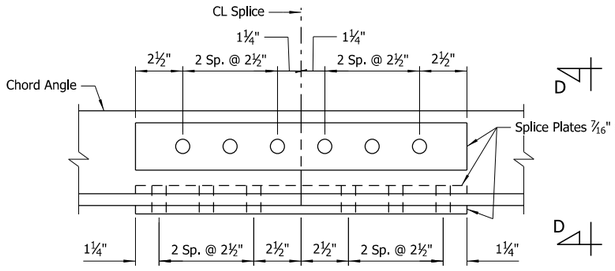

② CHORD SPLICE
Scale: 3 = 1'-0"

NOTE:
Chord angles may be spliced in convenient lengths for galvanizing and sign placement.

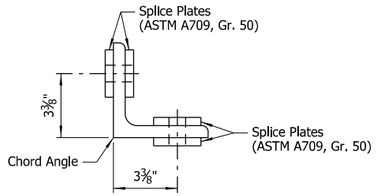

VIEW D-D
Scale: 3 = 1'-0"

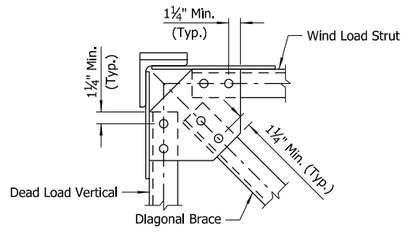

DETAIL N
Scale: 1½" = 1'-0"

NOTE:
Unless otherwise noted, thickness of all Gusset Plates shall be ⅜".

(1) Bolts shall be ⅞"ø. Provide 15⁄16" x 2" slotted holes in gusset plate and chord angle. Clearance between end of slot and adjacent bolt hole shall be no less than 1½". Use plate washer on gusset plate side.

(2) Bolts shall be ¾"ø and open holes shall be 13⁄16"ø.

STATE OF ARKANSAS
LICENSED PROFESSIONAL ENGINEER
No.14498
ADAM B. HALL
Digitally Signed 07/28/2023
BRIDGE ENGINEER

SHEET 3 OF 6
DETAILS OF 35' STEEL
CANTILEVER SIGN STRUCTURE

ROUTE SEC.

ARKANSAS STATE HIGHWAY COMMISSION
LITTLE ROCK, ARK.

DRAWN BY: CSW DATE: DEC. 2022 FILENAME: b012326_oc3.dgn
CHECKED BY: ABH DATE: FEB. 2023 SCALE: As Shown
DESIGNED BY: CSW DATE: DEC. 2022

STR. NO. SEE TABLE DRAWING NO. 66353

JESchnerWORKSPACE: ARDOT Bridge (2019)USERNAME: JESchner@ardot.gov
7/28/2023 12:12:54 PM
C:\Users\JESchner\Documents\ProjectSpace\170717560 - ARDOT 012326 Hwy 412 - Hwy 112\Drawings\b012326oSS_S303_OC (35').dgn
REVISED DATE:

DATE REVISED	DATE REVISED	FED. ROAD DIST. NO.	STATE	JOB NO.	SHEET NO.	TOTAL SHEETS
		6	ARK.	012326	566	838
		SEE TABLE - OC SIGN STR. (35') - 66354				

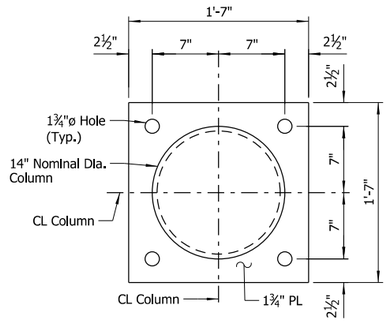

PLAN - COLUMN BASE

Scale: 1½" = 1'-0"

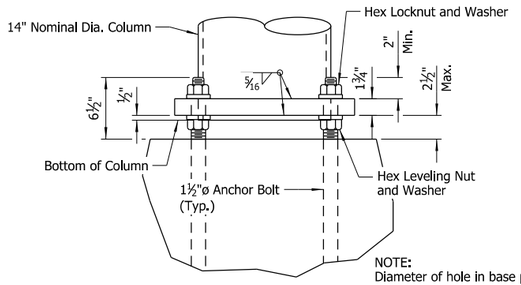

NOTE:
Diameter of hole in base plate to be ⅛" larger than column diameter.

ELEVATION - COLUMN BASE

Scale: 1½" = 1'-0"

(1) All "Lindapter" connectors or approved equal shall be installed according to Manufacturer's recommendations. All connectors, bolts, nuts and washers shall be galvanized.

NOTE:
Install all support connectors clear of the gusset plates and splice locations.

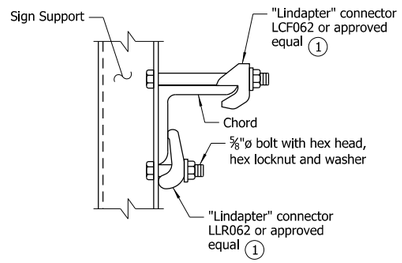

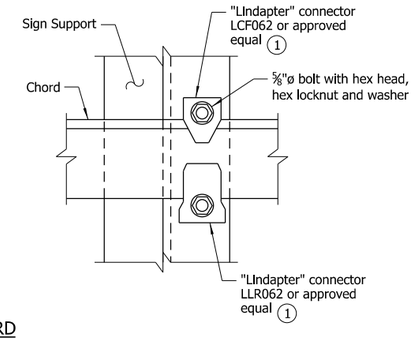

TOP CHORD

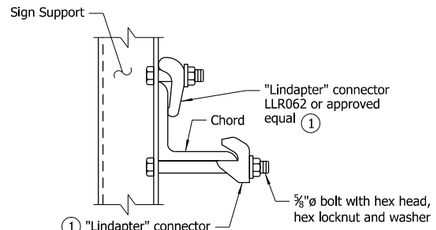

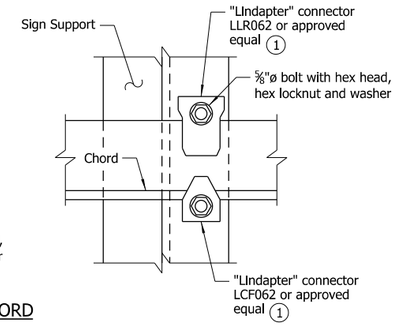

BOTTOM CHORD

DETAILS OF SIGN SUPPORT CONNECTION TO TRUSS

No Scale

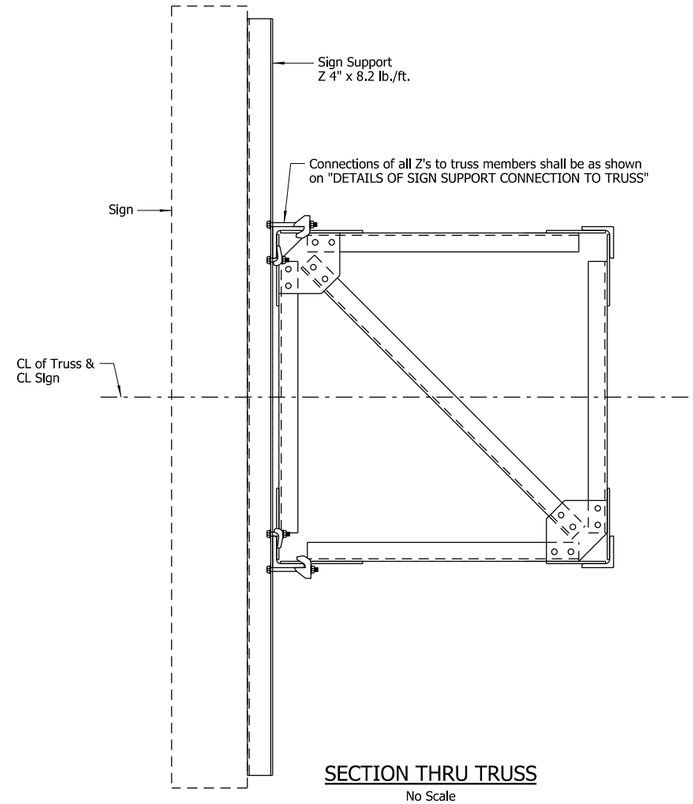

SECTION THRU TRUSS

No Scale

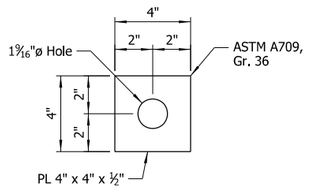

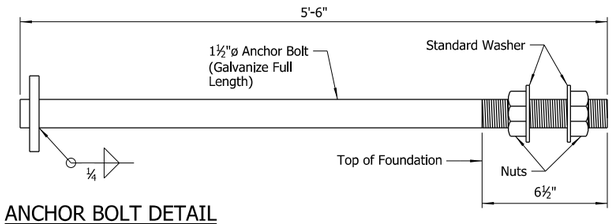

ANCHOR BOLT DETAIL

No Scale

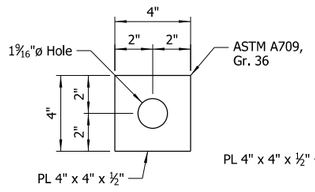

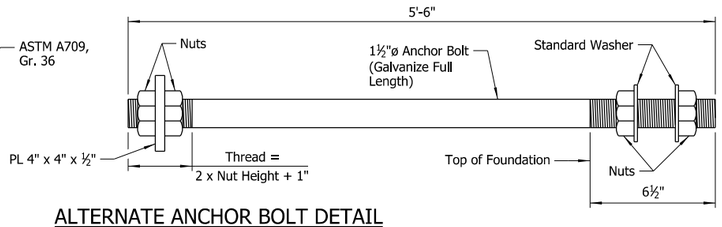

ALTERNATE ANCHOR BOLT DETAIL

No Scale

NOTE:
Anchor bolts shall comply with AASHTO M 314, Grade 55 with Supplementary Requirement S1, and shall be galvanized according to Subsection 807.07. Nuts for bolts shall be as specified in Subsection 807.07.

NOTE:
Unless otherwise noted, thickness of all Gusset Plates shall be ⅜".

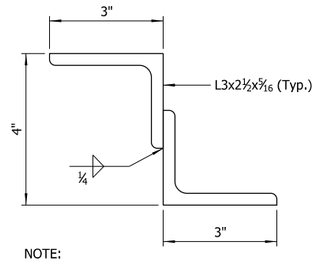

NOTE:
Structural Z support may be fabricated from angles as shown.

DETAILS OF ALTERNATE Z SUPPORT

No Scale

STATE OF ARKANSAS
LICENSED PROFESSIONAL ENGINEER
No.14498
ADAM B. HALL
Digitally Signed 07/28/2023
BRIDGE ENGINEER

SHEET 4 OF 6
DETAILS OF 35' STEEL CANTILEVER SIGN STRUCTURE

ROUTE SEC.

ARKANSAS STATE HIGHWAY COMMISSION

LITTLE ROCK, ARK.

DRAWN BY: CSW DATE: DEC. 2022 FILENAME: b012326_oc4.dgn
CHECKED BY: ABH DATE: FEB. 2023 SCALE: As Shown
DESIGNED BY: CSW DATE: DEC. 2022

STR. NO. SEE TABLE DRAWING NO. 66354

JESdimer 7/28/2023 12:12:55 PM
WORKSPACE: ARDOT Bridge (2019)
Use Setting(s): ARDOTstdsPWidgets(2017)17017660 - ARDOT 012326 Hwy 412 - Hwy 112\Drawings\b012326s6S_S304_OC (35').dgn
REVISED DATE:

DATE REVISED	DATE REVISED	FED. ROAD DIST. NO.	STATE	JOB NO.	SHEET NO.	TOTAL SHEETS
		6	ARK.	012326	567	838
		SEE TABLE - OC SIGN STR. (35') - 66355				

GENERAL NOTES:

CONSTRUCTION SPECIFICATIONS: Arkansas State Highway and Transportation Department Standard Specifications for Highway Construction, 2014 Edition, with applicable Supplemental Specifications and Special Provisions. Section and Subsection refer to the Specifications unless otherwise noted in the plans.

DESIGN SPECIFICATIONS: AASHTO LRFD Specifications for Structural Supports for Highway Signs, Luminaires, and Traffic Signals, First Edition, 2015 with current interim revisions.

Basic Wind Speed = 120 mph
Fatigue Category: I

This structure is approved for 300 square feet of sign area and a maximum sign weight (total of all signs) of 3600 lbs. Use of additional sign area or a heavier sign must be approved by the Engineer. If the structure height ("H") exceeds 30'-0", contact the Engineer.

FOUNDATION MATERIALS AND STRENGTHS:

Class S Concrete	f'c = 3,500 psi
Reinforcing Steel (Gr. 60, AASHTO M 31 or M 322, Type A)	fy = 60,000 psi

Spread footings for the structure have been designed assuming a factored bearing resistance of 2.0 ksf. Contractor shall be responsible for evaluating and verifying that the foundation soils are adequate to achieve the assumed factored bearing capacity, utilizing SPT (Standard Penetration Test), CPT (Cone Penetration Test), DCP (Dynamic Cone Penetration) test, or other suitable means, prior to or after footing excavation, whichever is appropriate. If the foundation soils are verified to be adequate, then the footing shall be constructed in accordance with the planned dimensions. Otherwise, the Design Engineer shall be contacted. Costs for foundation soil evaluation and verification shall be included in the item "STEEL CANTILEVER SIGN STRUCTURE".

Structural steel sign support members shall comply with the following specifications:

Angles:	ASTM A709, Grade 36 (Fy = 36,000 psi)
Plate, W-Section:	ASTM A709, Grade 50 (Fy = 50,000 psi)
(1) Pipe:	ASTM A139, Gr. C, straight-seam welded (Fy = 42,000 psi) ASTM A500, Gr. B (Fy = 42,000 psi) ASTM A501, Gr. B (Fy = 50,000 psi)
Z-Shapes:	ASTM A709, Grade 36 (Fy = 36,000 psi)
Shim Plates:	ASTM A1011, SS, Grade 36, Type 2, or Grade 40
Bolts:	ASTM F3125, Grade A325, Type 1
Locknuts - Approved Type:	ASTM A563, Grade DH or AASHTO M 292, Grade 2H
Washers:	ASTM F436
Nuts:	ASTM A563, Grade DH or AASHTO M 292, Grade 2H

The Contractor shall make check measurements in the field and make any adjustments necessary to meet the required clearances and to fit the new structure to the existing and/or proposed conditions.

Drawings show general features of design only. Shop drawings shall be made in accordance with Subsection 807.04, submitted, and approval secured before fabrication is begun.

Requests for substitution of structural steel shapes shown with shapes of greater size must be submitted by the Contractor to the Engineer for approval. Steels of equal or greater strengths will be accepted only when shown on the approved shop drawings. Shapes and materials shown in the plans will be the basis of payment and no additional compensation will be made for any adjustments due to substitutions.

All steel shall be galvanized according to Subsection 807.19. Steel completely encased in concrete may not be galvanized. Galvanized coating damaged during transport, handling or erection shall be field repaired in accordance with Subsection 807.88.

All main load carrying tension members greater than ½" in thickness shall conform to the requirements of the Longitudinal Charpy V-Notch test specified for Zone 1 minimum service temperature. This work and materials shall be paid for in accordance with Special Provision "STEEL SIGN STRUCTURES".

Field splices shall be located in order to avoid sign panel connections. There shall be a maximum of two field splices, and they shall be spaced a minimum of 15 feet apart.

Truss field sections shall be shop assembled. Entire truss shall be fully assembled and lifted into place as one unit on to tower supports. All truss member connections shall be bolted connections.

All welding that is to be done during fabrication of structural steel, including temporary welds, shall be detailed on the shop drawings and submitted for approval. If additional welds are required, whether temporary or permanent, a formal request with detailed drawings shall be submitted to the Engineer for approval. All welding shall conform to Subsection 807.26 except welding of tubular sections shall conform to AWS D1.1 Structural Welding Code.

No circumferential butt welds will be allowed in any pipe sections.

All fillet welds of critical members shall be tested according to AWS D1.1 Structural Welding Code - Steel using the magnetic particle method. Critical welds shall include: column to base plate and truss bottom support to column.

Connections shall be bolted with high-strength bolts. Unless otherwise noted, bolts shall be ⅞"ø and open holes shall be $^{15}/_{16}$"ø. Bolt spacing shall be 2½" for ⅞"ø bolts unless otherwise noted. Bolts shall be placed with heads on the outside face of all members.

All truss frame bolts shall comply with ASTM F3125, Grade A325, Type 1, galvanized according to Subsection 807.06. Nuts and washers for ASTM F3125, Grade A325, Type 1 bolts shall be furnished and galvanized in accordance with Subsection 807.06.

Locknuts shall be equipped with nylon locking inserts or other approved type locking system. Locknuts shall be installed according to Manufacturer's recommendations.

Anchor bolts shall comply with AASHTO M 314, Grade 55, including Supplementary Requirement S1, and shall be galvanized according to Subsection 807.07. Nuts and washers for anchor bolts shall be furnished and galvanized in accordance with Subsection 807.07. Anchor bolts shall be pretensioned in accordance with Special Provision "STEEL SIGN STRUCTURES".

Shoring may be required to protect existing shoulders or other elements during excavation. Any shoring required shall not be paid for directly, but shall be considered incidental to the item "STEEL CANTILEVER SIGN STRUCTURE". The excavations for the footing shall be backfilled before the structure is attached to the foundation.

For location of each 35' cantilever sign structure to be used, refer to Sign Plans.

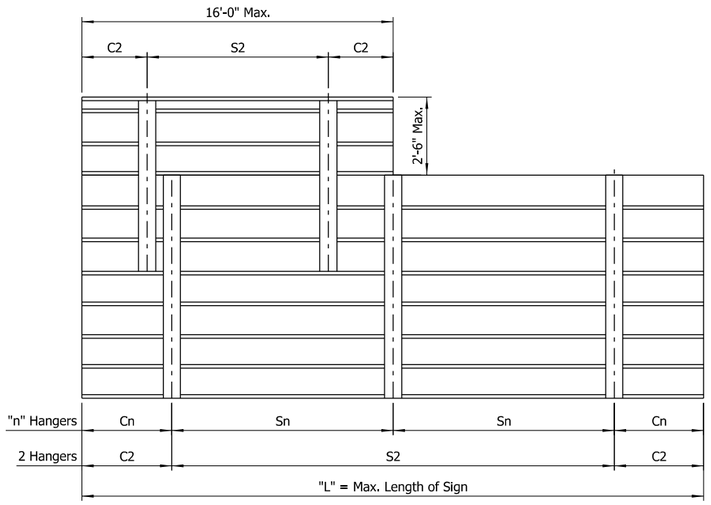

NOTE:
See sign details and plan sheets for number, size and dimensions of signs.

HANGER SPACING DETAILS FOR EXTRUDED PANEL SIGNS

No Scale

HANGER VARIABLES

(For Extruded Panel Signs)

Max. Length of Sign = "L"	"n" Hangers	Cantilever Length "Cn"	Hanger Spacing "Sn"
15'-0"	2 Hangers	0.21 x "L"	0.58 x "L"
30'-0"	3 Hangers	0.145 x "L"	0.355 x "L"

NOTE:
Hanger spacing and cantilever length shall be rounded to the nearest inch.

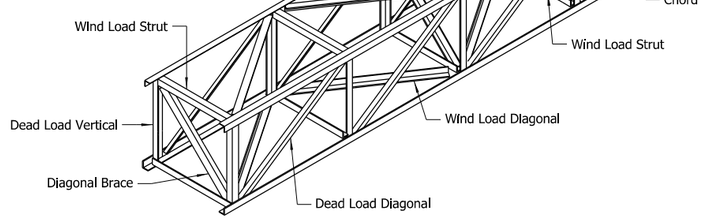

ISOMETRIC VIEW

No Scale

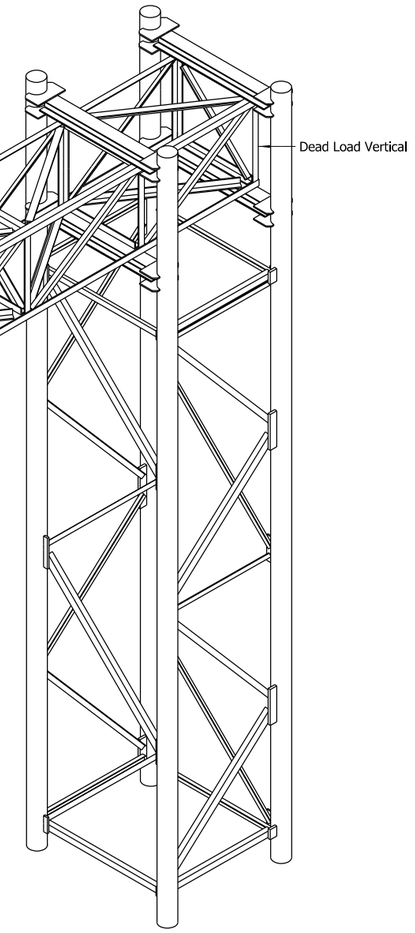

(1) In addition to material requirements, all pipe used for welded applications shall have a maximum carbon equivalency (CE) of 0.4 using the following equation:

CE = %C + %Mn/6 + %Cu/40 + %Ni/20 + %Cr/10 - %Mo/50 - %V/10

STATE OF ARKANSAS
LICENSED PROFESSIONAL ENGINEER
No.14498
ADAM B. HALL
Digitally Signed 07/28/2023
BRIDGE ENGINEER

SHEET 5 OF 6
DETAILS OF 35' STEEL CANTILEVER SIGN STRUCTURE

ROUTE SEC.

ARKANSAS STATE HIGHWAY COMMISSION
LITTLE ROCK, ARK.

DRAWN BY:	CSW	DATE:	DEC. 2022	FILENAME:	b012326_oc5.dgn
CHECKED BY:	ABH	DATE:	FEB. 2023	SCALE:	As Shown
DESIGNED BY:	CSW	DATE:	DEC. 2022		

STR. NO. SEE TABLE DRAWING NO. 66355

JESdinner 7/28/2023 12:12:55 PM
WORKSPACE: ARDOT Bridge (2019)
Workset: Default@Projects\2017\17017560 - ARDOT 012326 Hwy 412 - Hwy 112\Drawings\b012326oc5S_S305_OC (35').dgn
REVISED DATE:

DATE REVISED	DATE REVISED	FED. ROAD DIST. NO.	STATE	JOB NO.	SHEET NO.	TOTAL SHEETS
		6	ARK.	012326	568	838
		SEE TABLE - OC SIGN STR. (35') - 66356				

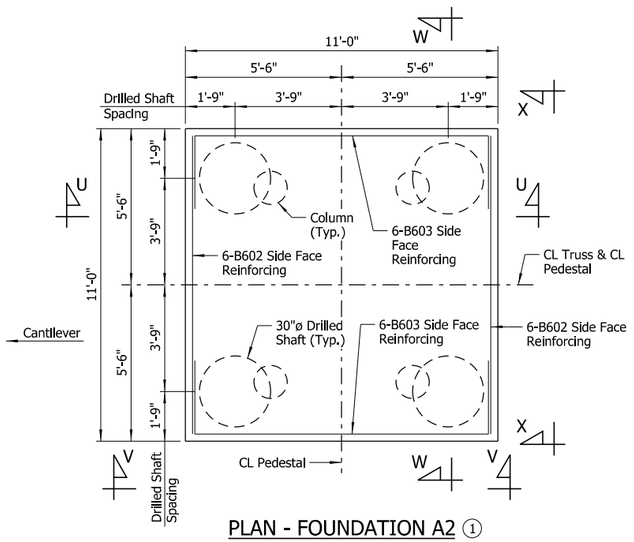

PLAN - FOUNDATION A2 (1)

Scale: ⅜" = 1'-0"

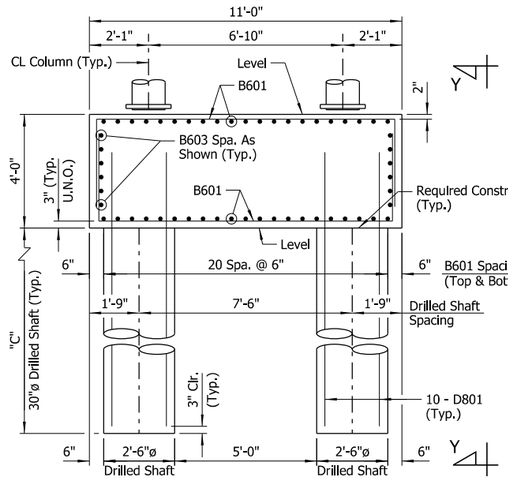

SECTION W-W

Scale: ⅜" = 1'-0"

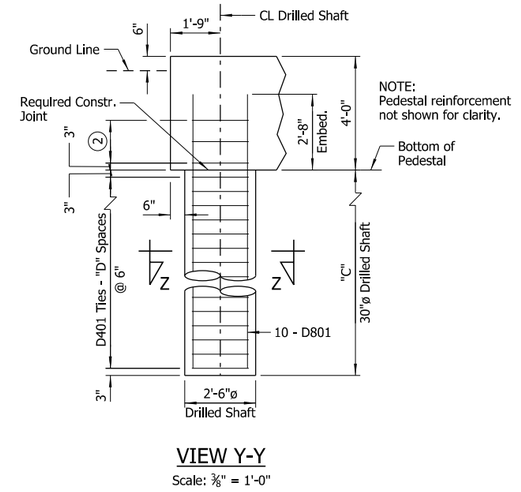

VIEW Y-Y

Scale: ⅜" = 1'-0"

(1) Foundation A2 allowed only when foundation is outside clear zone or is protected by guardrail or barrier.

(2) C401 Ties - 2 Spaces @ 9"

SECTION U-U

Scale: ⅜" = 1'-0"

VIEW X-X

Scale: ⅜" = 1'-0"

NOTE:
Vertical legs of B601 bars not shown for clarity.

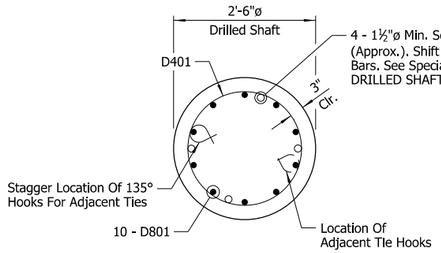

SECTION Z-Z

Scale: ¾" = 1'-0"

NOTE:
Vertical legs of B601 bars not shown for clarity.

VIEW V-V

Scale: ⅜" = 1'-0"

APPROX. QUANTITIES FOR FOUNDATION A2 (FOR INFORMATION ONLY)

CLASS S CONCRETE (3) (CU. YDS.)	REINFORCING STEEL (LBS.) (4)	EXCAVATION (CU. YDS.)	DRILLED SHAFT (30" DIA.) (LIN. FT.)	CROSSHOLE SONIC LOGGING (30" DIA.) (EACH)
17.93	2,579	26	"G"	1

(3) Does not include Class S Concrete for Drilled Shafts

(4) Does not include D401 and D801 Bars in Drilled Shafts

DRILLED SHAFT NOTES (FOUNDATION A2)

Drilled shafts shall conform to Special Provision "DRILLED SHAFT FOUNDATIONS FOR STEEL SIGN STRUCTURES". Drilled shafts will not be paid for directly but shall be considered subsidiary to the unit price bid for "STEEL CANTILEVER SIGN STRUCTURE". Temporary casing may be required. Unless approved by the Engineer, permanent steel casing shall not be used.

Crosshole Sonic Logging (CSL) shall be performed on one drilled shaft at each foundation and as directed by the Engineer. Testing shall be performed in accordance with Special Provision "NONDESTRUCTIVE TESTING OF DRILLED SHAFTS FOR STEEL SIGN STRUCTURES".

Concrete and reinforcing steel placed in drilled shafts will not be paid for directly but shall be considered subsidiary to the unit price bid for "STEEL CANTILEVER SIGN STRUCTURE". No additional payment shall be made for spacers, additional splices or bracing needed for assembly, shipping, handling or erecting.

Concrete in drilled shafts shall be Class "S" as modified by Special Provision "DRILLED SHAFT FOUNDATIONS FOR STEEL SIGN STRUCTURES".

Drilled shaft lengths shall be determined based on the results of exploratory borings, which shall be performed by the Contractor prior to shaft excavation.

If competent rock is not encountered in the exploratory boring, the Standard Penetration Test (SPT) blow count corrected by the hammer efficiency, N60, shall be used to determine shaft lengths. See "TABLE OF VARIABLES".

If competent rock is encountered in the exploratory boring within 25'-0" of planned top of drilled shaft, the shafts shall be founded a minimum of 3'-0" into rock and have a minimum length of 25'-0".

If competent rock is encountered in the exploratory boring below 25'-0" from planned top of drilled shaft, the shafts shall be founded a minimum of 3'-0" into rock or to the depth based on the SPT N60 value and associated shaft length in the "TABLE OF VARIABLES", whichever is shallower.

Testing results shall be submitted to the Engineer for review. Final drilled shaft lengths shall be approved by the Engineer prior to construction.

The cost of performing exploratory borings and in-situ strength testing shall be included in the item "STEEL CANTILEVER SIGN STRUCTURE".

TABLE OF VARIABLES (6)

SPT N60 (blows/ft.) (5)	Min. Depth of Exploratory Boring	Drilled Shaft Length, "C"	"D"	"E"	"F" (7)	"G"
<5	-	Contact Engineer	-	-	-	-
5 To 7	75'-0"	70'-0"	139	560	72'-5"	280'-0"
7 To 9	63'-0"	58'-0"	115	464	60'-5"	232'-0"
9 To 11	47'-0"	42'-0"	83	336	44'-5"	168'-0"
11 To 13	37'-0"	32'-0"	63	256	34'-5"	128'-0"
>13	31'-0"	26'-0"	51	208	28'-5"	104'-0"

(5) Tabulated SPT N60 values are raw SPT N values corrected by SPT hammer efficiency and represent average values along the plan shaft penetration. If the SPT N60 values in the foundation soils within 2 shaft diameters below the plan tip elevation are less than the average SPT N60 values along the plan shaft penetration, the Engineer shall be contacted.

(6) If final drilled shaft length is not shown in "TABLE OF VARIABLES" due to the presence of rock or other factors, variables "D" through "G" shall be determined as follows:

"D" = (Shaft Length in Ft. - 0.5) / 0.5
"E" = Shaft Length in Ft. x 8
"F" = Shaft Length + 2'-5"
"G" = Shaft Length x 4

(7) If "F" exceeds 60'-0", a lap splice is required for each D801 bar at the midpoint of the drilled shaft. Min. lap splice length for D801 bar = 3'-6". Length shown in table does not include the additional length required for a lap splice.

BAR LIST - FOUNDATION A2

MARK	NO. REQ'D	LENGTH	"A"	"B"	P.D.
B601	84	16'-4"	10'-6"	3'-1"	4½"
B602	12	10'-4"			Str.
B603	12	15'-2"	10'-4"	2'-7"	4½"
C401	12	7'-4"			3"
D401	"E"	7'-4"			3"
D801	40	"F"			Str.

BAR BENDING DIAGRAMS

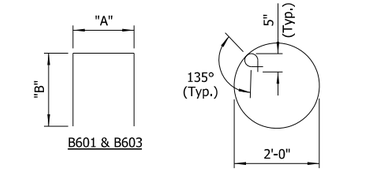

NOTES:
Dimensions of bars are out-to-out.

Number of bars shown is for one Foundation A2.

LEGEND

U.N.O. = Unless Noted Otherwise

STATE OF ARKANSAS
LICENSED PROFESSIONAL ENGINEER
No. 14498
ADAM B. HALL
Digitally Signed 07/28/2023
BRIDGE ENGINEER

SHEET 6 OF 6
DETAILS OF 35' STEEL CANTILEVER SIGN STRUCTURE

ROUTE SEC.

ARKANSAS STATE HIGHWAY COMMISSION

LITTLE ROCK, ARK.

DRAWN BY: CWT DATE: JAN. 2023 FILENAME: b012326_oc6.dgn
CHECKED BY: CSW DATE: FEB. 2023 SCALE: As Shown
DESIGNED BY: ABH DATE: JAN. 2023

STR. NO. SEE TABLE DRAWING NO. 66356

JESsInner 7/28/2023 12:12:56 PM
WORKSPACE: ARDOT Bridge (2019)
Workflow: Roadway Project(s)(2017)(1017560 - ARDOT 012326 Hwy 412 - Hwy 112\Drawings\b012326oSS_S306_OC (35').dgn
REVISED DATE:

DATE REVISED	DATE REVISED	FED. ROAD DIST. NO.	STATE	JOB NO.	SHEET NO.	TOTAL SHEETS
		6	ARK.	012326	569	838
		SEE TABLE - TEE MOUNT SIGN STR. - 66357				

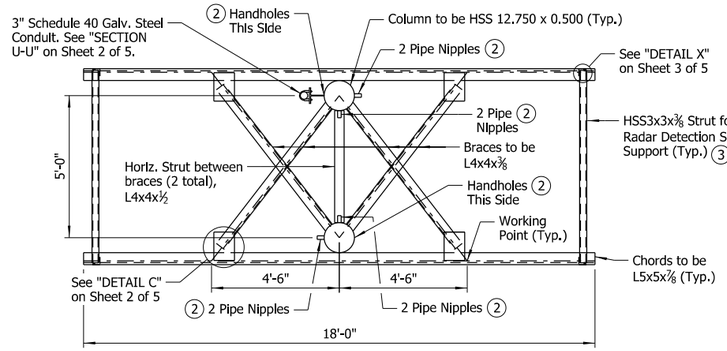

PLAN

Scale: ⅜" = 1'-0"

BAR LIST - FOUNDATION A1			
MARK	NO. REQ'D	LENGTH	P.D.
C401	10	30'-10"	2"
C601	84	6'-8"	4½"
F601	38	17'-6"	Str.
F602	70	9'-6"	Str.

BAR BENDING DIAGRAMS

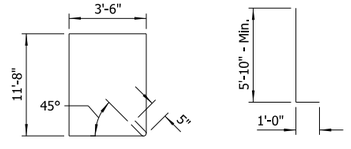

NOTES:
Dimensions of bars are out-to-out.

Number of bars shown is for one Foundation A1.

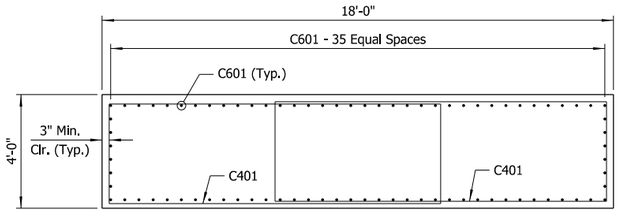

SECTION B-B

Scale: ⅜" = 1'-0"

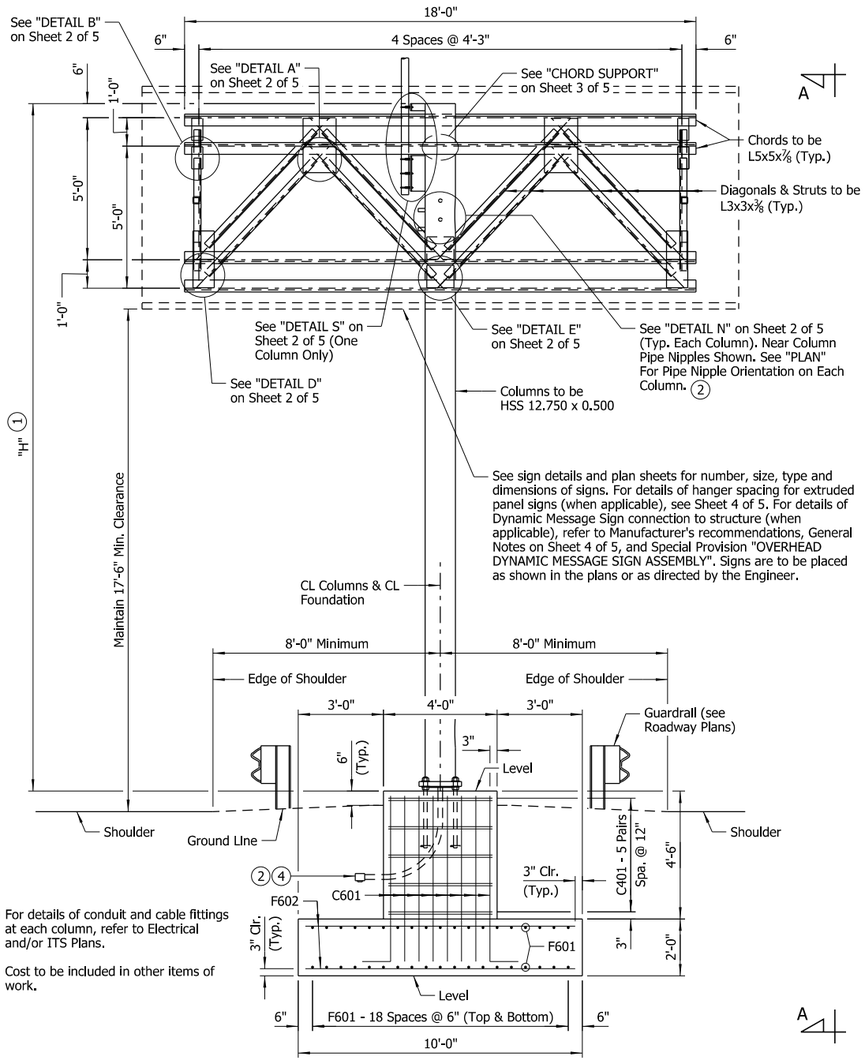

ELEVATION - FOUNDATION A1 5

No Scale

4 For details of conduit and cable fittings at each column, refer to Electrical and/or ITS Plans.

Cost to be included in other items of work.

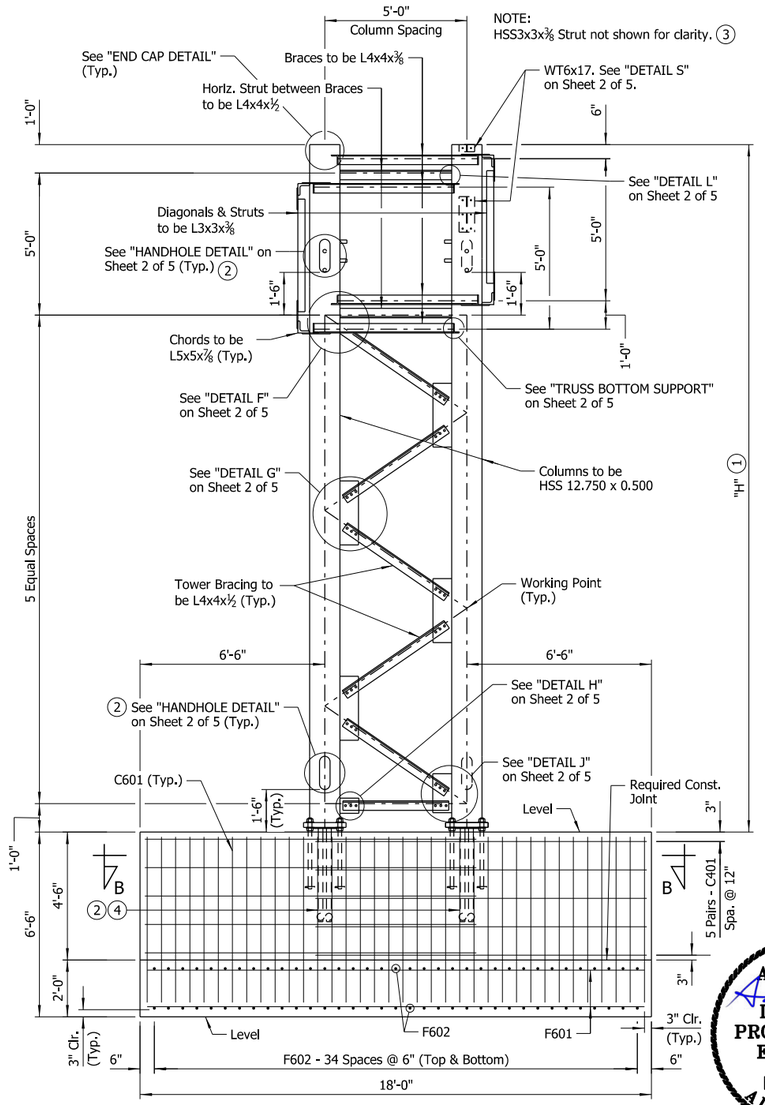

VIEW A-A

No Scale

5 Foundation A1 allowed only when foundation is outside clear zone or is protected by guardrail or barrier. For other foundation types and associated restrictions, see Sheets 4 and 5 of 5.

STRUCTURE NO.	FOUNDATION TYPE
TM-412-72-001	A1 or A2
TM-612-04-005	A1 or A2

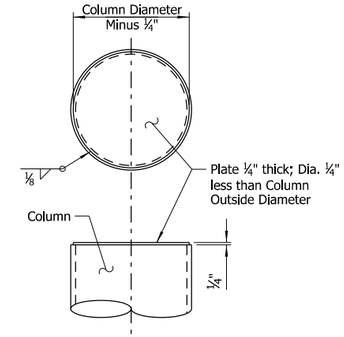

END CAP DETAIL

Scale: 1½" = 1'-0"

1 The Contractor shall make field measurements to determine the column height ("H") that is required to maintain the minimum vertical clearance. The column height shall be shown on the shop drawings with a note stating that the Contractor has made the required field measurements. If the structure height ("H") exceeds 30'-0", contact the Engineer.

2 Conduit, Handholes and Pipe Nipples only required when Dyanmic Message Signs are to be attached to the structure or as directed by the Engineer. Pipe Nipples shall be fitted with standard plugs until conduit is installed.

3 HSS3x3x⅜ Strut only required when Radar Detection Sensor is to be attached to the structure or as directed by the Engineer. See ITS Plans.

APPROX. QUANTITIES FOR FOUNDATION A1 (FOR INFORMATION ONLY)

CLASS S CONCRETE (CU. YDS.)	REINFORCING STEEL (LBS.)	EXCAVATION (CU. YDS.)
25.33	3,045	61

STATE OF ARKANSAS
LICENSED PROFESSIONAL ENGINEER
No.14498
ADAM B. HALL

Digitally Signed 07/28/2023
BRIDGE ENGINEER

SHEET 1 OF 5
DETAILS OF STEEL TEE MOUNT SIGN STRUCTURE

ROUTE SEC.

ARKANSAS STATE HIGHWAY COMMISSION

LITTLE ROCK, ARK.

DRAWN BY: CSW DATE: SEP. 2022 FILENAME: b012326_tm1.dgn
CHECKED BY: ABH DATE: SEP. 2022 SCALE: As Shown
DESIGNED BY: CSW DATE: SEP. 2022

STR. NO. SEE TABLE DRAWING NO. 66357

JES\bmer 7/28/2023 12:12:57 PM
WORKSPACE: ARDOT Bridge (2019)
Workspace Version: 4.0.0.0
REVISED DATE:
C:\Users\bmer\Desktop\Projects\20171\70176\60 - ARDOT 012326 Hwy 412 - Hwy 112\Drawings\sht\012326rSS_S401_TM.dgn

DATE REVISED	DATE REVISED	FED. ROAD DIST. NO.	STATE	JOB NO.	SHEET NO.	TOTAL SHEETS
		6	ARK.	012326	570	838
		SEE TABLE - TEE MOUNT SIGN STR. - 66358				

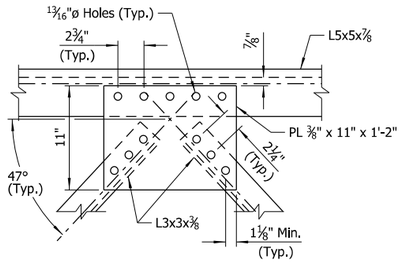

DETAIL A
Scale: 1½" = 1'-0"

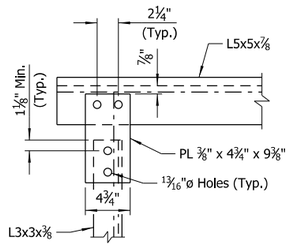

DETAIL B
Scale: 1½" = 1'-0"

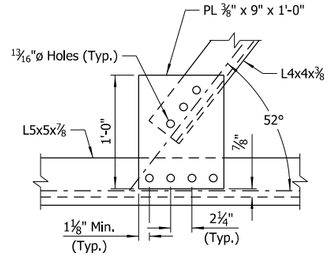

DETAIL C
Scale: 1½" = 1'-0"

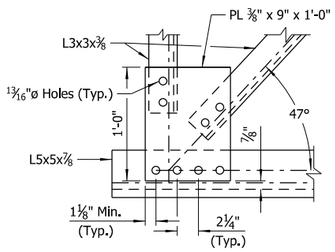

DETAIL D
Scale: 1½" = 1'-0"

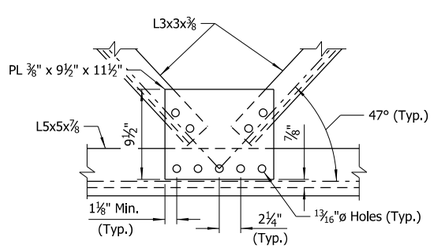

DETAIL E
Scale: 1½" = 1'-0"

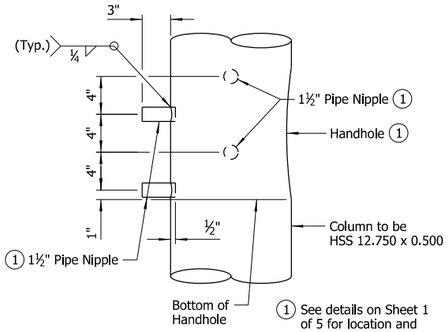

DETAIL N ②
Scale: 1½" = 1'-0"

① See details on Sheet 1 of 5 for location and orientation of handholes and pipe nipples.

② Handholes and pipe nipples only required when Dyanmic Message Signs are to be attached to the structure or as directed by the Engineer. Pipe nipples shall be fitted with standard plugs until conduit is installed.

NOTE:
Provide handhole covers with chain, waterproof grommet, and tamperproof screws.

Handhole covers shall be galvanized and meet the requirements of ASTM A36 at a minimum.

Tamperproof screws shall be galvanized and meet the requirements of ANSI/ASME B18.6.3.

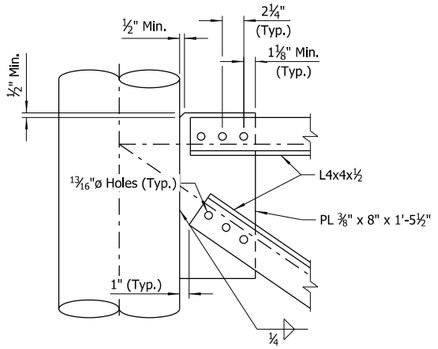

DETAIL F
Scale: 1½" = 1'-0"

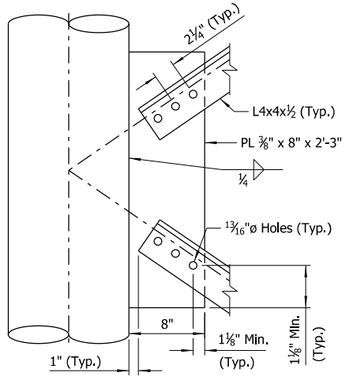

DETAIL G
Scale: 1½" = 1'-0"

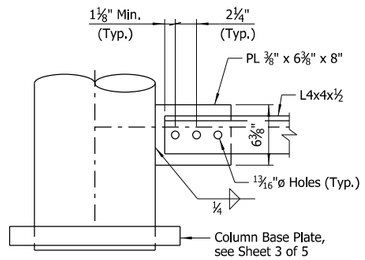

DETAIL H
Scale: 1½" = 1'-0"

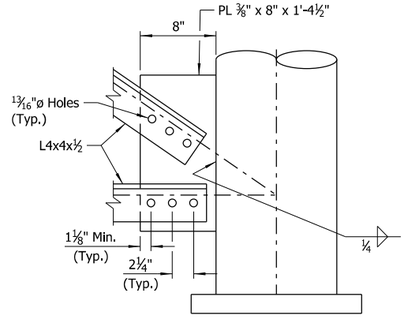

DETAIL J
Scale: 1½" = 1'-0"

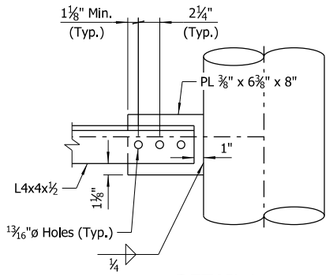

DETAIL L
Scale: 1½" = 1'-0"

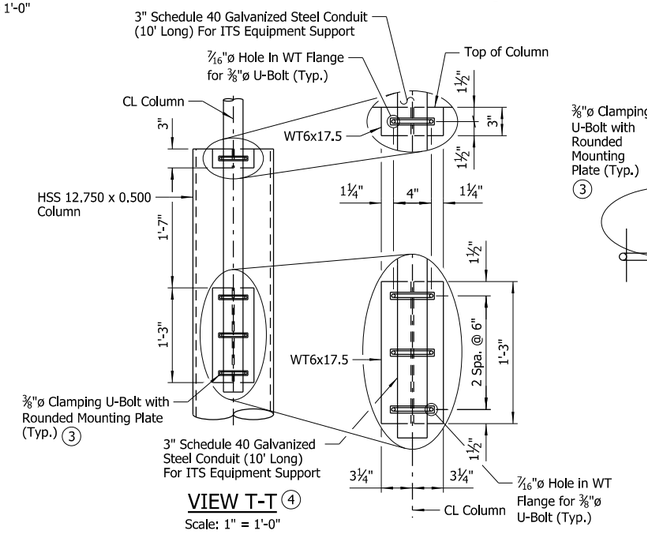

VIEW T-T ④
Scale: 1" = 1'-0"

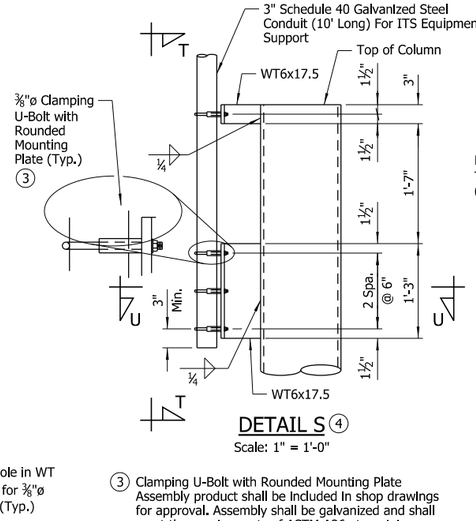

DETAIL S ④
Scale: 1" = 1'-0"

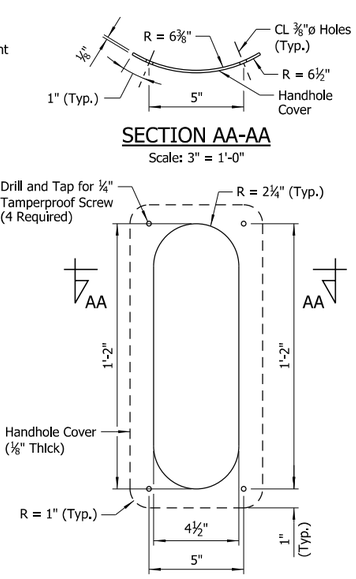

SECTION AA-AA
Scale: 3" = 1'-0"

HANDHOLE DETAIL ① ②
Scale: 3" = 1'-0"

③ Clamping U-Bolt with Rounded Mounting Plate Assembly product shall be included in shop drawings for approval. Assembly shall be galvanized and shall meet the requirements of ASTM A36 at a minimum. Install per Manufacturer's instructions.

④ 3" Conduit and conduit support steel only required when necessary to support ITS equipment or as directed by the Engineer. See ITS Plans.

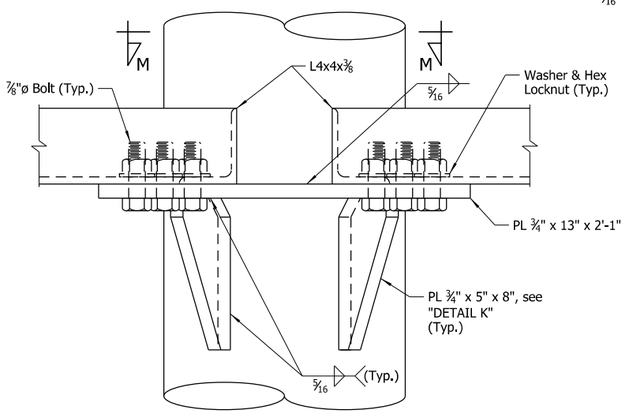

ELEVATION - TRUSS BOTTOM SUPPORT
(Bottom Connection shown, Top Connection similar)
Scale: 3" = 1'-0"

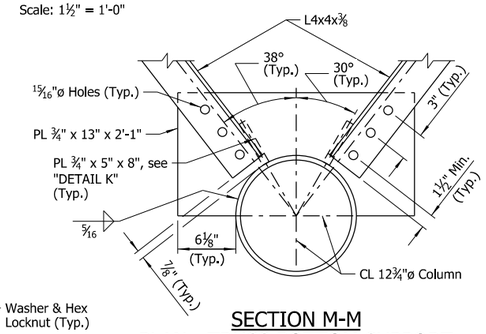

SECTION M-M
PLAN - TRUSS BOTTOM SUPPORT
Scale: 1½" = 1'-0"

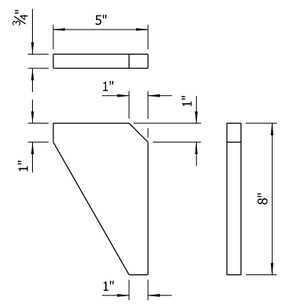

DETAIL K
Scale: 3" = 1'-0"

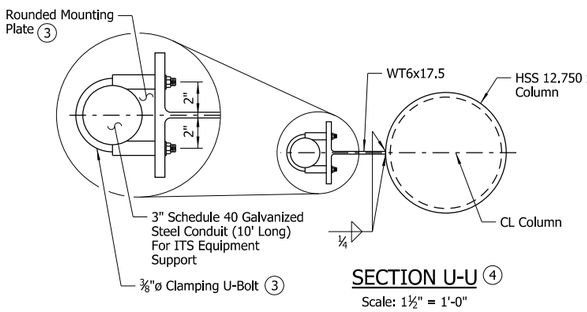

SECTION U-U ④
Scale: 1½" = 1'-0"

STATE OF ARKANSAS
LICENSED PROFESSIONAL ENGINEER
No.14498
ADAM B. HALL
Digitally Signed 07/28/2023
BRIDGE ENGINEER

SHEET 2 OF 5
DETAILS OF STEEL TEE MOUNT SIGN STRUCTURE

ROUTE SEC.

ARKANSAS STATE HIGHWAY COMMISSION
LITTLE ROCK, ARK.

DRAWN BY: CSW DATE: SEP. 2022 FILENAME: b012326_tm2.dgn
CHECKED BY: ABH DATE: SEP. 2022 SCALE: As Shown
DESIGNED BY: CSW DATE: SEP. 2022

STR. NO. SEE TABLE DRAWING NO. 66358

JESchnerr 7/28/2023 12:12:58 PM
WORKSPACE: ARDOT Bridge (2019)
Standard: ArkansasStandard.PWSetup (2017).170717560 - ARDOT 012326 Hwy 412 - Hwy 112\Drawings\b012326sSS_5402_TM.dgn
REVISED DATE:

DATE REVISED	DATE REVISED	FED. ROAD DIST. NO.	STATE	JOB NO.	SHEET NO.	TOTAL SHEETS
		6	ARK.	012326	571	838
		SEE TABLE - TEE MOUNT SIGN STR. - 66359				

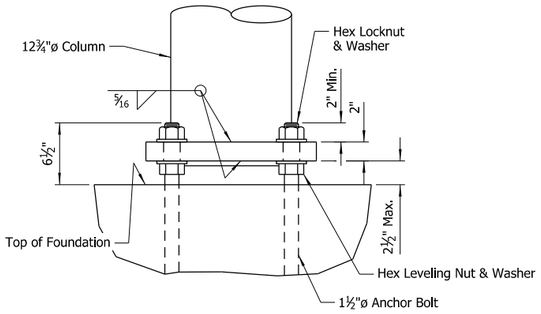

ELEVATION - COLUMN BASE

Scale: 1½" = 1'-0"

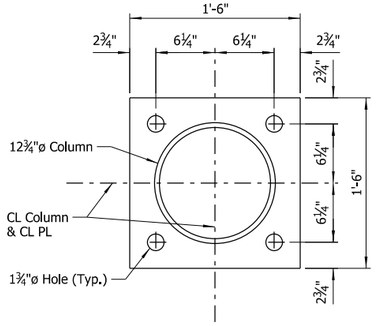

PLAN - COLUMN BASE

Scale: 1½" = 1'-0"

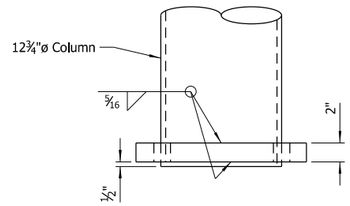

NOTE:
Diameter of hole in base plate to be ⅛" larger than column diameter.

DETAIL OF COLUMN CONNECTION TO BASE PLATE

Scale: 1½" = 1'-0"

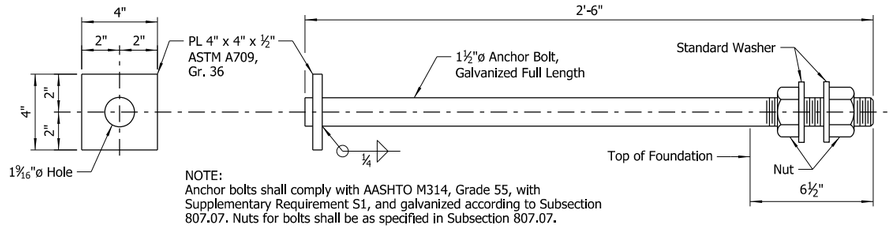

NOTE:
Anchor bolts shall comply with AASHTO M314, Grade 55, with Supplementary Requirement S1, and galvanized according to Subsection 807.07. Nuts for bolts shall be as specified in Subsection 807.07.

ANCHOR BOLT DETAIL

Scale: 3" = 1'-0"

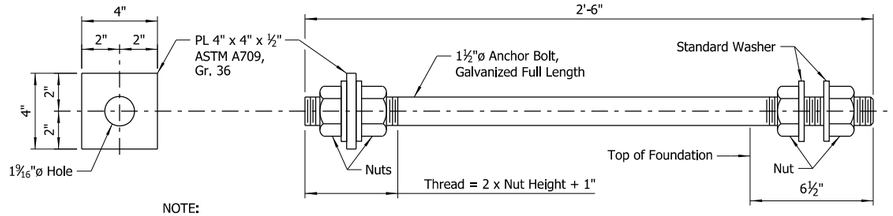

NOTE:
Anchor bolts shall comply with AASHTO M314, Grade 55, with Supplementary Requirement S1, and galvanized according to Subsection 807.07. Nuts for bolts shall be as specified in Subsection 807.07.

ALTERNATE ANCHOR BOLT DETAIL

Scale: 3" = 1'-0"

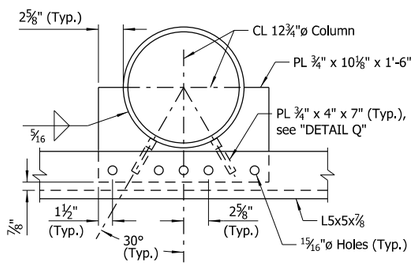

SECTION P-P
PLAN - CHORD SUPPORT

(Top Chord Shown, Bottom Chord Similar)
Scale: 1½" = 1'-0"

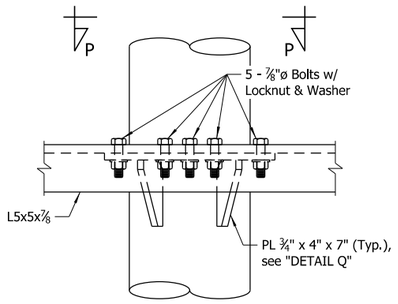

ELEVATION - CHORD SUPPORT

(Top Chord Shown, Bottom Chord Similar)
Scale: 1½" = 1'-0"

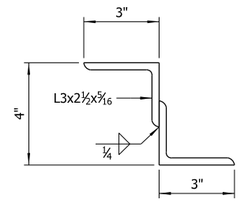

NOTE:
Structural Z support may be fabricated from angles as shown.

DETAILS OF ALTERNATE Z SUPPORT

No Scale

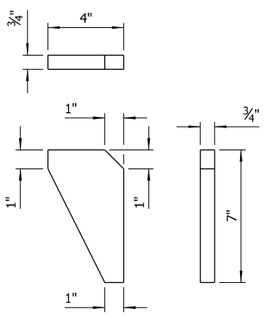

DETAIL Q

Scale: 3" = 1'-0"

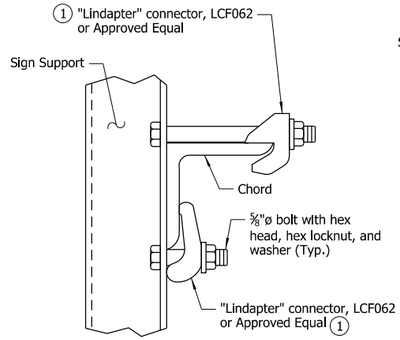

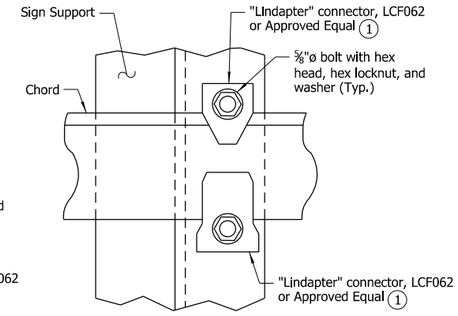

TOP CHORD

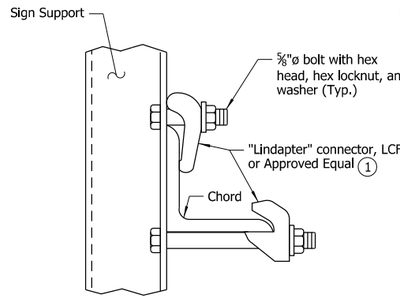

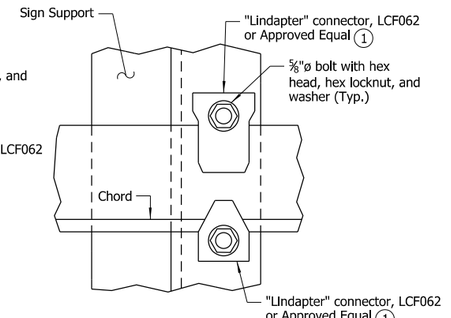

BOTTOM CHORD

1 All "Lindapter" connectors or approved equal shall be installed according to Manufacturer's recommendations. All connectors, bolts, nuts and washers shall be galvanized.

NOTE:
Install all support connectors clear of the gusset plates.

DETAILS OF SIGN SUPPORT CONNECTION TO TRUSS

No Scale

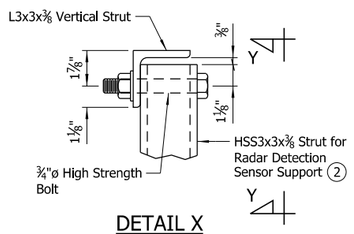

DETAIL X

Scale: 3" = 1'-0"

2 HSS3x3x⅜ Strut only required when Radar Detection Sensor Is to be attached to the structure or as directed by the Engineer. See ITS Plans.

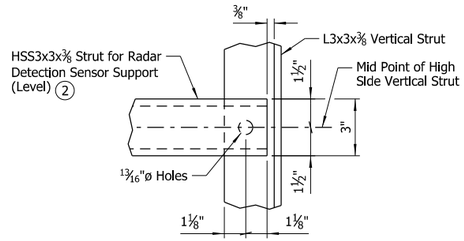

VIEW Y-Y

Scale: 3" = 1'-0"

STATE OF ARKANSAS
LICENSED PROFESSIONAL ENGINEER
No.14498
ADAM B. HALL
Digitally Signed 07/28/2023
BRIDGE ENGINEER

SHEET 3 OF 5
DETAILS OF STEEL TEE MOUNT SIGN STRUCTURE

ROUTE SEC.

ARKANSAS STATE HIGHWAY COMMISSION

LITTLE ROCK, ARK.

DRAWN BY: CSW DATE: SEP. 2022 FILENAME: b012326_tm3.dgn
CHECKED BY: ABH DATE: SEP. 2022 SCALE: As Shown
DESIGNED BY: CSW DATE: SEP. 2022

STR. NO. SEE TABLE DRAWING NO. 66359

JESkinner 7/28/2023 12:12:59 PM
WORKSPACE: ARDOT Bridge (2019)
Workset: Default/Projects/2017/17017660 - ARDOT 012326 Hwy 412 - Hwy 112\Drawings\b012326s6S_5403_TM.dgn
REVISED DATE:

DATE REVISED	DATE REVISED	FED. ROAD DIST. NO.	STATE	JOB NO.	SHEET NO.	TOTAL SHEETS
		6	ARK.	012326	572	838
		SEE TABLE - TEE MOUNT SIGN STR. - 66360				

BAR LIST - FOUNDATION B1

MARK	NO. REQ'D	LENGTH	P.D.
C401	10	30'-10"	2"
C601	84	8'-8"	4½"
F601	38	17'-6"	Str.
F602	70	9'-6"	Str.

BAR BENDING DIAGRAMS

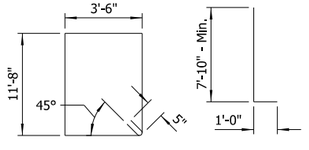

APPROX. QUANTITIES FOR FOUNDATION B1 (FOR INFORMATION ONLY)

Class S Concrete (Cu. Yds.)	Reinforcing Steel (Lbs.)	Excavation (Cu. Yds.)
38.67	3,300	41

NOTES:
Dimensions of bars are out-to-out.

Number of bars shown is for one Foundation B1.

GENERAL NOTES:

CONSTRUCTION SPECIFICATIONS: Arkansas State Highway and Transportation Department Standard Specifications for Highway Construction, 2014 Edition, with applicable Supplemental Specifications and Special Provisions. Section and Subsection refer to the Specifications unless otherwise noted in the plans.

DESIGN SPECIFICATIONS: AASHTO LRFD Specifications for Structural Supports for Highway Signs, Luminaires, and Traffic Signals, First Edition, 2015 with current interim revisions

Basic Wind Speed = 120 mph
Fatigue Category: I

This structure is approved for 250 square feet of sign area and a maximum sign weight (total of all signs) of 6000 lbs. Use of additional sign area or a heavier sign must be approved by the Engineer. If the structure height ("H") exceeds 30'-0", contact the Engineer.

FOUNDATION MATERIALS AND STRENGTHS:
Class S Concrete — f'c = 3,500 psi
Reinforcing Steel (Gr. 60, AASHTO M 31 or M 322, Type A) — fy = 60,000 psi

Spread footings for the structure have been designed assuming a factored bearing resistance of 2.0 ksf. Contractor shall be responsible for evaluating and verifying that the foundation soils are adequate to achieve the assumed factored bearing capacity, utilizing SPT (Standard Penetration Test), CPT (Cone Penetration Test), DCP (Dynamic Cone Penetration) test, or other suitable means, prior to or after footing excavation, whichever is appropriate. If the foundation soils are verified to be adequate, then the footing shall be constructed in accordance with the planned dimensions. Otherwise, the Design Engineer shall be contacted. Costs for foundation soil evaluation and verification shall be included in the item "STEEL TEE MOUNT SIGN STRUCTURE".

Structural steel sign support members shall comply with the following specifications:

Angles:	ASTM A709, Gr. 36 (Fy = 36,000 psi)
Plate, W-Section:	ASTM A709, Gr. 50 (Fy = 50,000 psi)
(1) Pipe:	ASTM A139, Gr. C, straight-seam welded (Fy = 42,000 psi), ASTM A500, Gr. B (Fy = 42,000 psi), ASTM A501, Gr. B (Fy = 50,000 psi)
Z-Shapes:	ASTM A709, Grade 36 (Fy = 36,000 psi)
Shim Plates:	ASTM A1011, SS, Grade 36, Type 2, or Grade 40
Square HSS Tubing:	ASTM A500, Gr. B (Fy = 46,000 psi), ASTM A501, Gr. B (Fy = 50,000 psi), ASTM A709, Gr. 36 (Fy = 36,000 psi)
Bolts:	ASTM F3125, Grade A325, Type 1
Locknuts - Approved Type:	ASTM A563, Grade DH or AASHTO M 292, Grade 2H
Washers:	ASTM F436
Nuts:	ASTM A563, Grade DH or AASHTO M 292, Grade 2H

(1) In addition to material requirements, all pipe used for welded applications shall have a maximum carbon equivalency (CE) of 0.4 using the following equation:

CE = %C + %Mn/6 + %Cu/40 + %Ni/20 + %Cr/10 - %Mo/50 - %V/10

The Contractor shall make check measurements in the field and make any adjustments necessary to meet the required clearances and to fit the new structure to the existing conditions.

Drawings show general features of design only. Shop drawings shall be made in accordance with Subsection 807.04, submitted, and approval secured before fabrication is begun.

Requests for substitution of structural steel shapes shown with shapes of greater size must be submitted by the Contractor to the Engineer for approval. Steels of equal or greater strengths will be accepted only when shown on the approved shop drawings. Shapes and materials shown in the plans will be the basis of payment and no additional compensation will be made for any adjustments due to substitutions.

All steel shall be galvanized according to Subsection 807.19. Steel completely encased in concrete may not be galvanized. Galvanized coating damaged during transport, handling or erection shall be field repaired in accordance with Subsection 807.88.

All main load carrying tension members greater than ½" in thickness shall conform to the requirements of the Longitudinal Charpy V-Notch test specified for Zone 1 minimum service temperature. This work and materials shall be paid for in accordance with Special Provision "STEEL SIGN STRUCTURES."

Truss field sections shall be shop assembled. Entire truss shall be fully assembled and lifted into place as one unit on to tower supports. All truss member connections shall be bolted connections.

All welding that is to be done during fabrication of structural steel, including temporary welds, shall be detailed on the shop drawings and submitted for approval. If additional welds are required, whether temporary or permanent, a formal request with detailed drawings shall be submitted to the Engineer for approval. All welding shall conform to Subsection 807.26 except welding of tubular sections shall conform to AWS D1.1 Structural Welding Code.

No circumferential butt welds will be allowed in any pipe sections.

All fillet welds of critical members shall be tested according to AWS D1.1 Structural Welding Code - Steel using the magnetic particle method. Critical welds shall include: column to base plate and truss bottom support to column.

Connections shall be bolted with high-strength bolts. Unless otherwise noted, bolts shall be ¾" diameter and open holes shall be $^{13}/_{16}$" diameter. Bolt spacing shall be 2¼" for ¾" diameter bolts unless otherwise noted. Bolts shall be placed with heads on the outside face of all members.

All truss frame bolts shall comply with ASTM F3125, Grade A325, Type 1, galvanized according to Subsection 807.06. Nuts and washers for ASTM F3125, Grade A325, Type 1 bolts shall be furnished and galvanized in accordance with Subsection 807.06.

Locknuts shall be equipped with nylon locking inserts or other approved type locking system. Locknuts shall be installed according to Manufacturer's recommendations.

Anchor bolts shall comply with AASHTO M 314, Grade 55, including Supplementary Requirement S1, and shall be galvanized according to Subsection 807.07. Nuts and washers for anchor bolts shall be furnished and galvanized in accordance with Subsection 807.07. Anchor bolts shall be pretensioned in accordance with Special Provision "STEEL SIGN STRUCTURES."

Shoring may be required to protect existing shoulders or other elements during excavation. Any shoring required shall not be paid for directly, but shall be considered incidental to the item "STEEL TEE MOUNT SIGN STRUCTURE." The excavations for the footings shall be backfilled before the structure is attached to the foundations.

DYNAMIC MESSAGE SIGN (WHEN APPLICABLE): The Dynamic Message Sign (DMS) supplier shall be responsible for the attachment method and materials used to attach the DMS and its accessories to the structure. The method of attachment shall not facilitate any corrosion of the structure.

For additional information regarding the DMS, see Special Provision "OVERHEAD DYNAMIC MESSAGE SIGN ASSEMBLY."

For location of each tee mount sign structure and associated foundation type to be used, refer to ITS and/or Sign Plans.

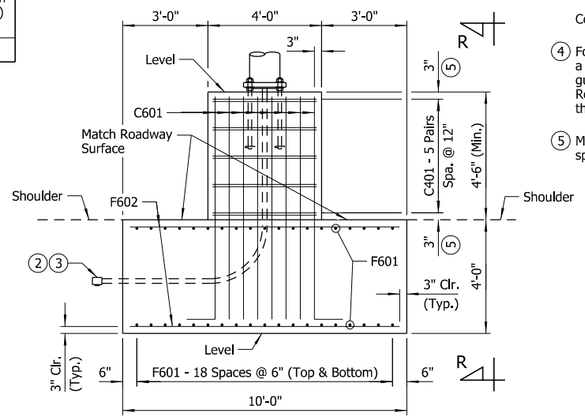

ELEVATION - FOUNDATION B1 (4)

Scale: ⅜" = 1'-0"

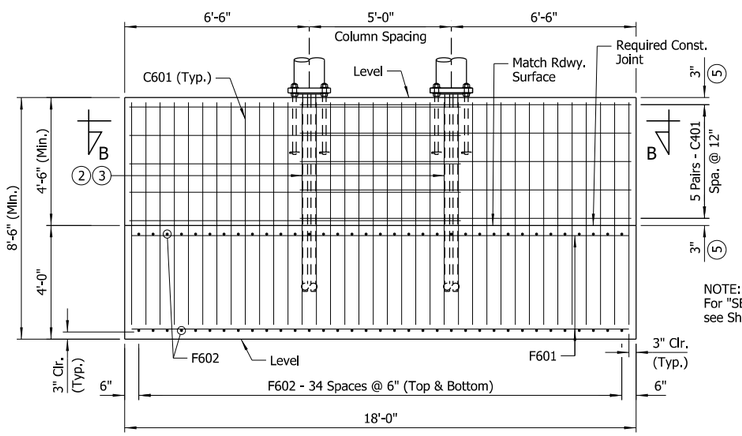

NOTE:
For "SECTION B-B", see Sheet 1 of 5.

VIEW R-R

Scale: ⅜" = 1'-0"

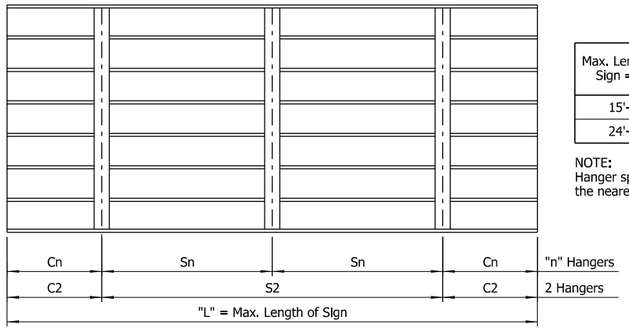

NOTE:
See sign details and plan sheets for number, size and dimensions of signs.

HANGER SPACING DETAILS FOR EXTRUDED PANEL SIGNS

No Scale

HANGER VARIABLES

(For Extruded Panel Signs)

Max. Length of Sign = "L"	"n" Hangers	Cantilever Length "Cn"	Hanger Spacing "Sn"
15'-0"	2 Hangers	0.21 x "L"	0.58 x "L"
24'-0"	3 Hangers	0.145 x "L"	0.355 x "L"

NOTE:
Hanger spacing and cantilever length shall be rounded to the nearest inch.

STATE OF ARKANSAS
LICENSED PROFESSIONAL ENGINEER
No.14498
ADAM B. HALL

Digitally Signed 07/28/2023
BRIDGE ENGINEER

(2) Conduit only required when Dyanmic Message Signs are to be attached to the structure or as directed by the Engineer.

(3) For details of conduit and cable fittings at each column, refer to Electrical and/or ITS Plans.

Cost to be included in other items of work.

(4) Foundation B1 is required when the foundation is located in a median, within the clear zone, and is not protected by guardrail or barrier. Foundation B1 requires adjacent Roadway Median Barrier to transition to match the ends of the pedestal. See Roadway Plans for additional information.

(5) Minor adjustments are allowed to maintain C401 12" spacing for foundations located in longitudinal grades.

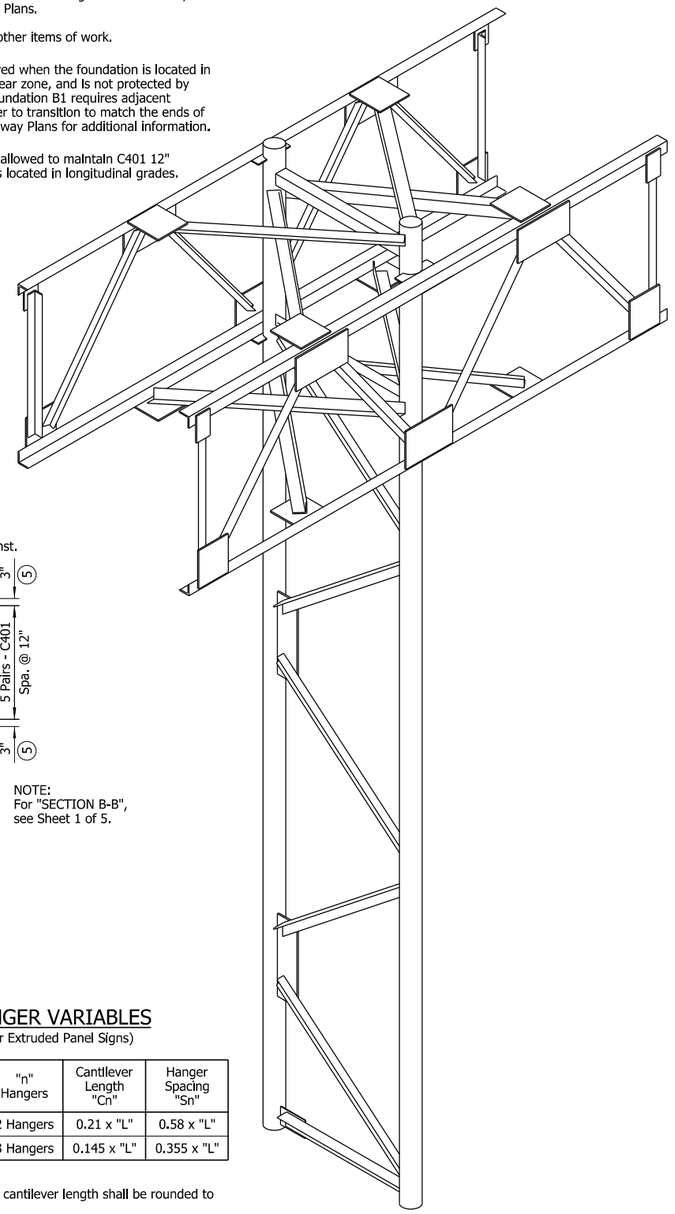

ISOMETRIC VIEW

No Scale

SHEET 4 OF 5
DETAILS OF STEEL TEE MOUNT SIGN STRUCTURE

ROUTE SEC.

ARKANSAS STATE HIGHWAY COMMISSION

LITTLE ROCK, ARK.

DRAWN BY: CSW DATE: SEP. 2022 FILENAME: b012326_tm4.dgn
CHECKED BY: ABH DATE: SEP. 2022 SCALE: As Shown
DESIGNED BY: CSW DATE: SEP. 2022

STR. NO. SEE TABLE DRAWING NO. 66360

JEskhner 7/28/2023 12:13:00 PM
WORKSPACE: ARDOT Bridge (2019)
Volume: E:\Projects\Bridge\Projects\2021\170176\0 - ARDOT 012326 Hwy 412 - Hwy 112\Drawings\b012326dgn\SS_5404_TM.dgn
REVISED DATE:

DATE REVISED	DATE REVISED	FED. ROAD DIST. NO.	STATE	JOB NO.	SHEET NO.	TOTAL SHEETS
		6	ARK.	012326	573	838
		SEE TABLE - TEE MOUNT SIGN STR. - 66361				

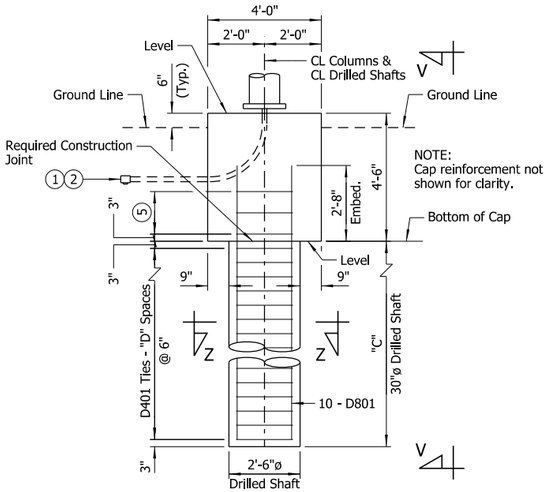

ELEVATION - FOUNDATION A2 (3)

Scale: ⅜" = 1'-0"

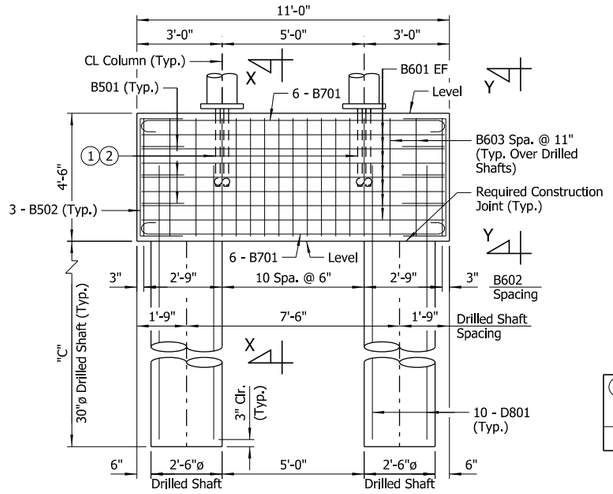

VIEW V-V

Scale: ⅜" = 1'-0"

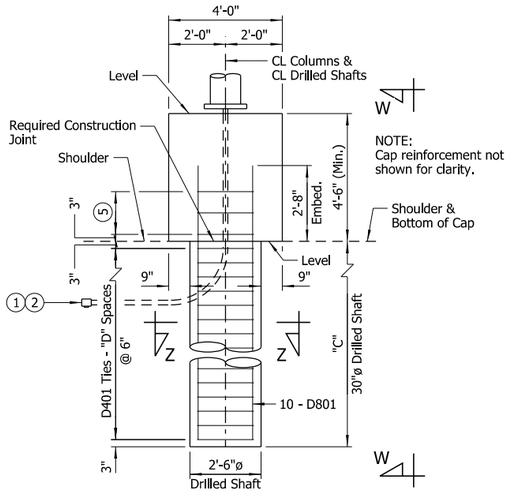

ELEVATION - FOUNDATION B2 (4)

Scale: ⅜" = 1'-0"

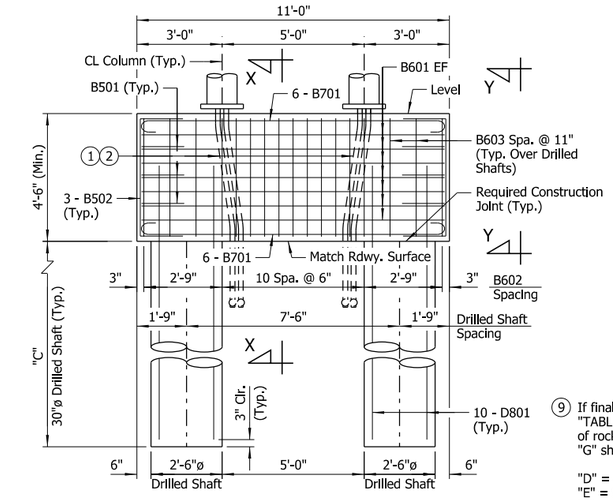

VIEW W-W

Scale: ⅜" = 1'-0"

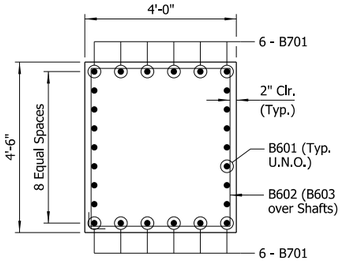

SECTION X-X

Scale: ½" = 1'-0"

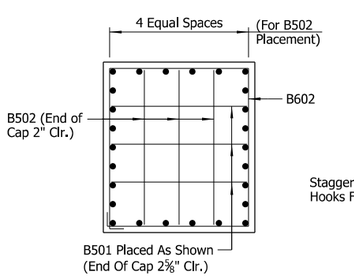

VIEW Y-Y

Scale: ½" = 1'-0"

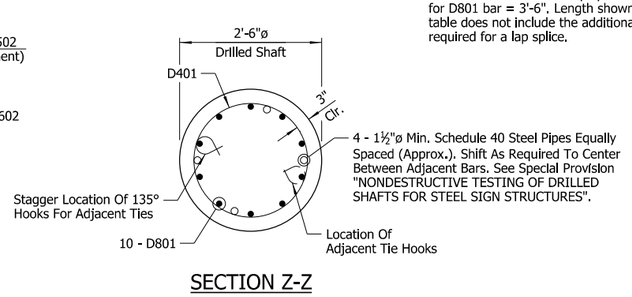

SECTION Z-Z

Scale: ¾" = 1'-0"

(1) Conduit only required when Dyanmic Message Signs are to be attached to the structure or as directed by the Engineer.

(2) For details of conduit and cable fittings at each column, refer to Electrical and/or ITS Plans.

Cost to be included in other Items of work.

(3) Foundation A2 allowed only when foundation is outside clear zone or is protected by guardrail or barrier.

(4) Foundation B2 is required when the foundation is located in a median, within the clear zone, and is not protected by guardrail or barrier. Foundation B2 requires adjacent Roadway Median Barrier to transition to match the ends of the cap. See Roadway Plans for additional information.

(5) C401 Ties - 2 Spaces @ 9"

APPROX. QUANTITIES FOR FOUNDATION A2 (FOR INFORMATION ONLY)

(6) CLASS S CONCRETE (CU. YDS.)	(7) REINFORCING STEEL (LBS.)	EXCAVATION (CU. YDS.)	DRILLED SHAFT (30" DIA.) (LIN. FT.)	CROSSHOLE SONIC LOGGING (30" DIA.) (EACH)
7.33	1,037	15	"G"	1

APPROX. QUANTITIES FOR FOUNDATION B2 (FOR INFORMATION ONLY)

(6) CLASS S CONCRETE (CU. YDS.)	(7) REINFORCING STEEL (LBS.)	DRILLED SHAFT (30" DIA.) (LIN. FT.)	CROSSHOLE SONIC LOGGING (30" DIA.) (EACH)
7.33	1,037	"G"	1

(6) Does not include Class S Concrete for Drilled Shafts

(7) Does not include D401 and D801 Bars in Drilled Shafts

(8) Tabulated SPT N60 values are raw SPT N values corrected by SPT hammer efficiency and represent average values along the plan shaft penetration. If the SPT N60 values in the foundation soils within 2 shaft diameters below the plan tip elevation are less than the average SPT N60 values along the plan shaft penetration, the Engineer shall be contacted.

(9) If final drilled shaft length is not shown in "TABLE OF VARIABLES" due to the presence of rock or other factors, variables "D" through "G" shall be determined as follows:

"D" = (Shaft Length in Ft. - 0.5) / 0.5
"E" = Shaft Length in Ft. x 4
"F" = Shaft Length + 2'-5"
"G" = Shaft Length x 2

(10) If "F" exceeds 60'-0", a lap splice is required for each D801 bar at the midpoint of the drilled shaft. Min. lap splice length for D801 bar = 3'-6". Length shown in table does not include the additional length required for a lap splice.

DRILLED SHAFT NOTES (FOUNDATIONS A2 & B2)

Drilled shafts shall conform to Special Provision "DRILLED SHAFT FOUNDATIONS FOR STEEL SIGN STRUCTURES". Drilled shafts will not be paid for directly but shall be considered subsidiary to the unit price bid for "STEEL TEE MOUNT SIGN STRUCTURE". Temporary casing may be required. Unless approved by the Engineer, permanent steel casing shall not be used.

Crosshole Sonic Logging (CSL) shall be performed on one drilled shaft at each foundation and as directed by the Engineer. Testing shall be performed in accordance with Special Provision "NONDESTRUCTIVE TESTING OF DRILLED SHAFTS FOR STEEL SIGN STRUCTURES".

Concrete and reinforcing steel placed in drilled shafts will not be paid for directly but shall be considered subsidiary to the unit price bid for "STEEL TEE MOUNT SIGN STRUCTURE". No additional payment shall be made for spacers, additional splices or bracing needed for assembly, shipping, handling or erecting.

Concrete in drilled shafts shall be Class "S" as modified by Special Provision "DRILLED SHAFT FOUNDATIONS FOR STEEL SIGN STRUCTURES".

Drilled shaft lengths shall be determined based on the results of exploratory borings, which shall be performed by the Contractor prior to shaft excavation.

If competent rock is not encountered in the exploratory boring, the Standard Penetration Test (SPT) blow count corrected by the hammer efficiency, N60, shall be used to determine shaft lengths. See "TABLE OF VARIABLES".

If competent rock is encountered in the exploratory boring within 25'-0" of planned top of drilled shaft, the shafts shall be founded a minimum of 3'-0" into rock and have a minimum length of 25'-0".

If competent rock is encountered in the exploratory boring below 25'-0" from planned top of drilled shaft, the shafts shall be founded a minimum of 3'-0" into rock or to the depth based on the SPT N60 value and associated shaft length in the "TABLE OF VARIABLES", whichever is shallower.

Testing results shall be submitted to the Engineer for review. Final drilled shaft lengths shall be approved by the Engineer prior to construction.

The cost of performing exploratory borings and in-situ strength testing shall be included in the item "STEEL TEE MOUNT SIGN STRUCTURE".

TABLE OF VARIABLES (9)

SPT N60 (8) (blows/ft.)	Min. Depth of Exploratory Boring	Drilled Shaft Length, "C"	"D"	"E"	"F" (10)	"G"
<5	-	Contact Engineer	-	-	-	-
5 To 7	72'-0"	67'-0"	133	268	69'-5"	134'-0"
7 To 9	60'-0"	55'-0"	109	220	57'-5"	110'-0"
9 To 11	45'-0"	40'-0"	79	160	42'-5"	80'-0"
11 To 13	36'-0"	31'-0"	61	124	33'-5"	62'-0"
>13	30'-0"	25'-0"	49	100	27'-5"	50'-0"

BAR LIST - FOUNDATION A2 OR B2

MARK	NO. REQ'D	LENGTH	"A"	"B"	P.D.
B501	6	6'-4"	3'-6"	1'-6"	2½"
B502	6	6'-10"	4'-0"	1'-6"	2½"
B601	14	10'-8"			Str.
B602	13	16'-10"			4½"
B603	4	11'-8"	3'-8"	4'-2"	4½"
B701	12	12'-4"			5¼"
C401	6	7'-4"			3"
D401	"E"	7'-4"			3"
D801	20	"F"			Str.

BAR BENDING DIAGRAMS

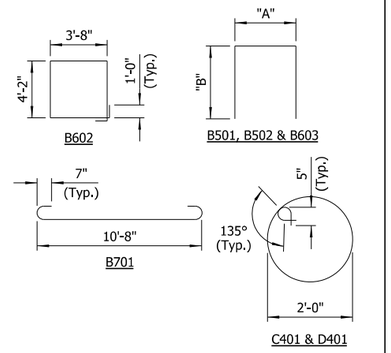

NOTES:
Dimensions of bars are out-to-out.

Number of bars shown is for one Foundation A2 or one Foundation B2.

LEGEND

U.N.O. = Unless Noted Otherwise
EF = Each Face

STATE OF ARKANSAS
LICENSED PROFESSIONAL ENGINEER
No.14498
ADAM B. HALL
Digitally Signed 07/28/2023
BRIDGE ENGINEER

SHEET 5 OF 5
DETAILS OF STEEL TEE MOUNT SIGN STRUCTURE

ROUTE SEC.

ARKANSAS STATE HIGHWAY COMMISSION
LITTLE ROCK, ARK.

DRAWN BY: CSW DATE: SEP. 2022 FILENAME: b012326_tm5.dgn
CHECKED BY: ABH DATE: SEP. 2022 SCALE: As Shown
DESIGNED BY: CSW DATE: SEP. 2022

STR. NO. SEE TABLE DRAWING NO. 66361

JESshmer 7/28/2023 12:13:01 PM
WORKSPACE: ARDOT Bridge (2019)
Workset: Model:C:\Bridge\Projects\2017\17017660 - ARDOT 012326 Hwy 412 - Hwy 112\Drawings\sht\012326rSS_S405_TM.dgn
REVISED DATE:

DATE REVISED	DATE REVISED	FED. RD. DIST. NO.	STATE	JOB NO.	SHEET NO.	TOTAL SHEETS
		6	ARK.	012326	574	838
		CROSS SECTIONS				
(2)						

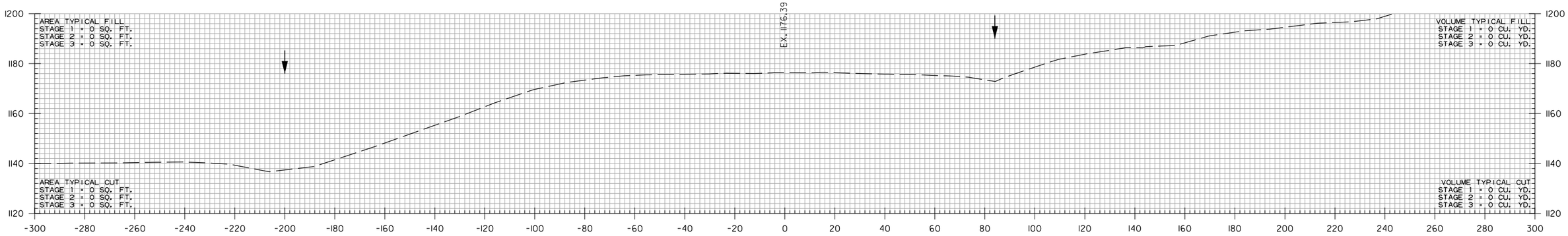

145+68.03

STA. 145+68.03 BEGIN JOB 012326
BEGIN LT. MAIN LANES

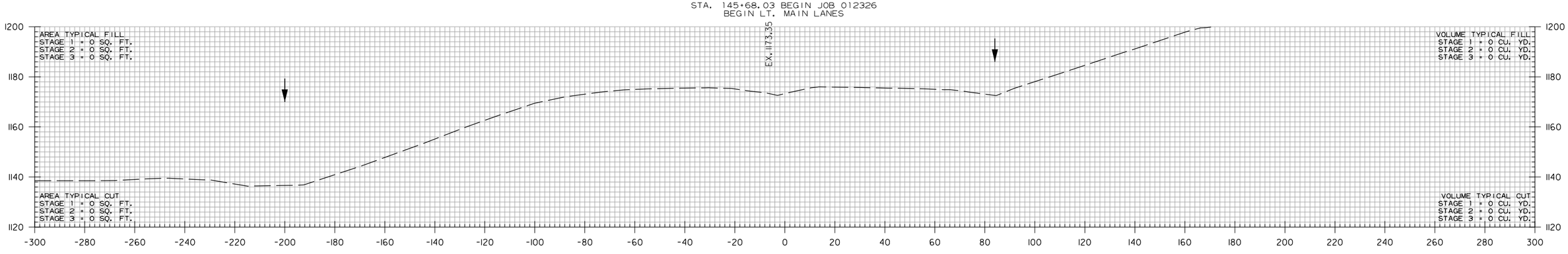

145+00.00

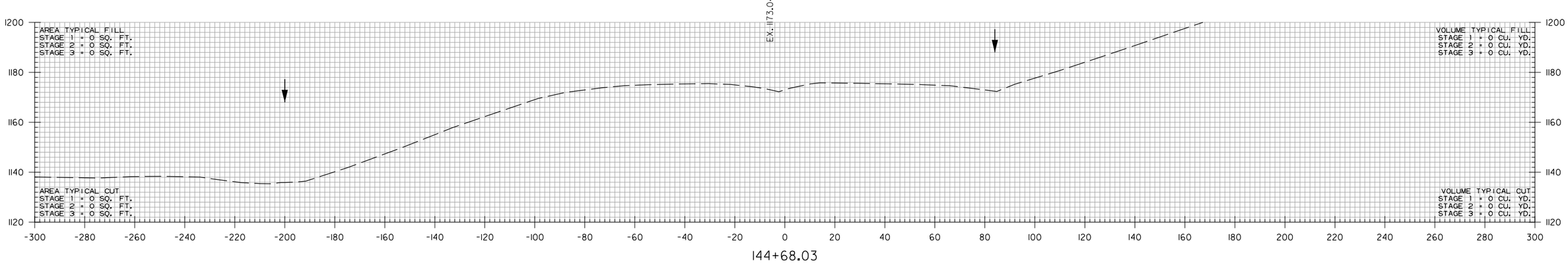

144+68.03

STA. 144+68.03 BEGIN 100' TRANSITION LT. MAIN LANES

STA. 144+68.03 TO STA. 145+68.03

WBCallaway 7/17/2023 5:06:00 PM
WORKSPACE: AHTD
L:\2017\170176\60 - ARDOT 012326 Hwy 412 - Hwy 112\Drawings\r012326_CX_MNL_01.dgn
REVISED DATE:

DATE REVISED	DATE REVISED	FED. RD. DIST. NO.	STATE	JOB NO.	SHEET NO.	TOTAL SHEETS
		6	ARK.	012326	575	838
		CROSS SECTIONS				
②						

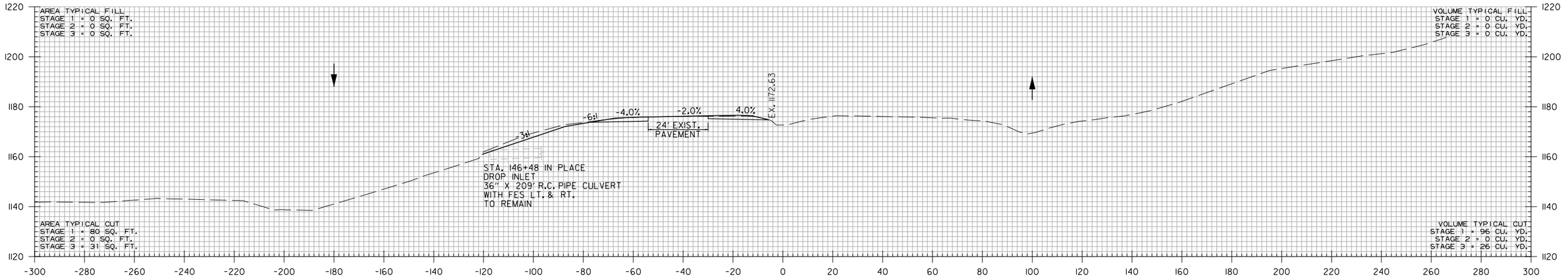

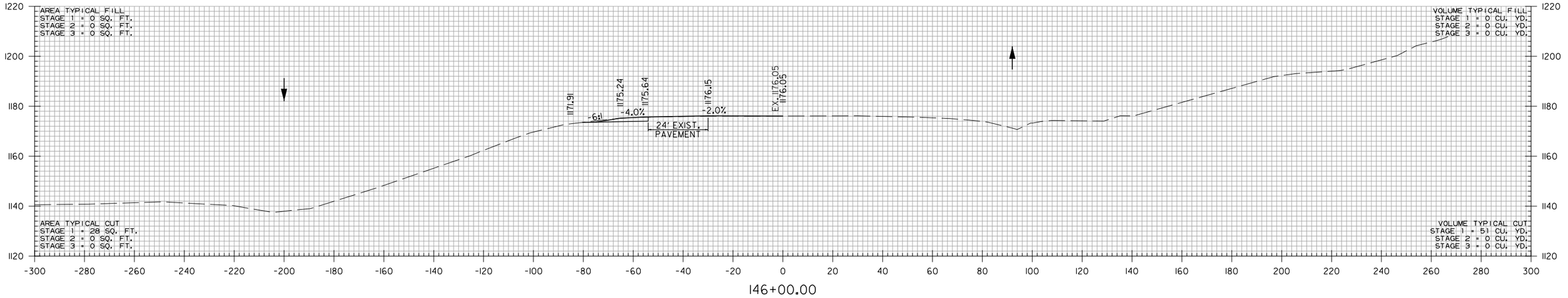

STA. 146+00 TO STA. 146+48.26

WBCallaway 7/17/2023 5:06:00 PM
WORKSPACE: AHTD
L:\20\T\T017660 - ARDOT 012326 Hwy 412 - Hwy 112\Drawings\r012326_CX_MNL_01.dgn
REVISED DATE:

DATE REVISED	DATE REVISED	FED. RD. DIST. NO.	STATE	JOB NO.	SHEET NO.	TOTAL SHEETS
		6	ARK.	012326	576	838
		CROSS SECTIONS				
(2)						

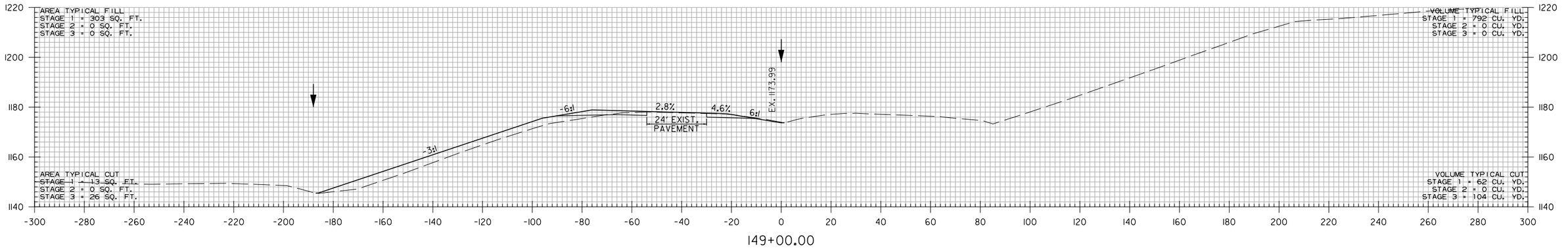

149+00.00

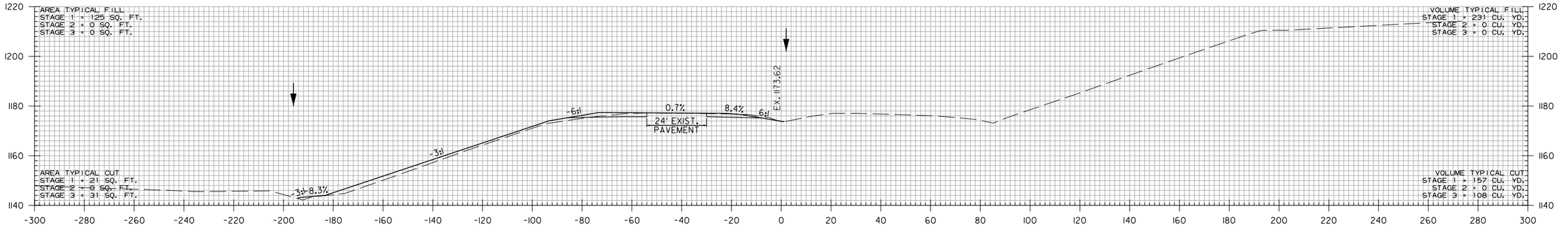

148+00.00

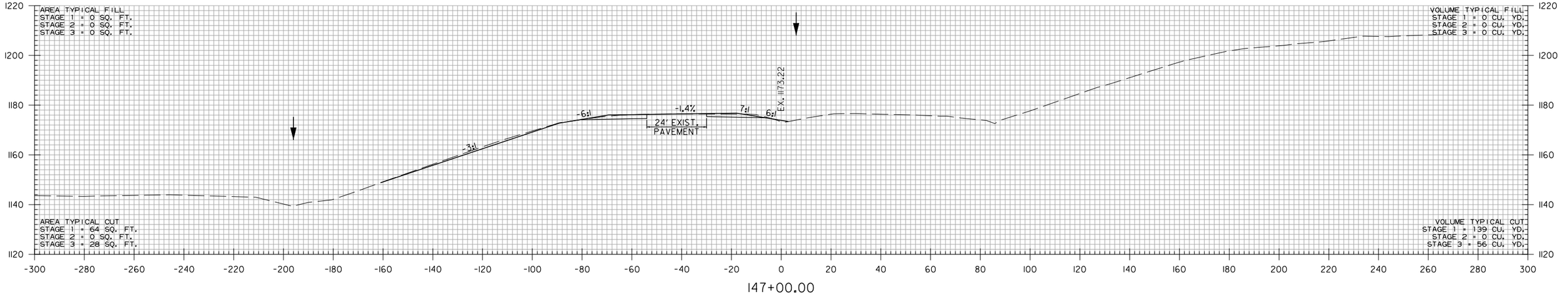

147+00.00

STA. 146+73.33 BEGIN SUPERELEVATION

STA. 147+00 TO STA. 149+00

WBCallaway 7/17/2023 5:06:00 PM
WORKSPACE: AHTD
L:\2017\17017660 - ARDOT 012326 Hwy 412 - Hwy 112\Drawings\r012326_CX_MNL_01.dgn
REVISED DATE:

DATE REVISED	DATE REVISED	FED. RD. DIST. NO.	STATE	JOB NO.	SHEET NO.	TOTAL SHEETS
		6	ARK.	012326	577	838
		CROSS SECTIONS				
②						

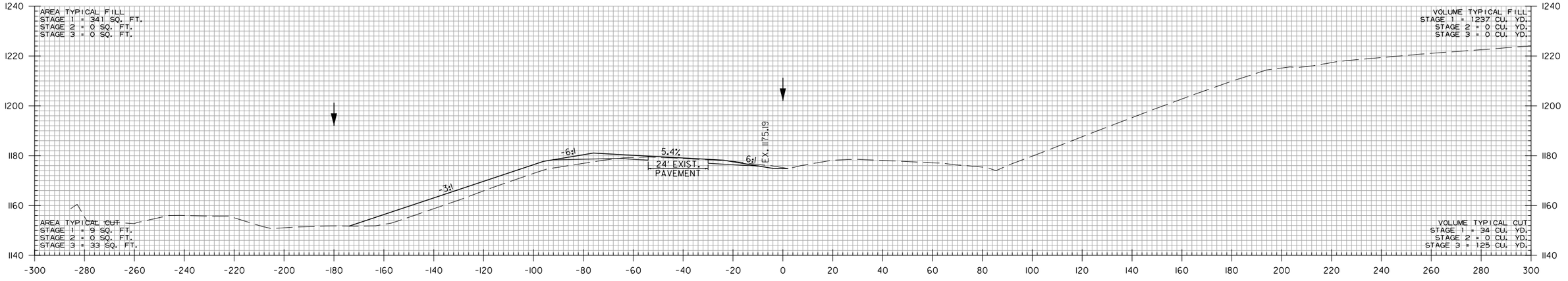

151+00.00

STA. 150+23.33 MAX. SUPERELEVATION (0.054'/')

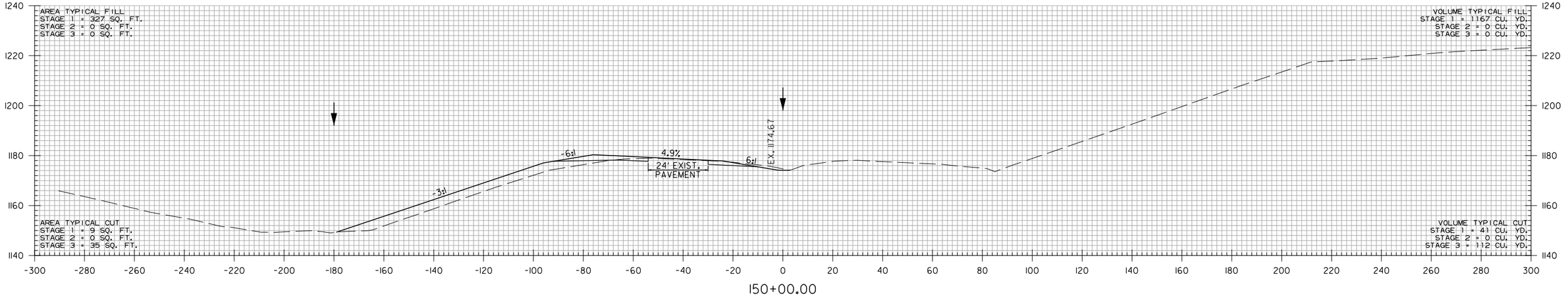

150+00.00

STA. 150+00 TO STA. 151+00

WBCallaway 7/17/2023 5:06:01 PM
WORKSPACE: AHTD
L:\2017\170176\60 - ARDOT 012326 Hwy 412 - Hwy 112\Drawings\r012326_CX_MNL_01.dgn
REVISED DATE:

DATE REVISED	DATE REVISED	FED. RD. DIST. NO.	STATE	JOB NO.	SHEET NO.	TOTAL SHEETS
		6	ARK.	012326	578	838
		CROSS SECTIONS				
②						

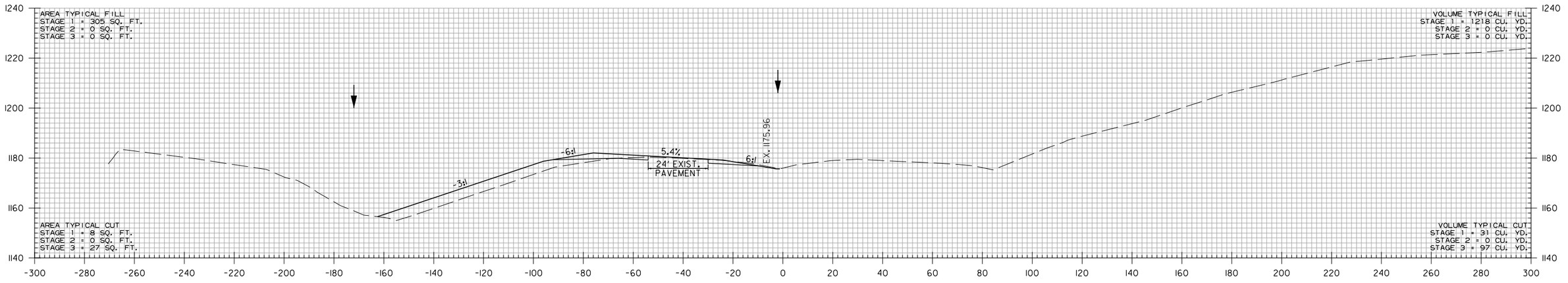

153+00.00

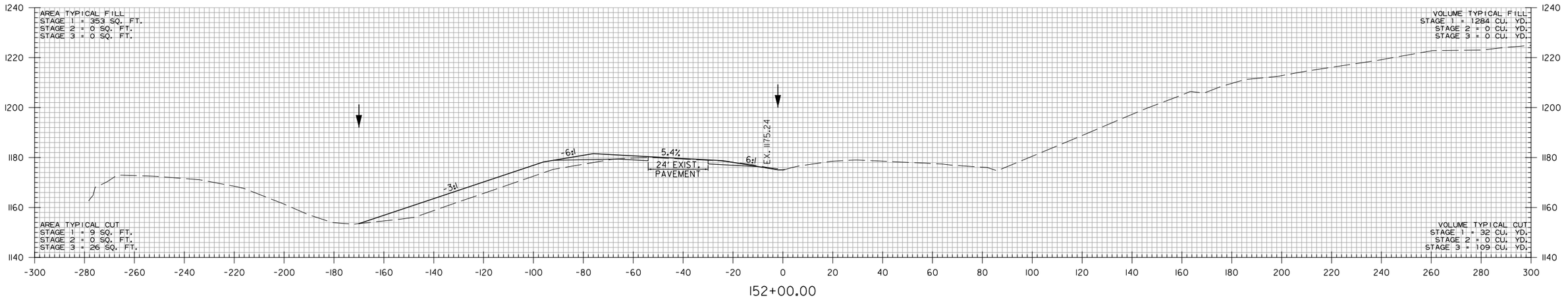

152+00.00

STA. 152+00 TO STA. 153+00

WBCalloway 7/17/2023 5:06:01 PM
WORKSPACE: AHTD
L:\20\T\T01\660 - ARDOT 012326 Hwy 412 - Hwy 112\Drawings\r012326_CX_MNL_01.dgn
REVISED DATE:

DATE REVISED	DATE REVISED	FED. RD. DIST. NO.	STATE	JOB NO.	SHEET NO.	TOTAL SHEETS
		6	ARK.	012326	579	838
		CROSS SECTIONS				
(2)						

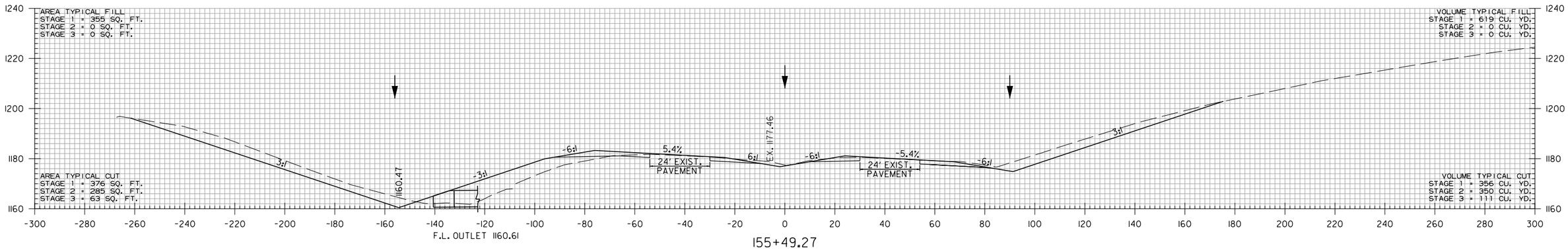

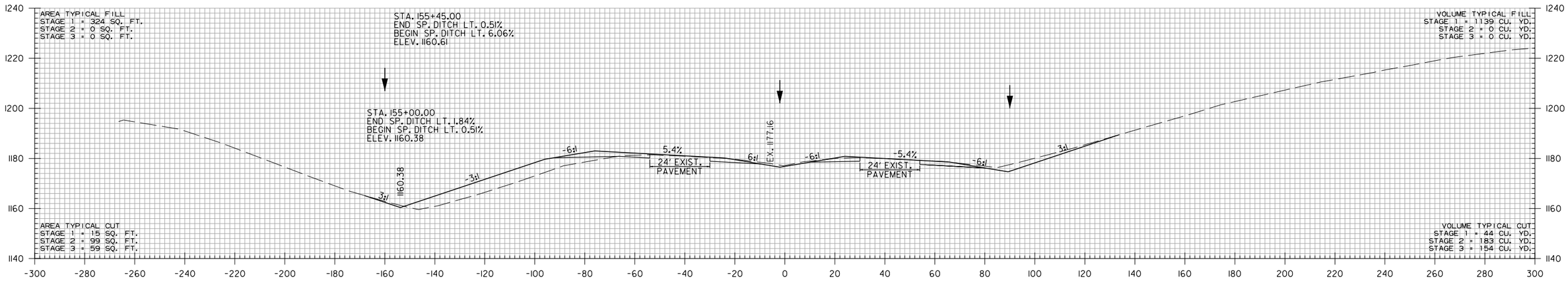

STA. 154+53.19 BEGIN RT. MAIN LANES

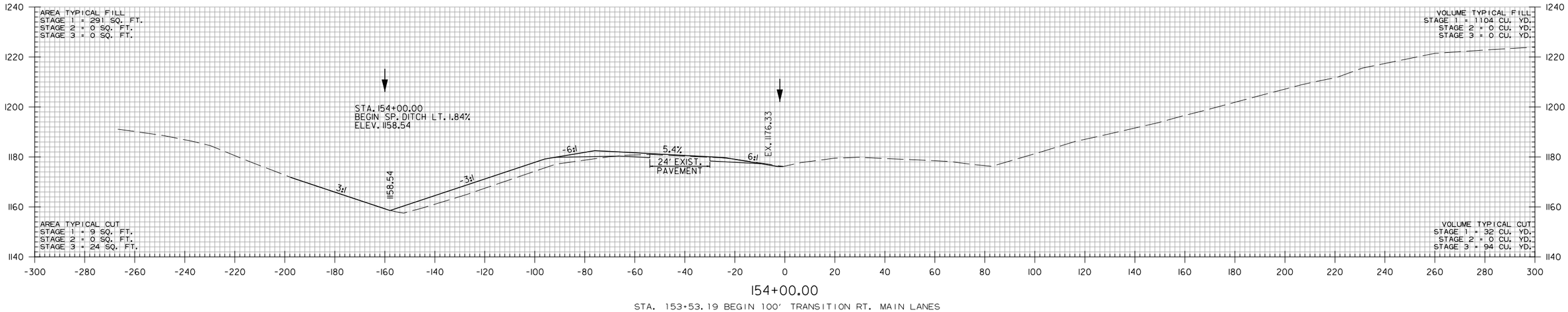

STA. 153+53.19 BEGIN 100' TRANSITION RT. MAIN LANES

STA. 154+00 TO STA. 155+49.27

WBCallaway 7/17/2023 5:06:01 PM
WORKSPACE: AHTD
L:\201\1701660 - ARDOT 012326 Hwy 412 - Hwy 112\Drawings\r012326_CX_MNL_01.dgn
REVISED DATE:

DATE REVISED	DATE REVISED	FED. RD. DIST. NO.	STATE	JOB NO.	SHEET NO.	TOTAL SHEETS
		6	ARK.	012326	580	838
		CROSS SECTIONS				
②						

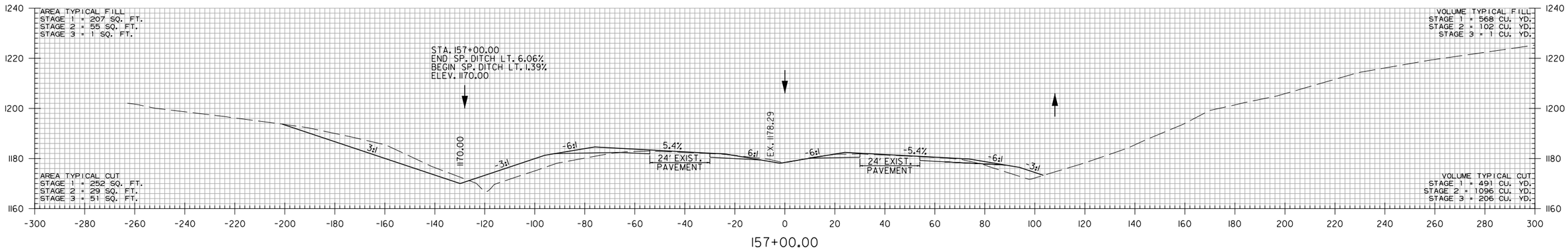

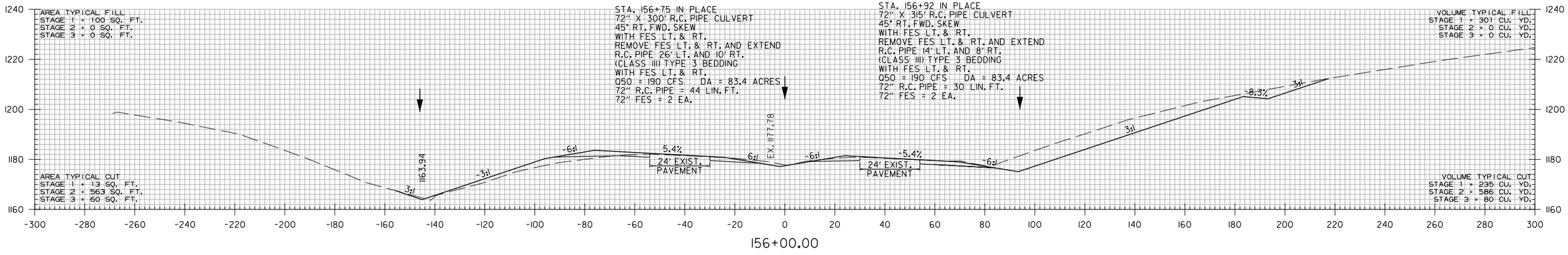

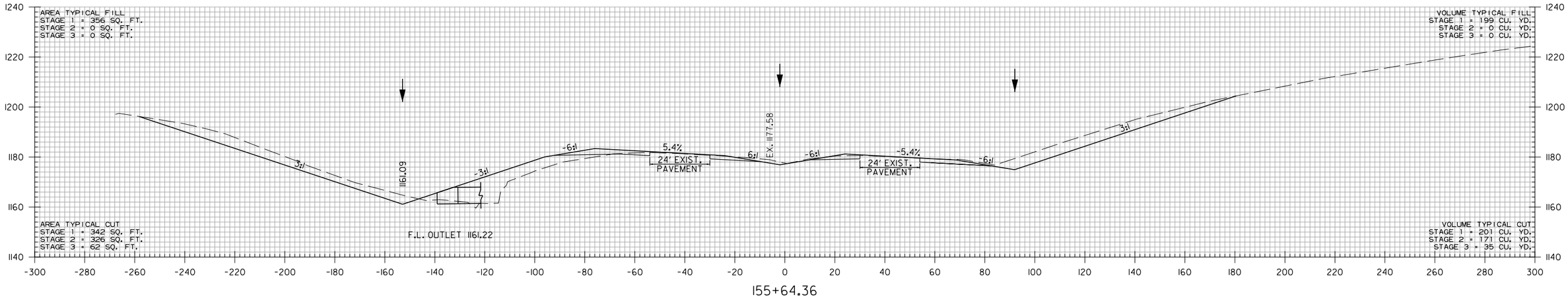

STA. 155+64.36 TO STA. 157+00

WBCallaway 7/17/2023 5:06:01 PM
WORKSPACE: AHTD
L:\2017\170\T660 - ARDOT 012326 Hwy 412 - Hwy 112\Drawings\r012326_CX_MNL_01.dgn
REVISED DATE:

DATE REVISED	DATE REVISED	FED. RD. DIST. NO.	STATE	JOB NO.	SHEET NO.	TOTAL SHEETS
		6	ARK.	012326	581	838
		CROSS SECTIONS				
②						

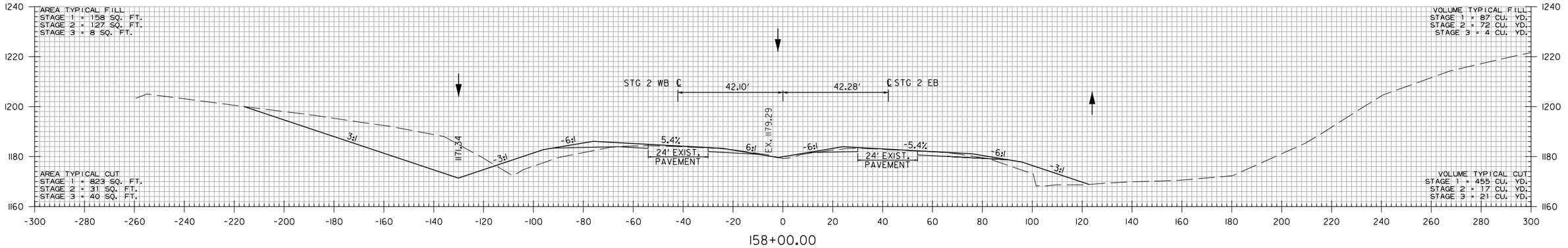

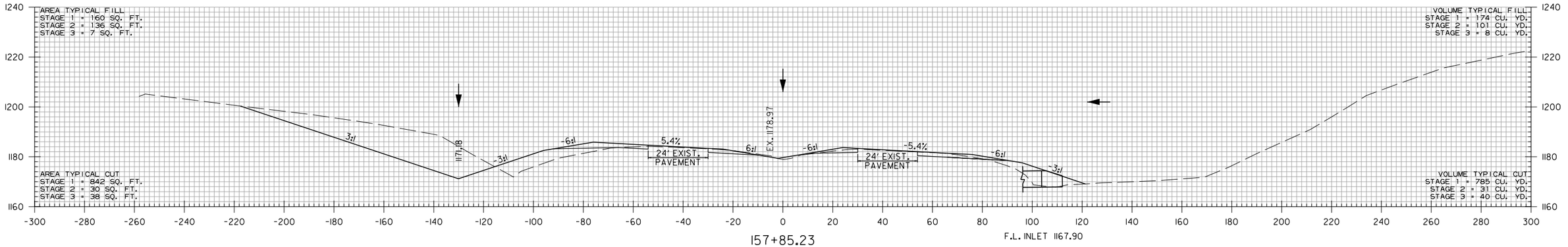

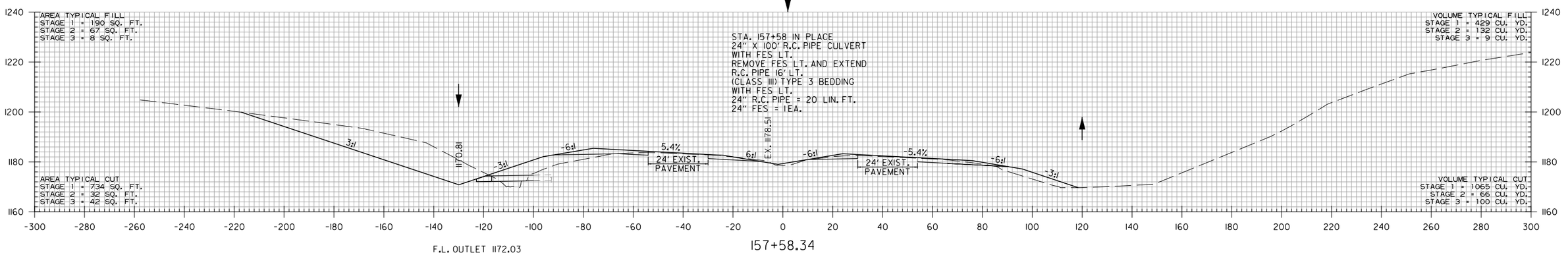

STA. 157+58.34 TO STA. 158+00

WBCalloway 7/17/2023 5:06:01PM
WORKSPACE: AHTD
L:\201\1701\660 - ARDOT 012326 Hwy 412 - Hwy 112\Drawings\r012326_CX_MNL_01.dgn
REVISED DATE:

DATE REVISED	DATE REVISED	FED. RD. DIST. NO.	STATE	JOB NO.	SHEET NO.	TOTAL SHEETS
		6	ARK.	012326	582	838
		CROSS SECTIONS				

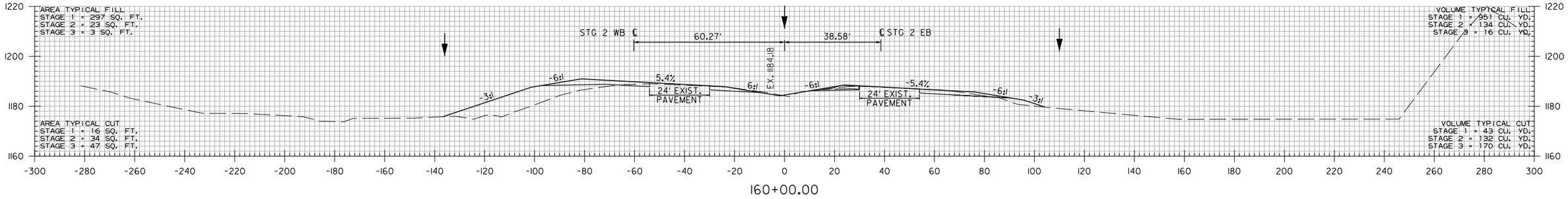

160+00.00

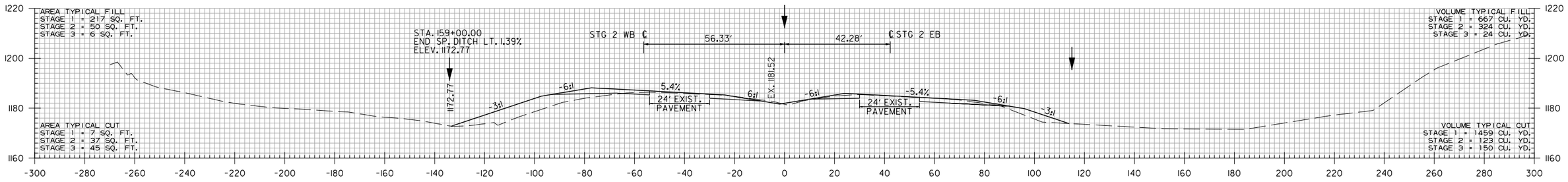

159+00.00

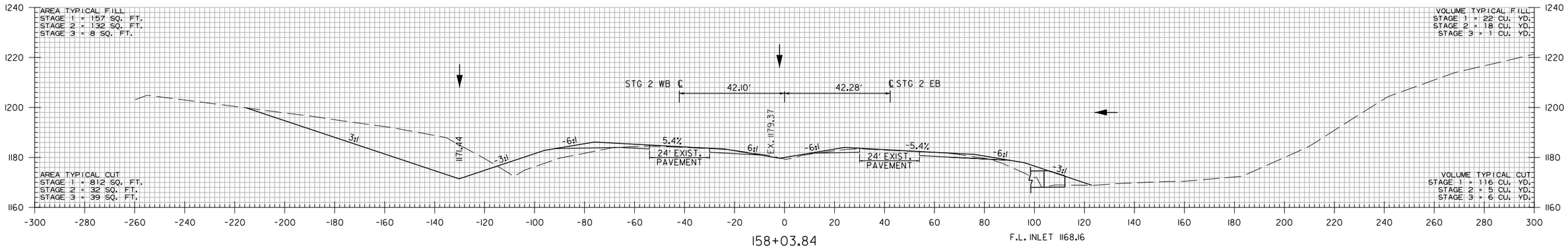

158+03.84

F.L. INLET 1168.16

STA. 158+03.84 TO STA. 160+00

WBCalloway 7/17/2023 5:06:02 PM
WORKSPACE: AHTD
L:\2017\1701660 - ARDOT 012326 Hwy 412 - Hwy 112\Drawings\r012326_CX_MNL_01.dgn
REVISED DATE:

DATE REVISED	DATE REVISED	FED. RD. DIST. NO.	STATE	JOB NO.	SHEET NO.	TOTAL SHEETS
		6	ARK.	012326	583	838
		CROSS SECTIONS				

(2)

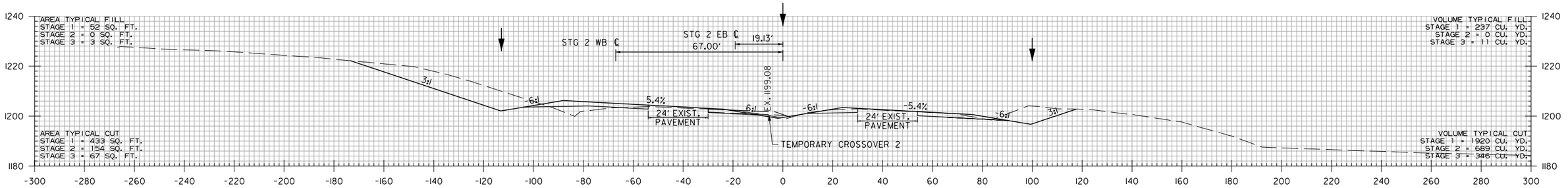

164+00.00

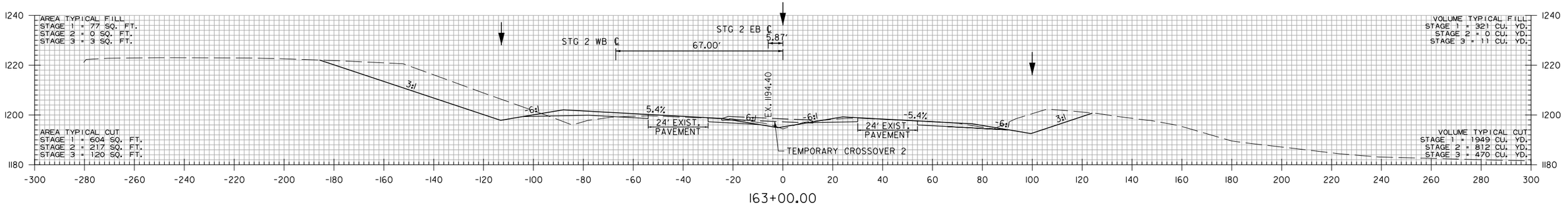

163+00.00

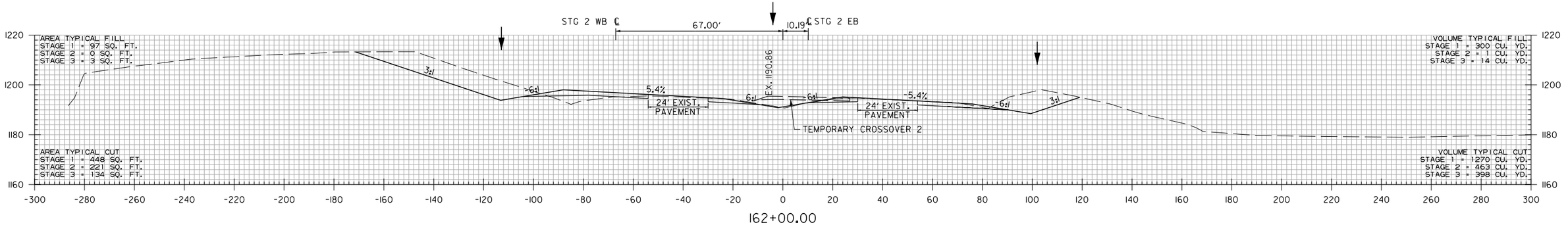

162+00.00

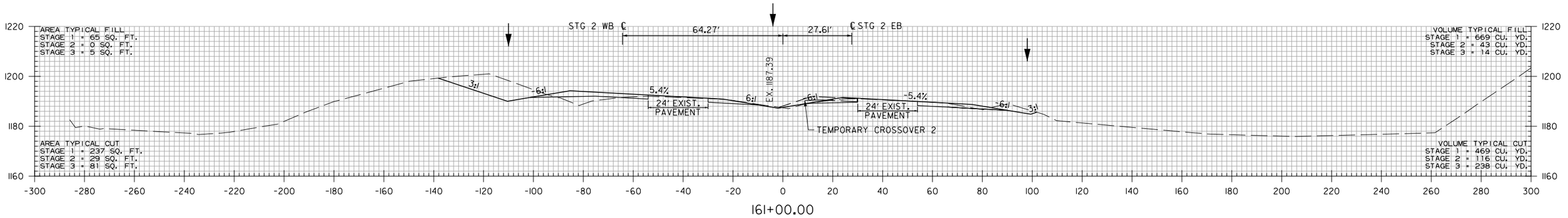

161+00.00

STA. 161+00 TO STA. 164+00

WBCalloway 7/17/2023 5:06:02 PM
WORKSPACE: AHTD
L:\2017\17017660 - ARDOT 012326 Hwy 412 - Hwy 112\Drawings\r012326_CX_MNL_01.dgn
REVISED DATE:

DATE REVISED	DATE REVISED	FED. RD. DIST. NO.	STATE	JOB NO.	SHEET NO.	TOTAL SHEETS
		6	ARK.	012326	584	838
		CROSS SECTIONS				

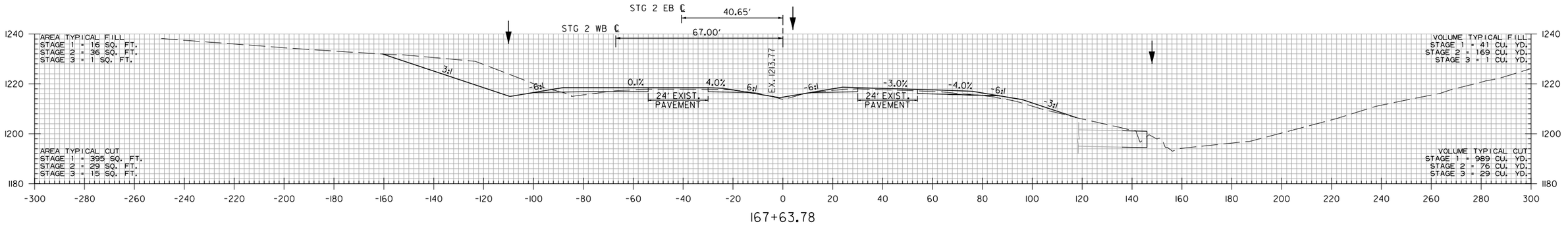

167+63.78

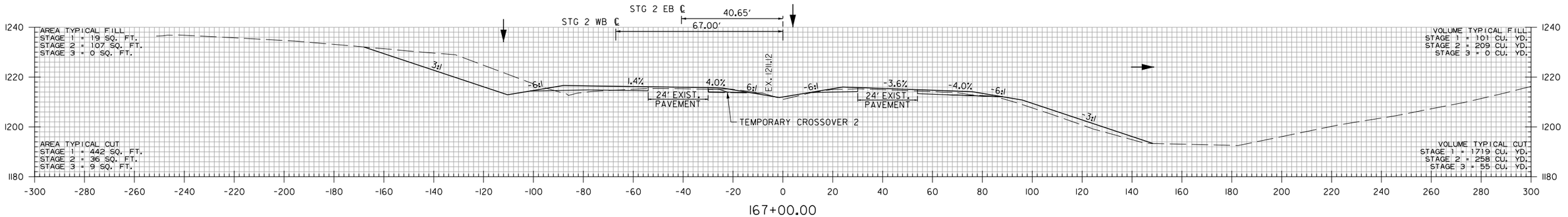

167+00.00

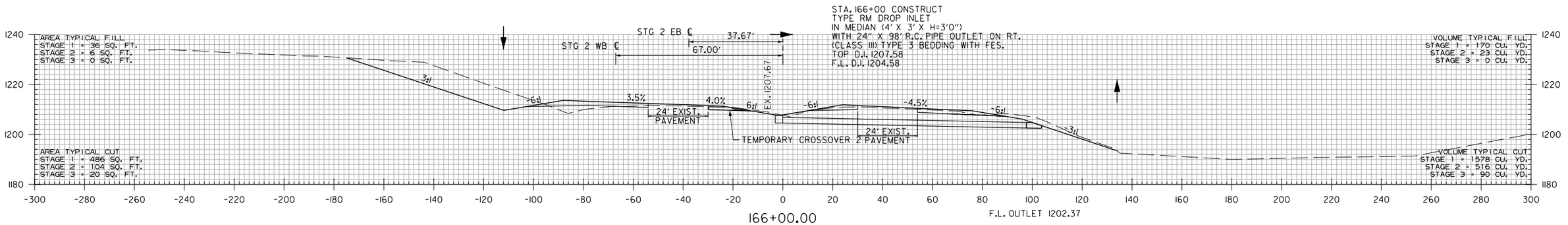

166+00.00

F.L. OUTLET 1202.37

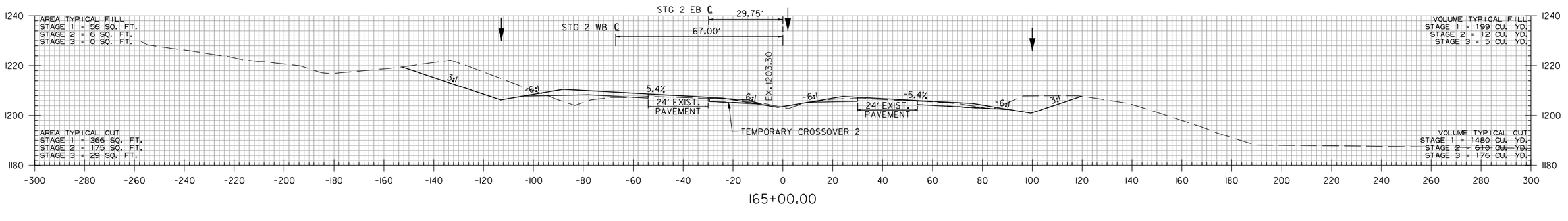

165+00.00

STA. 165+00 TO STA. 167+63.78

WBCalloway 7/17/2023 5:06:02 PM
WORKSPACE: AHTD
L:\2017\170176\60 - ARDOT 012326 Hwy 412 - Hwy 112\Drawings\r012326_CX_MNL_01.dgn
REVISED DATE:

DATE REVISED	DATE REVISED	FED. RD. DIST. NO.	STATE	JOB NO.	SHEET NO.	TOTAL SHEETS
		6	ARK.	012326	585	838
		CROSS SECTIONS				

(2)

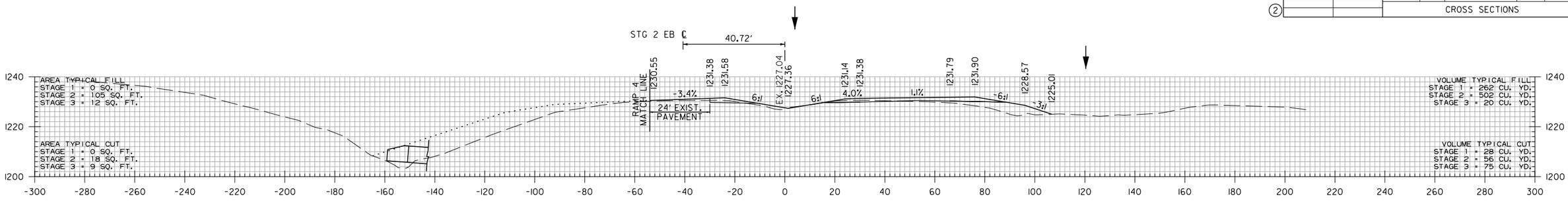

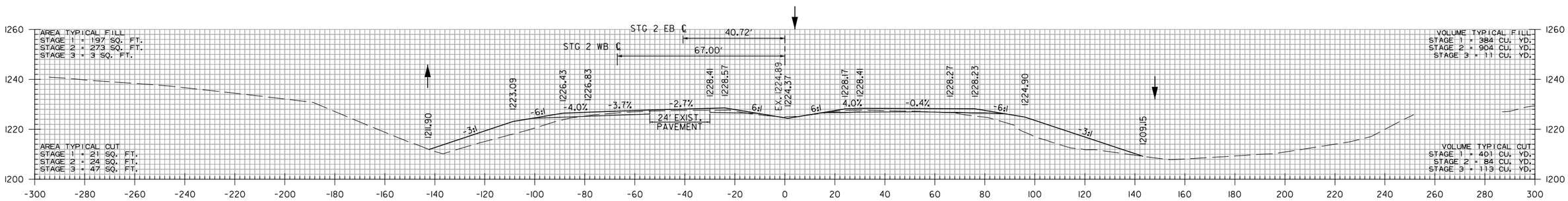

STA. 169+23.05 BEGIN SUPERELEVATION

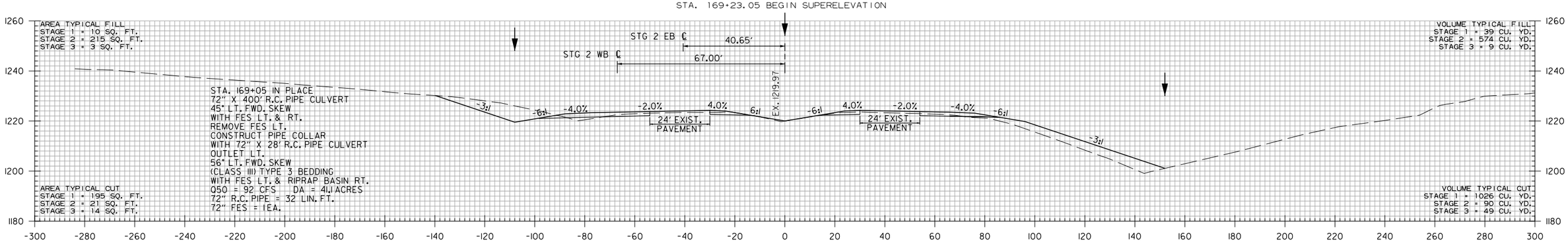

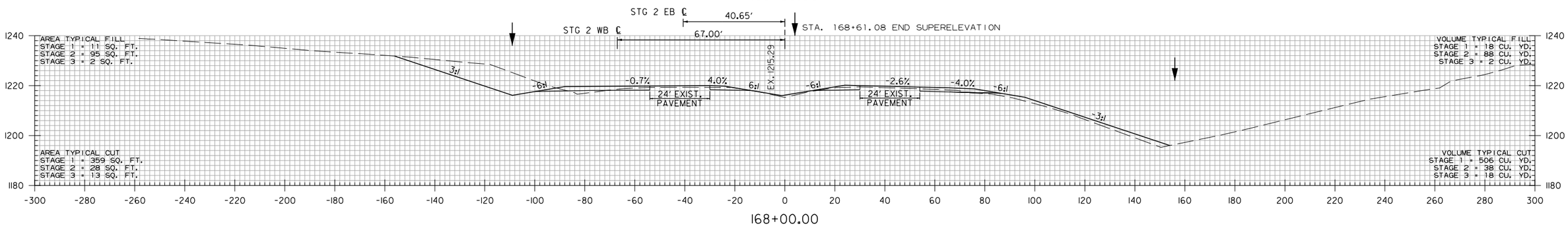

STA. 168+00 TO STA. 170+71.70

WBCallaway 7/17/2023 5:06:02 PM
WORKSPACE: AHTD
L:\2017\17017660 - ARDOT 012326 Hwy 412 - Hwy 112\Drawings\r012326_CX_MNL_01.dgn
REVISED DATE:

DATE REVISED	DATE REVISED	FED. RD. DIST. NO.	STATE	JOB NO.	SHEET NO.	TOTAL SHEETS
		6	ARK.	012326	586	838
		CROSS SECTIONS				

(2)

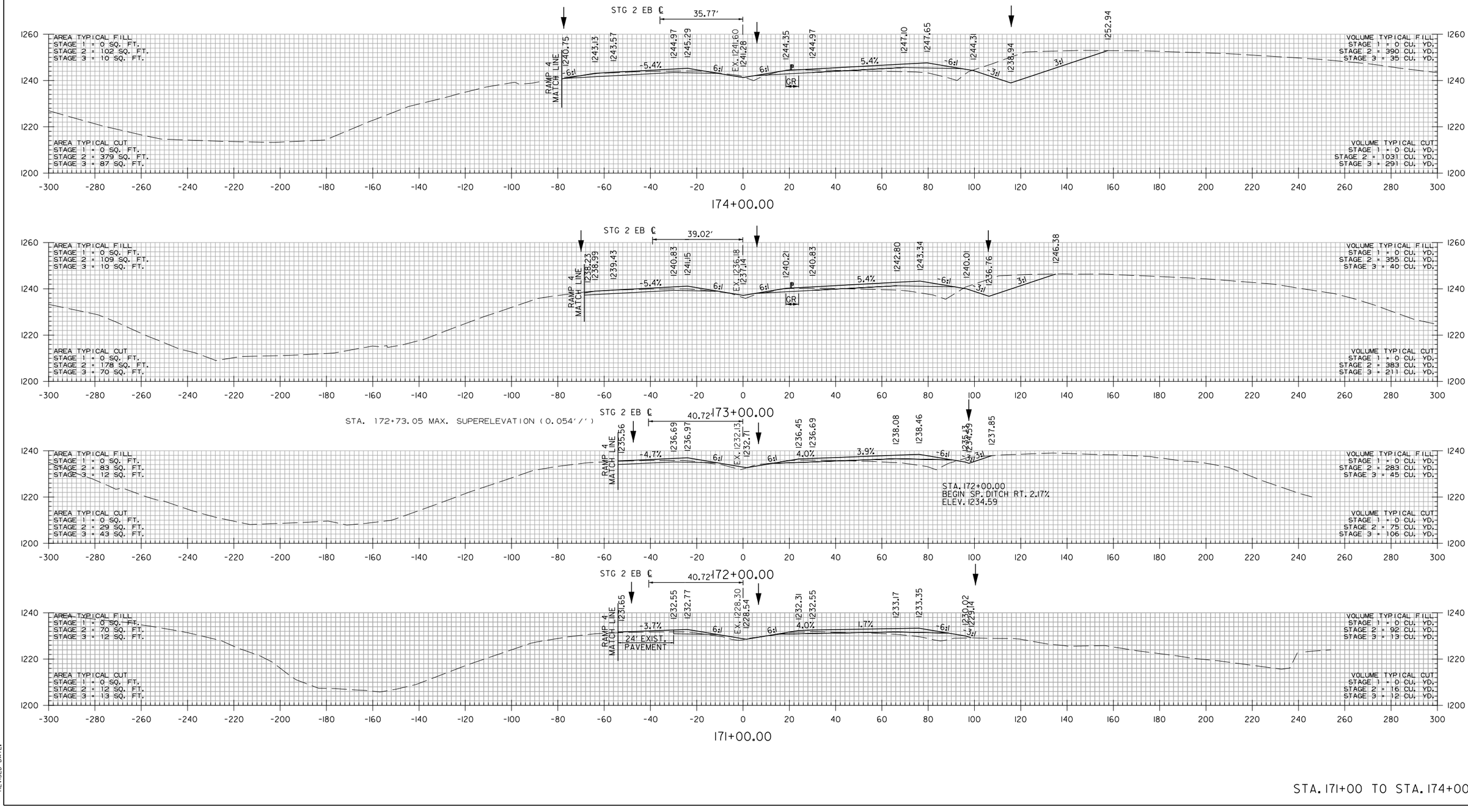

STA. 171+00 TO STA. 174+00

WBCallaway 7/17/2023 5:06:03 PM
WORKSPACE: AHTD
L:\201\1701660 - ARDOT 012326 Hwy 412 - Hwy 112\Drawings\r012326_CX_MNL_01.dgn
REVISED DATE:

DATE REVISED	DATE REVISED	FED. RD. DIST. NO.	STATE	JOB NO.	SHEET NO.	TOTAL SHEETS
		6	ARK.	012326	587	838
		CROSS SECTIONS				

(2)

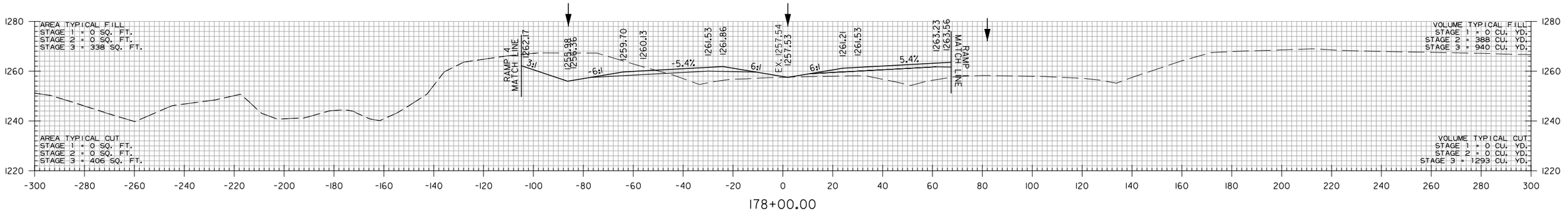

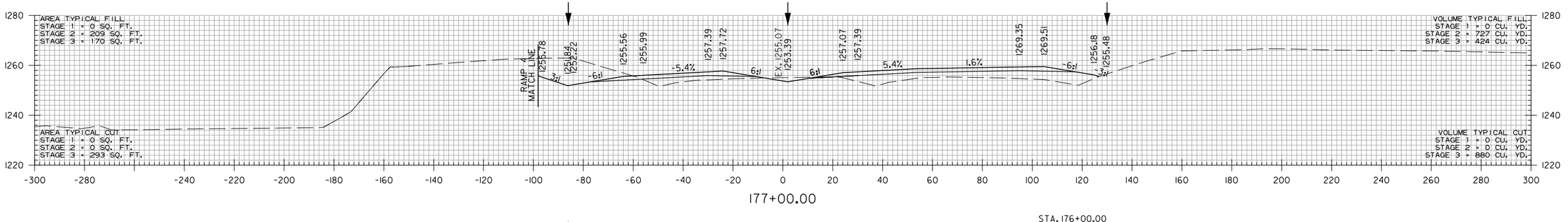

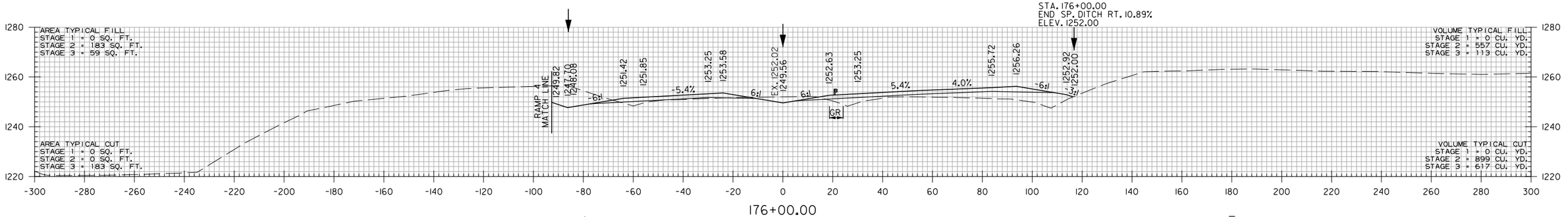

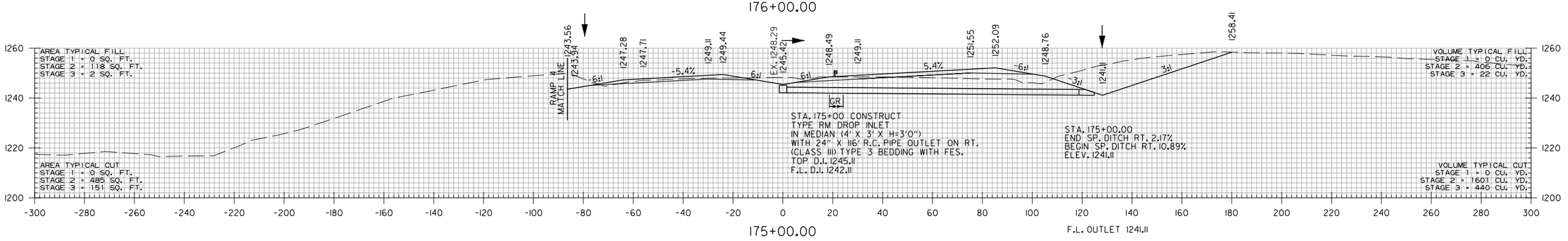

STA. 175+00 TO STA. 178+00

WBCalloway 7/17/2023 5:06:03 PM
WORKSPACE: AHTD
L:\2017\170176\60 - ARDOT 012326 Hwy 412 - Hwy 112\Drawings\r012326.CX_MNL.01.dgn
REVISED DATE:

DATE REVISED	DATE REVISED	FED. RD. DIST. NO.	STATE	JOB NO.	SHEET NO.	TOTAL SHEETS
		6	ARK.	012326	588	838
		CROSS SECTIONS				

(2)

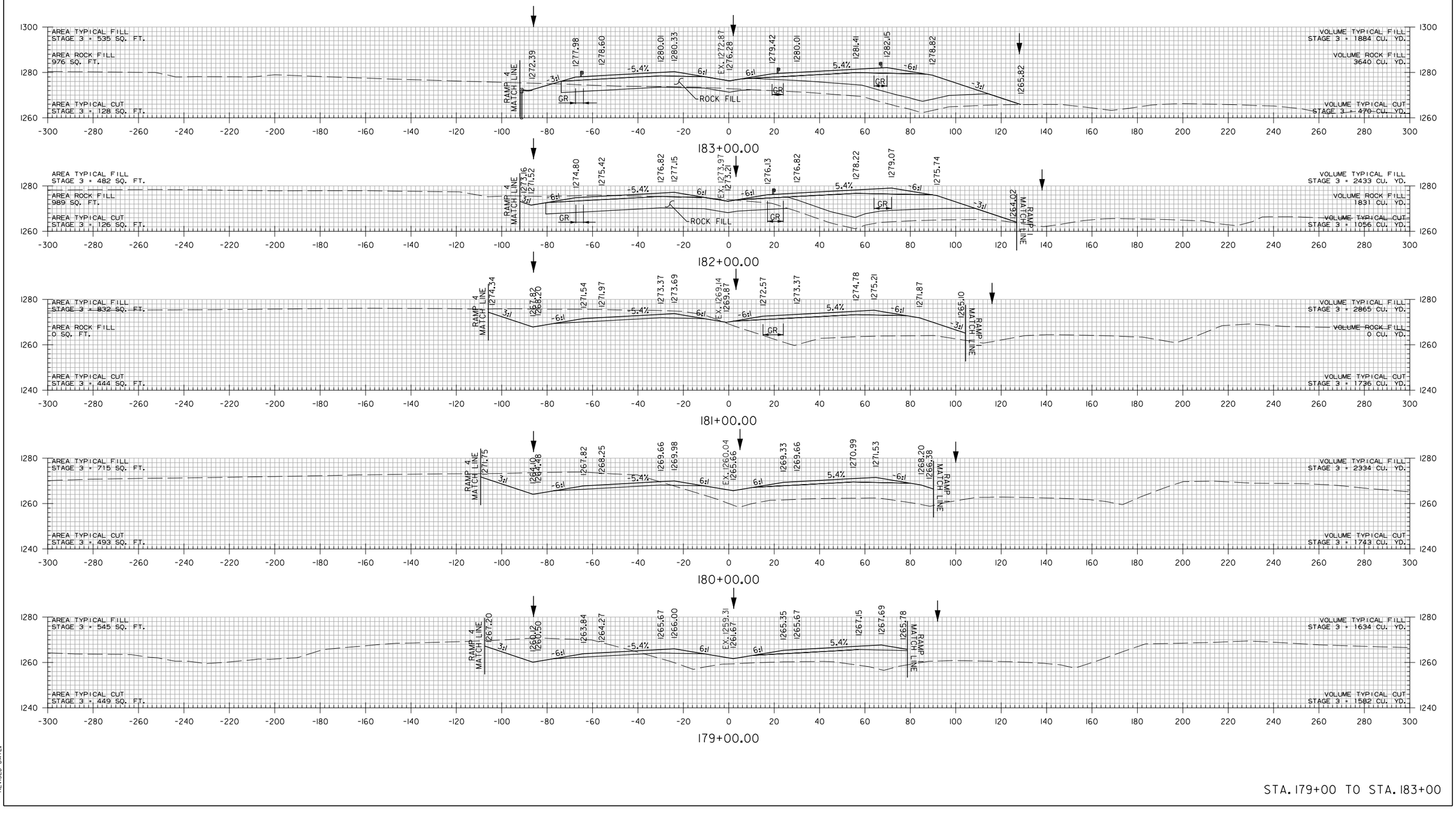

STA. 179+00 TO STA. 183+00

WBCallaway 7/17/2023 5:06:03 PM
WORKSPACE: AHTD
L:\2017\1701760 - ARDOT 012326 Hwy 412 - Hwy 112\Drawings\r012326_CX_MNL_01.dgn
REVISED DATE:

DATE REVISED	DATE REVISED	FED. RD. DIST. NO.	STATE	JOB NO.	SHEET NO.	TOTAL SHEETS
		6	ARK.	012326	589	838
		CROSS SECTIONS				
②						

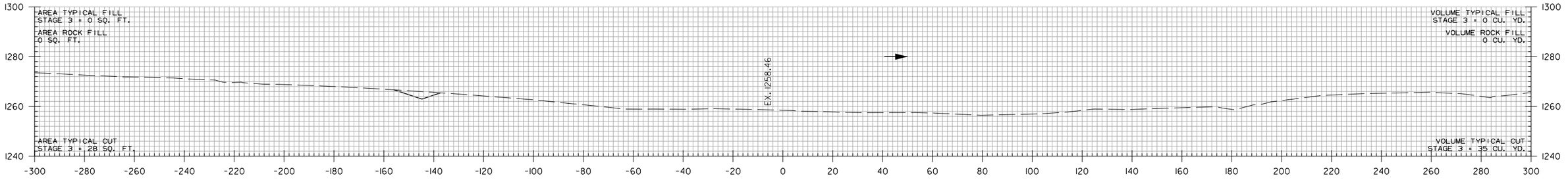

STA. 185+50.00
BEGIN SP. DITCH LT. -8.39%
ELEV. 1268.64

186+17.86

STA. 186+17.86 BEGIN TOE OF SLOPE

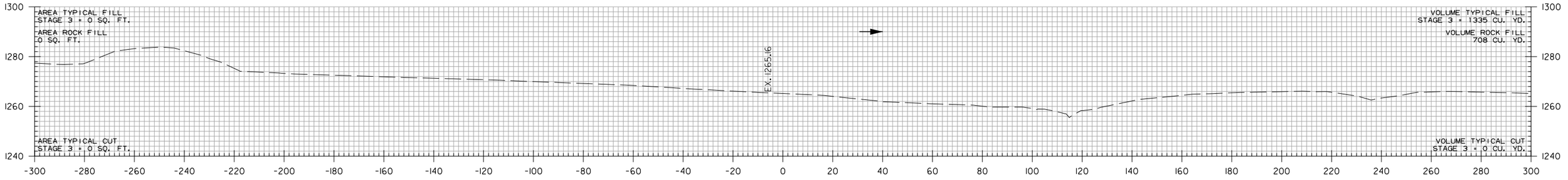

184+99.80

STA. 184+99.80 END TOE OF SLOPE

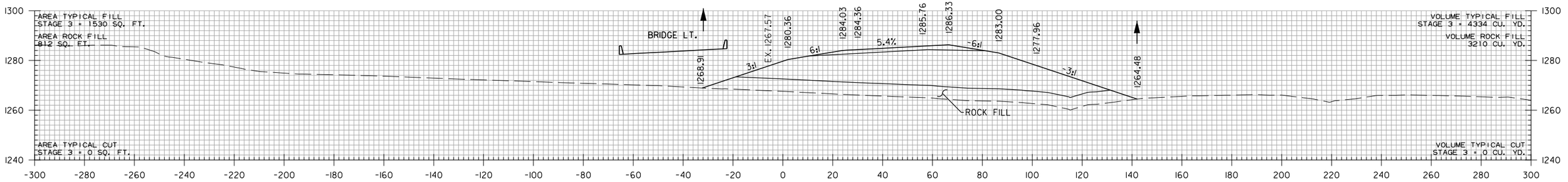

184+52.68

STA. 184+52.68 BEGIN BRIDGE RT.

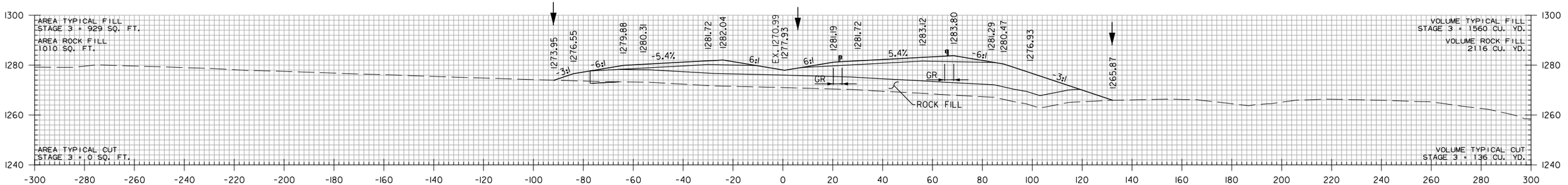

183+57.52

STA. 183+57.52 BEGIN BRIDGE LT.

STA. 183+57.52 TO STA. 186+17.86

WBCalloway 7/17/2023 5:06:03 PM
WORKSPACE: AHTD
L:\2017\17017660 - ARDOT 012326 Hwy 412 - Hwy 112\Drawings\r012326_CX_MNL_01.dgn
REVISED DATE:

DATE REVISED	DATE REVISED	FED. RD. DIST. NO.	STATE	JOB NO.	SHEET NO.	TOTAL SHEETS
		6	ARK.	012326	590	838
②		CROSS SECTIONS				

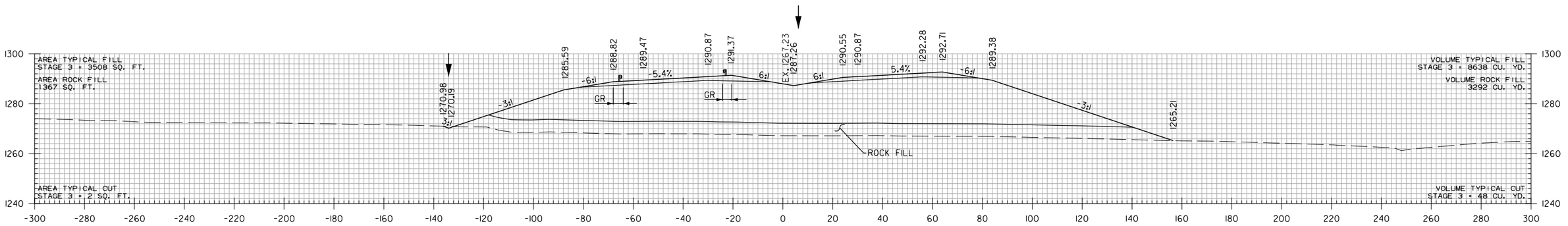

STA. 187+25.00
END SP. DITCH LT. 11.25%
BEGIN SP. DITCH LT. 4.50%
ELEV. 1269.50

187+40.30

STA. 187+40.30 END BRIDGE RT.

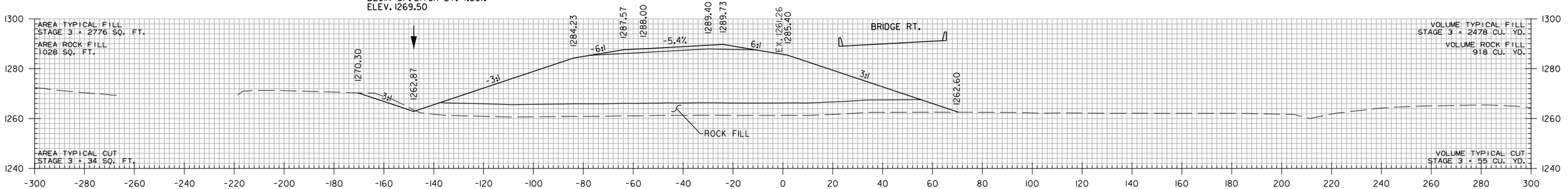

STA. 186+65.00
END SP. DITCH LT. 1.50%
BEGIN SP. DITCH LT. 11.25%
ELEV. 1262.75

186+66.07

STA. 186+66.07 END BRIDGE LT.

STA. 186+27.00
END SP. DITCH LT. -8.39%
BEGIN SP. DITCH LT. 1.50%
ELEV. 1262.18

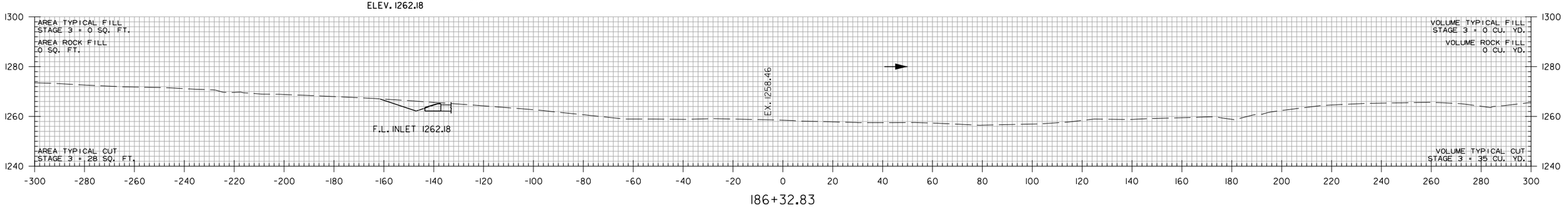

186+32.83

STA. 186+32.83 TO STA. 187+40.30

WBCalloway 7/18/2023 7:35:51 AM
WORKSPACE: AHTD
L:\20IT\170I660 - ARDOT 012326 Hwy 412 - Hwy 112\Drawings\r012326_CX_MNL_01.dgn
REVISED DATE:

DATE REVISED	DATE REVISED	FED. RD. DIST. NO.	STATE	JOB NO.	SHEET NO.	TOTAL SHEETS
		6	ARK.	012326	591	838
②		CROSS SECTIONS				

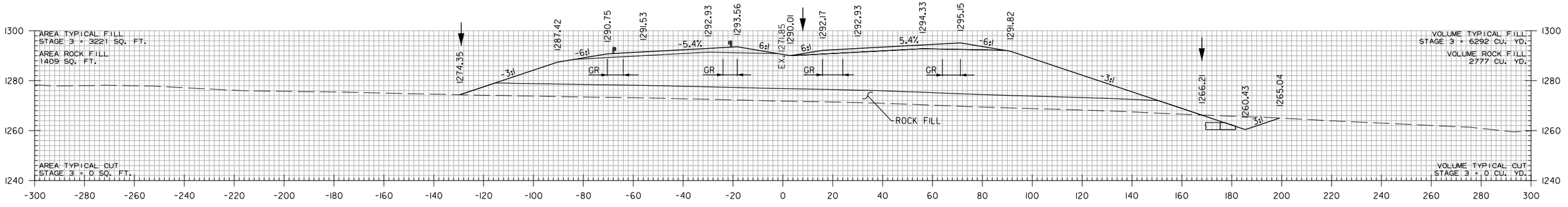

188+59.48

F.L. OUTLET 1260.43

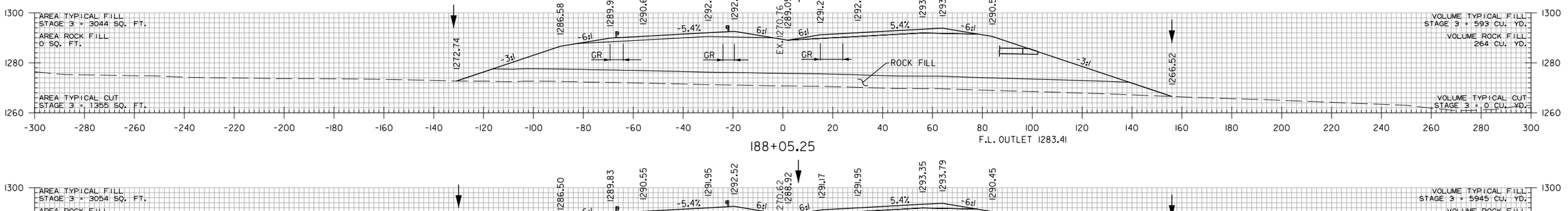

188+05.25

F.L. OUTLET 1283.41

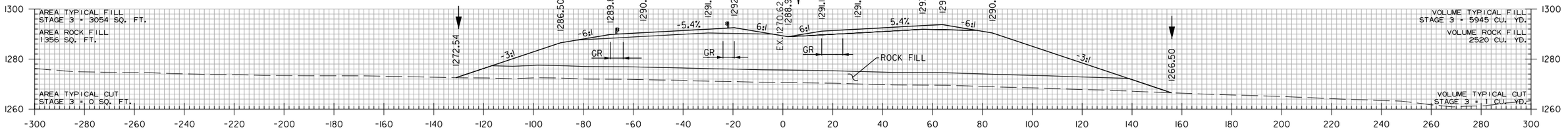

188+00.00

STA. 187+75.00
END SP. DITCH LT. 4.50%
ELEV. 1271.75

STA. 187+64 CONSTRUCT
30" X 366' R.C. PIPE CULVERT
30° RT. FWD. SKEW
(CLASS V) TYPE 3 BEDDING
WITH FES LT. & RT.
050 = 30 CFS DA = 9.2 ACRES

STA. 187+50 CONSTRUCT
TYPE RM DROP INLET
IN MEDIAN (4' X 3' X H=3'0")
WITH 24" X 104' R.C. PIPE OUTLET ON RT.
30° RT. FWD. SKEW
(CLASS III) TYPE 3 BEDDING WITH FES.
TOP D.I. 1287.55
F.L. D.I. 1284.55

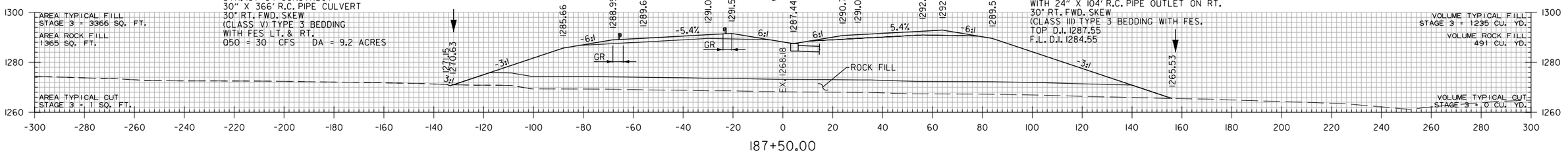

187+50.00

STA. 187+50 TO STA. 188+59.48

WBCallaway 7/17/2023 5:06:04 PM
WORKSPACE: AHTD
L:\2017\17017660 - ARDOT 012326 Hwy 412 - Hwy 112\Drawings\r012326_CX_MNL_01.dgn
REVISED DATE:

DATE REVISED	DATE REVISED	FED. RD. DIST. NO.	STATE	JOB NO.	SHEET NO.	TOTAL SHEETS
		6	ARK.	012326	592	838
		CROSS SECTIONS				
②						

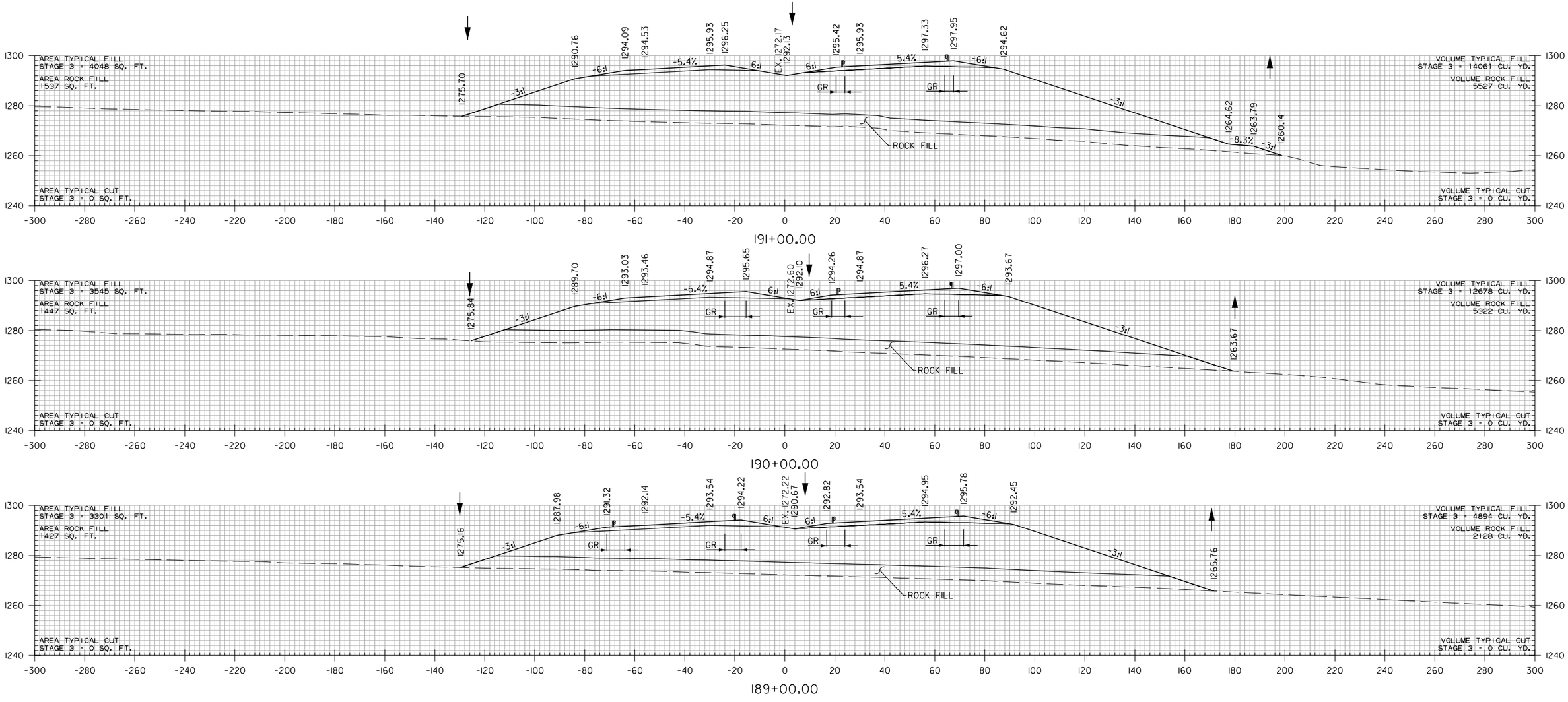

STA. 189+00 TO STA. 191+00

HBVinson 7/27/2023 2:07:06 PM
WORKSPACE: AHTD
L:\2017\17017660 - ARDOT 012326 Hwy 412 - Hwy 112\Drawings\r012326_CX_MNL_01.dgn
REVISED DATE:

DATE REVISED	DATE REVISED	FED. RD. DIST. NO.	STATE	JOB NO.	SHEET NO.	TOTAL SHEETS
		6	ARK.	012326	593	838
		CROSS SECTIONS				
②						

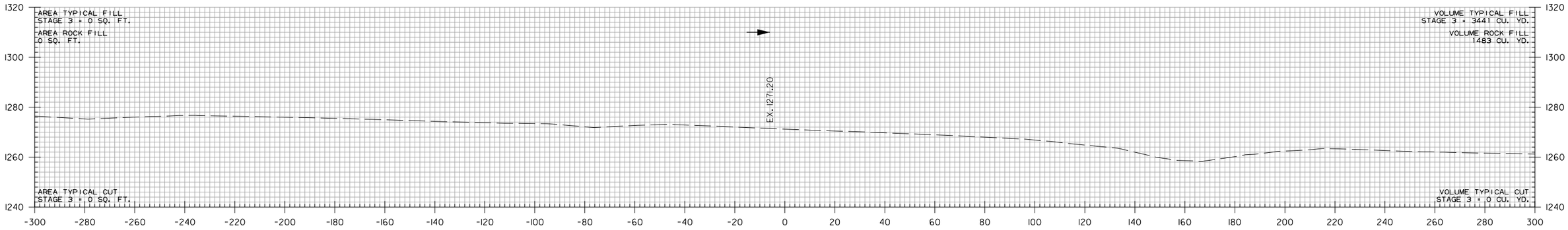

192+09.82

STA. 192+09.82 END TOE OF SLOPE

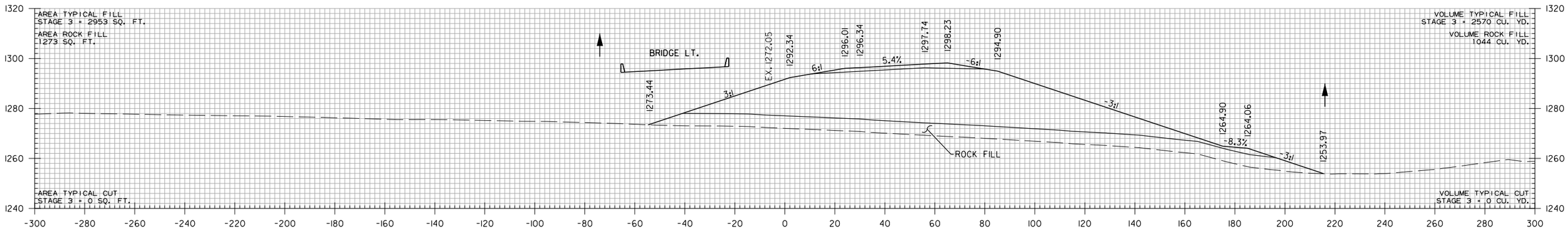

191+46.91

STA. 191+46.91 BEGIN BRIDGE RT.

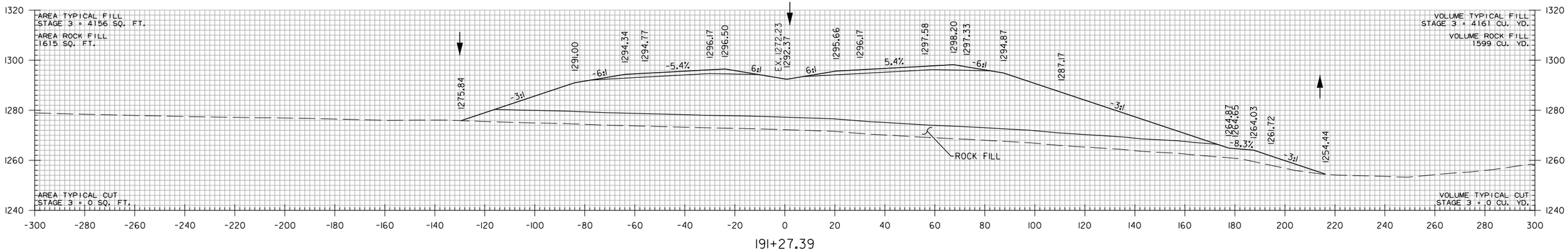

191+27.39

STA. 191+27.39 BEGIN BRIDGE LT.

STA. 191+27.39 TO STA. 192+09.82

WBCalloway 7/18/2023 7:35:52 AM
WORKSPACE: AHTD
L:\2017\170176\60 - ARDOT 012326 Hwy 412 - Hwy 112\Drawings\r012326_CX_MNL_01.dgn
REVISED DATE:

DATE REVISED	DATE REVISED	FED. RD. DIST. NO.	STATE	JOB NO.	SHEET NO.	TOTAL SHEETS
		6	ARK.	012326	594	838
		CROSS SECTIONS				
②						

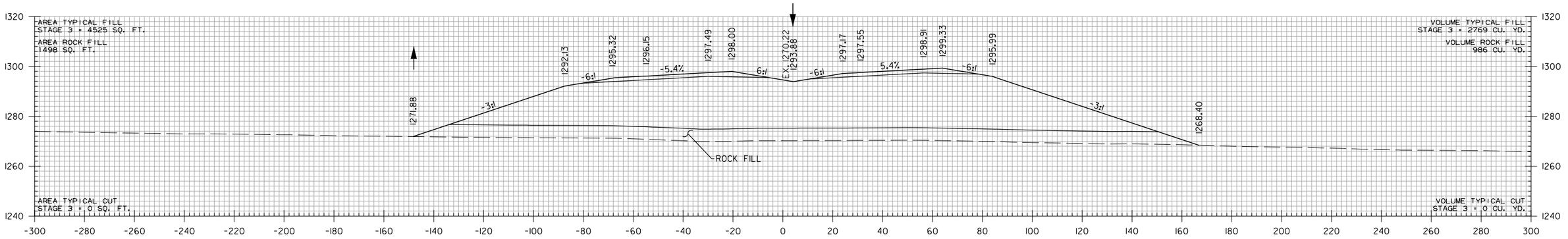

193+80.44

STA. 193+80.44 END BRIDGE RT.

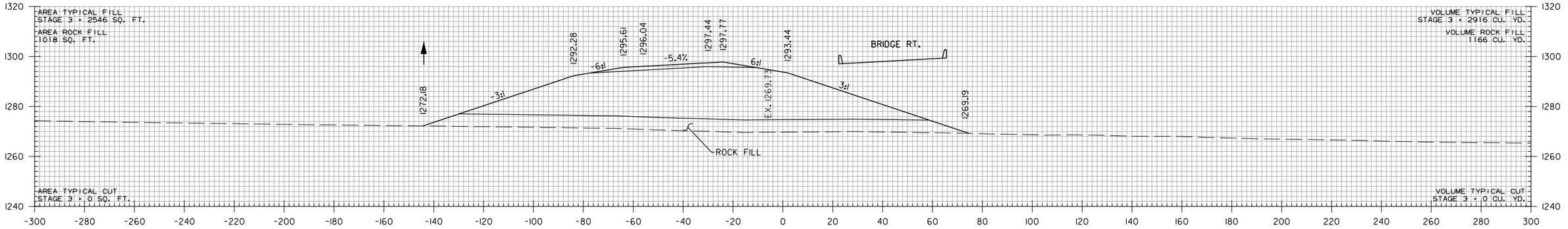

193+59.29

STA. 193+59.29 END BRIDGE LT.

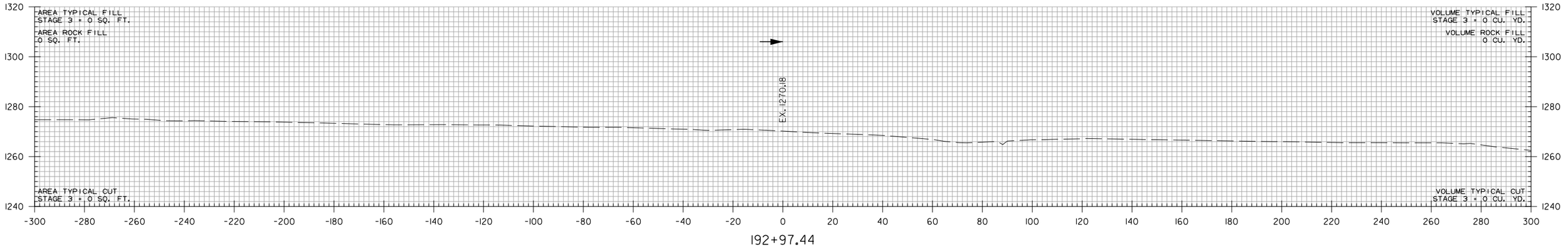

192+97.44

STA. 192+97.44 BEGIN TOE OF SLOPE

STA. 192+97.44 TO STA. 193+80.44

WBCallaway 7/18/2023 7:35:52 AM
WORKSPACE: AHTD
L:\201\T017660 - ARDOT 012326 Hwy 412 - Hwy 112\Drawings\r012326_CX_MNL_01.dgn
REVISED DATE:

DATE REVISED	DATE REVISED	FED. RD. DIST. NO.	STATE	JOB NO.	SHEET NO.	TOTAL SHEETS
		6	ARK.	012326	595	838
		CROSS SECTIONS				
②						

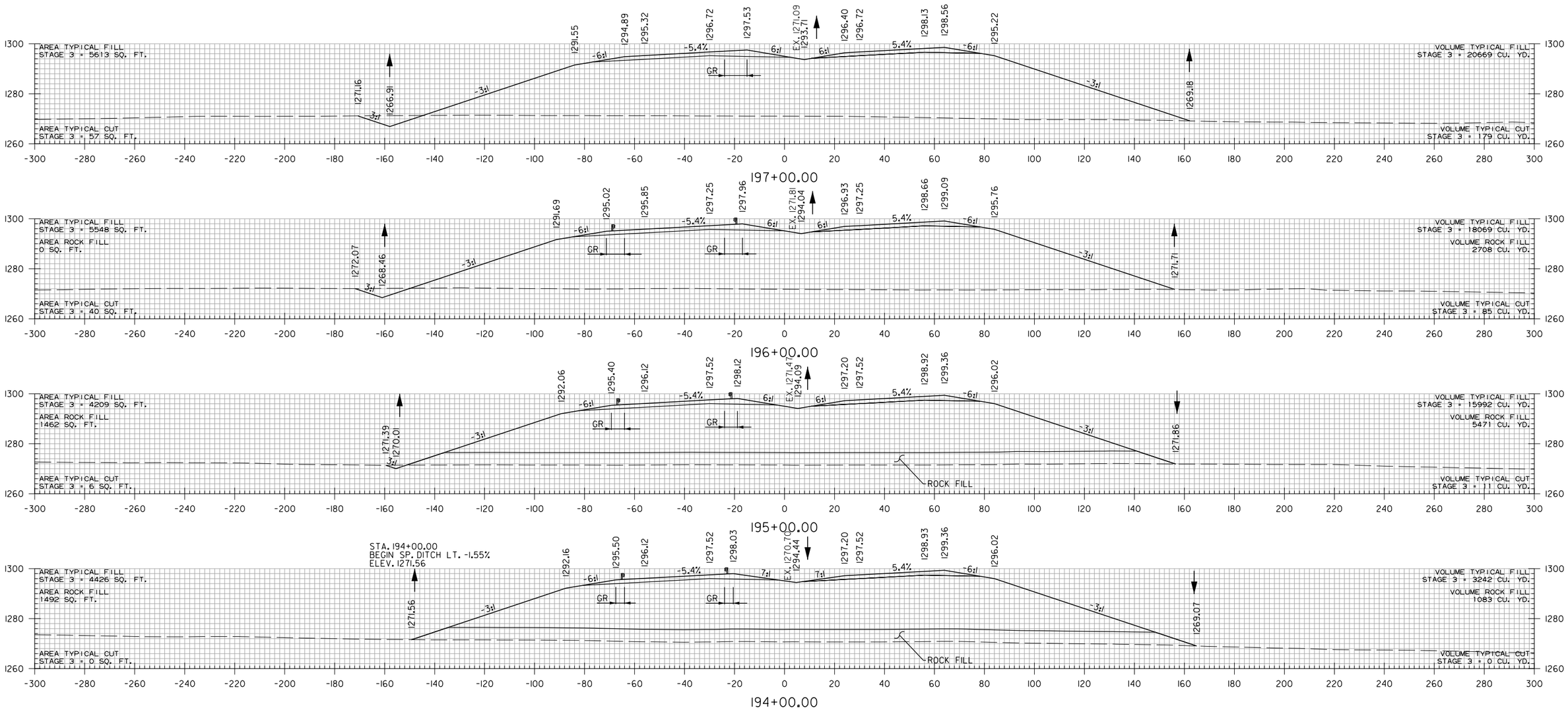

STA. 194+00 TO STA. 197+00

HBVinson
7/27/2023 2:07:06 PM
WORKSPACE: AHTD
L:\20\T\01\7660 - ARDOT 012326 Hwy 412 - Hwy 112\Drawings\r012326_CX_MNL_01.dgn
REVISED DATE:

DATE REVISED	DATE REVISED	FED. RD. DIST. NO.	STATE	JOB NO.	SHEET NO.	TOTAL SHEETS
		6	ARK.	012326	596	838
		CROSS SECTIONS				

(2)

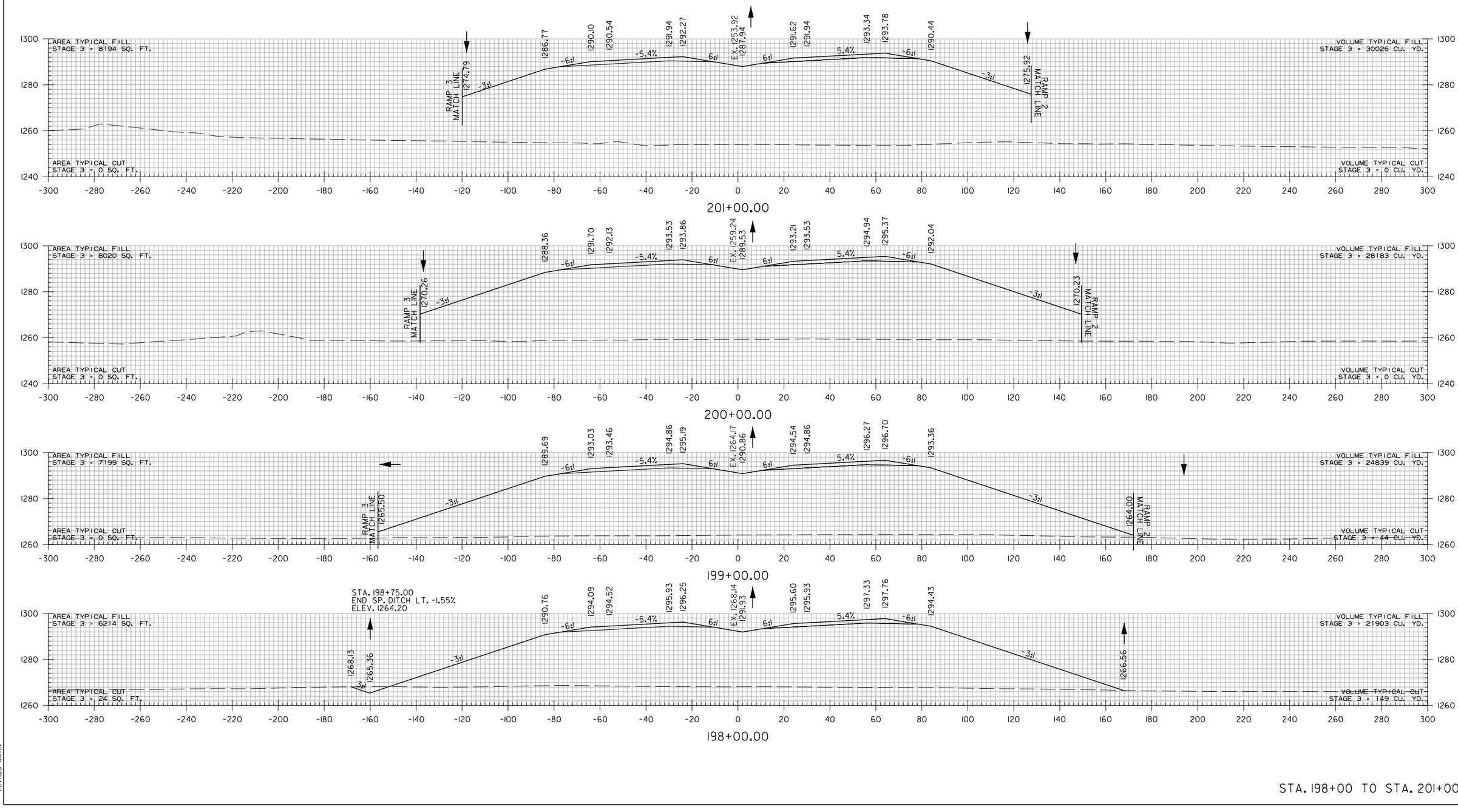

STA. 198+00 TO STA. 201+00

WBCallaway 7/17/2023 5:06:04 PM
WORKSPACE: AHTD
L:\201\T\017660 - ARDOT 012326 Hwy 412 - Hwy 112\Drawings\r012326_CX_MNL_01.dgn
REVISED DATE:

DATE REVISED	DATE REVISED	FED. RD. DIST. NO.	STATE	JOB NO.	SHEET NO.	TOTAL SHEETS
		6	ARK.	012326	597	838
		CROSS SECTIONS				
②						

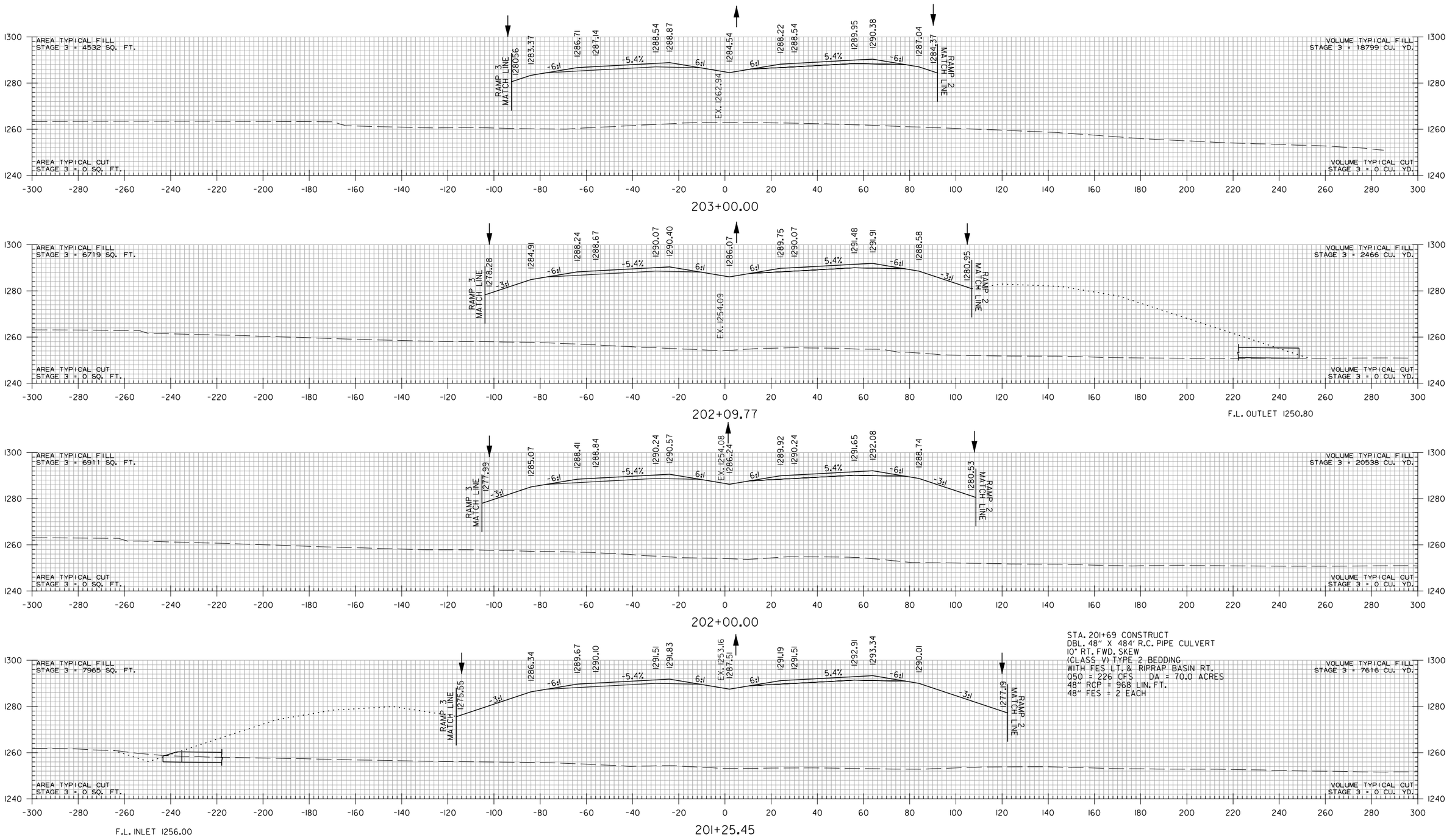

STA. 201+69 CONSTRUCT
DBL. 48" X 484' R.C. PIPE CULVERT
10° RT. FWD. SKEW
(CLASS V) TYPE 2 BEDDING
WITH FES LT. & RIPRAP BASIN RT.
050 = 226 CFS DA = 70.0 ACRES
48" RCP = 968 LIN. FT.
48" FES = 2 EACH

STA. 201+25.45 TO STA. 203+00

WBCalloway 7/17/2023 5:06:05 PM
WORKSPACE: AHTD
L:\2017\17017660 - ARDOT 012326 Hwy 412 - Hwy 112\Drawings\r012326_CX_MNL_01.dgn
REVISED DATE:

DATE REVISED	DATE REVISED	FED. RD. DIST. NO.	STATE	JOB NO.	SHEET NO.	TOTAL SHEETS
		6	ARK.	012326	598	838
		CROSS SECTIONS				
②						

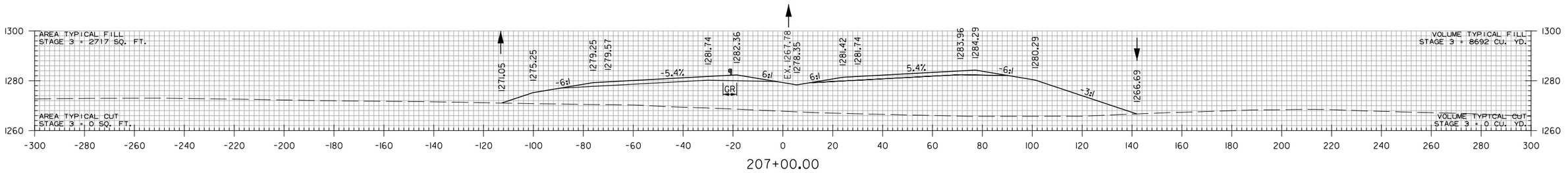

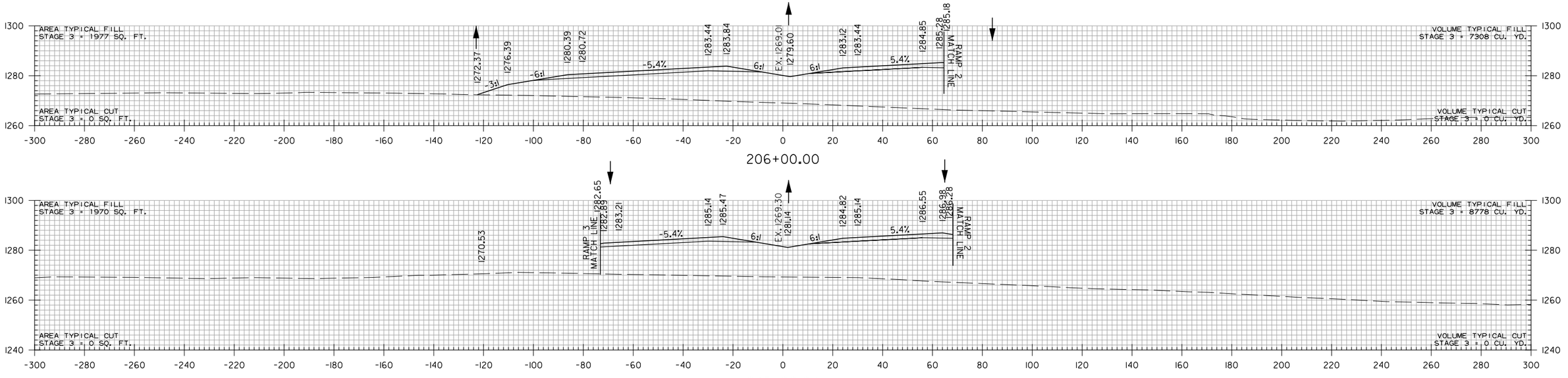

STA. 204+00 CONSTRUCT
TYPE RM DROP INLET
IN MEDIAN (4' X 3' X H=3'0")
WITH 24" X 126' R.C. PIPE OUTLET ON RT.
(CLASS III) TYPE 3 BEDDING WITH FES.
TOP D.I. 1282.84
F.L. D.I. 1279.84

F.L. OUTLET 1278.49

STA. 204+00 TO STA. 207+00

WBCallaway 7/17/2023 5:06:05 PM
WORKSPACE: AHTD
L:\2017\170T660 - ARDOT 012326 Hwy 412 - Hwy 112\Drawings\r012326_CX_MNL_01.dgn
REVISED DATE:

DATE REVISED	DATE REVISED	FED. RD. DIST. NO.	STATE	JOB NO.	SHEET NO.	TOTAL SHEETS
		6	ARK.	012326	599	838
②		CROSS SECTIONS				

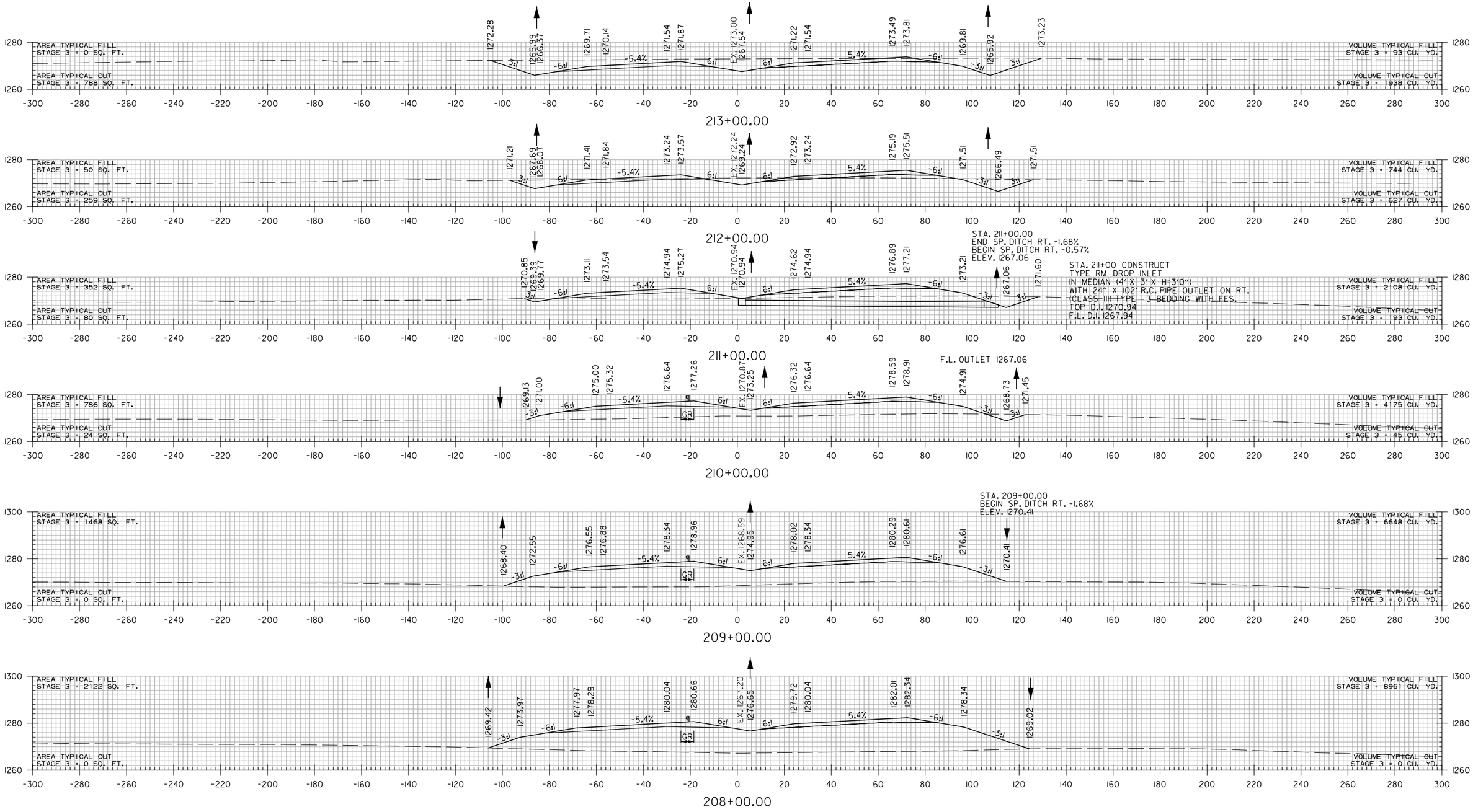

STA. 208+00 TO STA. 213+00

WBCallaway 7/17/2023 5:06:05 PM
WORKSPACE: AHTD
L:\20\7\7017660 - ARDOT 012326 Hwy 412 - Hwy 112\Drawings\r012326_CX_MNL_01.dgn
REVISED DATE:

DATE REVISED	DATE REVISED	FED. RD. DIST. NO.	STATE	JOB NO.	SHEET NO.	TOTAL SHEETS
		6	ARK.	012326	600	838
		CROSS SECTIONS				

(2)

STA. 219+50.00
BEGIN SP. DITCH LT. -3.50%
ELEV. 1255.33

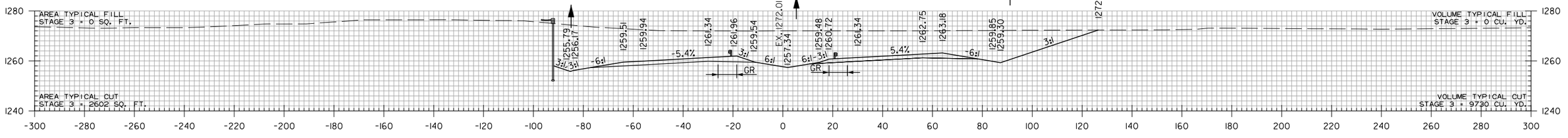

219+00.00

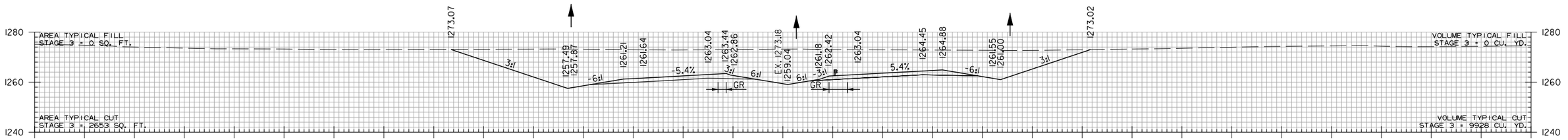

218+00.00

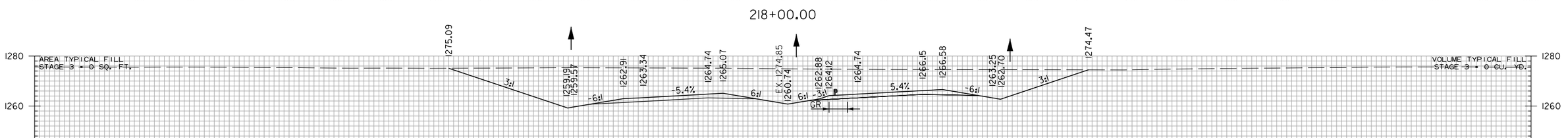

217+00.00

STA. 216+00.00
END SP. DITCH RT. -0.57%
ELEV. 1264.22

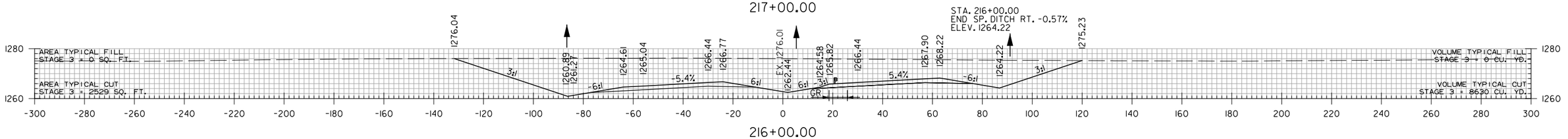

216+00.00

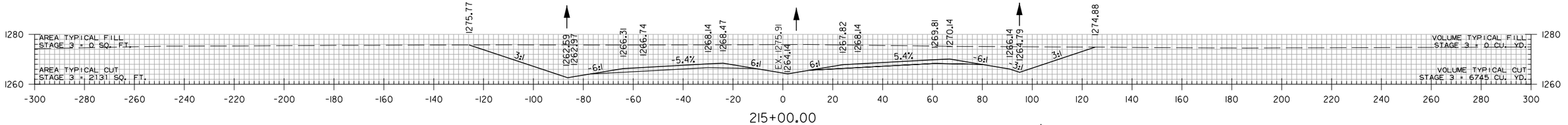

215+00.00

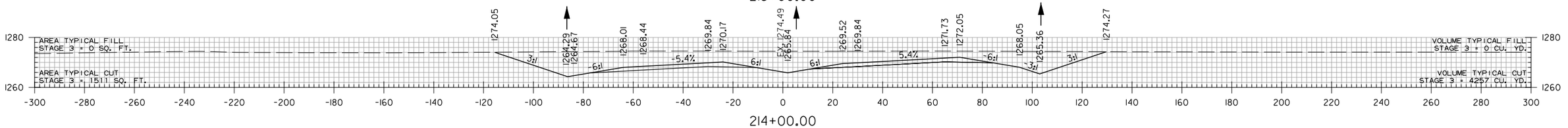

214+00.00

STA. 214+00 TO STA. 219+00

WBallaway 7/17/2023 5:06:06 PM
WORKSPACE: AHTD
L:\2017\17017660 - ARDOT 012326 Hwy 412 - Hwy 112\Drawings\r012326_CX_MNL_01.dgn
REVISED DATE:

DATE REVISED	DATE REVISED	FED. RD. DIST. NO.	STATE	JOB NO.	SHEET NO.	TOTAL SHEETS
		6	ARK.	012326	601	838
		CROSS SECTIONS				
②						

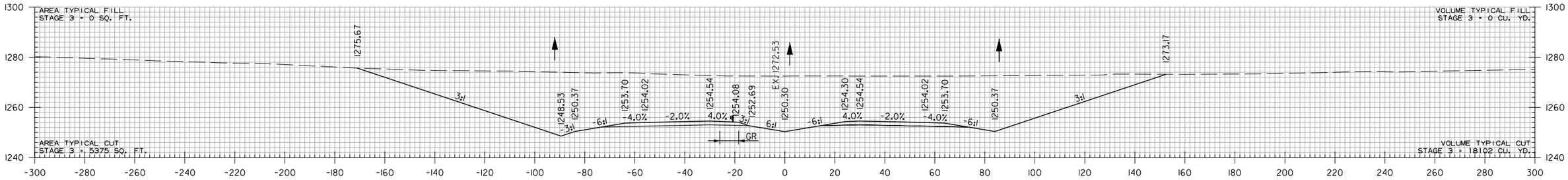

223+00.00

STA. 222+98.54 END SUPERELEVATION

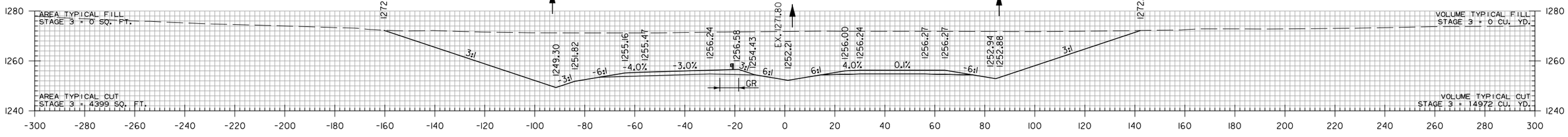

222+00.00

STA. 221+00.00
END SP. DITCH LT. -3.50%
BEGIN SP. DITCH LT. -0.78%
ELEV. 1250.08

STA. 221+00 CONSTRUCT
TYPE RM DROP INLET
IN MEDIAN (4' X 3' X H=3'0")
WITH 24" X 84' R.C. PIPE OUTLET ON LT.
(CLASS III) TYPE 3 BEDDING WITH FES.
TOP D.I. 1253.94
F.L. D.I. 1250.94

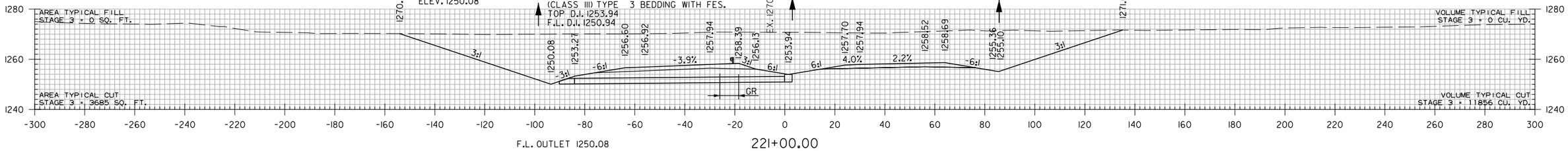

F.L. OUTLET 1250.08

221+00.00

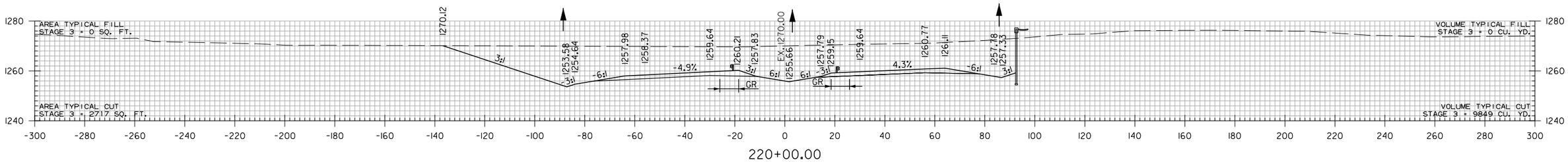

220+00.00

STA. 219+48.54 MAX. SUPERELEVATION (0.054'/')

STA. 220+00 TO STA. 223+00

WBCallaway 7/17/2023 5:06:06 PM
WORKSPACE: AHTD
L:\201\T017660 - ARDOT 012326 Hwy 412 - Hwy 112\Drawings\r012326_CX_MNL_01.dgn
REVISED DATE:

DATE REVISED	DATE REVISED	FED. RD. DIST. NO.	STATE	JOB NO.	SHEET NO.	TOTAL SHEETS
		6	ARK.	012326	602	838
		CROSS SECTIONS				
②						

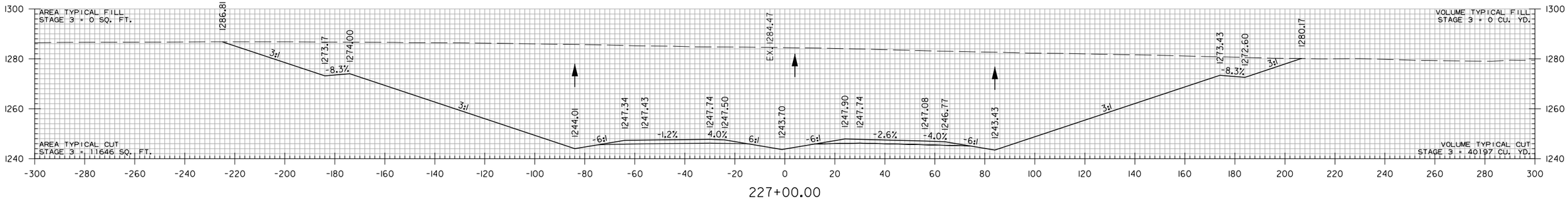

227+00.00

STA. 226+69.81 BEGIN SUPERELEVATION

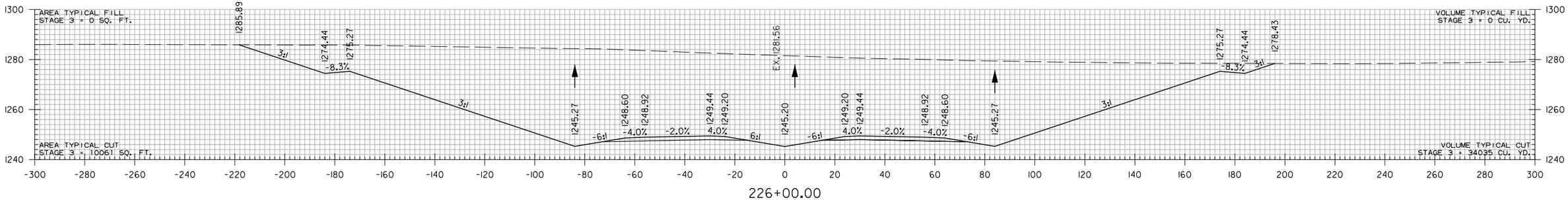

226+00.00

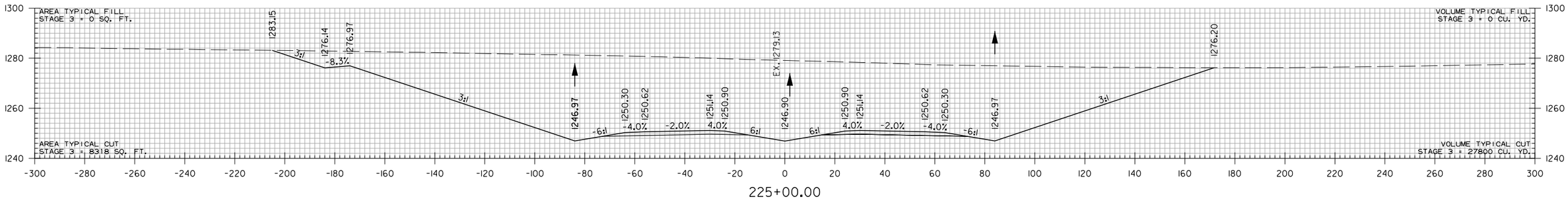

225+00.00

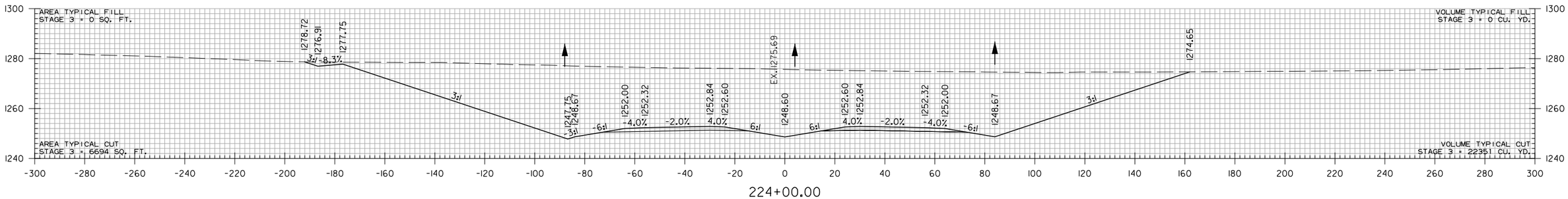

224+00.00

STA. 224+00 TO STA. 227+00

WBCalloway 7/17/2023 5:06:06 PM
WORKSPACE: AHTD
L:\2017\17017660 - ARDOT 012326 Hwy 412 - Hwy 412\Drawings\r012326_CX_MNL_01.dgn
REVISED DATE:

DATE REVISED	DATE REVISED	FED. RD. DIST. NO.	STATE	JOB NO.	SHEET NO.	TOTAL SHEETS
		6	ARK.	012326	603	838
		CROSS SECTIONS				
②						

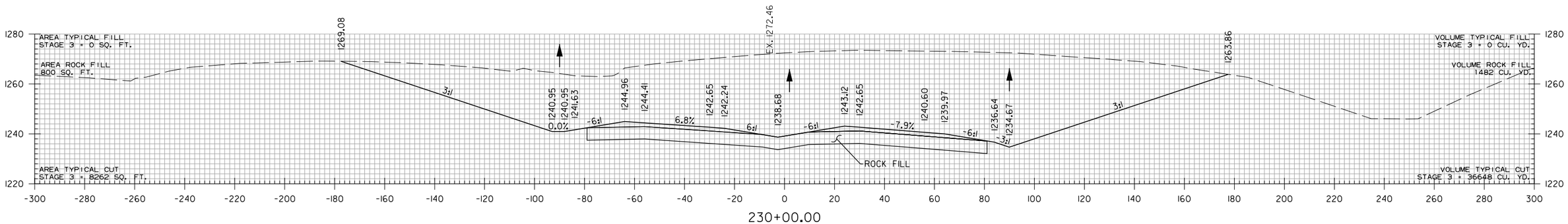

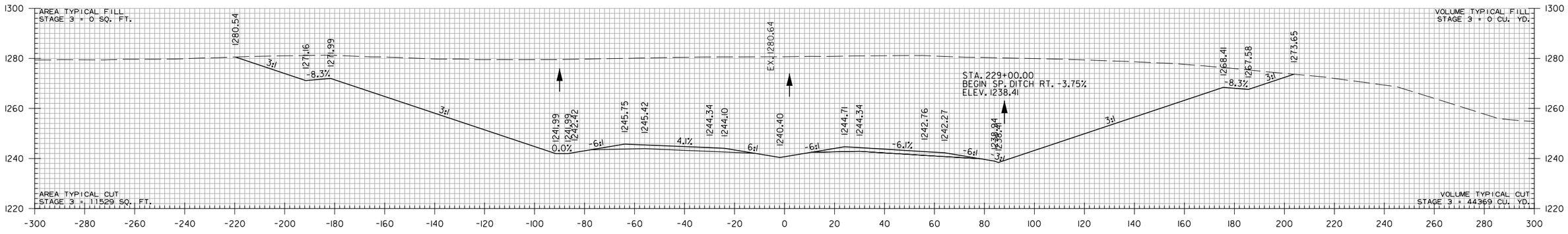

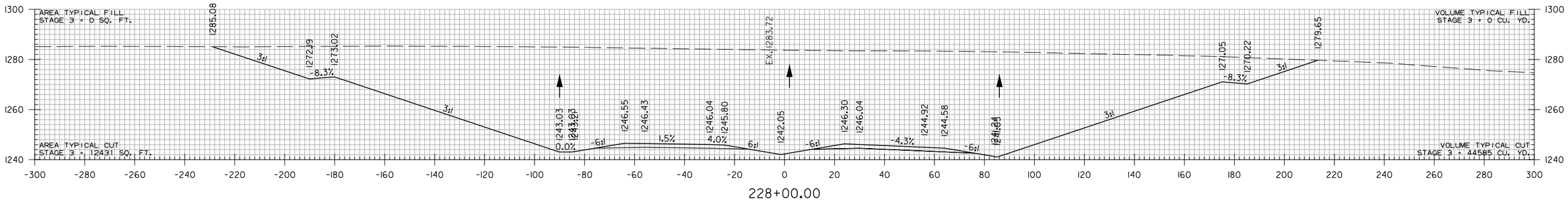

STA. 228+00 TO STA. 230+00

WBCalloway 7/17/2023 5:06:06 PM
WORKSPACE: AHTD
L:\2017\170176\60 - ARDOT 012326 Hwy 412 - Hwy 12\Drawings\r012326_CX_MNL_01.dgn
REVISED DATE:

DATE REVISED	DATE REVISED	FED. RD. DIST. NO.	STATE	JOB NO.	SHEET NO.	TOTAL SHEETS
		6	ARK.	012326	604	838
		CROSS SECTIONS				
②						

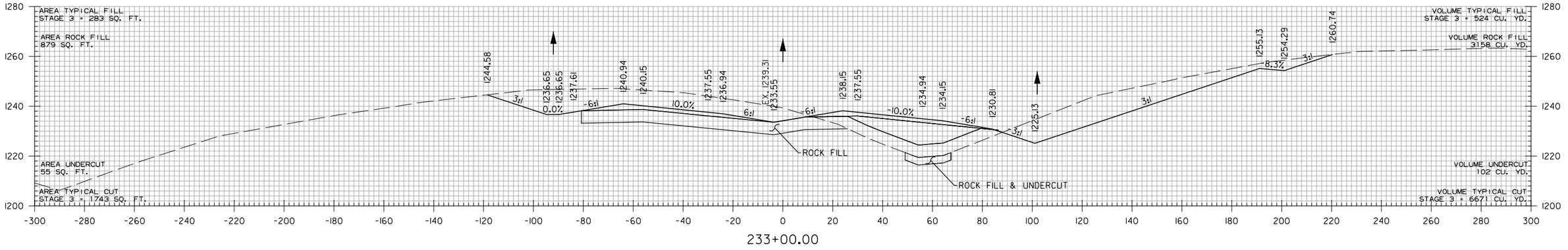

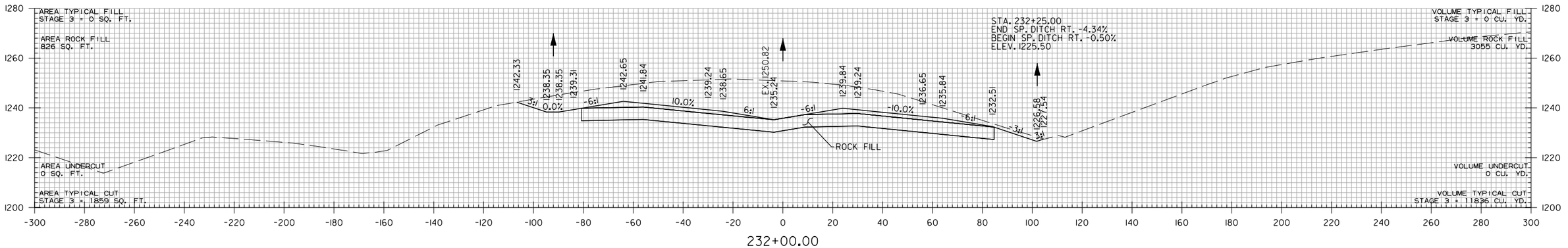

STA. 231+19.81 MAX SUPERELEVATION (0.10'/')

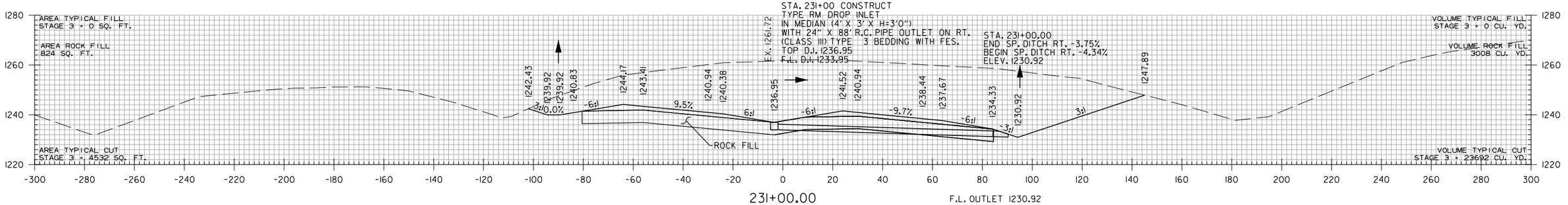

STA. 231+00 TO STA. 233+00

WBCalloway 7/17/2023 5:06:07 PM
WORKSPACE: AHTD
L:\2017\1701660 - ARDOT 012326 Hwy 412 - Hwy 12\Drawings\r012326_CX_MNL_01.dgn
REVISED DATE:

DATE REVISED	DATE REVISED	FED. RD. DIST. NO.	STATE	JOB NO.	SHEET NO.	TOTAL SHEETS
		6	ARK.	012326	605	838
		CROSS SECTIONS				
②						

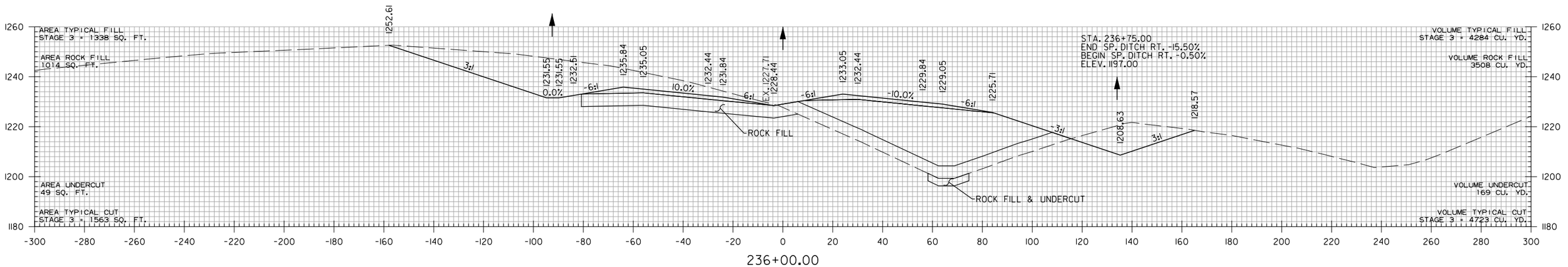

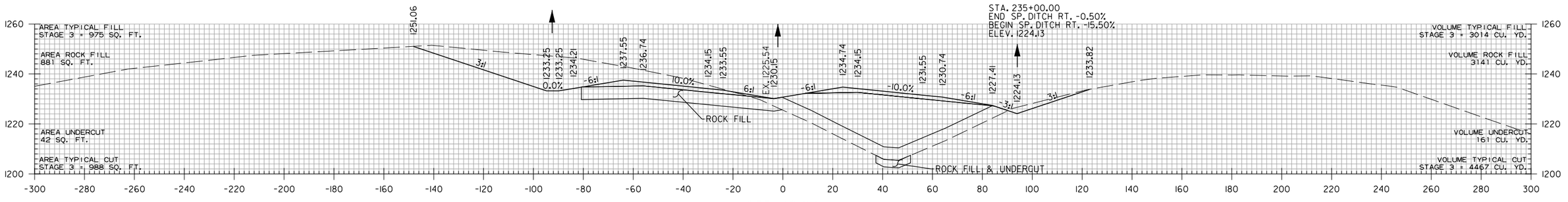

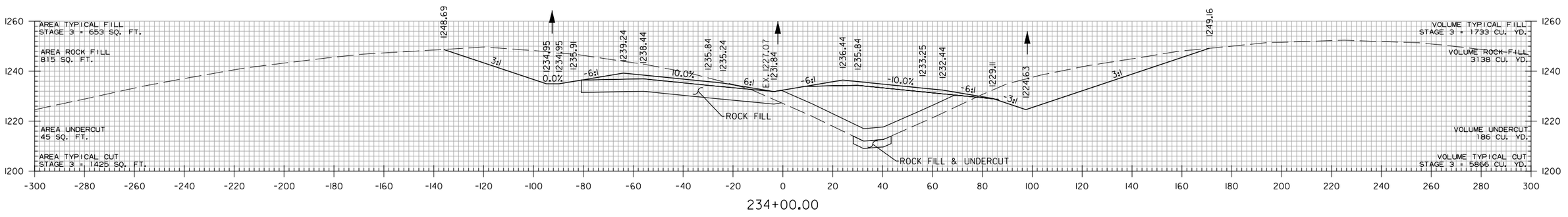

STA. 234+00 TO STA. 236+00

WBCalloway 7/17/2023 5:06:07 PM
WORKSPACE: AHTD
L:\2017\17017660 - ARDOT 012326 Hwy 412 - Hwy 112\Drawings\r012326_CX_MNL_01.dgn
REVISED DATE:

DATE REVISED	DATE REVISED	FED. RD. DIST. NO.	STATE	JOB NO.	SHEET NO.	TOTAL SHEETS
		6	ARK.	012326	606	838
		CROSS SECTIONS				
(2)						

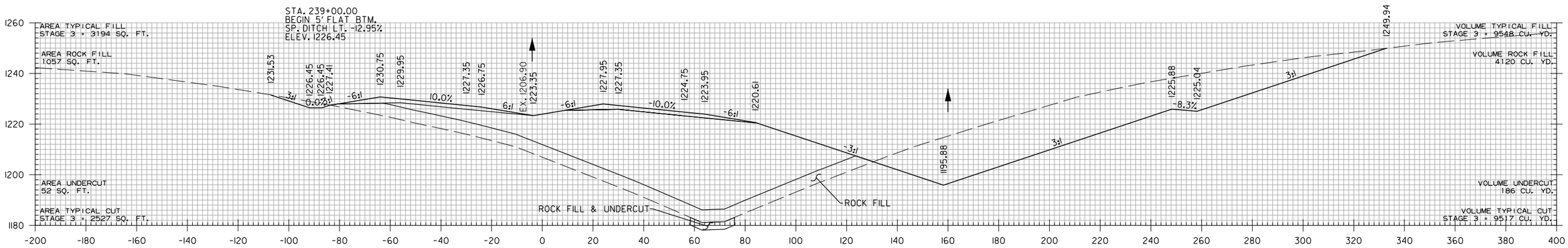

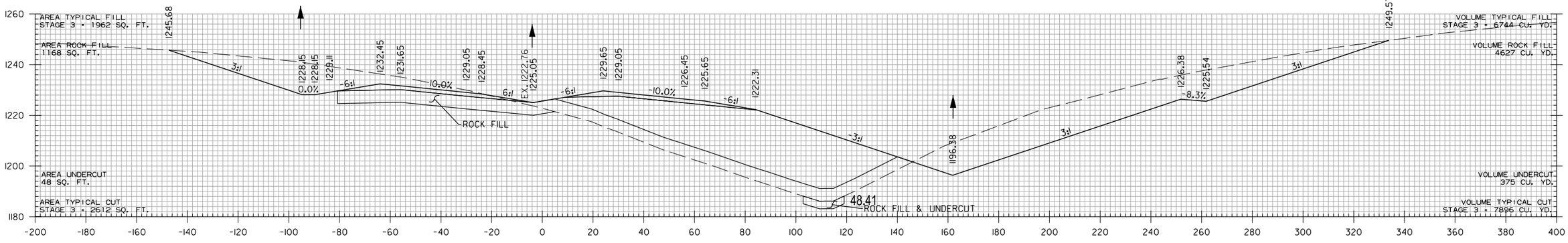

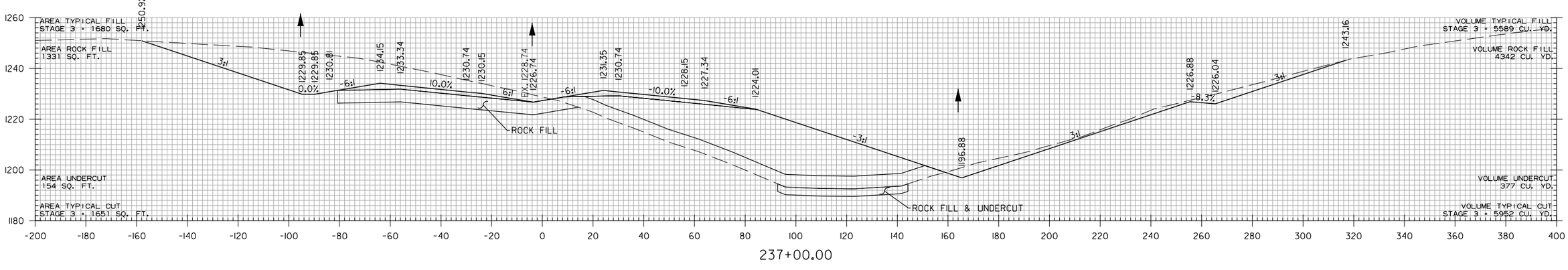

STA. 237+00 TO STA. 239+00

WBCallaway 7/17/2023 5:06:07 PM
WORKSPACE: AHTD
L:\2017\17017660 - ARDOT 012326 Hwy 412 - Hwy 112\Drawings\r012326_CX_MNL_01.dgn
REVISED DATE:

DATE REVISED	DATE REVISED	FED. RD. DIST. NO.	STATE	JOB NO.	SHEET NO.	TOTAL SHEETS
		6	ARK.	012326	607	838
		CROSS SECTIONS				
②						

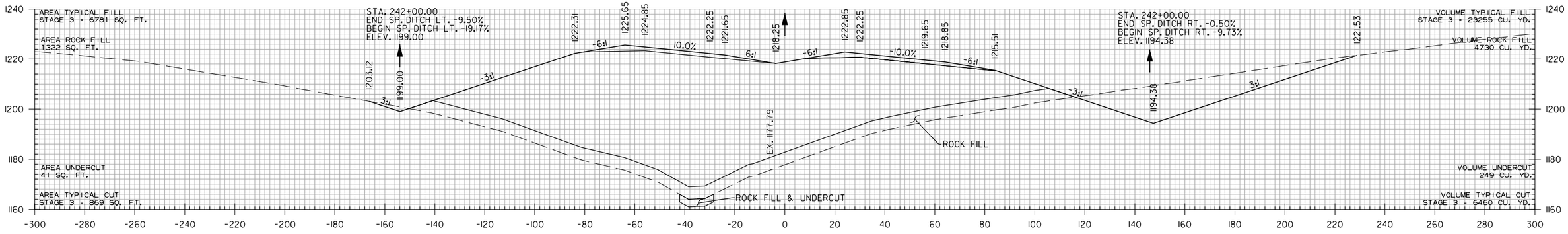

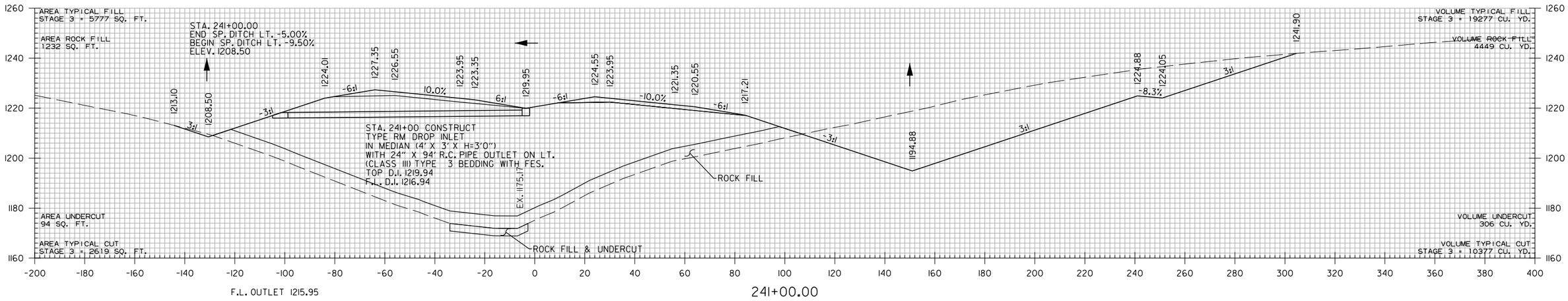

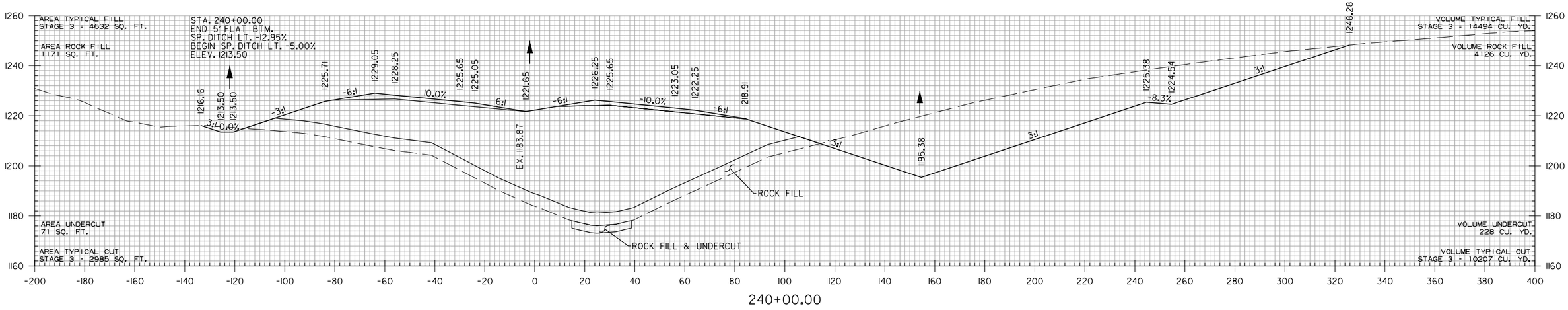

STA. 240+00 TO STA. 242+00

WBCalloway 7/17/2023 5:06:07 PM
WORKSPACE: AHTD
L:\201\170\170660 - ARDOT 012326 Hwy 412 - Hwy 112\Drawings\r012326_CX_MNL_01.dgn
REVISED DATE:

DATE REVISED	DATE REVISED	FED. RD. DIST. NO.	STATE	JOB NO.	SHEET NO.	TOTAL SHEETS
		6	ARK.	012326	608	838
		CROSS SECTIONS				
②						

STA. 243+77 CONSTRUCT
60" X 458' R.C. PIPE CULVERT
23° LT. FWD. SKEW
(CLASS V) TYPE I BEDDING
WITH FES RT. & CONTRA-COSTA ENERGY DISSIPATOR LT.
Q50 = 166 CFS DA = 33.4 ACRES

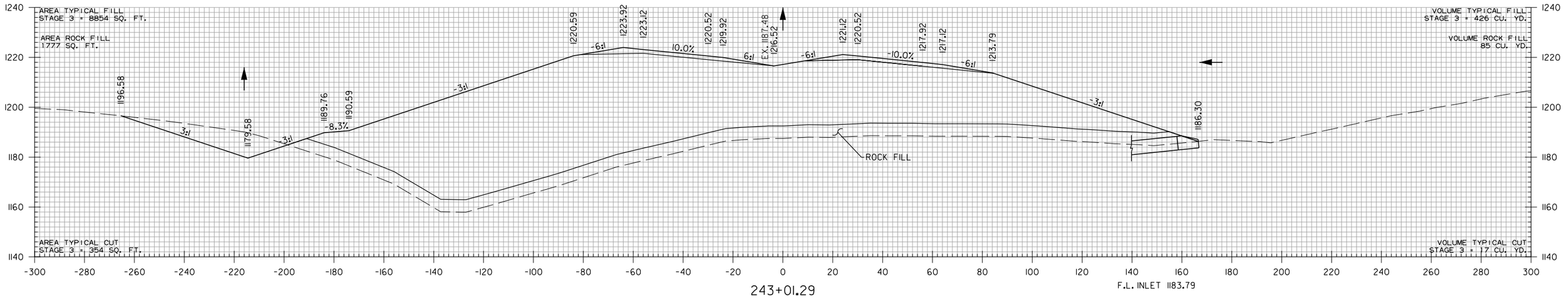

243+01.29

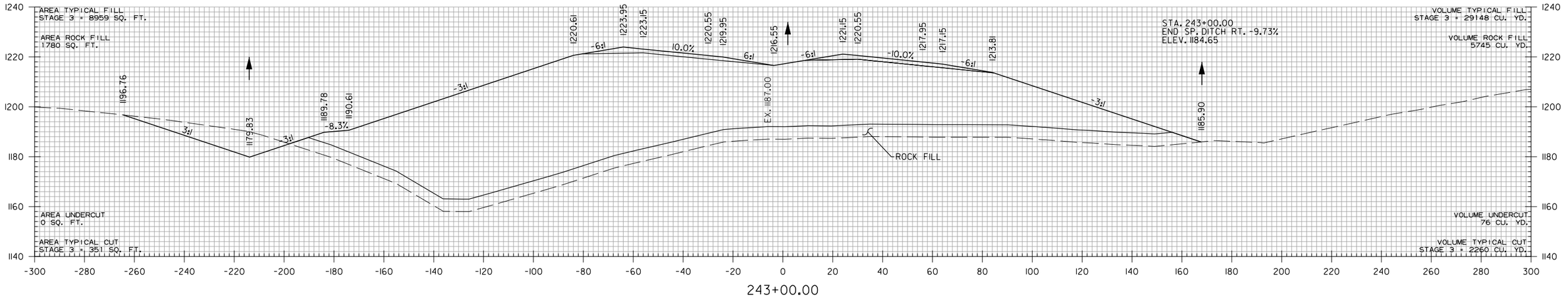

243+00.00

STA. 243+00 TO STA. 243+01.29

WBCallaway 7/17/2023 5:06:07 PM
WORKSPACE: AHTD
L:\2017\17017660 - ARDOT 012326 Hwy 412 - Hwy 112\Drawings\r012326_CX_MNL_01.dgn
REVISED DATE:

DATE REVISED	DATE REVISED	FED. RD. DIST. NO.	STATE	JOB NO.	SHEET NO.	TOTAL SHEETS
		6	ARK.	012326	609	838
		CROSS SECTIONS				
②						

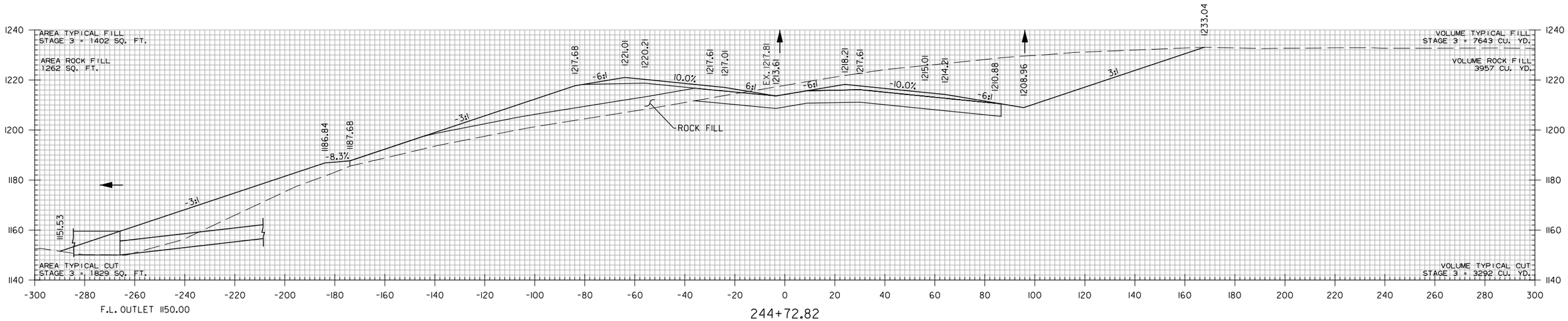

244+72.82

STA. 244+40.00
END SP. DITCH LT. -19.17%
ELEV. 1153.00

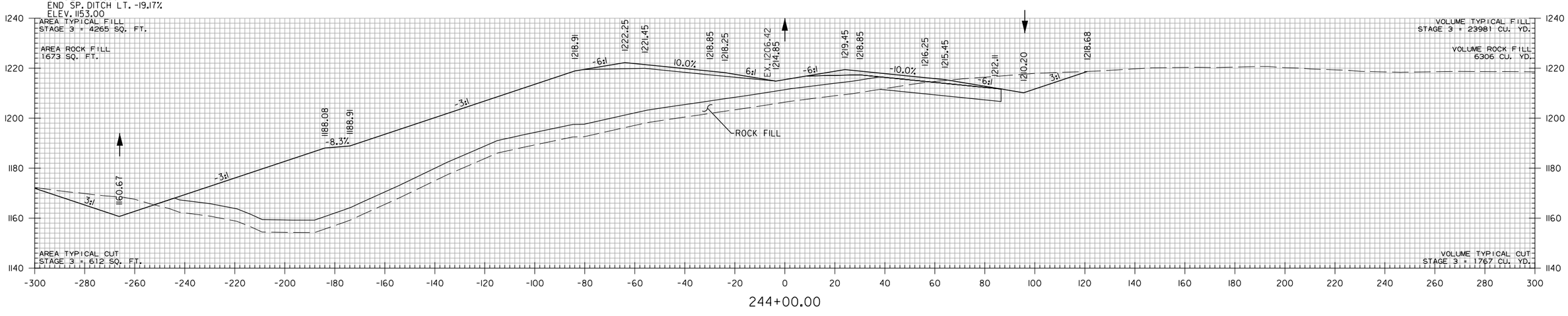

244+00.00

STA. 244+00 TO STA. 244+72.82

WBCallaway 7/17/2023 5:06:08 PM
WORKSPACE: AHTD
L:\2017\17017660 - ARDOT 012326 Hwy 412 - Hwy 112\Drawings\r012326_CX_MNL_01.dgn
REVISED DATE:

DATE REVISED	DATE REVISED	FED. RD. DIST. NO.	STATE	JOB NO.	SHEET NO.	TOTAL SHEETS
		6	ARK.	012326	610	838
		CROSS SECTIONS				
②						

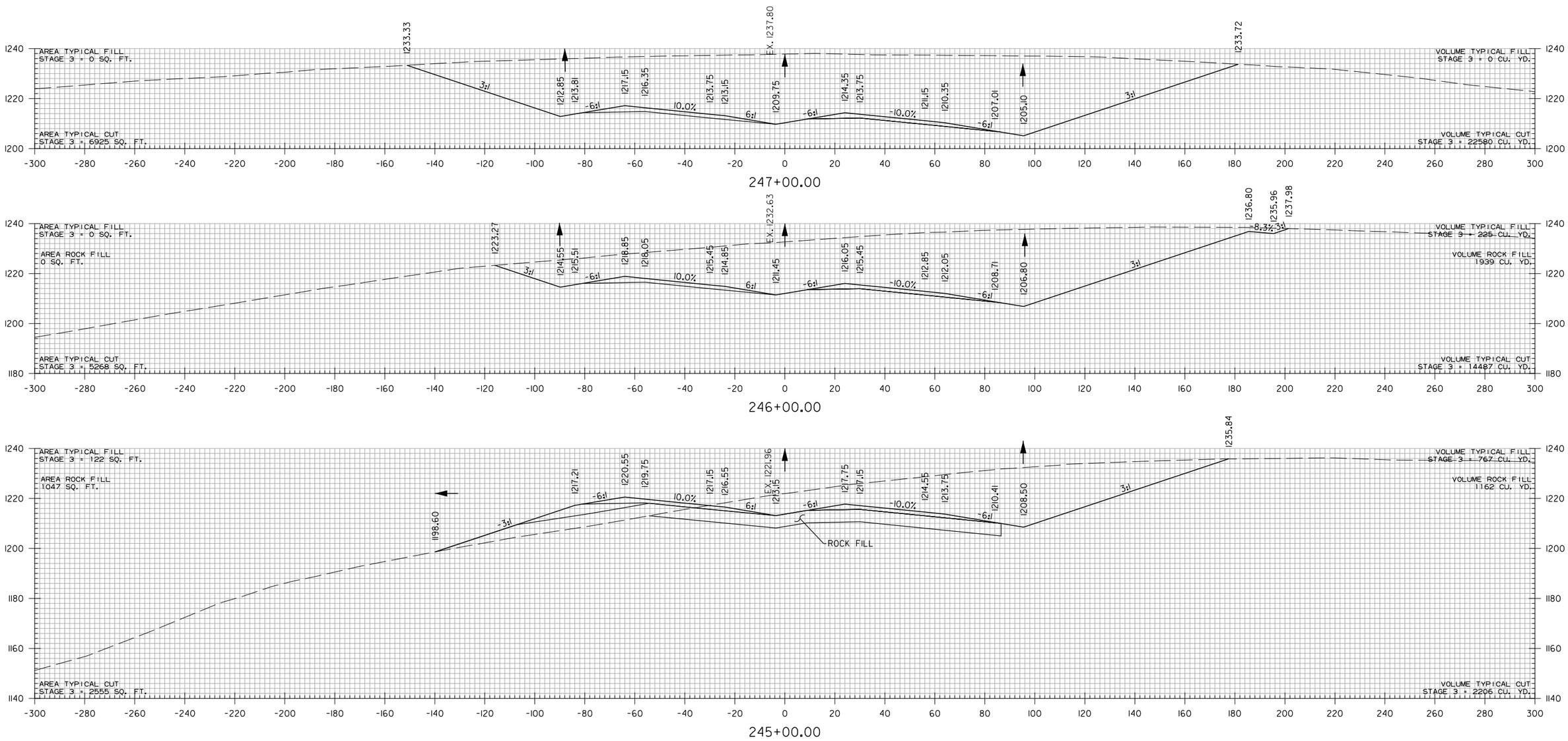

STA. 245+00 TO STA. 247+00

WBCallaway 7/17/2023 5:06:08 PM
WORKSPACE: AHTD
L:\2017\1701760 - ARDOT 012326 Hwy 412 - Hwy 112\Drawings\r012326_CX_MNL_01.dgn
REVISED DATE:

DATE REVISED	DATE REVISED	FED. RD. DIST. NO.	STATE	JOB NO.	SHEET NO.	TOTAL SHEETS
		6	ARK.	012326	611	838
		CROSS SECTIONS				
②						

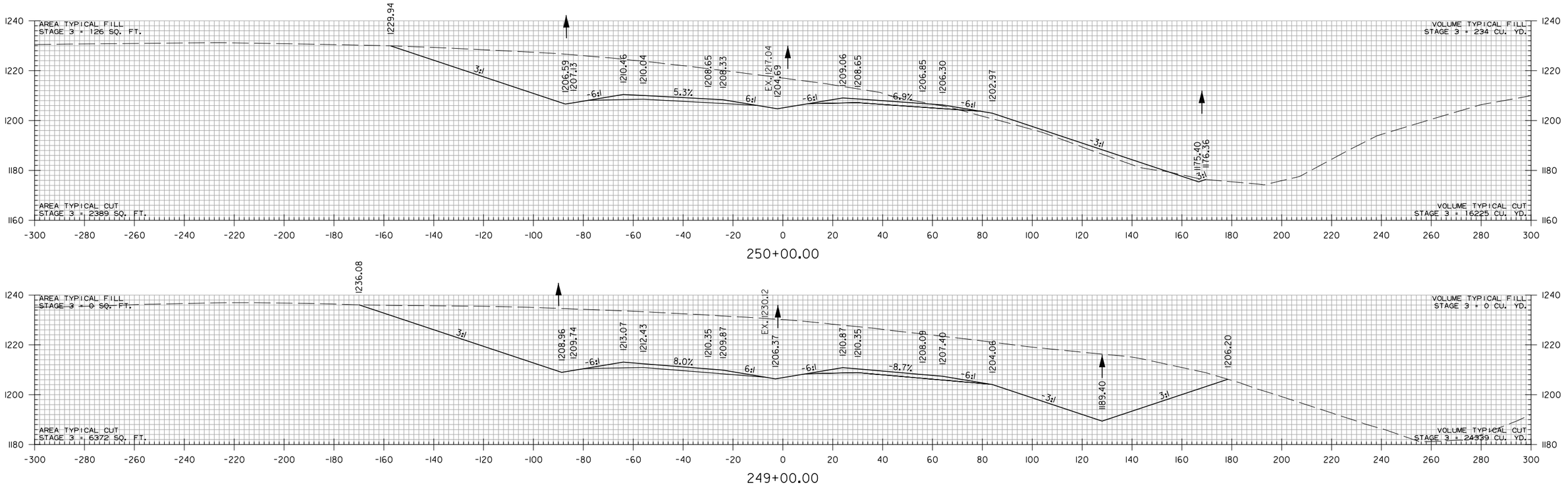

STA. 248+00 TO STA. 250+00

WBCalloway 7/17/2023 5:06:08 PM
WORKSPACE: AHTD
L:\2017\170176\60 - ARDOT 012326 Hwy 412 - Hwy 112\Drawings\r012326_CX_MNL_01.dgn
REVISED DATE:

DATE REVISED	DATE REVISED	FED. RD. DIST. NO.	STATE	JOB NO.	SHEET NO.	TOTAL SHEETS
		6	ARK.	012326	612	838
		CROSS SECTIONS				

(2)

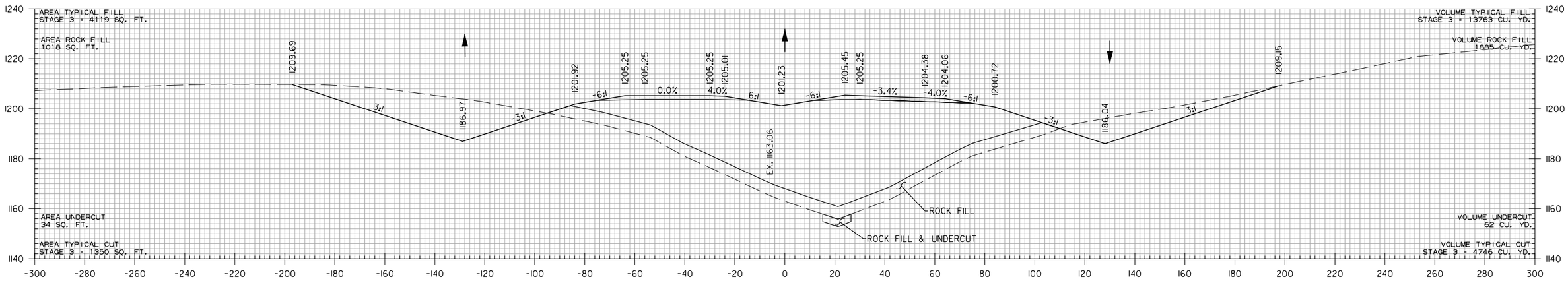

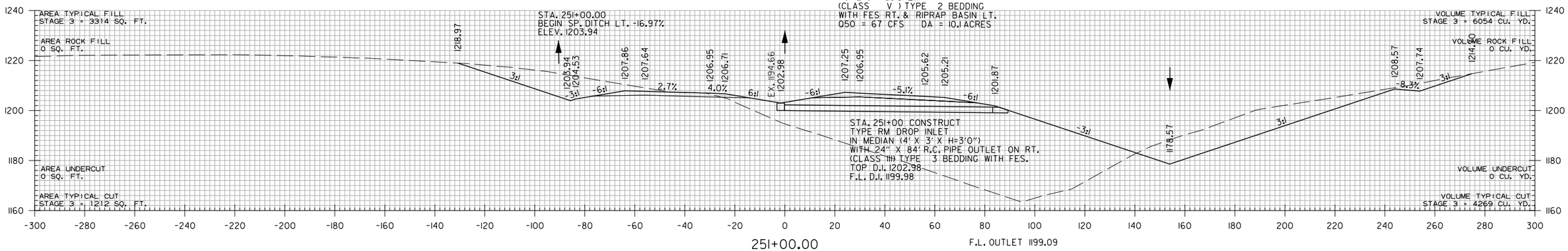

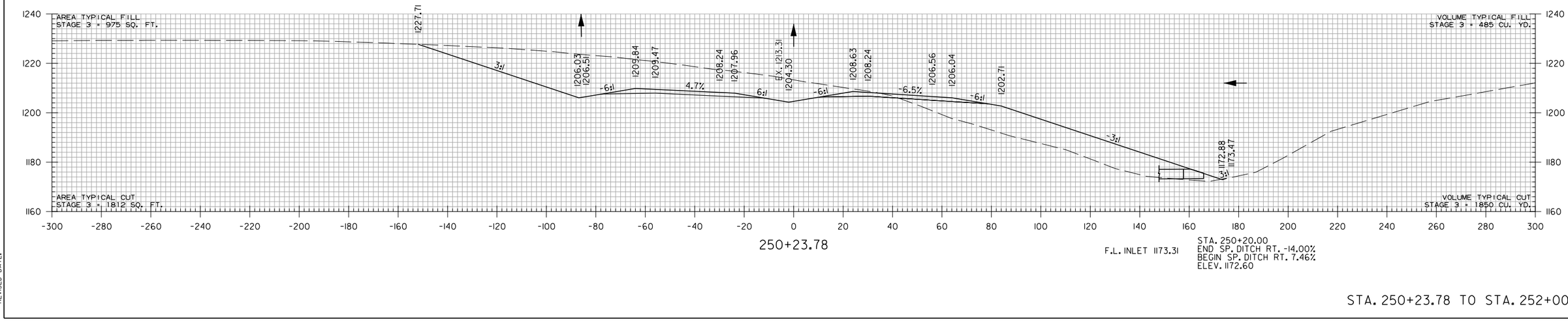

STA. 250+23.78 TO STA. 252+00

WBCallaway 7/17/2023 5:06:08 PM
WORKSPACE: AHTD
L:\2017\17017660 - ARDOT 012326 Hwy 412 - Hwy 112\Drawings\r012326_CX_MNL_01.dgn
REVISED DATE:

DATE REVISED	DATE REVISED	FED. RD. DIST. NO.	STATE	JOB NO.	SHEET NO.	TOTAL SHEETS
		6	ARK.	012326	613	838
		CROSS SECTIONS				

(2)

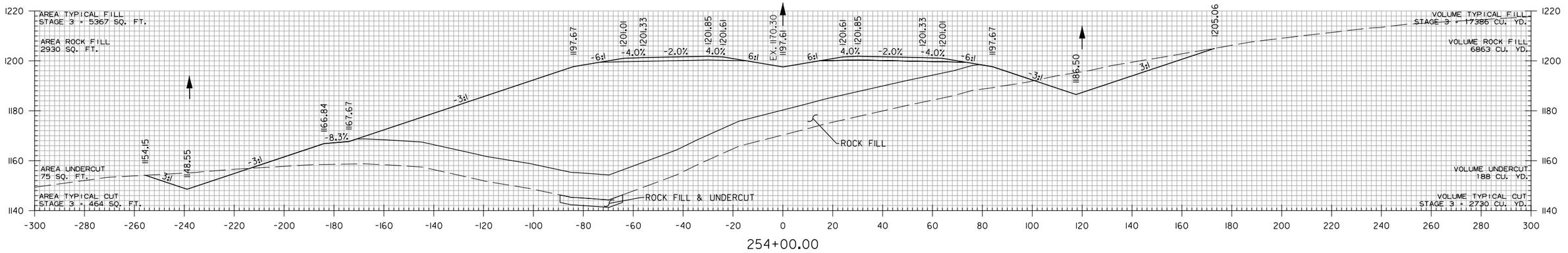

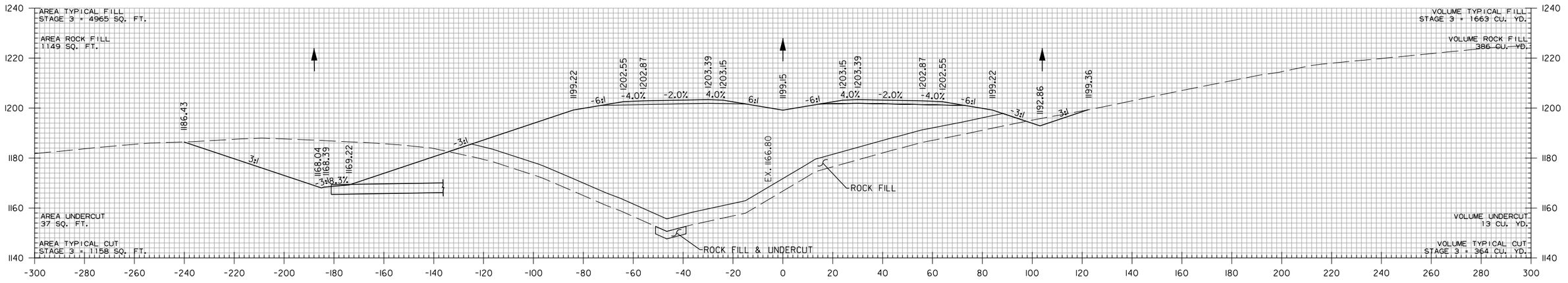

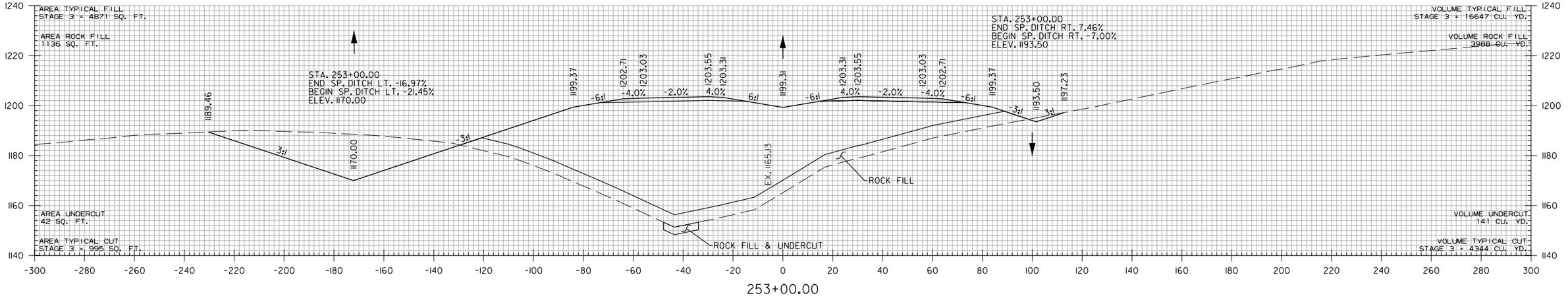

STA. 252+75.46 END SUPERELEVATION

STA. 253+00 TO STA. 254+00

WBCallaway 7/17/2023 5:06:09 PM
WORKSPACE: AHTD
L:\2017\170176\60 - ARDOT 012326 Hwy 412 - Hwy 112\Drawings\r012326_CX_MNL_01.dgn
REVISED DATE:

DATE REVISED	DATE REVISED	FED. RD. DIST. NO.	STATE	JOB NO.	SHEET NO.	TOTAL SHEETS
		6	ARK.	012326	614	838
②		CROSS SECTIONS				

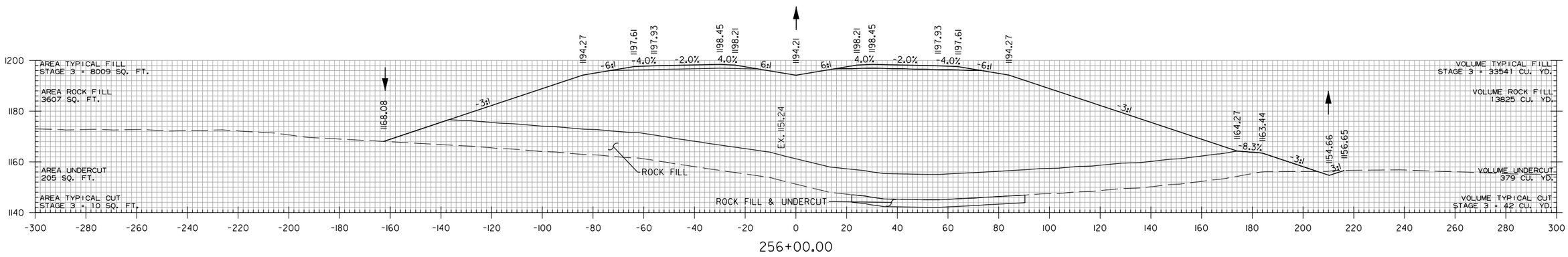

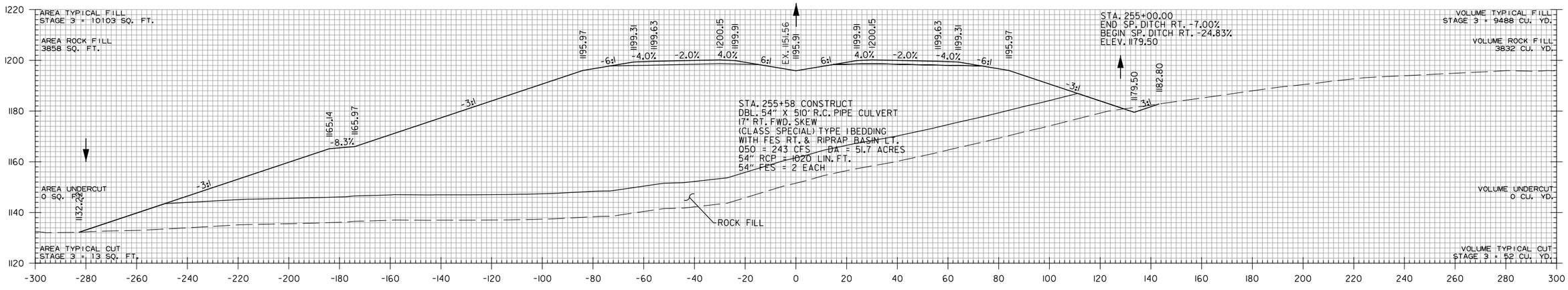

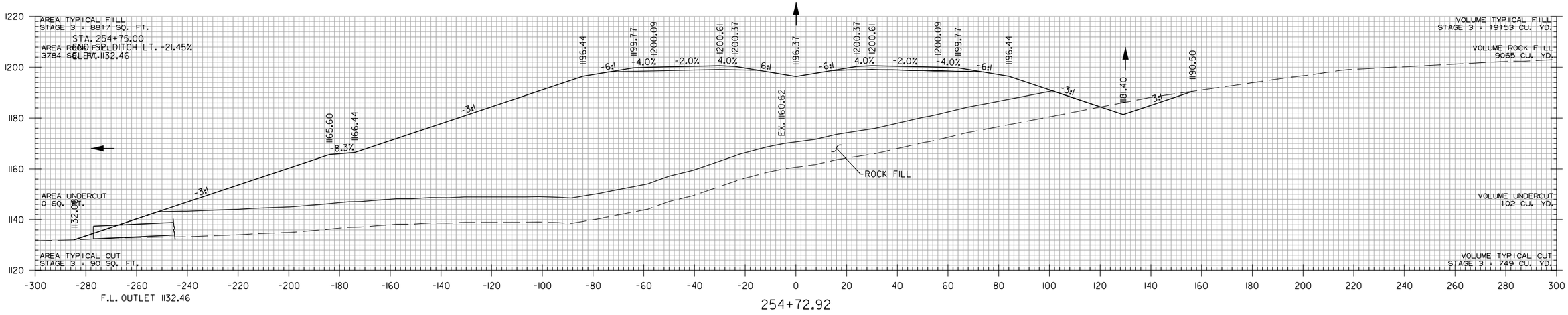

STA. 254+72.92 TO STA. 256+00

WBCallaway 7/17/2023 5:06:09 PM
WORKSPACE: AHTD
L:\2017\17017660 - ARDOT 012326 Hwy 412 - Hwy 112\Drawings\r012326_CX_MNL_01.dgn
REVISED DATE:

DATE REVISED	DATE REVISED	FED. RD. DIST. NO.	STATE	JOB NO.	SHEET NO.	TOTAL SHEETS
		6	ARK.	012326	615	838
		CROSS SECTIONS				
(2)						

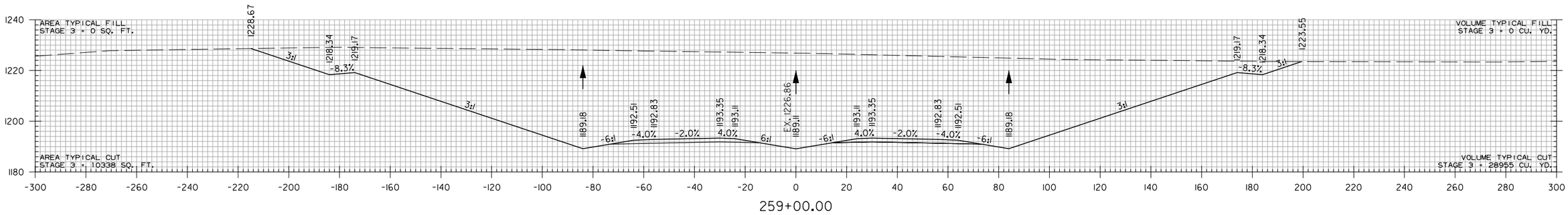

259+00.00

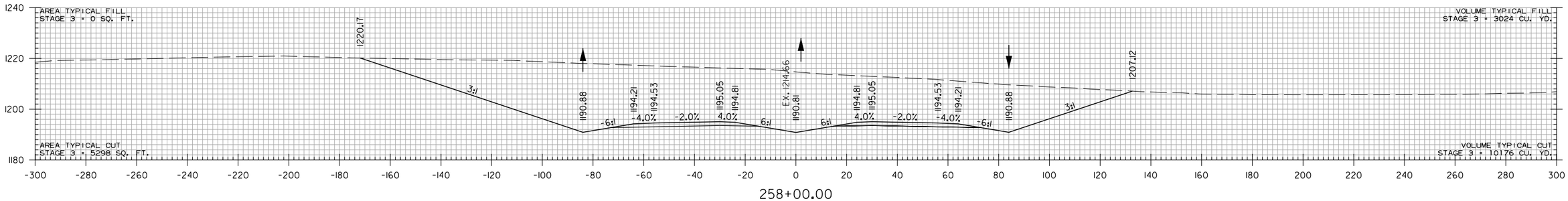

258+00.00

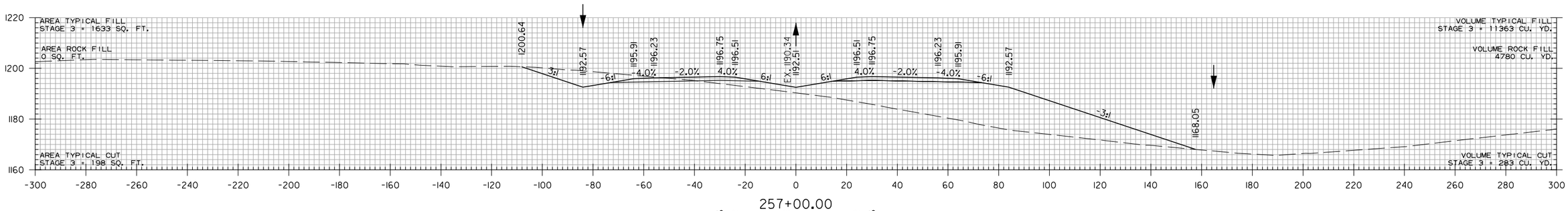

257+00.00

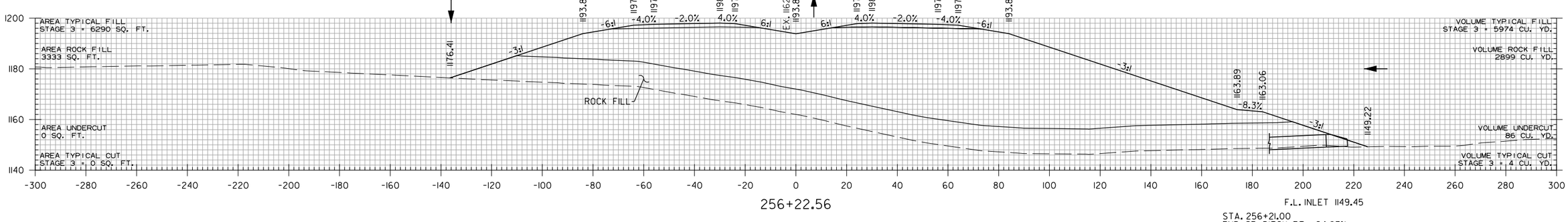

256+22.56

F.L. INLET 1149.45

STA. 256+21.00
END SP. DITCH RT. -24.83%
ELEV. 1149.45

STA. 256+22.56 TO STA. 259+00

WBCalloway 7/17/2023 5:06:09 PM
WORKSPACE: AHTD
L:\2017\17017660 - ARDOT 012326 Hwy 412 - Hwy 112\Drawings\r012326_CX_MNL_01.dgn
REVISED DATE:

DATE REVISED	DATE REVISED	FED. RD. DIST. NO.	STATE	JOB NO.	SHEET NO.	TOTAL SHEETS
		6	ARK.	012326	616	838
		CROSS SECTIONS				
②						

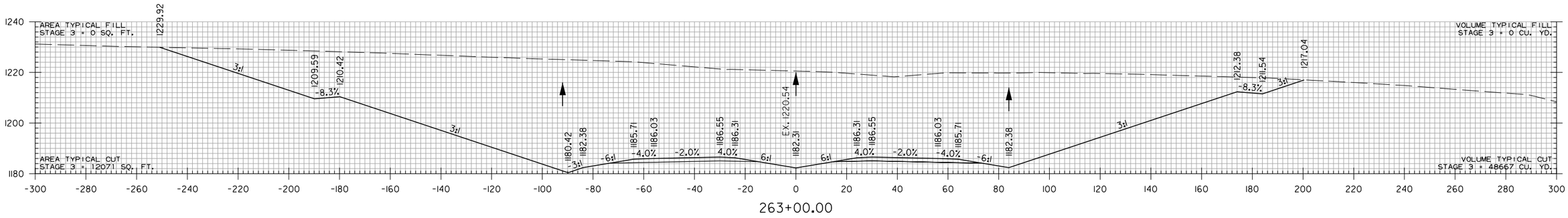

263+00.00

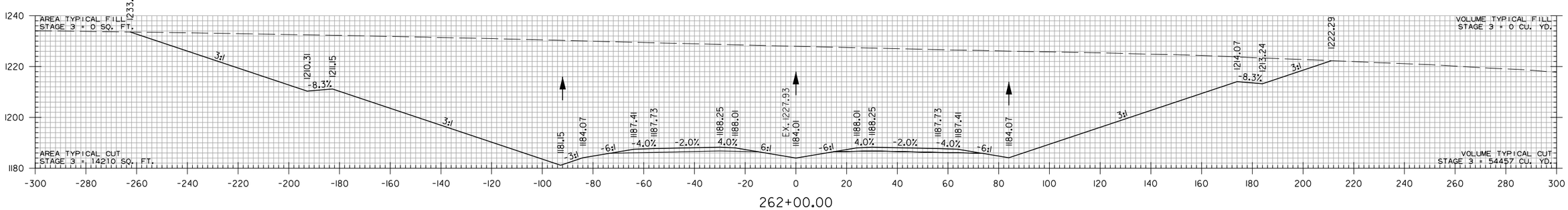

262+00.00

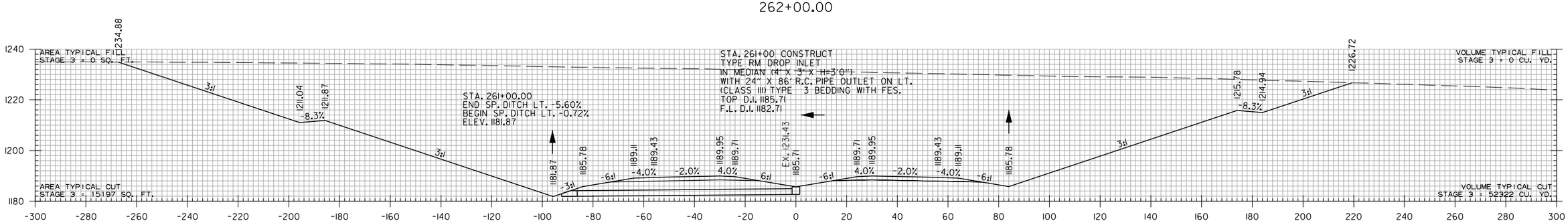

F.L. OUTLET 1181.87

261+00.00

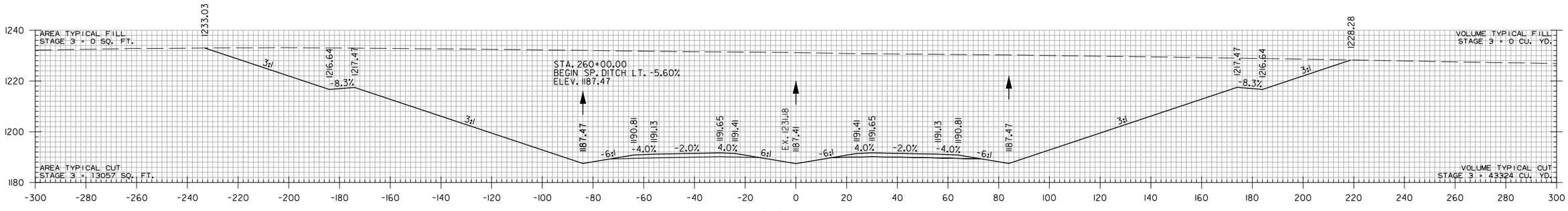

260+00.00

STA. 260+00 TO STA. 263+00

WBCalloway 7/17/2023 5:06:09 PM
WORKSPACE: AHTD
L:\2017\17017660 - ARDOT 012326 Hwy 412 - Hwy 112\Drawings\r012326_CX_MNL_01.dgn
REVISED DATE:

DATE REVISED	DATE REVISED	FED. RD. DIST. NO.	STATE	JOB NO.	SHEET NO.	TOTAL SHEETS
		6	ARK.	012326	617	838
		CROSS SECTIONS				
②						

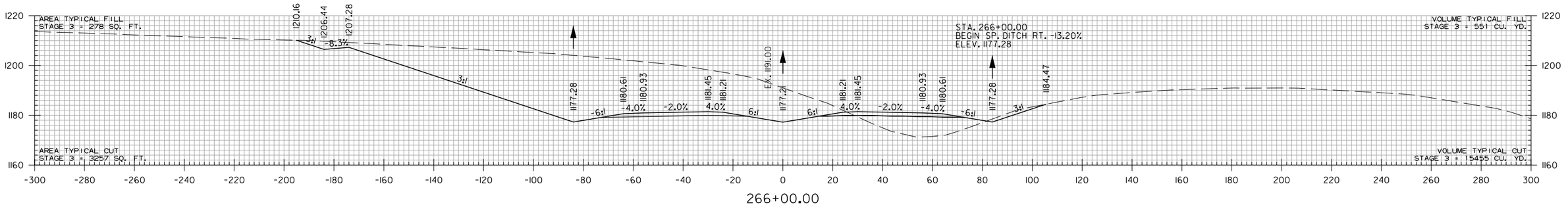

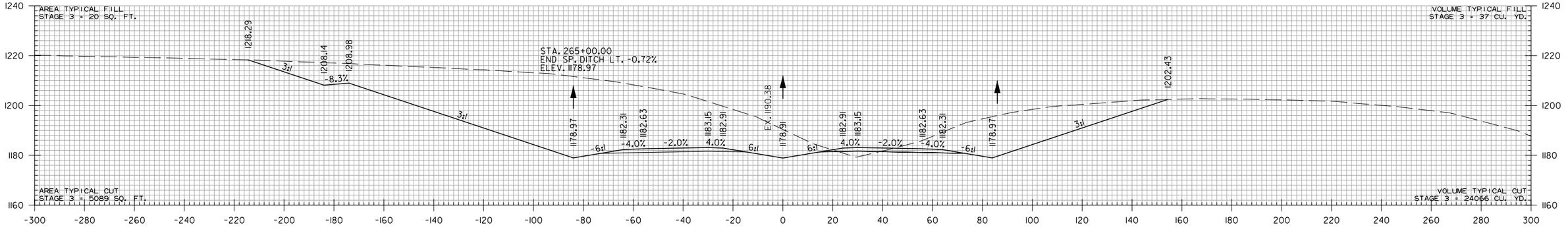

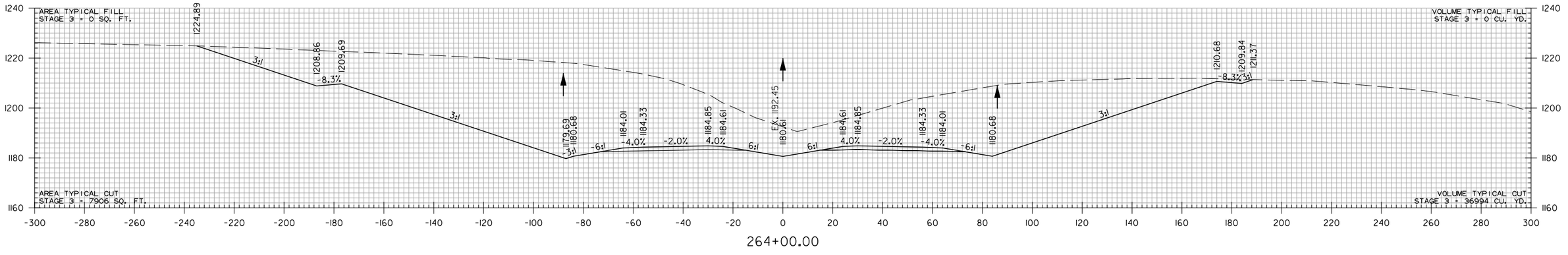

STA. 264+00 TO STA. 266+00

WBCallaway 7/17/2023 5:06:10 PM
WORKSPACE: AHTD
L:\2017\170176\60 - ARDOT 012326 Hwy 412 - Hwy 112\Drawings\r012326_CX_MNL_01.dgn
REVISED DATE:

DATE REVISED	DATE REVISED	FED. RD. DIST. NO.	STATE	JOB NO.	SHEET NO.	TOTAL SHEETS
		6	ARK.	012326	618	838
②		CROSS SECTIONS				

STA. 268+44 CONSTRUCT
54" X 316' R.C. PIPE CULVERT
20° LT. FWD. SKEW
(CLASS V) TYPE 3 BEDDING
WITH FES RT. & RIPRAP BASIN LT.
Q50 = 128 CFS DA = 58.6 ACRES

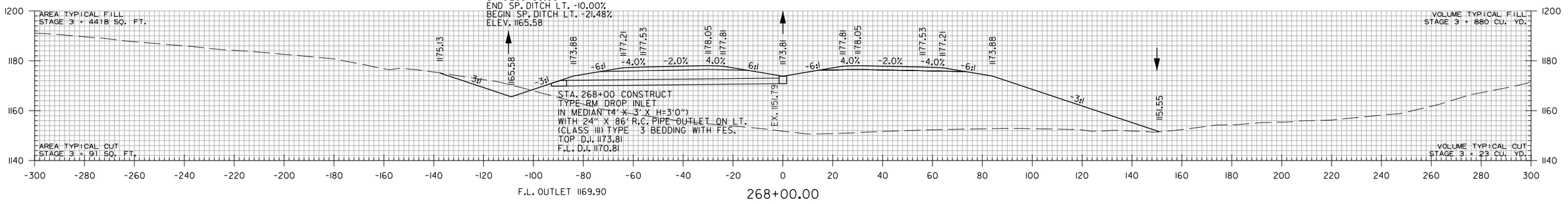

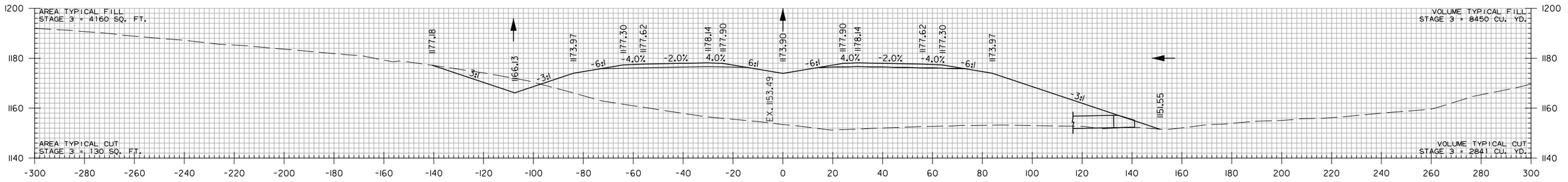

F.L. INLET 1152.20

STA. 267+90.00
END SP. DITCH RT. -13.20%
ELEV. 1152.20

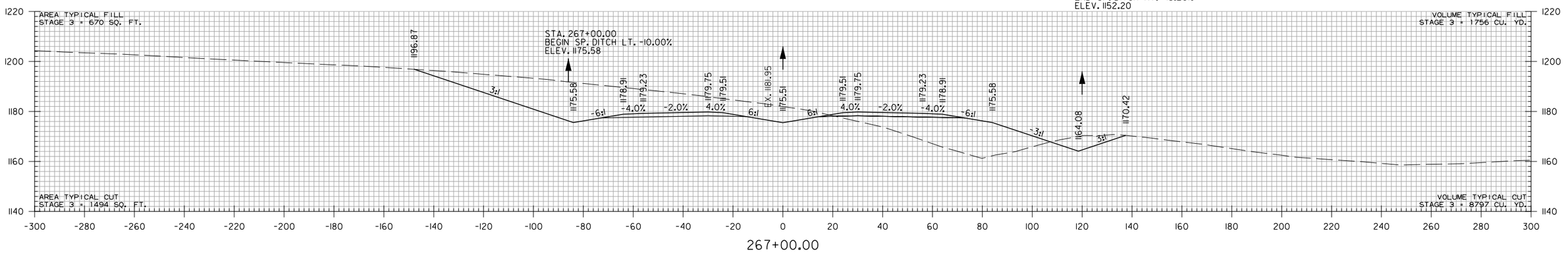

STA. 267+00 TO STA. 268+00

WBCalloway 7/17/2023 5:06:10 PM
WORKSPACE: AHTD
L:\2017\1701660 - ARDOT 012326 Hwy 412 - Hwy 112\Drawings\r012326_CX_MNL_01.dgn
REVISED DATE:

DATE REVISED	DATE REVISED	FED. RD. DIST. NO.	STATE	JOB NO.	SHEET NO.	TOTAL SHEETS
		6	ARK.	012326	619	838
		CROSS SECTIONS				

2

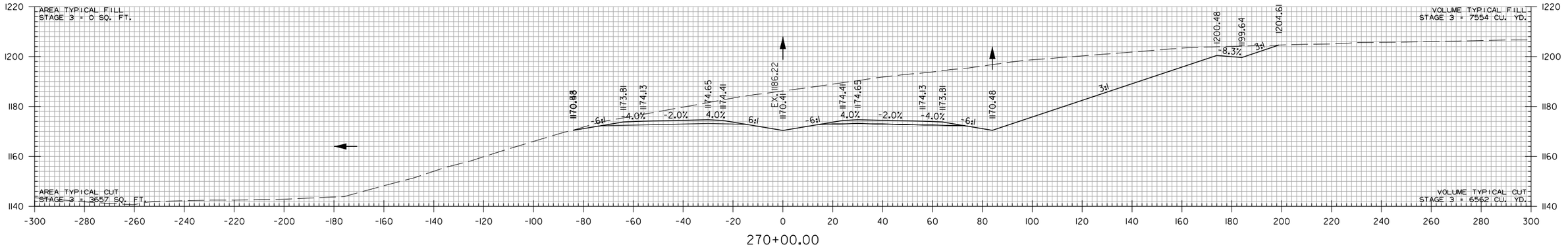

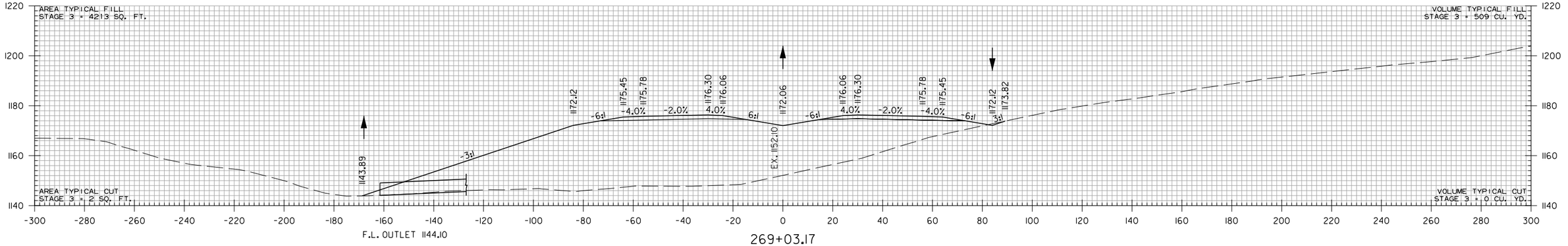

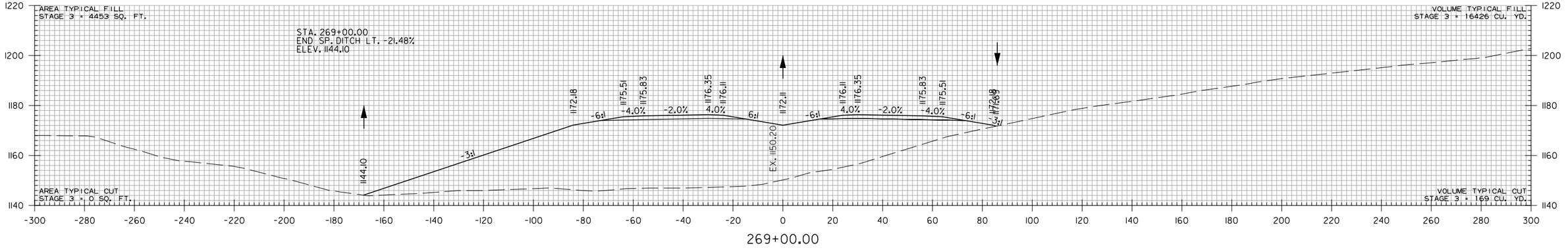

STA. 269+00 TO STA. 270+00

WBCallaway 7/17/2023 5:06:10 PM
WORKSPACE: AHTD
L:\2017\170176660 - ARDOT 012326 Hwy 412 - Hwy 112\Drawings\r012326_CX_MNL_01.dgn
REVISED DATE:

DATE REVISED	DATE REVISED	FED. RD. DIST. NO.	STATE	JOB NO.	SHEET NO.	TOTAL SHEETS
		6	ARK.	012326	620	838
		CROSS SECTIONS				
②						

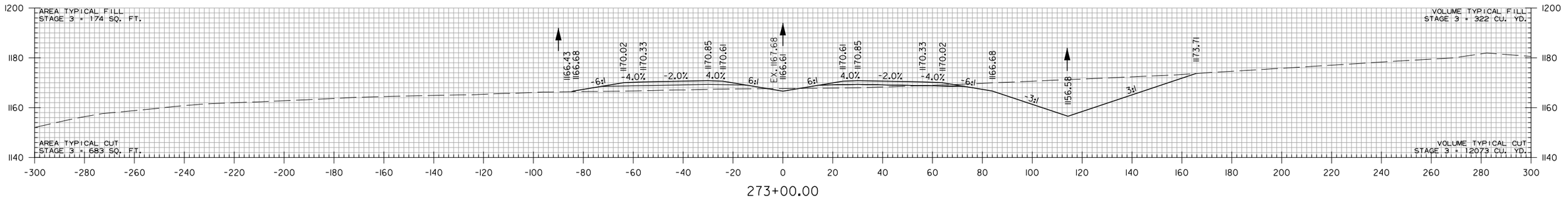

273+00.00

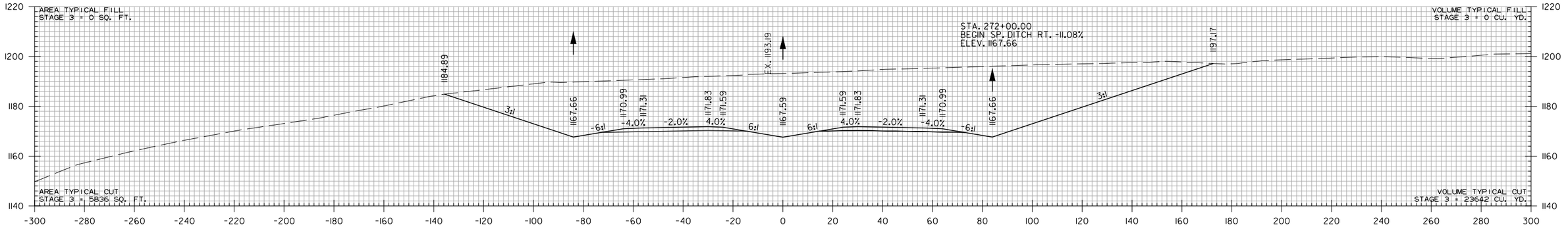

272+00.00

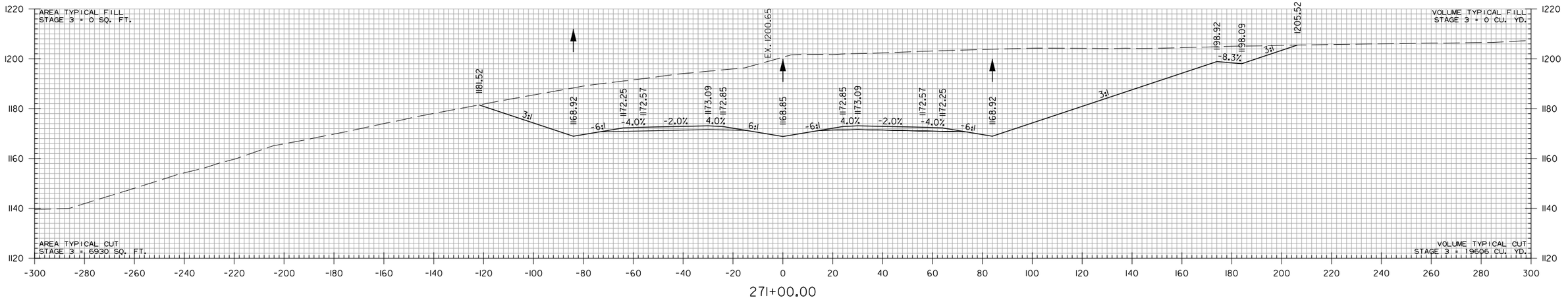

271+00.00

STA. 271+00 TO STA. 273+00

WBCallaway 7/17/2023 5:06:10 PM
WORKSPACE: AHTD
L:\2017\170766O - ARDOT 012326 Hwy 412 - Hwy 112\Drawings\r012326_CX_MNL_01.dgn
REVISED DATE:

DATE REVISED	DATE REVISED	FED. RD. DIST. NO.	STATE	JOB NO.	SHEET NO.	TOTAL SHEETS
		6	ARK.	012326	621	838
②		CROSS SECTIONS				

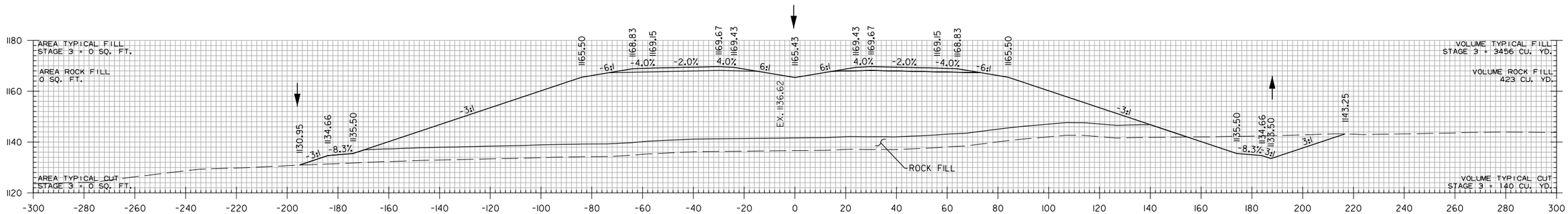

276+00.00

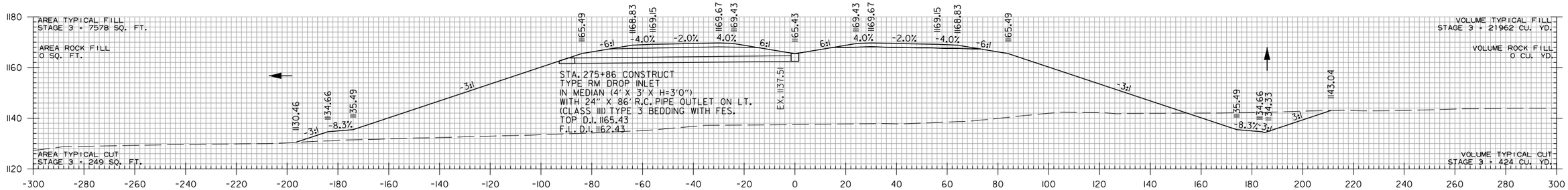

275+86.21

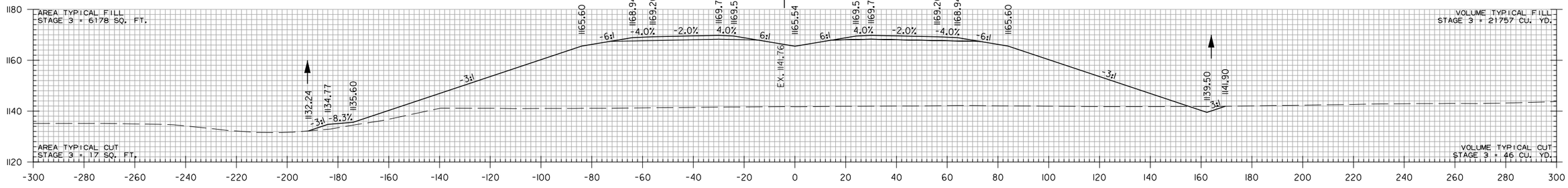

275+00.00

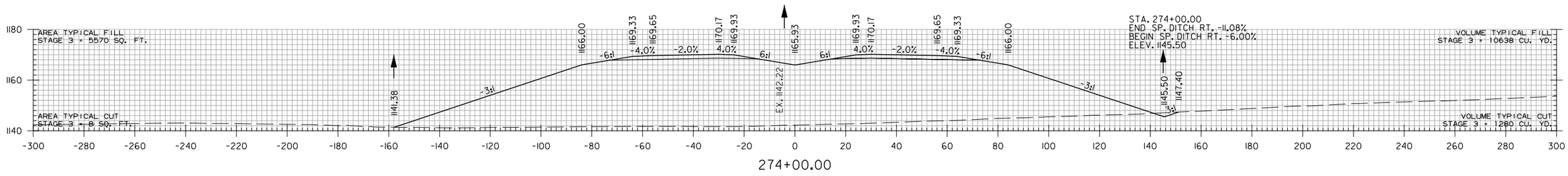

274+00.00

STA. 274+00 TO STA. 276+00

WBCallaway 7/17/2023 5:06:41 PM
WORKSPACE: AHTD
L:\2017\701660 - ARDOT 012326 Hwy 412 - Hwy 112\Drawings\r012326_CX_MNL_01.dgn
REVISED DATE:

DATE REVISED	DATE REVISED	FED. RD. DIST. NO.	STATE	JOB NO.	SHEET NO.	TOTAL SHEETS
10-23-2023		6	ARK.	012326	622	838
(2)		CROSS SECTIONS				

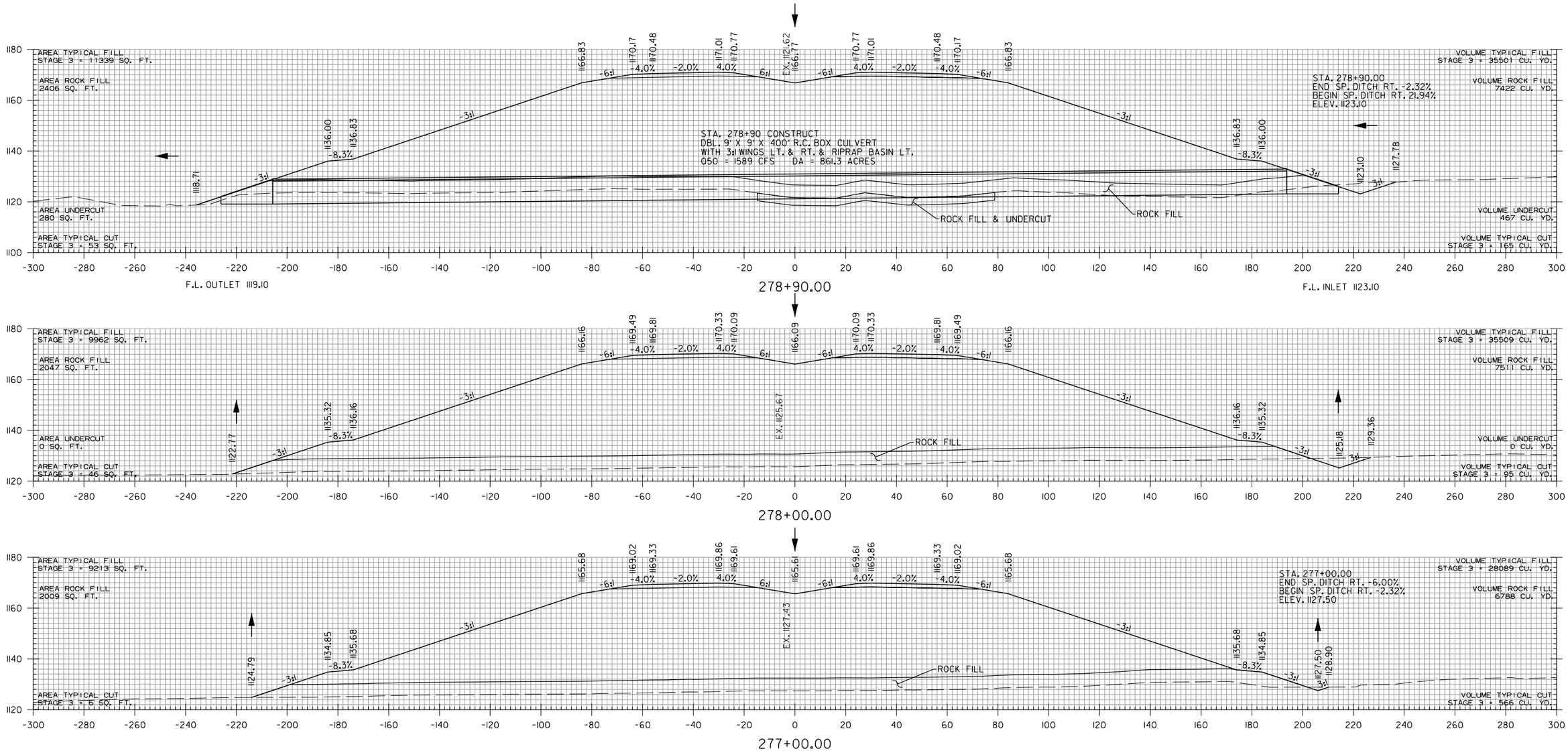

STA. 277+00 TO STA. 278+90

EPSherrill
WORKSPACE: AHTD
L:\2017\170176\60 - ARDOT 012326 Hwy 412 - Hwy 112\Drawings\r012326_CX_MNL_01.dgn
10/23/2023 2:35:47 PM
REVISED DATE:

DATE REVISED	DATE REVISED	FED. RD. DIST. NO.	STATE	JOB NO.	SHEET NO.	TOTAL SHEETS
		6	ARK.	012326	623	838
		CROSS SECTIONS				
②						

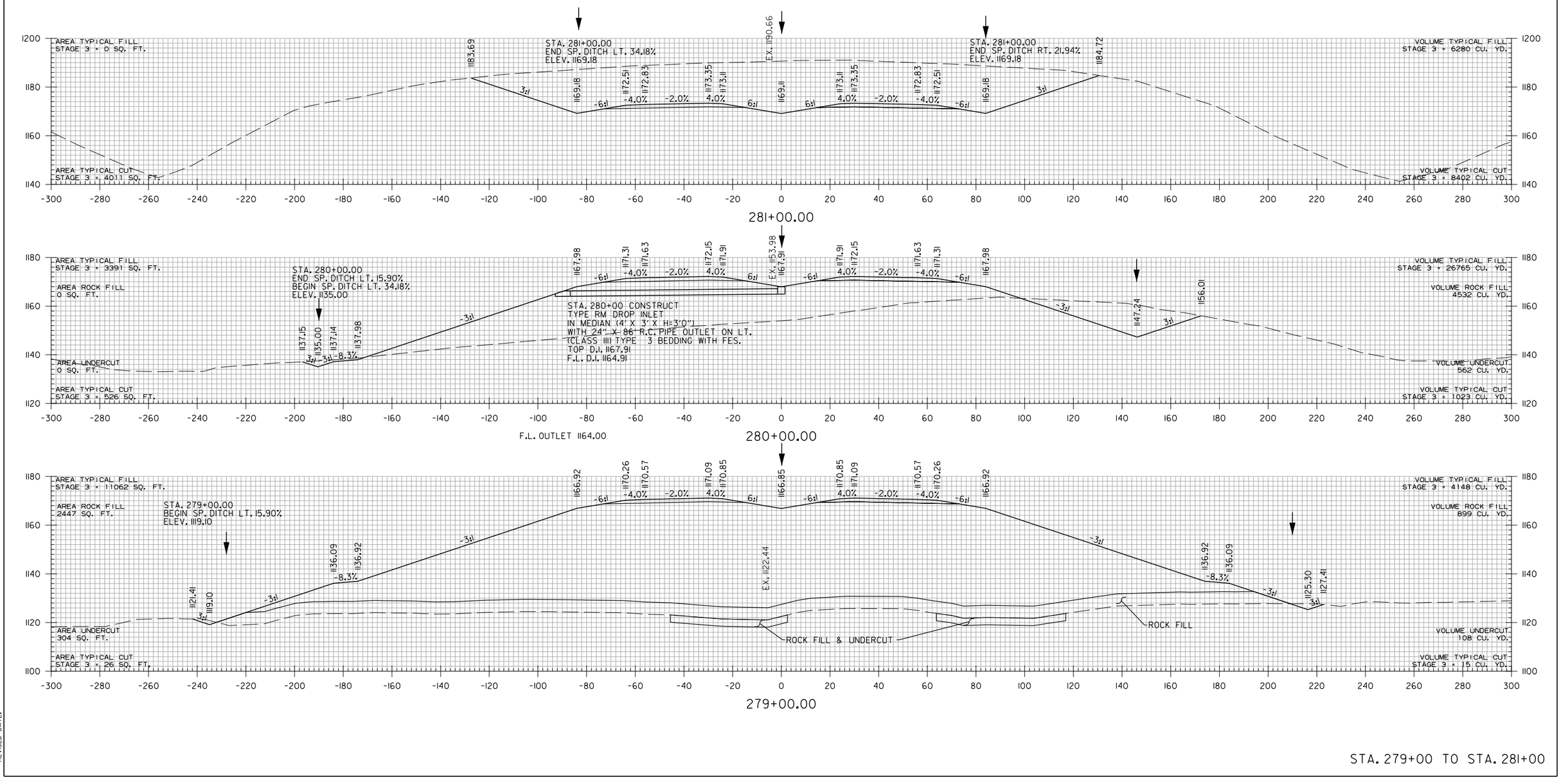

STA. 279+00 TO STA. 281+00

WBCalloway 7/17/2023 5:06:11 PM
WORKSPACE: AHTD
L:\2017\17017660 - ARDOT 012326 Hwy 412 - Hwy 112\Drawings\r012326_CX_MNL_01.dgn
REVISED DATE:

DATE REVISED	DATE REVISED	FED. RD. DIST. NO.	STATE	JOB NO.	SHEET NO.	TOTAL SHEETS
		6	ARK.	012326	624	838
		CROSS SECTIONS				
②						

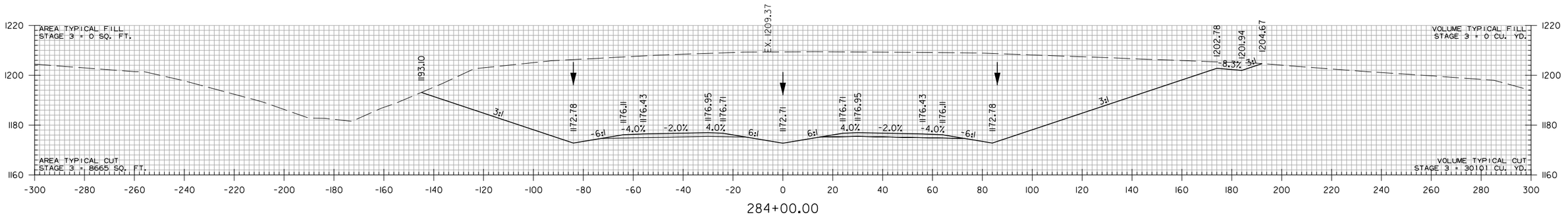

284+00.00

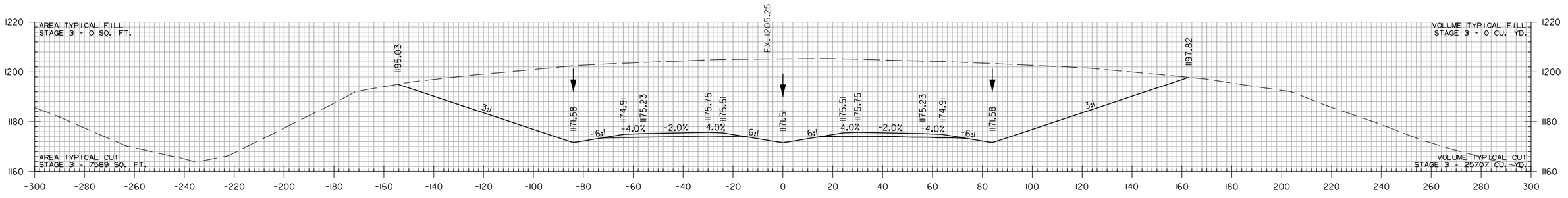

283+00.00

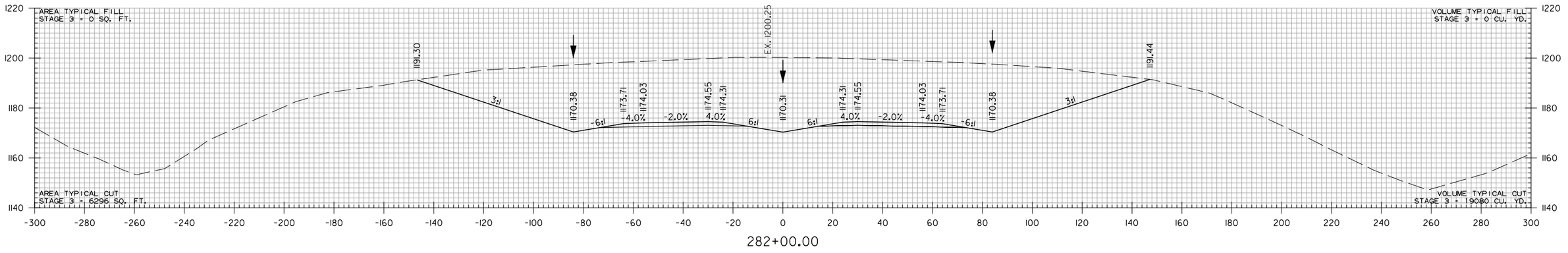

282+00.00

STA. 282+00 TO STA. 284+00

WBCalloway 7/17/2023 5:06:11 PM
WORKSPACE: AHTD
L:\2017\170176\60 - ARDOT 012326 Hwy 412 - Hwy 412\Drawings\r012326_CX_MNL_01.dgn
REVISED DATE:

DATE REVISED	DATE REVISED	FED. RD. DIST. NO.	STATE	JOB NO.	SHEET NO.	TOTAL SHEETS
		6	ARK.	012326	625	838
②		CROSS SECTIONS				

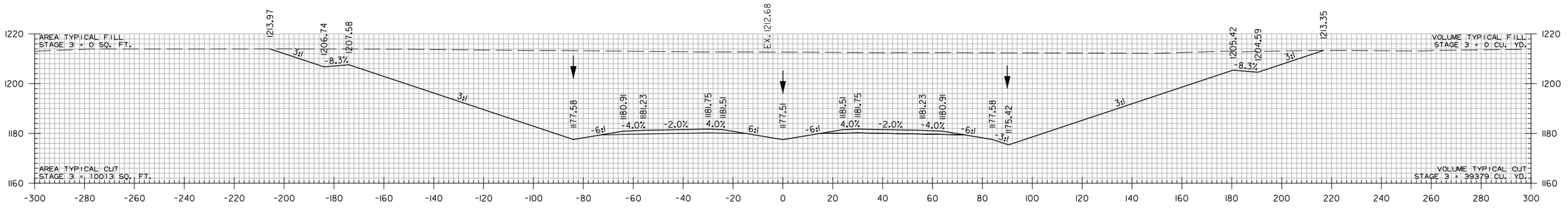

288+00.00

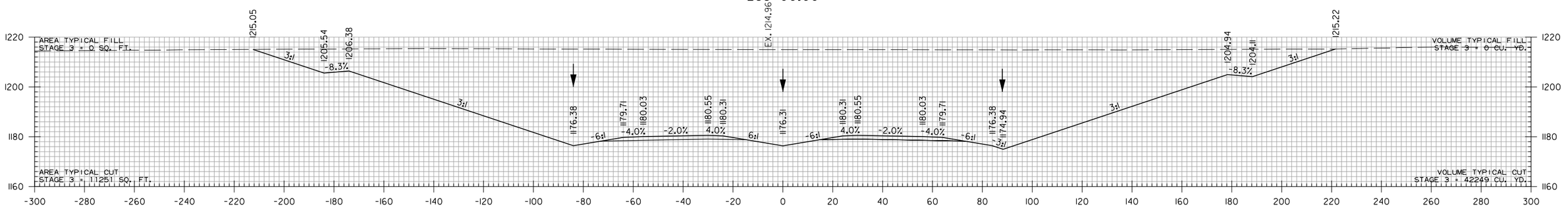

287+00.00

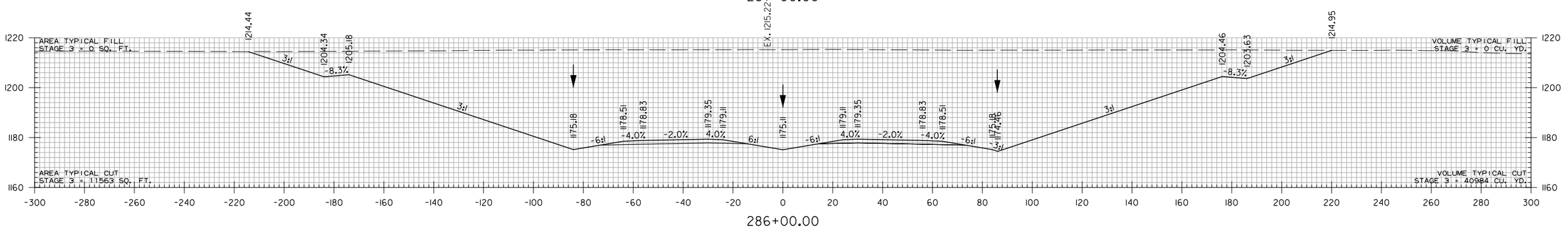

286+00.00

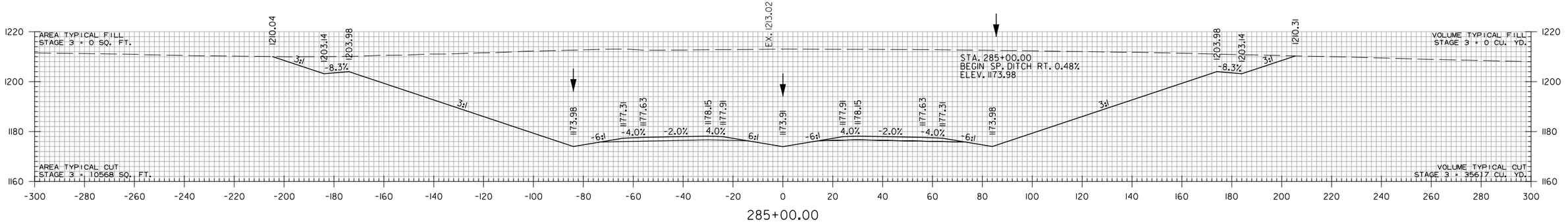

285+00.00

STA. 285+00 TO STA. 288+00

WBCalloway 7/17/2023 5:06:11 PM
WORKSPACE: AHTD
L:\2017\1701660 - ARDOT 012326 Hwy 412 - Hwy 112\Drawings\r012326_CX_MNL_01.dgn
REVISED DATE:

DATE REVISED	DATE REVISED	FED. RD. DIST. NO.	STATE	JOB NO.	SHEET NO.	TOTAL SHEETS
		6	ARK.	012326	626	838
		CROSS SECTIONS				

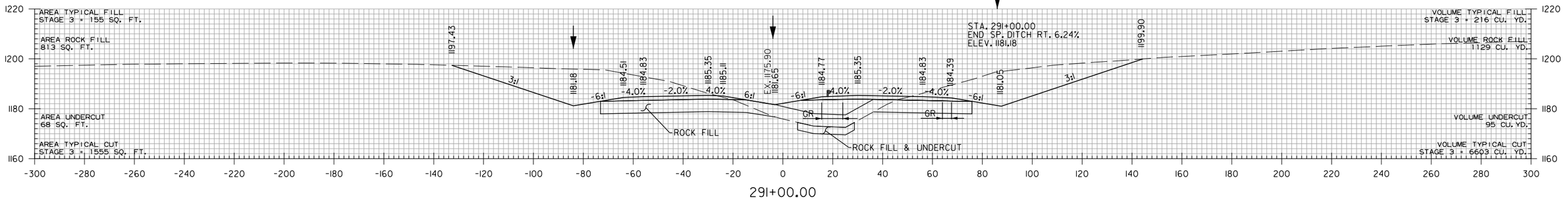

291+00.00

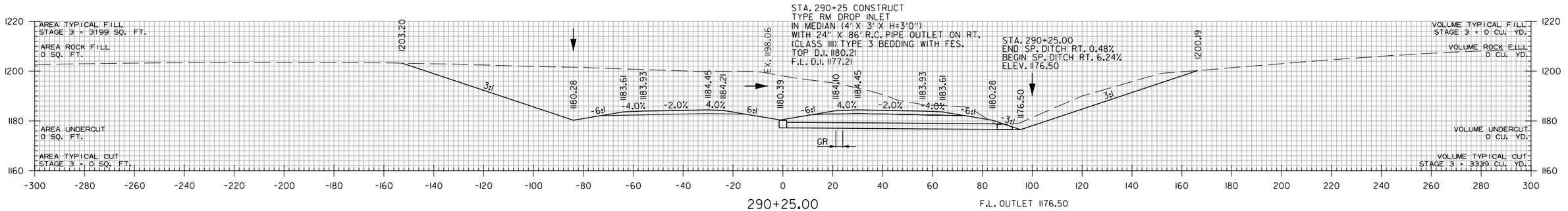

290+25.00 F.L. OUTLET 1176.50

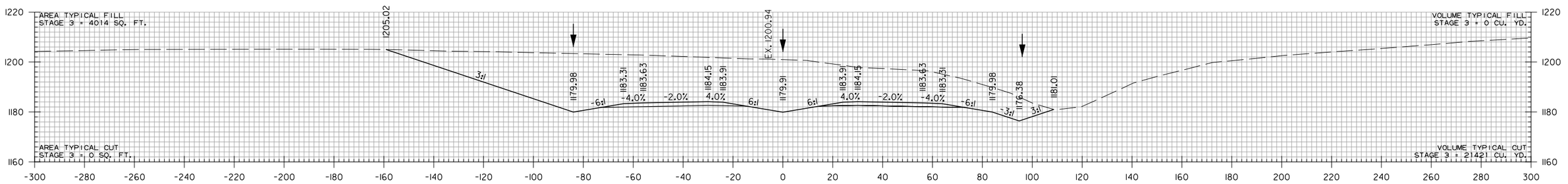

290+00.00

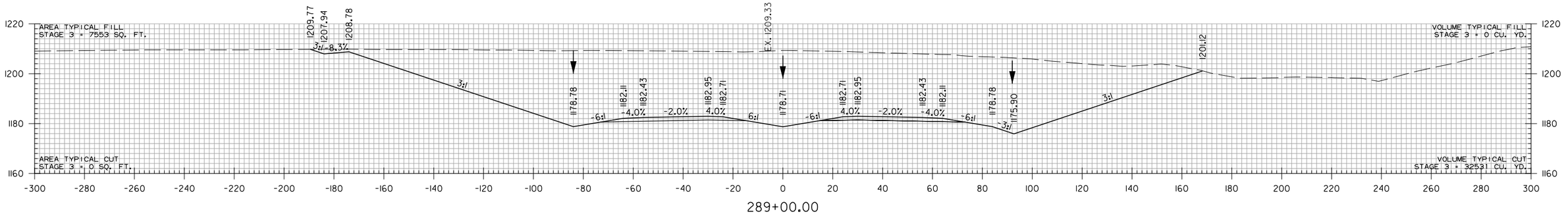

289+00.00

STA. 289+00 TO STA. 291+00

WBCalloway 7/17/2023 5:06:12 PM
WORKSPACE: AHTD
L:\2017\17017660 - ARDOT 012326 Hwy 412 - Hwy 112\Drawings\r012326_CX_MNL_01.dgn
REVISED DATE:

DATE REVISED	DATE REVISED	FED. RD. DIST. NO.	STATE	JOB NO.	SHEET NO.	TOTAL SHEETS
		6	ARK.	012326	627	838
		CROSS SECTIONS				
②						

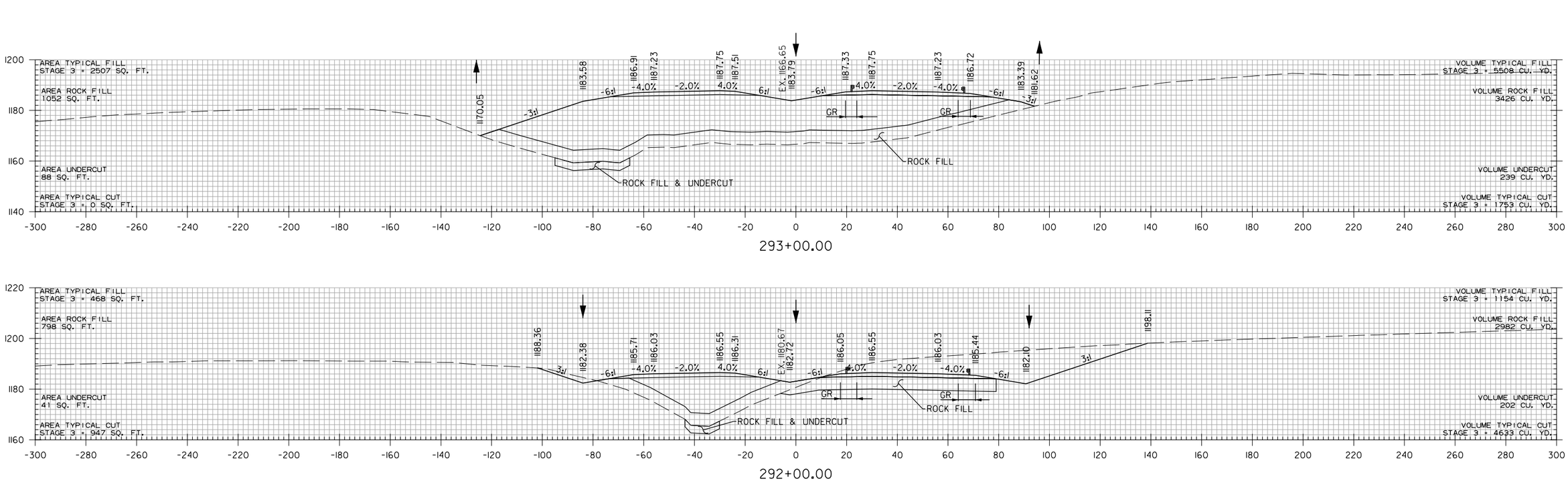

STA. 292+00 TO STA. 293+00

WBCallaway 7/17/2023 5:06:12 PM
WORKSPACE: AHTD
L:\2017\170176\60 - ARDOT 012326 Hwy 412 - Hwy 112\Drawings\r012326_CX_MNL_01.dgn
REVISED DATE:

DATE REVISED	DATE REVISED	FED. RD. DIST. NO.	STATE	JOB NO.	SHEET NO.	TOTAL SHEETS
		6	ARK.	012326	628	838
		CROSS SECTIONS				
②						

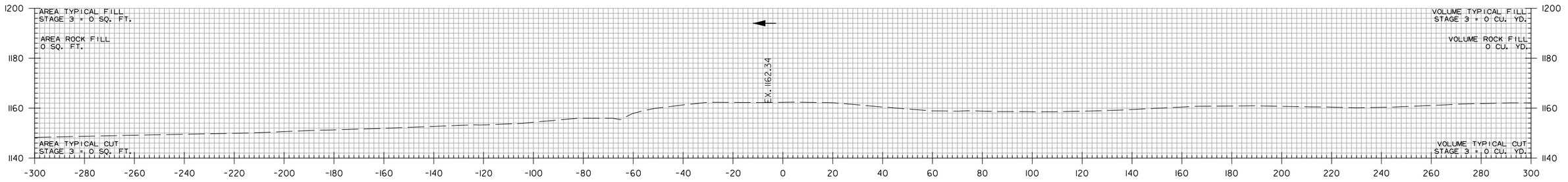

296+06.89

STA. 296+06.89 BEGIN TOE OF SLOPE

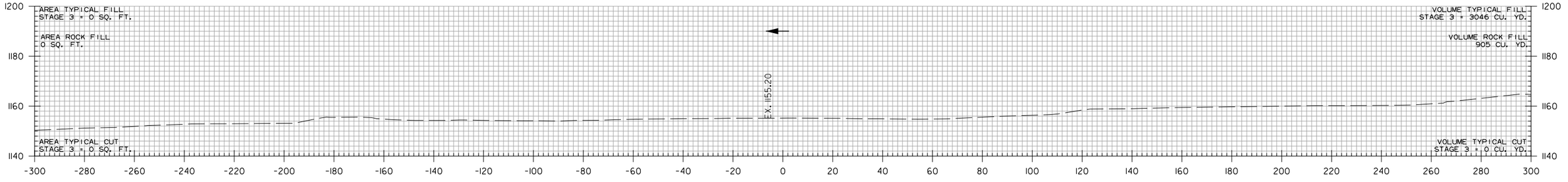

294+50.77

STA. 294+50.77 END TOE OF SLOPE

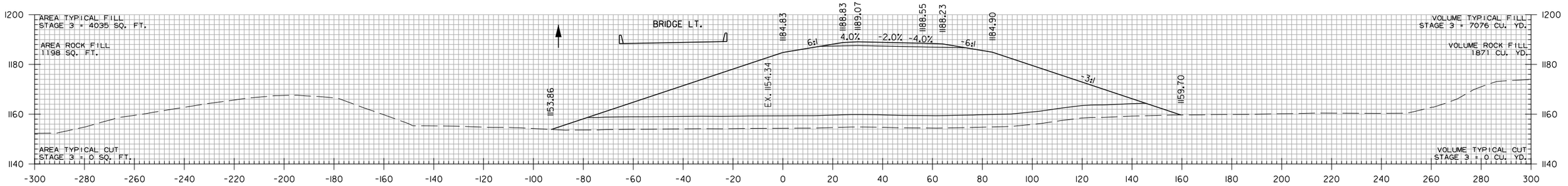

294+10.00

STA. 294+10.00 BEGIN BRIDGE RT.

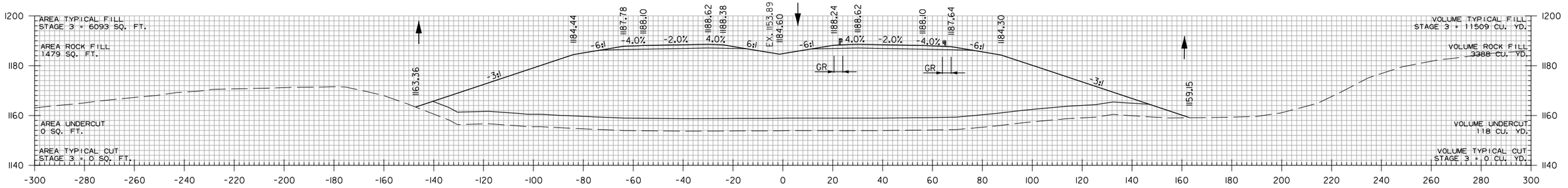

293+72.27

STA. 293+72.27 BEGIN BRIDGE LT.

STA. 293+72.27 TO STA. 296+06.89

WBCalloway 7/18/2023 7:36:01 AM
WORKSPACE: AHTD
L:\2017\170T660 - ARDOT 012326 Hwy 412 - Hwy 112\Drawings\r012326_CX_MNL_01.dgn
REVISED DATE:

DATE REVISED	DATE REVISED	FED. RD. DIST. NO.	STATE	JOB NO.	SHEET NO.	TOTAL SHEETS
		6	ARK.	012326	629	838
		CROSS SECTIONS				
②						

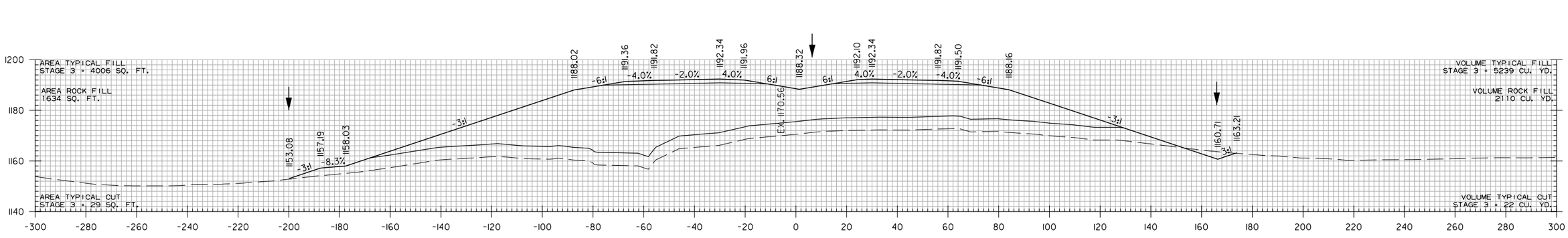

296+82.36

STA. 296+82.36 END BRIDGE RT.

STA. 296+70.00
END SP. DITCH RT. 1.67%
BEGIN SP. DITCH RT. 13.82%
ELEV. 1159.00

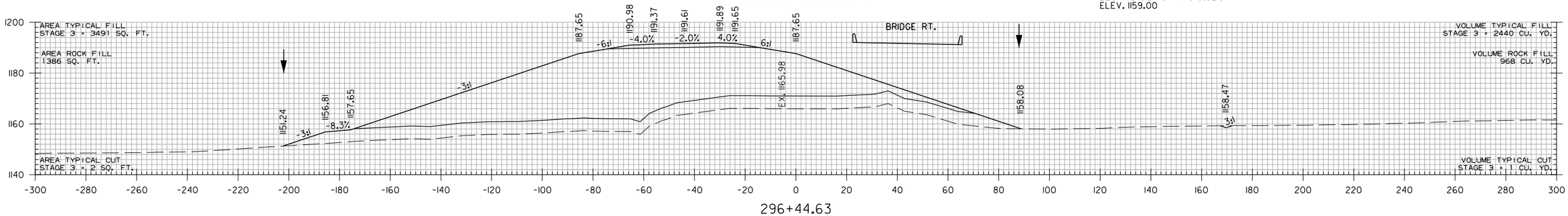

296+44.63

STA. 296+44.63 END BRIDGE LT.

STA. 296+40.00
BEGIN SP. DITCH RT. 1.67%
ELEV. 1158.50

STA. 296+44.63 TO STA. 296+82.36

WBCallaway 7/18/2023 7:36:01 AM
WORKSPACE: AHTD
L:\2017\17017660 - ARDOT 012326 Hwy 412 - Hwy 112\Drawings\r012326_CX_MNL_01.dgn
REVISED DATE:

DATE REVISED	DATE REVISED	FED. RD. DIST. NO.	STATE	JOB NO.	SHEET NO.	TOTAL SHEETS
		6	ARK.	012326	630	838
②		CROSS SECTIONS				

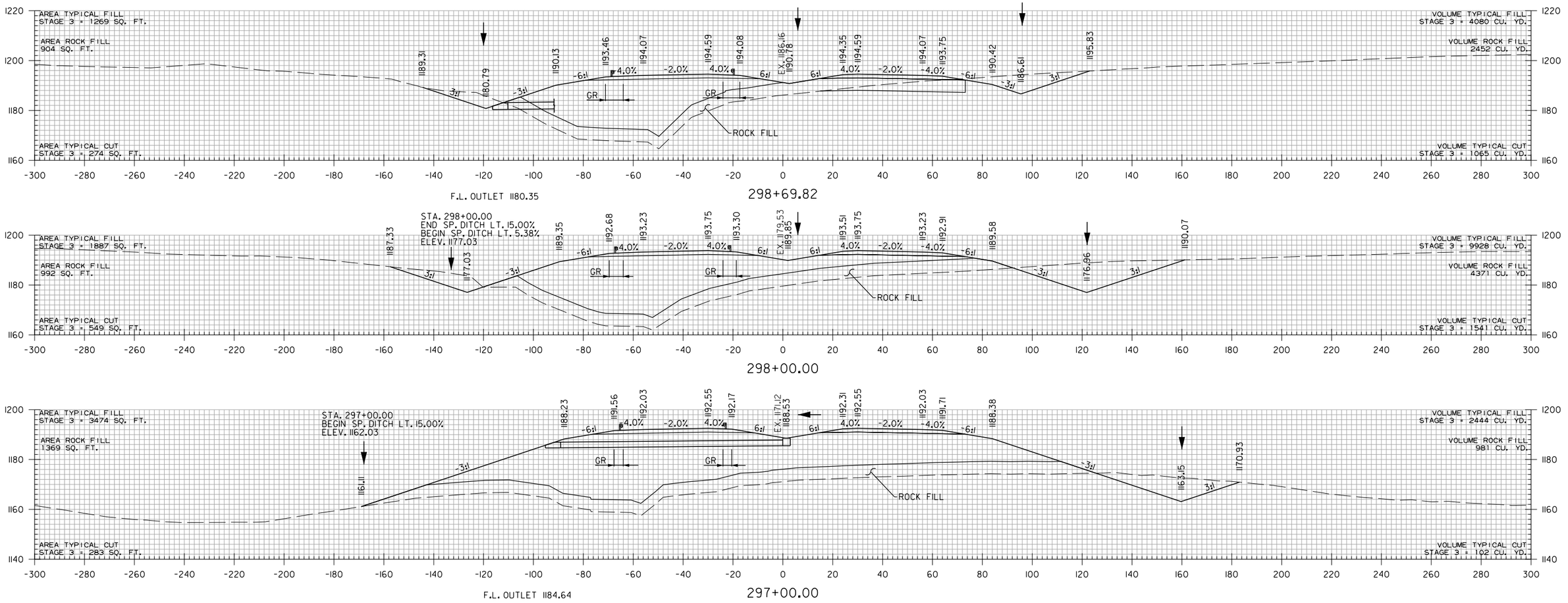

STA. 297+00 CONSTRUCT
TYPE RM DROP INLET
IN MEDIAN (4' X 3' X H=3'0")
WITH 24" X 90' R.C. PIPE OUTLET ON LT.
(CLASS III) TYPE 3 BEDDING WITH FES.
TOP D.I. 1188.55
F.L. D.I. 1185.55

STA. 297+00 TO STA. 298+69.82

WBCalloway 7/17/2023 5:06:12 PM
WORKSPACE: AHTD
L:\2017\17017660 - ARDOT 012326 Hwy 412 - Hwy 112\Drawings\r012326_CX_MNL_01.dgn
REVISED DATE:

DATE REVISED	DATE REVISED	FED. RD. DIST. NO.	STATE	JOB NO.	SHEET NO.	TOTAL SHEETS
		6	ARK.	012326	631	838
		CROSS SECTIONS				
②						

STA. 301+33.58 BEGIN SUPERELEVATION

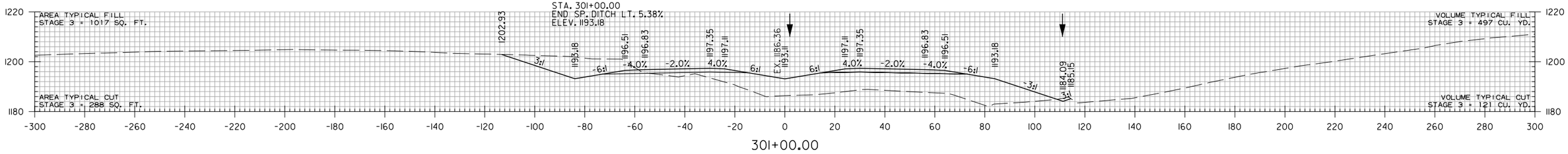

301+00.00

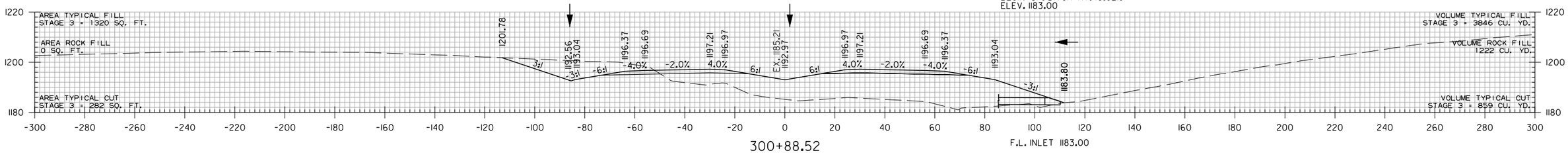

300+88.52

F.L. INLET 1183.00

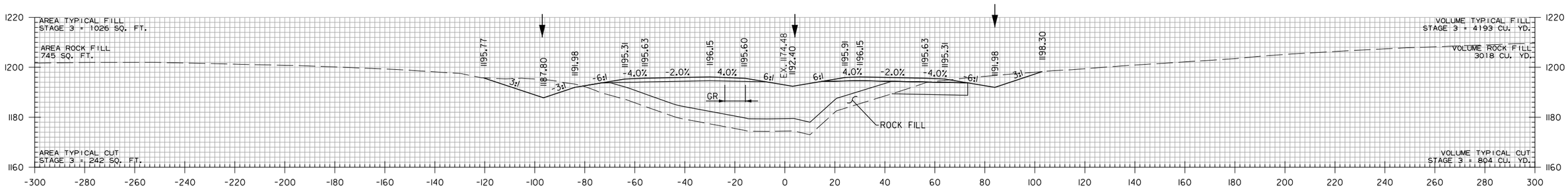

300+00.00

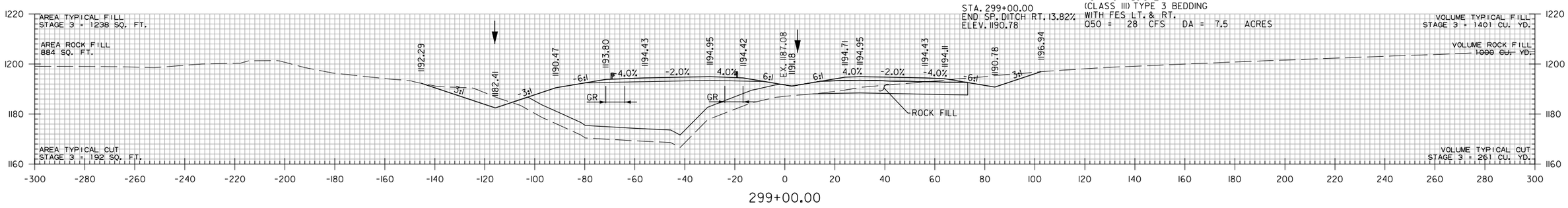

299+00.00

STA. 299+00 TO STA. 301+00

WBCalloway 7/17/2023 5:06:12 PM
WORKSPACE: AHTD
L:\2017\170176\60 - ARDOT 012326 Hwy 412 - Hwy 112\Drawings\r012326_CX_MNL_01.dgn
REVISED DATE:

DATE REVISED	DATE REVISED	FED. RD. DIST. NO.	STATE	JOB NO.	SHEET NO.	TOTAL SHEETS
		6	ARK.	012326	632	838
		CROSS SECTIONS				
②						

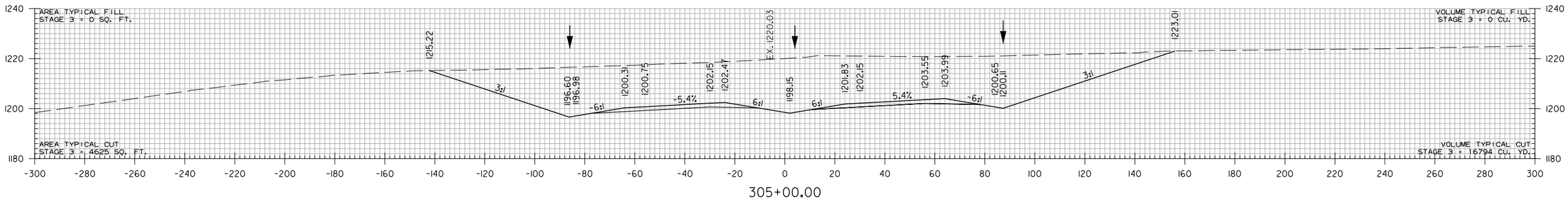

305+00.00

STA. 304+83.58 MAX. SUPERELEVATION (0.054'/')

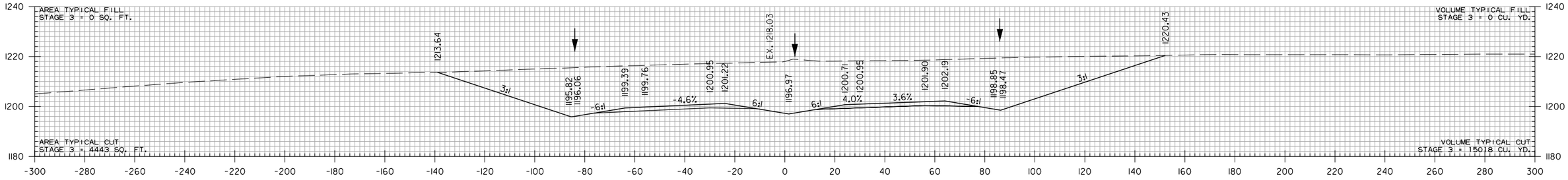

304+00.00

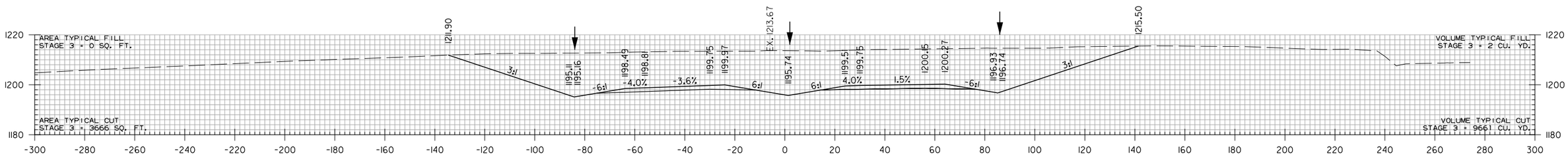

303+00.00

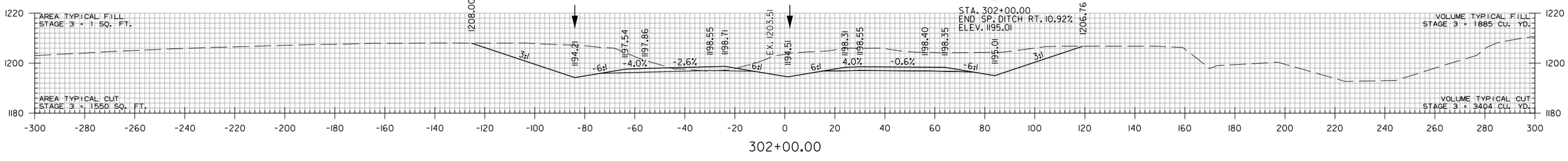

302+00.00

STA. 302+00 TO STA. 305+00

WBCallaway 7/17/2023 5:06:13 PM
WORKSPACE: AHTD
L:\201\1701660 - ARDOT 012326 Hwy 412 - Hwy 112\Drawings\r012326_CX_MNL_01.dgn
REVISED DATE:

DATE REVISED	DATE REVISED	FED. RD. DIST. NO.	STATE	JOB NO.	SHEET NO.	TOTAL SHEETS
		6	ARK.	012326	633	838
		CROSS SECTIONS				

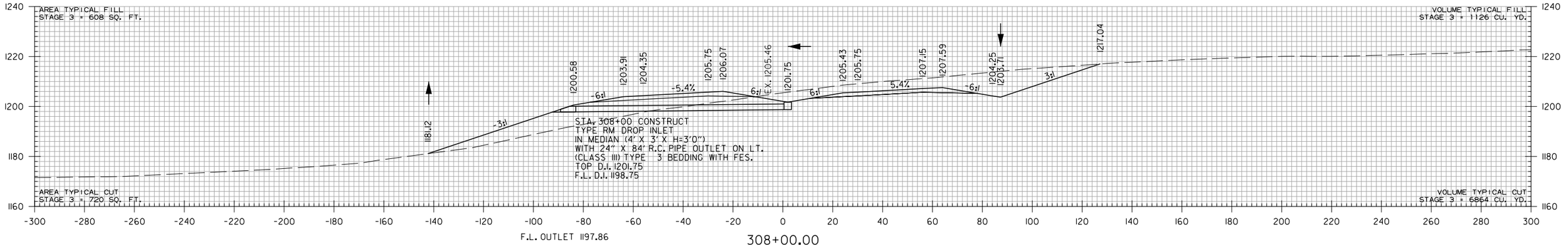

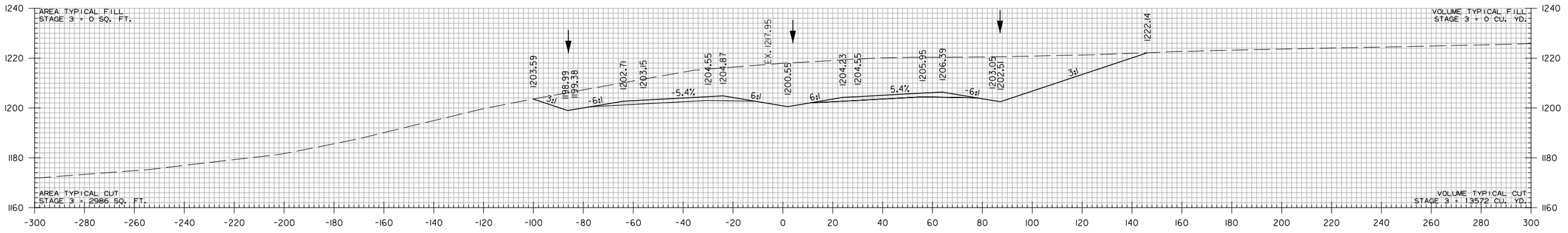

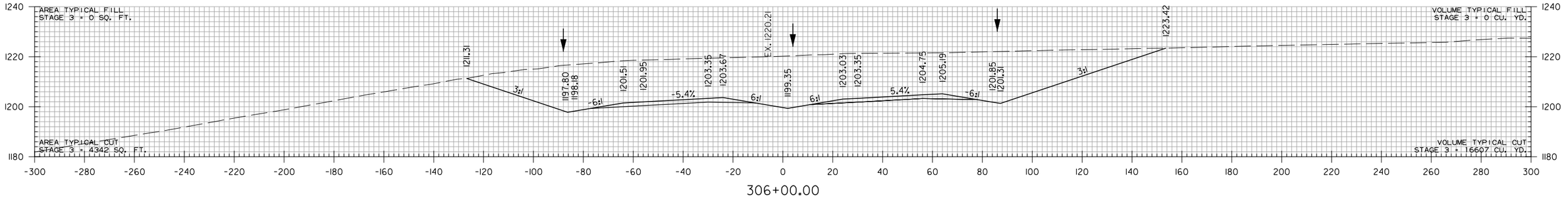

STA. 306+00 TO STA. 308+00

WBCalloway 7/17/2023 5:06:13 PM
WORKSPACE: AHTD
L:\20IT\I70I660 - ARDOT 012326 Hwy 412 - Hwy 121\Drawings\r012326_CX_MNL_01.dgn
REVISED DATE:

DATE REVISED	DATE REVISED	FED. RD. DIST. NO.	STATE	JOB NO.	SHEET NO.	TOTAL SHEETS
		6	ARK.	012326	634	838
		CROSS SECTIONS				
②						

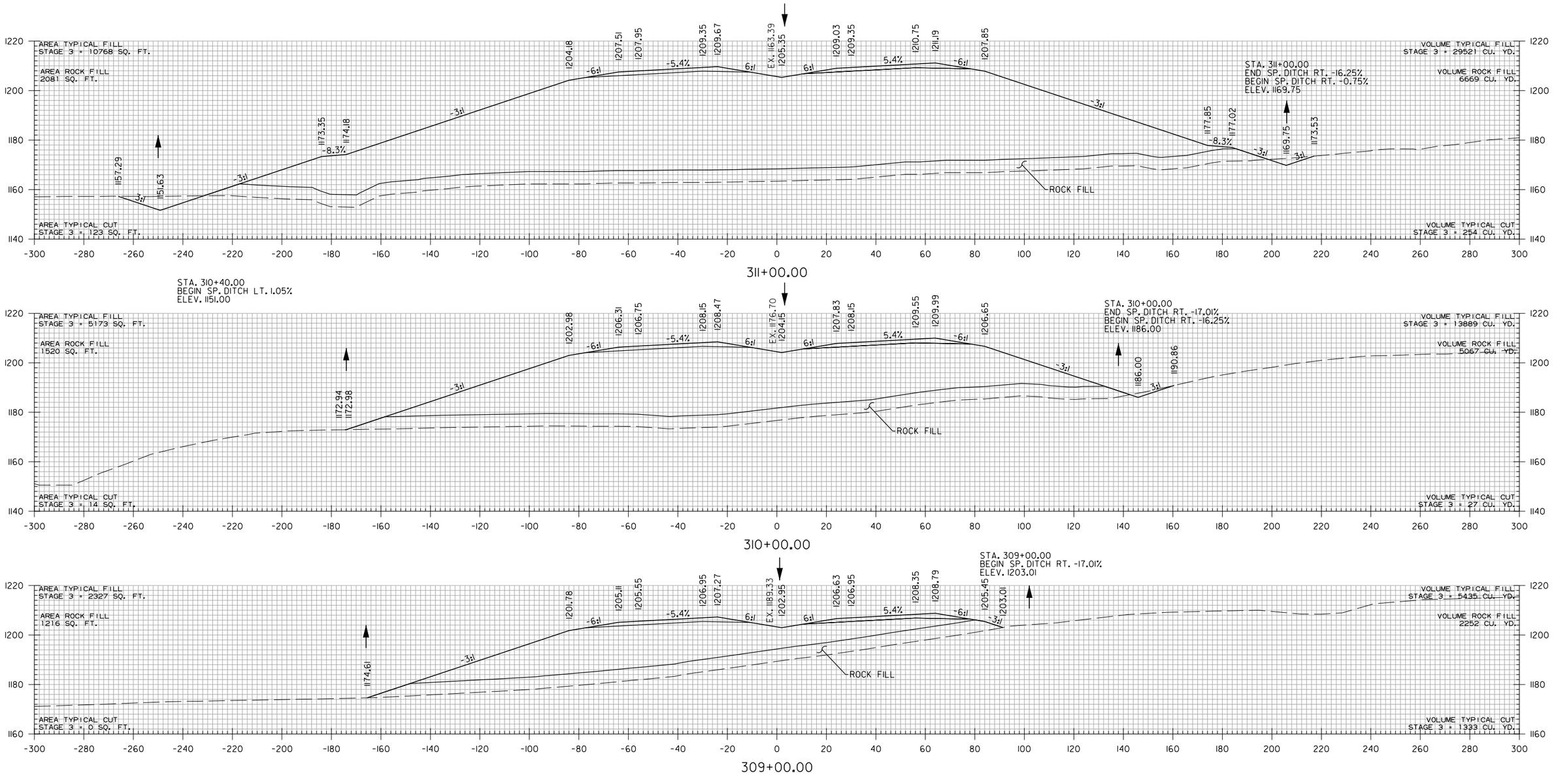

STA. 309+00 TO STA. 311+00

WBCallaway 7/17/2023 5:06:13 PM
WORKSPACE: AHTD
L:\2017\17017660 - ARDOT 012326 Hwy 412 - Hwy 112\Drawings\r012326_CX_MNL_01.dgn
REVISED DATE:

DATE REVISED	DATE REVISED	FED. RD. DIST. NO.	STATE	JOB NO.	SHEET NO.	TOTAL SHEETS
		6	ARK.	012326	635	838
		CROSS SECTIONS				
②						

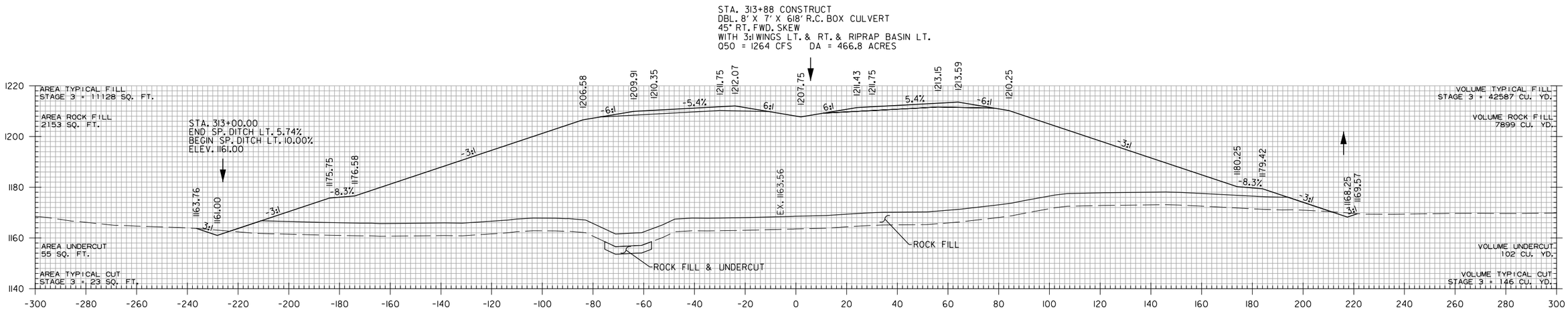

STA. 311+40.62 TO STA. 313+00

WBCallaway 7/17/2023 5:06:13 PM
WORKSPACE: AHTD
L:\2017\17017660 - ARDOT 012326 Hwy 412 - Hwy 112\Drawings\r012326_CX_MNL_01.dgn
REVISED DATE:

DATE REVISED	DATE REVISED	FED. RD. DIST. NO.	STATE	JOB NO.	SHEET NO.	TOTAL SHEETS
		6	ARK.	012326	636	838
		CROSS SECTIONS				

2

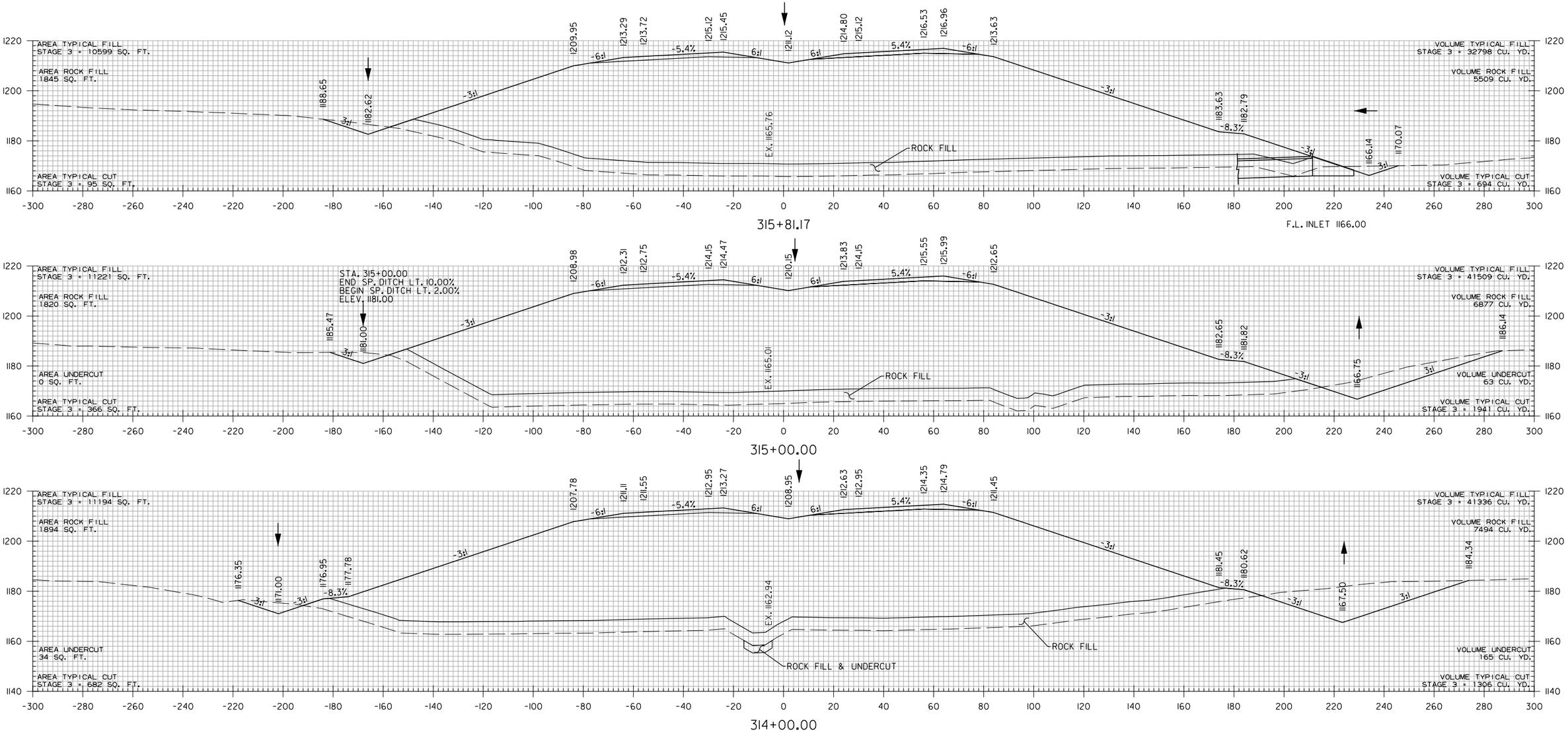

STA. 314+00 TO STA. 315+81.17

WBCallaway 7/17/2023 5:06:14 PM
WORKSPACE: AHTD
L:\2017\170176\60 - ARDOT 012326 Hwy 412 - Hwy 112\Drawings\r012326_CX_MNL_01.dgn
REVISED DATE:

DATE REVISED	DATE REVISED	FED. RD. DIST. NO.	STATE	JOB NO.	SHEET NO.	TOTAL SHEETS
		6	ARK.	012326	637	838
		CROSS SECTIONS				
②						

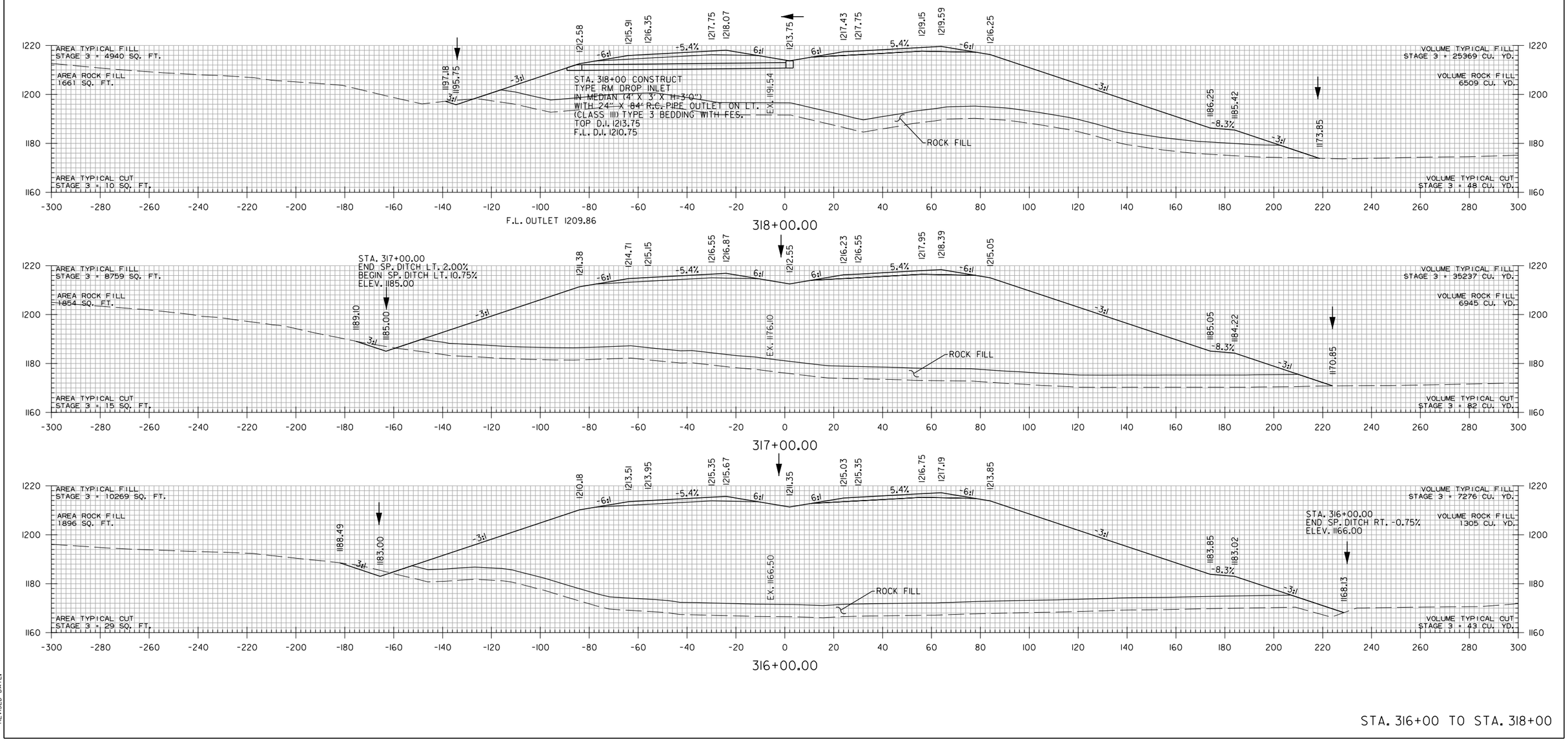

STA. 316+00 TO STA. 318+00

WBCalloway 7/17/2023 5:06:14 PM
WORKSPACE: AHTD
L:\2017\1701660 - ARDOT 012326 Hwy 412 - Hwy 112\Drawings\r012326_CX_MNL_01.dgn
REVISED DATE:

DATE REVISED	DATE REVISED	FED. RD. DIST. NO.	STATE	JOB NO.	SHEET NO.	TOTAL SHEETS
		6	ARK.	012326	638	838
		CROSS SECTIONS				
②						

STA. 319+00 TO STA. 321+00

WBCalloway 7/17/2023 5:06:14 PM
WORKSPACE: AHTD
L:\20ITN1701660 - ARDOT 012326 Hwy 412 - Hwy 112\Drawings\r012326.CX.MNL.01.dgn
REVISED DATE:

DATE REVISED	DATE REVISED	FED. RD. DIST. NO.	STATE	JOB NO.	SHEET NO.	TOTAL SHEETS
		6	ARK.	012326	639	838
②		CROSS SECTIONS				

STA. 322+00 TO STA. 323+87.71

WBCalloway 7/17/2023 5:06:14 PM
WORKSPACE: AHTD
L:\2017\170176\60 - ARDOT 012326 Hwy 412 - Hwy 112\Drawings\r012326_CX_MNL_01.dgn
REVISED DATE:

DATE REVISED	DATE REVISED	FED. RD. DIST. NO.	STATE	JOB NO.	SHEET NO.	TOTAL SHEETS
		6	ARK.	012326	640	838
		CROSS SECTIONS				

(2)

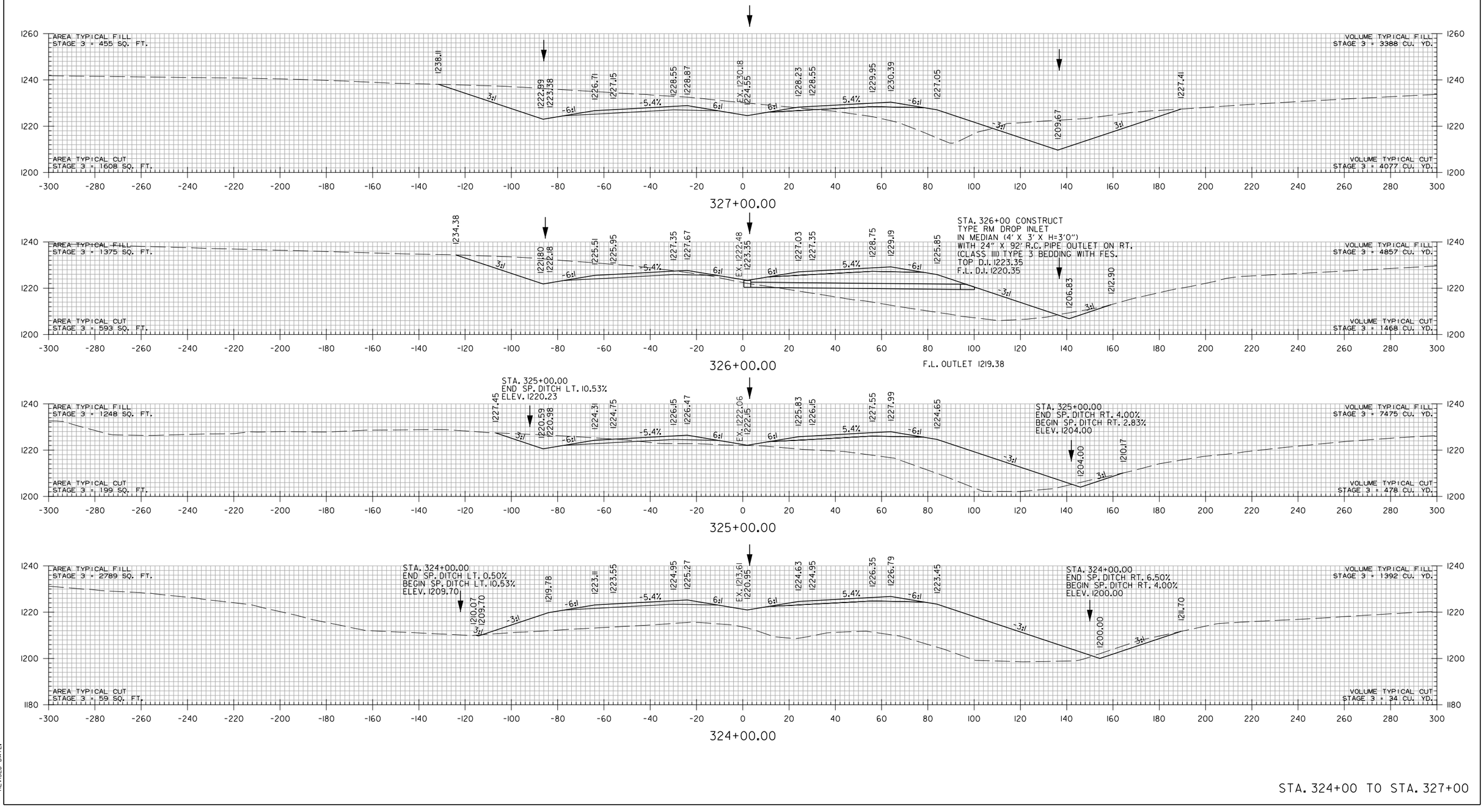

WBCallaway 7/17/2023 5:06:15 PM
WORKSPACE: AHTD
L:\2017\17017660 - ARDOT 012326 Hwy 412 - Hwy 412\Drawings\r012326_CX_MNL_01.dgn
REVISED DATE:

DATE REVISED	DATE REVISED	FED. RD. DIST. NO.	STATE	JOB NO.	SHEET NO.	TOTAL SHEETS
		6	ARK.	012326	641	838
		CROSS SECTIONS				
②						

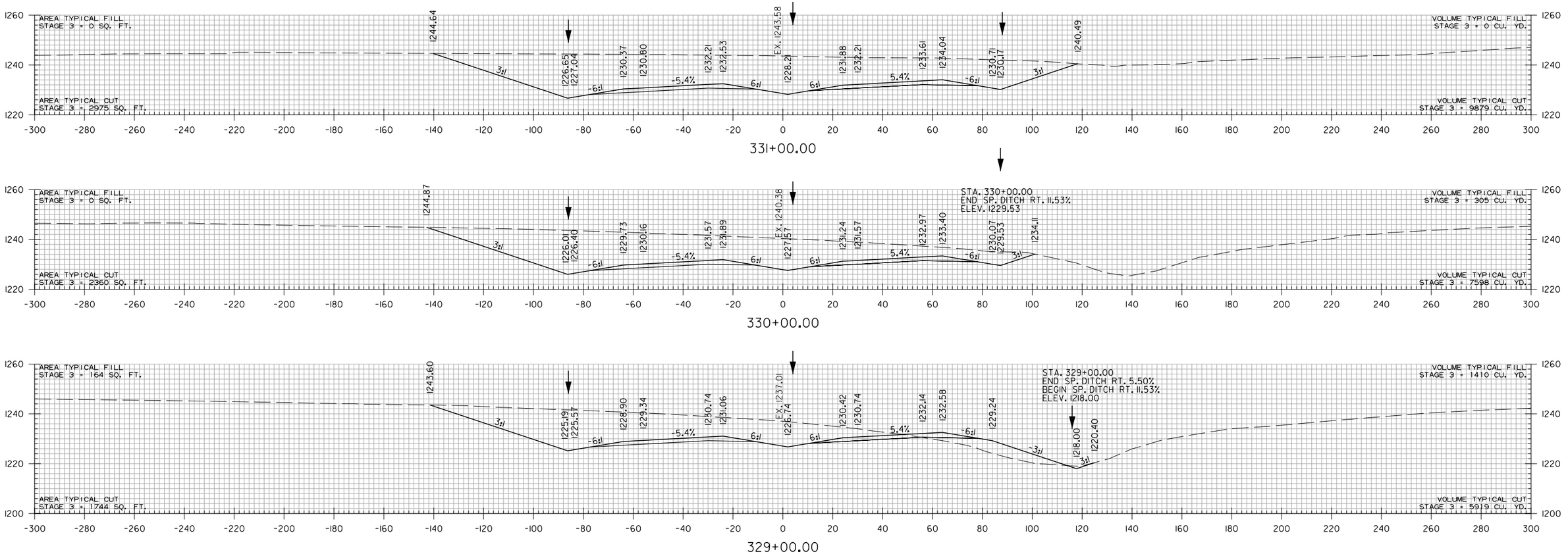

STA. 328+00 TO STA. 331+00

WBCalloway 7/17/2023 5:06:15 PM
WORKSPACE: AHTD
L:\2017\170176\60 - ARDOT 012326 Hwy 412 - Hwy 412\Drawings\r012326_CX_MNL_01.dgn
REVISED DATE:

DATE REVISED	DATE REVISED	FED. RD. DIST. NO.	STATE	JOB NO.	SHEET NO.	TOTAL SHEETS
		6	ARK.	012326	642	838
②		CROSS SECTIONS				

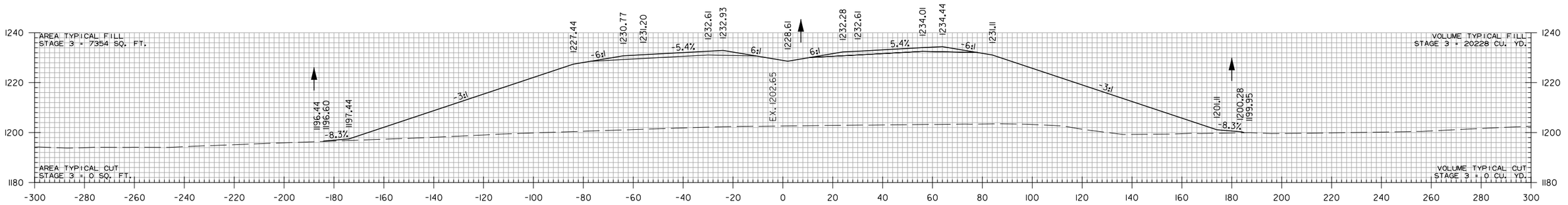

336+00.00

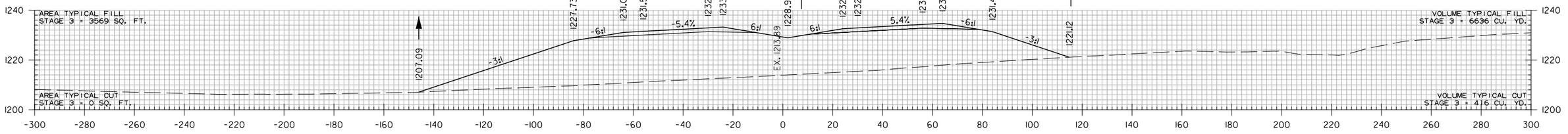

335+00.00

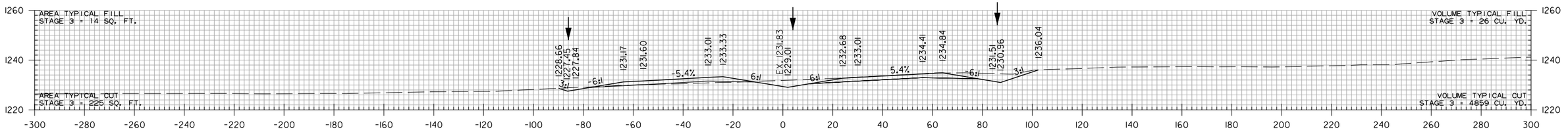

334+00.00

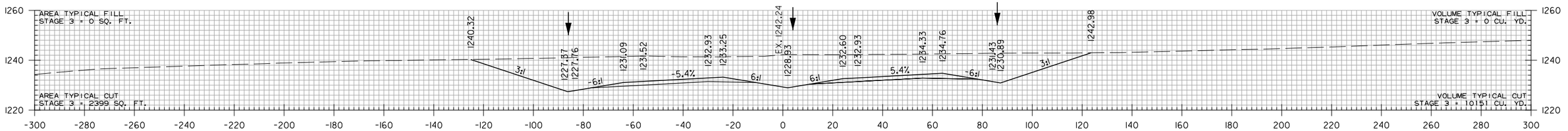

333+00.00

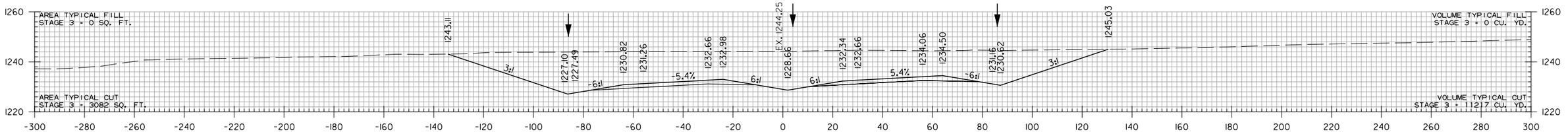

332+00.00

STA. 332+00 TO STA. 336+00

WBCalloway 7/17/2023 5:06:15 PM
WORKSPACE: AHTD
L:\20\T\10\T660 - ARDOT 012326 Hwy 412 - Hwy 112\Drawings\r012326_CX_MNL_01.dgn
REVISED DATE:

DATE REVISED	DATE REVISED	FED. RD. DIST. NO.	STATE	JOB NO.	SHEET NO.	TOTAL SHEETS
		6	ARK.	012326	643	838
		CROSS SECTIONS				
②						

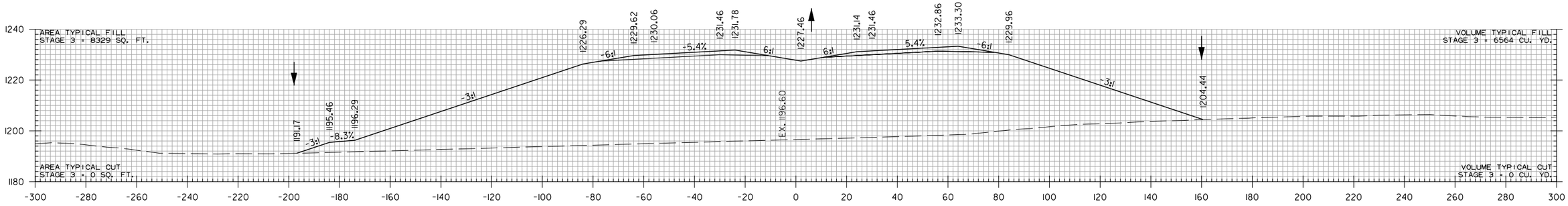

338+00.00

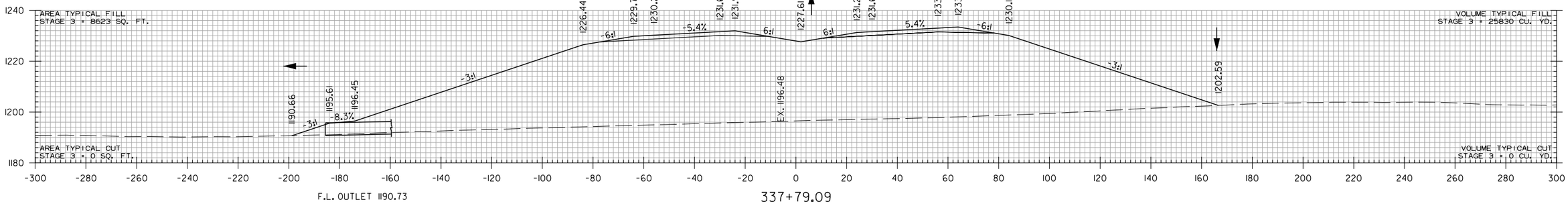

F.L. OUTLET 1190.73

337+79.09

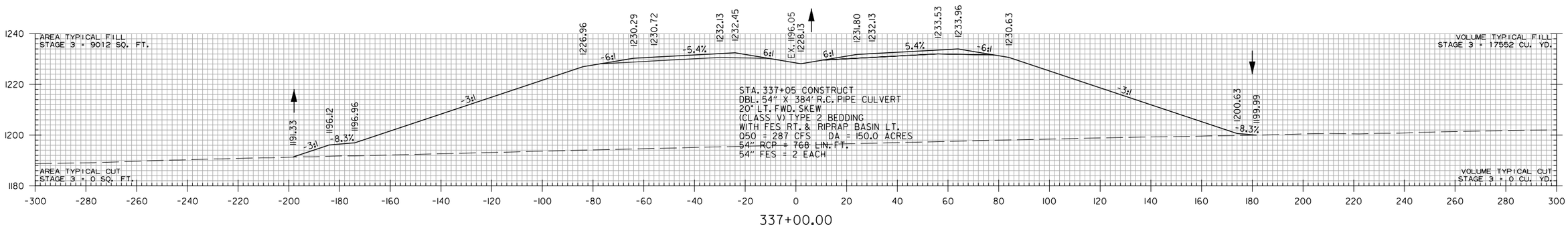

337+00.00

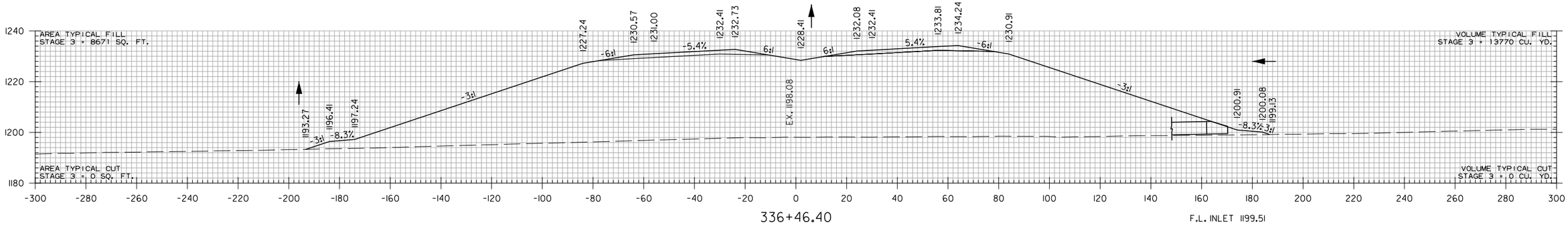

336+46.40

F.L. INLET 1199.51

STA. 336+46.40 TO STA. 338+00

WBCalloway 7/17/2023 5:06:15 PM
WORKSPACE: AHTD
L:\2017\17017660 - ARDOT 012326 Hwy 412 - Hwy 112\Drawings\r012326_CX_MNL_01.dgn
REVISED DATE:

DATE REVISED	DATE REVISED	FED. RD. DIST. NO.	STATE	JOB NO.	SHEET NO.	TOTAL SHEETS
		6	ARK.	012326	644	838
		CROSS SECTIONS				

(2)

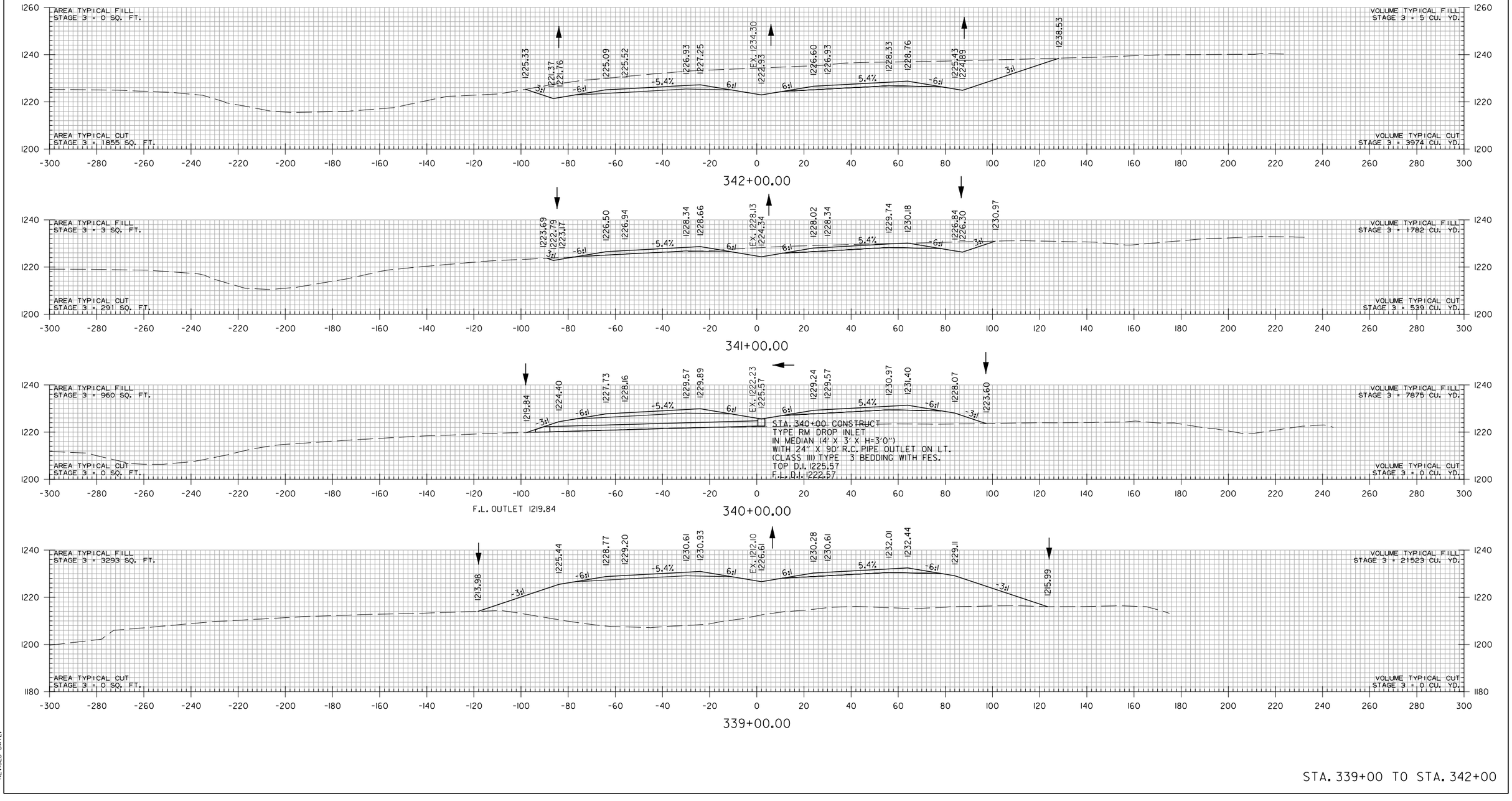

STA. 339+00 TO STA. 342+00

WBCallaway 7/17/2023 5:06:16 PM
WORKSPACE: AHTD
L:\2017\170176\0 - ARDOT 012326 Hwy 412 - Hwy 412\Drawings\r012326_CX_MNL_01.dgn
REVISED DATE:

DATE REVISED	DATE REVISED	FED. RD. DIST. NO.	STATE	JOB NO.	SHEET NO.	TOTAL SHEETS
		6	ARK.	012326	645	838
		CROSS SECTIONS				

(2)

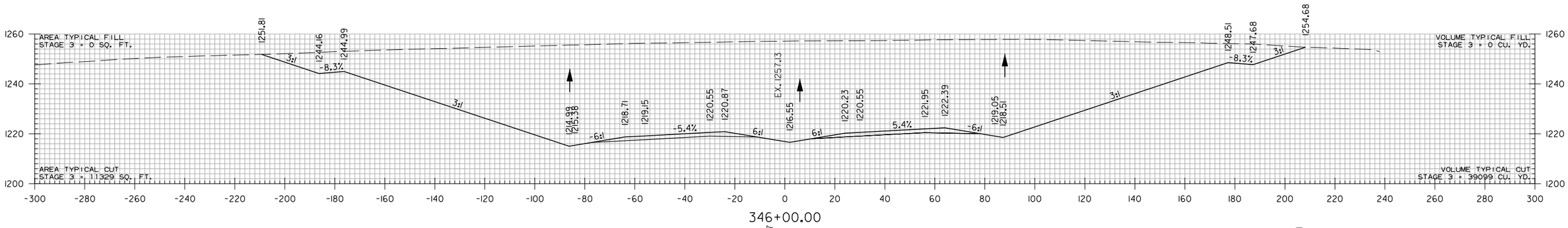

346+00.00

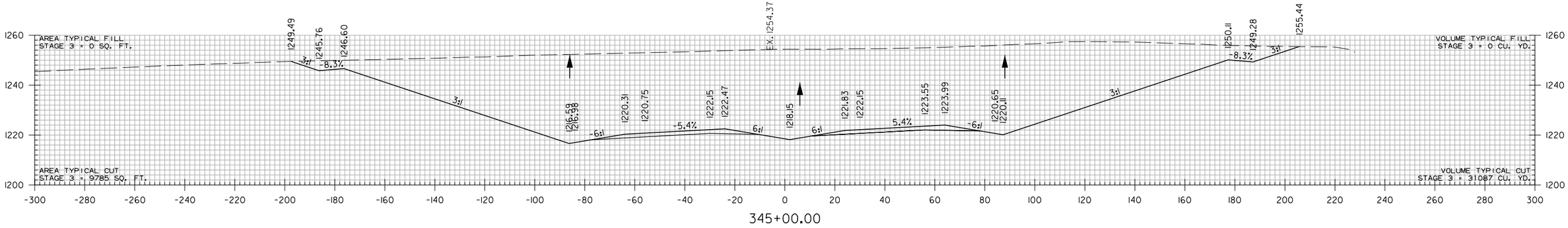

345+00.00

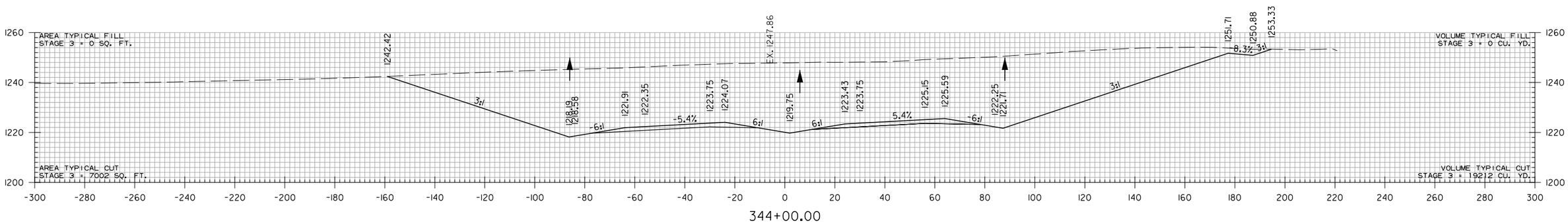

344+00.00

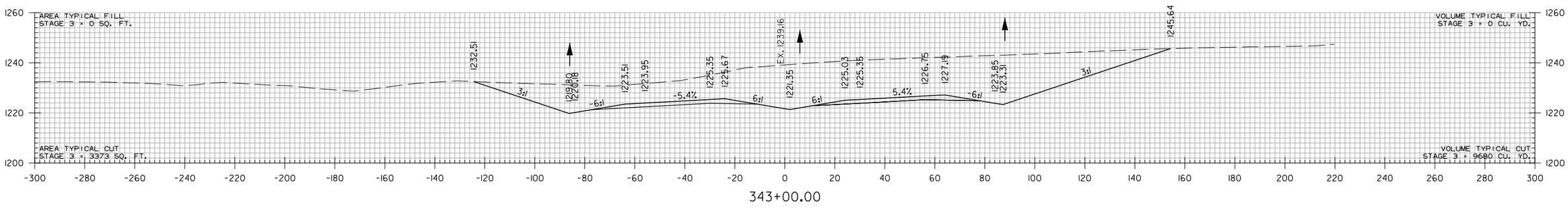

343+00.00

STA. 343+00 TO STA. 346+00

WBCalloway 7/17/2023 5:06:16 PM
WORKSPACE: AHTD
L:\2017\170176\60 - ARDOT 012326 Hwy 412 - Hwy 412\Drawings\r012326_CX_MNL_01.dgn
REVISED DATE:

DATE REVISED	DATE REVISED	FED. RD. DIST. NO.	STATE	JOB NO.	SHEET NO.	TOTAL SHEETS
		6	ARK.	012326	646	838
		CROSS SECTIONS				
②						

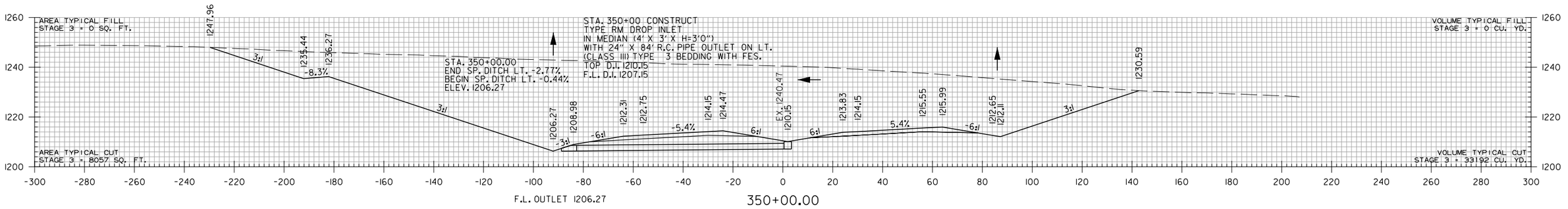

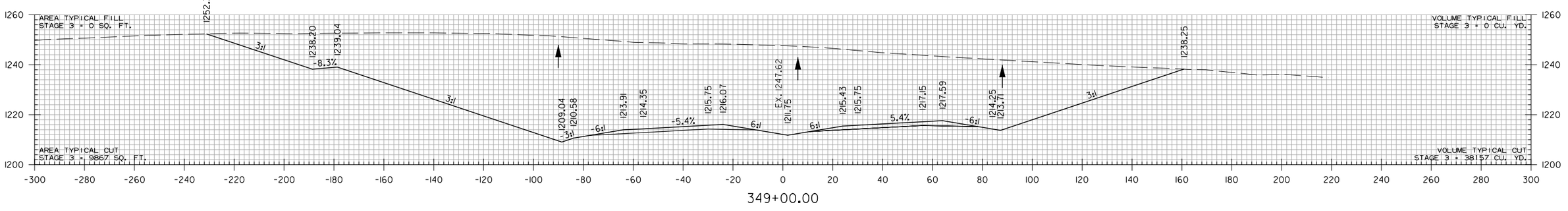

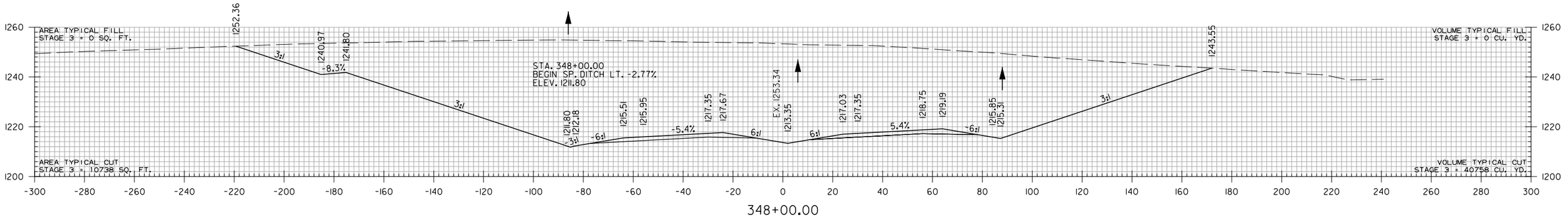

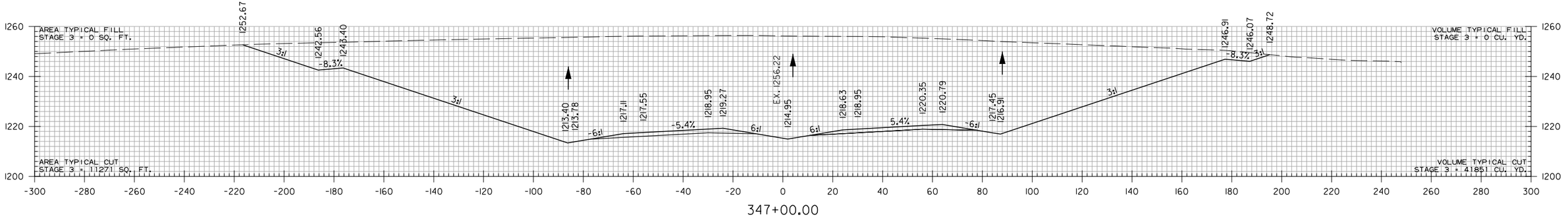

STA. 347+00 TO STA. 350+00

WBCalloway 7/17/2023 5:06:16 PM
WORKSPACE: AHTD
L:\2017\17017660 - ARDOT 012326 Hwy 412 - Hwy 121\Drawings\r012326_CX_MNL_01.dgn
REVISED DATE:

DATE REVISED	DATE REVISED	FED. RD. DIST. NO.	STATE	JOB NO.	SHEET NO.	TOTAL SHEETS
		6	ARK.	012326	647	838
		CROSS SECTIONS				
②						

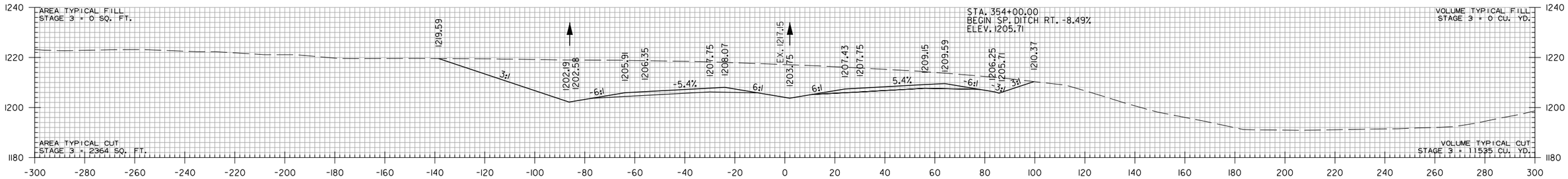

354+00.00

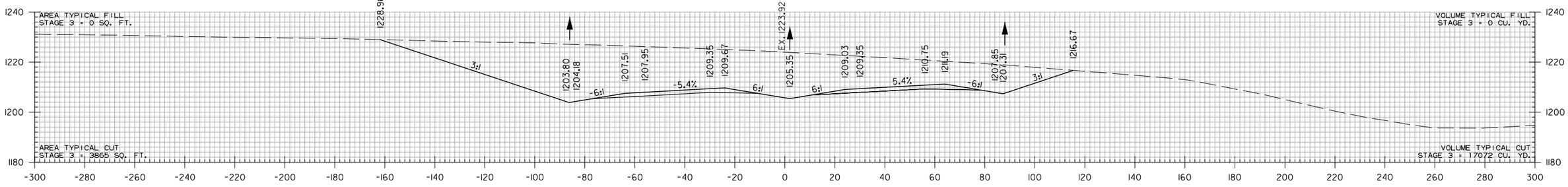

353+00.00

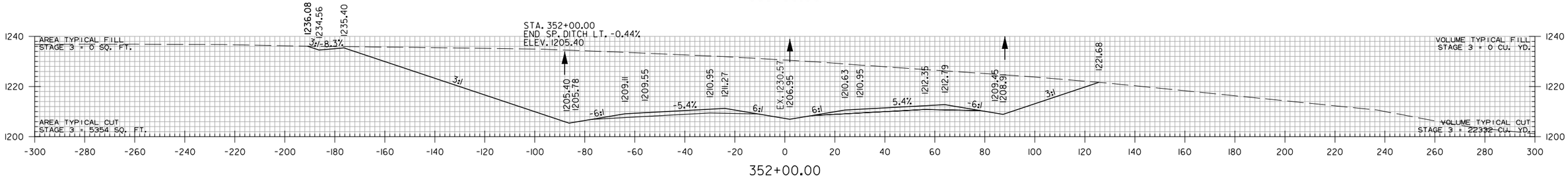

352+00.00

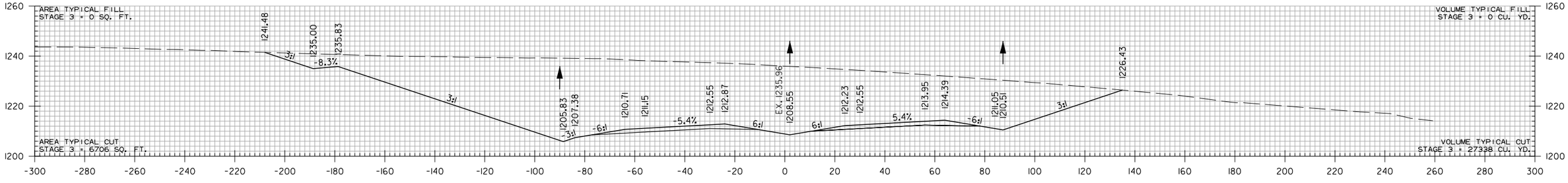

351+00.00

STA. 351+00 TO STA. 354+00

WBCallaway 7/17/2023 5:06:16 PM
WORKSPACE: AHTD
L:\2017\17017660 - ARDOT 012326 Hwy 412 - Hwy 412\Drawings\r012326_CX_MNL_01.dgn
REVISED DATE:

DATE REVISED	DATE REVISED	FED. RD. DIST. NO.	STATE	JOB NO.	SHEET NO.	TOTAL SHEETS
		6	ARK.	012326	648	838
②		CROSS SECTIONS				

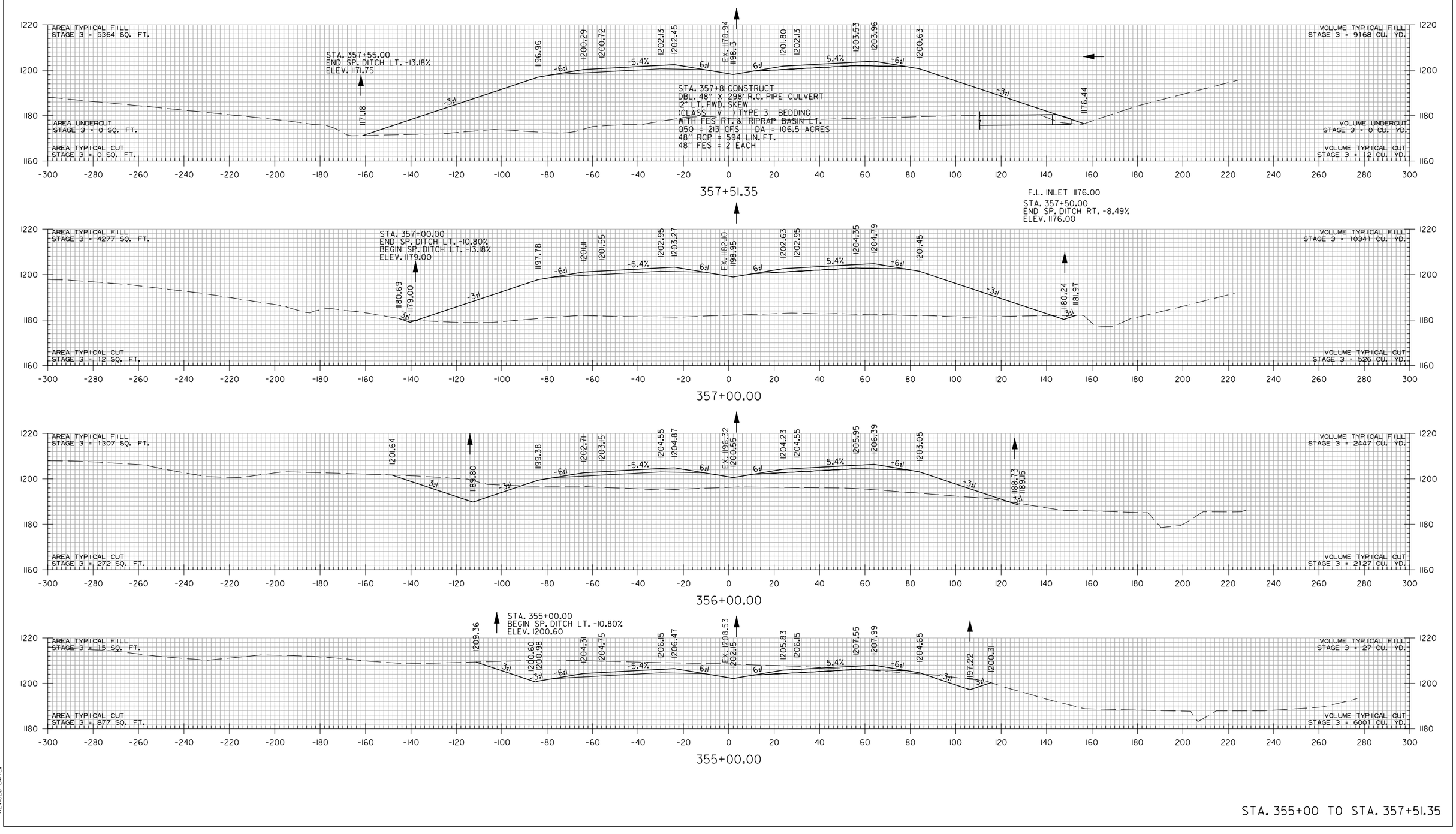

STA. 355+00 TO STA. 357+51.35

WBCallaway 7/17/2023 5:06:17 PM
WORKSPACE: AHTD
L:\2017\17017660 - ARDOT 012326 Hwy 412 - Hwy 112\Drawings\r012326_CX_MNL_01.dgn
REVISED DATE:

DATE REVISED	DATE REVISED	FED. RD. DIST. NO.	STATE	JOB NO.	SHEET NO.	TOTAL SHEETS
		6	ARK.	012326	649	838
		CROSS SECTIONS				
②						

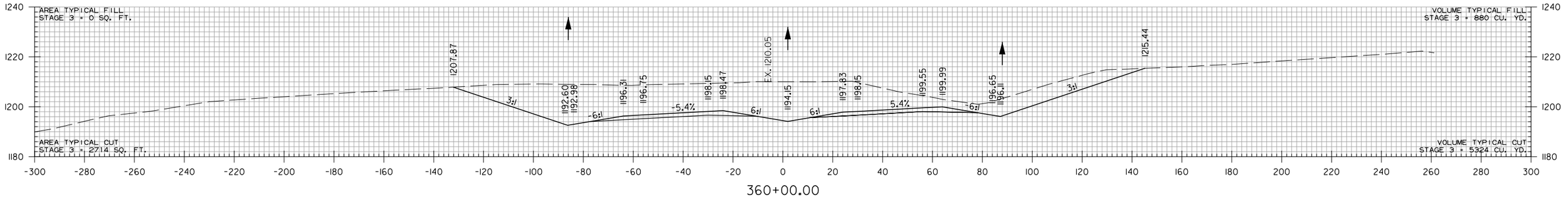

360+00.00

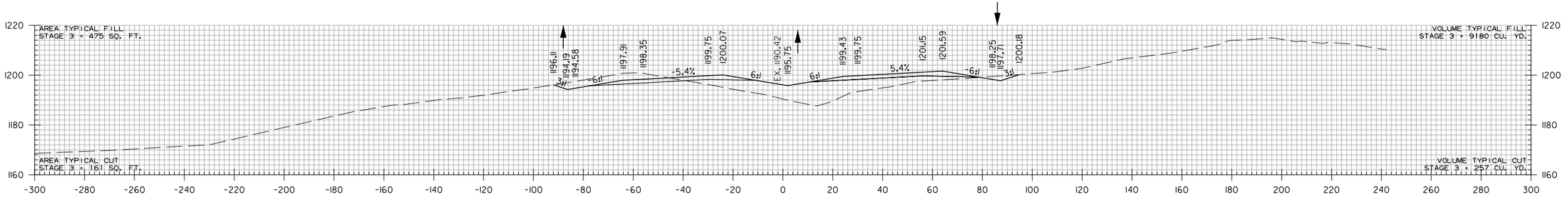

359+00.00

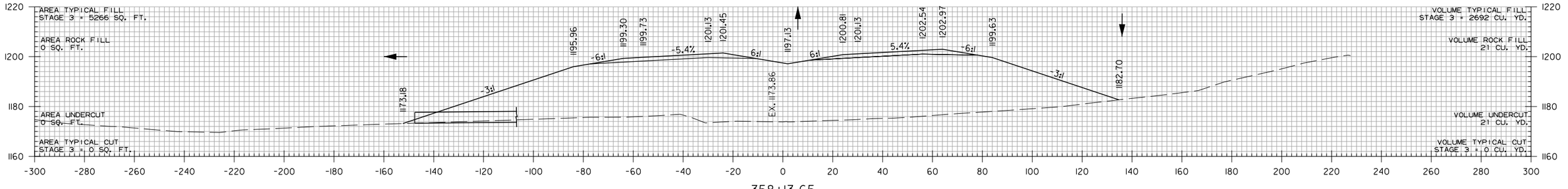

F.L. OUTLET 1173.27

358+13.65

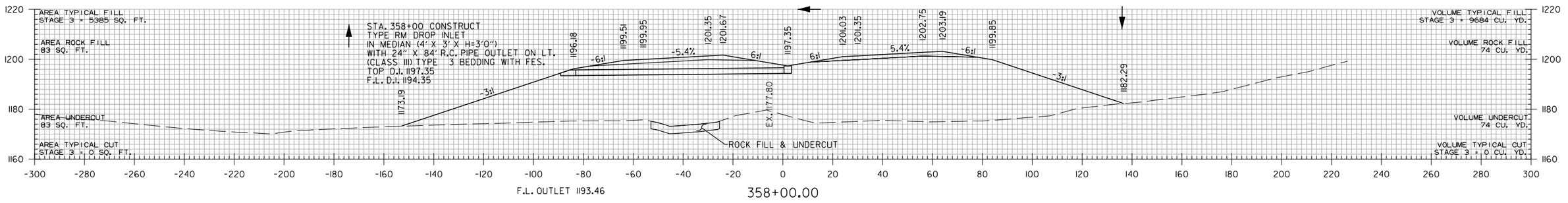

F.L. OUTLET 1193.46

358+00.00

STA. 358+00 TO STA. 360+00

WBCalloway 7/17/2023 5:06:17 PM
WORKSPACE: AHTD
L:\2017\1701660 - ARDOT 012326 Hwy 412 - Hwy 112\Drawings\r012326_CX_MNL_01.dgn
REVISED DATE:

DATE REVISED	DATE REVISED	FED. RD. DIST. NO.	STATE	JOB NO.	SHEET NO.	TOTAL SHEETS
		6	ARK.	012326	650	838
		CROSS SECTIONS				
②						

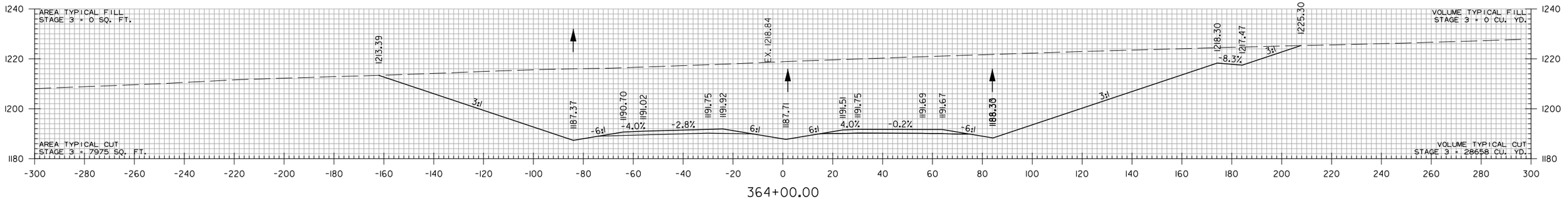

364+00.00

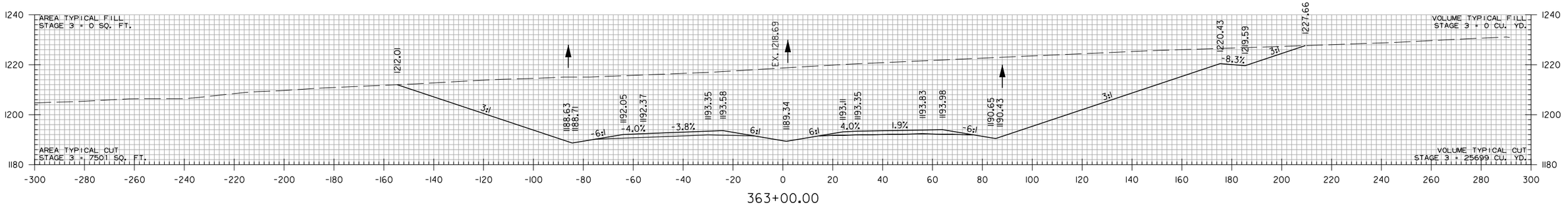

363+00.00

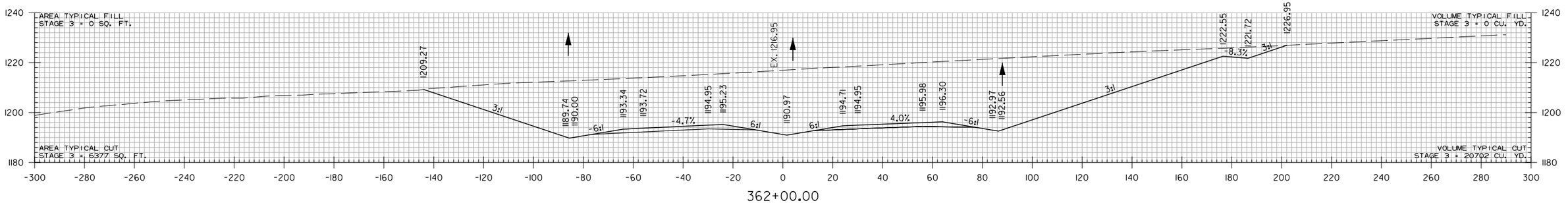

362+00.00

STA. 361+32.77 MAX. SUPERELEVATION (0.054'/')

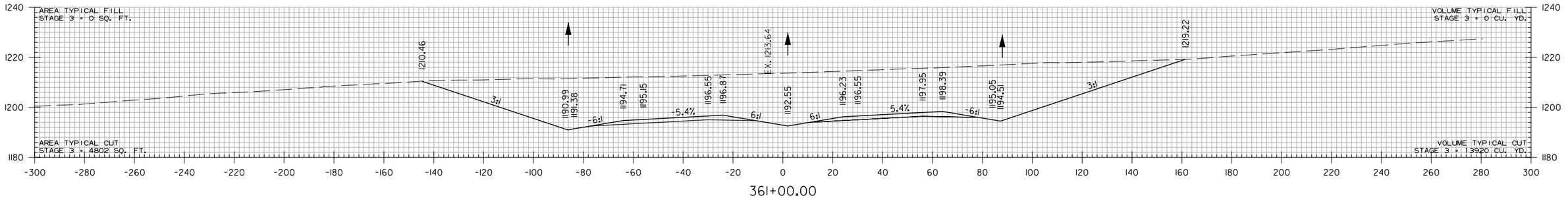

361+00.00

STA. 361+00 TO STA. 364+00

WBCalloway 7/17/2023 5:06:17 PM
WORKSPACE: AHTD
L:\2017\17017660 - ARDOT 012326 Hwy 412 - Hwy 412\Drawings\r012326_CX_MNL_01.dgn
REVISED DATE:

DATE REVISED	DATE REVISED	FED. RD. DIST. NO.	STATE	JOB NO.	SHEET NO.	TOTAL SHEETS
		6	ARK.	012326	651	838
		CROSS SECTIONS				

(2)

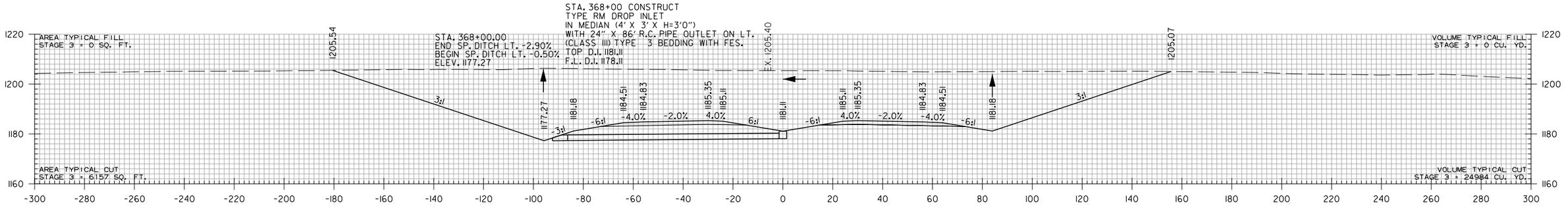

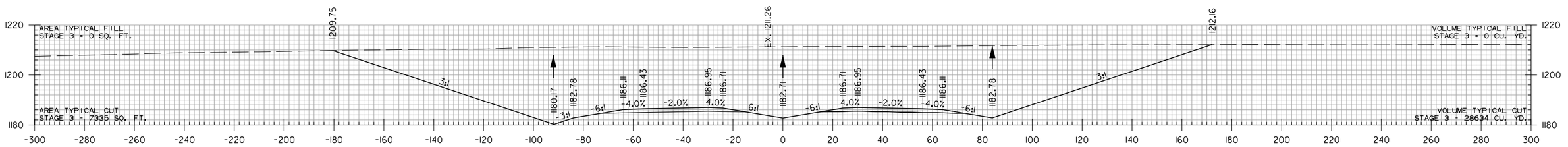

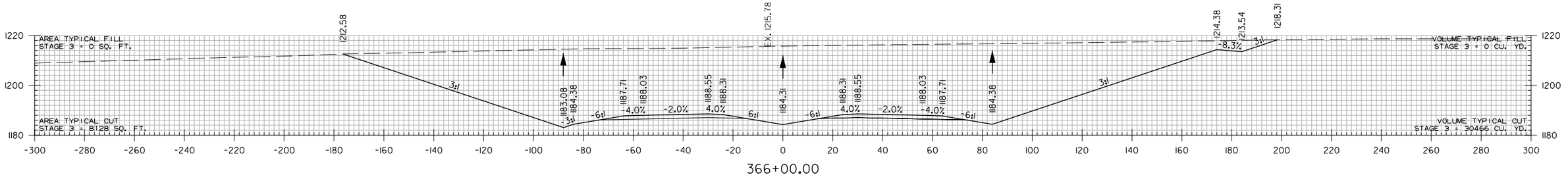

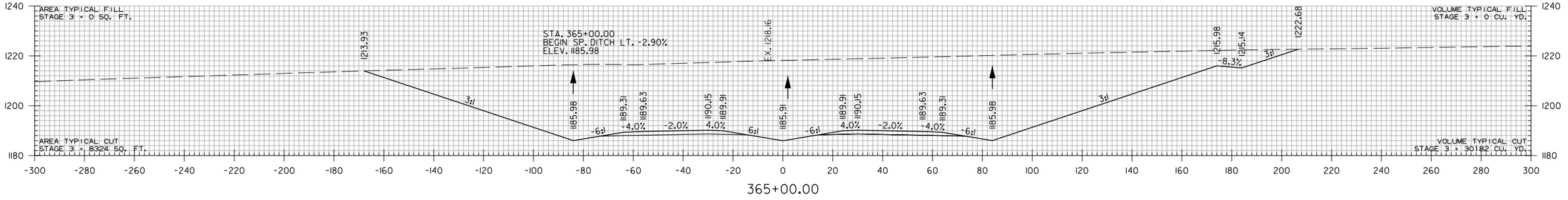

STA. 364+82.77 END SUPERELEVATION

STA. 365+00 TO STA. 368+00

WBCallaway 7/17/2023 5:06:17 PM
WORKSPACE: AHTD
L:\2017\1701660 - ARDOT 012326 Hwy 412 - Hwy 112\Drawings\r012326_CX_MNL_01.dgn
REVISED DATE:

DATE REVISED	DATE REVISED	FED. RD. DIST. NO.	STATE	JOB NO.	SHEET NO.	TOTAL SHEETS
		6	ARK.	012326	652	838
②		CROSS SECTIONS				

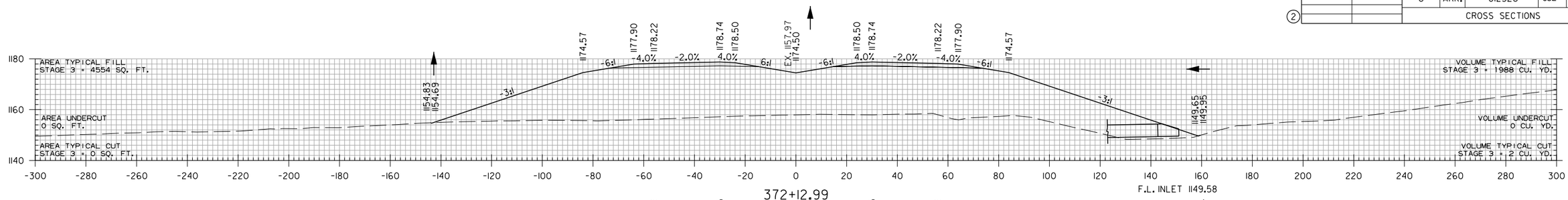

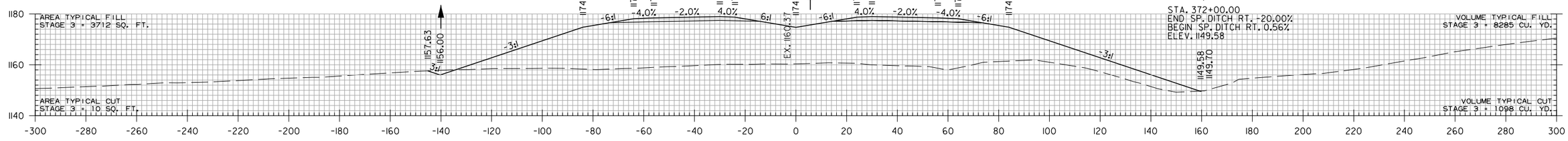

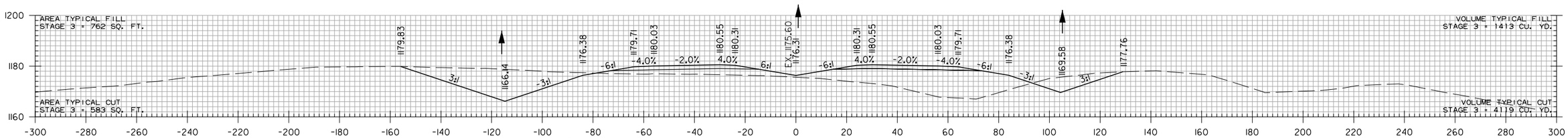

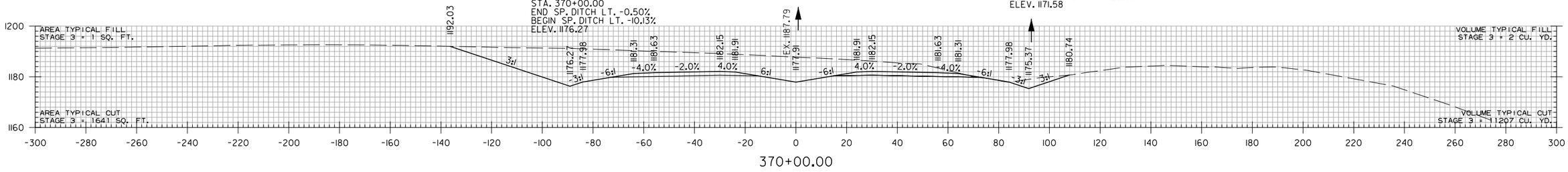

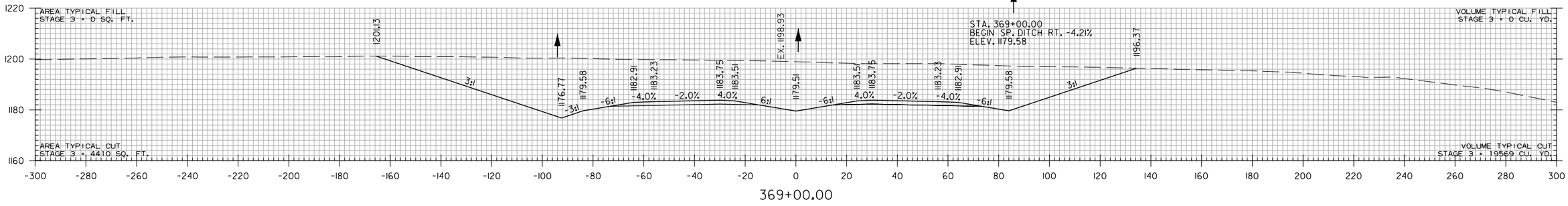

STA. 369+00 TO STA. 372+12.99

WBCallaway 7/17/2023 5:06:18 PM
WORKSPACE: AHTD
L:\2017\17017660 - ARDOT 012326 Hwy 412 - Hwy 112\Drawings\r012326_CX_MNL_01.dgn
REVISED DATE:

DATE REVISED	DATE REVISED	FED. RD. DIST. NO.	STATE	JOB NO.	SHEET NO.	TOTAL SHEETS
		6	ARK.	012326	653	838
②		CROSS SECTIONS				

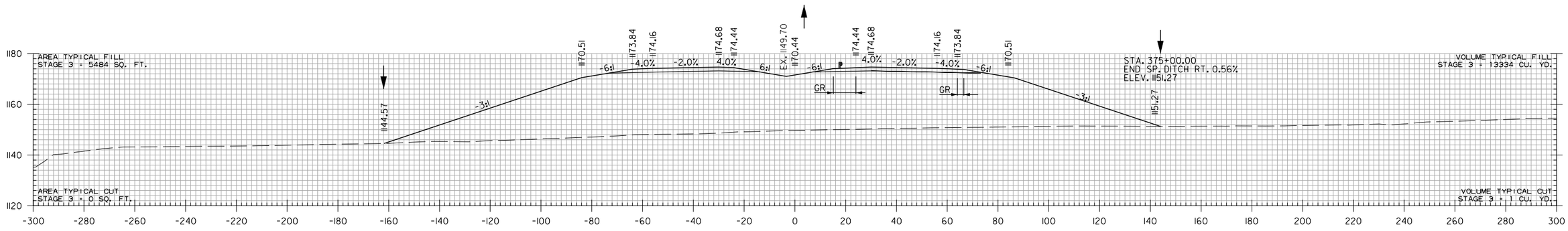

375+00.00

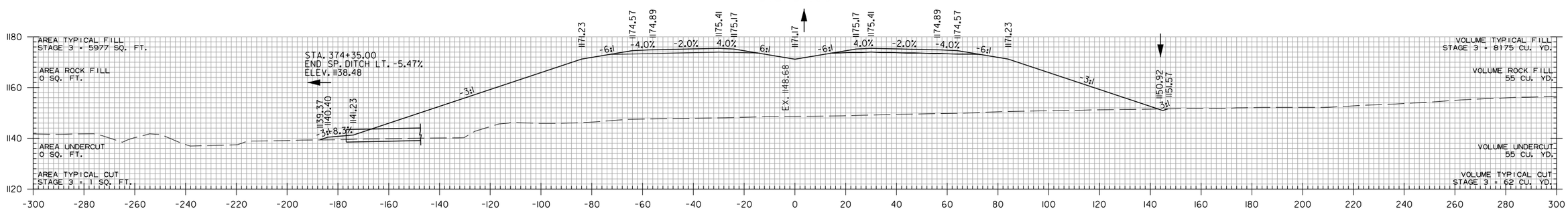

F.L. OUTLET 1138.48

374+37.17

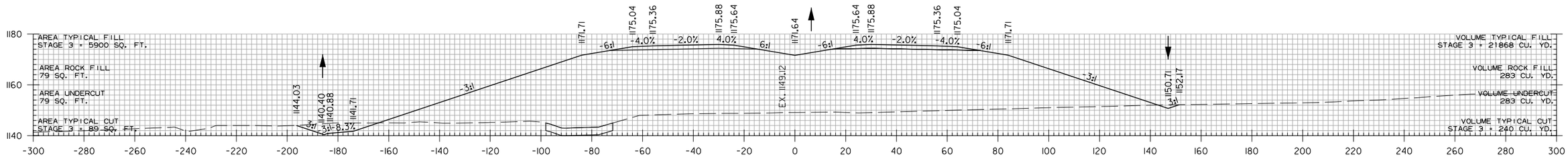

374+00.00

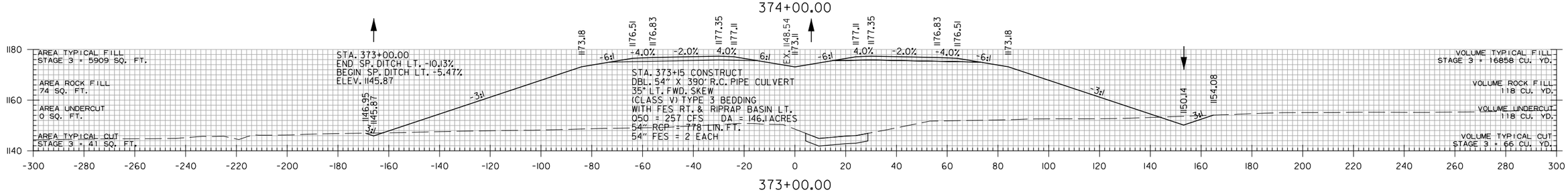

373+00.00

STA. 373+00 TO STA. 375+00

WBCallaway 7/17/2023 5:06:18 PM
WORKSPACE: AHTD
L:\2017\1701660 - ARDOT 012326 Hwy 412 - Hwy 112\Drawings\r012326_CX_MNL_01.dgn
REVISED DATE:

DATE REVISED	DATE REVISED	FED. RD. DIST. NO.	STATE	JOB NO.	SHEET NO.	TOTAL SHEETS
		6	ARK.	012326	654	838
		CROSS SECTIONS				
(2)						

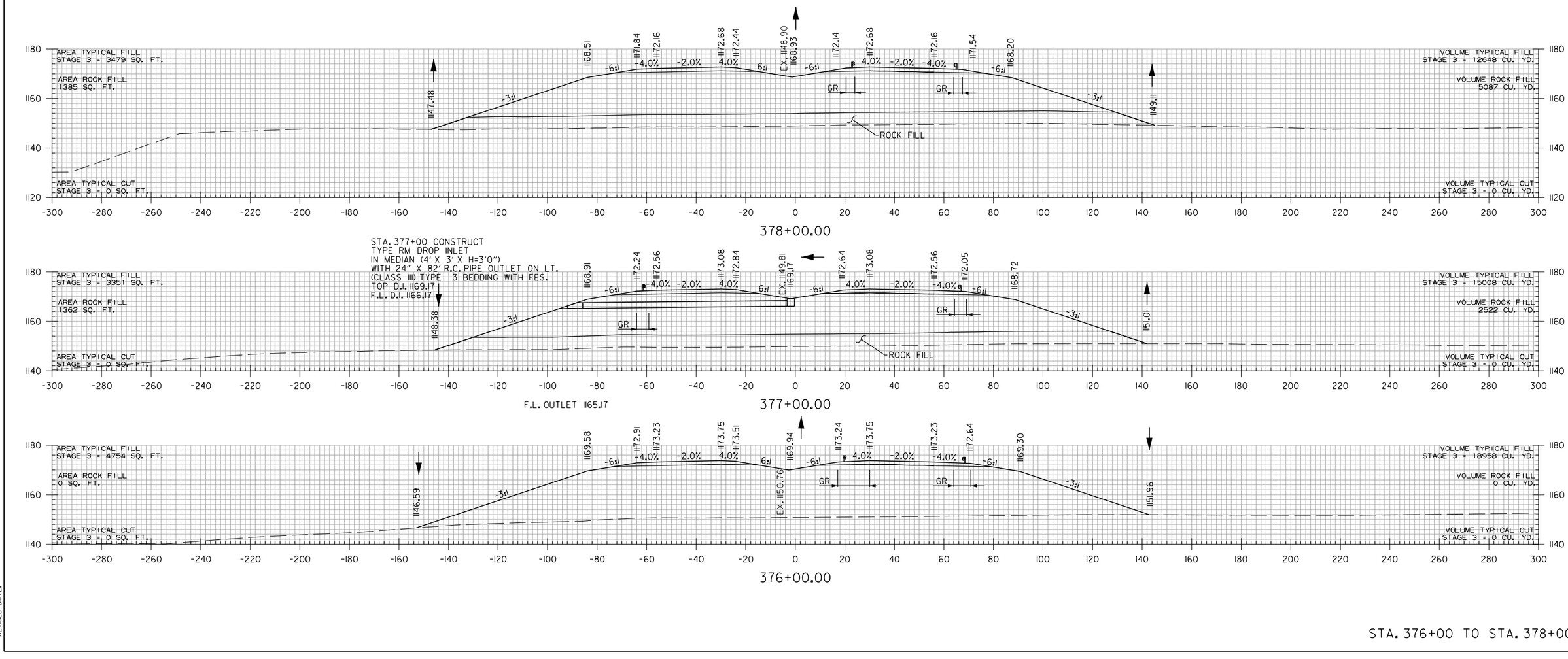

STA. 376+00 TO STA. 378+00

JATurner 8/10/2023 1:43:52 PM
WORKSPACE: AHTD
L:\2017\17017660 - ARDOT 012326 Hwy 412 - Hwy 112\Drawings\r012326_CX_MNL_01.dgn
REVISED DATE:

DATE REVISED	DATE REVISED	FED. RD. DIST. NO.	STATE	JOB NO.	SHEET NO.	TOTAL SHEETS
		6	ARK.	012326	655	838
		CROSS SECTIONS				
②						

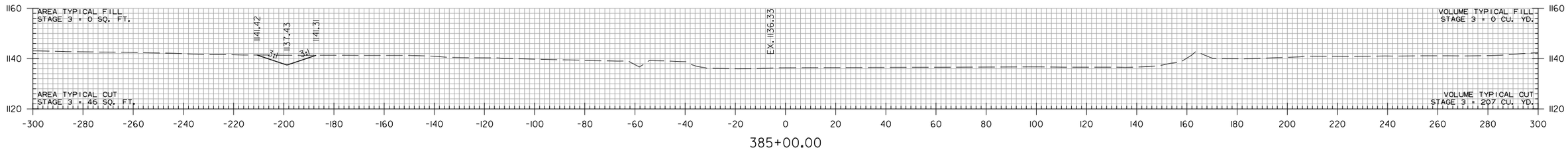

385+00.00

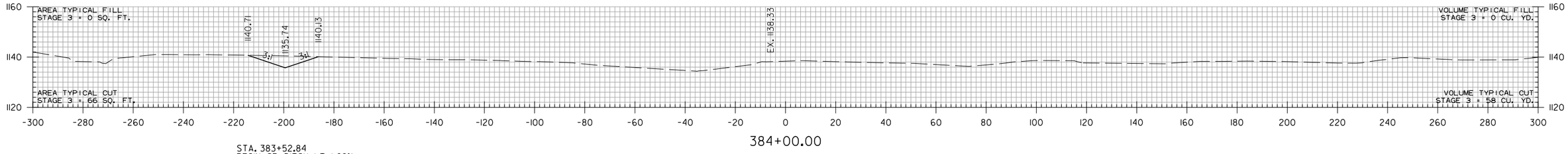

384+00.00

STA. 383+52.84
BEGIN SP. DITCH LT. 1.69%
ELEV. 1134.94

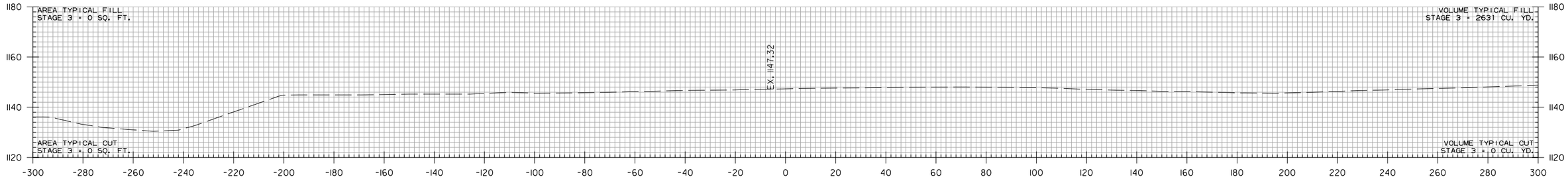

378+61.08

STA. 378+61.08 END TOE OF SLOPE

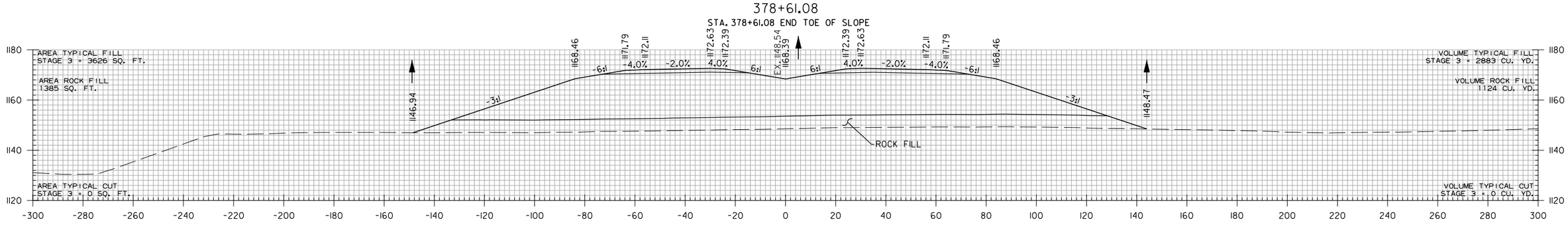

378+21.91

STA. 378+21.91 BEGIN BRIDGE LT. & RT

STA. 378+21.91 TO STA. 385+00

JATurner 8/10/2023 1:43:52 PM
WORKSPACE: AHTD
L:\2017\17017660 - ARDOT 012326 Hwy 412 - Hwy 112\Drawings\r012326_CX_MNL_01.dgn
REVISED DATE:

DATE REVISED	DATE REVISED	FED. RD. DIST. NO.	STATE	JOB NO.	SHEET NO.	TOTAL SHEETS
		6	ARK.	012326	656	838
		CROSS SECTIONS				
②						

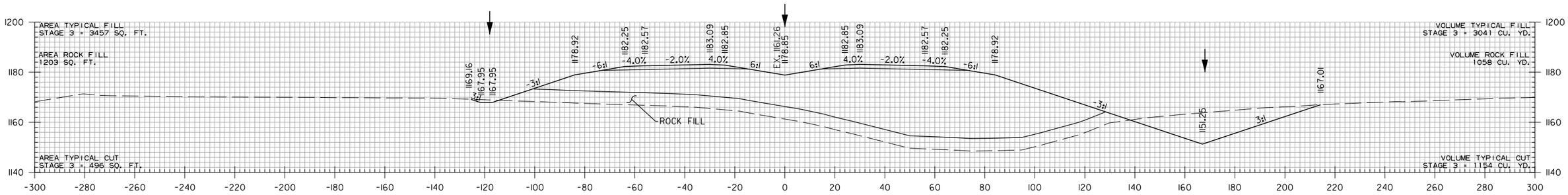

STA. 387+70.00
END SP. DITCH LT. 29.76%
BEGIN 5' FLAT BTM.
SP. DITCH LT. 0.50%
ELEV. 1167.85

387+89.09

STA. 387+89.09 END BRIDGE LT. & RT

STA. 387+50.00
END SP. DITCH RT. 16.67%
BEGIN SP. DITCH RT. 3.20%
ELEV. 1150.00

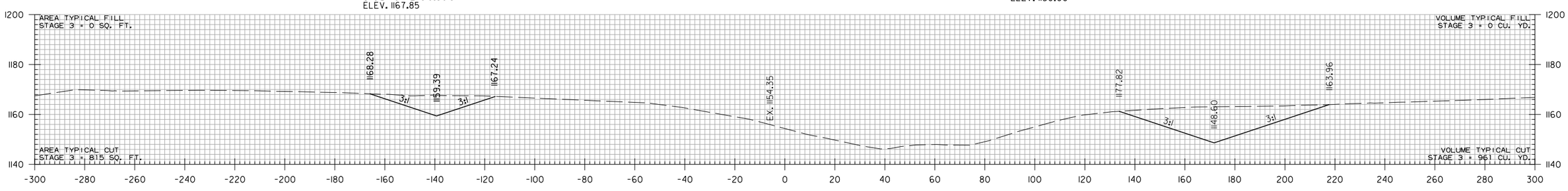

387+41.58

STA. 387+41.58 BEGIN TOE OF SLOPE

STA. 387+08.00
BEGIN SP. DITCH RT. 16.67%
ELEV. 1143.00

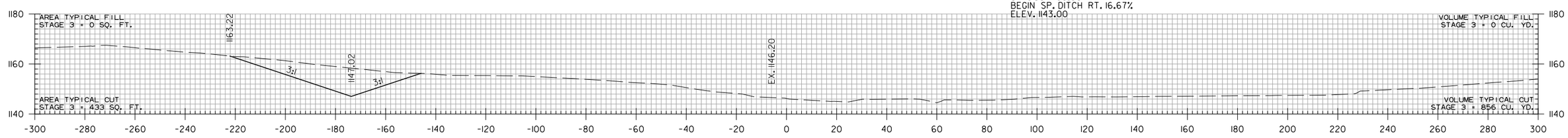

STA. 386+77.87
BEGIN SP. DITCH LT. 29.76%
ELEV. 1140.43

387+00.00

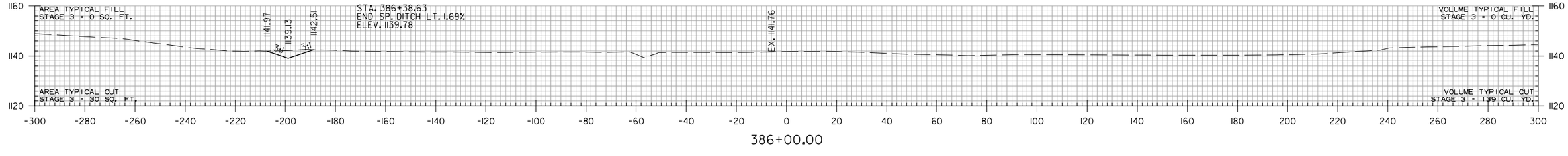

STA. 386+38.63
END SP. DITCH LT. 1.69%
ELEV. 1139.78

386+00.00

STA. 386+00 TO STA. 387+89.09

JATurner
WORKSPACE: AHTD
L:\2017\17017660 - ARDOT 012326 Hwy 412 - Hwy 112\Drawings\r012326_CX_MNL_01.dgn
8/10/2023 14:35:2 PM
REVISED DATE:

DATE REVISED	DATE REVISED	FED. RD. DIST. NO.	STATE	JOB NO.	SHEET NO.	TOTAL SHEETS
		6	ARK.	012326	657	838
		CROSS SECTIONS				
②						

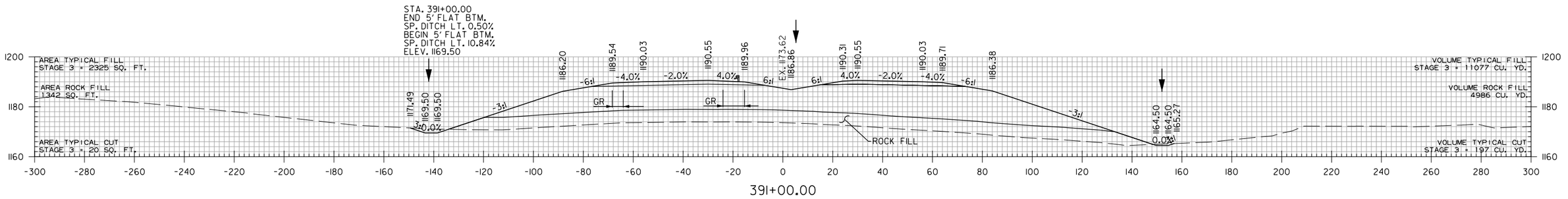

END BRIDGE LT. & RT., STA. 387+89.09

STA. 388+00 TO STA. 391+00

WBCalloway 7/17/2023 5:06:19 PM
WORKSPACE: AHTD
L:\2017\170176\60 - ARDOT 012326 Hwy 412 - Hwy 112\Drawings\r012326_CX_MNL_01.dgn
REVISED DATE:

DATE REVISED	DATE REVISED	FED. RD. DIST. NO.	STATE	JOB NO.	SHEET NO.	TOTAL SHEETS
		6	ARK.	012326	658	838
		CROSS SECTIONS				
②						

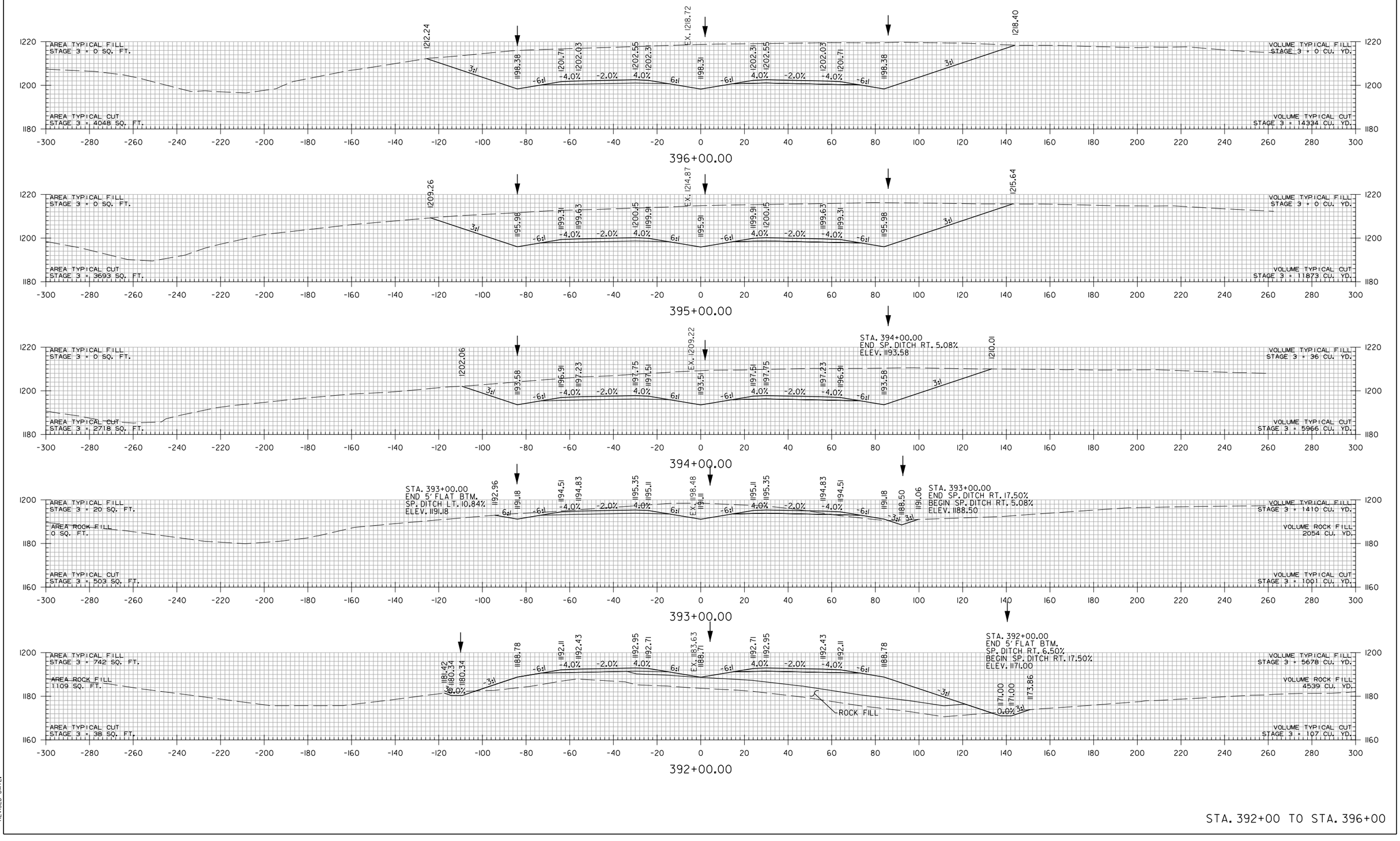

STA. 392+00 TO STA. 396+00

WBCallaway 7/17/2023 5:06:19 PM
WORKSPACE: AHTD
L:\2017\1701760 - ARDOT 012326 Hwy 412 - Hwy 112\Drawings\r012326_CX_MNL_01.dgn
REVISED DATE:

DATE REVISED	DATE REVISED	FED. RD. DIST. NO.	STATE	JOB NO.	SHEET NO.	TOTAL SHEETS
		6	ARK.	012326	659	838
②		CROSS SECTIONS				

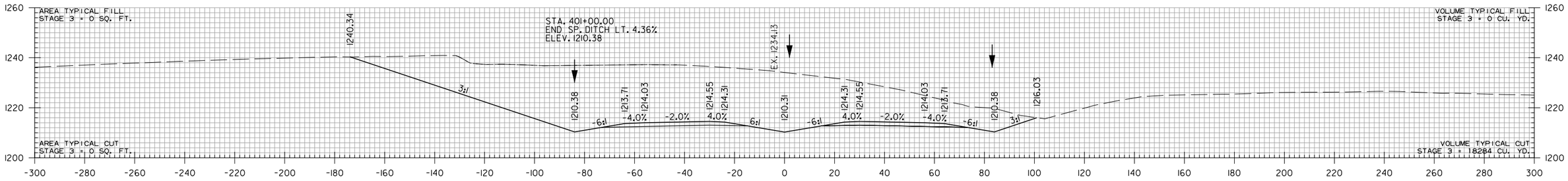

401+00.00

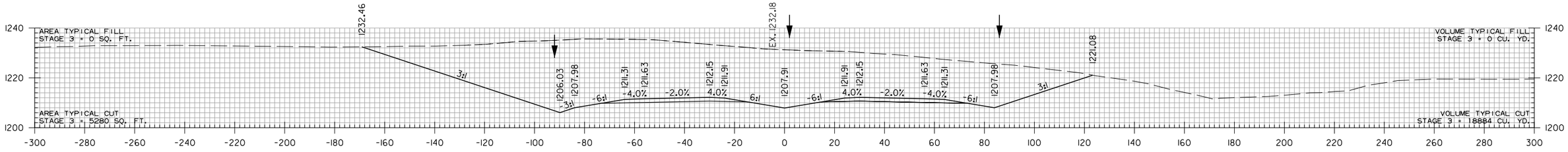

400+00.00

STA. 399+00 CONSTRUCT
TYPE RM DROP INLET
IN MEDIAN (4' X 3' X H=3'0")
WITH 24" X 86' R.C. PIPE OUTLET ON LT.
(CLASS III) TYPE 3 BEDDING WITH FES.
TOP D.I. 1205.51
F.L. D.I. 1202.51

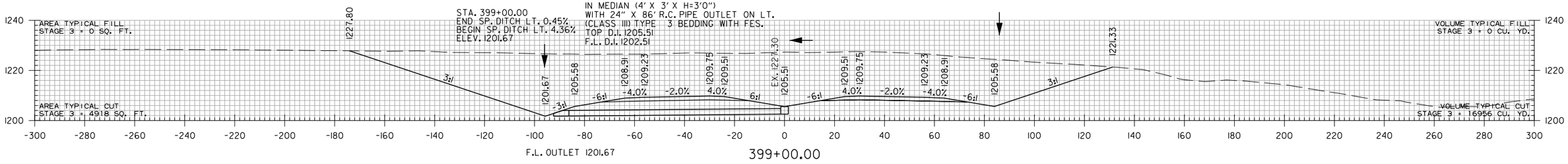

F.L. OUTLET 1201.67

399+00.00

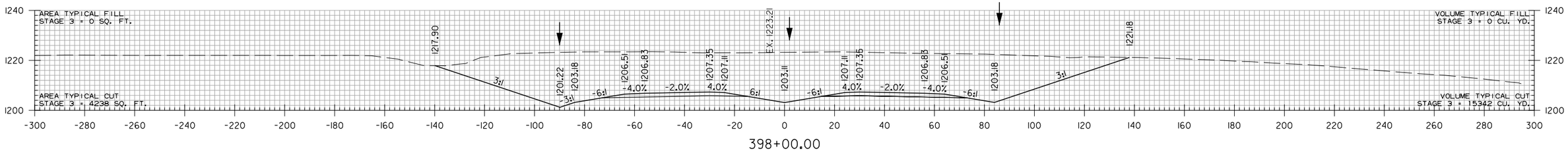

398+00.00

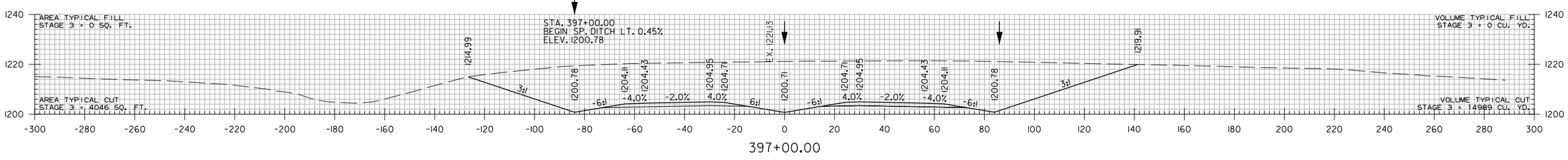

397+00.00

STA. 397+00 TO STA. 401+00

WBCallaway 7/17/2023 5:06:19 PM
WORKSPACE: AHTD
L:\20\T\0\0\T660 - ARDOT 012326 Hwy 412 - Hwy 112\Drawings\r012326_CX_MNL_01.dgn
REVISED DATE:

DATE REVISED	DATE REVISED	FED. RD. DIST. NO.	STATE	JOB NO.	SHEET NO.	TOTAL SHEETS
		6	ARK.	012326	660	838
		CROSS SECTIONS				
(2)						

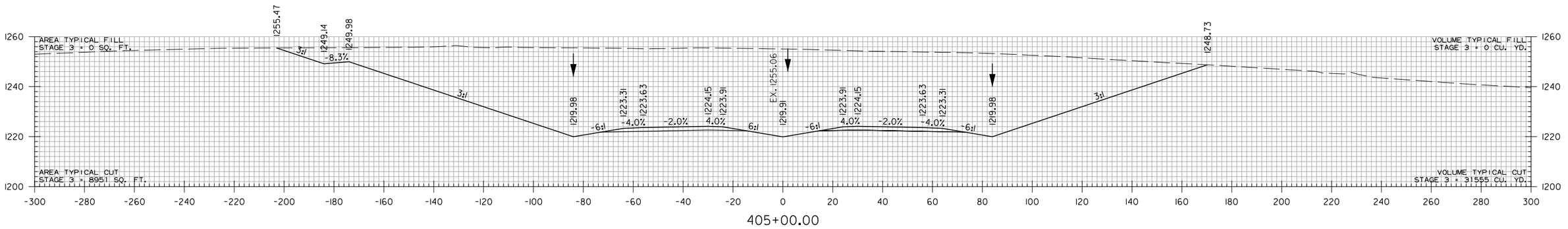

405+00.00

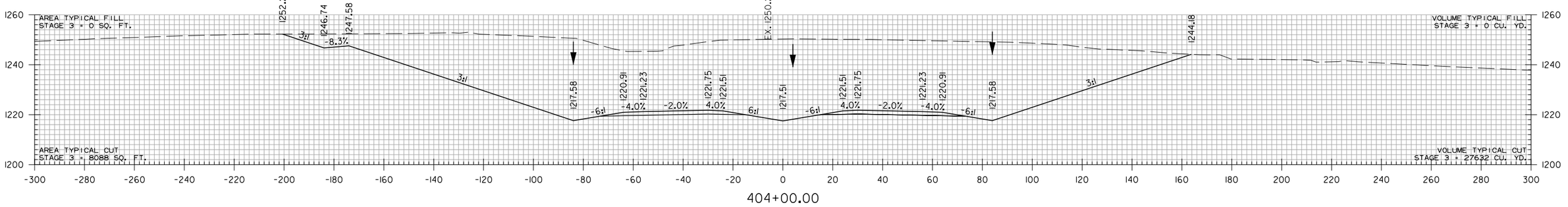

404+00.00

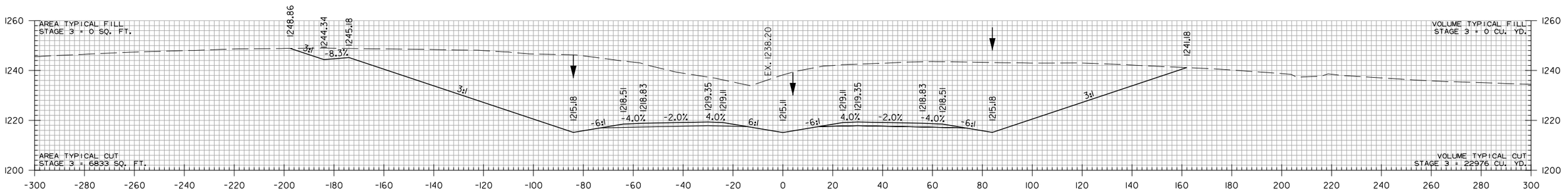

403+00.00

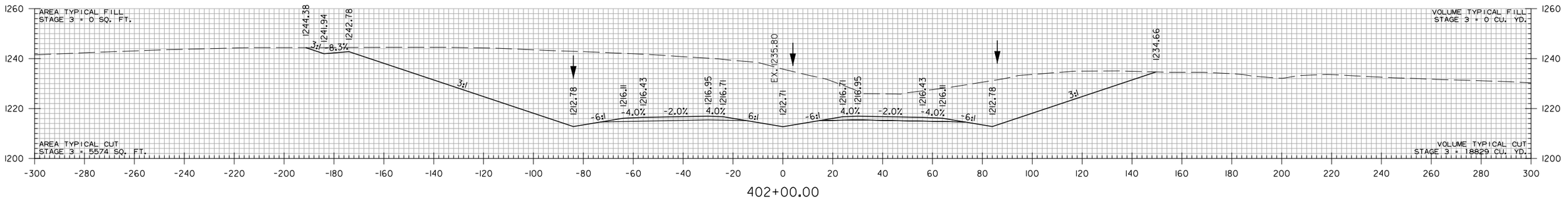

402+00.00

STA. 402+00 TO STA. 405+00

WBCalloway 7/17/2023 5:06:20 PM
WORKSPACE: AHTD
L:\2017\17017660 - ARDOT 012326 Hwy 412 - Hwy 412\Drawings\r012326_CX_MNL_01.dgn
REVISED DATE:

DATE REVISED	DATE REVISED	FED. RD. DIST. NO.	STATE	JOB NO.	SHEET NO.	TOTAL SHEETS
		6	ARK.	012326	661	838
		CROSS SECTIONS				
②						

STA. 409+00.00
END SP. DITCH LT. 0.45%
BEGIN SP. DITCH LT. 4.36%
ELEV. 1225.67

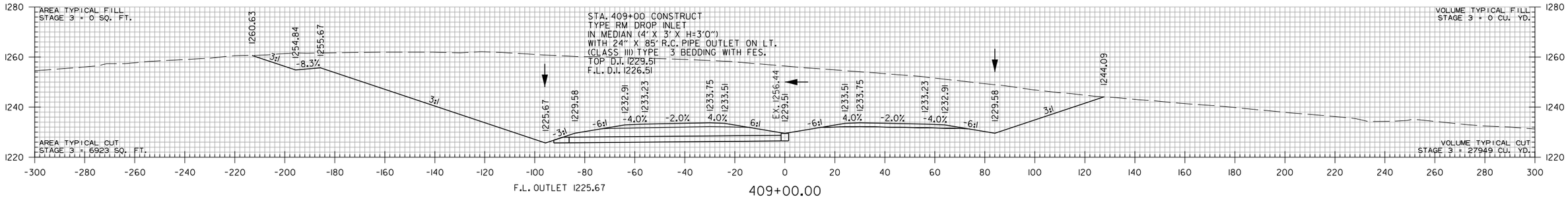

F.L. OUTLET 1225.67

409+00.00

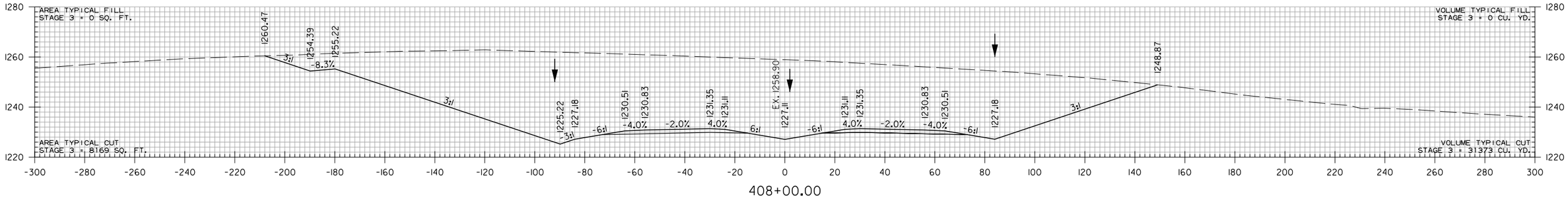

408+00.00

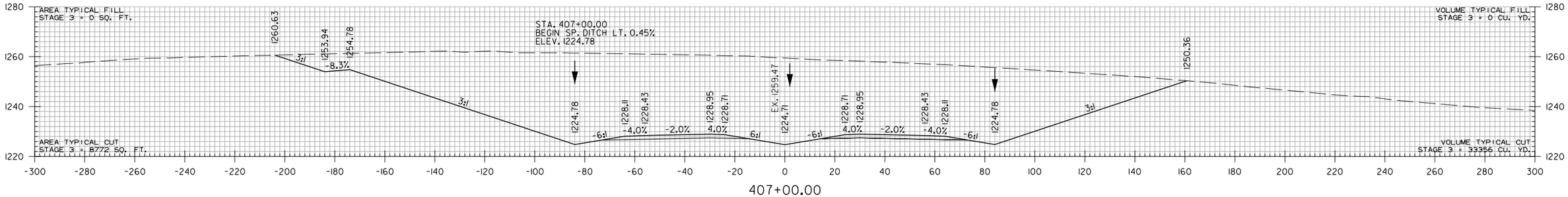

407+00.00

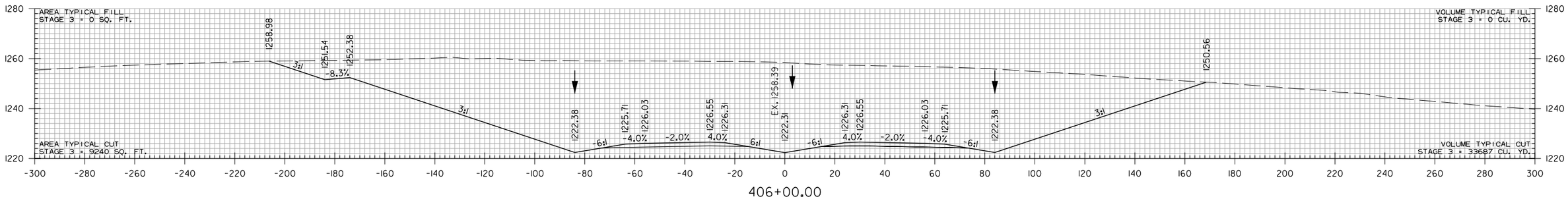

406+00.00

STA. 406+00 TO STA. 409+00

WBCalloway 7/17/2023 5:06:20 PM
WORKSPACE: AHTD
L:\2017\170176\660 - ARDOT 012326 Hwy 412 - Hwy 112\Drawings\r012326_CX_MNL_01.dgn
REVISED DATE:

DATE REVISED	DATE REVISED	FED. RD. DIST. NO.	STATE	JOB NO.	SHEET NO.	TOTAL SHEETS
		6	ARK.	012326	662	838
②		CROSS SECTIONS				

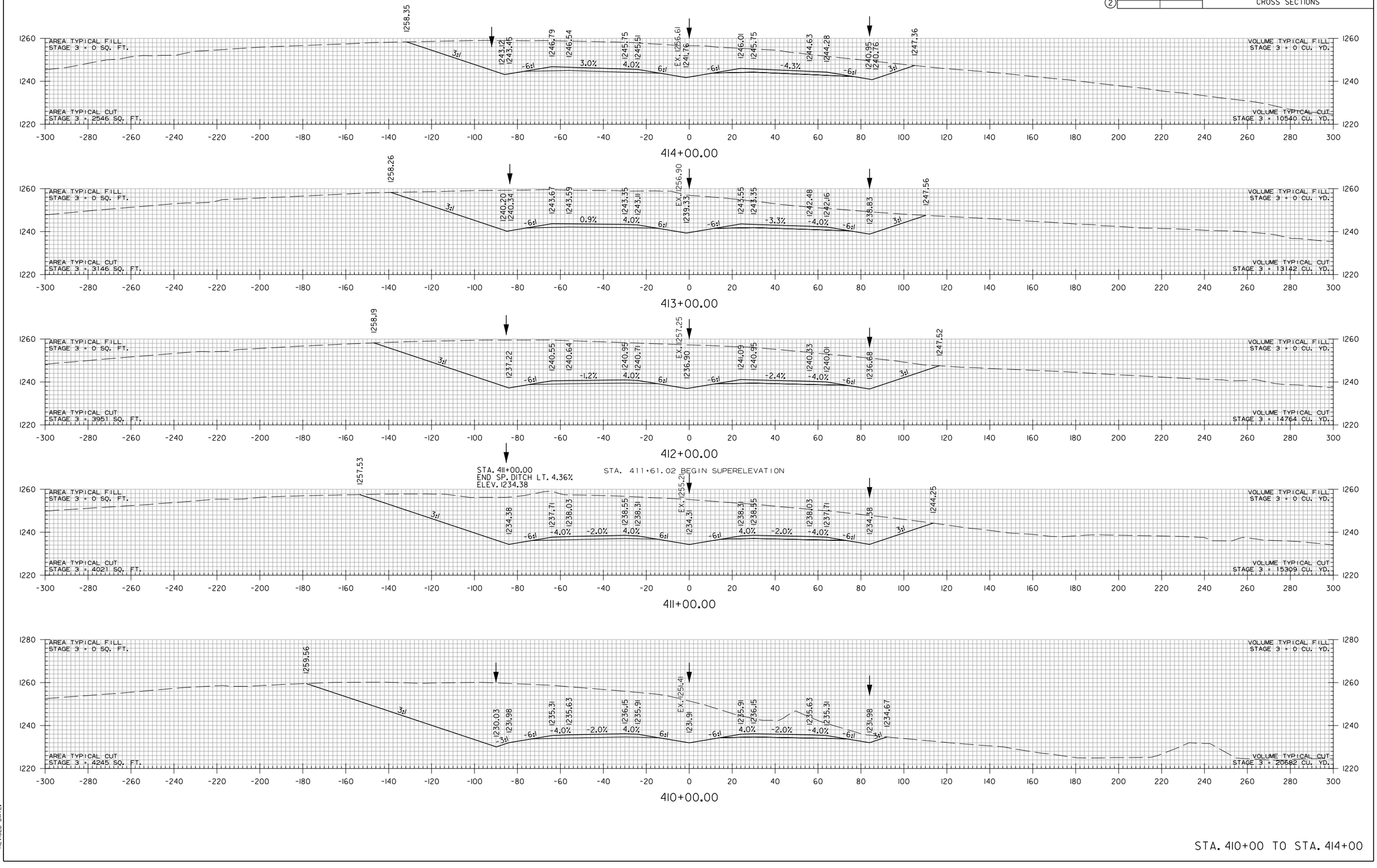

STA. 410+00 TO STA. 414+00

WBCallaway 7/17/2023 5:06:20 PM
WORKSPACE: AHTD
L:\2017\170176\60 - ARDOT 012326 Hwy 412 - Hwy 412\Drawings\r012326_CX_MNL_01.dgn
REVISED DATE:

DATE REVISED	DATE REVISED	FED. RD. DIST. NO.	STATE	JOB NO.	SHEET NO.	TOTAL SHEETS
		6	ARK.	012326	663	838
		CROSS SECTIONS				
②						

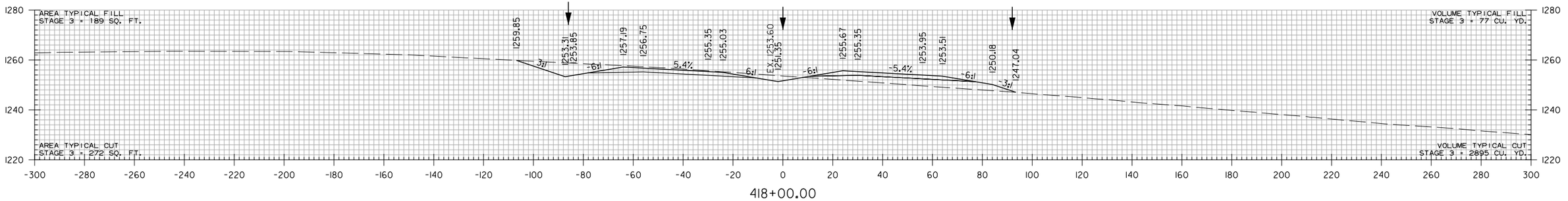

418+00.00

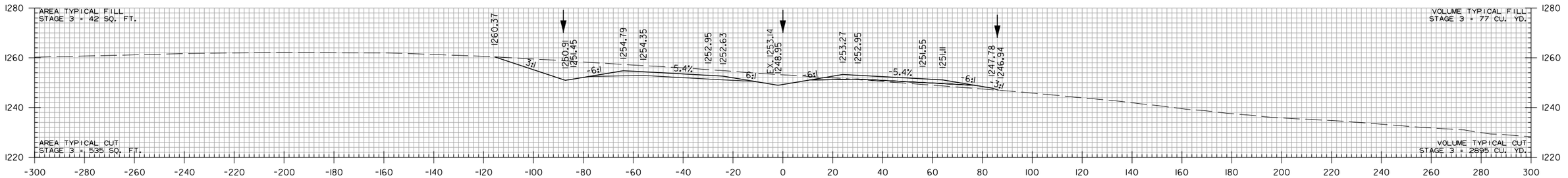

417+00.00

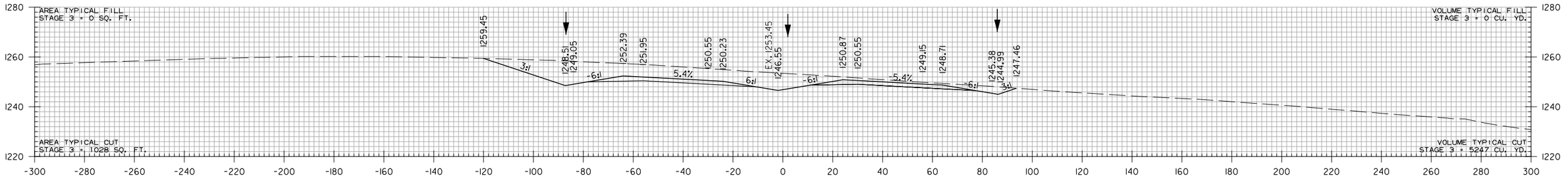

416+00.00

STA. 415+11.02 MAX. SUPERELEVATION (0.054'/')

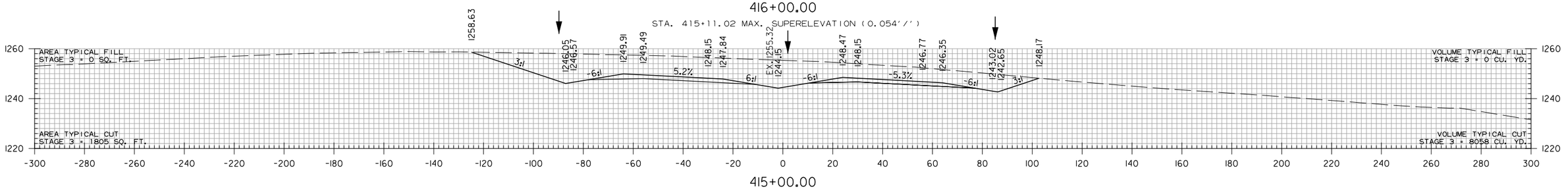

415+00.00

STA. 415+00 TO STA. 418+00

WBCallaway 7/17/2023 5:06:20 PM
WORKSPACE: AHTD
L:\2017\17017660 - ARDOT 012326 Hwy 412 - Hwy 412\Drawings\r012326_CX_MNL_01.dgn
REVISED DATE:

DATE REVISED	DATE REVISED	FED. RD. DIST. NO.	STATE	JOB NO.	SHEET NO.	TOTAL SHEETS
		6	ARK.	012326	664	838
		CROSS SECTIONS				
②						

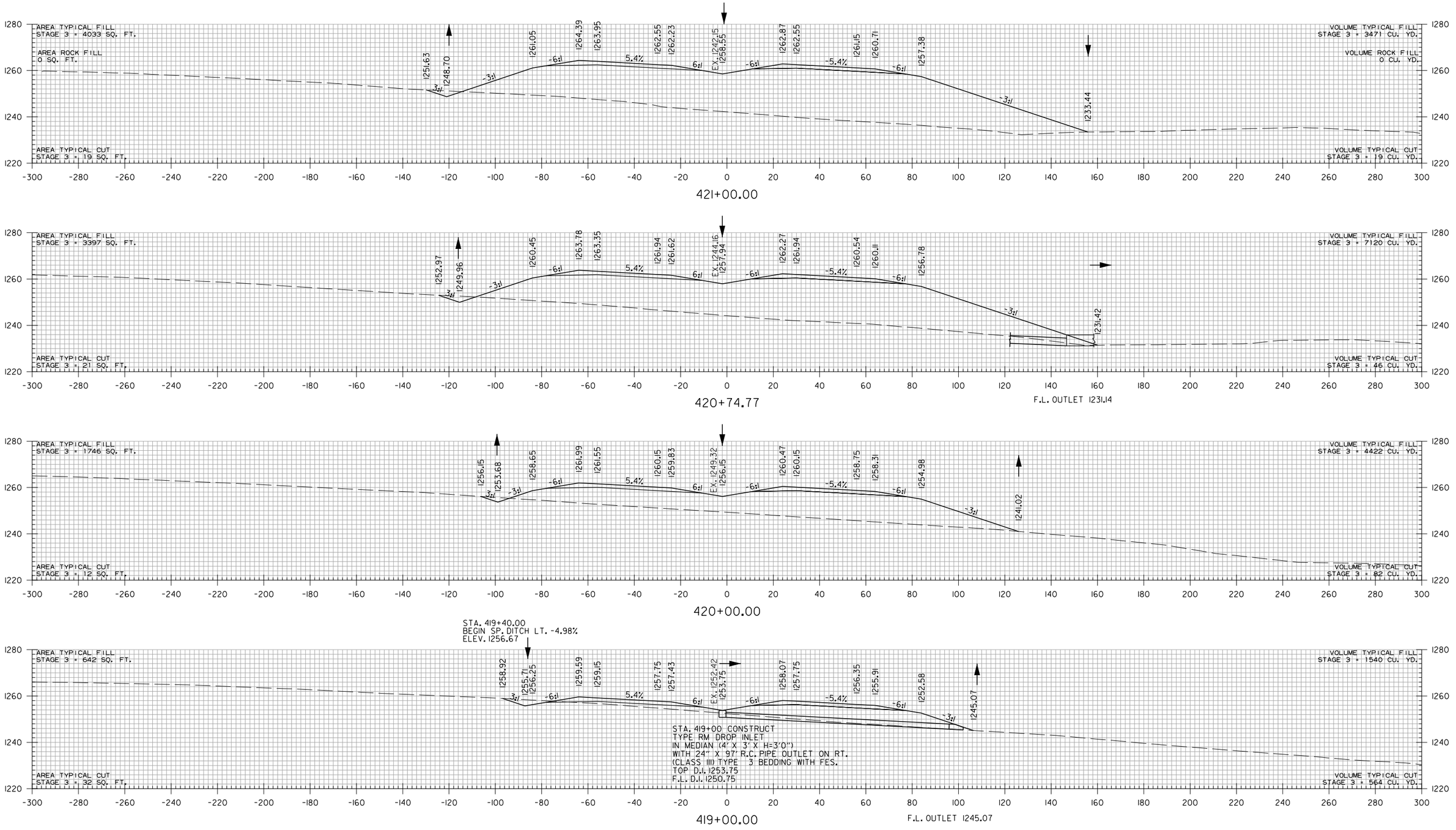

STA. 419+00 TO STA. 421+00

WBCalloway 7/17/2023 5:06:21PM
WORKSPACE: AHTD
L:\2017\170176\60 - ARDOT 012326 Hwy 412 - Hwy 112\Drawings\r012326_CX_MNL_01.dgn
REVISED DATE:

DATE REVISED	DATE REVISED	FED. RD. DIST. NO.	STATE	JOB NO.	SHEET NO.	TOTAL SHEETS
		6	ARK.	012326	665	838
		CROSS SECTIONS				
②						

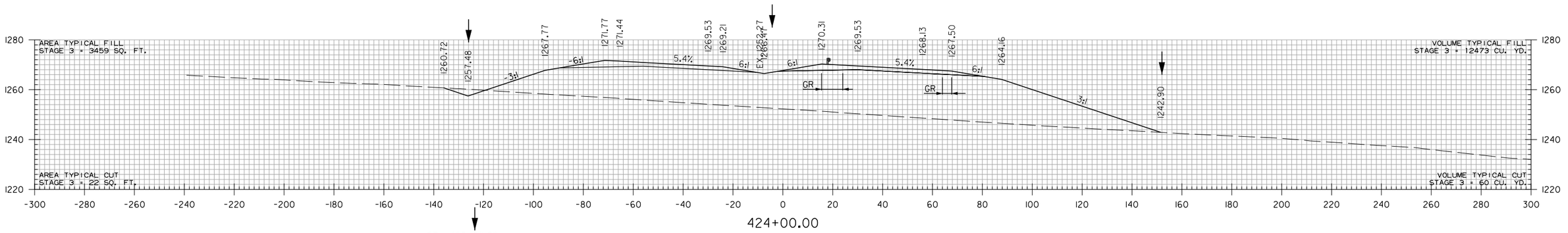

STA. 423+00.00
END SP. DITCH LT. 8.45%
BEGIN SP. DITCH LT. 2.48%
ELEV. 1255.00

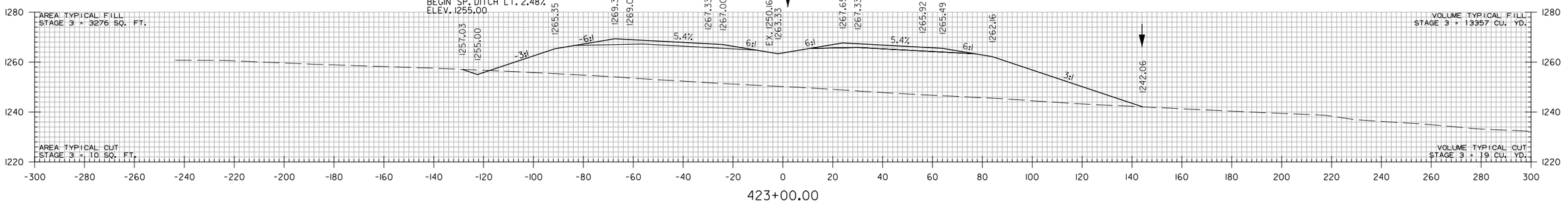

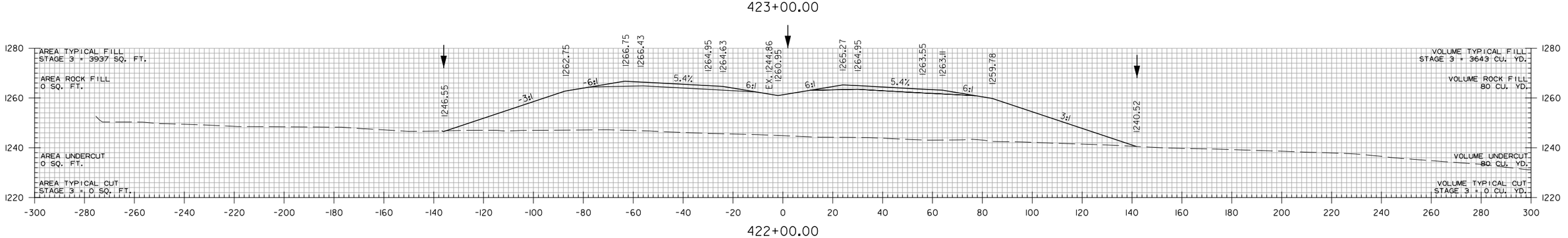

STA. 421+79.00
END SP. DITCH LT. -4.98%
BEGIN SP. DITCH LT. 8.45%
ELEV. 1244.77

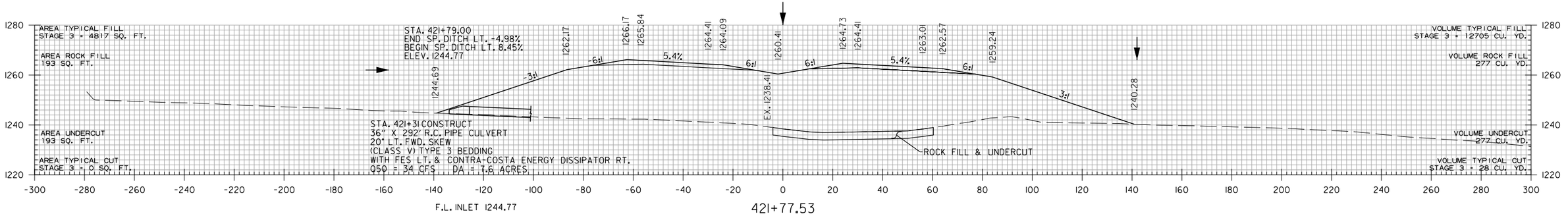

STA. 421+77.53 TO STA. 424+00

WBCalloway 7/17/2023 5:06:21PM
WORKSPACE: AHTD
L:\2017\170176\60 - ARDOT 012326 Hwy 412 - Hwy 112\Drawings\r012326_CX_MNL_01.dgn
REVISED DATE:

DATE REVISED	DATE REVISED	FED. RD. DIST. NO.	STATE	JOB NO.	SHEET NO.	TOTAL SHEETS
		6	ARK.	012326	666	838
		CROSS SECTIONS				
②						

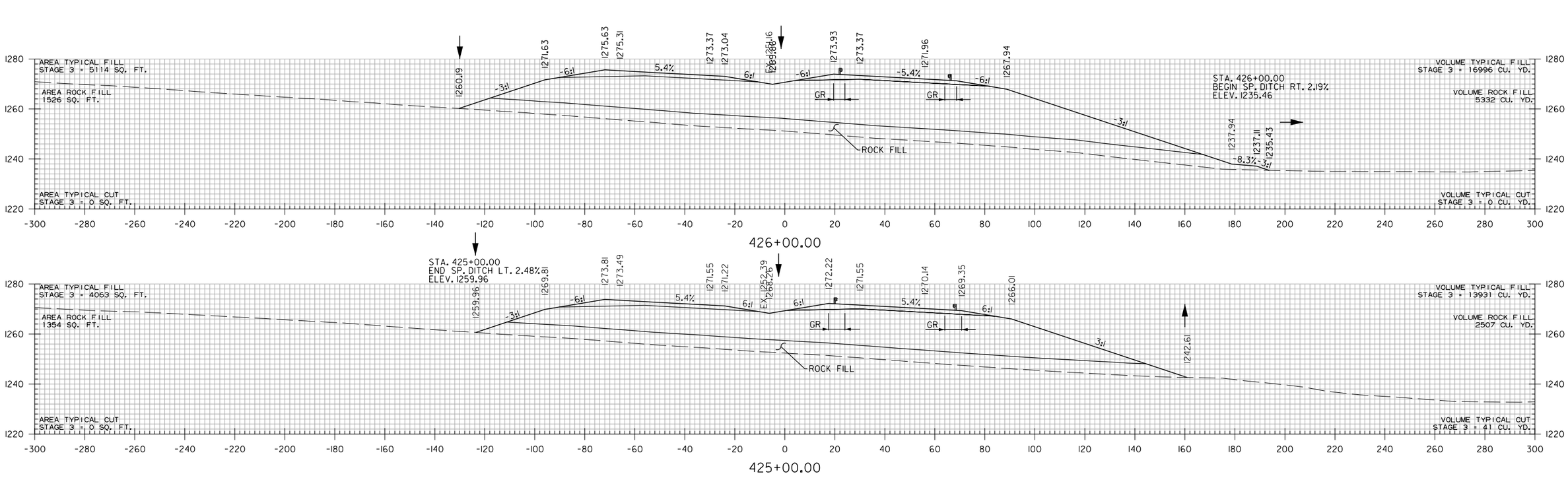

STA. 425+00 TO STA. 426+00

HBVinson 7/27/2023 2:07:24 PM
WORKSPACE: AHTD
L:\2017\170176G0 - ARDOT 012326 Hwy 412 - Hwy 112\Drawings\r012326_CX_MNL_01.dgn
REVISED DATE:

DATE REVISED	DATE REVISED	FED. RD. DIST. NO.	STATE	JOB NO.	SHEET NO.	TOTAL SHEETS
		6	ARK.	012326	667	838
		CROSS SECTIONS				
②						

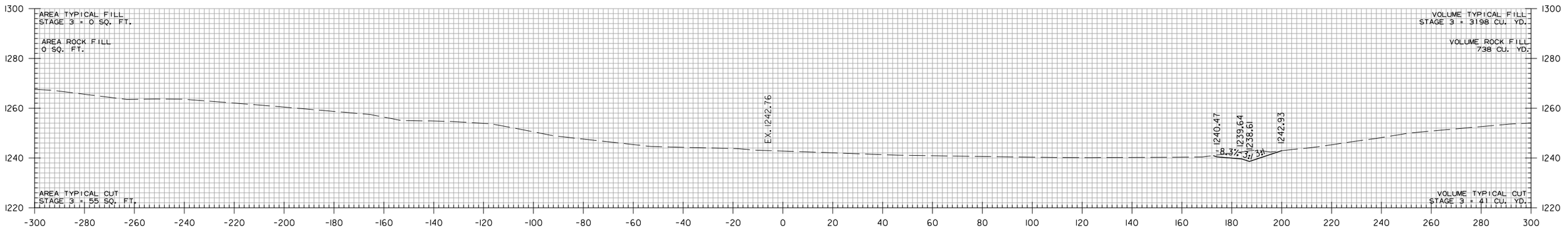

427+43.75

STA. 427+43.75 END TOE OF SLOPE

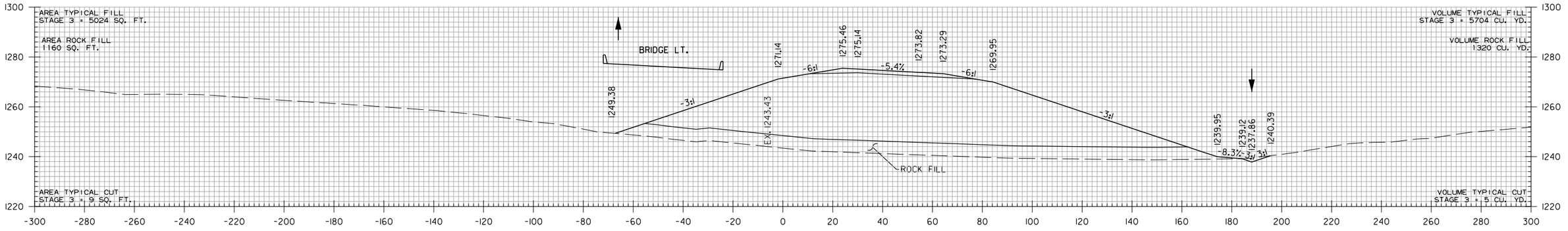

427+09.38

STA. 427+09.38 BEGIN BRIDGE RT.

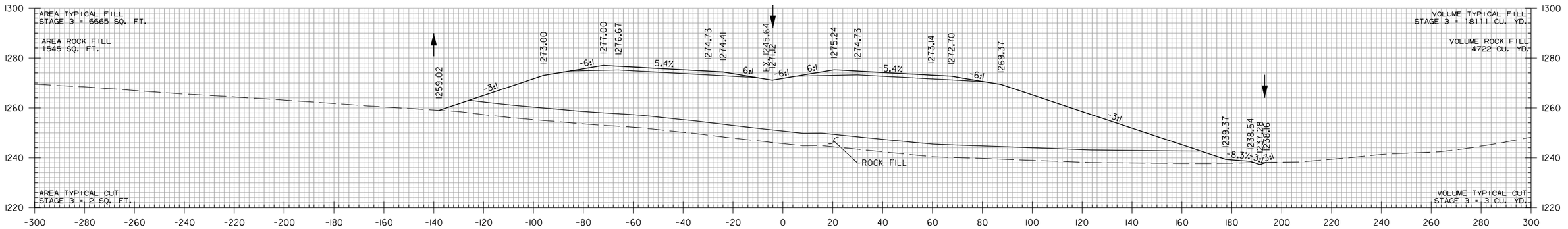

426+83.03

STA. 426+83.03 BEGIN BRIDGE LT.

STA. 426+83.03 TO STA. 427+43.75

WBCalloway 7/18/2023 7:36:11 AM
WORKSPACE: AHTD
L:\20\TI01660 - ARDOT 012326 Hwy 412 - Hwy 112\Drawings\r012326_CX_MNL_01.dgn
REVISED DATE:

DATE REVISED	DATE REVISED	FED. RD. DIST. NO.	STATE	JOB NO.	SHEET NO.	TOTAL SHEETS
		6	ARK.	012326	668	838
		CROSS SECTIONS				

(2)

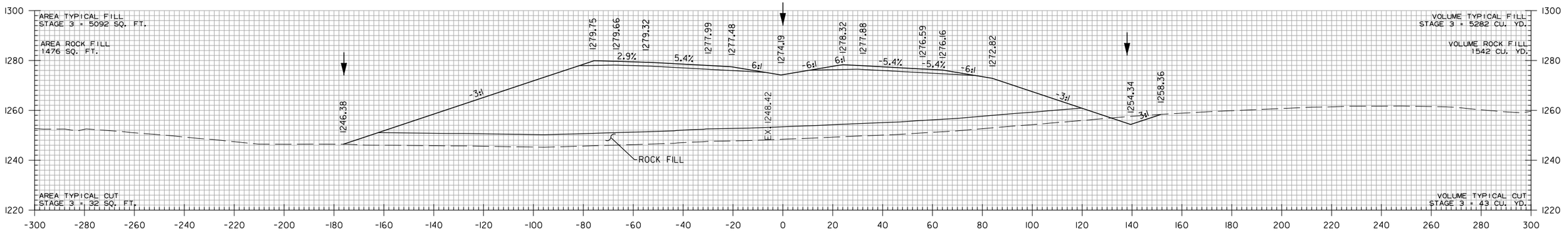

STA. 429+00.00
END SP. DITCH LT. 1.36%
ELEV. 1246.29

429+29.20
STA. 429+29.20 END BRIDGE RT.

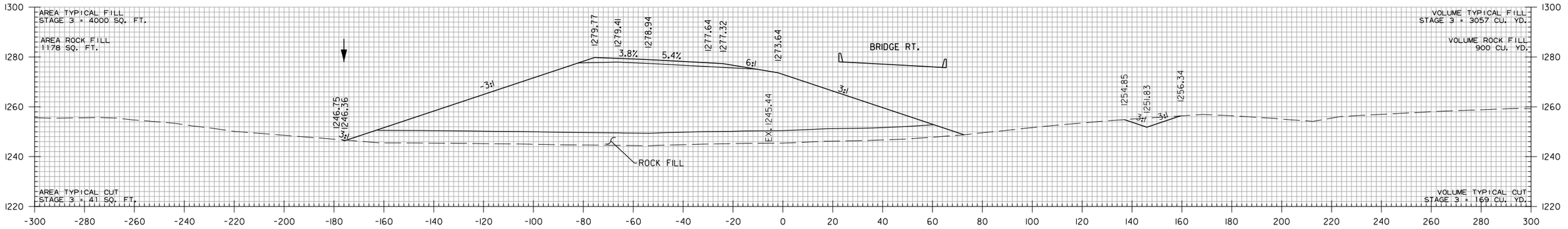

428+97.83
STA. 428+97.83 END BRIDGE LT.

STA. 428+75.00
BEGIN SP. DITCH RT. 8.00%
ELEV. 1250.00

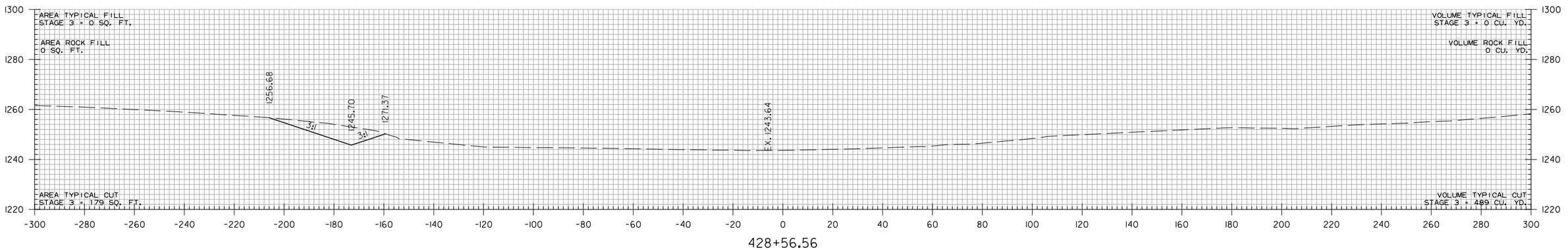

428+56.56

STA. 428+05.00
BEGIN SP. DITCH LT. 1.36%
ELEV. 1245.00

STA. 428+56.56 BEGIN TOE OF SLOPE

STA. 428+07.00
END SP. DITCH RT. 2.19%
ELEV. 1240.00

STA. 428+56.56 TO STA. 429+29.20

WBCalloway 7/18/2023 7:36:11 AM
WORKSPACE: AHTD
L:\201\101660 - ARDOT 012326 Hwy 412 - Hwy 112\Drawings\r012326_CX_MNL_01.dgn
REVISED DATE:

DATE REVISED	DATE REVISED	FED. RD. DIST. NO.	STATE	JOB NO.	SHEET NO.	TOTAL SHEETS
		6	ARK.	012326	669	838
		CROSS SECTIONS				
②						

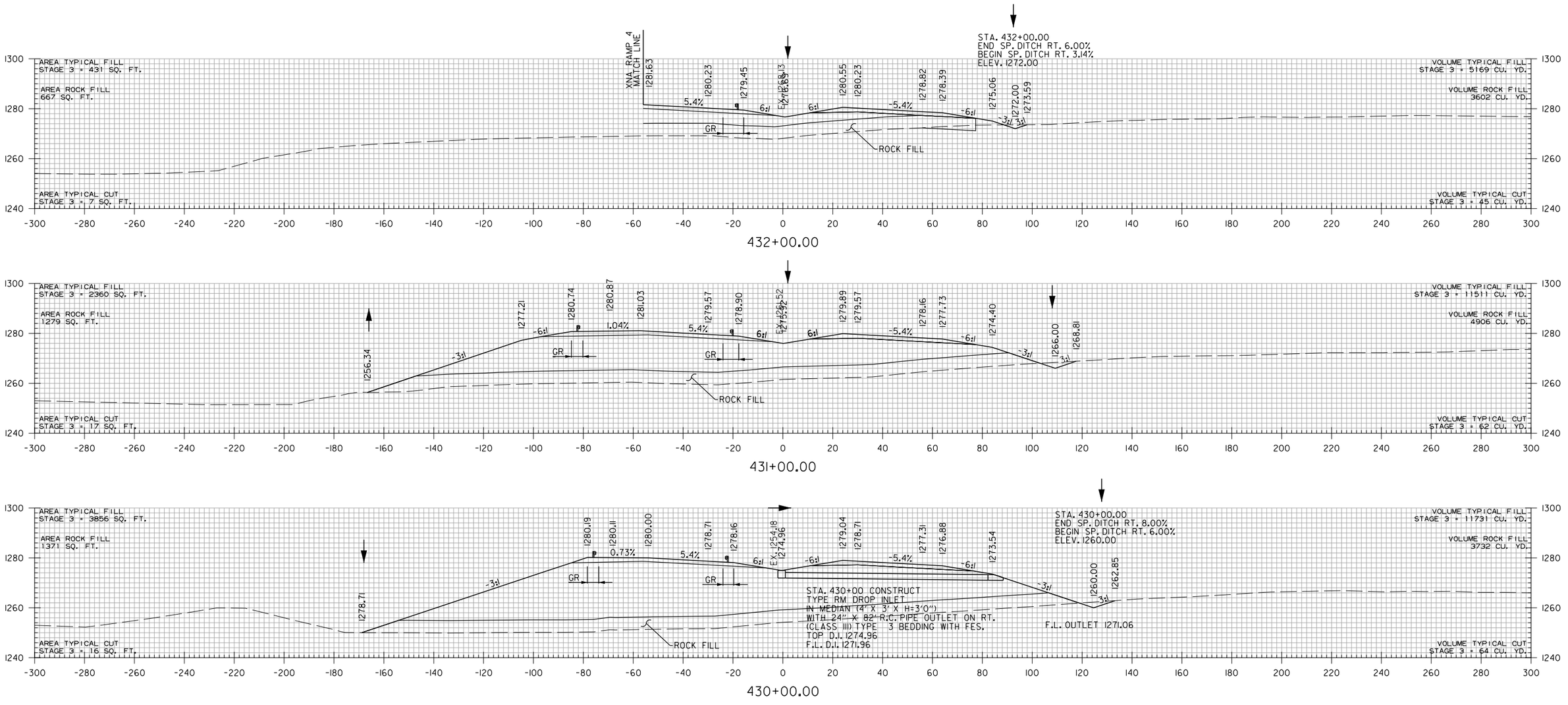

STA. 430+00 TO STA. 432+00

WBCallaway 7/17/2023 5:06:21PM
WORKSPACE: AHTD
L:\2017\17017660 - ARDOT 012326 Hwy 412 - Hwy 112\Drawings\r012326_CX_MNL_01.dgn
REVISED DATE:

DATE REVISED	DATE REVISED	FED. RD. DIST. NO.	STATE	JOB NO.	SHEET NO.	TOTAL SHEETS
		6	ARK.	012326	670	838
		CROSS SECTIONS				

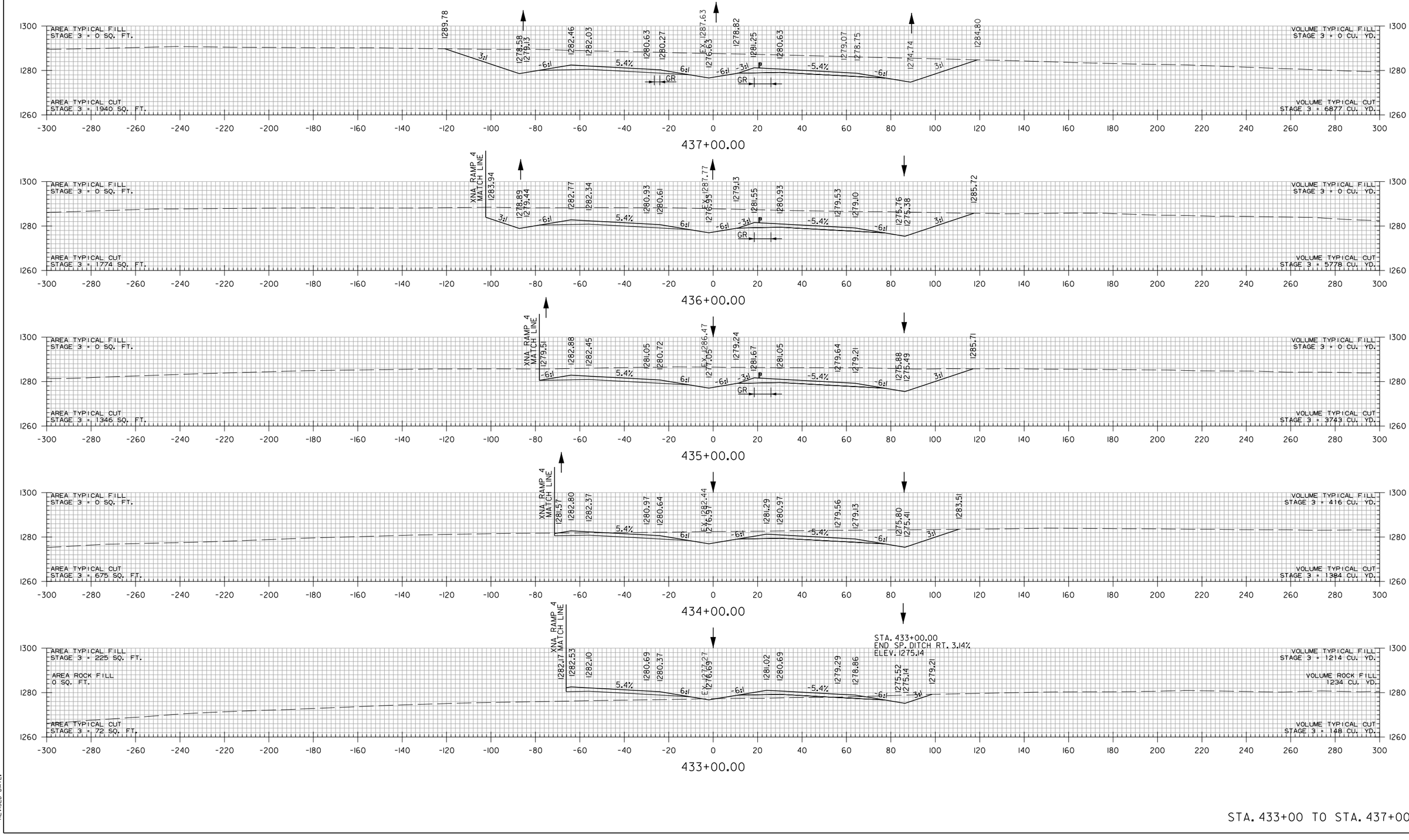

STA. 433+00 TO STA. 437+00

WBCallaway 7/17/2023 5:06:22 PM
WORKSPACE: AHTD
L:\2017\17017660 - ARDOT 012326 Hwy 412 - Hwy 112\Drawings\r012326_CX_MNL_01.dgn
REVISED DATE:

DATE REVISED	DATE REVISED	FED. RD. DIST. NO.	STATE	JOB NO.	SHEET NO.	TOTAL SHEETS
		6	ARK.	012326	671	838
		CROSS SECTIONS				
②						

STA. 441+80
BEGIN SP. DITCH LT. -3.85%
ELEV. 1276.21

STA. 441+60.00
END SP. DITCH RT. 1.25%
ELEV. 1272.08

AREA TYPICAL FILL
STAGE 3 = 191 SQ. FT.

AREA TYPICAL CUT
STAGE 3 = 166 SQ. FT.

VOLUME TYPICAL FILL
STAGE 3 = 234 CU. YD.

VOLUME TYPICAL CUT
STAGE 3 = 317 CU. YD.

441+00.00

STA. 441+87 CONSTRUCT
DOUBLE 44"x27"x285' R.C. ARCH PIPE CULVERT
50° LT. FWD. SKEW
W/ F.E.S. LT. AND RT.
(CLASS III) (TYPE 3 BEDDING) WITH F.E.S. RT.
Q50 = 55 CFS DA = 12 ACRES
44"x27" R.C. ARCH PIPE = 570 LIN. FT.
44"x27" F.E.S. = 2 EACH

AREA TYPICAL FILL
STAGE 3 = 149 SQ. FT.

AREA TYPICAL CUT
STAGE 3 = 327 SQ. FT.

VOLUME TYPICAL FILL
STAGE 3 = 323 CU. YD.

VOLUME TYPICAL CUT
STAGE 3 = 688 CU. YD.

440+61.40

F.L. OUTLET 1270.82
STA. 440+37.00
END SP. DITCH RT. -2.97%
BEGIN SP. DITCH RT. 1.25%
ELEV. 1270.55

AREA TYPICAL FILL
STAGE 3 = 149 SQ. FT.

AREA TYPICAL CUT
STAGE 3 = 327 SQ. FT.

VOLUME TYPICAL FILL
STAGE 3 = 275 CU. YD.

VOLUME TYPICAL CUT
STAGE 3 = 1593 CU. YD.

440+00.00

STA. 439+50.00
BEGIN SP. DITCH RT. -2.97%
ELEV. 1273.13

AREA TYPICAL FILL
STAGE 3 = 0 SQ. FT.

AREA TYPICAL CUT
STAGE 3 = 533 SQ. FT.

VOLUME TYPICAL FILL
STAGE 3 = 0 CU. YD.

VOLUME TYPICAL CUT
STAGE 3 = 3788 CU. YD.

439+00.00

AREA TYPICAL FILL
STAGE 3 = 0 SQ. FT.

AREA TYPICAL CUT
STAGE 3 = 1512 SQ. FT.

VOLUME TYPICAL FILL
STAGE 3 = 0 CU. YD.

VOLUME TYPICAL CUT
STAGE 3 = 6392 CU. YD.

438+00.00

STA. 438+00 TO STA. 441+00

JATurner 8/10/2023 1:43:52 PM
WORKSPACE: AHTD
L:\201\1701660 - ARDOT 012326 Hwy 412 - Hwy 112\Drawings\r012326_CX_MNL_01.dgn
REVISED DATE:

DATE REVISED	DATE REVISED	FED. RD. DIST. NO.	STATE	JOB NO.	SHEET NO.	TOTAL SHEETS
		6	ARK.	012326	672	838
		CROSS SECTIONS				

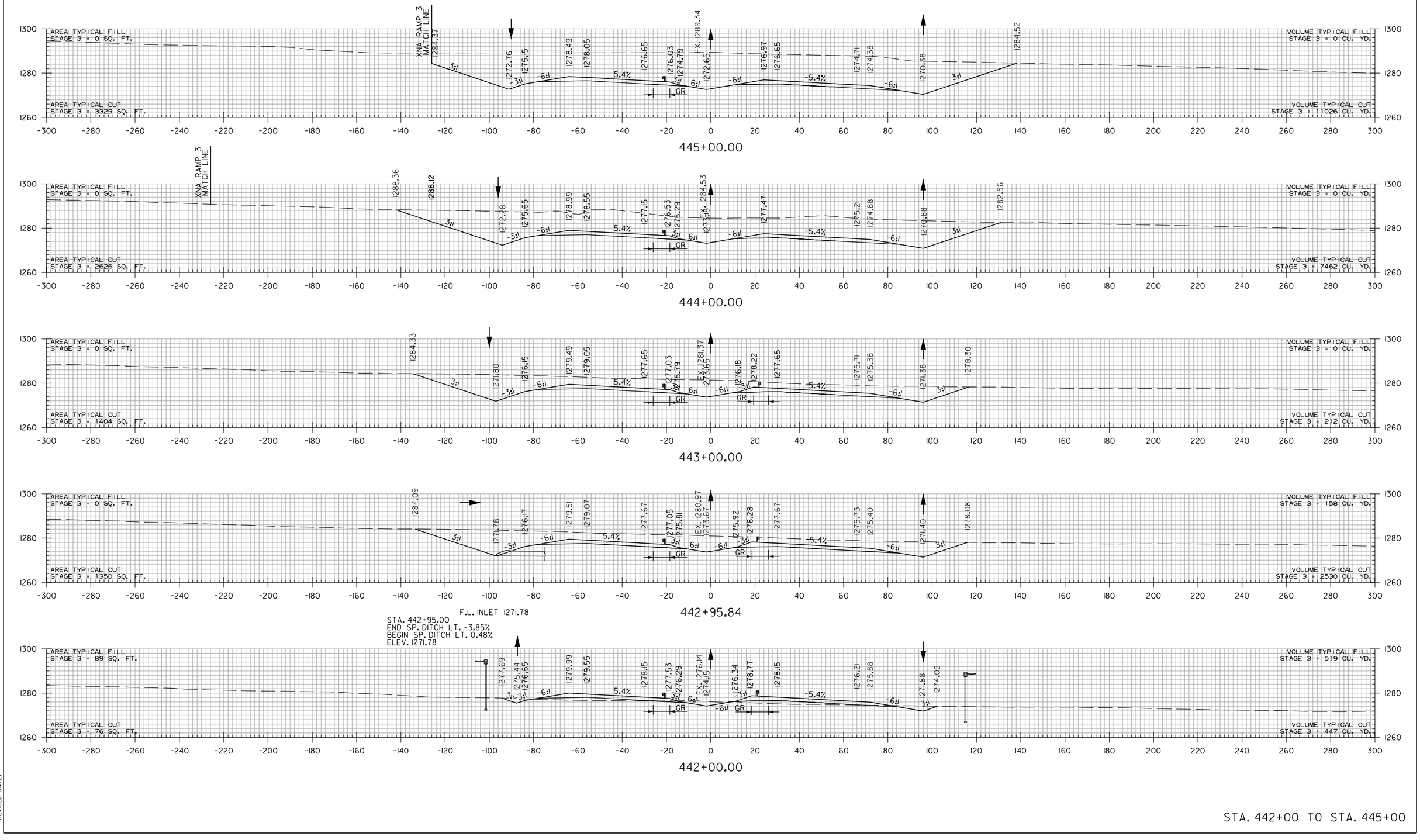

HBVinson
7/21/2023 2:07:25 PM
WORKSPACE: AHTD
L:\2017\1701660 - ARDOT 012326 Hwy 412 - Hwy 12\Drawings\r012326_CX_MNL_01.dgn
REVISED DATE:

DATE REVISED	DATE REVISED	FED. RD. DIST. NO.	STATE	JOB NO.	SHEET NO.	TOTAL SHEETS
		6	ARK.	012326	673	838
②		CROSS SECTIONS				

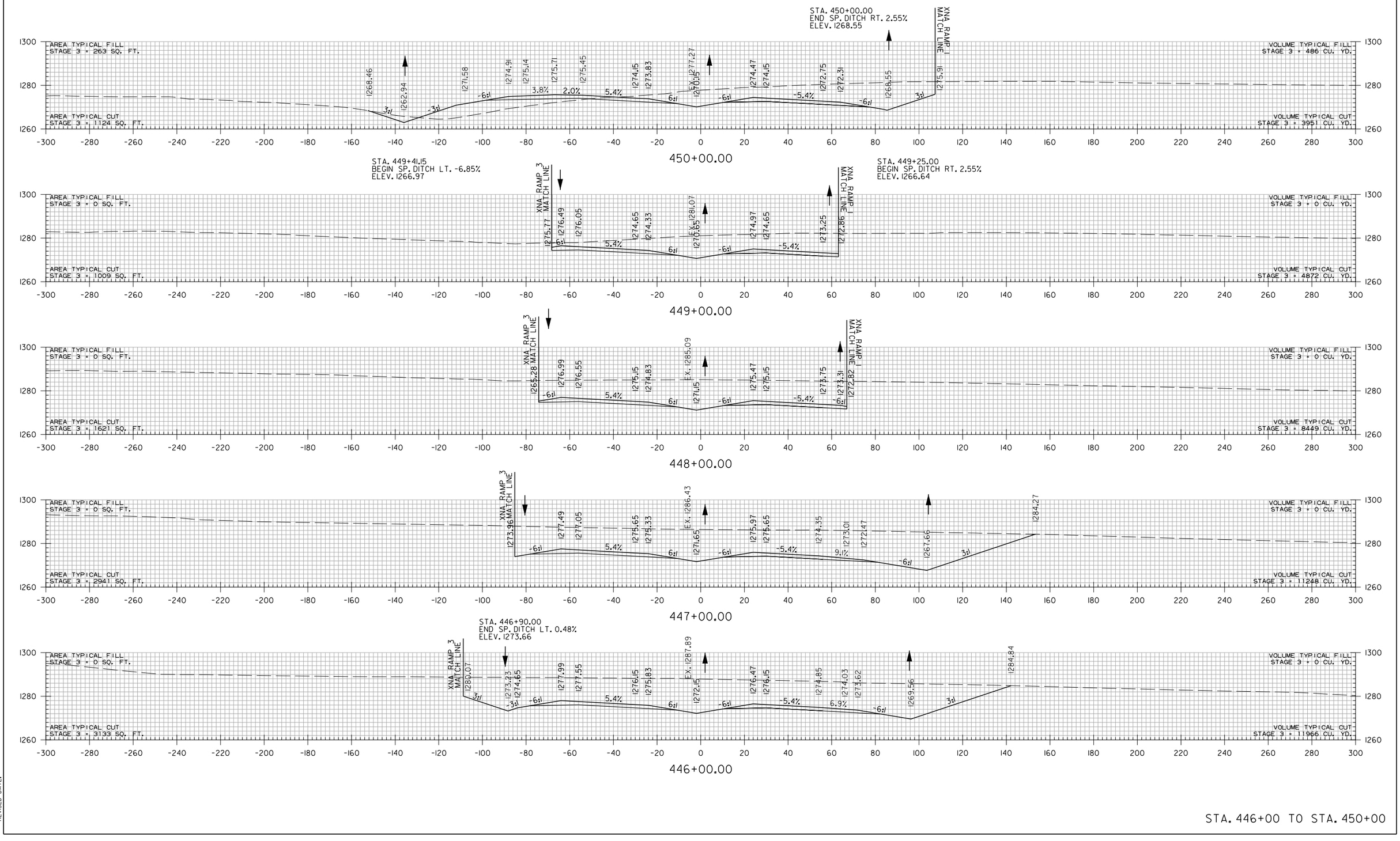

STA. 446+00 TO STA. 450+00

WBCallaway 7/17/2023 5:06:22 PM
WORKSPACE: AHTD
L:\201\1701660 - ARDOT 012326 Hwy 412 - Hwy 112\Drawings\r012326_CX_MNL_01.dgn
REVISED DATE:

DATE REVISED	DATE REVISED	FED. RD. DIST. NO.	STATE	JOB NO.	SHEET NO.	TOTAL SHEETS
		6	ARK.	012326	674	838
		CROSS SECTIONS				
②						

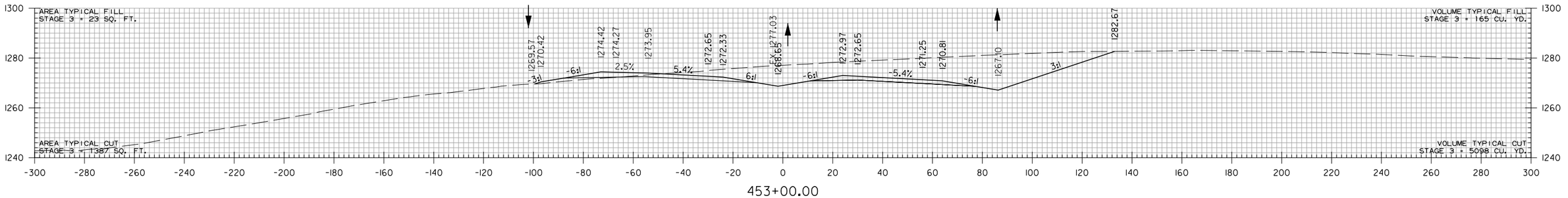

453+00.00

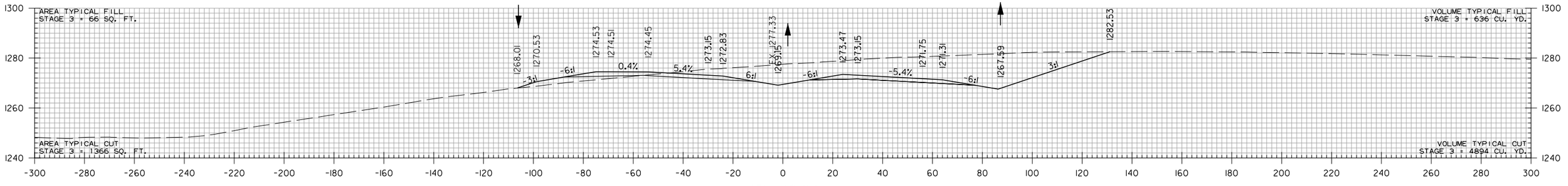

452+00.00

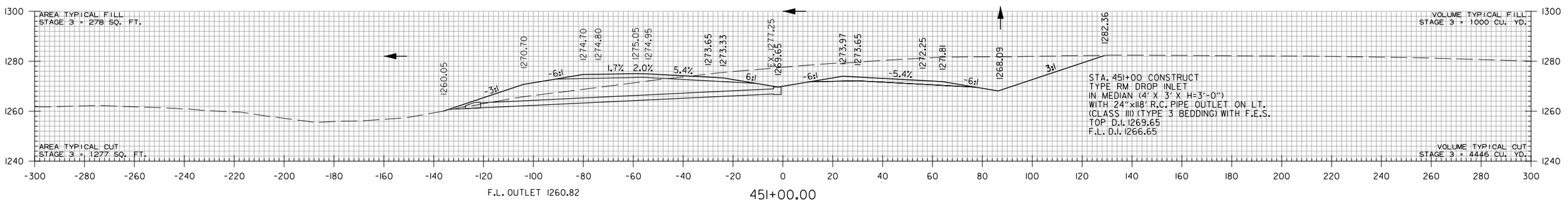

F.L. OUTLET 1260.82

451+00.00

STA. 450+46.00
END SP. DITCH LT. -6.85%
ELEV. 1259.79

STA. 451+00 TO STA. 453+00

WBCalloway 7/17/2023 5:06:23 PM
WORKSPACE: AHTD
L:\2017\17017660 - ARDOT 012326 Hwy 412 - Hwy 112\Drawings\r012326_CX_MNL_01.dgn
REVISED DATE:

DATE REVISED	DATE REVISED	FED. RD. DIST. NO.	STATE	JOB NO.	SHEET NO.	TOTAL SHEETS
		6	ARK.	012326	675	838
		CROSS SECTIONS				
②						

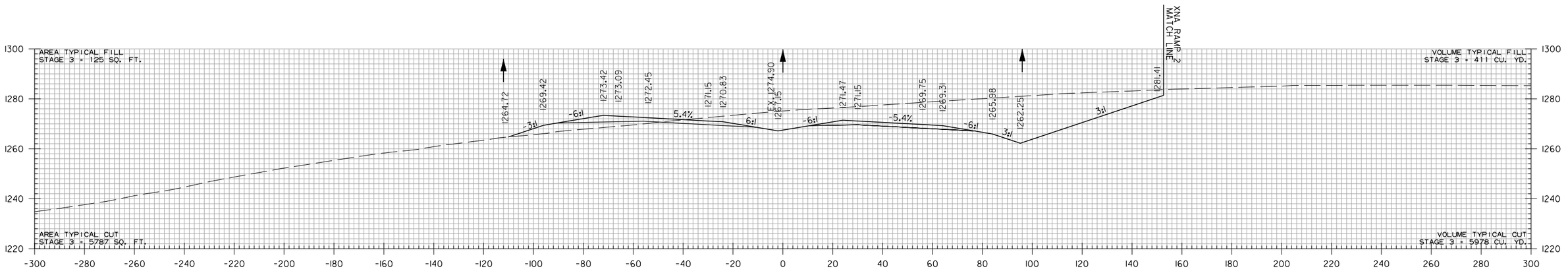

STA. 454+00 TO STA. 456+00

WBCalloway 7/17/2023 5:06:23 PM
WORKSPACE: AHTD
L:\20\T\T01T660 - ARDOT 012326 Hwy 412 - Hwy 112\Drawings\r012326_CX_MNL_01.dgn
REVISED DATE:

DATE REVISED	DATE REVISED	FED. RD. DIST. NO.	STATE	JOB NO.	SHEET NO.	TOTAL SHEETS
		6	ARK.	012326	676	838
		CROSS SECTIONS				
②						

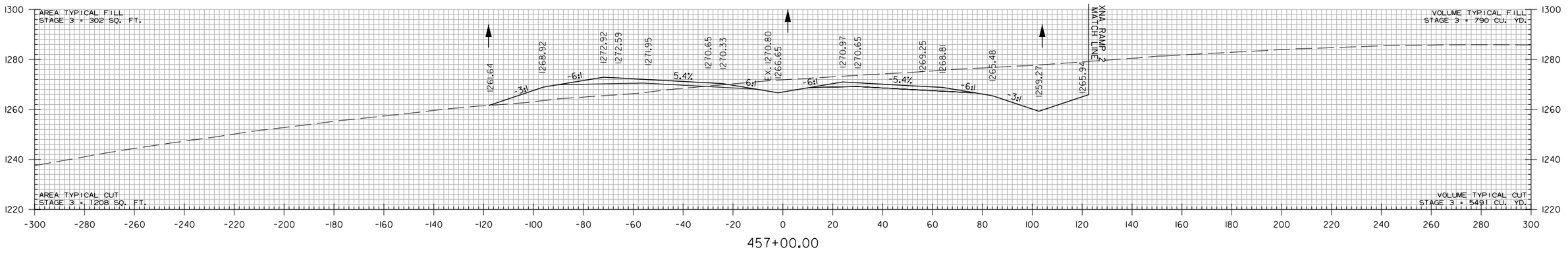

STA. 457+00 TO STA. 457+00

WBCallaway 7/17/2023 5:06:23 PM
WORKSPACE: AHTD
L:\2017\17017660 - ARDOT 012326 Hwy 412 - Hwy 112\Drawings\r012326_CX_MNL_01.dgn
REVISED DATE:

DATE REVISED	DATE REVISED	FED. RD. DIST. NO.	STATE	JOB NO.	SHEET NO.	TOTAL SHEETS
		6	ARK.	012326	677	838
		CROSS SECTIONS				
②						

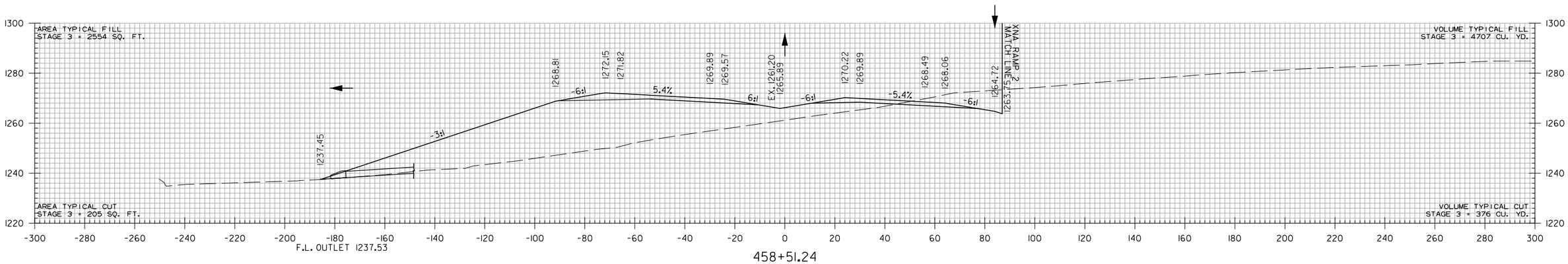

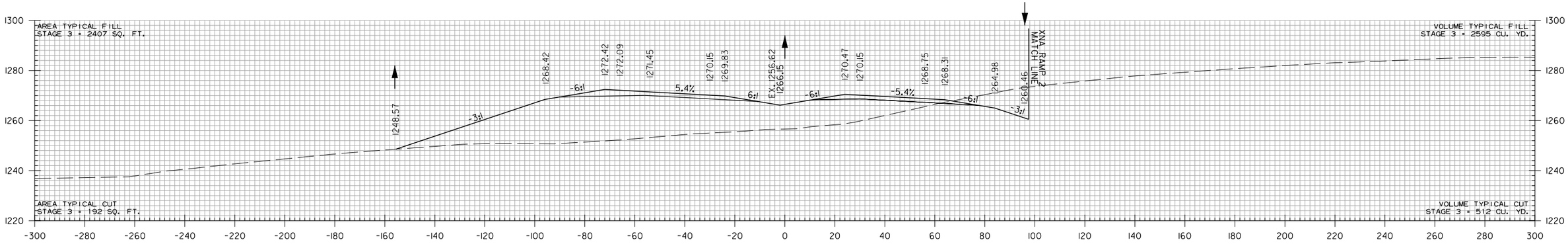

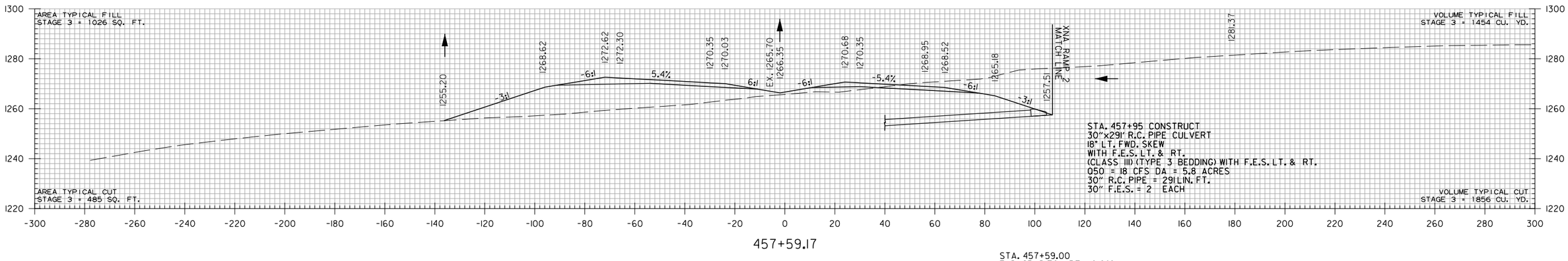

STA. 457+95 CONSTRUCT
30"x29I' R.C. PIPE CULVERT
18° LT. FWD. SKEW
WITH F.E.S. LT. & RT.
(CLASS III) (TYPE 3 BEDDING) WITH F.E.S. LT. & RT.
Q50 = 18 CFS DA = 5.8 ACRES
30" R.C. PIPE = 29I LIN. FT.
30" F.E.S. = 2 EACH

STA. 457+59.00
END SP. DITCH RT. -2.98%
ELEV. 1257.51

STA. 457+59.17 TO STA. 458+51.24

WBCallaway 7/18/2023 7:36:21 AM
WORKSPACE: AHTD
L:\20IT\I70I660 - ARDOT 012326 Hwy 412 - Hwy 112\Drawings\r012326_CX_MNL_01.dgn
REVISED DATE:

DATE REVISED	DATE REVISED	FED. RD. DIST. NO.	STATE	JOB NO.	SHEET NO.	TOTAL SHEETS
		6	ARK.	012326	678	838
		CROSS SECTIONS				
②						

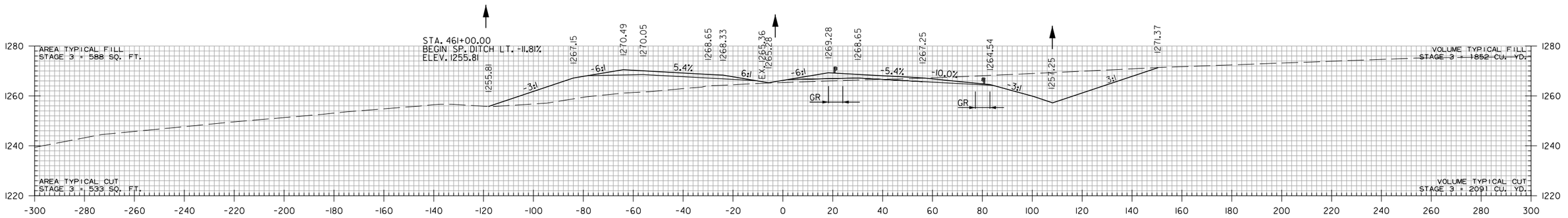

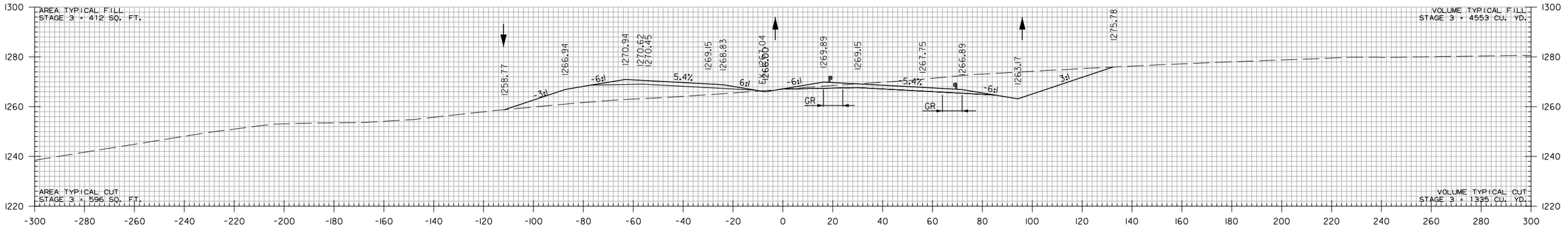

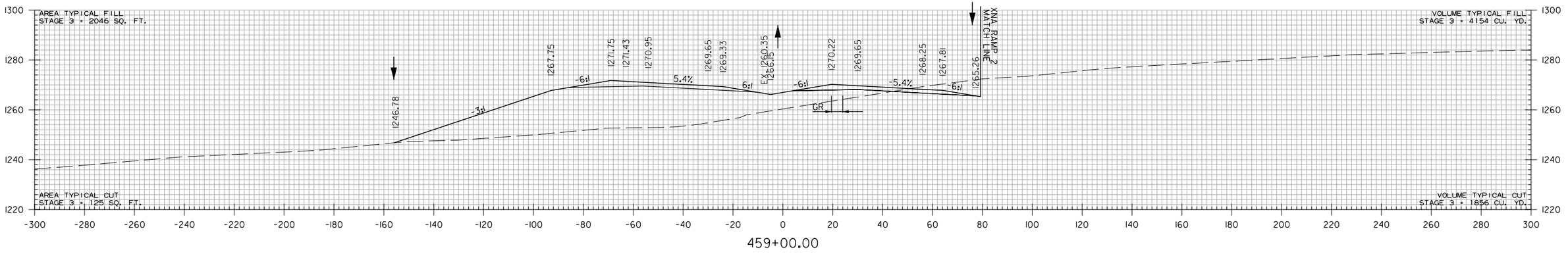

STA. 459+00 TO STA. 461+00

WBCallaway 7/17/2023 5:06:23 PM
WORKSPACE: AHTD
L:\2017\17017660 - ARDOT 012326 Hwy 412 - Hwy 112\Drawings\r012326_CX_MNL_01.dgn
REVISED DATE:

DATE REVISED	DATE REVISED	FED. RD. DIST. NO.	STATE	JOB NO.	SHEET NO.	TOTAL SHEETS
		6	ARK.	012326	679	838
		CROSS SECTIONS				
②						

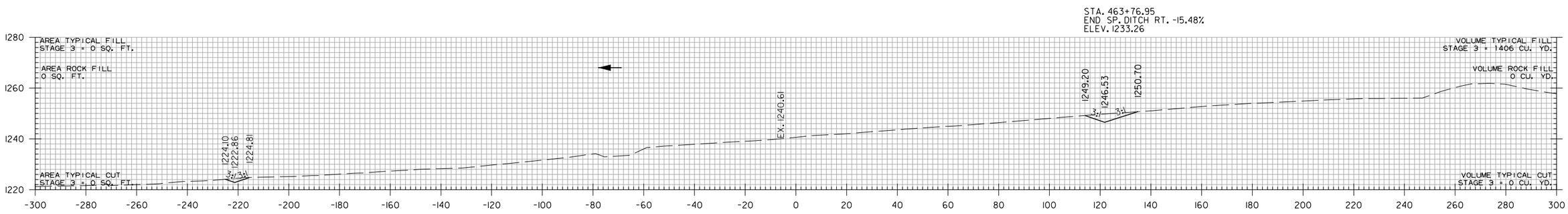

STA. 463+00.00
END SP. DITCH LT. -21.00%
BEGIN SP. DITCH LT. -6.67%
ELEV. 1223.00

463+02.14

STA. 463+02.14 END TOE OF SLOPE

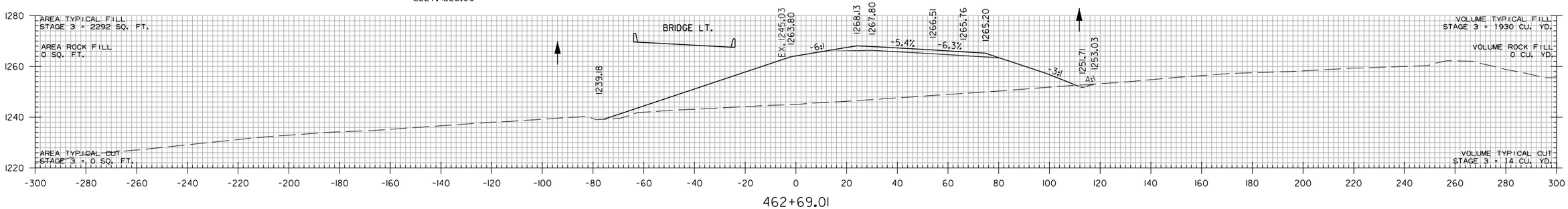

462+69.01

STA. 462+69.01 BEGIN BRIDGE RT.

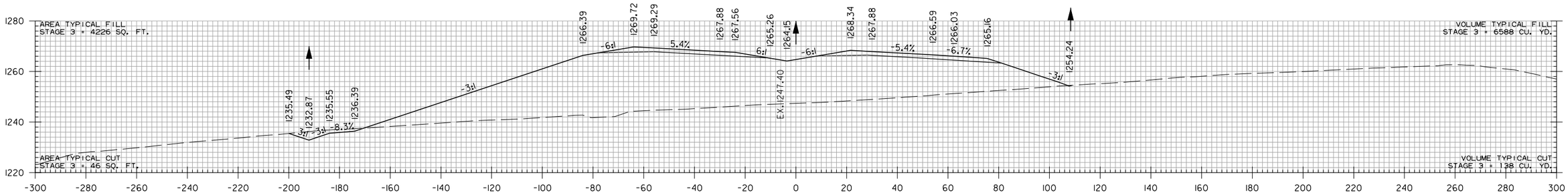

462+53.02

STA. 462+53.02 BEGIN BRIDGE LT.

STA. 462+50.00
END SP. DITCH RT. -1.69%
BEGIN SP. DITCH RT. -15.48%
ELEV. 1254.72

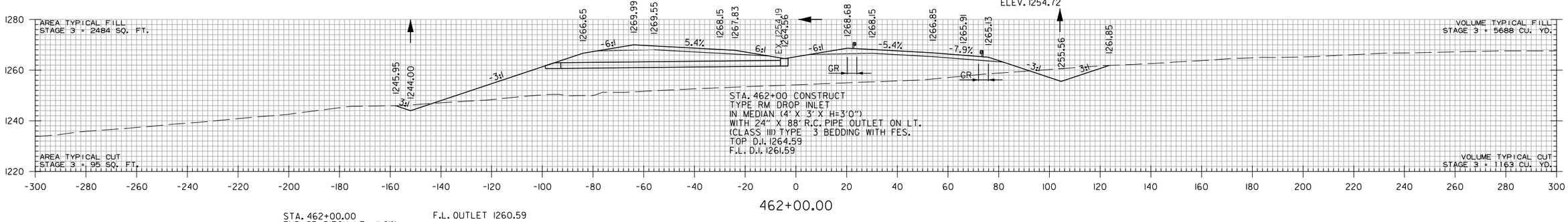

STA. 462+00 CONSTRUCT
TYPE RM DROP INLET
IN MEDIAN (4' X 3' X H=3'0")
WITH 24" X 88' R.C. PIPE OUTLET ON LT.
(CLASS III) TYPE 3 BEDDING WITH FES.
TOP D.I. 1264.59
F.L. D.I. 1261.59

462+00.00

STA. 462+00.00
END SP. DITCH LT. -11.81%
BEGIN SP. DITCH LT. -21.00%
ELEV. 1244.00

F.L. OUTLET 1260.59

STA. 462+00 TO STA. 463+02.14

WBCalloway 7/17/2023 5:06:24 PM
WORKSPACE: AHTD
L:\2017\17017660 - ARDOT 012326 Hwy 412 - Hwy 412\Drawings\r012326_CX_MNL_01.dgn
REVISED DATE:

DATE REVISED	DATE REVISED	FED. RD. DIST. NO.	STATE	JOB NO.	SHEET NO.	TOTAL SHEETS
		6	ARK.	012326	680	838
		CROSS SECTIONS				
(2)						

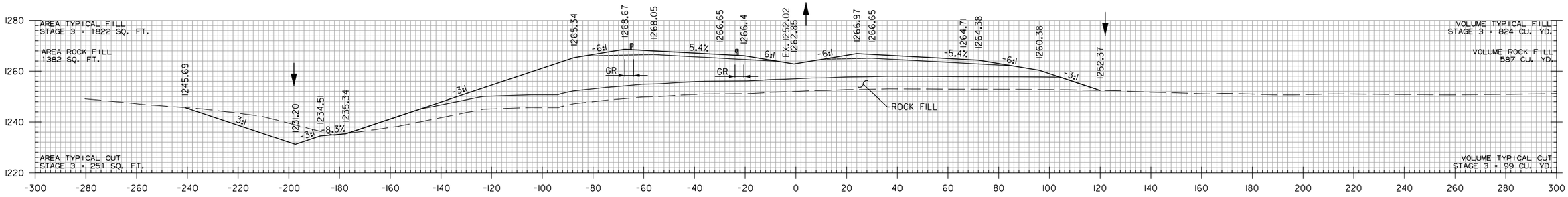

STA. 465+00.00
END SP. DITCH LT. 4.00%
BEGIN SP. DITCH LT. 10.00%
ELEV. 1231.20

465+00.00

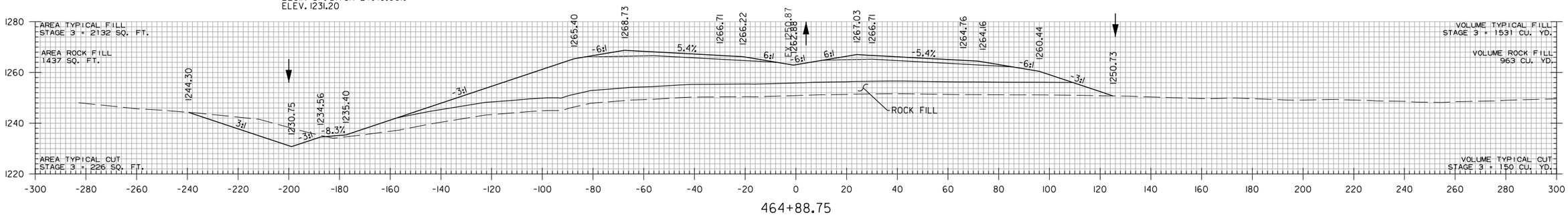

464+88.75

STA. 464+88.75 END BRIDGE RT.

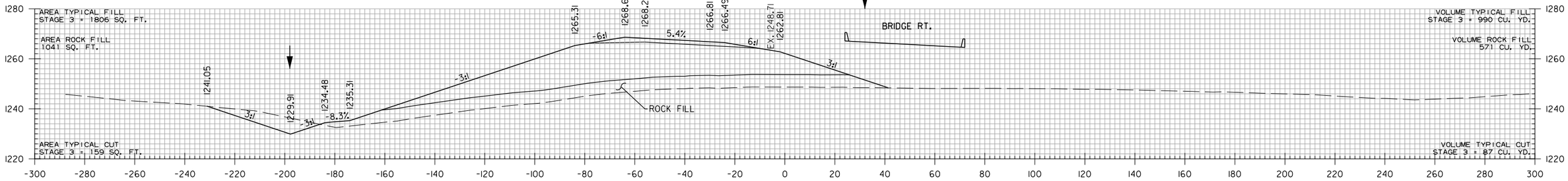

464+67.76

STA. 464+67.76 END BRIDGE LT.

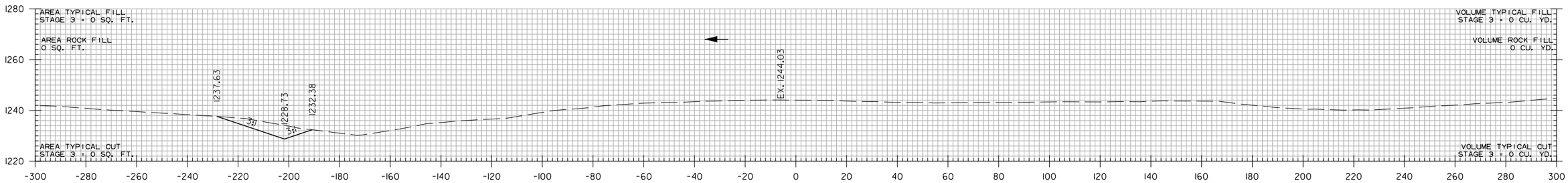

STA. 463+50.00
BEGIN SP. DITCH LT. 4.00%
ELEV. 1225.20

STA. 463+15.00
END SP. DITCH LT. -6.67%
ELEV. 1222.00

464+38.15

STA. 464+38.15 BEGIN TOE OF SLOPE

STA. 464+38.15 TO STA. 465+00

WBCalloway 7/18/2023 7:36:21 AM
WORKSPACE: AHTD
L:\2017\170176\660 - ARDOT 012326 Hwy 412 - Hwy 112\Drawings\r012326_CX_MNL_01.dgn
REVISED DATE:

DATE REVISED	DATE REVISED	FED. RD. DIST. NO.	STATE	JOB NO.	SHEET NO.	TOTAL SHEETS
		6	ARK.	012326	681	838
		CROSS SECTIONS				
②						

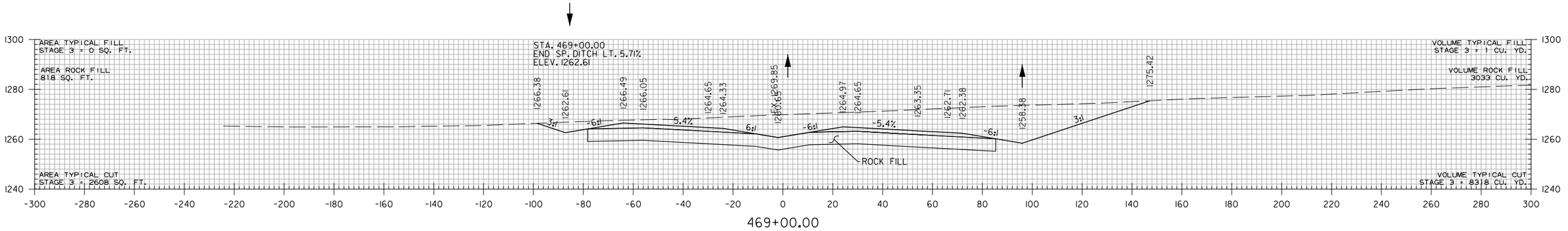

STA. 466+00 TO STA. 469+00

WBCallaway 7/17/2023 5:06:24 PM
WORKSPACE: AHTD
L:\20\T\T017660 - ARDOT 012326 Hwy 412 - Hwy 112\Drawings\r012326_CX_MNL_01.dgn
REVISED DATE:

DATE REVISED	DATE REVISED	FED. RD. DIST. NO.	STATE	JOB NO.	SHEET NO.	TOTAL SHEETS
		6	ARK.	012326	682	838
		CROSS SECTIONS				

2

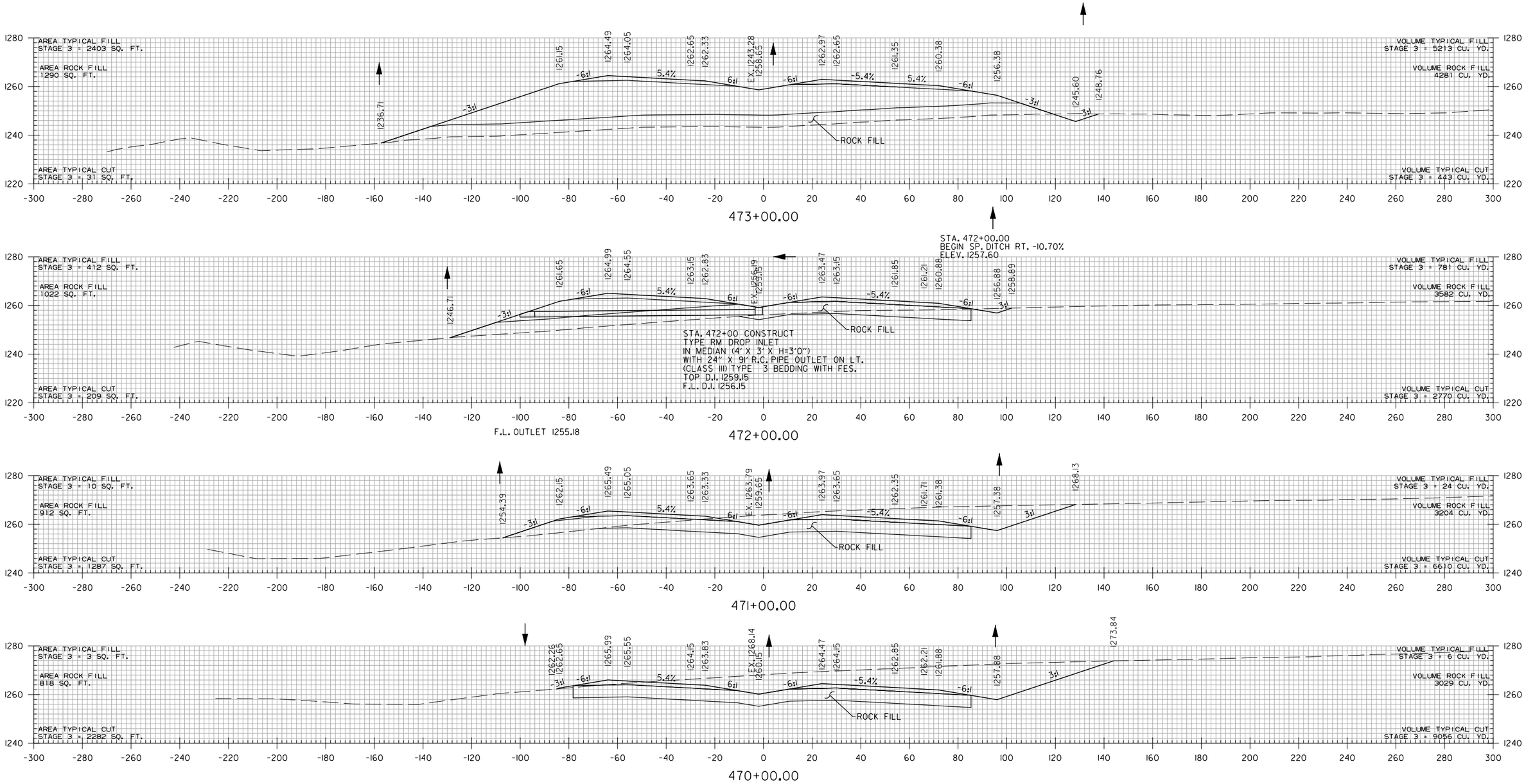

STA. 470+00 TO STA. 473+00

WBCallaway 7/17/2023 5:06:24 PM
WORKSPACE: AHTD
L:\2017\17017660 - ARDOT 012326 Hwy 412 - Hwy 112\Drawings\r012326_CX_MNL_01.dgn
REVISED DATE:

DATE REVISED	DATE REVISED	FED. RD. DIST. NO.	STATE	JOB NO.	SHEET NO.	TOTAL SHEETS
		6	ARK.	012326	683	838
		CROSS SECTIONS				

2

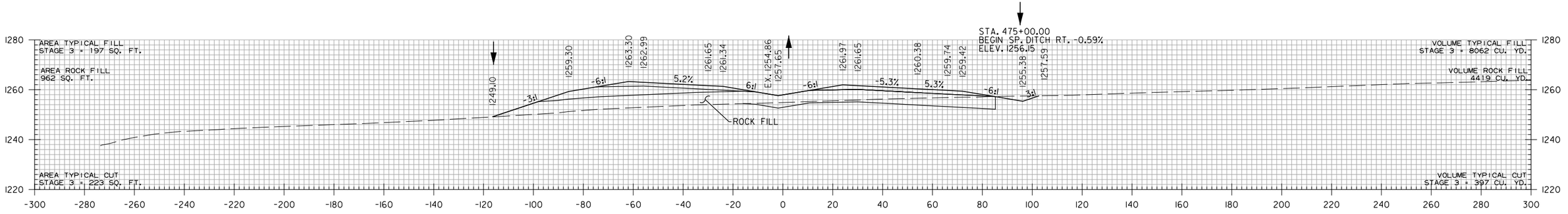

475+00.00

STA. 474+90.00 MAX. SUPERELEVATION (0.054'/')

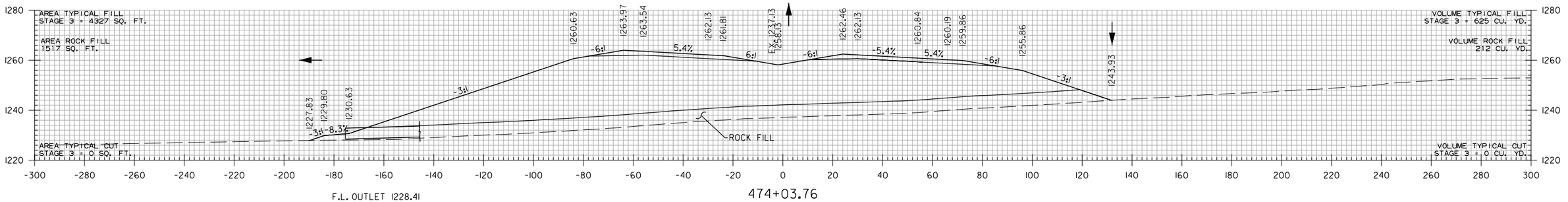

F.L. OUTLET 1228.41

474+03.76

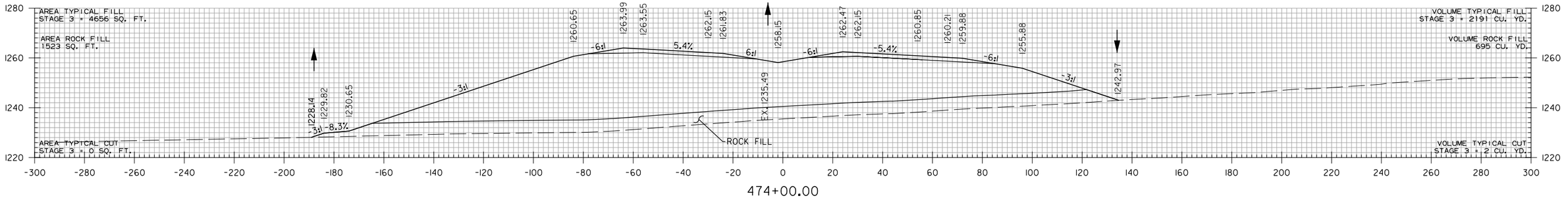

474+00.00

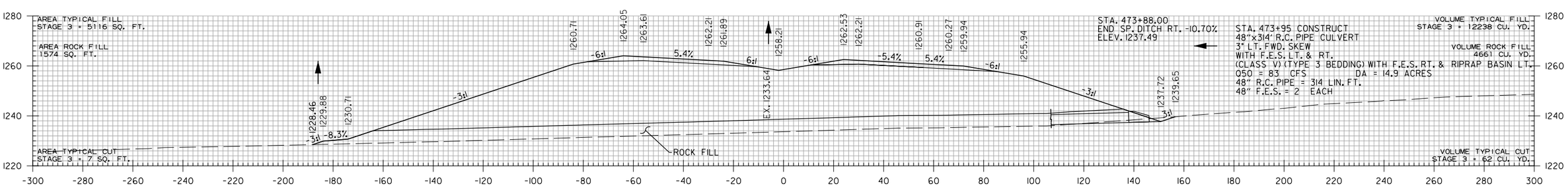

473+87.89

F.L. INLET 1237.72

STA. 473+87.89 TO STA. 475+00

WBCalloway 7/17/2023 5:06:31 PM
WORKSPACE: AHTD
L:\2017\170176660 - ARDOT 012326 Hwy 412 - Hwy 112\Drawings\r012326_CX_MNL_01.dgn
REVISED DATE:

DATE REVISED	DATE REVISED	FED. RD. DIST. NO.	STATE	JOB NO.	SHEET NO.	TOTAL SHEETS
		6	ARK.	012326	684	838
		CROSS SECTIONS				
②						

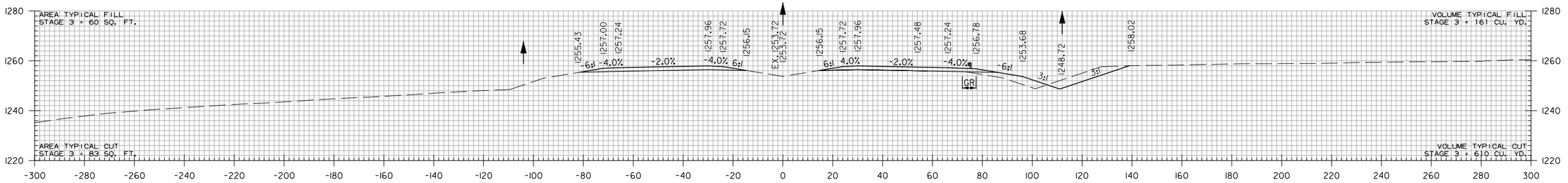

480+00.00

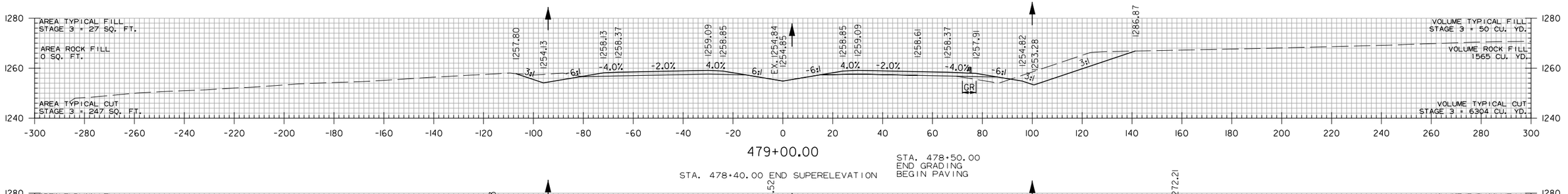

479+00.00

STA. 478+40.00 END SUPERELEVATION

STA. 478+50.00
END GRADING
BEGIN PAVING

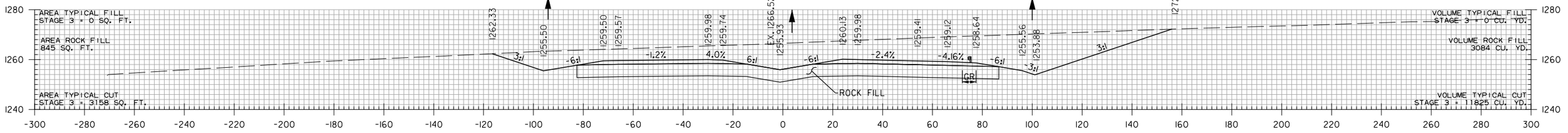

478+00.00

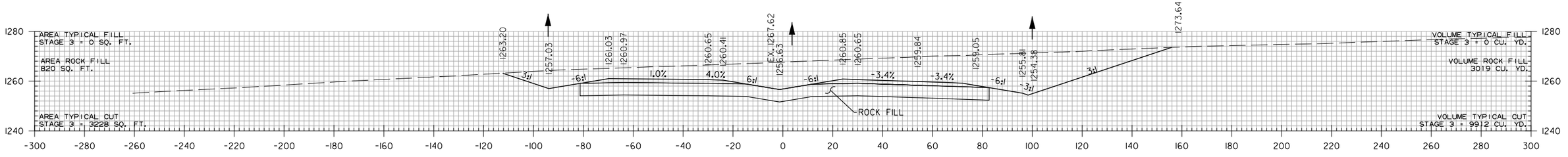

477+00.00

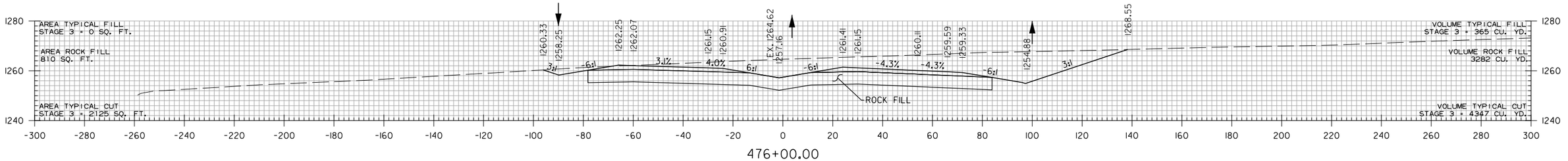

476+00.00

STA. 476+00 TO STA. 480+00

WBCallaway 7/17/2023 5:06:31PM
WORKSPACE: AHTD
L:\20\T\01\7660 - ARDOT 012326 Hwy 412 - Hwy 112\Drawings\r012326_CX_MNL_01.dgn
REVISED DATE:

DATE REVISED	DATE REVISED	FED. RD. DIST. NO.	STATE	JOB NO.	SHEET NO.	TOTAL SHEETS
		6	ARK.	012326	685	838
		CROSS SECTIONS				

(2)

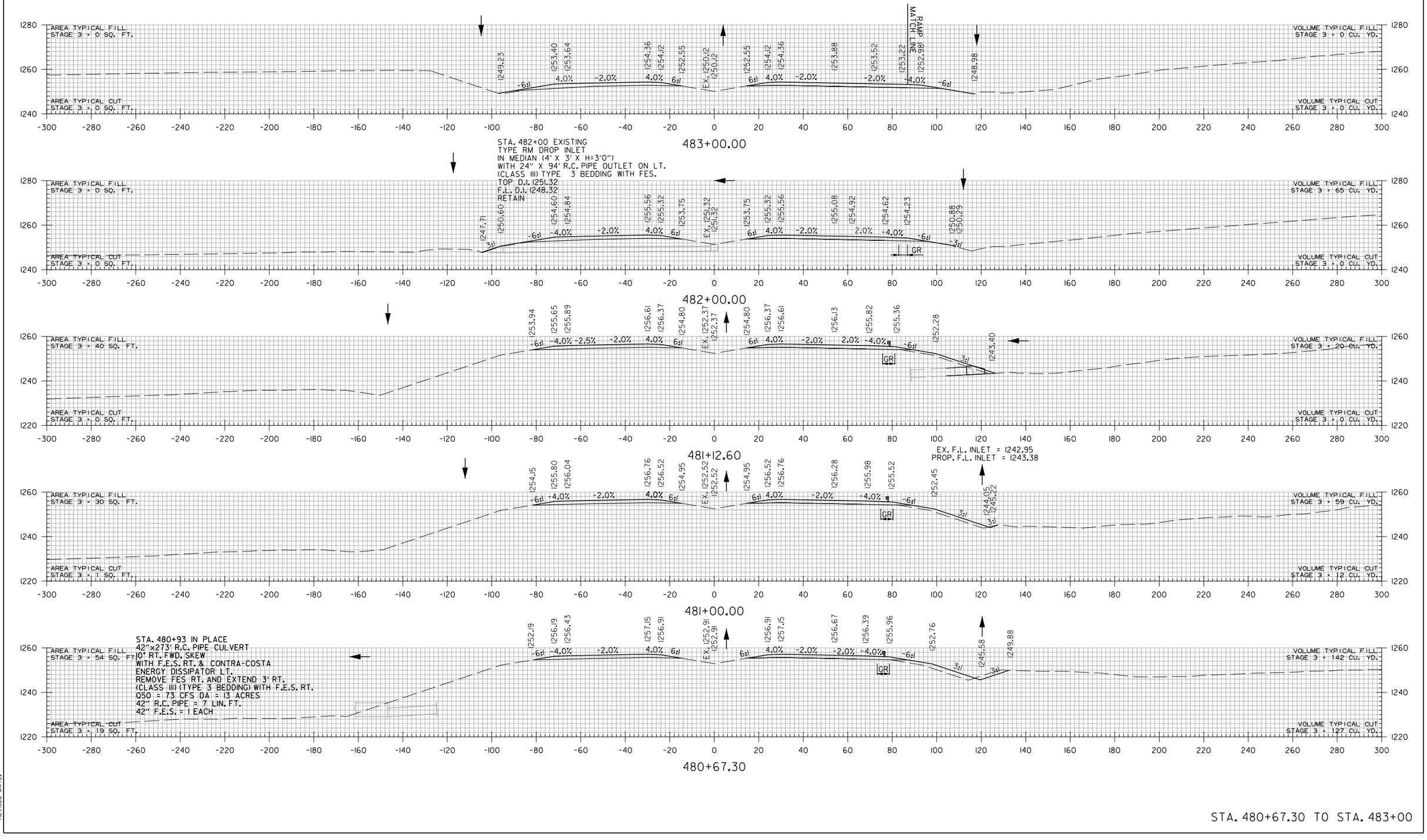

STA. 480+67.30 TO STA. 483+00

WBCallaway 7/18/2023 7:36:23 AM
WORKSPACE: AHTD
L:\201\T017660 - ARDOT 012326 Hwy 412 - Hwy 112\Drawings\r012326_CX_MNL_01.dgn
REVISED DATE:

DATE REVISED	DATE REVISED	FED. RD. DIST. NO.	STATE	JOB NO.	SHEET NO.	TOTAL SHEETS
		6	ARK.	012326	686	838
		CROSS SECTIONS				
(2)						

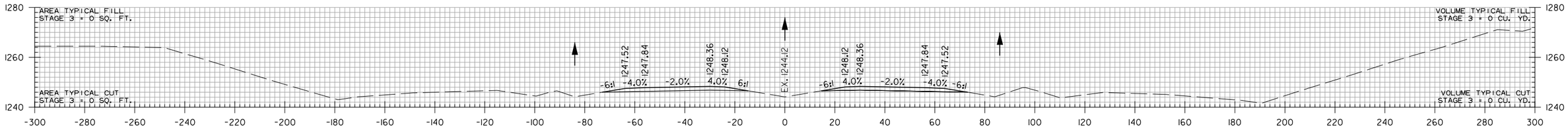

488+00.00

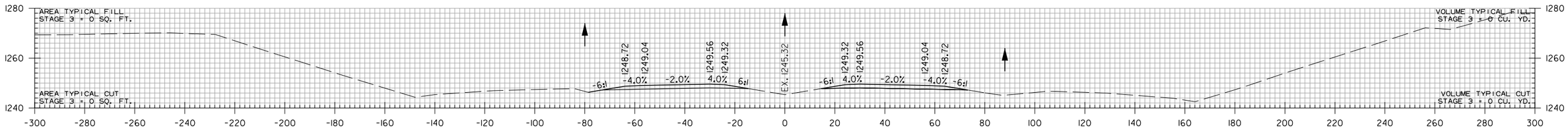

487+00.00

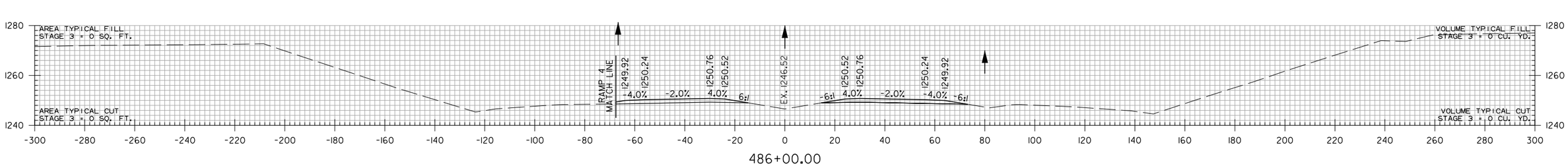

486+00.00

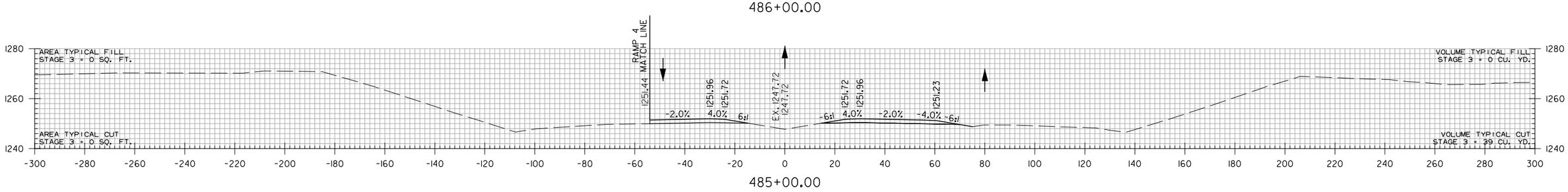

485+00.00

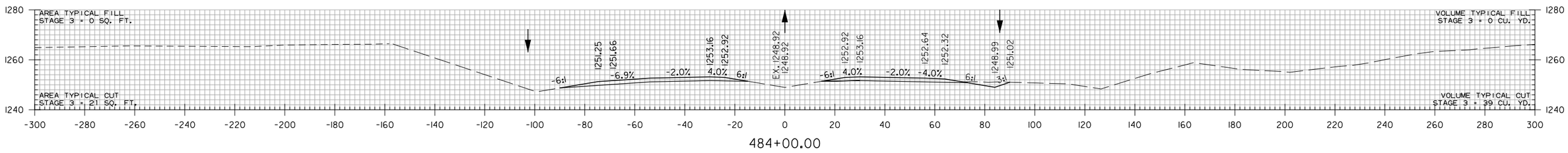

484+00.00

STA. 484+00 TO STA. 488+00

WBCalloway 7/18/2023 7:36:23 AM
WORKSPACE: AHTD
L:\201\1701660 - ARDOT 012326 Hwy 412 - Hwy 112\Drawings\r012326_CX_MNL_01.dgn
REVISED DATE:

DATE REVISED	DATE REVISED	FED. RD. DIST. NO.	STATE	JOB NO.	SHEET NO.	TOTAL SHEETS
		6	ARK.	012326	687	838
②		CROSS SECTIONS				

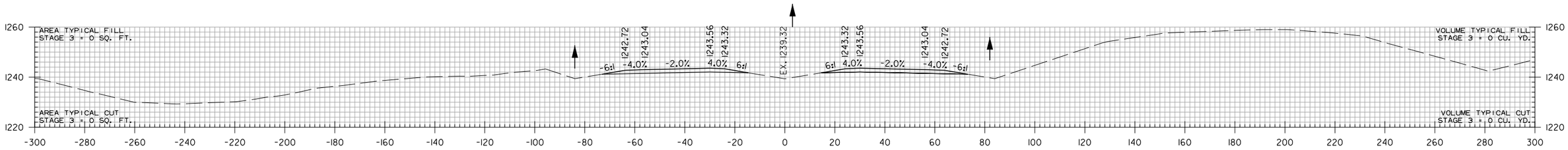

492+00.00

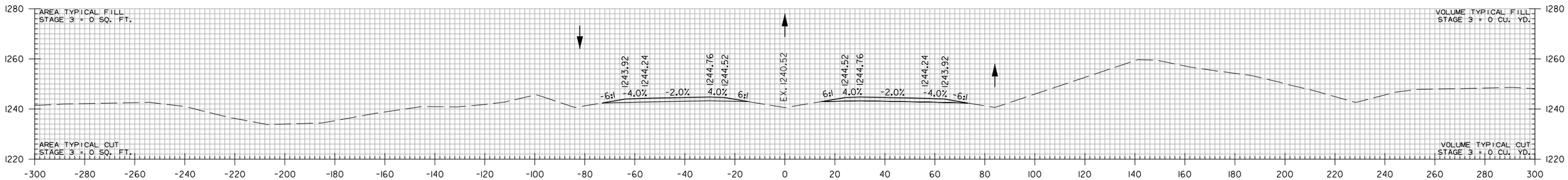

491+00.00

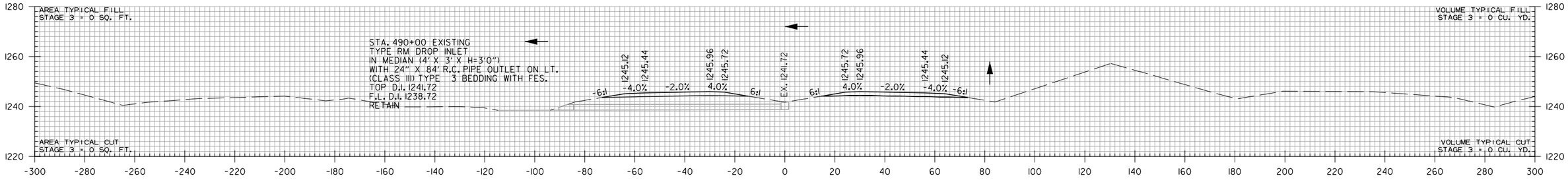

490+00.00

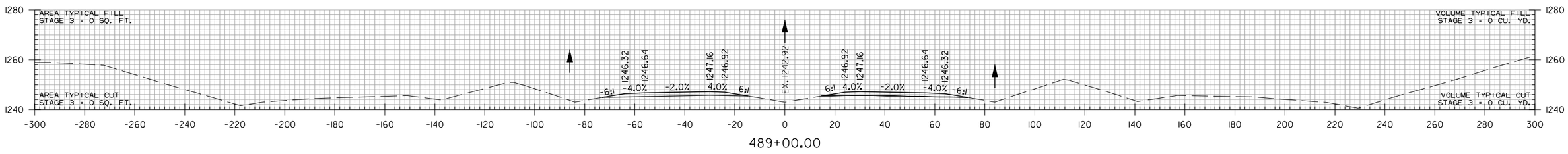

489+00.00

STA. 489+00 TO STA. 492+00

WBCallaway 7/18/2023 7:36:23 AM
WORKSPACE: AHTD
L:\2017\170176\0 - ARDOT 012326 Hwy 412 - Hwy 412\Drawings\r012326_CX_MNL_01.dgn
REVISED DATE:

DATE REVISED	DATE REVISED	FED. RD. DIST. NO.	STATE	JOB NO.	SHEET NO.	TOTAL SHEETS
		6	ARK.	012326	688	838
		CROSS SECTIONS				
②						

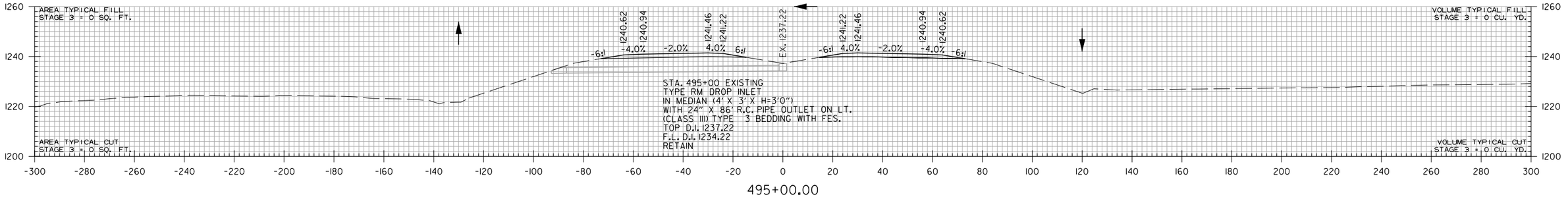

495+00.00

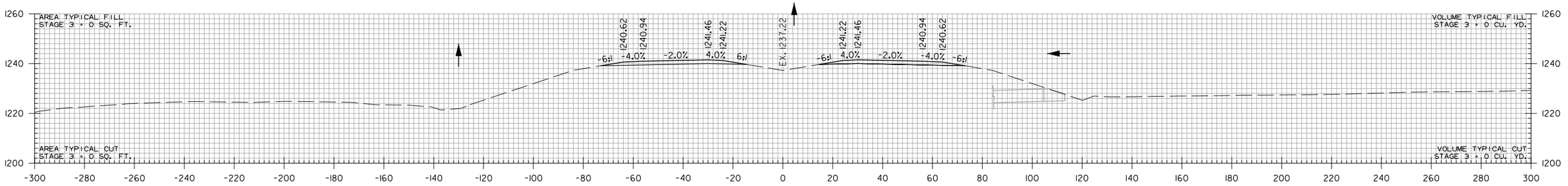

494+97.29

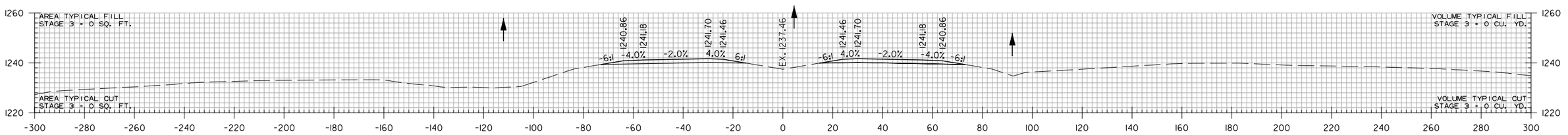

494+00.00

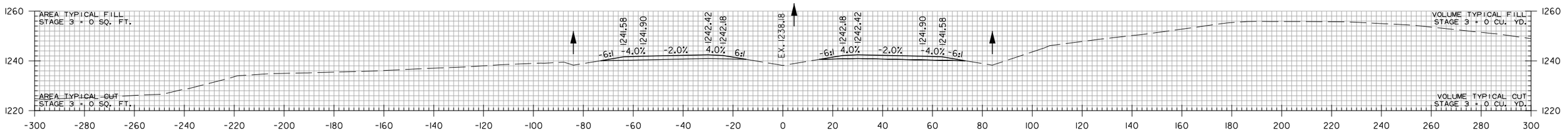

493+00.00

STA. 493+00 TO STA. 495+00

WBCallaway 7/18/2023 7:36:23 AM
WORKSPACE: AHTD
L:\2017\17017660 - ARDOT 012326 Hwy 412 - Hwy 112\Drawings\r012326_CX_MNL_01.dgn
REVISED DATE:

DATE REVISED	DATE REVISED	FED. RD. DIST. NO.	STATE	JOB NO.	SHEET NO.	TOTAL SHEETS
		6	ARK.	012326	689	838
		CROSS SECTIONS				

(2)

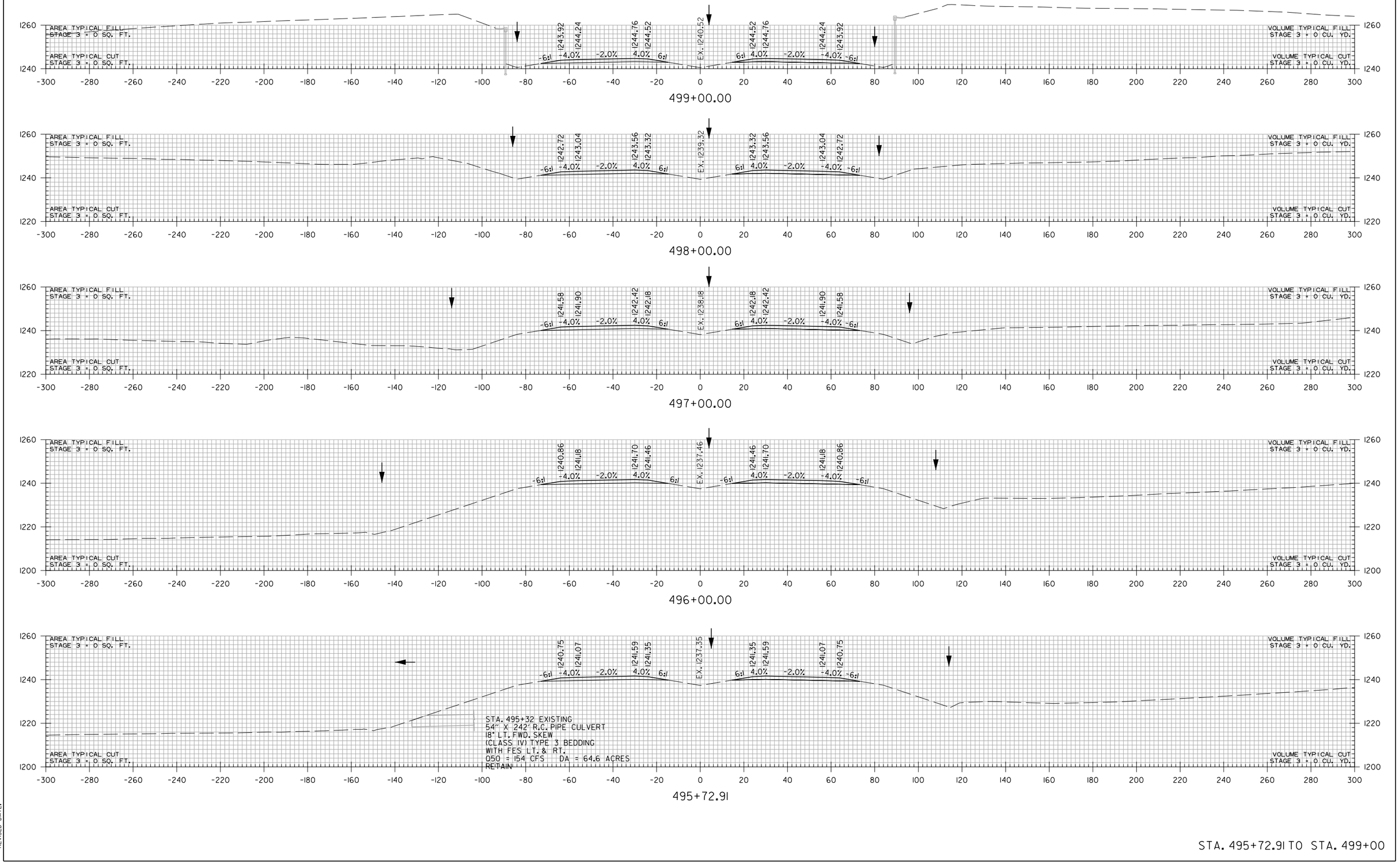

STA. 495+72.91 TO STA. 499+00

WBCalloway 7/18/2023 7:36:24 AM
WORKSPACE: AHTD
L:\2017\170176\60 - ARDOT 012326 Hwy 412 - Hwy 412\Drawings\r012326_CX_MNL_01.dgn
REVISED DATE:

DATE REVISED	DATE REVISED	FED. RD. DIST. NO.	STATE	JOB NO.	SHEET NO.	TOTAL SHEETS
		6	ARK.	012326	690	838
		CROSS SECTIONS				

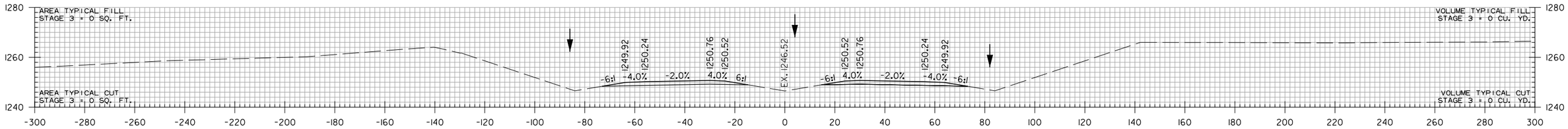

504+00.00

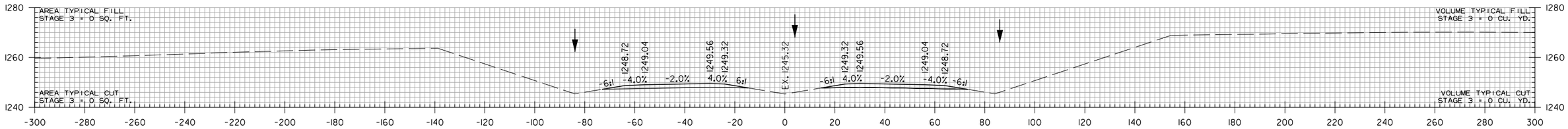

503+00.00

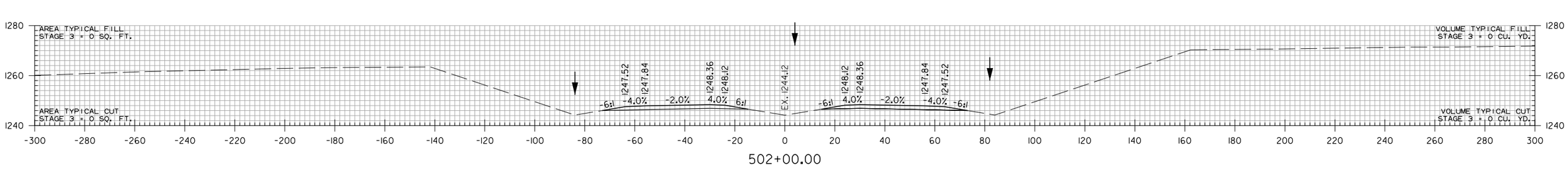

502+00.00

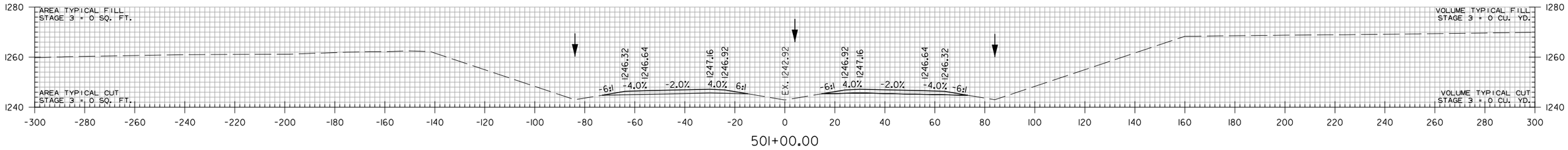

501+00.00

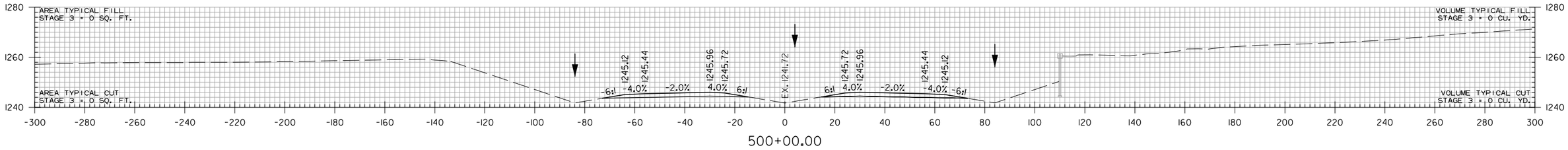

500+00.00

STA. 500+00 TO STA. 504+00

WBCalloway 7/18/2023 7:36:24 AM
WORKSPACE: AHTD
L:\20IT\170I660 - ARDOT 012326 Hwy 412 - Hwy 112\Drawings\r012326_CX_MNL_01.dgn
REVISED DATE:

DATE REVISED	DATE REVISED	FED. RD. DIST. NO.	STATE	JOB NO.	SHEET NO.	TOTAL SHEETS
		6	ARK.	012326	691	838
		CROSS SECTIONS				
②						

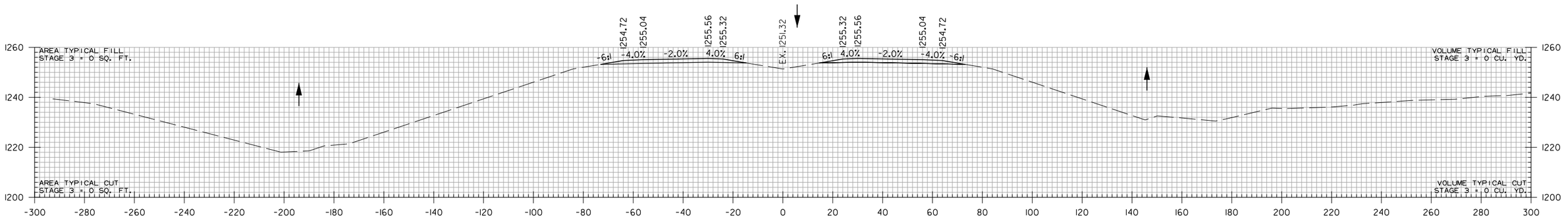

508+00.00

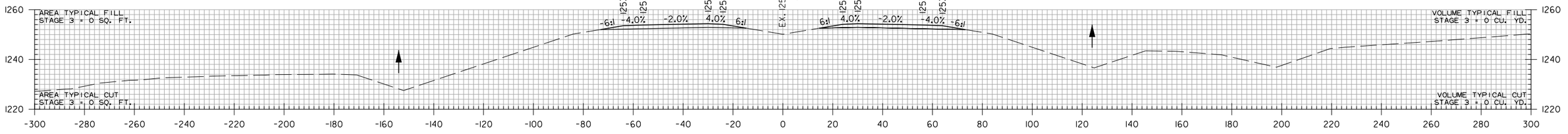

507+00.00

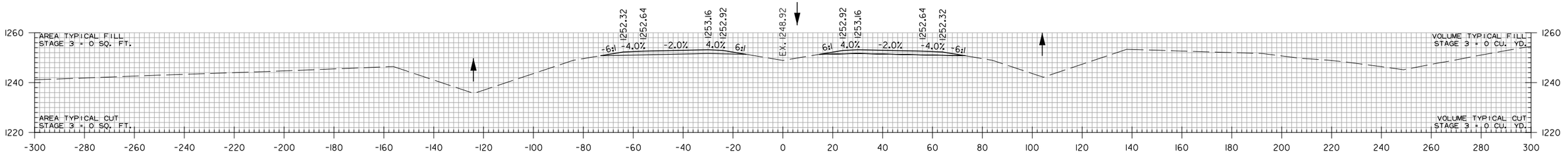

506+00.00

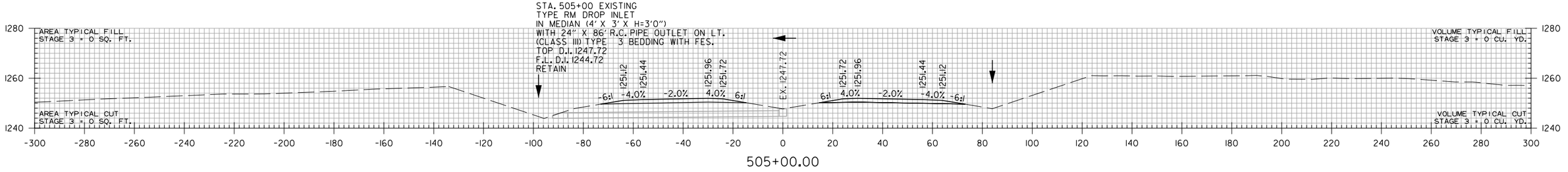

505+00.00

STA. 505+00 TO STA. 508+00

WBCallaway 7/18/2023 7:36:24 AM
WORKSPACE: AHTD
L:\2017\17017660 - ARDOT 012326 Hwy 412 - Hwy 112\Drawings\r012326_CX_MNL_01.dgn
REVISED DATE:

DATE REVISED	DATE REVISED	FED. RD. DIST. NO.	STATE	JOB NO.	SHEET NO.	TOTAL SHEETS
		6	ARK.	012326	692	838
		CROSS SECTIONS				
②						

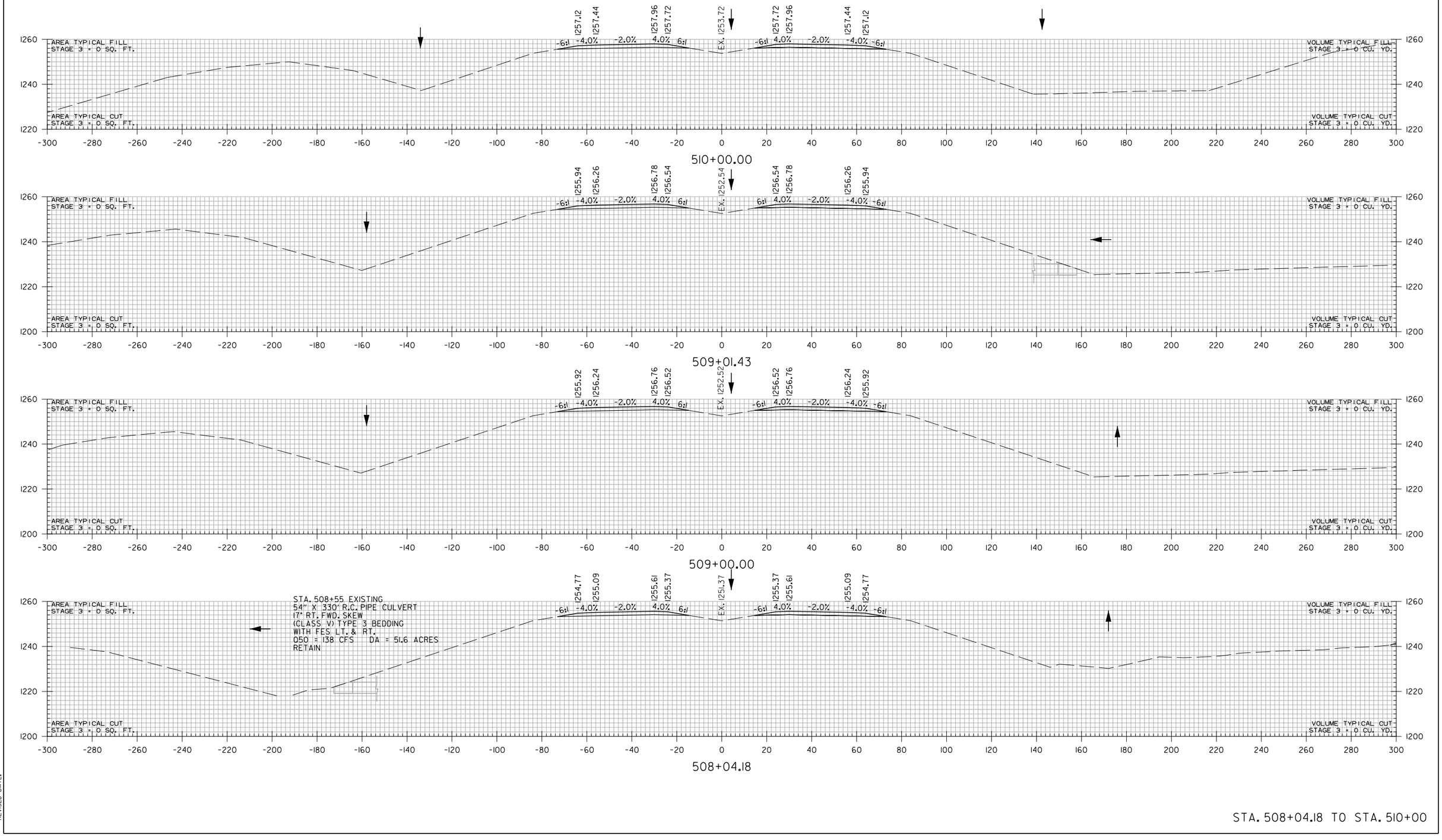

STA. 508+04.18 TO STA. 510+00

WBCallaway 7/18/2023 7:36:24 AM
WORKSPACE: AHTD
L:\2017\017660 - ARDOT 012326 Hwy 412 - Hwy 112\Drawings\r012326_CX_MNL_01.dgn
REVISED DATE:

DATE REVISED	DATE REVISED	FED. RD. DIST. NO.	STATE	JOB NO.	SHEET NO.	TOTAL SHEETS
		6	ARK.	012326	693	838
		CROSS SECTIONS				

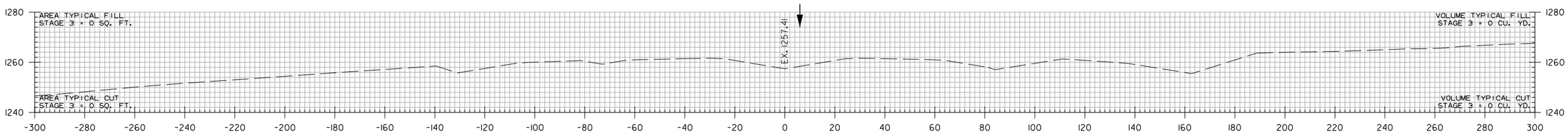

515+00.00

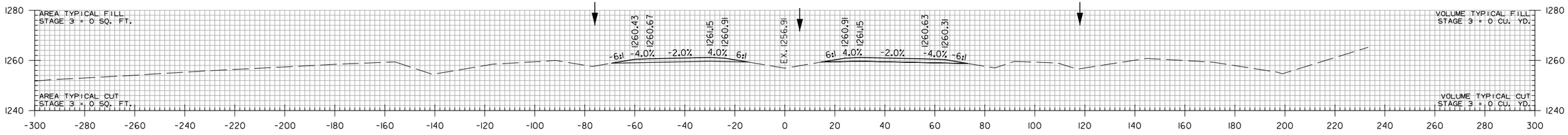

514+00.00

STA. 514+00.00 END JOB 012326 END PAVING

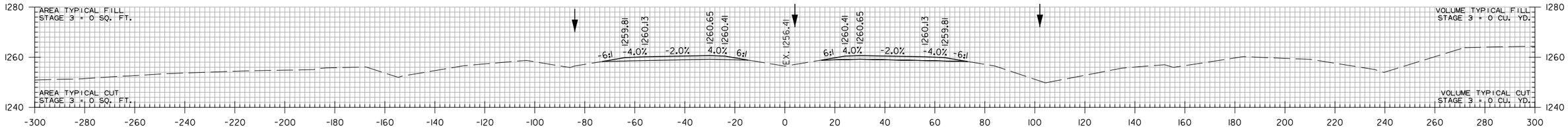

513+00.00

STA. 512+00 EXISTING
TYPE RM DROP INLET
IN MEDIAN (4' X 3' X H=3'0")
WITH 24" X 86' R.C. PIPE OUTLET ON LT.
(CLASS III) TYPE 3 BEDDING WITH FES.
TOP D.I. 1255.74
F.L. D.I. 1252.74
RETAIN

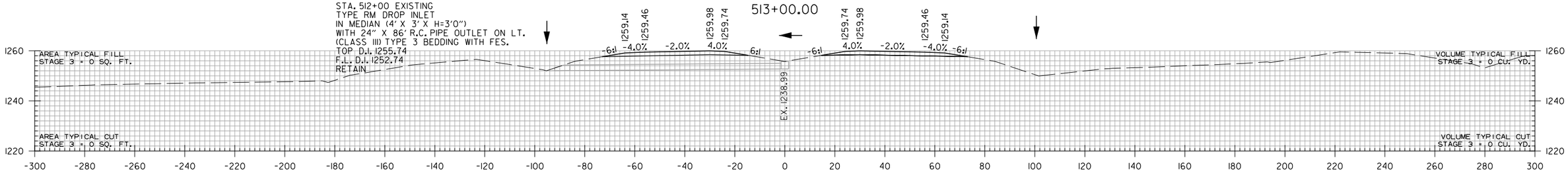

512+00.00

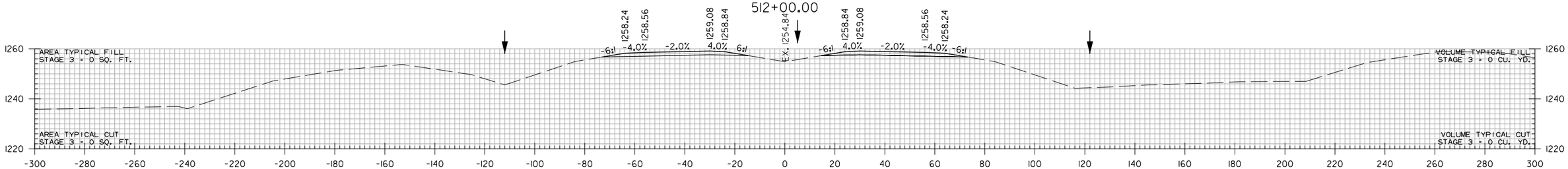

511+00.00

STA. 511+00 TO STA. 515+00

WBCalloway 7/18/2023 7:36:25 AM
WORKSPACE: AHTD
L:\20\T\1701660 - ARDOT 012326 Hwy 412 - Hwy 112\Drawings\r012326_CX_MNL_01.dgn
REVISED DATE:

DATE REVISED	DATE REVISED	FED. RD. DIST. NO.	STATE	JOB NO.	SHEET NO.	TOTAL SHEETS
		6	ARK.	012326	694	838
		CROSS SECTIONS				
②						

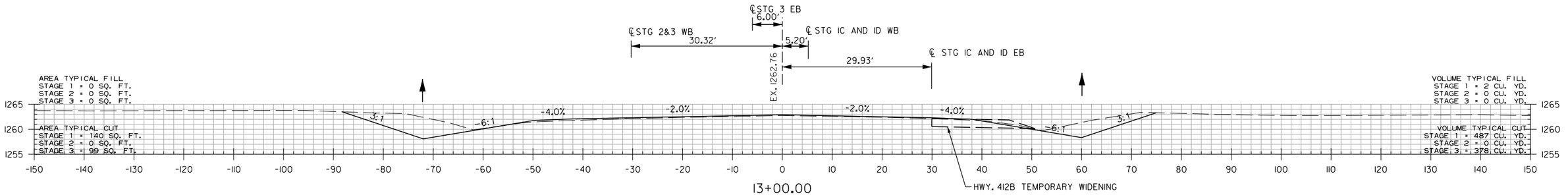

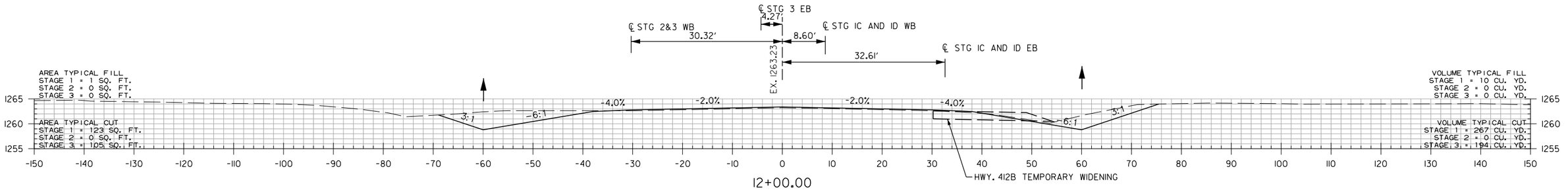

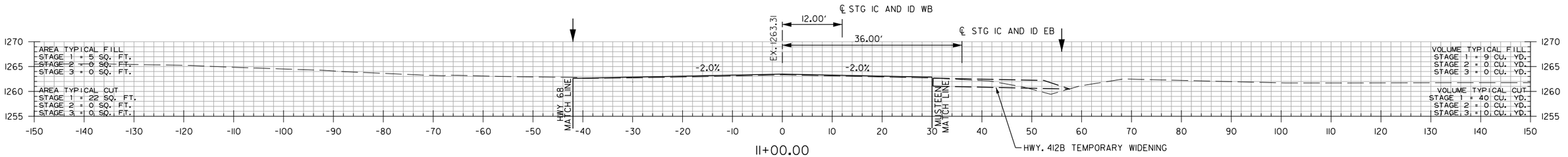

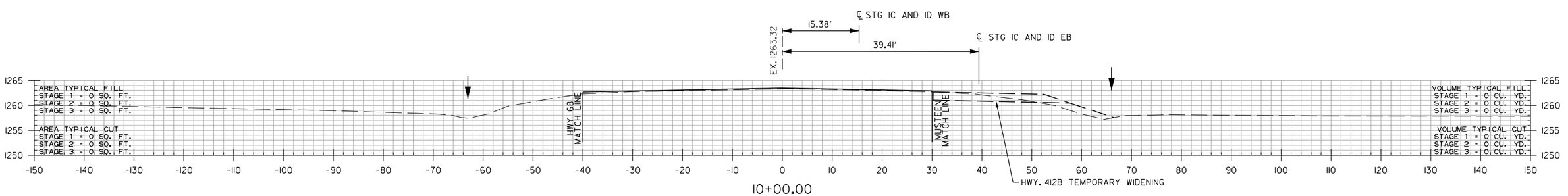

STA. 10+00.00 BEGIN HWY. 412B OVERLAY WITH NOTCH AND WIDEN

HWY. 412B
STA. 10+00 TO STA. 13+00

HBVinson
WORKSPACE: AHTD
L:\20\T\T01T660 - ARDOT 012326 Hwy 412 - Hwy 112\Drawings\r012326_CX_412B_01.dgn
7/27/2023 3:19:20 PM
REVISED DATE:

DATE REVISED	DATE REVISED	FED. RD. DIST. NO.	STATE	JOB NO.	SHEET NO.	TOTAL SHEETS
		6	ARK.	012326	695	838
		CROSS SECTIONS				

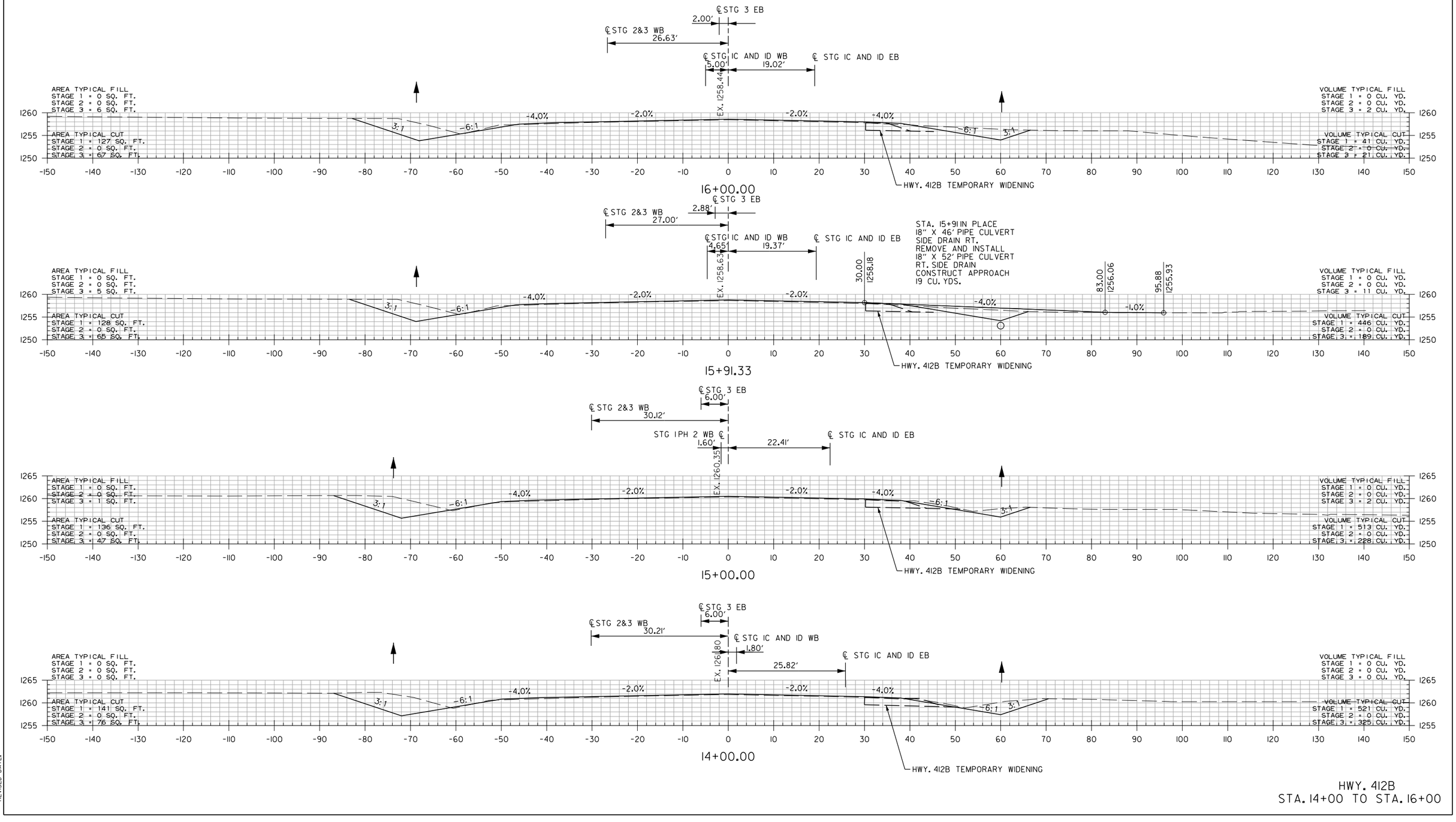

HWY. 412B
STA. 14+00 TO STA. 16+00

HBVinson
WORKSPACE: AHTD
L:\2017\17017660 - ARDOT 012326 Hwy 412 - Hwy 112\Drawings\r012326_CX_412B.0.dgn
7/27/2023 3:19:20 PM
REVISED DATE:

DATE REVISED	DATE REVISED	FED. RD. DIST. NO.	STATE	JOB NO.	SHEET NO.	TOTAL SHEETS
		6	ARK.	012326	696	838
		CROSS SECTIONS				
(2)						

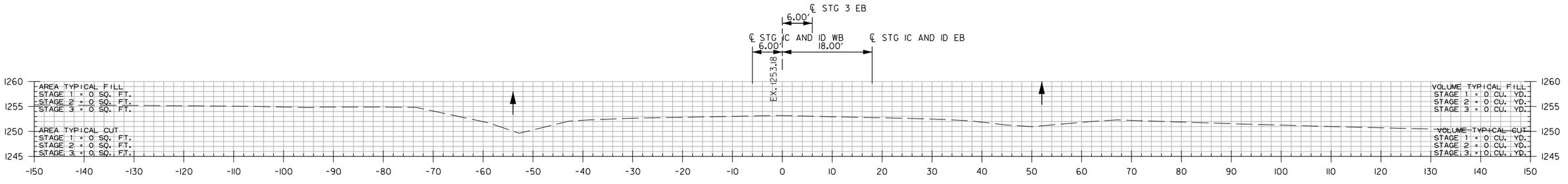

18+00.00

STA. 18+00.00 END 100' TRANSITION

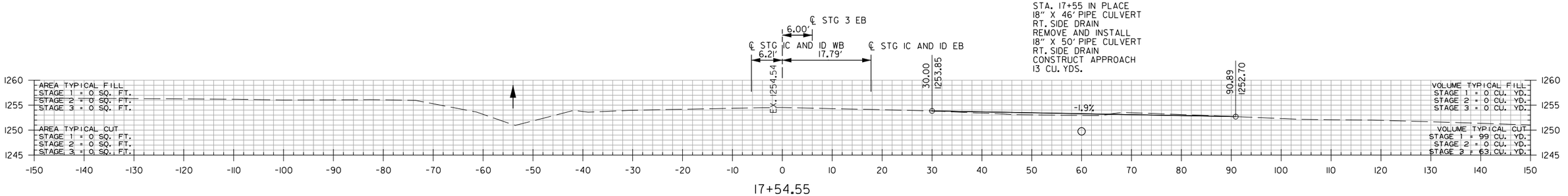

17+54.55

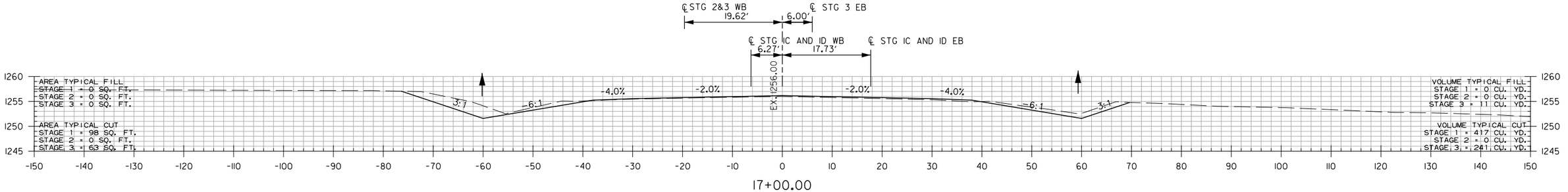

17+00.00

STA. 17+00.00 END HWY. 412B OVERLAY WITH NOTCH AND WIDEN

HWY. 412B
STA. 17+00 TO STA. 18+00

HBVinson
WORKSPACE: AHTD
L:\2017\17017660 - ARDOT 012326 Hwy 412 - Hwy 112\Drawings\r012326_CX_412B.DLdgn
7/27/2023 3:19:20 PM
REVISED DATE:

DATE REVISED	DATE REVISED	FED. RD. DIST. NO.	STATE	JOB NO.	SHEET NO.	TOTAL SHEETS
		6	ARK.	012326	697	838
		CROSS SECTION				
②						

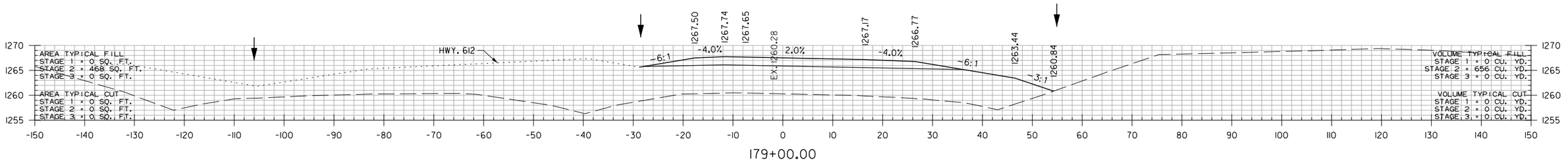

179+00.00

HWY. 412B RAMP I STA. 178+60 CONSTRUCT
TYPE RM DROP INLET LT.
(4' X 3' X H=3'0")
WITH 24" X 70' R.C. PIPE OUTLET ON RT.
(CLASS III) TYPE 3 BEDDING WITH FES.
TOP D.I. 1265.01
F.L. D.I. 1262.01

STA. 178+67.80 END SUPERELEVATION

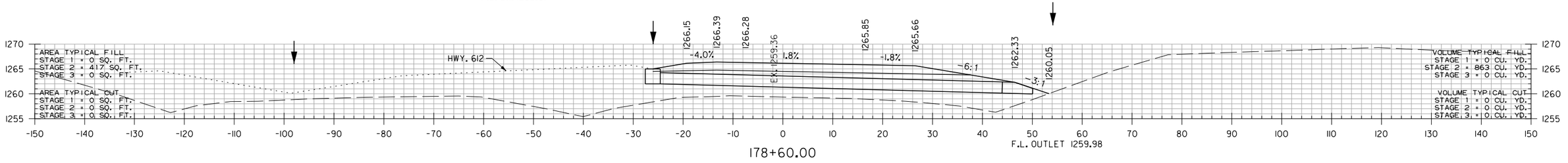

178+60.00

F.L. OUTLET 1259.98

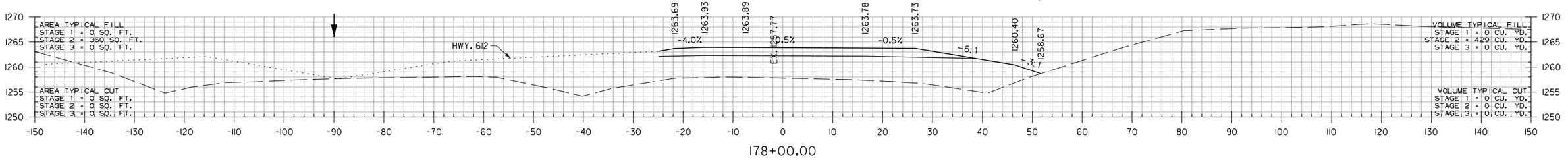

178+00.00

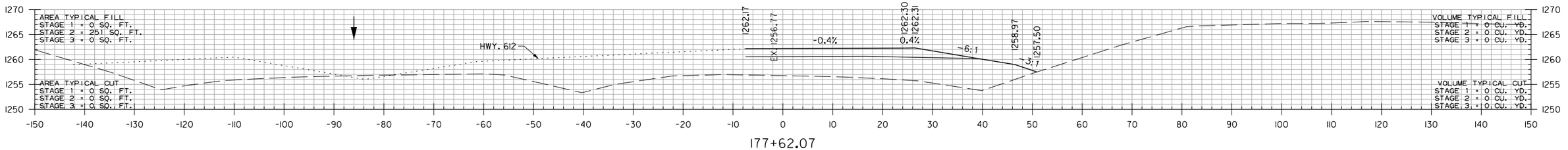

177+62.07

STA. 175+41.79 MATCH MAIN LANES SUPERELEVATION (0.054 FT./FT.)

STA. 177+62.07 BEGIN HWY. 412B RAMP I

HWY. 412B RAMP I
STA. 177+62.07 TO STA. 179+00

HBVinson
7/27/2023 3:19:23 PM
WORKSPACE: AHTD
L:\2017\17017660 - ARDOT 012326 Hwy 412 - Hwy 112\Drawings\r012326_CX_412BRI_01.dgn
REVISED DATE:

DATE REVISED	DATE REVISED	FED. RD. DIST. NO.	STATE	JOB NO.	SHEET NO.	TOTAL SHEETS
		6	ARK.	012326	698	838
		CROSS SECTION				
②						

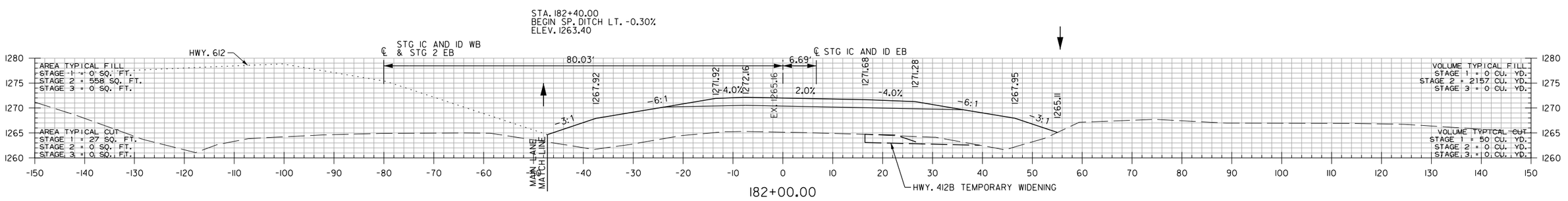

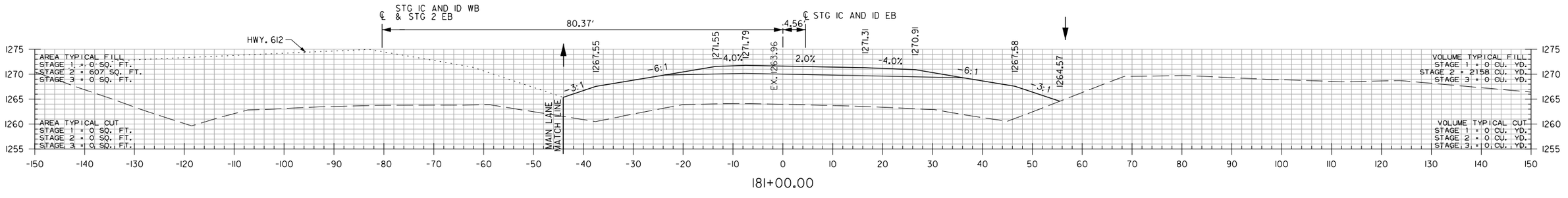

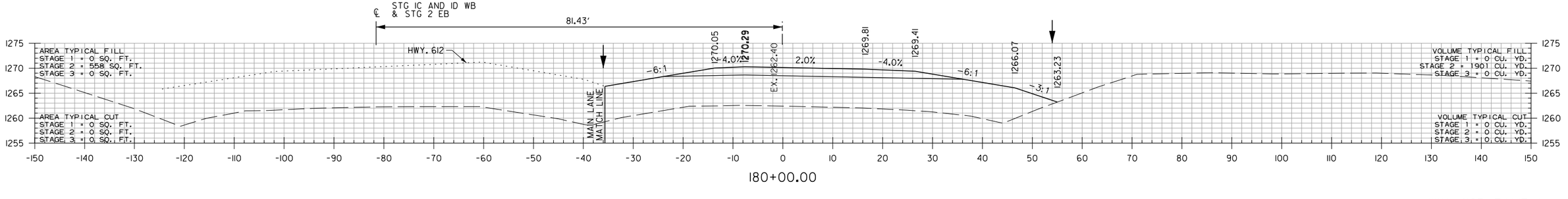

HWY. 412B RAMP I
STA. 180+00 TO STA. 182+00

HBVinson
7/27/2023 3:19:23 PM
WORKSPACE: AHTD
L:\2017\17017660 - ARDOT 012326 Hwy 412 - Hwy 112\Drawings\r012326_CX_412BRI_01.dgn
REVISED DATE:

DATE REVISED	DATE REVISED	FED. RD. DIST. NO.	STATE	JOB NO.	SHEET NO.	TOTAL SHEETS
		6	ARK.	012326	699	838
		CROSS SECTION				
②						

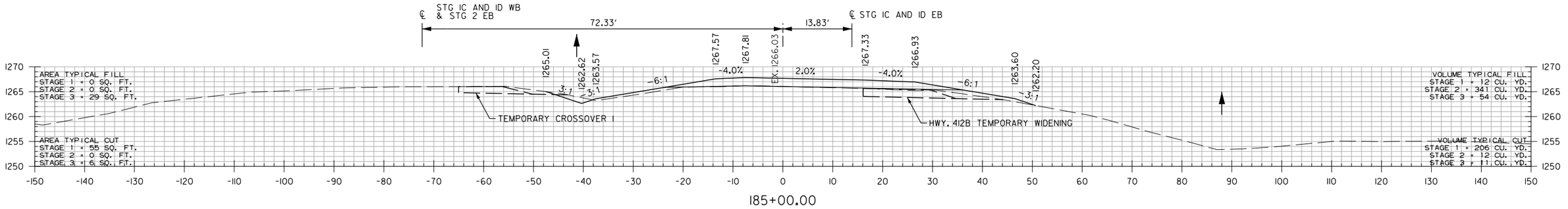

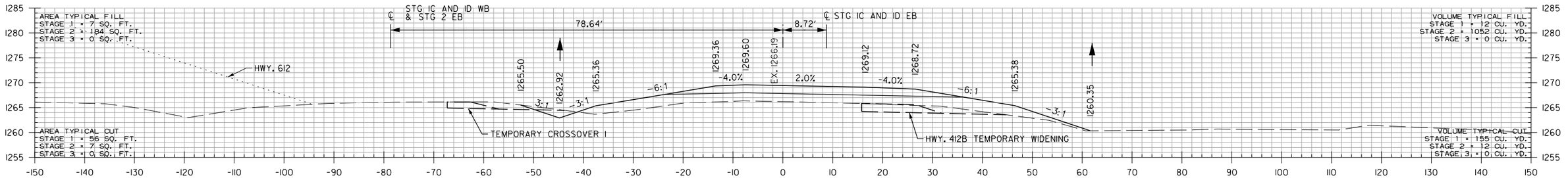

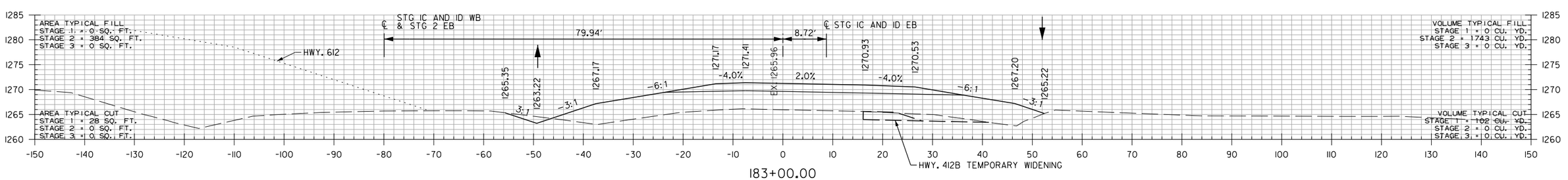

HWY. 412B RAMP 1
STA. 183+00 TO STA. 185+00

HBVinson
7/27/2023 3:19:23 PM
WORKSPACE: AHTD
L:\20IT\170I7660 - ARDOT 012326 Hwy 412 - Hwy 112\Drawings\r012326_CX_412BRI_01.dgn
REVISED DATE:

DATE REVISED	DATE REVISED	FED. RD. DIST. NO.	STATE	JOB NO.	SHEET NO.	TOTAL SHEETS
		6	ARK.	012326	700	838
②		CROSS SECTION				

STA. 186+00.00
END SP. DITCH LT. -0.30%
ELEV. 1262.32

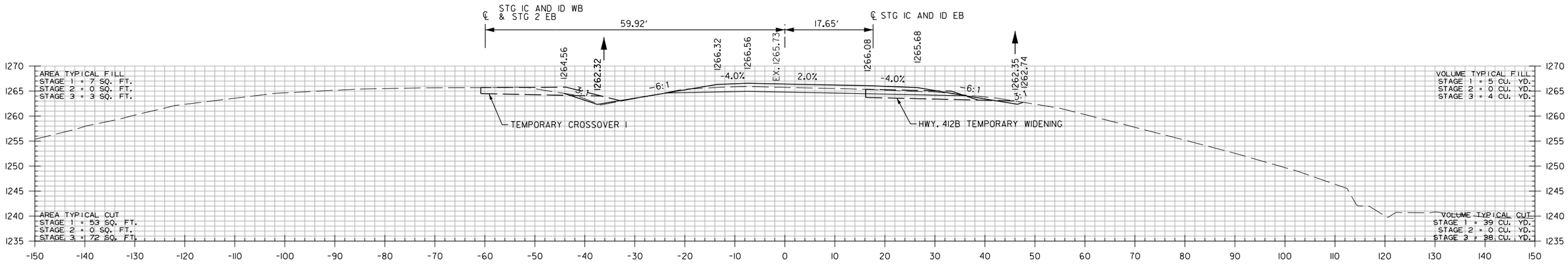

186+00.00

HWY. 412B RAMP 1 STA. 185+85 IN PLACE
42" X 273' R.C. PIPE CULVERT
7° RT. FWD. SKEW
WITH D.I. & FES LT.
RETAIN
Q50 = 40 CFS DA = 14.4 ACRES

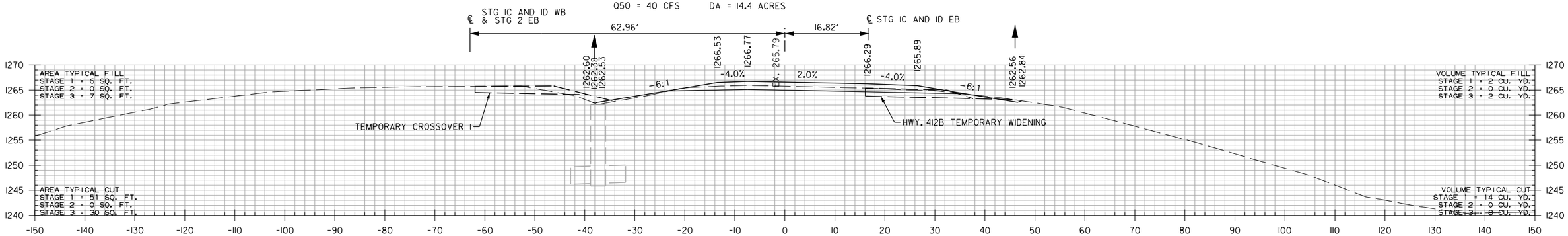

185+80.06

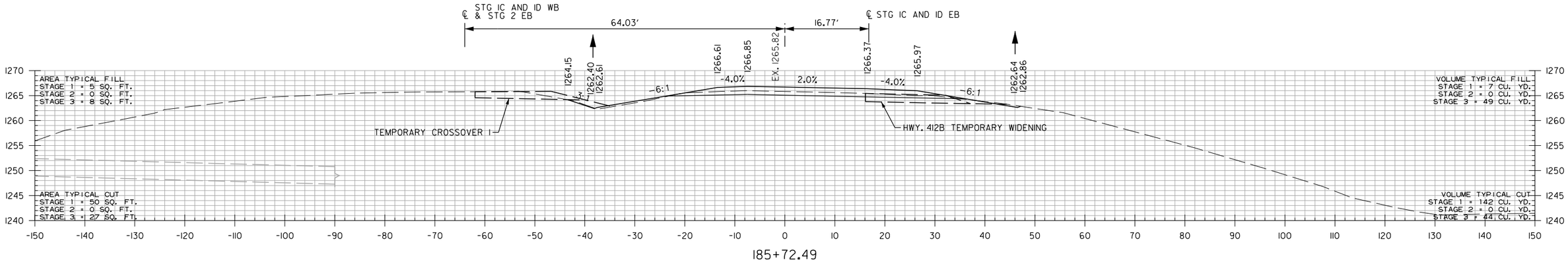

185+72.49

HWY. 412B RAMP 1
STA. 185+72.49 TO STA. 186+00

HBVinson 7/21/2023 3:19:23 PM
WORKSPACE: AHTD
L:\20\T\T01T660 - ARDOT 012326 Hwy 412 - Hwy 112\Drawings\r012326_CX_412BR1_01.dgn
REVISED DATE:

DATE REVISED	DATE REVISED	FED. RD. DIST. NO.	STATE	JOB NO.	SHEET NO.	TOTAL SHEETS
		6	ARK.	012326	701	838
		CROSS SECTION				
②						

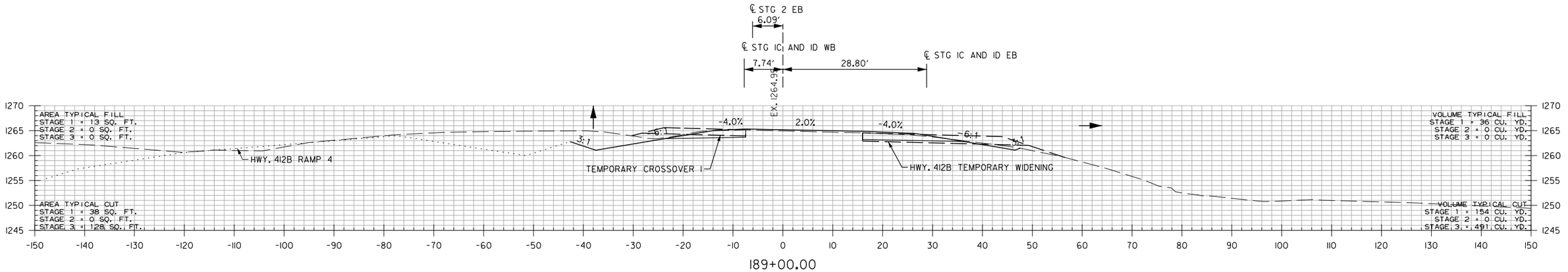

189+00.00

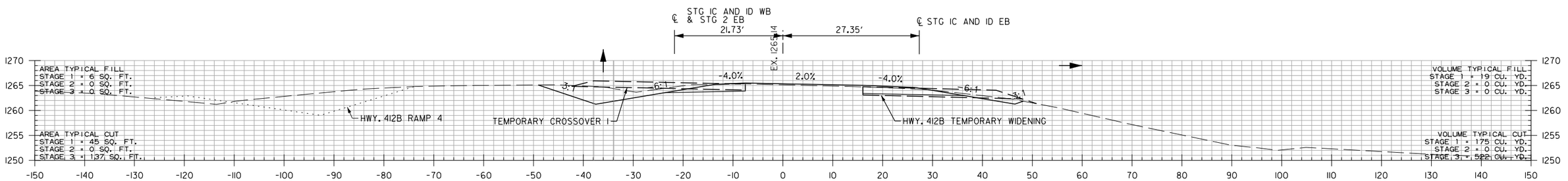

188+00.00

STA. 187+50.00 END HWY. 412B RAMP 1
BEGIN OVERLAY WITH NOTCH AND WIDEN

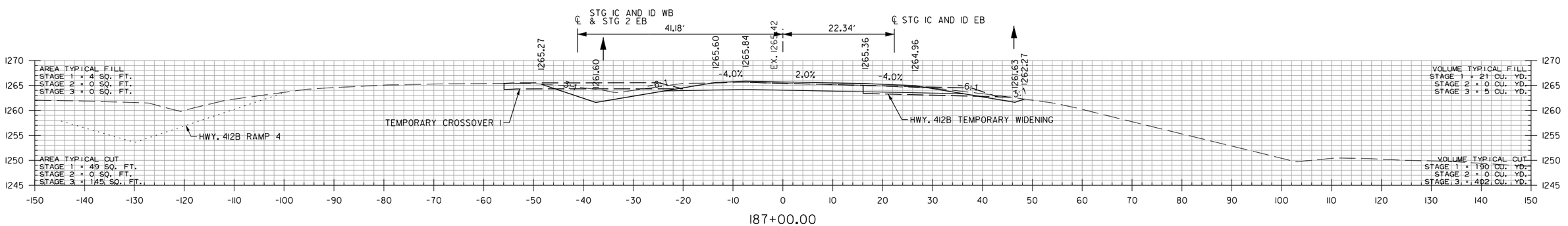

187+00.00

HWY. 412B RAMP 1
STA. 187+00 TO STA. 189+00

HBVinson
7/27/2023 3:19:23 PM
WORKSPACE: AHTD
L:\20IT\T0I7660 - ARDOT 012326 Hwy 412 - Hwy 112\Drawings\r012326_CX_412BRL01.dgn
REVISED DATE:

DATE REVISED	DATE REVISED	FED. RD. DIST. NO.	STATE	JOB NO.	SHEET NO.	TOTAL SHEETS
		6	ARK.	012326	702	838
		CROSS SECTION				
②						

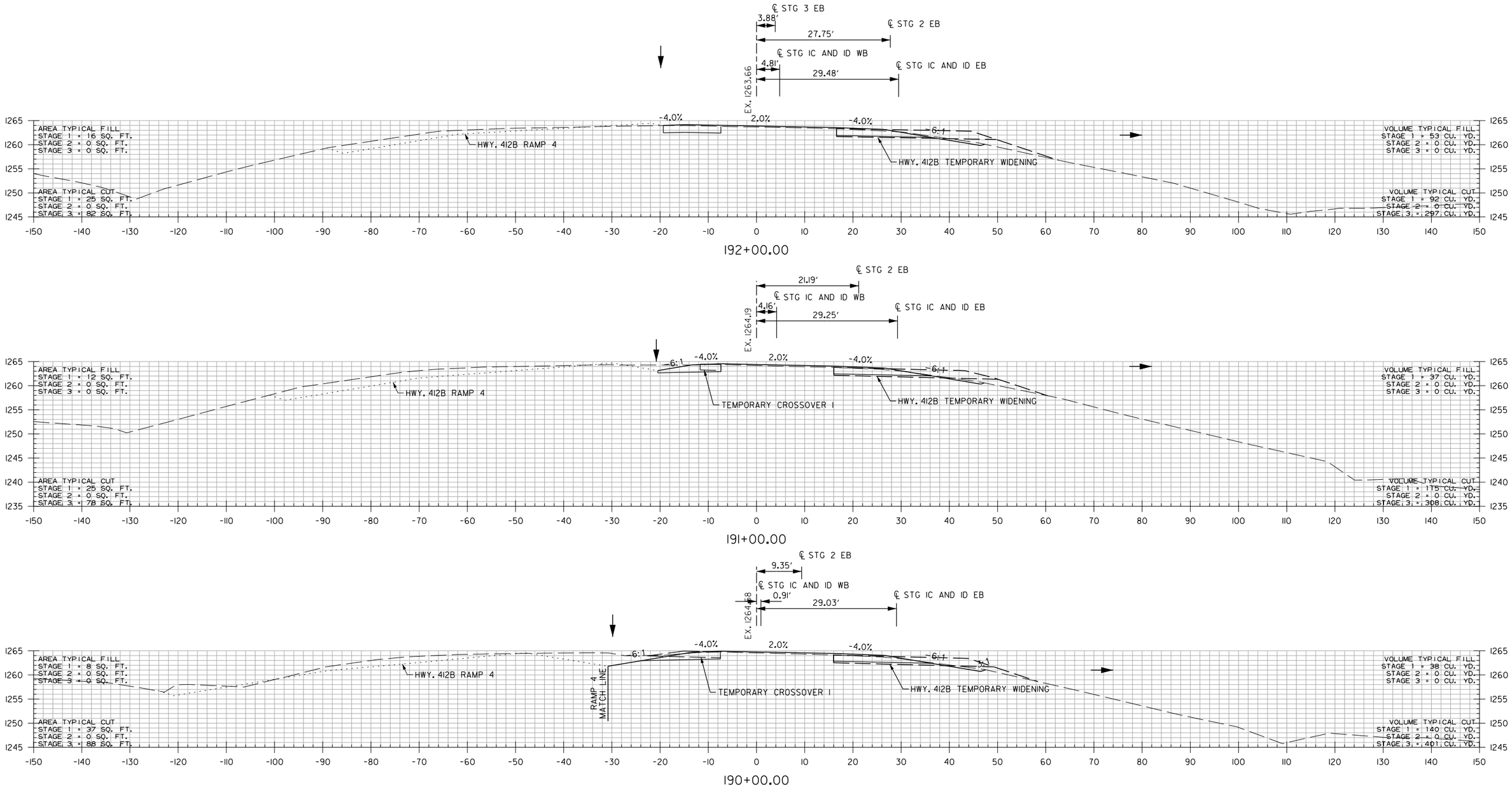

HWY. 412B RAMP 1
STA. 190+00 TO STA. 192+00

HBVinson
WORKSPACE: AHTD
L:\2017\17017660 - ARDOT 012326 Hwy 412 - Hwy 112\Drawings\r012326_CX_412BR1_01.dgn
7/27/2023 3:19:23 PM
REVISED DATE:

DATE REVISED	DATE REVISED	FED. RD. DIST. NO.	STATE	JOB NO.	SHEET NO.	TOTAL SHEETS
		6	ARK.	012326	703	838
		CROSS SECTION				
②						

STA. 194+50.62 END HWY. 412B RAMP 1
OVERLAY WITH NOTCH AND WIDEN

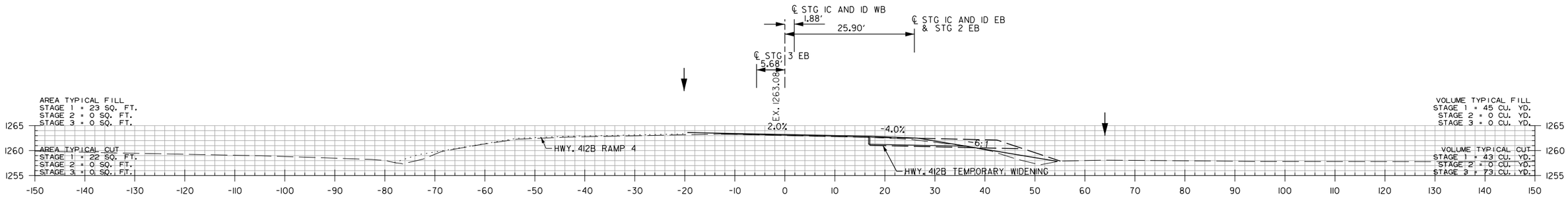

194+50.62

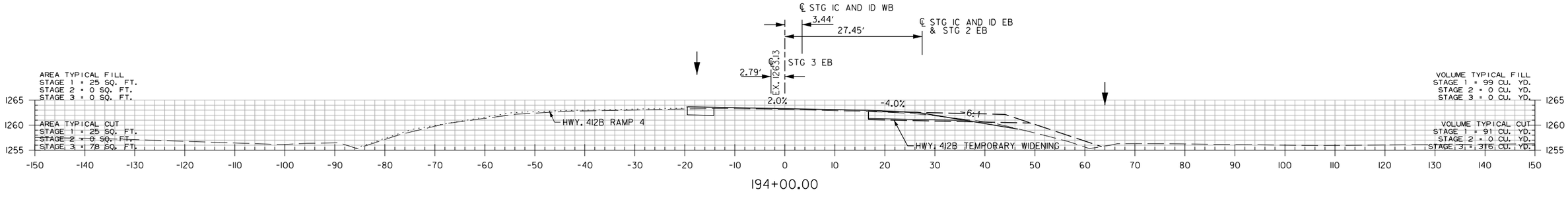

194+00.00

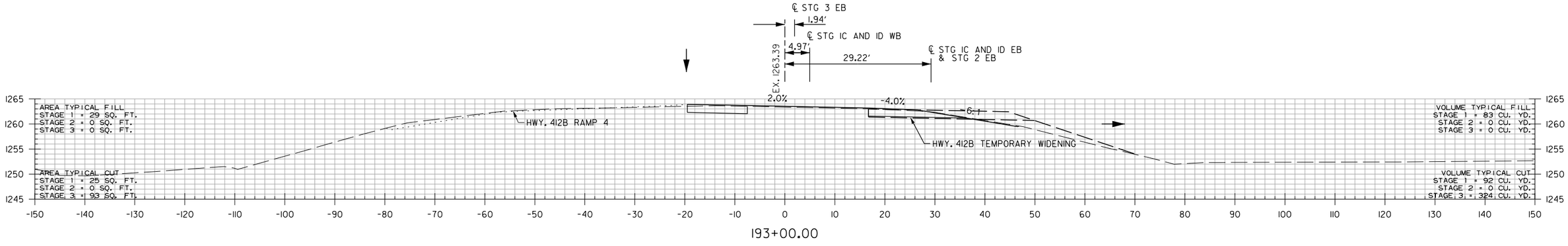

193+00.00

HWY. 412B RAMP 1
STA. 193+00 TO STA. 194+50.62

HBVinson
WORKSPACE: AHTD
L:\2017\17017660 - ARDOT 012326 Hwy 412 - Hwy 112\Drawings\r012326_CX_412BRL01.dgn
7/27/2023 3:19:23 PM
REVISED DATE:

DATE REVISED	DATE REVISED	FED. RD. DIST. NO.	STATE	JOB NO.	SHEET NO.	TOTAL SHEETS
		6	ARK.	012326	704	838
		CROSS SECTIONS				
②						

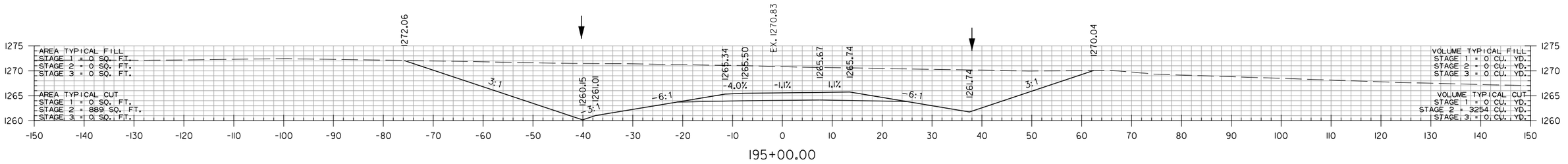

195+00.00

STA. 194+08.59 BEGIN SUPERELEVATION

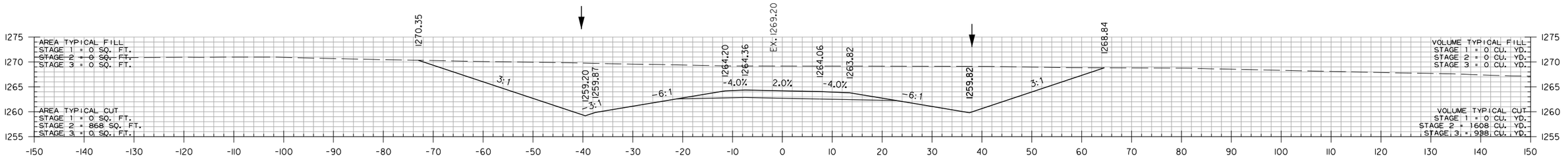

194+00.00

STA. 194+00.00
END SP. DITCH RT. 0.77%
ELEV. 1259.82

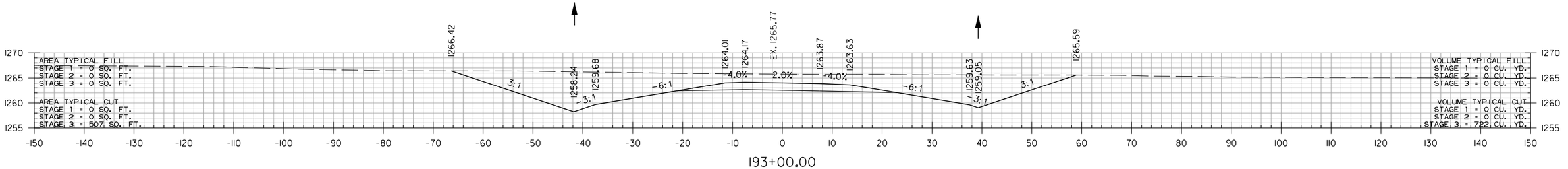

193+00.00

STA. 192+75.00
BEGIN SP. DITCH LT. 0.96%
ELEV. 1258.00

STA. 192+85.00
BEGIN SP. DITCH RT. 0.77%
ELEV. 1258.93

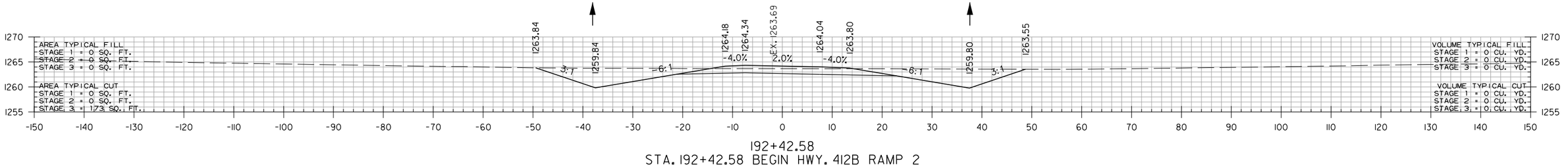

192+42.58
STA. 192+42.58 BEGIN HWY. 412B RAMP 2

HWY. 412B RAMP 2
STA. 192+42.58 TO STA. 195+00

HBVinson
WORKSPACE: AHTD
L:\2017\17017660 - ARDOT 012326 Hwy 412 - Hwy 112\Drawings\r012326_CX_412BR2_01.dgn
7/27/2023 3:19:24 PM
REVISED DATE:

DATE REVISED	DATE REVISED	FED. RD. DIST. NO.	STATE	JOB NO.	SHEET NO.	TOTAL SHEETS
		6	ARK.	012326	705	838
		CROSS SECTIONS				
②						

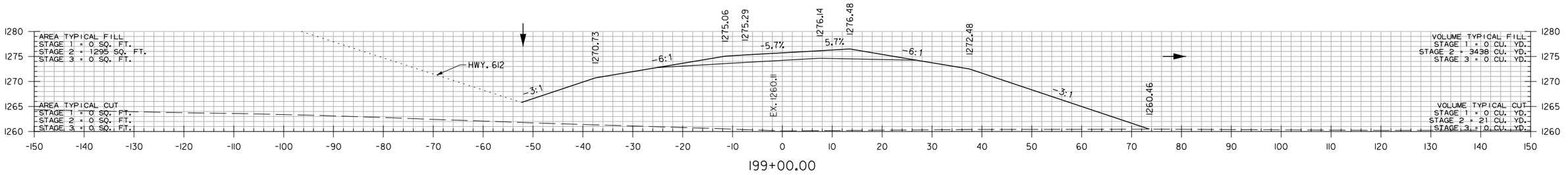

199+00.00

STA. 198+50.00
END SP. DITCH LT. 0.96%
ELEV. 1263.50

STA. 198+16.67 MAX SUPERELEVATION (0.083 FT./FT.)

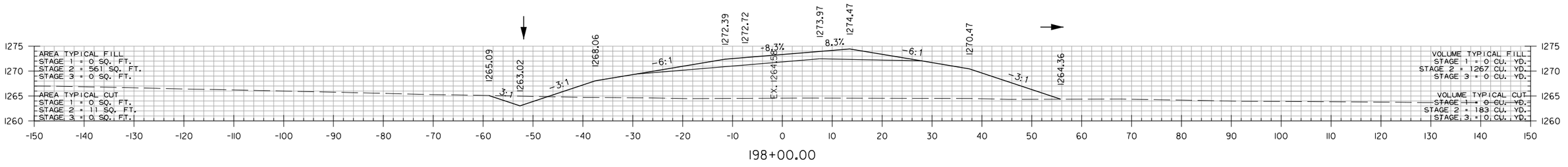

198+00.00

STA. 197+08.59 MAX SUPERELEVATION (0.083 FT./FT.)

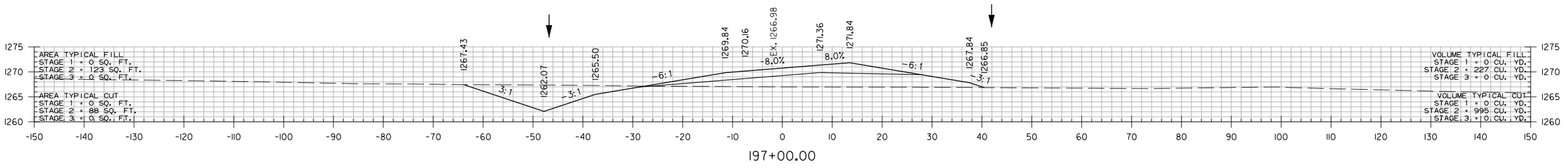

197+00.00

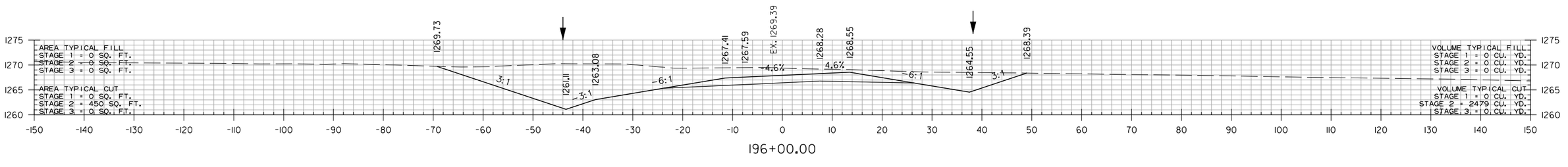

196+00.00

HWY. 412B RAMP 2
STA. 196+00 TO STA. 199+00

HBVinson
WORKSPACE: AHTD
L:\2017\170T660 - ARDOT 012326 Hwy 412 - Hwy 112\Drawings\r012326_CX_412BR2_01.dgn
7/27/2023 3:19:24 PM
REVISED DATE:

DATE REVISED	DATE REVISED	FED. RD. DIST. NO.	STATE	JOB NO.	SHEET NO.	TOTAL SHEETS
		6	ARK.	012326	706	838
		CROSS SECTIONS				

(2)

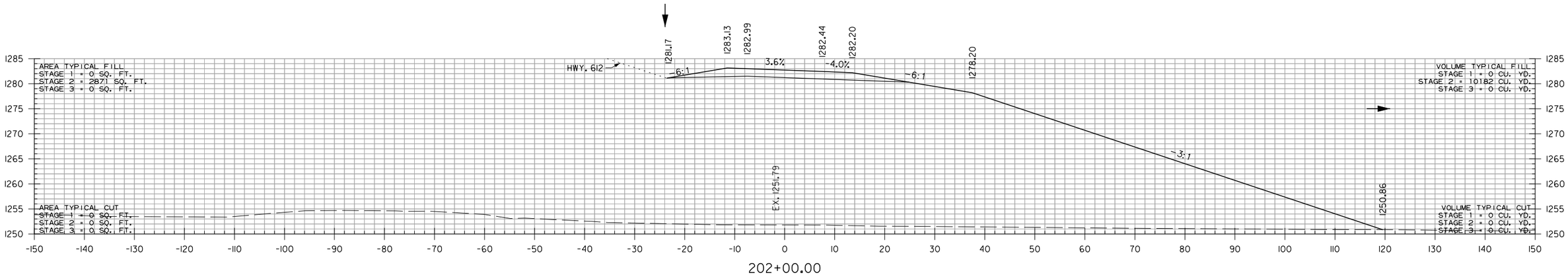

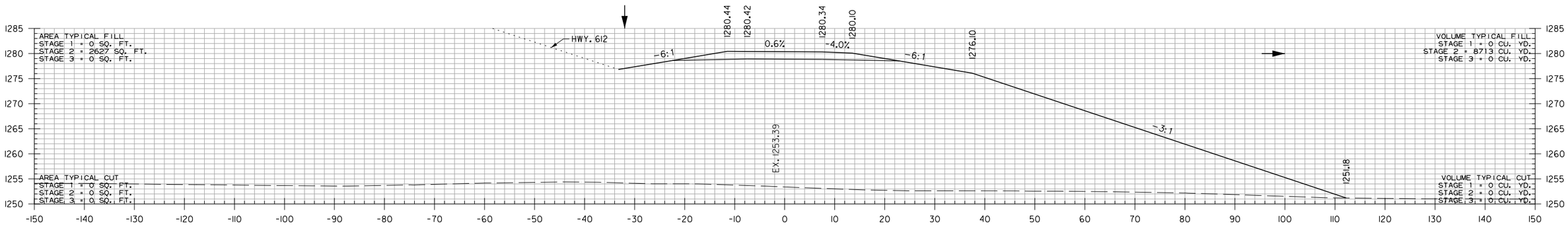

STA. 200+81.67 BEGIN SUPERELEVATION (0.00 FT./FT.)
STA. 200+81.67 END SUPERELEVATION (0.00 FT./FT.)

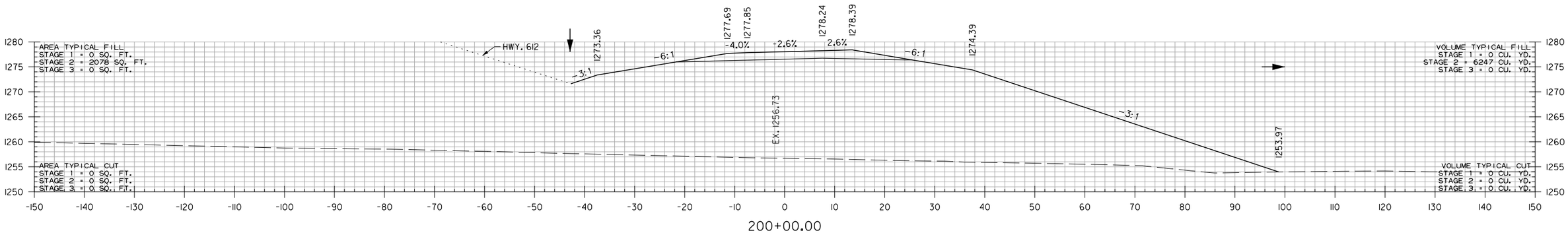

HWY. 412B RAMP 2
STA. 200+00 TO STA. 202+00

HBVinson
7/27/2023 3:19:24 PM
WORKSPACE: AHTD
L:\2017\170\1660 - ARDOT 012326 Hwy 412 - Hwy 12\Drawings\r012326_CX_412BR2_01.dgn
REVISED DATE:

DATE REVISED	DATE REVISED	FED. RD. DIST. NO.	STATE	JOB NO.	SHEET NO.	TOTAL SHEETS
		6	ARK.	012326	707	838
		CROSS SECTIONS				
②						

STA. 205+10.72 BEGIN SUPERELEVATION (0.00 FT./FT.)
STA. 205+10.72 END SUPERELEVATION (0.00 FT./FT.)

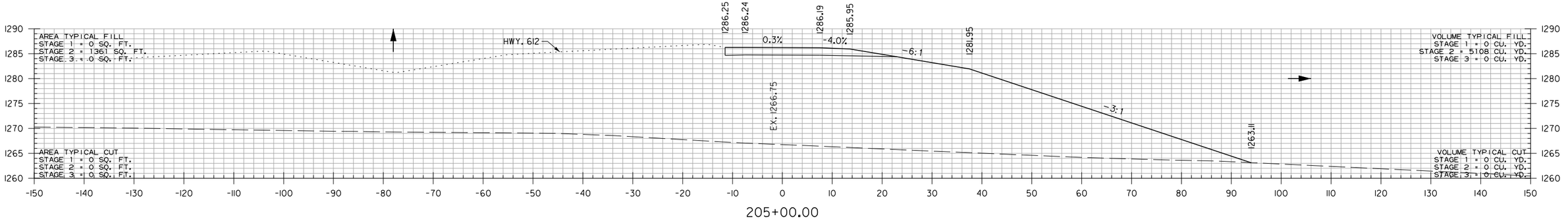

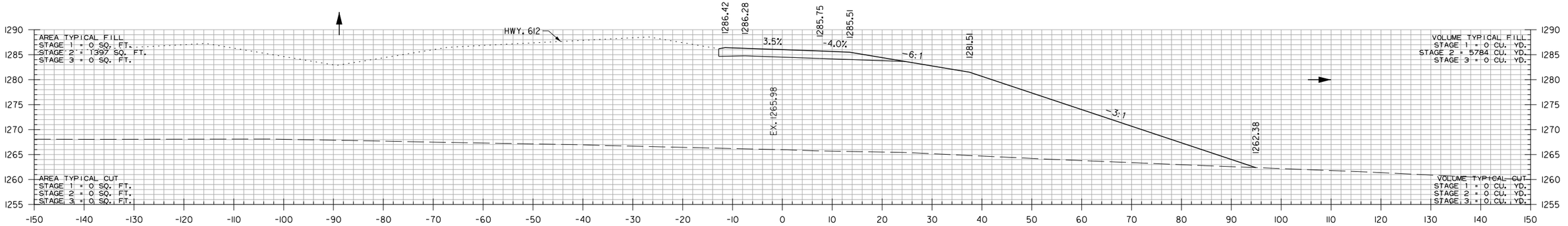

STA. 203+30.72 MAX SUPERELEVATION (0.057 FT./FT.)

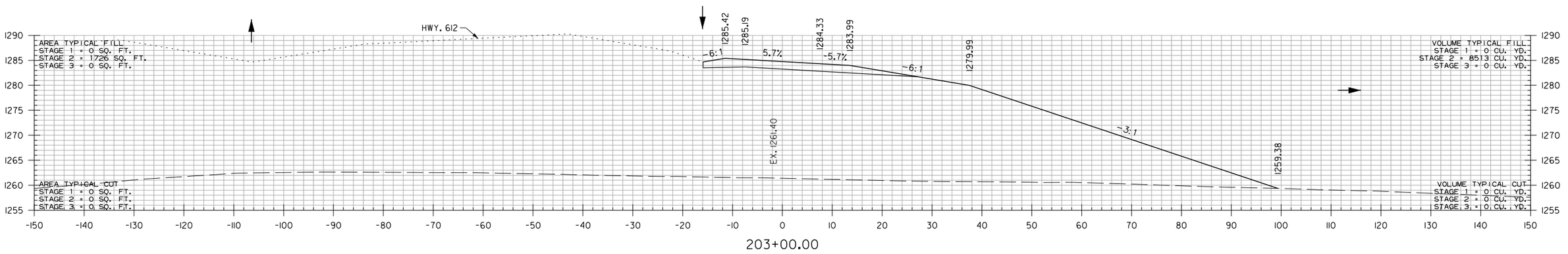

STA. 202+66.67 MAX SUPERELEVATION (0.057 FT./FT.)

HWY. 412B RAMP 2
STA. 203+00 TO STA. 205+00

HBVinson
WORKSPACE: AHTD
L:\20TY\17017660 - ARDOT 012326 Hwy 412 - Hwy 12\Drawings\r012326_CX_412BR2_01.dgn
7/27/2023 3:19:24 PM
REVISED DATE:

DATE REVISED	DATE REVISED	FED. RD. DIST. NO.	STATE	JOB NO.	SHEET NO.	TOTAL SHEETS
		6	ARK.	012326	708	838
		CROSS SECTIONS				
②						

STA. 206+80.72 MATCH MAIN LANES SUPERELEVATION (0.054 FT./FT.)

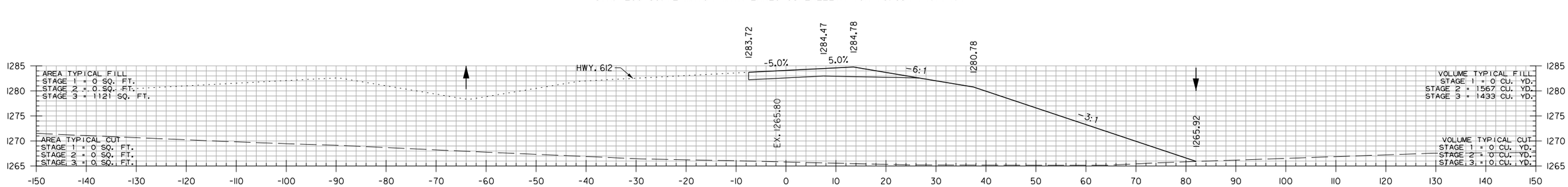

206+69.05

STA. 206+69.05 END HWY. 412B RAMP 2

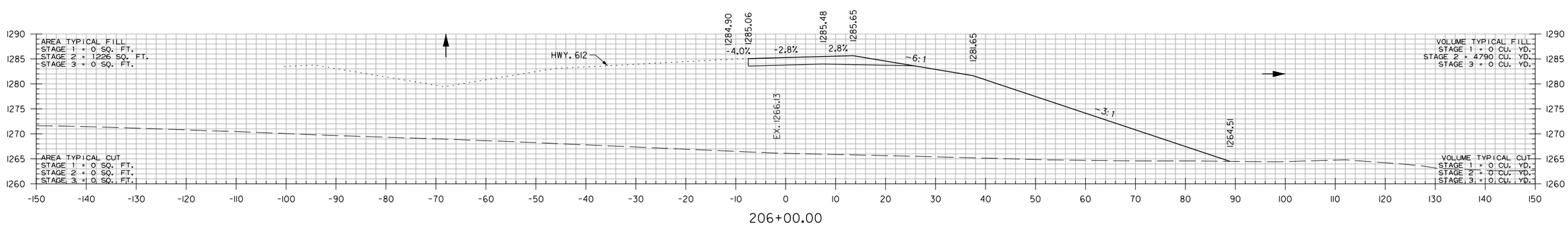

206+00.00

HWY. 412B RAMP 2
STA. 206+00 TO STA. 206+69.05

HBVinson 7/27/2023 3:19:24 PM
WORKSPACE: AHTD
L:\2017\17017660 - ARDOT 012326 Hwy 412 - Hwy 112\Drawings\r012326_CX_412BR2_01.dgn
REVISED DATE:

DATE REVISED	DATE REVISED	FED. RD. DIST. NO.	STATE	JOB NO.	SHEET NO.	TOTAL SHEETS
		6	ARK.	012326	709	838
		CROSS SECTIONS				
②						

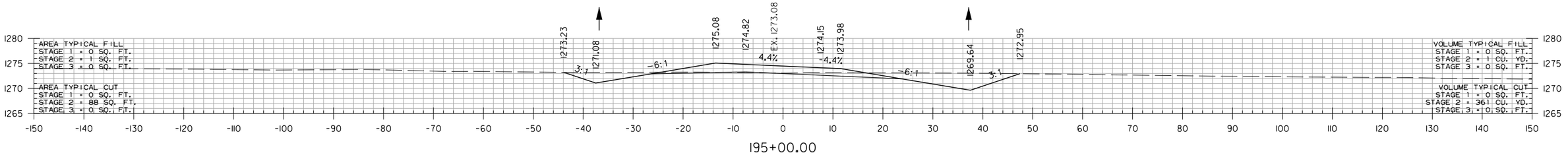

195+00.00

STA. 194+50.92 MAX SUPERELEVATION (0.058 FT./FT.)

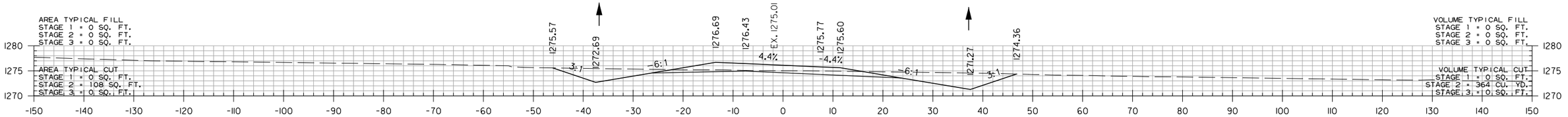

194+00.00

STA. 193+15.21 BEGIN SUPERELEVATION (0.02 FT./FT. R.C.)

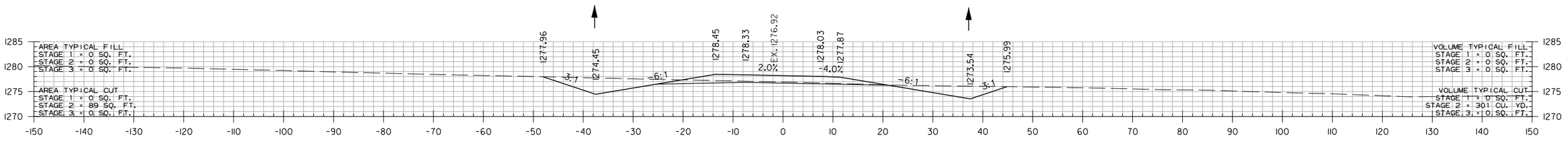

193+00.00

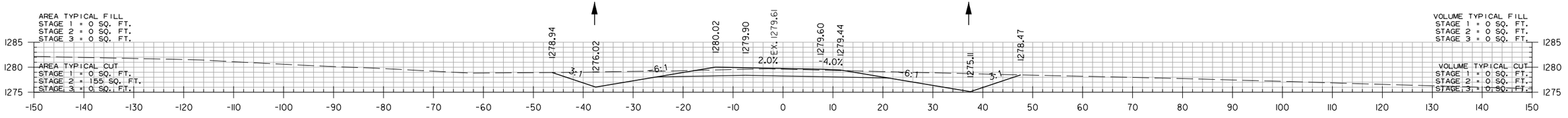

192+33.34

STA. 192+33.34 BEGIN HWY. 412B RAMP 3

HWY. 412B RAMP 3
STA. 192+33.34 TO STA. 195+00

HBVinson 7/27/2023 3:19:24 PM
WORKSPACE: AHTD
L:\2017\17017660 - ARDOT 012326 Hwy 412 - Hwy 112\Drawings\r012326_CX_412BR3_01.dgn
REVISED DATE:

DATE REVISED	DATE REVISED	FED. RD. DIST. NO.	STATE	JOB NO.	SHEET NO.	TOTAL SHEETS
		6	ARK.	012326	710	838
		CROSS SECTIONS				
②						

HWY. 412B RAMP 3 STA. 199+00 CONSTRUCT
30" X 110' R.C. PIPE CULVERT
(CLASS III) TYPE 3 BEDDING
RIPRAP BASIN LT. AND FES RT.
Q50 = 22 CFS DA = 5.4 ACRES

STA. 199+00.00
END SP. DITCH RT. -1.40%
ELEV. 1264.56

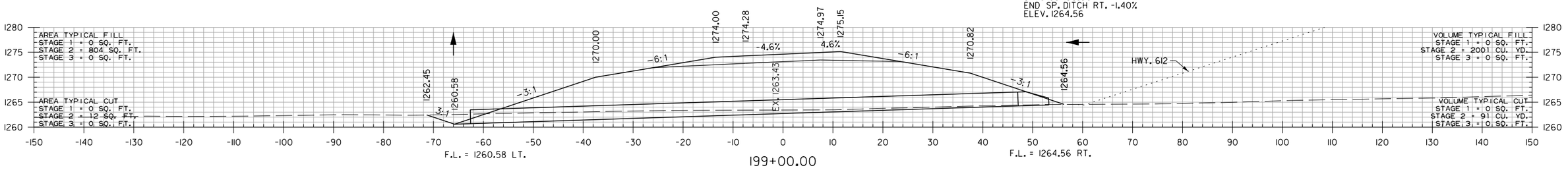

199+00.00

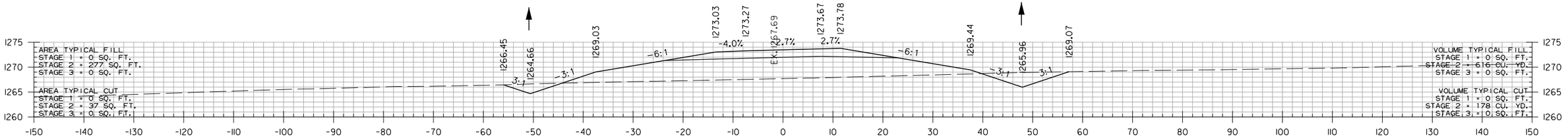

198+00.00

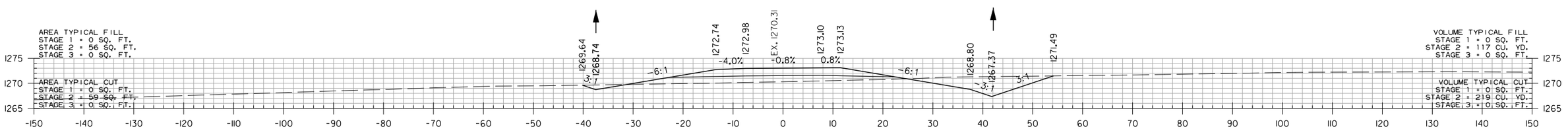

197+00.00

STA. 197+00.00
BEGIN SP. DITCH LT. -4.08%
ELEV. 1268.74

STA. 196+58.32 BEGIN SUPERELEVATION (0.00 FT./FT.)
STA. 196+58.32 END SUPERELEVATION (0.00 FT./FT.)

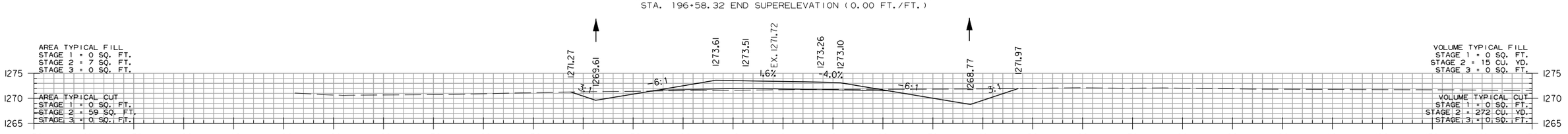

196+00.00

STA. 196+00.00
BEGIN SP. DITCH RT. -1.40%
ELEV. 1268.77

HWY. 412B RAMP 3
STA. 196+00 TO STA. 199+00

HBVinson
7/27/2023 3:19:24 PM
WORKSPACE: AHTD
L:\20IT\170I7660 - ARDOT 012326 Hwy 412 - Hwy 112\Drawings\r012326_CX_412BR3_01.dgn
REVISED DATE:

DATE REVISED	DATE REVISED	FED. RD. DIST. NO.	STATE	JOB NO.	SHEET NO.	TOTAL SHEETS
		6	ARK.	012326	711	838
		CROSS SECTIONS				
②						

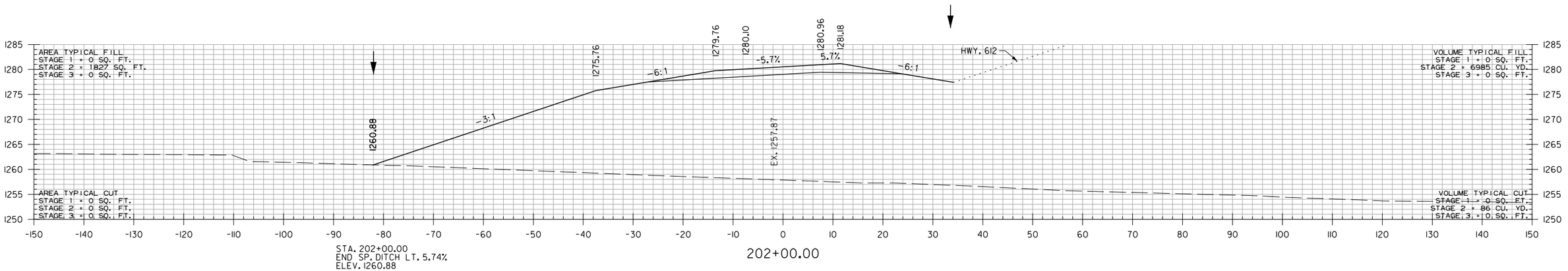

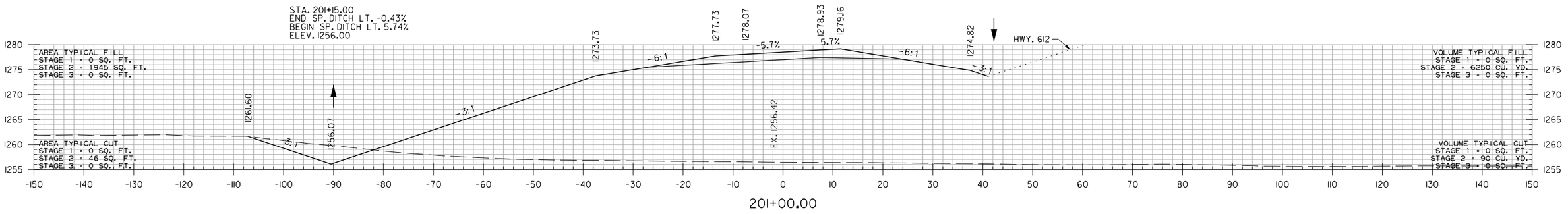

STA. 199+58.32 MAX SUPERELEVATION (0.057 FT./FT.)

HWY. 412B RAMP 3
STA. 200+00 TO STA. 202+00

HBVinson
7/27/2023 3:19:25 PM
WORKSPACE: AHTD
L:\201\1701\660 - ARDOT 012326 Hwy 412 - Hwy 112\Drawings\r012326.CX.412BR3.01.dgn
REVISED DATE:

DATE REVISED	DATE REVISED	FED. RD. DIST. NO.	STATE	JOB NO.	SHEET NO.	TOTAL SHEETS
		6	ARK.	012326	712	838
		CROSS SECTIONS				
②						

STA. 205+15.93 MAX SUPERELEVATION (0.057 FT./FT.)

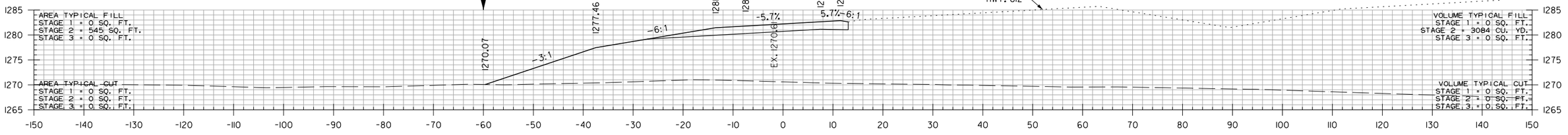

205+00.00

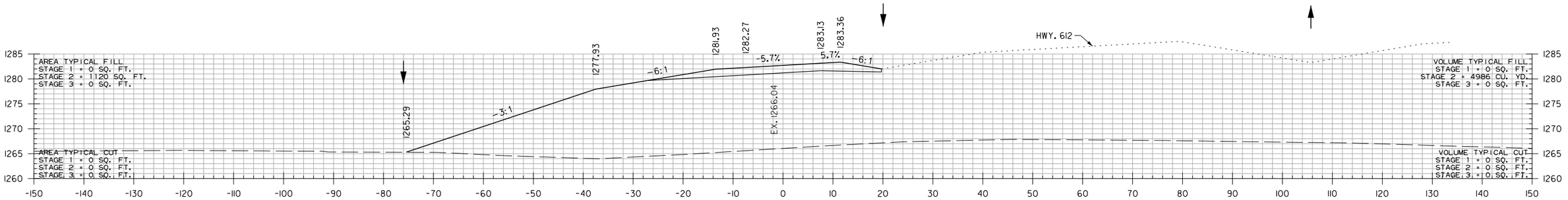

204+00.00

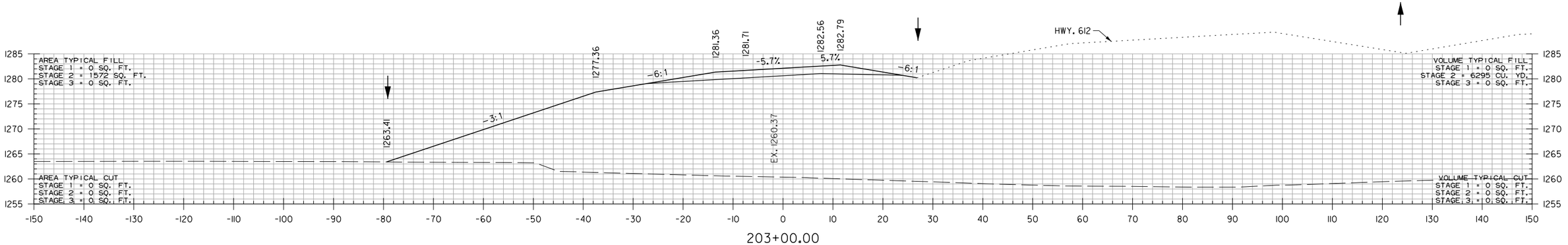

203+00.00

HWY. 412B RAMP 3
STA. 203+00 TO STA. 205+00

HBVinson 7/27/2023 3:19:25 PM
WORKSPACE: AHTD
L:\2017\1701660 - ARDOT 012326 Hwy 412 - Hwy 112\Drawings\r012326_CX_412BR3_01.dgn
REVISED DATE:

DATE REVISED	DATE REVISED	FED. RD. DIST. NO.	STATE	JOB NO.	SHEET NO.	TOTAL SHEETS
		6	ARK.	012326	713	838
		CROSS SECTIONS				
②						

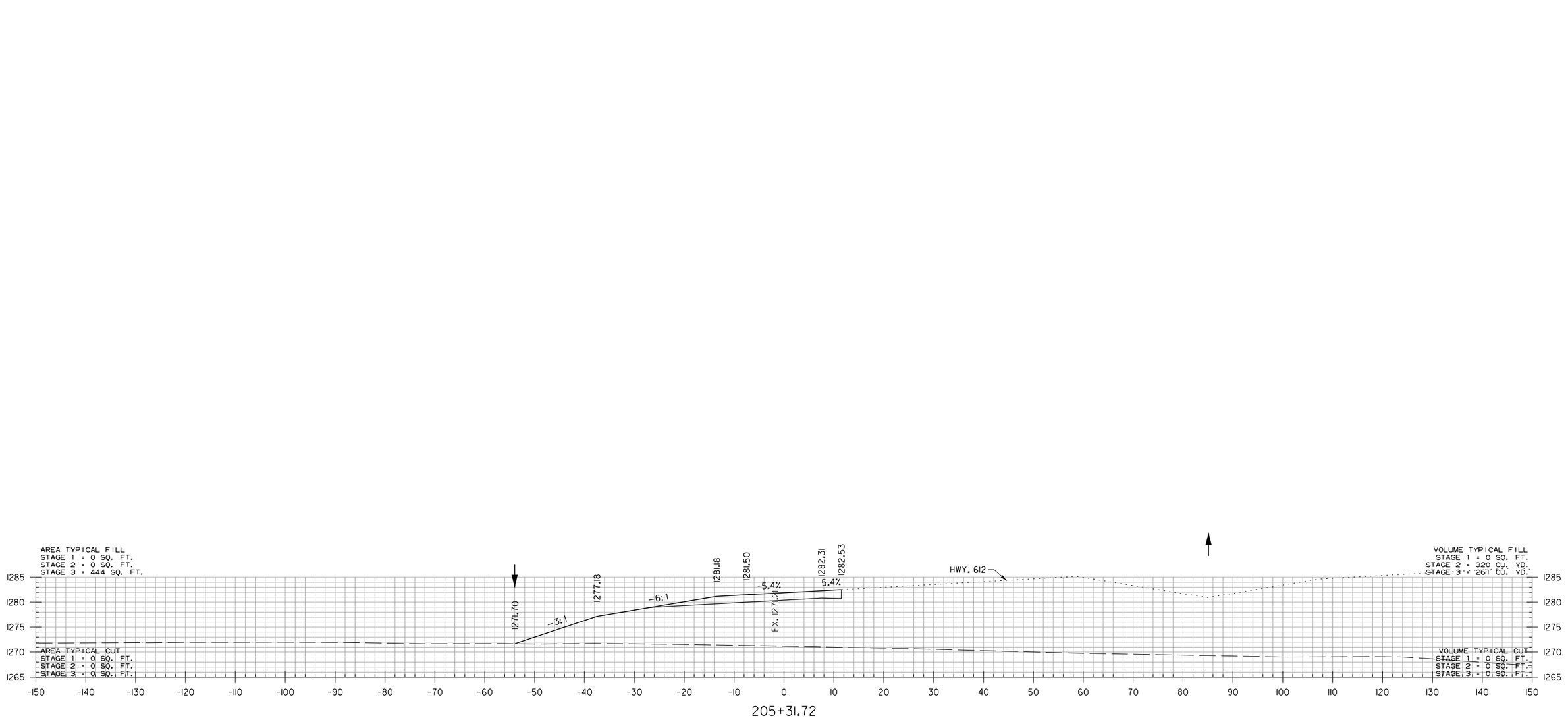

STA. 205+31.72 MATCH MAIN LANES SUPERELEVATION (0.054 FT./FT.)

STA. 205+31.72 END HWY. 412B RAMP 3

HWY. 412B RAMP 3
STA. 205+31.72 TO STA. 205+31.72

JATurner
8/10/2023 11:43:53 PM
WORKSPACE: AHTD
L:\2017\17017660 - ARDOT 012326 Hwy 412 - Hwy 112\Drawings\r012326_CX_412BR3_01.dgn
REVISED DATE:

DATE REVISED	DATE REVISED	FED. RD. DIST. NO.	STATE	JOB NO.	SHEET NO.	TOTAL SHEETS
		6	ARK.	012326	714	838
		CROSS SECTIONS				

2

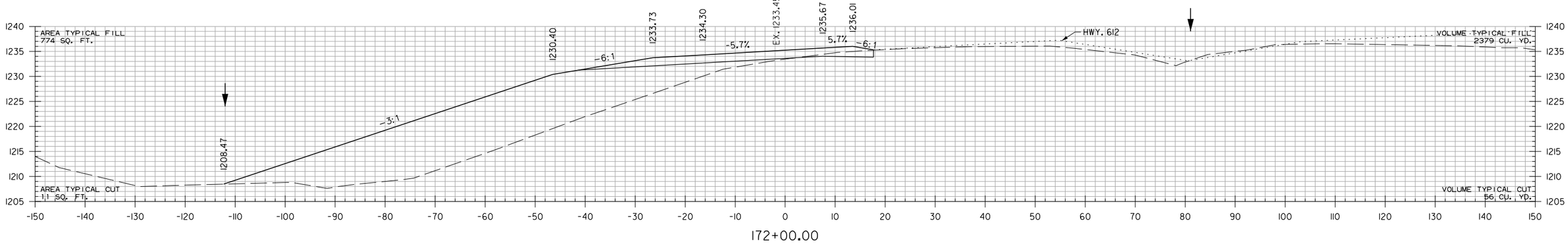

172+00.00

STA. 171+61.08 MAX SUPERELEVATION (0.057 FT./FT.)

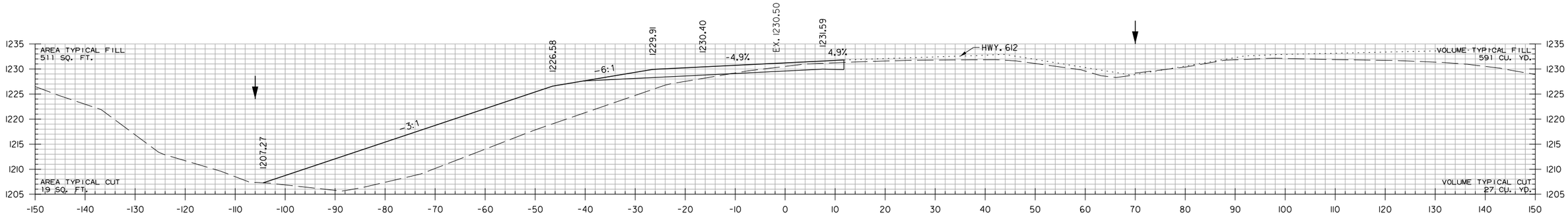

171+00.00

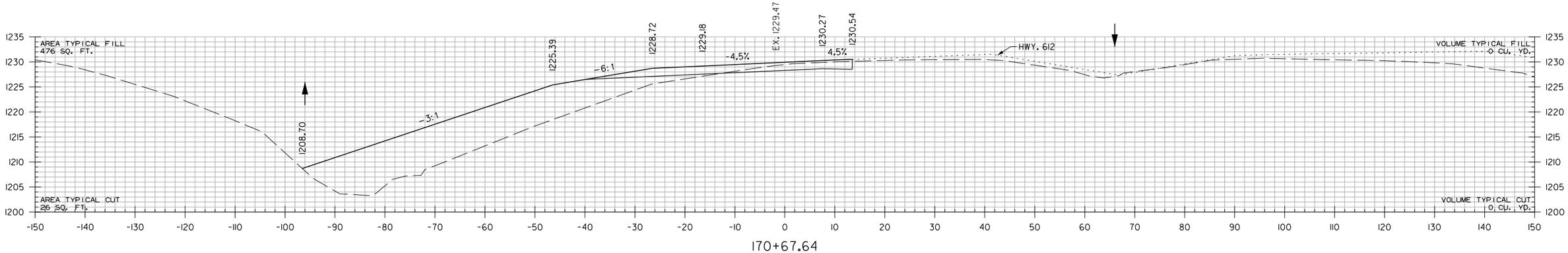

170+67.64

STA. 168+61.08 BEGIN SUPERELEVATION

STA. 170+67.64 BEGIN HWY. 412B RAMP 4

HWY. 412B RAMP 4

STA. 170+67.64 TO STA. 172+00

HBVinson 7/27/2023 3:19:25 PM
WORKSPACE: AHTD
L:\2017\17017660 - ARDOT 012326 Hwy 412 - Hwy 112\Drawings\r012326_CX_412BR4_01.dgn
REVISED DATE:

DATE REVISED	DATE REVISED	FED. RD. DIST. NO.	STATE	JOB NO.	SHEET NO.	TOTAL SHEETS
		6	ARK.	012326	715	838
		CROSS SECTIONS				
②						

HWY. 412B RAMP 4 STA. 173+10 CONSTRUCT
TYPE RM DROP INLET RT.
(4' X 3' X H=4'0")
WITH 24" X 70' R.C. PIPE OUTLET ON LT.
(CLASS III) TYPE 3 BEDDING WITH FES.
TOP 1238.64
INV. 1234.64

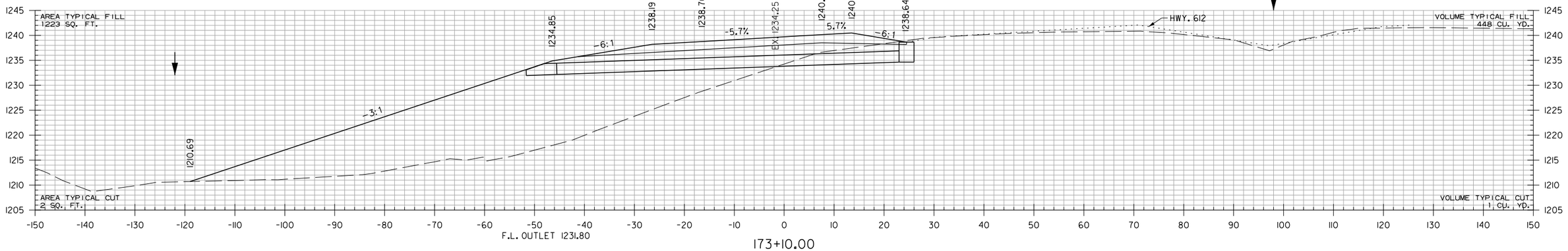

173+10.00

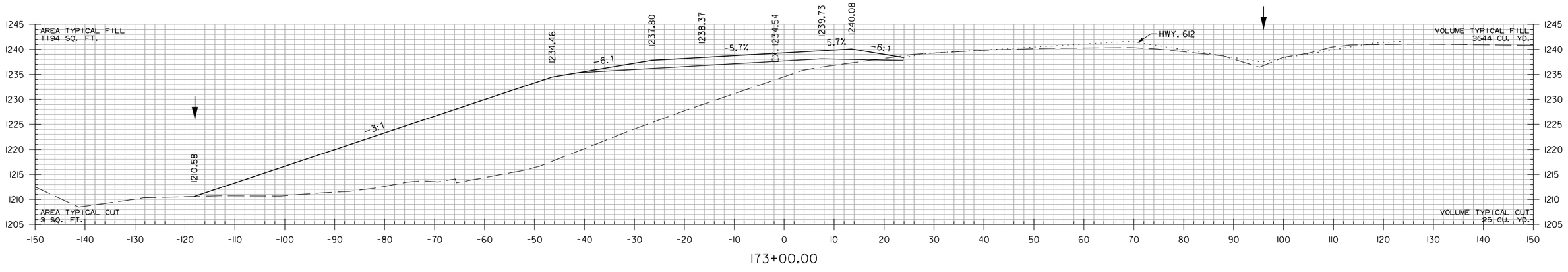

173+00.00

HWY. 412B RAMP 4
STA. 173+00 TO STA. 173+10

HBVinson
WORKSPACE: AHTD
L:\20IT\170I660 - ARDOT 012326 Hwy 412 - Hwy 112\Drawings\r012326_CX_412BR4_01.dgn
7/27/2023 3:9:25 PM
REVISED DATE:

DATE REVISED	DATE REVISED	FED. RD. DIST. NO.	STATE	JOB NO.	SHEET NO.	TOTAL SHEETS
		6	ARK.	012326	716	838
		CROSS SECTIONS				
②						

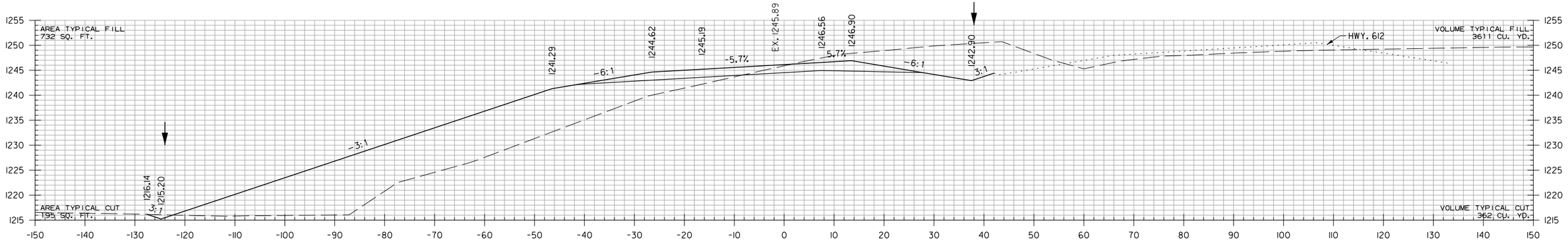

175+00.00

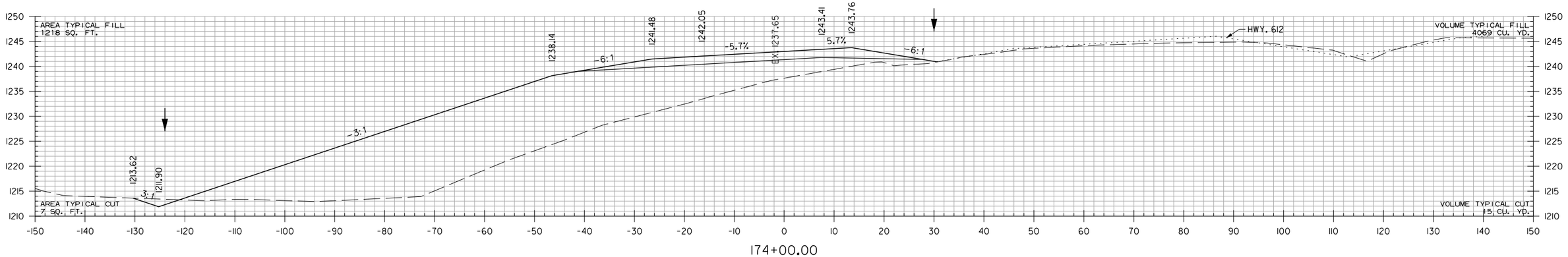

174+00.00

STA. 173+35.00
BEGIN SP. DITCH LT. 3.30%
ELEV. 1209.75

HWY. 412B RAMP 4
STA. 174+00 TO STA. 175+00

HBVinson 7/27/2023 3:9:25 PM
WORKSPACE: AHTD
L:\20\T\T01T660 - ARDOT 012326 Hwy 412 - Hwy 12\Drawings\r012326_CX_412BR4_01.dgn
REVISED DATE:

DATE REVISED	DATE REVISED	FED. RD. DIST. NO.	STATE	JOB NO.	SHEET NO.	TOTAL SHEETS
		6	ARK.	012326	717	838
		CROSS SECTIONS				
(2)						

HWY. 412B RAMP 4 STA. 176+00 CONSTRUCT
24" X 182' R.C. PIPE CULVERT
30° RT. FWD. SKEW
(CLASS IV) TYPE 3 BEDDING
WITH FES LT. & RT.
Q50 = 15 CFS DA = 3.6 ACRES

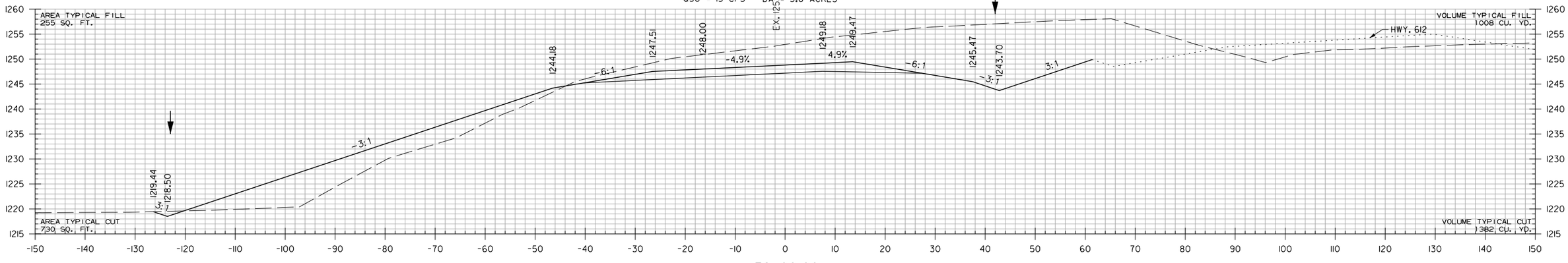

176+00.00

STA. 176+00.00
END SP. DITCH LT. 3.30%
BEGIN SP. DITCH LT. 5.50%
ELEV. 1218.50

STA. 175+75.00
BEGIN SP. DITCH RT. -4.80%
ELEV. 1244.90

STA. 175+69.10 MAX SUPERELEVATION (0.057 FT./FT.)

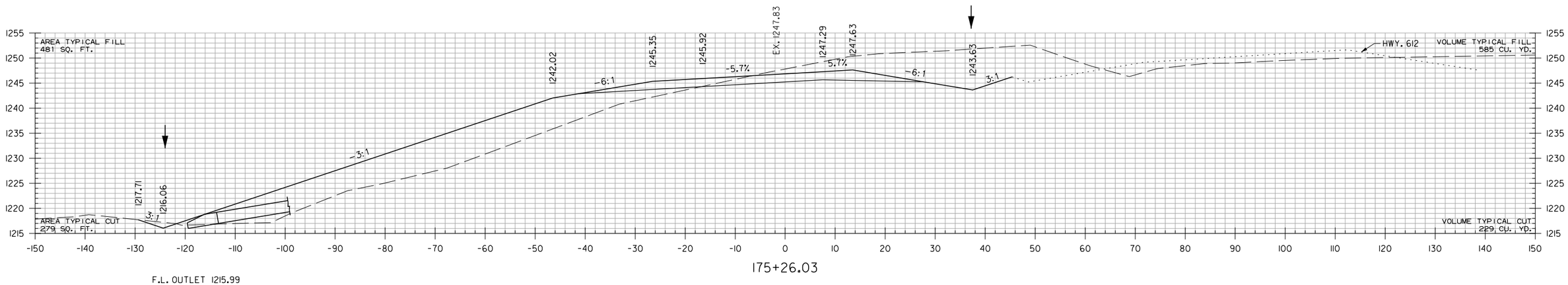

175+26.03

F.L. OUTLET 1215.99

HWY. 412B RAMP 4
STA. 175+26.03 TO STA. 176+00

HBVinson
WORKSPACE: AHTD
L:\20IT\170I660 - ARDOT 012326 Hwy 412 - Hwy 12\Drawings\r012326_CX_412BR4_01.dgn
7/27/2023 3:9:25 PM
REVISED DATE:

DATE REVISED	DATE REVISED	FED. RD. DIST. NO.	STATE	JOB NO.	SHEET NO.	TOTAL SHEETS
		6	ARK.	012326	718	838
		CROSS SECTIONS				
②						

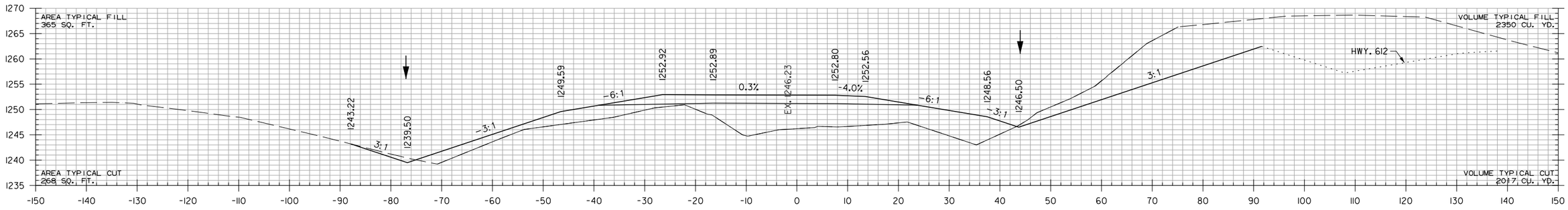

STA. 178+00.00
END SP. DITCH LT. 8.00%
BEGIN SP. DITCH LT. 11.43%
ELEV. 1239.50

178+00.00

STA. 177+87.10 BEGIN SUPERELEVATION (0.00 FT./FT.)
STA. 177+87.10 END SUPERELEVATION (0.00 FT./FT.)

STA. 177+25.00
END SP. DITCH LT. 18.00%
BEGIN SP. DITCH LT. 8.00%
ELEV. 1233.50

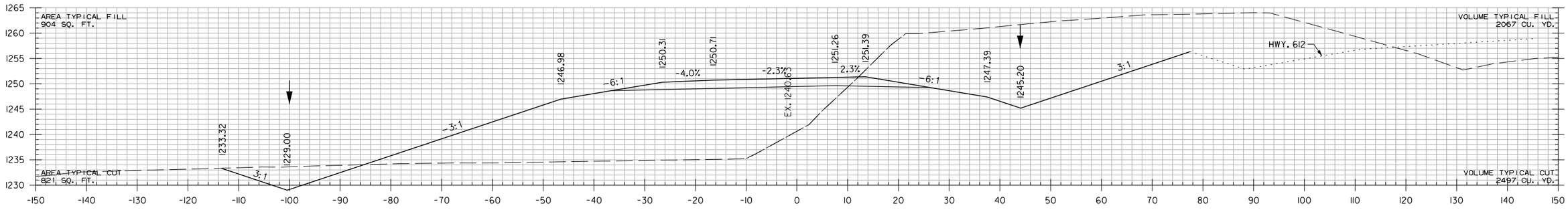

STA. 176+60.00
END SP. DITCH LT. 5.50%
BEGIN SP. DITCH LT. 18.00%
ELEV. 1221.80

177+00.00

STA. 176+85.00
END SP. DITCH RT. 4.17%
BEGIN SP. DITCH RT. 1.30%
ELEV. 1245.00

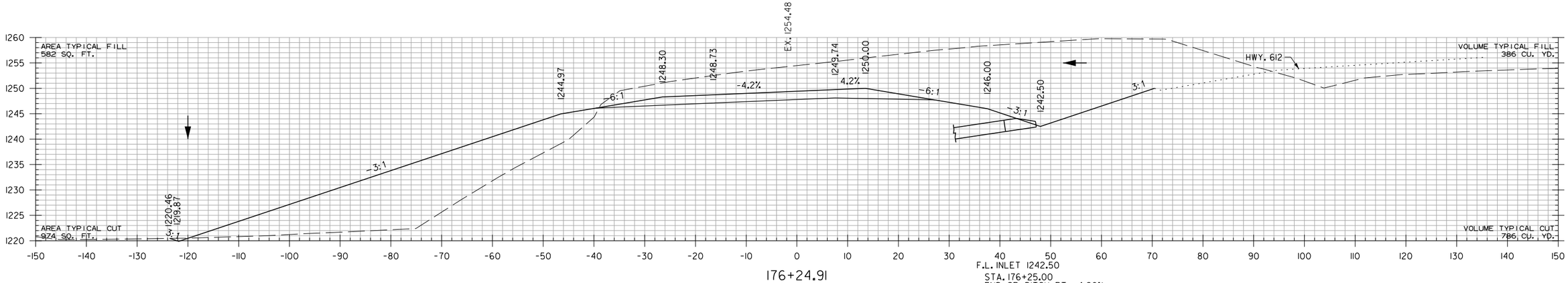

176+24.91

F.L. INLET 1242.50
STA. 176+25.00
END SP. DITCH RT. -4.80%
BEGIN SP. DITCH RT. 4.17%
ELEV. 1242.50

HWY. 412B RAMP 4
STA. 176+24.91 TO STA. 178+00

HBVinson 7/27/2023 3:9:26 PM
WORKSPACE: AHTD
L:\20IT\170I660 - ARDOT 012326 Hwy 412 - Hwy 12\Drawings\r012326_CX_412BR4_01.dgn
REVISED DATE:

DATE REVISED	DATE REVISED	FED. RD. DIST. NO.	STATE	JOB NO.	SHEET NO.	TOTAL SHEETS
		6	ARK.	012326	719	838
		CROSS SECTIONS				

2

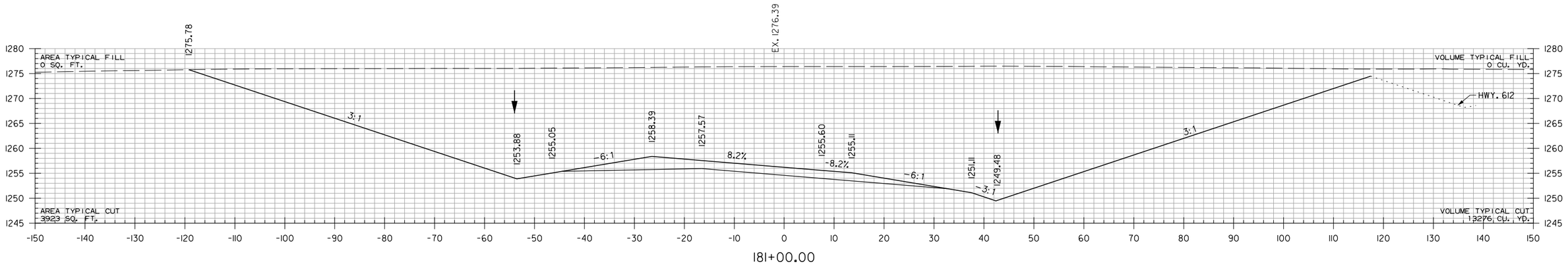

181+00.00

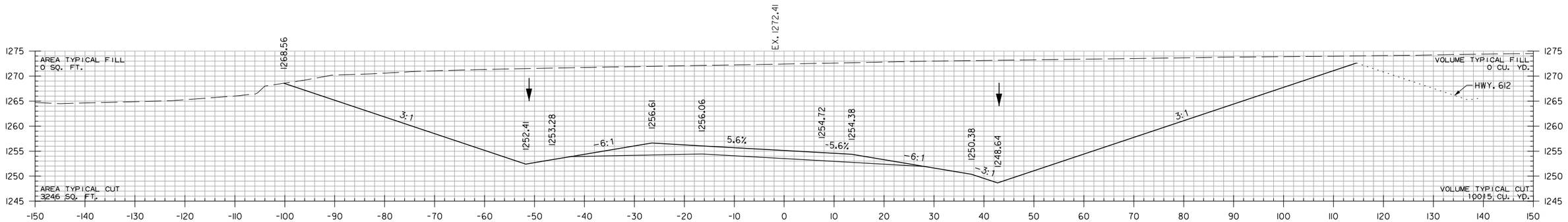

180+00.00

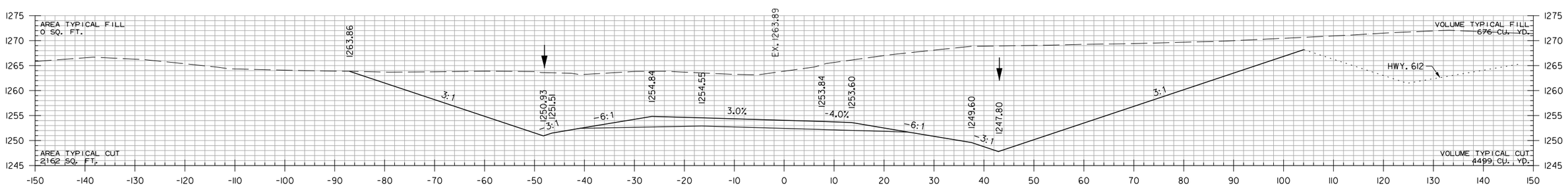

STA. 179+00.00
END SP. DITCH LT. 11.43%
ELEV. 1250.93

179+00.00

STA. 179+00.00
END SP. DITCH RT. 1.30%
BEGIN SP. DITCH RT. 0.84%
ELEV. 1247.80

HWY. 412B RAMP 4
STA. 179+00 TO STA. 181+00

HBVinson 7/27/2023 3:19:26 PM
WORKSPACE: AHTD
L:\2017\17017660 - ARDOT 012326 Hwy 412 - Hwy 112\Drawings\r012326_CX_412BR4_01.dgn
REVISED DATE:

DATE REVISED	DATE REVISED	FED. RD. DIST. NO.	STATE	JOB NO.	SHEET NO.	TOTAL SHEETS
		6	ARK.	012326	720	838
		CROSS SECTIONS				
②						

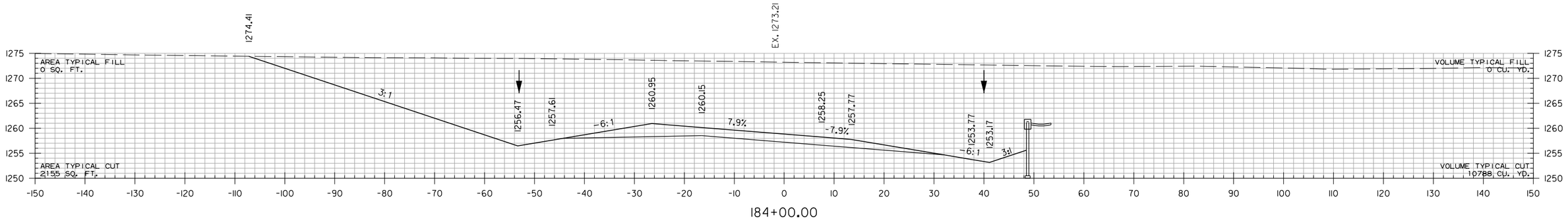

184+00.00

STA. 183+25.05 MAX SUPERELEVATION (0.10 FT./FT.)

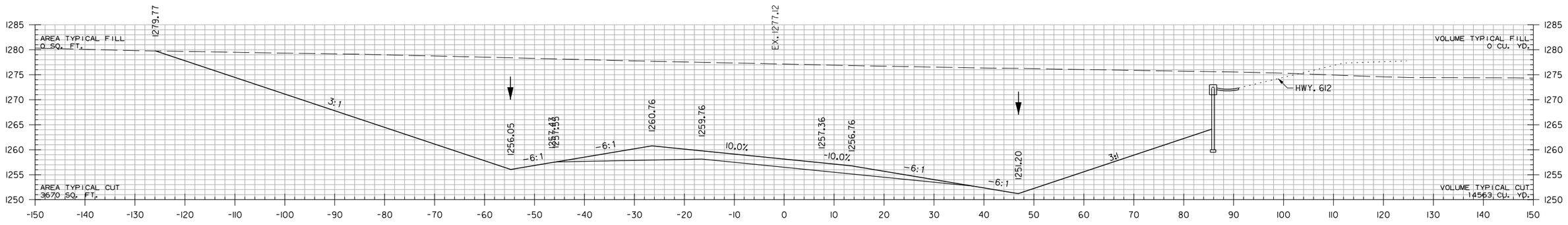

183+00.00

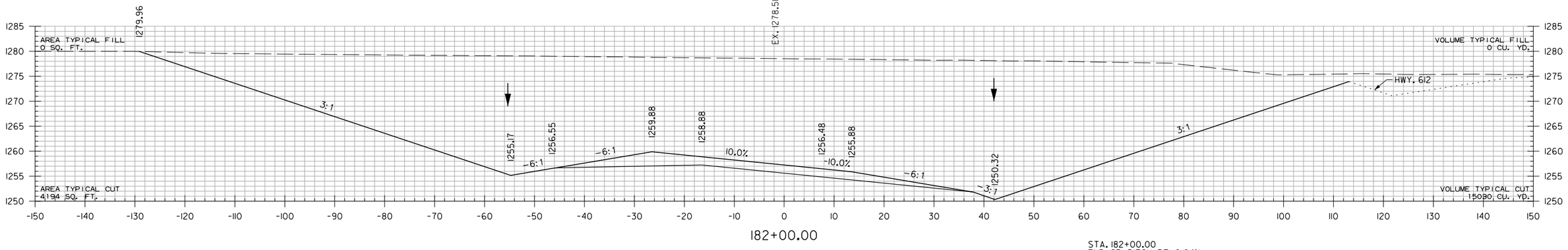

182+00.00

STA. 181+69.10 MAX SUPERELEVATION (0.10 FT./FT.)

STA. 182+00.00
END SP. DITCH RT. 0.84%
ELEV. 1250.32

HWY. 412B RAMP 4
STA. 182+00 TO STA. 184+00

HBVinson 7/27/2023 3:19:26 PM
WORKSPACE: AHTD
L:\2017\17017660 - ARDOT 012326 Hwy 412 - Hwy 112\Drawings\r012326_CX_412BR4_01.dgn
REVISED DATE:

DATE REVISED	DATE REVISED	FED. RD. DIST. NO.	STATE	JOB NO.	SHEET NO.	TOTAL SHEETS
		6	ARK.	012326	721	838
		CROSS SECTIONS				
(2)						

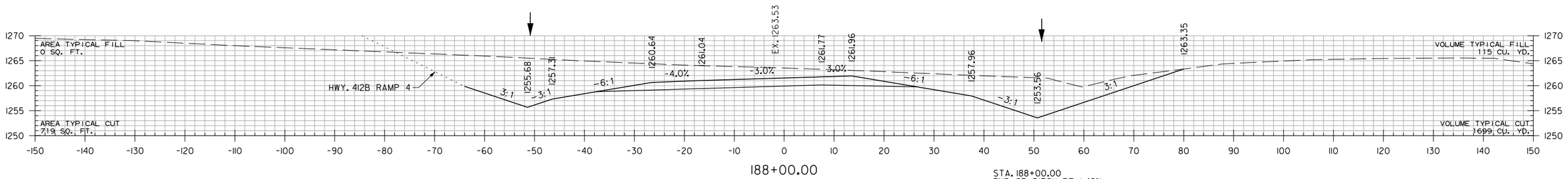

188+00.00

STA. 188+00.00
END SP. DITCH RT. 1.42%
BEGIN SP. DITCH RT. 5.44%
ELEV. 1253.56

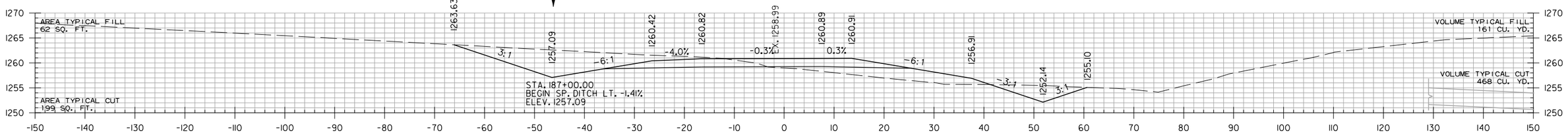

187+00.00

STA. 186+70.00
BEGIN SP. DITCH RT. 1.42%
ELEV. 1251.71

STA. 186+89.05 BEGIN SUPERELEVATION (0.00 FT./FT.)
STA. 186+89.05 END SUPERELEVATION (0.00 FT./FT.)

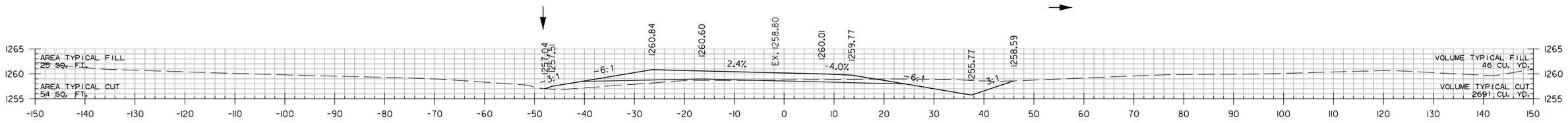

186+00.00

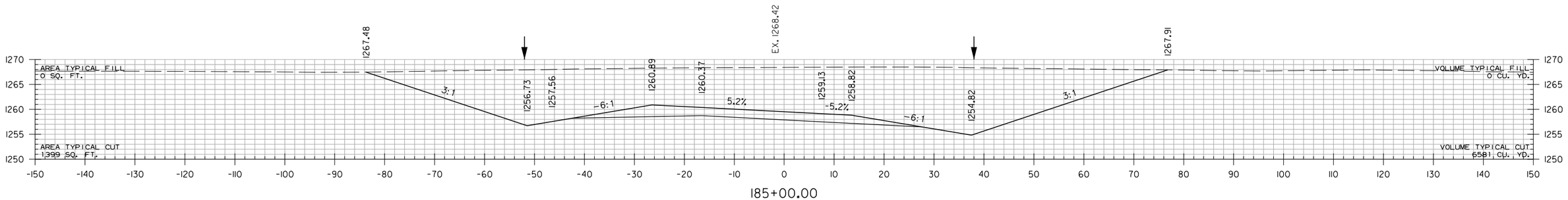

185+00.00

HWY. 412B RAMP 4
STA. 185+00 TO STA. 188+00

HBVinson
7/27/2023 3:19:26 PM
WORKSPACE: AHTD
L:\2017\17017660 - ARDOT 012326 Hwy 412 - Hwy 112\Drawings\r012326_CX_412BR4_01.dgn
REVISED DATE:

DATE REVISED	DATE REVISED	FED. RD. DIST. NO.	STATE	JOB NO.	SHEET NO.	TOTAL SHEETS
		6	ARK.	012326	722	838
		CROSS SECTIONS				
②						

STA. 190+25.05 MAX SUPERELEVATION (0.092 FT./FT.)

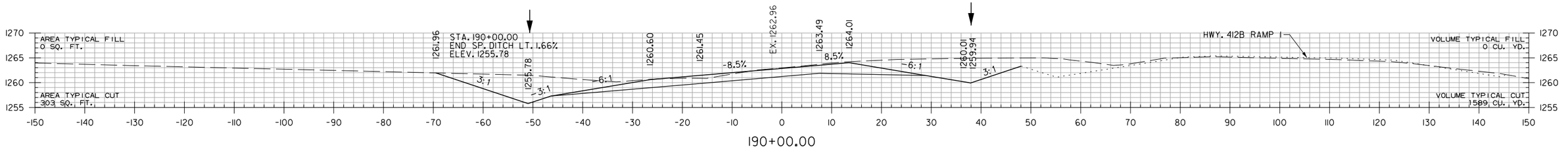

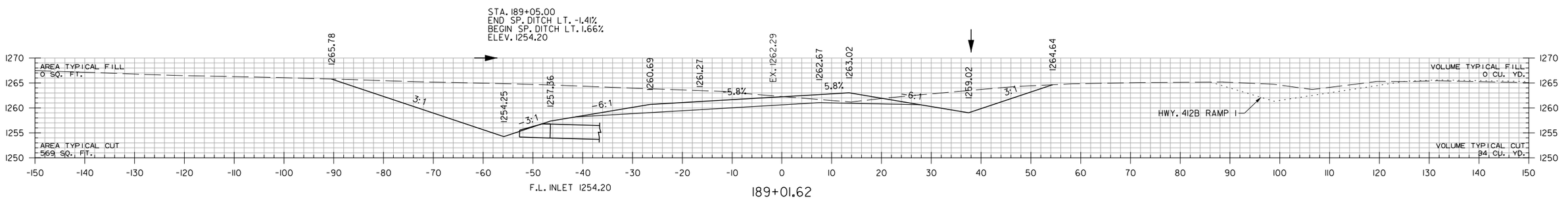

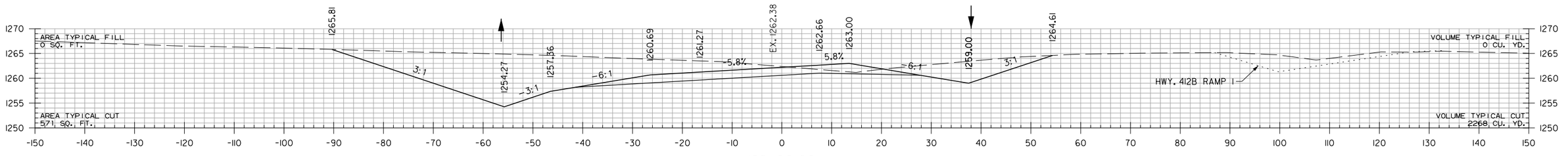

STA. 189+00.00
END SP. DITCH RT. 5.44%
ELEV. 1259.00

HWY. 412B RAMP 4 STA. 188+50 CONSTRUCT
30" X 126' R.C. PIPE CULVERT
45° LT. FWD. SKEW
(CLASS III) TYPE 3 BEDDING
WITH FES LT. & RT.
Q50 = 33 CFS DA = 11.1 ACRES

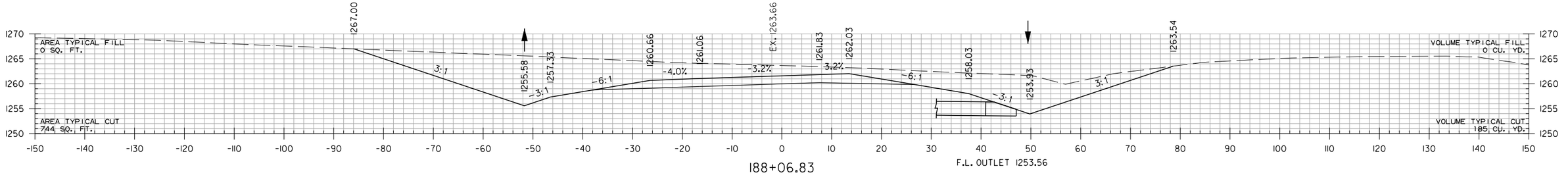

HWY. 412B RAMP 4
STA. 188+06.83 TO STA. 190+00

HBVinson
WORKSPACE: AHTD
L:\2017\17017660 - AROOT 012326 Hwy 412 - Hwy 112\Drawings\r012326_CX_412BR4_01.dgn
7/27/2023 3:19:26 PM
REVISED DATE:

DATE REVISED	DATE REVISED	FED. RD. DIST. NO.	STATE	JOB NO.	SHEET NO.	TOTAL SHEETS
		6	ARK.	012326	723	838
		CROSS SECTIONS				
②						

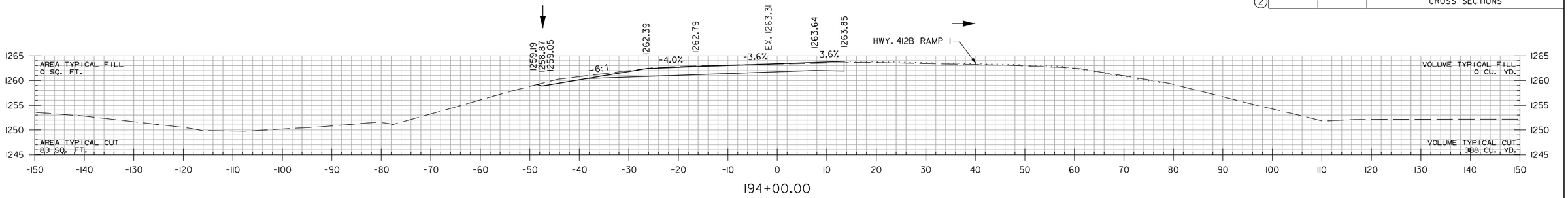

194+00.00

STA. 194+00.00 END HWY. 412B RAMP 4
BEGIN OVERLAY

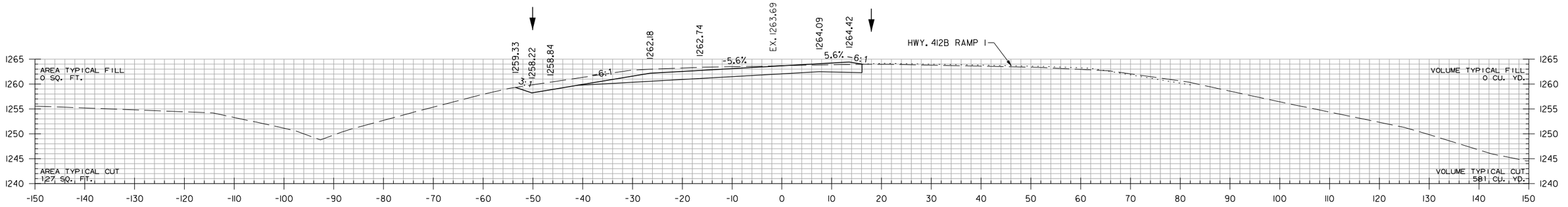

193+00.00

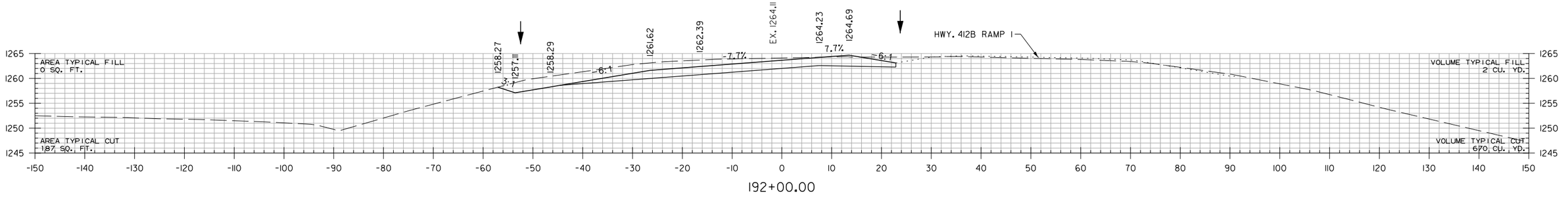

192+00.00

STA. 191+25.88 MAX SUPERELEVATION (0.092 FT./FT.)

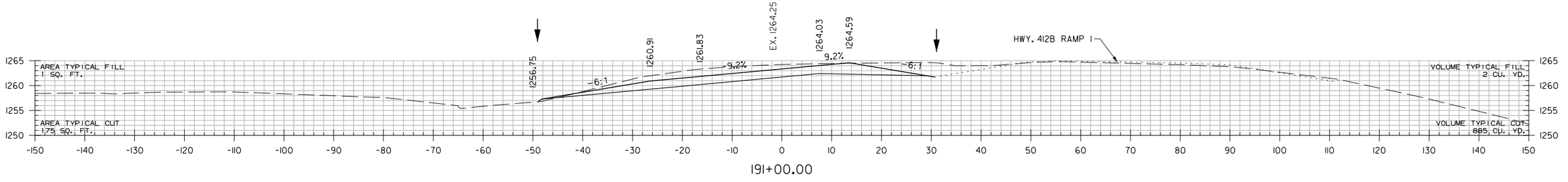

191+00.00

HWY. 412B RAMP 4
STA. 191+00 TO STA. 194+00

HBVinson
WORKSPACE: AHTD
L:\2017\17017660 - ARDOT 012326 Hwy 412 - Hwy 112\Drawings\r012326_CX_412BR4_0.dgn
7/27/2023 3:19:26 PM
REVISED DATE:

DATE REVISED	DATE REVISED	FED. RD. DIST. NO.	STATE	JOB NO.	SHEET NO.	TOTAL SHEETS
		6	ARK.	012326	724	838
		CROSS SECTIONS				
②						

195+51.46

STA. 195+51.46 END HWY. 412B RAMP 4 OVERLAY

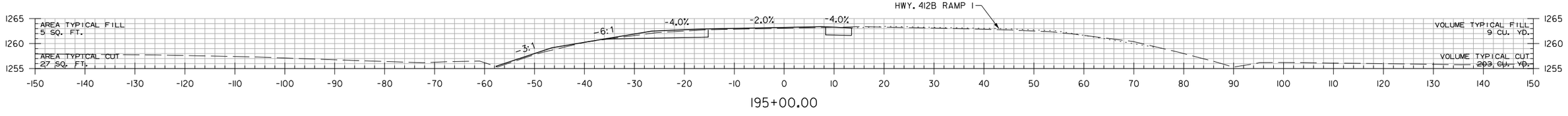

195+00.00

STA. 194+75.88 END SUPERELEVATION

HWY. 412B RAMP 4
STA. 195+00 TO STA. 195+51.46

HBVinson
7/27/2023 3:19:27 PM
WORKSPACE: AHTD
L:\2017\17017660 - ARDOT 012326 Hwy 412 - Hwy 112\Drawings\r012326_CX_412BR4_01.dgn
REVISED DATE:

DATE REVISED	DATE REVISED	FED. RD. DIST. NO.	STATE	JOB NO.	SHEET NO.	TOTAL SHEETS
		6	ARK.	012326	725	838
		CROSS SECTIONS				
②						

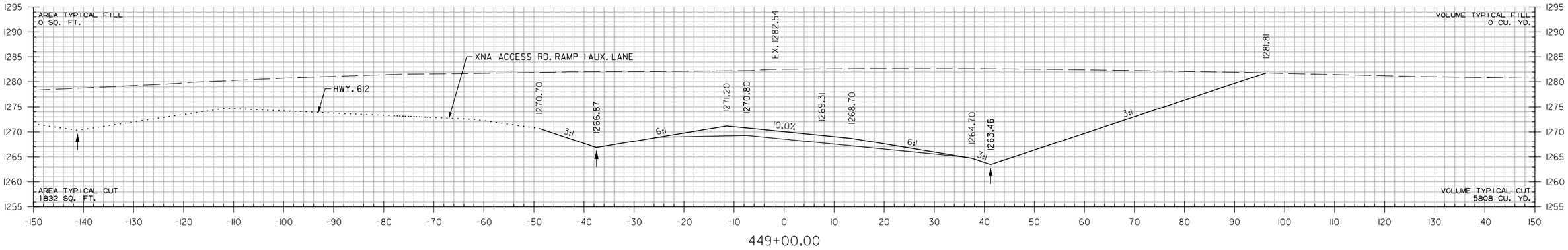

449+00.00

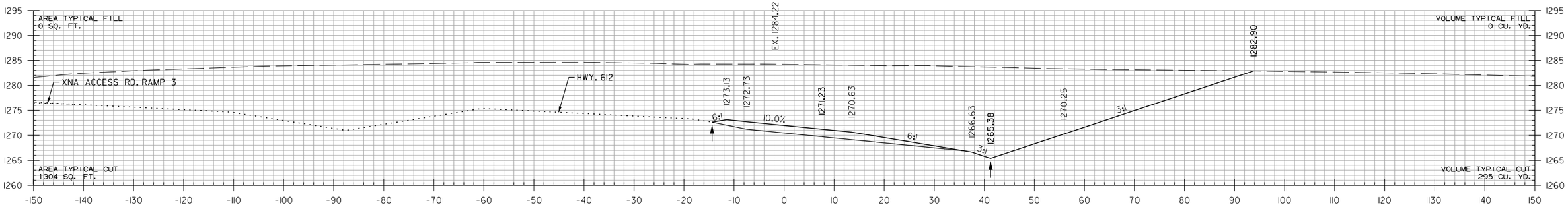

448+00.00

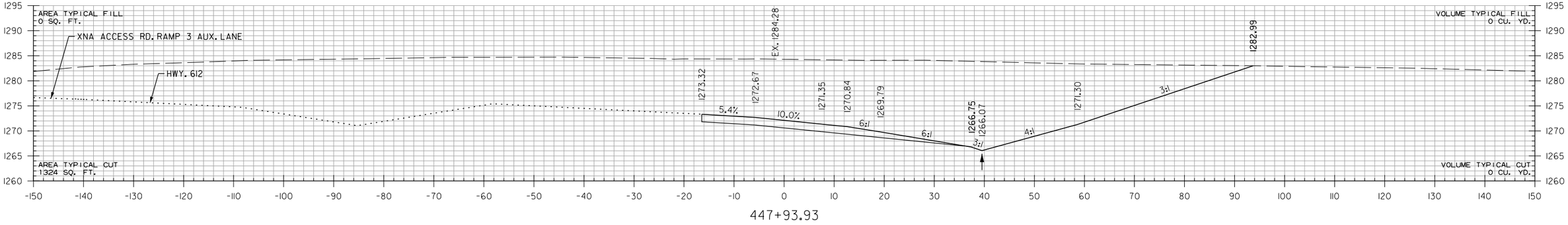

447+93.93

STA. 447+36.87 MAX. SUPERELEVATION (0.100'/')
STA. 445+35.62 MATCH SUPERELEVATION (0.054'/')
STA. 447+93.93 BEGIN XNA ACCESS RD. RAMP 1

XNA ACCESS RD. RAMP 1
STA. 447+93.93 TO STA. 449+00

HBVinson 7/21/2023 3:19:35 PM
WORKSPACE: AHTD
L:\2017\17017660 - ARDOT 012326 Hwy 412 - Hwy 112\Drawings\r-012326_CX_XNA ACCESS RD. RAMP 1.dgn
REVISED DATE:

DATE REVISED	DATE REVISED	FED. RD. DIST. NO.	STATE	JOB NO.	SHEET NO.	TOTAL SHEETS
		6	ARK.	012326	726	838
		CROSS SECTIONS				

2

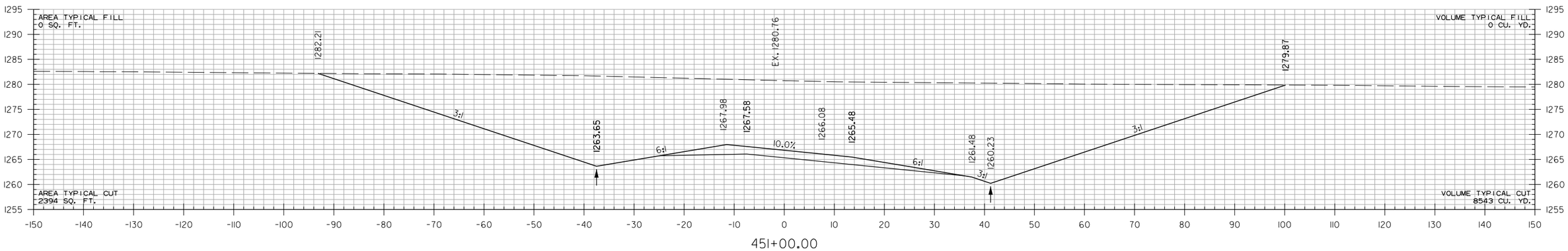

451+00.00

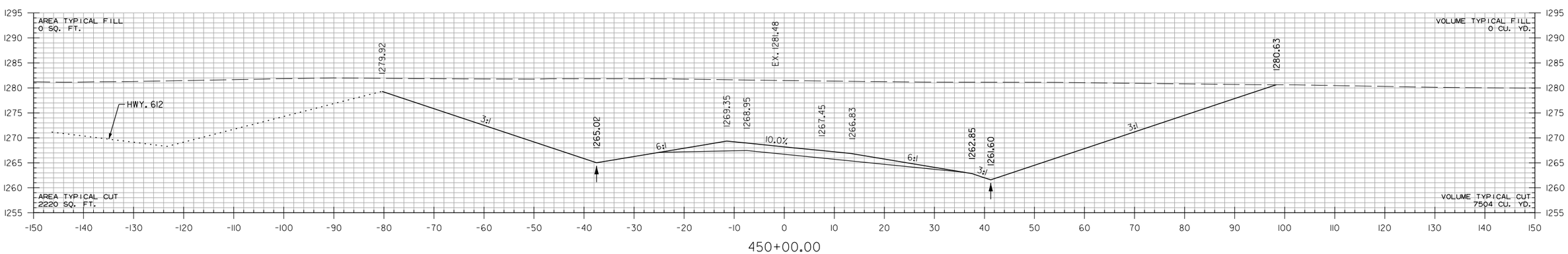

450+00.00

XNA ACCESS RD. RAMP 1
STA. 450+00 TO STA. 451+00

JATurner 8/10/2023 1:44:17 PM
WORKSPACE: AHTD
L:\2017\17017660 - ARDOT 012326 Hwy 412 - Hwy 112\Drawings\r012326_CX_XNA ACCESS RD. RAMP 1.dgn
REVISED DATE:

DATE REVISED	DATE REVISED	FED. RD. DIST. NO.	STATE	JOB NO.	SHEET NO.	TOTAL SHEETS
		6	ARK.	012326	727	838
		CROSS SECTIONS				
(2)						

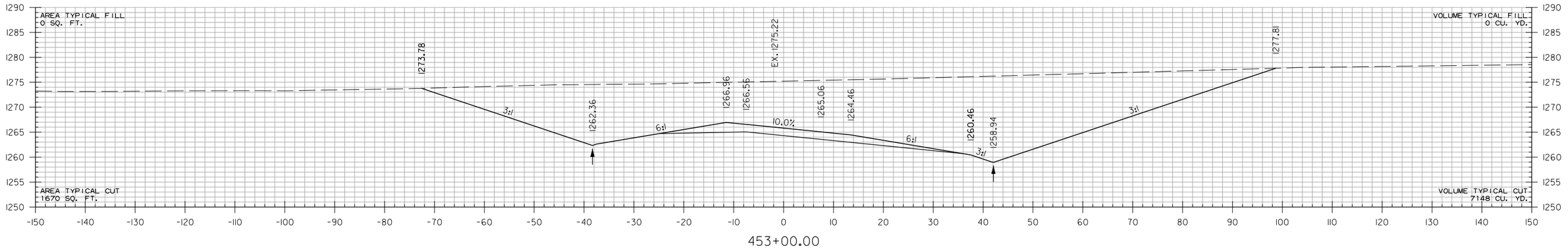

453+00.00

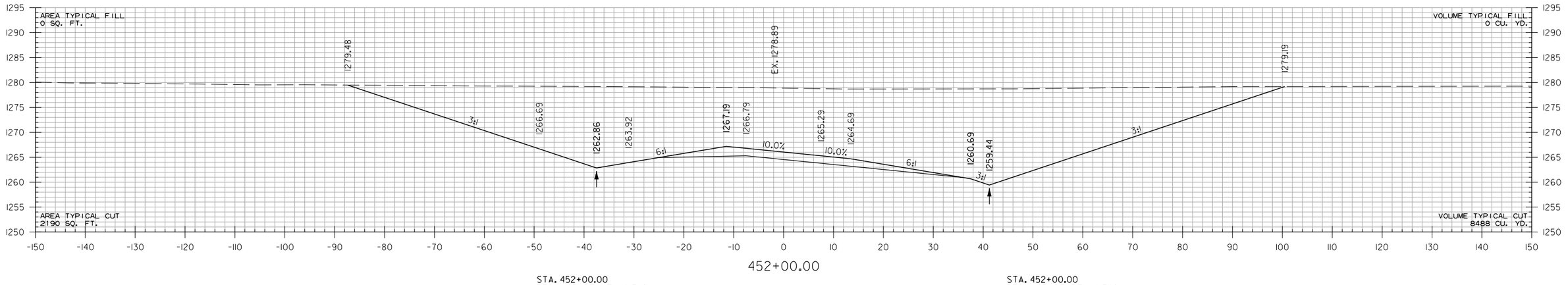

452+00.00

STA. 452+00.00
BEGIN SP. DT. LT. -0.50%
ELEV. 1262.86

STA. 452+00.00
BEGIN SP. DT. RT. -0.50%
ELEV. 1259.44

XNA ACCESS RD. RAMP I
STA. 452+00 TO STA. 453+00

HBVinson 7/27/2023 3:39:35 PM
WORKSPACE: AHTD
L:\2017\17017660 - ARDOT 012326 Hwy 412 - Hwy 112\Drawings\r012326_CX_XNA ACCESS RD. RAMP 1.dgn
REVISED DATE:

DATE REVISED	DATE REVISED	FED. RD. DIST. NO.	STATE	JOB NO.	SHEET NO.	TOTAL SHEETS
		6	ARK.	012326	728	838
		CROSS SECTIONS				
②						

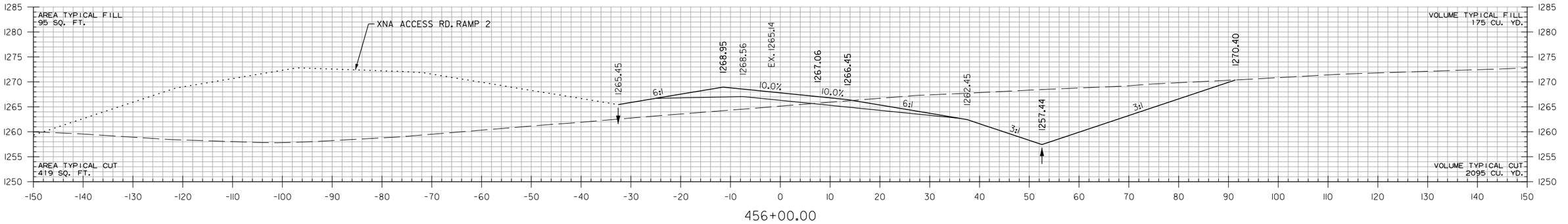

456+00.00

STA. 455+35.00
END SP. DT. LT. 2.89%
ELEV. 1263.99

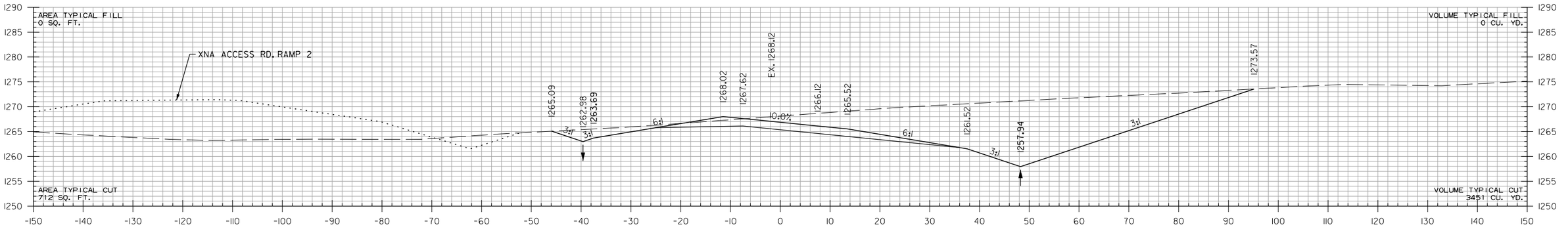

455+00.00

STA. 454+52.00
END SP. DT. LT. -0.50%
BEGIN SP. DT. LT. 2.89%
ELEV. 1261.60

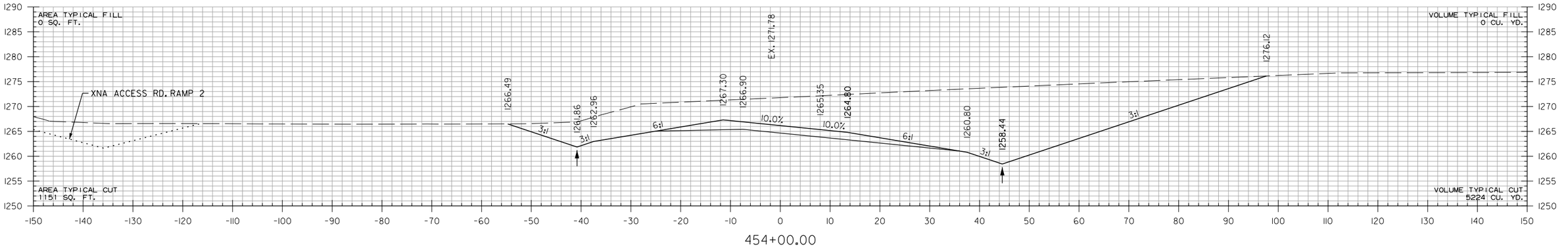

454+00.00

XNA ACCESS RD. RAMP 1
STA. 454+00 TO STA. 456+00

HBVinson
WORKSPACE: AHTD
L:\20T\170\7660 - ARDOT 012326 Hwy 412 - Hwy 12\Drawings\r012326.CX.XNA ACCESS RD. RAMP 1.dgn
7/27/2023 3:19:35 PM
REVISED DATE:

DATE REVISED	DATE REVISED	FED. RD. DIST. NO.	STATE	JOB NO.	SHEET NO.	TOTAL SHEETS
		6	ARK.	012326	729	838
		CROSS SECTIONS				

(2)

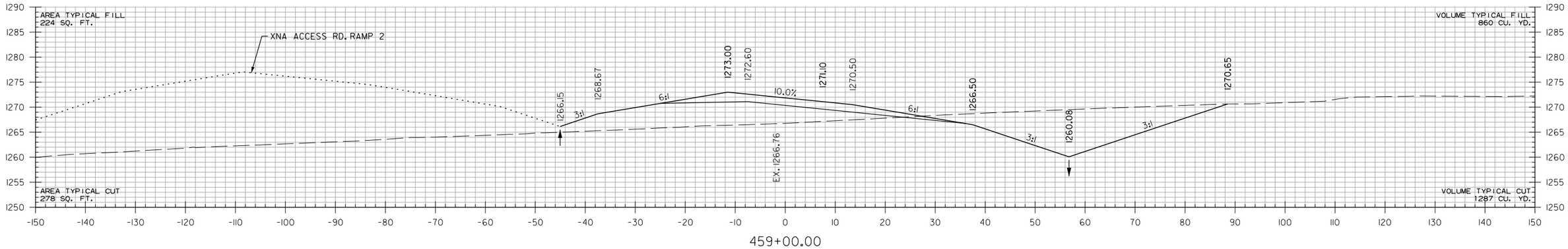

STA. 458+00 CONSTRUCT
36" X 213' R.C. PIPE CULVERT
(CLASS IV) (TYPE 3 BEDDING)
WITH FES LT. & RT.
Q50 = 29 CFS DA = 8.3 ACRES

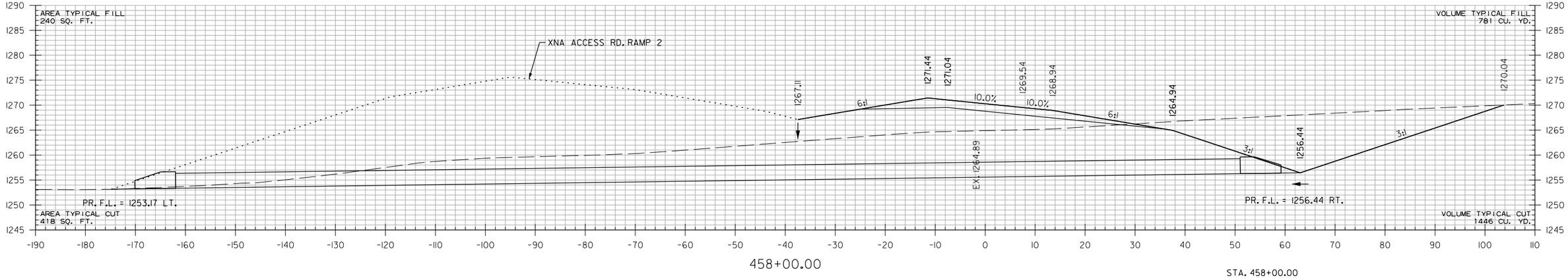

STA. 458+00.00
END SP. DT. RT. -0.50%
BEGIN SP. DT. RT. 3.64%
ELEV. 1256.44

STA. 458+00 TO STA. 458+00

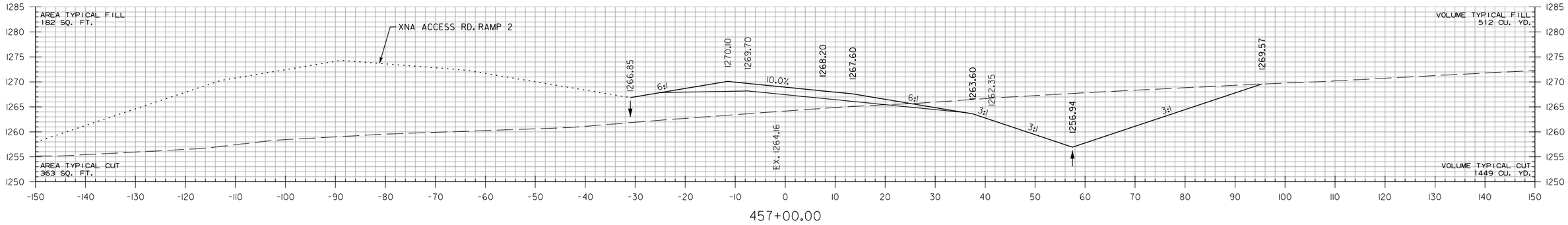

XNA ACCESS RD. RAMP 1
STA. 457+00 TO STA. 459+00

HBVinson
7/27/2023 3:19:35 PM
WORKSPACE: AHTD
L:\2017\1701660 - ARDOT 012326 Hwy 412 - Hwy 112\Drawings\r012326.CX.XNA ACCESS RD. RAMP 1.dgn
REVISED DATE:

DATE REVISED	DATE REVISED	FED. RD. DIST. NO.	STATE	JOB NO.	SHEET NO.	TOTAL SHEETS
		6	ARK.	012326	730	838
		CROSS SECTIONS				
②						

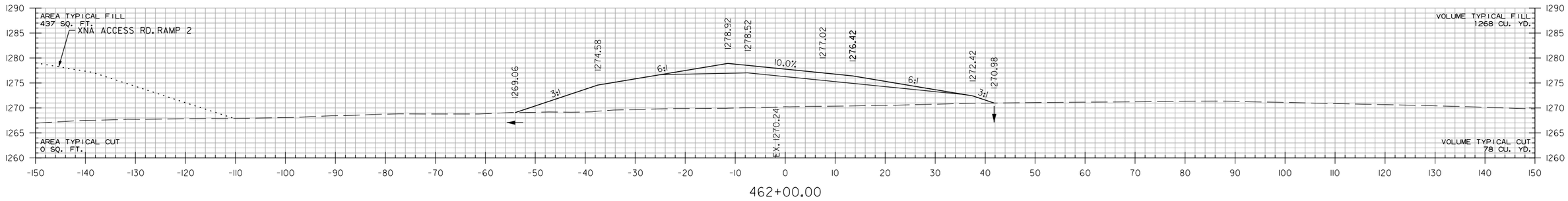

STA. 462+00.00
END SP. DT. RT. 3.64%
ELEV. 1270.98

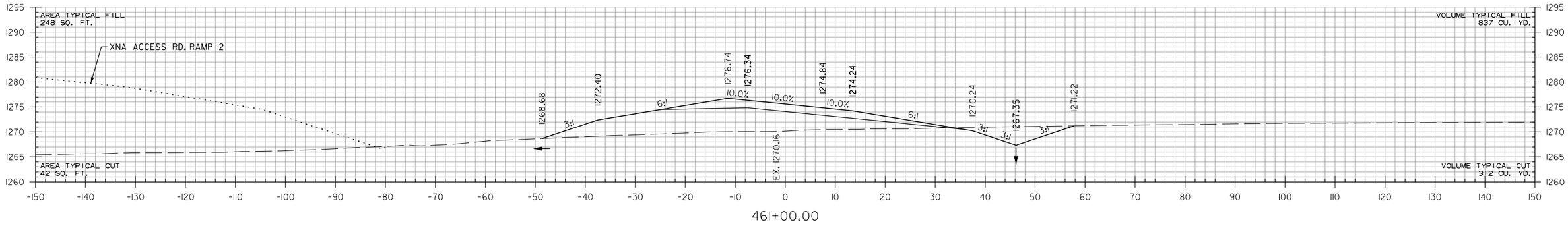

STA. 460+00 CONSTRUCT
24" X 86' R.C. PIPE CULVERT
(CLASS III) (TYPE 3 BEDDING)
WITH FES LT. & RT.
Q50 = 6.8 CFS DA = 1.3 ACRES

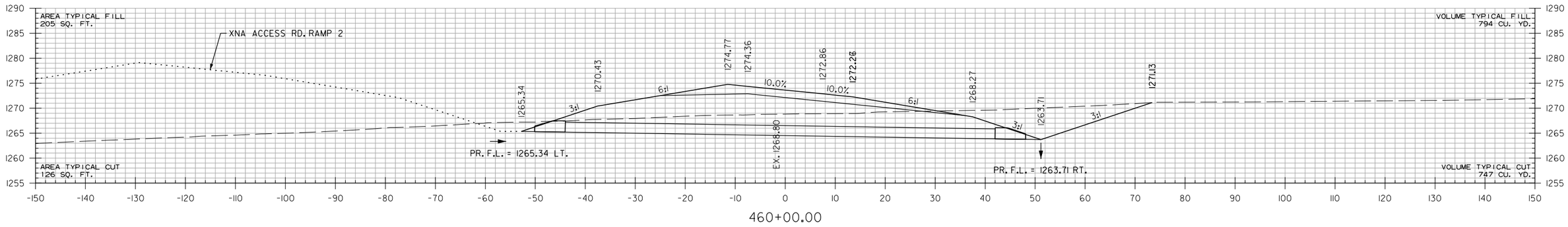

XNA ACCESS RD. RAMP 1
STA. 460+00 TO STA. 462+00

HBVinson
WORKSPACE: AHTD
L:\20FY\70\T660 - ARDOT 012326 Hwy 412 - Hwy 112\Drawings\r012326.CX.XNA ACCESS RD. RAMP 1.dgn
7/21/2023 3:19:36 PM
REVISED DATE:

DATE REVISED	DATE REVISED	FED. RD. DIST. NO.	STATE	JOB NO.	SHEET NO.	TOTAL SHEETS
		6	ARK.	012326	731	838
		CROSS SECTIONS				
2						

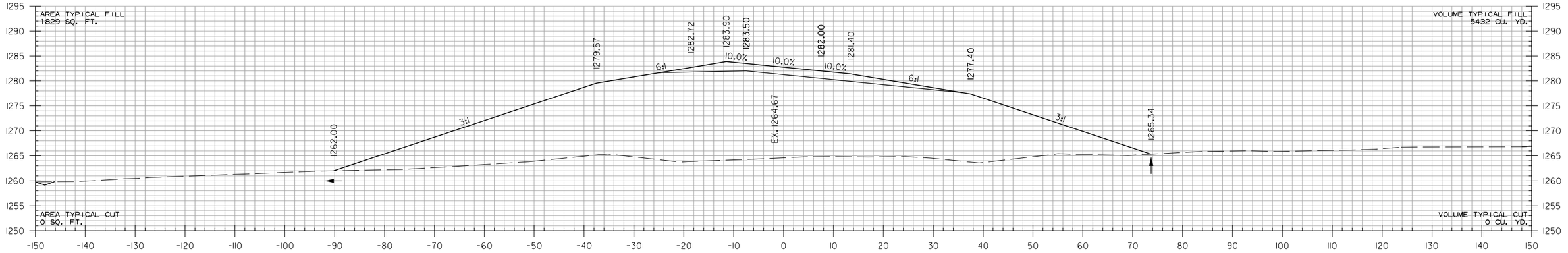

XNA ACCESS RD. RAMP 1
STA. 463+00 TO STA. 464+00

HBVinson 7/27/2023 3:19:36 PM
WORKSPACE: AHTD
L:\20IT\TOIT660 - ARDOT 012326 Hwy 412 - Hwy 112\Drawings\r012326.CX.XNA ACCESS RD. RAMP 1.dgn
REVISED DATE:

DATE REVISED	DATE REVISED	FED. RD. DIST. NO.	STATE	JOB NO.	SHEET NO.	TOTAL SHEETS
		6	ARK.	012326	732	838
		CROSS SECTIONS				
②						

STA. 465+44.40 MAX. SUPERELEVATION (0.100'/')

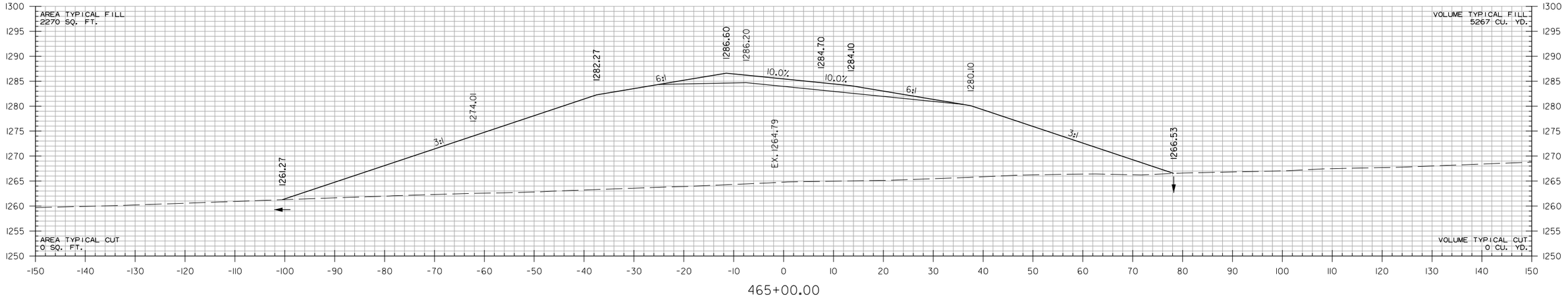

465+00.00

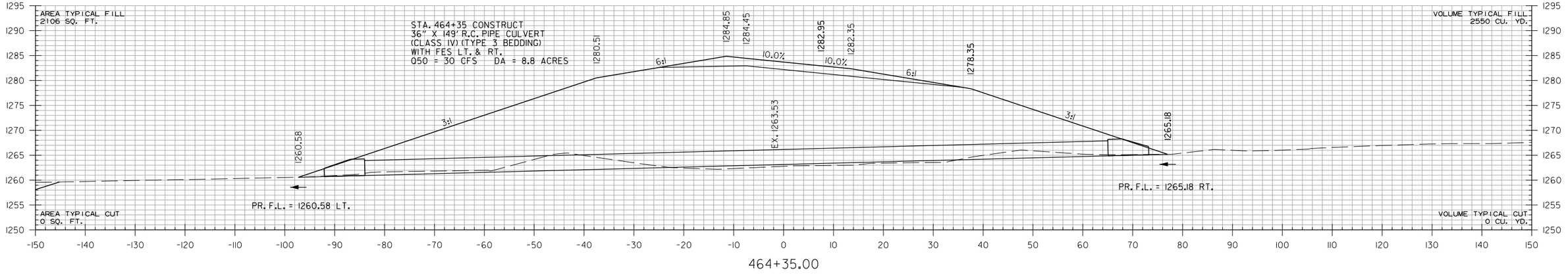

464+35.00

XNA ACCESS RD. RAMP I
STA. 464+35 TO STA. 465+00

HBVinson
WORKSPACE: AHTD
L:\2017\17017660 - ARDOT 012326 Hwy 412 - Hwy 112\Drawings\r012326_CX_XNA ACCESS RD. RAMP 1.dgn
REVISED DATE: 7/27/2023 3:19:36 PM

DATE REVISED	DATE REVISED	FED. RD. DIST. NO.	STATE	JOB NO.	SHEET NO.	TOTAL SHEETS
		6	ARK.	012326	733	838
		CROSS SECTIONS				
②						

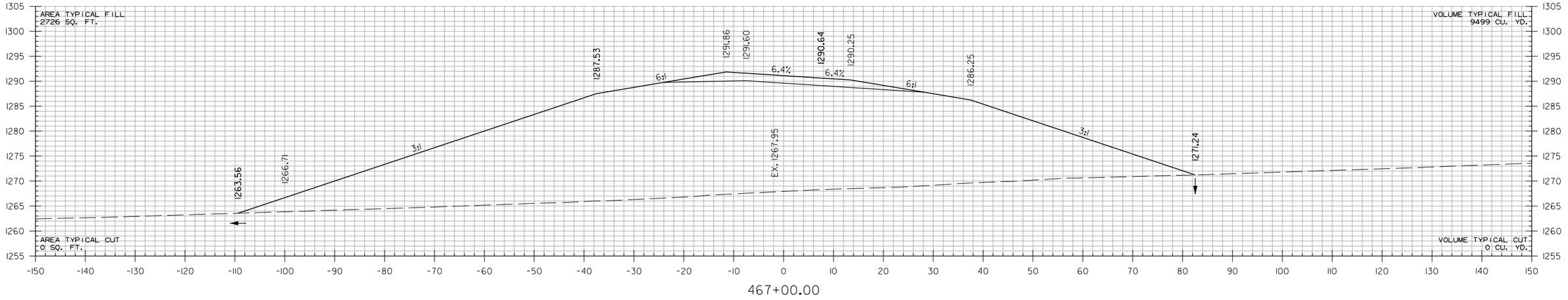

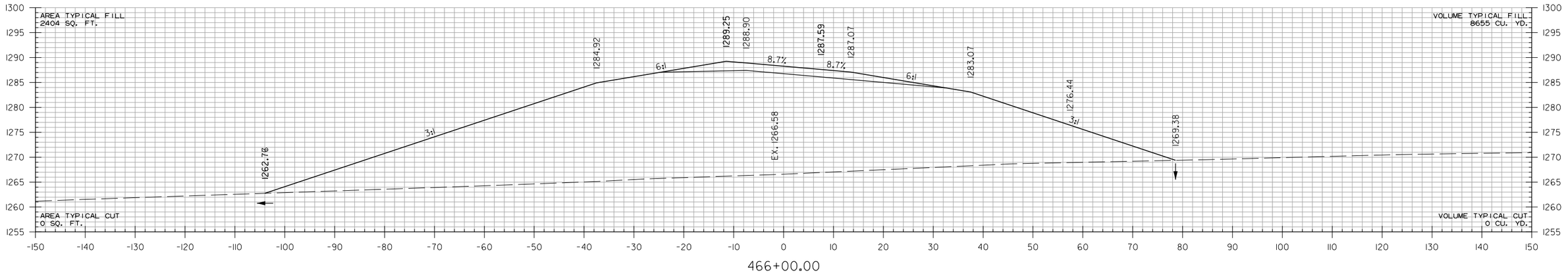

XNA ACCESS RD. RAMP I
STA. 466+00 TO STA. 467+00

HBVinson 7/27/2023 3:39:36 PM
WORKSPACE: AHTD
L:\2017\17017660 - ARDOT 012326 Hwy 412 - Hwy 112\Drawings\r012326_CX_XNA ACCESS RD. RAMP 1.dgn
REVISED DATE:

DATE REVISED	DATE REVISED	FED. RD. DIST. NO.	STATE	JOB NO.	SHEET NO.	TOTAL SHEETS
		6	ARK.	012326	734	838
		CROSS SECTIONS				
2						

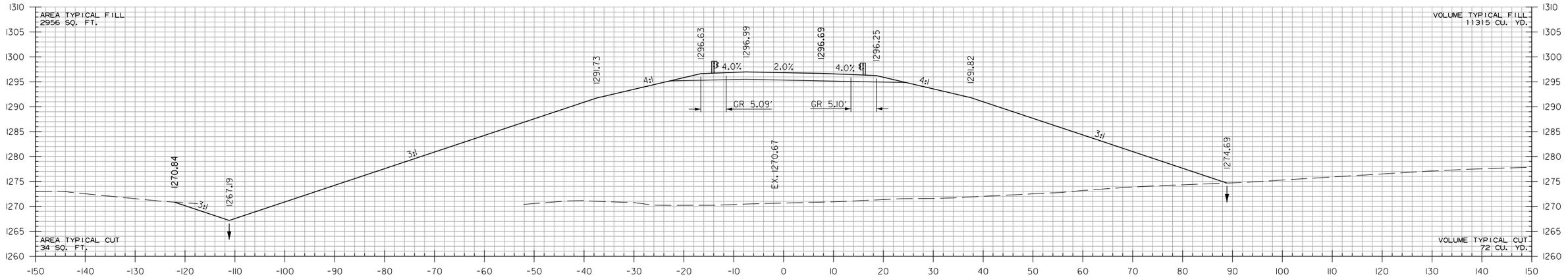

STA. 468+94.40 END SUPERELEVATION

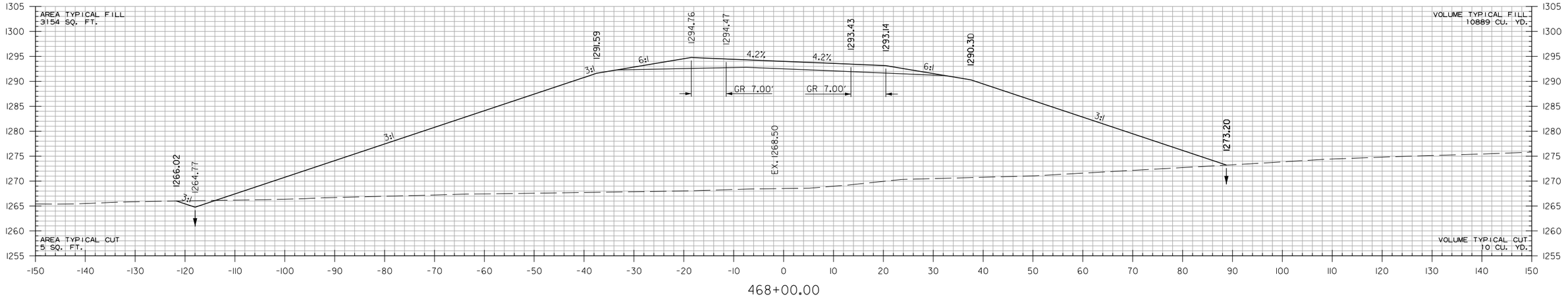

STA. 467+50.00
BEGIN SP. DT. LT. 2.42%
ELEV. 1263.56

XNA ACCESS RD. RAMP I
STA. 468+00 TO STA. 469+00

HBVinson 7/27/2023 3:9:36 PM
WORKSPACE: AHTD
L:\20IT\I70I660 - ARDOT 012326 Hwy 412 - Hwy 112\Drawings\r012326_CX_XNA ACCESS RD. RAMP I.dgn
REVISED DATE:

DATE REVISED	DATE REVISED	FED. RD. DIST. NO.	STATE	JOB NO.	SHEET NO.	TOTAL SHEETS
		6	ARK.	012326	735	838
		CROSS SECTIONS				

2

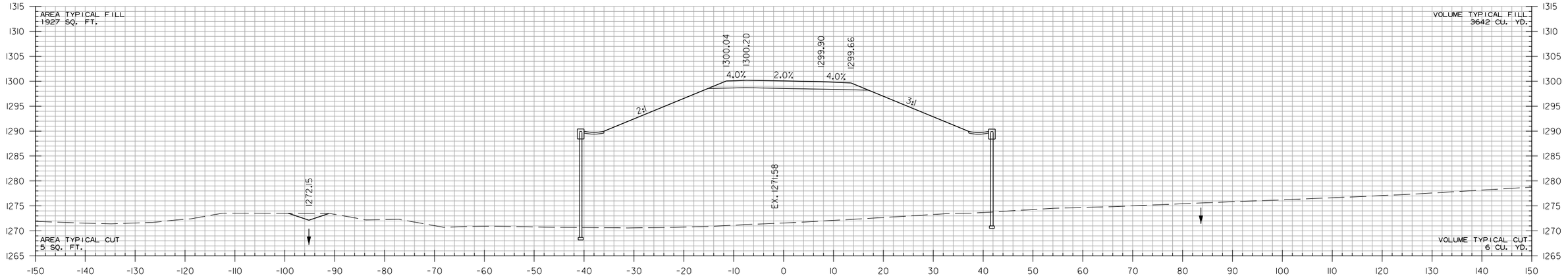

470+38.82

STA. 470+37.00
END SP. DT. LT. 2.42%
ELEV. 1270.50

STA. 470+38.82 BEGIN BRIDGE
BRIDGE END RETAINING WALL

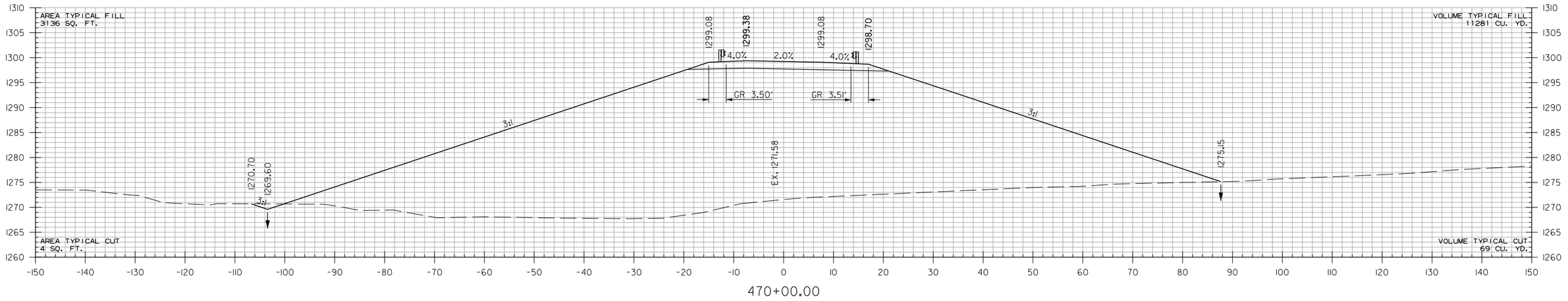

470+00.00

XNA ACCESS RD. RAMP 1
STA. 470+00 TO STA. 470+38.82

HBVinson 7/27/2023 3:19:36 PM
WORKSPACE: AHTD
L:\2017\17660 - ARDOT 012326 Hwy 412 - Hwy 112\Drawings\r012326_CX_XNA ACCESS RD. RAMP 1.dgn
REVISED DATE:

DATE REVISED	DATE REVISED	FED. RD. DIST. NO.	STATE	JOB NO.	SHEET NO.	TOTAL SHEETS
		6	ARK.	012326	736	838
		CROSS SECTIONS				
②						

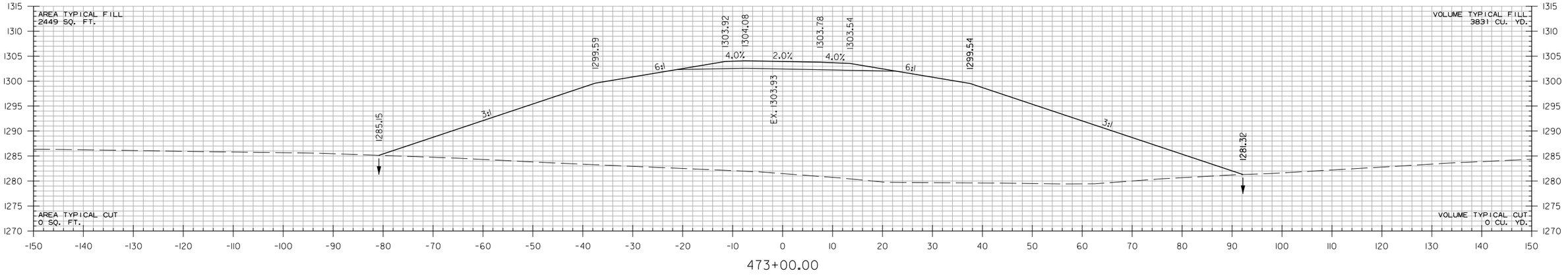

473+00.00

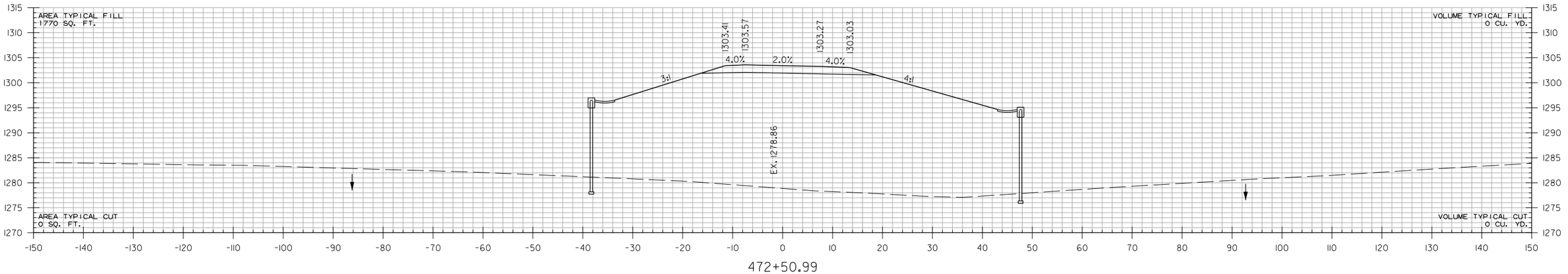

472+50.99

STA. 472+50.99 END BRIDGE
BRIDGE END RETAINING WALL

XNA ACCESS RD. RAMP I
STA. 472+50.99 TO STA. 473+00

HBVinson 7/27/2023 3:39:36 PM
WORKSPACE: AHTD
L:\2017\17017660 - ARDOT 012326 Hwy 412 - Hwy 112\Drawings\r012326_CX_XNA ACCESS RD. RAMP 1.dgn
REVISED DATE:

DATE REVISED	DATE REVISED	FED. RD. DIST. NO.	STATE	JOB NO.	SHEET NO.	TOTAL SHEETS
		6	ARK.	012326	737	838
		CROSS SECTIONS				
②						

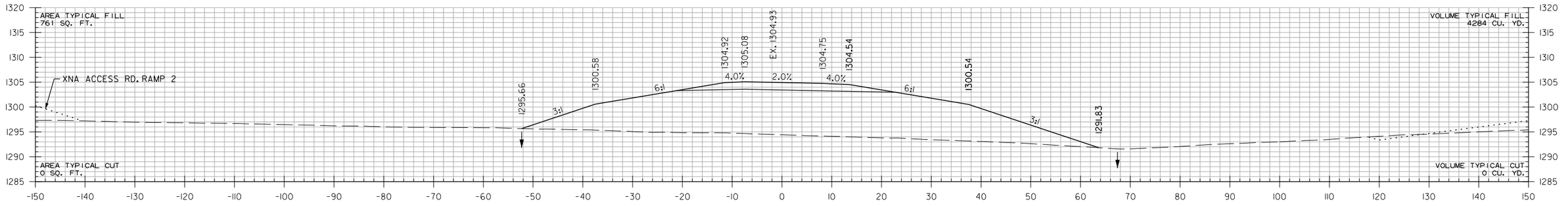

476+00.00

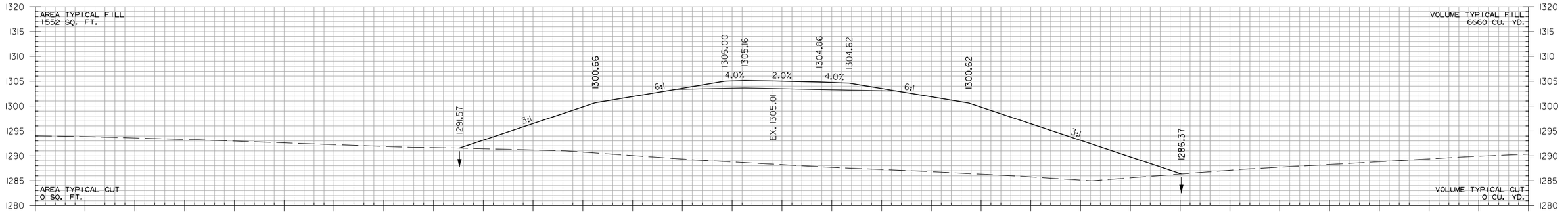

475+00.00

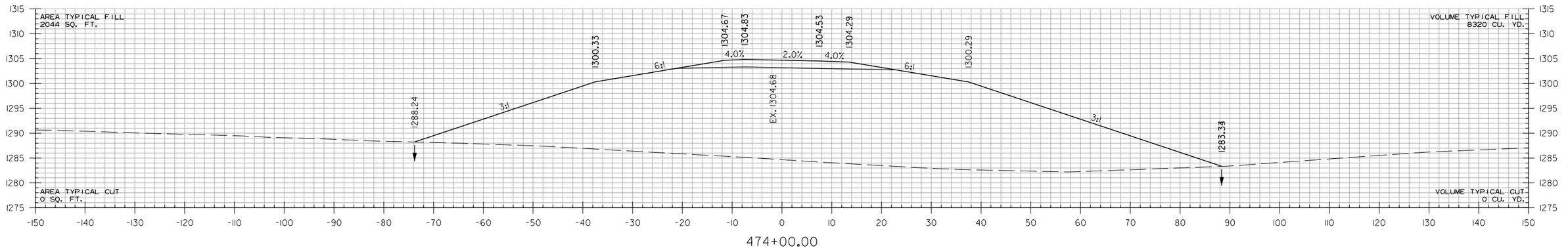

474+00.00

XNA ACCESS RD. RAMP 1
STA. 474+00 TO STA. 476+00

HBVinson 7/27/2023 3:9:36 PM
WORKSPACE: AHTD
L:\20\TV\170\f660 - ARDOT 012326 Hwy 412 - Hwy 112\Drawings\r012326_CX_XNA ACCESS RD. RAMP 1.dgn
REVISED DATE:

DATE REVISED	DATE REVISED	FED. RD. DIST. NO.	STATE	JOB NO.	SHEET NO.	TOTAL SHEETS
		6	ARK.	012326	738	838
2		CROSS SECTIONS				

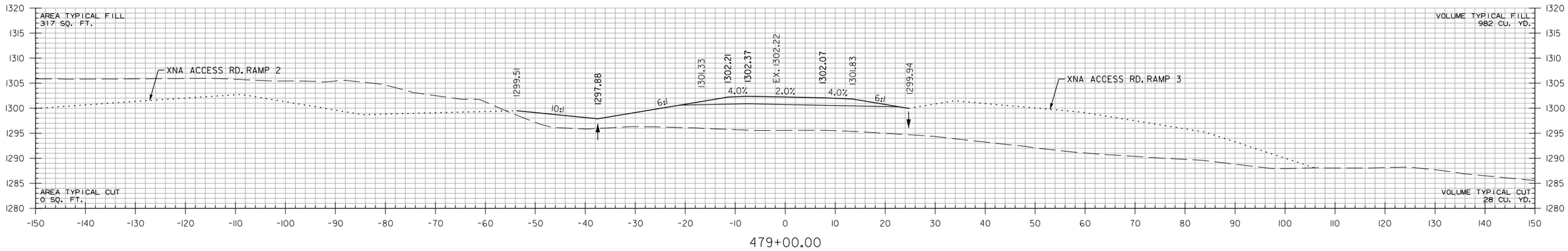

XNA ACCESS RD. RAMP 1
STA. 477+00 TO STA. 479+00

HBVinson 7/27/2023 3:19:36 PM
WORKSPACE: AHTD
L:\2017\17660 - ARDOT 012326 Hwy 412 - Hwy 112\Drawings\r012326_CX_XNA ACCESS RD. RAMP 1.dgn
REVISED DATE:

DATE REVISED	DATE REVISED	FED. RD. DIST. NO.	STATE	JOB NO.	SHEET NO.	TOTAL SHEETS
		6	ARK.	012326	739	838
		CROSS SECTIONS				
②						

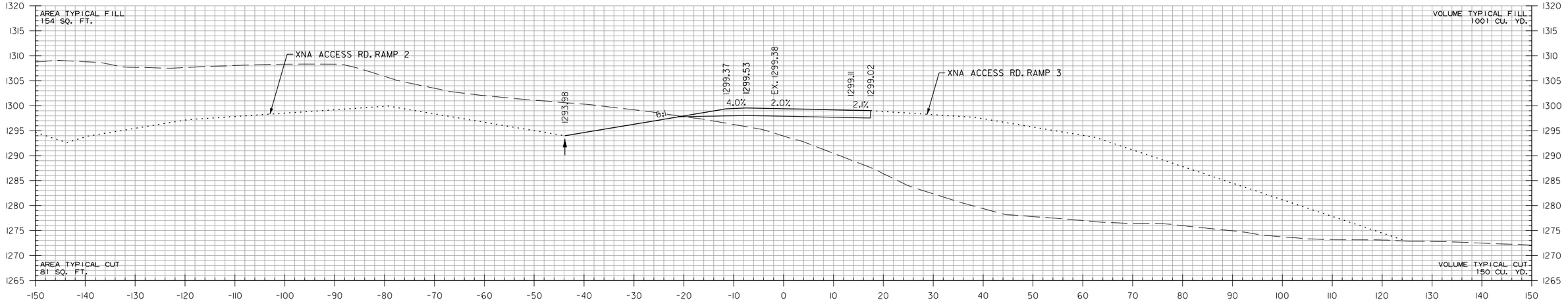

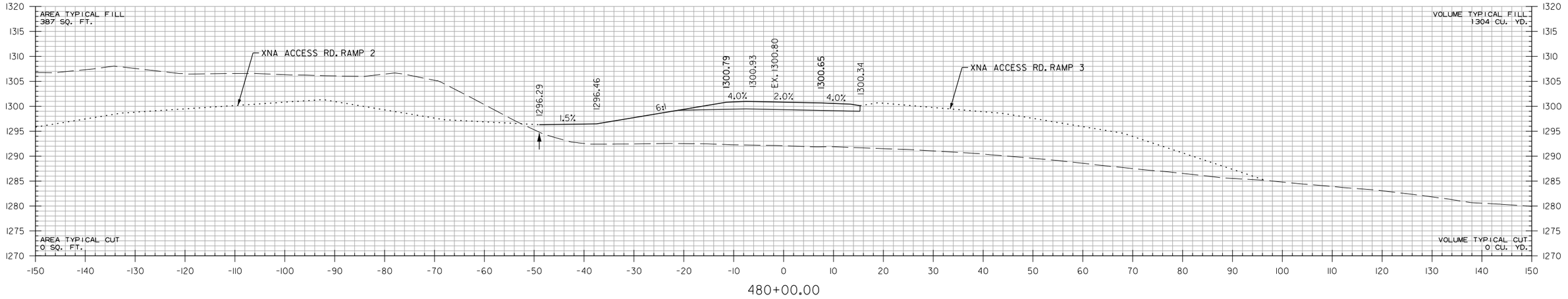

XNA ACCESS RD. RAMP 1
STA. 480+00 TO STA. 481+00

HBVinson 7/27/2023 3:9:37 PM
WORKSPACE: AHTD
L:\20\7\01\7660 - ARDOT 012326 Hwy 412 - Hwy 112\Drawings\r012326_CX_XNA ACCESS RD. RAMP 1.dgn
REVISED DATE:

DATE REVISED	DATE REVISED	FED. RD. DIST. NO.	STATE	JOB NO.	SHEET NO.	TOTAL SHEETS
		6	ARK.	012326	740	838
		CROSS SECTIONS				
(2)						

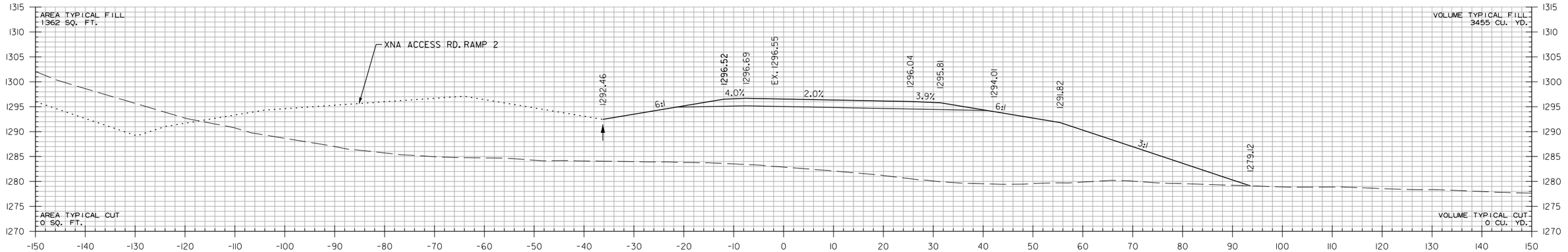

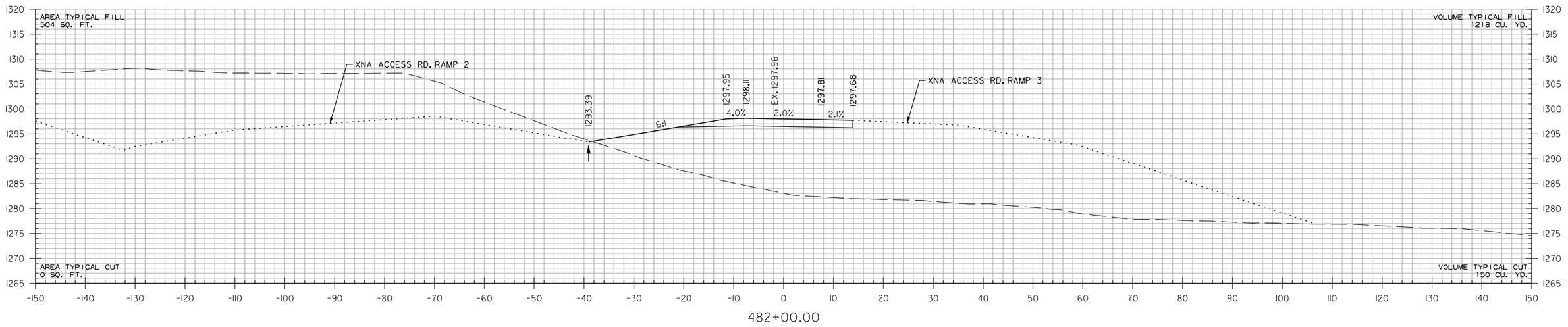

XNA ACCESS RD. RAMP 1
STA. 482+00 TO STA. 483+00

HBVinson
7/27/2023 3:19:37 PM
WORKSPACE: AHTD
L:\2017\170760 - ARDOT 012326 Hwy 412 - Hwy 112\Drawings\r012326_CX_XNA ACCESS RD. RAMP 1.dgn
REVISED DATE:

DATE REVISED	DATE REVISED	FED. RD. DIST. NO.	STATE	JOB NO.	SHEET NO.	TOTAL SHEETS
		6	ARK.	012326	741	838
		CROSS SECTIONS				
②						

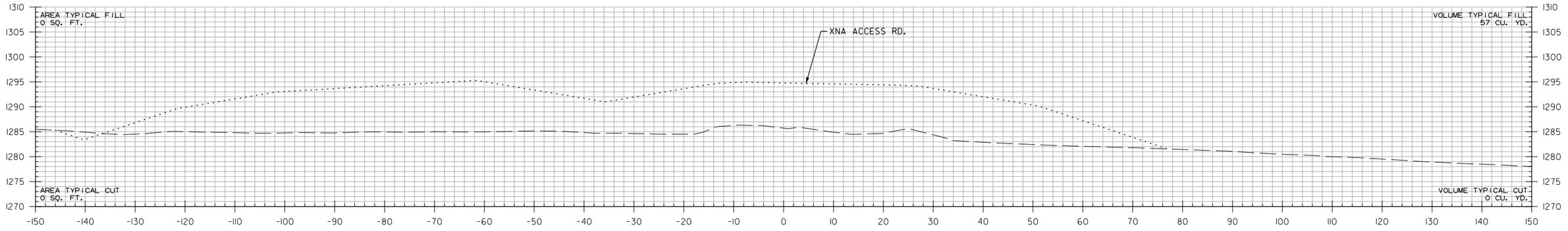

484+23.86

STA. 484+19.97 END XNA ACCESS RD. RAMP 1

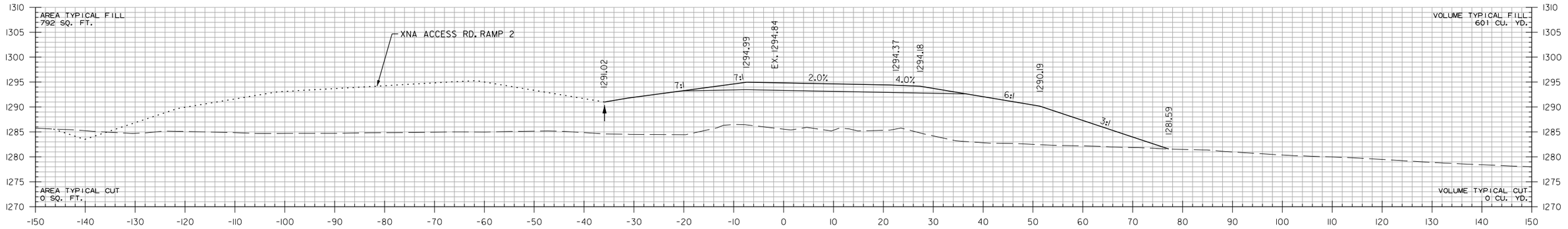

484+19.97

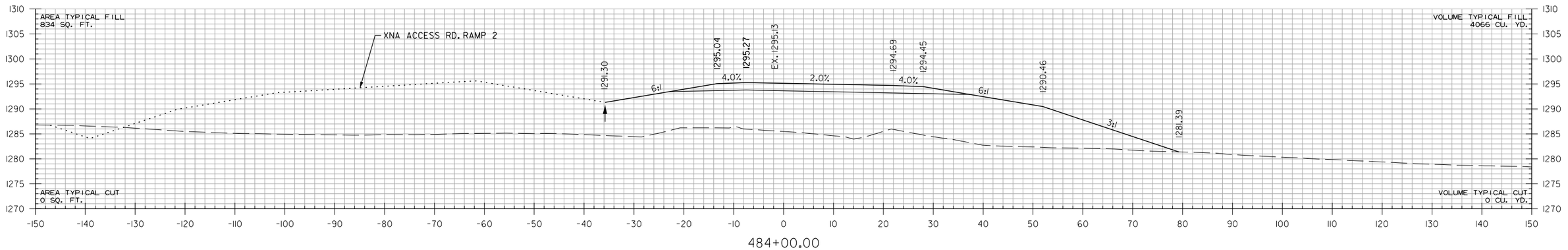

484+00.00

XNA ACCESS RD. RAMP 1
STA. 484+00 TO STA. 484+23.86

HBVinson 7/27/2023 3:9:37 PM
WORKSPACE: AHTD
L:\20\7\01\7660 - ARDOT 012326 Hwy 412 - Hwy 112\Drawings\r012326.CX_XNA ACCESS RD. RAMP 1.dgn
REVISED DATE:

DATE REVISED	DATE REVISED	FED. RD. DIST. NO.	STATE	JOB NO.	SHEET NO.	TOTAL SHEETS
		6	ARK.	012326	742	838
		CROSS SECTIONS				
②						

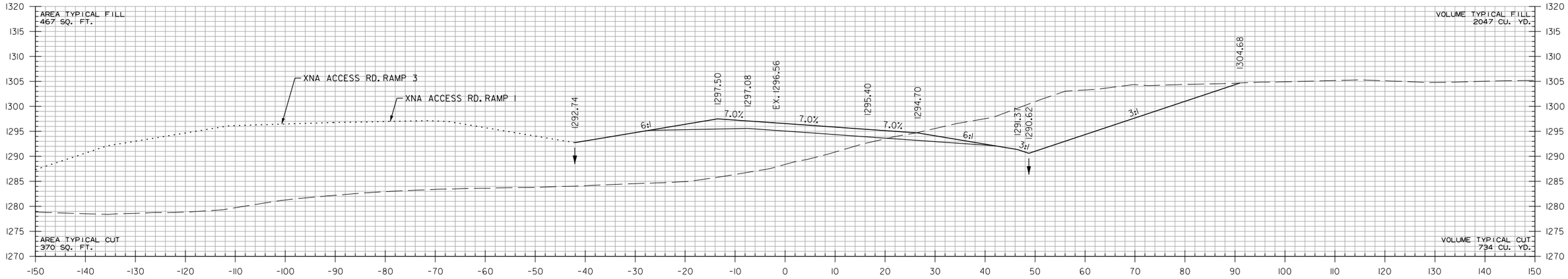

418+00.00

STA. 418+00.00
END SP. DT. RT. 5.86%
ELEV. 1290.62

STA. 417+39.90 MAX. SUPERELEVATION (0.070'/')

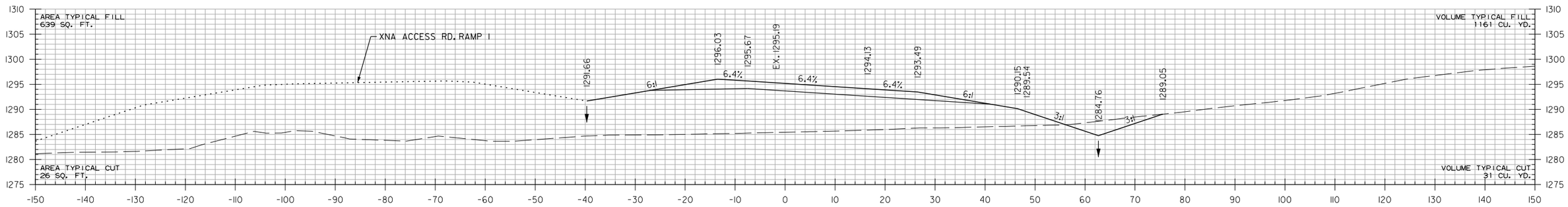

417+00.00

STA. 416+70.00
END SP. DT. RT. 0.00%
BEGIN SP. DT. RT. 5.86%
ELEV. 1283.00

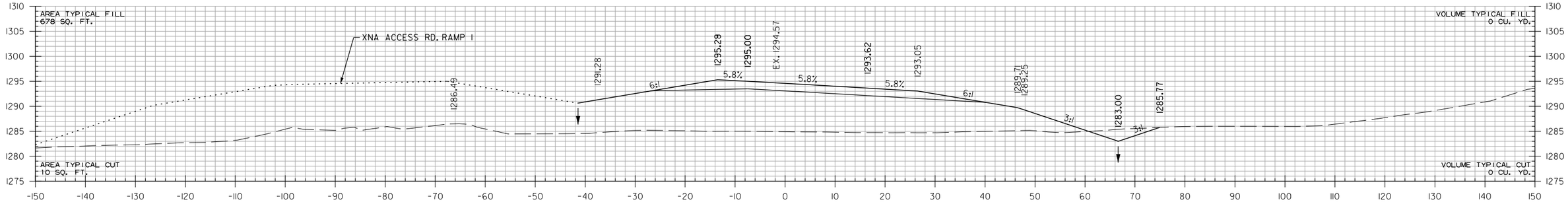

416+52.40

STA. 416+52.40 SUPERELEVATION (0.058'/')(MATCH XNA ACCESS RD.)

STA. 416+52.40 BEGIN XNA ACCESS RD. RAMP 2

STA. 416+52.40
BEGIN SP. DT. RT. 0.00%
ELEV. 1283.00

XNA ACCESS RD. RAMP 2
STA. 416+52.40 TO STA. 418+00

HBVinson
WORKSPACE: AHTD
L:\2017\170\T660 - ARDOT 012326 Hwy 412 - Hwy 112\Drawings\r012326.CX.XNA ACCESS RD. RAMP 2.dgn
7/21/2023 3:19:37 PM
REVISED DATE:

DATE REVISED	DATE REVISED	FED. RD. DIST. NO.	STATE	JOB NO.	SHEET NO.	TOTAL SHEETS
		6	ARK.	012326	743	838
		CROSS SECTIONS				
②						

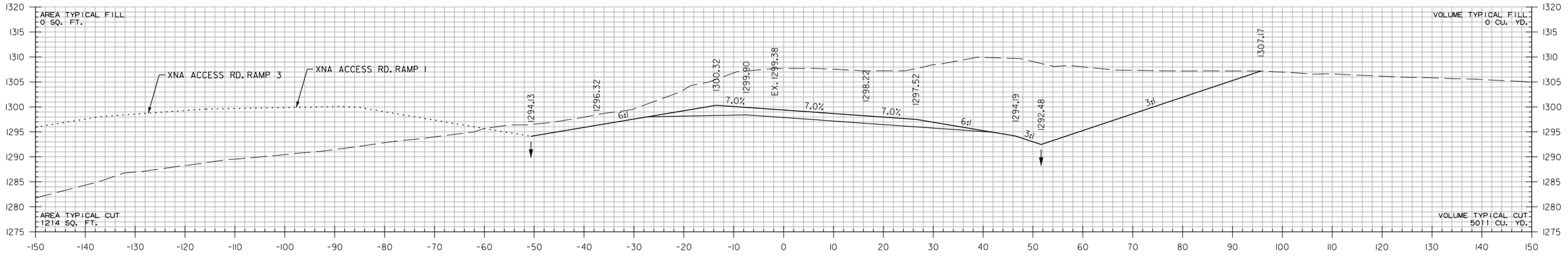

420+00.00

STA. 419+50.00
BEGIN SP. DT. RT. -0.50%
ELEV. 1292.73

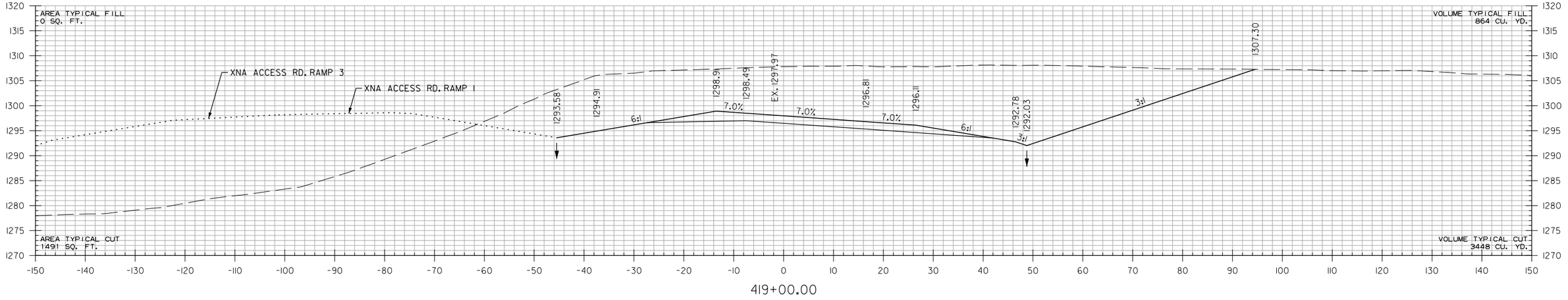

419+00.00

XNA ACCESS RD. RAMP 2
STA. 419+00 TO STA. 420+00

HBVinson 7/27/2023 3:9:37 PM
WORKSPACE: AHTD
L:\20IT\170I660 - ARDOT 012326 Hwy 412 - Hwy 112\Drawings\r012326_CX_XNA ACCESS RD. RAMP 2.dgn
REVISED DATE:

DATE REVISED	DATE REVISED	FED. RD. DIST. NO.	STATE	JOB NO.	SHEET NO.	TOTAL SHEETS
		6	ARK.	012326	744	838
		CROSS SECTIONS				
②						

STA. 423+39.35
END SP. DT. RT. -0.50%
ELEV. 1290.78

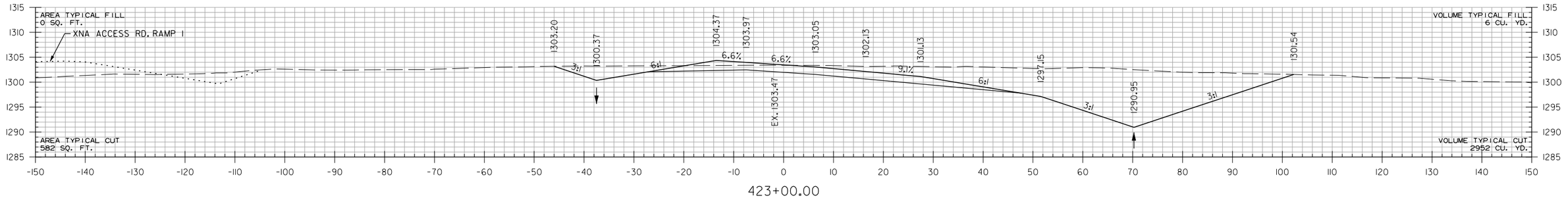

423+00.00

STA. 422+72.22 MAX. SUPERELEVATION (0.070'/')

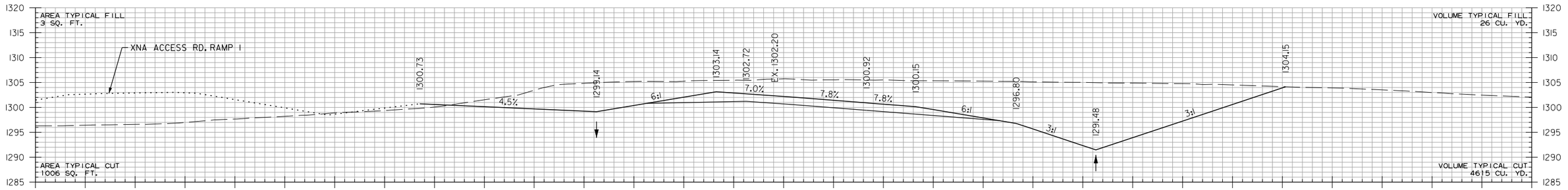

422+00.00

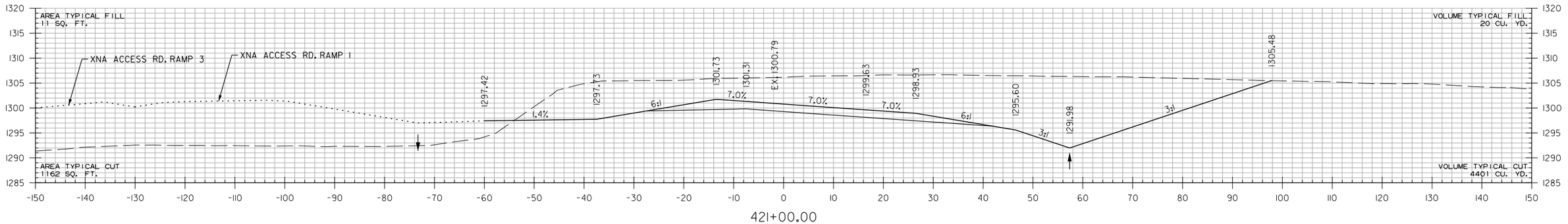

421+00.00

XNA ACCESS RD. RAMP 2
STA. 421+00 TO STA. 423+00

HBVinson
WORKSPACE: AHTD
L:\2017\17017660 - ARDOT 012326 Hwy 412 - Hwy 112\Drawings\r012326.CX.XNA ACCESS RD. RAMP 2.dgn
7/21/2023 3:19:37 PM
REVISED DATE:

DATE REVISED	DATE REVISED	FED. RD. DIST. NO.	STATE	JOB NO.	SHEET NO.	TOTAL SHEETS
		6	ARK.	012326	745	838
		CROSS SECTIONS				
②						

STA. 426+22.22 END SUPERELEVATION

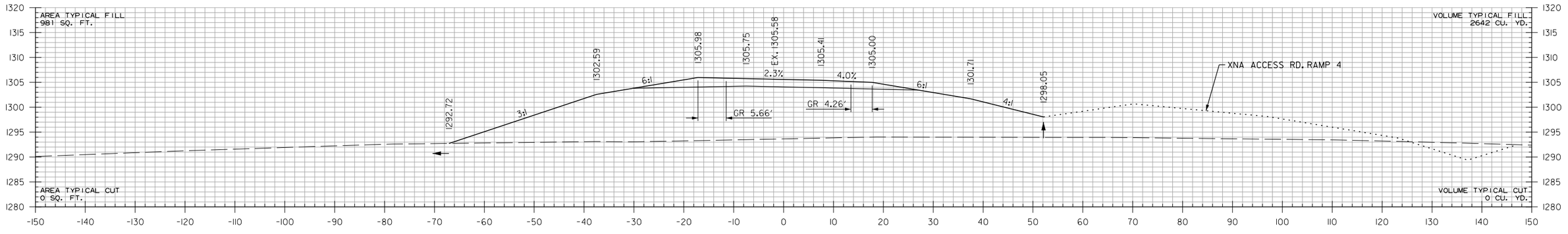

426+00.00

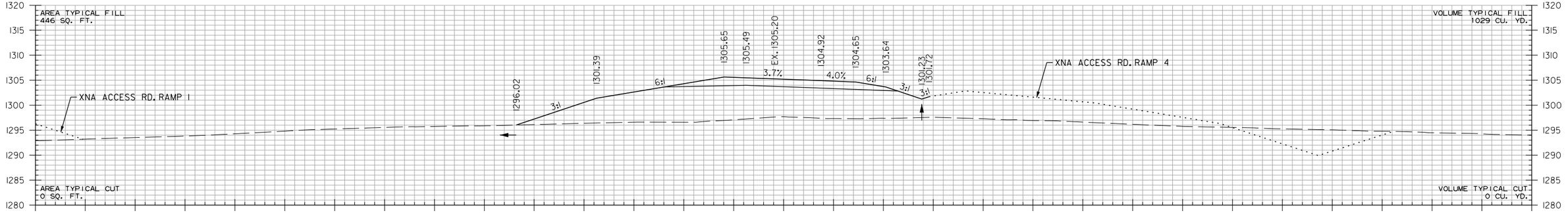

425+00.00

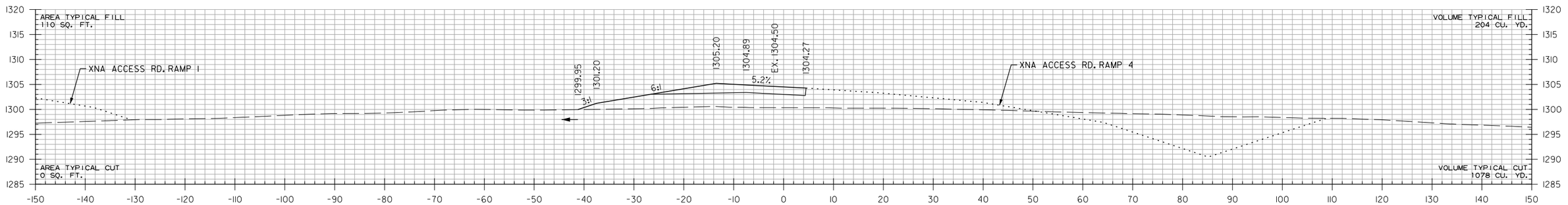

424+00.00

XNA ACCESS RD. RAMP 2
STA. 424+00 TO STA. 426+00

HBVinson
WORKSPACE: AHTD
L:\20IT\I70I660 - ARDOT 012326 Hwy 412 - Hwy 112\Drawings\r012326.CX.XNA ACCESS RD. RAMP 2.dgn
REVISED DATE:
7/27/2023 3:19:37 PM

DATE REVISED	DATE REVISED	FED. RD. DIST. NO.	STATE	JOB NO.	SHEET NO.	TOTAL SHEETS
		6	ARK.	012326	746	838
		CROSS SECTIONS				
(2)						

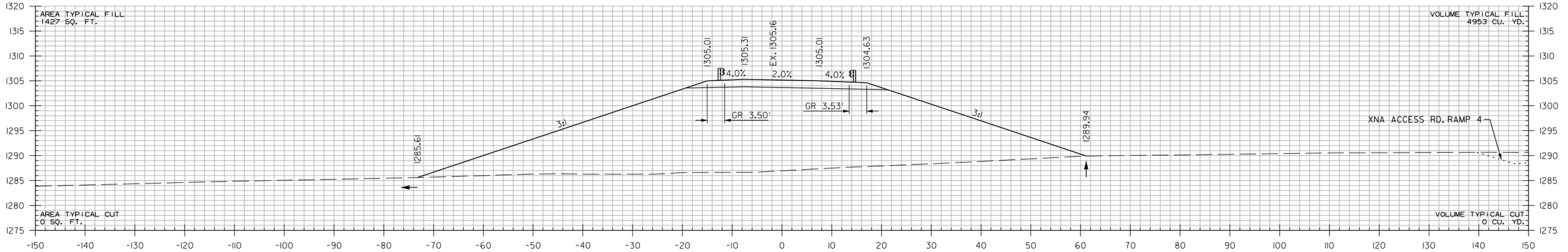

428+00.00

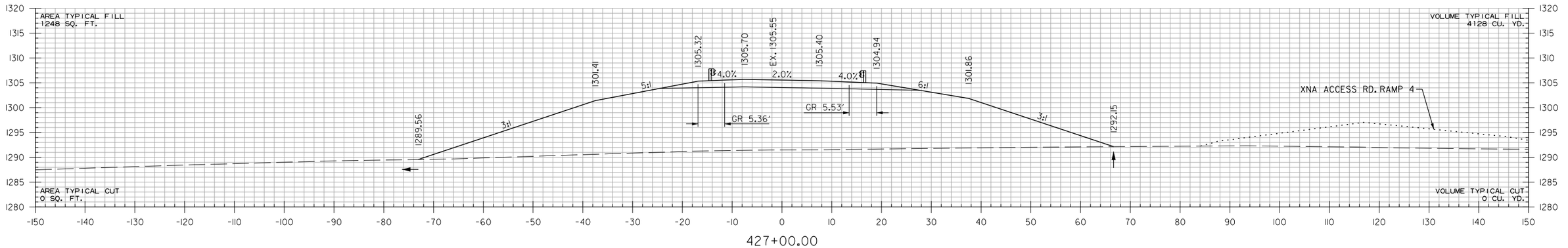

427+00.00

XNA ACCESS RD. RAMP 2
STA. 427+00 TO STA. 428+00

HBVinson 7/27/2023 3:9:37 PM
WORKSPACE: AHTD
L:\20\TV\70\f660 - ARDOT 012326 Hwy 412 - Hwy 112\Drawings\r-012326_CX_XNA ACCESS RD. RAMP 2.dgn
REVISED DATE:

DATE REVISED	DATE REVISED	FED. RD. DIST. NO.	STATE	JOB NO.	SHEET NO.	TOTAL SHEETS
		6	ARK.	012326	747	838
		CROSS SECTIONS				
2						

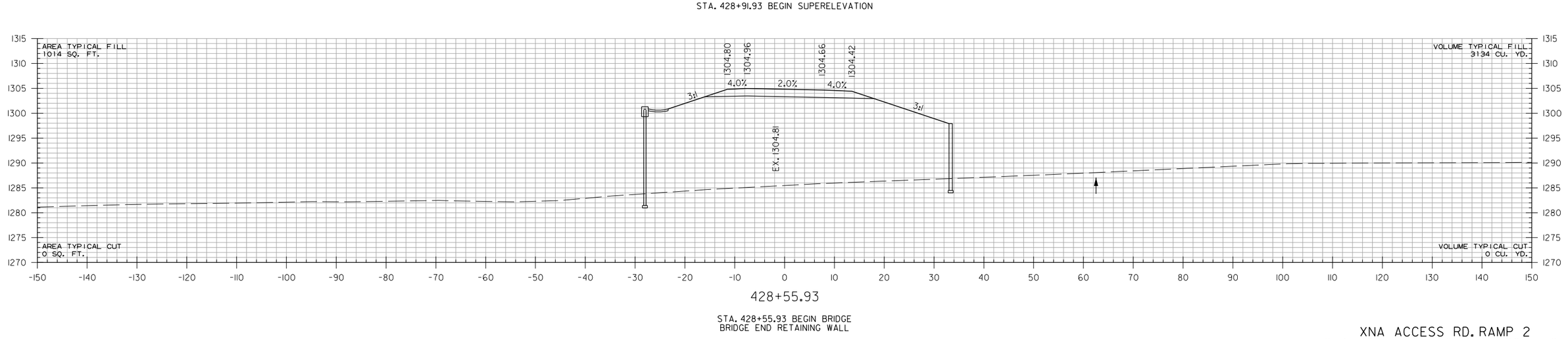

XNA ACCESS RD. RAMP 2
STA. 428+55.93 TO STA. 428+55.93

HBVinson 7/27/2023 3:19:38 PM
WORKSPACE: AHTD
L:\2017\170176660 - ARDOT 02326 Hwy 412 - Hwy 112\Drawings\r02326_CX_XNA ACCESS RD. RAMP 2.dgn
REVISED DATE:

DATE REVISED	DATE REVISED	FED. RD. DIST. NO.	STATE	JOB NO.	SHEET NO.	TOTAL SHEETS
		6	ARK.	012326	748	838
		CROSS SECTIONS				
(2)						

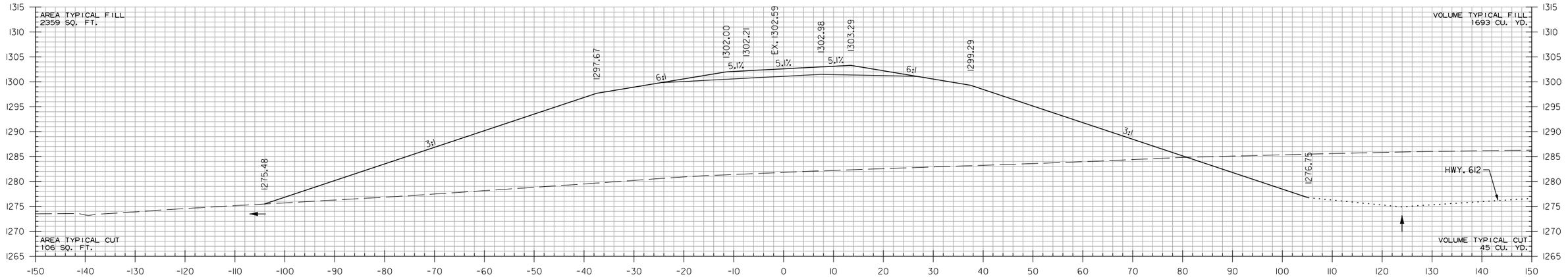

431+00.00

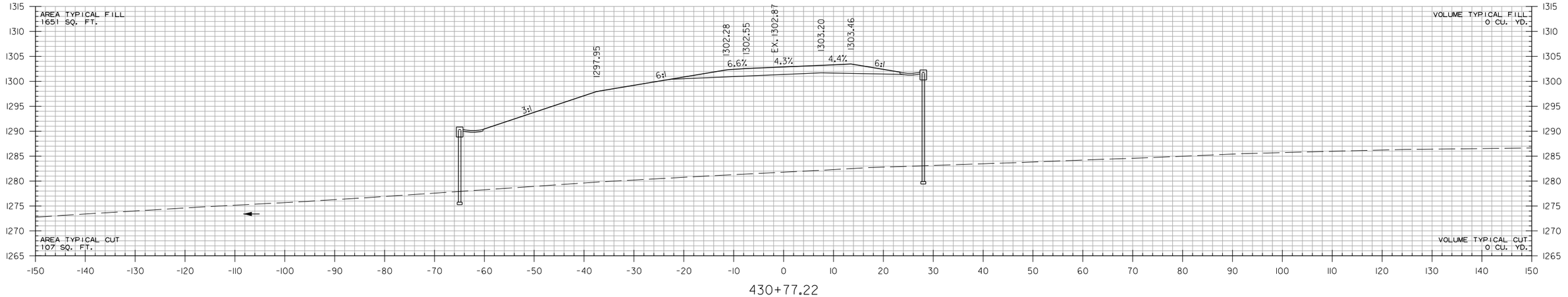

430+77.22

STA. 430+77.22 END BRIDGE
BRIDGE END RETAINING WALL

XNA ACCESS RD. RAMP 2
STA. 430+77.22 TO STA. 431+00

HBVinson 7/27/2023 3:9:38 PM
WORKSPACE: AHTD
L:\20IT\170I660 - ARDOT 012326 Hwy 412 - Hwy 112\Drawings\r-012326_CX_XNA ACCESS RD. RAMP 2.dgn
REVISED DATE:

DATE REVISED	DATE REVISED	FED. RD. DIST. NO.	STATE	JOB NO.	SHEET NO.	TOTAL SHEETS
		6	ARK.	012326	749	838
		CROSS SECTIONS				
②						

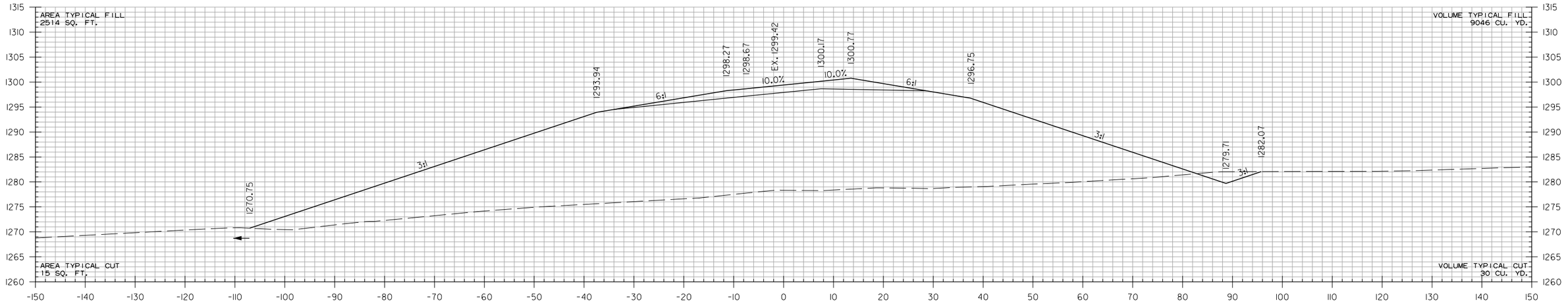

STA. 432+41.93 MAX. SUPERELEVATION (0.100'/')

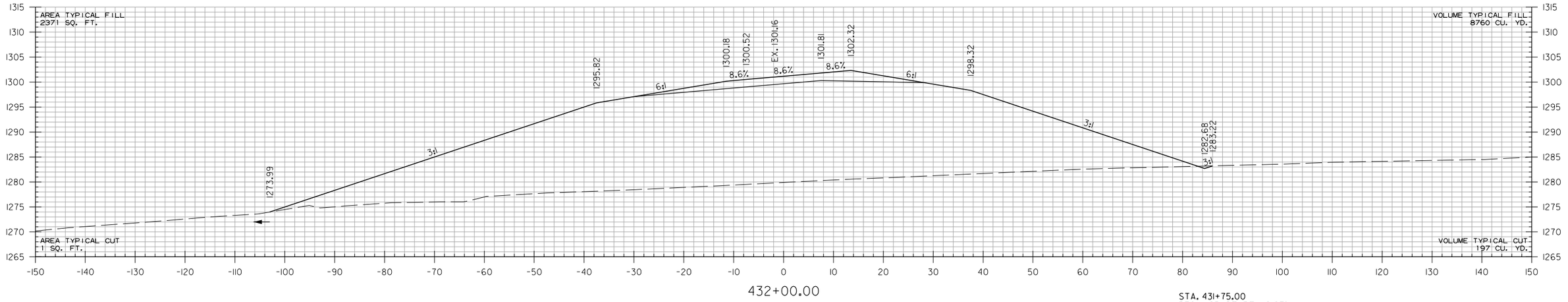

STA. 431+75.00
BEGIN SP. DT. RT. -2.97%
ELEV. 1283.43

XNA ACCESS RD. RAMP 2
STA. 432+00 TO STA. 433+00

HBVinson 7/27/2023 3:9:38 PM
WORKSPACE: AHTD
L:\20IT\170I660 - ARDOT 012326 Hwy 412 - Hwy 112\Drawings\r-012326_CX_XNA ACCESS RD. RAMP 2.dgn
REVISED DATE:

DATE REVISED	DATE REVISED	FED. RD. DIST. NO.	STATE	JOB NO.	SHEET NO.	TOTAL SHEETS
		6	ARK.	012326	750	838
		CROSS SECTIONS				

2

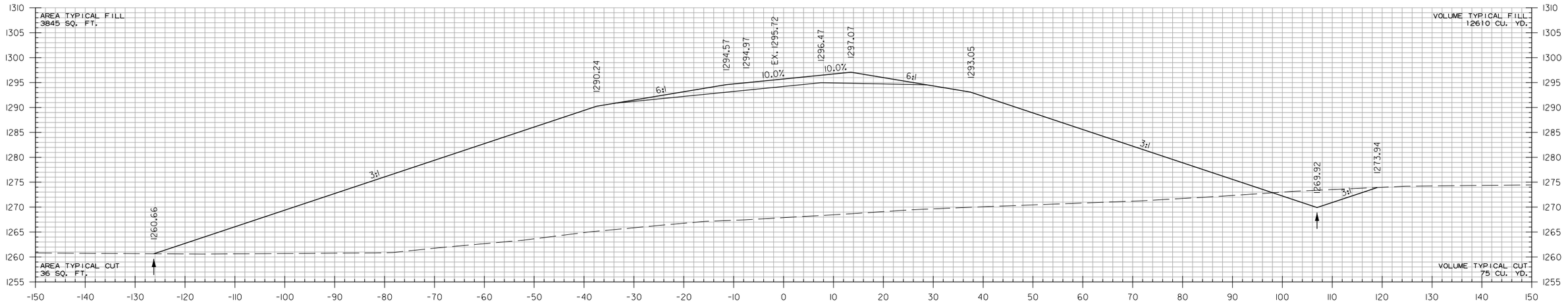

435+00.00

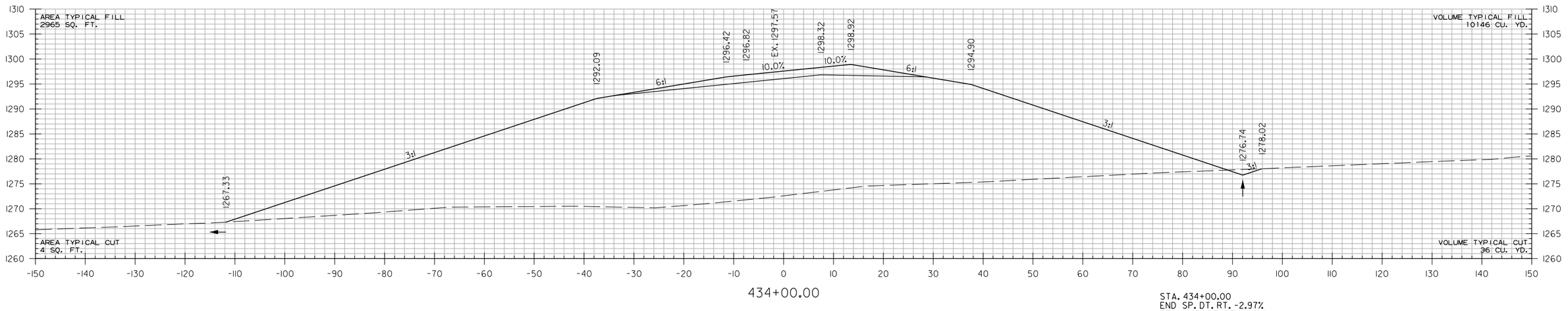

434+00.00

STA. 434+00.00
END SP. DT. RT. -2.97%
BEGIN SP. DT. RT. -6.81%
ELEV. 1276.74

XNA ACCESS RD. RAMP 2
STA. 434+00 TO STA. 435+00

HBVinson 7/27/2023 3:19:38 PM
WORKSPACE: AHTD
L:\2017\17017660 - ARDOT 012326 Hwy 412 - Hwy 112\Drawings\r012326_CX_XNA ACCESS RD. RAMP 2.dgn
REVISED DATE:

DATE REVISED	DATE REVISED	FED. RD. DIST. NO.	STATE	JOB NO.	SHEET NO.	TOTAL SHEETS
		6	ARK.	012326	751	838
		CROSS SECTIONS				

2

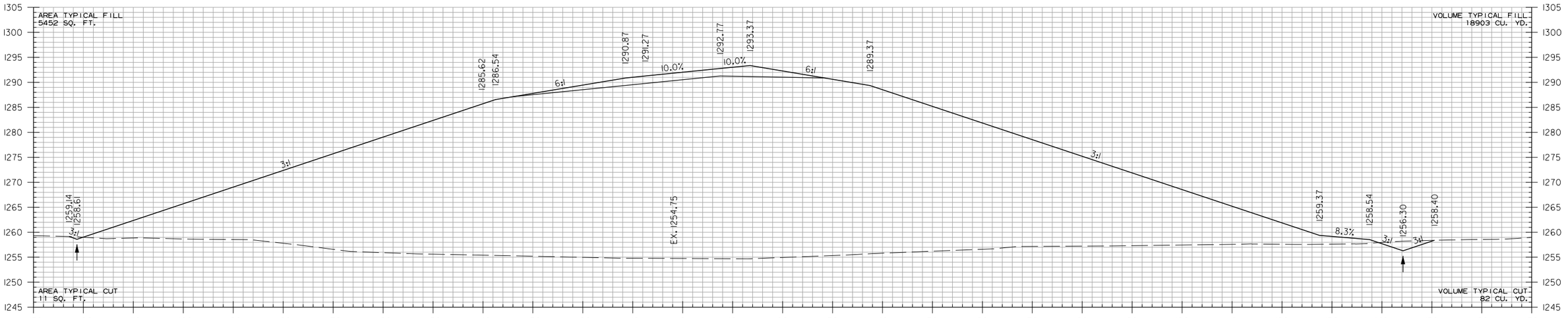

437+00.00

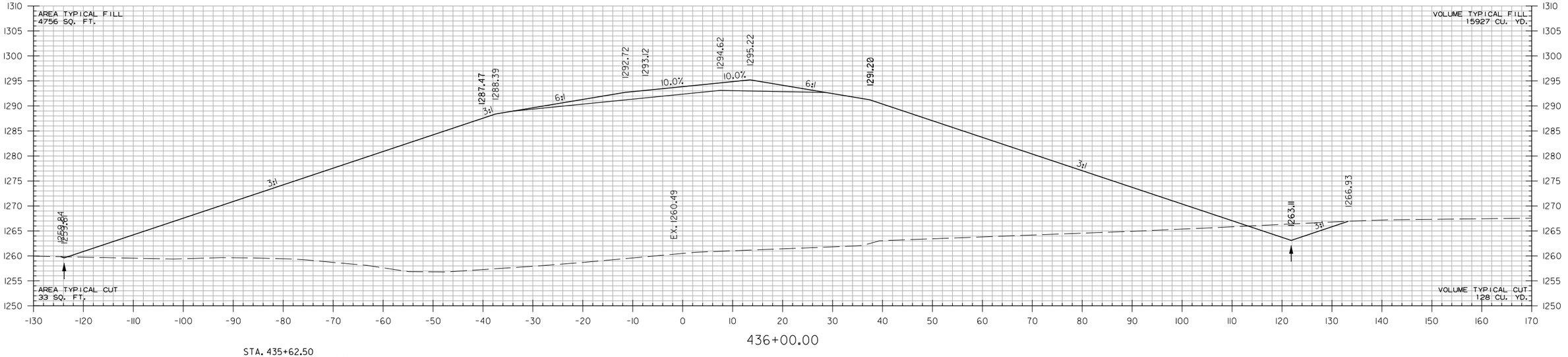

436+00.00

STA. 435+62.50
BEGIN SP. DT. LT. -1.00%
ELEV. 1259.98

XNA ACCESS RD. RAMP 2
STA. 436+00 TO STA. 437+00

HBVinson 7/27/2023 3:19:38 PM
WORKSPACE: AHTD
L:\2017\17017660 - ARDOT 012326 Hwy 412 - Hwy 112\Drawings\r012326_CX_XNA ACCESS RD. RAMP 2.dgn
REVISED DATE:

DATE REVISED	DATE REVISED	FED. RD. DIST. NO.	STATE	JOB NO.	SHEET NO.	TOTAL SHEETS
		6	ARK.	012326	752	838
		CROSS SECTIONS				
②						

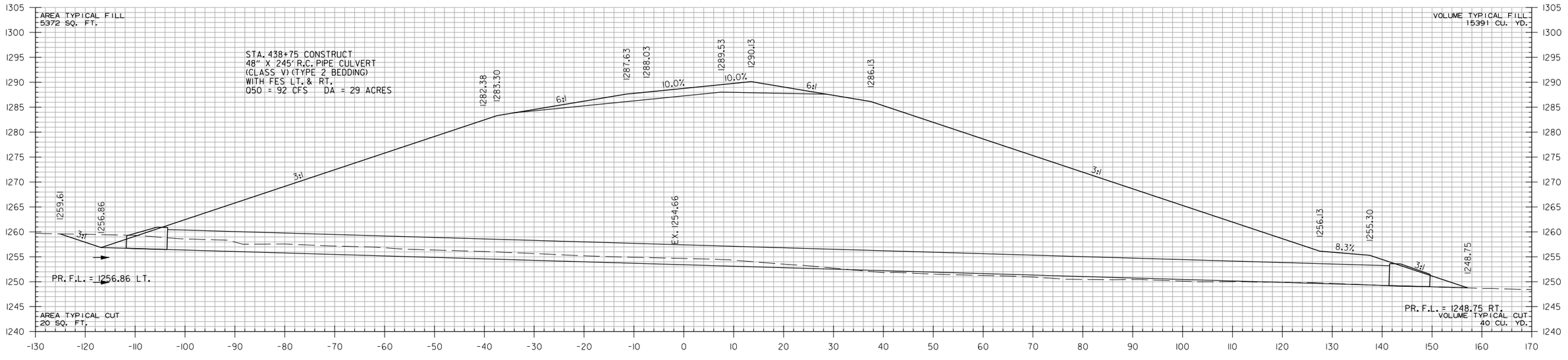

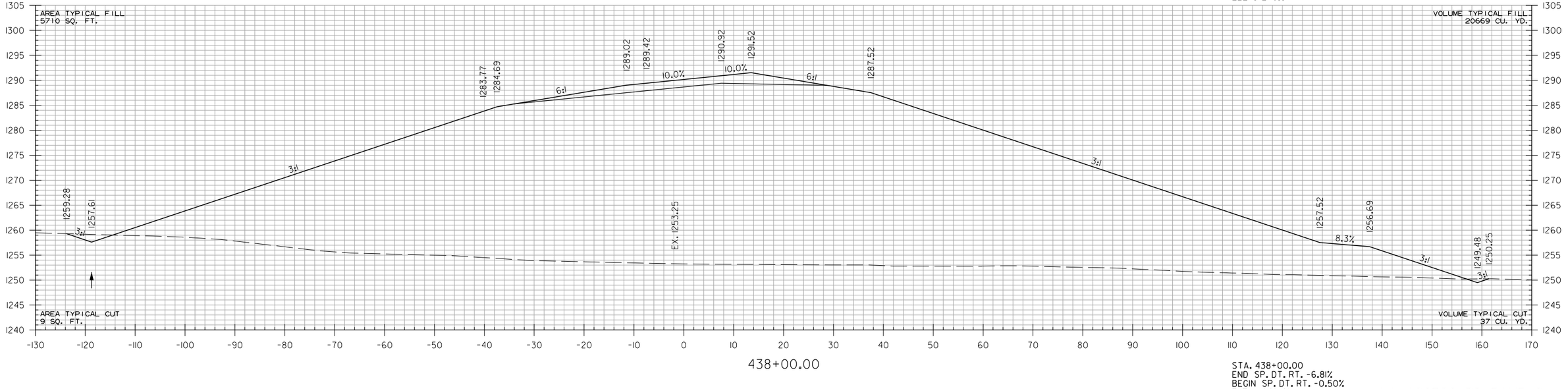

XNA ACCESS RD. RAMP 2
STA. 438+00 TO STA. 438+75

HBVinson
WORKSPACE: AHTD
L:\2017\17017660 - ARDOT 012326 Hwy 412 - Hwy 112\Drawings\r012326_CX_XNA ACCESS RD. RAMP 2.dgn
7/27/2023 3:19:38 PM
REVISED DATE:

DATE REVISED	DATE REVISED	FED. RD. DIST. NO.	STATE	JOB NO.	SHEET NO.	TOTAL SHEETS
		6	ARK.	012326	753	838
		CROSS SECTIONS				
②						

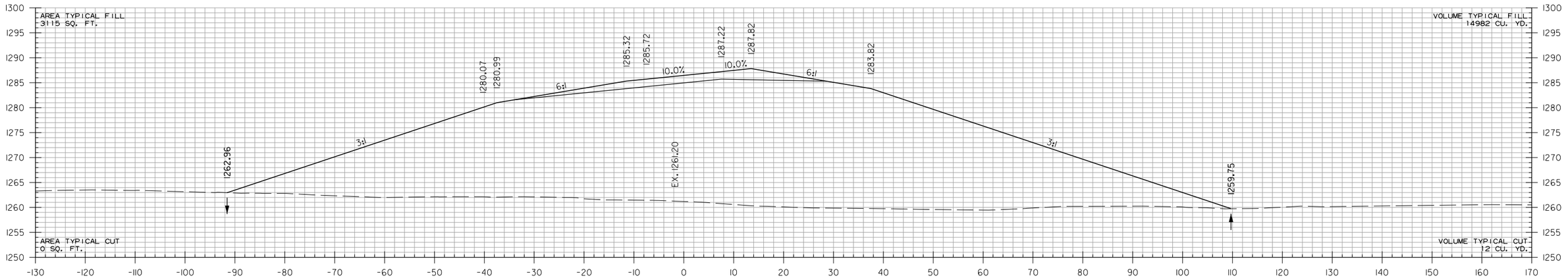

STA. 440+00.00
END SP. DT. LT. 4.88%
ELEV. 1262.96

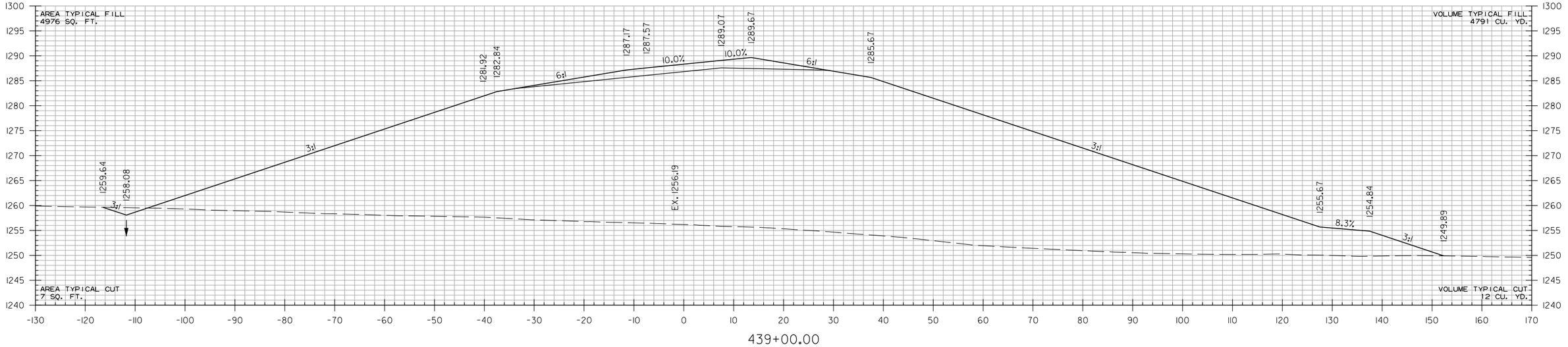

XNA ACCESS RD. RAMP 2
STA. 439+00 TO STA. 440+00

HBVinson
WORKSPACE: AHTD
L:\2017\170\T660 - ARDOT 012326 Hwy 412 - Hwy 112\Drawings\r012326.CX.XNA ACCESS RD. RAMP 2.dgn
7/27/2023 3:19:38 PM
REVISED DATE:

DATE REVISED	DATE REVISED	FED. RD. DIST. NO.	STATE	JOB NO.	SHEET NO.	TOTAL SHEETS
		6	ARK.	012326	754	838
		CROSS SECTIONS				
(2)						

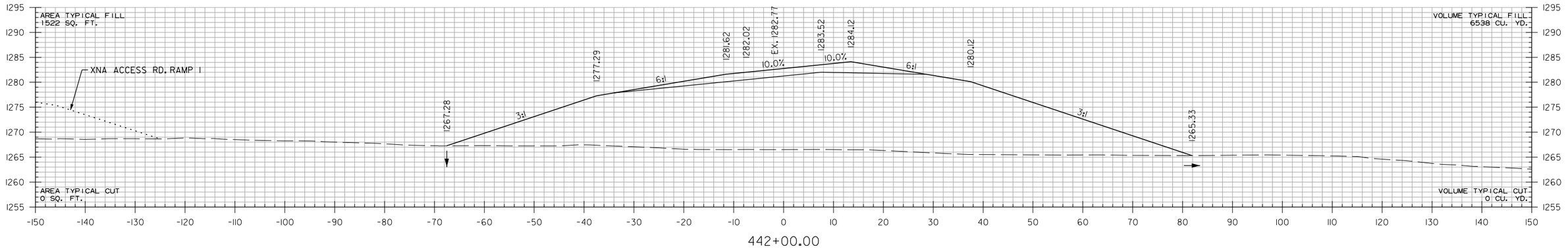

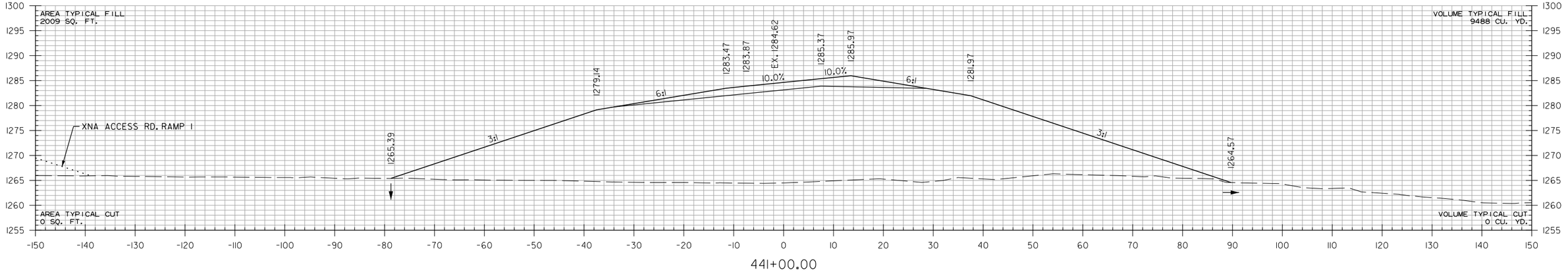

XNA ACCESS RD. RAMP 2
STA. 441+00 TO STA. 442+00

HBVinson 7/27/2023 3:39:38 PM
WORKSPACE: AHTD
L:\2017\17017660 - ARDOT 012326 Hwy 412 - Hwy 112\Drawings\r012326_CX_XNA ACCESS RD. RAMP 2.dgn
REVISED DATE:

DATE REVISED	DATE REVISED	FED. RD. DIST. NO.	STATE	JOB NO.	SHEET NO.	TOTAL SHEETS
		6	ARK.	012326	755	838
		CROSS SECTIONS				
②						

STA. 444+83.00
END SP. DT. LT. -1.04%
BEGIN SP. DT. LT. 0.50%
ELEV. 1265.35

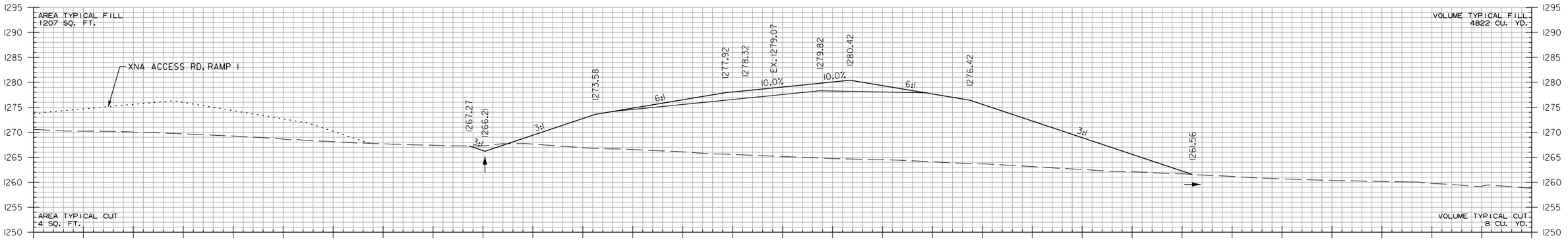

444+00.00

STA. 443+42.50
BEGIN SP. DT. LT. -1.04%
ELEV. 1266.81

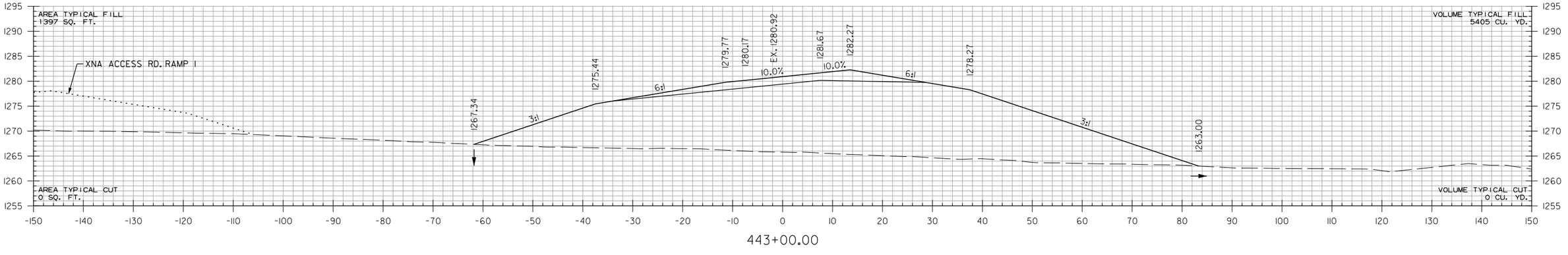

443+00.00

XNA ACCESS RD. RAMP 2
STA. 443+00 TO STA. 444+00

HBVinson
WORKSPACE: AHTD
L:\20\T\T01\660 - ARDOT 012326 Hwy 412 - Hwy 112\Drawings\r012326.CX.XNA ACCESS RD. RAMP 2.dgn
7/21/2023 3:19:38 PM
REVISED DATE:

DATE REVISED	DATE REVISED	FED. RD. DIST. NO.	STATE	JOB NO.	SHEET NO.	TOTAL SHEETS
		6	ARK.	012326	756	838
		CROSS SECTIONS				
②						

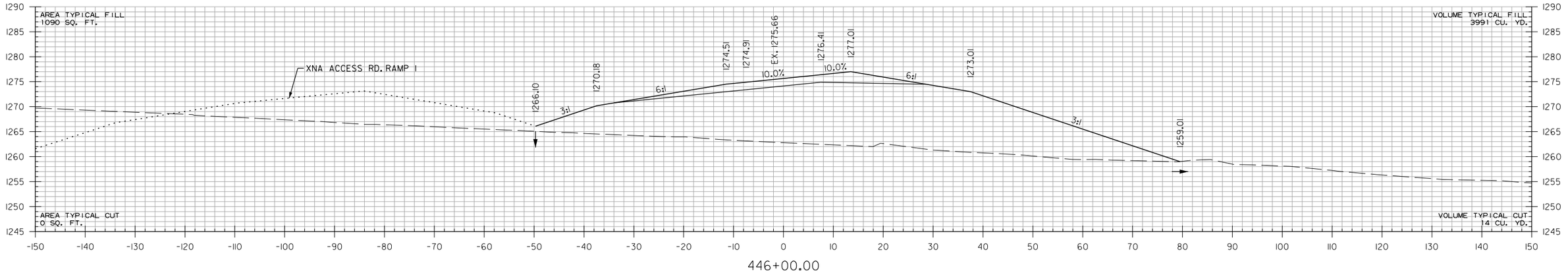

446+00.00

STA. 445+70.00
END SP. DT. LT. 0.50%
ELEV. 1265.79

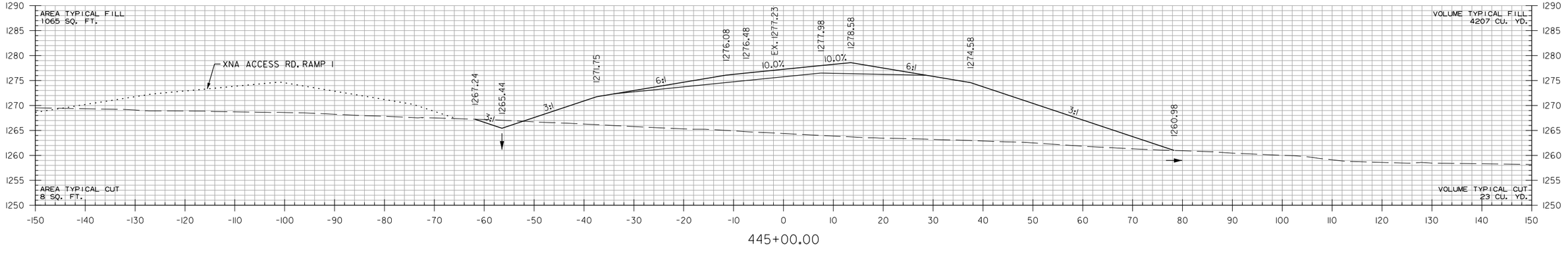

445+00.00

XNA ACCESS RD. RAMP 2
STA. 445+00 TO STA. 446+00

HBVinson
7/27/2023 3:19:38 PM
WORKSPACE: AHTD
L:\20\T\T01\660 - ARDOT 012326 Hwy 412 - Hwy 112\Drawings\r012326_CX_XNA ACCESS RD. RAMP 2.dgn
REVISED DATE:

DATE REVISED	DATE REVISED	FED. RD. DIST. NO.	STATE	JOB NO.	SHEET NO.	TOTAL SHEETS
		6	ARK.	012326	757	838
		CROSS SECTIONS				
②						

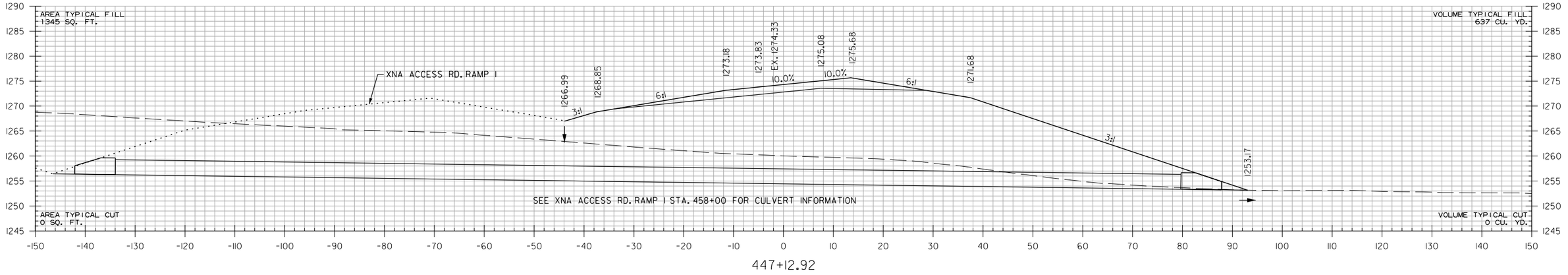

447+12.92

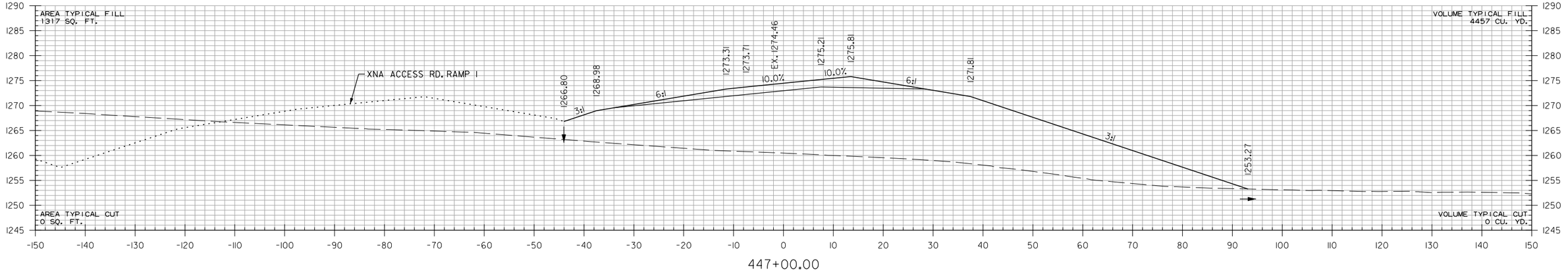

447+00.00

XNA ACCESS RD. RAMP 2
STA. 447+00 TO STA. 447+12.92

HBVinson
WORKSPACE: AHTD
L:\2017\17017660 - ARDOT 012326 Hwy 412 - Hwy 112\Drawings\r012326_CX_XNA ACCESS RD. RAMP 2.dgn
REVISED DATE: 7/27/2023 3:19:39 PM

DATE REVISED	DATE REVISED	FED. RD. DIST. NO.	STATE	JOB NO.	SHEET NO.	TOTAL SHEETS
		6	ARK.	012326	758	838
		CROSS SECTIONS				

(2)

STA. 449+92.50
BEGIN SP. DT. LT. -2.15%
ELEV. 1263.00

STA. 449+10.00
BEGIN SP. DT. RT. 0.64%
ELEV. 1256.71

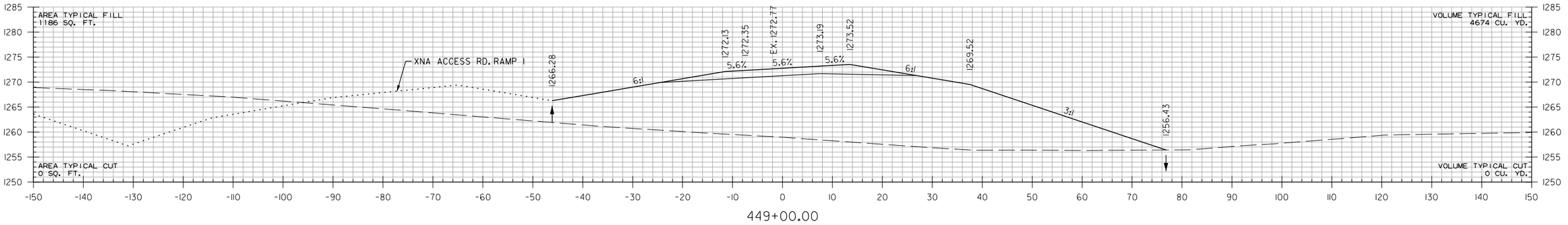

449+00.00

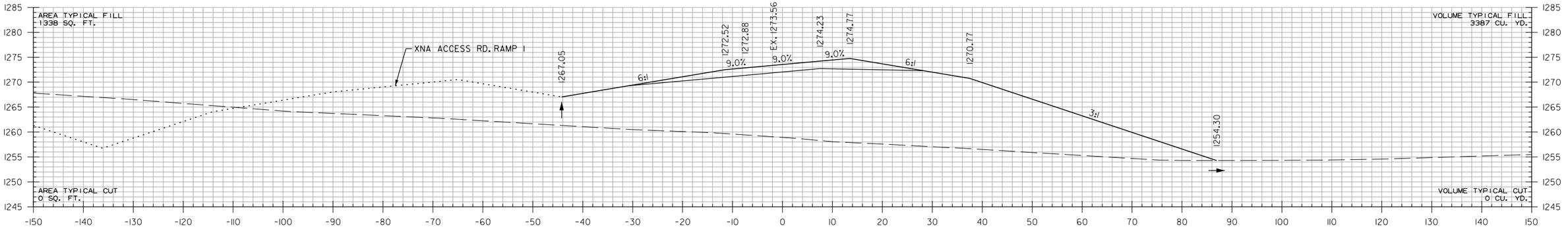

448+00.00

STA. 447+70.56 MAX. SUPERELEVATION (0.100'/')

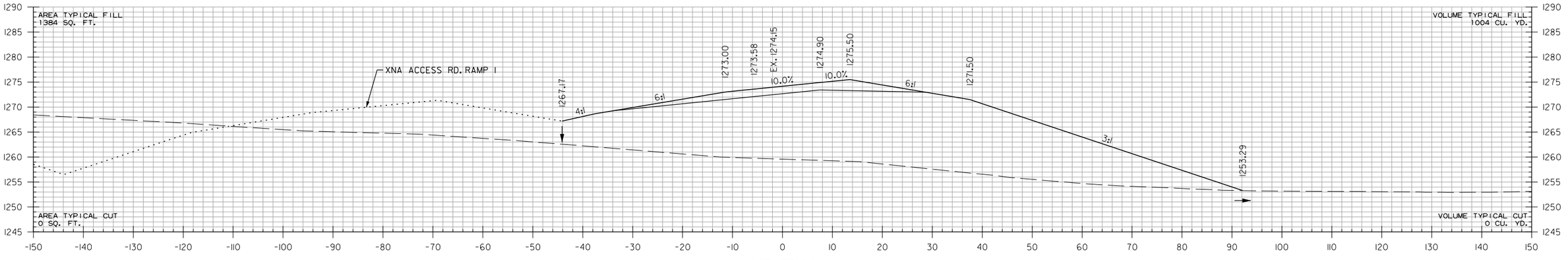

447+32.80

XNA ACCESS RD. RAMP 2
STA. 447+32.80 TO STA. 449+00

HBVinson
WORKSPACE: AHTD
L:\2017\17017660 - ARDOT 012326 Hwy 412 - Hwy 112\Drawings\r012326_CX_XNA ACCESS RD. RAMP 2.dgn
7/27/2023 3:49:39 PM
REVISED DATE:

DATE REVISED	DATE REVISED	FED. RD. DIST. NO.	STATE	JOB NO.	SHEET NO.	TOTAL SHEETS
		6	ARK.	012326	759	838
		CROSS SECTIONS				
②						

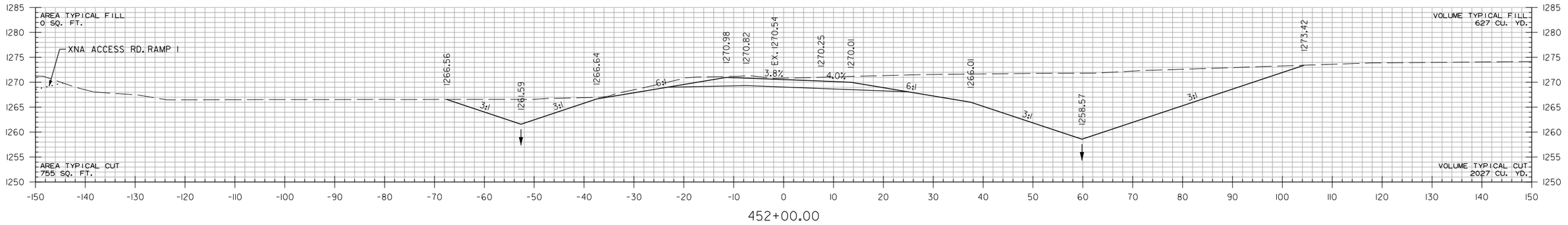

STA. 451+20.57 BEGIN SUPERELEVATION
STA. 451+20.56 END SUPERELEVATION

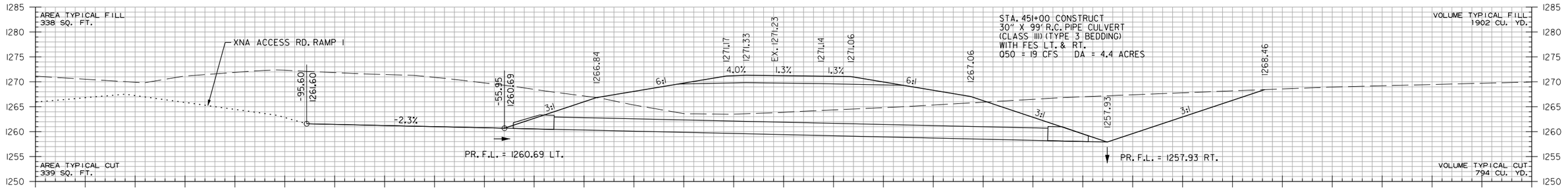

STA. 451+00.00
END SP. DT. LT. -2.15%
BEGIN SP. DT. LT. 0.90%
ELEV. 1260.69

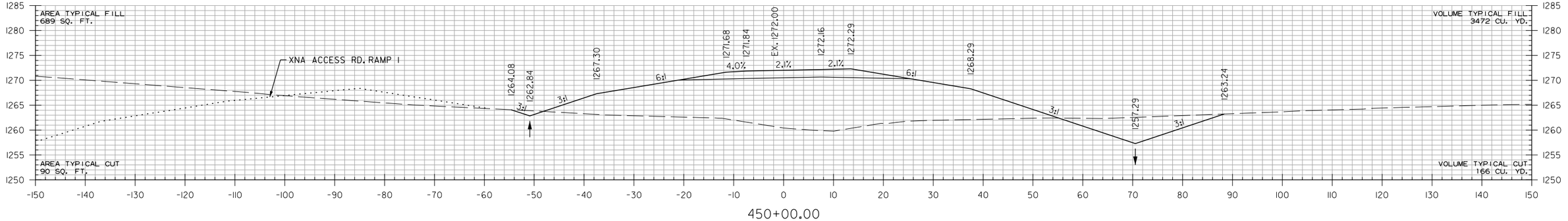

XNA ACCESS RD. RAMP 2
STA. 450+00 TO STA. 452+00

HBVinson
WORKSPACE: AHTD
L:\2017\170176\60 - ARDOT 012326 Hwy 412 - Hwy 112\Drawings\r012326_CX_XNA ACCESS RD. RAMP 2.dgn
7/27/2023 3:19:39 PM
REVISED DATE:

DATE REVISED	DATE REVISED	FED. RD. DIST. NO.	STATE	JOB NO.	SHEET NO.	TOTAL SHEETS
		6	ARK.	012326	760	838
		CROSS SECTIONS				
②						

STA. 454+70.57 MAX. SUPERELEVATION (0.100'/')

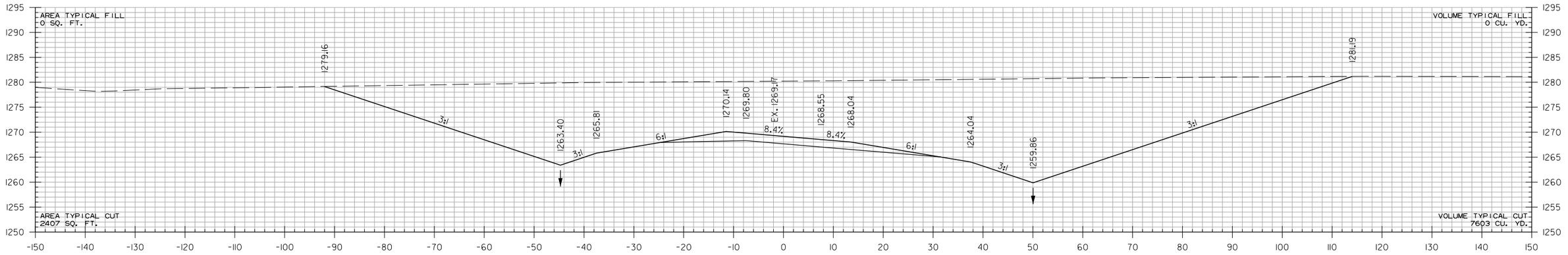

454+00.00

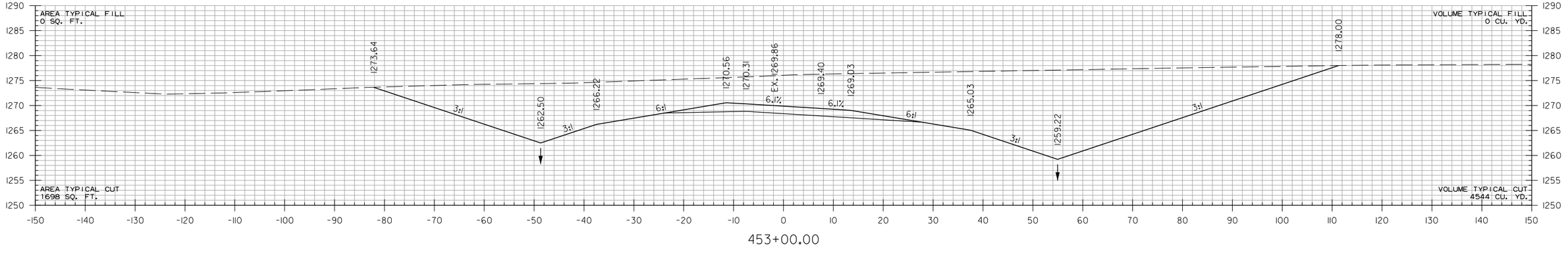

453+00.00

XNA ACCESS RD. RAMP 2
STA. 453+00 TO STA. 454+00

HBVinson 7/27/2023 3:39:39 PM
WORKSPACE: AHTD
L:\2017\17017660 - ARDOT 012326 Hwy 412 - Hwy 112\Drawings\r012326_CX_XNA ACCESS RD. RAMP 2.dgn
REVISED DATE:

DATE REVISED	DATE REVISED	FED. RD. DIST. NO.	STATE	JOB NO.	SHEET NO.	TOTAL SHEETS
		6	ARK.	012326	761	838
		CROSS SECTIONS				
②						

STA. 456+25.00
END SP. DT. RT. 0.64%
ELEV. 1261.31

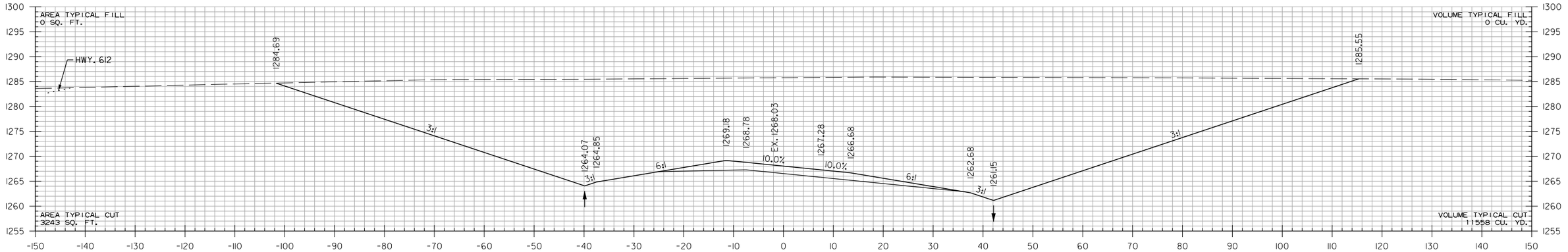

456+00.00

STA. 455+75.00
END SP. DT. LT. 0.90%
BEGIN SP. DT. LT. -3.64%
ELEV. 1264.98

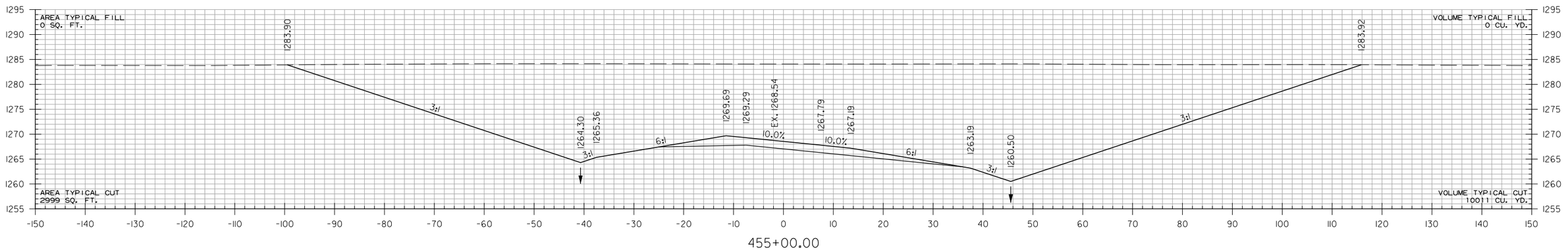

455+00.00

XNA ACCESS RD. RAMP 2
STA. 455+00 TO STA. 456+00

HBVinson 7/27/2023 3:19:39 PM
WORKSPACE: AHTD
L:\20IT\TOI7660 - ARDOT 012326 Hwy 412 - Hwy 112\Drawings\r012326.CX.XNA ACCESS RD. RAMP 2.dgn
REVISED DATE:

DATE REVISED	DATE REVISED	FED. RD. DIST. NO.	STATE	JOB NO.	SHEET NO.	TOTAL SHEETS
		6	ARK.	012326	762	838
		CROSS SECTIONS				
2						

STA. 457+80 CONSTRUCT
24" X 88' R.C. PIPE CULVERT
(CLASS III) (TYPE 3 BEDDING)
WITH FES LT. & RT.
Q50 = 5.6 CFS DA = 1.1 ACRES

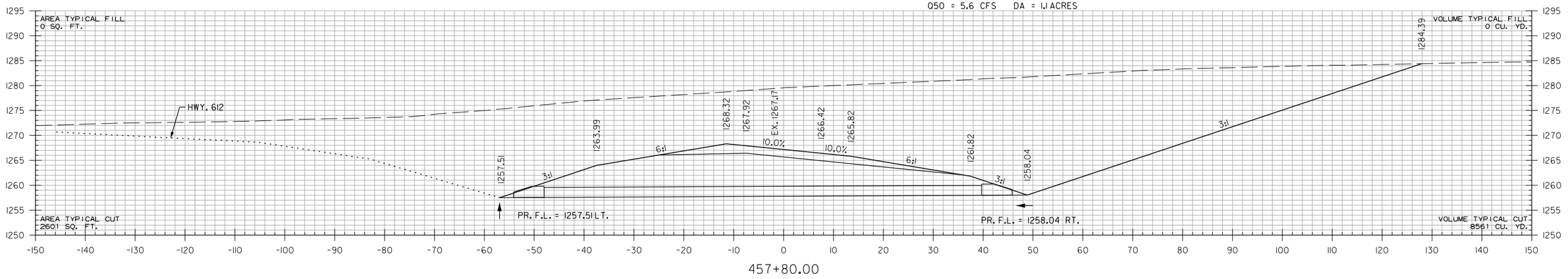

STA. 457+80.00
END SP. DT. LT. -3.64%
ELEV. 1257.51

STA. 457+80.00
END SP. DT. RT. -2.87%
BEGIN SP. DT. RT. 1.35%
ELEV. 1258.04

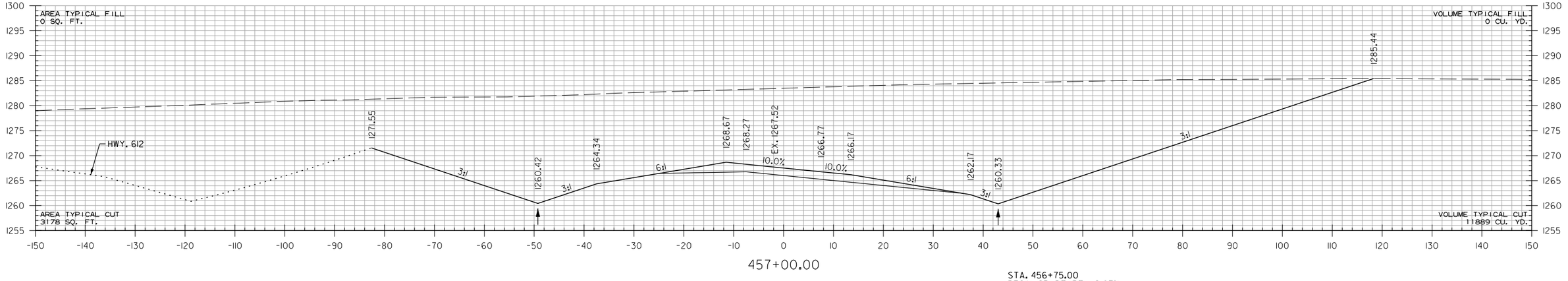

STA. 456+75.00
BEGIN SP. DT. RT. -2.87%
ELEV. 1261.05

XNA ACCESS RD. RAMP 2
STA. 457+00 TO STA. 457+80

HBVinson 7/27/2023 3:39:39 PM
WORKSPACE: AHTD
L:\2017\17017660 - ARDOT 012326 Hwy 412 - Hwy 112\Drawings\r012326_CX_XNA ACCESS RD. RAMP 2.dgn
REVISED DATE:

DATE REVISED	DATE REVISED	FED. RD. DIST. NO.	STATE	JOB NO.	SHEET NO.	TOTAL SHEETS
		6	ARK.	012326	763	838
		CROSS SECTIONS				
(2)						

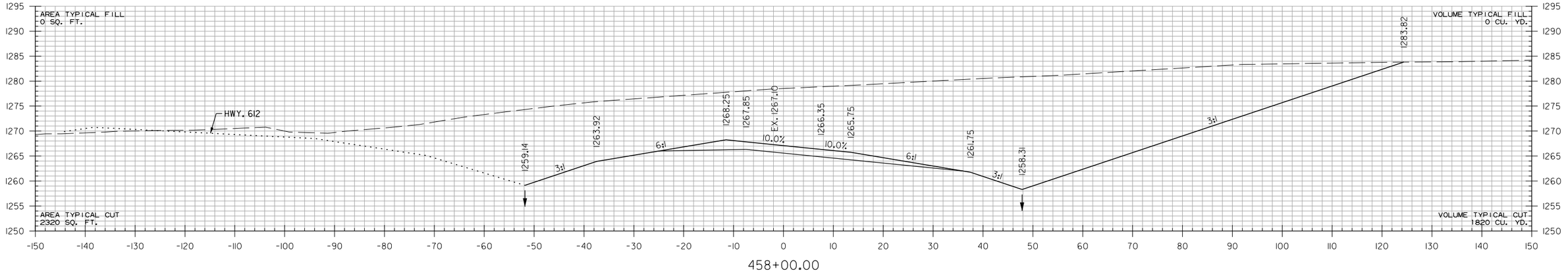

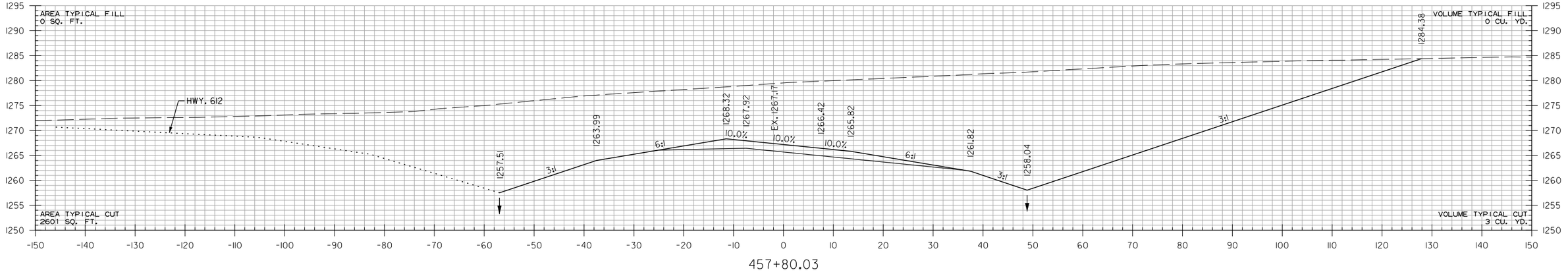

XNA ACCESS RD. RAMP 2
STA. 457+80.03 TO STA. 458+00

HBVinson 7/27/2023 3:39:39 PM
WORKSPACE: AHTD
L:\2017\17017660 - ARDOT 012326 Hwy 412 - Hwy 112\Drawings\r012326_CX_XNA ACCESS RD. RAMP 2.dgn
REVISED DATE:

DATE REVISED	DATE REVISED	FED. RD. DIST. NO.	STATE	JOB NO.	SHEET NO.	TOTAL SHEETS
		6	ARK.	012326	764	838
		CROSS SECTIONS				
②						

STA. 463+07.53 MATCH SUPERELEVATION (0.054'/')
STA. 461+06.28 MAX. SUPERELEVATION (0.100'/')

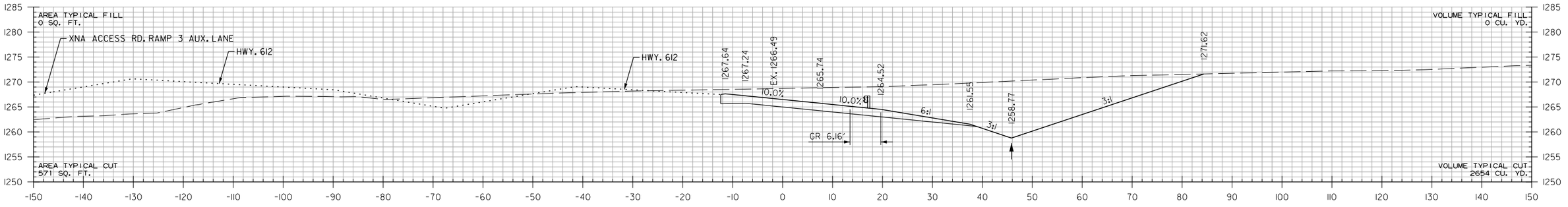

460+86.86

STA. 460+86.86 END XNA ACCESS RD. RAMP 2

STA. 460+86.86
END SP. DT. RT. -1.74%
ELEV. 1257.51

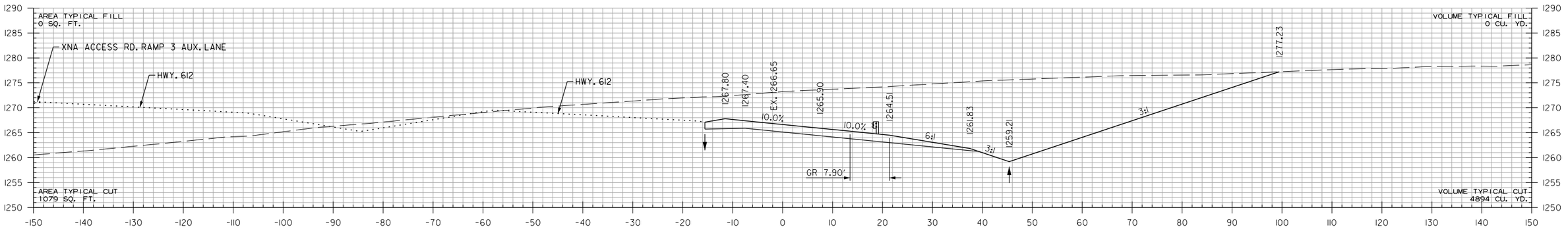

460+00.00

STA. 459+85.00
BEGIN SP. DT. RT. -1.74%
ELEV. 1259.28

STA. 459+37.50
END SP. DT. RT. 1.35%
ELEV. 1260.16

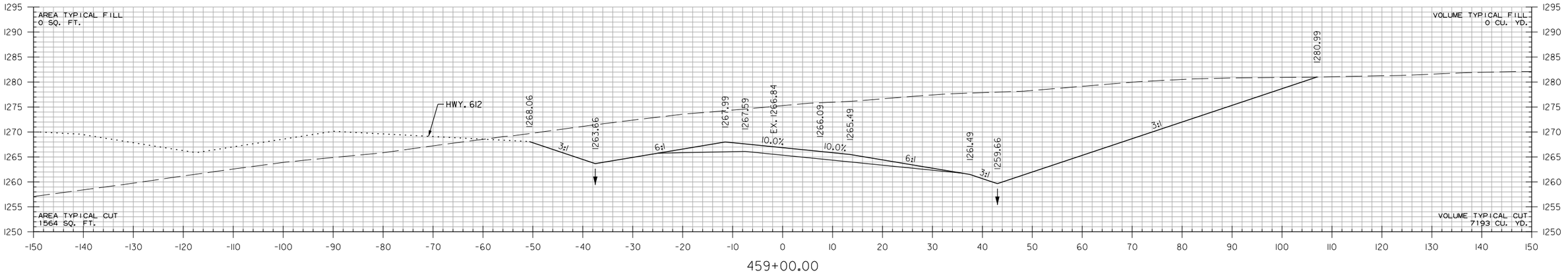

459+00.00

XNA ACCESS RD. RAMP 2
STA. 459+00 TO STA. 460+86.86

HBVinson 7/27/2023 3:9:39 PM
WORKSPACE: AHTD
L:\20\7\17017660 - ARDOT 012326 Hwy 412 - Hwy 112\Drawings\r012326_CX_XNA ACCESS RD. RAMP 2.dgn
REVISED DATE:

DATE REVISED	DATE REVISED	FED. RD. DIST. NO.	STATE	JOB NO.	SHEET NO.	TOTAL SHEETS
		6	ARK.	012326	765	838
		CROSS SECTIONS				
(2)						

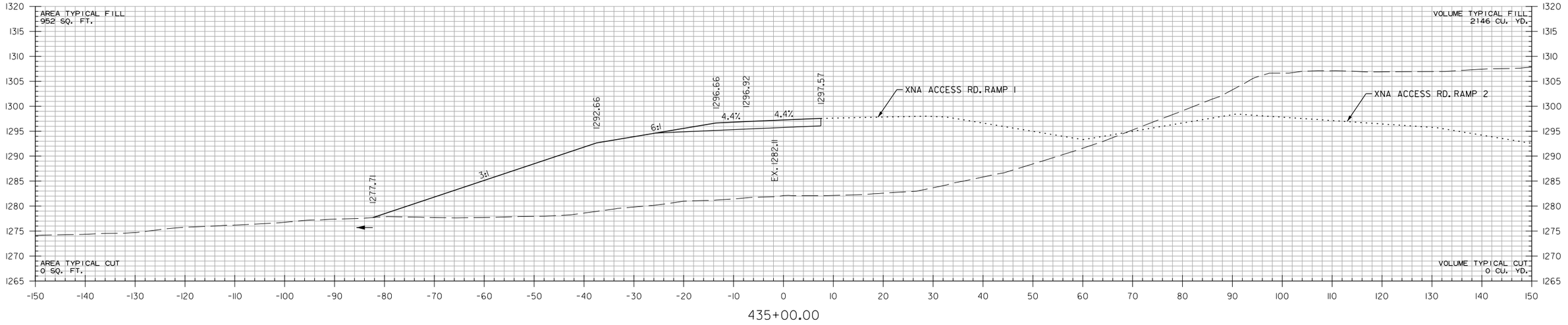

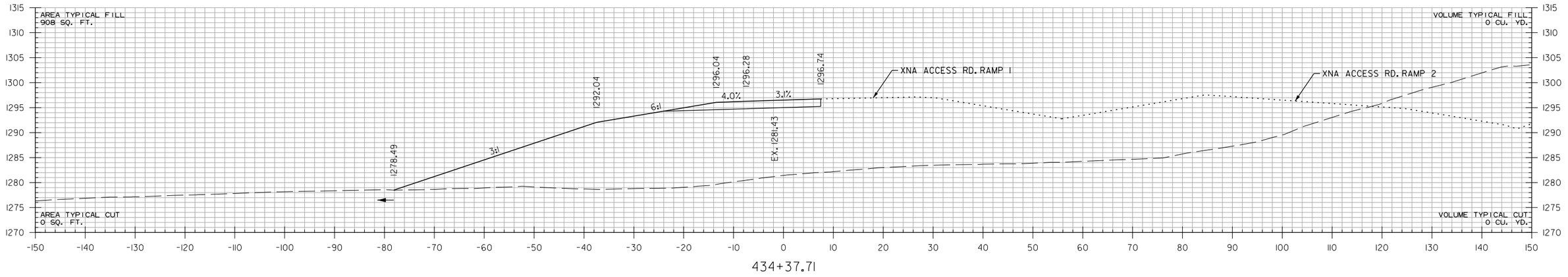

STA. 433+85.64 BEGIN SUPERELEVATION

STA. 434+37.71 BEGIN XNA ACCESS RD. RAMP 3

XNA ACCESS RD. RAMP 3
STA. 434+37.71 TO STA. 435+00

HBVinson 7/27/2023 3:39:39 PM
WORKSPACE: AHTD
L:\2017\17017660 - ARDOT 012326 Hwy 412 - Hwy 112\Drawings\r012326_CX_XNA ACCESS RD. RAMP 3.dgn
REVISED DATE:

DATE REVISED	DATE REVISED	FED. RD. DIST. NO.	STATE	JOB NO.	SHEET NO.	TOTAL SHEETS
		6	ARK.	012326	766	838
		CROSS SECTIONS				
②						

STA. 437+35.64 MAX. SUPERELEVATION (0.092'/')

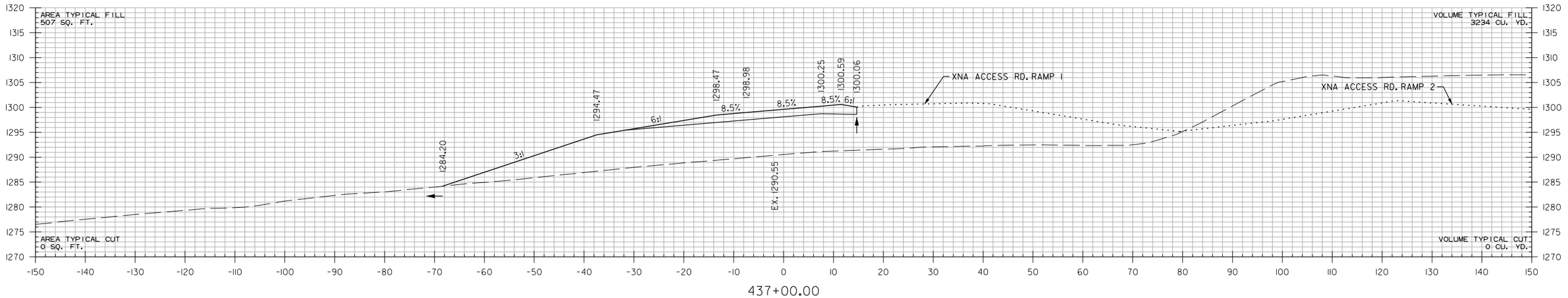

437+00.00

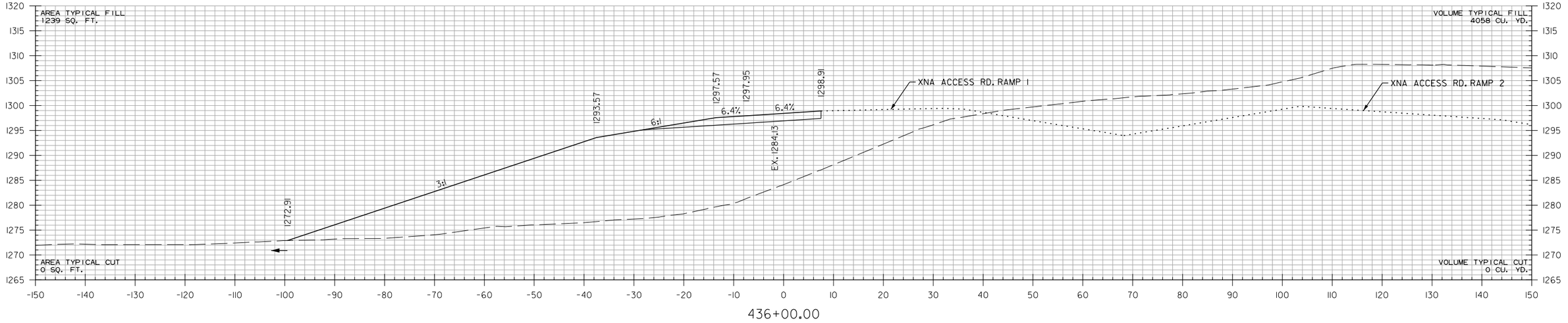

436+00.00

XNA ACCESS RD. RAMP 3
STA. 436+00 TO STA. 437+00

HBVinson
7/27/2023 3:19:40 PM
WORKSPACE: AHTD
L:\2017\170176\60 - ARDOT 012326 Hwy 412 - Hwy 112\Drawings\r012326.CX.XNA ACCESS RD. RAMP 3.dgn
REVISED DATE:

DATE REVISED	DATE REVISED	FED. RD. DIST. NO.	STATE	JOB NO.	SHEET NO.	TOTAL SHEETS
		6	ARK.	012326	767	838
②		CROSS SECTIONS				

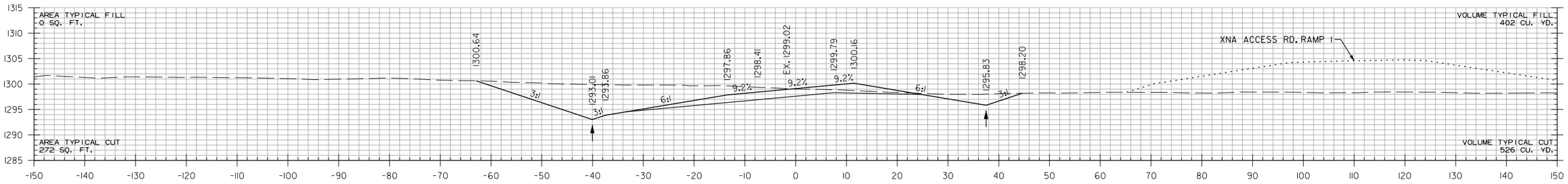

440+00.00

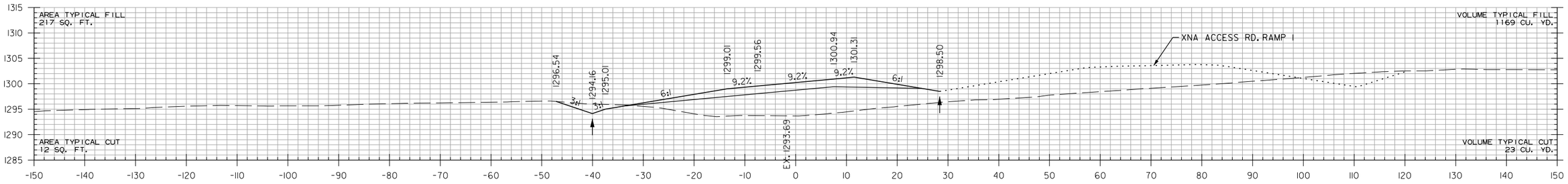

439+00.00

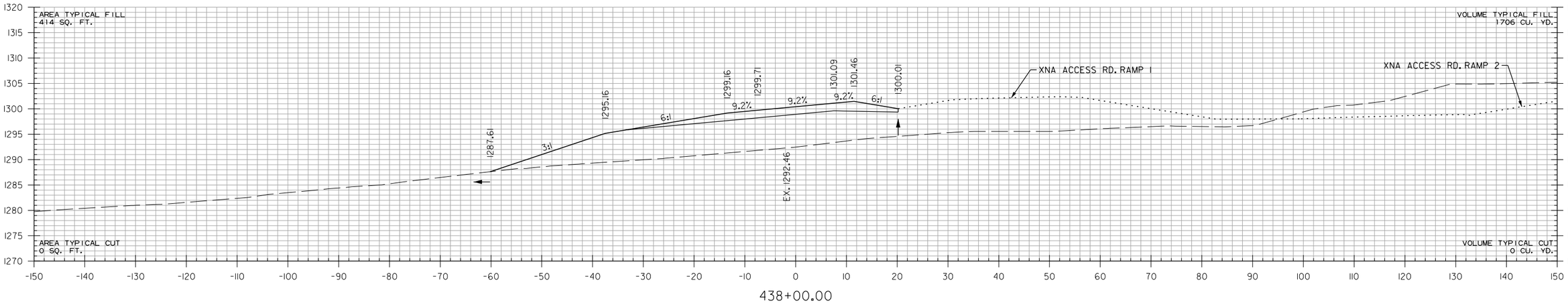

438+00.00

XNA ACCESS RD. RAMP 3
STA. 438+00 TO STA. 440+00

HBVinson 7/27/2023 3:9:40 PM
WORKSPACE: AHTD
L:\20IT\170I660 - ARDOT 012326 Hwy 412 - Hwy 112\Drawings\r012326.CX.XNA ACCESS RD. RAMP 3.dgn
REVISED DATE:

DATE REVISED	DATE REVISED	FED. RD. DIST. NO.	STATE	JOB NO.	SHEET NO.	TOTAL SHEETS
		6	ARK.	012326	768	838
		CROSS SECTIONS				
②						

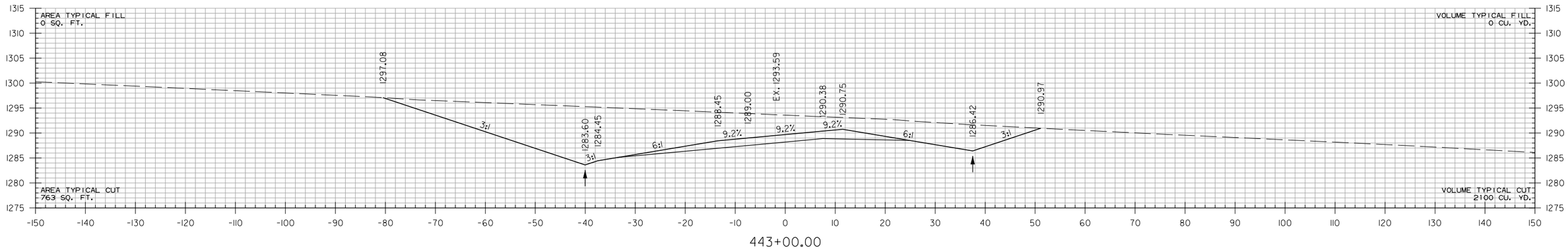

443+00.00

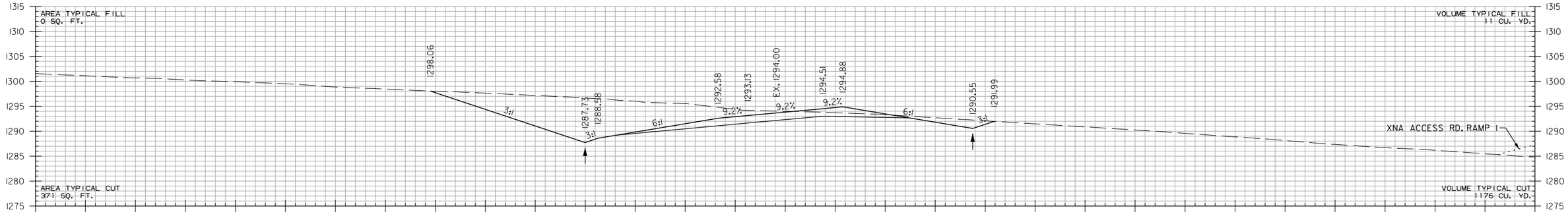

442+00.00

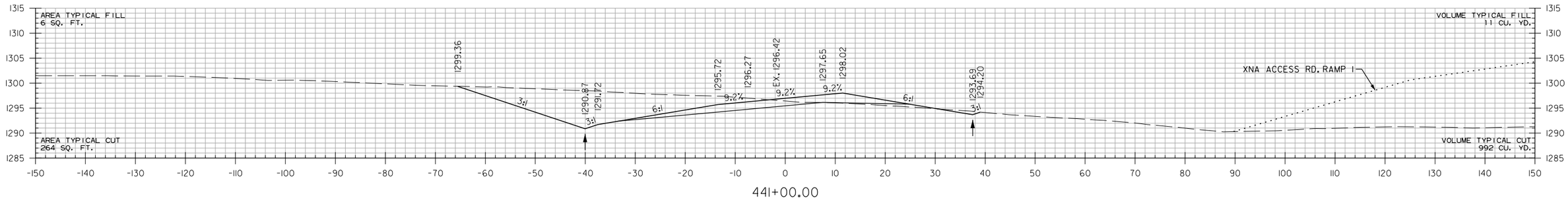

441+00.00

XNA ACCESS RD. RAMP 3
STA. 441+00 TO STA. 443+00

HBVinson
WORKSPACE: AHTD
L:\2017\170T660 - ARDOT 012326 Hwy 412 - Hwy 112\Drawings\r-012326.CX.XNA ACCESS RD. RAMP 3.dgn
7/21/2023 3:19:40 PM
REVISED DATE:

DATE REVISED	DATE REVISED	FED. RD. DIST. NO.	STATE	JOB NO.	SHEET NO.	TOTAL SHEETS
		6	ARK.	012326	769	838
		CROSS SECTIONS				
②						

STA. 444+90 CONSTRUCT
DROP INLET 40' LT. H=2'-6"
WITH 24" x 84' R.C. PIPE OUTLET
TO F.E.S. RT.
TYPE RM DROP INLET = 4'X3'
24" R.C. PIPE (CLASS III)
(TYPE 3 BEDDING) = 84 LIN. FT.
24" F.E.S. = 1 EACH
Q50 = 11 CFS DA = 2.5 ACRES

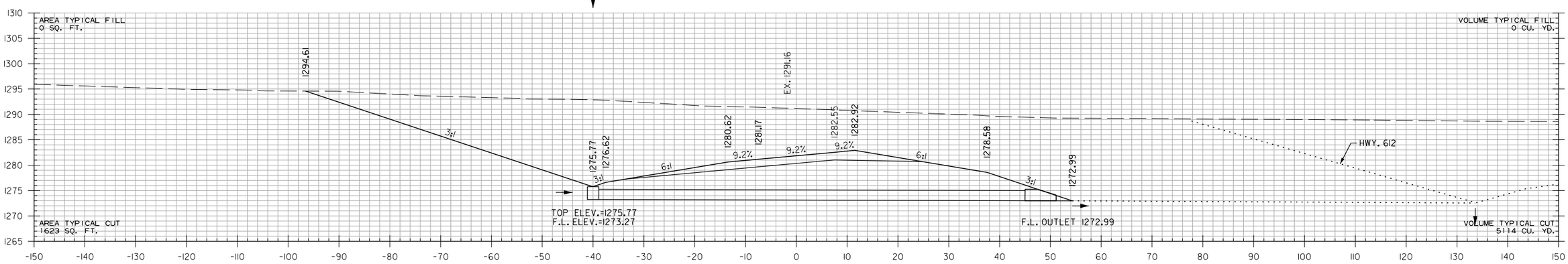

STA. 444+90.00
END SP. DT. RT. -7.44%
BEGIN SP. DT. RT. 2.37%
ELEV. 1272.99

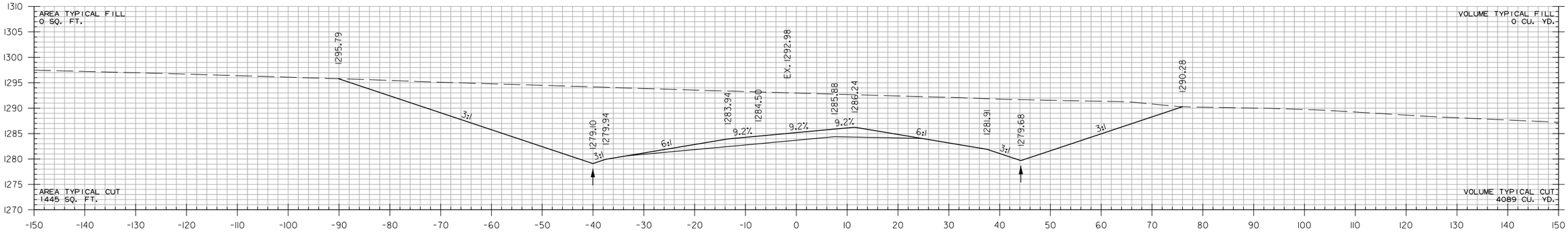

STA. 443+25.00
BEGIN SP. DT. RT. -7.44%
ELEV. 1285.26

XNA ACCESS RD. RAMP 3
STA. 444+00 TO STA. 444+90

HBVinson
WORKSPACE: AHTD
L:\2017\170176\60 - ARDOT 012326 Hwy 412 - Hwy 112\Drawings\r012326_CX_XNA ACCESS RD. RAMP 3.dgn
7/27/2023 3:19:40 PM
REVISED DATE:

DATE REVISED	DATE REVISED	FED. RD. DIST. NO.	STATE	JOB NO.	SHEET NO.	TOTAL SHEETS
		6	ARK.	012326	770	838
		CROSS SECTIONS				
②						

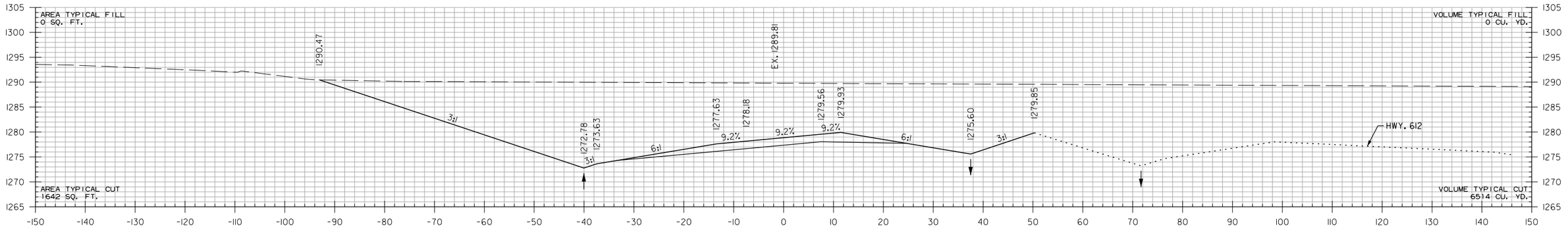

446+00.00

STA. 446+00.00
END SP. DT. RT. 2.37%
ELEV. 1275.60

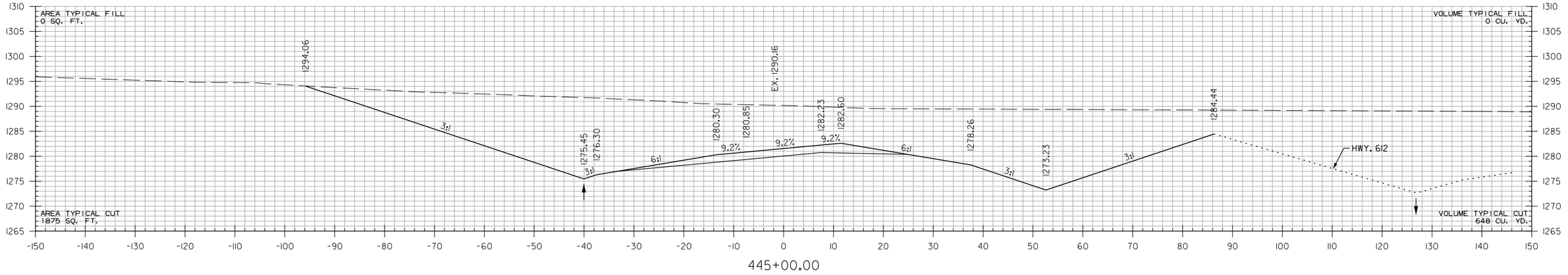

445+00.00

XNA ACCESS RD. RAMP 3
STA. 445+00 TO STA. 446+00

HBVinson
WORKSPACE: AHTD
L:\2017\17017660 - ARDOT 012326 Hwy 412 - Hwy 112\Drawings\r012326_CX_XNA ACCESS RD. RAMP 3.dgn
7/27/2023 3:39:40 PM
REVISED DATE:

DATE REVISED	DATE REVISED	FED. RD. DIST. NO.	STATE	JOB NO.	SHEET NO.	TOTAL SHEETS
		6	ARK.	012326	771	838
②		CROSS SECTIONS				

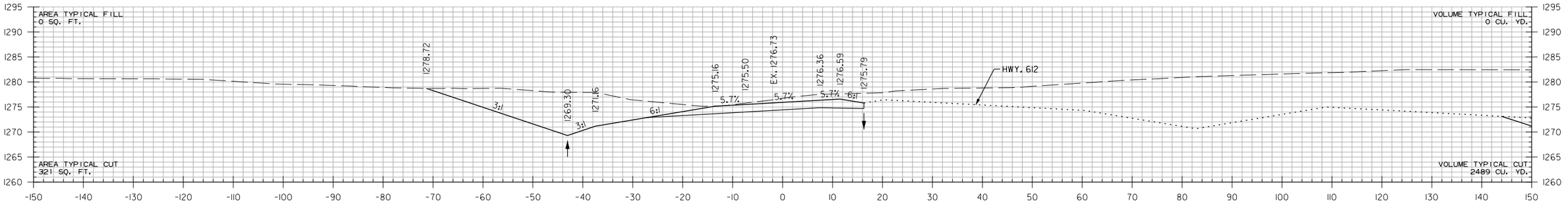

449+00.00

STA. 448+90.00
END SP. DT. LT. -0.50%
BEGIN SP. DT. LT. -6.84%
ELEV. 1269.99

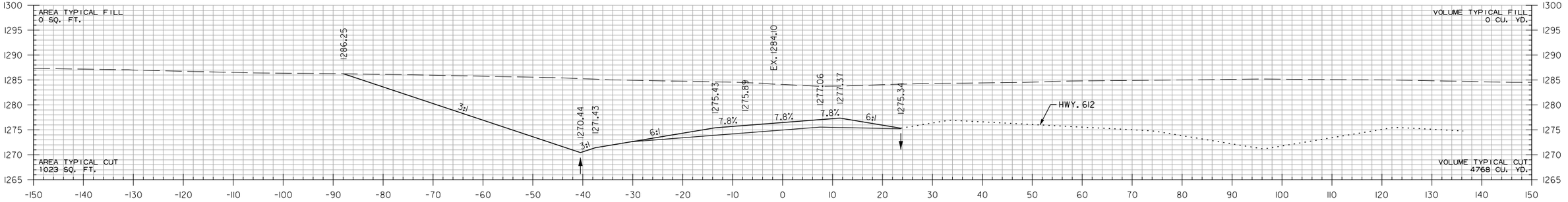

448+00.00

STA. 447+30.64
BEGIN SP. DT. LT. -0.50%
ELEV. 1270.78

STA. 447+30.64 MAX. SUPERELEVATION (0.092'/')

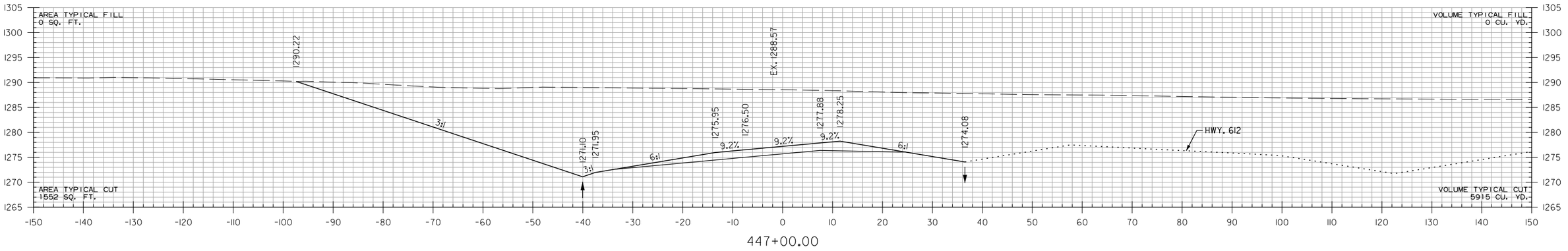

447+00.00

XNA ACCESS RD. RAMP 3
STA. 447+00 TO STA. 449+00

HBVinson 7/27/2023 3:19:40 PM
WORKSPACE: AHTD
L:\2017\17017660 - ARDOT 012326 Hwy 412 - Hwy 112\Drawings\r012326.CX.XNA ACCESS RD. RAMP 3.dgn
REVISED DATE:

DATE REVISED	DATE REVISED	FED. RD. DIST. NO.	STATE	JOB NO.	SHEET NO.	TOTAL SHEETS
		6	ARK.	012326	772	838
		CROSS SECTIONS				
②						

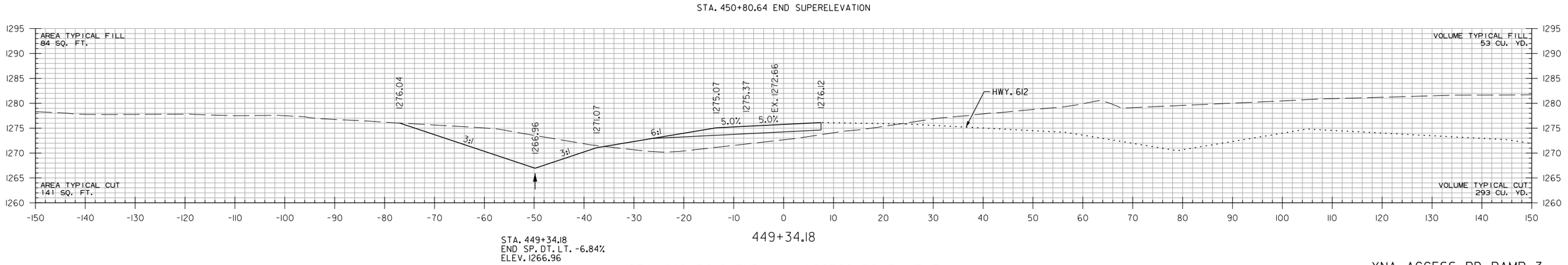

STA. 449+34.18 END XNA ACCESS RD. RAMP 3

XNA ACCESS RD. RAMP 3
STA. 449+34.18 TO STA. 449+34.18

HBVinson 7/27/2023 3:19:40 PM
WORKSPACE: AHTD
L:\2017\170176\60 - ARDOT 02326 Hwy 412 - Hwy 112\Drawings\r02326_CX_XNA ACCESS RD. RAMP 3.dgn
REVISED DATE:

DATE REVISED	DATE REVISED	FED. RD. DIST. NO.	STATE	JOB NO.	SHEET NO.	TOTAL SHEETS
		6	ARK.	012326	773	838
		CROSS SECTIONS				
②						

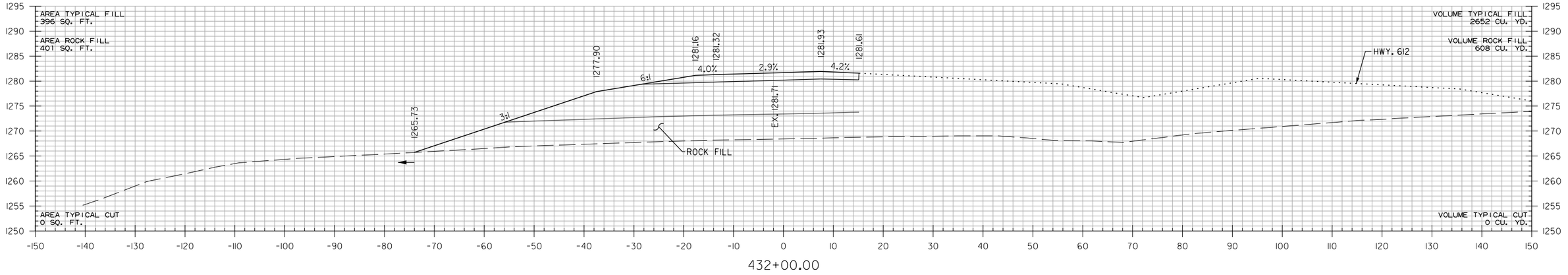

432+00.00

STA. 431+57.19 BEGIN SUPERELEVATION

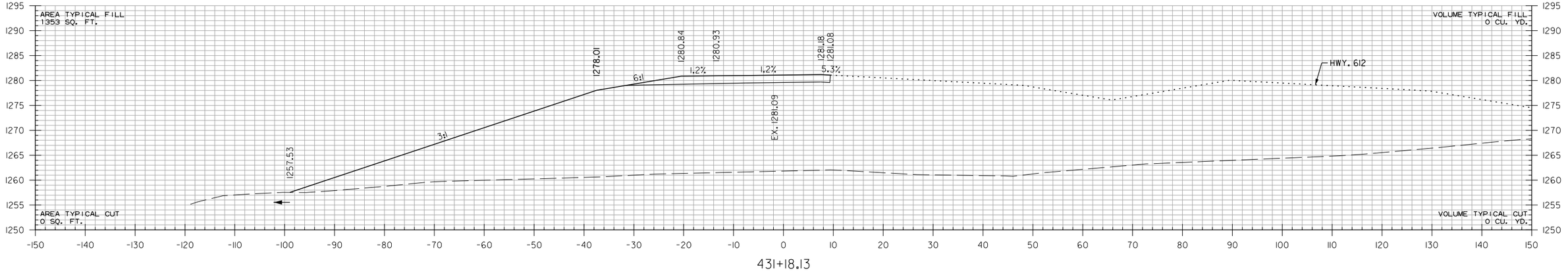

431+18.13

STA. 431+18.13 BEGIN XNA ACCESS RD. RAMP 4

XNA ACCESS RD. RAMP 4
STA. 431+18.13 TO STA. 432+00

HBVinson 7/27/2023 3:39:42 PM
WORKSPACE: AHTD
L:\2017\17017660 - ARDOT 012326 Hwy 412 - Hwy 112\Drawings\r012326_CX_XNA ACCESS RD. RAMP 4.dgn
REVISED DATE:

DATE REVISED	DATE REVISED	FED. RD. DIST. NO.	STATE	JOB NO.	SHEET NO.	TOTAL SHEETS
		6	ARK.	012326	774	838
		CROSS SECTIONS				
②						

STA. 435+07.19 MAX. SUPERELEVATION (0.092'/')

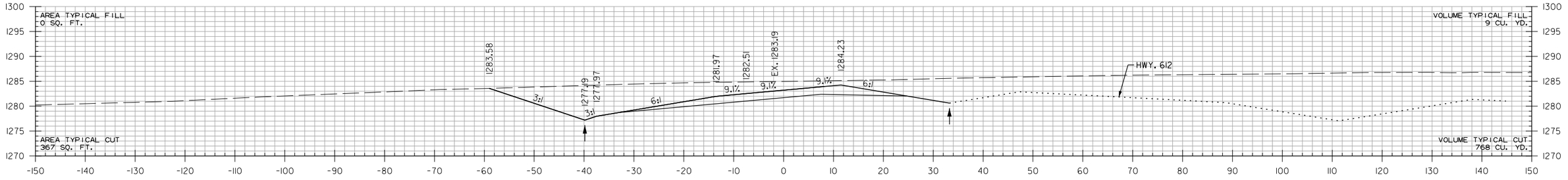

435+00.00

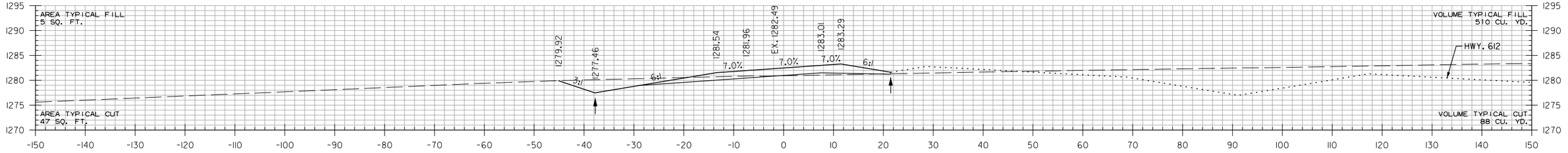

434+00.00

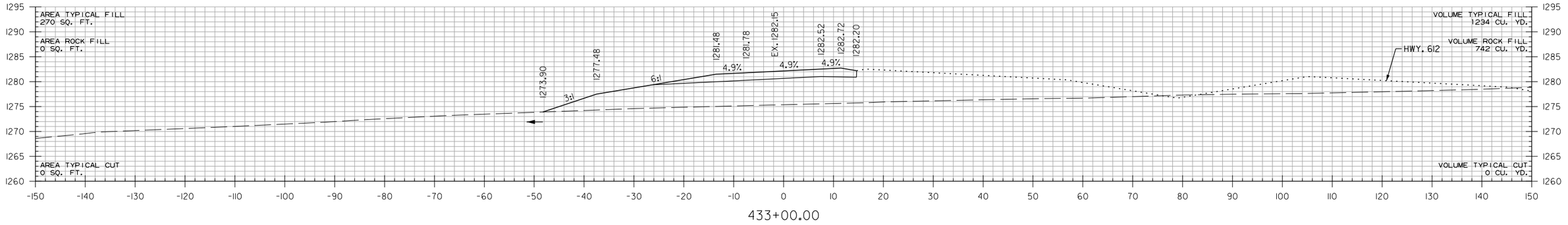

433+00.00

XNA ACCESS RD. RAMP 4
STA. 433+00 TO STA. 435+00

HBVinson
7/27/2023 3:19:42 PM
WORKSPACE: AHTD
L:\2017\17017660 - ARDOT 012326 Hwy 412 - Hwy 112\Drawings\r-012326.CX.XNA ACCESS RD. RAMP 4.dgn
REVISED DATE:

DATE REVISED	DATE REVISED	FED. RD. DIST. NO.	STATE	JOB NO.	SHEET NO.	TOTAL SHEETS
		6	ARK.	012326	775	838
		CROSS SECTIONS				
②						

STA. 438+25.00
BEGIN SP. DT. LT. 2.22%
ELEV. 1286.90

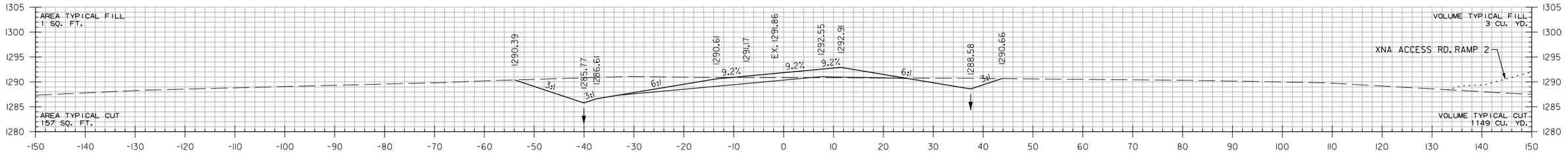

438+00.00

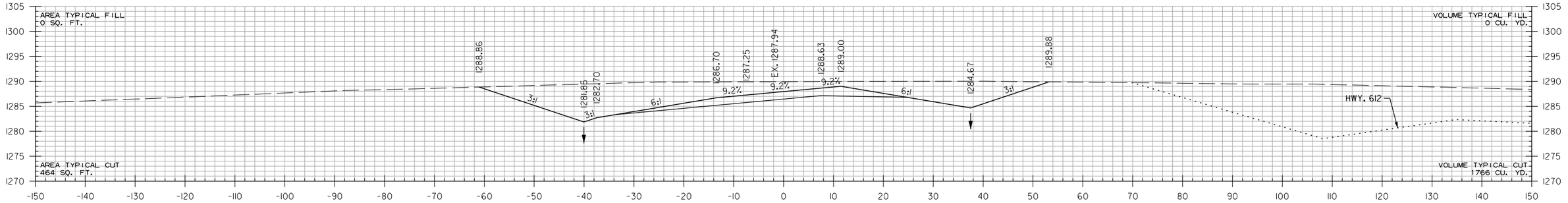

437+00.00

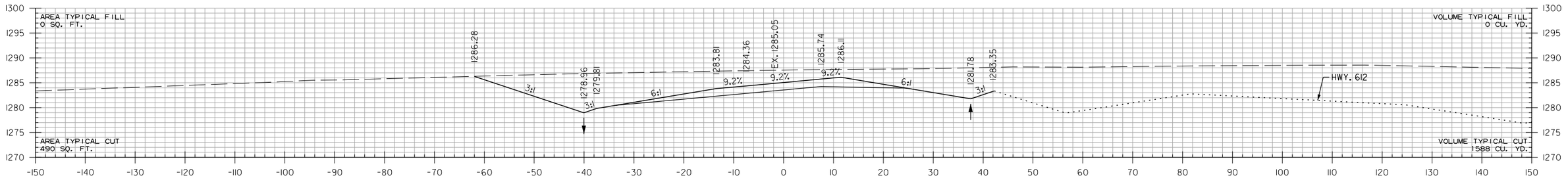

436+00.00

XNA ACCESS RD. RAMP 4
STA. 436+00 TO STA. 438+00

HBVinson 7/27/2023 3:19:42 PM
WORKSPACE: AHTD
L:\20\T\T01\T660 - ARDOT 012326 Hwy 412 - Hwy 112\Drawings\r012326.CX.XNA ACCESS RD. RAMP 4.dgn
REVISED DATE:

DATE REVISED	DATE REVISED	FED. RD. DIST. NO.	STATE	JOB NO.	SHEET NO.	TOTAL SHEETS
		6	ARK.	012326	776	838
		CROSS SECTIONS				

2

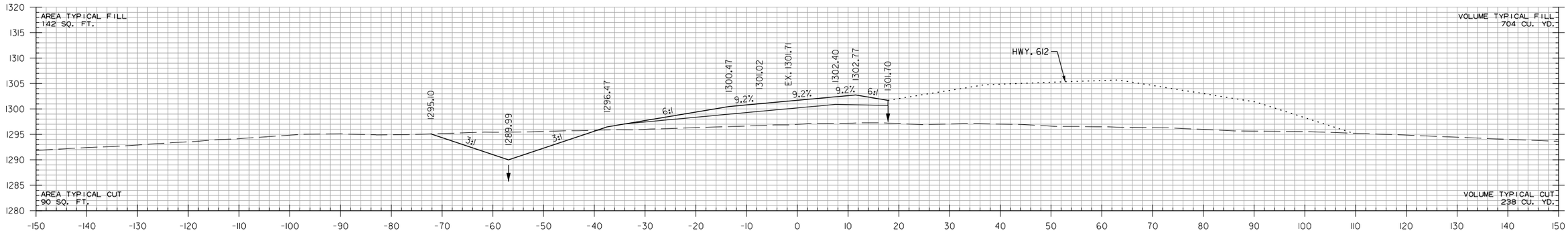

STA. 439+25.00
END SP. DT. LT. 2.22%
BEGIN SP. DT. LT. 0.50%
ELEV. 1289.12

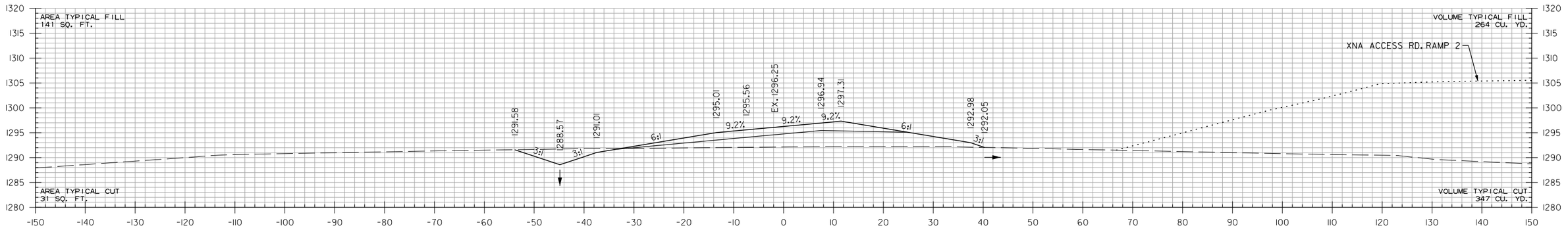

XNA ACCESS RD. RAMP 4
STA. 439+00 TO STA. 441+00

HBVinson 7/27/2023 3:19:42 PM
WORKSPACE: AHTD
L:\2017\1701760 - ARDOT 012326 Hwy 412 - Hwy 112\Drawings\r012326_CX_XNA ACCESS RD. RAMP 4.dgn
REVISED DATE:

DATE REVISED	DATE REVISED	FED. RD. DIST. NO.	STATE	JOB NO.	SHEET NO.	TOTAL SHEETS
		6	ARK.	012326	777	838
		CROSS SECTIONS				
②						

STA. 444+24.83 (0.074'/') (SEE XNA ACCESS RD. RAMP 2 FOR CONTINUATION)
STA. 443+37.33 MAX. SUPERELEVATION (0.092'/')

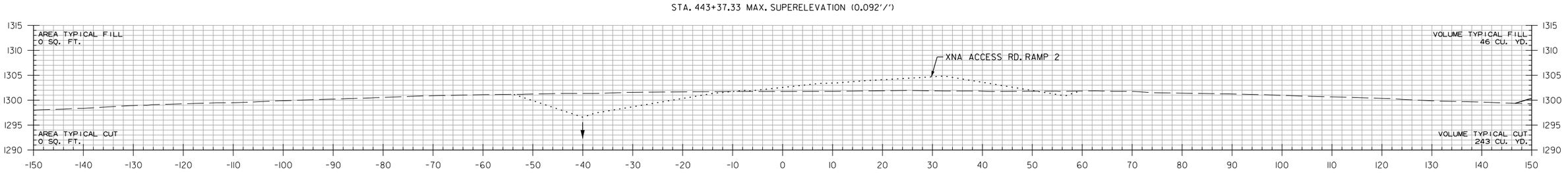

442+57.79

STA. 442+57.78
END SP. DT. LT. 0.50%
ELEV. 1290.78

STA. 442+57.79 END XNA ACCESS RD. RAMP 4

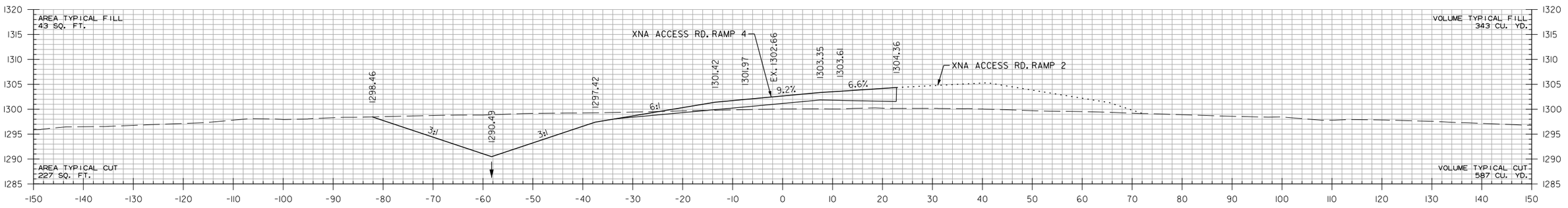

442+00.00

XNA ACCESS RD. RAMP 4
STA. 442+00 TO STA. 442+57.79

HBVinson
WORKSPACE: AHTD
L:\2017\1701660 - ARDOT 012326 Hwy 412 - Hwy 112\Drawings\r012326.CX. XNA ACCESS RD. RAMP 4.dgn
7/27/2023 3:19:42 PM
REVISED DATE:

DATE REVISED	DATE REVISED	FED. RD. DIST. NO.	STATE	JOB NO.	SHEET NO.	TOTAL SHEETS
		6	ARK.	012326	778	838
		CROSS SECTIONS				
(2)						

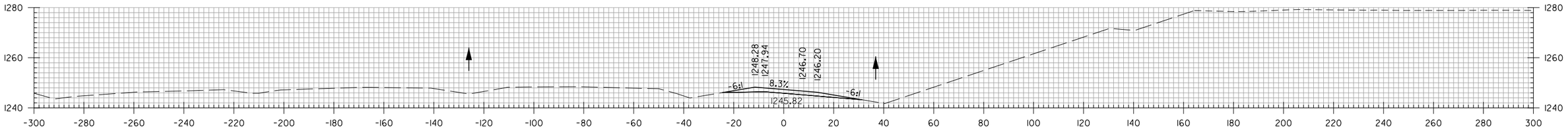

487+00.00

STA. 486+71.30 MAX SUPERELEVATION (0.083 FT./FT)

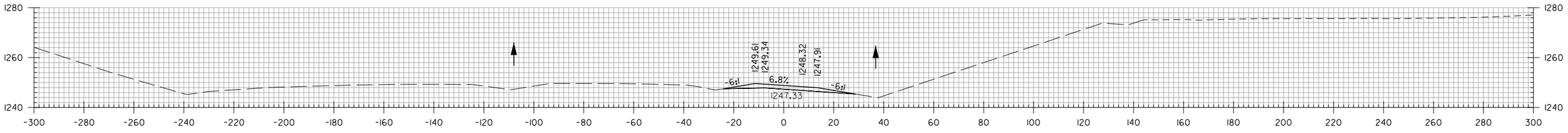

486+00.00

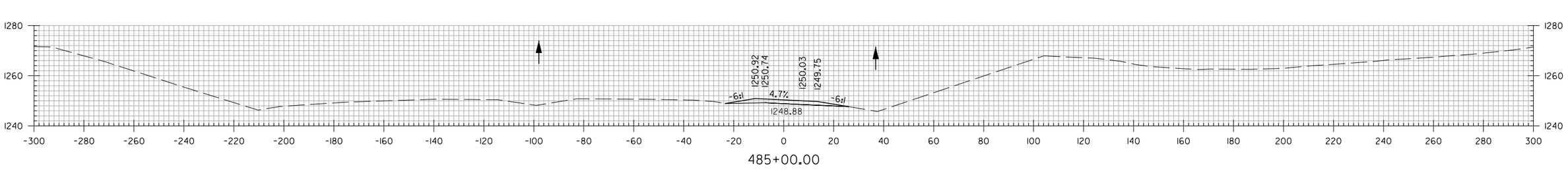

485+00.00

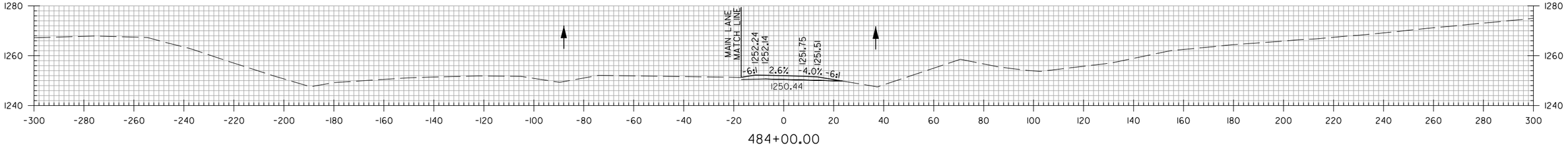

484+00.00

STA. 483+71.30 BEGIN SUPERELEVATION

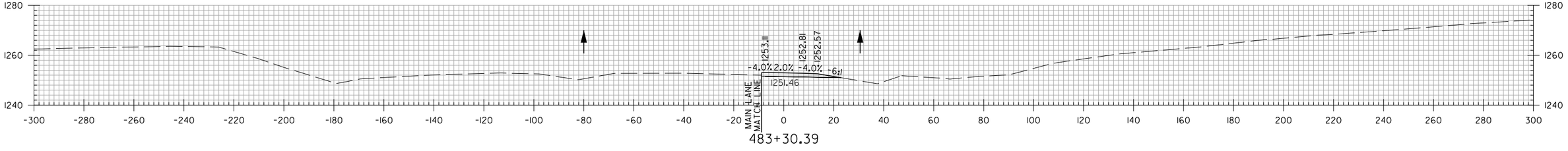

483+30.39

STA. 483+30.39 BEGIN HWY. 112 RAMP I

HWY. 112 RAMP I
STA. 483+30.39 TO STA. 487+00

HBVinson 7/21/2023 3:19:42 PM
WORKSPACE: AHTD
L:\20\T\T01\660 - ARDOT 012326 Hwy 412 - Hwy 112\Drawings\r012326_CX_112R1_01.dgn
REVISED DATE:

DATE REVISED	DATE REVISED	FED. RD. DIST. NO.	STATE	JOB NO.	SHEET NO.	TOTAL SHEETS
		6	ARK.	012326	779	838
		CROSS SECTIONS				
(2)						

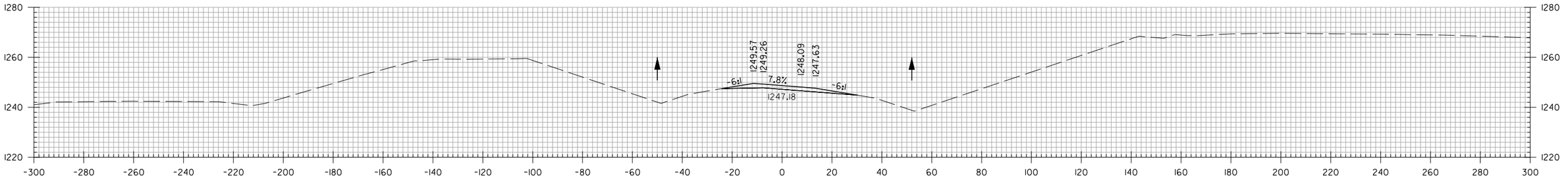

491+00.00

STA. 490+74.64 MAX SUPERELEVATION (0.083 FT./FT.)

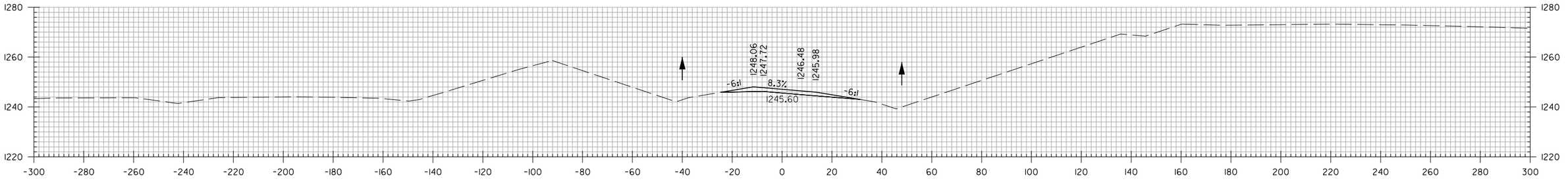

490+00.00

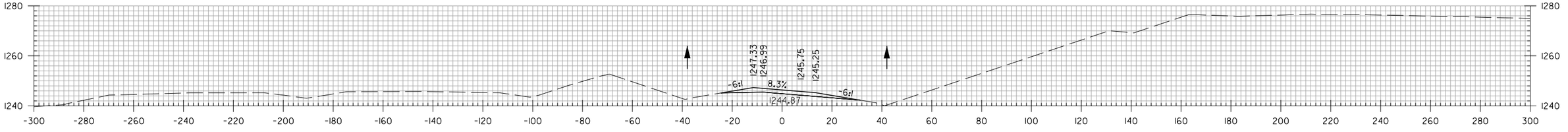

489+00.00

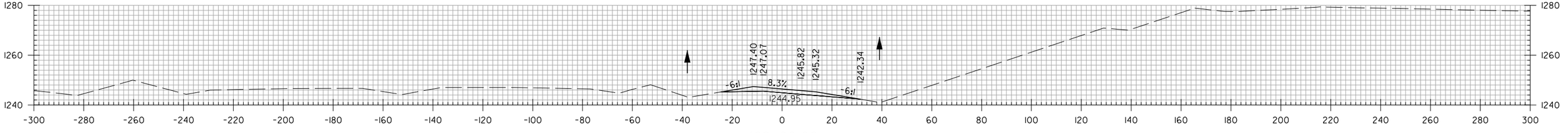

488+00.00

HWY. 112 RAMP I
STA. 488+00 TO STA. 491+00

HBVinson 7/27/2023 3:19:43 PM
WORKSPACE: AHTD
L:\2017\17017660 - ARDOT 012326 Hwy 412 - Hwy 112\Drawings\r012326_CX_112R1_01.dgn
REVISED DATE:

DATE REVISED	DATE REVISED	FED. RD. DIST. NO.	STATE	JOB NO.	SHEET NO.	TOTAL SHEETS
		6	ARK.	012326	780	838
		CROSS SECTIONS				
②						

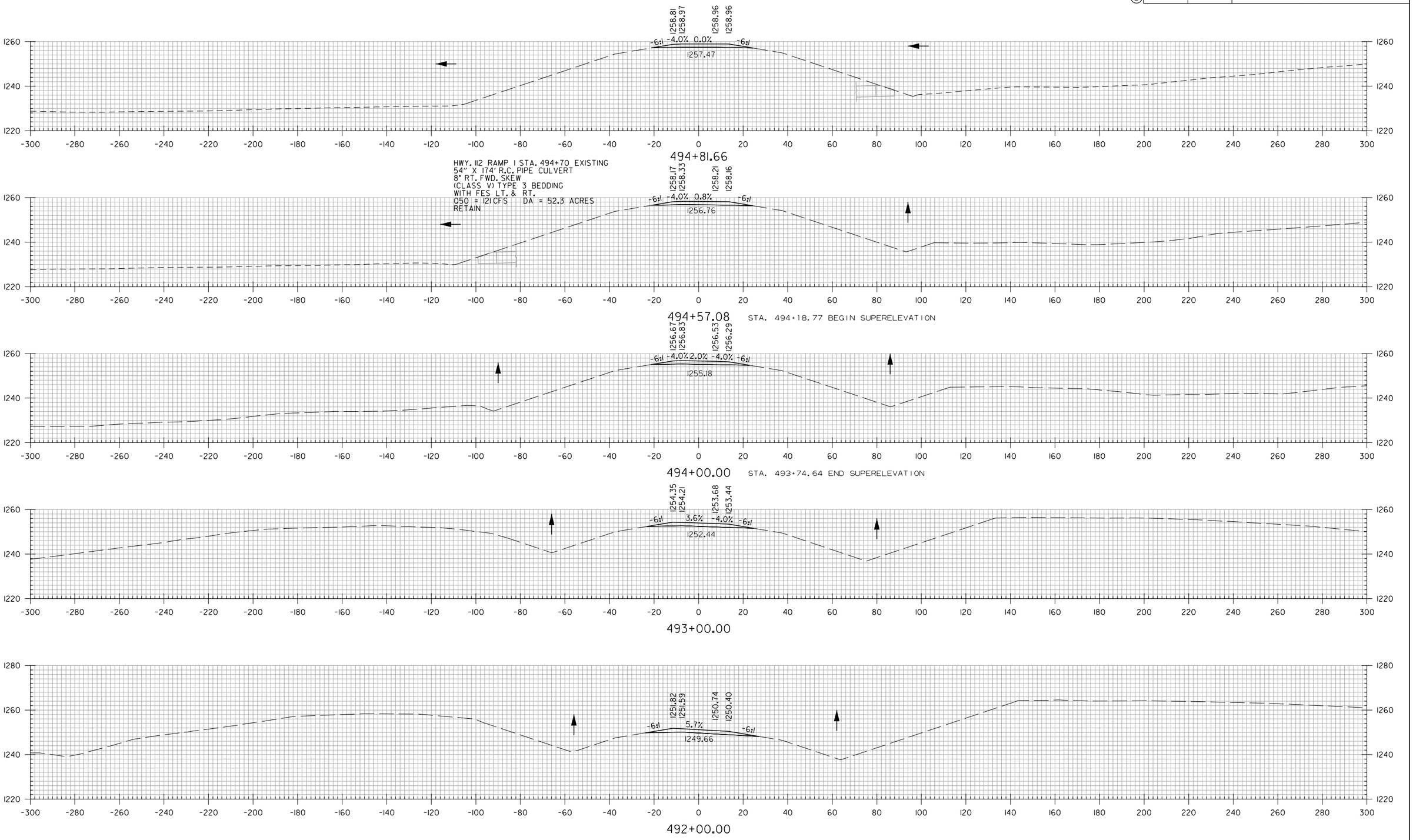

HWY. 112 RAMP 1
STA. 492+00 TO STA. 494+81.66

HBVinson 7/27/2023 3:19:43 PM
WORKSPACE: AHTD
L:\2017\170766O - ARDOT 012326 Hwy 412 - Hwy 112\Drawings\r012326_CX_112R1_0.dgn
REVISED DATE:

DATE REVISED	DATE REVISED	FED. RD. DIST. NO.	STATE	JOB NO.	SHEET NO.	TOTAL SHEETS
		6	ARK.	012326	781	838
		CROSS SECTIONS				
②						

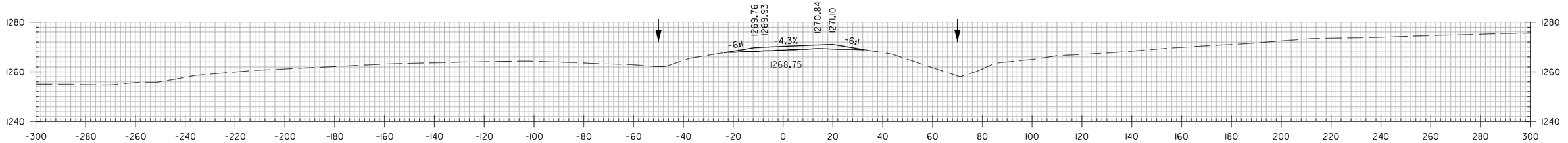

499+00.00

STA. 498+50.61 MAX SUPERELEVATION (0.058 FT./FT.)

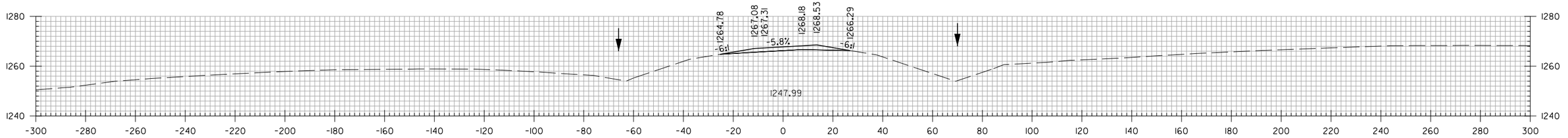

498+00.00

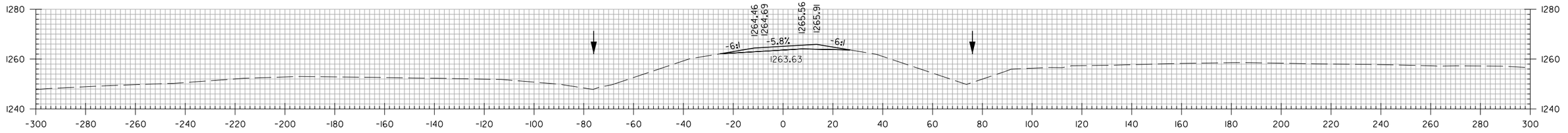

497+00.00

STA. 496+68.77 MAX SUPERELEVATION (0.058 FT./FT)

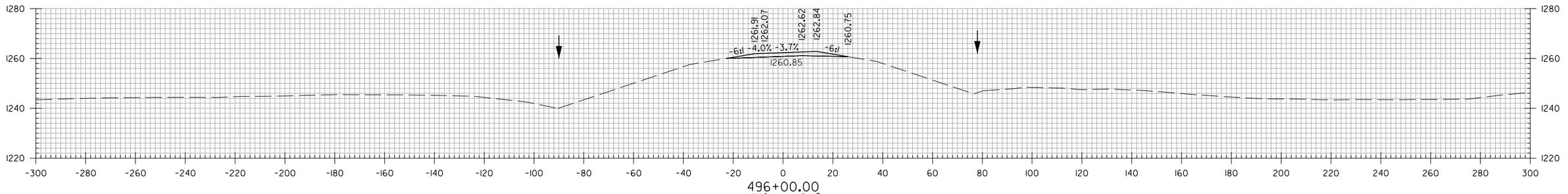

496+00.00

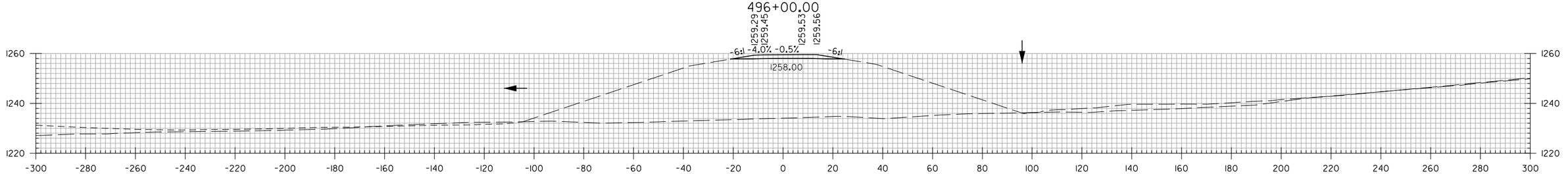

495+00.00

HWY. 112 RAMP I
STA. 495+00 TO STA. 499+00

HBVinson
WORKSPACE: AHTD
L:\2017\170176GO - ARDOT 012326 Hwy 412 - Hwy 112\Drawings\r012326_CX_I2RL01.dgn
7/27/2023 3:19:43 PM
REVISED DATE:

DATE REVISED	DATE REVISED	FED. RD. DIST. NO.	STATE	JOB NO.	SHEET NO.	TOTAL SHEETS
		6	ARK.	012326	782	838
		CROSS SECTIONS				
②						

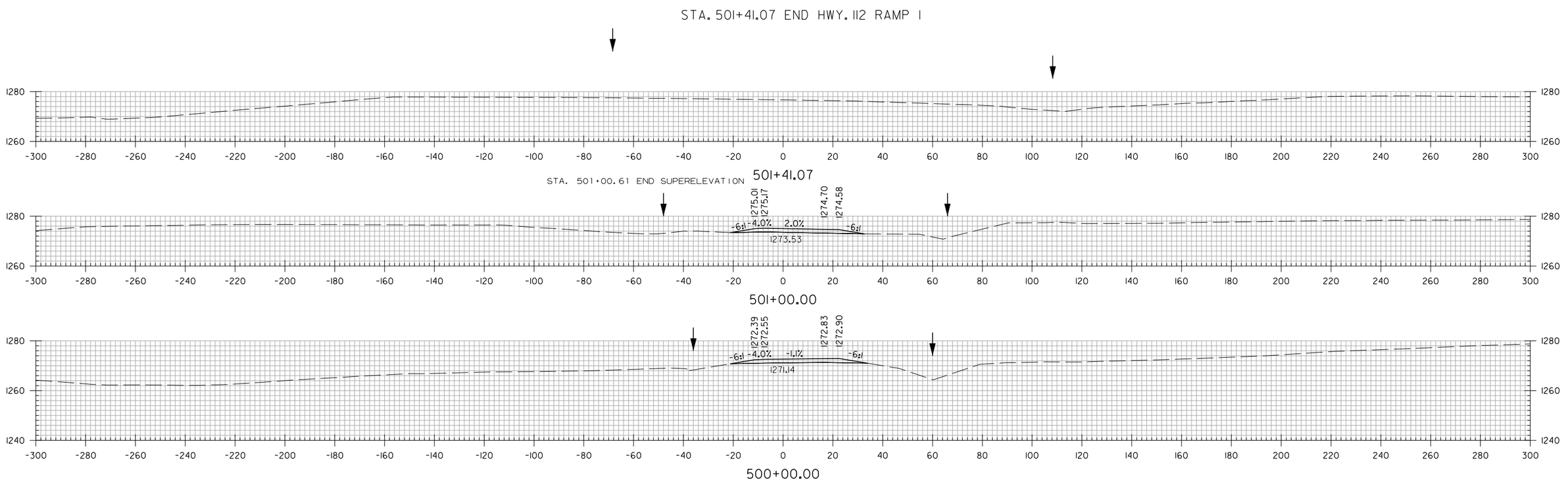

HWY. 112 RAMP 1
STA. 500+00 TO STA. 501+41.07

HBVinson
WORKSPACE: AHTD
L:\2017\17017660 - ARDOT 012326 Hwy 412 - Hwy 112\Drawings\r012326_CX_I2R1_0.dgn
7/27/2023 3:19:43 PM
REVISED DATE:

DATE REVISED	DATE REVISED	FED. RD. DIST. NO.	STATE	JOB NO.	SHEET NO.	TOTAL SHEETS
		6	ARK.	012326	783	838
		CROSS SECTIONS				
②						

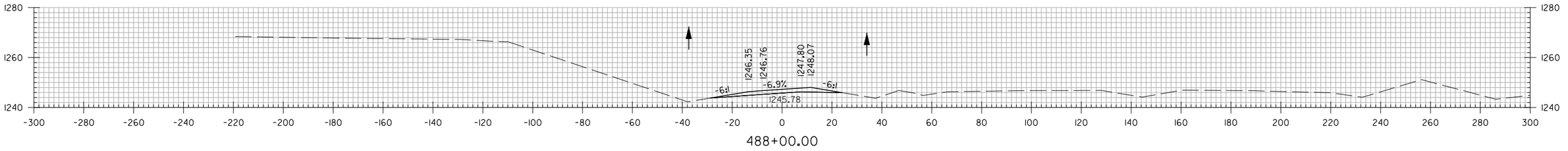

488+00.00

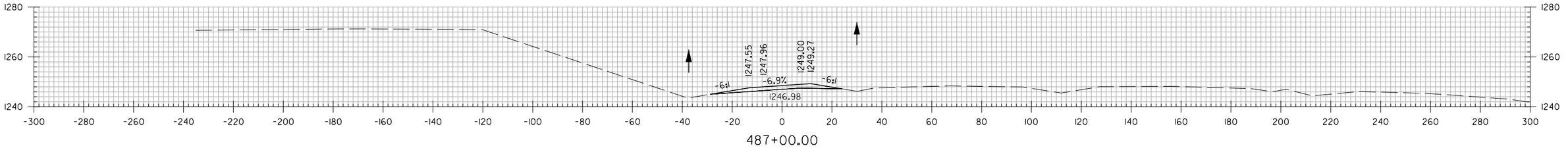

487+00.00

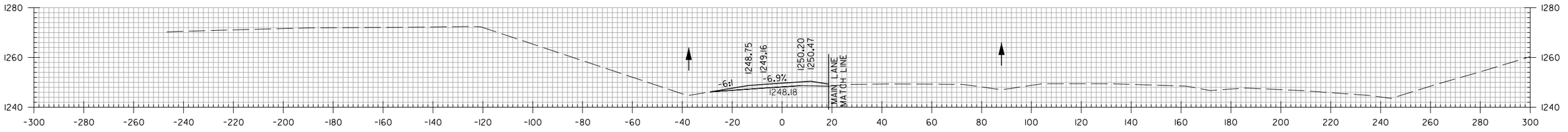

486+00.00

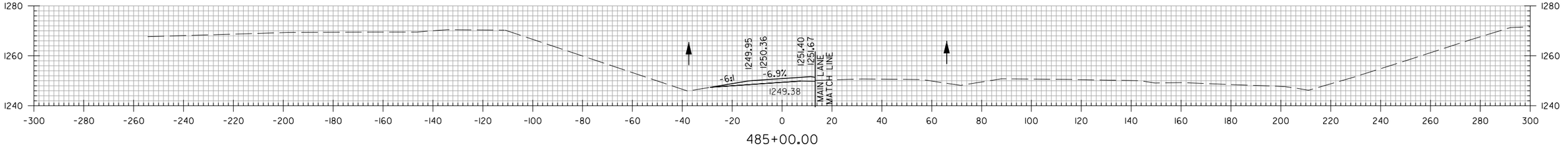

485+00.00

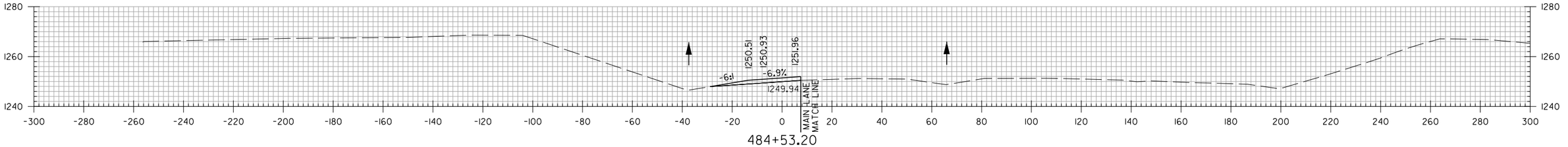

484+53.20

STA. 484+53.20 BEGIN HWY. 112 RAMP 4

STA. 483+84.15 MAX SUPERELEVATION (0.069 FT./FT)
STA. 480+84.15 BEGIN SUPERELEVATION

HWY. 112 RAMP 4
STA. 484+53.20 TO STA. 488+00

HBVinson 7/21/2023 3:19:43 PM
WORKSPACE: AHTD
L:\20\T\T01T660 - ARDOT 012326 Hwy 412 - Hwy 112\Drawings\r012326_CX_112R4_01.dgn
REVISED DATE:

DATE REVISED	DATE REVISED	FED. RD. DIST. NO.	STATE	JOB NO.	SHEET NO.	TOTAL SHEETS
		6	ARK.	012326	784	838
		CROSS SECTIONS				
②						

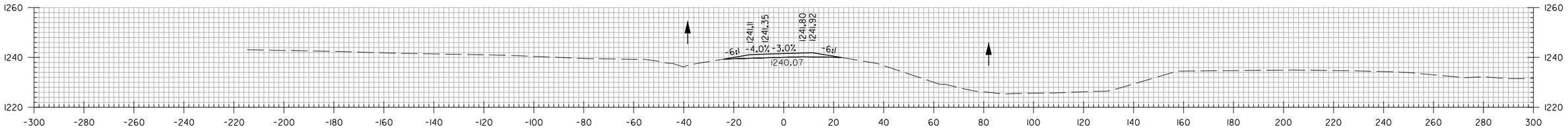

493+00.00

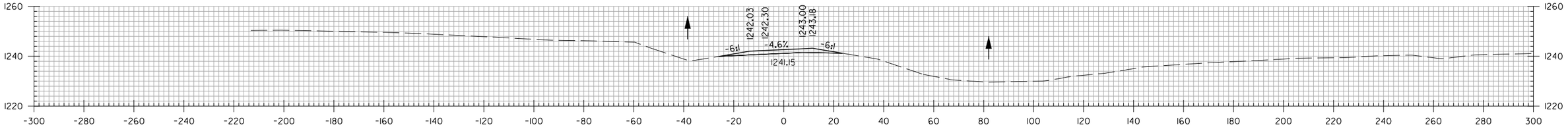

492+00.00

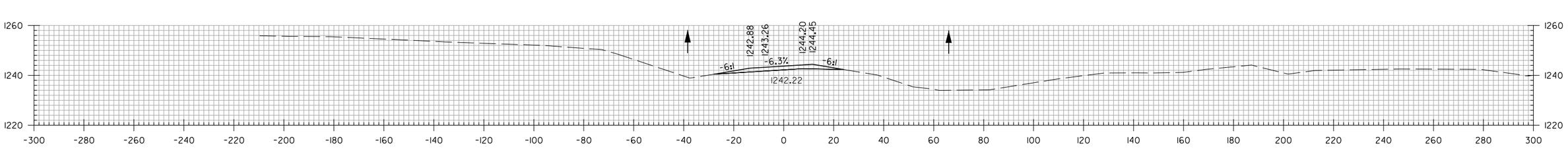

491+00.00

STA. 490+60.68 MAX SUPERELEVATION (0.069 FT./FT.)

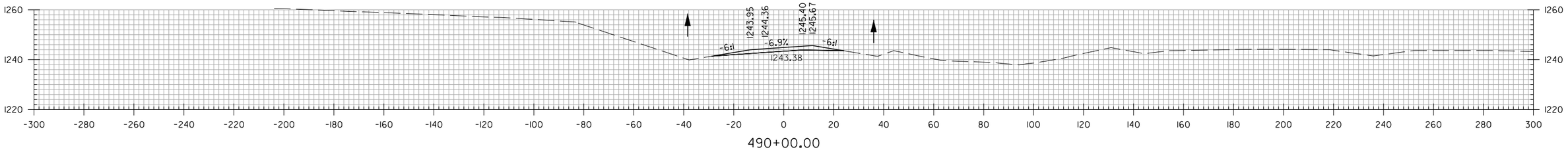

490+00.00

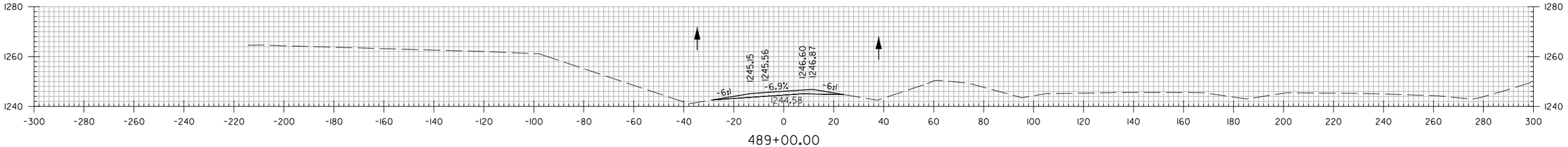

489+00.00

HWY. 112 RAMP 4
STA. 489+00 TO STA. 493+00

HBVinson 7/27/2023 3:19:43 PM
WORKSPACE: AHTD
L:\20\7\101660 - ARDOT 012326 Hwy 412 - Hwy 112\Drawings\r012326_CX_112R4_01.dgn
REVISED DATE:

DATE REVISED	DATE REVISED	FED. RD. DIST. NO.	STATE	JOB NO.	SHEET NO.	TOTAL SHEETS
		6	ARK.	012326	785	838
		CROSS SECTIONS				
②						

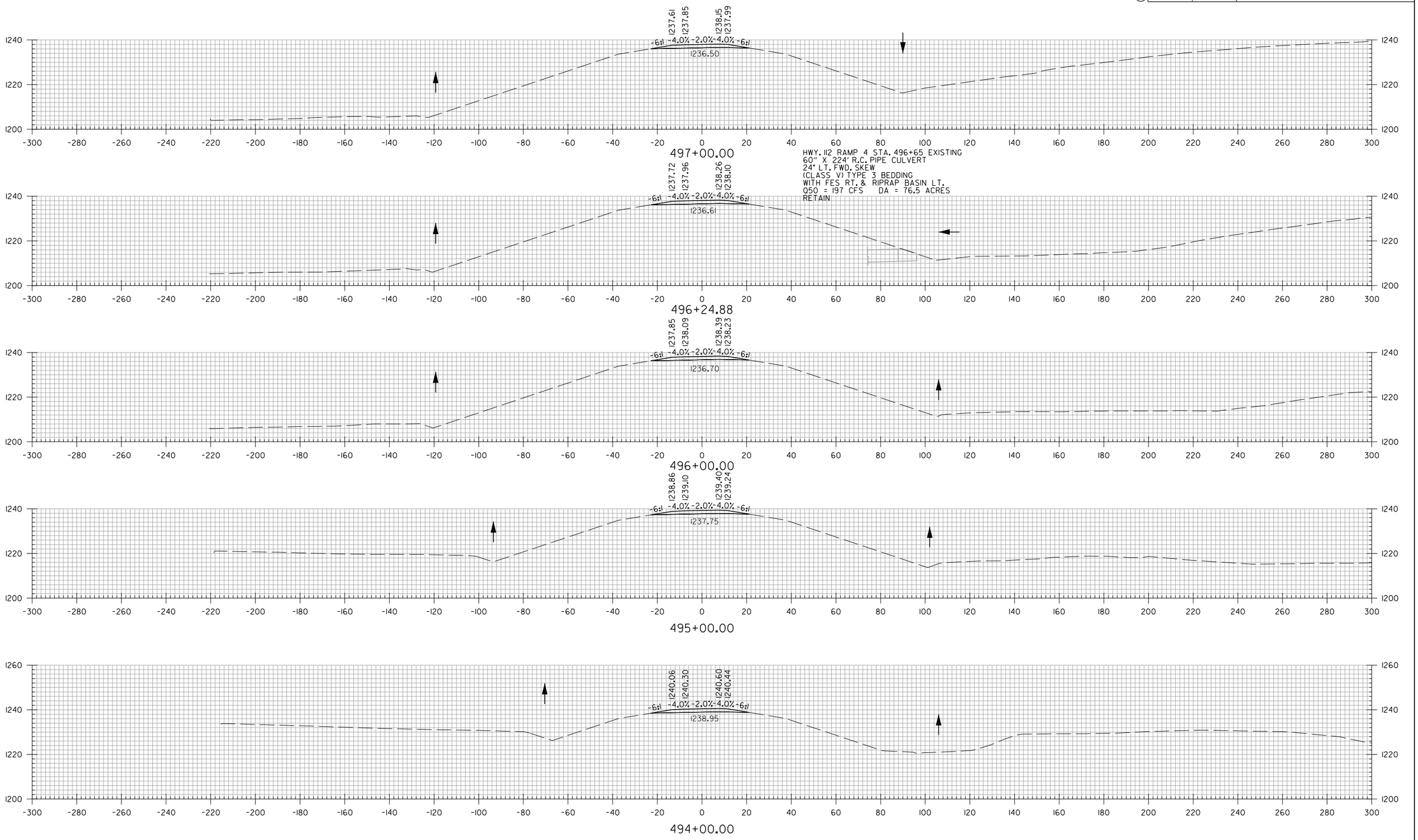

HBVinson
7/27/2023 3:19:43 PM
WORKSPACE: AHTD
L:\2017\170766O - ARDOT 012326 Hwy 412 - Hwy 112\Drawings\r012326_CX_112R4_01.dgn
REVISED DATE:

DATE REVISED	DATE REVISED	FED. RD. DIST. NO.	STATE	JOB NO.	SHEET NO.	TOTAL SHEETS
		6	ARK.	012326	786	838
		CROSS SECTIONS				
②						

STA. 499+12.74 END HWY. 112 RAMP 4

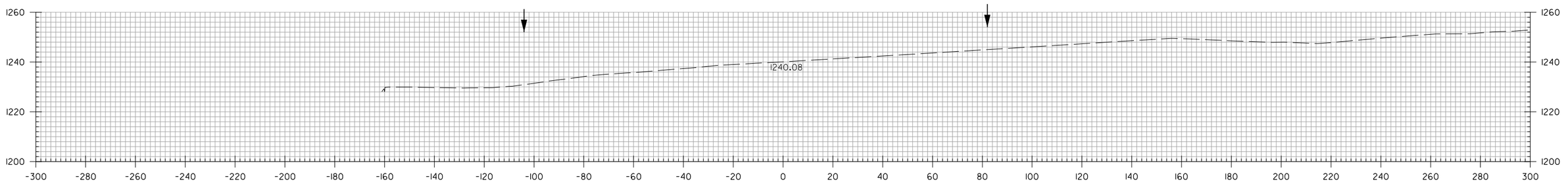

499+12.74

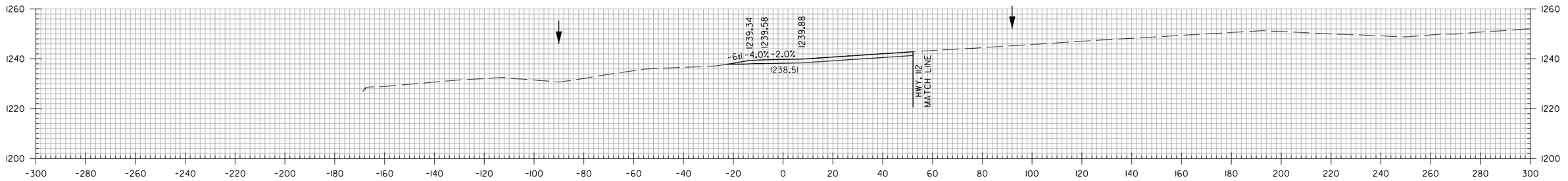

499+00.00

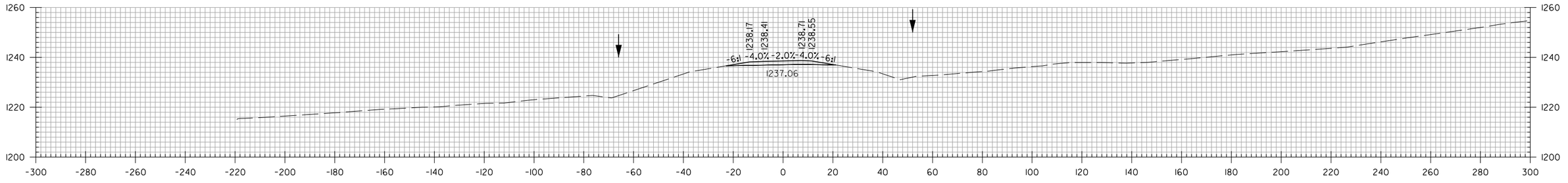

498+00.00

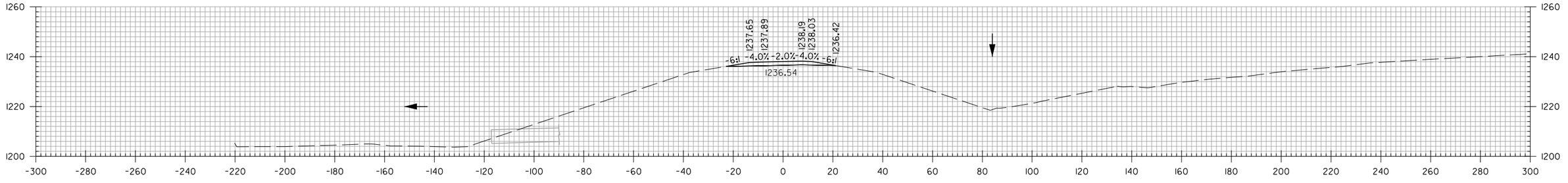

497+16.66

HWY. 112 RAMP 4
STA. 497+16.66 TO STA. 499+12.74

HBVinson 7/27/2023 3:19:43 PM
WORKSPACE: AHTD
L:\20IT\170I7660 - ARDOT 012326 Hwy 412 - Hwy 112\Drawings\r012326_CX_112R4_01.dgn
REVISED DATE:

DATE REVISED	DATE REVISED	FED. RD. DIST. NO.	STATE	JOB NO.	SHEET NO.	TOTAL SHEETS
		6	ARK.	012326	787	838
		CROSS SECTIONS				

(2)

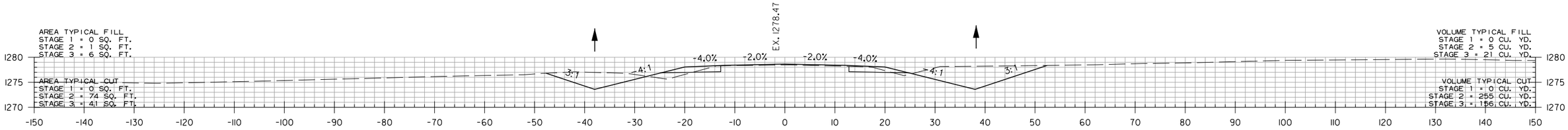

47+00.00

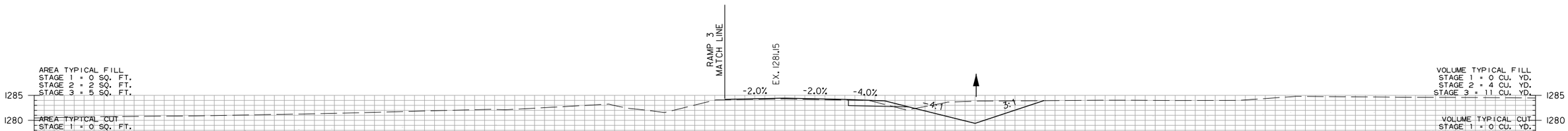

46+00.00

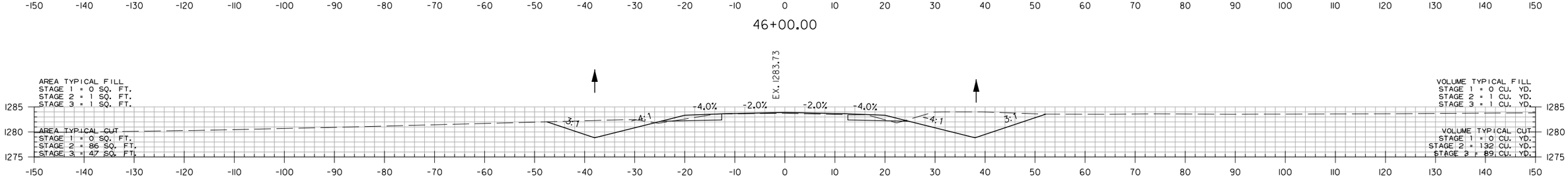

45+00.00

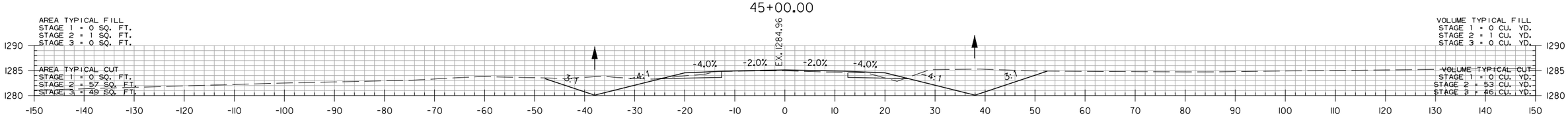

44+50.00

STA. 44+50.00 BEGIN HWY. 68 OVERLAY WITH NOTCH AND WIDEN

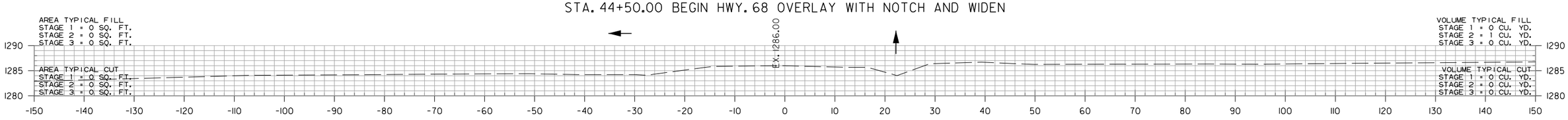

44+00.00

STA. 43+50.00 BEGIN 100' TRANSITION

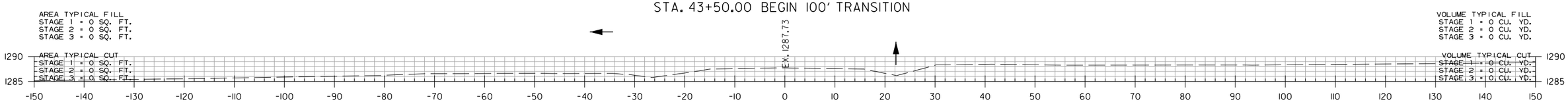

43+09.97

HWY. 68
STA. 43+09.97 TO STA. 47+00

HBVinson 7/27/2023 3:19:48 PM
WORKSPACE: AHTD
L:\2017\170\T660 - ARDOT 012326 Hwy 412 - Hwy 112\Drawings\r012326_CX_CR68_01.dgn
REVISED DATE:

DATE REVISED	DATE REVISED	FED. RD. DIST. NO.	STATE	JOB NO.	SHEET NO.	TOTAL SHEETS
		6	ARK.	012326	788	838
		CROSS SECTIONS				
②						

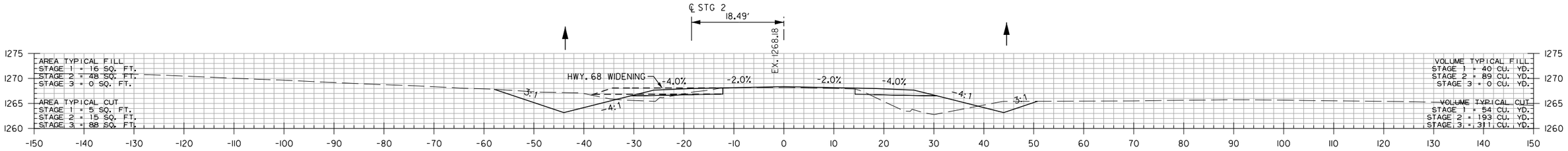

51+00.00

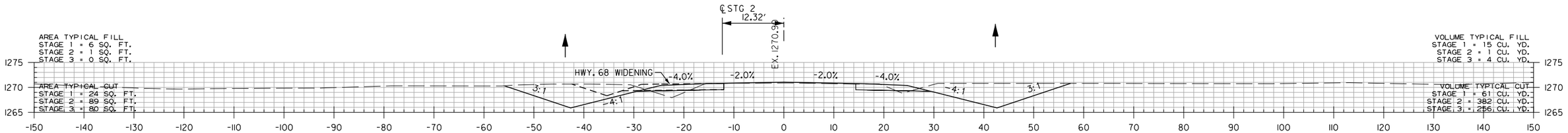

50+00.00

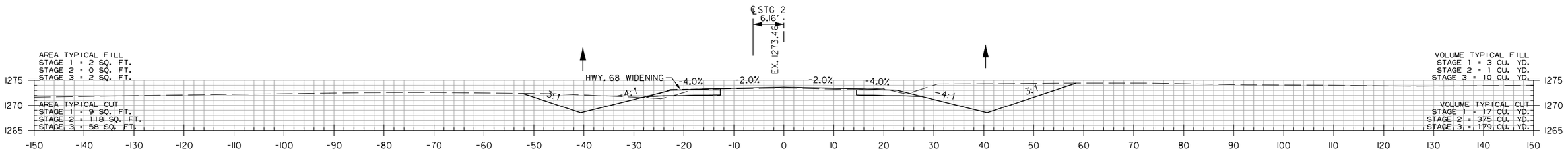

49+00.00

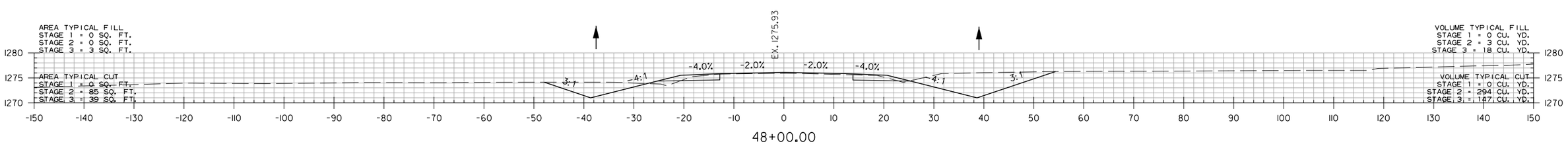

48+00.00

HWY. 68
STA. 48+00 TO STA. 51+00

HBVinson 7/27/2023 3:19:48 PM
WORKSPACE: AHTD
L:\2017\1701660 - ARDOT 012326 Hwy 412 - Hwy 112\Drawings\r012326_CX_CR68_01.dgn
REVISED DATE:

DATE REVISED	DATE REVISED	FED. RD. DIST. NO.	STATE	JOB NO.	SHEET NO.	TOTAL SHEETS
		6	ARK.	012326	789	838
		CROSS SECTIONS				

(2)

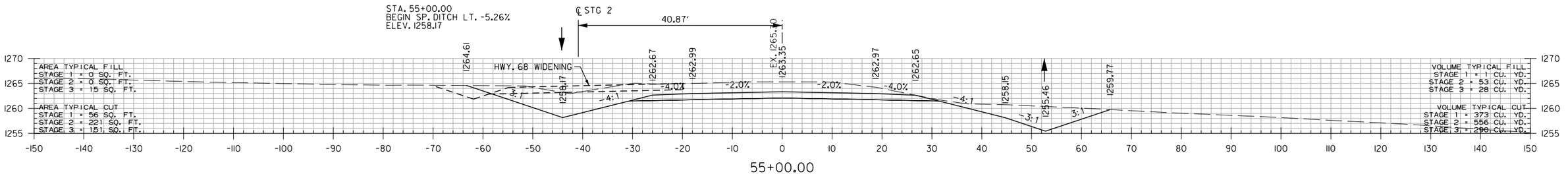

55+00.00

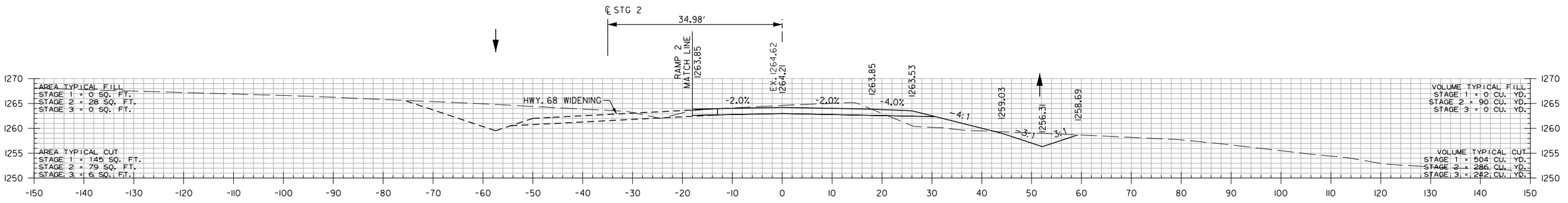

54+00.00

STA. 53+00 CONSTRUCT
24" X 85' R.C. PIPE CULVERT
(CLASS III) TYPE 3 BEDDING
WITH FES LT. & RT.
Q50 = 16 CFS DA = 5.1 ACRES

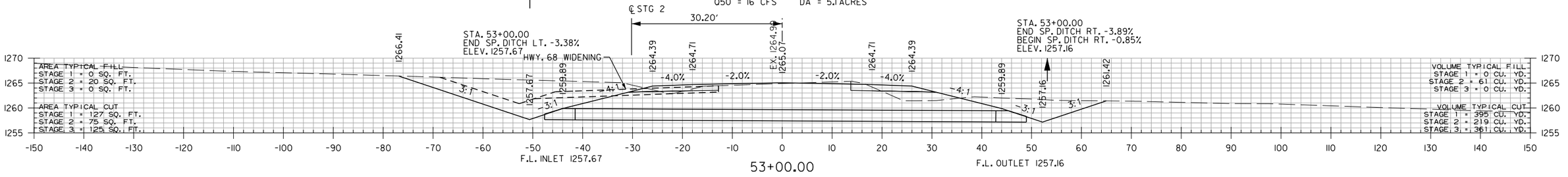

F.L. INLET 1257.67

53+00.00

F.L. OUTLET 1257.16

STA. 53+00.00 END HWY. 68 OVERLAY WITH NOTCH AND WIDEN
BEGIN HWY. 68

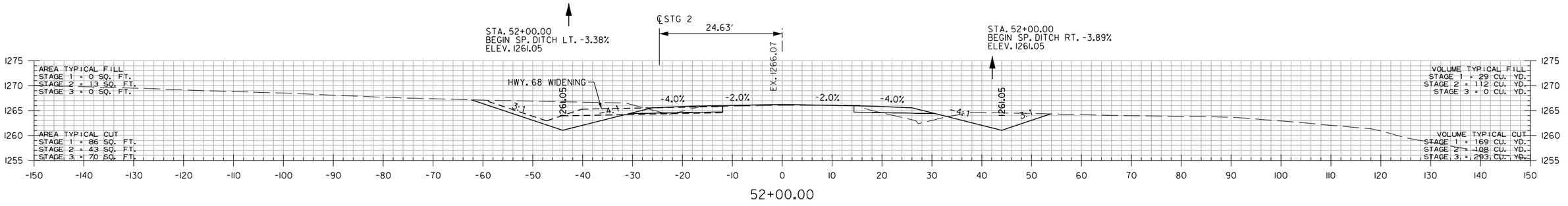

52+00.00

HWY. 68
STA. 52+00 TO STA. 55+00

HBVinson
7/27/2023 3:19:48 PM
WORKSPACE: AHTD
L:\2017\17017660 - ARDOT 012326 Hwy 412 - Hwy 112\Drawings\r012326_CX_CR68.01.dgn
REVISED DATE:

DATE REVISED	DATE REVISED	FED. RD. DIST. NO.	STATE	JOB NO.	SHEET NO.	TOTAL SHEETS
		6	ARK.	012326	790	838
		CROSS SECTIONS				
②						

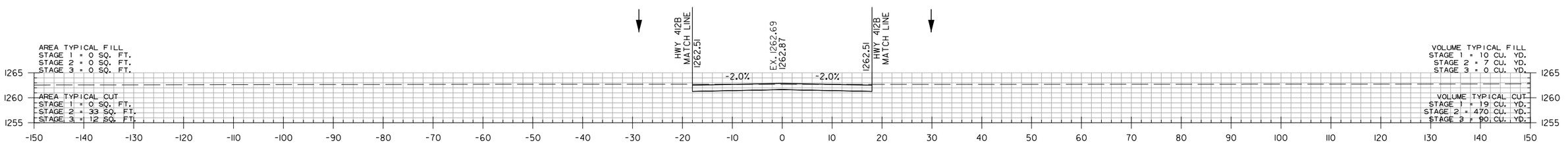

56+60.84

STA. 56+60.84 END HWY. 68

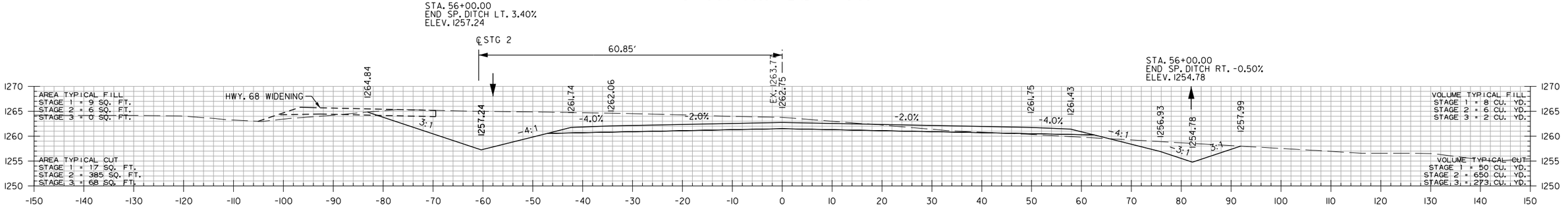

56+00.00

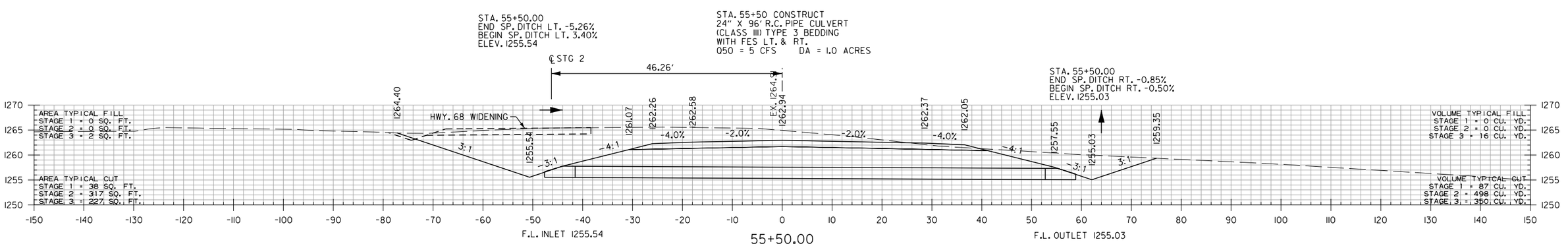

55+50.00

HWY. 68
STA. 55+50 TO STA. 56+60.84

HBVinson
WORKSPACE: AHTD
L:\20IT\170I7660 - ARDOT 012326 Hwy 412 - Hwy 112\Drawings\r012326_CX_CR68.0.dgn
REVISED DATE: 7/27/2023 3:19:48 PM

DATE REVISED	DATE REVISED	FED. RD. DIST. NO.	STATE	JOB NO.	SHEET NO.	TOTAL SHEETS
		6	ARK.	012326	791	838
		CROSS SECTIONS				

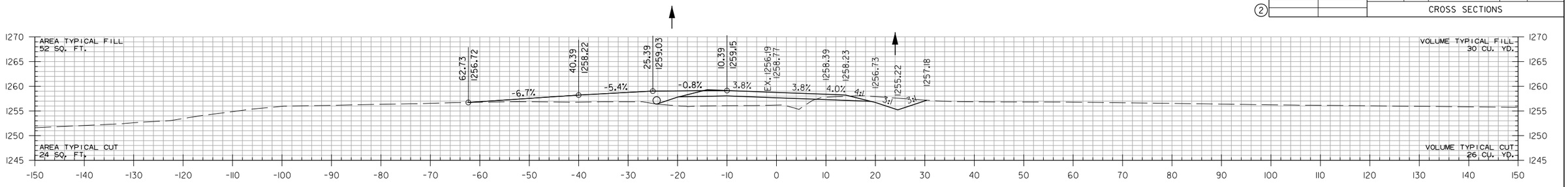

16+21.95

STA. 16+22 INSTALL
18" X 88' PIPE CULVERT
LT. SIDE DRAIN
CONSTRUCT APPROACH
29 CU. YDS.

STA. 16+00.00
BEGIN SP. DITCH RT. -2.50%
ELEV. 1255.77

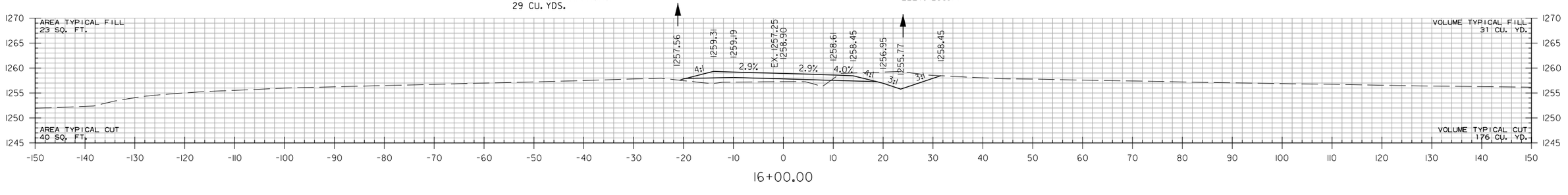

16+00.00

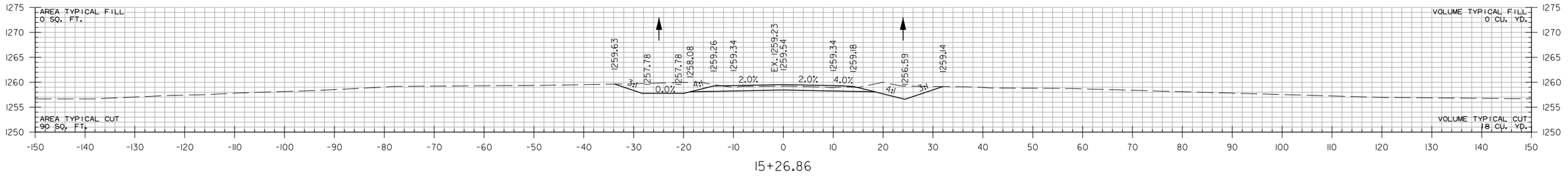

15+26.86

STA. 15+26.86 BEGIN SUPERELEVATION

STA. 15+26.86 BEGIN MUSTEEN RD.

STA. 15+16
CONSTRUCTAPPROACH
22 CU. YDS.

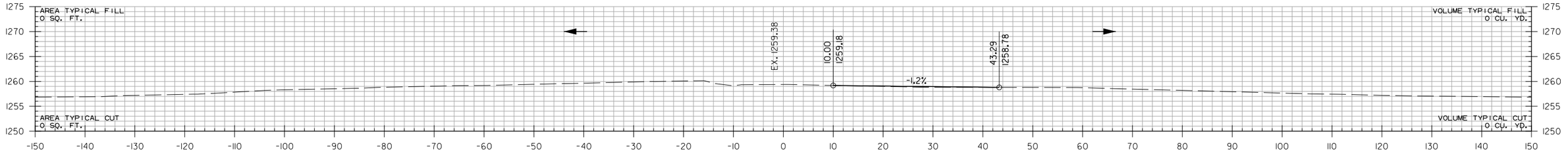

15+16.01

STA. 14+26.86 BEGIN 100' TRANSITION

MUSTEEN RD.
STA. 15+16.01 TO STA. 16+21.95

JATurner
8/9/2023 7:47:17 AM
WORKSPACE: AHTD
L:\2017\17017660 - ARDOT 012326 Hwy 412 - Hwy 112\Drawings\r012326_CX_MUS_01.dgn
REVISED DATE:

DATE REVISED	DATE REVISED	FED. RD. DIST. NO.	STATE	JOB NO.	SHEET NO.	TOTAL SHEETS
		6	ARK.	012326	792	838
②		CROSS SECTIONS				

STA. 17+76.86 MAX. SUPERELEVATION (0.10'/')

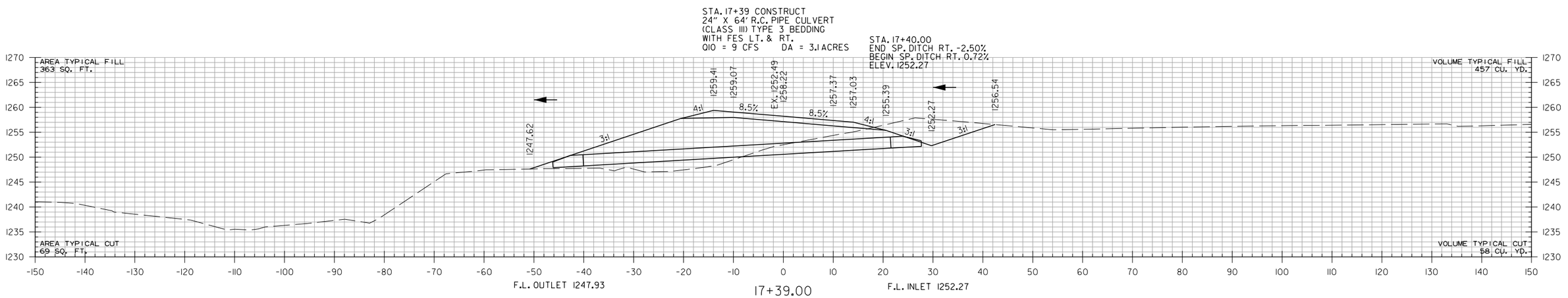

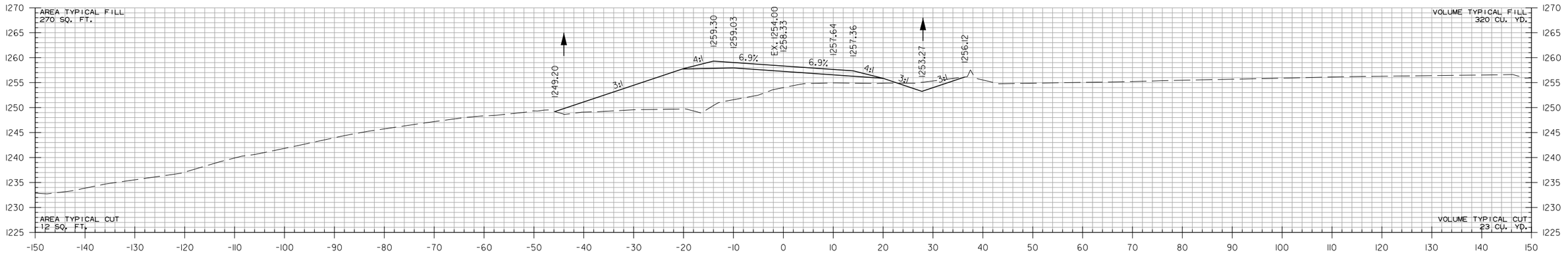

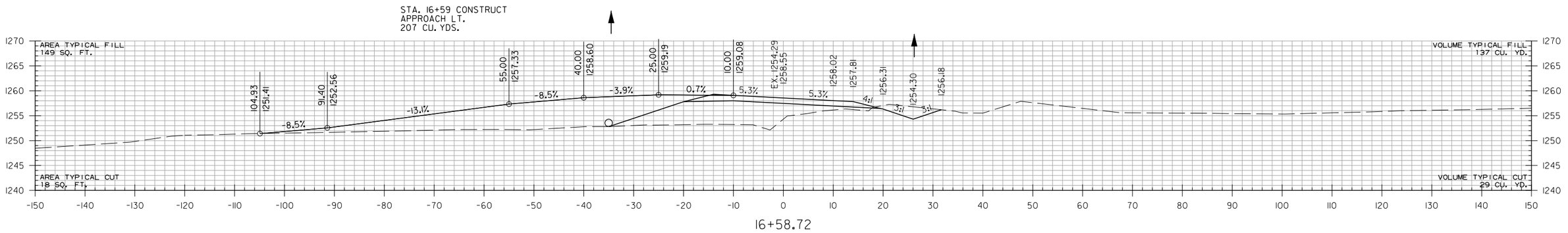

MUSTEEN RD.
STA. 16+58.72 TO STA. 17+39

HBVinson
7/27/2023 3:19:49 PM
WORKSPACE: AHTD
L:\20\170\7660 - ARDOT 012326 Hwy 412 - Hwy 112\Drawings\r012326_CX_MUS.01.dgn
REVISED DATE:

DATE REVISED	DATE REVISED	FED. RD. DIST. NO.	STATE	JOB NO.	SHEET NO.	TOTAL SHEETS
		6	ARK.	012326	793	838
		CROSS SECTIONS				

(2)

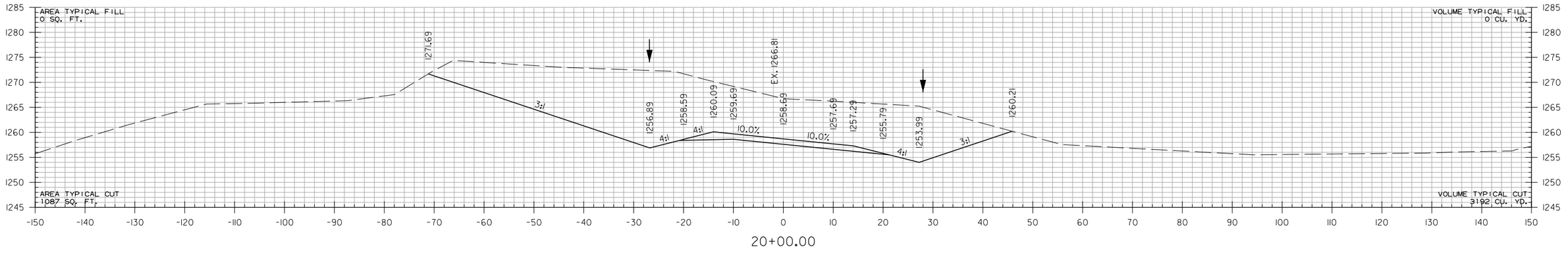

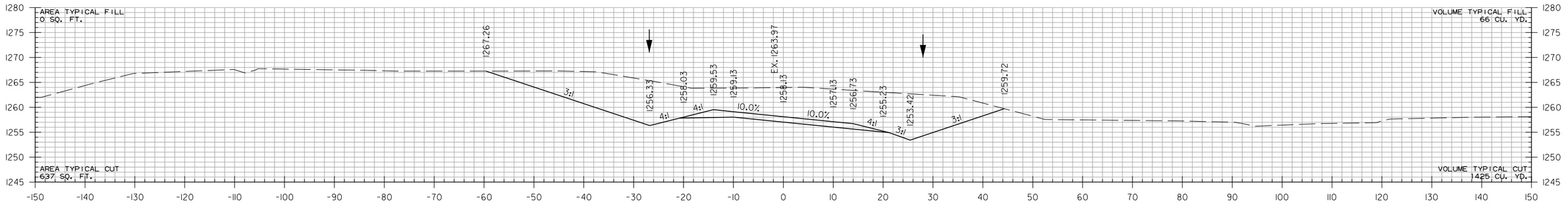

STA. 19+00.00
END SP. DITCH RT. 0.72%
ELEV. 1253.42

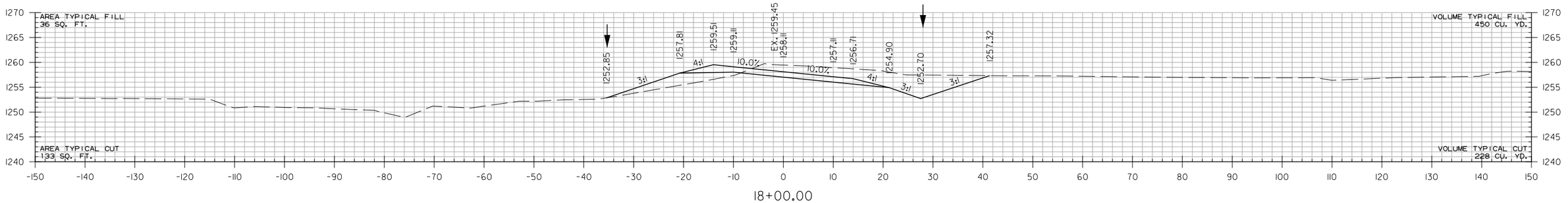

MUSTEEN RD.
STA. 18+00 TO STA. 20+00

HBVinson 7/27/2023 3:9:49 PM
WORKSPACE: AHTD
L:\20IT\170I660 - ARDOT 012326 Hwy 412 - Hwy 112\Drawings\r012326_CX_MUS_01.dgn
REVISED DATE:

DATE REVISED	DATE REVISED	FED. RD. DIST. NO.	STATE	JOB NO.	SHEET NO.	TOTAL SHEETS
		6	ARK.	012326	794	838
		CROSS SECTIONS				
2						

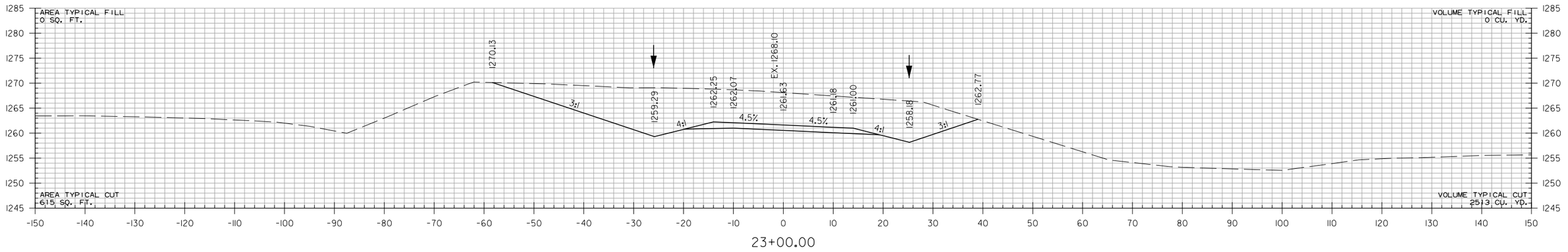

23+00.00

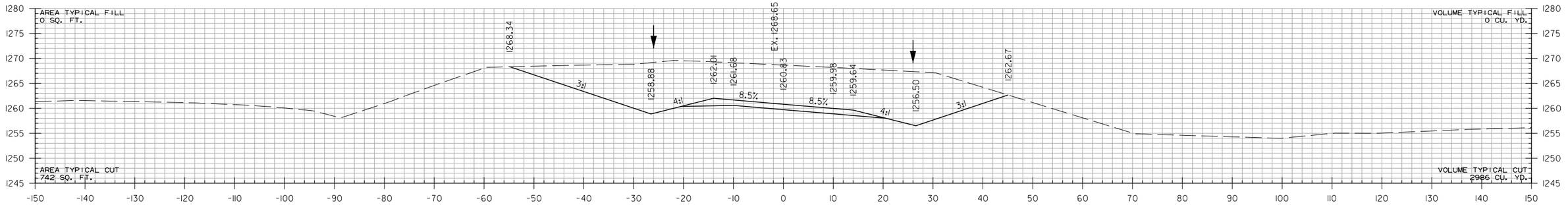

22+00.00

STA. 21+62.27 MAX. SUPERELEVATION (0.10'/')

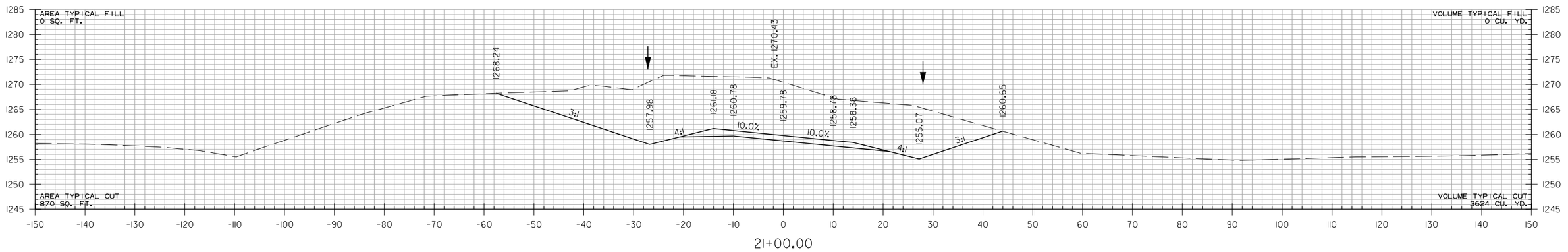

21+00.00

MUSTEEN RD.
STA. 21+00 TO STA. 23+00

HBVinson
7/27/2023 3:19:49 PM
WORKSPACE: AHTD
L:\20\T\T017660 - ARDOT 012326 Hwy 412 - Hwy 112\Drawings\r012326_CX_MUS_01.dgn
REVISED DATE:

DATE REVISED	DATE REVISED	FED. RD. DIST. NO.	STATE	JOB NO.	SHEET NO.	TOTAL SHEETS
		6	ARK.	012326	795	838
		CROSS SECTIONS				

2

STA. 25+90 CONSTRUCT
APPROACH RT.
91 CU. YDS.

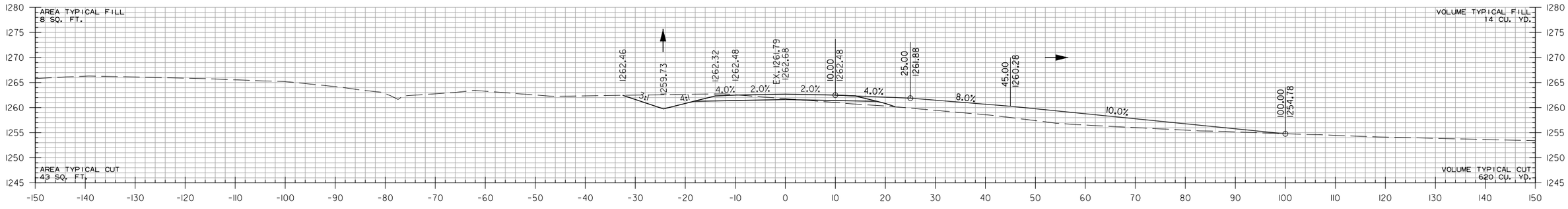

26+00.00

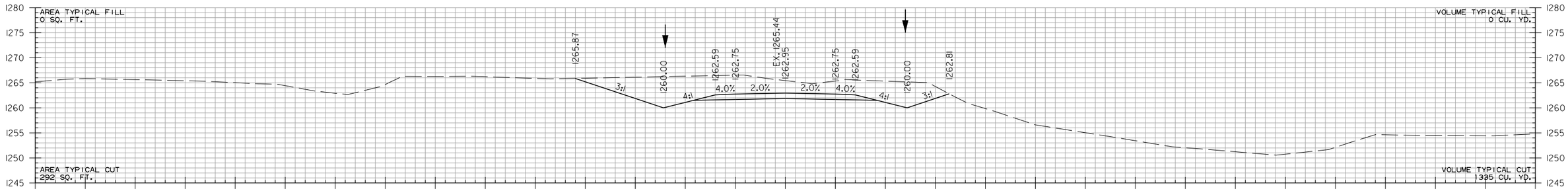

25+00.00

STA. 24+12.27 END SUPERELEVATION

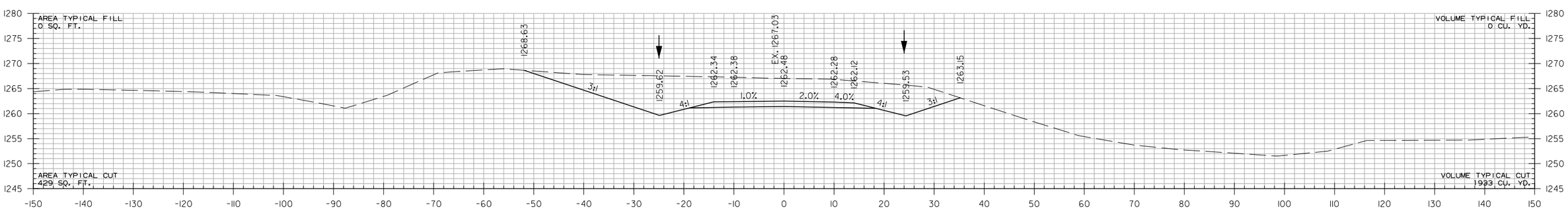

24+00.00

MUSTEEN RD.
STA. 24+00 TO STA. 26+00

JATurner 8/9/2023 7:47:17 AM
WORKSPACE: AHTD
L:\2017\17017660 - ARDOT 012326 Hwy 412 - Hwy 112\Drawings\r012326_CX_MUS_01.dgn
REVISED DATE:

DATE REVISED	DATE REVISED	FED. RD. DIST. NO.	STATE	JOB NO.	SHEET NO.	TOTAL SHEETS
		6	ARK.	012326	796	838
		CROSS SECTIONS				
(2)						

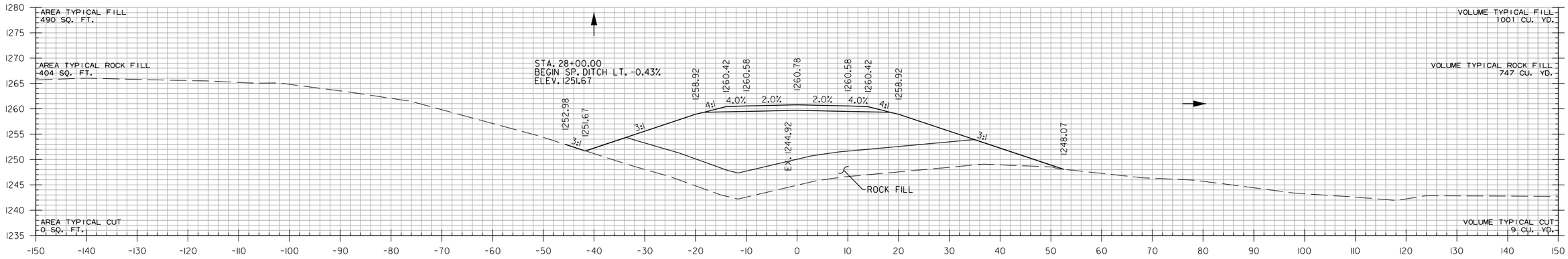

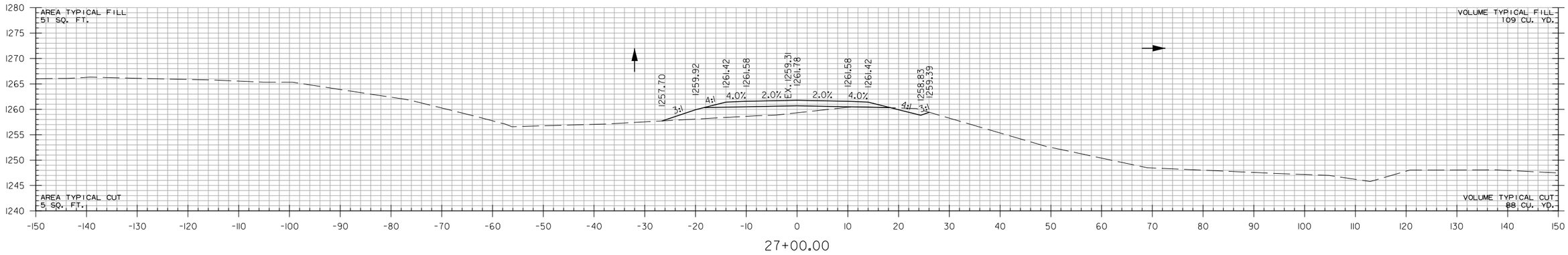

MUSTEEN RD.
STA. 27+00 TO STA. 28+00

HBVinson
7/27/2023 3:19:49 PM
WORKSPACE: AHTD
L:\20IT\170I7660 - ARDOT 012326 Hwy 412 - Hwy 112\Drawings\r012326_CX_MUS_01.dgn
REVISED DATE:

DATE REVISED	DATE REVISED	FED. RD. DIST. NO.	STATE	JOB NO.	SHEET NO.	TOTAL SHEETS
		6	ARK.	012326	797	838
		CROSS SECTIONS				
(2)						

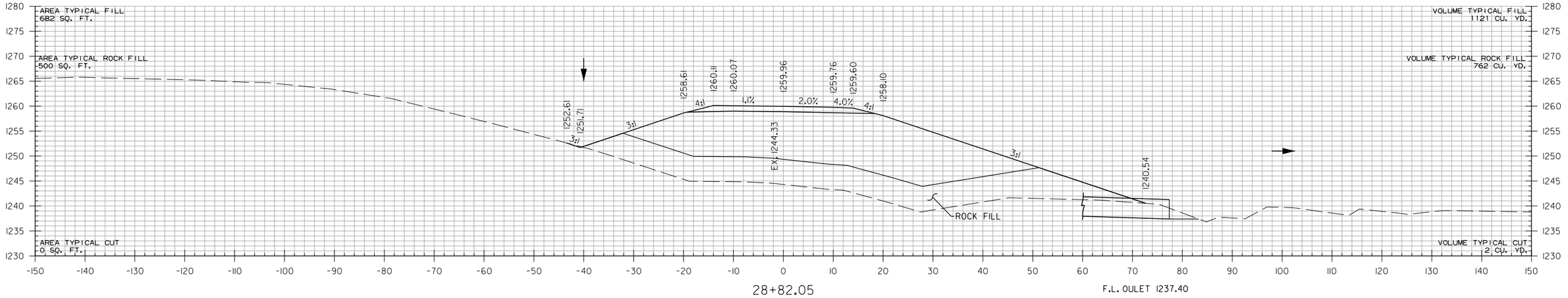

STA. 28+54 IN PLACE
42" X 146' R.C. PIPE CULVERT
8° RT. FWD. SKEW
WITH FES LT. & RT.
REMOVE FES AND 21' RC PIPE RT.
CONSTRUCT TYPE RM DROP INLET LT.
(4'7" X 3' X H=9'3")
WITH 42" X 124' R.C. PIPE OUTLET ON RT.
20° RT. FWD. SKEW
(CLASS IV) TYPE 3 BEDDING
WITH RIPRAP BASIN RT.
Q50 = 40 CFS DA = 14.4 ACRES
TOP D.I. 1251.50
F.L. D.I. 1242.29

STA. 28+42.47 BEGIN SUPERELEVATION

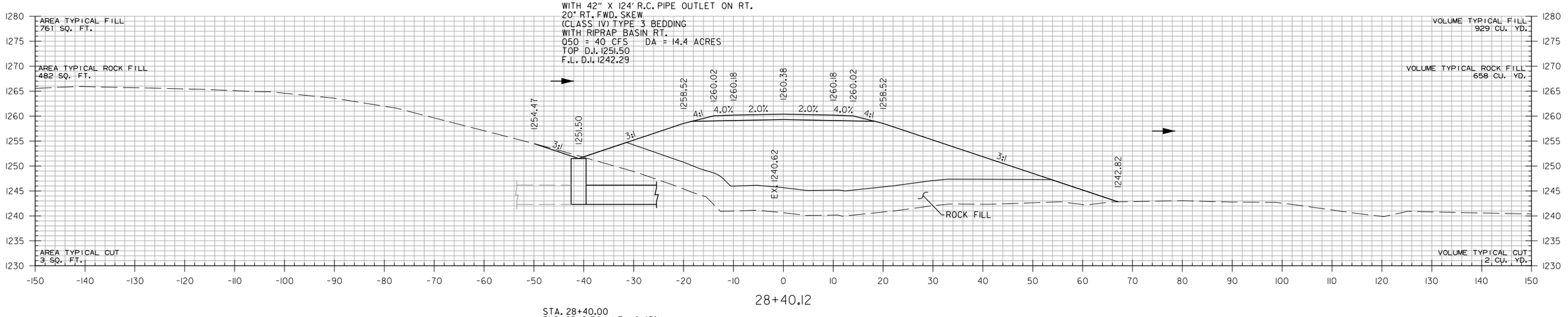

STA. 28+40.00
END SP. DITCH LT. -0.43%
BEGIN SP. DITCH LT. 0.50%
ELEV. 1251.50

MUSTEEN RD.
STA. 28+40.12 TO STA. 28+82.05

HBVinson 7/27/2023 3:19:49 PM
WORKSPACE: AHTD
L:\2017\170T660 - ARDOT 012326 Hwy 412 - Hwy 112\Drawings\r012326_CX_MUS_01.dgn
REVISED DATE:

DATE REVISED	DATE REVISED	FED. RD. DIST. NO.	STATE	JOB NO.	SHEET NO.	TOTAL SHEETS
		6	ARK.	012326	798	838
		CROSS SECTIONS				
②						

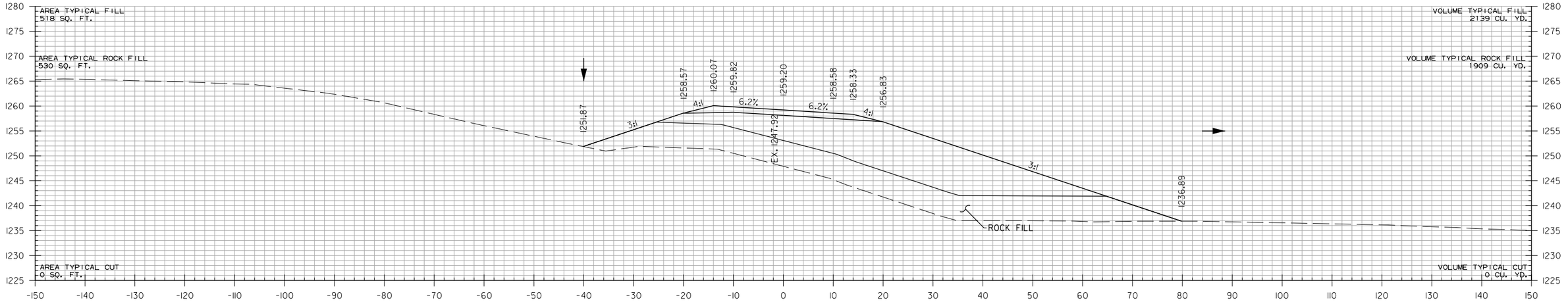

30+00.00

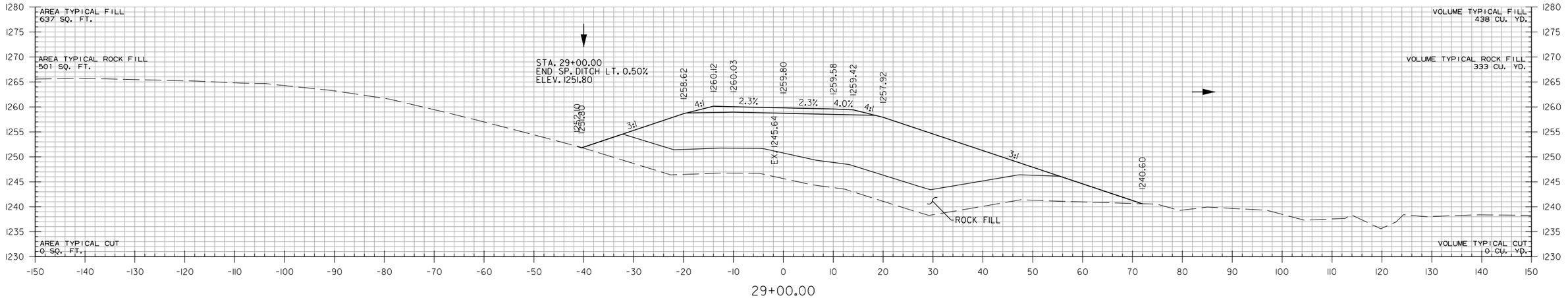

29+00.00

MUSTEEN RD.
STA. 29+00 TO STA. 30+00

HBVinson 7/27/2023 3:19:50 PM
WORKSPACE: AHTD
L:\20IT\I70IT660 - ARDOT 012326 Hwy 412 - Hwy 112\Drawings\r012326_CX_MUS_01.dgn
REVISED DATE:

DATE REVISED	DATE REVISED	FED. RD. DIST. NO.	STATE	JOB NO.	SHEET NO.	TOTAL SHEETS
		6	ARK.	012326	799	838
		CROSS SECTIONS				
(2)						

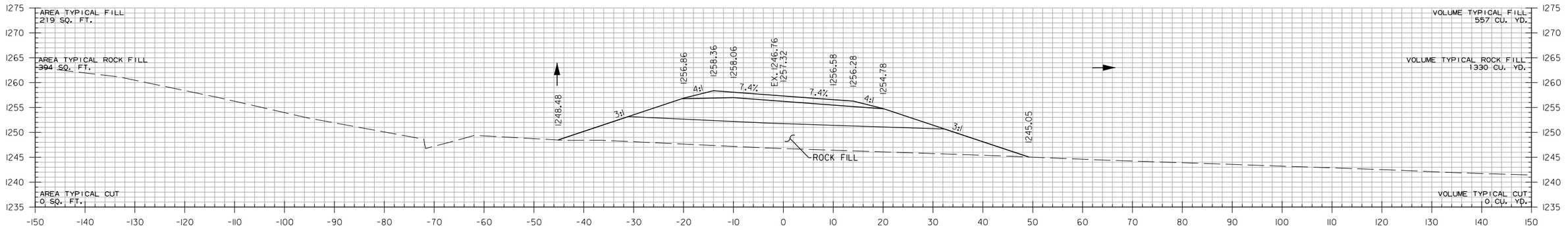

32+00.00

STA. 31+37.82 MAX. SUPERELEVATION (0.099'/')

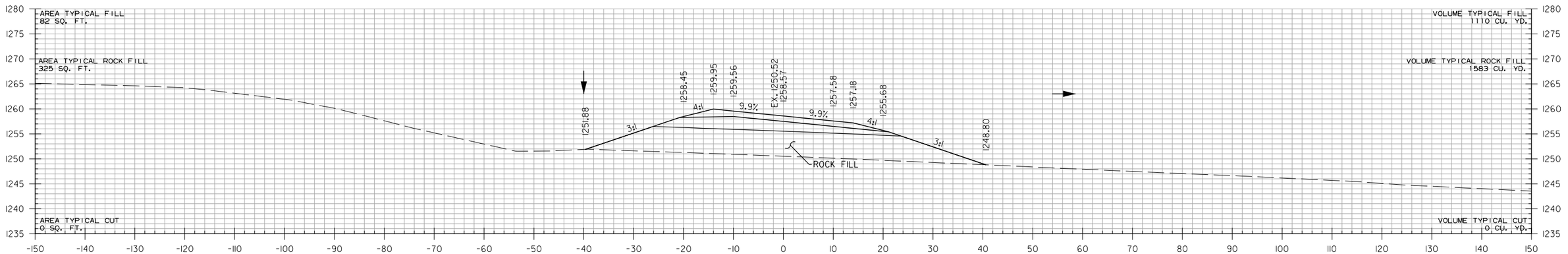

31+00.00

STA. 30+92.47 MAX. SUPERELEVATION (0.099'/')

MUSTEEN RD.
STA. 31+00 TO STA. 32+00

HBVinson 7/27/2023 3:49:50 PM
WORKSPACE: AHTD
L:\20\T\T01T660 - ARDOT 012326 Hwy 412 - Hwy 112\Drawings\r012326_CX_MUS_01.dgn
REVISED DATE:

DATE REVISED	DATE REVISED	FED. RD. DIST. NO.	STATE	JOB NO.	SHEET NO.	TOTAL SHEETS
		6	ARK.	012326	800	838
		CROSS SECTIONS				
②						

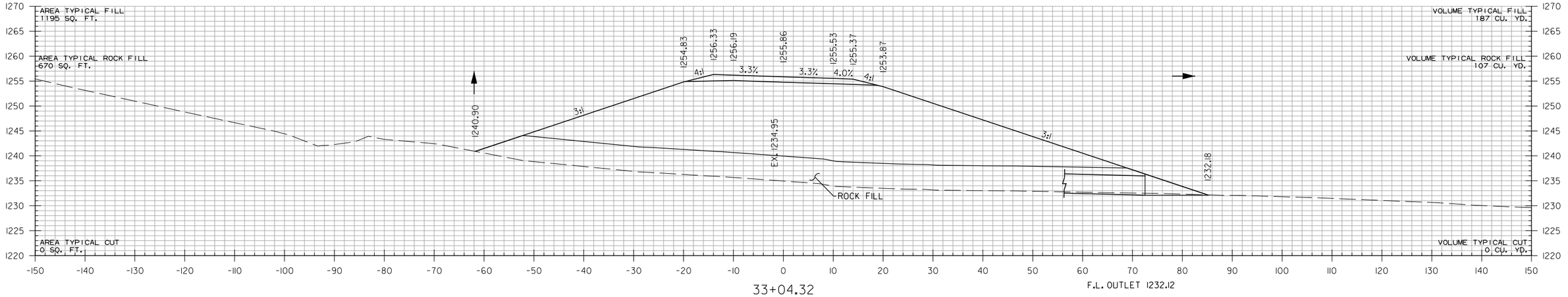

33+04.32

F.L. OUTLET 1232.12

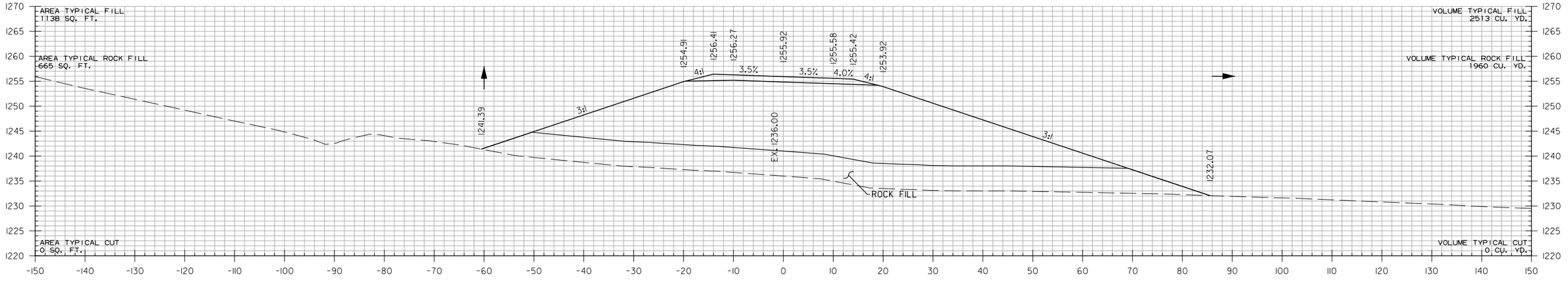

33+00.00

MUSTEEN RD.
STA. 33+00 TO STA. 33+04.32

HBVinson
7/27/2023 3:19:50 PM
WORKSPACE: AHTD
L:\20\T\T01T660 - ARDOT 012326 Hwy 412 - Hwy 112\Drawings\r012326_CX_MUS_01.dgn
REVISED DATE:

DATE REVISED	DATE REVISED	FED. RD. DIST. NO.	STATE	JOB NO.	SHEET NO.	TOTAL SHEETS
		6	ARK.	012326	801	838
		CROSS SECTIONS				
②						

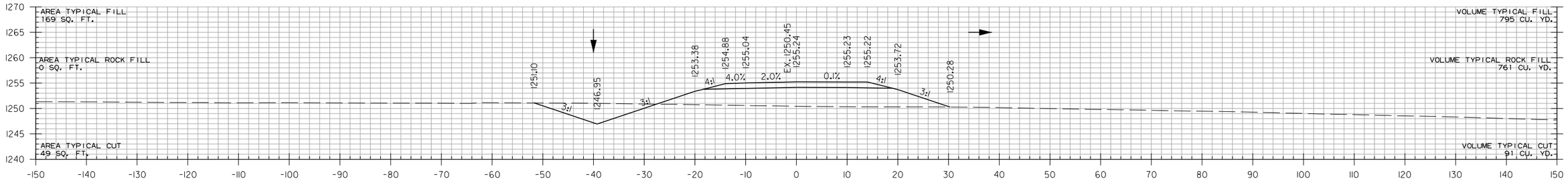

35+00.00

STA. 34+15.00
END SP. DITCH LT. 13.44%
BEGIN SP. DITCH LT. 3.47%
ELEV. 1244.00

STA. 34+76.65 BEGIN SUPERELEVATION

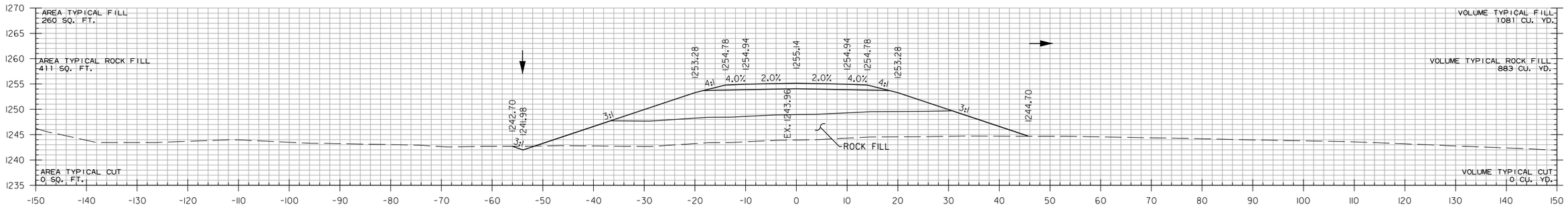

34+00.00

STA. 33+87.82 END SUPERELEVATION

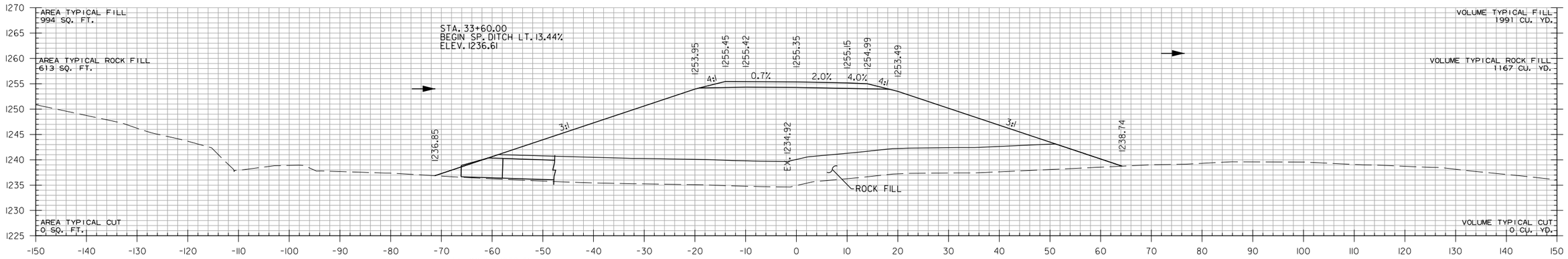

F.L. INLET 1236.61

STA. 33+31 CONSTRUCT
42" X 140' R.C. PIPE CULVERT
20° LT. FWD. SKEW
(CLASS IV) TYPE 3 BEDDING
WITH FES LT. & CONTRA-COSTA ENERGY DISSIPATOR RT.
Q50 = 52 CFS DA = 16.8 ACRES

33+53.45

MUSTEEN RD.
STA. 33+53.45 TO STA. 35+00

HBVinson
7/27/2023 3:19:50 PM
WORKSPACE: AHTD
L:\20IT\IT0IT660 - ARDOT 012326 Hwy 412 - Hwy 112\Drawings\r012326_CX_MUS_01.dgn
REVISED DATE:

DATE REVISED	DATE REVISED	FED. RD. DIST. NO.	STATE	JOB NO.	SHEET NO.	TOTAL SHEETS
		6	ARK.	012326	802	838
		CROSS SECTIONS				
②						

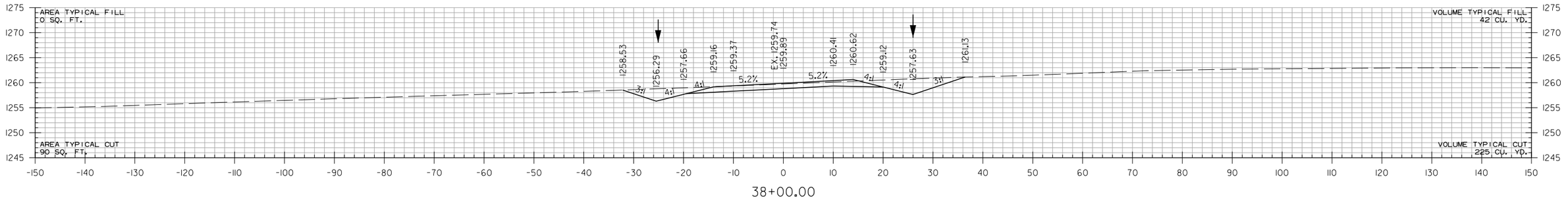

STA. 37+00.00
END SP. DITCH LT. 3.47%
ELEV. 1253.89

STA. 37+03.60 MAX. SUPERELEVATION (0.091'/')

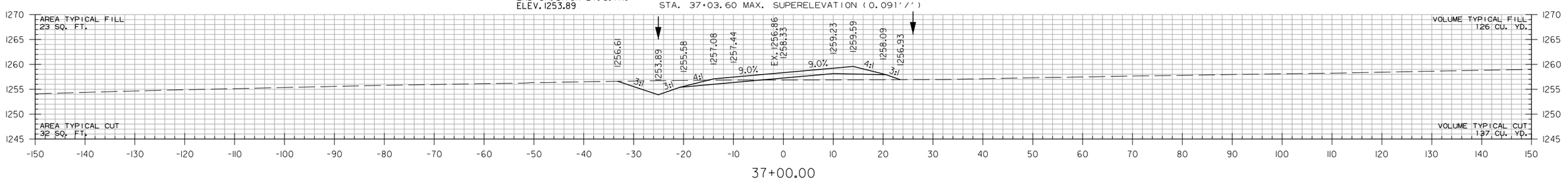

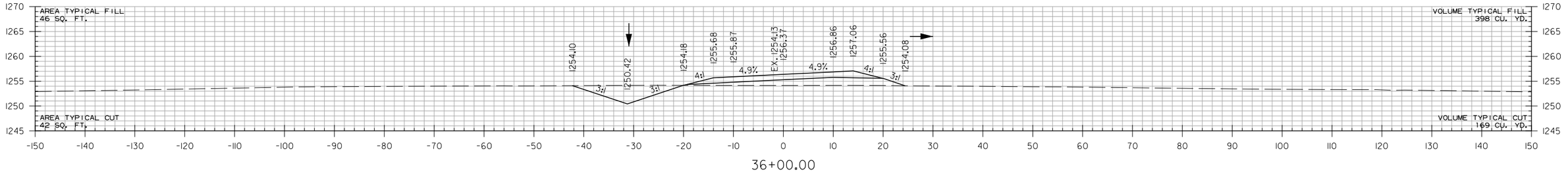

MUSTEEN RD.
STA. 36+00 TO STA. 38+00

HBVinson
WORKSPACE: AHTD
L:\2017\17017660 - ARDOT 012326 Hwy 412 - Hwy 112\Drawings\r012326_CX_MUS_01.dgn
7/27/2023 3:19:50 PM
REVISED DATE:

DATE REVISED	DATE REVISED	FED. RD. DIST. NO.	STATE	JOB NO.	SHEET NO.	TOTAL SHEETS
		6	ARK.	012326	803	838
		CROSS SECTIONS				
②						

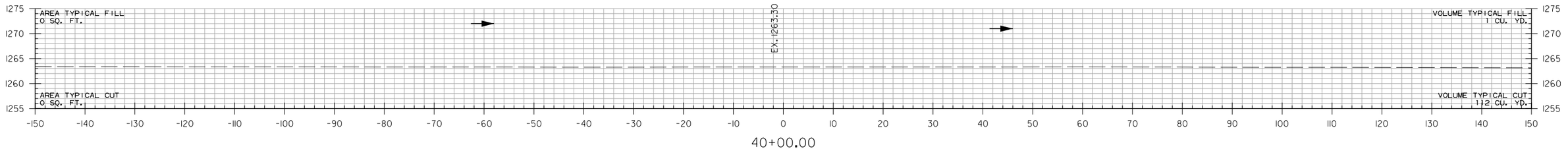

40+00.00

STA. 39+70.00 END MUSTEEN RD.

STA. 39+30.54 END SUPERELEVATION

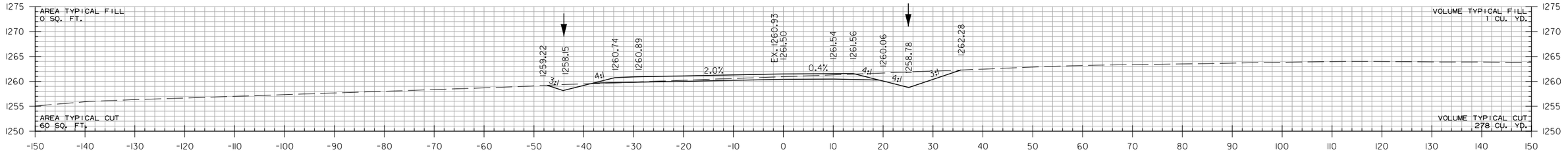

39+00.00

MUSTEEN RD.
STA. 39+00 TO STA. 40+00

HBVinson 7/27/2023 3:19:50 PM
WORKSPACE: AHTD
L:\2017\17017660 - ARDOT 012326 Hwy 412 - Hwy 112\Drawings\r012326_CX_MUS_01.dgn
REVISED DATE:

DATE REVISED	DATE REVISED	FED. RD. DIST. NO.	STATE	JOB NO.	SHEET NO.	TOTAL SHEETS
		6	ARK.	012326	804	838
		CROSS SECTIONS				

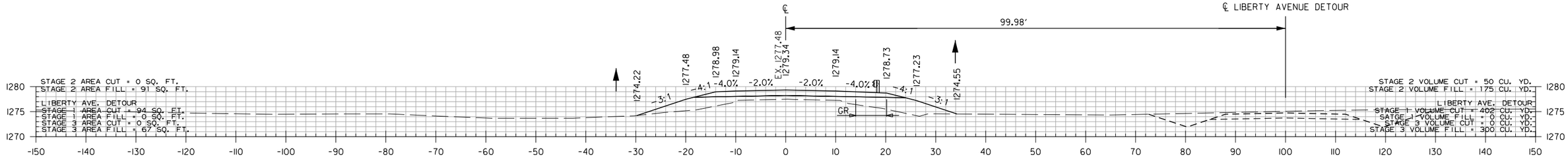

17+00.00

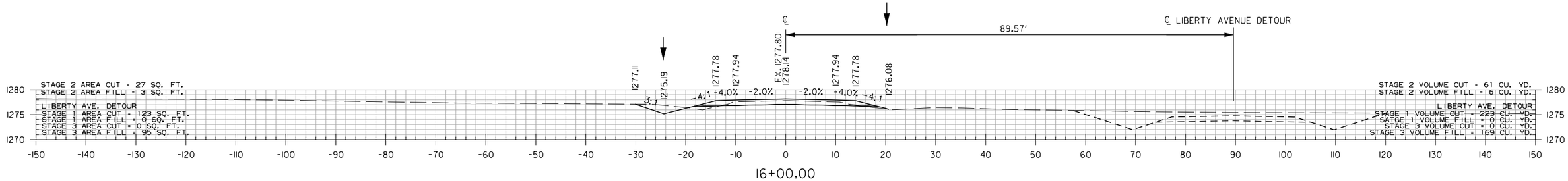

16+00.00

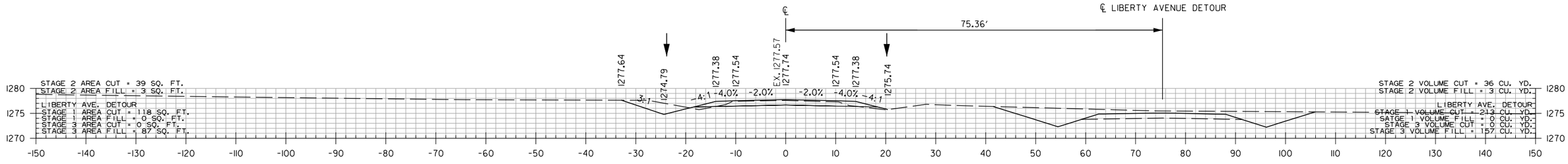

15+50.00

STA. 15+50.00 BEGIN LIBETY. AVE.

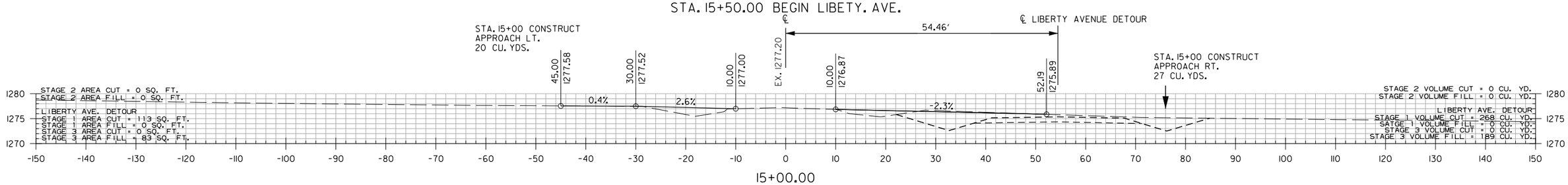

15+00.00

STA. 14+50.00 BEGIN 100' TRANSITION

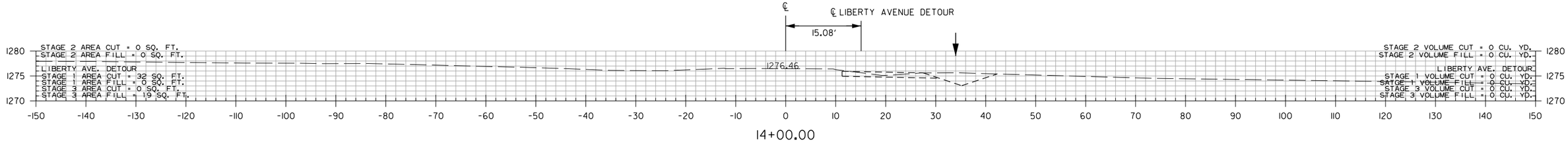

14+00.00

LIBERTY AVE.
STA. 14+00 TO STA. 17+00

HBVinson 7/21/2023 3:19:50 PM
WORKSPACE: AHTD
L:\20\7\7017660 - ARDOT 012326 Hwy 412 - Hwy 112\Drawings\r012326_CX_LIB_0.dgn
REVISED DATE:

DATE REVISED	DATE REVISED	FED. RD. DIST. NO.	STATE	JOB NO.	SHEET NO.	TOTAL SHEETS
		6	ARK.	012326	805	838
		CROSS SECTIONS				
②						

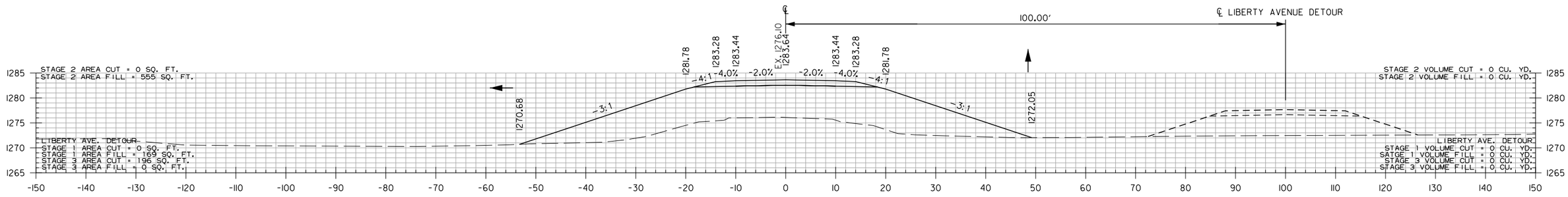

21+07.13

STA. 21+07.13 BEGIN BRIDGE
BRIDGE END RETAINING WALL

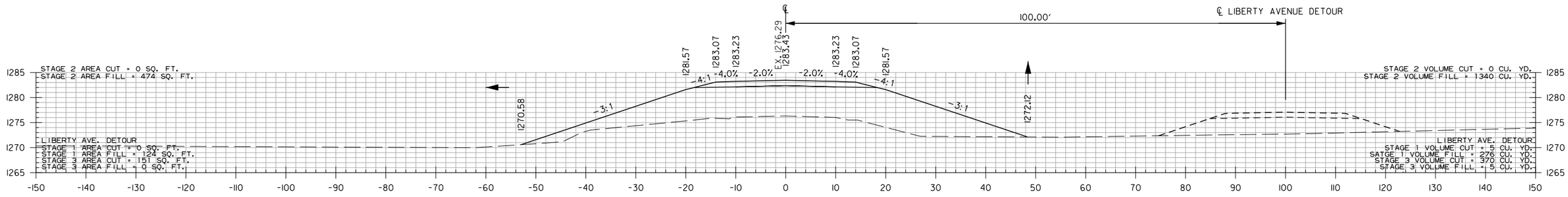

18+92.86

STA. 18+92.86 BEGIN BRIDGE
BRIDGE END RETAINING WALL

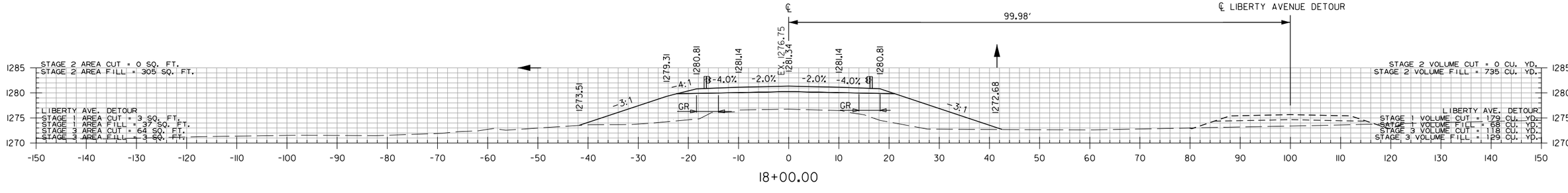

18+00.00

LIBERTY AVE.
STA. 18+00 TO STA. 21+07.13

HBVinson 7/27/2023 3:19:50 PM
WORKSPACE: AHTD
L:\2017\701660 - ARDOT 012326 Hwy 412 - Hwy 112\Drawings\r012326_CX_LIB_01.dgn
REVISED DATE:

DATE REVISED	DATE REVISED	FED. RD. DIST. NO.	STATE	JOB NO.	SHEET NO.	TOTAL SHEETS
		6	ARK.	012326	806	838
		CROSS SECTIONS				

(2)

STA. 24+80 IN PLACE
X" X 40' PIPE CULVERT
LT. SIDE DRAIN
REMOVE AND INSTALL
18" X 54' PIPE CULVERT
LT. SIDE DRAIN
CONSTRUCT APPROACH
13 CU. YDS.

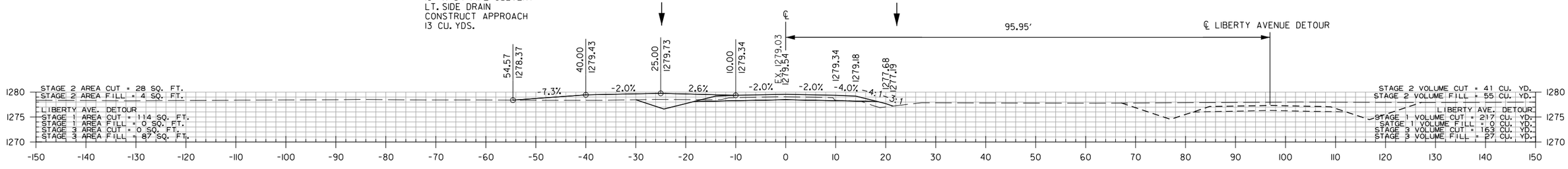

24+80.00

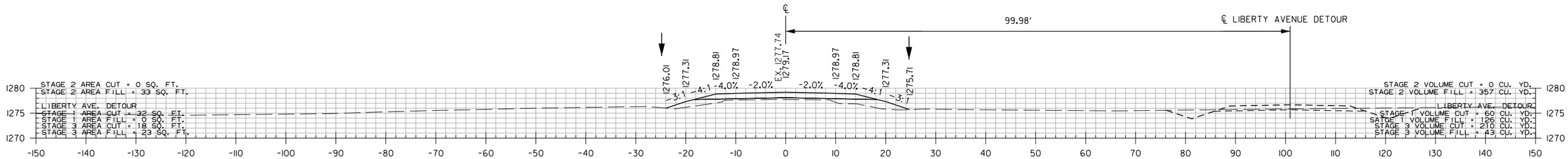

24+00.00

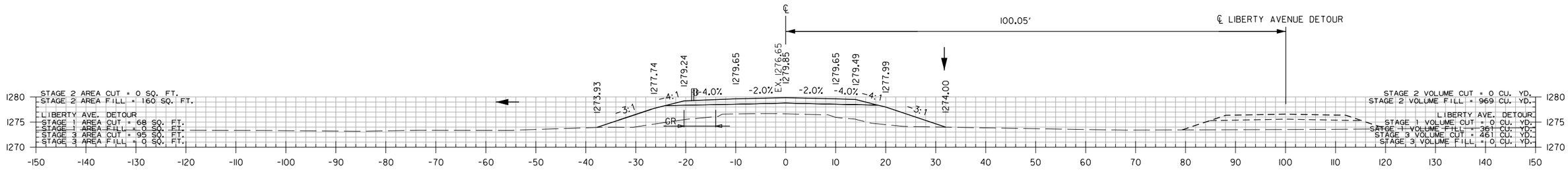

23+00.00

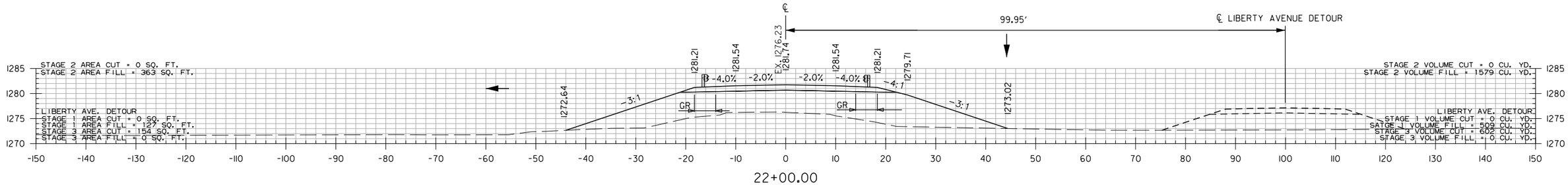

22+00.00

LIBERTY AVE.
STA. 22+00 TO STA. 24+80

HBVinson
WORKSPACE: AHTD
L:\2017\170176G0 - ARDOT 012326 Hwy 412 - Hwy 112\Drawings\r012326_CX_LIB_01.dgn
REVISED DATE:
7/27/2023 3:19:50 PM

DATE REVISED	DATE REVISED	FED. RD. DIST. NO.	STATE	JOB NO.	SHEET NO.	TOTAL SHEETS
		6	ARK.	012326	807	838
		CROSS SECTIONS				

(2)

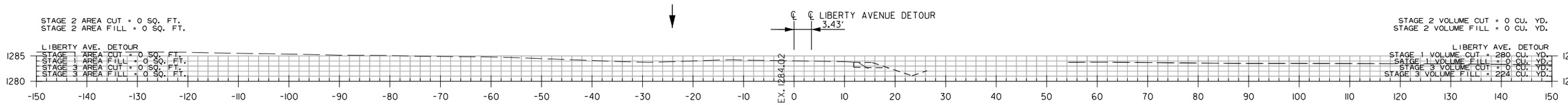

28+00.00

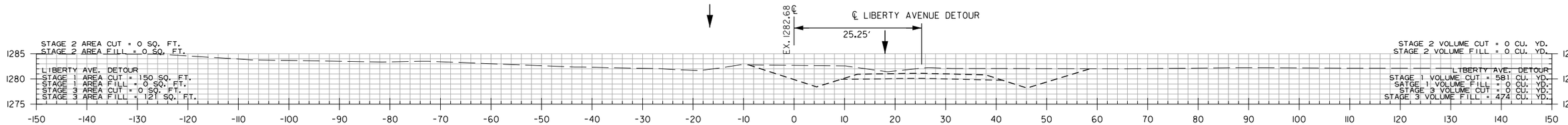

27+00.00

STA. 26+50.00 END 100' TRANSITION

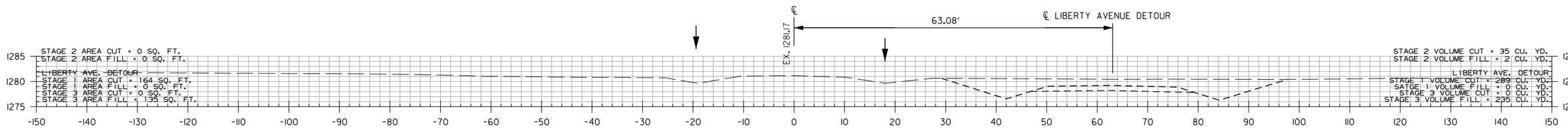

26+00.00

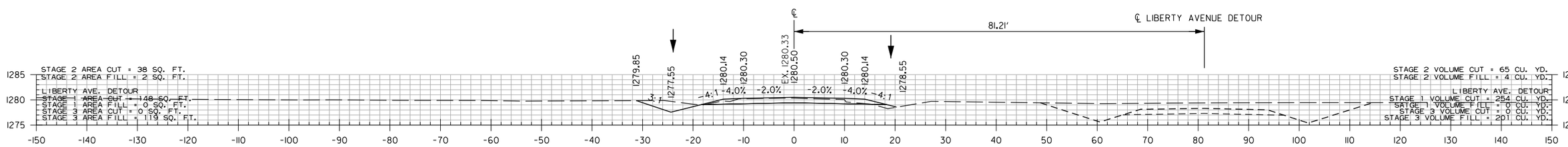

25+50.00

STA. 25+50.00 END LIBETY. AVE.

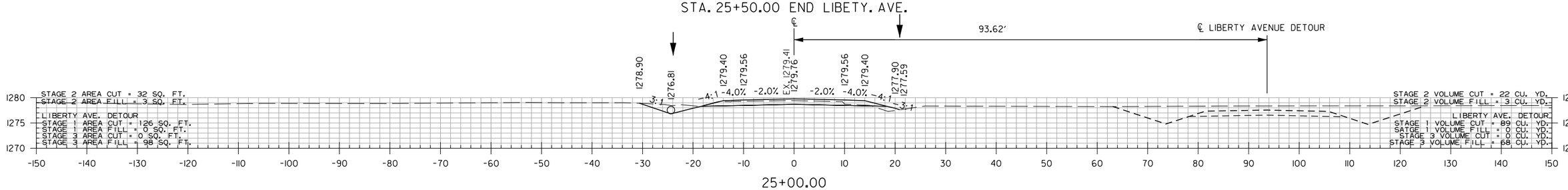

25+00.00

LIBERTY AVE.
STA. 25+00 TO STA. 28+00

HBVinson 7/27/2023 3:45:15PM
WORKSPACE: AHTD
L:\20\TO1\T0660 - ARDOT 012326 Hwy 412 - Hwy 112\Drawings\r-012326_CX_LIB_01.dgn
REVISED DATE:

DATE REVISED	DATE REVISED	FED. RD. DIST. NO.	STATE	JOB NO.	SHEET NO.	TOTAL SHEETS
		6	ARK.	012326	808	838
		CROSS SECTIONS				

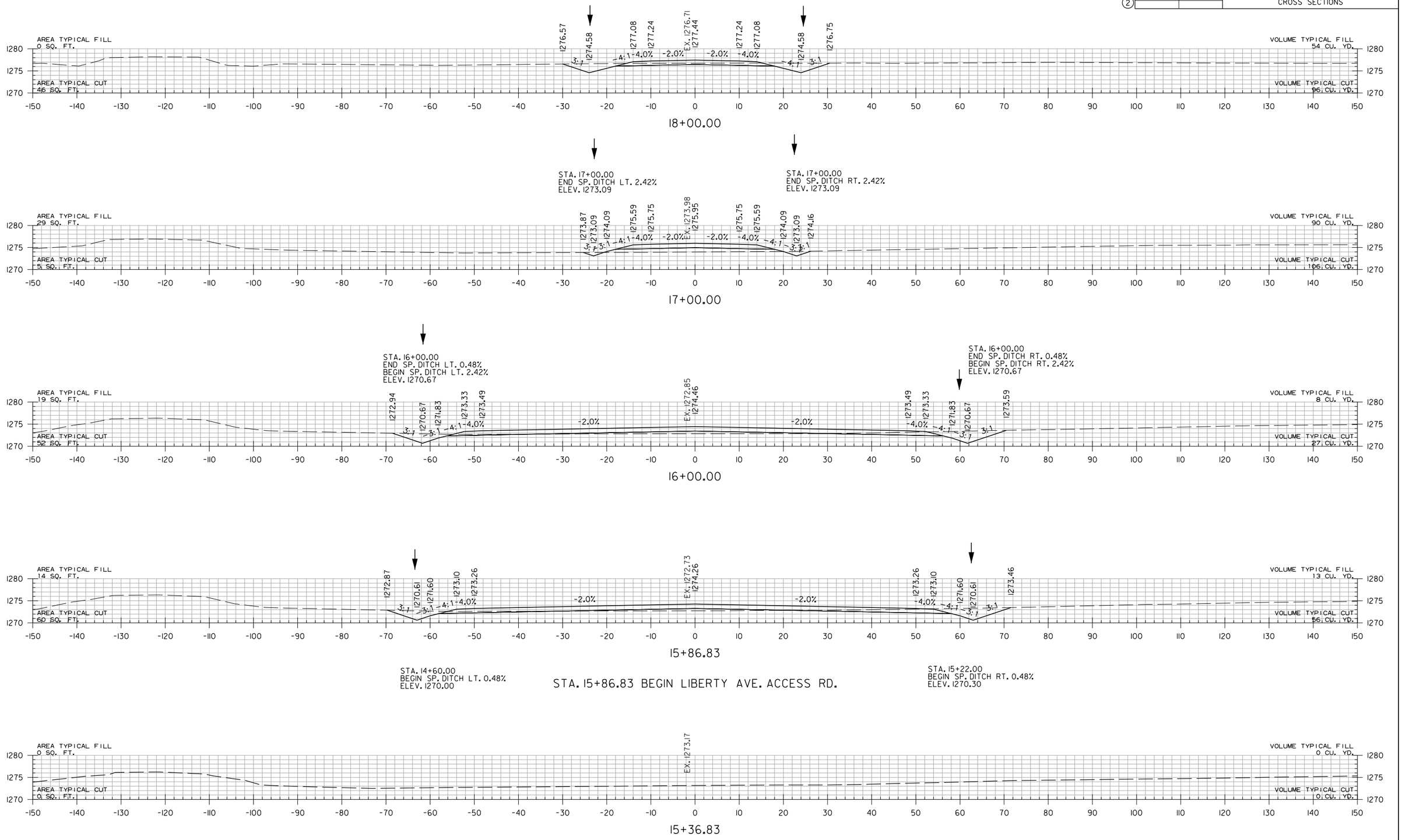

STA. 15+86.83 BEGIN LIBERTY AVE. ACCESS RD.

STA. 15+36.83 BEGIN CUL-DE-SAC

LIBERTY AVE. ACCESS RD.
STA. 15+36.83 TO STA. 18+00

HBVinson 7/27/2023 3:19:51 PM
WORKSPACE: AHTD
L:\2017\17017660 - ARDOT 012326 Hwy 412 - Hwy 112\Drawings\r012326_CX_LIB_FR.dgn
REVISED DATE:

DATE REVISED	DATE REVISED	FED. RD. DIST. NO.	STATE	JOB NO.	SHEET NO.	TOTAL SHEETS
		6	ARK.	012326	809	838
		CROSS SECTIONS				
2						

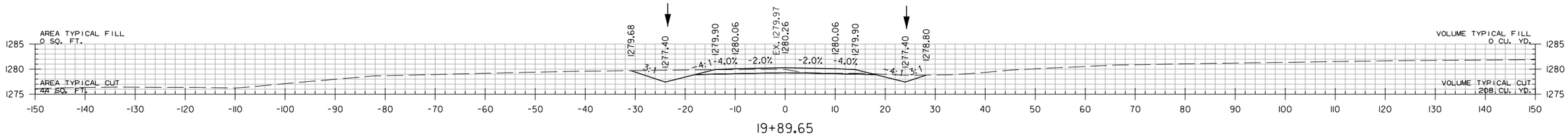

19+89.65

STA. 19+89.65 END LIBERTY AVE. ACCESS RD.

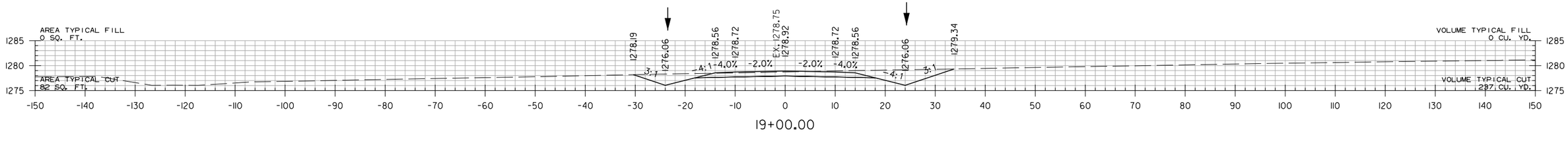

19+00.00

LIBERTY AVE. ACCESS RD.
STA. 19+90 TO STA. 19+89.65

HBVinson 7/27/2023 3:19:51PM
WORKSPACE: AHTD
L:\2017\17017660 - ARDOT 012326 Hwy 412 - Hwy 112\Drawings\r012326_CX_LIB_FR.dgn
REVISED DATE:

DATE REVISED	DATE REVISED	FED. RD. DIST. NO.	STATE	JOB NO.	SHEET NO.	TOTAL SHEETS
		6	ARK.	012326	810	838
②		CROSS SECTIONS				

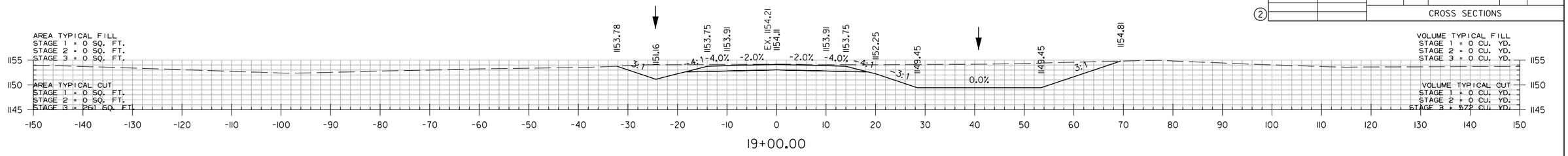

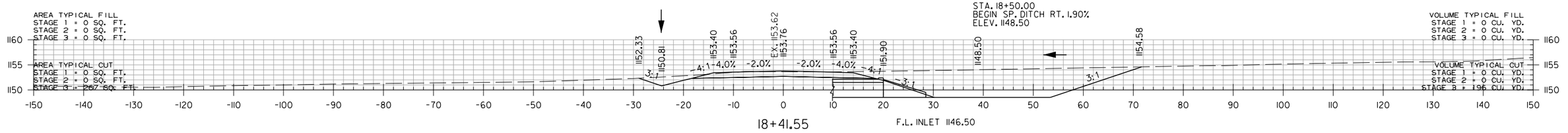

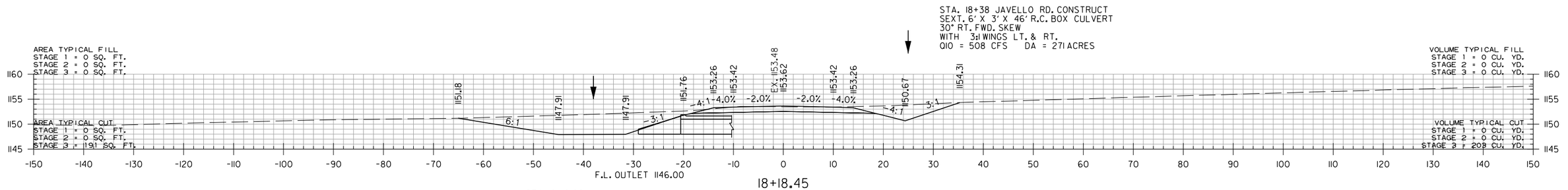

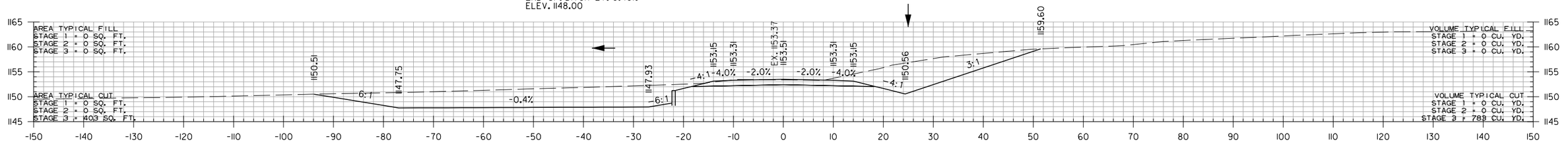

STA. 18+00.00 BEGIN JAVELLO RD.

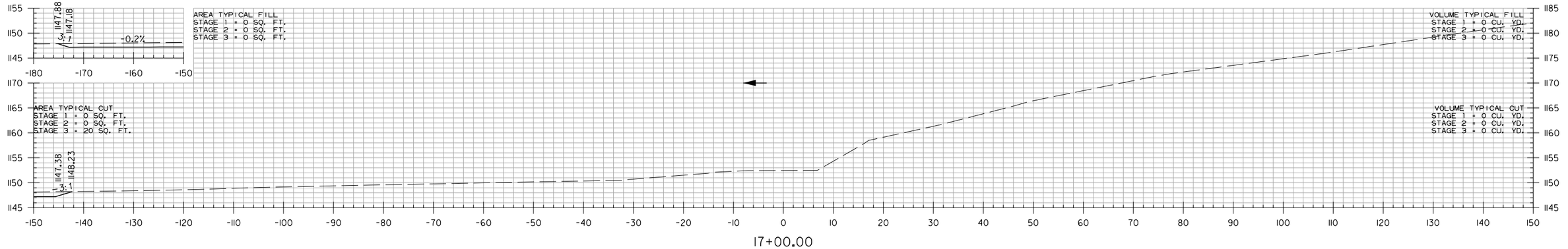

STA. 16+40.00, 173' LT.
BEGIN SP. DITCH LT. 0.40%
ELEV. 1147.00

STA. 17+00.00 BEGIN 100' TRANSITION

JAVELLO RD.
STA. 17+00 TO STA. 19+00

HBVinson
7/27/2023 3:19:51 PM
WORKSPACE: AHTD
L:\201\1701660 - ARDOT 012326 Hwy 412 - Hwy 112\Drawings\r012326_CX_JAV_01.dgn
REVISED DATE:

DATE REVISED	DATE REVISED	FED. RD. DIST. NO.	STATE	JOB NO.	SHEET NO.	TOTAL SHEETS
		6	ARK.	012326	811	838
		CROSS SECTIONS				
②						

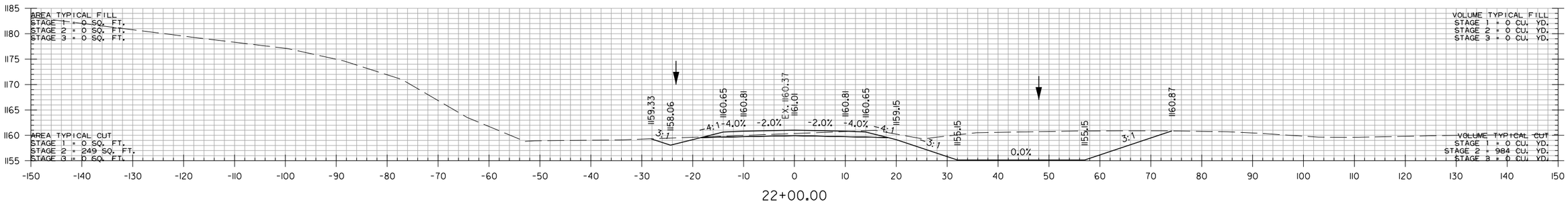

22+00.00

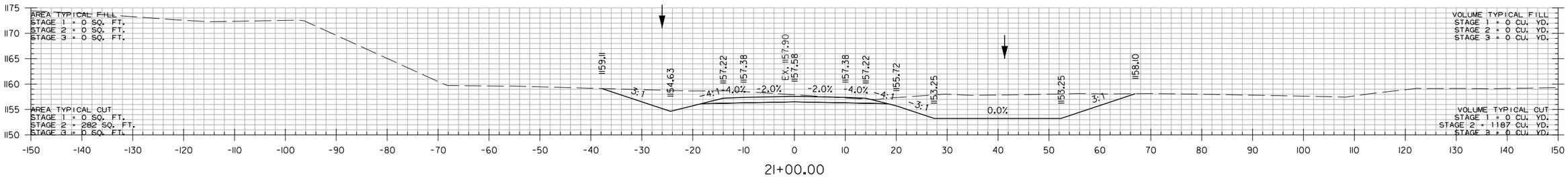

21+00.00

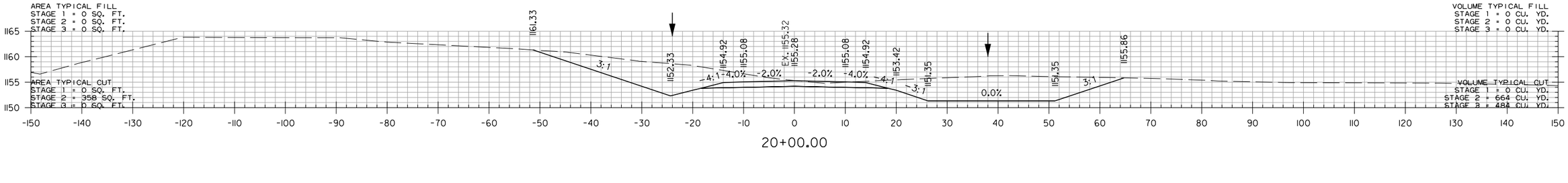

20+00.00

JAVELLO RD.
STA. 20+00 TO STA. 22+00

HBVinson 7/27/2023 3:19:51 PM
WORKSPACE: AHTD
L:\2017\170176\60 - ARDOT 012326 Hwy 412 - Hwy 112\Drawings\r012326_CX_JAV_01.dgn
REVISED DATE:

DATE REVISED	DATE REVISED	FED. RD. DIST. NO.	STATE	JOB NO.	SHEET NO.	TOTAL SHEETS
		6	ARK.	012326	812	838
		CROSS SECTIONS				
②						

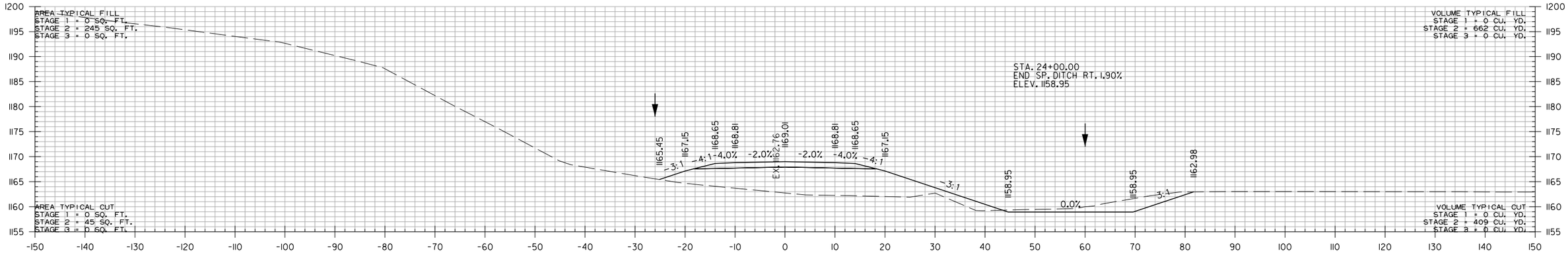

24+00.00

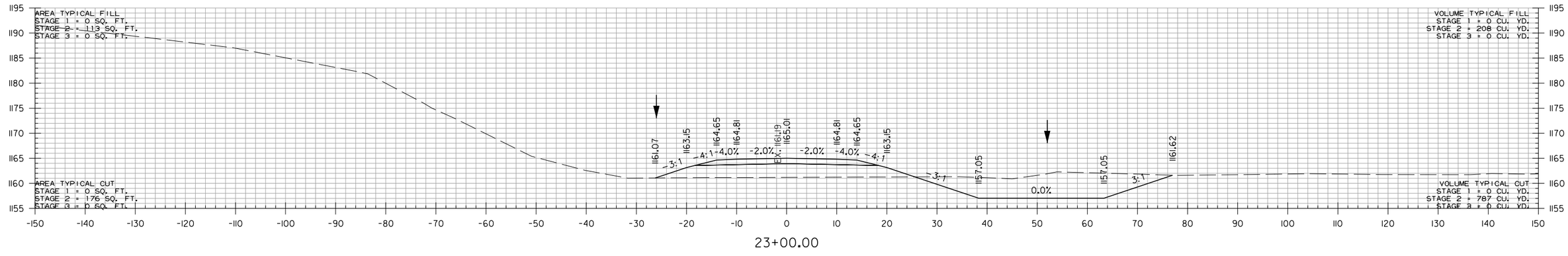

23+00.00

JAVELLO RD.
STA. 23+00 TO STA. 24+00

HBVinson 7/27/2023 3:19:51 PM
WORKSPACE: AHTD
L:\2017\1701660 - ARDOT 012326 Hwy 412 - Hwy 12\Drawings\r012326_CX_JAV_01.dgn
REVISED DATE:

DATE REVISED	DATE REVISED	FED. RD. DIST. NO.	STATE	JOB NO.	SHEET NO.	TOTAL SHEETS
		6	ARK.	012326	813	838
		CROSS SECTIONS				
(2)						

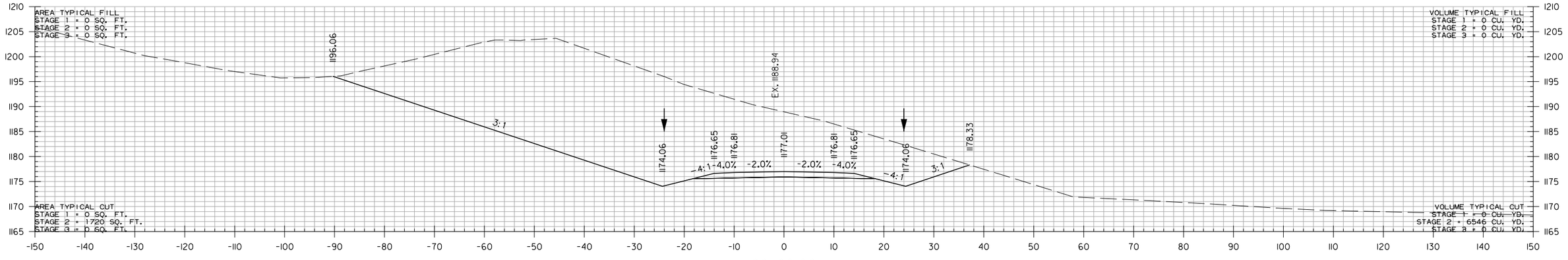

26+00.00

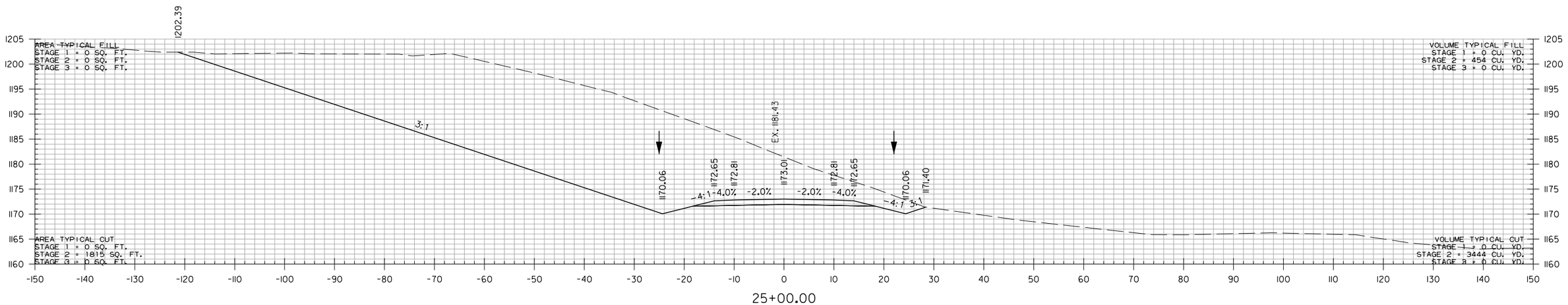

25+00.00

JAVELLO RD.
STA. 25+00 TO STA. 26+00

HBVinson 7/27/2023 3:19:51 PM
WORKSPACE: AHTD
L:\20IT\170I7660 - ARDOT 012326 Hwy 412 - Hwy 112\Drawings\r012326_CX_JAV_01.dgn
REVISED DATE:

DATE REVISED	DATE REVISED	FED. RD. DIST. NO.	STATE	JOB NO.	SHEET NO.	TOTAL SHEETS
		6	ARK.	012326	814	838
		CROSS SECTIONS				
②						

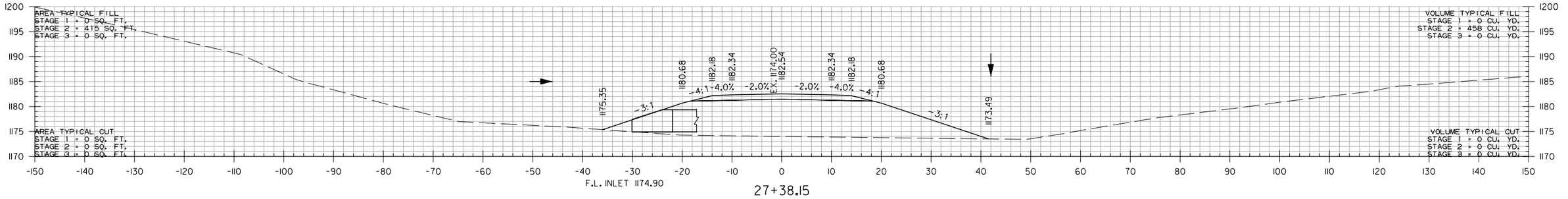

STA. 27+24 JAVELLO CONSTRUCT
48" X 66' R.C. PIPE CULVERT
30° LT. FWD. SKEW
(CLASS III) TYPE 3 BEDDING
WITH FES LT. & RIPRAP BASIN RT.
QIO = 83 CFS DA = 47.2 ACRES

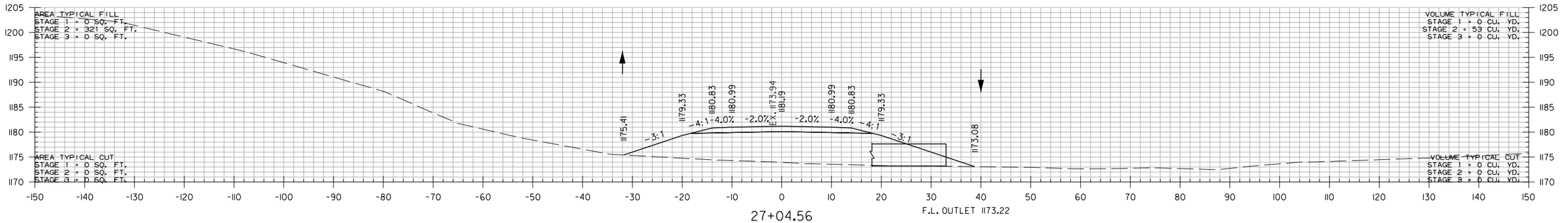

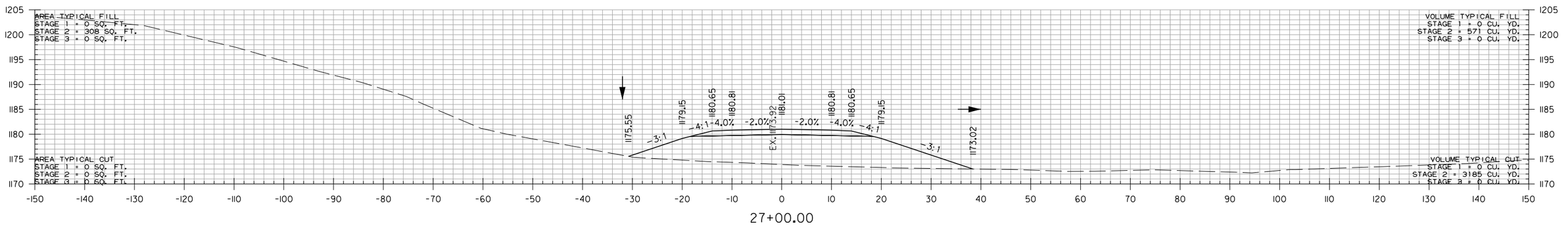

JAVELLO RD.
STA. 27+00 TO STA. 27+38.15

HBVinson 7/27/2023 3:19:52 PM
WORKSPACE: AHTD
L:\2017\17017660 - ARDOT 012326 Hwy 412 - Hwy 112\Drawings\r012326_CX_JAV_01.dgn
REVISED DATE:

DATE REVISED	DATE REVISED	FED. RD. DIST. NO.	STATE	JOB NO.	SHEET NO.	TOTAL SHEETS
		6	ARK.	012326	815	838
		CROSS SECTIONS				
(2)						

STA. 30+46.65 MAX SUPERELEVATION (0.10 FT./FT.)

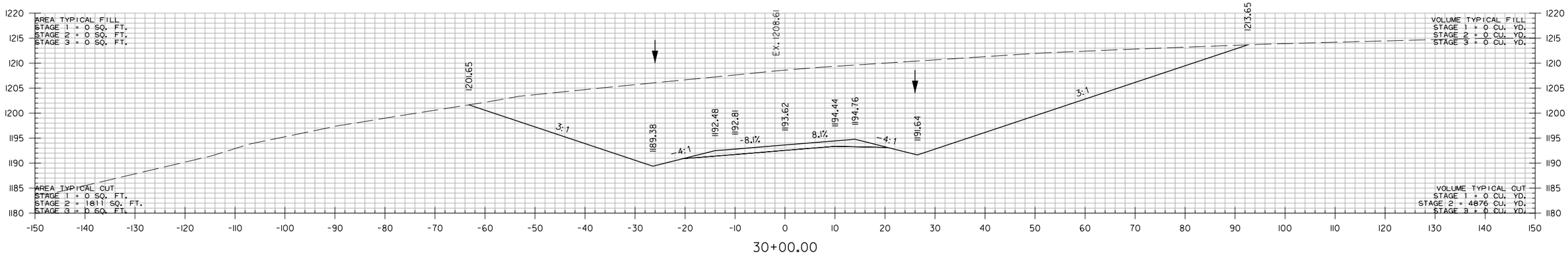

30+00.00

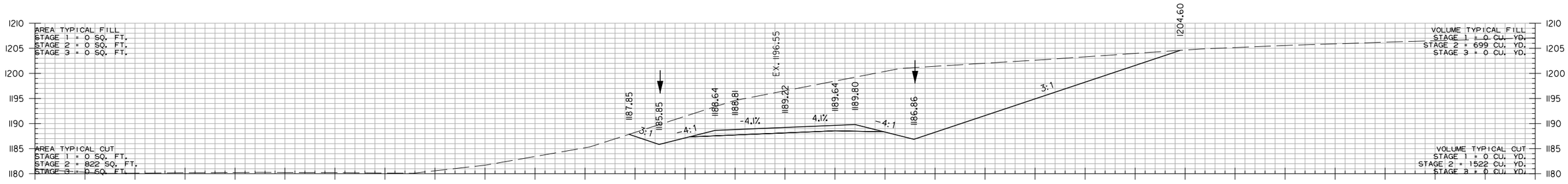

29+00.00

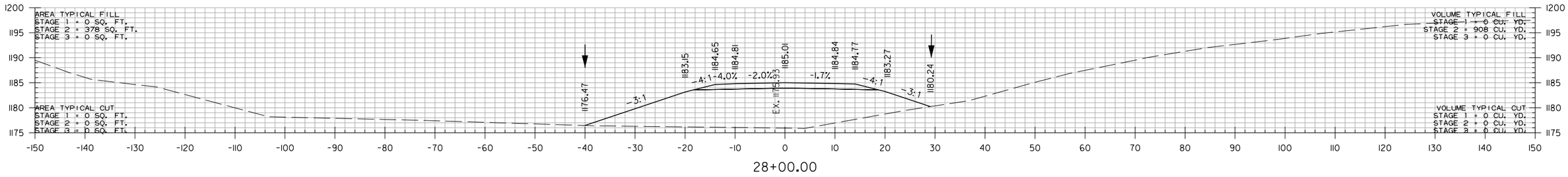

28+00.00

STA. 27+96.65 BEGIN SUPERELEVATION

JAVELLO RD.
STA. 28+00 TO STA. 30+00

HBVinson
7/27/2023 3:19:52 PM
WORKSPACE: AHTD
L:\20IT\170I7660 - ARDOT 012326 Hwy 412 - Hwy 112\Drawings\r012326_CX_JAV_01.dgn
REVISED DATE:

DATE REVISED	DATE REVISED	FED. RD. DIST. NO.	STATE	JOB NO.	SHEET NO.	TOTAL SHEETS
		6	ARK.	012326	816	838
		CROSS SECTIONS				
(2)						

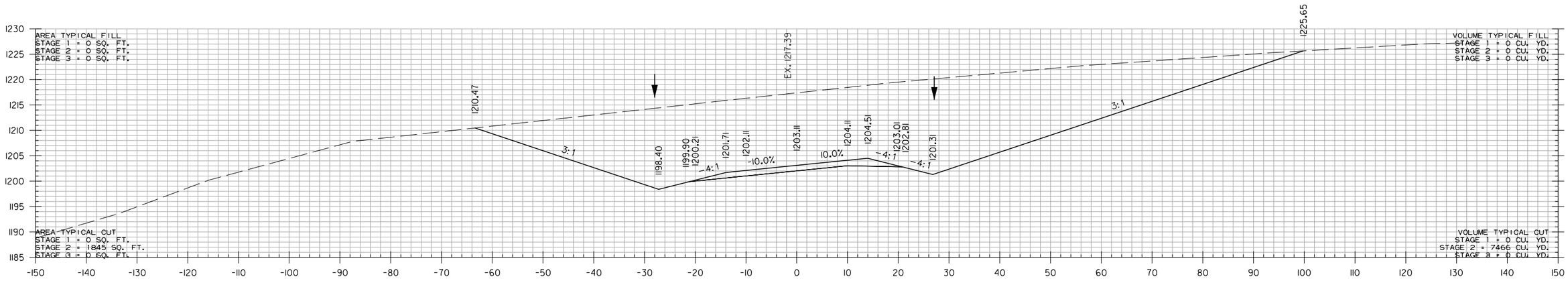

32+00.00

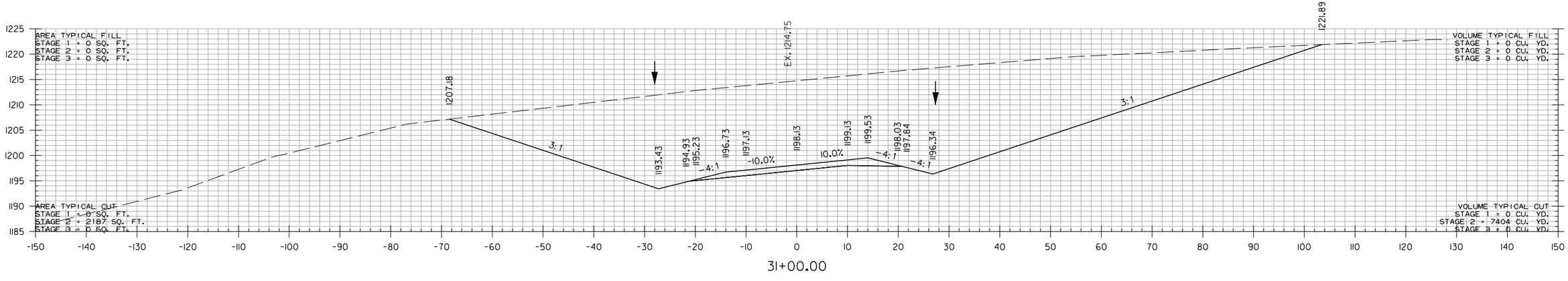

31+00.00

JAVELLO RD.
STA. 31+00 TO STA. 32+00

HBVinson 7/27/2023 3:19:52 PM
WORKSPACE: AHTD
L:\2017\1701660 - ARDOT 012326 Hwy 412 - Hwy 112\Drawings\r012326_CX_JAV_01.dgn
REVISED DATE:

DATE REVISED	DATE REVISED	FED. RD. DIST. NO.	STATE	JOB NO.	SHEET NO.	TOTAL SHEETS
		6	ARK.	012326	817	838
		CROSS SECTIONS				
(2)						

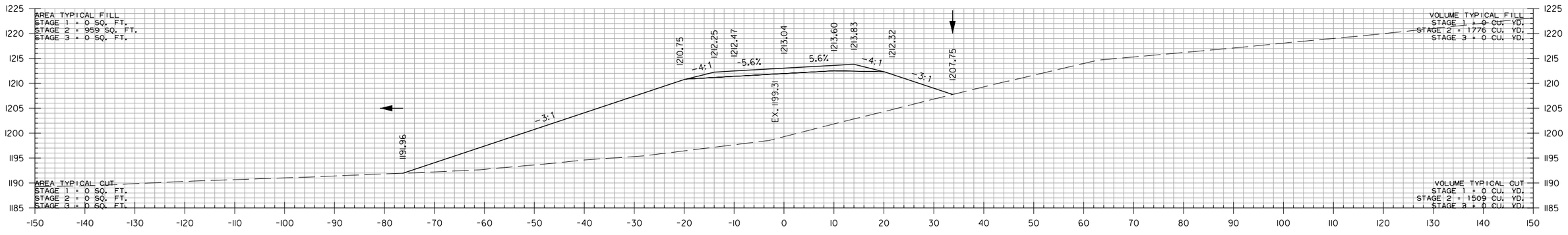

STA. 32+91.17 MAX SUPERELEVATION (0.10 FT./FT.)

JAVELLO RD.
STA. 33+00 TO STA. 34+00

HBVinson 7/27/2023 3:19:52 PM
WORKSPACE: AHTD
L:\20IT\170I7660 - ARDOT 012326 Hwy 412 - Hwy 112\Drawings\r012326_CX_JAV.01.dgn
REVISED DATE:

DATE REVISED	DATE REVISED	FED. RD. DIST. NO.	STATE	JOB NO.	SHEET NO.	TOTAL SHEETS
		6	ARK.	012326	818	838
		CROSS SECTIONS				
(2)						

STA. 35+41.17 END SUPERELEVATION

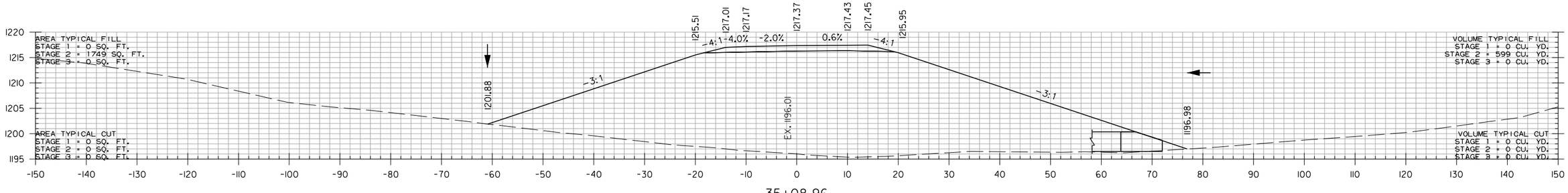

35+08.96

F.L. INLET 1196.49

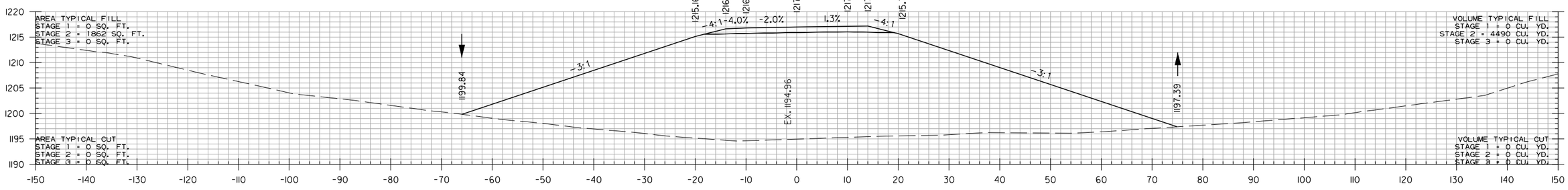

35+00.00

STA. 34+70 JAVELLO CONSTRUCT
42" X 164' R.C. PIPE CULVERT
30° RT. FWD. SKEW
(CLASS IV) TYPE 3 BEDDING
WITH FES RT. & RIPRAP BASIN LT.
Q10 = 63 CFS DA = 33.6 ACRES

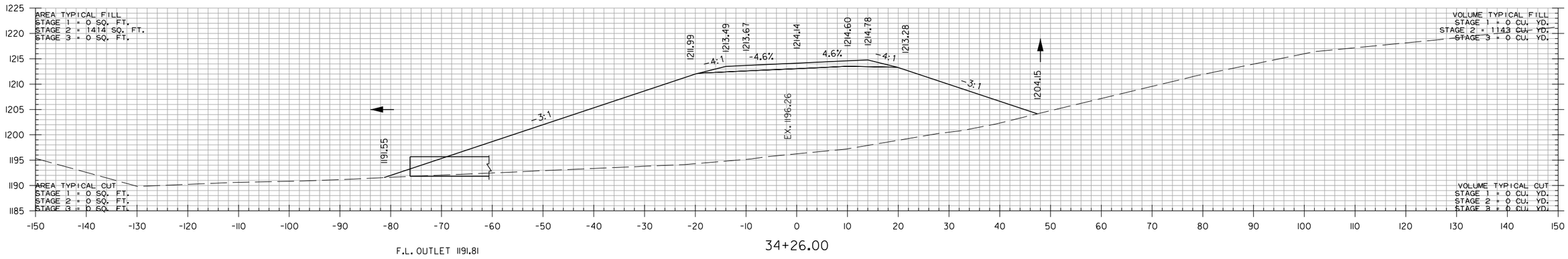

F.L. OUTLET 1191.81

34+26.00

JAVELLO RD.
STA. 34+26 TO STA. 35+08.96

HBVinson 7/27/2023 3:19:52 PM
WORKSPACE: AHTD
L:\20IT\I70I660 - ARDOT 012326 Hwy 412 - Hwy 112\Drawings\r012326_CX_JAV_01.dgn
REVISED DATE:

DATE REVISED	DATE REVISED	FED. RD. DIST. NO.	STATE	JOB NO.	SHEET NO.	TOTAL SHEETS
		6	ARK.	012326	819	838
		CROSS SECTIONS				
②						

AREA TYPICAL FILL
STAGE 1 = 0 SQ. FT.
STAGE 2 = 0 SQ. FT.
STAGE 3 = 0 SQ. FT.

AREA TYPICAL CUT
STAGE 1 = 0 SQ. FT.
STAGE 2 = 0 SQ. FT.
STAGE 3 = 0 SQ. FT.

VOLUME TYPICAL FILL
STAGE 1 = 0 CU. YD.
STAGE 2 = 199 CU. YD.
STAGE 3 = 0 CU. YD.

VOLUME TYPICAL CUT
STAGE 1 = 0 CU. YD.
STAGE 2 = 248 CU. YD.
STAGE 3 = 0 CU. YD.

STA. 38+00.00 END 100' TRANSITION

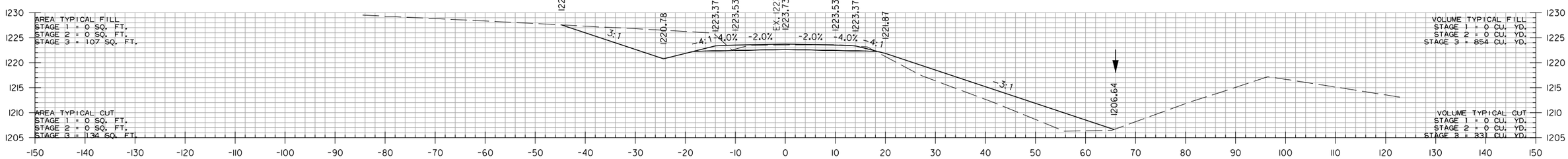

37+00.00

STA. 37+00.00 END JAVELLO RD.

STA. 36+00 INSTALL
18" X 85' PIPE CULVERT
LT. SIDE DRAIN
CONSTRUCTAPPROACH
19 CU. YDS.

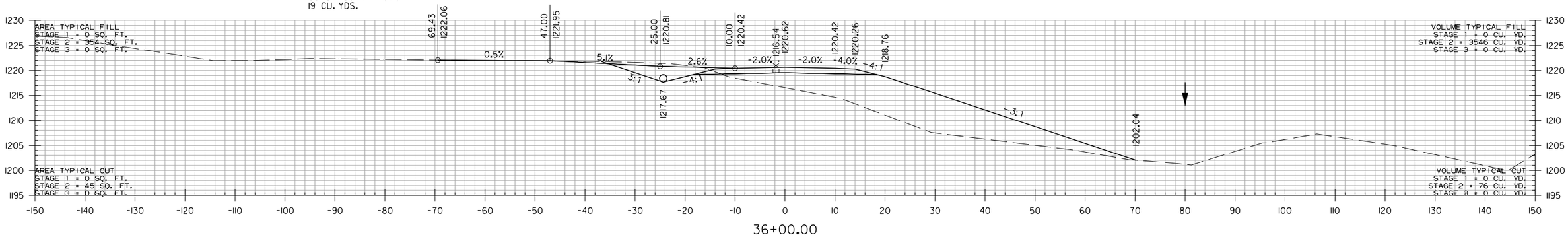

36+00.00

JAVELLO RD.
STA. 36+00 TO STA. 37+00

HBVinson 7/27/2023 3:19:52 PM
WORKSPACE: AHTD
L:\2017\1701660 - ARDOT 012326 Hwy 412 - Hwy 112\Drawings\r012326_CX_JAV_01.dgn
REVISED DATE:

DATE REVISED	DATE REVISED	FED. RD. DIST. NO.	STATE	JOB NO.	SHEET NO.	TOTAL SHEETS
		6	ARK.	012326	820	838
		CROSS SECTIONS				
(2)						

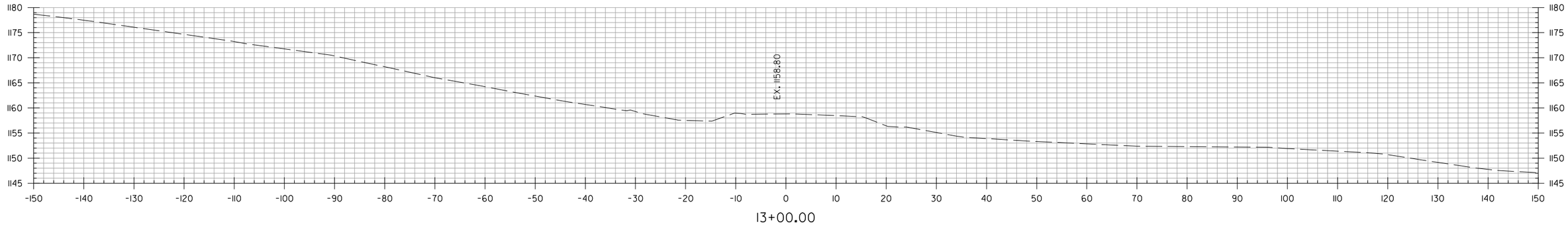

13+00.00

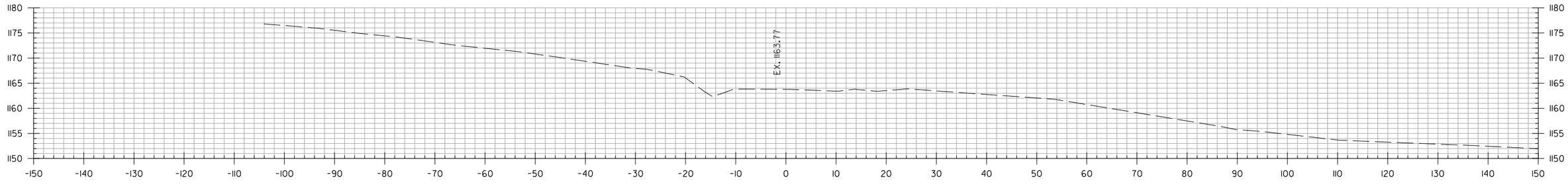

12+00.00

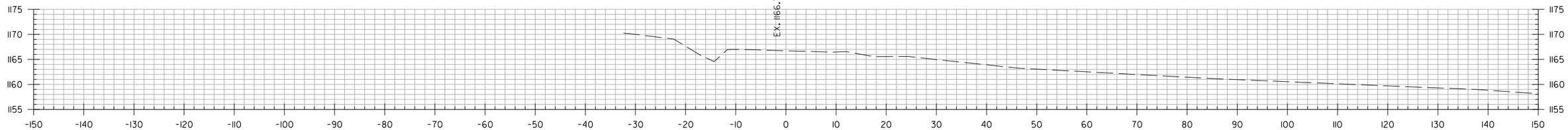

11+02.51

BRUSH CREEK RD.
STA. 11+02.51 TO STA. 13+00

HBVinson
WORKSPACE: AHTD
L:\2017\701660 - ARDOT 012326 Hwy 412 - Hwy 112\Drawings\r012326_CX_BRC_01.dgn
7/27/2023 3:19:52 PM
REVISED DATE:

DATE REVISED	DATE REVISED	FED. RD. DIST. NO.	STATE	JOB NO.	SHEET NO.	TOTAL SHEETS
		6	ARK.	012326	821	838
		CROSS SECTIONS				
②						

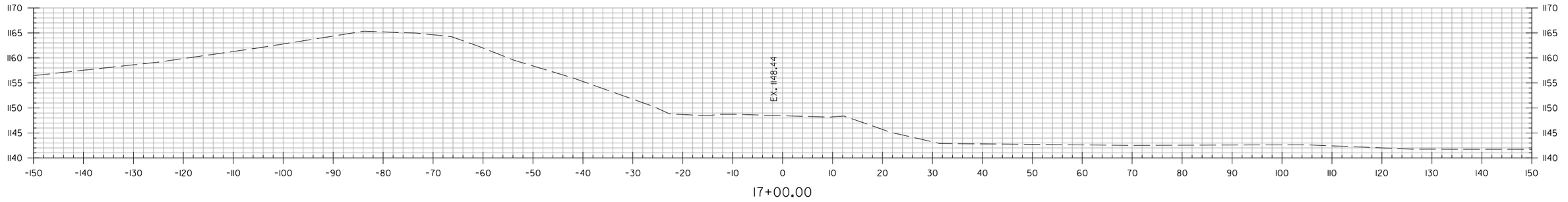

17+00.00

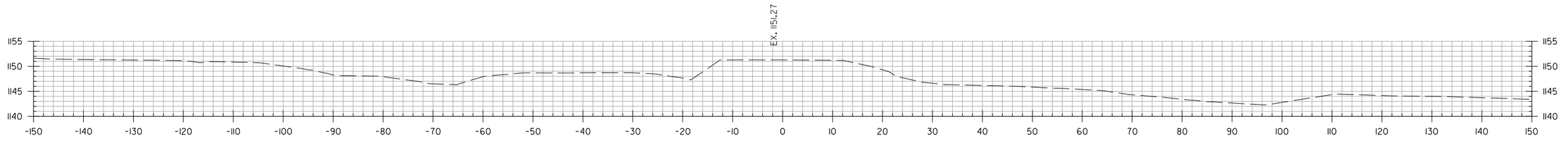

16+00.00

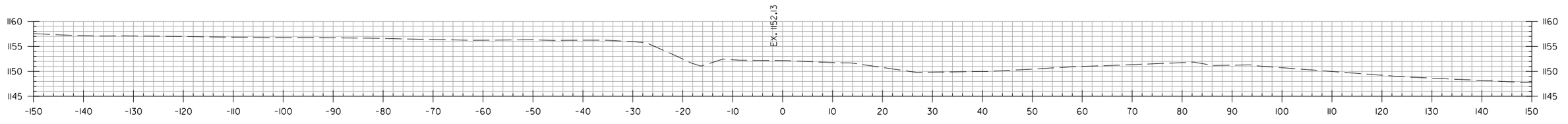

15+00.00

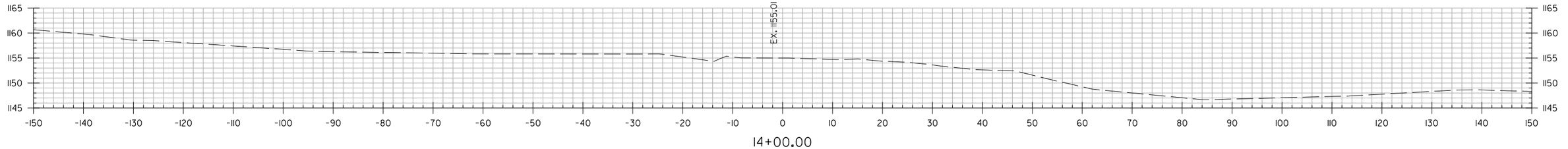

14+00.00

BRUSH CREEK RD.
STA. 14+00 TO STA. 17+00

HBVinson
WORKSPACE: AHTD
L:\2017\170176601 - ARDOT 012326 Hwy 412 - Hwy 112\Drawings\r012326_CX_BRC_01.dgn
7/27/2023 3:19:52 PM
REVISED DATE:

DATE REVISED	DATE REVISED	FED. RD. DIST. NO.	STATE	JOB NO.	SHEET NO.	TOTAL SHEETS
		6	ARK.	012326	822	838
		CROSS SECTIONS				
(2)						

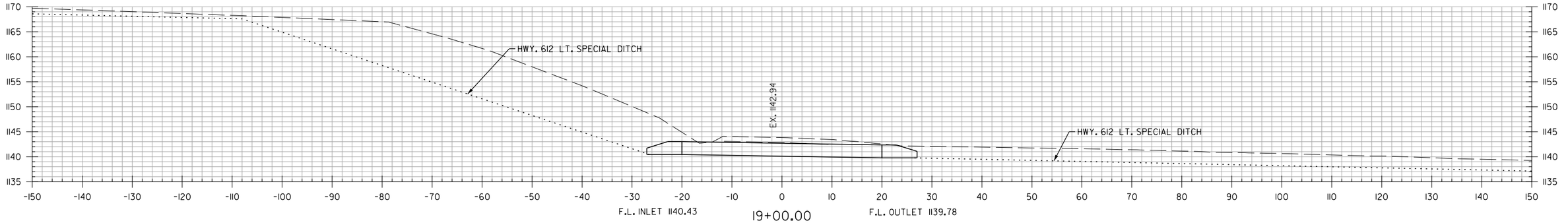

19+00.00

STA. 19+00 CONSTRUCT
TRP. 44" X 27" X 40' R.C. ARCH PIPE
WITH F.E.S. LT. & RT.
Q25 = 64 CFS DA = 26.7 ACRES
44" X 27" R.C. ARCH PIPE = 120 LIN. FT.
44" X 27" F.E.S. = 6 EACH

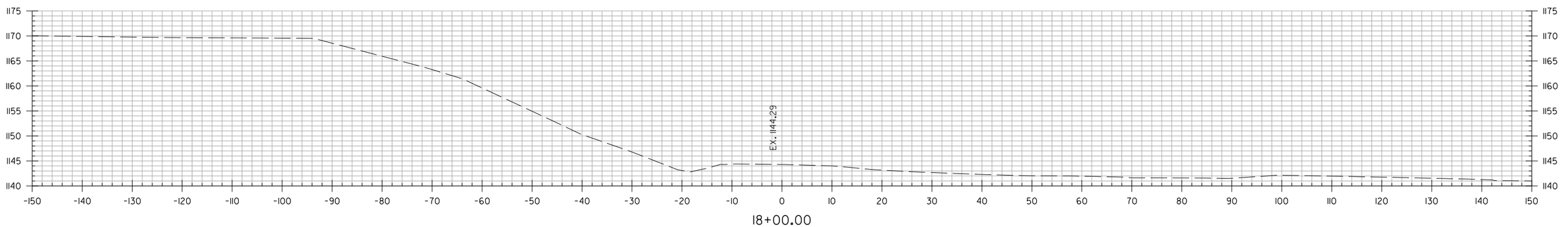

18+00.00

BRUSH CREEK RD.
STA. 18+00 TO STA. 19+00

JATurner 8/10/2023 1:44:19 PM
WORKSPACE: AHTD
L:\2017\170766O - ARDOT 012326 Hwy 412 - Hwy 112\Drawings\r012326_CX_BRC_01.dgn
REVISED DATE:

DATE REVISED	DATE REVISED	FED. RD. DIST. NO.	STATE	JOB NO.	SHEET NO.	TOTAL SHEETS
		6	ARK.	012326	823	838
		CROSS SECTIONS				
(2)						

STA. 21+76 CONSTRUCT
DBL. 30" X 38' R.C. PIPE CULVERT
8°17'18" LT. FWD. SKEW
(CLASS III) TYPE 3 BEDDING
WITH FES LT. & RT.
Q25 = 29 CFS DA = 12.4 ACRES

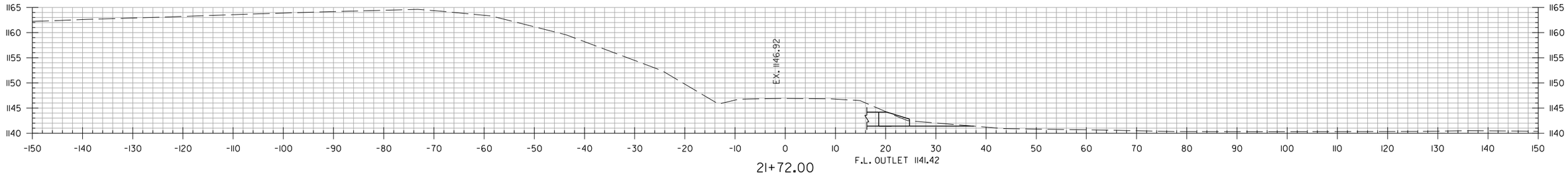

21+72.00

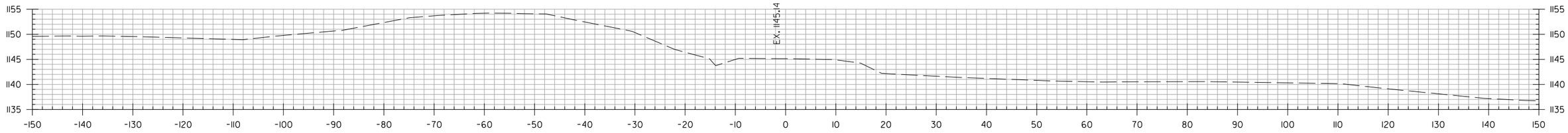

21+00.00

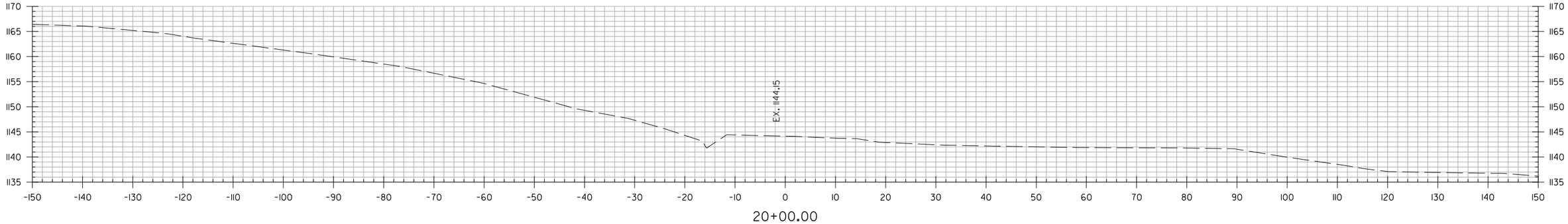

20+00.00

BRUSH CREEK RD.
STA. 20+00 TO STA. 21+72

HBVinson 7/27/2023 3:19:53 PM
WORKSPACE: AHTD
L:\20\1701\7660 - ARDOT 012326 Hwy 412 - Hwy 112\Drawings\r012326_CX_BRC_01.dgn
REVISED DATE:

DATE REVISED	DATE REVISED	FED. RD. DIST. NO.	STATE	JOB NO.	SHEET NO.	TOTAL SHEETS
		6	ARK.	012326	824	838
		CROSS SECTIONS				
②						

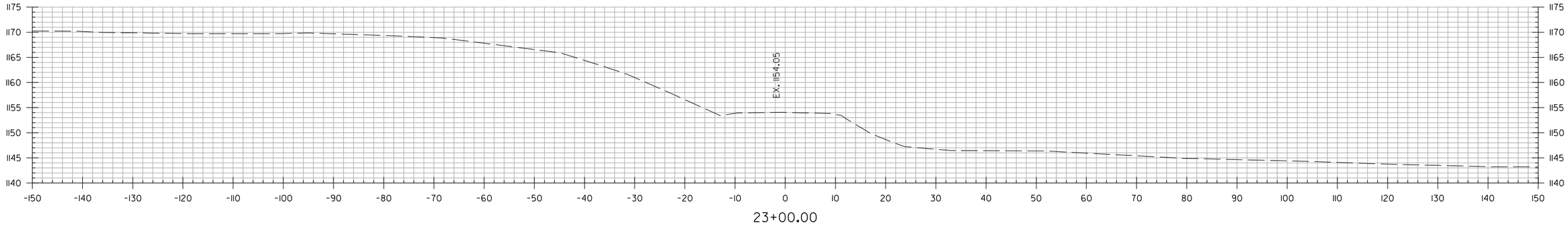

23+00.00

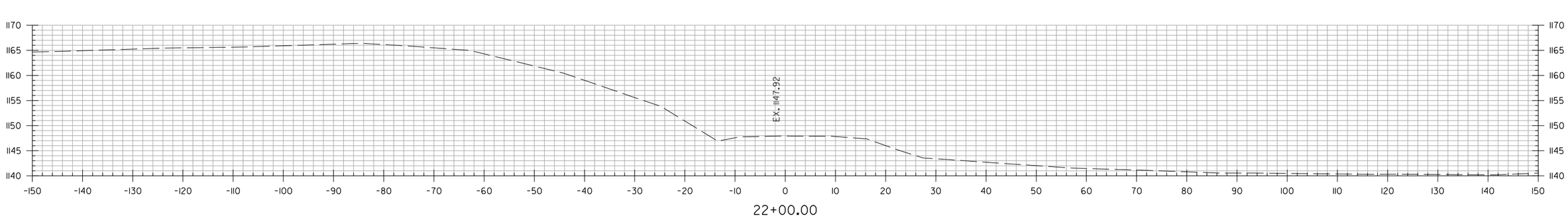

22+00.00

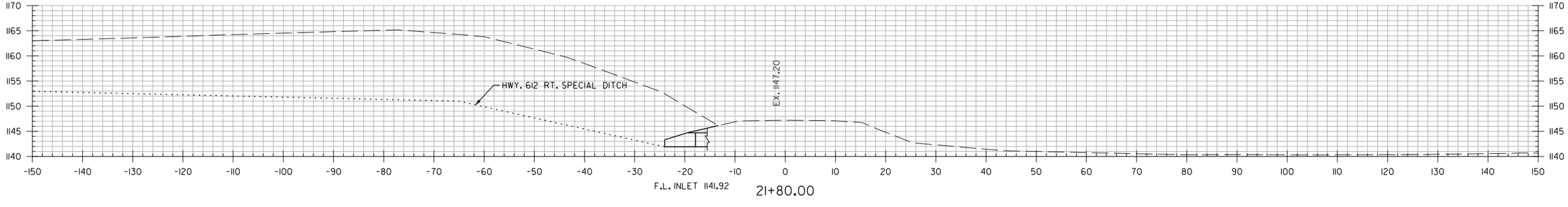

21+80.00

BRUSH CREEK RD.
STA. 21+80 TO STA. 23+00

HBVinson 7/27/2023 3:19:53 PM
WORKSPACE: AHTD
L:\2017\17017660 - ARDOT 02326 Hwy 412 - Hwy 112\Drawings\r02326_CX_BRC_01.dgn
REVISED DATE:

DATE REVISED	DATE REVISED	FED. RD. DIST. NO.	STATE	JOB NO.	SHEET NO.	TOTAL SHEETS
		6	ARK.	012326	825	838
		CROSS SECTIONS				
2						

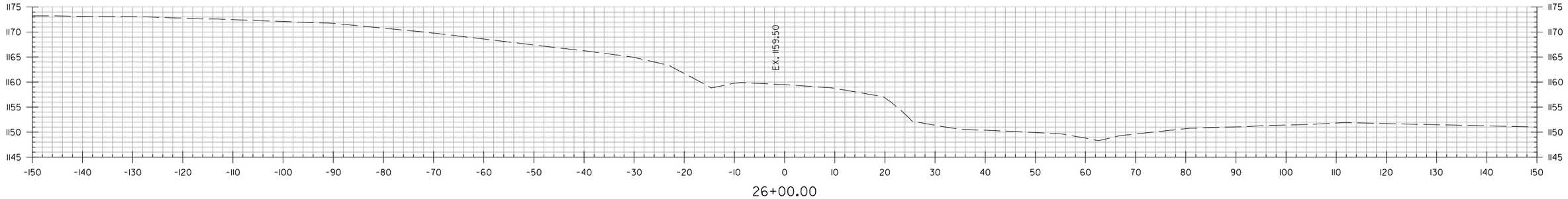

26+00.00

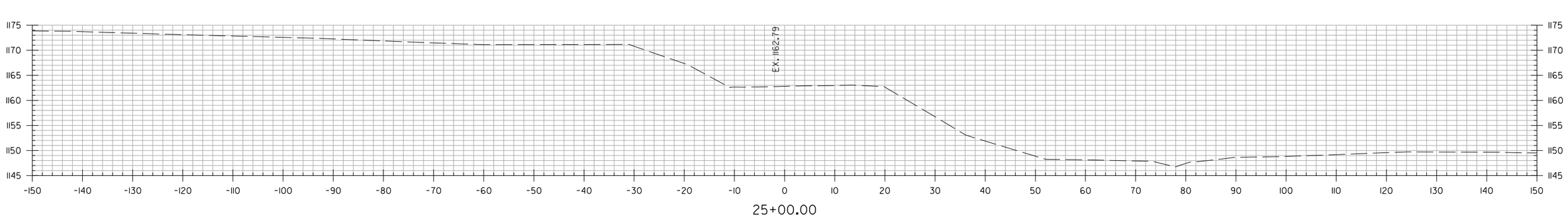

25+00.00

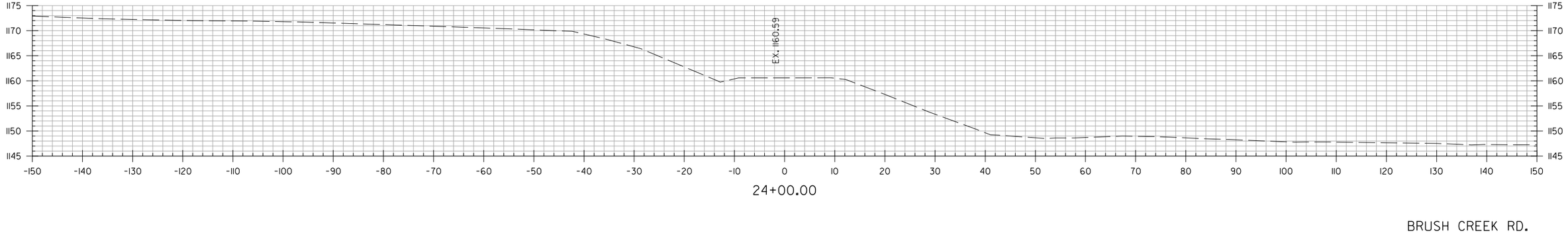

24+00.00

BRUSH CREEK RD.
STA. 24+00 TO STA. 26+00

HBVinson
7/27/2023 3:19:53 PM
WORKSPACE: AHTD
L:\2017\170176601 - ARDOT 012326 Hwy 412 - Hwy 112\Drawings\r012326_CX_BRC_01.dgn
REVISED DATE:

DATE REVISED	DATE REVISED	FED. RD. DIST. NO.	STATE	JOB NO.	SHEET NO.	TOTAL SHEETS
		6	ARK.	012326	826	838
		CROSS SECTIONS				
②						

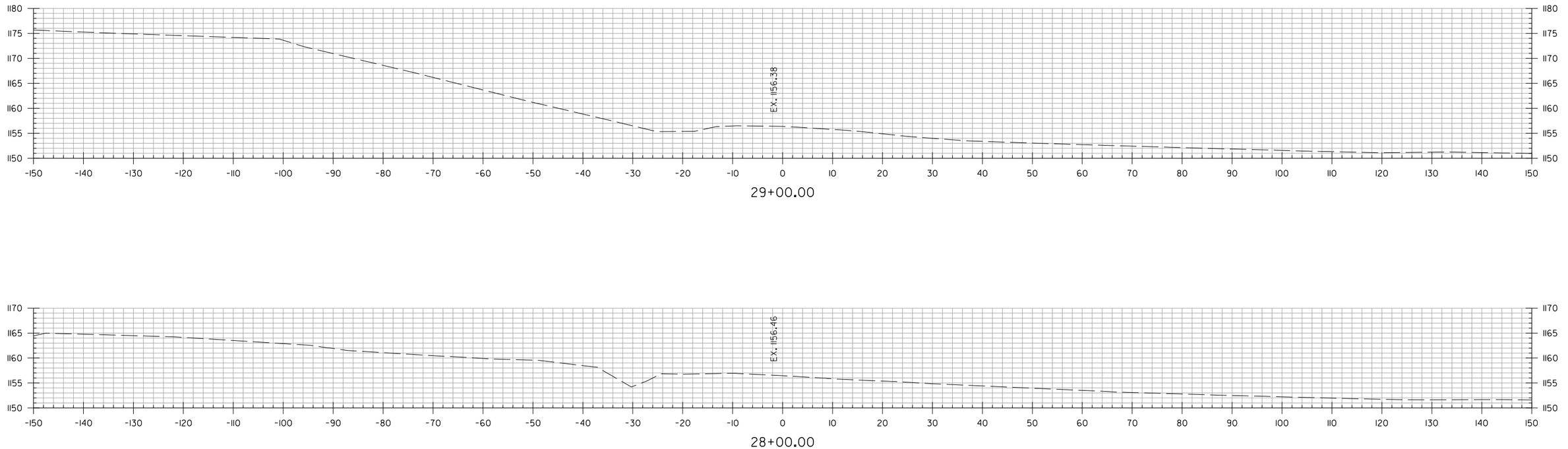

BRUSH CREEK RD.
STA. 27+00 TO STA. 29+00

HBVinson
WORKSPACE: AHTD
L:\2017\17017660 - ARDOT 012326 Hwy 412 - Hwy 112\Drawings\r012326_CX_BRC_01.dgn
7/27/2023 3:19:53 PM
REVISED DATE:

DATE REVISED	DATE REVISED	FED. RD. DIST. NO.	STATE	JOB NO.	SHEET NO.	TOTAL SHEETS
		6	ARK.	012326	827	838
		CROSS SECTIONS				
②						

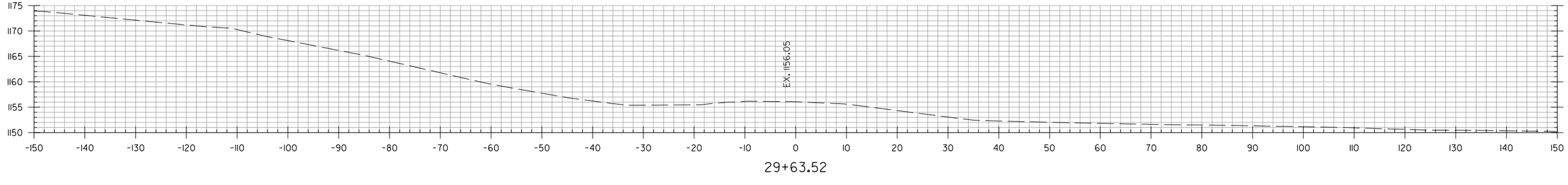

BRUSH CREEK RD.
STA. 29+63.52 TO STA. 29+63.52

HBVinson
WORKSPACE: AHTD
L:\2017\17017660 - ARDOT 012326 Hwy 412 - Hwy 112\Drawings\r012326_CX_BRC_01.dgn
7/27/2023 3:19:53 PM
REVISED DATE:

DATE REVISED	DATE REVISED	FED. RD. DIST. NO.	STATE	JOB NO.	SHEET NO.	TOTAL SHEETS
		6	ARK.	012326	828	838
		CROSS SECTIONS				
(2)						

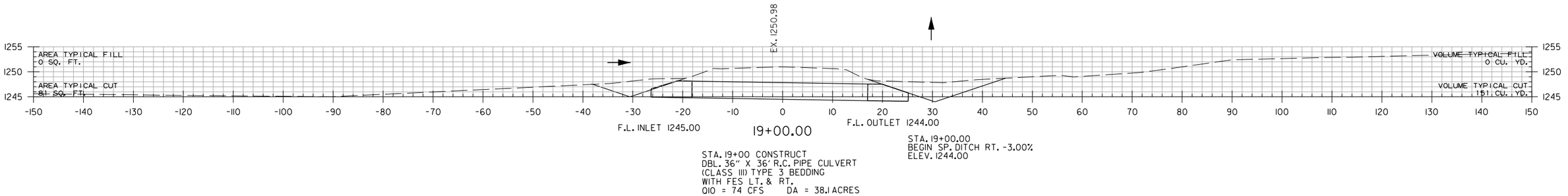

19+00.00

STA. 19+00.00
BEGIN SP. DITCH RT. -3.00%
ELEV. 1244.00

STA. 19+00 CONSTRUCT
DBL. 36" X 36' R.C. PIPE CULVERT
(CLASS III) TYPE 3 BEDDING
WITH FES LT. & RT.
QIO = 74 CFS DA = 38.1 ACRES

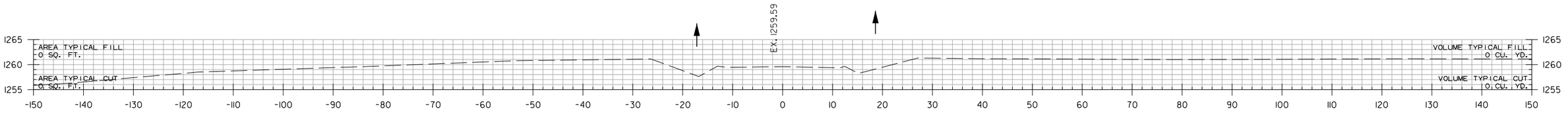

18+00.00

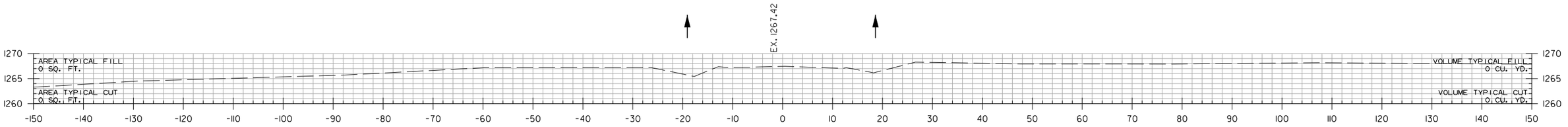

17+00.00

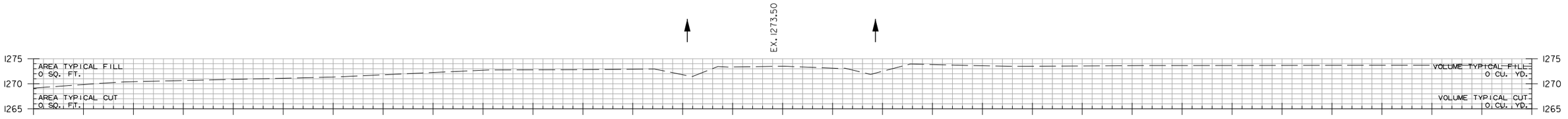

16+00.00

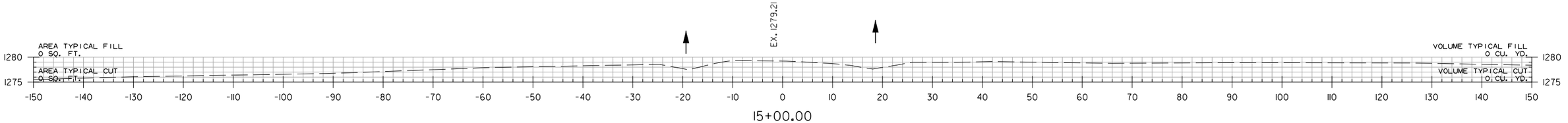

15+00.00

MARCHANT RD.
STA. 15+00 TO STA. 19+00

HBVinson
WORKSPACE: AHTD
L:\20\170\7660 - ARDOT 012326 Hwy 412 - Hwy 112\Drawings\r012326_CX_MAR_01.dgn
7/27/2023 3:19:53 PM
REVISED DATE:

DATE REVISED	DATE REVISED	FED. RD. DIST. NO.	STATE	JOB NO.	SHEET NO.	TOTAL SHEETS
		6	ARK.	012326	829	838
		CROSS SECTIONS				
②						

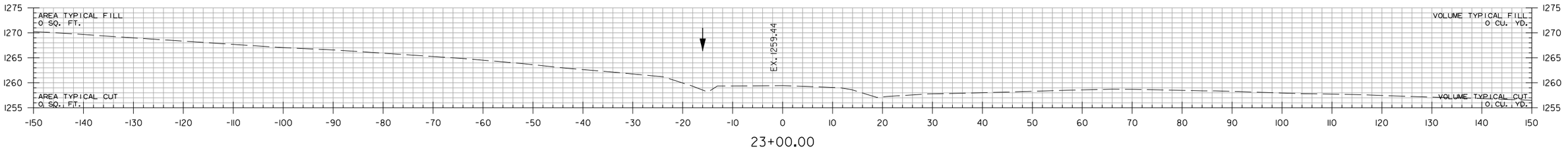

23+00.00

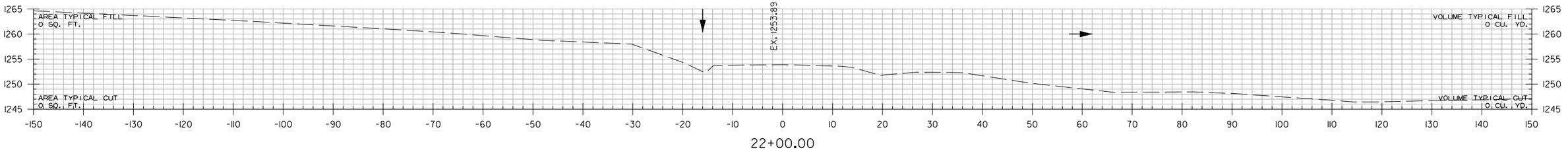

22+00.00

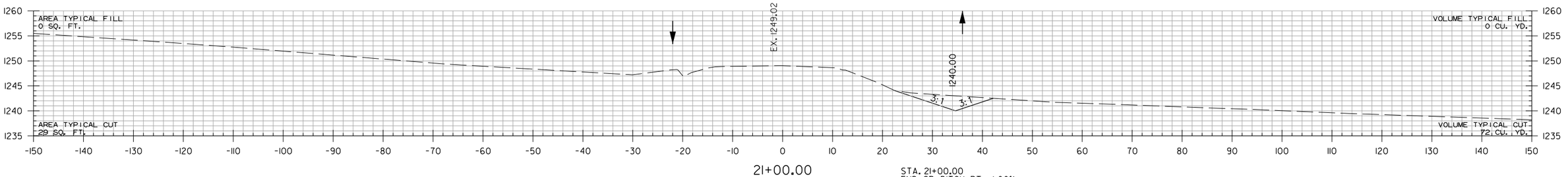

21+00.00

STA. 21+00.00
END SP. DITCH RT. -1.00%
ELEV. 1240.00

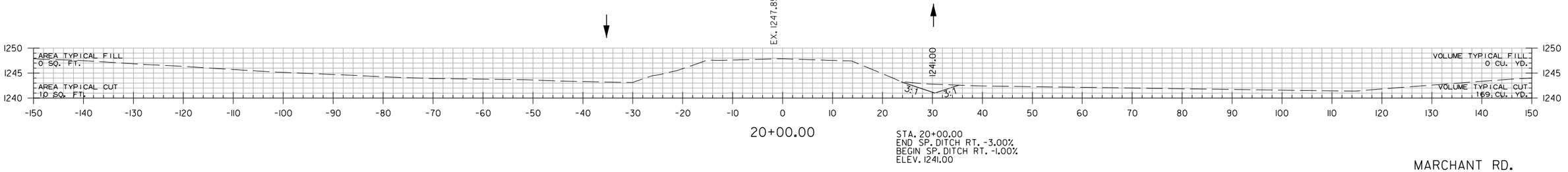

20+00.00

STA. 20+00.00
END SP. DITCH RT. -3.00%
BEGIN SP. DITCH RT. -1.00%
ELEV. 1241.00

MARCHANT RD.
STA. 20+00 TO STA. 23+00

HBVinson
WORKSPACE: AHTD
L:\2017\017660 - ARDOT 012326 Hwy 412 - Hwy 112\Drawings\r012326_CX_MAR.Dldgn
7/27/2023 3:19:53 PM
REVISED DATE:

DATE REVISED	DATE REVISED	FED. RD. DIST. NO.	STATE	JOB NO.	SHEET NO.	TOTAL SHEETS
		6	ARK.	012326	830	838
		CROSS SECTIONS				
②						

25+00.00

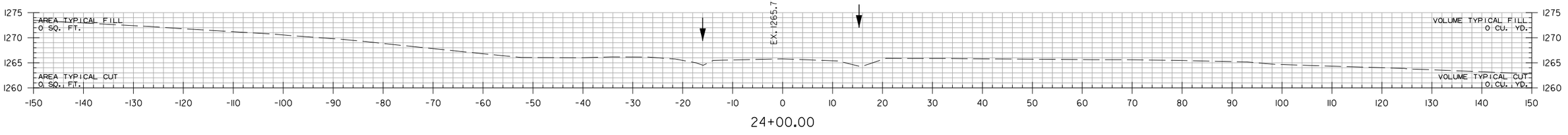

24+00.00

MARCHANT RD.
STA. 24+00 TO STA. 25+00

HBVinson
WORKSPACE: AHTD
L:\2017\17017660 - ARDOT 012326 Hwy 412 - Hwy 112\Drawings\r012326_CX_MAR.Oldgn
7/27/2023 3:19:53 PM
REVISED DATE:

DATE REVISED	DATE REVISED	FED. RD. DIST. NO.	STATE	JOB NO.	SHEET NO.	TOTAL SHEETS
		6	ARK.	012326	831	838
		CROSS SECTIONS				
②						

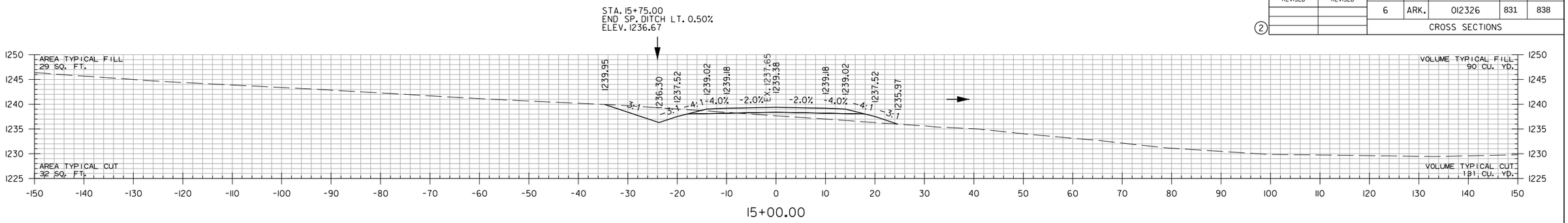

15+00.00

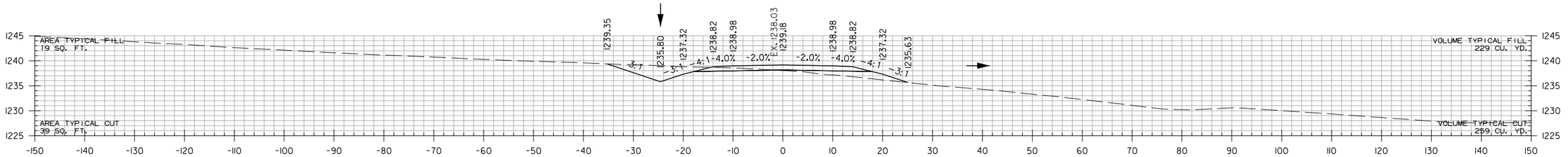

14+00.00

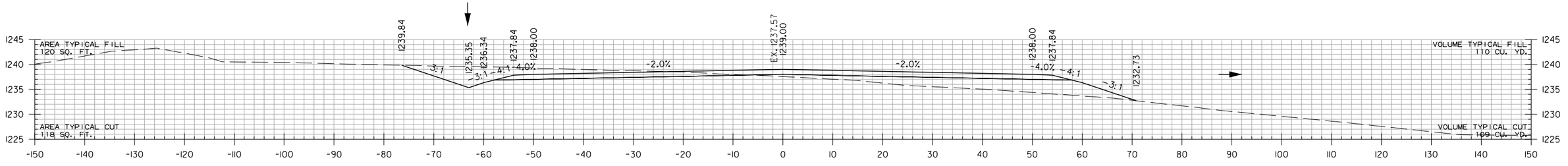

13+10.82

STA. 12+65.00
BEGIN SP. DITCH LT. 0.50%
ELEV. 1235.12

STA. 13+10.82 BEGIN MARCHANT RD. ACCESS RD.

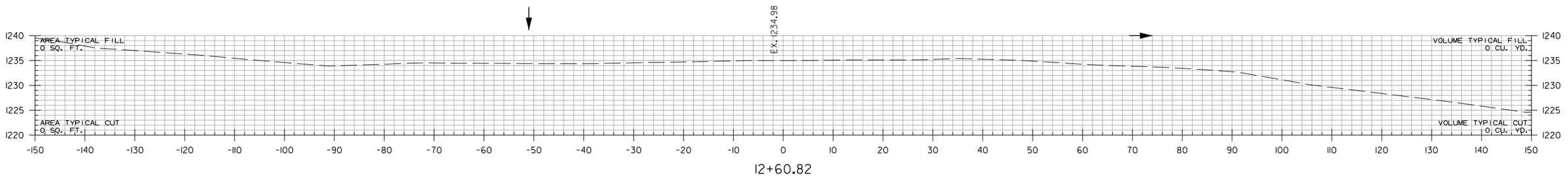

12+60.82

STA. 12+60.82 BEGIN CUL-DE-SAC

MARCHANT RD. ACCESS RD.
STA. 12+60.82 TO STA. 15+00

HBVinson
WORKSPACE: AHTD
L:\2017\17017660 - ARDOT 012326 Hwy 412 - Hwy 112\Drawings\r012326_CX_MAR_FR.dgn
7/27/2023 3:19:53 PM
REVISED DATE:

DATE REVISED	DATE REVISED	FED. RD. DIST. NO.	STATE	JOB NO.	SHEET NO.	TOTAL SHEETS
		6	ARK.	012326	832	838
②		CROSS SECTIONS				

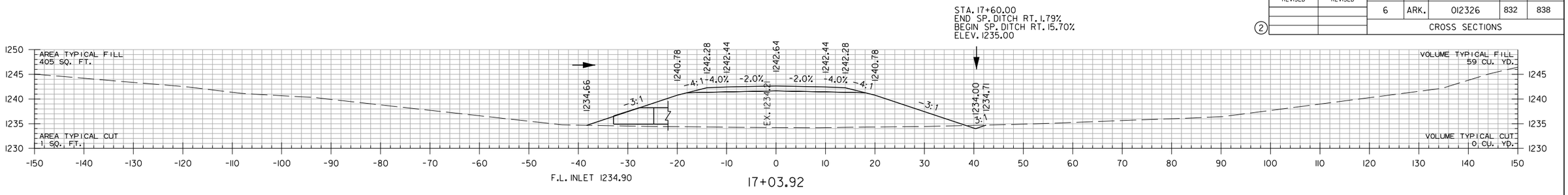

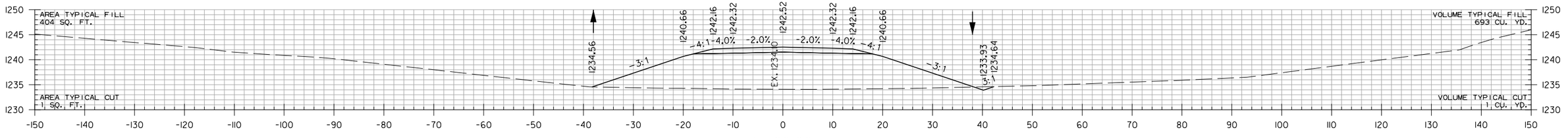

STA. 16+75 CONSTRUCT
DBL. 36" X 76' R.C. PIPE CULVERT
45° LT. FWD. SKEW
(CLASS III) TYPE 3 BEDDING
WITH FES LT. & RT.
Q50 = 92 CFS DA = 47.9 ACRES

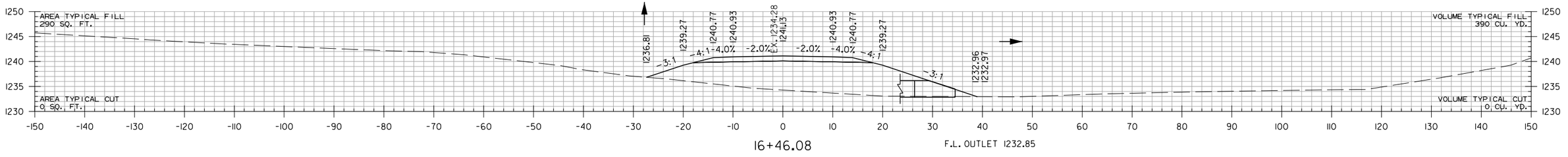

F.L. OUTLET 1232.85

STA. 16+40.00
BEGIN SP. DITCH RT. 1.79%
ELEV. 1232.85

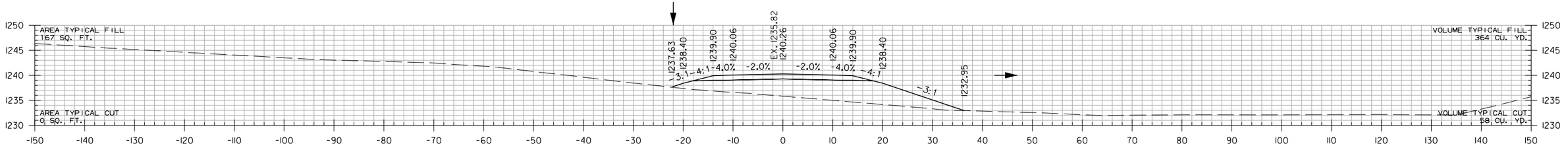

MARCHANT RD. ACCESS RD.
STA. 16+00 TO STA. 17+03.92

HBVinson 7/27/2023 3:19:54 PM
WORKSPACE: AHTD
L:\2017\170176\60 - ARDOT 012326 Hwy 412 - Hwy 112\Drawings\r012326_CX_MAR_FR.dgn
REVISED DATE:

DATE REVISED	DATE REVISED	FED. RD. DIST. NO.	STATE	JOB NO.	SHEET NO.	TOTAL SHEETS
		6	ARK.	012326	833	838
		CROSS SECTIONS				
②						

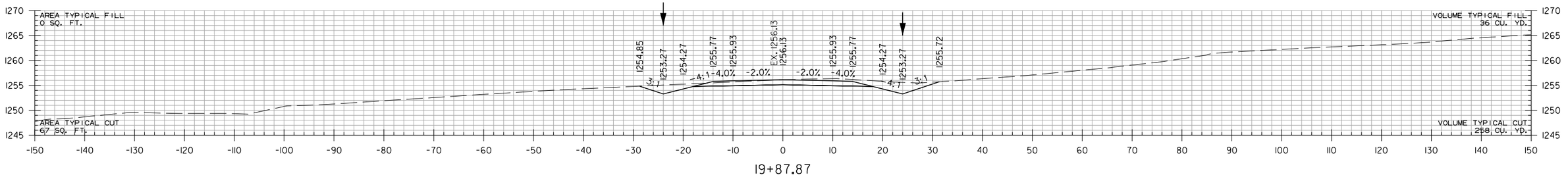

19+87.87

STA. 19+87.87 END MARCHANT RD. ACCESS RD.

STA. 19+00.00
END SP. DITCH RT. 7.00%
ELEV. 1248.28

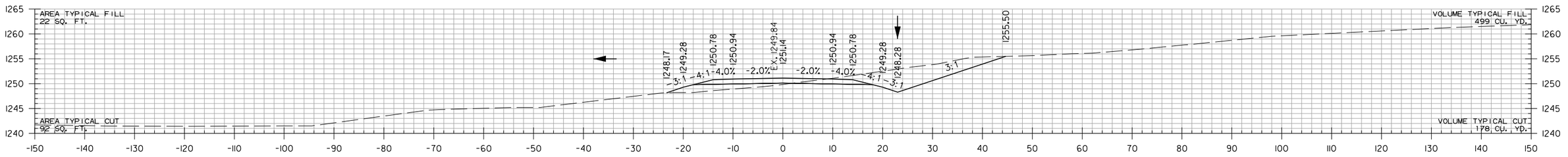

19+00.00

STA. 18+00.00
END SP. DITCH RT. 15.70%
BEGIN SP. DITCH RT. 7.00%
ELEV. 1241.28

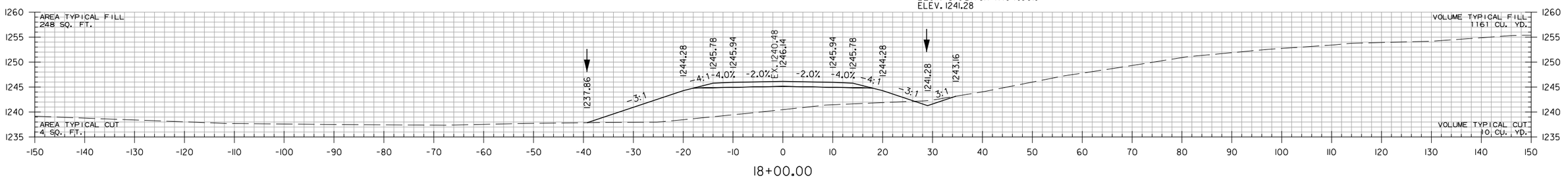

18+00.00

MARCHANT RD. ACCESS RD.
STA. 18+00 TO STA. 19+87.87

HBVinson 7/27/2023 3:19:54 PM
WORKSPACE: AHTD
L:\2017\17017660 - ARDOT 012326 Hwy 412 - Hwy 112\Drawings\r012326_CX_MAR_FR.dgn
REVISED DATE:

DATE REVISED	DATE REVISED	FED. RD. DIST. NO.	STATE	JOB NO.	SHEET NO.	TOTAL SHEETS
		6	ARK.	012326	834	838
		CROSS SECTIONS				
②						

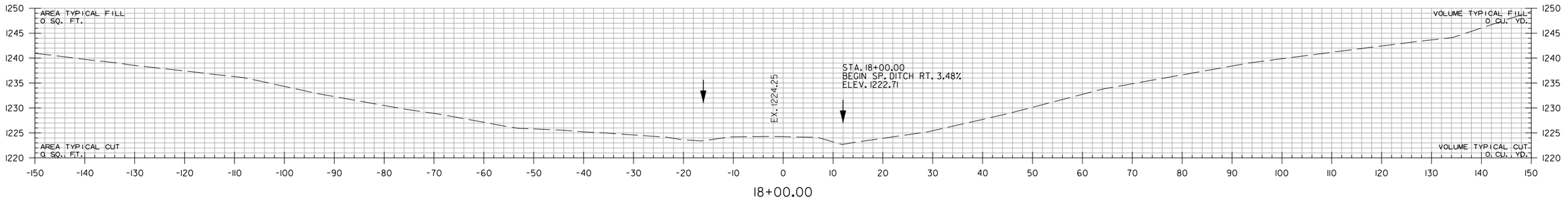

18+00.00

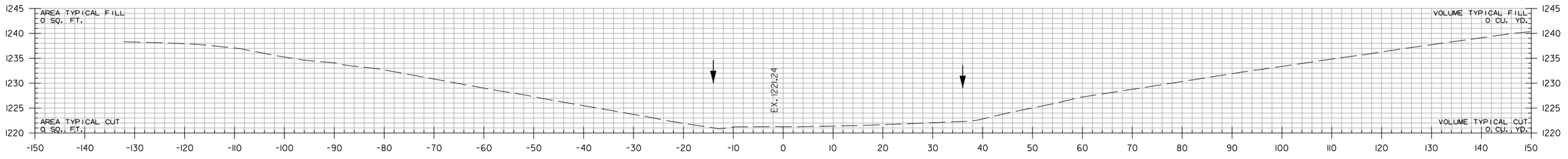

17+00.00

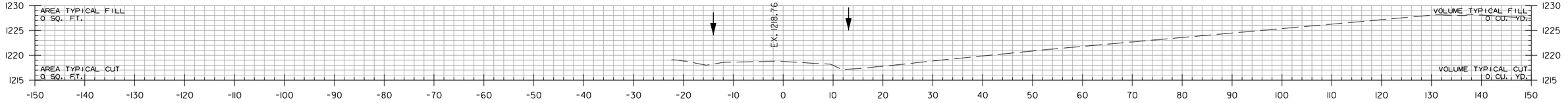

16+00.00

ROBBINS RD.
STA. 16+00 TO STA. 18+00

HBVinson
WORKSPACE: AHTD
L:\2017\17017660 - ARDOT 02326 Hwy 412 - Hwy 112\Drawings\r02326_CX_ROB_0.dgn
7/27/2023 3:19:54 PM
REVISED DATE:

DATE REVISED	DATE REVISED	FED. RD. DIST. NO.	STATE	JOB NO.	SHEET NO.	TOTAL SHEETS
		6	ARK.	012326	835	838
		CROSS SECTIONS				
②						

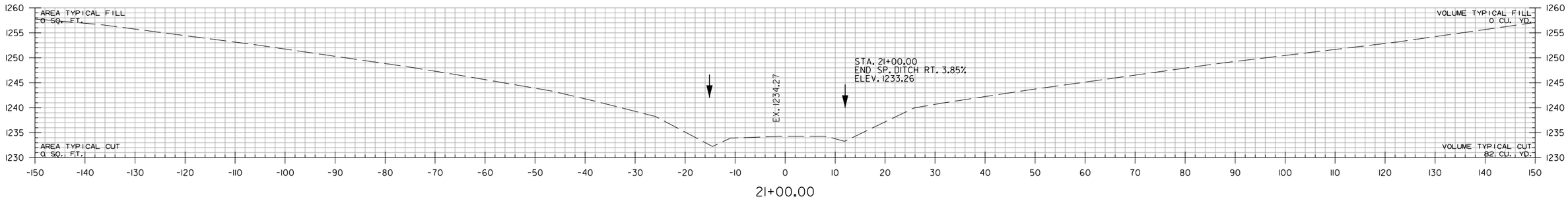

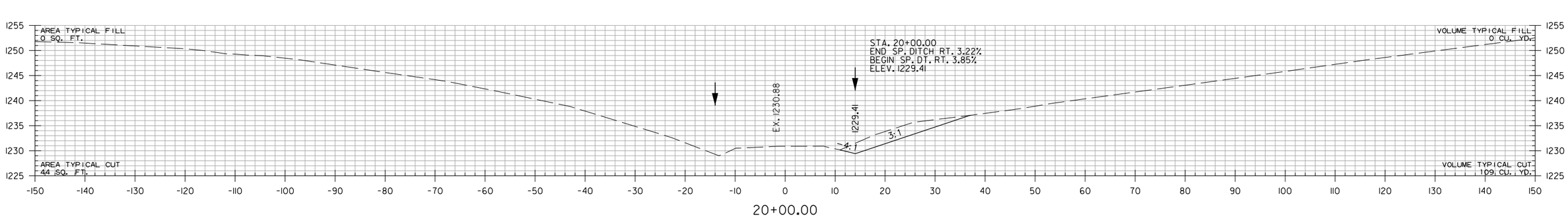

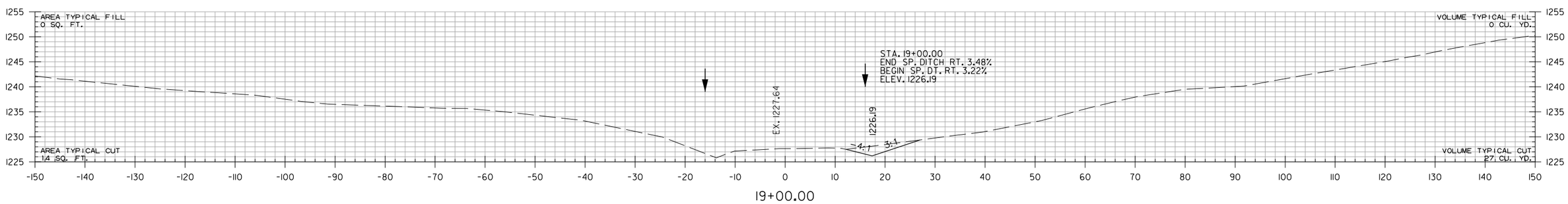

ROBBINS RD.
STA. 19+00 TO STA. 21+00

HBVinson 7/27/2023 3:9:54 PM
WORKSPACE: AHTD
L:\20IT\I70I660 - ARDOT 012326 Hwy 412 - Hwy 112\Drawings\r-012326_CX_ROB_01.dgn
REVISED DATE:

DATE REVISED	DATE REVISED	FED. RD. DIST. NO.	STATE	JOB NO.	SHEET NO.	TOTAL SHEETS
		6	ARK.	012326	836	838
		CROSS SECTIONS				
②						

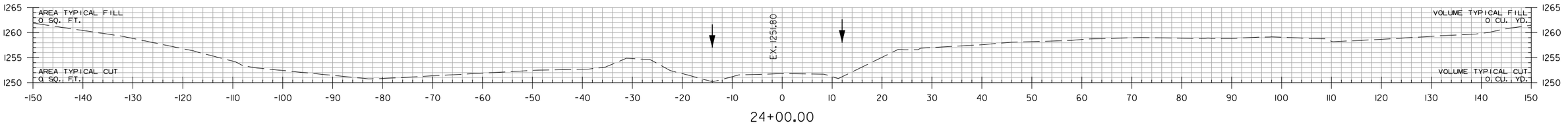

24+00.00

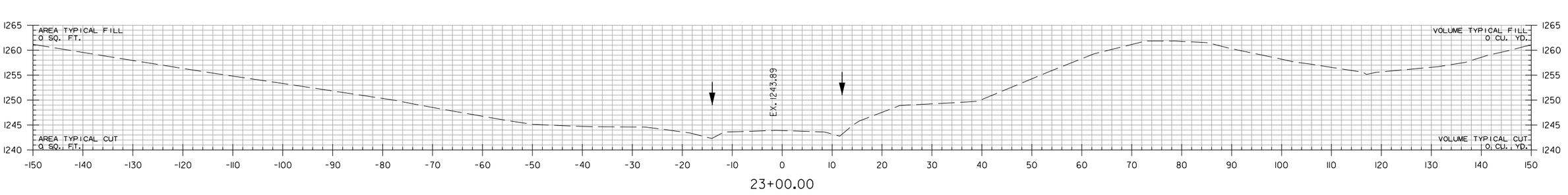

23+00.00

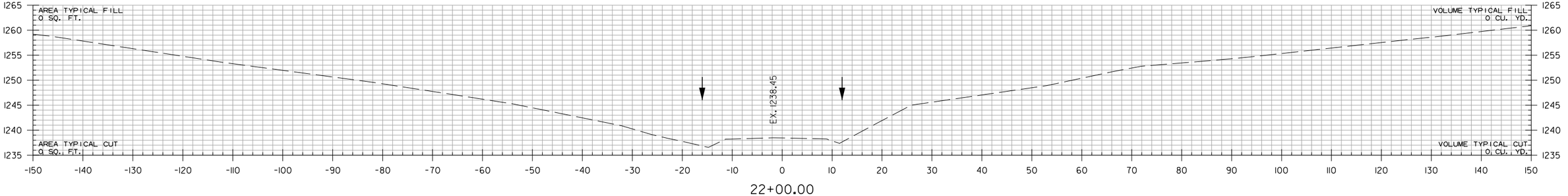

22+00.00

ROBBINS RD.
STA. 22+00 TO STA. 24+00

HBVinson
WORKSPACE: AHTD
L:\20\T\T01T660 - AR00T 012326 Hwy 412 - Hwy 112\Drawings\r012326.CX.RGB.01.dgn
REVISED DATE:
7/27/2023 3:19:54 PM

DATE REVISED	DATE REVISED	FED. RD. DIST. NO.	STATE	JOB NO.	SHEET NO.	TOTAL SHEETS
		6	ARK.	012326	837	838
		CROSS SECTIONS				
②						

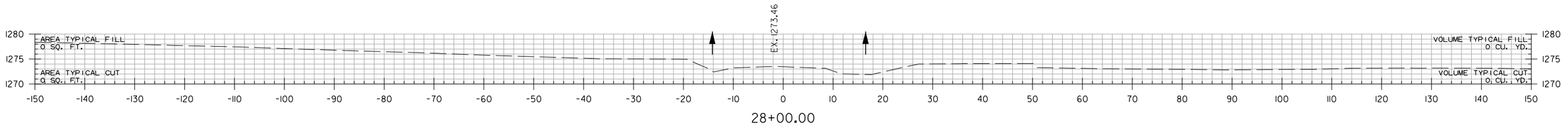

28+00.00

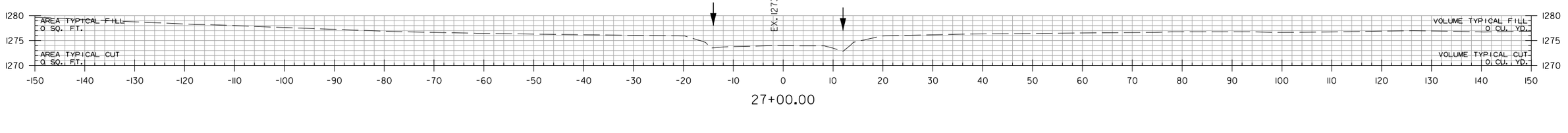

27+00.00

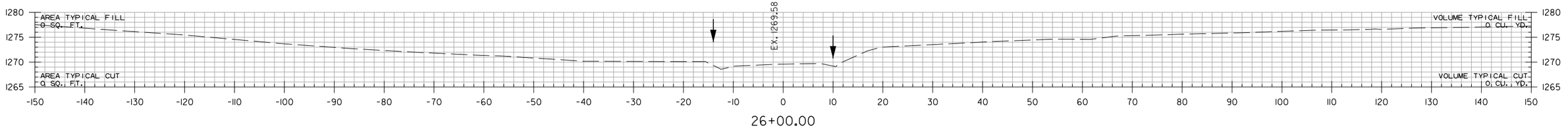

26+00.00

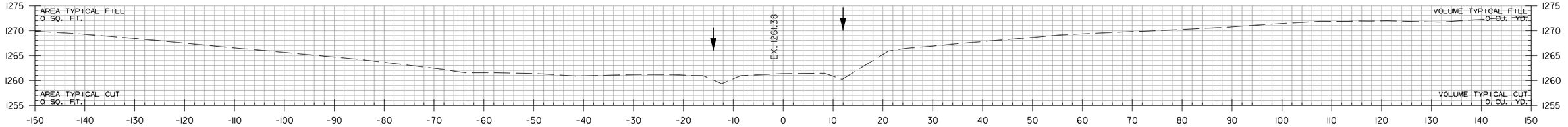

25+00.00

ROBBINS RD.
STA. 25+00 TO STA. 28+00

HBVinson
WORKSPACE: AHTD
L:\2017\17017660 - ARDOT 012326 Hwy 412 - Hwy 112\Drawings\r012326_CX_ROB_00.dgn
7/27/2023 3:19:54 PM
REVISED DATE:

DATE REVISED	DATE REVISED	FED. RD. DIST. NO.	STATE	JOB NO.	SHEET NO.	TOTAL SHEETS
		6	ARK.	012326	838	838
		CROSS SECTIONS				
②						

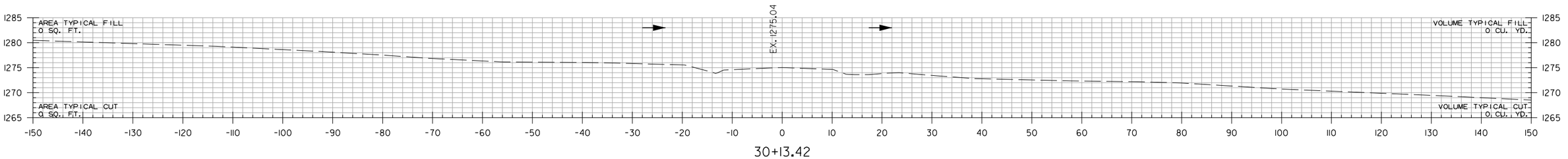

30+13.42

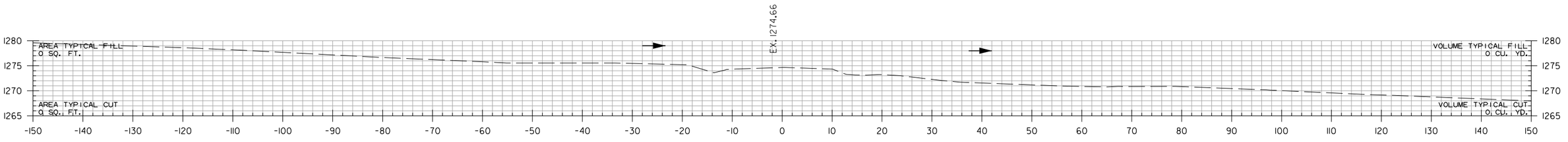

30+00.00

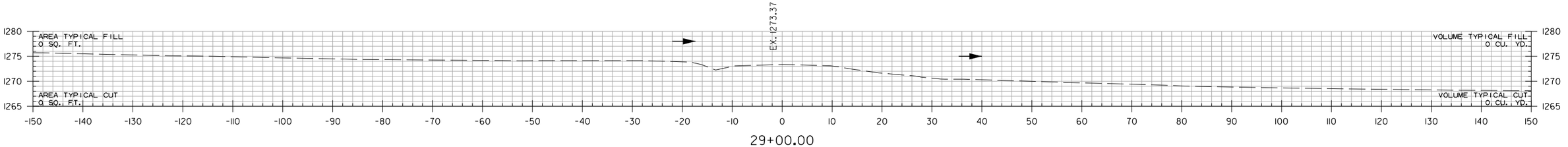

29+00.00

ROBBINS RD.
STA. 29+00 TO STA. 30+13.42

HBVinson 7/27/2023 3:19:54 PM
WORKSPACE: AHTD
L:\20\T\T01T660 - ARDOT 012326 Hwy 412 - Hwy 112\Drawings\r012326.CX.RGB.01.dgn
REVISED DATE:

DATE REVISED	DATE FILMED	DATE REVISED	DATE FILMED	FED. ROAD DIST. NO.	STATE	FED. AID PROJ. NO.	SHEET NO.	TOTAL SHEETS
				6	ARK.			
				JOB NO.				

1 RIPRAP & EXCAV. 55001

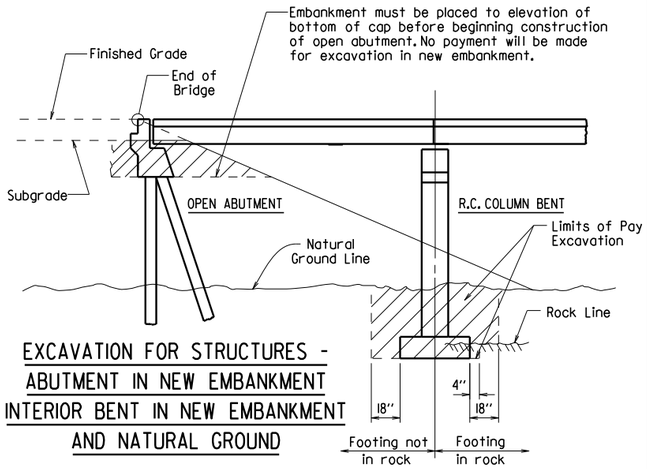

EXCAVATION FOR STRUCTURES - ABUTMENT IN NEW EMBANKMENT INTERIOR BENT IN NEW EMBANKMENT AND NATURAL GROUND

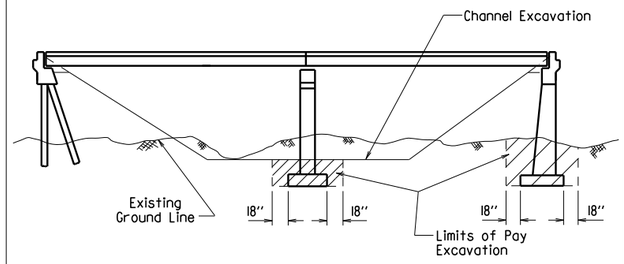

EXCAVATION FOR STRUCTURES - BRIDGE LOCATION WITH DESIGNATED CHANNEL CHANGE

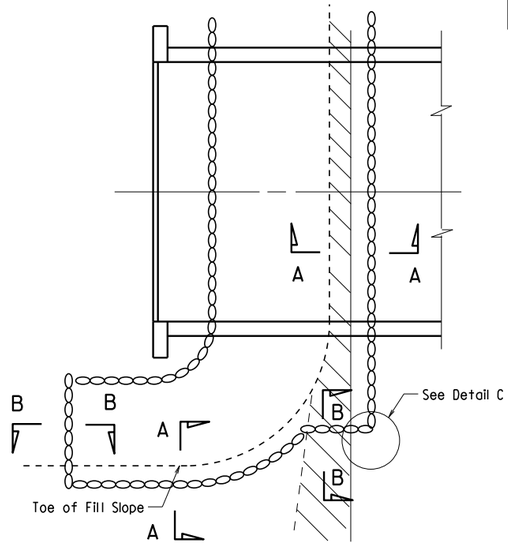

PLAN OF DUMPED RIPRAP

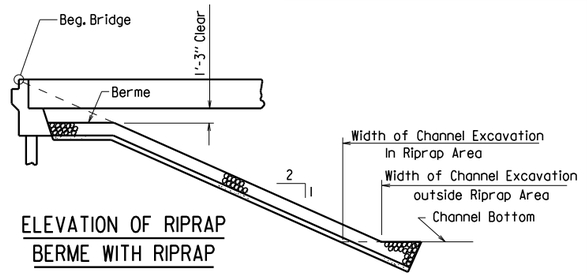

ELEVATION OF RIPRAP BERME WITH RIPRAP

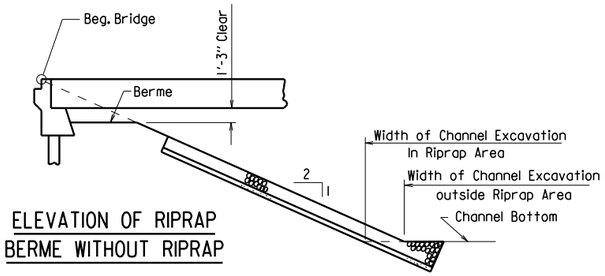

ELEVATION OF RIPRAP BERME WITHOUT RIPRAP

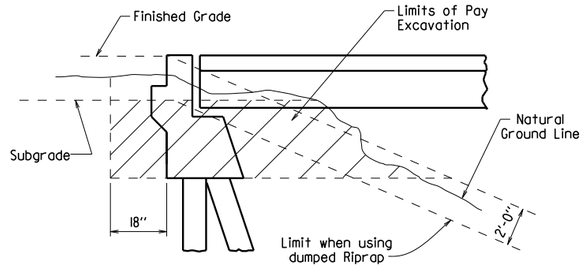

EXCAVATION FOR STRUCTURES - ABUTMENT IN NATURAL GROUND

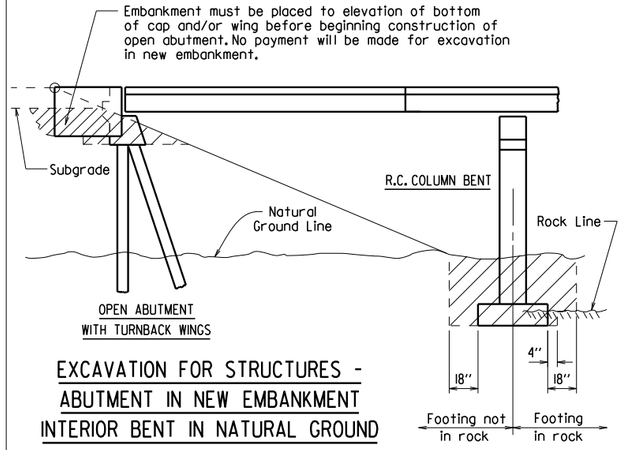

EXCAVATION FOR STRUCTURES - ABUTMENT IN NEW EMBANKMENT INTERIOR BENT IN NATURAL GROUND

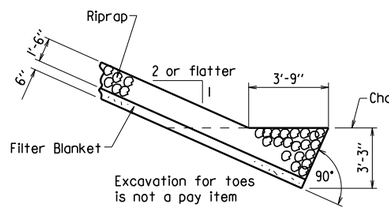

SECTION A-A

(Toe Excavation in Soil)

SECTION B-B

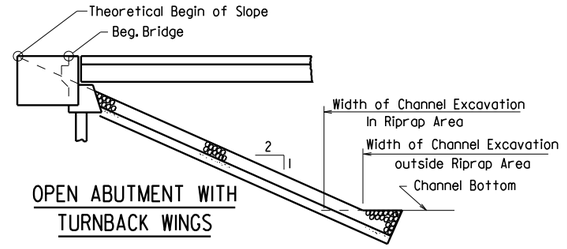

OPEN ABUTMENT WITH TURNBACK WINGS

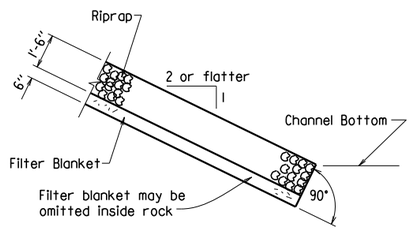

SECTION A-A

(Toe Excavation in Rock)

Note : Use this type of toe when rock is encountered which is in a stable condition.

Note : In lieu of an aggregate filter blanket, a synthetic fiber geotextile fabric complying with the requirements of Subsection 816.02(e) may be used.

Note : Details for computing excavation for structures are included for information as to how plan quantities were calculated and for use when adjusting quantities when changing footing elevation.

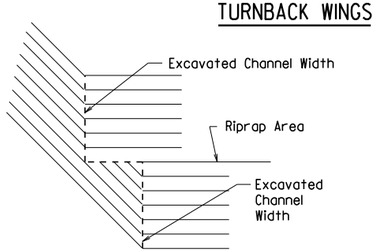

DETAIL C

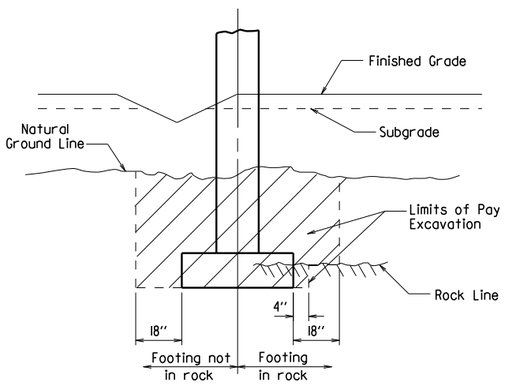

EXCAVATION FOR STRUCTURES - BENT IN ROADWAY FILL SECTION AND NATURAL GROUND

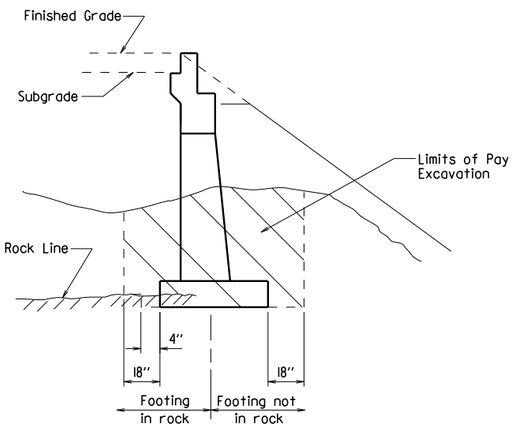

EXCAVATION FOR STRUCTURES - ABUTMENT IN NATURAL GROUND AND NEW EMBANKMENT

STANDARD DETAILS FOR DUMPED RIPRAP AND FILTER BLANKET AND COMPUTING EXCAVATION FOR STRUCTURES

ARKANSAS STATE HIGHWAY COMMISSION

LITTLE ROCK, ARK.

DRAWN BY: KDH DATE: 2-27-2014 FILENAME: b5500l.dgn

CHECKED BY: BEF DATE: 2-27-2014 SCALE: NO SCALE

DESIGNED BY: STD. DATE:

DRAWING NO. 55001

DATE REVISED	DATE FILMED	DATE REVISED	DATE FILMED	FED. ROAD DIST. NO.	STATE	FED. AID PROJ. NO.	SHEET NO.	TOTAL SHEETS
				6	ARK.			
				JOB NO.				

① CONCRETE RIPRAP 55002

Note:
Sloped surfaces of concrete riprap to be marked off into blocks (construction joints optional) with an approved grooving tool, spacing the grooved lines about 5' apart.

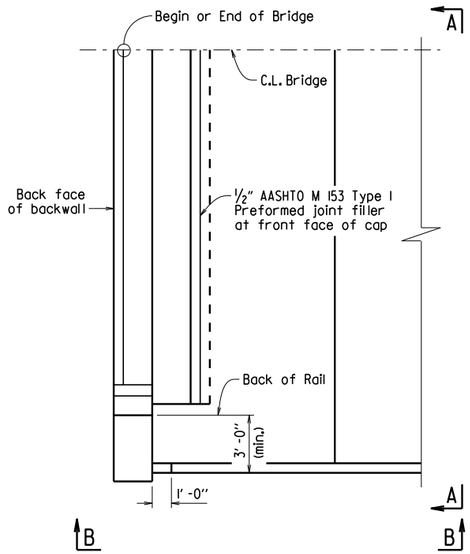

PLAN OF CONCRETE RIPRAP
PERPENDICULAR TO WING
¼" = 1'-0"

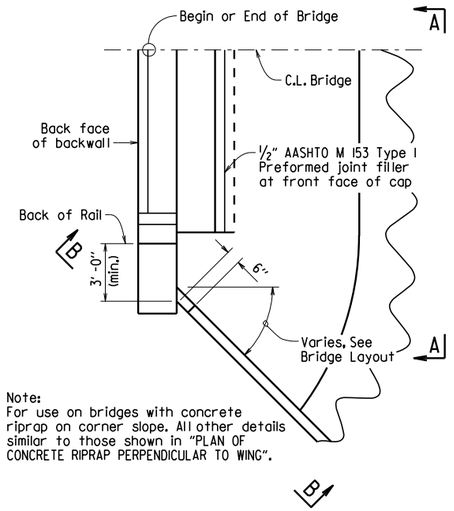

Note:
For use on bridges with concrete riprap on corner slope. All other details similar to those shown in "PLAN OF CONCRETE RIPRAP PERPENDICULAR TO WING".

PLAN OF CONCRETE RIPRAP
AT ANGLE TO WING
¼" = 1'-0"

Note:
For use on bridges with turned back wings. All other details similar to those shown in "PLAN OF CONCRETE RIPRAP PERPENDICULAR TO WING".

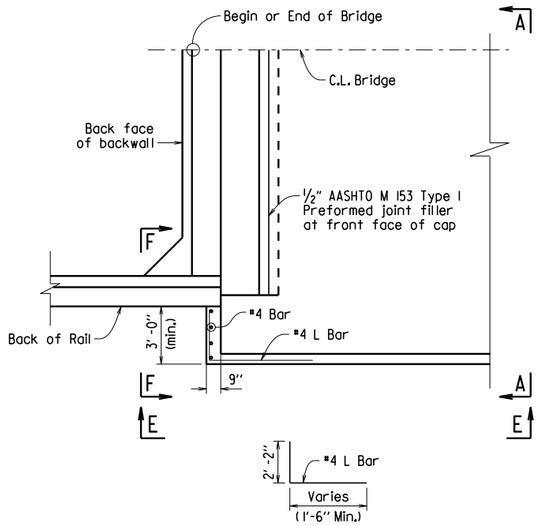

PLAN OF CONCRETE RIPRAP
PERPENDICULAR TO TURNED BACK WING
¼" = 1'-0"

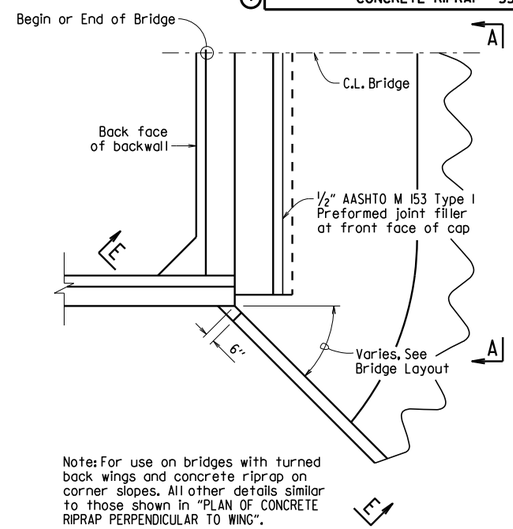

Note: For use on bridges with turned back wings and concrete riprap on corner slopes. All other details similar to those shown in "PLAN OF CONCRETE RIPRAP PERPENDICULAR TO WING".

PLAN OF CONCRETE RIPRAP
AT ANGLE FROM TURNED BACK WING
¼" = 1'-0"

Note:
Wing is shown perpendicular to concrete riprap. Details are similar when wing is at an angle to riprap.

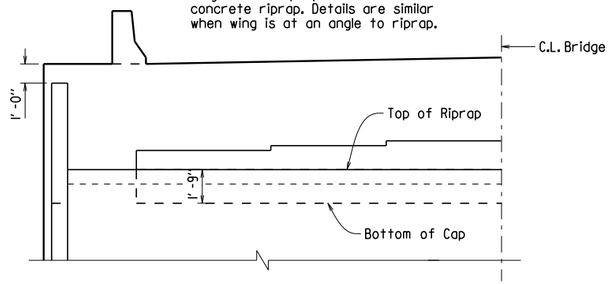

VIEW A-A
¼" = 1'-0"

① Match slope of Riprap Apron.

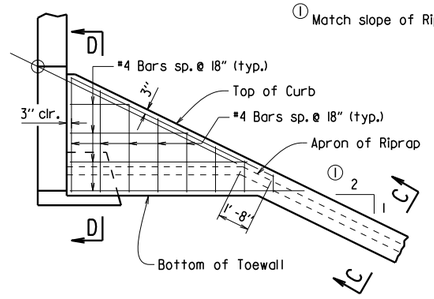

VIEW B-B
¼" = 1'-0"

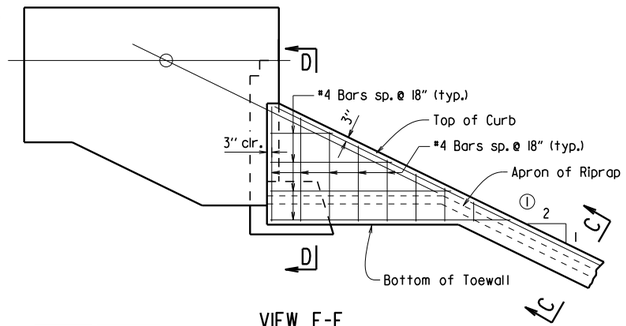

VIEW E-E
¼" = 1'-0"

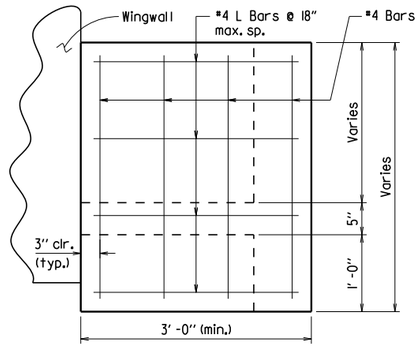

VIEW F-F
1" = 1'-0"

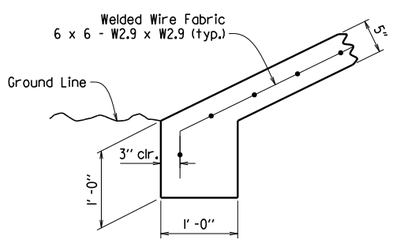

TOE OF CONCRETE RIPRAP
1" = 1'-0"

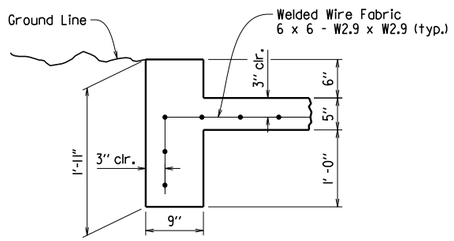

SECTION C-C
1" = 1'-0"

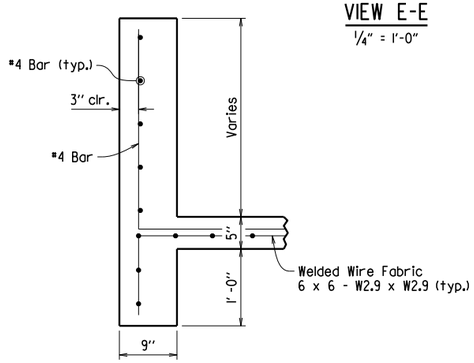

SECTION D-D
1" = 1'-0"

GENERAL NOTES

All concrete shall be Class A with a minimum compressive strength, f'c = 2,100 psi.

Welded wire fabric shall conform to AASHTO M55 or M221.

STANDARD DETAILS FOR CONCRETE RIPRAP

ARKANSAS STATE HIGHWAY COMMISSION

LITTLE ROCK, ARK.

DRAWN BY: ACP DATE: 2/27/2014 FILENAME: b55002.dgn
CHECKED BY: BEF DATE: 2/27/2014 SCALE: AS SHOWN
DESIGNED BY: Std. DATE: ---

DRAWING NO. 55002

DATE REVISED	DATE FILMED	DATE REVISED	DATE FILMED	FED. ROAD DIST. NO.	STATE	FED. AID PROJ. NO.	SHEET NO.	TOTAL SHEETS
3/24/16				6	ARK.			
				JOB NO.				
				①	BRIDGE DECK FORMS		55005	

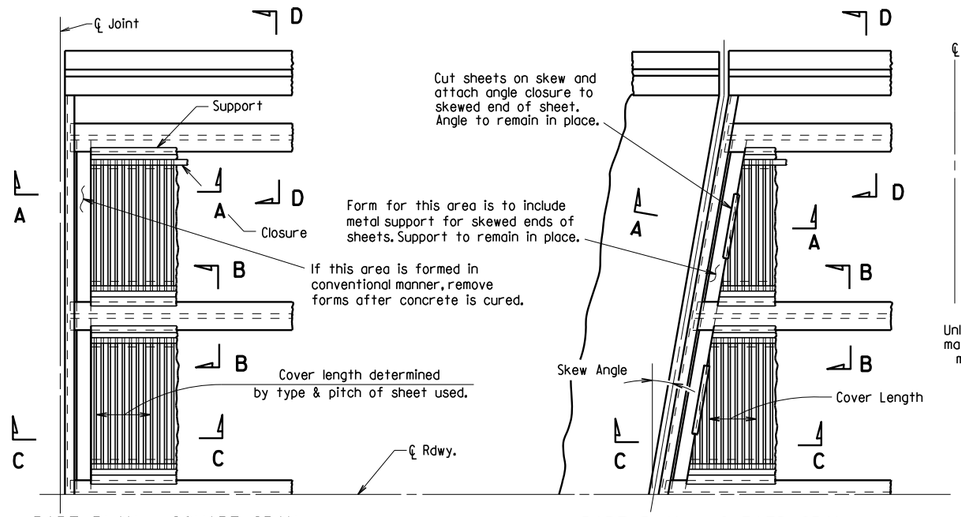

PART PLAN - SQUARE SPAN

3/8" = 1'-0"

PART PLAN - SKEWED SPAN

3/8" = 1'-0"

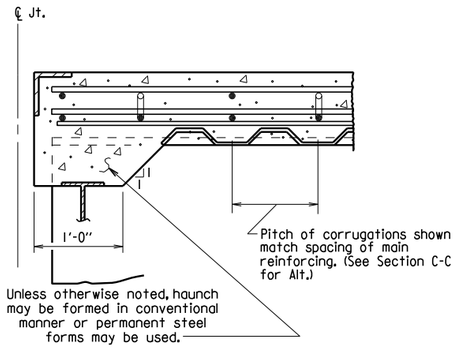

SECTION A-A

N.T.S.
(Angle at end of span)

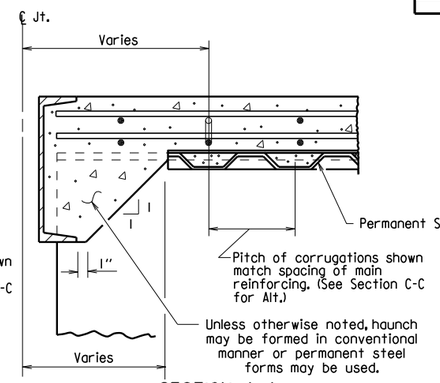

SECTION A-A

N.T.S.
(Channel at end of span)

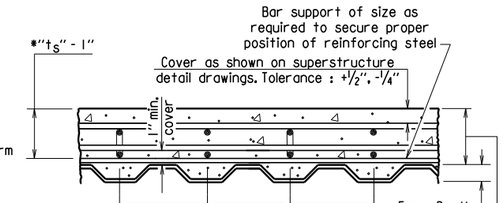

SECTION C-C

1" = 1'-0"

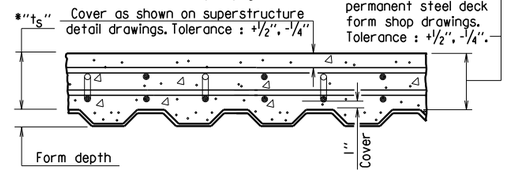

SECTION C-C - ALTERNATE

1" = 1'-0"
(Applicable when corrugations do not match spacing of main reinforcement)

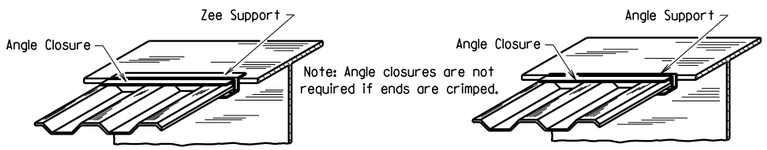

SKETCH OF PERMISSIBLE SUPPORTS

N.T.S.

*t_s = slab thickness as shown on superstructure detail drawings.

GENERAL NOTES

Permanent steel deck forms may be used at the Contractor's option and shall be at no additional cost to the Department. Such use may result in changes to the dead load deflection of the girder. Any cost for adjustments due to a change in the dead load deflection will be borne by the Contractor. Payment for deck concrete and structural steel will not be increased due to use of permanent steel deck forms.

Permanent steel deck forms shall conform to Subsection 802.14(b). Detailed plans, including detailed calculations and manufacturer's technical brochure, shall be submitted to and approved by the Engineer before work of forming the bridge deck is started.

Welding of form supports to the tension flange of steel girders will be permitted only in areas where shear connectors are used. When welding is not allowed, the method of fastening Z or ∠ supports to the flange must be approved by the Engineer.

Form sheets shall be fastened to supporting members and to each other with galvanized metal screws sufficient in size and number to provide a secure attachment. Alternate methods of attachment must be approved by the Engineer.

When the pitch of form corrugations match the reinforcing spacing, transversely align form sheets across the bridge to maintain the correct orientation of continuous reinforcing bars in the corrugations.

Bar support rods, when used, shall be sized and spaced to adequately support the bottom reinforcing mat at the required position.

High chairs shall be sized to support the top mat of reinforcing at the proper position. High chairs shall be placed at locations shown on the detail drawings.

Specifications: Arkansas State Highway and Transportation Department Standard Specifications for Highway Construction (2014 Edition), with applicable Supplemental Specifications and Special Provisions.

SECTION B-B

1" = 1'-0"
(Showing permissible support for tension flange where shear connectors are used, and for all compression flanges)

③ ⚠ Minimum weld: 1/8" x 1" @ 18". More weld may be required; maximum length per weld = 1 1/2" (typ.)

SECTION B-B

1" = 1'-0"
(Showing permissible support for tension flange where shear connectors are used and for all compression flanges)

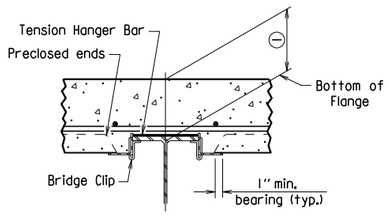

SECTION B-B

1" = 1'-0"
(Showing permissible support for tension flange where shear connectors are not used)

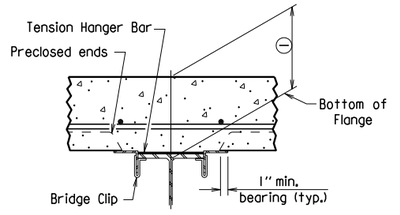

SECTION B-B

1" = 1'-0"
(Showing permissible support for tension flange where shear connectors are not used)

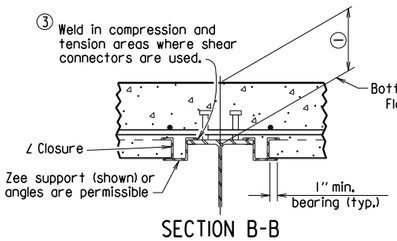

SECTION B-B

1" = 1'-0"
(Showing ∠ Closure)

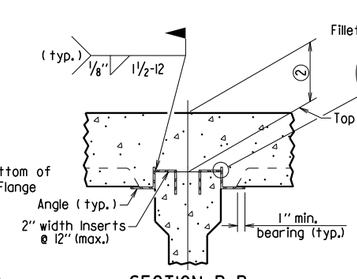

SECTION B-B (FOR CONCRETE GIRDERS)

1" = 1'-0"
(Showing support by Insert cast in girder)

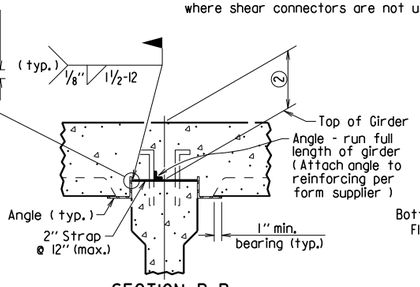

SECTION B-B (FOR CONCRETE GIRDERS)

1" = 1'-0"
(Showing support by Strap)

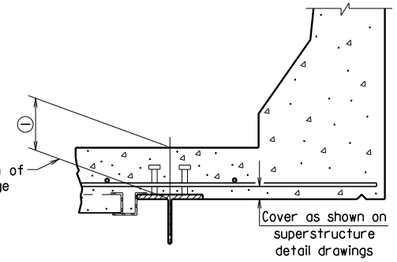

SECTION D-D

1" = 1'-0"
Note: Only Bottom Reinforcing is shown.

① Distance from top of slab to bottom of top flange as measured at centerline girder and as shown on superstructure detail drawings. This dimension may vary within the following limits to maintain the grade and slab thickness tolerances : Minimum - occurs when either the top flange or the support angle leg contacts the bottom reinforcing steel; Maximum = t_S + 1 3/4" + flange thickness. See Section C-C for slab thickness tolerance between adjacent girder flanges.

② Distance from top of slab to top of girder as measured at centerline girder and as shown on superstructure detail drawings. This dimension may vary within the following limits to maintain the grade and slab thickness tolerances : Minimum - occurs when either the top of girder or the support angle leg contacts the bottom reinforcing steel; Maximum - value shown on the superstructure detail drawings when removable forms are used. See Section C-C for slab thickness tolerance between adjacent girder flanges.

⚠ Revised weld dimension by KWY, Ck'd. by BEF, 3/24/16.

STANDARD DETAILS FOR PERMANENT STEEL BRIDGE DECK FORMS FOR STEEL & CONCRETE GIRDER SPANS

ARKANSAS STATE HIGHWAY COMMISSION

LITTLE ROCK, ARK.

DRAWN BY:	KDH	DATE:	2-27-2014	FILENAME:	b55005.dgn
CHECKED BY:	BEF	DATE:	2-27-2014	SCALE:	NONE
DESIGNED BY:	STD.	DATE:	—		

DRAWING NO. 55005

DATE REVISED	DATE FILMED	DATE REVISED	DATE FILMED	FED. ROAD DIST. NO.	STATE	FED. AID PROJ. NO.	SHEET NO.	TOTAL SHEETS
				6	ARK.			
				JOB NO.				
				①		GENERAL NOTES		55006

GENERAL NOTES

These GENERAL NOTES are applicable unless otherwise shown in the Plan Details, Special Provisions, or Supplemental Specifications.

CONSTRUCTION SPECIFICATIONS: Arkansas State Highway and Transportation Department Standard Specifications for Highway Construction (2014 Edition) with applicable Supplemental Specifications and Special Provisions. Section and Subsection refer to the Standard Specifications.

DESIGN SPECIFICATIONS: See Bridge Layout(s).

SUPERSTRUCTURE NOTES:

MATERIALS AND STRENGTHS:

Class S(AE) Concrete	f'c =	4,000 psi
Reinforcing Steel (Gr. 60, AASHTO M 31 or M 322, Type A)	fy =	60,000 psi
Structural Steel (AASHTO M 270, Gr. 36)	Fy =	36,000 psi
Structural Steel (AASHTO M 270, Gr. 50)	Fy =	50,000 psi
Structural Steel (AASHTO M 270, Gr. 50W)	Fy =	50,000 psi
Structural Steel (AASHTO M 270, Gr. HPS70W)	Fy =	70,000 psi

See Plan Details for Grade(s) of Structural Steel required.

CONCRETE:

All concrete shall be Class S(AE) with a minimum 28 day compressive strength f'c = 4,000 psi. Concrete shall be poured in the dry and all exposed corners shall be chamfered ¾" unless otherwise noted.

The superstructure details shown are for use when removable deck forming is used and are the basis for measurement of Class S(AE) Concrete. See Standard Drawing No. 55005 for allowable modifications and for tolerances when Permanent Steel Bridge Deck Forms are used.

Use of a longitudinal screed is not permitted on any span of a bridge deck with horizontal curvature.

The concrete deck (roadway surface) shall be given a tine finish in accordance with Subsection 802.19 for Class 5 Tined Bridge Roadway Surface Finish. Sidewalks shall receive a broomed finish as specified for final finishing in Subsection 802.19 for Class 6 Broomed Finish. Movement of the finishing machine across new concrete shall be on planks placed on the surface and shall be prohibited for 72 hours after finishing the pour. Sufficient concrete must be placed ahead of the strike-off to fully load the beam or girder. When permitted, the use of a longitudinal strike-off will require that a vertical camber adjustment be made in the strike-off to account for the future dead load deflection due to any railings, median barrier, and sidewalks.

REINFORCING STEEL:

All reinforcing steel shall be Grade 60 conforming to AASHTO M 31 or M 322, Type A, with mill test reports and shall be epoxy coated. The reinforcing steel is to be accurately located in the forms and firmly held in place by steel wire supports, sufficient in number and size to prevent displacement during the course of construction. The wire supports will not be paid for directly, but will be considered subsidiary to the item "Epoxy Coated Reinforcing Steel (Grade 60)".

STRUCTURAL STEEL (COMMON TO W-BEAMS AND PLATE GIRDERS):

Structural steel shall be AASHTO M 270 with grade and payment as specified in the plans. Grade 50W steel shall not be painted and all exposed surfaces shall be cleaned in accordance with Subsection 807.84(e). Grade 36 and Grade 50 steel shall be painted unless otherwise noted and all exposed surfaces shall be cleaned in accordance with Subsection 807.84. Structural steel completely embedded in concrete may be AASHTO M 270, Gr. 36, Gr. 50 or Gr. 50W unless otherwise noted.

Drawings show general features of design only. Shop drawings shall be made in accordance with the specifications, submitted and approval secured before fabrication is begun.

Requests for substitution of structural steel shapes shown with shapes of greater size must be submitted by the Contractor to the Engineer for approval. Steels of equal or greater strengths will be accepted only when shown on the approved shop drawings. Payment will be based on the basis of shapes and materials shown in the plans, and no additional compensation will be made for any adjustments due to substitutions.

All welding that is to be done during fabrication of structural steel, including temporary welds, shall be detailed on the shop drawings and submitted for approval. If additional welds are required, whether permanent or temporary, a formal request with detailed drawings shall be submitted to the Engineer for approval; however, additional welds used for attaching falsework support devices or screed rail supports to the structural steel that do not exceed the limitations of Subsection 802.13 will not require approval prior to construction. All welding shall conform to Subsection 807.26.

Unless otherwise noted, field connections shall be bolted with ¾" ø high-strength bolts using 13/16 " ø open holes. Holes for ¾" ø high-strength bolts may be 15/16 " ø if a washer is supplied for use under both the nut and head of the bolt. The use of oversized holes will not be allowed on main members unless otherwise noted. Bolts shall be placed with heads on the outside face of the exterior beam or girder webs and on the bottom of the beam or girder flanges.

All stud shear connectors shall be granular flux filled, solid fluxed, or equal and shall be automatically end welded in accordance with recommendations of the Manufacturer.

When painting is required, all structural steel except galvanized steel and steel completely encased in concrete shall be painted in accordance with Subsection 807.75. The color of paint shall be as specified in the plans.

STRUCTURAL STEEL (W-BEAMS):

All beams and field splice plates, and all diaphragms and connection plates attached to horizontally curved beams are considered main load carrying members and shall meet the Longitudinal Charpy V-Notch Test specified in Subsection 807.05. This work and material will not be paid for directly, but shall be considered subsidiary to the item "Structural Steel in Beam Spans (M 270, Gr. ___)".

All beams in continuous units and simple spans with field splices shall be blocked in their true position in the shop in groups as specified in Subsection 807.54(b)(2) with the webs horizontal. The camber, length of sections, distance between bearings, and openings of joints shall be measured and this information shall become part of the permanent records. The component parts shall be match marked in this assembly and these marks shall be shown on the erection diagram.

All beams in simple spans without field splices shall be blocked in their true position with webs horizontal. The camber, distance between bearings, and openings of joints shall be measured and this information shall become part of the permanent records.

Flange field splice plates shall be cut and fabricated so that the primary direction of rolling is parallel to the direction of the main tensile and/or compressive stresses.

All beam dimensions are based on a temperature of 60 degrees F. A tolerance of ¼" +/- is allowed for camber.

Bent plate diaphragms for horizontally curved beams shall be cut and fabricated so that the primary direction of rolling is parallel to the direction of the main tensile and/or compressive stresses. Bent plate diaphragms for straight beams may be cut and fabricated in accordance with Subsection 807.35 or as required for horizontally curved beams.

Unless otherwise noted, diaphragms shall be installed as beams are erected. All bolts in diaphragms and field splices shall be installed and tightened in accordance with Subsection 807.71 prior to pouring the concrete deck.

STRUCTURAL STEEL (PLATE GIRDERS):

All references to cross-frames shall include "X" or "K" types.

All girder web and flange plates, all field splice plates, and all diaphragms, cross-frames and connection plates attached to horizontally curved girders are considered main load carrying members and shall meet the Longitudinal Charpy V-Notch Test specified in Subsection 807.05. This work and material will not be paid for directly, but shall be considered subsidiary to the item "Structural Steel in Plate Girder Spans (M 270, Gr. ___)".

All girders in continuous units and simple spans with field splices shall be assembled in the shop as specified in Subsection 807.54(b)(2) and blocked in their true position with webs horizontal. The camber, length of sections, distance between bearings, and openings of joints shall be measured and this information shall become part of the permanent records. The component parts shall be match marked in this assembly and these marks shall be shown on the erection diagram.

All girders in simple spans without field splices shall be blocked in their true position with webs horizontal. The camber, distance between bearings, and openings of joints shall be measured and this information shall become part of the permanent records.

Web and flange plates for main members and flange splice plates for main members shall be cut and fabricated so that the primary direction of rolling is parallel to the direction of the main tensile and/or compressive stresses.

Girder webs may be made by shop splicing with minimum lengths of 25 feet for sections. Flange plates longer than 50 feet may be made by shop splicing with minimum lengths of 25 feet for sections. No additional payment will be made for shop welded splices.

All girder dimensions are based on a temperature of 60 degrees F. A tolerance of ¼" +/- is allowed for camber.

Groove welds in web and flange plates shall be Quality Control (Q.C.) tested by nondestructive testing, as required in Subsection 807.23(b). Fillet welds at flange to web plate connections shall be Q.C. tested by the magnetic particle method. All Q.C. testing shall be considered subsidiary to the item "Structural Steel in Plate Girder Spans (M 270, Gr. ___)".

Bent plate diaphragms for horizontally curved girders shall be cut and fabricated so that the primary direction of rolling is parallel to the direction of the main tensile and/or compressive stresses. Bent plate diaphragms for straight girders may be cut and fabricated in accordance with Subsection 807.35 or as required for horizontally curved girders.

Unless otherwise noted, cross-frames and diaphragms shall be installed as girders are erected. All bolts in cross-frames, diaphragms, and field splices shall be installed and tightened in accordance with Subsection 807.71 prior to pouring the concrete deck.

SUBSTRUCTURE NOTES:

CONCRETE:

Unless otherwise noted, concrete in caps, columns and footings (except seal footings) shall be Class "S" with a minimum 28 day compressive strength f'c = 3,500 psi and shall be poured in the dry. Seal Concrete for footings shall have a minimum 28 day compressive strength f'c = 2,100 psi.

Concrete in drilled shafts shall be Class "S" as modified by Job SP "Drilled Shaft Foundations".

All exposed corners shall be chamfered ¾" unless otherwise noted.

REINFORCING STEEL:

All reinforcing steel shall be Grade 60 (yield strength = 60,000 psi) conforming to AASHTO M 31 or M 322, Type A, with mill test reports.

Top reinforcing bars in cap shall be properly placed to avoid interference with anchor bolts or sheet metal sleeves.

STRUCTURAL STEEL:

Structural steel in end bents shall be AASHTO M 270 with grade and payment as specified in the plans.

FOR ADDITIONAL INFORMATION AND NOTES, SEE LAYOUT(S) AND PLAN DETAILS.

FOR ADDITIONAL INFORMATION AND NOTES, SEE LAYOUT(S) AND PLAN DETAILS.

STANDARD GENERAL NOTES
FOR STEEL BRIDGE STRUCTURES

ARKANSAS STATE HIGHWAY COMMISSION
LITTLE ROCK, ARK.

DRAWN BY: A.M.S. DATE: 9-2-2015 FILENAME: b55006.dgn
CHECKED BY: B.E.F. DATE: 9-2-2015 SCALE: NO SCALE
DESIGNED BY: STD. DATE:

DRAWING NO. 55006

PRINT DATE: 11/7/2019

DATE REVISED	DATE FILMED	DATE REVISED	DATE FILMED	FED. ROAD DIST. NO.	STATE	FED. AID PROJ. NO.	SHEET NO.	TOTAL SHEETS
				6	ARK.			
				JOB NO.				
				①	STEEL BRIDGE STRUCTURES 55007			

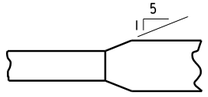

Plan-Unequal Width (Flg.)

FLANGE SPLICE

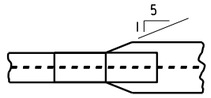

FLANGE SPLICE AT UNEQUAL BOTTOM FLANGE WIDTHS

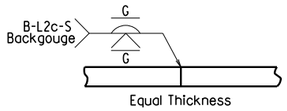

Equal Thickness

WEB & FLANGE SPLICE

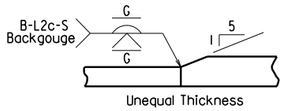

Unequal Thickness

FLANGE SPLICE

(Use when Base Metal Thickness is Equal to or Less than 2")

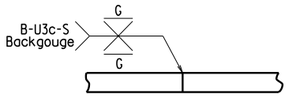

Equal Thickness

WEB & FLANGE SPLICE

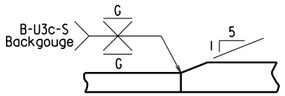

Unequal Thickness

FLANGE SPLICE

(Use when Base Metal Thickness is Greater than 2")

DETAILS OF WELDED SPLICES FOR PLATE GIRDERS

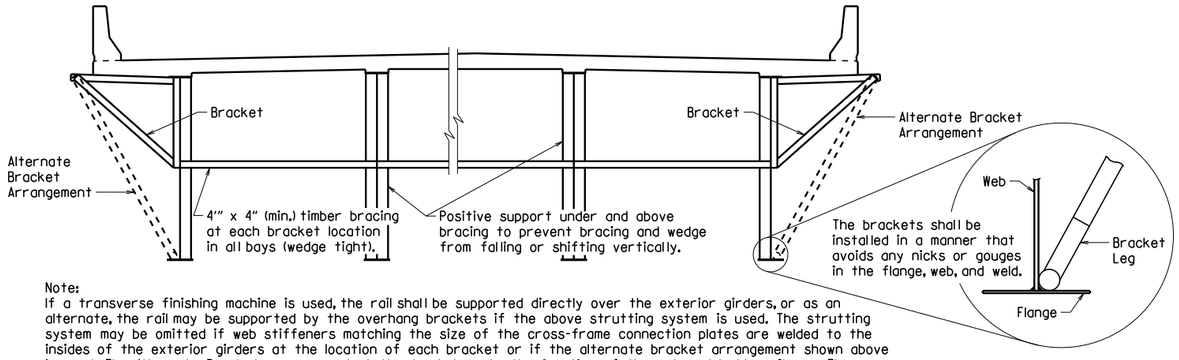

Note:
If a transverse finishing machine is used, the rail shall be supported directly over the exterior girders, or as an alternate, the rail may be supported by the overhang brackets if the above strutting system is used. The strutting system may be omitted if web stiffeners matching the size of the cross-frame connection plates are welded to the insides of the exterior girders at the location of each bracket or if the alternate bracket arrangement shown above is used. The Alternate Bracket arrangement shall extend down to the junction of the web and bottom flange. The stiffener shall conform to the details for cross frame connection plates shown on the plans. No direct payment will be made for brackets, timber bracing, supports, or welded stiffeners. Payment shall be subsidiary to "Structural Steel in Plate Girder Spans (___)".

SCREED RAIL SUPPORT FOR PLATE GIRDERS

(USE WHEN WEB DEPTHS ARE 48" OR GREATER)

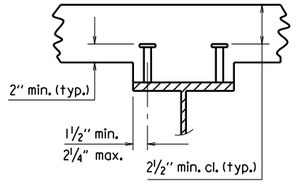

2 STUDS PER ROW

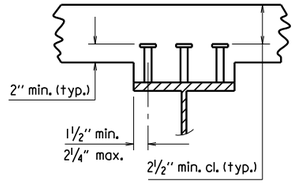

3 STUDS PER ROW

Stud Shear Connectors shall be automatically end welded to the beam or girder flange in accordance with the recommendations of the Manufacturer. See plan details for number and size.

SHEAR CONNECTOR DETAIL

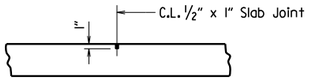

Use Type 3 or 4 Joint Sealer. See Subsections 501.02(h) and 501.05(j). Backer Rod filler will not be required. Joint Sealer shall be measured and paid for as Class S(AE) Concrete-Bridge. Slab Joints shall extend to the outside edge of the deck slab and shall align with open joints at the front face of the parapet. Slab joints shall be installed before the parapet railing is poured. If slab joints are to be sawed, they shall be sawed as soon as the concrete has sufficiently set to allow sawing of the joint without damage to the slab. Slab joints shall be placed at all pouring sequence construction joints and required slab joint locations. The joint sealer shall extend across the deck from gutterline to gutterline.

ADDITIONAL NOTES IF SIDEWALKS OR RAISED MEDIANS ARE REQUIRED:
Slab Joints shall be installed before the sidewalk or raised median is poured. After installation of the joint in the sidewalk or raised median and prior to pouring the parapet rail, the joint sealer shall be placed extending across the deck slab from gutterline to gutterline and acrosss the top of the sidwalk or raised median to the edge of the slab. No joint sealer shall be placed on the deck slab under the sidewalk or raised median.

TRANSVERSE SLAB JOINT DETAIL

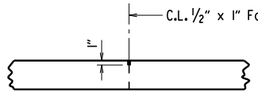

Use ½" x 1" Type 3 or 4 Joint Sealer. See Subsections 501.02(h) and 501.05(j). Backer Rod filler will not be required. Joint sealer shall be measured and paid for as Class S(AE) Concrete-Bridge. This joint shall be formed. Seal color shall be gray or other color similar to concrete.

LONGITUDINAL CONSTRUCTION JOINT

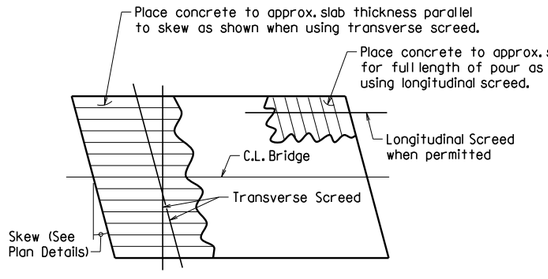

Note: At the Contractor's option, the transverse screed may be placed parallel to the skew or perpendicular to C. L. Bridge.

CONCRETE PLACEMENT PROCEDURE FOR BRIDGES WITH SKEW

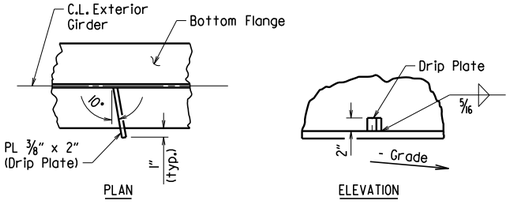

PLAN

ELEVATION

Drip Plate to be welded to the outer side of the bottom flange of the exterior girders.

Locate drip plate 5'-0" from C.L. Bearing on high side of each Bent, unless otherwise noted in the plans.

BOTTOM FLANGE DRIP PLATE

(USE WHEN WEB DEPTHS ARE 54" OR GREATER AND UNIT OR SPAN IS NOT IN LEVEL GRADE)

t_s = slab thickness. See "Typical Roadway Section" in the plans.

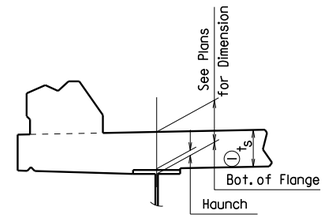

EXTERIOR BEAM OR GIRDER

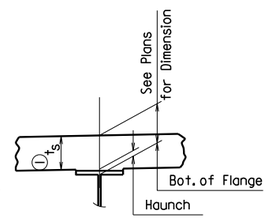

INTERIOR BEAM OR GIRDER

① Tolerance when removable deck forming is used is + ½", - ¼". Haunch forming is required and shall be adjusted to maintain slab thickness tolerance.

NOTES:
Haunch dimension may vary within the following limits to maintain the grade and slab thickness tolerance: Minimum occurs when top flange contacts bottom reinforcing steel; Maximum = top flange thickness plus 1¾" unless otherwise noted in the plans. No increase in concrete and structural steel quantities will be made to maintain tolerances.

Tolerances shown are applicable only when removable deck forming is used. See Std. Dwg. No. 55005 for tolerances when permanent steel deck forms are used. Payment for concrete shall be based on removable deck forming.

ADJUSTMENT FOR SLAB THICKNESS TOLERANCE

NOTE: Working Point matches Theoretical Roadway Grade.

ROUNDING DETAIL

BRIDGES IN NORMAL CROWN

WELD TABLE

Material Thickness of Thicker Part Joined (Inches)	Minimum Size of Fillet Weld (Inches)	Single Pass Weld Must Be Used
To ¾" Inclusive	¼"	
Over ¾"	⅝"	

NOTE: When a fillet weld size, as shown on the plans, is larger than the minimum, the first pass shall be that specified for minimum size of fillet weld.

SECTION AND SUBSECTION REFER TO THE ARKANSAS STATE HIGHWAY AND TRANSPORTATION DEPARTMENT STANDARD SPECIFICATIONS FOR HIGHWAY CONSTRUCTION (2014 EDITION).

THESE DETAILS ARE APPLICABLE UNLESS OTHERWISE SHOWN IN THE PLAN DETAILS, SPECIAL PROVISIONS, OR SUPPLEMENTAL SPECIFICATIONS.

STANDARD DETAILS FOR STEEL BRIDGE STRUCTURES

ARKANSAS STATE HIGHWAY COMMISSION

LITTLE ROCK, ARK.

DRAWN BY: JYP DATE: 2/11/2016 FILENAME: b55007.dgn

CHECKED BY: AMS DATE: 2/11/2016 SCALE: No Scale

DESIGNED BY: STD. DATE: —

DRAWING NO. 55007

DATE REVISED	DATE FILMED	DATE REVISED	DATE FILMED	FED. ROAD DIST. NO.	STATE	FED. AID PROJ. NO.	SHEET NO.	TOTAL SHEETS
				6	ARK.			
				JOB NO.				
				①	POURED SILICONE JOINT			55008

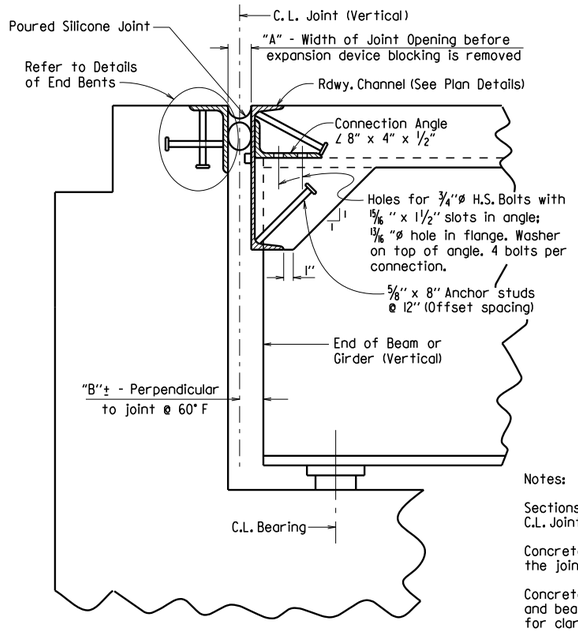

SECTION THRU JOINT AT END BENT

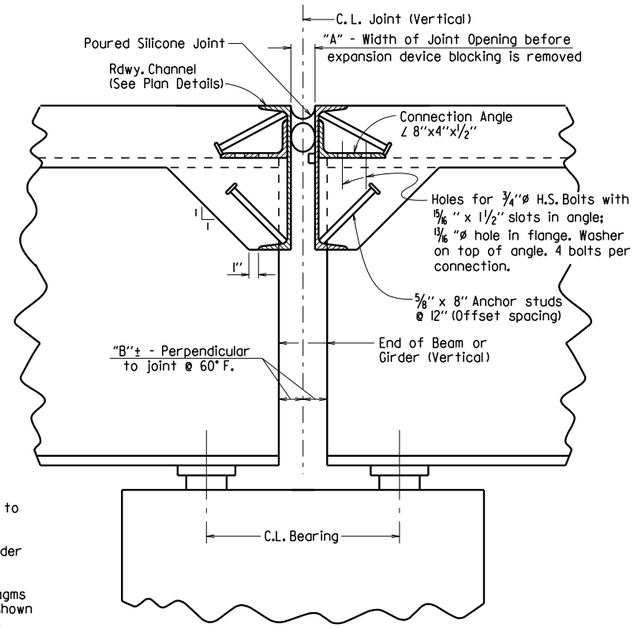

SECTION THRU JOINT AT INTERMEDIATE BENT

Notes:

Sections are taken perpendicular to C.L. Joint.

Concrete shall be hand packed under the joint armor.

Concrete diaphragms, steel diaphragms and bearing stiffeners are not shown for clarity. See plans for details.

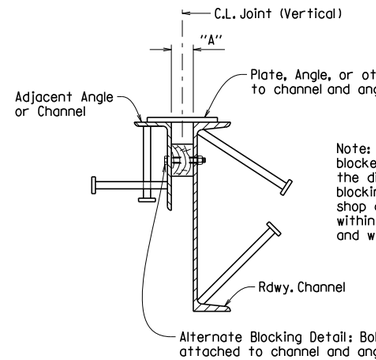

Note: Each expansion joint device shall be blocked in the Shop by the Fabricator to the dimension "A" shown for 60° F and the blocking details shall be shown on the shop drawings. Blocking shall be placed within 2 feet of each end of the device and with a maximum spacing of 8 feet.

DETAILS FOR BLOCKING EXPANSION JOINT DEVICE

EXPANSION DEVICE INSTALLATION AT END BENTS:

The Contractor may elect to install the expansion device using one of the following two alternatives:

1) The concrete span pour adjacent to joint shall be placed before the end bent backwall is placed. After the end bent backwall forms are in place and the beams or girders erected, the blocked expansion device shall be installed and adjusted for grade. All connection bolts shall be fully tightened prior to placing the deck concrete adjacent to the bent. Immediately prior to pouring the backwall concrete, the blocking shall be removed, and the opening adjusted for temperature and grade.

2) The backwall shall be poured to the optional construction joint after beams or girders are erected. The blocked expansion device shall be installed and adjusted for grade. All connection bolts shall be fully tightened prior to placing the deck concrete adjacent to the bent. Immediately prior to pouring the remainder of the backwall concrete, the blocking shall be removed and the opening adjusted for temperature and grade.

EXPANSION DEVICE INSTALLATION AT INTERMEDIATE BENTS:

After all beams or girders on each side of the joint are erected the blocked expansion device shall be installed and adjusted for grade. Deck concrete shall be placed for the entire unit or span on one side of the joint before deck concrete on the other side is placed. Connection bolts for the first side to have deck concrete placed shall be completely bolted. Bolts on the other side shall be loosely installed so that thermal and rotational movements will not be restricted during concrete placement on the first side.

Connection bolts on the second side shall remain loose until the concrete pour adjacent to the joint is to be placed. Immediately prior to pouring the span concrete on the second side, the blocking shall be removed, the joint adjusted for temperature and grade, and the connection bolts tightened.

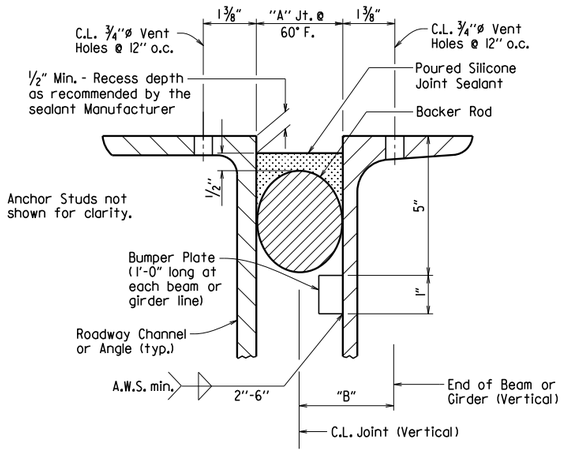

DETAIL OF POURED SILICONE JOINT

Silicone joint material and installation shall conform to Section 809. The temperature limitations recommended by the sealant Manufacturer shall be observed. The sealant shall be installed only when the average 24 hour air temperature is between 40° and 80° F.

Use an appropriately sized backer rod at the depth shown in the Manufacturer's literature based on the joint width at the time of sealing. Unless otherwise noted, do not install more backer rod than can be sealed in the same day.

The Contractor shall verify separation of the backer rod from the joint material after the joint material has set.

When bridge deck is constructed in stages, backer rods shall be extended beyond length of poured joint in initial construction stage so that the two pieces can be properly spliced together prior to installing sealant in subsequent stages. Manufacturer's recommendations shall be followed to prevent sealant from "running out of joint" during stage construction.

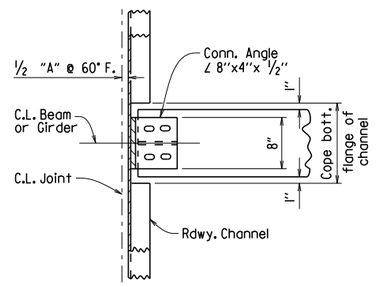

CHANNEL CONNECTION DETAIL

BENTS WITHOUT SKEW

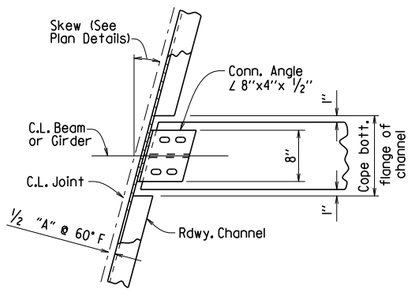

CHANNEL CONNECTION DETAIL

BENTS WITH SKEW

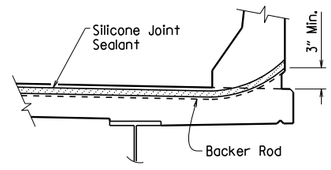

JOINT SEAL PLACEMENT AT RAIL

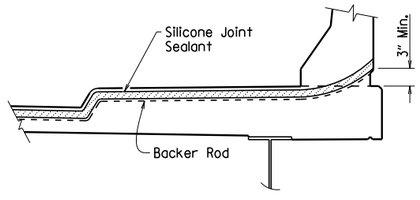

JOINT SEAL PLACEMENT AT SIDEWALK

SECTION AND SUBSECTION REFER TO THE ARKANSAS STATE HIGHWAY AND TRANSPORTATION DEPARTMENT STANDARD SPECIFICATIONS FOR HIGHWAY CONSTRUCTION (2014 EDITION).

THESE DETAILS ARE APPLICABLE UNLESS OTHERWISE SHOWN IN THE PLAN DETAILS, SPECIAL PROVISIONS, OR SUPPLEMENTAL SPECIFICATIONS. SEE "TABLE OF SILICONE JOINT DATA" IN PLAN DETAILS FOR VARIABLES "A" AND "B", AND BUMPER PLATE SIZE.

STANDARD DETAILS FOR POURED SILICONE JOINTS

ARKANSAS STATE HIGHWAY COMMISSION

LITTLE ROCK, ARK.

DRAWN BY: A.C.P. DATE: 2/11/2016 FILENAME: b55008.dgn

CHECKED BY: A.M.S. DATE: 2/11/2016 SCALE: No Scale

DESIGNED BY: STD. DATE: —

DRAWING NO. 55008

DATE REVISED	DATE FILMED	DATE REVISED	DATE FILMED	FED. ROAD DIST. NO.	STATE	FED. AID PROJ. NO.	SHEET NO.	TOTAL SHEETS
				6	ARK.			
				JOB NO.				

1 STRIP SEAL JOINT 55009

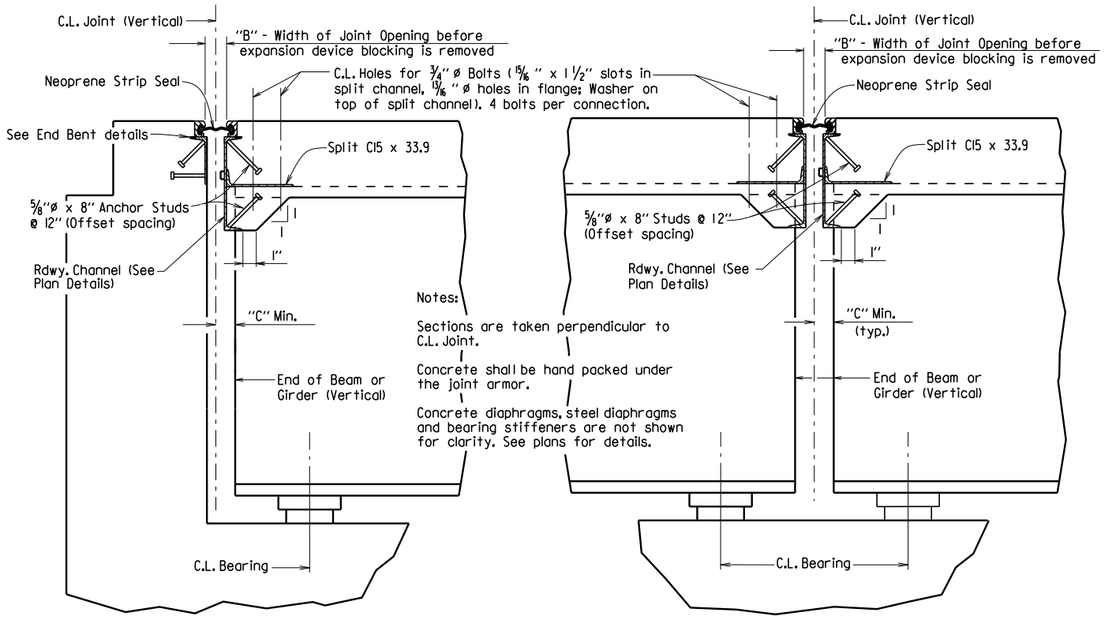

SECTION THRU JOINT AT END BENT

SECTION THRU JOINT AT INTERMEDIATE BENT

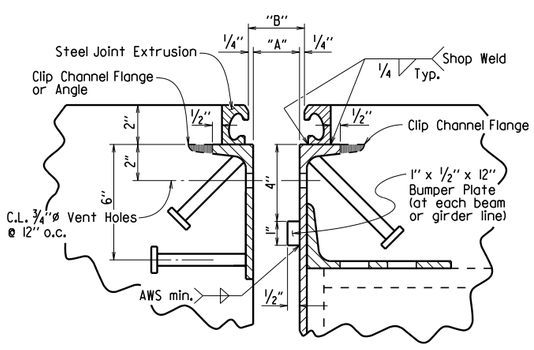

DETAIL OF STRIP SEAL JOINT

Detail shown at End Bent,
Details similar at Intermediate Bent

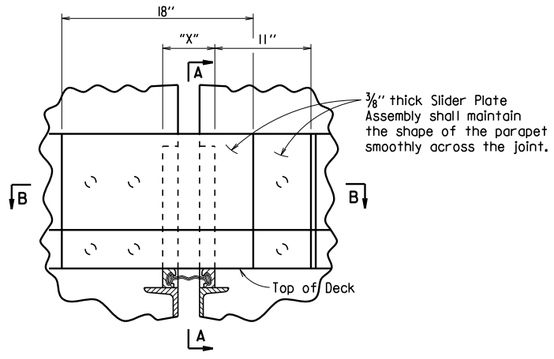

Dimension "X" equals the width of opening in parapet to allow for removal or repair of joint.

DETAIL OF PARAPET SLIDER PLATES

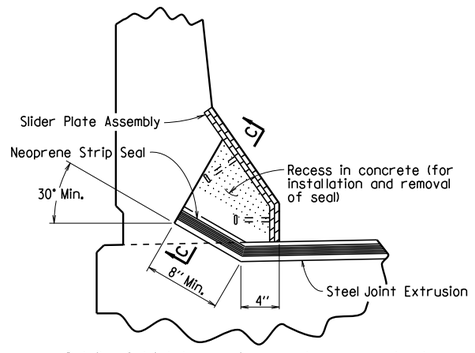

Details of Joint turn-up in parapet are general and show basic design controls only. See plan details for joint installation at sidewalks.

SECTION A-A

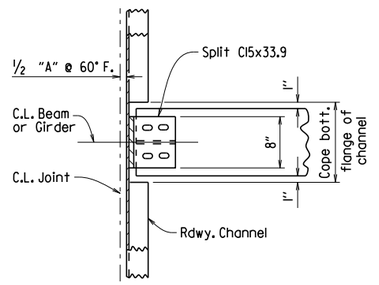

CHANNEL CONNECTION DETAIL

BENTS WITHOUT SKEW

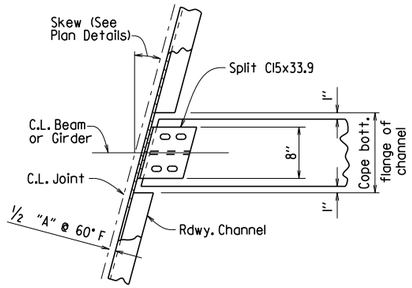

CHANNEL CONNECTION DETAIL

BENTS WITH SKEW

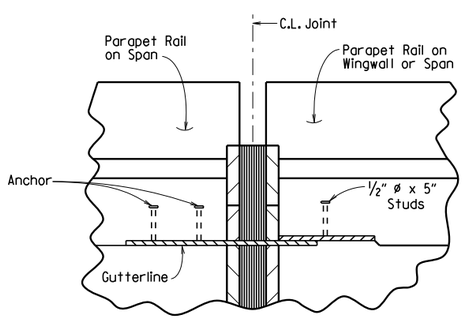

The method of attachment of the slider plate assembly shall allow for removal to provide for future replacement of the neoprene seal. Anchors shall not be paid for directly, but shall be considered subsidiary to the item "Armored Joint with Neoprene Strip Seal".

Method of installation and fabrication shall be determined by the Manufacturer.

SECTION B-B

BENTS WITHOUT SKEW SHOWN

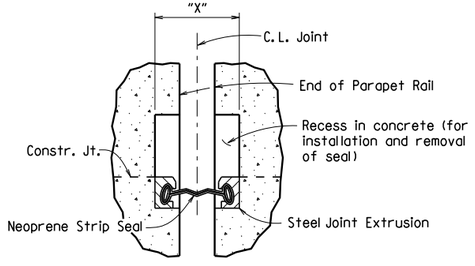

SECTION C-C

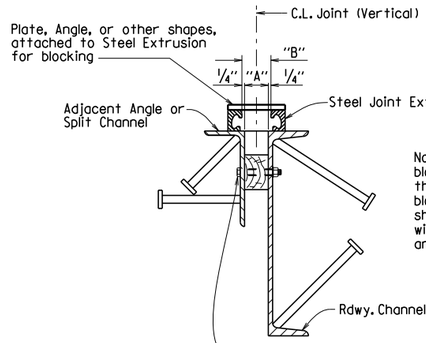

Note: Each expansion joint device shall be blocked in the Shop by the Fabricator to the dimension "A" shown for 60° F and the blocking details shall be shown on the shop drawings. Blocking shall be placed within 2 feet of each end of the device and with a maximum spacing of 8 feet.

DETAILS FOR BLOCKING EXPANSION JOINT DEVICE

EXPANSION DEVICE INSTALLATION AT END BENTS:

The Contractor may elect to install the expansion device using one of the following two alternatives:

1) The concrete span pour adjacent to joint shall be placed before the end bent backwall is placed. After the end bent backwall forms are in place and the beams or girders erected, the blocked expansion device shall be installed and adjusted for grade. All connection bolts shall be fully tightened prior to placing the deck concrete adjacent to the bent. Immediately prior to pouring the backwall concrete, the blocking shall be removed, and the opening adjusted for temperature and grade.

2) The backwall shall be poured to the optional construction joint after beams or girders are erected. The blocked expansion device shall be installed and adjusted for grade. All connection bolts shall be fully tightened prior to placing the deck concrete adjacent to the bent. Immediately prior to pouring the remainder of the backwall concrete, the blocking shall be removed and the opening adjusted for temperature and grade.

EXPANSION DEVICE INSTALLATION AT INTERMEDIATE BENTS:

After all beams or girders on each side of the joint are erected the blocked expansion device shall be installed and adjusted for grade. Deck concrete shall be placed for the entire unit or span on one side of the joint before deck concrete on the other side is placed. Connection bolts for the first side to have deck concrete placed shall be completely bolted. Bolts on the other side shall be loosely installed so that thermal and rotational movements will not be restricted during concrete placement on the first side.

Connection bolts on the second side shall remain loose until the concrete pour adjacent to the joint is to be placed. Immediately prior to pouring the span concrete on the second side, the blocking shall be removed, the joint adjusted for temperature and grade, and the connection bolts tightened.

GENERAL NOTES FOR NEOPRENE STRIP SEAL JOINTS:

The steel extrusion and neoprene strip seal material and installation shall be in accordance with Section 809.

The expansion device shall provide for the movement rating(s) shown in the "TABLE OF STRIP SEAL JOINT DATA" in the plan details. The expansion joint shall be capable of sealing the deck surface and parapet area to prevent moisture and other contaminants from descending through the joint.

Details of proposed slider plate assembly shall be submitted to the Engineer for approval prior to the fabrication of any structural steel at the expansion device.

All structural steel shall conform to AASHTO M 270, Grade 50W and all exposed surfaces shall be cleaned in accordance with Subsection 807.84(e). The parapet slider plates and structural steel completely embedded in concrete shall conform to AASHTO M 270, Grade 36, 50 or 50W steel. Unless otherwise noted in the plans, all exposed surfaces of the parapet slider plates shall be cleaned and painted in accordance with Section 638. Painting shall not be paid for directly and structural steel completely embedded in concrete need not be painted. Payment for structural steel shall be as specified in the plans.

SECTION AND SUBSECTION REFER TO THE ARKANSAS STATE HIGHWAY AND TRANSPORTATION DEPARTMENT STANDARD SPECIFICATIONS FOR HIGHWAY CONSTRUCTION (2014 EDITION).

THESE DETAILS ARE APPLICABLE UNLESS OTHERWISE SHOWN IN THE PLAN DETAILS, SPECIAL PROVISIONS, OR SUPPLEMENTAL SPECIFICATIONS. SEE "TABLE OF STRIP SEAL JOINT DATA" IN PLAN DETAILS FOR VARIABLES "A", "B", AND "C".

STANDARD DETAILS FOR NEOPRENE STRIP SEAL JOINTS

ARKANSAS STATE HIGHWAY COMMISSION

LITTLE ROCK, ARK.

DRAWN BY: L.J.B. DATE: 2/11/2016 FILENAME: b55009.dgn
CHECKED BY: A.M.S. DATE: 2/11/2016 SCALE: No Scale
DESIGNED BY: STD. DATE: —

DRAWING NO. 55009

DATE REVISED	DATE REVISED	FED. RD. DIST. NO.	STATE	JOB NO.	SHEET NO.	TOTAL SHEETS
4-14-23		6	ARK.			
		TYPE D NAME PLATE - 55010				

The name of the bridge as shown on the plans shall be placed on Lines 1 & 2 using ⅛" raised letters and numerals ⅜" high.

	Example 1	Example 2	Example 3	Example 4
Line 1	RED RIVER	SOUTHERN RAILROAD	SALINE RIVER	HIGHWAY 5
Line 2	RELIEF	OVERPASS	RELIEF	

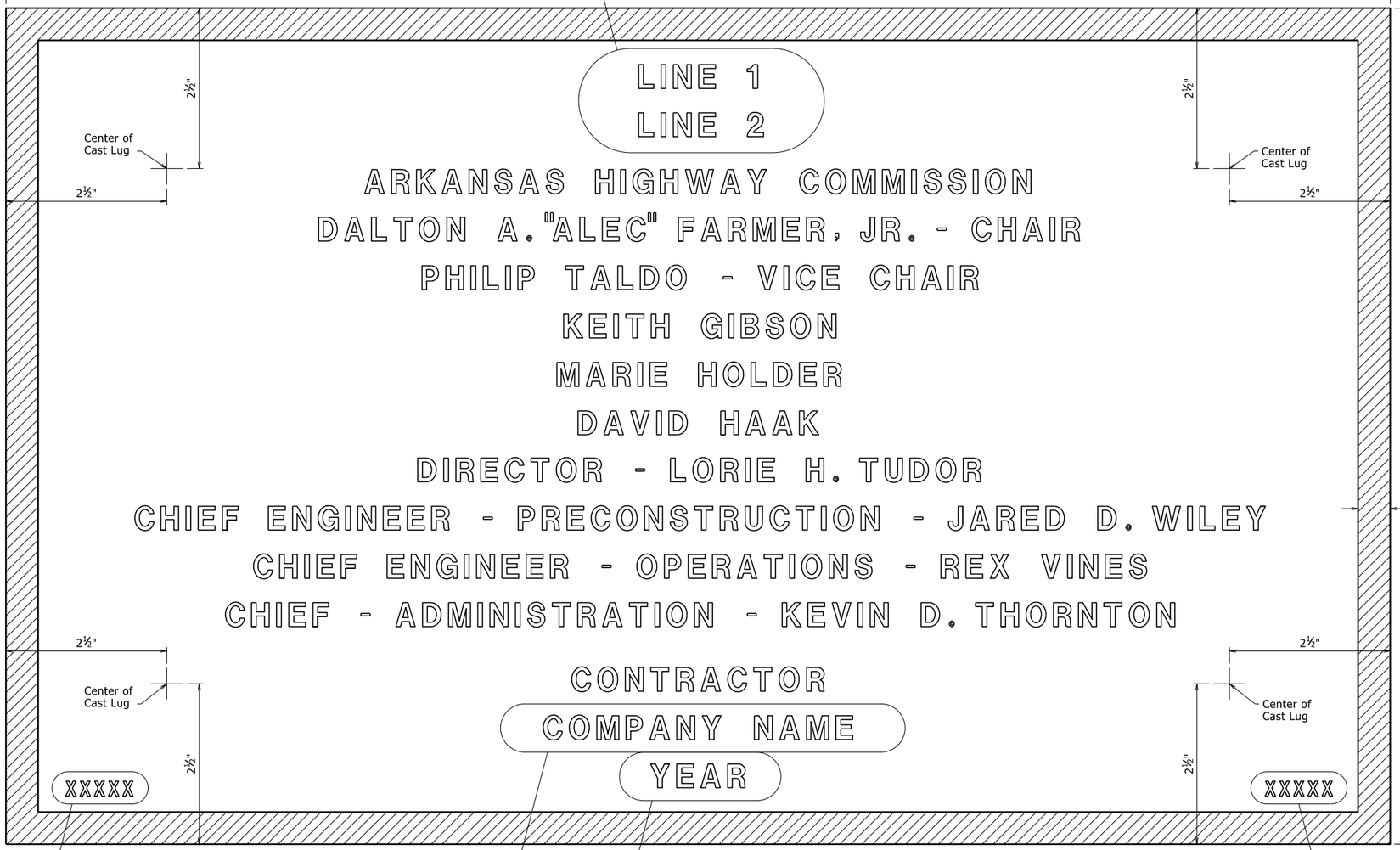

Place the design live loading here using ⅛" raised letters and numerals ¼" high. Examples: HS20, HL-93

Place the Year in which Contract was awarded here using ⅛" raised numerals ⅜" high. Example: 2001

Place the name of the company awarded the construction contract here using ⅛" raised letters and numerals ⅜" high. Example: ABCD CONSTRUCTION, INC.

Place the Bridge number here using ⅛" raised letters and numerals ¼" high. Examples: A1234, 05432

TYPICAL BRIDGE NAME PLATE

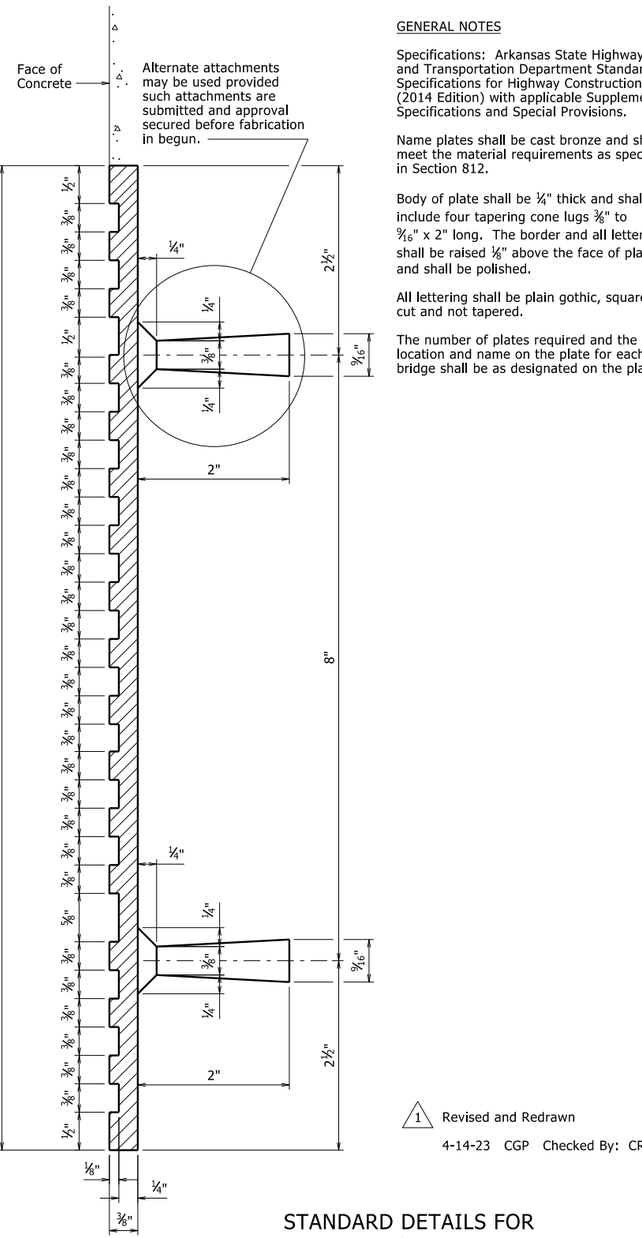

GENERAL NOTES

Specifications: Arkansas State Highway and Transportation Department Standard Specifications for Highway Construction, (2014 Edition) with applicable Supplemental Specifications and Special Provisions.

Name plates shall be cast bronze and shall meet the material requirements as specified in Section 812.

Body of plate shall be ¼" thick and shall include four tapering cone lugs ⅜" to 9/16" x 2" long. The border and all lettering shall be raised ⅛" above the face of plate and shall be polished.

All lettering shall be plain gothic, square cut and not tapered.

The number of plates required and the location and name on the plate for each bridge shall be as designated on the plans.

1 Revised and Redrawn
4-14-23 CGP Checked By: CRE

STANDARD DETAILS FOR
TYPE D BRIDGE NAME PLATE

ROUTE SEC.

ARKANSAS STATE HIGHWAY COMMISSION
LITTLE ROCK, ARK.

DRAWN BY: KDH DATE: 2-27-2014 FILENAME: b55010.dgn
CHECKED BY: BEF DATE: 2-27-2014 SCALE: NO SCALE
DESIGNED BY: STD. DATE:

DRAWING NO. 55010

PRINT DATE: 4/20/2023

DATE REVISED	DATE FILMED	DATE REVISED	DATE FILMED	FED. ROAD DIST. NO.	STATE	FED. AID PROJ. NO.	SHEET NO.	TOTAL SHEETS
3/24/16				6	ARK.			
				JOB NO.				
				①		STEEL H-PILES		55020

GENERAL NOTES FOR STEEL H-PILES:

Steel H-Piles shall conform to AASHTO M 270, Grade 36 or greater.

See Bridge Layout and Bent Details for pile size, estimated length, spacing, pile anchorage (if required) and for driving information.

Steel H-Piles that extend above the ground and are not protected by pile encasement shall be painted in accordance with Subsection 805.02.

Brackets, lugs, cap plates, pile tips, driving points, pile painting, splicing and welding shall not be paid for directly, but shall be considered subsidiary to the item "Steel Piling".

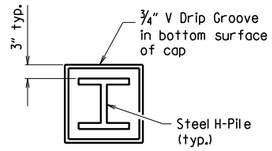

VIEW X-X

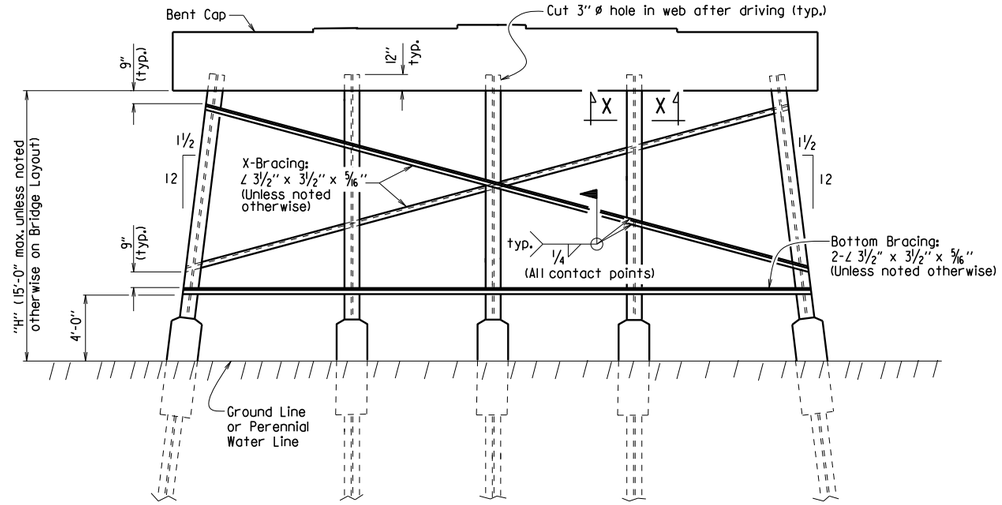

Notes:
All bracing shall be cut and welded in the field. Each brace shall be furnished in one piece. Payment shall be made under Item 807.

Unless noted otherwise, omit X-Bracing when "H" is less than 8 feet.

Omit X-Bracing and Bottom Bracing when "H" is 5 feet or less.

When required on the Bridge Layout sheet, pile encasements shall be constructed. See Notes and Details for H-Pile Encasements.

Omit all bracing (and V-groove in cap) when pile encasement is extended to bottom of bent cap.

TYPICAL DETAILS OF H-PILE TRESTLE INTERMEDIATE BENT

(Shown with Partial Height Encasement)

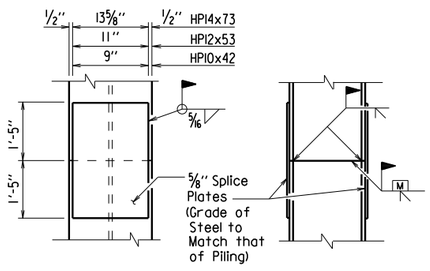

The Contractor may for his own convenience and at his own expense provide as many as three splices per pile. Minimum spacing between splices shall be 5 feet.

TYPICAL SPLICE DETAILS

⚠ H-pile splicers manufactured by Associated Pile and Fitting Corporation, LB Foster Piling, Skyline Steel or equivalent may be used in lieu of the "Typical Splice Details" shown. H-pile splicers shall match the same grade of steel specified for the piling and shall be welded to the pile with a 5/16" fillet weld around the entire perimeter of the splice. Flanges shall be welded with a complete penetration groove weld complying with AASHTO/AWS Joint Designation B-U4a or B-U4b. All welding shall conform to Subsection 807.26 of the AHTD Standard Specifcations for Highway Construction (2014 Edition).

Notes:
Steel pile tip reinforcing not required when approved H-Pile driving points are used.

Steel pile tip reinforcing shall not be paid for directly, but shall be considered subsidiary to the item "Steel Piling".

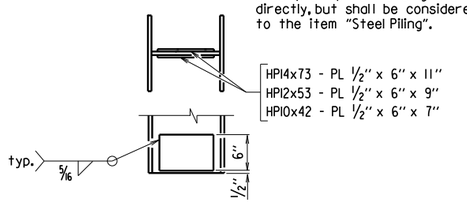

REINFORCING DETAIL FOR STEEL H-PILE TIP

GENERAL NOTES FOR H-PILE ENCASEMENTS:

⚠ See Bridge Layout for additional notes, any pile encasement restrictions and required location of pile encasements.

All concrete shall be Class S with a minimum 28-day compressive strength, f'c = 3,500 psi. If concrete cannot be placed in the dry, Seal Concrete may be used from top to bottom of encasement.

Reinforcing steel shall be Grade 60 conforming to AASHTO M 31 or M 322, Type A.

Welded Wire Fabric shall conform to AASHTO M 55 or M 221. Galvanized Corrugated Steel Pipe shall conform to AASHTO M 36 and M 218.

Concrete, welded wire fabric or reinforcing steel and galvanized pipe shall not be paid for directly, but shall be considered subsidiary to the item "Pile Encasement".

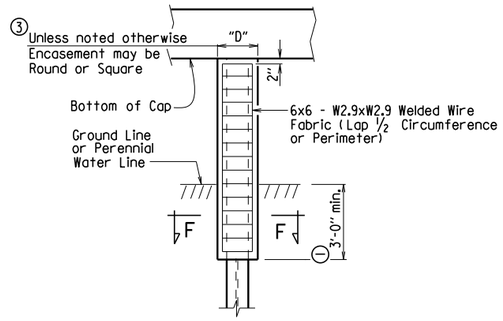

PILE ENCASEMENT DETAIL FOR STEEL H-PILES

④ (Shown with Encasement to Bottom of Cap)

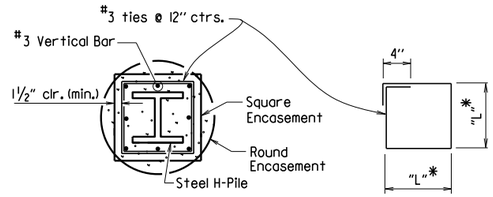

SECTION F-F

*Measured out-to-out of bar.

TABLE OF VARIABLES FOR PILE ENCASEMENT

Pile Size	"D" Square Encsmt.	"D" Round Encsmt.	"L"*
HPI0x42	1'-7"	2'-0"	1'-4"
HPI2x53	1'-8"	2'-2"	1'-5"
HPI4x73	1'-11"	2'-6"	1'-8"

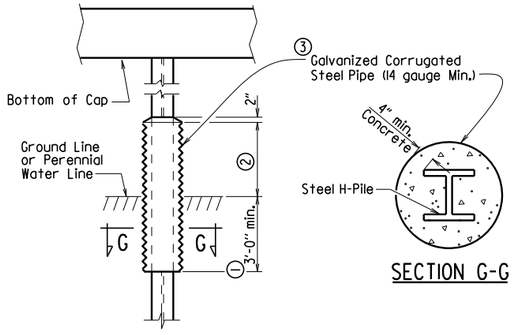

SECTION G-G

① Unless otherwise noted on Bridge Layout.

② 3'-0" minimum or as shown on Bridge Layout.

③ Encasement dimensions shall be sized to maintain a minimum concrete cover of 4" from the H-Pile. Reinforcement shall be sized to provide a minimum concrete cover of 1½" and a minimum clearance of 1¼" from the pile.

④ Alternate pile encasement, when not extended to bottom of cap, shall have 2" concrete taper for water runoff as shown in the Partial Height Encasement detail.

ALTERNATE PILE ENCASEMENT DETAIL FOR STEEL H-PILES

(Shown with Partial Height Encasement)

⚠ Added alternate method of splicing H-piles and revised pile encasement note.
3/24/2016 AMS

This document was originally issued and sealed by Charles R. Ellis, PE No. 9235, on March 24, 2016. This copy is not a signed and sealed document.

STATE OF ARKANSAS
REGISTERED PROFESSIONAL ENGINEER
No. 9235
CHARLES R. ELLIS

BRIDGE ENGINEER

STANDARD DETAILS FOR STEEL H-PILES AND PILE ENCASEMENTS

ARKANSAS STATE HIGHWAY COMMISSION

LITTLE ROCK, ARK.

DRAWN BY: A.M.S. DATE: 2/27/2014 FILENAME: b55020.dgn
CHECKED BY: B.E.F. DATE: 2/27/2014 SCALE: NO SCALE
DESIGNED BY: STD. DATE: —

DRAWING NO. 55020

DATE REVISED	DATE FILMED	DATE REVISED	DATE FILMED

FED. ROAD DIST. NO.	STATE	FED. AID PROJ. NO.	SHEET NO.	TOTAL SHEETS
6	ARK.			
JOB NO.				

TYPE CI APPROACH SLAB 55040CI

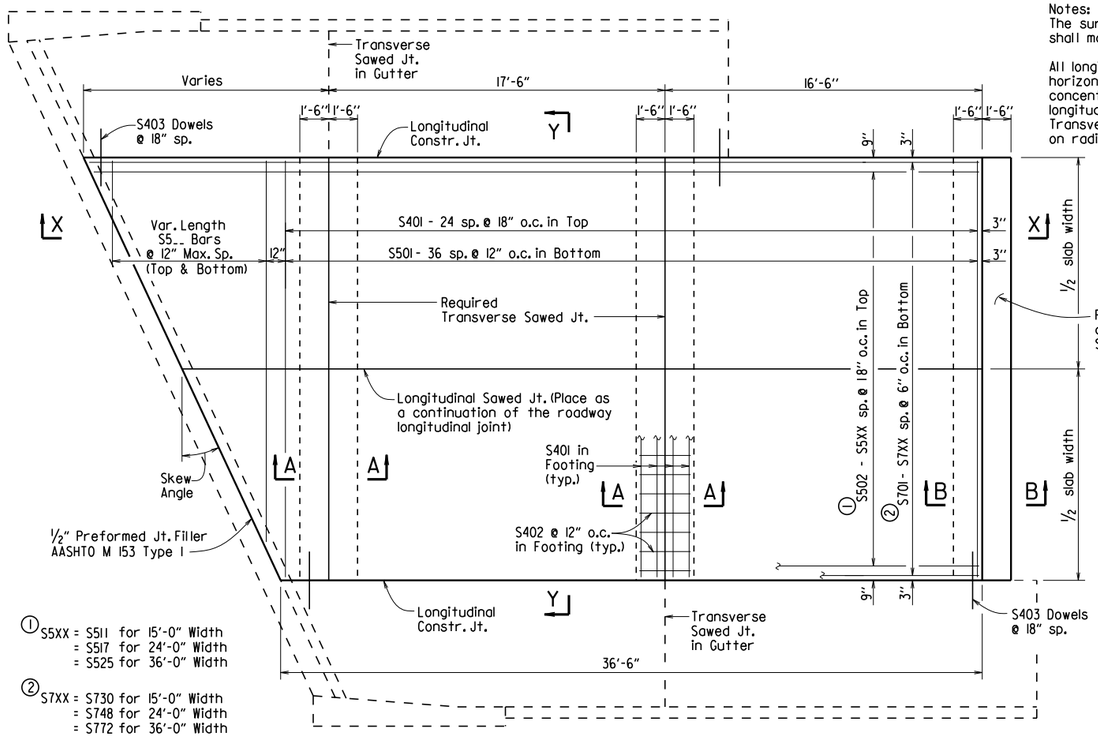

① S5XX = S511 for 15'-0" Width
= S517 for 24'-0" Width
= S525 for 36'-0" Width

② S7XX = S730 for 15'-0" Width
= S748 for 24'-0" Width
= S772 for 36'-0" Width

PLAN - SKEWED APPROACH SLAB WITH APPROACH GUTTERS

1/4" = 1'-0"

Notes:
The surface finish for Approach Slabs shall match that used on the bridge deck.

All longitudinal lines within the limits of horizontal curves shall be on curves concentric to C.L. Bridge. Adjustment to longitudinal bar lengths may be required. Transverse reinforcing shall be placed on radial lines to C.L. Bridge.

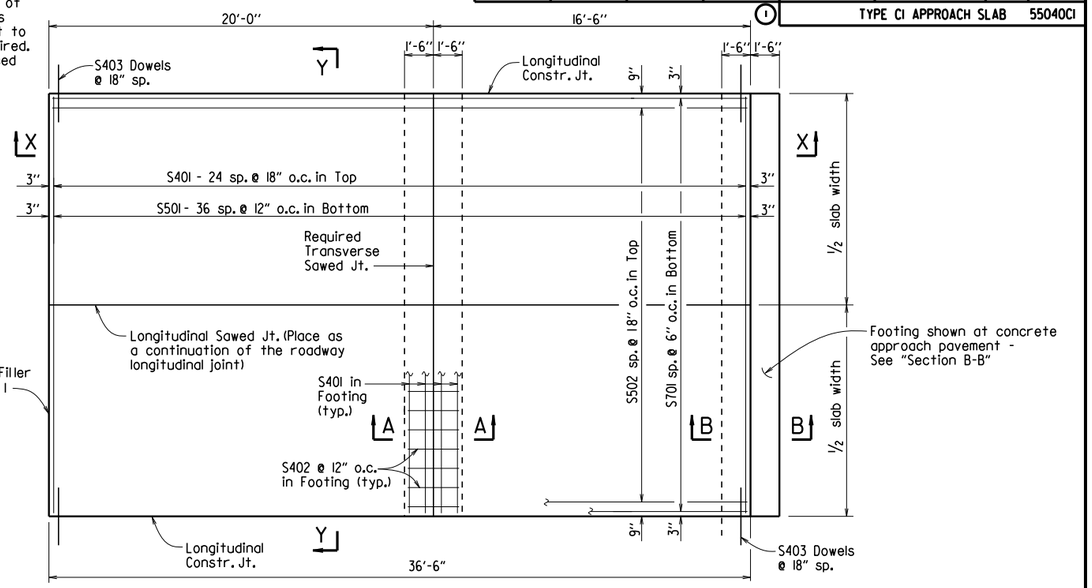

PLAN - SQUARE APPROACH SLAB

1/4" = 1'-0"

BAR LIST

(Square & Skewed Approach Slabs)

	Mark	Square No. Req'd.	Square Length	Skewed No. Req'd.	Skewed Length
15'-0" Slab Width	S401	33	14'-8"	37	14'-8"
	S402	30	2'-8"	45	2'-8"
	S403	50	3'-0"	*	3'-0"
	S501	37	14'-8"	37	14'-8"
	S502	10	36'-2"	—	—
	S502 - S511	—	—	1 Ea.	36.1' + 0.75' (tan skew angle) to 36.1' + 14.25' (tan skew angle)
	S5..	—	—	2 Ea.	14.7' - 0.75'/(tan skew angle) to 2'-0" Min.
	S701	30	36'-2"	—	—
	S701 - S730	—	—	1 Ea.	36.1' + 0.25' (tan skew angle) to 36.1' + 14.75' (tan skew angle)
24'-0" Slab Width	S401	33	23'-8"	37	23'-8"
	S402	48	2'-8"	72	2'-8"
	S403	50	3'-0"	*	3'-0"
	S501	37	23'-8"	37	23'-8"
	S502	16	36'-2"	—	—
	S502 - S517	—	—	1 Ea.	36.1' + 0.75' (tan skew angle) to 36.1' + 23.25' (tan skew angle)
	S5..	—	—	2 Ea.	23.7' - 0.75'/(tan skew angle) to 2'-0" Min.
	S701	48	36'-2"	—	—
	S701 - S748	—	—	1 Ea.	36.1' + 0.25' (tan skew angle) to 36.1' + 23.75' (tan skew angle)
36'-0" Slab Width	S401	33	35'-8"	37	35'-8"
	S402	72	2'-8"	108	2'-8"
	S403	50	3'-0"	*	3'-0"
	S501	37	35'-8"	37	35'-8"
	S502	24	36'-2"	—	—
	S502 - S525	—	—	1 Ea.	36.1' + 0.75' (tan skew angle) to 36.1' + 35.25' (tan skew angle)
	S5..	—	—	2 Ea.	35.7' - 0.75'/(tan skew angle) to 2'-0" Min.
	S701	72	36'-2"	—	—
	S701 - S772	—	—	1 Ea.	36.1' + 0.25' (tan skew angle) to 36.1' + 35.75' (tan skew angle)

* Varies with skew angle

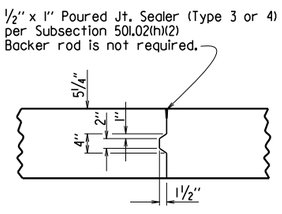

DETAILS OF LONGITUDINAL CONSTRUCTION JOINT

¾" = 1'-0"

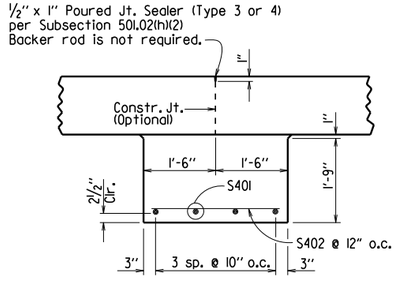

SECTION A-A

N.T.S.

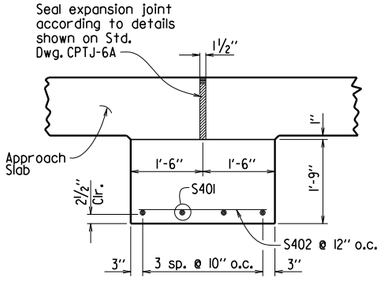

SECTION B-B

AT CONCRETE APPROACH PAVEMENT

N.T.S.

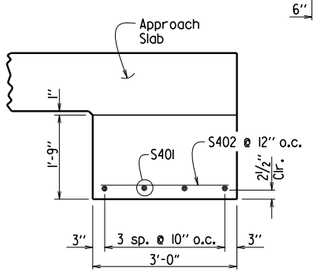

SECTION B-B

AT ASPHALT APPROACH PAVEMENT

N.T.S.

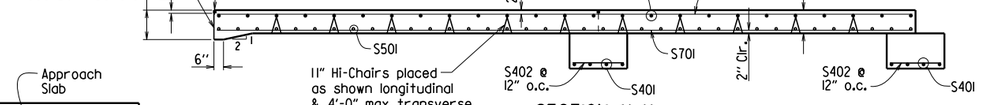

SECTION X-X

SQUARE APPROACH SLAB SHOWN

1/4" = 1'-0"

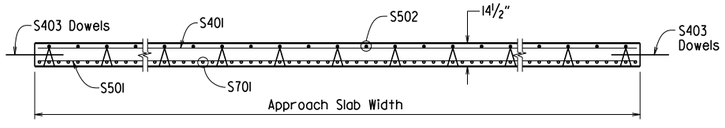

SECTION Y-Y

N.T.S.

TABLE OF QUANTITIES FOR ONE SQUARE APPROACH SLAB

(FOR INFORMATION ONLY)

Slab Width	Reinforcing Steel (Lbs.)	Concrete (Cu. Yds.)
15'-0"	3640	30.75
24'-0"	5775	49.15
36'-0"	8620	73.75

GENERAL NOTES

This drawing shall be used for Approach Slabs in Seismic Performance Zone 1 and for the maximum skew angles shown below:

15'-0" Slab Width: Maximum Skew Angle = 50°
24'-0" Slab Width: Maximum Skew Angle = 40°
36'-0" Slab Width: Maximum Skew Angle = 30°

All concrete shall be Class S (AE) with a minimum 28 day compressive strength f'c = 4,000 psi and shall be poured in the dry.

All reinforcing steel shall be Grade 60 (yield strength = 60,000 psi) conforming to AASHTO M 31 or M 322, Type A, with mill test reports.

Approach Slabs will be measured and paid for in accordance with Section 504.

STANDARD DETAILS FOR TYPE CI APPROACH SLAB

ARKANSAS STATE HIGHWAY COMMISSION

LITTLE ROCK, ARK.

DRAWN BY: A.M.S. DATE: 2/27/2014 FILENAME: b55040ci.dgn
CHECKED BY: K.W.Y. DATE: 2/27/2014 SCALE: AS SHOWN
DESIGNED BY: STD. DATE:

DRAWING NO. 55040CI

DATE REVISED	DATE FILMED	DATE REVISED	DATE FILMED	FED. ROAD DIST. NO.	STATE	FED. AID PROJ. NO.	SHEET NO.	TOTAL SHEETS
				6	ARK.			
				JOB NO.				

(1) Type F Approach Gutters - 55030F

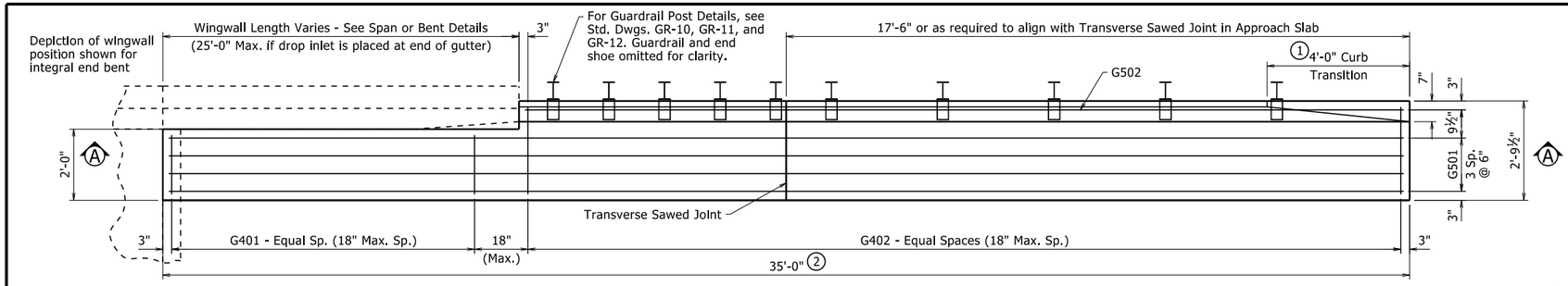

HALF PLAN OF APPROACH GUTTERS FOR SQUARE END BENT

½" = 1'-0"

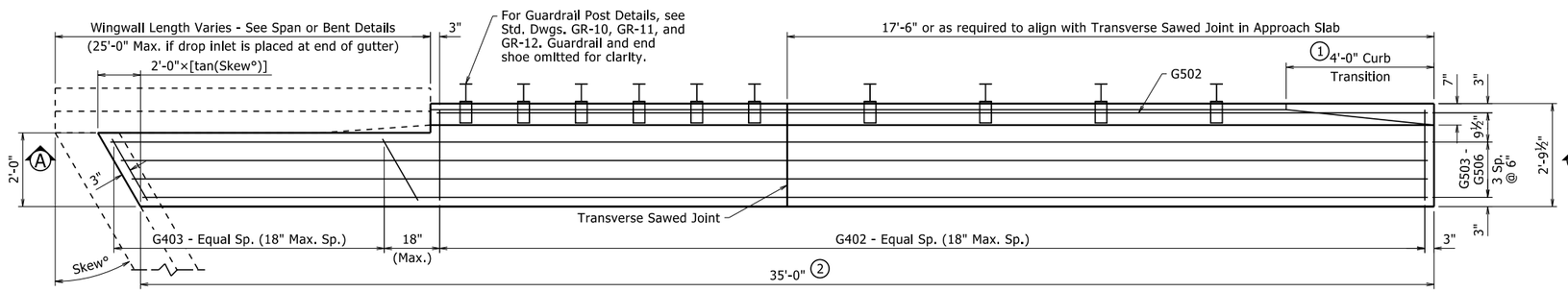

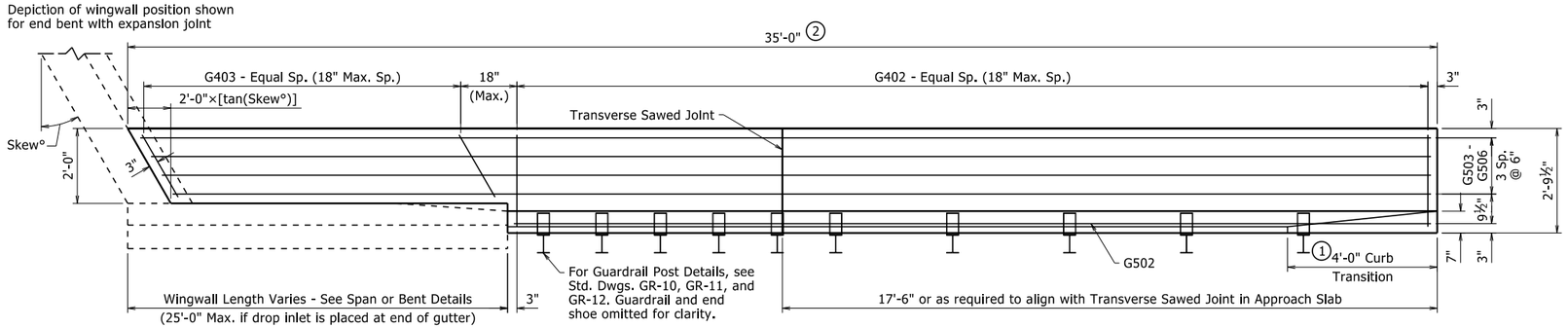

PLAN OF SKEWED APPROACH GUTTERS FOR SKEWED END BENT

½" = 1'-0"

QUANTITIES FOR ONE APPROACH GUTTER

(For Information Only)

Reinforcing Steel (Lbs.)	Concrete (Cu. Yds.)
210	4.20

Quantities are based on one gutter for a square, integral end bent and a wingwall length of 10'-0"

BAR LIST FOR ONE APPROACH GUTTER

	Mark	No. Req'd.	Length
Square End Bent	G401	(4)	1'-8"
	G402	(4)	2'-5½"
	G501	4	34'-8"
	G502	1	(4)
Skewed End Bent	G402	(4)	2'-5½"
	G403	(4)	(4)
	G502	1	(4)
	G503 - G506	1 ea.	(4)

(4) Varies with Skew and/or Wingwall Length

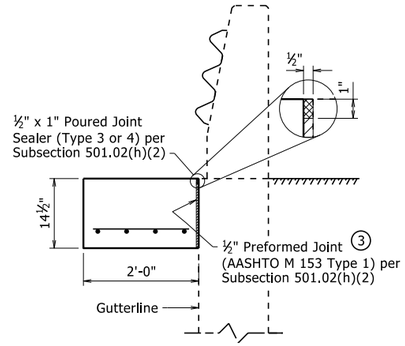

SECTION B-B

¾" = 1'-0"

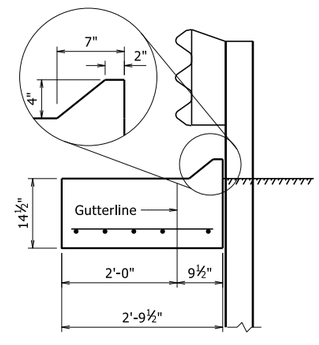

SECTION C-C

¾" = 1'-0"

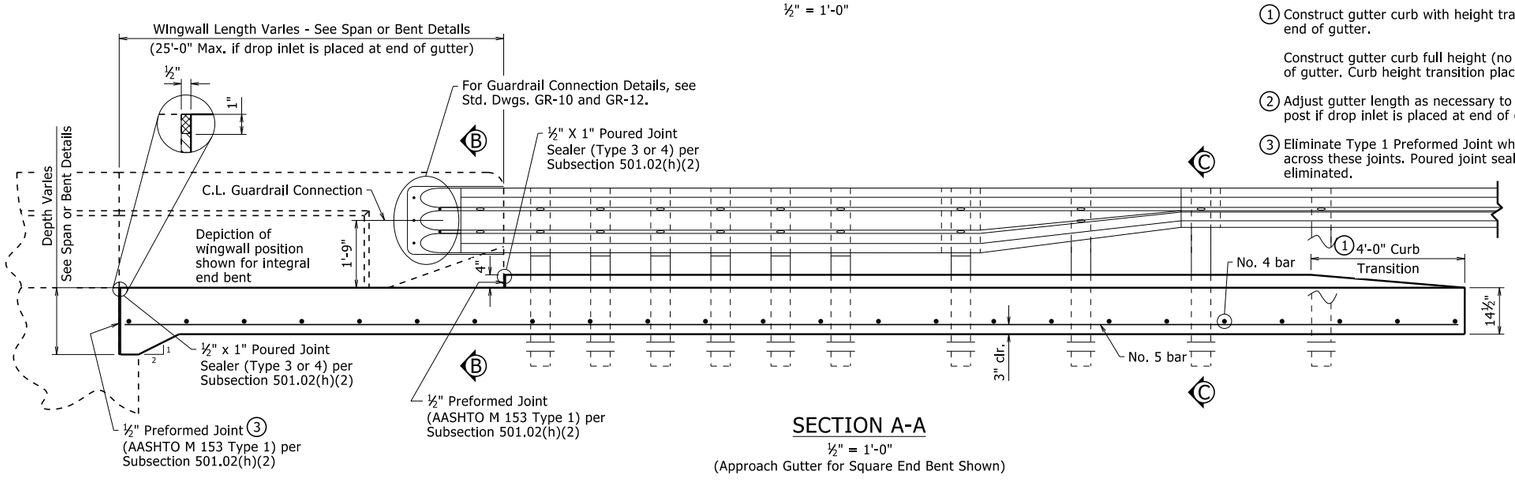

SECTION A-A

½" = 1'-0"

(Approach Gutter for Square End Bent Shown)

(1) Construct gutter curb with height transition as shown if drop inlet is not placed at end of gutter.

Construct gutter curb full height (no height transition) if drop inlet is placed at end of gutter. Curb height transition placed on drop inlet.

(2) Adjust gutter length as necessary to avoid outlet pipe interference with guardrail post if drop inlet is placed at end of gutter.

(3) Eliminate Type 1 Preformed Joint when bridge details show reinforcing dowels across these joints. Poured joint sealer is required, however, backer rod shall be eliminated.

GENERAL NOTES

All concrete shall be Class S(AE) with a minimum 28 day compressive strength f'c = 4,000 psi and shall be poured in the dry.

All reinforcing steel shall be Grade 60 (yield strength = 60,000 psi) conforming to AASHTO M 31 or M 322, Type A, with mill test reports.

Approach Gutters will be measured and paid for in accordance with Section 504.

All longitudinal lines within the limits of horizontal curves shall be on curves concentric to C.L. Bridge. Adjustment to longitudinal bar lengths may be required. Transverse reinforcing shall be placed on radial lines to C.L. Bridge.

Scales shown are for 22"x34" drawings. When using 11"x17" drawings, reduce scale by one half.

STANDARD DETAILS FOR TYPE F APPROACH GUTTERS

ARKANSAS STATE HIGHWAY COMMISSION

LITTLE ROCK, ARK.

DRAWN BY:	NAC	DATE:	4-8-2021	FILENAME:	b55030f.dgn
CHECKED BY:	LJB	DATE:	4-8-2021	SCALE:	AS NOTED
DESIGNED BY:	STD	DATE:	-		

DRAWING NO. 55030F

PRINT DATE: 4/9/2021

DATE REVISED	DATE FILMED	DATE REVISED	DATE FILMED	FED. ROAD DIST. NO.	STATE	FED. AID PROJ. NO.	SHEET NO.	TOTAL SHEETS
09/27/2022				6	ARK.			
				JOB NO.				

TYPE SSTR36 - 55070

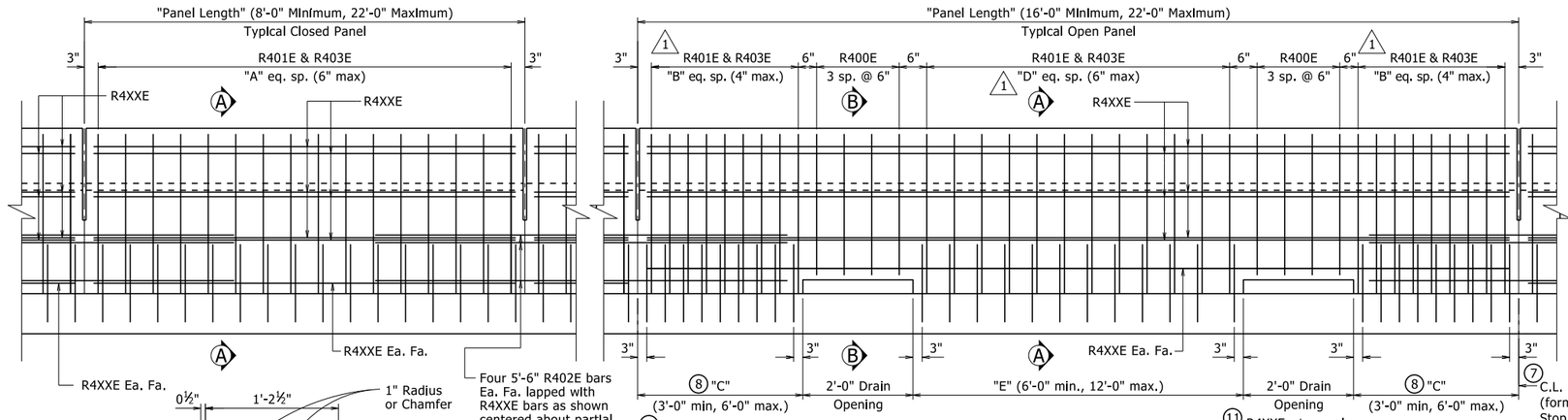

① ELEVATION - SINGLE SLOPE TRAFFIC RAIL

¾" = 1'-0"

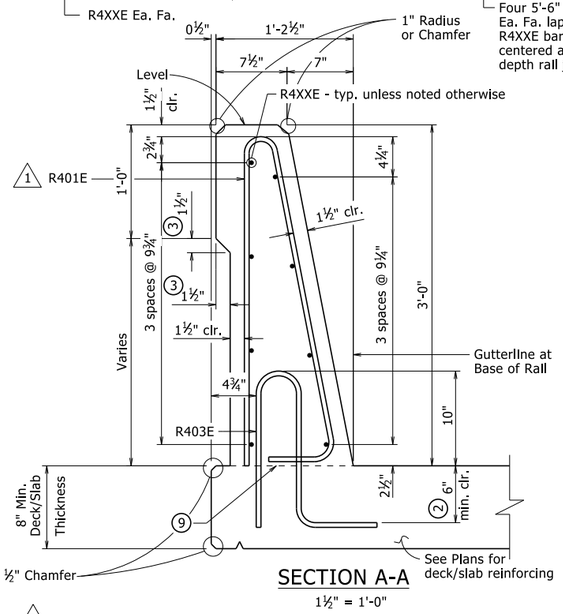

SECTION A-A

1½" = 1'-0"

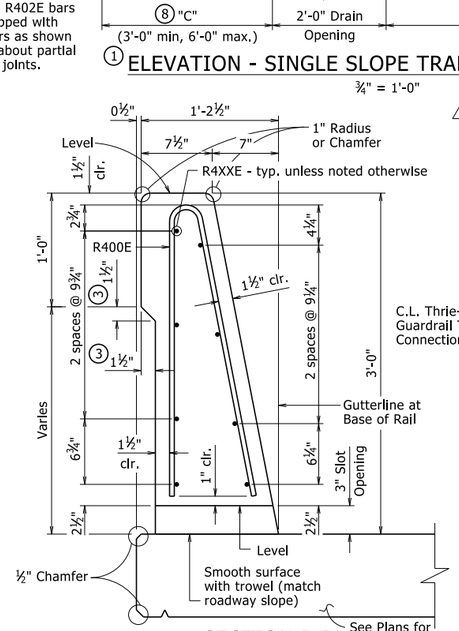

SECTION B-B

1½" = 1'-0"

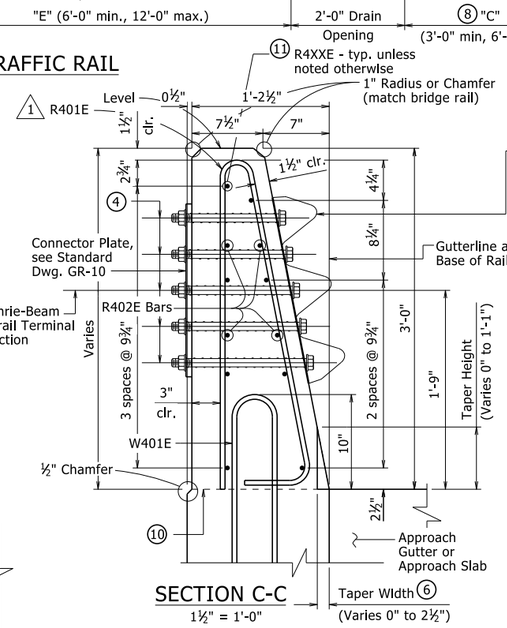

SECTION C-C

1½" = 1'-0"

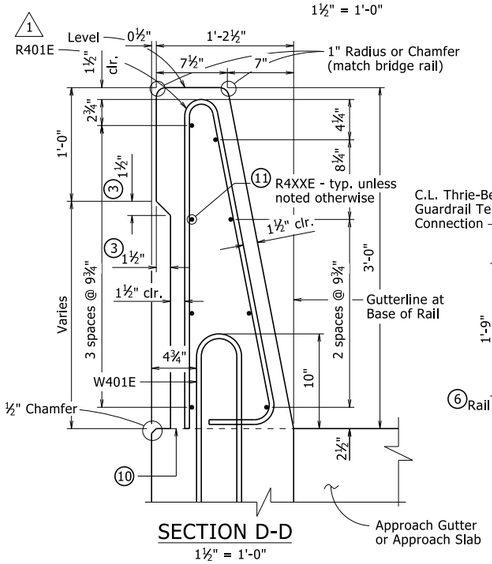

SECTION D-D

1½" = 1'-0"

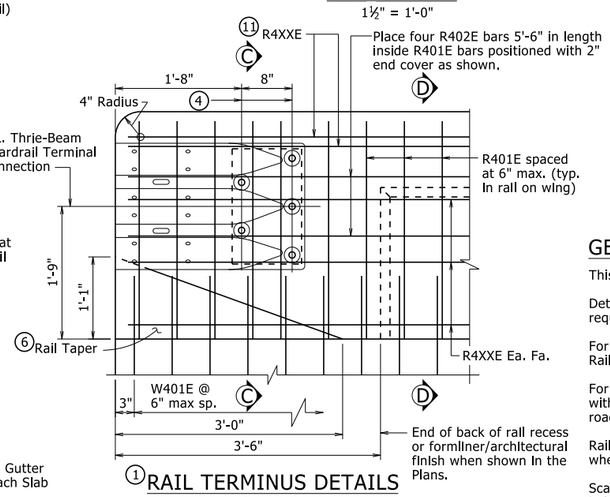

① RAIL TERMINUS DETAILS

1" = 1'-0"

⑦ C.L. Full-Depth Rail Joint (formed width ¼" to 1" max). Stop 6" from top of deck/slab or sidewalk. Place at all intermediate bents locations where rail is continuous.

⑦ C.L. Partial-Depth Rail Joint (formed width ¼" to 1" max). Stop 16" from top of deck/slab or sidewalk. Place at all remaining locations other than at intermediate bents.

① All measurements shown are along gutterline at base of rail.

② Minimum embedment into deck/slab.

③ Eliminate recess when formliner with architectural finish is used. See Plans for additional information.

④ C.L. 1" ø formed holes for ⅞" ø bolts. See Standard Drawings GR-10 and GR-12 for additional information.

⑤ Only applicable for bridges with rail cast directly on bridge deck/slab surface. Increase height as necessary for sidewalks, see Plans for additional information.

⑥ Field bend front leg of R401E bar as required to maintain minimum 1½" front face clearance within limits of taper.

⑦ When optional slip forming is used: to control cracking, all rail joints must be V-grooved around the perimeter of the rail prior to concrete set and sawing. Depth of V-groove shall be ½". Sawing of the joints shall be done as soon as practical to a width of ¼", and must be controlled so it will follow the V-Groove.

⑧ End posts shall be the same length within a panel.

Bolt Special End Shoe to face of rail as shown. Tapered washers are not required between the head of the bolts and the sloped face of the rail. Tighten the five terminal connection bolts in a well distributed pattern to prevent damage or distortion of the thrie-beam connection. Cut bolts off after installation so as to extend no more than ¾" beyond nut. Paint ends of cut-off bolts with zinc-rich paint. This work and material will not be paid for directly but shall be considered subsidiary to associated contract items.

BENDING DIAGRAM

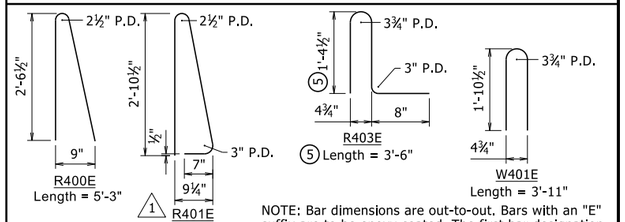

NOTE: Bar dimensions are out-to-out. Bars with an "E" suffix are to be epoxy coated. The first bar designation number indicates the reinforcing bar size.

⑨ Required Construction Joint. Level where water flows away from rail, match roadway slope where water flows toward rail.

⑩ Top of Abutment Wing & Required Construction Joint (match bridge deck/slab construction joint slope). See Plans for Wing reinforcing.

⑪ These bars will not be included in the "Table of Variables". See Plans for details.

TABLE OF VARIABLES

Closed Rail Panels			Open Rail Panels					
Panel Length	A	R4XXE	Panel Length	B	C	D	E	R4XXE

See Plans for table with values.

GENERAL NOTES

This rail has been successfully evaluated by full-scale crash test to meet MASH TL-4 criteria.

Details shown are general for bridges without sidewalks. See Plans for additional details and requirements specific to bridges with sidewalks.

For Table of Variables, Rail Bar List, locations of Full and Partial Depth Rail Joints, and Wing & Rail Bar Lists, see Plans.

For location of drain openings, see Plans. Drain openings shown are not applicable for bridges with sidewalks. Drain openings will not be allowed over Railroad Right of Way, travelled roadways, and protected waterways.

Rail Terminus details, including Rail Taper, are not applicable for bridges with sidewalks or when bridge railing is continuous with roadway railing.

Scales shown are for 22"x34" drawings. When using 11"x17" drawings, reduce scale by one half.

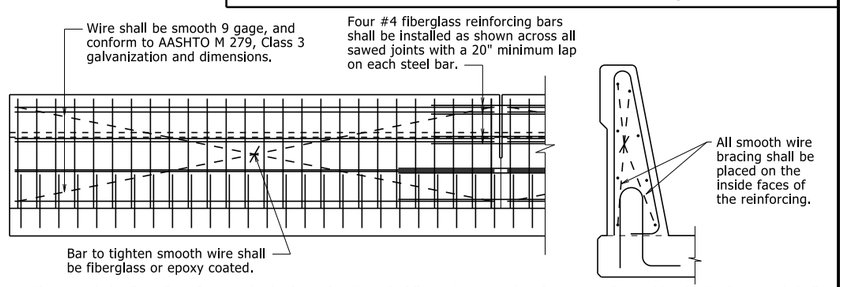

The extruded rail shall conform to the horizontal and vertical lines shown on the plans or as directed by the Engineer and shall present a smooth, uniform appearance and texture. Unless otherwise noted, exposed surfaces may be given a light brush finish or a Class 3, Textured Coating Finish in place of Class 2, Rubbed Finish.

All panels shall be braced as required to prevent racking.

Slip forming will not be allowed on bridges where formliner with architectural treatment is used unless approval from the Engineer is obtained.

DETAILS OF OPTIONAL SLIP FORMING OF BRIDGE TRAFFIC RAIL

No Scale

△1 Modified bending diagram and spacing for R401E bar.

By: CGP, Checked by: CMW 09/27/2022

This document was originally issued and sealed by Charles R. Ellis, PE No. 9235, on November 5, 2020. This copy is not a signed and sealed document.

STATE OF ARKANSAS
LICENSED PROFESSIONAL ENGINEER
No. 9235
CHARLES R. ELLIS

BRIDGE ENGINEER

THESE DETAILS ARE APPLICABLE UNLESS OTHERWISE SHOWN IN THE PLAN DETAILS, SPECIAL PROVISIONS, OR SUPPLEMENTAL SPECIFICATIONS.

STANDARD DETAILS FOR BRIDGE TRAFFIC RAIL TYPE SSTR36

ARKANSAS STATE HIGHWAY COMMISSION

LITTLE ROCK, ARK.

DRAWN BY: KWY DATE: 11/5/2020
CHECKED BY: LJB DATE: 11/5/2020
DESIGNED BY: STD. DATE: -----
FILENAME: b55070.dgn
SCALE: As Noted

DRAWING NO. 55070

PRINT DATE: 10/6/2022

DATE REVISED	DATE REVISED	FED. ROAD DIST. NO.	STATE	JOB NO.	SHEET NO.	TOTAL SHEETS
		6	ARK.			
		TYPE SSTR42 - 55071				

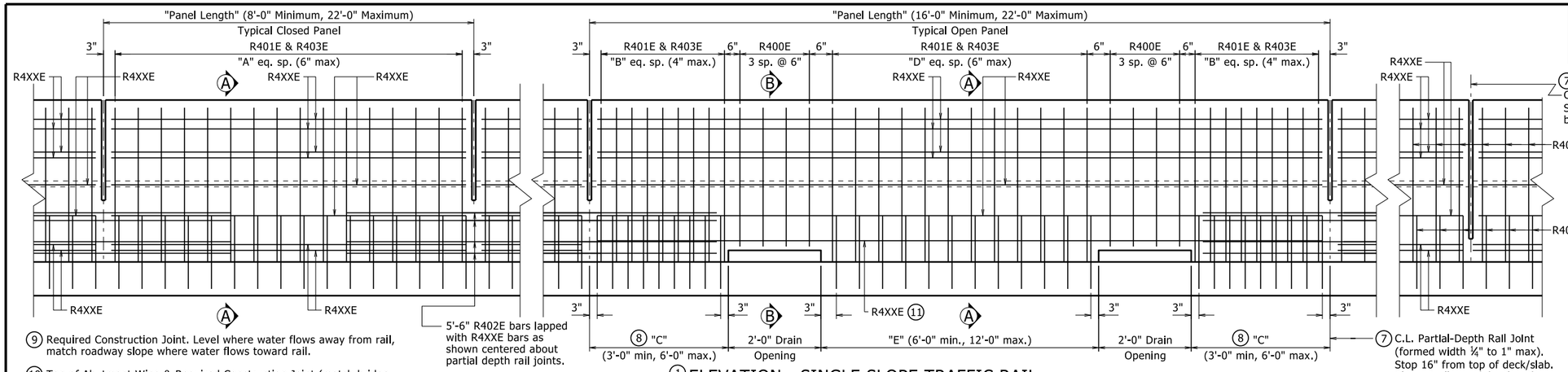

1 ELEVATION - SINGLE SLOPE TRAFFIC RAIL

9 Required Construction Joint. Level where water flows away from rail, match roadway slope where water flows toward rail.

10 Top of Abutment Wing & Required Construction Joint (match bridge deck/slab construction joint slope). See Plans for Wing reinforcing.

11 These bars shall be raised up over drain opening as shown in "SECTION B-B".

1 All measurements shown are along gutterline at base of rail.

2 Minimum embedment into deck/slab.

3 Eliminate recess when formliner with architectural finish is used. See Plans for additional information.

4 C.L. 1" ø formed holes for ⅞" ø bolts. See Standard Drawings GR-10 and GR-12 for additional information.

5 These bars will not be included in the "TABLE OF VARIABLES", see plans for additional information.

6 Field bend front leg of R401E bar as required to maintain minimum 1½" front face clearance within limits of taper.

7 When optional slip forming is used: to control cracking, all rail joints must be V-grooved around the perimeter of the rail prior to concrete set and sawing. Depth of V-groove shall be ½". Sawing of the joints shall be done as soon as practical to a width of ¼", and must be controlled so it will follow the V-Groove.

8 End posts shall be the same length within a panel.

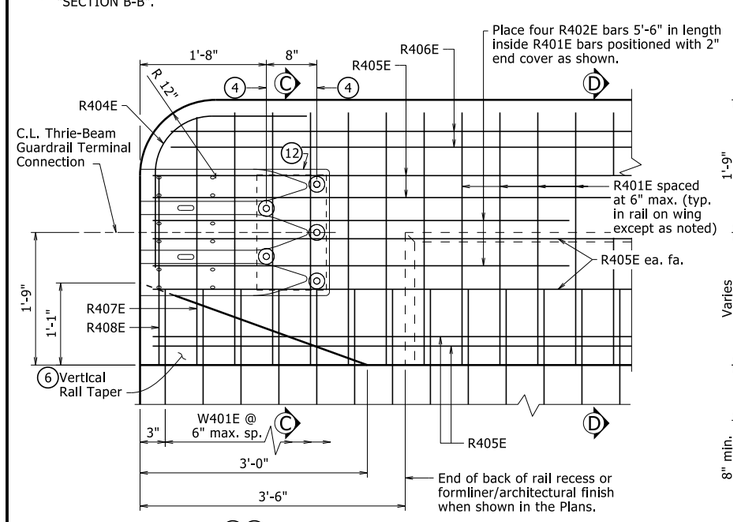

1 5 RAIL TERMINUS DETAIL
1" = 1'-0"

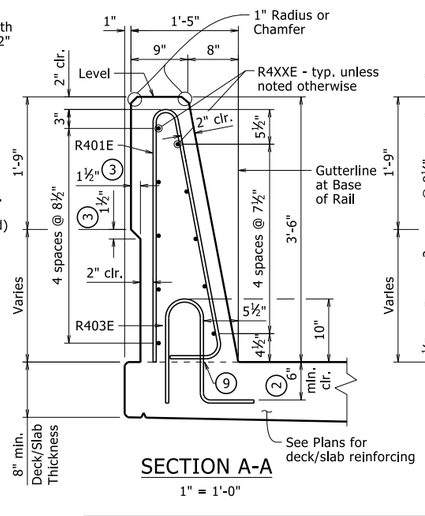

SECTION A-A
1" = 1'-0"

SECTION B-B
1" = 1'-0"

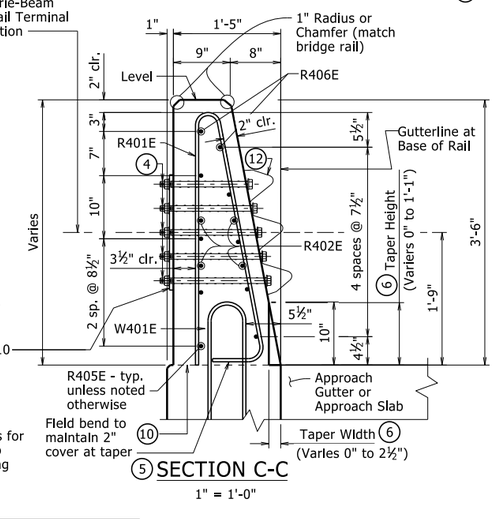

5 SECTION C-C
1" = 1'-0"

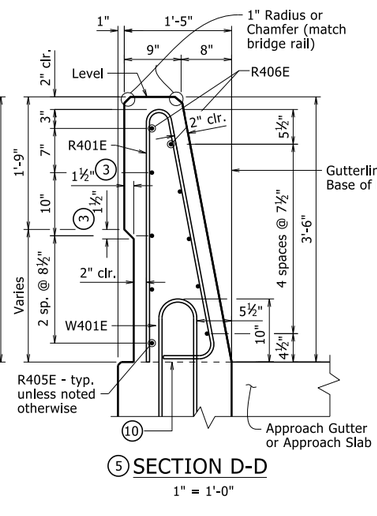

5 SECTION D-D
1" = 1'-0"

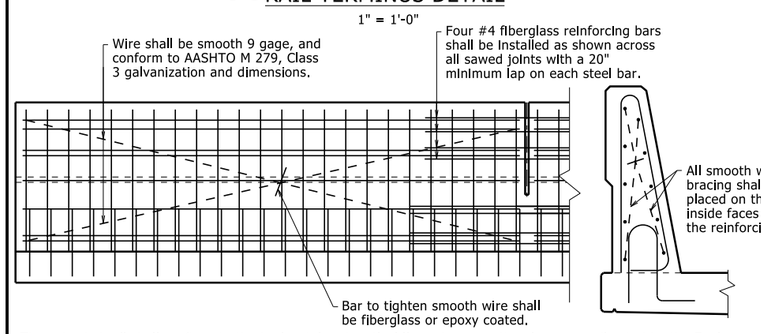

BENDING DIAGRAM

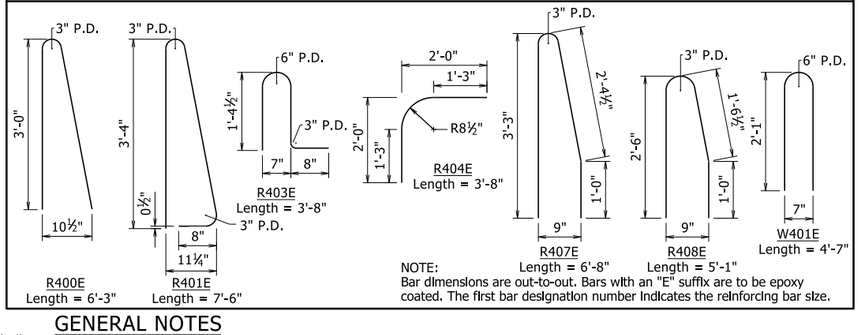

12 Bolt Special End Shoe to face of rail as shown. Tapered washers are not required between the head of the bolts and the sloped face of the rail. Tighten the five terminal connection bolts in a well distributed pattern to prevent damage or distortion of the thrie-beam connection. Cut bolts off after installation so as to extend no more than ⅜" beyond nut. Paint ends of cut-off bolts with zinc-rich paint. This work and material will not be paid for directly but shall be considered subsidiary to associated contract items.

TABLE OF VARIABLES

Closed Rail Panels			Open Rail Panels					
Panel Length	A	R4XXE	Panel Length	B	C	D	E	R4XXE

See Plans for table with values.

This document was originally issued and sealed by Charles R. Ellis, PE No. 9235, on July 06, 2022. This copy is not a signed and sealed document.

THESE DETAILS ARE APPLICABLE UNLESS OTHERWISE SHOWN IN THE PLAN DETAILS, SPECIAL PROVISIONS, OR SUPPLEMENTAL SPECIFICATIONS.

GENERAL NOTES

The extruded rail shall conform to the horizontal and vertical lines shown on the plans or as directed by the Engineer and shall present a smooth, uniform appearance and texture. Unless otherwise noted, exposed surfaces may be given a light brush finish or a Class 3, Textured Coating Finish in place of Class 2, Rubbed Finish.

All panels shall be braced as required to prevent racking.

Slip forming will not be allowed on bridges where formliner with architectural treatment is used unless approval from the Engineer is obtained.

DETAILS OF OPTIONAL SLIP FORMING OF BRIDGE TRAFFIC RAIL

No Scale

This rail has been evaluated and accepted to be of equal strength to railings with similar geometry, which have been evaluated by full-scale crash test to meet MASH TL-4 criteria.

For Table of Variables, Rail Bar List, locations of Full and Partial Depth Rail Joints, and Wing & Rail Bar Lists, see Plans.

For location of drain openings, see Plans. Drain openings will not be allowed over Railroad Right of Way, travelled roadways, and protected waterways.

Rail Terminus details, including Rail Taper, are not applicable when bridge railing is continuous with roadway railing.

Scales shown are for full size 22"x34" drawings. When using 11"x17" drawings, reduce scale by one half.

STATE OF ARKANSAS
LICENSED PROFESSIONAL ENGINEER
No. 9235
CHARLES R. ELLIS
BRIDGE ENGINEER

STANDARD DETAILS FOR BRIDGE TRAFFIC RAIL TYPE SSTR42

ARKANSAS STATE HIGHWAY COMMISSION

LITTLE ROCK, ARK.

DRAWN BY: CGP DATE: 06/30/2022 FILENAME: b55071.dgn
CHECKED BY: CMW DATE: 07/01/2022 SCALE: AS NOTED
DESIGNED BY: STD. DATE: -

DRAWING NO. 55071

PRINT DATE: 10/7/2022

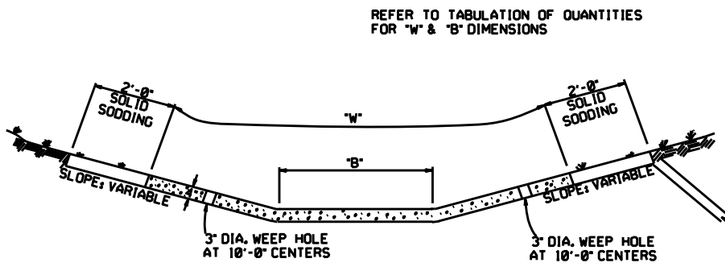

TYPE A

EXCAVATE TO NEAT LINES TO CONSTRUCT DITCH PAVING AND SOLID SODDING.

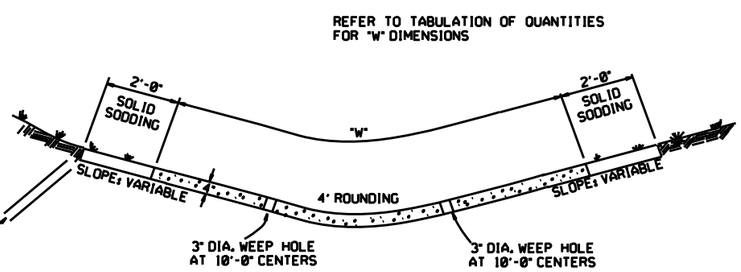

TYPE B

THE STEEL AND ADDITIONAL CONCRETE FOR THE WALLS SHALL NOT BE PAID FOR DIRECTLY, BUT SHALL BE CONSIDERED TO BE INCLUDED IN THE PRICE BID FOR "CONCRETE DITCH PAVING."

TOE WALL DEPTH MAY BE ALTERED TO 1'-0" WHEN DIRECTED BY THE ENGINEER IN ROCK EXCAVATION

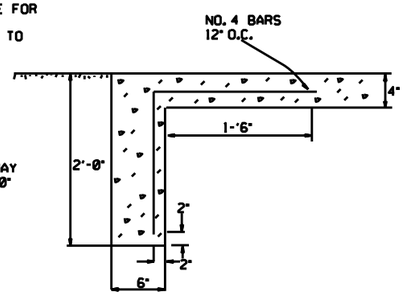

TOE WALL DETAIL FOR CONCRETE DITCH PAVING

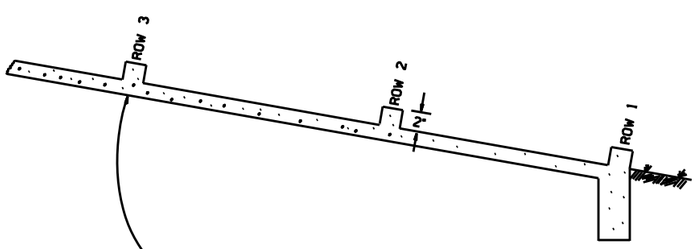

NUMBER OF ELEMENTS PER ROW VARIES WITH WIDTH OF PAVING SPECIFIED

ENERGY DISSIPATORS TO BE USED FOR THE ENTIRE LENGTH OF DITCH WHEN SLOPE OF DITCH PAVING EXCEEDS 7%. THE DISSIPATORS WILL NOT BE PAID FOR DIRECTLY, BUT SHALL BE CONSIDERED TO BE INCLUDED IN THE PRICE BID FOR CONCRETE DITCH PAVING.

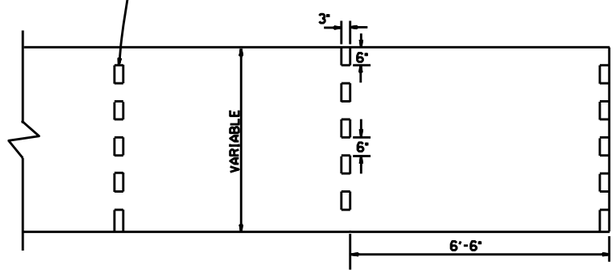

ENERGY DISSIPATORS
(NO SCALE)

GENERAL NOTES:

THE FULL WIDTH OF EACH SECTION SHALL BE POURED MONOLITHICALLY.

TOE WALLS TO BE CONSTRUCTED FULL WIDTH AT EACH END OF DITCH PAVING, AND POURED MONOLITHICALLY.

SOLID SOD ALONG DITCH PAVING TO BE PLACED WITHIN 14 DAYS OF DITCH PAVING CONSTRUCTION.

1" WIDE TRANSVERSE EXPANSION JOINTS SHALL BE PLACED IN CONCRETE DITCH PAVING AT 45° INTERVALS. THE SPACE SHALL BE FILLED WITH APPROVED JOINT FILLER COMPLYING WITH AASHTO M213.

DATE	REVISION	DATE FILM'D
12-8-16	CORRECTED ENERGY DISSIPATOR DRAWING AND NOTE	
11-17-10	ADDED GENERAL NOTE	
6-2-94	ADDED GENERAL NOTE ABOUT SOLID SODDING	
11-30-8	ELIMINATED MIN. ROWS OF ELEMENTS	111-30-89
7-15-88	REVISED DISSIPATOR NOTE	653-7-15-88
4-3-87	REVISED ENERGY DISSIPATOR	671-4-3-87
1-9-87	MODIFIED NOTE ON ENERGY DISS.	532-1-9-87
11-3-86	ADDED NOTE TO ENERGY DISS.	599-12-1-86
11-1-84	ENERGY DISSIPATOR DETAILS ADDED	508-11-1-84
11-1-84	EXCAVATION DETAILS ADDED TYPED A & B	
10-2-72	REVISED AND REDRAWN	508-10-2-72

ARKANSAS STATE HIGHWAY COMMISSION

CONCRETE DITCH PAVING

STANDARD DRAWING CDP-1

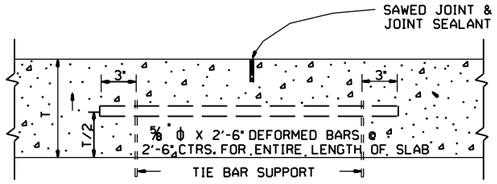

LONGITUDINAL JOINT

NOTE: THE TIE BAR SUPPORT SHOWN ABOVE MAY BE ELIMINATED IF OTHER APPROVED METHODS FOR PLACING AND SUPPORTING THE TIE BARS ARE PROVIDED.

TIE BARS SHALL BE 15" FROM TRANSVERSE JOINTS.

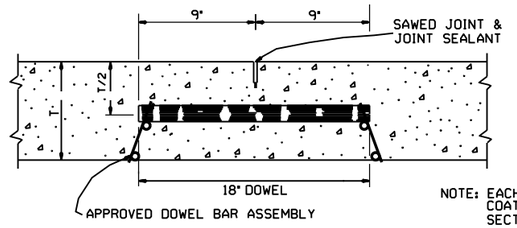

NOTE: EACH DOWEL TO BE COATED ACCORDING TO SECTION 502 OF THE STANDARD SPECIFICATIONS.

ROUND STEEL BAR DOWEL
1¼" DIA. WHEN T<10"
1½" DIA. WHEN T≥10"

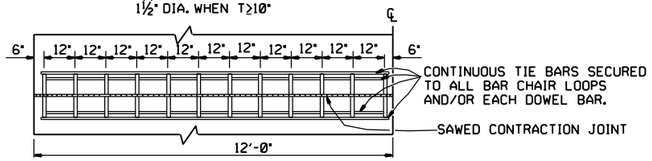

ONE-HALF 24' PAVEMENT
12 DOWELS
PLAN

NOTE: FOR 20' PAVEMENT USE 20 DOWELS @ 12" CTRS. WITH 6" SPACING FROM C.L. AND EDGE OF SLAB TO FIRST BAR. FOR 15' PAVEMENT USE 15 DOWELS @ 12" CTRS. WITH 6" SPACING FROM C.L. AND EDGE OF SLAB TO FIRST BAR. FOR 26' PAVEMENT USE 26 DOWELS @ 12" CTRS. WITH 6" SPACING FROM C.L. AND EDGE OF SLAB TO FIRST BAR. FOR PAVEMENT WIDTHS OTHER THAN THOSE SHOWN ABOVE, USE DOWELS AT 12" CTRS. WITH 6" MAX. SPACING FROM C.L. TO FIRST BAR. DISTANCE FROM EDGE OF SLAB TO FIRST BAR SHALL BE ADJUSTED TO MAINTAIN 12" DOWEL BAR SPACING

CONTRACTION JOINT DETAILS

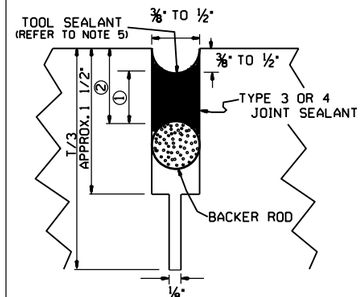

DETAIL OF SAWED CONTRACTION JOINT

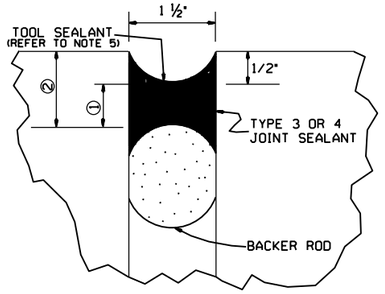

DETAIL OF EXPANSION JOINT

JOINT CONFIGURATION FOR TYPE 3 OR 4 JOINT SEALANT

JOINT WIDTH	SEALANT THICKNESS ①	BACKER ROD DIAMETER	BACKER ROD PLACEMENT DEPTH ②
INCHES			
¼	¼	⅜	½
⅜	¼	½	½
½	¼	⅝	½
⅝	5/16	¾	7/16
¾	⅜	⅞	⅜
1 ½	¾	2	1 ¼

JOINT CONFIGURATION FOR TYPE 5 JOINT SEALANT

JOINT WIDTH	SEALANT THICKNESS ①	BACKER ROD DIAMETER	BACKER ROD PLACEMENT DEPTH ②
INCHES			
¼	½	⅜	¾
⅜	¾	½	1

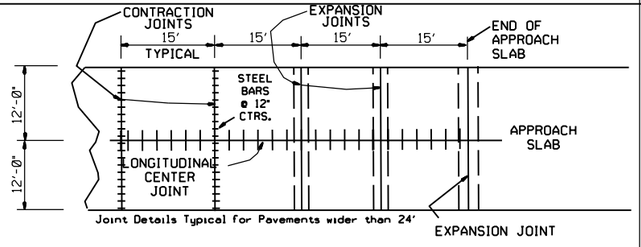

PLAN SHOWING EXPANSION JOINTS AT BRIDGE APPROACH SLABS

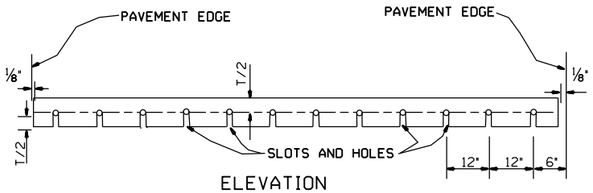

ELEVATION

NOTE: ALL DOWEL BARS SHALL CONFORM TO THE DETAILS FOR CONTRACTION JOINTS.

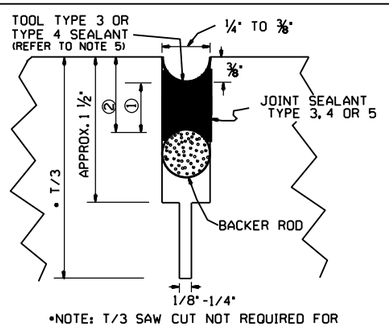

•NOTE: T/3 SAW CUT NOT REQUIRED FOR LONGITUDINAL CONSTRUCTION JOINT.

DETAIL OF SAWED LONGITUDINAL JOINT AND LONGITUDINAL CONSTRUCTION JOINT

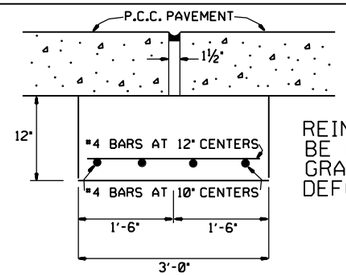

REINFORCING SHALL BE GRADE 40 OR GRADE 60 DEFORMED BARS.

DETAIL OF JOINT SUPPORT FOR EXPANSION JOINTS

GENERAL NOTES

1. "T" DENOTES THICKNESS OF SLAB.
2. DOWEL BARS SHALL BE PLACED IN ACCORDANCE WITH THE DIMENSIONS SHOWN. A TOLERANCE OF PLUS OR MINUS ONE INCH WILL BE ALLOWED FOR THE VERTICAL AND LATERAL PLACEMENT AND A TOLERANCE OF PLUS OR MINUS ¼" WILL BE ALLOWED FOR THE TILT AND SKEW. DOWEL BARS SHALL BE FIELD COATED FOR A MINIMUM DISTANCE OF 2" GREATER THAN HALF THE LENGTH OF THE BAR WITH AN APPROVED GREASE AS A BOND BREAKER JUST PRIOR TO PLACEMENT OF CONCRETE.
3. THE EXPANSION JOINT SUPPORT MAY BE CONSTRUCTED WITH CLASS "A", "S" OR PAVING CONCRETE. PAYMENT FOR THE JOINT SUPPORT SHALL BE FOR THE CONTRACT UNIT PRICE BID FOR THE CLASS OF CONCRETE SPECIFIED IN THE PLANS. PAYMENT FOR ALL OTHER WORK AND MATERIALS REQUIRED FOR THE CONSTRUCTION OF THE JOINT SUPPORT SHALL BE INCLUDED IN THE PRICE BID FOR THE ABOVE ITEMS.
4. CONTRACTION JOINTS SHALL BE CONSTRUCTED ON 15' CENTERS.
5. TOOLING NOT REQUIRED FOR SELF-LEVELING SILICONE.
6. UNLESS OTHERWISE SPECIFIED IN THE PLANS, CONCRETE SHOULDERS SHALL BE CONSTRUCTED ACCORDING TO THE DETAILS SHOWN HEREON. CONTRACTION JOINTS SHALL MATCH CONTRACTION JOINTS IN THE LANES.
7. TIE WIRES IN DOWEL BAR ASSEMBLIES SHALL NOT BE CUT PRIOR TO PLACEMENT OF PAVING CONCRETE.

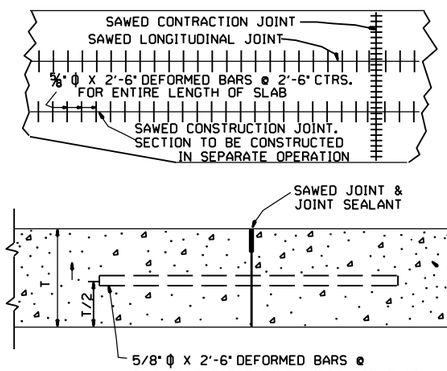

NOTE: TIE BARS SHALL BE 15" FROM TRANSVERSE JOINTS.

LONGITUDINAL CONSTRUCTION JOINT

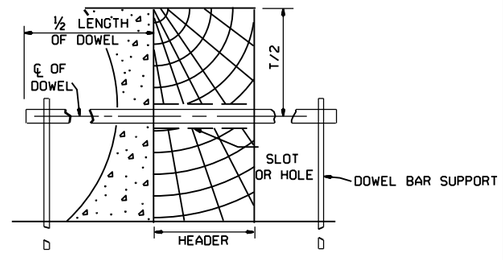

SECTION

TRANSVERSE CONSTRUCTION JOINT

DATE	REVISION	DATE FILMED
11-07-19	REV. EXP. JOINT REF ON APP. SLAB	
5-25-06	ADDED GENERAL NOTE 7	
10-9-03	REMOVED TIE BAR COATING & REVISED GENERAL NOTES	
11-16-01	ADDED TOOL SEALANT AND NOTE 5; REVISED NOTE 3	
4-26-96	REVISED CONTRACTION JOINT NOTE	
11- 3-94	ADDED NOTE RE: REINF. BARS	
4- 1-93	REVISED DOWEL BARS & GEN. NOTES	4- 1-93
10- 1-92	REVISED DOWEL SPACING	10- 1-92
8- 15-91	ADDED SPAC FOR CONTR JTS & DEL KEYWAY	
05-24-90	REVISED TIE BAR, DOWEL & JOINT SIZE	
01-25-90	ADDED EXPANSION JOINT	01-25-90
11-30-89	CHANGED T/4+1 TO T/3+1	11-30-89
03-23-89	ALTERED SAWED JOINT & ADDED NOTE	512-03-23-89
07-15-88	REVISED AND REDRAWN	632-07-15-88

ARKANSAS STATE HIGHWAY COMMISSION

TRANSVERSE & LONGITUDINAL JOINTS FOR CONCRETE PAVEMENT (NON-REINFORCED)

STANDARD DRAWING CPTJ - 6A

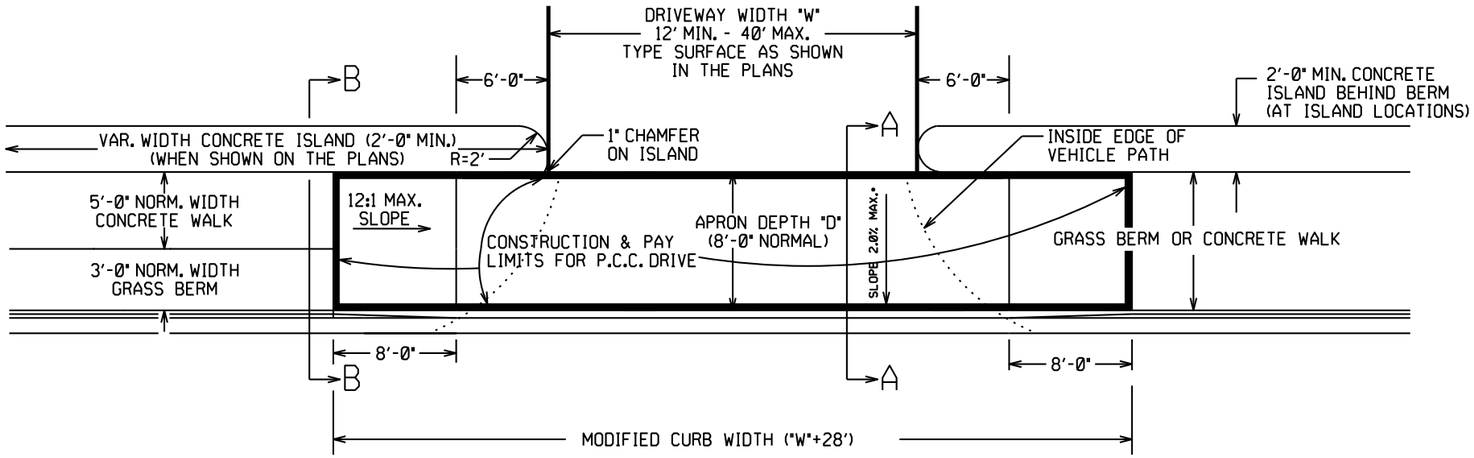

PLAN VIEW

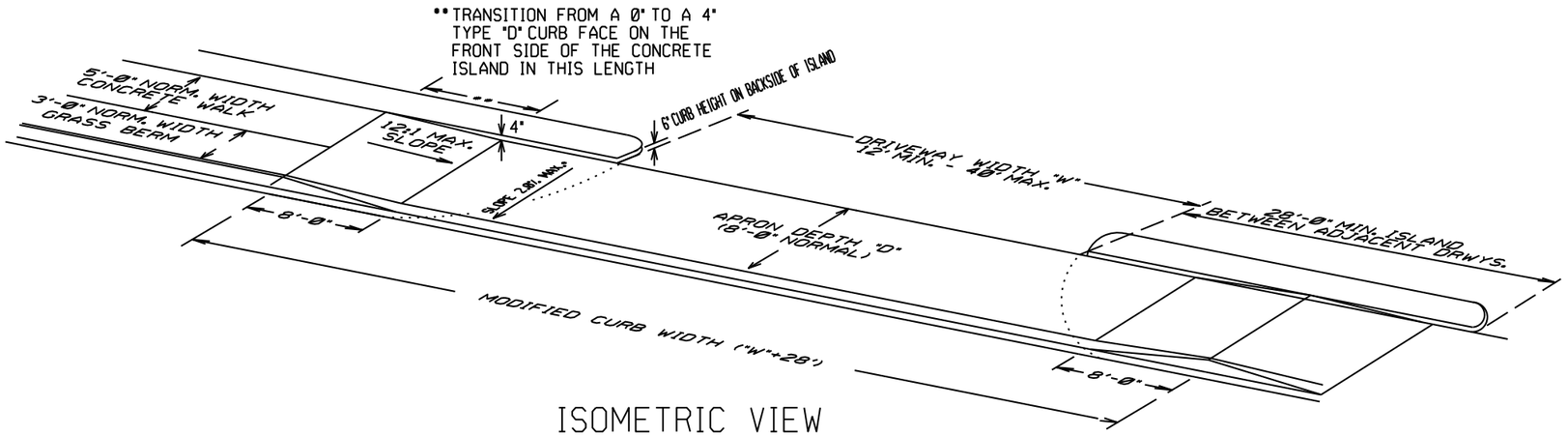

ISOMETRIC VIEW

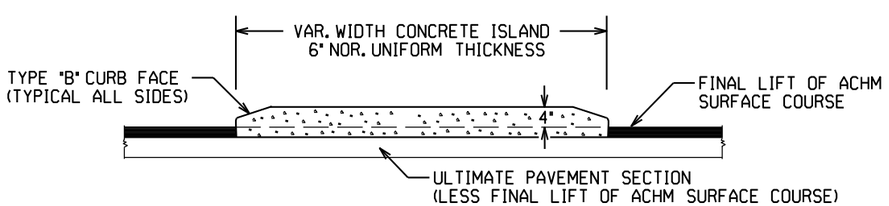

CURBED ISLANDS FOR CHANNELIZATION

CONCRETE ISLAND NOTES:

1. REFER TO PLANS FOR TYPE OF CURB FACE TO BE USED. NO DIRECT PAYMENT WILL BE MADE FOR THE CURB FACES SHOWN ON THE ISLAND DETAILS. PAYMENT FOR THE CURB FACE WILL BE INCLUDED IN THE UNIT PRICE BID FOR THE ITEM "CONCRETE ISLAND".

2. TRANSVERSE EXPANSION JOINTS, NOT LESS THAN 1/2" WIDE, SHALL BE PLACED AT MINIMUM INTERVAL OF 45'. TRANSVERSE JOINT SHALL BE CONSTRUCTED USING A JOINT FILLER COMPLYING WITH AASHTO M213.

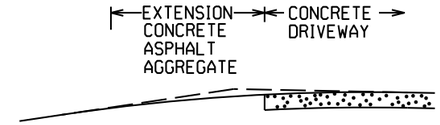

EXTENSION TYPICAL SECTIONS

1: CONCRETE - 6" P.C. CONCRETE DRIVEWAY

2: ASPHALT - 2" ACHM SURFACE COURSE (1/2")
4" ACHM BINDER COURSE (1") OR
4" ACHM BASE COURSE (1-1/2")

3: ASPHALT - 2" ACHM SURFACE COURSE (1/2")
7" AGGREGATE BASE COURSE

4: AGGREGATE - 6" AGGREGATE BASE COURSE

THE TYPE OF EXTENSION SHALL BE AS SHOWN IN THE PLANS. THE CONTRACTOR MAY, WITH THE APPROVAL OF THE ENGINEER, SUBSTITUTE A LOWER NUMBERED TYPE OF EXTENSION IN LIEU OF THE TYPE SPECIFIED IN THE PLANS, BUT AT NO ADDITIONAL COST TO THE DEPARTMENT.

DRIVEWAY EXTENSION DETAILS

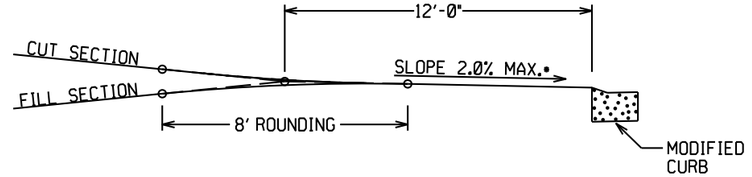

DRIVEWAY VERTICAL ALIGNMENT DETAILS

• NOTE: DRIVEWAYS MAY NOT BE SLOPED AWAY FROM THE ROADWAY UNLESS APPROVED BY THE ENGINEER.

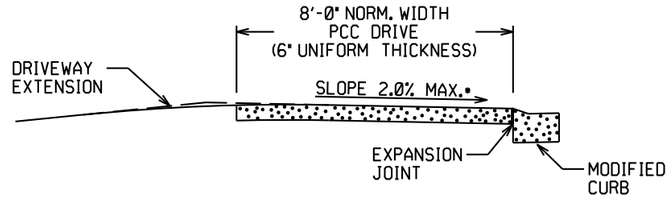

SECTION A-A

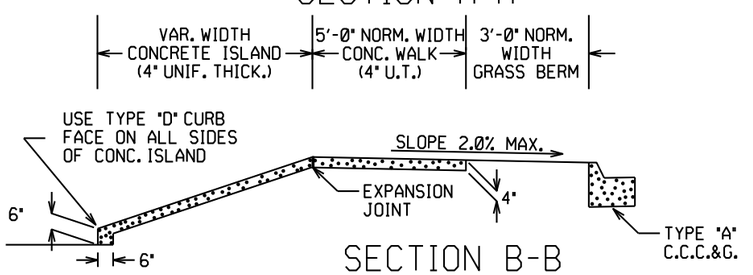

SECTION B-B

CURBED ISLAND BEHIND WALK

DATE REV	DATE FILMED	DESCRIPTION
5-19-22		REVISED ISLAND NOTES
11-07-19		REVISED WALK DETAILS
2-27-14		REVISED PLAN & ISOMETRIC VIEW
11-29-07		ADDED CHANNELIZATION ISLAND WITH TYPE C CURB FACE & REVISED DRIVEWAY SLOPE NOTE & VERTICAL ALIGNMENT DETAIL
11-10-05		REV. APRON SLOPE & DEPTH OF AGG. BASE.
8-22-02		ADDED ISLAND DETAILS & NOTES
3-30-00		REV. MOD. CURB WIDTH & TRANS. NOTE
11-19-98		REVISED NOTES
11-18-98		REDRAWN AND REISSUED

ARKANSAS STATE HIGHWAY COMMISSION

DETAILS OF DRIVEWAYS & ISLANDS

STANDARD DRAWING DR-1

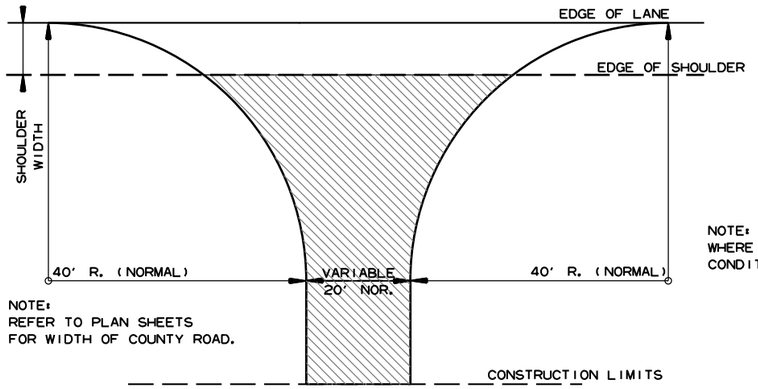

NOTE:
REFER TO PLAN SHEETS
FOR WIDTH OF COUNTY ROAD.

NOTE: TURNOUTS SHALL BE MODIFIED WHERE NECESSARY TO MEET LOCAL CONDITIONS AS DIRECTED BY THE ENGINEER.

ACHM SURFACE COURSE (1/2")
(220 LBS. PER SQ. YD.) AND
AGGREGATE BASE COURSE (CLASS 7)
7" COMP. DEPTH, UNLESS OTHERWISE
SPECIFIED IN PLANS.

DETAIL FOR COUNTY ROAD TURNOUTS OPEN SHOULDER SECTION

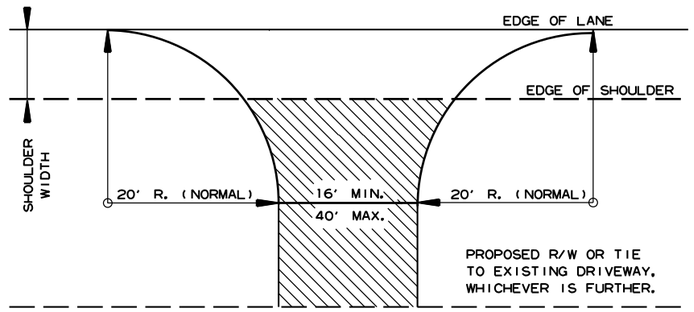

NOTE: TURNOUTS AND PRIVATE DRIVES SHALL BE MODIFIED WHERE NECESSARY TO MEET LOCAL CONDITIONS AS DIRECTED BY THE ENGINEER.

ACHM SURFACE COURSE (1/2")
(220 LBS. PER SQ. YD.) AND
AGGREGATE BASE COURSE (CLASS 7)
7" COMP. DEPTH IF ASPHALT OR
GRAVEL DRIVE EXISTING; OR 6"
CONCRETE IF CONCRETE DRIVE
EXISTING.

DETAIL FOR DRIVEWAY TURNOUTS OPEN SHOULDER SECTION (ARTERIALS)

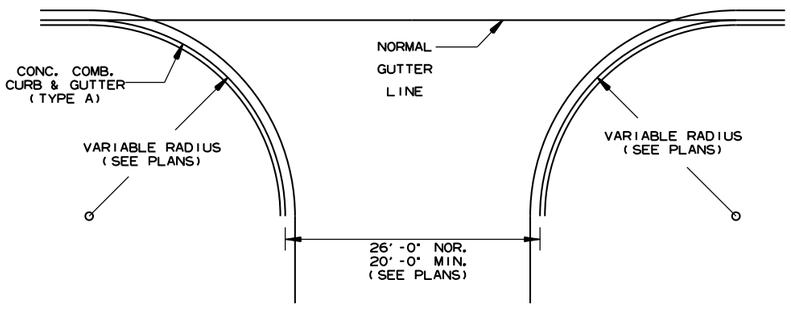

NOTE:
PAVEMENT STRUCTURE FOR STATE HIGHWAYS, CITY STREETS,
& COUNTY ROADS TO BE SAME AS MAIN LANES.

DETAIL OF TURNOUTS, ASPHALT STREETS, COUNTY ROADS & STATE HIGHWAYS CURB & GUTTER SECTION

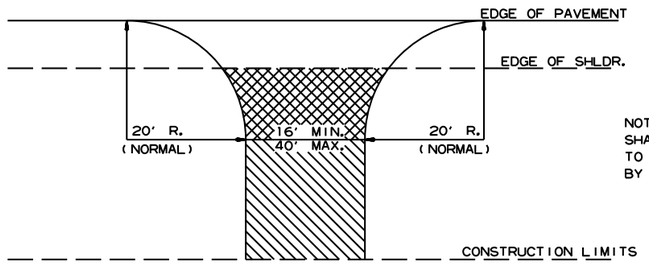

NOTE: TURNOUTS AND PRIVATE DRIVES SHALL BE MODIFIED WHERE NECESSARY TO MEET LOCAL CONDITIONS AS DIRECTED BY THE ENGINEER.

ASPHALT CONCRETE HOT MIX SURFACE
COURSE (220 LBS. PER SQ. YD.)
AGGREGATE BASE COURSE (CLASS 7)
7" COMP. DEPTH IF ASPHALT DRIVE EXIST OR
6" CONCRETE IF CONCRETE DRIVE EXIST.

AGGREGATE BASE COURSE (CLASS 7)
9" COMP. DEPTH OR CONFORM
TO EXISTING DRIVEWAY

DETAIL FOR DRIVEWAY TURNOUTS (COLLECTORS)

DATE REV	DATE FILMED	DESCRIPTION
5-19-22		ISSUED

ARKANSAS STATE HIGHWAY COMMISSION

DETAILS OF DRIVEWAYS & STREET TURNOUTS

STANDARD DRAWING DR-2

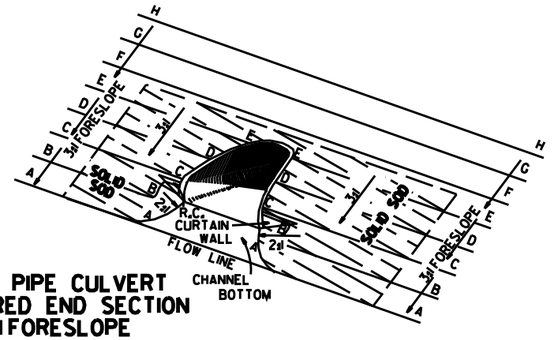

TYPICAL PIPE CULVERT
WITH FLARED END SECTION
& 3:1 FORESLOPE

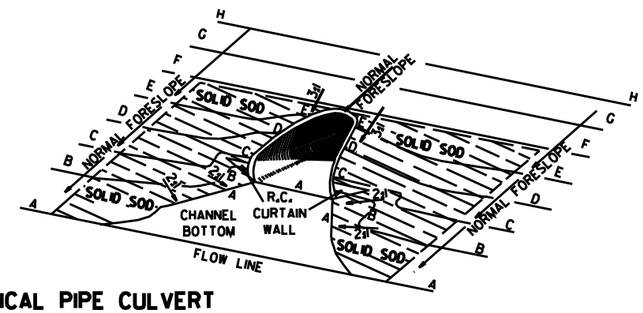

TYPICAL PIPE CULVERT
WITH FLARED END SECTION
& FLATTENED ADJACENT SLOPES

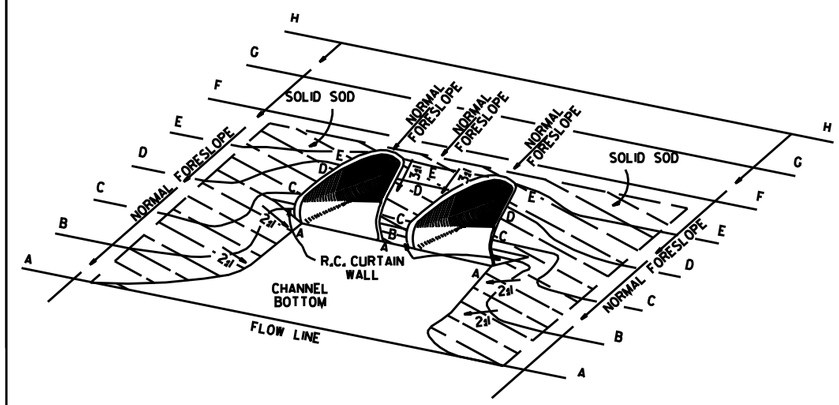

TYPICAL MULTIPLE PIPE CULVERT
WITH FLARED END SECTIONS
& FLATTENED ADJACENT SLOPES

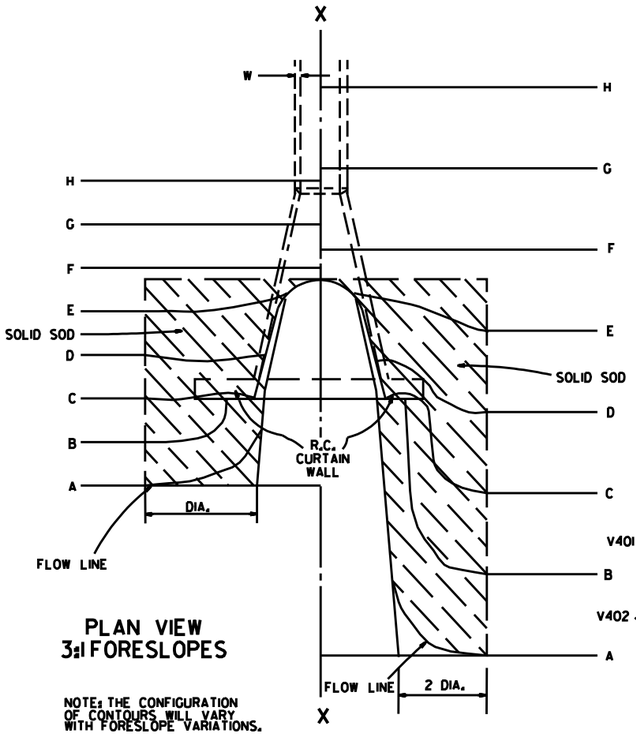

PLAN VIEW
3:1 FORESLOPES

NOTE: THE CONFIGURATION OF CONTOURS WILL VARY WITH FORESLOPE VARIATIONS.

PLAN VIEW
FLATTENED FORESLOPES

R.C. CURTAIN WALL DIMENSIONS & QUANTITIES

PIPE DIA.	H_1	L_1	L	L (DBL.)/2	SINGLE R.C.P.C. CONC. CU. YDS.	SINGLE R.C.P.C. REINF. STEEL LBS.	DOUBLE R.C.P.C. CONC. CU. YDS.	DOUBLE R.C.P.C. REINF. STEEL LBS.
18"	11½"	3'-5"	8'-0"	6'-3"	0.31	27.7	0.45	39.5
24"	1'-0½"	4'-6"	9'-6"	7'-6"	0.37	33.4	0.53	48.0
30"	1'-3½"	5'-7"	11'-0"	9'-0"	0.45	39.0	0.67	59.0
36"	1'-7"	6'-8"	13'-0"	10'-6"	0.58	52.6	0.83	73.9
42"	2'-1½"	7'-3"	15'-6"	12'-0"	0.82	77.1	1.10	100.7
48"	2'-5"	7'-10"	17'-0"	13'-0"	0.98	94.9	1.27	120.4
54"	2'-9½"	8'-5"	18'-6"	14'-0"	1.16	115.8	1.47	143.7
60"	3'-4"	9'-0"	20'-6"	15'-6"	1.47	149.7	1.84	180.3
72"	4'-5"	10'-2"	25'-6"	18'-6"	2.31	232.6	2.73	271.0

NOTE: QUANTITIES SHOWN ARE FOR ONE (1) CURTAIN WALL.

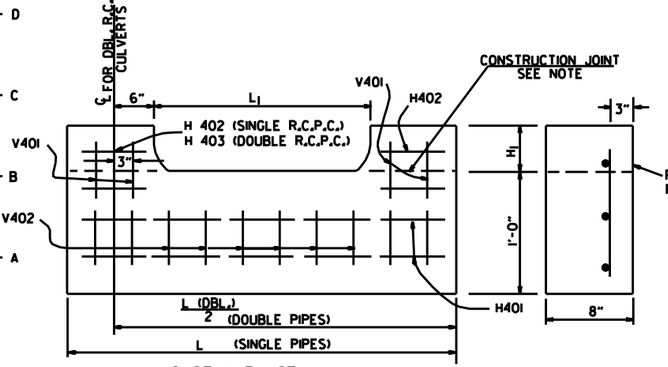

CAST-IN-PLACE

NOTE: THE PORTION OF THE R.C. CURTAIN WALL BENEATH THE FLARED END SECTION (LOWER 1'-0") SHALL BE PLACED MONOLITHICALLY. THE FLARED END SECTION SHALL THEN BE SET IN PLACE & THE REMAINING PORTIONS OF THE R.C. CURTAIN WALL PLACED.

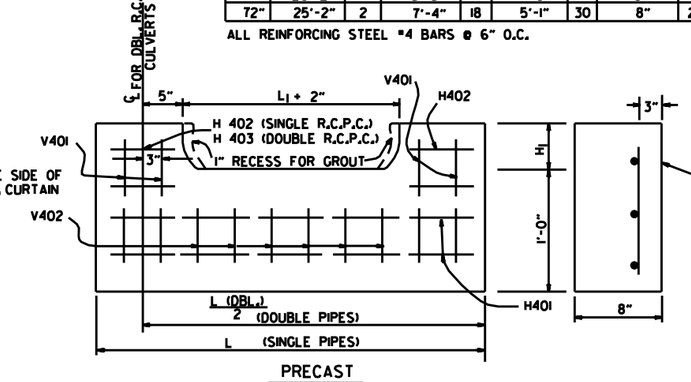

PRECAST

NOTE: THE PRECAST CURTAIN WALL WILL BE SET AND BACKFILLED WITH COMPACTED MATERIAL. THE FLARED END SECTION SHALL THEN BE SET IN PLACE AND THE 1" RECESS FILLED WITH GROUT. WHERE "L" EXCEEDS 11' THE CURTAIN WALL MAY BE CAST IN TWO (2) OR MORE SECTIONS. THE METHOD OF JOINING THE SECTIONS FOR INSTALLATION SHALL BE APPROVED BY THE ENGINEER.

R.C. CURTAIN WALL DETAILS

REINFORCING STEEL SCHEDULE

PIPE DIA.	SINGLE R.C. PIPE CULVERT H401 L	H401 NO.	H402 L	H402 NO.	V401 L	V401 NO.	V402 L	V402 NO.	DOUBLE R.C. PIPE CULVERT H401 L	H401 NO.	H402 L	H402 NO.	H403 L	H403 NO.	V401 L	V401 NO.	V402 L	V402 NO.
18"	7'-8"	2	1'-11½"	4	1'-7½"	8	8"	8	12'-2"	2	1'-11½"	4	8"	2	1'-7½"	10	8"	14
24"	9'-2"	2	2'-2"	4	1'-8½"	10	8"	9	14'-8"	2	2'-2"	4	8"	2	1'-8½"	12	8"	18
30"	10'-8"	2	2'-4½"	4	1'-11½"	10	8"	12	17'-8"	2	2'-4½"	4	8"	2	1'-11½"	14	8"	22
36"	12'-8"	2	2'-10"	6	2'-3"	12	8"	14	20'-8"	2	2'-10"	6	8"	3	2'-3"	14	8"	28
42"	15'-2"	2	3'-9½"	8	2'-9½"	16	8"	15	23'-8"	2	3'-9½"	8	8"	4	2'-9½"	18	8"	30
48"	16'-8"	2	4'-3"	10	3'-1"	18	8"	16	25'-8"	2	4'-3"	10	8"	5	3'-1"	20	8"	32
54"	18'-2"	2	4'-8½"	12	3'-5½"	20	8"	17	27'-8"	2	4'-9"	12	8"	6	3'-5½"	22	8"	34
60"	20'-2"	2	5'-5"	14	4'-0"	24	8"	18	30'-8"	2	5'-5"	14	8"	7	4'-0"	26	8"	36
72"	25'-2"	2	7'-4"	18	5'-1"	30	8"	20	36'-8"	2	7'-4"	18	8"	9	5'-1"	33	8"	40

ALL REINFORCING STEEL #4 BARS @ 6" O.C.

SOLID SODDING

PIPE DIA.	SINGLE R.C.P.C. 3:1	4:1	6:1	DOUBLE R.C.P.C. 3:1	4:1	6:1
	SQ. YDS.			SQ. YDS.		
18"	5	7	12	6	8	13
24"	8	12	19	9	13	20
30"	13	18	29	14	19	30
36"	17	26	41	18	28	43
42"	23	35	55	25	37	57
48"	29	46	68	31	48	70
54"	35	57	85	37	59	87
60"	45	62	104	48	65	107
72"	64	92	156	67	95	159

NOTE: QUANTITIES SHOWN ABOVE ARE FOR ONE (1) END OF F.E.S.

GENERAL NOTES

1. A CAST-IN-PLACE OR PRECAST CURTAIN WALL MAY BE USED. PAYMENT FOR THE CURTAIN WALL SHALL BE CONSIDERED TO BE INCLUDED IN THE UNIT PRICE BID EACH FOR FLARED END SECTIONS OF THE SEVERAL SIZES, WHICH PRICE SHALL BE FULL COMPENSATION FOR FURNISHING ALL MATERIALS INCLUDING REINFORCING STEEL AND CONCRETE; FOR FORMS, MIXING AND PLACING; FOR EXCAVATION AND BACKFILL, AND FOR ALL LABOR, TOOLS, EQUIPMENT AND INCIDENTALS NECESSARY TO COMPLETE THE WORK.
2. ALL EXPOSED EDGES SHALL BE CHAMFERED ¾".
3. CONCRETE FOR CURTAIN WALL SHALL MEET THE REQUIREMENTS FOR CLASS A OR S CONCRETE AS PROVIDED IN SECTION 802 OF THE STANDARD SPECIFICATIONS OR FOR PAVING CONCRETE AS PROVIDED IN SECTION 501 OF THE STANDARD SPECIFICATIONS.
4. WELDED WIRE MESH 3 x 3 W10 x W10 MAY BE USED IN LIEU OF REINFORCING BARS.

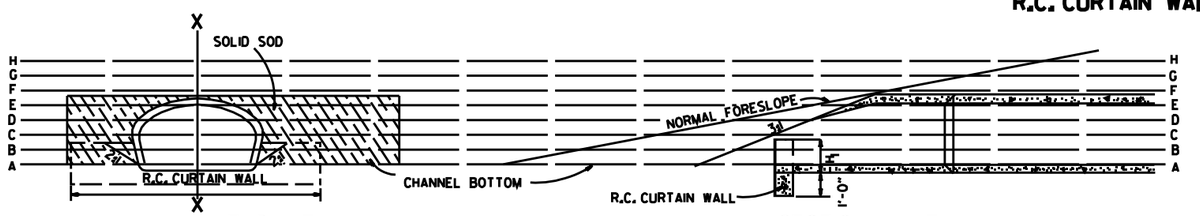

END VIEW

SECTIONAL VIEW "X-X"

DATE	REVISION	FILMED
10-18-96	ADDED NOTE TO SOLID SODDING	
10-12-95	CORRECTED SPELLING	
11-3-94	ADDED GENERAL NOTE NO. 4	
8-15-91	REV. CURTAIN WALL QUANT. STEEL SCH. & SOLID SOD QUANT.	
3-2-81	ALLOW PRECAST IN 2 OR MORE PIECES CHAMFER EDGES	
5-15-80	ADDED PRECAST WALL & GENERAL NOTES	
10-2-72	REVISED AND REDRAWN	

ARKANSAS STATE HIGHWAY COMMISSION

FLARED END SECTION

STANDARD DRAWING FES-1

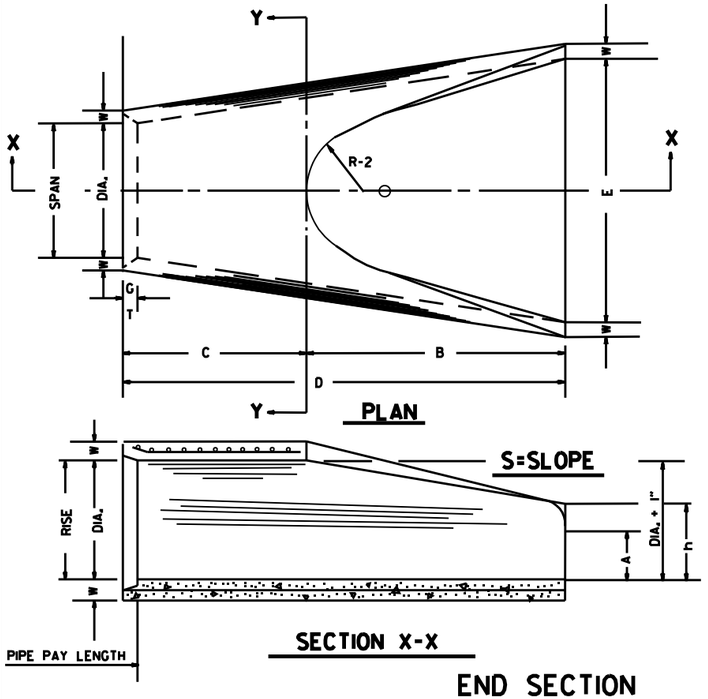

END SECTION FOR REINFORCED CONCRETE PIPE CULVERTS

TABLE OF DIMENSIONS

DIA.	WALL	A	B	C	D	E	S	DIA. + 1"	P	R-1	R-2	G-T	WT.	h
18"	2½"	9"	2'-3"	3'-10"	6'-1"	3'-0"	3st	19"	29"	15½"	12"	2"	1000	1'-0½"
24"	3"	9½"	3'-7½"	2'-6"	6'-1½"	4'-0"	3st	25"	33⅜"	16⅛"	14"	2½"	1600	1'-1½"
30"	3½"	1'-0"	4'-6"	1'-7¾"	6'-1¾"	5'-0"	3st	31"	37"	18½"	15"	3¼"	1940	1'-4⅝"
36"	4"	1'-3"	5'-3"	2'-10¾"	8'-1¾"	6'-0"	3st	37"	47⅛"	24⅝"	20"	3½"	4100	1'-8"
42"	4½"	1'-9"	5'-3"	2'-11"	8'-2"	6'-6"	3st	43"	53⅞"	27½"	22"	3½"	5380	2'-2½"
48"	5"	2'-0"	6'-0"	2'-2"	8'-2"	7'-0"	3st	49"	56½"	28½"	22"	3½"	6550	2'-6"
54"	5½"	2'-4"	6'-6"	1'-10"	8'-4"	7'-6"	3st	55"	65½"	33⅛"	24"	4"	8750	2'-10½"
60"	6"	2'-10"	6'-6"	1'-10"	8'-4"	8'-0"	3st	61"	72½"	36⅛"	24"	4"	9270	3'-5"
72"	7"	3'-10"	6'-6"	1'-10"	8'-4"	9'-0"	3st	73"	77⅛"	38⅝"	24"	5"	13250	4'-6"

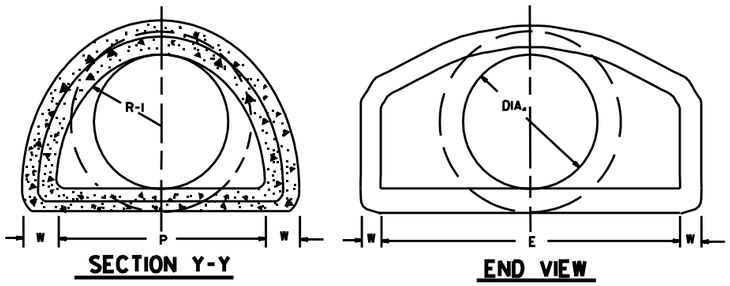

NOTE: TONGUE END ON UPSTREAM SECTION
GROOVE END ON DOWNSTREAM SECTION

ARCH PIPE

EQUIV. DIA.	• SPAN AASHTO M 206	• SPAN AHD NOMINAL	• RISE AASHTO M 206	• RISE AHD NOMINAL	W	A	B	C	D	E	P	R2	G-T	S
	INCHES													
15	18	18	11	11	2"	4"	2'-0"	4'-0"	6'-0"	3'-0"	29"	12"	1½"	2½st
18	22	22	13½	14	2½"	5"	2'-0"	4'-1"	6'-1"	3'-6"	32⅛"	13"	2½"	2½st
21	26	26	15½	16	2¾"	7"	2'-3"	3'-10"	6'-1"	4'-0"	34⅛"	14"	2½"	2½st
24	28½	29	18	18	3"	9"	2'-3"	3'-10"	6'-1"	5'-0"	36⅛"	15"	2½"	2½st
30	36¼	36	22½	23	3½"	10"	3'-1"	3'-0½"	6'-1½"	6'-0"	47⅛"	20"	3"	2½st
36	43¾	44	26⅝	27	4"	10½"	4'-0"	2'-1½"	6'-1½"	6'-6"	54⅞"	22"	3½"	2½st
42	51⅛	51	31⅝	31	4½"	11½"	4'-7"	1-10¼"	6'-5¼"	7'-2"	59½"	23"	3¾"	2½st
48	58½	59	36	36	5"	1'-3"	5'-3"	2'-10¾"	8'-1¾"	7'-10"	70⅜"	24"	4¼"	2½st
54	65	65	40	40	5½"	1'-7"	5'-3"	2'-11"	8'-2"	8'-6"	72⅛"	24"	4¾"	2¼st
60	73	73	45	45	6"	1'-10"	5'-6"	2'-8"	8'-2"	9'-0"	77⅛"	24"	5"	2¼st

• THE MEASURED SPAN AND RISE SHALL NOT VARY MORE THAN ± 2 PER CENT FROM THE VALUES SPECIFIED BY AASHTO M 206.

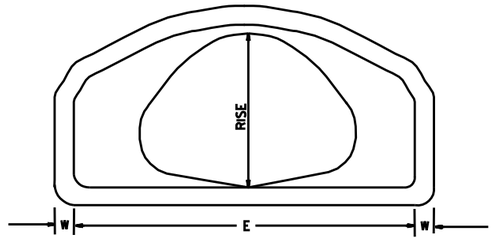

END VIEW
CONCRETE ARCH PIPE

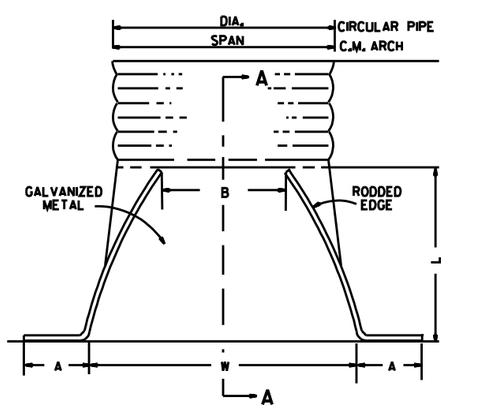

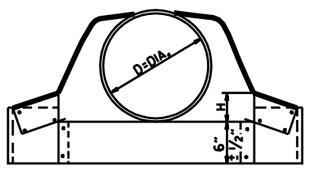

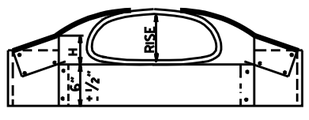

CIRCULAR PIPE

D. DIA.	GAUGE	A 1" ±	B. MAX.	H 1" ±	L 1½" ±	W 2" ±	S
		INCHES					
12	16	6	6	6	21	24	2½st
15	16	7	8	6	26	30	2½st
18	16	8	10	6	31	36	2½st
21	16	9	12	6	36	42	2½st
24	16	10	13	6	41	48	2½st
30	14	12	16	8	51	60	2½st
36	14	14	19	9	60	72	2½st
42	12	16	22	11	69	84	2½st
48	12	18	27	12	78	90	2½st
54	12	18	30	12	84	102	2st
60	12	18	33	12	87	114	1½st
66	12	18	36	12	87	120	1½st
72	12	18	39	12	87	126	1 1/3st

C.M. ARCH PIPE

EQUIV. DIA.	SPAN	RISE	A 1" ±	B MAX.	H 1" ±	L 1½" ±	W 2" ±	S	GAUGE
	INCHES								
15"	17	13	7	9	6	19	30	2½st	16
18"	21	15	7	10	6	23	36	2½st	16
21"	24	18	8	12	6	28	42	2½st	16
24"	28	20	9	14	6	32	48	2½st	16
30"	35	24	10	16	6	39	60	2½st	14
36"	42	29	12	18	8	46	75	2½st	14
42"	49	33	13	21	9	53	85	2½st	12
48"	57	38	18	26	12	63	90	2½st	12
54"	64	43	18	30	12	70	102	2½st	12
60"	71	47	18	33	12	77	114	2½st	12

NOTE: ALTERNATE CONNECTIONS TO THE PIPE CULVERTS, IN ACCORDANCE WITH MANUFACTURER'S STANDARD PRACTICES, MAY BE MADE SUBJECT TO THE APPROVAL OF THE ENGINEER.

END SECTIONS FOR CORRUGATED METAL PIPE CULVERTS

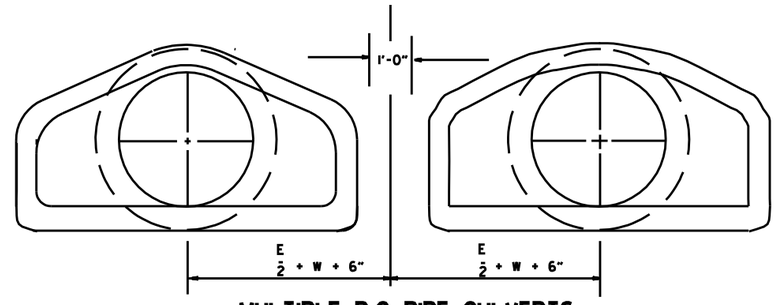

MULTIPLE R.C. PIPE CULVERTS

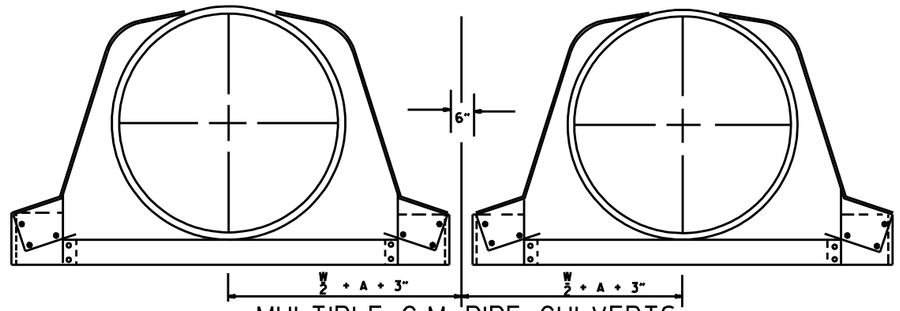

MULTIPLE C.M. PIPE CULVERTS

DATE	REVISION	FILMED
10-18-96	REVISED ASTM REF. TO AASHTO	
5-15-80	REVISED DISTANCE BETWEEN MULTIPLE R.C.P. F.E.S.	664-5-15-80
7-14-78	C.M. ARCH SIZES TO CONFORM WITH AASHTO SIZES	752-7-14-78
8-22-75	ADDED MULTIPLE PIPE CULVERTS	517-8-22-75
12-5-74	REMOVED NOTE RE REINF. FOR R.C. F.E.S.	500-12-5-74
5-24-73	CMP END SECTION, SHOW PIPE PAY LENGTH	627-5-24-73
10-2-72	REVISED AND REDRAWN	760-10-2-72

ARKANSAS STATE HIGHWAY COMMISSION

FLARED END SECTION

STANDARD DRAWING FES-2

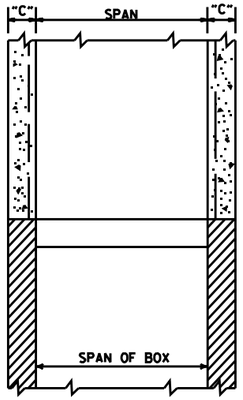

SECTION B-B

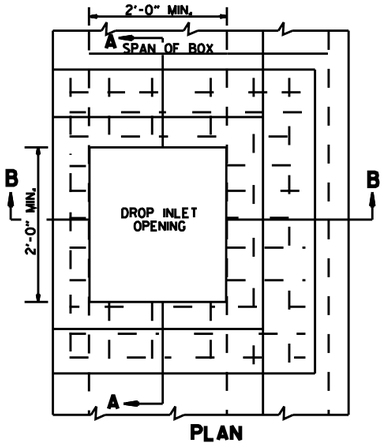

PLAN

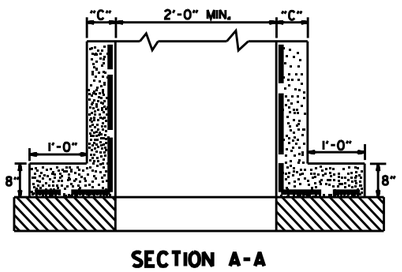

SECTION A-A

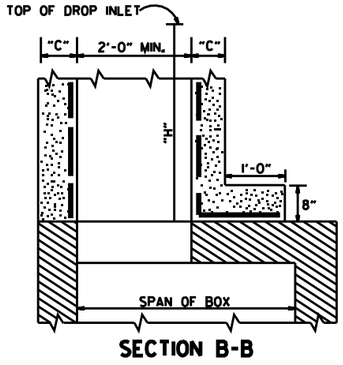

SECTION B-B

METHOD OF CONSTRUCTING DROP INLET ON EXISTING R.C. BOX CULVERT

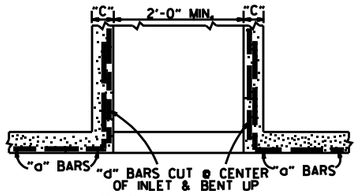

SECTION A-A

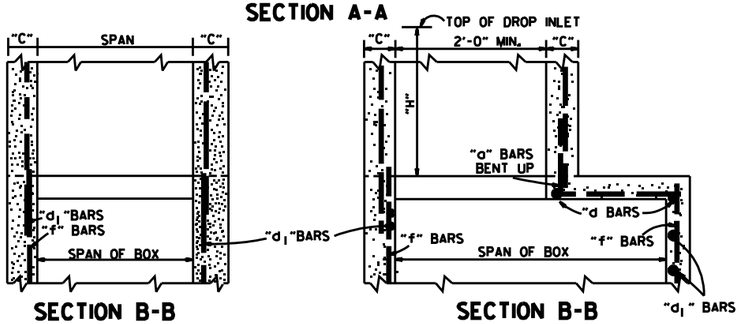

SECTION B-B SECTION B-B

METHOD OF CONSTRUCTING DROP INLET ON NEW R.C. BOX CULVERT

NOTE: "C" DIMENSIONS AND REINFORCING BAR SIZES, SHALL CONFORM TO THOSE SHOWN ON STANDARD DRAWING FOR DROP INLET.

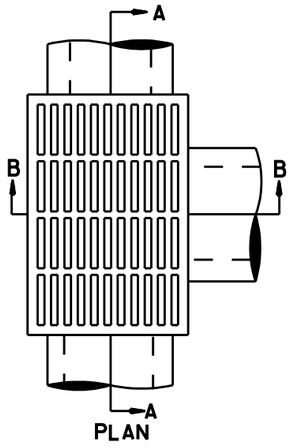

PLAN

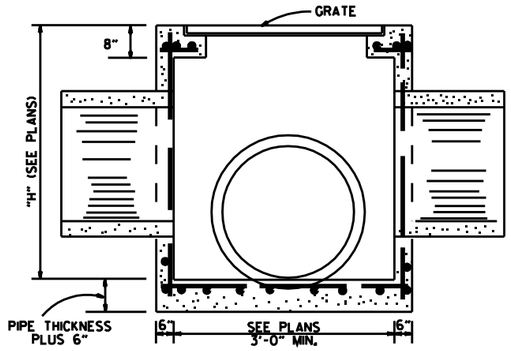

SECTION A-A

NOTE: REINF. BARS TO BE #4 BARS ON 6" CTRS. WITH 1½" MIN. COVER. THIS TYPE DROP INLET TO BE USED WHERE NOT SUBJECTED TO TRAFFIC.

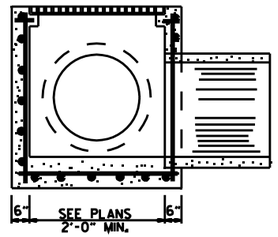

SECTION B-B

DROP INLET (TYPE E)

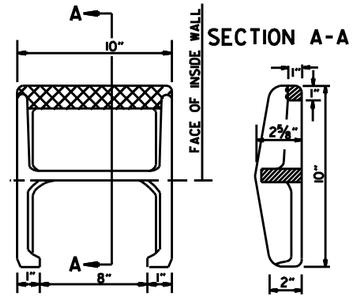

SECTION A-A

APPROX. WEIGHT = 11 LBS. (CAST IRON)

PLAN

NOTE: THIS DETAIL IS TYPICAL. OTHERS MAY BE USED WITH PRIOR APPROVAL OF THE ENGINEER.

DETAIL OF STEP FOR DROP INLET

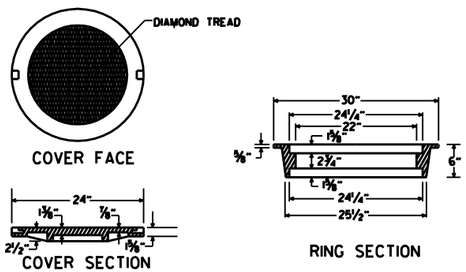

APPROXIMATE TOTAL WEIGHT = 333 LBS.

HEAVY DUTY RING & COVER

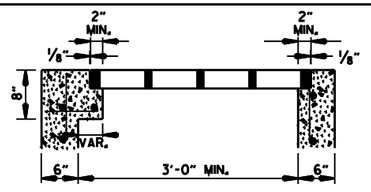

SECTION A-A

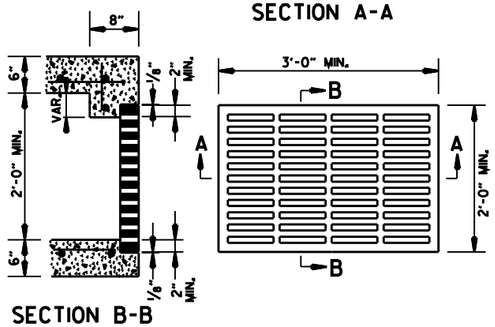

SECTION B-B

APPROXIMATE MINIMUM WATERWAY OPENING = 260 SQ. IN.

GRATE FOR TYPE E DROP INLET

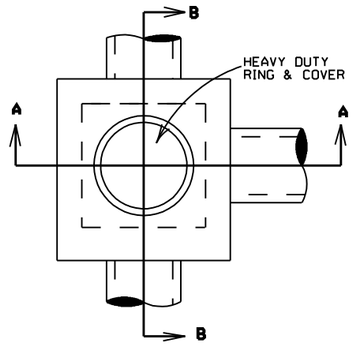

PLAN

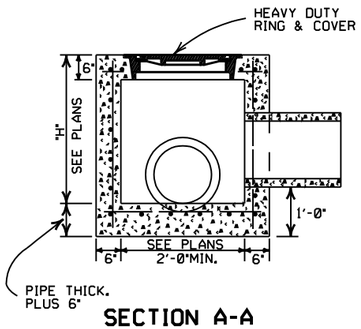

SECTION A-A

NOTE: REINF. BARS TO BE #4 BARS ON 6" CTRS. WITH 1½" MIN. COVER. THIS TYPE JUNCTION BOX TO BE USED WHERE NOT SUBJECTED TO TRAFFIC.

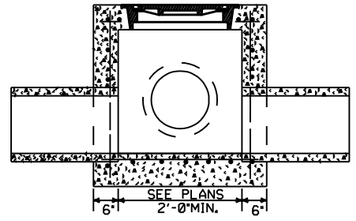

SECTION B-B

JUNCTION BOX (TYPE E)

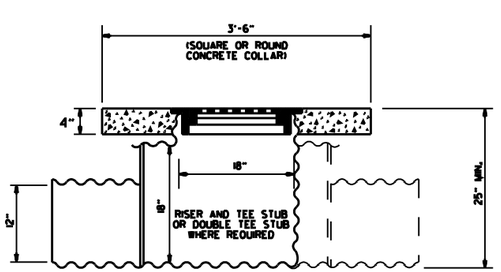

NOTE: CONCRETE COLLAR TO BE CAST IN PLACE. 12" PIPE CULVERTS TO BE MEASURED AND PAID FOR AS " 12" SIDE DRAIN ".

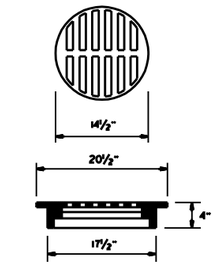

USE NEENAH R-5901-C OR EQUIVALENT BICYCLE SAFE FRAME AND GRATE

DETAIL OF YARD DRAIN

GENERAL NOTES:

1. ALL EXPOSED CORNERS SHALL BE ¾" CHAMFERED.
2. STEPS SHALL BE INSTALLED ON 16" CENTERS ON ALL INLETS 4'-0" HIGH OR OVER, OR AS APPROVED BY THE ENGINEER.
3. EXPANSION JOINT MATERIAL SHALL BE ¾" PREFORMED FIBER.
4. GRATE OR GRATE AND FRAME SHALL BE CONSTRUCTED OF CAST IRON AND SHALL CONFORM TO THE REQUIREMENTS OF THE STANDARD SPECIFICATIONS FOR GRAY IRON CASTINGS AASHTO M 105 CLASS 35B. GRATE MAY BE USED WITHOUT FRAME.
5. GRATE AND FRAME SHALL NOT BE PAINTED.
6. GRATE SHALL BE BICYCLE SAFE.
7. HEAVY DUTY RING SHALL ALWAYS BE INSTALLED WITH FLANGE ON TOP.
8. HEAVY DUTY RING AND COVER SHALL BE CONSTRUCTED OF CAST IRON AND SHALL CONFORM TO THE REQUIREMENTS OF THE STANDARD SPECIFICATIONS FOR GRAY IRON CASTINGS AASHTO M105 CLASS 35B & AASHTO M306.
9. HEAVY DUTY RING AND COVER SHALL NOT BE PAINTED.
10. DIMENSIONS SHOWN FOR RING AND COVER ARE TYPICAL. THE CONTRACTOR MAY SUBSTITUTE SIMILAR CASTINGS WITH THE APPROVAL OF THE ENGINEER. REQUESTING APPROVAL FOR CASTING DESIGNS MAY BE MADE BY REFERRING TO PREVIOUSLY APPROVED DRAWINGS.

DATE REV.	REVISION	DATE FILMED
11-16-01	ADDED NOTE 10	
1-12-00	REVISED HEAVY DUTY RING & COVER	
7-02-98	CHANGED GRATE DETAIL, DELETED DI(TYPE D), REPLACED RING & COVER W/HEAVY DUTY RING & COVER, ADDED JUNCTION BOX (TYPE E)	
6-26-97	ADDED DIMENSION TO TYPE IV-A	
10-18-96	ADDED DETAIL OF YARD DRAIN	
8-15-91	DELETE TYPE IV GRATE	
7-15-88	REVISED STEP DETAIL	
5-20-83	REVISED DETAILS OF GRATES (TYPE IV & IV-A)	
2-4-83	ADDED GENERAL NOTE NO. 4	
3-2-81	ADDED TYPE IV-A GRATE	
5-22-74	DELETED INLET (TYPE F) & GRATE (TYPE III)	
10-2-72	REVISED AND REDRAWN	

ARKANSAS STATE HIGHWAY COMMISSION

DETAILS OF DROP INLETS & JUNCTION BOXES

STANDARD DRAWING FPC-9

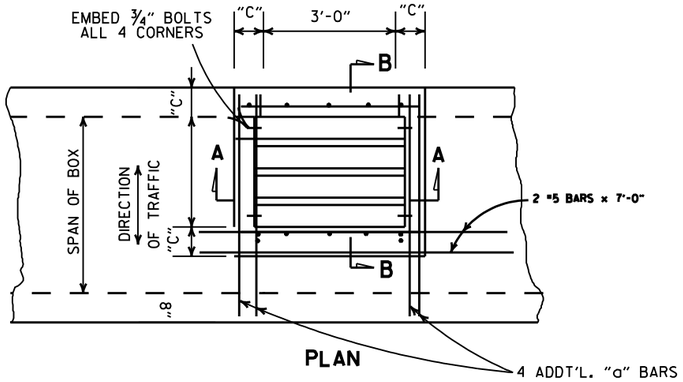

PLAN

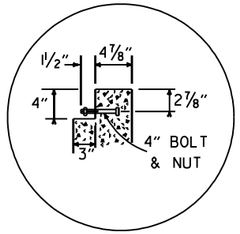

DETAIL A

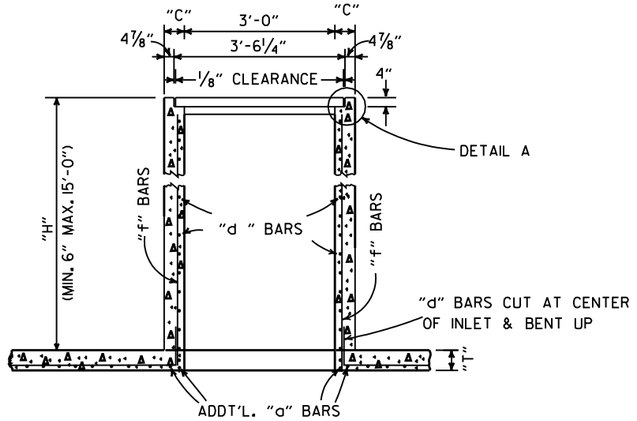

SECTION A-A

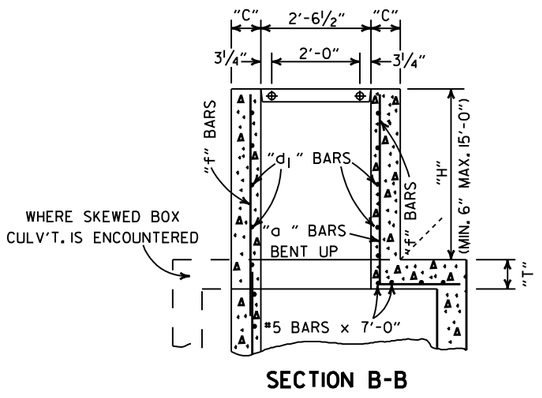

SECTION B-B

NOTE: ADDT'L.REINF. STEEL TO BE INCLUDED IN UNIT PRICE BID PER TYPE "TM" D.I.

DIMENSIONS & REINF. BARS FOR D.I. TO BE THE SAME AS THOSE SHOWN ON APPLICABLE STD. BARREL DRAWING FOR R.C. BOX CULVERTS.

DROP INLET TYPE "TM"
FOR REINFORCED CONC. BOX CULVERTS

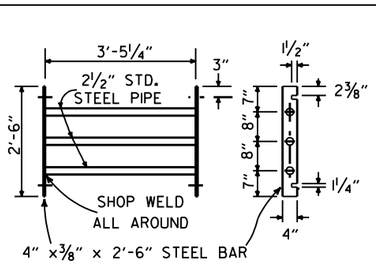

GRATE DETAIL

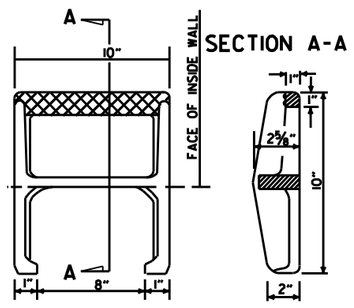

APPROX. WEIGHT = 11 LBS. (CAST IRON)

PLAN

NOTE: THIS DETAIL IS TYPICAL. OTHERS MAY BE USED WITH PRIOR APPROVAL OF THE ENGINEER.

DETAIL OF STEP FOR DROP INLET

GENERAL NOTES:

1. STEEL PIPE FOR GRATES AND BOLTS SHALL CONFORM TO THE REQUIREMENTS OF SECTION 807. BOLTS SHALL CONFORM TO ONE OF THE FOLLOWING: ASTM A193, GRADE B8 CLASS 1 OR 2, ASTM A307 OR AASHTO M 164.
2. STEEL PIPE FOR GRATES SHALL BE "STANDARD WEIGHT" PIPE CONFORMING TO ASTM A53 NATIONAL STANDARD PIPE.
3. BOLTS, NUTS, WASHERS SHALL BE GALVANIZED IN ACCORDANCE WITH AASHTO M 232 OR AASHTO M 298, CLASS 40 OR 50.
4. ALL EXPOSED CORNERS TO HAVE ¾" CHAMFER.
5. ALL #4 AND #5 REINFORCING BARS TO HAVE 1½" COVER. LARGER SIZES TO HAVE 2" COVER.
6. THE COMPLETE PIPE GRATE SHALL BE PAINTED IN ACCORDANCE WITH THE STANDARD SPECIFICATIONS.

TABLE OF "W" DIMENSIONS

I.D. PIPE	SKEW OF CROSS DRAIN		
	STRAIGHT	30°	45°
	"W"	"W"	"W"
24"	4'-0"	4'-0"	4'-0"
30"	4'-0"	4'-0"	4'-5"
36"	4'-0"	4'-3"	5'-3"
42"	4'-3"	4'-11"	6'-1"
48"	4'-10"	5'-7"	6'-11"

NOTE: DIMENSIONS SHOWN ABOVE ARE FOR PIPES INTERSECTING DROP INLET ON ONE SIDE ONLY. FOR SKEWED PIPES INTERSECTING BOTH SIDES OF DROP INLET, "W" WILL NEED TO BE INCREASED OR AXIS OF INTERSECTING PIPES WILL NEED TO BE SHIFTED.

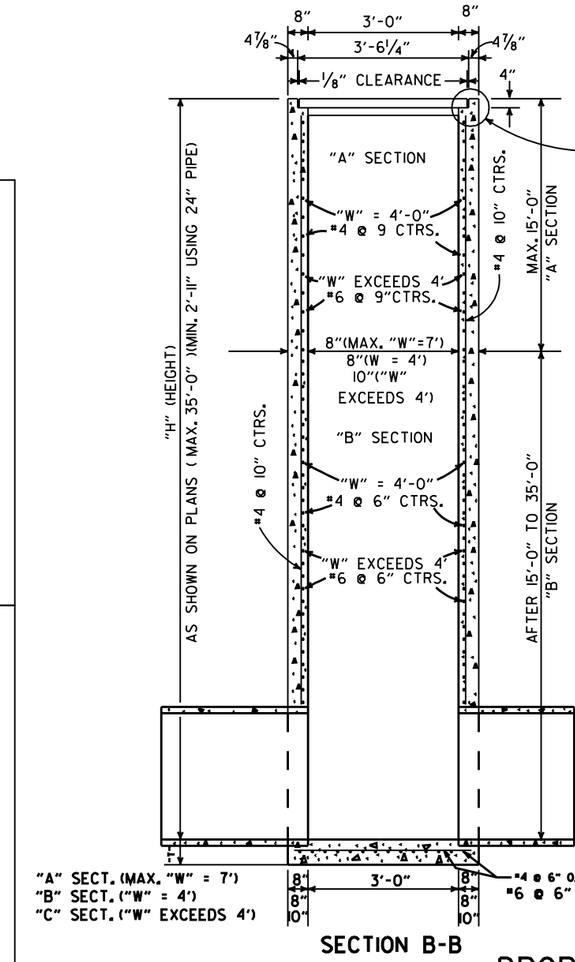

SECTION B-B

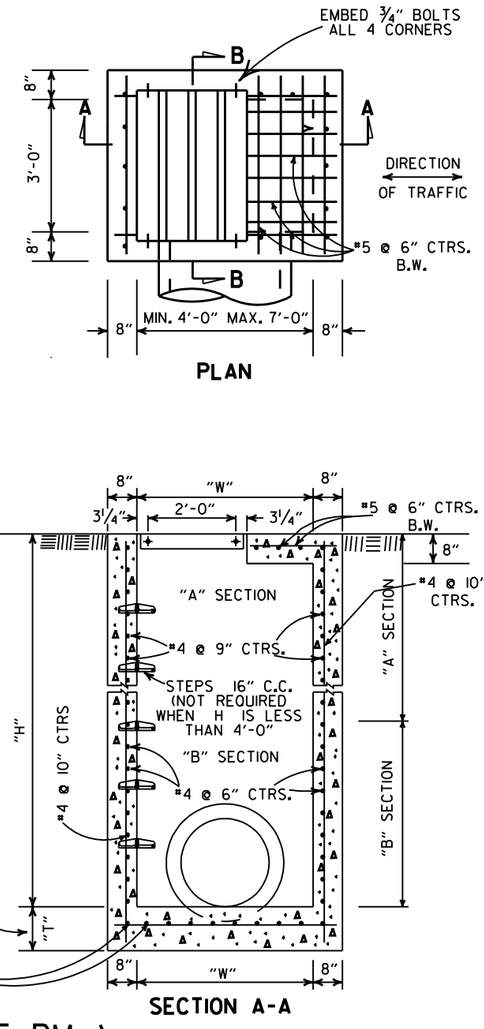

SECTION A-A

DROP INLET(TYPE RM)

REVISED		DATE FILMED
8-22-02	ADDED & REVISED DIMENSION TO SECTION A-A	
1-12-00	CORRECTED DIMENSION ON SECTION B-B	
11-06-97	ADDED DIMENSION TO SECTION A-A	
10-18-96	REVISED ASTM REF. TO AASHTO AND ADDED NOTE TO TABLE OF "W" DIMENSIONS	
10-1-92	ADDED DIRECTION OF TRAFFIC	10-1-92
8-15-91	ADDED NOTE ABOUT PAINTING OF GRATE	8-15-91
11-30-89	ALTERED DETAIL A	11-30-89
7-15-88	REVISED STEP DETAIL, TM & RM D.I. & GRATE DETAIL	719-7-15-88
10-2-72	REVISED AND REDRAWN	542-10-2-72

ARKANSAS STATE HIGHWAY COMMISSION

DETAILS OF DROP INLETS

STANDARD DRAWING FPC-9D

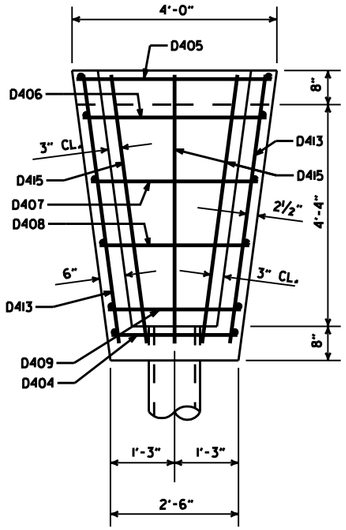

PLAN

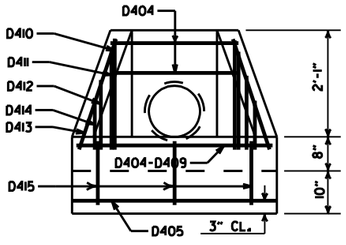

FRONT ELEVATION

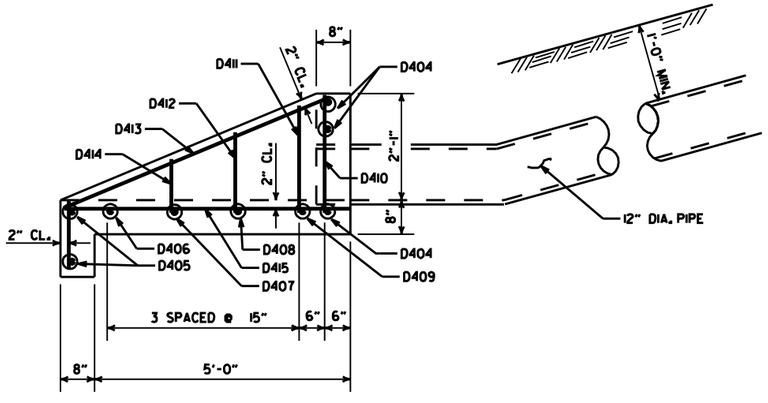

SIDE ELEVATION
CONCRETE SPILLWAY

BAR LIST (CONCRETE SPILLWAY)

MARK	NO. REQ'D.	LENGTH	BENDING DIAGRAM
D404	3	2'-2"	5'-4", 1'-2", 2" P.D., D415
D405	2	3'-8"	
D406	1	3'-5"	
D407	1	3'-1"	
D408	1	2'-9"	
D409	1	2'-5"	
D410	2	2'-5"	
D411	2	2'-2"	
D412	2	1'-9"	
D413	2	5'-6"	
D414	2	1'-2"	
D415	3	6'-5"	

DETAILS OF CONCRETE SPILLWAY (TYPE A)

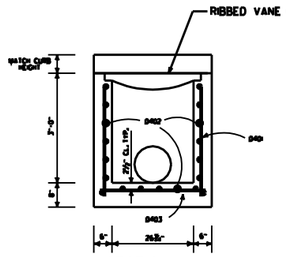

SECTION A-A

BAR LIST (DROP INLET)

MARK	TYPE N-1		TYPE N-2		TYPE N-3	
	NO. REQ'D.	LENGTH	NO. REQ'D.	LENGTH	NO. REQ'D.	LENGTH
D401	20	3'-0"	26	3'-0"	32	3'-0"
D402	19	2'-2"	19	3'-8"	19	5'-2"
D403	17	2'-11"	20	2'-11"	23	2'-11"

ALL BARS #4 @ 6" SPACING

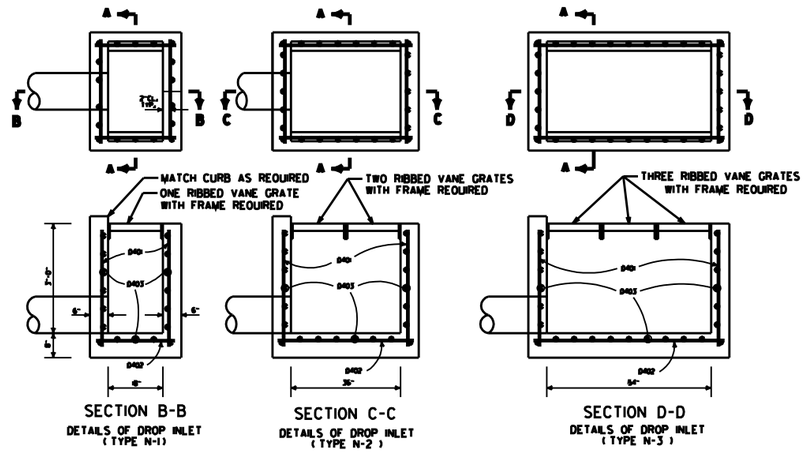

SECTION B-B
DETAILS OF DROP INLET
(TYPE N-1)

SECTION C-C
DETAILS OF DROP INLET
(TYPE N-2)

SECTION D-D
DETAILS OF DROP INLET
(TYPE N-3)

DETAILS OF DROP INLET

GENERAL NOTES (GRATE & FRAME)

1. RIBBED VANE GRATE AND FRAME SHALL BE CONSTRUCTED OF CAST IRON AND SHALL CONFORM TO THE REQUIREMENTS OF THE STANDARD SPECIFICATIONS FOR GRAY IRON CASTINGS AASHTO M 105 CLASS 35B & AASHTO M 306.
2. GRATE AND FRAME SHALL NOT BE PAINTED.
3. GRATE AND FRAME SHALL BE INSTALLED IN DROP INLET IN ASSEMBLED POSITION.
4. APPROXIMATE WEIGHT OF GRATE SHALL BE 170 LBS.

SECTION A-A

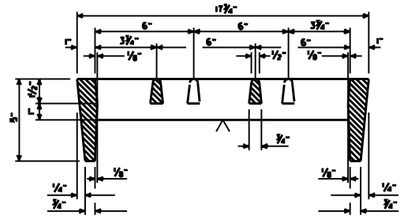

SECTION B-B

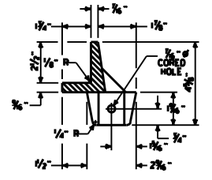

SECTION THRU FRAME

DETAILS OF RIBBED VANE GRATE AND FRAME

DATE REVISED	DATE FILMED	DESCRIPTION
7-02-98		REVISED SECT. A-A DETAIL OF DROP INLET & ADDED AASHTO REF. TO NOTE 1, REVISED GRATE
10-18-96		REVISED ASTM REF. TO AASHTO
8-15-91		ISSUED

ARKANSAS STATE HIGHWAY COMMISSION

DETAILS OF DROP INLETS AND SPILLWAY OUTLET

STANDARD DRAWING FPC-9N

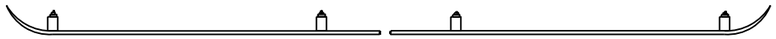

PLAN

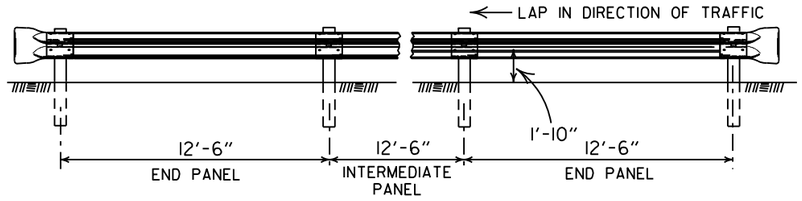

ELEVATION

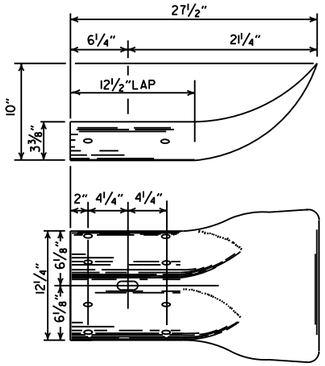

TERMINAL SECTION

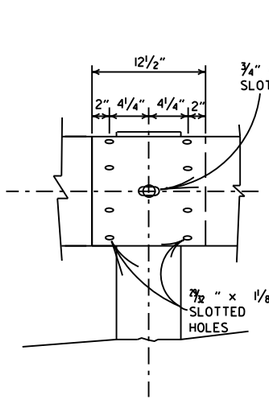

RAIL SPLICE

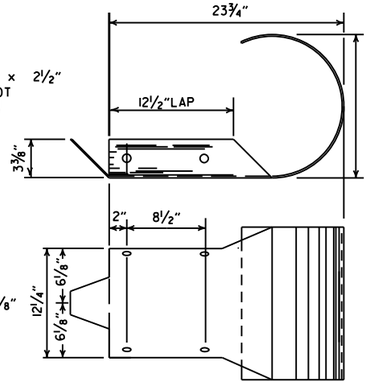

TERMINAL SECTION

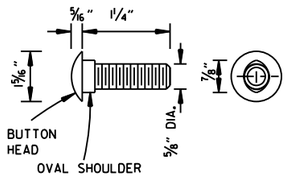

SPLICE BOLT

NOTE: POST BOLT SAME EXCEPT LENGTH.

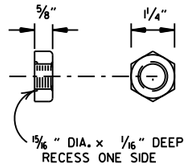

NUT

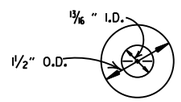

CUT STEEL WASHER

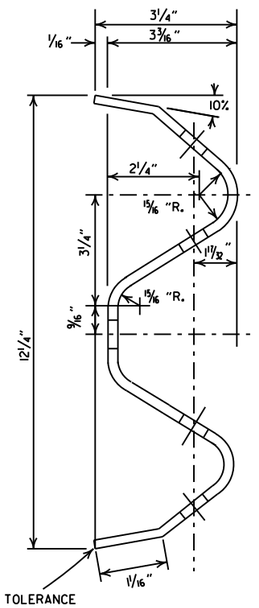

SECTION THRU RAIL

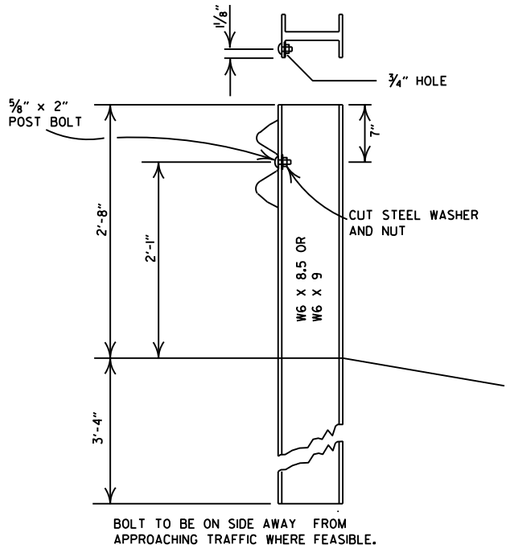

STEEL POST

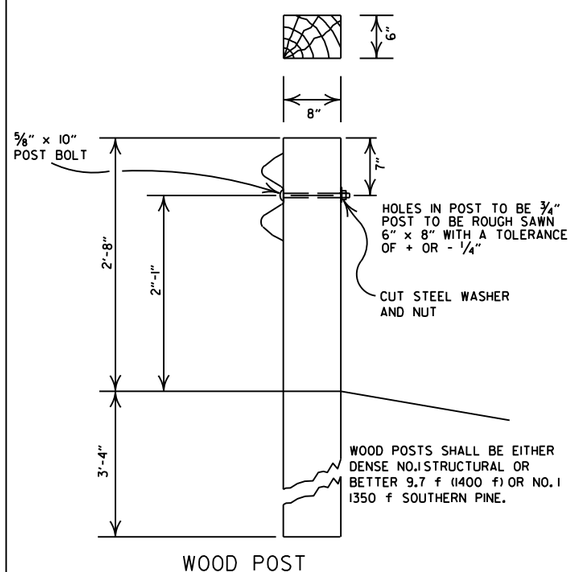

WOOD POST

DETAILS OF POST CONNECTIONS

DATE	REVISION	FILMED
11-07-19	RENUMBERED AND RENAMED	
11-16-17	REVISED GUARDRAIL HEIGHT	
07-14-10	RAISED HEIGHT OF GUARDRAIL 1"	
08-22-02	REVISED DIMENSION ON STEEL POST	
11-16-01	REVISED STEEL AND WOOD POST	
08-12-98	REMOVED CONCRETE POST	
10-18-96	CHANGED WOOD POST NOTE	10-18-96
06-02-94	ADDED ALTERNATE STEEL POST SIZE	
08-05-93	REVISED STEEL POSTS SIZE	8-5-93
08-15-91	DELETE STEEL PLATE WASHER & ADDED TYPE C TO TITLE	8-15-91
10-30-87	REMOVED DET. PLCMNT. ON HWY.	555-11-20-87
01-04-83	GRADE FOR WOOD POSTS	679-1-4-83
10-01-77	HARDENED WASHER	922-10-1-72
10-02-72	REVISED & REDRAWN	521-10-2-72

ARKANSAS STATE HIGHWAY COMMISSION

GUARDRAIL DETAILS (TYPE C) STREET / ROAD BARRICADE OR TEMPORARY INSTALLATION

STANDARD DRAWING GR-5

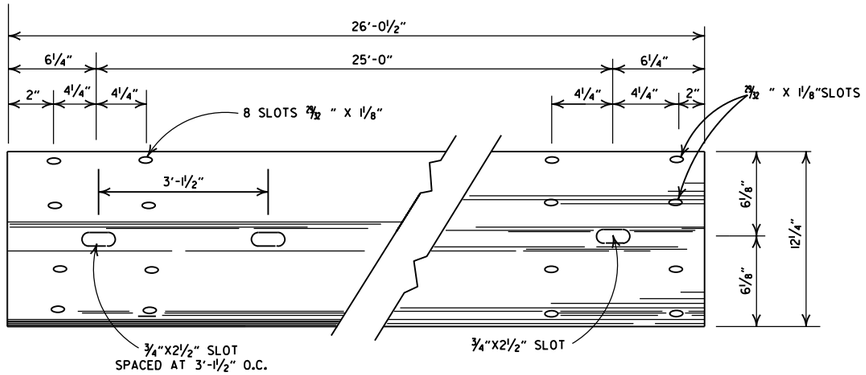

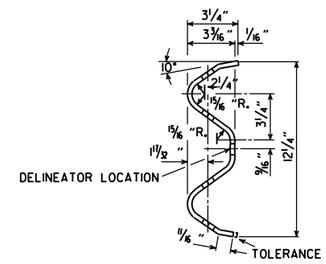

DETAILS OF W-BEAM GUARDRAIL

RAIL SECTION OF CLOSELY SIMILAR DIMENSIONS AND COMPARABLE STRENGTH MAY BE SUBSTITUTED IF APPROVED BY THE ENGINEER.

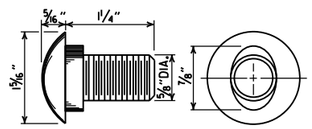

SPLICE BOLT
POST BOLT - SAME EXCEPT LENGTH

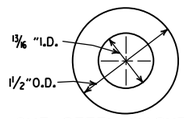

CUT STEEL WASHER

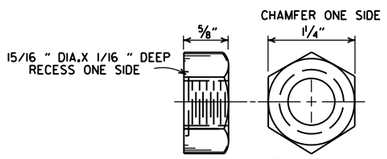

NUT

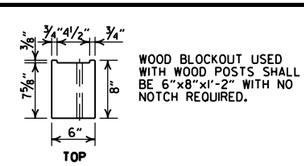

WOOD BLOCKOUT USED WITH WOOD POSTS SHALL BE 6"x8"x1'-2" WITH NO NOTCH REQUIRED.

WOOD BLOCKOUT (W-BEAM)

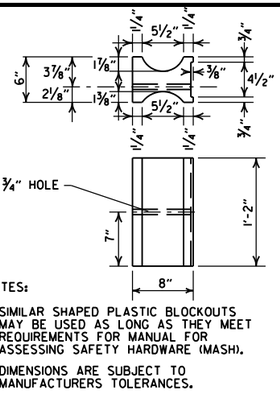

NOTES:

1. SIMILAR SHAPED PLASTIC BLOCKOUTS MAY BE USED AS LONG AS THEY MEET REQUIREMENTS FOR MANUAL FOR ASSESSING SAFETY HARDWARE (MASH).
2. DIMENSIONS ARE SUBJECT TO MANUFACTURERS TOLERANCES.

PLASTIC BLOCKOUT (W-BEAM)

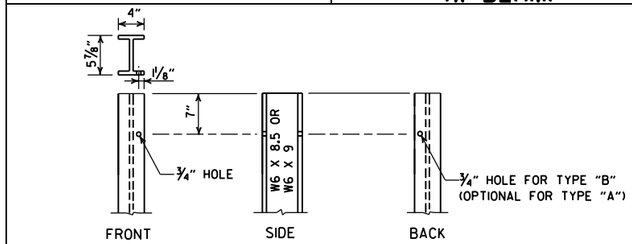

STEEL POST

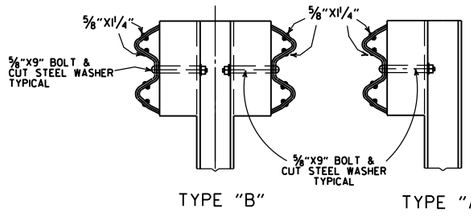

DETAILS OF STEEL LINE POST CONNECTIONS (W-BEAM)

-GENERAL NOTES-

ALL BOLTS SHALL BE SUFFICIENT LENGTH TO EXTEND THROUGH THE FULL THICKNESS OF THE NUT AND NO MORE THAN ¾" BEYOND IT.

WHERE W-BEAM GUARDRAIL CONTINUES, THE INTERMEDIATE SECTIONS SHALL HAVE A POST SPACING OF 6'-3" UNLESS OTHERWISE NOTED.

W-BEAM GUARDRAIL REPRESENTING INTERMEDIATE SECTIONS WILL BE MEASURED ALONG THE ROADWAY FACE FROM CENTERLINE OF POST TO CENTERLINE OF POST.

USE W-BEAM GUARDRAIL COMPONENTS OF SAME MATERIAL FOR ENTIRE JOB. FOR EXTENSIONS OR MODIFICATION OF EXISTING GUARDRAIL, W-BEAM GUARDRAIL COMPONENTS OF THE SAME TYPE AS THOSE EXISTING SHALL BE USED.

ANY BACKFILLING UNDER OR AROUND POST SHALL BE DAMP SAND THOROUGHLY TAMPED IN PLACE.

WOOD POSTS & WOOD BLOCKS SHALL BE EITHER DENSE NO. 1 STRUCTURAL OR BETTER 9.7 f (1400 f) OR NO. 1 1350 f SOUTHERN PINE.

CONTRACTOR SHALL HAVE THE OPTION OF USING WOOD BLOCKOUTS FOR W-BEAM GUARDRAIL OR PLASTIC BLOCKOUTS, AS LONG AS BLOCKOUT USED MEETS REQUIREMENTS FOR MANUAL FOR ASSESSING SAFETY HARDWARE (MASH) FOR W-BEAM GUARDRAIL.

DELINEATORS SHALL BE MOUNTED AT 37.5' SPACING ON THE FRONT FACE OF THE GUARDRAIL. SPACING MAY BE REDUCED IN CURVES, AS DIRECTED BY THE ENGINEER. COLOR SHALL BE IN ACCORDANCE WITH THE MANUAL ON UNIFORM TRAFFIC CONTROL DEVICES. PAYMENT FOR DELINEATORS SHALL BE CONSIDERED INCLUDED IN THE PRICE BID PER LIN. FT. FOR GUARDRAIL.

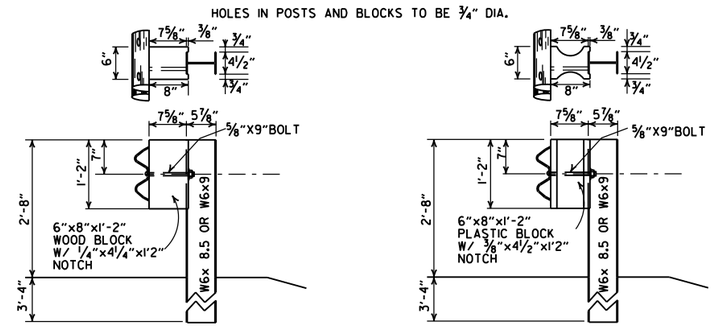

WOOD BLOCKOUT CONNECTIONS

PLASTIC BLOCKOUT CONNECTIONS

DETAILS OF STEEL LINE POST CONNECTIONS (W-BEAM)

POSTS AND BLOCKS TO BE ROUGH SAWN 6"X8" WITH A TOLERANCE OF + OR - ¼".

WOOD BLOCKOUT CONNECTIONS

PLASTIC BLOCKOUT CONNECTIONS

DETAILS OF WOOD LINE POST CONNECTIONS (W-BEAM)

DATE	REVISION	FILMED
05-19-22	REVISED GENERAL NOTES, ADDED DELINEATOR LOCATION.	
11-07-19	RENUMBERED AND RENAMED	
11-16-17	REVISED GENERAL NOTES AND RAISED GUARDRAIL HEIGHT 3"	
07-14-10	RAISED HEIGHT OF GUARDRAIL 1"	
10-15-09	ADDED REFERENCE TO MASH	
04-10-03	REVISED GENERAL NOTES	
08-22-02	REVISED DIMENSION ON WOOD & PLASTIC BLOCKOUT CONNECTIONS & STEEL POST	
11-16-01	REVISED WOOD BLOCKOUT & DETAILS OF WOOD LINE POST CONNECTIONS	
03-30-00	REMOVED GUARDRAIL AT BRIDGE ENDS	
01-12-00	ADDED PLASTIC BLOCKOUT	
08-12-98	REV. BLOCKOUTS TO WOOD, DELETED CONC. POST & REV. GENERAL NOTE, DELETED DET. OF GUARDRAIL REPLACE. BEHIND CURB & DET. OF POST PLACE. IN SOLID ROCK, & ADDED DETAILS OF STEEL LINE POST CONN. REMOVED BACK-UP PLATE, REVISED HOLES IN STEEL POLES	
04-03-97	REMOVED "LAP IN DIRECTION OF TRAFFIC" NOTE & PLACED ARROWS ON WASHERS	
10-18-96	REVISED WOOD POST NOTE	
06-02-94	ADDED ALT. STEEL POST SIZE	
08-05-93	REVISED STEEL POST SIZE	8-5-93
10-01-92	REDRAWN & REVISED	10-1-92
08-15-91	REVISED WASHER NOTE	8-15-91
08-02-90	REV. GEN. NOTE & DEPTH OF ANC. POST IN ROCK	8-2-90
07-15-88	REVISED SECTION 3 & GENERAL NOTES	
03-04-88	REV. ANCHOR POST, ELEV. NOTES & POST IN ROCK	780-3-4-88
10-30-87	REVISED WOOD LINE POST DETAIL	546-10-30-87
10-09-87	REDRAWN & REVISED	802-10-9-87

ARKANSAS STATE HIGHWAY COMMISSION

GUARDRAIL DETAILS

STANDARD DRAWING GR-6

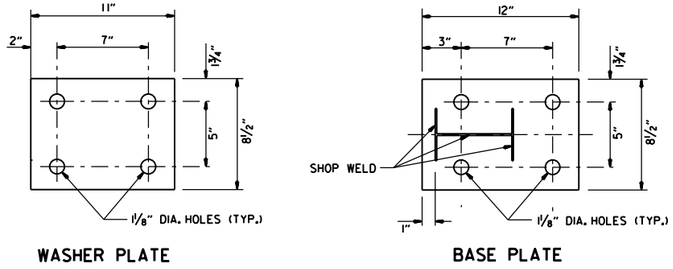

WASHER PLATE

BASE PLATE

Note: Bolts, nuts, washers and plates shall be galvanized in accordance with Section 807 of the Standard Specifications.

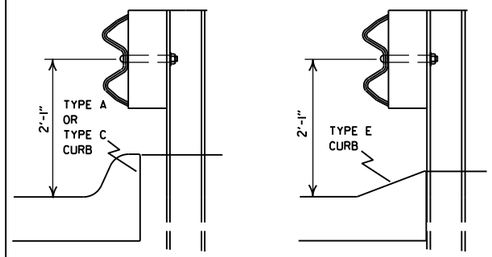

DETAIL OF GUARDRAIL PLACEMENT BEHIND CURB (W-BEAM)

FOR DESIGN SPEEDS OF 50 MPH OR LESS ALL CURB FACES, AS SHOWN ON STD. DRWG. CG-1, MAY BE USED. FOR DESIGN SPEEDS OF 55 MPH OR MORE TYPE "E" CURB FACE SHALL BE USED.

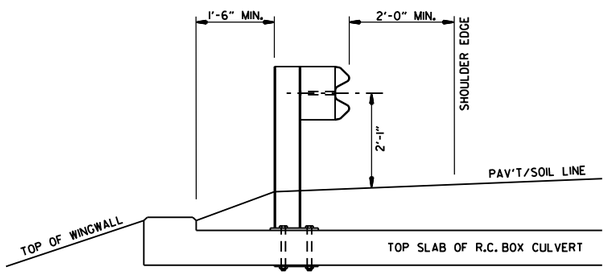

SECTION A-A

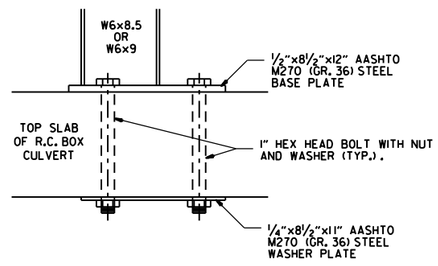

DETAIL OF CONNECTION

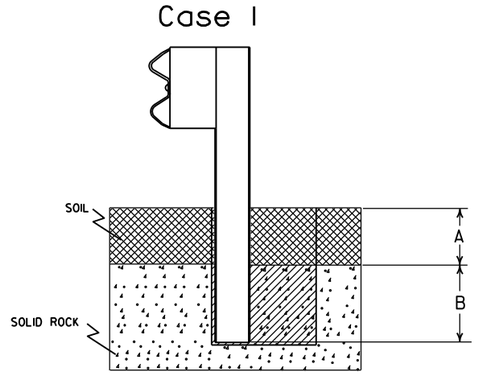

Plan View Steel Posts

Either hole configuration acceptable

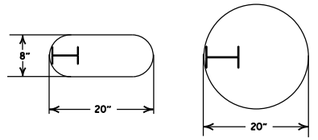

Plan View Wood Posts

Either hole configuration acceptable

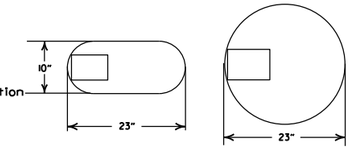

Notes: For overlying soil depths (A) ranging from 0 to 18", the depth of required drilling (B) is equal to 24".

Zone A:
Backfill according to Section 617.03(a).

Zone B:
Backfill hole in 6" lifts with material meeting the requirements of Section 802.02(c) - Alternate gradation. Compact to 95% maximum dry density per ASTM D-698.

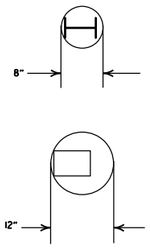

Notes: For overlying soil depths (A) ranging from 18" to 44", the depth of required drilling (B) is equal to either 12" or 44" minus the depth of soil whichever is less.

Zone A & B:
Backfill according to Section 617.03(a).

DETAIL OF POST PLACEMENT IN SOLID ROCK (W-BEAM)

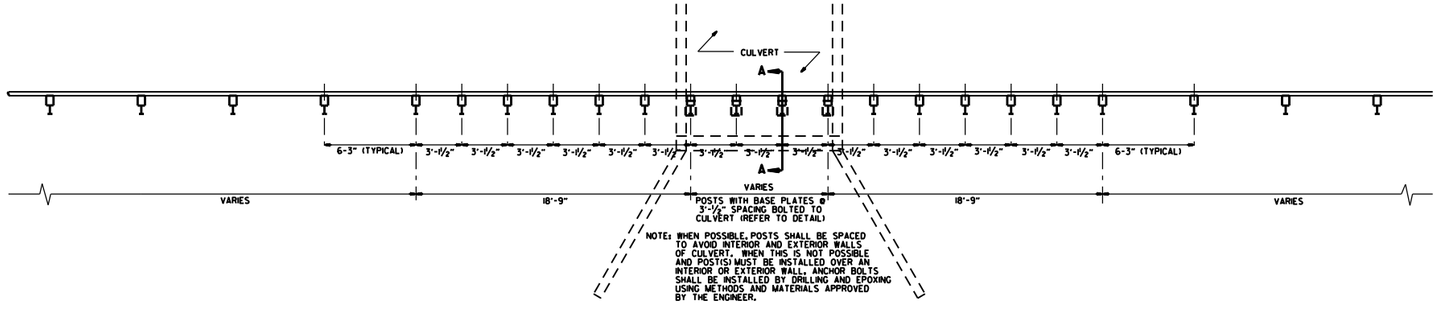

PLAN LAYOUT OF TYPE A GUARDRAIL AT LOW-FILL CULVERTS

NOTE: THIS DETAIL IS TO BE USED ONLY WHEN THE COVER OVER THE CULVERT DOES NOT PERMIT FULL EMBEDMENT OF GUARDRAIL POSTS AS SHOWN ON STD. DWG. GR-6.

DATE	REVISION	FILMED
11-07-19	RENUMBERED, RENAMED, REVISED REFERENCE	
11-16-17	REVISED GUARDRAIL HEIGHT	
07-14-10	RAISED HEIGHT OF GUARDRAIL 1"	
04-12-07	REVISED DETAIL OF GUARDRAIL PLACEMENT BEHIND CURB	
11-10-05	ADDED GUARDRAIL PLACEMENT BEHIND CURB; REVISED DETAIL OF CONNECTION	
11-18-04	REVISED POST PLACEMENT IN ROCK & CULVERT CONNECTION DETAILS. ADDED DETAIL FOR GUARDRAIL PLACEMENT AT LOW-FILL CULVERTS	
03-30-00	REMOVED CONCRETE INSERT ANCHOR	
08-12-98	CHANGED STEEL SPACER BLOCK TO WOOD BLOCKOUT, ADDED DET. OF GUARDRAIL CONNECTION TO R.C. BOX CULV'T., DELETED DET. OF STEEL LINE POST CONN. & ADDED DET. OF GUARDRAIL PLACE. BEHIND CURB & DET. OF POSTPLACE. IN SOLID ROCK	
04-03-96	PLACED ARROWS AT CUT STEEL WASHERS	4-3-96
10-18-96	REV. ASTM REF. TO AASHTO	
11-22-95	ADDED OPTIONAL HOLES	
06-02-94	REVISED ALTERNATE POST SIZE	
08-05-93	REVISED STEEL POST SIZE	
10-01-92	REDRAWN & REVISED	10-1-92
08-02-90	DEL. WASHER ON ANCHOR ASSEMBLY	8-2-90
07-15-88	CONFORMED TO 1988 SPECS	
03-04-88	REVISED ANCHOR NOTE	
10-30-87	REVISED ANCHOR ASSEMBLY	712-10-30-87
10-30-87	REVISED PLACEMENT BEHIND CURB	547-10-30-87
10-09-87	REDRAWN & REVISED	803-10-9-87

ARKANSAS STATE HIGHWAY COMMISSION

GUARDRAIL DETAILS

STANDARD DRAWING GR-7

NOTE: GUARDRAIL WITH GUARDRAIL TERMINAL (TYPE 1) TO BE INSTALLED ONLY AT LOCATIONS SHOWN ON PLANS.

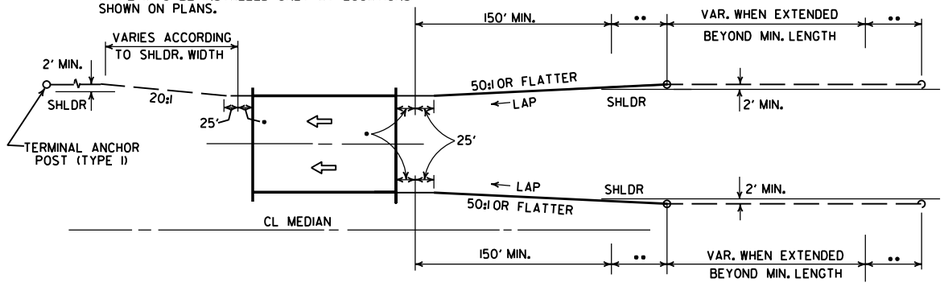

ONE-WAY TRAFFIC

••• LAP OF GUARDRAIL SHALL BE AS SHOWN FOR A DISTANCE OF UP TO 200'. CHANGE TO LAP IN DIRECTION OF TRAVEL.

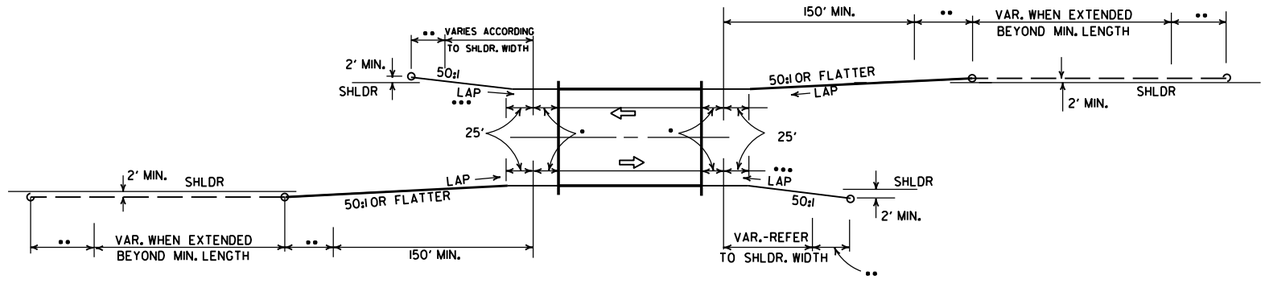

TWO-WAY TRAFFIC

METHODS OF INSTALLATION OF GUARDRAIL AT LESS THAN FULL SHOULDER WIDTH BRIDGES USING GUARDRAIL TERMINAL (TYPE 2)

••• LAP OF GUARDRAIL SHALL BE AS SHOWN FOR A DISTANCE OF UP TO 200'. CHANGE TO LAP IN DIRECTION OF TRAVEL.

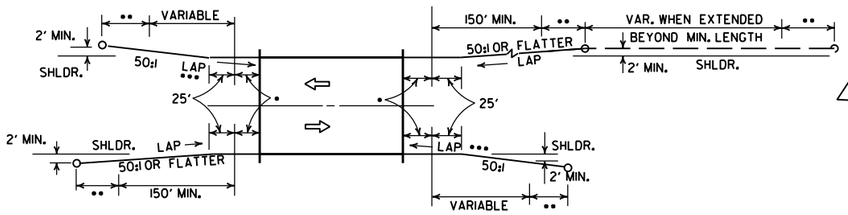

TWO-WAY TRAFFIC

NOTE: GUARDRAIL WITH GUARDRAIL TERMINAL (TYPE 1) TO BE INSTALLED ONLY AT LOCATIONS SHOWN ON PLANS.

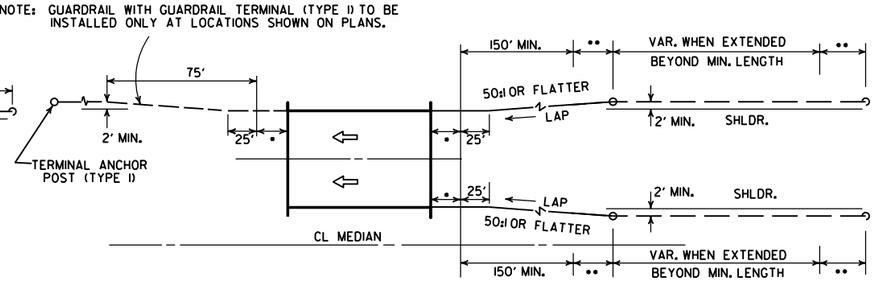

ONE-WAY TRAFFIC

METHOD OF INSTALLATION OF GUARDRAIL AT FULL SHOULDER WIDTH BRIDGES USING GUARDRAIL TERMINAL (TYPE 2)

••• LAP OF GUARDRAIL SHALL BE AS SHOWN FOR A DISTANCE OF UP TO 200'. CHANGE TO LAP IN DIRECTION OF TRAVEL.

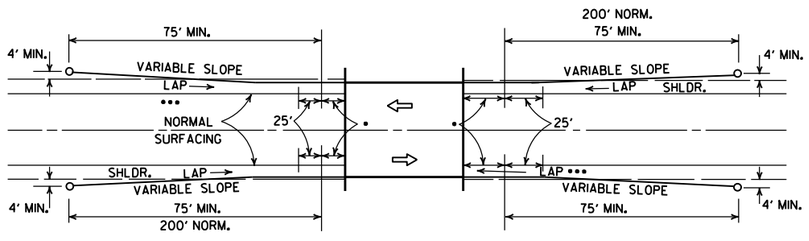

METHOD OF INSTALLATION OF GUARDRAIL USING GUARDRAIL TERMINAL (TYPE 1) (FULL SHOULDER WIDTH OR LESS BRIDGES)

LEGEND

- • THRIE BEAM GUARDRAIL TERMINAL
- •• GUARDRAIL TERMINAL (TYPE 2)

DATE	REVISION	DATE FILM
11-07-19	RENUMBERED AND RENAMED	
4-17-08	REVISED LAYOUTS	
11-10-05	REMOVED GUARDRAIL NOTES AND DETAILS	
11-16-01	DELETED NOTE-METHOD OF INSTALLATION OF GUARDRAIL USING GUARDRAIL TERM. (TY. 1)	
1-12-00	ADDED CONSTRUCTION NOTE	1-12-00
6-26-97	REVISED LAYOUT	
10-1-92	REDRAWN & REVISED	10-1-92
	ADDED NOTE	
10-9-87	REDRAWN & REVISED	

ARKANSAS STATE HIGHWAY COMMISSION

GUARDRAIL DETAILS

STANDARD DRAWING GR-8

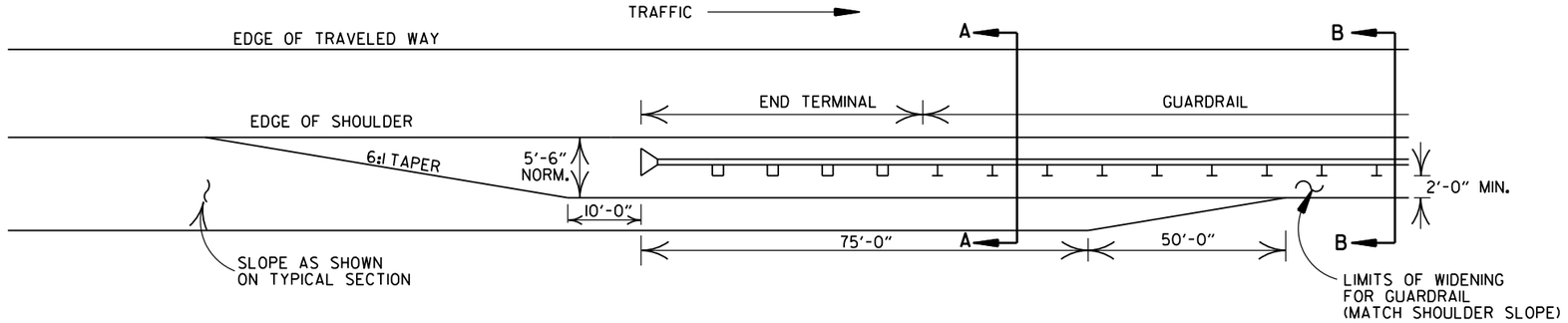

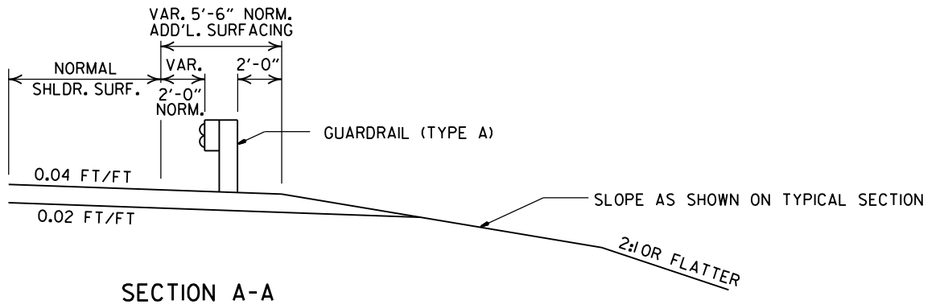

SECTION A-A

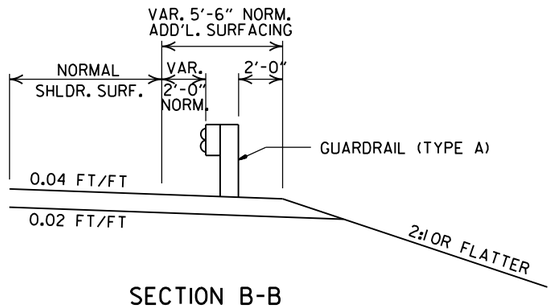

SECTION B-B

DETAILS OF WIDENING FOR GUARDRAIL

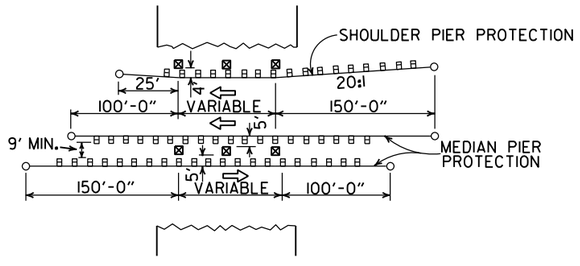

METHOD OF INSTALLATION OF GUARDRAIL AT FIXED OBSTACLE

NOTE: NORMAL SECTION TO BE WIDENED APPROX. 5'-6" EACH SIDE TO SUPPORT GUARDRAIL.

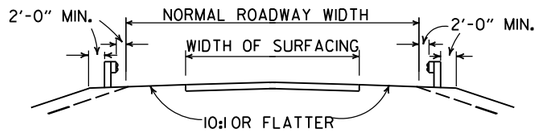

SECTION ON TANGENT

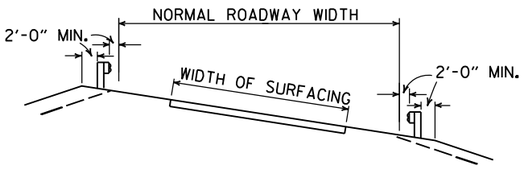

SECTION ON CURVE

DETAILS SHOWING POSITION OF GUARDRAIL ON HIGHWAY

DATE	REVISION	DATE FILM
11-07-19	RENUMBERED AND RENAMED	
4-17-08	MINOR REVISION	
11-10-05	DRAWN	

ARKANSAS STATE HIGHWAY COMMISSION

GUARDRAIL DETAILS

STANDARD DRAWING GR-9

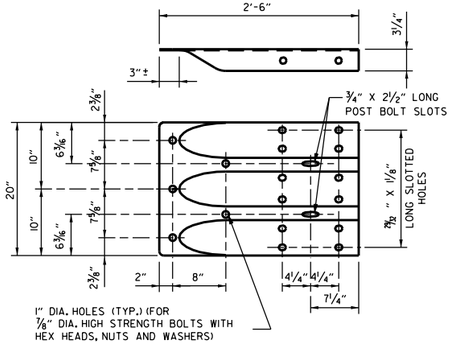

SPECIAL END SHOE

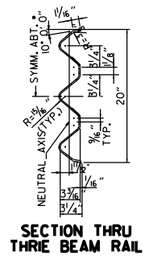

SECTION THRU THRIE BEAM RAIL

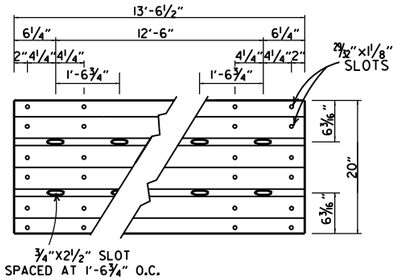

THRIE BEAM RAIL

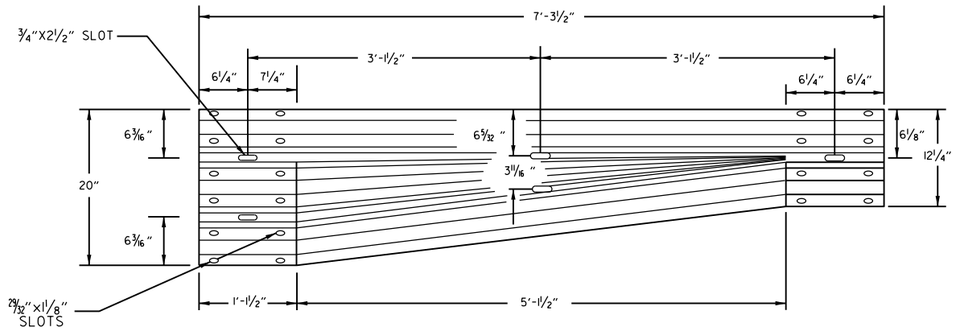

TRANSITION SECTION

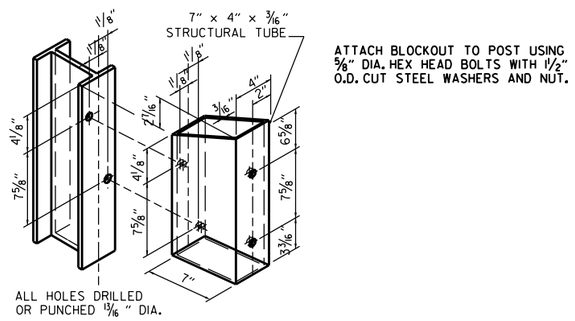

STRUCTURAL STEEL TUBING BLOCKOUT DETAIL

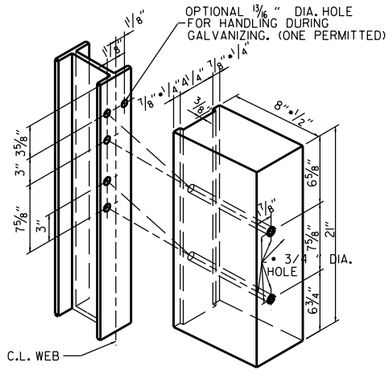

ALL HOLES 13/16" DIAMETER EXCEPT AS NOTED

HOLE PUNCHING DETAIL FOR STEEL POST & WOOD OR PLASTIC BLOCKOUTS

NOTE: BLOCKS SHALL BE THE SAME TYPE THROUGHOUT THE PROJECT LIMITS.

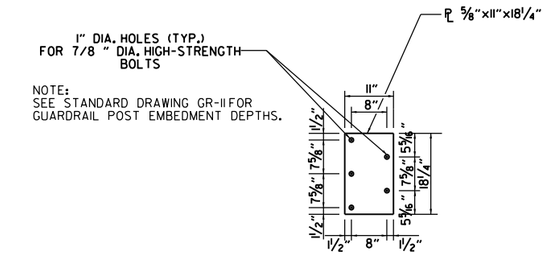

CONNECTOR PLATE

CONNECTOR PLATE SHALL BE AASHTO M270, GR. 36 AND SHALL BE GALVANIZED AFTER FABRICATION. GALVANIZING SHALL CONFORM TO SUBSECTION 807.19 OF THE STANDARD SPECIFICATIONS. CONNECTOR PLATE TO BE BOLTED TO SPECIAL END SHOE USING ⅞" DIA. HIGH STRENGTH BOLTS, WITH THE HEADS PLACED ON THE TRAFFIC FACE. WASHERS SHALL BE USED UNDER THE HEAD AND NUT. BOLTS, NUTS AND WASHERS SHALL BE GALVANIZED AND SHALL CONFORM TO SUBSECTION 807.06.

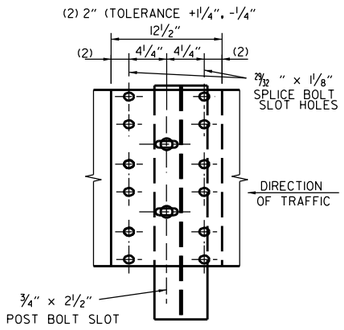

THRIE BEAM RAIL SPLICE AT POST

GENERAL NOTES:

THE THRIE BEAM RAIL, SPECIAL END SHOE, AND THE TRANSITION SECTION SHALL BE MADE OF STEEL AND SHALL BE 12 GAGE. ZINC COATING SHALL BE TYPE 1.

RAIL POSTS SHALL BE SET PERPENDICULAR TO THE ROADWAY PROFILE GRADE AND VERTICALLY IN CROSS SECTION.

ALL BOLTS SHALL BE SUFFICIENT LENGTH TO EXTEND THROUGH THE FULL THICKNESS OF THE NUT AND NO MORE THAN 3"4" BEYOND IT.

ALL LAP SPLICES, INCLUDING SPECIAL END SHOES, SHALL BE MADE IN THE DIRECTION SHOWN ON STANDARD DRAWINGS GR-8 & GR-13.

REFER TO STD. DRWG. GR-11 FOR POST DETAILS.

USE THRIE BEAM GUARDRAIL COMPONENTS OF SAME MATERIAL FOR ENTIRE JOB.

THRIE BEAM POSTS SHALL BE SAME MATERIAL AS W-BEAM POSTS FOR ENTIRE JOB.

WOOD POSTS & WOOD BLOCKS SHALL BE EITHER DENSE NO. 1 STRUCTURAL OR BETTER 9.7 f (1400 f) OR NO. 1 1350 f SOUTHERN PINE.

DATE	REVISION	FILMED
11-07-19	RENAMED AND REVISED REFERENCES	
11-16-17	REVISED TRANSITION SECTION, GUARD RAIL HEIGHT, AND GENERAL NOTES; MOVED THRIE BEAM GUARD RAIL CONNECTIONS AT BRIDGES ENDS TO STD. DRWG. GR-12	
07-14-10	RAISED HEIGHT OF W-BEAM 1"	
11-29-07	ADDED PLASTIC BLOCKOUTS	
11-10-05	ADDED NOTE FOR ATTACHING STEEL BLOCKOUT	
11-18-04	REVISED GENERAL NOTES	
10-9-03	REVISED GENERAL NOTES	
04-10-03	REVISED GENERAL NOTES	
08-22-02	REVISED NOTE (2)	
06-29-00	MOVED DIMENSION LINES	
05-18-00	ADDED NOTE	
03-30-00	DRAWN & ISSUED	

ARKANSAS STATE HIGHWAY COMMISSION

GUARDRAIL DETAILS

STANDARD DRAWING GR-10

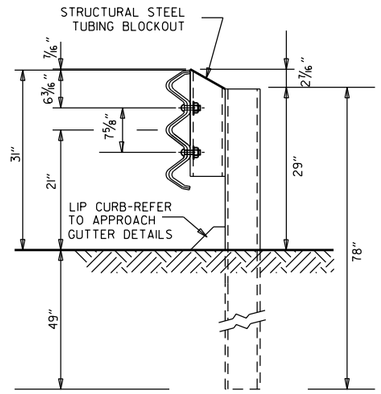

THRIE BEAM RAIL WITH STEEL TUBING BLOCKOUT
AND STEEL POST
POSTS 1-7

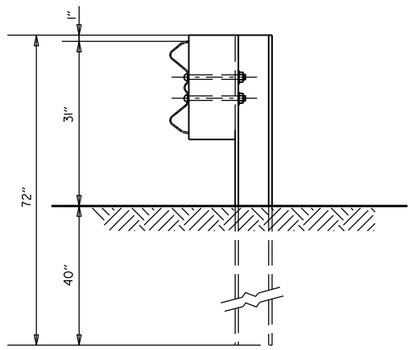

W-BEAM TO THRIE BEAM TRANSITION RAIL
WITH WOOD OR PLASTIC BLOCKOUT AND STEEL POST
POST 8

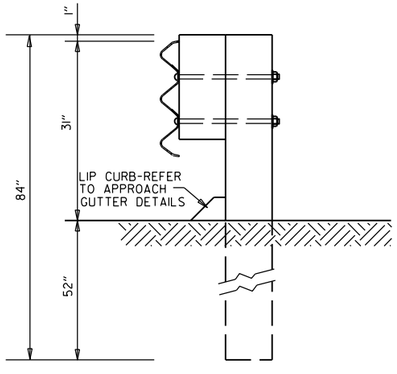

THRIE BEAM RAIL
WITH WOOD OR PLASTIC
BLOCKOUTS & WOOD POSTS
POSTS 1-6

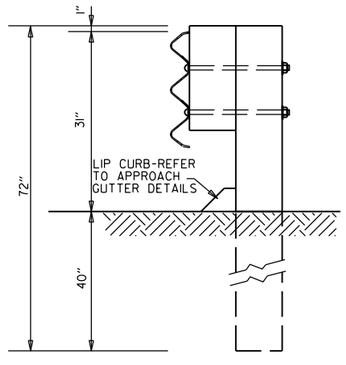

THRIE BEAM RAIL
WITH WOOD OR PLASTIC
BLOCKOUT & WOOD POST
POST 7

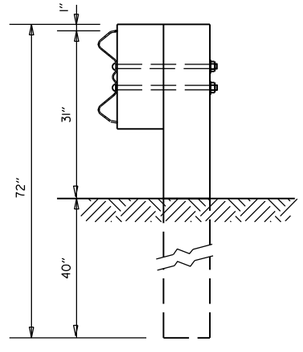

W-BEAM TO THRIE BEAM
TRANSITION RAIL WITH WOOD OR
PLASTIC BLOCKOUT & WOOD POST
POST 8

GENERAL NOTES:

RAIL POSTS SHALL BE SET PERPENDICULAR TO THE ROADWAY PROFILE GRADE AND VERTICALLY IN CROSS SECTION.

WOOD POSTS & WOOD BLOCKS SHALL BE EITHER DENSE NO. 1STRUCTURAL OR BETTER 9.7f (1400 f) OR NO.1 1350 f SOUTHERN PINE.

DATE	REVISION	FILMED
11-07-19	RENAMED	
11-16-17	REVISED GUARDRAIL HEIGHT, CHANGED STD. DWG. NUMBER FROM GR-10A TO GR-11	
07-14-10	REVISED POST 8 DIMENSIONS	
11-29-07	ADDED PLASTIC BLOCKOUTS	
08-22-02	REVISED LIP CURB NOTE	
03-30-00	DRAWN & ISSUED	

ARKANSAS STATE HIGHWAY COMMISSION

GUARDRAIL DETAILS

STANDARD DRAWING GR-11

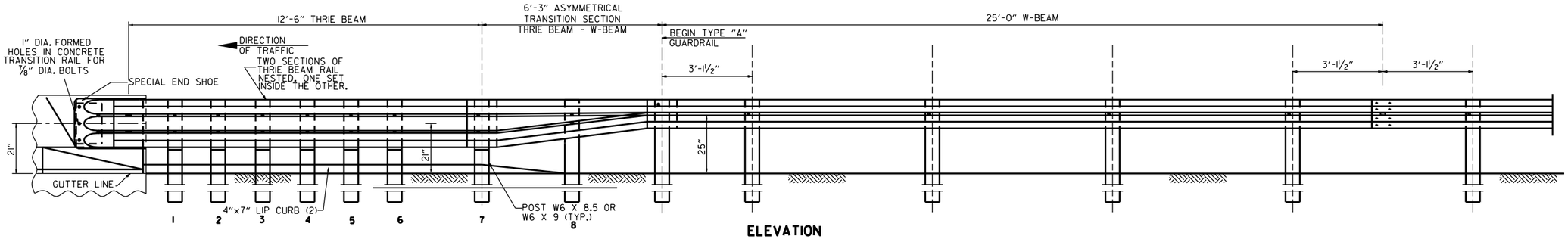

ELEVATION

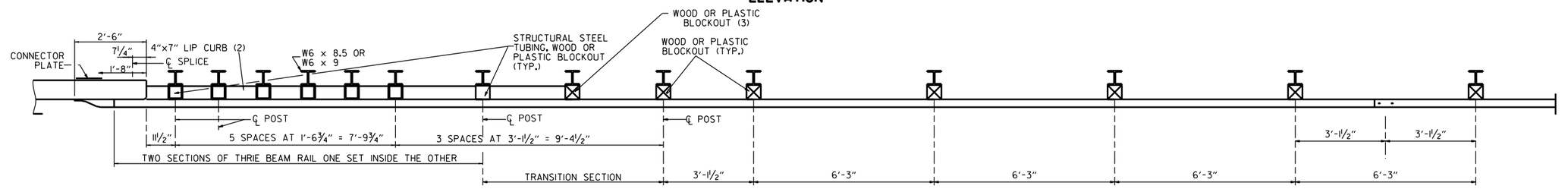

PLAN

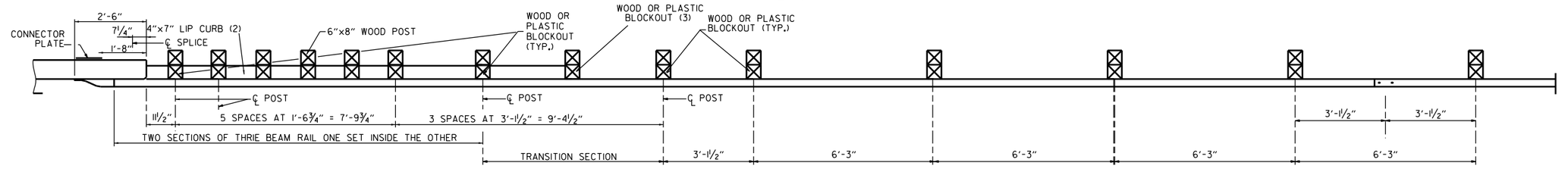

PLAN

(1) VERIFY BOLT SPACING FROM RAIL TRANSITION PRODUCER.
(2) REFER TO APPROACH GUTTER DETAILS.
(3) LENGTH OF BLOCKOUT ON POST 8 TO BE MODIFIED TO FIT RAIL WIDTH.

THRIE BEAM GUARDRAIL CONNECTION AT BRIDGE ENDS

GENERAL NOTES:

THE THRIE BEAM RAIL, SPECIAL END SHOE, AND THE TRANSITION SECTION SHALL BE MADE OF STEEL AND SHALL BE 12 GAGE. ZINC COATING SHALL BE TYPE I.

RAIL POSTS SHALL BE SET PERPENDICULAR TO THE ROADWAY PROFILE GRADE AND VERTICALLY IN CROSS SECTION.

ALL BOLTS SHALL BE SUFFICIENT LENGTH TO EXTEND THROUGH THE FULL THICKNESS OF THE NUT AND NO MORE THAN 3/4" BEYOND IT.

ALL LAP SPLICES, INCLUDING SPECIAL END SHOES, SHALL BE MADE IN THE DIRECTION SHOWN ON STANDARD DRAWINGS GR-8 & GR-13.

REFER TO STD. DRWG. GR-11 FOR POST DETAILS.

USE THRIE BEAM GUARDRAIL COMPONENTS OF SAME MATERIAL FOR ENTIRE JOB.

THRIE BEAM POSTS SHALL BE SAME MATERIAL AS W-BEAM POSTS FOR ENTIRE JOB.

POSTS SHALL NOT BE PLACED AT SPLICE LOCATIONS ALONG W-BEAM RAILS.

WOOD POSTS & WOOD BLOCKS SHALL BE EITHER DENSE NO. 1 STRUCTURAL OR BETTER 9.7f (1400 f) OR NO. 1 1350 f SOUTHERN PINE.

DATE	REVISION	FILMED
05-14-20	REVISED NOTES	
11-07-19	RENAMED & REVISED REFERENCES	
11-16-17	RE-DRAWN FROM STD. DWG. GR-10 & ISSUED	

ARKANSAS STATE HIGHWAY COMMISSION

GUARDRAIL DETAILS

STANDARD DRAWING GR-12

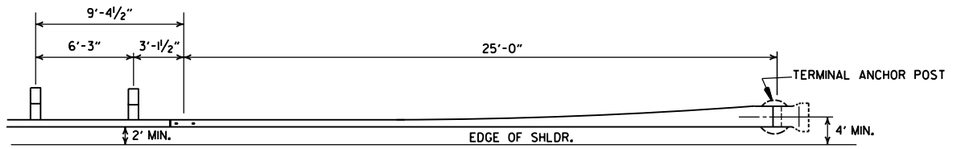

PLAN - GUARDRAIL TERMINAL (TYPE I)

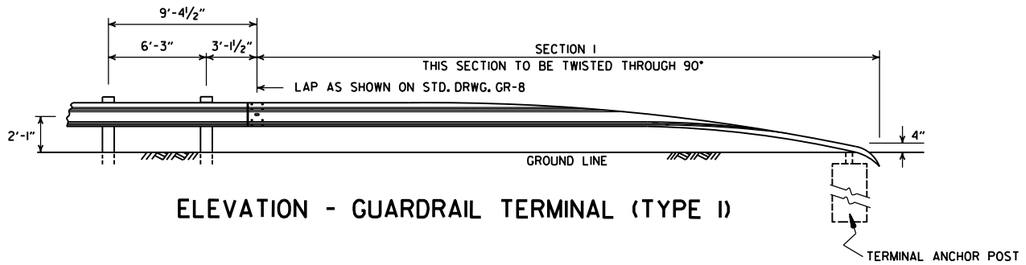

ELEVATION - GUARDRAIL TERMINAL (TYPE I)

NOTE:
SECTIONS I AND 2 OF GUARDRAIL TERMINAL SHALL BE PAID FOR AT THE PRICE BID PER LINEAR FOOT OF THE TYPE OF GUARDRAIL SPECIFIED.

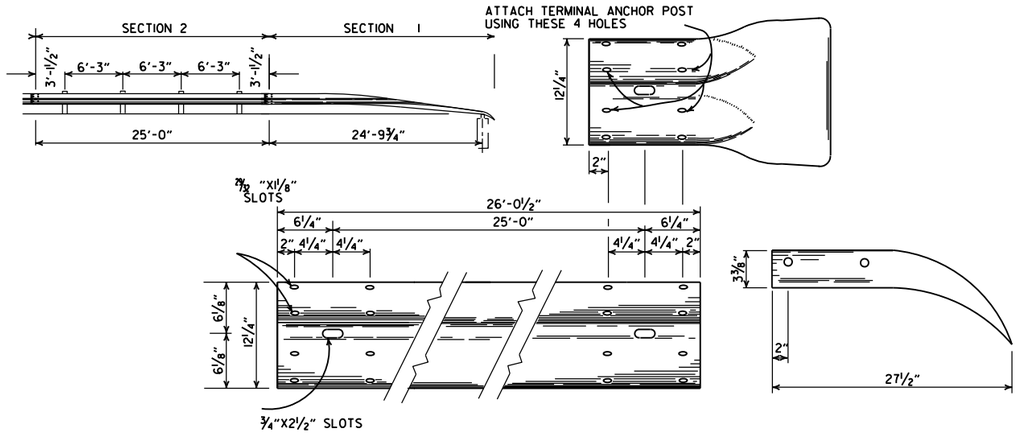

SECTION I

TERMINAL SECTION

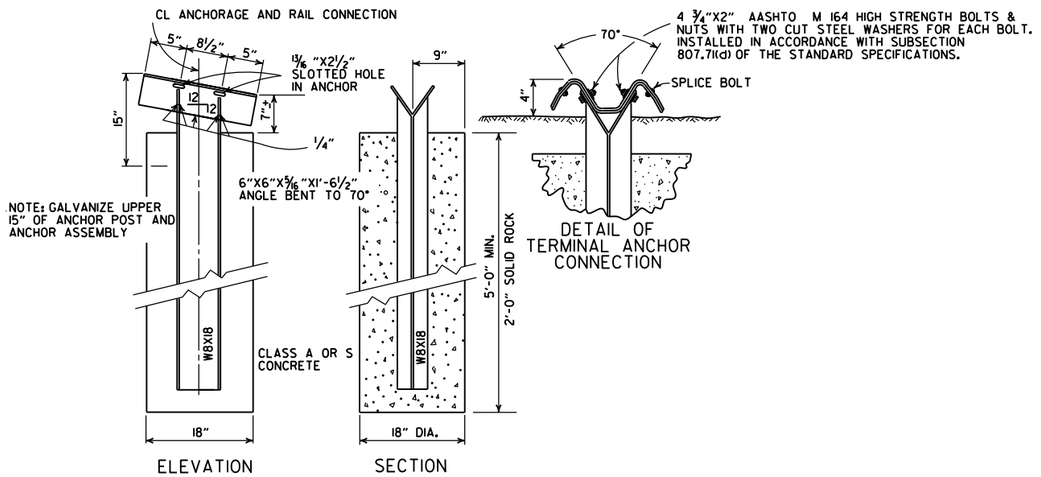

NOTE: RAIL MEMBERS MAY BE BOLTED TO ANGLE AT TERMINAL ANCHOR AND THE TWO ASSEMBLIES POSITIONED TO PROPER ALIGNMENT PRIOR TO PLACING CONCRETE AROUND 8 WF 17 POST IF CONTRACTOR SO DESIRES.

DETAIL OF TERMINAL ANCHOR POST (TYPE I)

DATE	REVISION	FILMED
11-07-19	RENAMED & REVISED REFERENCE.	
11-16-17	REVISED GUARDRAIL HEIGHT AND LOCATION OF POSTS	
07-14-10	RAISED HEIGHT OF GUARDRAIL 1"	
06-26-97	REVISED LAP NOTE	
10-18-96	REVISED ASTM REF. TO AASHTO	
11-03-94	DIMENSION TERMINAL DETAIL	
11-11-92	ADDED NOTE FOR PAYMENT	11-11-92
10-01-92	DRAWN & ISSUED	10-1-92

ARKANSAS STATE HIGHWAY COMMISSION

GUARDRAIL DETAILS

STANDARD DRAWING GRT-1

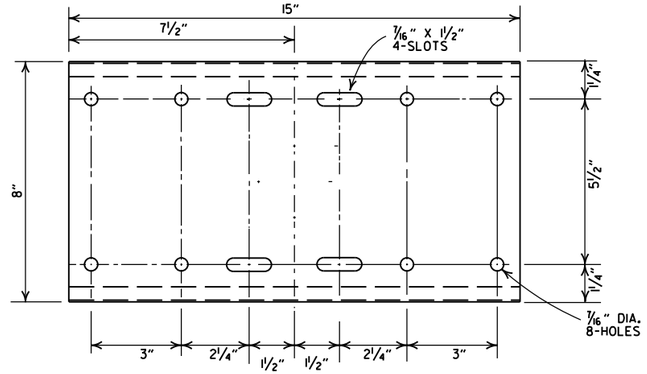

SHELF

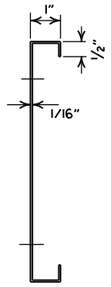

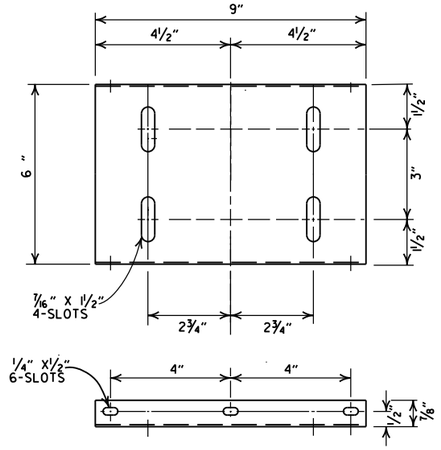

PLATFORM

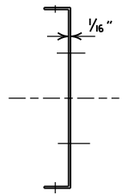

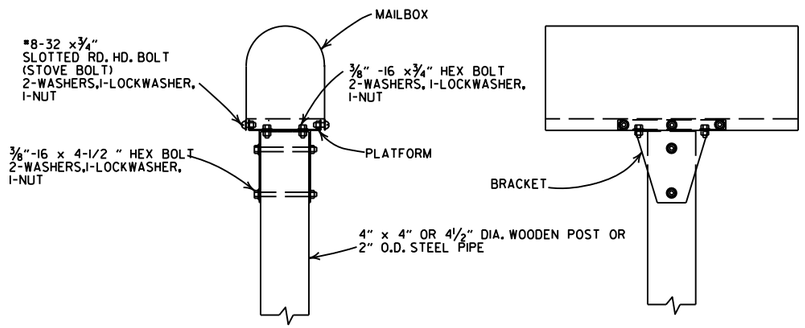

SINGLE INSTALLATION

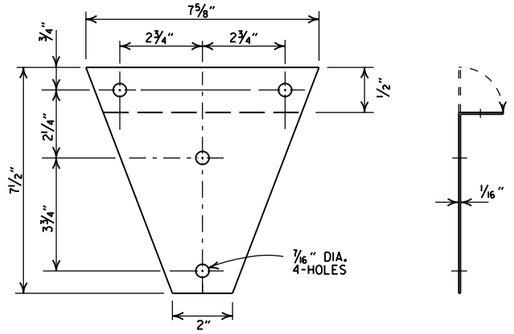

BRACKET

GENERAL NOTES

1. MAILBOX POSTS MAY BE WOOD OR METAL. WOOD POSTS SHALL BE PRESSURE TREATED FOR GROUND CONTACT IN ACCORDANCE WITH SECTION 637.02 OF THE STANDARD SPECIFICATIONS.
2. ANTI-TWIST PLATES SHALL BE USED ONLY ON METAL POSTS.
3. MAILBOX SHELF, BRACKET & PLATFORM SHALL BE GALVANIZED OR PAINTED STEEL, HOWEVER TREATED WOOD MAY BE USED WITH WOODEN POSTS. THE WOODEN SHELF, BRACKET & PLATFORM SHALL BE A MINIMUM OF ¾" THICK AND SHALL BE ASSEMBLED WITH BOLTS OF THE APPROPRIATE LENGTH WITH SIX 8 X¾" FLATHEAD WOOD SCREWS USED TO ATTACH THE MAILBOX TO THE PLATFORM.
4. THE MAILBOX SHELF AND PLATFORM THAT IS SHOWN IS FOR STANDARD SIZE MAILBOXES. THE SHELF AND PLATFORM SIZE SHALL BE MODIFIED TO FIT MAILBOXES OF A DIFFERENT SIZE.
5. METAL PIPE FOR MAILBOX SUPPORT SHALL BE 2" OUTSIDE DIAMETER STEEL WITH A WALL THICKNESS OF 0.145" AND A WEIGHT OF 2.72 LBS PER FT. OUTSIDE DIAMETER AND WEIGHT SHALL HAVE A TOLERANCE OF +/- 5% ACCORDING TO AASHTO M 181.
6. MAILBOX SUPPORT SYSTEM DIFFERING FROM THOSE SHOWN MAY BE USED, PROVIDED THEY ARE ON THE ARDOT QUALIFIED PRODUCTS LIST FOR MAILBOX SUPPORTS.

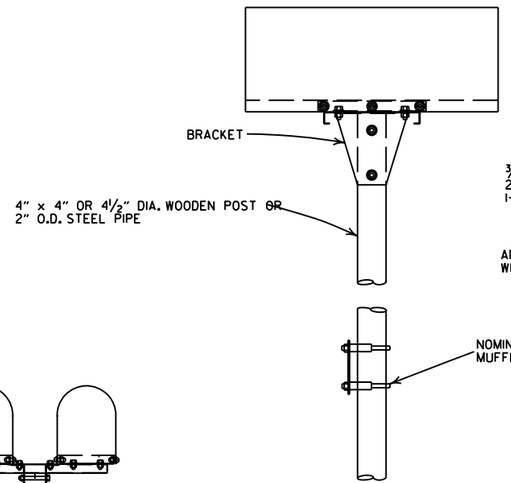

DOUBLE INSTALLATION

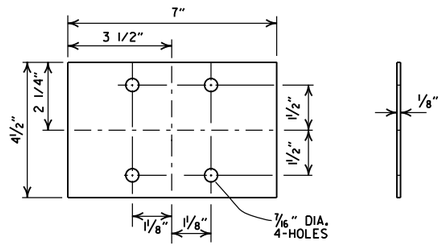

ANTI-TWIST PLATE

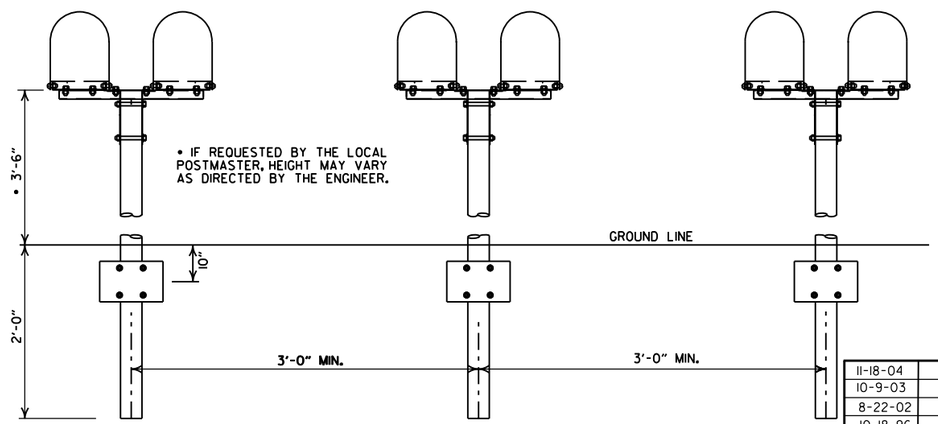

SPACING FOR MULTIPLE POST INSTALLATION

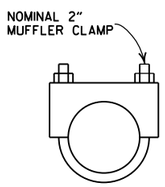

CLAMP

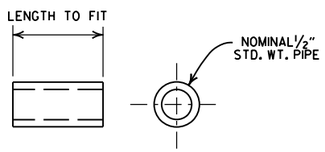

SPACER

DATE	FILMED	REVISION
11-18-04		REVISED NOTES
10-9-03		REVISED NOTE 6
8-22-02		REVISED NOTE 6
10-18-96		CORRECTED AASHTO
10-1-92		CORRECTED SPELLING
9-26-91		NEW PHONE NUMBER
8-15-91		ADDED NOTE
11-30-89		ADJUSTED HEIGHT & ADDED NOTE
2-16-89		DELETED SLOTS FROM SHELF & PLTF
11-17-88	10-1-92	ADJUSTED DIMENSIONS OF STEEL POSTS
7-15-88	20-7-15-88	ISSUED

ARKANSAS STATE HIGHWAY COMMISSION

MAILBOX DETAILS

STANDARD DRAWING MB-1

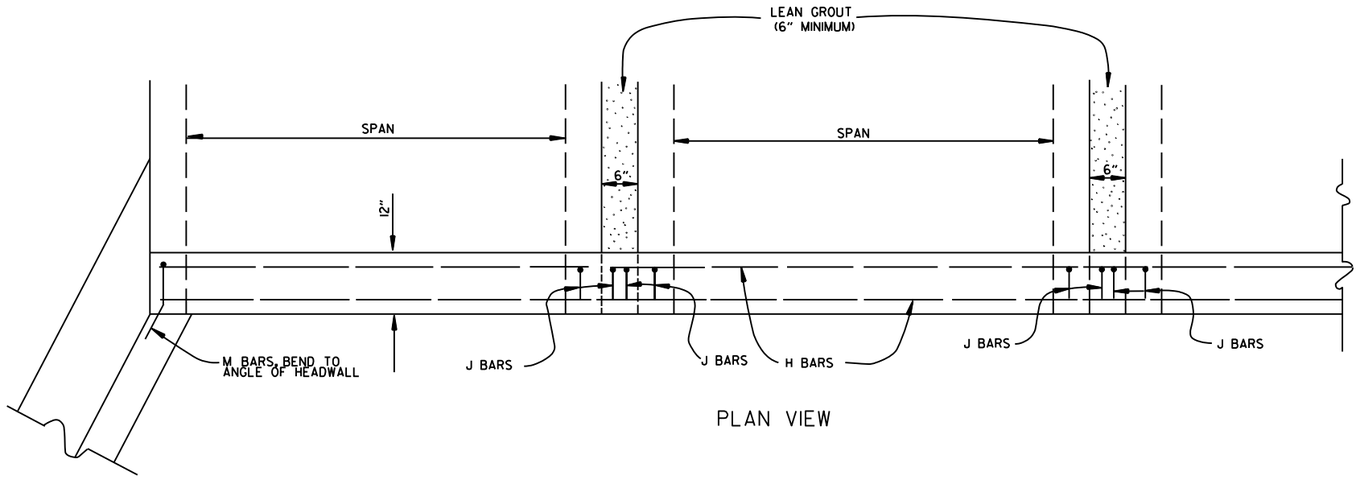

PLAN VIEW

BAR LIST

BAR	NO.	SIZE	LENGTH	BAR BENDING DIAGRAM
H	2	#4	•	
I	•	#4	•	
J	•	#4	1'-5"	
L	•	#4	3'-2"	
M	•	#4	1'-8"	

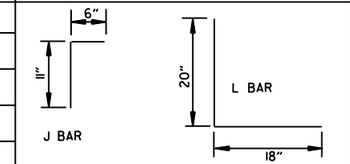

• NOTE: LENGTH AND NUMBER OF BARS VARIES WITH SIZE OF CULVERT

GENERAL NOTES

WINGS, CURTAIN WALLS AND APRONS SHALL BE TIED TO THE PRECAST CULVERT SECTION BY CASTING BARS IN CULVERT END SECTIONS AS SHOWN OR BY DOWELING AND GROUTING. J BARS AND M BARS SHALL BE EMBEDDED A MINIMUM OF 10" IN PRECAST BOX.

WINGS, FOOTINGS, APRONS AND CURTAIN WALLS SHALL BE CONSTRUCTED IN ACCORDANCE WITH THE APPLICABLE WING DRAWING. STEEL AND CONCRETE QUANTITIES WILL BE ADJUSTED TO FIT THE IN-PLACE WIDTH & HEIGHT OF THE PRECAST CONCRETE BOX CULVERTS.

ALL EXPOSED CORNERS TO HAVE ¾" CHAMFERS.

WINGWALLS AND FOOTINGS MAY BE ADJUSTED IN THE FIELD AS DIRECTED BY THE ENGINEER.

ALL CONCRETE, REINFORCING STEEL, LEAN GROUT, MEMBRANE WATERPROOFING, DRAINAGE FILL MATERIAL, GEOTEXTILE FILTER FABRIC, LABOR, MATERIALS AND EQUIPMENT REQUIRED FOR INSTALLING PRECAST BOX CULVERTS WILL NOT BE PAID FOR DIRECTLY BUT WILL BE CONSIDERED TO BE INCLUDED IN THE PRICE BID FOR THE ITEMS AS SPECIFIED IN SECTION 607 OF THE STANDARD SPECIFICATIONS.

LEAN GROUT SHALL CONSIST OF A SAND CEMENT MIXTURE MEETING THE FOLLOWING REQUIREMENTS:
PORTLAND CEMENT SHALL BE TYPE I AND SHALL MEET THE REQUIREMENTS OF AASHTO M 85.
SAND SHALL MEET THE REQUIREMENTS OF FINE AGGREGATE AS SPECIFIED IN SECTION 802.02 OF THE STANDARD SPECIFICATIONS.
THE SAND CEMENT MIXTURE SHALL CONSIST OF NOT LESS THAN 1.5 SACKS OF PORTLAND CEMENT PER TON OF MATERIAL MIXTURE.
THE MIXTURE SHALL CONTAIN SUFFICIENT WATER TO HYDRATE THE CEMENTS. THE SAND CEMENT MIXTURE SHALL BE PLACED IN MAXIMUM 8 INCH THICK LIFTS, LOOSE MEASURE, AND THOROUGHLY RODDED AND TAMPED AROUND BOX TO THOROUGHLY FILL ALL VOIDS.

MEMBRANE WATERPROOFING CONFORMING TO THE REQUIREMENTS OF SECTION 815 OF THE STANDARD SPECIFICATIONS SHALL BE APPLIED TO ALL BOX CULVERT JOINTS.

THE MEMBRANE WATERPROOFING WILL BE REQUIRED ON THE TOP EXTERNAL JOINT AND SHALL EXTEND 1 FOOT DOWN THE SIDES OF THE CULVERT.

IN OUTER BARRELS, ONE WEEP HOLE IS REQUIRED IN EXTERIOR WALLS OF EACH PRECAST CULVERT SECTION. WEEP HOLES SHALL HAVE A MAXIMUM HORIZONTAL SPACING OF 10'-0" IN THE ASSEMBLED CULVERT AND SHALL BE SPACED TO CLEAR ALL REINFORCING STEEL. THE DRAIN OPENING SHALL BE 4" DIAMETER AND SHALL BE PLACED 12" ABOVE THE TOP OF THE BOTTOM SLAB.

DRAINAGE FILL MATERIAL WITH GEOTEXTILE FABRIC IS REQUIRED AT THE EXTERIOR WALLS OF THE ASSEMBLED CULVERT, SEE DETAILS ON THIS DRAWING.

MINIMUM WIDTH SHALL BE 12" (6" ON EACH SIDE OF JOINT). ON MULTIPLE BARREL CULVERTS, MEMBRANE WATERPROOFING SHALL BE APPLIED TO EACH BARREL AS DESCRIBED ABOVE.

WITH THE APPROVAL OF THE ENGINEER, THE CONTRACTOR WILL BE ALLOWED TO SUBSTITUTE, AT NO ADDITIONAL COST TO THE DEPARTMENT, FLOWABLE SELECT MATERIAL CONFORMING TO SECTION 206 OF THE STANDARD SPECIFICATIONS IN LIEU OF LEAN GROUT.

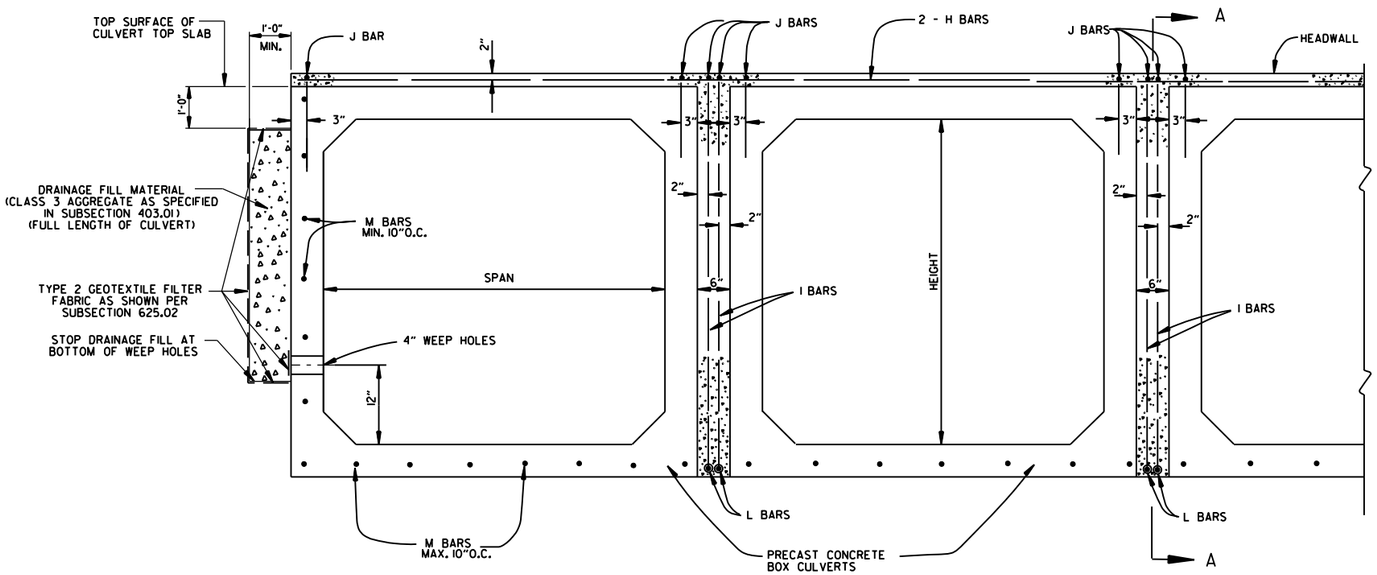

END VIEW

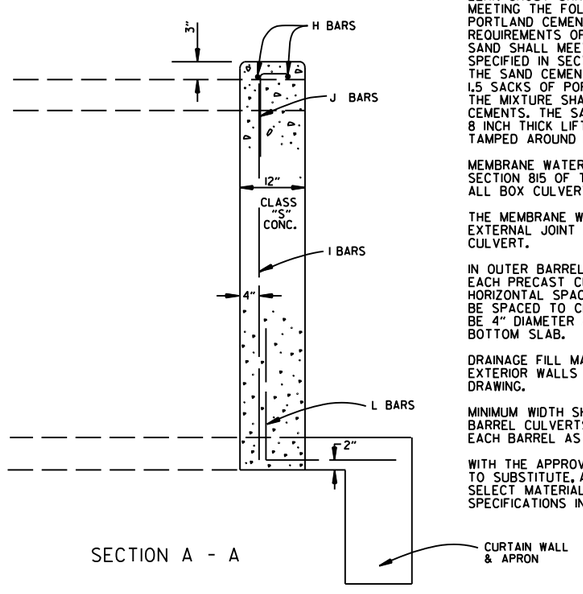

SECTION A - A

DATE	REVISION	DATE FILMED
1-28-15	REVISED GEOTEXTILE FABRIC PLACEMENT	
12-15-11	ADDED NOTE & DTLS FOR WEEP HOLE AND DRAINAGE FILL	
10-15-09	ADDED GENERAL NOTE	
11-10-05	REVISED SPACING OF "M" BARS	
4-10-03	REVISED GENERAL NOTES	
10-18-96	CORRECTED AASHTO REF.	
10-1-92	ADDED NOTE FOR MEMBRANE WATERPROOFING	
8-15-91	ADDED NOTE FOR LEAN GROUT	
11- 8-90	REVISED FOR 1991 SPECS	
11-30-89	ISSUED; JABE	

ARKANSAS STATE HIGHWAY COMMISSION

PRECAST CONCRETE BOX CULVERTS

STANDARD DRAWING PBC-1

REINFORCED CONCRETE ARCH PIPE DIMENSIONS

EQUIV. DIA.	SPAN		RISE	
	AASHTO M 206	ARDOT NOMINAL	AASHTO M 206	ARDOT NOMINAL
INCHES	INCHES			
15	18	18	11	11
18	22	22	13½	14
21	26	26	15½	16
24	28½	29	18	18
30	36¼	36	22½	23
36	43⅜	44	26⅝	27
42	51⅛	51	31⅜	31
48	58½	59	36	36
54	65	65	40	40
60	73	73	45	45
72	88	88	54	54
84	102	102	62	62
90	115	115	72	72
96	122	122	77½	77
108	138	138	87⅛	87
120	154	154	96⅞	97
132	168¾	169	106½	107

THE MEASURED SPAN AND RISE SHALL NOT VARY MORE THAN ± 2 PERCENT FROM THE VALUES SPECIFIED BY AASHTO M206.

REINFORCED CONCRETE HORIZONTAL ELLIPTICAL PIPE DIMENSIONS

EQUIV. DIA.	AASHTO M 207	
	SPAN	RISE
INCHES	INCHES	
18	23	14
24	30	19
27	34	22
30	38	24
33	42	27
36	45	29
39	49	32
42	53	34
48	60	38
54	68	43
60	76	48
66	83	53
72	91	58
78	98	63
84	106	68

THE MEASURED SPAN AND RISE SHALL NOT VARY MORE THAN ± 2 PERCENT FROM THE VALUES SPECIFIED BY AASHTO M207.

CONSTRUCTION SEQUENCE

1. PLACE STRUCTURAL BEDDING MATERIAL TO GRADE. DO NOT COMPACT.
2. INSTALL PIPE TO GRADE.
3. COMPACT STRUCTURAL BEDDING OUTSIDE THE MIDDLE THIRD OF THE PIPE.
4. PLACE AND COMPACT THE HAUNCH AREA UP TO THE MIDDLE OF THE PIPE.
5. COMPLETE BACKFILL ACCORDING TO SUBSECTION 606.03.(f)(1).

NOTE: HAUNCH AND STRUCTURAL BEDDING MATERIAL WILL NOT BE PAID FOR SEPARATELY, BUT COMPENSATION WILL BE CONSIDERED TO BE INCLUDED IN THE PRICE BID PER LINEAR FOOT OF CONCRETE PIPE.

- LEGEND -

D_1 = NORMAL INSIDE DIAMETER OF PIPE
D_O = OUTSIDE DIAMETER OF PIPE
H = FILL COVER HEIGHT OVER PIPE (FEET)
MIN. = MINIMUM
= UNDISTURBED SOIL

INSTALLATION TYPE	MATERIAL REQUIREMENTS FOR HAUNCH AND STRUCTURAL BEDDING
TYPE 1	AGGREGATE BASE COURSE (CLASS 5 OR CLASS 7)
TYPE 2	SELECTED MATERIALS (CLASS SM-1, SM-2, OR SM-4) OR TYPE 1 INSTALLATION MATERIAL*
TYPE 3**	AASHTO CLASSIFICATION A-1 THRU A-6 SOIL OR TYPE 1 OR 2 INSTALLATION MATERIAL

* SM-3 WILL NOT BE ALLOWED.

** MATERIALS SHALL NOT INCLUDE ORGANIC MATERIALS OR STONES LARGER THAN 3 INCHES.

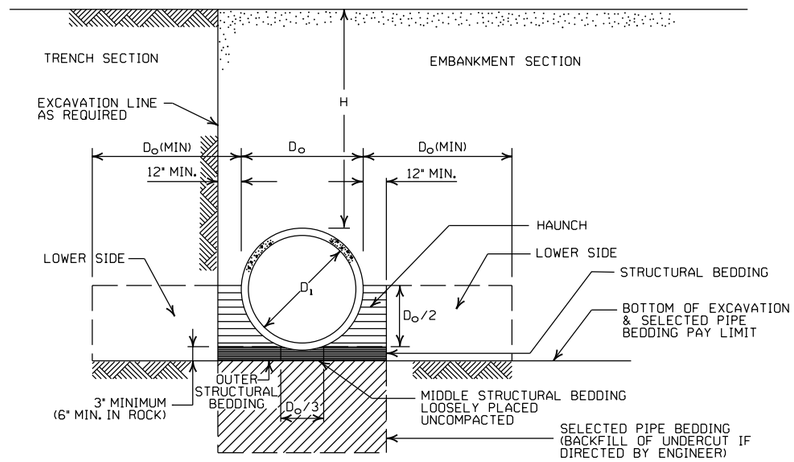

EMBANKMENT AND TRENCH INSTALLATIONS

1. MATERIAL IN THE HAUNCH AND OUTER STRUCTURAL BEDDING SHALL BE COMPACTED TO 95% OF THE MAXIMUM DENSITY ACCORDING TO THE TYPE OR CLASS OF MATERIAL USED.
2. FOR TRENCHES WITH WALLS OF NATURAL SOIL, THE DENSITY OF THE SOIL IN THE LOWER SIDE ZONE SHALL BE AS FIRM AS THE 95% DENSITY REQUIRED FOR THE HAUNCH. IF THE EXISTING SOIL DOES NOT MEET THIS CRITERIA, IT SHALL BE REMOVED AND RECOMPACTED TO 95% OF THE MAXIMUM DENSITY ACCORDING TO THE TYPE OF MATERIAL USED.
3. FOR EMBANKMENTS, THE MATERIAL IN THE LOWER SIDE ZONE SHALL BE COMPACTED TO 95% OF THE MAXIMUM DENSITY ACCORDING TO THE TYPE OR CLASS OF MATERIAL USED.

GENERAL NOTES

1. CONCRETE PIPE CULVERT CONSTRUCTION SHALL CONFORM TO ARKANSAS DEPARTMENT OF TRANSPORTATION STANDARD SPECIFICATIONS FOR HIGHWAY CONSTRUCTION (CURRENT EDITION), WITH APPLICABLE SUPPLEMENTAL SPECIFICATIONS AND SPECIAL PROVISIONS. UNLESS OTHERWISE NOTED IN THE PLANS, SECTION AND SUBSECTION REFER TO THE STANDARD CONSTRUCTION SPECIFICATIONS.
2. CONCRETE PIPE CULVERT DESIGN SHALL CONFORM TO AASHTO LRFD BRIDGE DESIGN SPECIFICATIONS, FIFTH EDITION (2010) WITH 2010 INTERIMS.
3. ALL PIPE SHALL CONFORM TO SECTION 606. CIRCULAR R.C. PIPE CULVERTS SHALL CONFORM TO AASHTO M170, R.C. ARCH PIPE CULVERTS SHALL CONFORM TO AASHTO M206 AND HORIZONTAL ELLIPTICAL PIPE CULVERTS SHALL CONFORM TO AASHTO M207.
4. ALL PIPE SHALL BE PROTECTED DURING CONSTRUCTION BY A COVER SUFFICIENT TO PREVENT DAMAGE FROM PASSAGE OF EQUIPMENT.
5. THE MINIMUM TRENCH WIDTH SHALL BE THE OUTSIDE DIAMETER OF THE PIPE PLUS 24 INCHES. THE MAXIMUM ALLOWABLE TRENCH WIDTH SHALL BE THE MINIMUM WIDTH PRACTICABLE FOR WORKING CONDITIONS.
6. MULTIPLE PIPE CULVERTS SHALL BE INSTALLED WITH A MINIMUM CLEARANCE OF 24 INCHES BETWEEN STRINGS OF PIPE. REFER TO STD. DWG. FES-2 FOR MINIMUM CLEARANCE WHERE FLARED END SECTIONS ARE USED.
7. IMPERVIOUS MATERIAL SHOULD BE PLACED AS DIRECTED BY THE ENGINEER AT THE ENDS OF THE CULVERT TO PREVENT LOSS OF STRUCTURAL BEDDING WHEN PERVIOUS MATERIAL IS USED FOR STRUCTURAL BEDDING AND/OR BACKFILL.
8. NOT MORE THAN ONE LIFTING HOLE MAY BE PROVIDED IN CONCRETE PIPE TO FACILITATE HANDLING. HOLE MAY BE CAST IN PLACE, CUT INTO THE FRESH CONCRETE AFTER FORMS ARE REMOVED, OR DRILLED. THE HOLE SHALL NOT BE MORE THAN TWO INCHES IN DIAMETER OR TWO INCHES SQUARE. CUTTING OR DISPLACEMENT OF REINFORCEMENT WILL NOT BE PERMITTED. SPALLED AREAS AROUND THE HOLE SHALL BE REPAIRED IN A WORKMANLIKE MANNER. LIFTING HOLE SHALL BE FILLED WITH MORTAR, CONCRETE, OR OTHER METHOD AS APPROVED BY THE ENGINEER.
9. WHEN DIRECTED BY THE ENGINEER, UNSUITABLE MATERIAL THAT IS ENCOUNTERED AT THE BOTTOM OF THE EXCAVATED TRENCH (BELOW THE AREA IDENTIFIED AS "STRUCTURAL BEDDING" ABOVE) WILL BE EXCAVATED AND REPLACED WITH SELECTED PIPE BEDDING. THE QUANTITY OF MATERIAL REQUIRED TO BACKFILL THE UNDERCUT AREA UP TO THE SELECTED PIPE BEDDING PAY LIMIT DESIGNATED ABOVE WILL BE MEASURED AND PAID FOR AS "SELECTED PIPE BEDDING."
10. WHEN THE EXISTING MATERIAL EXCAVATED FOR THE PIPE TRENCH IS DETERMINED BY THE ENGINEER TO BE UNSUITABLE FOR BACKFILLING THE PIPE (ABOVE THE AREA IDENTIFIED ABOVE AS THE HAUNCH), BORROW MATERIAL OR MATERIAL FROM THE ROADWAY EXCAVATION WILL BE USED TO BACKFILL THE PIPE. IF SUITABLE MATERIAL IS NOT AVAILABLE, THE ENGINEER MAY AUTHORIZE THE USE OF "SELECTED PIPE BACKFILL."

MINIMUM HEIGHT OF FILL "H" OVER CIRCULAR R.C. PIPE CULVERTS

	CLASS OF PIPE			
	CLASS III		CLASS IV	CLASS V
INSTALLATION TYPE	TYPE 1 OR 2	TYPE 3	ALL	ALL
PIPE ID (IN.)	FEET			
12-15	2	2.5	2	1
18-24	2.5	3	2	1
27-33	3	4	2	1
36-42	3.5	5	2	1
48	4.5	5.5	2	1
54-60	5	7	2	1
66-78	6	8	2	1
84-108	7.5	8	2	1

NOTE: FOR MINIMUM COVER VALUES, "H" SHALL INCLUDE A MINIMUM OF 12" OF PAVEMENT AND/OR BASE.

MAXIMUM HEIGHT OF FILL "H" OVER CIRCULAR R.C. PIPE CULVERTS

INSTALLATION TYPE	CLASS OF PIPE		
	CLASS III	CLASS IV	CLASS V
	FEET		
TYPE 1	21	32	50
TYPE 2	16	25	39
TYPE 3	12	20	30

NOTE: IF FILL HEIGHT EXCEEDS 50 FEET, A SPECIAL DESIGN CONCRETE PIPE WILL BE REQUIRED USING TYPE 1 INSTALLATION.

MINIMUM HEIGHT OF FILL "H" OVER R.C. ARCH & HORIZONTAL ELLIPTICAL PIPE CULVERTS

INSTALLATION TYPE	CLASS OF PIPE	
	CLASS III	CLASS IV
	FEET	
TYPE 2 OR TYPE 3	2.5	1.5

NOTE: TYPE 1 INSTALLATION WILL NOT BE ALLOWED FOR ARCH & HORIZONTAL ELLIPTICAL PIPE CULVERTS.

NOTE: FOR MINIMUM COVER VALUES, "H" SHALL INCLUDE A MINIMUM OF 12" OF PAVEMENT AND/OR BASE.

MAXIMUM HEIGHT OF FILL "H" OVER R.C. ARCH & HORIZONTAL ELLIPTICAL PIPE CULVERTS

INSTALLATION TYPE	CLASS OF PIPE	
	CLASS III	CLASS IV
	FEET	
TYPE 2	13	21
TYPE 3	10	16

NOTE: TYPE 1 INSTALLATION WILL NOT BE ALLOWED FOR ARCH & HORIZONTAL ELLIPTICAL PIPE CULVERTS.

DATE	REVISION	DATE FILMED
2-27-14	REVISED GENERAL NOTE 1.	
12-15-11	REVISED FOR LRFD DESIGN SPECIFICATIONS	
5-18-00	REVISED TYPE 3 BEDDING & ADDED NOTE	
3-30-00	REVISED INSTALLATIONS	
11-06-97	ISSUED	

ARKANSAS STATE HIGHWAY COMMISSION

CONCRETE PIPE CULVERT FILL HEIGHTS & BEDDING

STANDARD DRAWING PCC-1

CORRUGATED STEEL PIPE (ROUND)

PIPE DIAMETER (INCHES)	① MINUMUM COVER TOP OF PIPE TO TOP OF GROUND "H" (FEET)	MAX. FILL HEIGHT "H" ABOVE TOP OF PIPE (FEET)				
		METAL THICKNESS (INCHES)				
		0.064	0.079	0.109	0.138	0.168
2⅔ INCH BY ½ INCH CORRUGATION RIVETED, WELDED, OR HELICAL LOCK-SEAM						
12	1	84	91			
15	1	67	73			
18	1	56	61			
24	1	42	46	59		
30	2	34	36	47		
36	2		30	39	41	
42	2		43	67	70	73
48	2		37	58	61	64
② 3 INCH BY 1 INCH OR 5 INCH BY 1 INCH CORRUGATION RIVETED, WELDED, BOLTED, OR HELICAL LOCK-SEAM						
36	1	48	60	88	111	118
42	1	41	51	72	90	102
48	1	36	45	64	77	85
54	2	32	40	59	71	79
60	2	29	36	53	64	71
66	2	26	33	47	58	64
72	2	24	30	44	53	59
78	2		28	41	49	54
84	2		26	38	45	51
90	2		24	35	43	45
96	2		22	33	40	44
102	2			31	38	42
108	2			30	35	39
114	2			28	34	37
120	2			27	32	35

CORRUGATED ALUMINUM PIPE (ROUND)

PIPE DIAMETER (INCHES)	① MINUMUM COVER TOP OF PIPE TO TOP OF GROUND "H" (FEET)	MAX. FILL HEIGHT "H" ABOVE TOP OF PIPE (FEET)				
		METAL THICKNESS IN INCHES				
		0.060	0.075	0.105	0.135	0.164
		2 ⅔ INCH BY ½ INCH CORRUGATION RIVETED OR HELICAL LOCK-SEAM				
12	1	45	45			
18	2	30	30	52		
24	2	22	22	39	41	
30	2		18	31	32	34
36	2.5		15	26	27	28
42	2			43	43	44
48	2			40	41	43
54	2			35	37	38
60	2				33	34
66	2					31
72	2					29

CONSTRUCTION SEQUENCE

1. PLACE STRUCTURAL BEDDING MATERIAL TO GRADE. DO NOT COMPACT.
2. INSTALL PIPE TO GRADE.
3. COMPACT STRUCTURAL BEDDING OUTSIDE THE MIDDLE THIRD OF THE PIPE.
4. COMPLETE STRUCTURAL BACKFILL OPERATION BY WORKING FROM SIDE TO SIDE OF THE PIPE. THE SIDE TO SIDE STRUCTURAL BACKFILL DIFFERENTIAL SHALL NOT EXCEED 24 INCHES OR 1/3 THE SIZE OF THE PIPE, WHICHEVER IS LESS.

NOTE: STRUCTURAL BACKFILL AND STRUCTURAL BEDDING MATERIAL WILL NOT BE PAID FOR SEPARATELY, BUT COMPENSATION WILL BE CONSIDERED TO BE INCLUDED IN THE PRICE BID PER LINEAR FOOT OF METAL PIPE.

INSTALLATION TYPE	MATERIAL REQUIREMENTS FOR STRUCTURAL BACKFILL AND STRUCTURAL BEDDING
TYPE 1	AGGREGATE BASE COURSE (CLASS 4, 5, 6, OR 7)
TYPE 2	SELECTED MATERIALS (CLASS SM-1, SM-2, OR SM-4) OR TYPE 1 INSTALLATION MATERIAL ③

③ SM-3 WILL NOT BE ALLOWED.

EQUIVALENT METAL THICKNESSES AND GAUGES

METAL THICKNESS IN INCHES			GAUGE NUMBER
STEEL			
ZINC COATED	UNCOATED	ALUMINUM	
0.064	0.0598	0.060	16
0.079	0.0747	0.075	14
0.109	0.1046	0.105	12
0.138	0.1345	0.135	10
0.168	0.1644	0.164	8

CORRUGATED METAL PIPE ARCHES

EQUIV. DIA. (INCHES)	PIPE DIMENSION SPAN X RISE (INCHES)	MINUMUM CORNER RADIUS (INCHES)	STEEL				ALUMINUM			
			MIN. THICKNESS REQUIRED INCHES	① MIN. HEIGHT OF FILL, "H" (FT.)	MAX. HEIGHT OF FILL, "H" (FT.)		MIN. THICKNESS REQUIRED INCHES	① MIN. HEIGHT OF FILL, "H" (FT.)	MAX. HEIGHT OF FILL, "H" (FT.)	
				INSTALLATION	INSTALLATION			INSTALLATION	INSTALLATION	
				TYPE 1	TYPE 1			TYPE 1	TYPE 1	
			2 ⅔ INCH BY ½ INCH CORRUGATION RIVETED, WELDED, OR HELICAL LOCK-SEAM				2 ⅔ INCH BY ½ INCH CORRUGATION RIVETED OR HELICAL LOCK-SEAM			
15	17x13	3	0.064	2	15		0.060	2	15	
18	21x15	3	0.064	2	15		0.060	2	15	
21	24x18	3	0.064	2.25	15		0.060	2.25	15	
24	28x20	3	0.064	2.5	15		0.075	2.5	15	
30	35x24	3	0.079	3	12		0.075	3	12	
36	42x29	3½	0.079	3	12		0.105	3	12	
42	49x33	4	0.079	3	12		0.105	3	12	
48	57x38	5	0.109	3	13		0.135	3	13	
54	64x43	6	0.109	3	14		0.135	3	14	
60	71x47	7	0.138	3	15		0.164	3	15	
66	77x52	8	0.168	3	15					
72	83x57	9	0.168	3	15					
			② 3 INCH BY 1 INCH OR 5 INCH BY 1 INCH CORRUGATION RIVETED, WELDED, OR HELICAL LOCK-SEAM							
				INSTALLATION		INSTALLATION				
				TYPE 2	TYPE 1	TYPE 2	TYPE 1			
36	40x31	5	0.079	3	2	12	15			
42	46x36	6	0.079	3	2	13	15			
48	53x41	7	0.079	3	2	13	15			
54	60x46	8	0.079	3	2	13	15			
60	66x51	9	0.079	3	2	13	15			
66	73x55	12	0.079	3	2	15	15			
72	81x59	14	0.079	3	2	15	15			
78	87x63	14	0.079	3	2	15	15			
84	95x67	16	0.109	3	2	15	15			
90	103x71	16	0.109	3	2	15	15			
96	112x75	18	0.109	3	2	15	15			
102	117x79	18	0.109	3	2	15	15			
108	128x83	18	0.138	3	2	15	15			

① FOR MINIMUM COVER VALUES, "H" SHALL INCLUDE A MINIMUM 12" OF PAVEMENT AND/OR BASE.

② WHERE THE STANDARD 2 2/3"x ½" CORRUGATION AND GAUGE IS SPECIFIED FOR A GIVEN DIAMETER, A PIPE OF THE SAME DIAMETER WITH A 3" x 1" OR 5" x 1" CORRUGATION MAY BE SUBSTITUTED, PROVIDING IT IS GAUGED FOR A FILL HEIGHT CONDITION EQUAL TO OR GREATER THAN THE MAXIMUM FILL HEIGHT CONDITION FOR THE SPECIFIED GAUGE AND CORRUGATION.

- LEGEND -

D_o = OUTSIDE DIAMETER OF PIPE
MAX. = MAXIMUM
MIN. = MINIMUM
= STRUCTURAL BACKFILL MATERIAL
= UNDISTURBED SOIL
EQUIV. DIA. = EQUIVALENT DIAMETER
H = FILL COVER HEIGHT OVER PIPE (FEET)

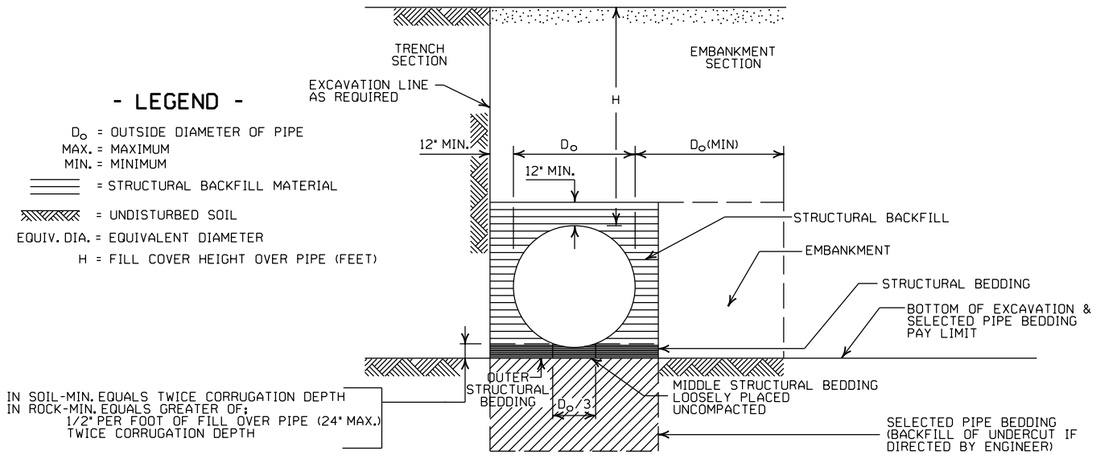

EMBANKMENT AND TRENCH INSTALLATIONS

1. STRUCTURAL BACKFILL, EMBANKMENT, AND OUTER STRUCTURAL BEDDING MATERIAL SHALL BE COMPACTED TO 95% OF THE MAXIMUM DENSITY ACCORDING TO THE TYPE OR CLASS OF MATERIAL USED.
2. INSTALLATION TYPE 1 OR 2 MAY BE USED FOR CORRUGATED STEEL OR ALUMINUM PIPE (ROUND).
3. INSTALALTION TYPE 1 SHALL BE USED FOR CORRUGATED STEEL OR ALUMINUM PIPE ARCHES WITH 2⅔" X ½" CORRUGATION.
4. INSTALLATION TYPE 1 OR 2 MAY BE USED FOR CORRUGATED STEEL OR ALUMINUM PIPE ARCHES WITH 3" X 1" OR 5" X 1" CORRUGATION.

GENERAL NOTES

1. METAL PIPE CULVERT CONSTRUCTION SHALL CONFORM TO ARKANSAS DEPARTMENT OF TRANSPORTATION STANDARD SPECIFICATIONS FOR HIGHWAY CONSTRUCTION (CURRENT EDITION), WITH APPLICABLE SUPPLEMENTAL SPECIFICATIONS AND SPECIAL PROVISIONS. UNLESS OTHERWISE NOTED IN THE PLANS, SECTION AND SUBSECTION REFER TO THE STANDARD CONSTRUCTION SPECIFICATIONS.
2. METAL PIPE CULVERT DESIGN SHALL CONFORM TO AASHTO LRFD BRIDGE DESIGN SPECIFICATIONS, FIFTH EDITION (2010) WITH 2010 INTERIMS.
3. METAL PIPE CULVERT MATERIALS AND INSTALLATIONS SHALL CONFORM TO SECTION 606 AND JOB SPECIAL PROVISION "METAL PIPE".
4. ALL PIPE SHALL BE PROTECTED DURING CONSTRUCTION BY A COVER SUFFICIENT TO PREVENT DAMAGE FROM PASSAGE OF EQUIPMENT.
5. THE MINIMUM TRENCH WIDTH SHALL BE THE OUTSIDE DIAMETER OF THE PIPE PLUS 24 INCHES. THE MAXIMUM ALLOWABLE TRENCH WIDTH SHALL BE THE MINIMUM WIDTH PRACTICABLE FOR WORKING CONDITIONS.
6. MULTIPLE PIPE CULVERTS SHALL BE INSTALLED WITH A MINIMUM CLEARANCE OF 24 INCHES BETWEEN STRINGS OF PIPE. REFER TO STD. DWG. FES-2 FOR MINIMUM CLEARANCE WHERE FLARED END SECTIONS ARE USED.
7. IMPERVIOUS MATERIAL SHOULD BE PLACED AS DIRECTED BY THE ENGINEER AT THE ENDS OF THE CULVERT TO PREVENT LOSS OF STRUCTURAL BEDDING WHEN PERVIOUS MATERIAL IS USED FOR STRUCTURAL BEDDING AND/OR BACKFILL.
8. WHEN DIRECTED BY THE ENGINEER, UNSUITABLE MATERIAL THAT IS ENCOUNTERED AT THE BOTTOM OF THE EXCAVATED TRENCH (BELOW THE AREA IDENTIFIED AS "STRUCTURAL BEDDING" ABOVE) WILL BE EXCAVATED AND REPLACED WITH SELECTED PIPE BEDDING. THE QUANTITY OF MATERIAL REQUIRED TO BACKFILL THE UNDERCUT AREA UP TO THE SELECTED PIPE BEDDING PAY LIMIT DESIGNATED ABOVE WILL BE MEASURED AND PAID FOR AS "SELECTED PIPE BEDDING."
9. WHEN THE EXISTING MATERIAL EXCAVATED FOR THE PIPE TRENCH IS DETERMINED BY THE ENGINEER TO BE UNSUITABLE FOR BACKFILLING THE PIPE (ABOVE THE AREA IDENTIFIED AS STRUCTURAL BACKFILL), BORROW MATERIAL OR MATERIAL FROM THE ROADWAY EXCAVATION WILL BE USED TO BACKFILL THE PIPE. IF SUITABLE MATERIAL IS NOT AVAILABLE, THE ENGINEER MAY AUTHORIZE THE USE OF "SELECTED PIPE BACKFILL."

DATE	REVISION	DATE FILMED
2-27-14	REVISED GENERAL NOTE 1.	
12-15-11	REVISED FOR LRFD DESIGN SPECS	
3-30-00	REVISED INSTALLATIONS	
11-06-97	ISSUED	

ARKANSAS STATE HIGHWAY COMMISSION

METAL PIPE CULVERT FILL HEIGHTS & BEDDING

STANDARD DRAWING PCM-1

INSTALLATION TYPE	•• MATERIAL REQUIREMENTS FOR STRUCTURAL BACKFILL AND STRUCTURAL BEDDING
TYPE 2	•SELECTED MATERIALS (CLASS SM-1, SM-2 OR SM-4)

• AGGREGATE BASE COURSE (CLASS 4, 5, 6, OR 7) MAY BE USED IN LIEU OF SELECTED MATERIAL.

SM3 WILL NOT BE ALLOWED.

•• STRUCTURAL BEDDING MATERIAL SHALL HAVE A MAXIMUM PARTICLE SIZE OF 1INCH. STRUCTURAL BACKFILL MATERIAL SHALL BE FREE OF ORGANIC MATERIAL, STONES LARGER THAN 1.50 INCH IN GREATEST DIMENSION, OR FROZEN LUMPS.

STRUCTURAL BACKFILL AND STRUCTURAL BEDDING MATERIAL WILL NOT BE PAID FOR SEPARATELY, BUT COMPENSATION WILL BE CONSIDERED TO BE INCLUDED IN THE PRICE BID PER LINEAR FOOT OF HDPE PIPE.

MULTIPLE INSTALLATION OF HIGH DENSITY POLYETHYLENE PIPES

PIPE DIAMETER	CLEAR DISTANCE BETWEEN PIPES
18"	1'-6"
24"	2'-0"
30"	2'-6"
36"	3'-0"
42"	3'-6"
48"	4'-0"

MINIMUM TRENCH WIDTH BASED ON FILL HEIGHT "H"

PIPE DIAMETER	TRENCH WIDTH (FEET)	
	"H" < 10'-0"	"H" >OR= 10'-0"
18"	4'-6"	4'-6"
24"	5'-0"	6'-0"
30"	5'-6"	7'-6"
36"	6'-0"	9'-0"
42"	7'-0"	10'-6"
48"	8'-0"	12'-0"

①NOTE:
18" MIN. (18" - 30" DIAMETERS)
24" MIN. (36" - 48" DIAMETERS)

MINIMUM COVER VALUES, "H" SHALL INCLUDE A MINIMUM 12" OF PAVEMENT AND/OR BASE.

MINIMUM COVER FOR CONSTRUCTION LOADS

PIPE DIAMETER	② MIN. COVER (FEET) FOR INDICATED CONSTRUCTION LOADS			
	18.0-50.0 (KIPS)	50.0-75.0 (KIPS)	75.0-110.0 (KIPS)	110.0-175.0 (KIPS)
36" OR LESS	2'-0"	2'-6"	3'-0"	3'-0"
42" OR GREATER	3'-0"	3'-0"	3'-6"	4'-0"

②MINIMUM COVER SHALL BE MEASURED FROM TOP OF PIPE TO TOP OF THE MAINTAINED CONSTRUCTION ROADWAY SURFACE. THE SURFACE SHALL BE MAINTAINED.

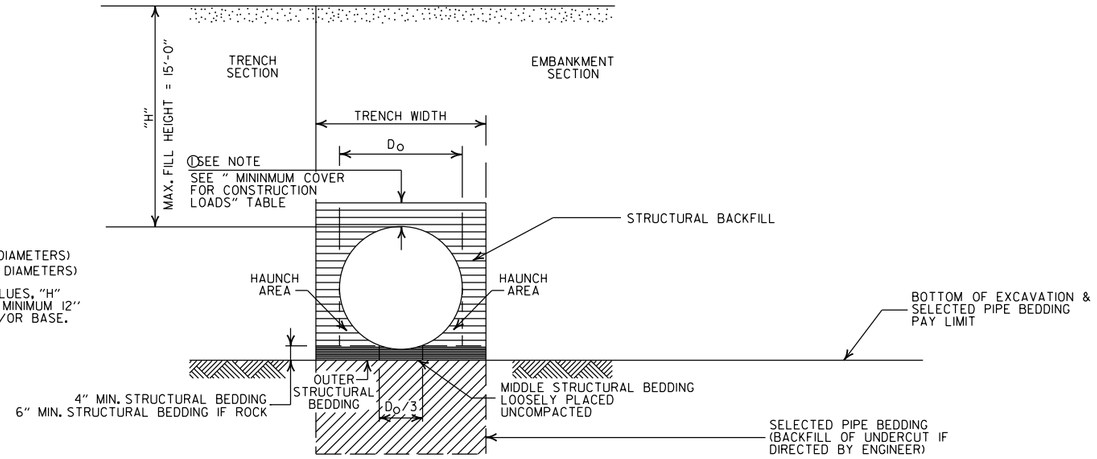

TYPE 2 EMBANKMENT AND TRENCH INSTALLATIONS

1. STRUCTURAL BACKFILL, EMBANKMENT, AND OUTER STRUCTURAL BEDDING MATERIAL SHALL BE COMPACTED TO 95% OF THE MAXIMUM DENSITY ACCORDING TO THE TYPE OR CLASS OF MATERIAL USED.

CONSTRUCTION SEQUENCE

1. PLACE STRUCTURAL BEDDING MATERIAL TO GRADE. DO NOT COMPACT.
2. INSTALL PIPE TO GRADE.
3. COMPACT STRUCTURAL BEDDING OUTSIDE THE MIDDLE THIRD OF THE PIPE.
4. THE STRUCTURAL BACKFILL SHALL BE PLACED AND COMPACTED IN LAYERS NOT EXCEEDING 8". THE LAYERS SHALL BE BROUGHT UP EVENLY AND SIMULTANEOUSLY TO THE ELEVATION OF THE MINIMUM COVER.
5. PIPE INSTALLATION MAY REQUIRE THE USE OF RESTRAINTS, WEIGHTING OR OTHER APPROVED METHODS IN ORDER TO HELP MAINTAIN GRADE AND ALIGNMENT.

GENERAL NOTES

1. PIPE SHALL CONFORM TO AASHTO M294, TYPE S. INSTALLATION SHALL CONFORM TO JOB SPECIAL PROVISION "PLASTIC PIPE" AND SECTION 606 OF THE STANDARD SPECIFICIATIONS FOR HIGHWAY CONSTRUCTION (CURRENT EDITION).
2. PLASTIC PIPE CULVERT DESIGN SHALL CONFORM TO AASHTO LRFD BRIDGE DESIGN SPECIFICATIONS, FIFTH EDITION (2010) WITH 2010 INTERIMS.
3. THE MAXIMUM ALLOWABLE TRENCH WIDTH SHALL BE THE MINIMUM WIDTH PLUS A SUFFICIENT WIDTH TO ENSURE WORKING ROOM TO PROPERLY AND SAFELY PLACE AND COMPACT HAUNCHING AND OTHER BACKFILL MATERIAL.
4. IMPERVIOUS MATERIAL SHOULD BE PLACED AS DIRECTED BY THE ENGINEER AT THE ENDS OF THE CULVERT TO PREVENT LOSS OF STRUCTURAL BEDDING WHEN PERVIOUS MATERIAL IS USED FOR STRUCTURAL BEDDING AND/OR BACKFILL.
5. WHEN DIRECTED BY THE ENGINEER, UNSUITABLE MATERIAL THAT IS ENCOUNTERED AT THE BOTTOM OF THE EXCAVATED TRENCH (BELOW THE AREA IDENTIFIED AS "STRUCTURAL BEDDING" ABOVE) WILL BE EXCAVATED AND REPLACED WITH SELECTED PIPE BEDDING. THE QUANTITY OF MATERIAL REQUIRED TO BACKFILL THE UNDERCUT AREA UP TO THE SELECTED PIPE BEDDING PAY LIMIT DESIGNATED ABOVE WILL BE MEASURED AND PAID FOR AS "SELECTED PIPE BEDDING."
6. WHEN THE EXISTING MATERIAL EXCAVATED FOR THE PIPE TRENCH IS DETERMINED BY THE ENGINEER TO BE UNSUITABLE FOR BACKFILLING THE PIPE (ABOVE THE AREA IDENTIFIED ABOVE AS STRUCTURAL BACKFILL), BORROW MATERIAL OR MATERIAL FROM THE ROADWAY EXCAVATION WILL BE USED TO BACKFILL THE PIPE. IF SUITABLE MATERIAL IS NOT AVAILABLE, THE ENGINEER MAY AUTHORIZE THE USE OF "SELECTED PIPE BACKFILL."
7. FOR PIPE TYPES THAT ARE NOT SMOOTH ON THE OUTSIDE (CORRUGATED OR PROFILE WALLS), BACKFILL GRADATIONS SHOULD BE SELECTED THAT WILL PERMIT THE FILLING OF THE CORRUGATION OR PROFILE VALLEY.
8. HIGH DENSITY POLYETHYLENE PIPES OF DIAMETERS OTHER THAN SHOWN WILL NOT BE ALLOWED.
9. JOINTS FOR HDPE PIPE SHALL MEET THE REQUIREMENTS FOR SOIL TIGHTNESS AS SPECIFIED IN AASHTO SECTION 26.4.2.4 AND 30.4.2 "AASHTO LRFD BRIDGE CONSTRUCTION SPECIFICATIONS." JOINTS SHALL BE INSTALLED PER MANUFACTURER'S RECOMMENDATIONS.

- LEGEND -

H = FILL HEIGHT (FT.)
D = OUTSIDE DIAMETER OF PIPE
MAX. = MAXIMUM
MIN. = MINIMUM

= STRUCTURAL BACKFILL MATERIAL

= UNDISTURBED SOIL

DATE	REVISION	DATE FILMED
2-27-14	REVISED GENERAL NOTE 1.	
12-15-11	REVISED GENERAL NOTES & MINIMUM COVER NOTE	
11-17-10	ISSUED	

ARKANSAS STATE HIGHWAY COMMISSION

PLASTIC PIPE CULVERT (HIGH DENSITY POLYETHYLENE)

STANDARD DRAWING PCP-1

INSTALLATION TYPE	•• MATERIAL REQUIREMENTS FOR STRUCTURAL BACKFILL AND STRUCTURAL BEDDING
TYPE 2	•SELECTED MATERIALS (CLASS SM-1, SM-2, OR SM-4)

• AGGREGATE BASE COURSE (CLASS 4, 5, 6, OR 7) MAY BE USED IN LIEU OF SELECTED MATERIAL.

SM3 WILL NOT BE ALLOWED.

•• STRUCTURAL BEDDING MATERIAL SHALL HAVE A MAXIMUM PARTICLE SIZE OF 1INCH. STRUCTURAL BACKFILL MATERIAL SHALL BE FREE OF ORGANIC MATERIAL, STONES LARGER THAN 1.50 INCH IN GREATEST DIMENSION, OR FROZEN LUMPS.

STRUCTURAL BACKFILL AND STRUCTURAL BEDDING MATERIAL WILL NOT BE PAID FOR SEPARATELY, BUT COMPENSATION WILL BE CONSIDERED TO BE INCLUDED IN THE PRICE BID PER LINEAR FOOT OF PVC PIPE.

MINIMUM TRENCH WIDTH BASED ON FILL HEIGHT "H"

PIPE DIAMETER	TRENCH WIDTH (FEET)	
	"H" < 10'-0"	"H" >OR= 10'-0"
18"	4'-6"	4'-6"
24"	5'-0"	6'-0"
30"	5'-6"	7'-6"
36"	6'-0"	9'-0"

MULTIPLE INSTALLATION OF PVC PIPES

PIPE DIAMETER	CLEAR DISTANCE BETWEEN PIPES
18"	1'-6"
24"	2'-0"
30"	2'-6"
36"	3'-0"

MAXIMUM FILL HEIGHT BASED ON STRUCTURAL BACKFILL

PIPE DIAMETER	"H"
18"	45'-0"
24"	45'-0"
30"	40'-0"
36"	40'-0"

① NOTE:
12" MIN. (18" - 36" DIAMETERS)
MINIMUM COVER VALUE, "H" SHALL INCLUDE A MINIMUM 12" OF PAVEMENT AND/OR BASE.

MINIMUM COVER FOR CONSTRUCTION LOADS

PIPE DIAMETER	② MIN. COVER (FEET) FOR INDICATED CONSTRUCTION LOADS			
	18.0-50.0 (KIPS)	50.0-75.0 (KIPS)	75.0-110.0 (KIPS)	110.0-175.0 (KIPS)
18" THRU 36"	2'-0"	2'-6"	3'-0"	3'-0"

②MINIMUM COVER SHALL BE MEASURED FROM TOP OF PIPE TO TOP OF THE MAINTAINED CONSTRUCTION ROADWAY SURFACE. THE SURFACE SHALL BE MAINTAINED.

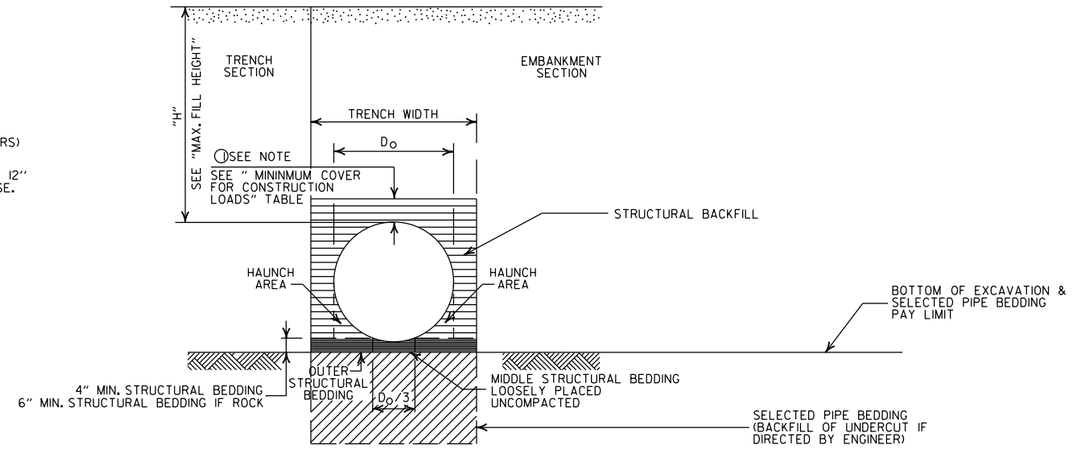

TYPE 2 EMBANKMENT AND TRENCH INSTALLATIONS

1. STRUCTURAL BACKFILL, EMBANKMENT, AND OUTER STRUCTURAL BEDDING MATERIAL SHALL BE COMPACTED TO 95% OF THE MAXIMUM DENSITY ACCORDING TO THE TYPE OR CLASS OF MATERIAL USED.

CONSTRUCTION SEQUENCE

1. PLACE STRUCTURAL BEDDING MATERIAL TO GRADE. DO NOT COMPACT.
2. INSTALL PIPE TO GRADE.
3. COMPACT STRUCTURAL BEDDING OUTSIDE THE MIDDLE THIRD OF THE PIPE.
4. THE STRUCTURAL BACKFILL SHALL BE PLACED AND COMPACTED IN LAYERS NOT EXCEEDING 8". THE LAYERS SHALL BE BROUGHT UP EVENLY AND SIMULTANEOUSLY TO THE ELEVATION OF THE MINIMUM COVER.
5. PIPE INSTALLATION MAY REQUIRE THE USE OF RESTRAINTS, WEIGHTING OR OTHER APPROVED METHODS IN ORDER TO HELP MAINTAIN GRADE AND ALIGNMENT.

GENERAL NOTES

1. PIPE SHALL CONFORM TO ASTM F949, CELL CLASS 12454. INSTALLATION SHALL CONFORM TO JOB SPECIAL PROVISION "PLASTIC PIPE" AND SECTION 606 OF THE STANDARD SPECIFICATIONS FOR HIGHWAY CONSTRUCTION (CURRENT EDITION).
2. PLASTIC PIPE CULVERT DESIGN SHALL CONFORM TO AASHTO LRFD BRIDGE DESIGN SPECIFICATIONS, FIFTH EDITION (2010) WITH 2010 INTERIMS.
3. THE MAXIMUM ALLOWABLE TRENCH WIDTH SHALL BE THE MINIMUM WIDTH PLUS A SUFFICIENT WIDTH TO ENSURE WORKING ROOM TO PROPERLY AND SAFELY PLACE AND COMPACT HAUNCHING AND OTHER BACKFILL MATERIAL.
4. IMPERVIOUS MATERIAL SHOULD BE PLACED AS DIRECTED BY THE ENGINEER AT THE ENDS OF THE CULVERT TO PREVENT LOSS OF STRUCTURAL BEDDING WHEN PERVIOUS MATERIAL IS USED FOR STRUCTURAL BEDDING AND/OR BACKFILL.
5. WHEN DIRECTED BY THE ENGINEER, UNSUITABLE MATERIAL THAT IS ENCOUNTERED AT THE BOTTOM OF THE EXCAVATED TRENCH (BELOW THE AREA IDENTIFIED AS "STRUCTURAL BEDDING" ABOVE) WILL BE EXCAVATED AND REPLACED WITH SELECTED PIPE BEDDING. THE QUANTITY OF MATERIAL REQUIRED TO BACKFILL THE UNDERCUT AREA UP TO THE SELECTED PIPE BEDDING PAY LIMIT DESIGNATED ABOVE WILL BE MEASURED AND PAID FOR AS "SELECTED PIPE BEDDING."
6. WHEN THE EXISTING MATERIAL EXCAVATED FOR THE PIPE TRENCH IS DETERMINED BY THE ENGINEER TO BE UNSUITABLE FOR BACKFILLING THE PIPE (ABOVE THE AREA IDENTIFIED ABOVE AS STRUCTURAL BACKFILL), BORROW MATERIAL OR MATERIAL FROM THE ROADWAY EXCAVATION WILL BE USED TO BACKFILL THE PIPE. IF SUITABLE MATERIAL IS NOT AVAILABLE, THE ENGINEER MAY AUTHORIZE THE USE OF "SELECTED PIPE BACKFILL."
7. FOR PIPE TYPES THAT ARE NOT SMOOTH ON THE OUTSIDE (CORRUGATED OR PROFILE WALLS), BACKFILL GRADATIONS SHOULD BE SELECTED THAT WILL PERMIT THE FILLING OF THE CORRUGATION OR PROFILE VALLEY.
8. PVC PIPES OF DIAMETERS OTHER THAN SHOWN WILL NOT BE ALLOWED.
9. JOINTS FOR PVC PIPE SHALL MEET THE REQUIREMENTS FOR SOIL TIGHTNESS AS SPECIFIED IN AASHTO SECTION 26.4.2.4 AND 30.4.2 "AASHTO LRFD BRIDGE CONSTRUCTION SPECIFICATIONS." JOINTS SHALL BE INSTALLED PER MANUFACTURER'S RECOMMENDATIONS.

- LEGEND -

H = FILL HEIGHT (FT.)
D_O = OUTSIDE DIAMETER OF PIPE
MAX. = MAXIMUM
MIN. = MINIMUM

= STRUCTURAL BACKFILL MATERIAL
= UNDISTURBED SOIL

DATE	REVISION	DATE FILMED
2-27-14	REVISED GENERAL NOTE 1.	
12-15-11	REV GENERAL NOTES & MINIMUM COVER NOTE; DELETED SM3 MATERIAL	
11-17-10	ISSUED	

ARKANSAS STATE HIGHWAY COMMISSION

PLASTIC PIPE CULVERT (PVC F949)

STANDARD DRAWING PCP-2

INSTALLATION TYPE	**MATERIAL REQUIREMENTS FOR STRUCTURAL BACKFILL AND STRUCTURAL BEDDING
TYPE 1	AGGREGATE BASE COURSE (CLASS 4, 5, 6, OR 7)
TYPE 2	*SELECTED MATERIALS (CLASS SM-1, SM-2 OR SM-4) OR TYPE 1 INSTALLATION MATERIAL

*SM3 WILL NOT BE ALLOWED.

** STRUCTURAL BEDDING MATERIAL SHALL HAVE A MAXIMUM PARTICLE SIZE OF 1INCH. STRUCTURAL BACKFILL MATERIAL SHALL BE FREE OF ORGANIC MATERIAL, STONES LARGER THAN 1.50 INCH IN GREATEST DIMENSION, OR FROZEN LUMPS.

STRUCTURAL BACKFILL AND STRUCTURAL BEDDING MATERIAL WILL NOT BE PAID FOR SEPARATELY, BUT COMPENSATION WILL BE CONSIDERED TO BE INCLUDED IN THE PRICE BID PER LINEAR FOOT OF POLYPROPYLENE PIPE.

MULTIPLE INSTALLATION OF POLYPROPYLENE PIPES

PIPE DIAMETER	CLEAR DISTANCE BETWEEN PIPES
18"	1'-6"
24"	2'-0"
30"	2'-6"
36"	3'-0"
42"	3'-6"
48"	4'-0"
60"	5'-0"

MINIMUM TRENCH WIDTH BASED ON FILL HEIGHT "H"

PIPE DIAMETER	TRENCH WIDTH (FEET)	
	"H" < 10'-0"	"H" >OR= 10'-0"
18"	4'-6"	4'-6"
24"	5'-0"	6'-0"
30"	5'-6"	7'-6"
36"	6'-0"	9'-0"
42"	7'-0"	10'-6"
48"	8'-0"	12'-0"
60"	10'-0"	15'-0"

①NOTE:
12" MIN. (18" - 42" DIAMETERS)
24" MIN. (60" DIAMETER)

MINIMUM COVER VALUES, "H" SHALL INCLUDE A MINIMUM 12" OF PAVEMENT AND/OR BASE.

MAXIMUM HEIGHT OF FILL "H"

PIPE DIAMETER	INSTALLATION TYPE	
	TYPE 1	TYPE 2
18"	18'	14'
24"	16'	12'
30"	18'	14'
36"	16'	12'
42"	18'	13'
48"	15'	11'
60"	17'	12'

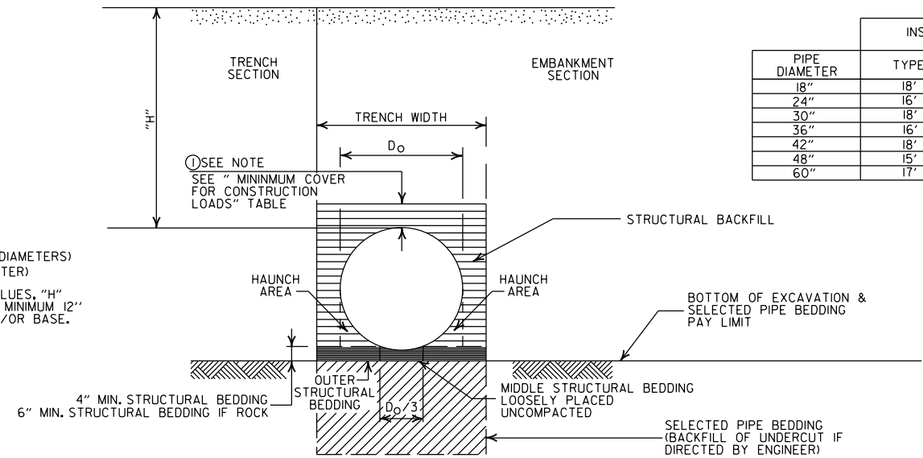

MINIMUM COVER FOR CONSTRUCTION LOADS

PIPE DIAMETER	② MIN. COVER (FEET) FOR INDICATED CONSTRUCTION LOADS			
	18.0-50.0 (KIPS)	50.0-75.0 (KIPS)	75.0-110.0 (KIPS)	110.0-150.0 (KIPS)
36" OR LESS	2'-0"	2'-6"	3'-0"	3'-0"
42" OR GREATER	3'-0"	3'-0"	3'-6"	4'-0"

②MINIMUM COVER SHALL BE MEASURED FROM TOP OF PIPE TO TOP OF THE MAINTAINED CONSTRUCTION ROADWAY SURFACE. THE SURFACE SHALL BE MAINTAINED.

EMBANKMENT AND TRENCH INSTALLATIONS

1. STRUCTURAL BACKFILL, EMBANKMENT, AND OUTER STRUCTURAL BEDDING MATERIAL SHALL BE COMPACTED TO 95% OF THE MAXIMUM DENSITY ACCORDING TO THE TYPE OR CLASS OF MATERIAL USED.

CONSTRUCTION SEQUENCE

1. PLACE STRUCTURAL BEDDING MATERIAL TO GRADE. DO NOT COMPACT.
2. INSTALL PIPE TO GRADE.
3. COMPACT STRUCTURAL BEDDING OUTSIDE THE MIDDLE THIRD OF THE PIPE.
4. THE STRUCTURAL BACKFILL SHALL BE PLACED AND COMPACTED IN LAYERS NOT EXCEEDING 8". THE LAYERS SHALL BE BROUGHT UP EVENLY AND SIMULTANEOUSLY TO THE ELEVATION OF THE MINIMUM COVER.
5. PIPE INSTALLATION MAY REQUIRE THE USE OF RESTRAINTS, WEIGHTING OR OTHER APPROVED METHODS IN ORDER TO HELP MAINTAIN GRADE AND ALIGNMENT.

GENERAL NOTES

1. PIPE SHALL CONFORM TO AASHTO M330, TYPE S, INSTALLATION SHALL CONFORM TO JOB SPECIAL PROVISION "PLASTIC PIPE" AND SECTION 606 OF THE STANDARD SPECIFICIATIONS FOR HIGHWAY CONSTRUCTION (CURRENT EDITION).
2. PLASTIC PIPE CULVERT DESIGN SHALL CONFORM TO AASHTO LRFD BRIDGE DESIGN SPECIFICATIONS, SIXTH EDITION (2012) WITH 2013 INTERIMS.
3. THE MAXIMUM ALLOWABLE TRENCH WIDTH SHALL BE THE MINIMUM WIDTH PLUS A SUFFICIENT WIDTH TO ENSURE WORKING ROOM TO PROPERLY AND SAFELY PLACE AND COMPACT HAUNCHING AND OTHER BACKFILL MATERIAL.
4. IMPERVIOUS MATERIAL SHOULD BE PLACED AS DIRECTED BY THE ENGINEER AT THE ENDS OF THE CULVERT TO PREVENT LOSS OF STRUCTURAL BEDDING WHEN PERVIOUS MATERIAL IS USED FOR STRUCTURAL BEDDING AND/OR BACKFILL.
5. WHEN DIRECTED BY THE ENGINEER, UNSUITABLE MATERIAL THAT IS ENCOUNTERED AT THE BOTTOM OF THE EXCAVATED TRENCH (BELOW THE AREA IDENTIFIED AS "STRUCTURAL BEDDING" ABOVE) WILL BE EXCAVATED AND REPLACED WITH SELECTED PIPE BEDDING. THE QUANTITY OF MATERIAL REQUIRED TO BACKFILL THE UNDERCUT AREA UP TO THE SELECTED PIPE BEDDING PAY LIMIT DESIGNATED ABOVE WILL BE MEASURED AND PAID FOR AS "SELECTED PIPE BEDDING."
6. WHEN THE EXISTING MATERIAL EXCAVATED FOR THE PIPE TRENCH IS DETERMINED BY THE ENGINEER TO BE UNSUITABLE FOR BACKFILLING THE PIPE (ABOVE THE AREA IDENTIFIED ABOVE AS STRUCTURAL BACKFILL), BORROW MATERIAL OR MATERIAL FROM THE ROADWAY EXCAVATION WILL BE USED TO BACKFILL THE PIPE. IF SUITABLE MATERIAL IS NOT AVAILABLE, THE ENGINEER MAY AUTHORIZE THE USE OF "SELECTED PIPE BACKFILL."
7. FOR PIPE TYPES THAT ARE NOT SMOOTH ON THE OUTSIDE (CORRUGATED OR PROFILE WALLS), BACKFILL GRADATIONS SHOULD BE SELECTED THAT WILL PERMIT THE FILLING OF THE CORRUGATION OR PROFILE VALLEY.
8. POLYPROPYLENE PIPES OF DIAMETERS OTHER THAN SHOWN WILL NOT BE ALLOWED.
9. JOINTS FOR POLYPROPYLENE PIPE SHALL MEET THE REQUIREMENTS FOR SOIL TIGHTNESS AS SPECIFIED IN SECTION 26.4.2.4 AND 30.4.2 OF THE AASHTO LRFD BRIDGE CONSTRUCTION SPECIFICATIONS 3RD EDITION (2010) WITH 2012 INTERIMS. JOINTS SHALL BE INSTALLED PER MANUFACTURER'S RECOMMENDATIONS.

- LEGEND -

H = FILL HEIGHT (FT.)
D_O = OUTSIDE DIAMETER OF PIPE
MAX. = MAXIMUM
MIN. = MINIMUM

= STRUCTURAL BACKFILL MATERIAL

= UNDISTURBED SOIL

DATE	REVISION	DATE FILMED
02-27-20	REVISED	
11-07-19	ISSUED	

ARKANSAS STATE HIGHWAY COMMISSION

PLASTIC PIPE CULVERT (POLYPROPYLENE)

STANDARD DRAWING PCP-3

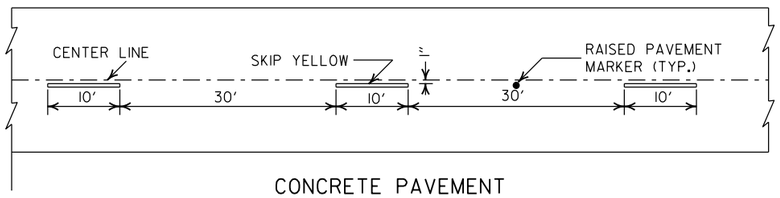

CONCRETE PAVEMENT

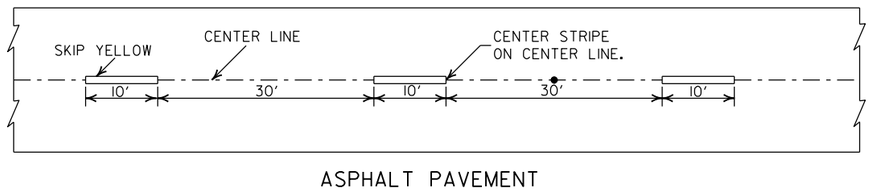

ASPHALT PAVEMENT

BROKEN LINE STRIPING

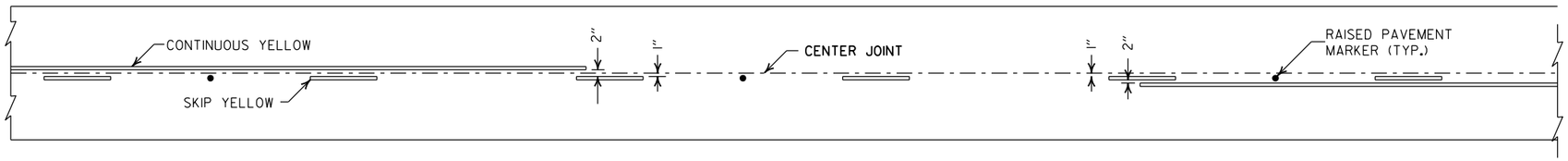

SOLID LINE STRIPING ON CONCRETE PAVEMENT

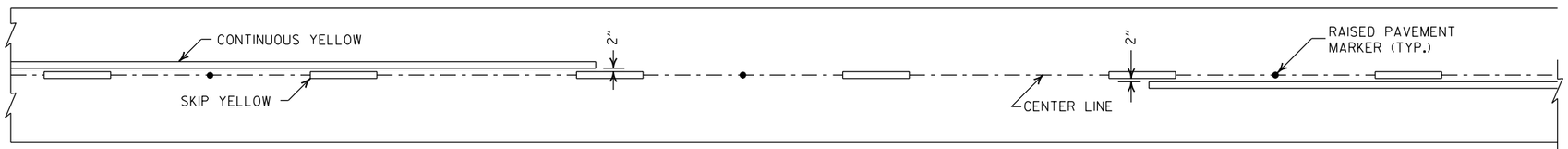

SOLID LINE STRIPING ON ASPHALT PAVEMENT

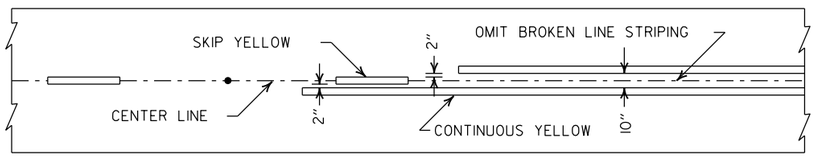

ASPHALT PAVEMENT

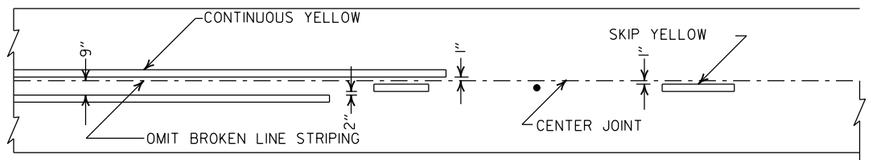

CONCRETE PAVEMENT

STRIPING AT ADJACENT NO PASSING LANES

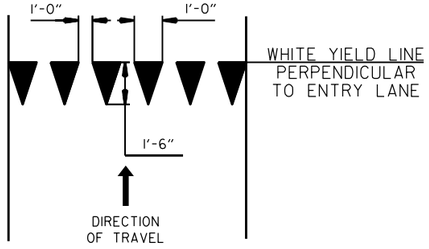

YIELD LINE DETAIL

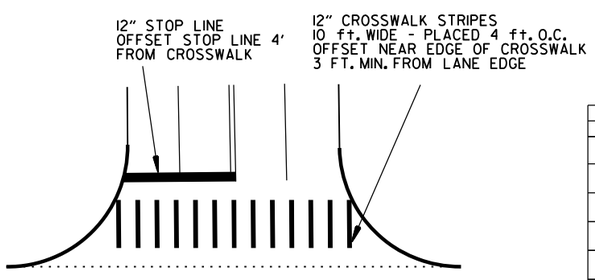

CROSSWALK AND STOP LINE DETAILS

NOTES:
1. REFER TO THE STRIPING DETAILS FOR PAVEMENT MARKING LINE WIDTHS.
2. THIS DRAWING SHALL BE USED IN CONJUNCTION WITH THE LATEST REVISED ADDITION OF THE "MANUAL ON UNIFORM TRAFFIC CONTROL DEVICES."
3. RAISED PAVEMENT MARKERS SHALL BE PLACED ON AN 80 FEET SPACING UNLESS OTHERWISE SHOWN IN THE PLANS.

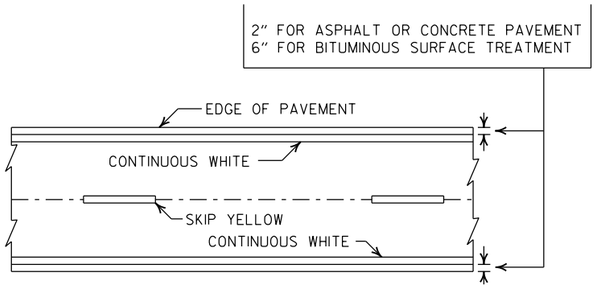

PAVEMENT EDGE LINE MARKING

NOTE:
THE RED LENS OF THE TYPE II R.P.M. SHALL FACE THE INCORRECT TRAFFIC MOVEMENT.

TYPE II
RED/CLEAR OR
YELLOW/YELLOW

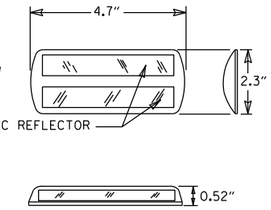

NOTE:
DIMENSIONS SHOWN FOR RAISED PAVEMENT MARKERS ARE TYPICAL. THE CONTRACTOR MAY SUBSTITUTE SIMILAR MARKERS WITH THE APPROVAL OF THE ENGINEER. REQUESTING APPROVAL FOR SIMILAR MARKERS MAY BE MADE BY REFERRING TO THE ARDOT QUALIFIED PRODUCTS LIST.

DETAIL OF STANDARD RAISED PAVEMENT MARKERS

DATE	REVISION	FILMED
2-27-20	REVISED STOP LINE DETAILS	
6-1-17	ADDED YIELD LINE DETAIL	
5-12-16	REVISED LINE WIDTHS, SPACING, & NOTES	
9-12-13	REVISED DETAIL OF STANDARD RAISED PAVEMENT MARKERS	
11-17-10	REVISED GENERAL NOTES & REMOVED PLOWABLE PVMT MRKRS	
11-18-04	REVISED NOTE 2 & GENERAL NOTES	
8-22-02	ADDED CROSSWALK & STOPBAR DTLS.	
7-02-98	ADDED DETAILS OF STD. RAISED PAV'T. MARKERS	
4-26-96	REV. NOTES 3&4; ADDED R.P.M.	
9-30-80	DRAWN	1-9-30-80

ARKANSAS STATE HIGHWAY COMMISSION

PAVEMENT MARKING DETAILS

STANDARD DRAWING PM-1

PAVEMENT MARKING QUANTITIES
(BASED ON 700' ACCEL. LANE + 300' TAPER)

ENTRANCE RAMP

12" WHITE = 370 LIN. FT.
RAISED PAVEMENT MARKERS TYPE II (WHITE/RED) = 38 EACH

EXIT RAMP

6" WHITE = 280 LIN. FT.
12" WHITE = 815 LIN. FT.
RAISED PAVEMENT MARKERS TYPE II (WHITE/RED) = 38 EACH
RAISED PAVEMENT MARKERS TYPE II (WHITE/RED) = 48 EACH

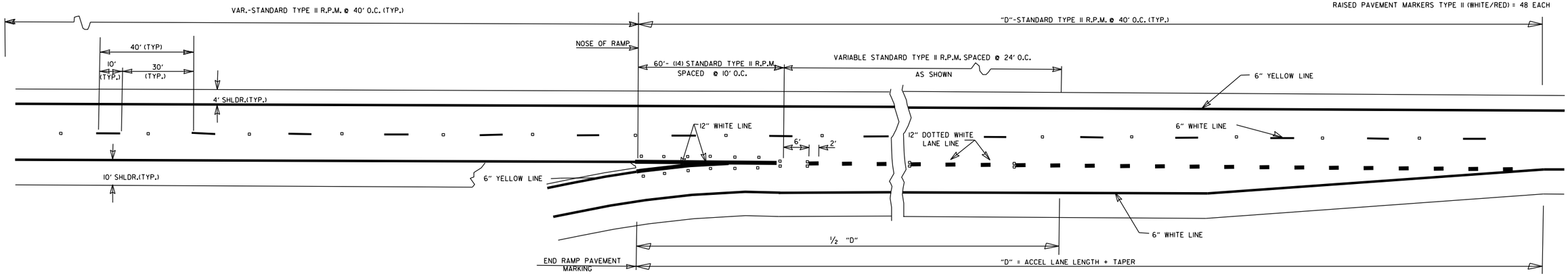

ENTRANCE RAMPS

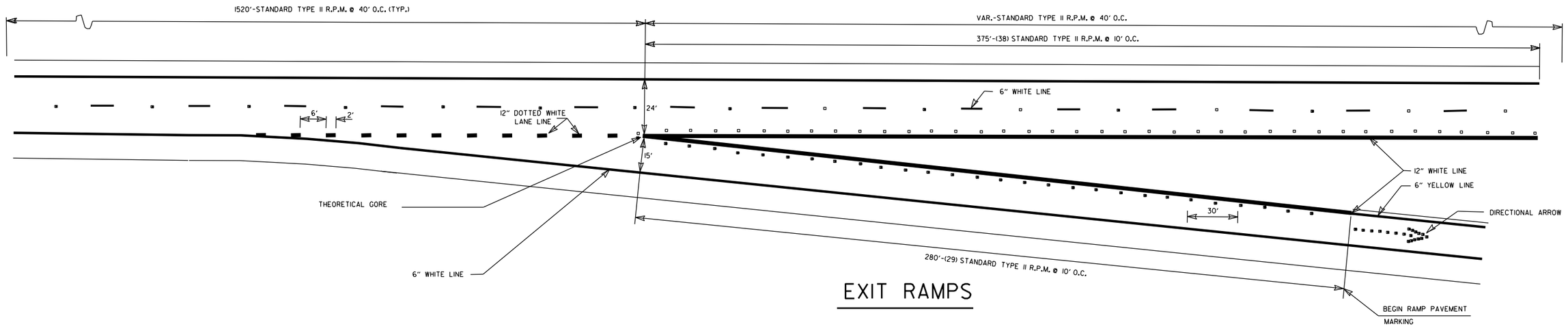

EXIT RAMPS

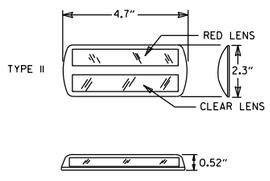

DETAIL OF
STANDARD
RAISED PAVEMENT MARKERS

NOTE:
THE RED LENS OF THE TYPE II R.P.M. SHALL FACE THE INCORRECT TRAFFIC MOVEMENT.

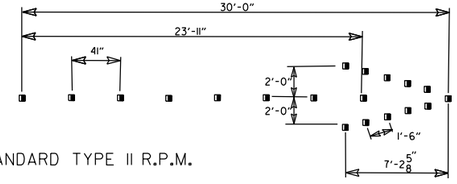

(19) STANDARD TYPE II R.P.M.

DIRECTIONAL ARROWS

GENERAL NOTES:

THIS DRAWING SHOULD BE CONSIDERED AS TYPICAL ONLY AND THE FINAL LOCATION OF THE STRIPING AND PAVEMENT MARKERS SHALL BE DETERMINED BY THE ENGINEER.

THIS DRAWING SHOULD BE USED IN CONJUNCTION WITH THE "MANUAL ON UNIFORM TRAFFIC CONTROL DEVICES", LATEST REVISION.

NOTE:
DIMENSIONS SHOWN FOR RAISED PAVEMENT MARKERS ARE TYPICAL. THE CONTRACTOR MAY SUBSTITUTE SIMILAR MARKERS WITH THE APPROVAL OF THE ENGINEER. REQUESTING APPROVAL FOR SIMILAR MARKERS MAY BE MADE BY REFERRING TO THE ARDOT QUALIFIED PRODUCTS LIST.

DATE	REVISION	FILMED
05-14-20	REMOVED CROSSHATCH MARKINGS ON EXIT RAMPS	
11-07-19	REVISED DOTTED PAV'T MARKINGS; ADDED CROSSHATCH MARKINGS ON EXIT RAMPS	
12-8-16	REVISED RAISED PAV'T MARKERS FOR 80' SPACING; REVISED WIDTH OF STRIPING	
9-12-13	REVISED DETAIL OF STANDARD RAISED PAVEMENT MARKERS	
7-26-12	REVISED RPM NOTATION	
12-15-11	REVISED RPMs ACCORDING TO LATEST POLICY	
11-17-10	REMOVED PLOWABLE PAVEMENT MARKERS	
6-3-10	REVISED PER 2009 MUTCD	
11-18-04	REVISED NOTES	
8-22-02	ADDED & REVISED NOTES; REV. ENTRANCE & EXIT RAMPS	
5-18-00	REMOVED HASHMARKS	
7-02-98	CHANGED TYPES TO ROMAN NUMERALS	
4-26-96	ADDED DIMENSIONS & QUANTITIES; REVISED LANE WIDTH ON EXIT RAMP	
2-2-95	PLACED IN USE	2-2-95

ARKANSAS STATE HIGHWAY COMMISSION

PAVEMENT MARKING DETAILS ON ACCESS CONTROLLED ROADWAYS

STANDARD DRAWING PM-2

NOTE:

1. UNLESS OTHERWISE SPECIFIED ON THE PLANS, THE UNDERDRAIN COVER SHALL BE THOROUGHLY COMPACTED EARTH AND SHALL BE SUBSIDIARY TO PIPE UNDERDRAIN.

2. GRANULAR MATERIAL SHALL BE WRAPPED WITH GEOTEXTILE FABRIC. LAP FABRIC 12" OR THE WIDTH OF THE TRENCH AT THE TOP.

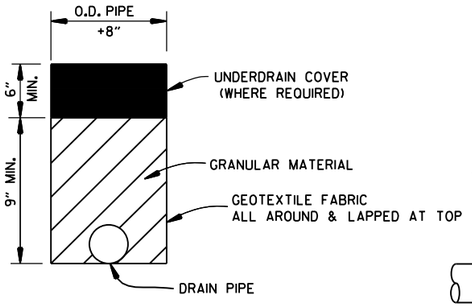

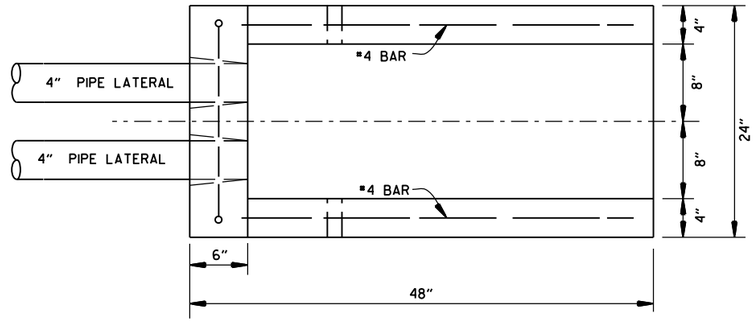

PLAN VIEW

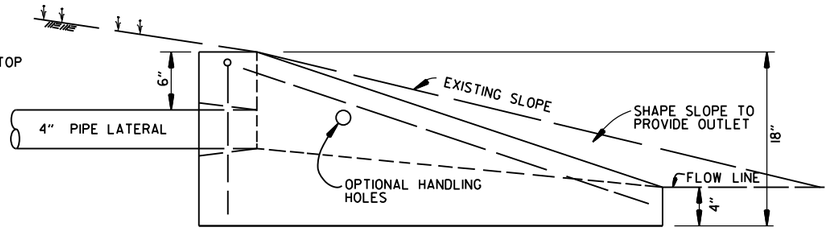

SIDE VIEW

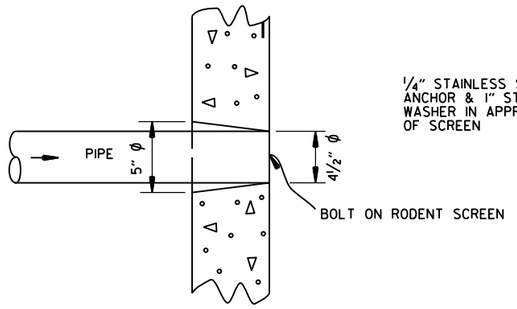

DETAIL OF HOLE
FOR 4" PIPE

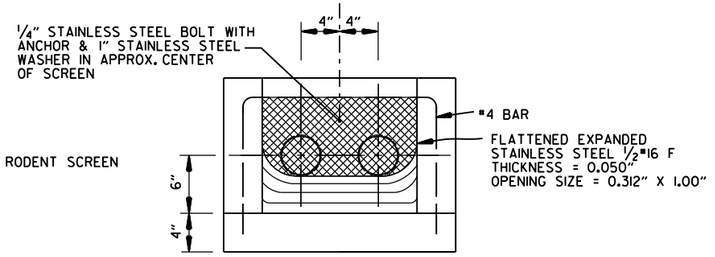

FRONT VIEW
(DETAIL OF RODENT SCREEN)

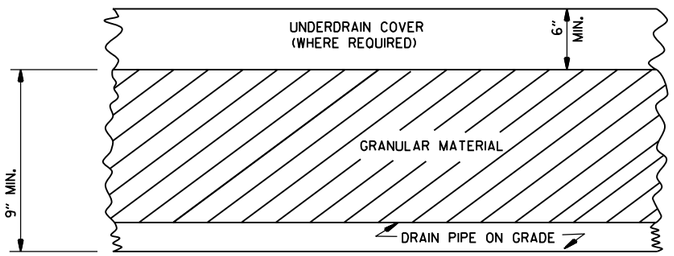

DETAILS OF PIPE UNDERDRAIN

NOTES FOR PIPE UNDERDRAINS

1. GEOTEXTILE FABRIC SHALL MEET THE REQUIREMENTS OF SECTION 625 FOR TYPE 1. PAYMENT FOR GEOTEXTILE FABRIC AND GRANULAR FILTER MATERIAL SHALL BE INCLUDED IN THE PRICE BID PER LIN. FT. FOR "4" PIPE UNDERDRAINS" IN ACCORDANCE WITH SECTION 611 OF THE STANDARD SPECIFICATIONS.

2. 4" NON-PERFORATED SCHEDULE 40 PVC PIPE LATERALS WITH OUTLET PROTECTORS SHALL BE INSTALLED AS SHOWN HEREON. LATERALS WILL BE MEASURED AND PAID FOR AS "4" PIPE UNDERDRAINS." UNDERDRAIN OUTLET PROTECTORS WILL BE MEASURED AND PAID FOR BY THE UNIT IN ACCORDANCE WITH SECTION 611 OF THE STANDARD SPECIFICATIONS.

3. EXISTING 4" PIPE UNDERDRAINS MAY BE CONNECTED TO PROPOSED DROP INLETS OR EXTENDED WHERE DIRECTED BY THE ENGINEER. PAYMENT FOR CONNECTING TO DROP INLETS SHALL BE CONSIDERED INCLUDED IN THE PRICE BID FOR "4" PIPE UNDERDRAINS."

4. THE LOCATION OF ALL LATERALS SHALL BE MARKED WITH 4" X 12" PERMANENT PAVEMENT MARKING TAPE (TYPE III WHITE) AT THE OUTSIDE EDGE OF THE SHOULDER, PLACED TRANSVERSE TO TRAFFIC. PAYMENT FOR THIS WORK SHALL BE INCLUDED IN THE PRICE BID FOR THE VARIOUS CONTRACT ITEMS.

5. PAYMENT FOR THE RODENT SCREEN SHALL BE INCLUDED IN THE PRICE BID PER EACH FOR "UNDERDRAIN OUTLET PROTECTORS."

6. ANY EXISTING UNDERDRAINS THAT INTERFERE WITH INSTALLATION OF THE NEW UNDERDRAIN SYSTEM SHALL BE REMOVED AND DISPOSED OF AS DIRECTED BY THE ENGINEER. PAYMENT WILL BE CONSIDERED INCLUDED IN THE PRICE BID FOR THE VARIOUS CONTRACT ITEMS. EXISTING UNDERDRAIN OUTLET PROTECTORS SHALL BE REMOVED UNDER THE ITEM "REMOVAL AND DISPOSAL OF UNDERDRAIN OUTLET PROTECTORS."

7. AT LOCATIONS WHERE A SINGLE LATERAL IS USED THE CONTRACTOR SHALL HAVE THE FOLLOWING OPTIONS: 1. INSTALL OUTLET PROTECTOR AS SHOWN ON STANDARD DRAWING PU-1 AND GROUT THE UNUSED HOLE OR 2. INSTALL AN OUTLET PROTECTOR WITH A SINGLE HOLE.

UNDERDRAIN OUTLET PROTECTORS

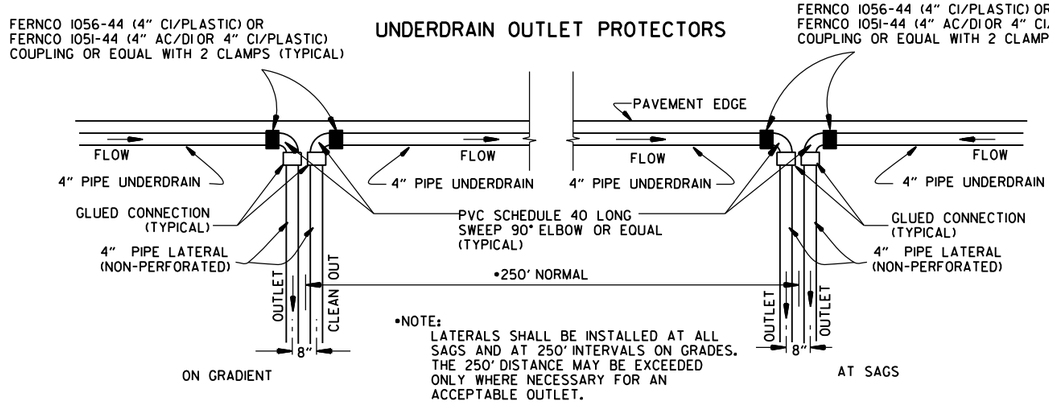

DETAIL OF PIPE UNDERDRAIN LATERALS
WHEN PLACED ALONG PAVEMENT EDGE

NOTE: PVC PIPE FOR LATERALS SHALL MEET THE REQUIREMENTS OF ASTM D 1785 (LATEST REVISION) FOR SCHEDULE 40 PIPE.

DATE	REVISION	DATE FILMED
12-8-16	ADDED NOTES FOR PIPE UNDERDRAINS, REVISED RODENT SCREEN DETAIL AND NOTES, REMOVED NOTE 1 FOR GRANULAR MATERIAL, ADDED NOTE FOR GEOTEXTILE FABRIC	
4-10-03	REVISED NOTE 3	
1-12-00	REVISED DETAIL OF UNDERDRAIN LATERALS	
11-18-98	REVISED NOTE	
10-18-96	REVISED MIN. DEPTH & GEOTEXTILE FABRIC	
4-26-96	ADDED LATERAL NOTE; 5½" TO 5"	
11-22-95	REVISED LATERALS	
7-20-95	REVISED LATERALS & ADDED NOTE	
11- 3-94	REVISED FOR DUAL LATERALS	11- 3-94
10- 1-92	SUBSTITUTED GEOTEXTILE	10- 1-92
8-15-91	ADDED POLYEDTHYLENE PIPE	8-15-91
11- 8-90	DELETED ALTERNATE NOTE	11- 8-90
1-25-90	ADDED 4" SNAP ADAPTER	1-25-90
11-30-89	DEL. (SUBGRADE); ADDED (WHERE REQUIRED)	11-30-89
7-15-88	ISSUED P.L.M.	647-7-15-88

ARKANSAS STATE HIGHWAY COMMISSION

DETAILS OF PIPE UNDERDRAIN

STANDARD DRAWING PU-1

STEEL FABRICATION: REINFORCING STEEL FABRICATION SHALL CONFORM TO THE DIMENSIONS LISTED IN THE TABLE BELOW:

BAR SIZE	PIN DIAMETER	HOOK EXTENSION "K"
3	2¼"	4"
4	3 "	4½"
5	3¾"	5"
6	4½"	6"
7	5¼"	7"
8	6"	8"

IF THE OVERALL HEIGHT OF THE HOOK (SEE DIAGRAM BELOW) FOR A "b", "b1", "b2" or "b3" BENT BAR IS GREATER THAN THE CORRESPONDING TOP OR BOTTOM SLAB THICKNESS, LESS 2¾ INCHES, EACH BENT BAR SHALL BE REPLACED WITH ONE HOOKED BAR AND ONE STRAIGHT BAR, USING LENGTHS AS SHOWN IN THE TABLE BELOW. THE TWO BARS SHALL BE THE SAME DIAMETER AS, AND PLACED AT THE SAME SPACING AS, THE "b", "b1", "b2" OR "b3" BENT BARS THEY REPLACE.

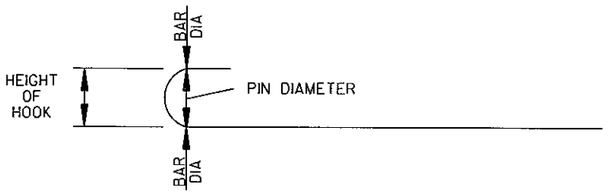

NOTE: DIMENSIONS OF BARS ARE MEASURED OUT TO OUT OF BARS.

OVERALL HEIGHT OF HOOKED BAR DIAGRAM

THE HOOKED BARS SHALL BE PLACED IN THE BOTTOM OF THE TOP SLAB AND THE TOP OF THE BOTTOM SLAB. THE STRAIGHT BARS SHALL BE PLACED IN THE TOP OF THE TOP SLAB AND THE BOTTOM OF THE BOTTOM SLAB. SEE TABLE BELOW FOR LENGTHS OF REPLACEMENT HOOKED AND STRAIGHT BARS.

FOR SKEWED CULVERTS, THE REPLACEMENT STRAIGHT BAR MAY HAVE TO BE CUT IN FIELD TO FIT.

REPLACEMENT BAR LENGTHS TABLE

BAR SIZE: "b", "b1", "b2" OR "b3"	LENGTH OF HOOKED BAR	LENGTH OF STRAIGHT BAR
#4	L + 1' - 0"	SEE "c" BAR LENGTH
#5	L + 1' - 2"	SEE "c" BAR LENGTH
#6	L + 1' - 4"	SEE "c" BAR LENGTH
#7	L + 1' - 8"	SEE "c" BAR LENGTH
#8	L + 1' - 10"	SEE "c" BAR LENGTH
#9	L + 2' - 6"	SEE "c" BAR LENGTH

L = "OW" - 3 INCHES

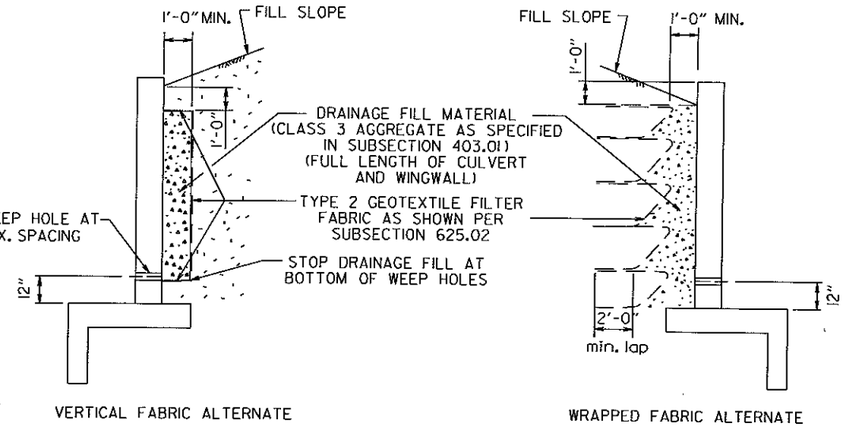

WINGWALL & CULVERT DRAINAGE DETAIL

REINFORCED CONCRETE BOX CULVERT GENERAL NOTES

CONCRETE SHALL BE CLASS S WITH A MINIMUM 28 DAY COMPRESSIVE STRENGTH OF 3500 PSI.

REINFORCING STEEL SHALL BE AASHTO M 31 OR M 53, GRADE 60.

CONSTRUCTION AND MATERIALS FOR WINGWALL & CULVERT DRAINAGE, INCLUDING WEEP HOLES AND GRANULAR MATERIAL, SHALL BE SUBSIDIARY TO THE BID ITEM, "CLASS S CONCRETE".

MEMBRANE WATERPROOFING SHALL CONFORM TO THE REQUIREMENTS OF SECTION 815 OF THE STANDARD SPECIFICATIONS.

MEMBRANE WATERPROOFING SHALL BE APPLIED TO ALL CONSTRUCTION JOINTS IN THE TOP SLAB AND THE SIDEWALLS OF R.C. BOX CULVERTS AS DIRECTED BY THE ENGINEER. NO PAYMENT SHALL BE MADE FOR THIS ITEM, BUT PAYMENT WILL BE CONSIDERED TO BE INCLUDED IN THE VARIOUS ITEMS BID FOR THE R.C. BOX CULVERT.

REINFORCING STEEL TOLERANCES: THE TOLERANCES FOR REINFORCING STEEL SHALL MEET THOSE LISTED IN "MANUAL OF STANDARD PRACTICE" PUBLISHED BY CONCRETE REINFORCING STEEL INSTITUTE (CRSI) EXCEPT THAT THE TOLERANCE FOR TRUSS BARS SUCH AS FIGURE 3 ON PAGE 7-4 OF THE CRSI MANUAL SHALL BE MINUS ZERO TO PLUS ½ INCH.

WEEP HOLES IN BOX CULVERT WALLS SHALL HAVE A MAXIMUM HORIZONTAL SPACING OF 10'-0" AND SHALL BE SPACED TO CLEAR ALL REINFORCING STEEL. THE DRAIN OPENING SHALL BE 4" DIAMETER AND SHALL BE PLACED 12" ABOVE THE TOP OF THE BOTTOM SLAB.

WEEP HOLES IN WINGWALLS SHALL HAVE A MAXIMUM HORIZONTAL SPACING OF 10'-0" AND SHALL BE SPACED TO CLEAR ALL REINFORCING STEEL. THERE SHALL BE A MINIMUM OF TWO (2) WEEP HOLES IN EACH WINGWALL. THE DRAIN OPENING SHALL BE 4" DIAMETER AND SHALL BE PLACED 12" ABOVE THE TOP OF THE WINGWALL FOOTING.

THE REQUIREMENTS SHOWN ON THIS DRAWING SHALL SUPERCEDE THE CORRESPONDING REQUIREMENTS ON ALL REINFORCED CONCRETE BOX CULVERT STANDARD DRAWINGS.

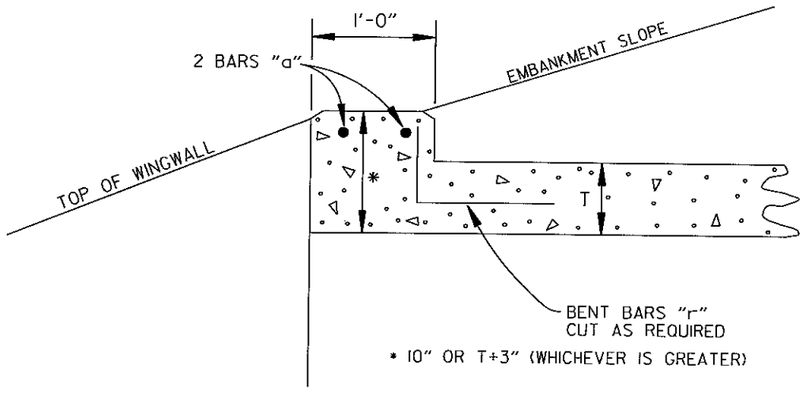

NOTE: FOR ALL SKEWED R.C. BOX CULVERTS THE LENGTH "K" OF THE MODIFIED HEADWALL SHALL BE EQUAL TO THE ROADWAY LENGTH "RL". THE ENDS OF THE HEADWALL SHALL BE CONSTRUCTED PARALLEL TO THE SKEW ANGLE OF THE BOX CULVERT.

R.C. BOX CULVERT HEADWALL MODIFICATIONS

DATE	REVISION	DATE FILMED
7/26/12	REV. DRAINAGE FILL MATERIAL & DETAIL	
12/15/11	REQUIRE WEEP HOLES IN BOX CULVERT WALLS	
5-25-06	REV. GEN. NOTES AND DETAILS FOR WEEP HOLES; BAR DIAGRAM	
11-16-01	ADDED WINGWALL DRAINAGE DETAIL/EDITED GEN. NOTES	
10-18-96	REV. ASTM REF. TO AASHTO & ADDED BAR DIAGRAM	
10-12-95	MOVED SOLID SODDING DETAIL TO RCB-2	
6-2-94	ADDED SOLID SODDING PLAN DETAIL	
8-5-93	REVISED PIN DIAMETER TO SPECS.	
8-15-91	DRAWN AND ISSUED	

ARKANSAS STATE HIGHWAY COMMISSION

REINFORCED CONCRETE BOX CULVERT DETAILS

STANDARD DRAWING RCB-1

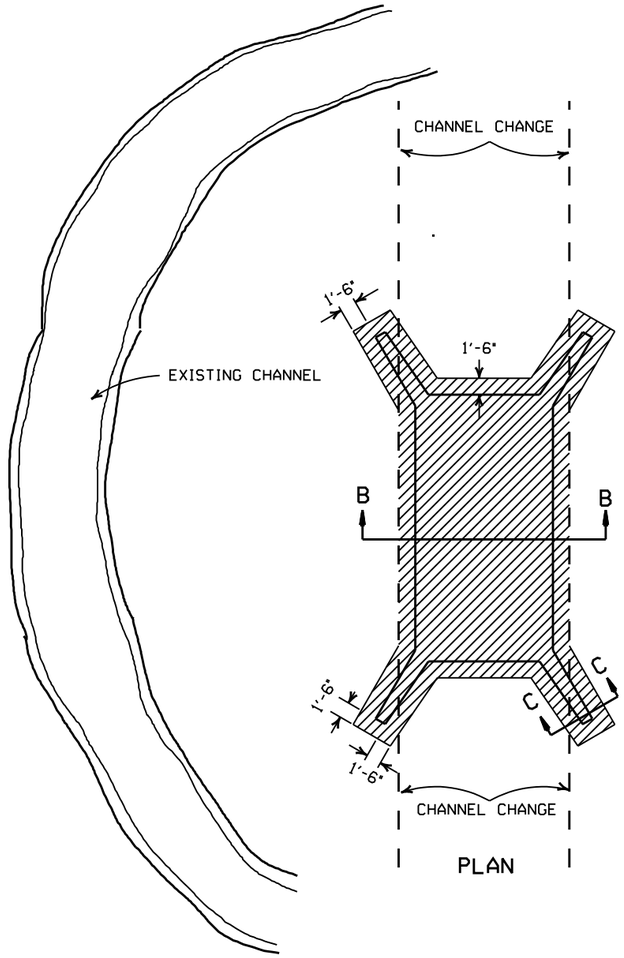

PLAN

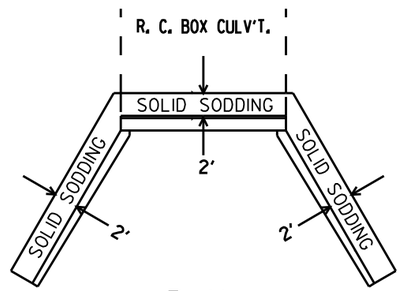

PLAN

PARTIAL SECTION SHOWING SOLID SODDING AT HEADWALLS AND WING WALLS

NOTE: LENGTH MEASURED ALONG THE CENTER OF 2' STRIP OF SOLID SODDING.

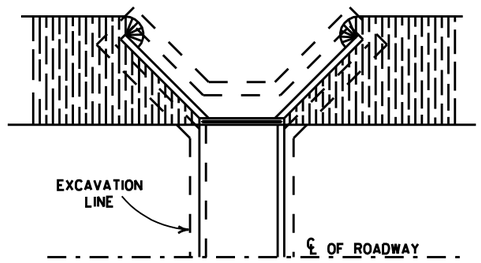

PLAN

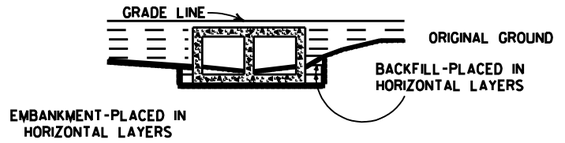

LONGITUDINAL SECTION

BACKFILL DETAILS FOR BOX CULVERT

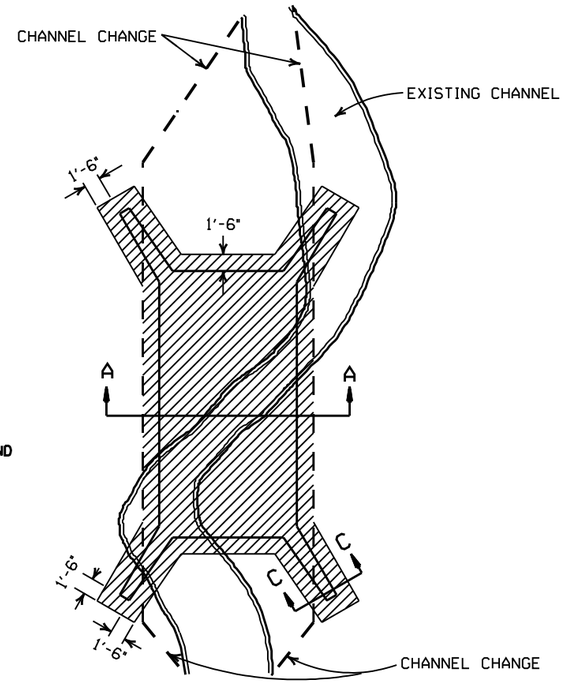

PLAN

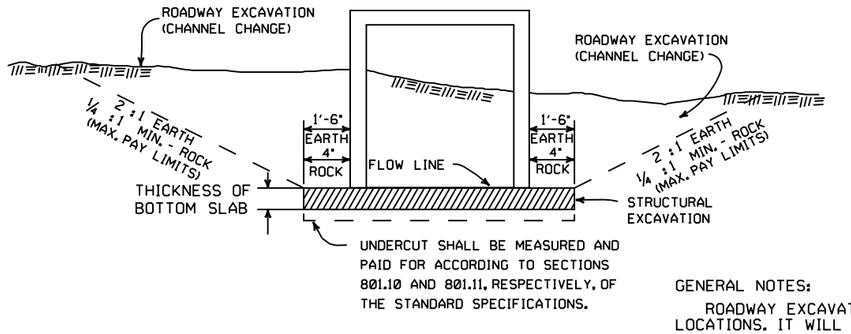

SECTION B-B

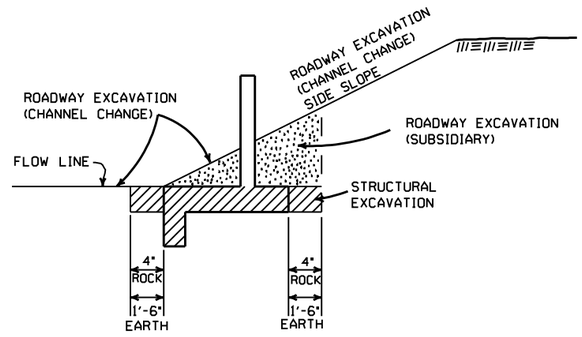

SECTION C-C

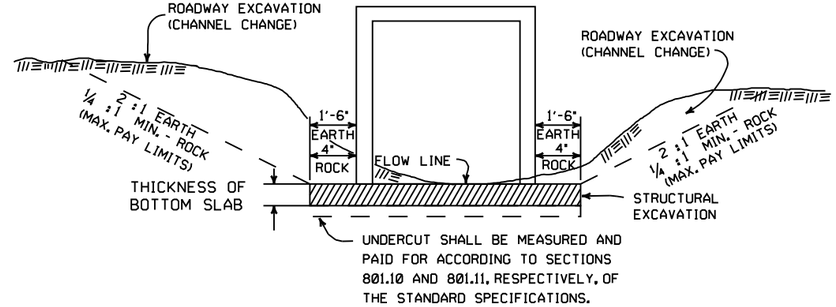

SECTION A-A

DETAILS FOR NEW CHANNELS

DETAILS THROUGH EXISTING CHANNELS

GENERAL NOTES:

ROADWAY EXCAVATION (CHANNEL CHANGE) WILL BE PAID FOR AT R.C. BOX CULVERT LOCATIONS. IT WILL BE PAID TO THE LIMITS ACTUALLY CUT AND WILL BE CONFINED TO THAT PORTION OF THE INDICATED AREA THAT IS ABOVE THE FLOW LINE. ROADWAY EXCAVATION (CHANNEL CHANGE) SHALL BE MEASURED BY CROSS SECTIONS AND VOLUMES COMPUTED BY AVERAGE END AREA METHOD. ALL CHANNEL CHANGES SHALL BE BROUGHT TO GRADE PRIOR TO MAKING ANY EXCAVATION FOR STRUCTURES.

EXCAVATION FOR STRUCTURES WILL BE PAID FOR AT ALL R.C. BOX CULVERT LOCATIONS. IT WILL BE PAID TO THE LIMITS SHOWN AND SHALL BE CONFINED TO THAT PORTION OF THE INDICATED AREA THAT IS BELOW THE CHANNEL FLOW LINE.

ROADWAY EXCAVATION SHOWN IN SECTION C-C ABOVE AS SUBSIDIARY WILL NOT BE MEASURED OR PAID FOR DIRECTLY, BUT PAYMENT WILL BE CONSIDERED TO BE INCLUDED IN THE VARIOUS ITEMS OF EXCAVATION.

DATE	REVISION	FILMED
11-20-03	REVISED SECTION A-A NOTE	
8-22-02	REVISED SECTION B-B NOTE	
10-12-95	COMBINED 1891B AND 1888A	
1-4-83	REVISED GENERAL NOTES	674-1-4-83
	AND ADDED MAXIMUM PAY	
	LIMIT NOTES.	
2-2-76	EXCAV. PAY LIMITS	917-2-2-76
10-2-72	REVISED AND REDRAWN	564-10-16-72

ARKANSAS STATE HIGHWAY COMMISSION

EXCAVATION PAY LIMITS, BACKFILL, & SOLID SODDING FOR BOX CULVERTS

STANDARD DRAWING RCB-2

LOOP DETECTOR INSTALLATION AND TESTING

NOTES:

1. LOOPS WITH A PERIMETER GREATER THAN 40' SHALL HAVE TWO TURNS. LOOPS WITH A PERIMETER LESS THAN OR EQUAL TO 40' SHALL HAVE THREE TURNS, UNLESS OTHERWISE NOTED ON THE PLANS. QUADRUPOLE LOOPS SHALL BE TWO TURNS IN A (2-4-2 CONFIGURATION), UNLESS OTHERWISE NOTED ON THE PLANS.
2. LOOP AND FEEDER WIRE SHALL BE CONTINUOUS WITHOUT SPLICES EXCEPT AT THE LOOP/FEEDER WIRE SPLICE AS SHOWN. SPLICES SHALL BE ROSIN SOLDERED AND WATERPROOFED WITH AN ACCEPTED SPLICE KIT. A DRIAN WIRE SHALL BE GROUNDED IN THE CABINET AND INSULATED AT THE LOOP TO FEEDER WIRE SPLICE.
3. THE LOOP TO FEEDER WIRE SPLICE, THE FEEDER WIRE JACKET AND LOOP WIRE JACKET IN DUCT SHALL BE COMPLETELY SEALED AND WATERPROOFED.
4. THE CONTRACTOR MAY MAKE CONNECTIONS TO THE SIGNAL CABLE AND LOOP TO FEEDER WIRE CONNECTION AT THE TERMINAL STRIPS MOUNTED TO POLE INSIDE THE HAND HOLD COVER AS SHOWN IN DETAIL. HANDHOLE TERMINALS MUST BE EASILY ACCESSIBLE, BUT PROTECTED AGAINST ACCIDENTAL CONTACT. THE CONNECTION OF POWER CARRYING CIRCUITS MUST BE SEPERATED FROM LOOP OR LOGIC CIRCUITS. ALL CONNECTIONS TO TERMINAL STRIPS SHALL UTILIZE SPADE LUGS OR AS APPROVED BY THE ENGINEER.
5. EACH LOOP SHALL HAVE A SEPERATE "FEEDER WIRE" UNLESS OTHERWISE NOTED ON THE PLANS. ALL FEEDER WIRES SHALL BE LABELED AS TO LOOP NUMBER AS DESIGNATED ON THE PLANS.
6. ALL LOOP WIRE ENTERING CONCRETE PULL BOXES SHALL BE ENCLOSED IN CONDUIT. EACH LOOP WIRE SHALL ENTER CONCRETE PULL BOX OR POLE BASE THROUGH A SEPARATE PIECE OF ONE (1.25") INCH CONDUIT.
7. LOOP WIRE FROM LOOP TO CONDUIT IS NOT TWISTED. LOOP WIRE IN THE CONDUIT MUST BE TWISTED TWO TO FIVE TURNS PER FOOT.
8. "30-DAY PERFORMANCE TEST SHALL NOT COMMENCE UNTIL ALL LOOPS ARE TESTED BY THE CONTRACTOR, THEN APPROVED AND ACCEPTED BY THE ENGINEER, AND THE TESTING RECORDS HAVE BEEN SUBMITTED TO THE ENGINEER. THE WARRENTY PERIOD FOR LOOPS SHALL NOT COMMENCE UNTIL TESTED BY THE CONTRACTOR AND ACCEPTED BY THE ENGINEER. THE CONTRACTOR SHALL PERFORM TEST AND PROVIDE A RECORD TO THE ENGINEER AS LISTED IN THE LOOP DETECTOR TESTING PROCEDURE.
9. UNLESS OTHERWISE APPROVED BY THE ENGINEER, BACKER ROD SHALL BE INSTALLED IN SHORT SECTIONS SPACED NO MORE THAN 18" APART AND WEDGED INTO THE SLOT TO THE CABLE IN PLACE. CABLE SHALL BE TOTALLY ENCAPSULATED IN SEALER.
10. "HOT POUR" SEALER SHALL NOT ALLOW WITH 705-LOOP WIRING IN DUCT.
11. WHERE UNDERGROUND SPLICES OF SIGNAL CABLE ARE REQUIRED. CONNECTIONS SHALL BE SOLDERED AND COMPLETELY WATERPROOFED TO THE SATISIFACTION OF THE ENGINEER. WATERPROOFING SHALL EXTEND A MININUM OF TWO (2") INCHES PAST THE SIGNAL CABLE JACKET AND SHALL COMPLETELY COVER ALL INDIVIDUAL CONDUCTORS OF THE SIGNAL CABLE. WATERPROOFING DOES NOT APPLY TO CONNECTIONS MADE IN POLE BASES.
12. THE CONTRACTOR SHALL CONNECT A SEPARATE NEUTRAL FOR EACH LOAD SWITCH REPRESENTED ON EACH SIGNAL POLE. ONLY ONE NEUTRAL IS REQUIRED FOR PEDESTRIAN SIGNALS. A SEPERATE 5C (TYPICAL) IS PROVIDED FOR PEDESTRIAN PUSH BUTTONS.
13. TRAFFIC CONTROLLER CABINET LAYOUT SHALL BE SUCH THAT IT IS NOT NECESSARY TO SHUT DOWN POWER TO REMOVE LOAD SWITCHES IN ORDER TO EASILY TEST OR MODIFY DETECTOR INPUTS TO THE CONTROLLER. THE CONTROLLER CABINET SHALL BE WIRED SUCH THAT THE POWER TO LOAD SWITCHES CANNOT BACKFEED TO THE LOAD SWITCH POWER BUSS DURING FLASH OPERATION.

SERIES CONNECTED LOOPS

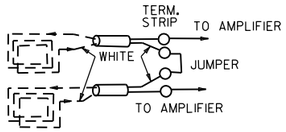

WIND LOOPS COUNTERCLOCKWISE; TAG WIRE EXITING SLOT AND TIE TO WHITE LEAD OF FEEDER WIRE; WHEN LOOPS ARE TIED TO SAME VEHICLE DETECTOR, SERIES CONNECT IN CABINET AS SHOWN.

HANDHOLE TERMINAL

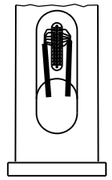

QUADRUPOLE LOOP

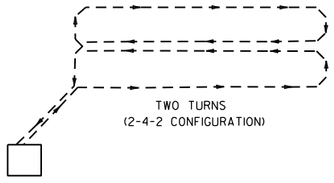

TWO TURNS
(2-4-2 CONFIGURATION)

TRAFFIC SIGNAL PRE-EMPTION INTERFACE WIRING DIAGRAM

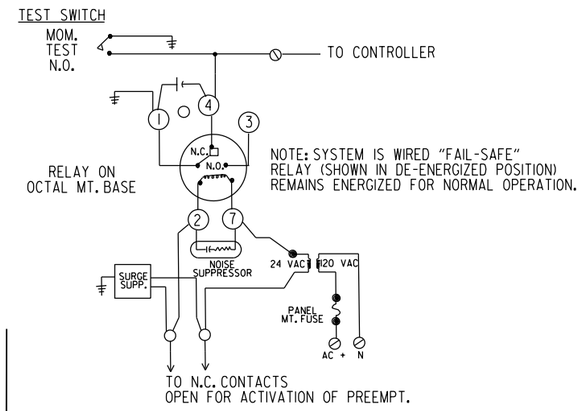

NOTE: SYSTEM IS WIRED "FAIL-SAFE" RELAY (SHOWN IN DE-ENERGIZED POSITION) REMAINS ENERGIZED FOR NORMAL OPERATION.

TYPICAL INTERSECTION

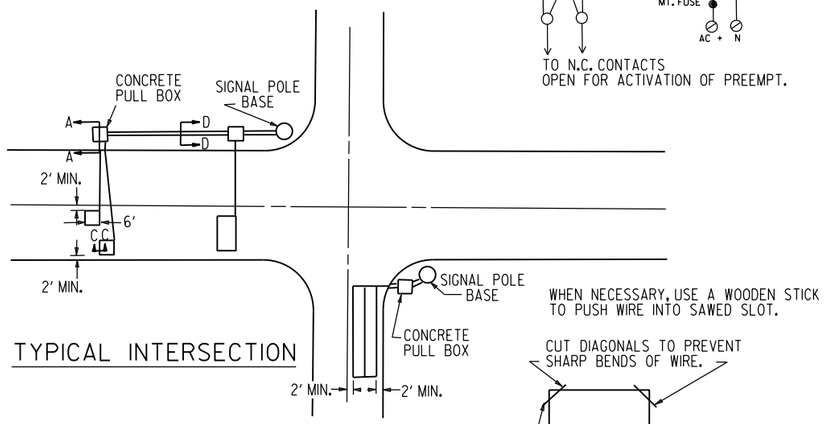

WHEN NECESSARY, USE A WOODEN STICK TO PUSH WIRE INTO SAWED SLOT.

CUT DIAGONALS TO PREVENT SHARP BENDS OF WIRE.

SLOT CUT BY SAW SHOWING OVERLAP TO PROVIDE FULL DEPTH AT CORNERS.

TYPICAL PROCEDURE FOR DETECTOR LOOP TESTING

1. DISCONNECT AND TEST CONTINUITY (< 10 OHMS) IF CONTINUITY IS BAD, GO TO TEST 3.
2. TEST INSULATION (@ 500 VOLT TEST > 10 MEG-OHM)

   IF TESTS 1& 2 ARE GOOD, NO FURTHER TESTING IS NECESSARY. RECORDED RESULTS CONSIST OF TESTS 1& 2 FROM CONTROL CABINET WITH FEEDER WIRE CONNECTED TO LOOP.
3. OPEN SPACE (DO NOT BREAK CONNECTION) REPEAT TEST 1& 2 IF TEST 3 IS BAD, GO TO TEST 4.
4. BREAK SPLICE, INSTALL JUMPER IN CABINET, REPEAT TESTS 1& 2 SEPARATELY FOR FEEDER AND FOR LOOP.

FAILURES TYPICALLY RESULT FROM BROKEN WIRE IN PAVEMENT, FAULTY INSULATION OF LOOP OR FEEDER WIRE, OR POORLY INSULATED SPLICE CONNECTION.

TRENCHING DETAIL
(FOR SAW CUT TRENCH IN ROADWAY)

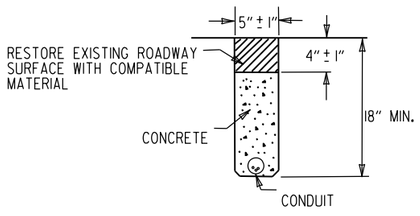

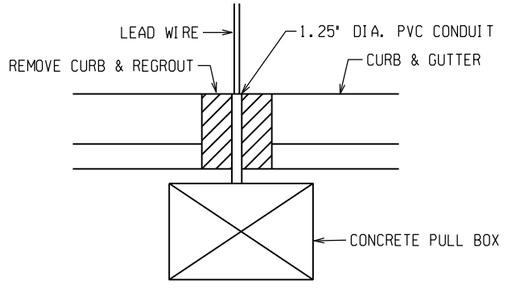

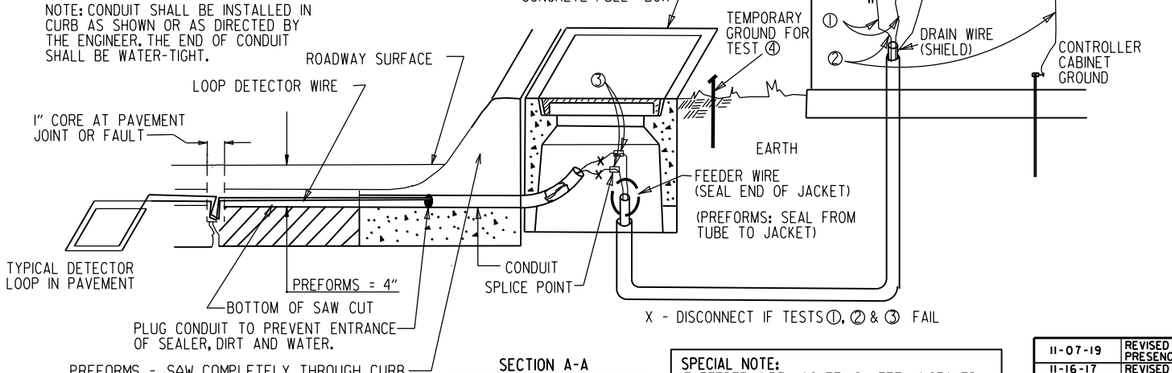

SECTION A-A

1'-6" CONCRETE COMBINATION CURB AND GUTTER

SPECIAL NOTE:
IF FEEDER WIRE JACKET IS LEFT UNSEALED AND WATER IS ALLOWED TO ENTER JACKET, CONTRACTOR WILL BE REQUIRED TO REPLACE FEEDER WIRE AT NO COST TO DEPARTMENT.

TYPICAL SECTIONS FOR PULSE AND PRESENCE LOOP DETECTORS

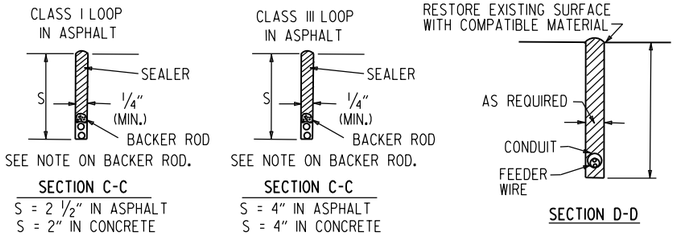

DATE	REVISION	FILMED
11-07-19	REVISED NOTE 6 & TYPICAL FOR PRESENCE LOOP DETECTORS	
11-16-17	REVISED NOTES	
09-12-13	ISSUED AS STANDARD DRAWING	
05-17-01	REVISED	
04-11-01	REVISED	
02-04-00	REVISED PRE-EMPTION TEST SWITCH	
11-18-98	REVISED NOTES	
11-21-95	ISSUED	

ARKANSAS STATE HIGHWAY COMMISSION

LOOP DETECTOR INSTALLATION

STANDARD DRAWING SD-4

DRAWER PLAN VIEW

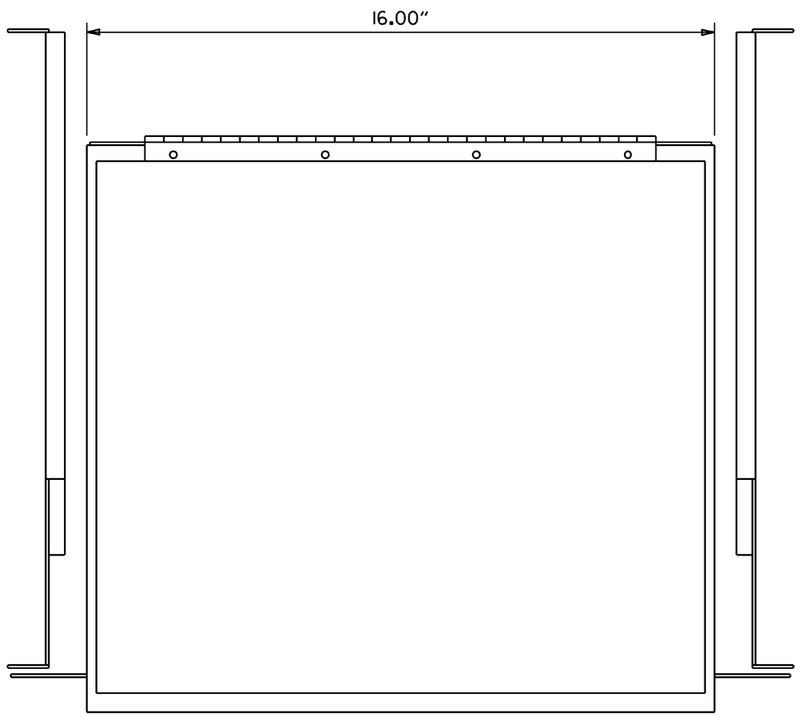

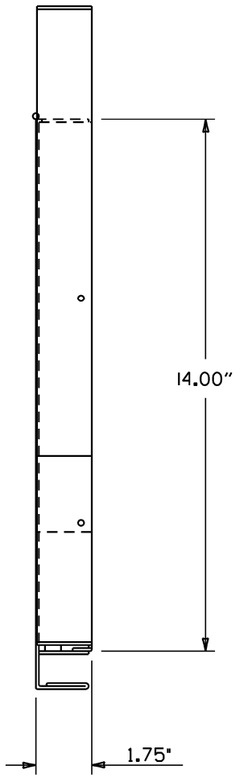

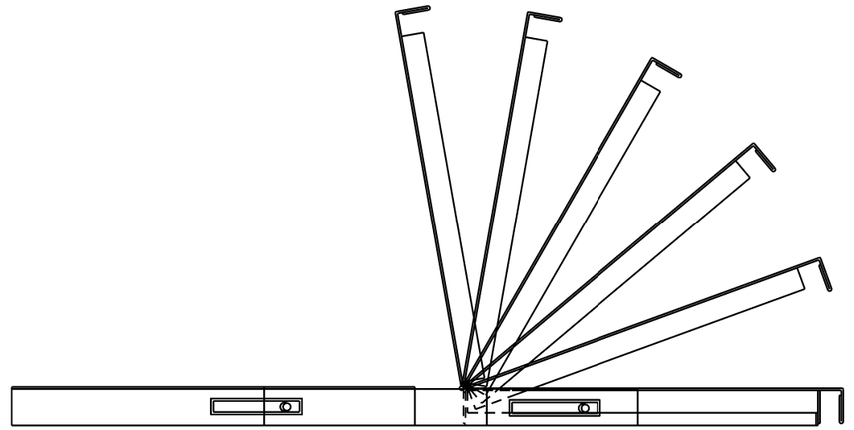

NOTES:
1. RIGHT HAND SLIDE SHOWN, LEFT SLIDE OPPOSITE.
2. GENERAL DEVICES (CC3002-99-0102) OR EQUAL AND CONTAINS (1) RIGHT HAND SLIDE ASSEMBLY, (1) LEFT HAND SLIDE ASSEMBLY.
3. ALL HARDWARE NECESSARY TO FASTEN SLIDE ASSEMBLY TO UNDERSIDE OF CONTROLLER SHELF SHALL BE INCLUDED.

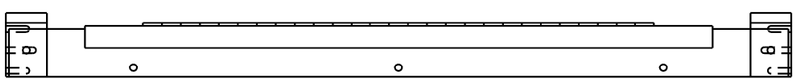

FRONT VIEW

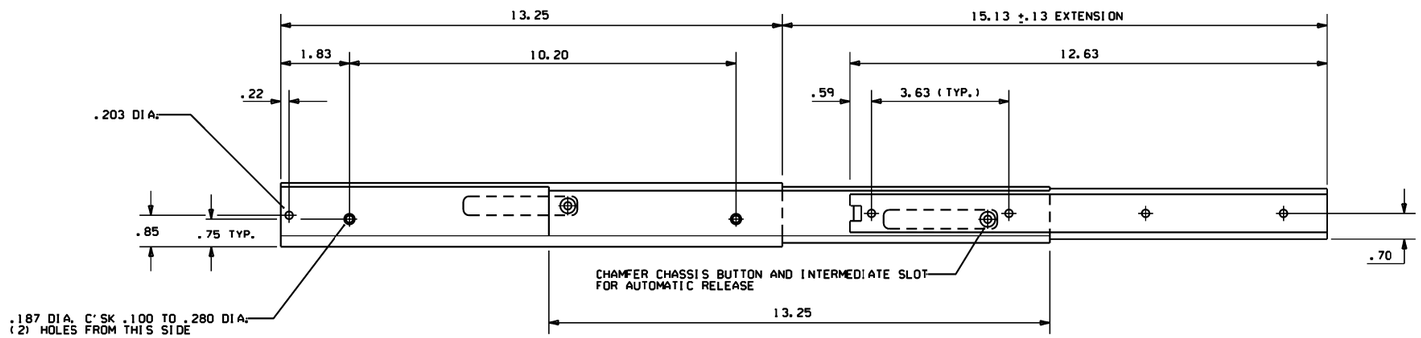

RIGHT SIDE ASSEMBLY

DATE	REVISION	DATE FILM
9-12-13	ISSUED AS STANDARD DRAWING	
6-15-05	ISSUED	

ARKANSAS STATE HIGHWAY COMMISSION

CONTROLLER CABINET UTILITY DRAWER

STANDARD DRAWING SD-5

CONDUIT ENTRY TO EXISTING POLE BASE

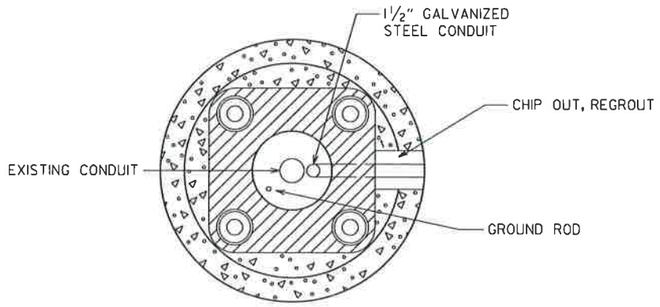

ANCHOR BASE

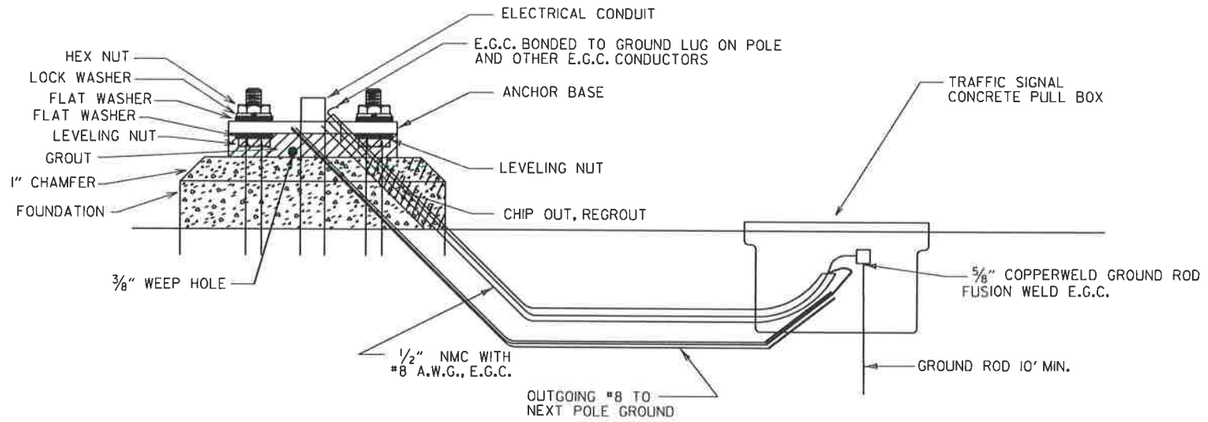

CONDUIT ENTRY TO EXISTING CONTROLLER CABINET

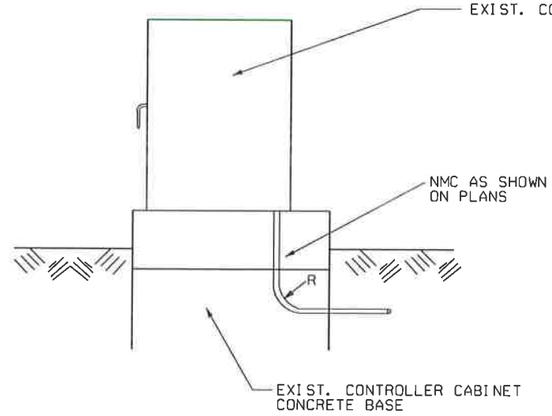

NOTE: ENTRY TO CABINET SHALL BE THROUGH A CUT IN THE BASE SUFFICIENT TO PROVIDE ADEQUATE CONDUIT RADIUS FOR ITEM.

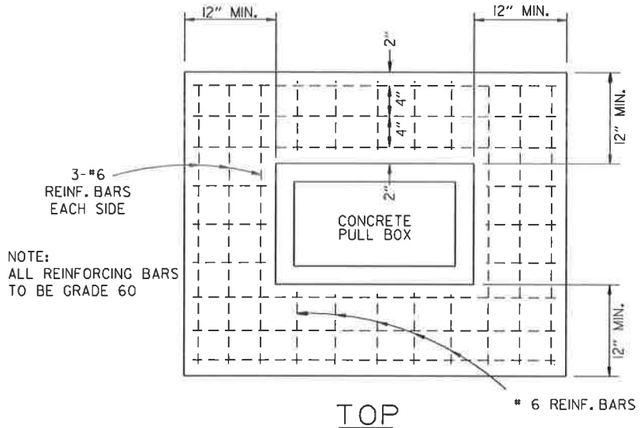

TOP

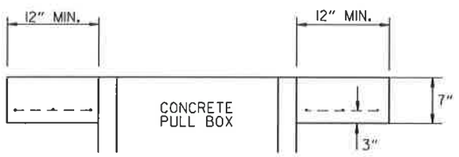

ELEVATION

TYPE "HD" CONCRETE PULL BOX DETAIL

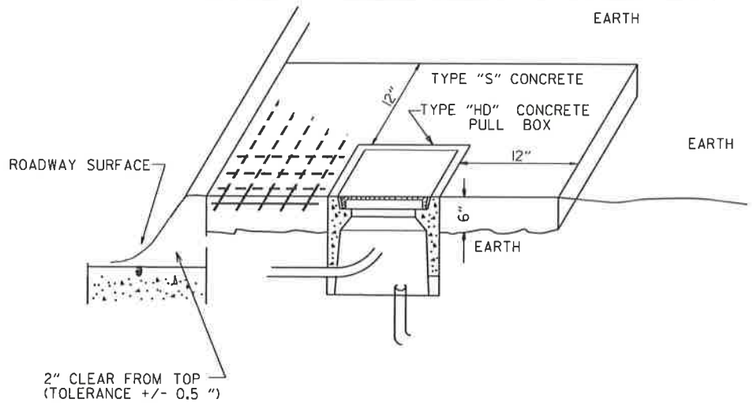

NOTE:
ALL TYPE 1 AND TYPE 2 HD CONCRETE PULL BOXES ARE INSTALLED WITH AN APRON OF CONCRETE 12" WIDE AND 7" IN DEPTH. ALL PAYMENT SHALL BE INCLUDED IN THE PRICE OF THE TYPE HD CONCRETE PULL BOX. THE CONCRETE PULL BOX SHALL BE INSTALLED FLUSH TO SURROUNDING GRADE UNLESS OTHERWISE INSTRUCTED BY THE ENGINEER. THE CONCRETE SHALL BE CLASS "S". THREE #6 REINFORCING BARS IN THE APRON ON ALL SIDES OF THE CONCRETE PULL BOX IS REQUIRED IN CONCRETE.

DATE	REVISION	FILMED
11-16-17	REVISED NOTES	
09-02-15	REVISED PULL BOX DEPTH	
09-12-13	ISSUED AS STANDARD DRAWING	
05-21-09	REVISED GROUNDING	
07-31-08	ADDED & REVISED CONDUIT ENTRY	
06-23-04	REVISED CLEARANCE AT CURB ENTRY	
01-04-02	ADDED REINFORCING TO BOX APRON	
07-02-01	REVISED	
12-27-99	REVISED NOTES	
11-18-98	ISSUED	

ARKANSAS STATE HIGHWAY COMMISSION

HEAVY DUTY PULL BOX

STANDARD DRAWING SD-6

(A)

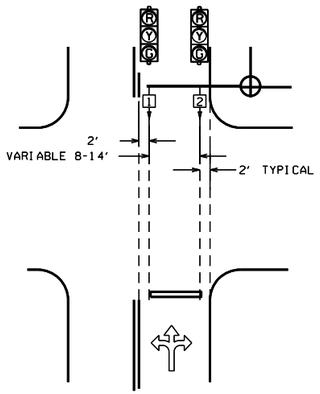

(B)

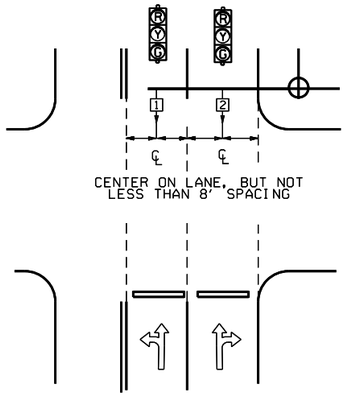

(C)

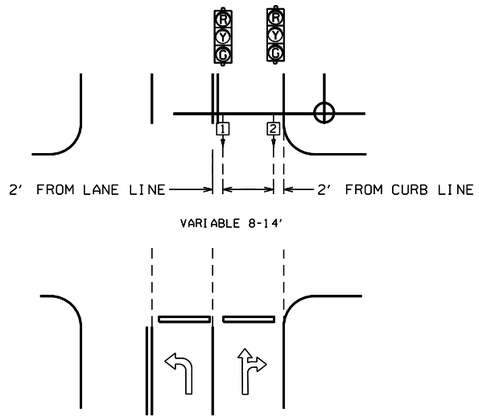

(C2)

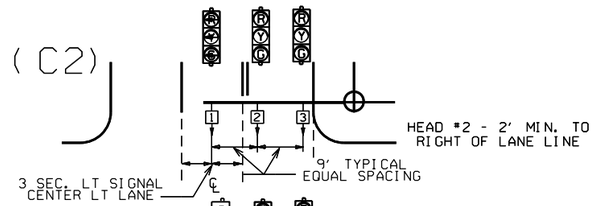

(C1)

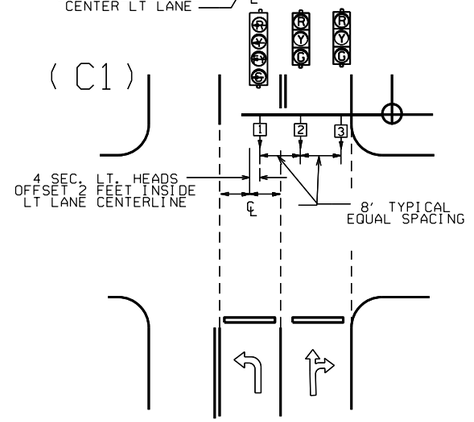

(C3)

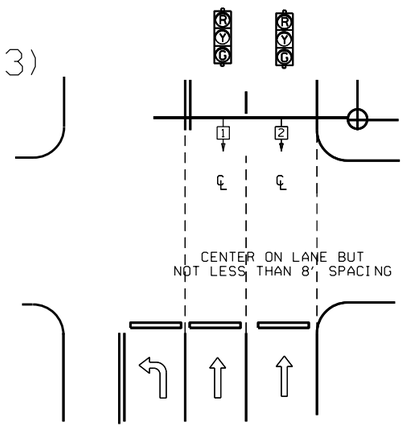

(D2)

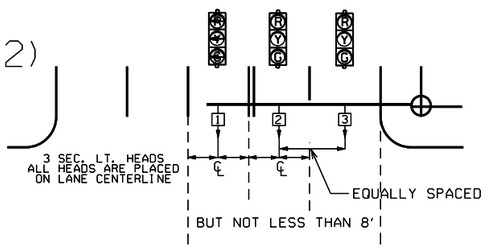

(D1)

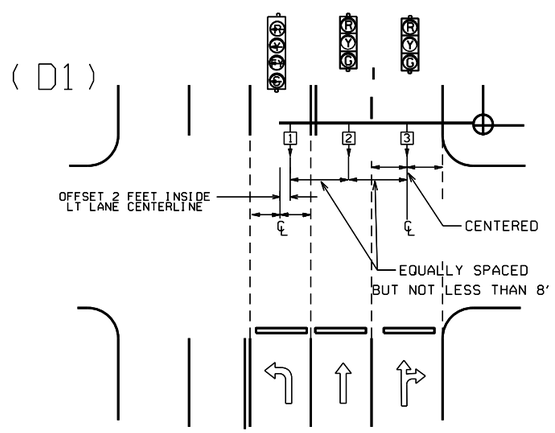

NOTE: WHERE LEFT TURN HEAD (HEAD 1 ON D1 AND D2) IS NOT CALLED FOR ON PLANS, MAST ARM LENGTH MAY STILL BE ALLOWED FOR FUTURE INSTALLATION. HEADS FOR THROUGH MOVEMENTS SHALL STILL BE ALIGNED WITH THROUGH LANES AS SHOWN ON DETAILS.

(E)

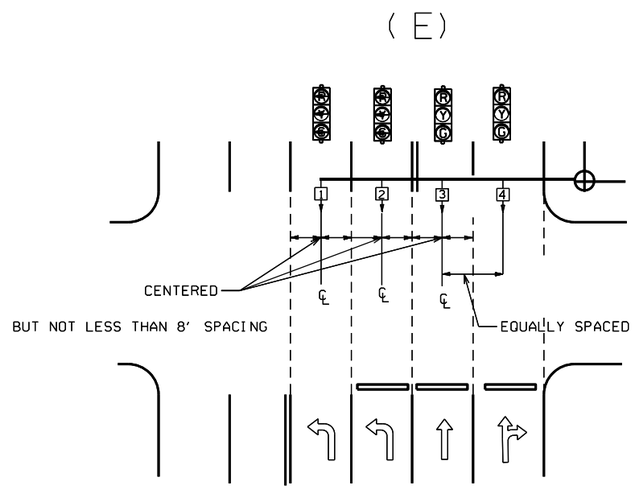

℄ = CENTER OF LANE FROM APPROACH SIDE

GENERAL NOTES:

1. FOUR SECTION "PROTECTED/PERMISSIVE" LEFT TURN HEADS SHOULD BE PLACED A MINIMUM OF TWO (2') FEET TO THE RIGHT OF THE CENTERLINE OF THE APPROACHING LEFT TURN LANE.

2. THREE SECTION "PROTECTED" LEFT TURN HEADS SHOULD BE PLACED ON THE CENTERLINE OF THE APPROACHING LEFT TURN LANE.

3. WHEN IT IS NECESSARY TO PLACE POLES OTHER THAN AS SHOWN ON PLAN SHEET(S) RESULTING IN MAST ARM EXTENDING MORE THAN TWO FEET PAST (TO THE LEFT OF) THE CENTERLINE OF THE APPROACHING LEFT TURN LANE, MAST ARM SHALL BE CUT TO APPROPRIATE LENGTH AS DETERMINED BY THE ENGINEER, AND A NEW END CAP PROVIDED. THE CONTRACTOR SHALL BE RESPONSIBLE FOR DETERMINING THIS PRIOR TO INSTALLING THE MAST ARM IF ADDITIONAL COMPENSATION IS REQUIRED.

4. SIGNAL HEAD SPACING SHALL, IN NO CASE, BE LESS THAN EIGHT (8') FEET BETWEEN HEADS ON CENTER, MEASURED HORIZONTALLY PERPENDICULAR TO THE APPROACH.

5. ALL SIGNAL HEADS SHOWN ON THIS DETAIL SHEET SHALL BE LOCATED ACCORDING TO THE DIMENSIONS SHOWN IN RELATION TO THE APPROACH SIDE OF THE INTERSECTION.

6. MAXIMUM MOUNTING HEIGHT OF SIGNAL FACES LOCATED BETWEEN 40 FEET AND 53 FEET FROM STOP BAR SHALL BE IN ACCORDANCE WITH FIGURE 4D-5 OF 2009 MUTCD.

12-8-16	REVISED NOTE 6	
9-12-13	ISSUED AS STANDARD DRAWING	
3-11-10	2009 MUTCD	
12-9-99	ISSUED	
DATE	REVISION	DATE FILM

ARKANSAS STATE HIGHWAY COMMISSION

SIGNAL HEAD PLACEMENT

STANDARD DRAWING SD-8

MAIN BREAKER NOT NEAR CONTROLLER CABINET SECONDARY REQUIRED

WITH POWER ISOLATION ASSEMBLY

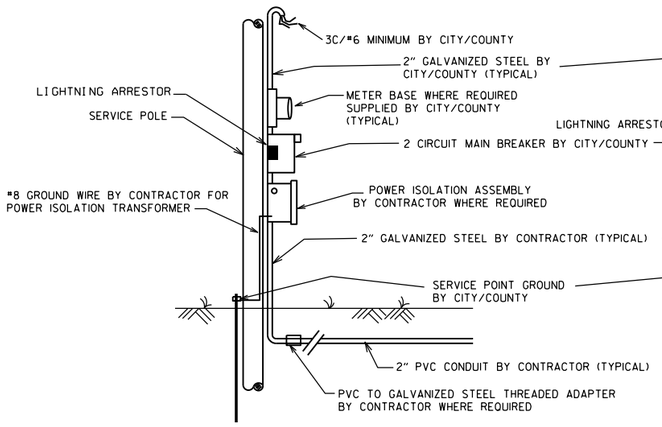

WITHOUT POWER ISOLATION ASSEMBLY

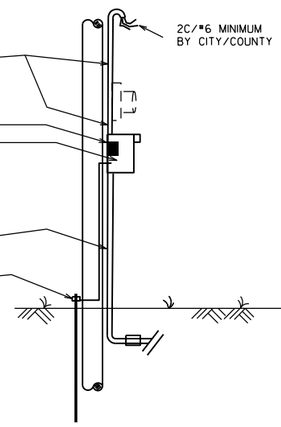

NOTES TO CONTRACTOR AND AGENCY RESPONSIBLE FOR MAINTENANCE OF THE INTERSECTION (CITY/COUNTY):

ELECTRICAL SERVICE TYPICALLY FALLS INTO TWO CATEGORIES:
MAIN BREAKER NEAR CONTROLLER CABINET; AND MAIN BREAKER NOT NEAR CONTROLLER CABINET. THE CONTRACTOR'S AND THE CITY'S/COUNTY'S RESPONSIBILITY VARIES ACCORDINGLY AS INDICATED ON THESE DETAILS.

ALL SITUATIONS:
ELECTRICAL SERVICE SHALL BE PROVIDED BY THE CITY/COUNTY TO A SERVICE POLE WITH EXTERNAL RAINTIGHT BREAKER (MAIN BREAKER) AT A MUTUALLY ACCEPTABLE POINT WITHIN THE RIGHT-OF-WAY. SERVICE POINT INCLUDES GALVANIZED STEEL CONDUIT TO A POINT 18" BELOW GROUND LINE, TWO CIRCUIT MAIN BREAKER, LIGHTNING ARRESTOR, POWER ISOLATION ASSEMBLY WHERE REQUIRED, METER LOOP IF REQUIRED BY LOCAL UTILITY COMPANY, ELECTRICAL CONDUCTORS AND WEATHERHEAD. WHERE STREET LIGHTING IS INCLUDED AS PART OF SIGNAL INSTALLATION STREET LIGHTING CIRCUIT (2C/#12 A.W.G. UF RATED, TYPICAL) SHALL BE KEPT SEPARATE FROM THE CIRCUIT SERVING TRAFFIC SIGNAL. SERVICE WIRE AND WIRING FROM THE CONTROLLER TO MAIN BREAKER IS PROVIDED BY THE CONTRACTOR AS A PART OF THIS CONTRACT. WIRE AND WIRING FROM MAIN BREAKER, AND CONNECTION TO THE UTILITY IS THE RESPONSIBILITY OF THE CITY/COUNTY.

MAIN BREAKER NOT NEAR CONTROLLER CABINET:
THE MAIN BREAKER ASSEMBLY, GALVANIZED STEEL CONDUIT. WEATHERHEAD AND WIRE ABOVE MAIN BREAKER AND CONNECTION TO THE UTILITY SHALL BE PROVIDED BY CITY/COUNTY. CONTRACTOR SHALL PROVIDE AS PART OF CONTRACT SECONDARY BREAKER, CONDUIT, WIRE AND WIRING TO THE MAIN BREAKER.

MAIN BREAKER NEAR CONTROLLER CABINET:
ALL COMPONENTS OF THE SERVICE POINT WITH THE EXCEPTION OF THE WIRE AND WIRING ABOVE THE MAIN BREAKER IS FURNISHED AND INSTALLED BY THE CONTRACTOR. WIRING FROM MAIN BREAKER INCLUDING CONNECTION TO THE UTILITY, IS THE RESPONSIBILITY OF THE CITY/COUNTY. IF METER LOOP IS REQUIRED, METER BASE AND HARDWARE IS PROVIDED BY THE CITY/COUNTY AND INSTALLED BY THE CONTRACTOR.

GROUND ROD - A 10' X 5/8" GROUND ROD SHALL BE INSTALLED IN THE CONCRETE PULL BOX FOR EACH POLE AND THE CONTROLLER. PAYMENT FOR THE GROUND ROD AND 1/2" NMC SHALL BE INCLUDED IN ITEM 701. THE CONCRETE PULL BOX AND CONDUCTOR BOX SHALL BE PAID FOR SEPARATELY.

SECONDARY BREAKER BY CONTRACTOR (SUBSIDIARY)

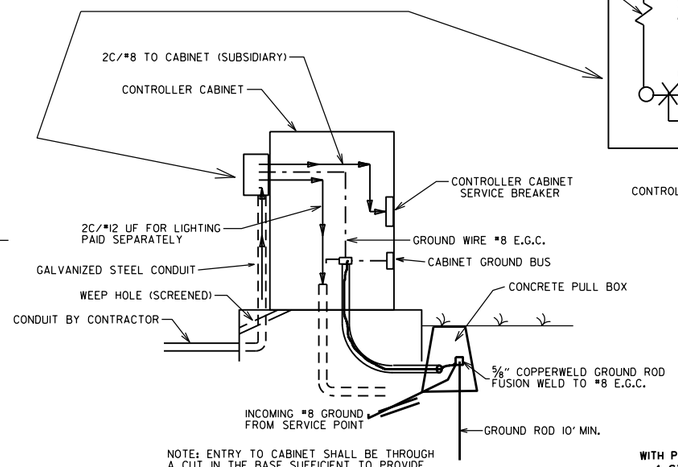

NOTE: ENTRY TO CABINET SHALL BE THROUGH A CUT IN THE BASE SUFFICIENT TO PROVIDE ADEQUATE CONDUIT RADIUS FOR ITEM.

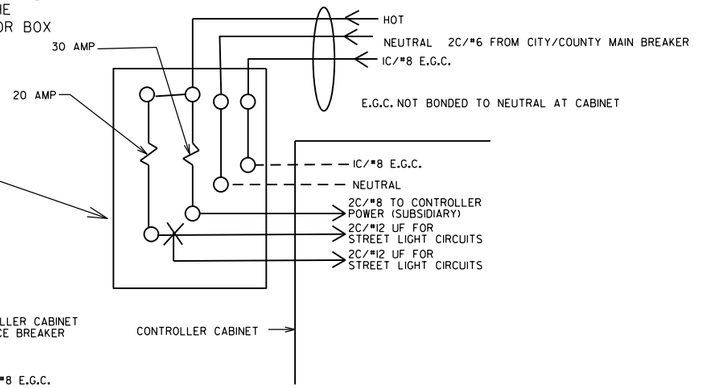

MAIN BREAKER WIRING (TYPICAL)

SERVICE GROUND IS TYPICALLY TIED TO NEUTRAL AT THE MAIN BREAKER. AS SUCH, CONTROLLER GROUND IS NOT TIED TO NEUTRAL AT SECONDARY BREAKER OR IN CONTROLLER CABINET.

WITH POWER ISOLATION ASSEMBLY
4 CIRCUIT MAIN BREAKER

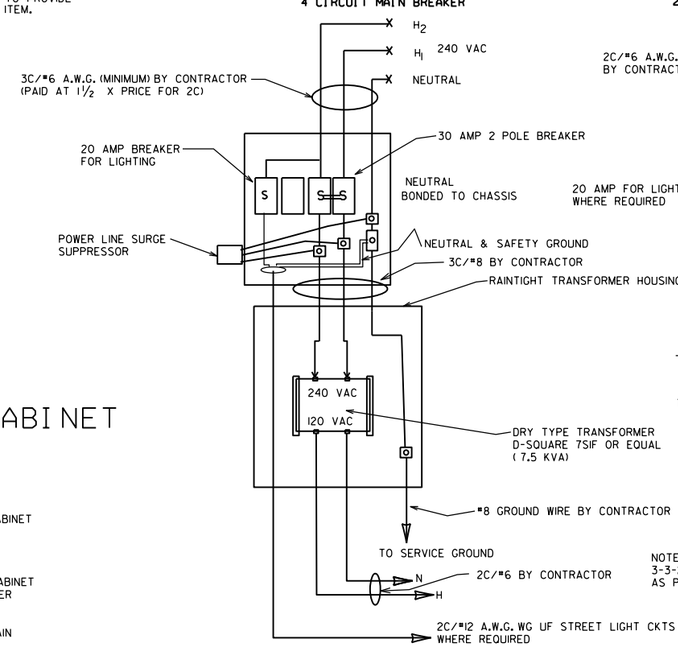

WITHOUT POWER ISOLATION ASSEMBLY
2 CIRCUIT MAIN BREAKER

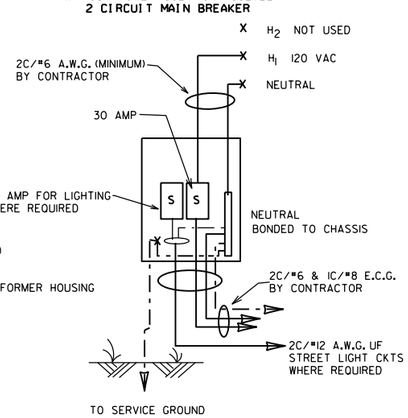

NOTE: ELECTRICAL GROUND CONDUCTOR (E.C.G.) ADDED 3-3-2003, CONSISTING OF A IC/#8 A.W.G. CU GREEN WIRE AS PER NATIONAL ELECT. CODES.

MAIN BREAKER NEAR CONTROLLER CABINET SECONDARY NOT REQUIRED

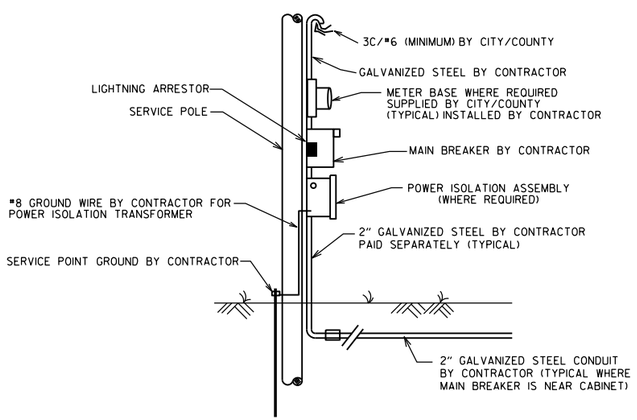

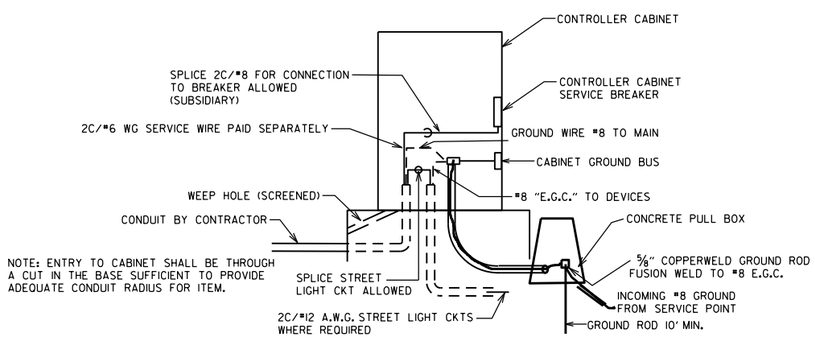

NOTE: ENTRY TO CABINET SHALL BE THROUGH A CUT IN THE BASE SUFFICIENT TO PROVIDE ADEQUATE CONDUIT RADIUS FOR ITEM.

DATE	REVISION	FILMED
11-07-19	REVISED	
11-16-17	REVISED NOTES	
09-12-13	ISSUED AS STANDARD DRAWING	
04-18-13	ADDED LIGHTNING ARRESTOR	
05-21-09	REVISED GROUNDING	
07-31-08	REVISED GROUNDING	
03-03-03	ADDED EGC NOTE	
09-26-01	REVISED	
12-27-99	REVISED	
07-28-99	REVISED	
02-05-99	ISSUED	

ARKANSAS STATE HIGHWAY COMMISSION

SERVICE POINT

STANDARD DRAWING SD-9

NOTES:
PEDESTRIAN AND TRAFFIC SIGNAL HEAD SIGNS:
EACH ITEM "TRAFFIC SIGNAL HEAD (4 SEC., I-WAY)" SHALL INCLUDE A SPECIAL SIGN AS SHOWN, ATTACHED TO THE MAST ARM OR SPAN ASSEMBLY 12" TO THE RIGHT OF THE SIGNAL HEAD UNLESS REMOVED WITHIN THE SIGNAL PLAN NOTES.

EACH ITEM "TRAFFIC SIGNAL HEAD (3 SEC., I-WAY)" TO BE USED AS A LEFT TURN INDICATION ONLY SHALL INCLUDE A SIGN (R10-10) AS SHOWN, ATTACHED TO THE MAST ARM OR SPAN ASSEMBLY 12" TO THE RIGHT OF THE SIGNAL HEAD.

EACH PEDESTRIAN PUSHBUTTON SHALL HAVE ONE R10-3E SIGN ATTACHED TO THE POLE ABOVE THE BUTTON. ALL SIGNS SHALL BE MANUFACTURED IN ACCORDANCE WITH SECTION 723 OF THE STANDARD SPECIFICATIONS FOR HIGHWAY CONSTRUCTION.

ALL SIGN BLANKS SHALL BE CONSTRUCTED OF ALUMINUM ALLOY (ASTM DESIGNATION B-209. ALLOY 5052-H38) WITH THICKNESS OF 0.100 INCH.

GENERAL NOTES:
1. MAST ARM POLES SHALL BE MOUNTED A MINIMUM OF FOUR (4') FEET BEHIND CURB OR SHOULDER.

2. OCTAGONAL POLES AND ARMS MEETING THE REQUIREMENTS OF THE PLANS SPECIFICATIONS CAN BE INSTALLED IN LIEU OF ROUND. ALL POLES AND ARMS IN A JOB MUST BE THE SAME SHAPE.

3. MINIMUM STRUCTURAL REQUIREMENTS:
DESIGN SPECIFICATIONS: AASHTO STANDARD SPECIFICATIONS FOR STRUCTURAL SUPPORTS FOR HIGHWAY SIGNS, LUMINAIRES AND TRAFFIC SIGNALS, 4TH EDITION (2001) WITH 2003 AND 2006 INTERIMS.

USE FATIGUE CATEGORY I FOR ALL STRUCTURES ON ROUTES WHERE THE SPEED LIMIT IS 65 MPH AND GREATER AT THE STRUCTURE LOCATION AND ON ROUTES WHERE THE SPEED LIMIT IS GREATER THAN 45 MPH WITH AN MAST ARM OF 60' OR LONGER.

USE FATIGUE CATEGORY II FOR ALL STRUCTURES ON ROUTES WHERE THE SPEED LIMIT IS LESS THAN 65 MPH AND GREATER THAN 45 MPH WITH MAST ARMS LESS THAN 60' AND ON ROUTES WHERE THE SPEED LIMITS OF 45 MPH AND LESS WITH AN MAST ARM OF 60' OR LONGER.

USE FATIGUE CATEGORY III FOR ALL STRUCTURES WHERE THE SPEED LIMIT IS 45 MPH AND LESS AND MAST ARMS LESS THAN 60'.

CONSTRUCTION SPECIFICATIONS:
STANDARD SPECIFICATIONS FOR HIGHWAY CONSTRUCTION (CURRENT EDITION) WITH APPLICABLE SUPPLEMENTAL SPECIFICATIONS AND SPECIAL PROVISIONS.

BASE WIND SPEED: 90 MPH.

STEEL MEMBERS CONSIDERED MAIN LOAD CARRYING MEMBERS WITH A THICKNESS GREATER THAN ½" SHALL MEET THE LONGITUDINAL CHARPY V-NOTCH TEST SPECIFIED IN SUBSECTION 807.05 OF THE STANDARD SPECIFICATIONS.

DEAD LOAD: AS A MINIMUM, DESIGN SHALL BE BASED ON THE FIXED ATTACHMENTS SHOWN BELOW OR AS MODIFIED IN THE PLANS.

ALL SIGNAL HEADS TO BE ONE WAY, TWELVE (12") INCH AND HAVE FIVE (5") INCH BACK PLATES:

SIGNAL HEADS AT THE END OF MAST ARM - ONE 4 SEC., 85 LB., 14.5 SQ. FT., ONE SIGN MOUNTED 3 FEET FROM SIGNAL HEAD (2'-0" X 2'-6"; 20 LB.) REMAINING SIGNAL HEADS SPACED AT 8 FT. (3 SEC., 56 LB., 8.3 SQ. FT.): DESIGN TO ACCOMMODATE:
2 SIGNAL HEADS FOR MAST ARMS 10 FT. TO 16 FT.
3 SIGNAL HEADS FOR MAST ARMS 18 FT. TO 24 FT.
4 SIGNAL HEADS FOR MAST ARMS OVER 26 FT.

STREET NAME SIGN - 72" X 18", 36 LB., MOUNTED SUCH THAT OUTSIDE EDGE IS NOT GREATER THAT 12 FT. FROM POLE. DEPENDING UPON POSITION OF SIGNAL HEAD ADJACENT TO POLE, SIGN MAY OVERLAP POLE SHAFT.
ROADWAY LUMINAIRES (WHERE REQUIRED ON PLAN SHEET) - VARIABLE ARM LENGTH (MAX. WT. 75 LB., 3.3 SQ. FT.)
PEDESTRIAN SIGNALS - TWO 1 SEC., 12 INCH MOUNTED 8 FT. FROM BASE OF POLE. POST MOUNTED 3 SEC. SIGNAL HEAD AT 10 FT. ON SIDE OF POLE.

4. POLE/MAST ARM CAP - POLE AND MAST ARM CAPS SHALL BE PROVIDED, FABRICATED OF EITHER STEEL OR CAST ALUMINUM.

5. HAND HOLE - HAND HOLES SHALL BE 4 IN. X 6 IN. FOR STANDARD, AND 3 IN. X 5 IN. FOR PED POLES. MINIMUM PLACED APPROXIMATELY 12 INCHES FROM BASE, AND SHALL BE FIXED WITH A BOLT DOWN COVER. A VACCUM FORMED ABS COVER IS AN ACCEPTABLE ALTERNATE TO STEEL. POLES GREATER THAN 21FT. IN HEIGHT (FOR ROADWAY LUMINAIRE ATTACHMENT) SHALL INCLUDED A HAND HOLE WITHIN 12 INCHES OF MAST ARM(S) ATTACHMENT(S).

6. POLE/MAST ARM TAPER SLOPE - AVERAGE TAPER OF SIGNAL MAST ARMS AND POLE SHAFT SHALL BE 0.125 TO 0.15 INCHES PER FOOT.

MAST ARM CENTERLINE ANGLE AT ATTACHMENT POINT WITH POLE SHALL MAINTAIN NOT LESS THAN 0.5 DEGREES OR MORE THAN 4 DEGREES POSITIVE SLOPE WITH A LINE PERPENDICULAR TO THE POLE CENTERLINE. THE MAST ARM SHALL MAINTAIN A POSITIVE SLOPE AFTER IT IS PLACED UNDER LOAD.

7. NUT COVERS - EACH POLE SHALL INCLUDE A BOLT DOWN NUT COVER FOR EACH ANCHOR BOLT.

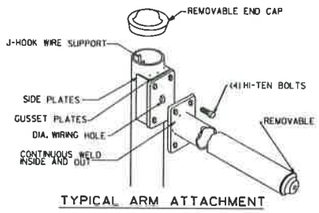

TYPICAL ARM ATTACHMENT

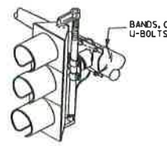

NOTE: THE SIGNAL SHALL BE CONNECTED TO THE MAST ARM BY BRACKETING AS DIRECTED BY THE ENGINEER.

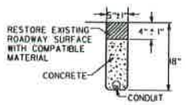

TRENCHING DETAIL
(FOR SAW CUT TRENCH IN ROADWAY)

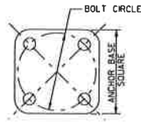

ANCHOR BASE

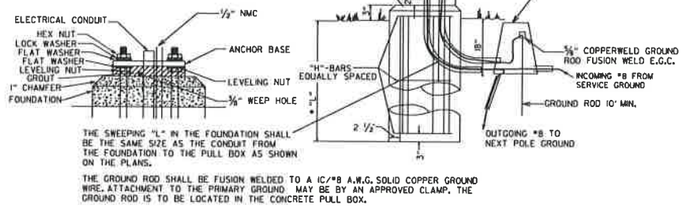

TYPICAL FOUNDATION DETAILS

POLE FOUNDATION MINIMUM DIMENSIONS AND STEEL REINFORCING. ALL REINFORCING STEEL SHALL BE GRADE 40 MIN.

ARM LENGTH	FOUNDATION DIAMETER	DEPTH "L"*	STEEL VERTICAL	STEEL HORIZONTAL	STEEL O.C.
PED	30"	7'-0"	12-#7 (6'-6")	10-#4	8.44"
2' TO 12'	30"	10'-6"	12-#7 (10'-0")	15-#4	8.42"
OVER 12' TO 20'	30"	11'-6"	12-#7 (11'-0")	16-#4	8.66"
OVER 20' TO 35'	36"	12'-6"	13-#8 (12'-0")	17-#4	8.88"
OVER 35' TO 50'	36"	13'-6"	13-#8 (13'-0")	19-#4	8.56"
OVER 50' TO 72'	42"	14'-6"	18-#8 (14'-0")	20-#4	8.74"
TWINS TO 20'	30"	16'-0"	12-#6 (15'-6")	22-#4	8.76"
TWINS OVER 20' TO 44'	36"	16'-0"	13-#8 (15'-6")	22-#4	8.76"
TWINS OVER 44' TO 50'	42"	16'-0"	18-#8 (15'-6")	22-#4	8.76"
TWINS OVER 50' TO 72'	42"	16'-6"	18-#8 (16'-0")	23-#4	8.64"

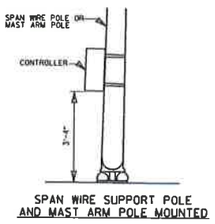

SPAN WIRE SUPPORT POLE AND MAST ARM POLE MOUNTED

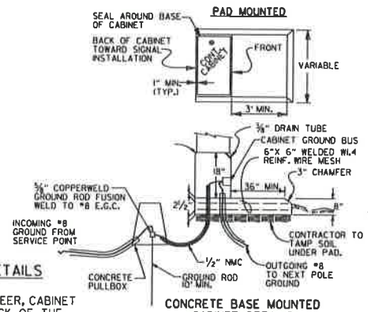

CONCRETE BASE MOUNTED CABINET DETAILS

CONTROLLER CABINET MOUNTING DETAILS

NOTE:
UNLESS OTHERWISE DIRECTED BY THE ENGINEER, CABINET ORIENTATION SHALL BE SUCH THAT THE BACK OF THE CABINET IS PARALLEL TO THE STREET AND POSITIONED TO ALLOW VISIBILITY OF THE SIGNAL DISPLAY WHILE OBSERVING THE CONTROLLER FRONT PANEL.

8. GROUND ROD - A 10' X ⅝" GROUND ROD SHALL BE INSTALLED IN THE CONCRETE PULL BOX FOR EACH POLE AND THE CONTROLLER. PAYMENT FOR THE GROUND ROD AND ½" NMC SHALL BE INCLUDED IN ITEM 714 FOR SIGNAL POLES AND ITEM 701FOR THE CONTROLLER. THE CONCRETE PULL BOX AND CONDUCTOR BOX SHALL BE PAID SEPERATELY.

9. POLE BASE/FOUNDATION - ANCHOR BOLTS SHALL INCLUDE AS A MINIMUM, ONE LEVELING NUT, TWO FLAT WASHERS, ONE LOCK WASHER, AND ONE HEX NUT. PERIMETER OF ANCHOR BASE SHALL BE GROUTED WITH A ¼" WEEP HOLE. ALL CONCRETE SHALL BE CLASS "S" OR GREATER.

10. CONCRETE - ALL CONCRETE FOR CONTROLLER CABINET AND POLE FOUNDATIONS SHALL BE CLASS "S" OR GREATER.

11. PEDESTRIAN PHASES - PEDESTRIAN MOVEMENTS SHALL BE PUSH BUTTON ACTUATED AND CONCURRENTLY TIMED, UNLESS OTHERWISE INDICATED ON THE PLAN SHEET(S). FURNISHING AND INSTALLING PEDESTRIAN PUSH SWITCH SHALL BE CONSIDERED SUBSIDIARY TO THE ITEM 707 PEDESTRIAN SIGNAL HEAD.

* WHEN THE GROUND ELEVATION AT THE POLE IS LOWER THAN THE ROADWAY ELEVATION, THE LENGTH OF FOUNDATION ABOVE THE GROUND MAY BE INCREASED TO PROVIDE THE REQUIRED SIGNAL HEAD CLEARANCE ABOVE THE ROADWAY. WHEN THE REQUIRED LENGTH OF FOUNDATION ABOVE THE GROUND IS 18" OR LESS, NO INCREASE IN DEPTH "L" WILL BE REQUIRED. WHEN THE REQUIRED LENGTH OF FOUNDATION ABOVE THE GROUND IS 5'-6" OR LESS, INCREASE DEPTH "L" BY 1'-0". FOR LENGTHS GREATER THAN 5'-6", DEPTH "L" SHALL BE ADJUSTED AS DIRECTED BY THE ENGINEER. LONGITUDINAL REINFORCING, AS SHOWN IN THE TABLE, SHALL BE PROVIDED FOR THE LENGTH OF THE EXTENDED SHAFT AND #4 TIES SHALL BE PROVIDED AT A SPACING NOT TO EXCEED 9" ON CENTERS. PAYMENT WILL BE IN ACCORDANCE WITH SECTION 714 TRAFFIC SIGNAL MAST ARM AND POLE WITH FOUNDATION OF THE STANDARD SPECIFICATIONS.

** IN LIEU OF DESIGNING THE STRUCTURE TO RESIST PERIODIC GALLOPING, A VIBRATORY MITIGATION DEVICE MAY BE PROVIDED BY THE POLE MANIFACTURER. THE VIBRATORY MITIGATION DEVICE SHALL BE AN ANTI-GALLOPING PANEL CONSISTING OF A 60" X 16" X 0.125" SIGN BLANK MOUNTED NEAR THE END OF THE MAST ARM NOT TO EXCEED ONE QUARTER OF THE LENGTH OF THE MAST ARM FROM THE END OF THE MAST ARM WITH THE LONG AXIS OF THE PANEL COLLINEAR WITH THE LONG AXIS OF THE MAST ARM. THE PANEL SHOULD BE MOUNTED AT SUCH THE HEIGHT AS TO PROVIDE AT LEAST 6" CLEAR FROM THE TOP OF ANY SIGNAL ASSEMBLY OF SIGN PANEL LOCATED ON THE MAST ARM WITHIN THE LENGTH OF THE ANTI-GALLOPING PANEL.

TRUCK-INDUCED GUST LOADS SHALL BE EXCLUDED FOR FATIGUE DESIGN FOR ALL STRUCTURES EXCEPT MAST ARMS MOUNTED OVER FACILITIES WITH POSTED SPEEDS OF 65 MPH OR GREATER AT THE LOCATION OF THE STRUCTURE.

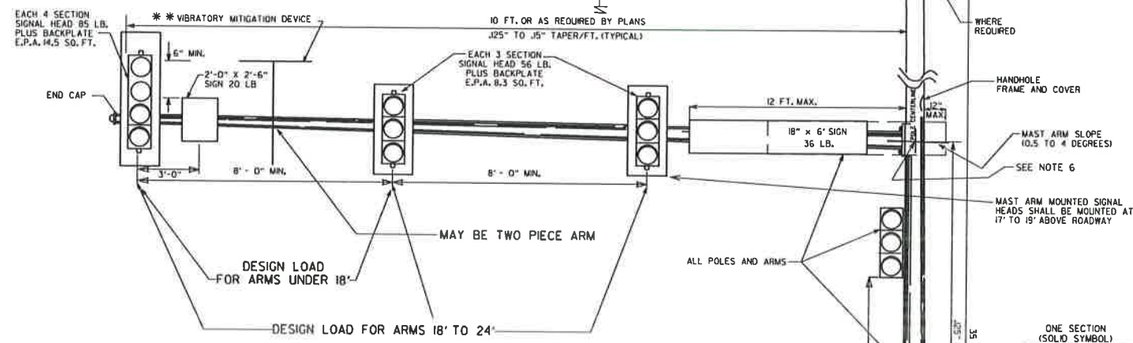

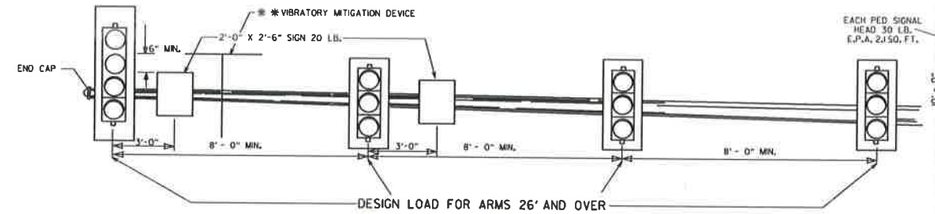

SIGNAL OPERATION NOTES:

FLASHING OPERATION - PRIOR TO NORMAL OPERATION, SIGNAL SHALL BE FLASHED FOR A PERIOD OF 3 TO 5 WORK DAYS OR AS DIRECTED BY THE ENGINEER. SIGNAL SHALL BE PLACED IN OPERATION ONLY ON A REGULAR WORK DAY, EXCEPT FRIDAY.

THE CONTRACTOR MAY BE REQUIRED TO ALTER THE FLASHING DISPLAY DURING THE TEMPORARY FLASH PERIOD. AT THE TIME THE INTERSECTION IS PLACED IN PERMANENT OPERATION, THE FLASH SEQUENCE SHALL THEN BE RETURNED TO THAT INDICATED ON THE PLAN SHEETS. NO ADDITIONAL COMPENSATION SHALL BE ALLOWED FOR THESE ALTERATION IN FLASH SEQUENCE.

SPECIAL NOTE: 90 MPH WIND ZONE DESIGN, SEE NOTE 3. MINIMUM STRUCTURAL REQUIREMENTS.

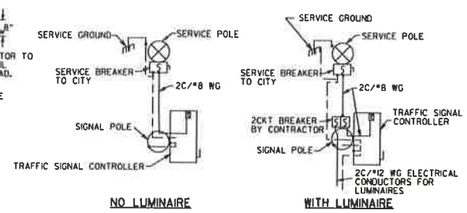

SERVICE DISCONNECT
NOTE: ELECTRICAL GROUND CONDUCTOR IS BONDED TO ALL METAL ENCLOSURES

R10-10 SPECIAL

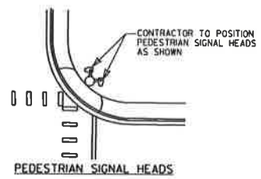

PEDESTRIAN SIGNAL HEADS

DATE	REVISION	FILMED
11-16-17	REVISED NOTES, ADDED PEDESTRIAN SIGNAL HEAD DETAIL, ADDED HANDHOLE TERMINAL DETAIL, ADDED TRENCHING DETAIL	
02-27-14	REVISED NOTES.	
09-12-13	ISSUED AS STANDARD DRAWING	
12-08-16	REVISED NOTES	
02-27-14	REVISED NOTES	
09-12-13	ISSUED AS STANDARD DRAWING	
07-21-11	REVISED VMD, SIGNAL HEADS	
05-21-09	REVISED GROUNDING	
07-31-08	REVISED GROUNDING	
04-25-08	ADDED VIBRATORY MITIGATION DEVICE & NOTES	
04-18-08	REVISED AASHTO NOTES	
04-17-08	REVISED TO 2001 AASHTO STANDARDS	
10-12-04	REVISED CABINET ORIENTATION	
06-23-04	REVISED	
05-11-04	REV. NOTE 3/AASHTO REQUIREMENTS	
06-11-01	REV. NOTES & POLE MAST ARM SLOPE	
04-11-01	REVISED POLE TAPERS	
04-25-00	REV. NOTES & SIGNAL HEAD PLACEMENT	
11-22-99	REVISED FOUNDATION DETAILS	
11-17-98	REVISED DETAILS AND NOTES	
11-21-95	ISSUED	

ARKANSAS STATE HIGHWAY COMMISSION

STEEL POLE WITH MAST ARM

STANDARD DRAWING SD-11

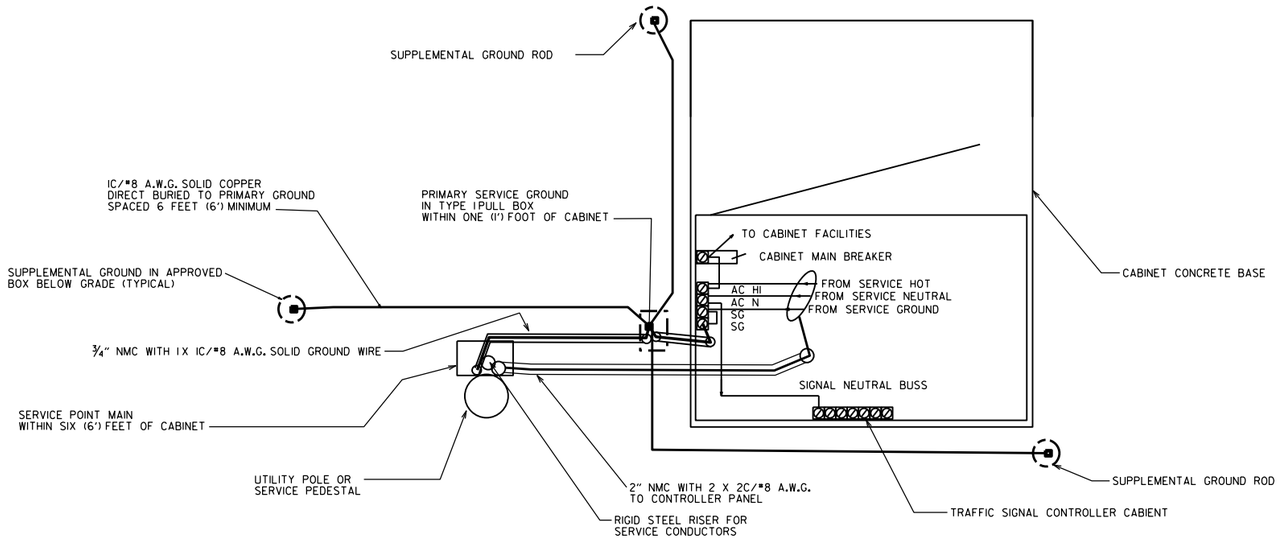

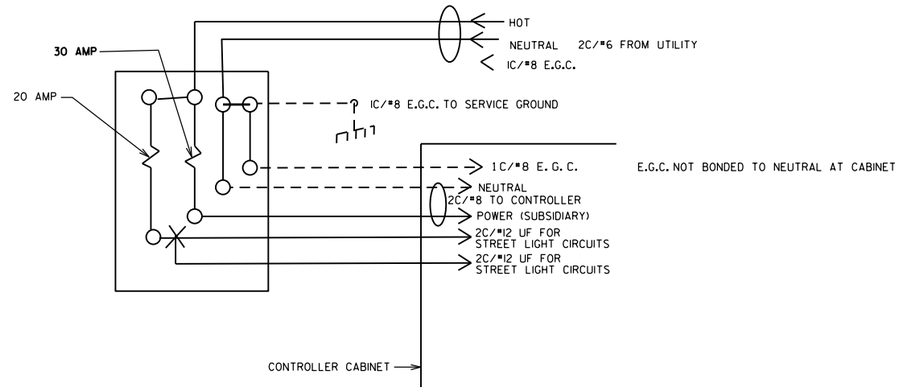

MAIN BREAKER WIRING (TYPICAL)

SERVICE GROUND IS TYPICALLY TIED TO NEUTRAL AT THE MAIN BREAKER. AS SUCH, CONTROLLER GROUND IS NOT TIED TO NEUTRAL AT SECONDARY BREAKER OR IN CONTROLLER CABINET.

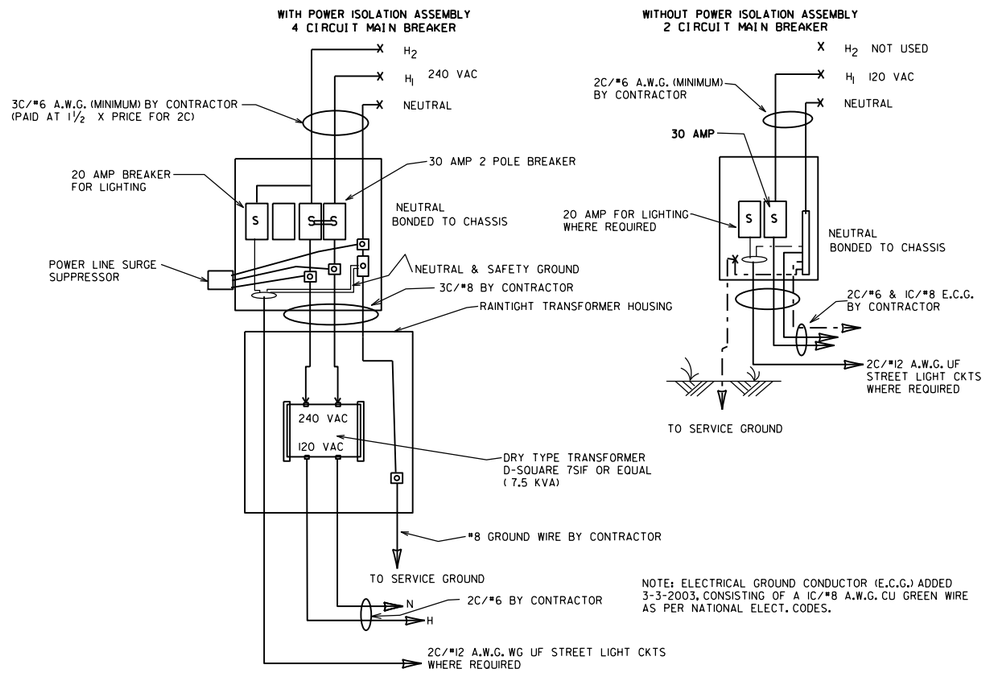

NOTES:

LOCATION OF SERVICE:
TO MEET THE REQUIREMENTS FOR SAFETY AND MAXIMIZE LIGHTNING PROTECTION. THE "SERVICE POINT MAIN" FROM THE UTILITY PRIMARY SERVICE POINT MUST BE WITHIN SIX (6') FEET OF THE TRAFFIC SIGNAL CONTROLLER CABINET. ELECTRICAL SERVICE SHALL BE PROVIDED BY THE CITY/COUNTY TO A SERVICE POLE OR PEDESTAL WITH EXTERNAL RAINTIGHT BREAKER (MAIN BREAKER) AT A MUTUALLY ACCEPTABLE POINT WITHIN THE RIGHT-OF-WAY. SERVICE POINT INCLUDES GALVANIZED STEEL CONDUIT TO A POLE 18" BELOW GROUND LINE, TWO CIRCUIT MAIN BREAKER, POWER ISOLATION ASSEMBLY WHERE REQUIRED, METER LOOP IF REQUIRED BY LOCAL UTILITY COMPANY, ELECTRICAL CONDUCTORS AND WEATHERHEAD. WHERE STREET LIGHTING IS INCLUDED AS PART OF SIGNAL INSTALLATION, STREET LIGHTING CIRCUIT (2C/#12 A.W.G. UF RATED, TYPICAL) SHALL BE KEPT SEPARATE FROM THE CIRCUIT SERVING TRAFFIC SIGNAL. SERVICE WIRE AND WIRING FROM THE CONTROLLER TO MAIN BREAKER IS PROVIDED BY THE CONTRACTOR AS A PART OF THIS CONTRACT. WIRE AND WIRING FROM MAIN RESPONSIBILITY OF THE CITY/COUNTY.

METER LOOP:
ALL COMPONENTS OF THE SERVICE POINT WITH THE EXCEPTION OF THE WIRE AND WIRING ABOVE THE MAIN BREAKER IS FURNISHED AND INSTALLED BY THE CONTRACTOR. WIRING FROM MAIN BREAKER INCLUDING CONNECTION TO THE UTILITY, IS THE RESPONSIBILITY OF THE CITY/COUNTY. IF METER LOOP IS REQUIRED, METER BASE AND HARDWARE IS PROVIDED BY THE CITY/COUNTY AND ISTALLED BY THE CONTRACTOR.

SUPPLEMENT GROUND RODS:
SUPPLEMENT GROUND RODS ARE FUSION WELDED TO IC/#8 A.W.G. SOLID COPPER GROUND WIRE. ATTACHMENT TO PRIMARY GROUND MAY BE AN APPROVED CLAMP. GROUND RODS ARE LOCATED IN A BOX APPROVED BY THE ENGINEER MEETING THE SAME LOADING REQUIREMENTS AS SECTION 711 CONCRETE PULL BOX OF THE STANDARD SPECIFICATIONS, WITH THE EXCEPTION TO DIMENSIONS. THE CONCRETE PULL BOX MAY BE EITHER ROUND OR SQUARE APPROXIMATELY SIX (6") INCHES MINIMUM INSIDE DIMENSIONS AND SIX (6") INCHES DEPTH. (STRONGWELL PC0608BA06 WITH PC0608CA00 LID OR EQUAL).

DATE	REVISION	FILMED
11-07-19	REVISED NOTES	
11-16-17	REVISED NOTES	
09-12-13	ISSUED AS STANDARD DRAWING	
01-17-08	ISSUED	

ARKANSAS STATE HIGHWAY COMMISSION

SERVICE POINT INSTALLATION WITH SUPPLEMENT GROUNDING ARRAY

STANDARD DRAWING SD-12

SUPERELEVATION TABLE FOR ONE - WAY TRAFFIC

DEGREE OF CURVE	30 MPH			35 MPH			40 MPH			45 MPH			50 MPH			55 MPH			60 MPH			65 MPH			70 MPH			75 MPH		
	e	Ls (FT)		e	Ls (FT)		e	Ls (FT)		e	Ls (FT)		e	Ls (FT)		e	Ls (FT)		e	Ls (FT)		e	Ls (FT)		e	Ls (FT)		e	Ls (FT)	
		MINIMUM	DESIRABLE		MINIMUM	DESIRABLE		MINIMUM	DESIRABLE		MINIMUM	DESIRABLE		MINIMUM	DESIRABLE		MINIMUM	DESIRABLE		MINIMUM	DESIRABLE		MINIMUM	DESIRABLE		MINIMUM	DESIRABLE		MINIMUM	DESIRABLE
0° 15'	NC			NC			NC			NC			NC			NC			NC			NC			NC			NC		
0° 30'	NC			NC			NC			NC			NC			NC			RC	115		RC	115		RC	115		0.022	121	
0° 45'	NC			NC			NC			NC			RC	115		RC	115		0.024	127		0.026	132		0.030	144		0.032	150	
1° 00'	NC			NC			NC			RC	108		0.022	121		0.026	132		0.030	144		0.034	156		0.038	167		0.042	179	350
1° 15'	NC			NC			RC	101		0.022	114		0.028	138		0.032	150		0.038	167		0.042	179		0.046	190	350	0.052	208	
1° 30'	NC			RC	94		0.022	106		0.028	130		0.032	150		0.038	167		0.044	185		0.050	202	350	0.056	218		0.062	236	
1° 45'	RC	86		RC	94		0.026	116		0.030	136		0.036	161		0.044	185		0.050	202	350	0.056	218		0.064	242		0.070	259	
2° 00'	RC	86		0.024	103		0.028	121		0.034	146		0.042	179		0.048	196		0.056	218		0.064	242		0.070	259		0.080	288	400
2° 15'	RC	86		0.026	108		0.032	131		0.038	157		0.046	190		0.054	214		0.062	236		0.070	259		0.078	282	400	0.088	311	
2° 30'	0.022	90		0.028	113		0.034	136		0.042	168		0.050	202		0.058	224	350	0.068	253		0.076	276		0.086	305		0.096	334	450
2° 45'	0.024	95		0.030	118		0.038	146		0.046	179		0.054	214		0.064	242		0.072	265		0.082	294		0.092	323		0.100	346	
3° 00'	0.026	100		0.034	126		0.040	151		0.050	190	300	0.058	224		0.068	253		0.078	282		0.088	311		0.098	340	450	D MAX = 2° 45'		
3° 15'	0.028	103		0.036	131		0.044	161		0.052	194		0.062	236		0.072	265		0.082	294		0.092	323		0.100	346				
3° 30'	0.030	108		0.038	136		0.046	167	250	0.056	205		0.066	247		0.076	276		0.086	305		0.096	334		D MAX = 3° 30'					
3° 45'	0.032	112		0.040	140		0.050	176		0.058	211		0.070	259		0.080	288		0.090	317		0.098	340							
4° 00'	0.034	116		0.042	145	250	0.052	181		0.062	222		0.072	265		0.084	300		0.094	329	400	0.100	346							
4° 15'	0.036	120		0.044	150		0.054	186		0.064	227		0.076	276		0.086	305		0.096	334		D MAX = 4° 15'								
4° 30'	0.036	120		0.046	155		0.056	192		0.068	238		0.078	282		0.090	317	400	0.098	340										
4° 45'	0.038	125		0.048	160		0.060	202		0.070	244		0.082	294		0.092	323		0.100	346										
5° 00'	0.040	130		0.050	164		0.062	206		0.072	248		0.084	300		0.094	329		D MAX = 5° 15'										
5° 30'	0.044	138		0.054	173		0.066	217		0.078	265		0.088	311		0.098	340												
6° 00'	0.046	143	250	0.058	182		0.070	227		0.082	276		0.092	323		0.100	346												
6° 30'	0.050	151		0.062	192		0.074	238		0.086	287		0.096	334	350	D MAX = 6° 30'													
7° 00'	0.052	156		0.064	197		0.078	247		0.090	298		0.098	340															
7° 30'	0.054	160		0.068	206		0.080	252		0.092	302	350	0.100	346															
8° 00'	0.058	168		0.070	211		0.084	263		0.094	308		D MAX = 8° 25'																
8° 30'	0.060	173		0.072	215		0.086	268	300	0.096	313																		
9° 00'	0.062	178		0.076	224		0.088	272		0.098	319																		
9° 30'	0.064	181		0.078	229		0.092	282		0.100	324																		
10° 00'	0.066	186		0.080	234		0.094	288		D MAX = 10° 30'																			
11° 00'	0.070	194		0.084	244		0.096	293																					
12° 00'	0.074	203		0.088	253	300	0.098	298																					
13° 00'	0.076	208		0.090	258		0.100	302	350																				
14° 00'	0.080	216		0.094	266		D MAX = 13° 45'																						
15° 00'	0.082	221		0.096	271																								
16° 00'	0.086	229		0.098	276																								
17° 00'	0.088	233		0.100	281																								
18° 00'	0.090	238		D MAX = 19° 30'																									
19° 00'	0.092	242																											
20° 00'	0.094	246																											
21° 00'	0.096	251	300																										
22° 00'	0.096	251																											
23° 00'	0.098	254																											
24° 00'	0.098	254																											
25° 00'	0.100	259																											
D MAX = 28° 30'																													

GENERAL NOTES

1. ON PAVEMENT WITH ONE-WAY TRAFFIC, THE SUPERELEVATION SHALL BE REVOLVED ON THE PROFILE GRADE POINT.
2. SUPERELEVATION VALUES SHOWN ON THE CROSS SECTIONS ARE VALUES (+) OR (-) TO BE ADDED OR SUBTRACTED FROM THE POINT OF CONTROL.
3. LENGTHS FOR Ls MAY BE ROUNDED IN MULTIPLES OF 25 FT. OR 50 FT. TO PERMIT SIMPLER CALCULATIONS.
4. MINIMUM Ls VALUES MAY BE USED FOR RAMPS; DESIRABLE VALUES SHALL APPLY TO MAIN LANES.
5. DIVIDED PAVEMENTS WIDER THAN 4 LANES SHALL HAVE ADDITIONAL TRANSITION LENGTHS AS FOLOWS:

6 LANE DIVIDED---------+20%
8 LANE DIVIDED---------+50%

ABBREVIATIONS

NC - NORMAL CROWN
RC - REVERSE CROWN, SUPERELEVATION AT NORMAL CROWN SLOPE
S - SUPERELEVATION
L - DISTANCE FROM BEGINNING OF SUPERELEVATION TRANSITION TO ANY POINT (FT.)
d - WIDTH OF PAVEMENT
e - MAXIMUM RATE OF SUPERELEVATION (FT. PER FT.)
Ls - LENGTH OF SUPERELEVATION TRANSITION (FT.)
C - NORMAL CROWN (FT.)

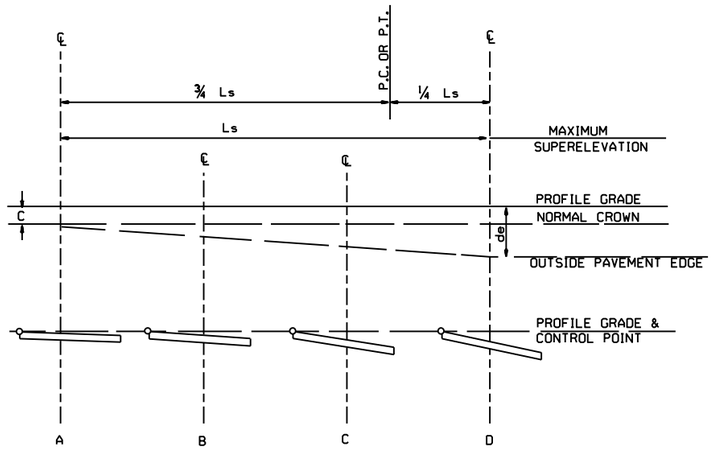

ONE-WAY TRAFFIC
INSIDE LANE

SUPERELEVATION FORMULA = $S = -\frac{L(de-C)}{Ls} - C$

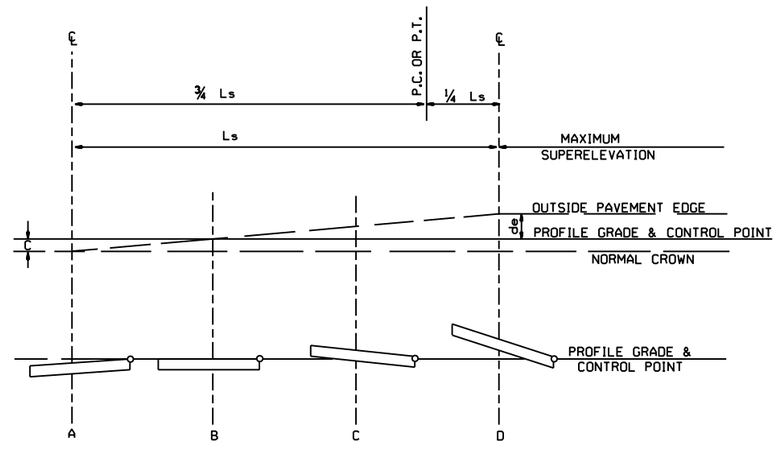

ONE-WAY TRAFFIC
OUTSIDE LANE

SUPERELEVATION FORMULA = $S = +\frac{L(de+C)}{Ls} - C$

DATE	REVISION	DATE FILLMED
11-07-19	REVISED SUPERELEVATION TABLE	
01-09-87	ISSUED	578-1-15-87

ARKANSAS STATE HIGHWAY COMMISSION

TABLES AND METHOD OF SUPERELEVATION FOR ONE-WAY TRAFFIC

STANDARD DRAWING SE-1

SUPERELEVATION TABLE FOR TWO - WAY TRAFFIC

DEGREE OF CURVE	30 MPH			35 MPH			40 MPH			45 MPH			50 MPH			55 MPH			60 MPH			65 MPH			70 MPH			75 MPH		
	e	Ls (FT)		e	Ls (FT)		e	Ls (FT)		e	Ls (FT)		e	Ls (FT)		e	Ls (FT)		e	Ls (FT)		e	Ls (FT)		e	Ls (FT)		e	Ls (FT)	
		MINIMUM	DESIRABLE		MINIMUM	DESIRABLE		MINIMUM	DESIRABLE		MINIMUM	DESIRABLE		MINIMUM	DESIRABLE		MINIMUM	DESIRABLE		MINIMUM	DESIRABLE		MINIMUM	DESIRABLE		MINIMUM	DESIRABLE		MINIMUM	DESIRABLE
0° 15'	NC			NC			NC			NC			NC			NC			NC			NC			NC			NC		
0° 30'	NC			NC			NC			NC			NC			NC			RC	96		RC	96		RC	96		0.022	101	
0° 45'	NC			NC			NC			NC			RC	96		RC	96		0.024	106		0.026	110		0.030	120		0.032	125	
1° 00'	NC			NC			NC			RC	90		0.022	101		0.026	110		0.030	120		0.034	130		0.038	139	300	0.042	149	300
1° 15'	NC			NC			RC	84		0.022	95		0.028	115		0.032	125		0.038	139		0.042	149		0.046	158		0.052	173	
1° 30'	NC			RC	78		0.022	88		0.028	108		0.032	125		0.038	139		0.044	154		0.050	168	300	0.056	182		0.062	197	
1° 45'	RC	72		RC	78		0.026	97		0.030	113		0.036	134		0.044	154		0.050	168	300	0.056	182		0.064	202		0.070	216	
2° 00'	RC	72		0.024	86		0.028	101		0.034	122		0.042	149		0.048	163		0.056	182		0.064	202		0.070	216		0.080	240	
2° 15'	RC	72		0.026	90		0.032	109		0.038	131		0.046	158		0.054	178	300	0.062	197		0.070	216		0.078	235	350	0.088	259	350
2° 30'	0.022	75		0.028	94		0.034	113		0.042	140		0.050	168		0.058	187		0.068	211		0.076	230		0.086	254		0.096	278	
2° 45'	0.024	79		0.030	98		0.038	122		0.046	149	200	0.054	178		0.064	202		0.072	221		0.082	245		0.092	269		0.100	288	400
3° 00'	0.026	83		0.034	105		0.040	126		0.050	158		0.058	187	250	0.068	211		0.078	235		0.088	259		0.098	283	400	D MAX = 2° 45'		
3° 15'	0.028	86		0.036	109		0.044	134		0.052	162		0.062	197		0.072	221		0.082	245		0.092	269		0.100	288				
3° 30'	0.030	90		0.038	113		0.046	139	200	0.056	171		0.066	206		0.076	230		0.086	254		0.096	278	350	D MAX = 3° 30'					
3° 45'	0.032	93		0.040	117		0.050	147		0.058	176		0.070	216		0.080	240		0.090	264		0.098	283							
4° 00'	0.034	97		0.042	121	200	0.052	151		0.062	185		0.072	221		0.084	250		0.094	274	350	0.100	288							
4° 15'	0.036	100		0.044	125		0.054	155		0.064	189		0.076	230		0.086	254	350	0.096	278		D MAX = 4° 15'								
4° 30'	0.036	100		0.046	129		0.056	160		0.068	198		0.078	235		0.090	264		0.098	283										
4° 45'	0.038	104	200	0.048	133		0.060	168		0.070	203		0.082	245		0.092	269		0.100	288										
5° 00'	0.040	108		0.050	137		0.062	172		0.072	207		0.084	250		0.094	274		D MAX = 5° 15'										
5° 30'	0.044	115		0.054	144		0.066	181		0.078	221	250	0.088	259		0.098	283												
6° 00'	0.046	119		0.058	152		0.070	189		0.082	230		0.092	269		0.100	288												
6° 30'	0.050	126		0.062	160		0.074	198		0.086	239		0.096	278	300	D MAX = 6° 30'													
7° 00'	0.052	130		0.064	164		0.078	206		0.090	248		0.098	283															
7° 30'	0.054	133		0.068	172		0.080	210		0.092	252		0.100	288															
8° 00'	0.058	140		0.070	176		0.084	219		0.094	257	300	D MAX = 8° 25'																
8° 30'	0.060	144		0.072	179		0.086	223	250	0.096	261																		
9° 00'	0.062	148		0.076	187		0.088	227		0.098	266																		
9° 30'	0.064	151		0.078	191		0.092	235		0.100	270																		
10° 00'	0.066	155		0.080	195		0.094	240		D MAX = 10° 30'																			
11° 00'	0.070	162		0.084	203		0.096	244																					
12° 00'	0.074	169		0.088	211	250	0.098	248																					
13° 00'	0.076	173		0.090	215		0.100	252	300	D MAX = 13° 45'																			
14° 00'	0.080	180		0.094	222																								
15° 00'	0.082	184		0.096	226																								
16° 00'	0.086	191		0.098	230																								
17° 00'	0.088	194		0.100	234																								
18° 00'	0.090	198	250	D MAX = 19° 30'																									
19° 00'	0.092	202																											
20° 00'	0.094	205																											
21° 00'	0.096	209																											
22° 00'	0.096	209																											
23° 00'	0.098	212																											
24° 00'	0.098	212																											
25° 00'	0.100	216																											
D MAX = 28° 30'																													

ABBREVIATIONS

NC - NORMAL CROWN
RC - REVERSE CROWN, SUPERELEVATION AT NORMAL CROWN SLOPE
e - RATE OF SUPERELEVATION (FT. PER FT.)
Ls - LENGTH OF SUPERELEVATION TRANSITION (FT.)
L - DISTANCE FROM BEGINNING OF SUPERELEVATION TRANSITION TO ANY POINT (FT.)
d - WIDTH OF PAVEMENT (FT.) OR WIDTH OF SUBGRADE (FT.)
C - NORMAL CROWN (FT.)

GENERAL NOTES

1. ON PAVEMENT WITH TWO-WAY TRAFFIC, THE SUPERELEVATION SHALL BE REVOLVED ON THE INSIDE PAVEMENT EDGE UNLESS OTHERWISE NOTED ON THE PLANS
2. SUPERELEVATION VALUES SHOWN ON THE CROSS SECTIONS ARE VALUES (+) OR (-) TO BE ADDED TO OR SUBTRACTED FROM THE POINT OF CONTROL.
3. LENGTHS FOR L MAY BE ROUNDED IN MULTIPLES OF 25 FT. OR 50 FT. TO PERMIT SIMPLER CALCULATIONS.
4. PAVEMENTS WIDER THAN 2 LANES SHALL HAVE ADDITIONAL TRANSITION LENGTHS AS FOLLOWS:

3 LANE UNDIVIDED - - - - - +20%
4 LANE UNDIVIDED - - - - - +50%
5 LANE UNDIVIDED - - - - - +80%
6 LANE UNDIVIDED - - - - - +100%

NOTE: MAINTAIN NORMAL CROWN ON INSIDE UNTIL SUPERELEVATION EXCEEDS 2C.

RATE OF SUPERELEVATION SHALL BE COMPUTED ON STRAIGHT LINE METHOD USING APPLICABLE Ls.

SUPERELEVATION FORMULA = $\frac{Lde}{Ls}$

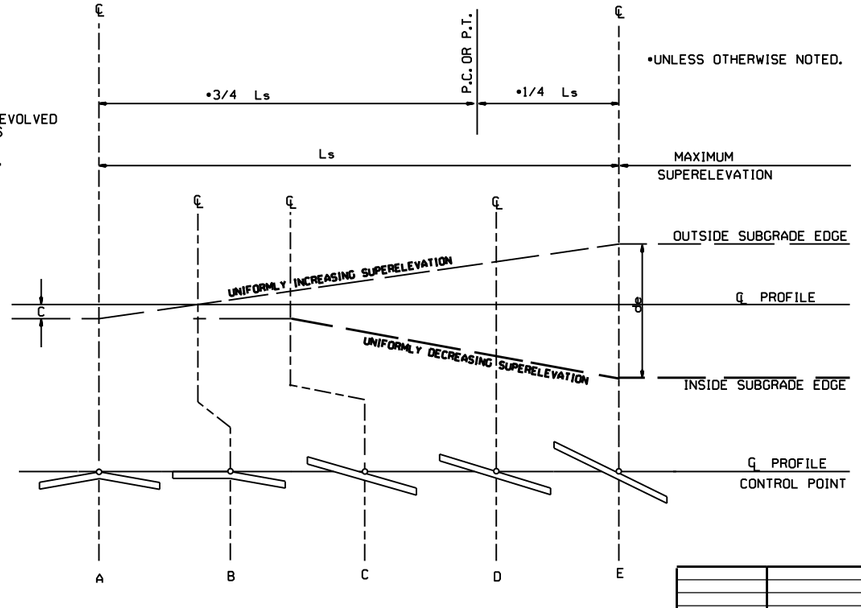

STANDARD METHOD WHEN SUPERELEVATION REVOLVES AROUND CENTER LINE

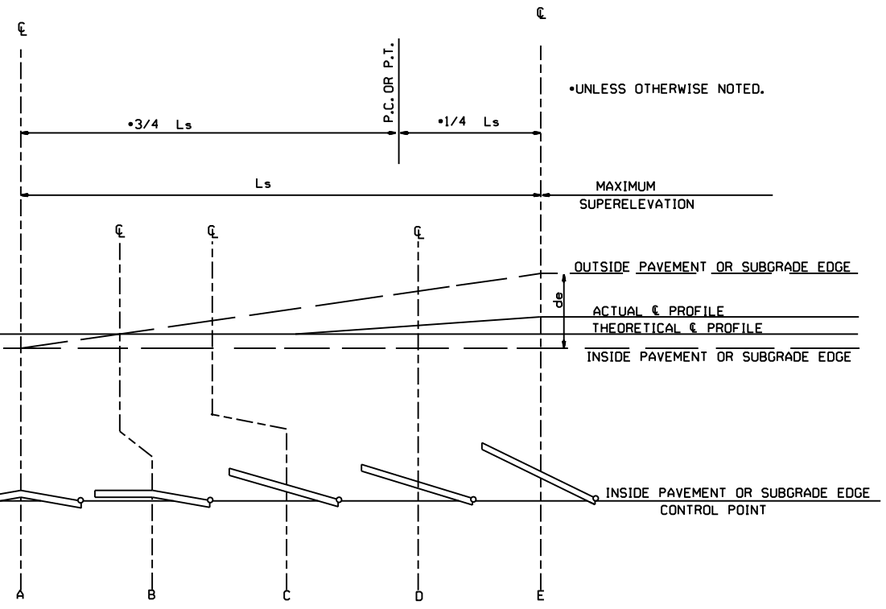

STANDARD METHOD WHEN SUPERELEVATION REVOLVES AROUND INNER SUBGRADE POINT OR INNER PAVEMENT EDGE

NOTE: MAINTAIN NORMAL CROWN ON INSIDE UNTIL SUPERELEVATION EXCEEDS 2C.

DATE	REVISION	DATE FILLMED
11-07-19	REVISED SUPERELEVATION TABLE	
10-18-96	ADDED FORMULA	
01-09-87	ISSUED	534-1-9-87

ARKANSAS STATE HIGHWAY COMMISSION

TABLES AND METHOD OF SUPERELEVATION FOR TWO-WAY TRAFFIC

STANDARD DRAWING SE-2



R1-1
30"X30"



W1-3
30"X30"
(LT. OR RT.)

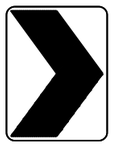

W1-8
18"X24"



W2-5
30"X30"



W3-1
36"X36"



W5-1
36"X36"



M6-3
21"X15"

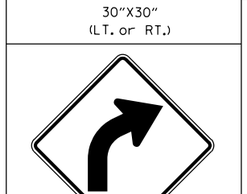

R1-2
36"X36"X36"

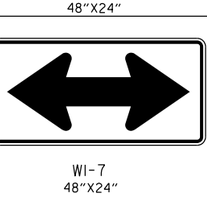

W1-4
30"X30"
(LT. or RT.)

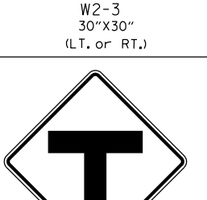

W2-1
30"X30"

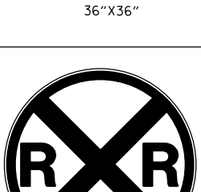

S1-1
36"X36"

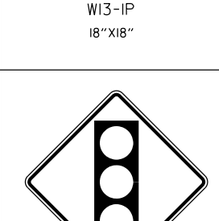

W3-2
36"X36"



County
Route Marker
M1-6
24"X24"

NOTE: REFLECTORIZED YELLOW LEGEND (COUNTY NAME, ROUTE LETTER & NUMBER) & BORDER ON A BLUE BACKGROUND.



M6-4
21"X15"

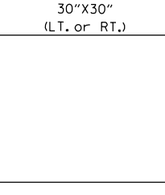

R2-1
24"X30"

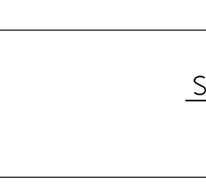

W1-5
30"X30"
(LT. or RT.)

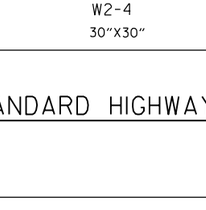

W2-2
30"X30"

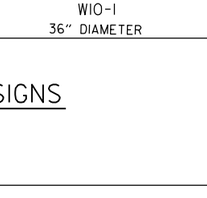

W5-2
36"X36"

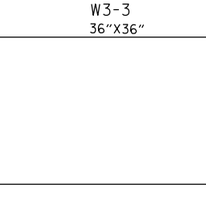

W8-3
36"X36"

R1-3P
18"X6"

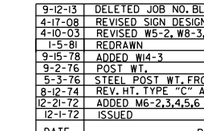

M6-5
21"X15"



W1-1
30"X30"
(LT. or RT.)

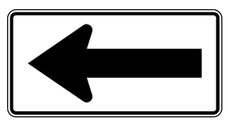

W1-6
48"X24"

W1-7
48"X24"

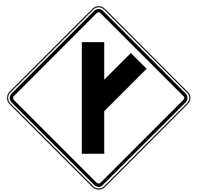

W2-3
30"X30"
(LT. or RT.)



W5-3
36"X36"



W13-1P
18"X18"

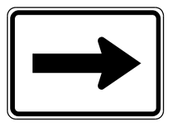

M6-1
21"X15"

NOTE: ALL M6 SIGNS TO BE MADE WITH REFLECTORIZED YELLOW ARROW & BORDER WITH BLUE BACKGROUND.

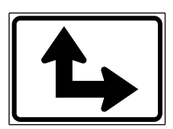

M6-6
21"X15"

W1-2
30"X30"
(LT. or RT.)

W2-4
30"X30"

W10-1
36" DIAMETER

W3-3
36"X36"

M6-2
21"X15"

S4-3P
24"X8"



S4-2P
24"X10"

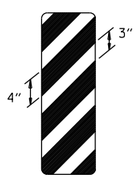

OM-3
12"X36"
(LT. or RT.)

MINIMUM DIMENSIONS SHOWN

SUPPORT SECTION

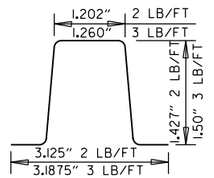

(U-CHANNEL)
STANDARD SUPPORT
ASSEMBLIES

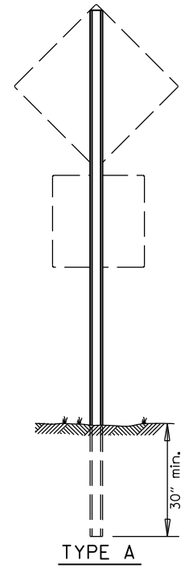

TYPE A

NOTE: LENGTH OF SIGN POSTS SHALL BE DETERMINED SO AS TO PROVIDE FOR MINIMUM VERTICAL CLEARANCES AS CALLED FOR IN THE SPECIFICATIONS PLUS A MINIMUM VERTICAL PENETRATION OF 30" IN THE SOIL.

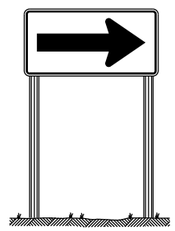

TYPE B

TYPE C

MINIMUM WEIGHT

TYPE A & B = 3 LBS./FT.
TYPE C = 2 LBS./FT.

STANDARD HIGHWAY SIGNS

DATE	REVISION	DATE FILMED
9-12-13	DELETED JOB NO. BLOCK; REVISED RI-3 TO RI-3P	
4-17-08	REVISED SIGN DESIGNATION - W3-1 & W3-2	
4-10-03	REVISED W5-2, W8-3, OM-3; ADDED WI-8	
1-5-81	REDRAWN	960-1-15-81
9-15-78	ADDED WI4-3	877-9-15-78
9-2-76	POST WT.	623-9-3-76
5-3-76	STEEL POST WT. FROM 2"-3"; ADDED S4-2 & S4-3	504-5-3-76
8-12-74	REV. HT. TYPE "C" ASSEMBLY	500-8-21-74
12-21-72	ADDED M6-2,3,4,5,6	500-12-21-72
12-1-72	ISSUED	562-12-1-72

SUPPORT ASSEMBLIES

ARKANSAS STATE HIGHWAY COMMISSION

STANDARD HIGHWAY SIGNS AND SUPPORT ASSEMBLIES

STANDARD DRAWING SHS-1

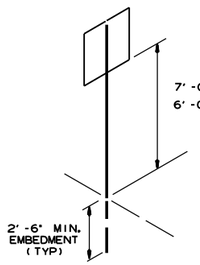

U-1

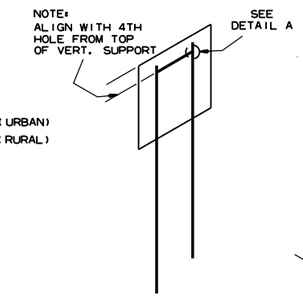

U-2

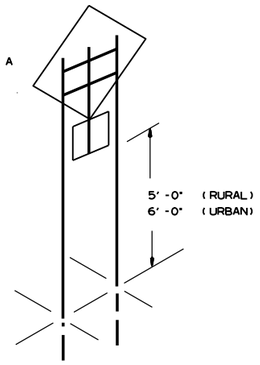

U-2 (A)

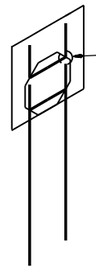

U-2 (B)

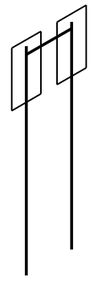

U-2 (1)

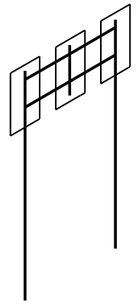

U-2 (2)

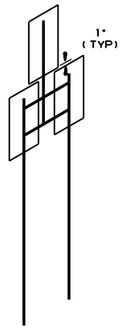

U-2 (3)

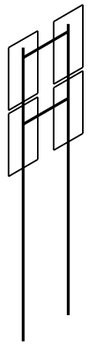

U-2 (4)

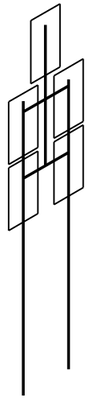

U-2 (5)

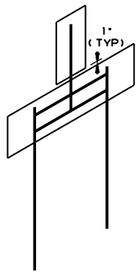

U-2 (6)

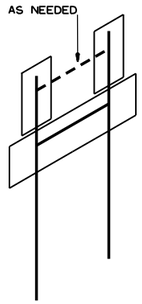

U-2 (7)

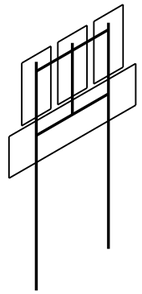

U-2 (8)

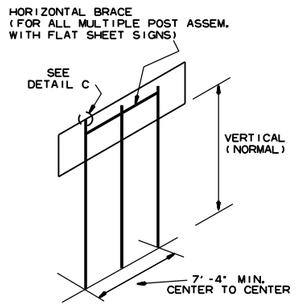

U-3

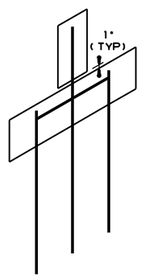

U-3 (1)

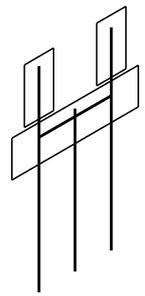

U-3 (2)

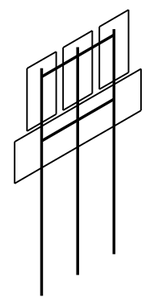

U-3 (3)

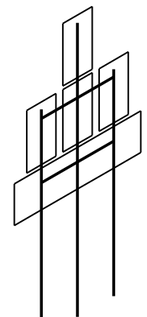

U-3 (4)

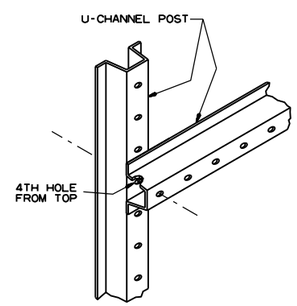

DETAIL A

SHOWING HORIZONTAL BRACE

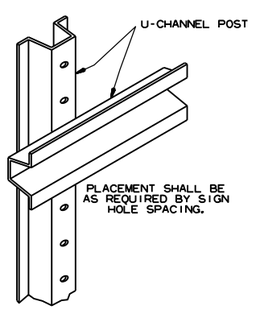

DETAIL B

SHOWING BACK-TO-BACK INSTALLATION

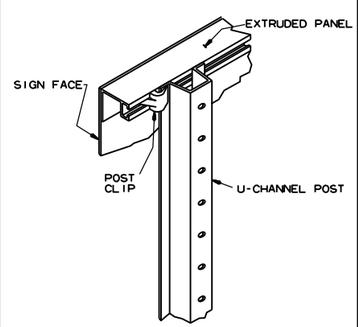

DETAIL C

SHOWING GUIDE SIGN MOUNTING WITH EXTRUDED PANELS

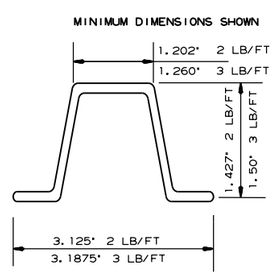

DETAIL C

U-CHANNEL POST

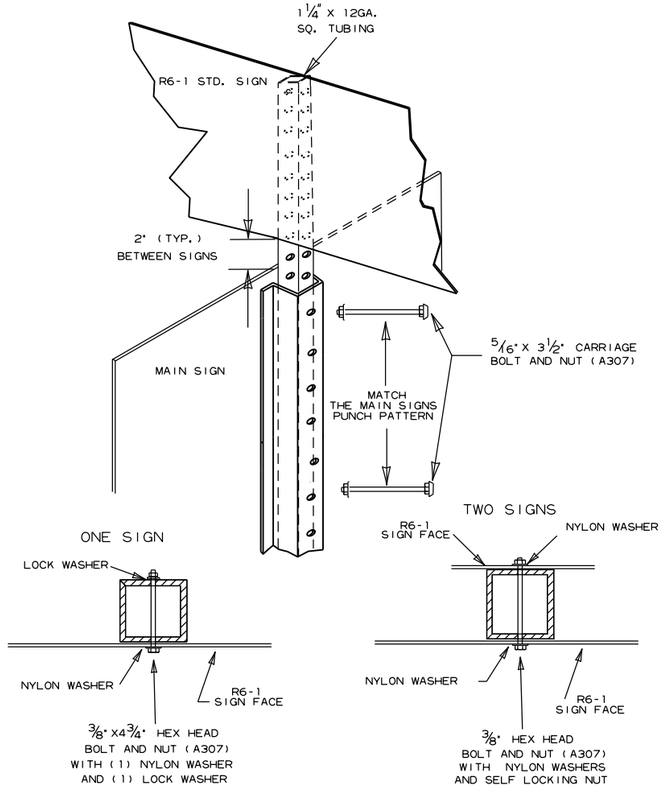

DETAIL E

R6-1 EXTENSION FOR U-CHANNEL POST

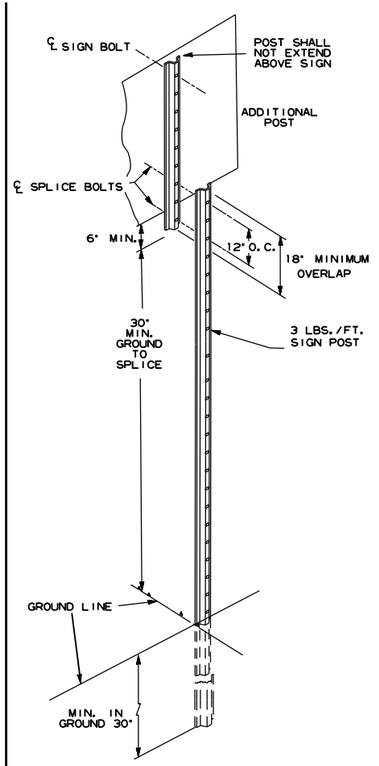

DETAIL F

DETAIL OF SPLICES

NOTES:

SIGNS AT LEAST 8' IN LENGTH MAY BE INSTALLED ON THREE 3 LB. POST. IN NO CASE SHALL THERE BE MORE THAN TWO 3 LB. POSTS WITHIN A 7' PATH.

SPLICES NECESSARY TO ATTAIN PROPER MOUNTING HEIGHT SHALL BE AS SHOWN IN DETAIL (F).

NORMAL INSTALLATIONS WILL REQUIRE 5/16" DIA. CARRIAGE BOLTS TO MOUNT SIGNS TO POST AND TO ASSEMBLE THE VARIOUS POST SUPPORTS.

ALL SIGN POSTS SHALL BE PLUMB.

THE POST FOR "TYPE U" SUPPORTS SHALL BE HOT DIP GALVANIZED.

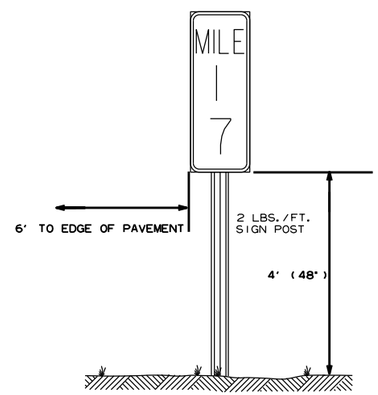

TYPICAL MILE MARKER INSTALLATION

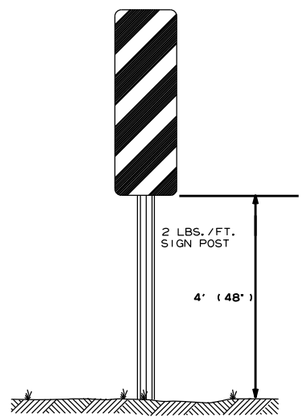

TYPICAL OM-3 INSTALLATION AT EDGE OF OBSTRUCTION

DATE	REVISION	FILMED
7-25-19	REVISED CARRIAGE BOLT WITH MATERIAL REQUIREMENT	
2-27-14	REVISED NOTES.	
9-12-13	REVISED U-2(3), U-2(6), U-3(1), DETAIL D; ADDED DETAILS E & F; ADDED TYPICAL MARKERS	
10-9-03	REMOVED ROUND POST & REVISED SPACING	
10-12-95	MOVED UPPER SPLICE	
6-8-95	REVISED SPLICE DETAIL	6-8-95
2-2-95	REDRAWN	2-2-95

ARKANSAS STATE HIGHWAY COMMISSION

U-CHANNEL POST ASSEMBLIES

STANDARD DRAWING SHS-2

POST SIZE	BASE CONNECTION DATA											FUSE PLATE DATA									
	BOLT SIZE	BOLT TORQUE (INCH/LBS)	A	B	C	D	E	t_1	t_2	W	R	F	G		J	K	M	d_1	d_2	t_3	BOLT SIZE	WT.OF EACH FUSE PLATE LBS.
W 6X9																						
W 6X12	5/8" x 2 3/4"	450"-680"	5"	2"	1 1/4"	2 3/4"	1 1/8"	3/4"	1/2"	1/4"	11/32"	4 1/4"	2"		4"	2 1/4"	1"	9/16"	3/4"	1/4"	1/2" x 1 1/2"	1.01
W 6X15												5"	2 1/2"		6"	3 1/2"	1 1/2"	11/16"	1 1/4"	3/8"	5/8" x 2 1/4"	2.51
W 8X18												5"	2 1/2"		5 1/4"	2 3/4"	1 1/4"	13/16"	1 11/16"	3/8"	3/4" x 2 1/4"	2.26
W 8X21												5 1/2"	2 1/2"		5 1/4"	2 3/4"	1 1/4"	13/16"	1"	1/2"	3/4" x 2 1/4"	3.35
W 10X22	3/4" x 3 1/2"	750"-1050"	6"	2 1/4"	1 3/8"	3 1/2"	1 1/4"	1"	3/4"	5/16"	11/32"	6"	3"		5 3/4"	2 3/4"	1 3/8"	1 3/16"	1 1/8"	1/2"	3/4" x 2 1/4"	4.03
W 10X26																						
W 12X26												6"	3"		6 1/2"	3 1/2"	1 5/8"	1 3/16"	1 15/16"	1/2"	3/4" x 2 1/4"	4.47

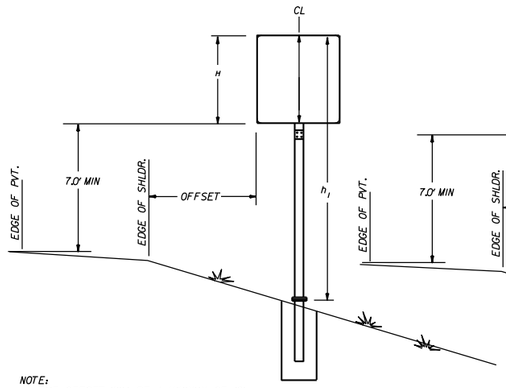

NOTE:
THE OFFSET WILL BE A MINIMUM OF 10' FROM THE EDGE OF PAVED SURFACE OR AS DIRECTED BY THE ENGINEER

G-1

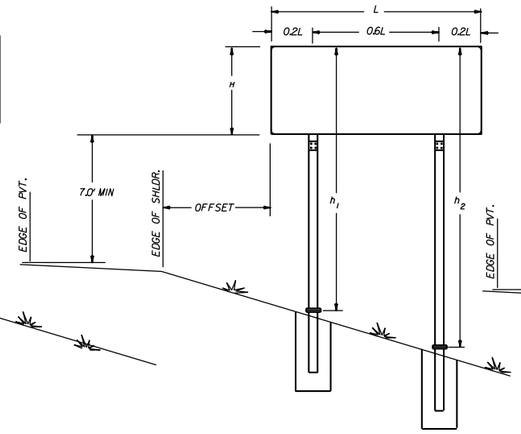

G-2

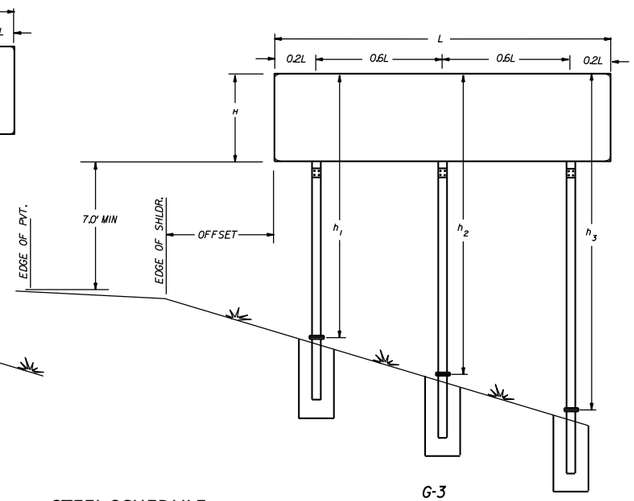

G-3

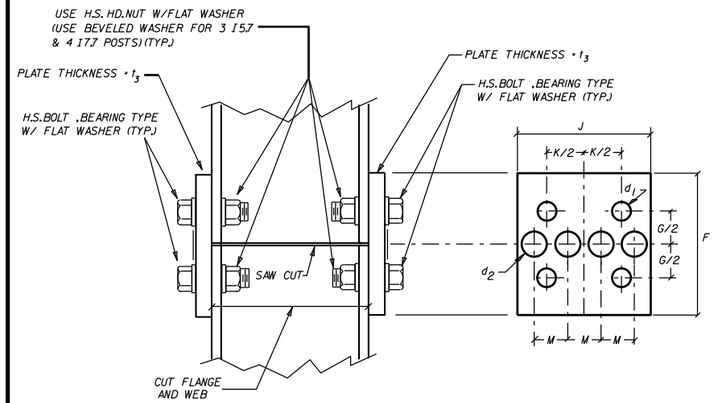

NOTE: USE H.S.HEX HEAD BOLTS,HEX HEAD NUTS AND BEVEL OR FLAT WASHERS (WHERE REQ.) UNDER NUTS. ALL HOLES SHALL BE DRILLED.ALL PLATE CUTS SHALL PREFERABLY BE SAW CUTS,HOWEVER FLAME CUTTING WILL BE PERMITTED PROVIDED ALL EDGES ARE GROUND. METAL PROJECTING BEYOND THE PLANE OF THE PLATE FACE WILL NOT BE PERMITTED. STEEL FUSE PLATES SHALL CONFORM TO THE REQUIREMENTS OF ASTM-A36,ASTM-A441,ASTM-572 GRADE 50,OR ASTM-A588 MAY BE SUBSTITUTED FOR A36 AT THE OPTION OF THE FABRICATOR. STEEL USED SHALL HAVE AN ULTIMATE TENSILE STRENGTH NOT TO EXCEED 80 KSI.

NOTE: SECTIONS SHOWN ARE FOR INSTALLATION ON THE RIGHT SHOULDER AND IN THE GORE. BOLT HOLES IN BASE PLATE ARE SLOTTED AND BEVELED AS SHOWN. USE H.S.BOLTS WITH HEX HD.,HEX NUT AND THREE FLAT WASHERS FOR EACH BOLT.SEE TABLE FOR BOLT DIA. AND TORQUE.
NOTE: ASSEMBLE SIGN POST TO STUB POST USING THE BOLTS SPEC.IN THE TABLE AND AS SHOWN IN THE ELEVATION DETAILS. THERE SHALL BE THREE FLAT WASHERS ON EACH BOLT LOCATED AS SHOWN IN THE ELEVATIONS. USE A SHIM TO PLUMB THE SIGN POST. THEN TIGHTEN THE BOLTS USING A 12" TO 15" WRENCH UNTIL THE WASHERS AND SHIMS ARE SEATED AND THE BOLT THREADS ARE CLEAR ,THEN LOOSEN EACH BOLT IN TURN AND RETIGHTEN IN A SYSTEMATIC ORDER TO THE PRESCRIBED TORQUE (SEE TABLE). THE BURR THREADS ADJACENT TO THE BACK SIDE OF THE NUT TO PREVENT LOOSENING.

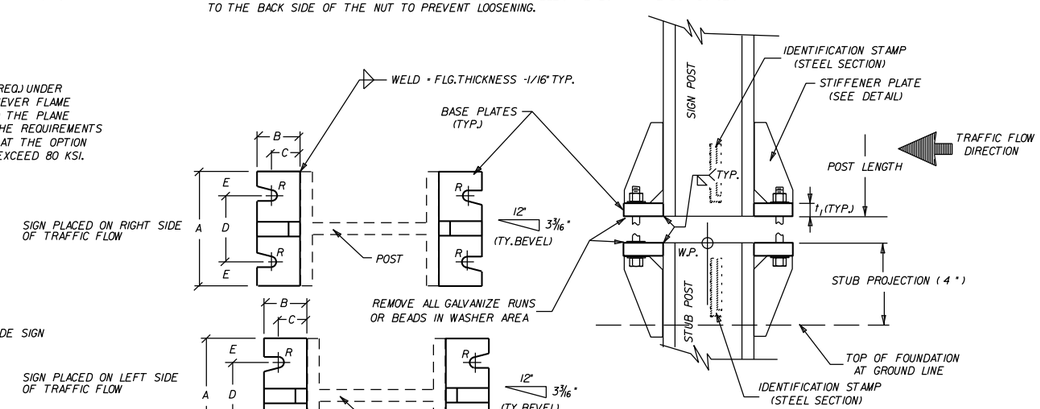

NOTE: BOLT HOLES,USED IN THE MOUNTING OF STANDARD SIGNS SHALL BE LOCATED IN THE FLANGE ADJACENT TO THE NEAR EDGE OF PAVEMENT FOR SINGLE POST ASSEMBLIES AND IN THE OUTSIDE FLANGES FOR MULTIPLE POST ASSEMBLIES.

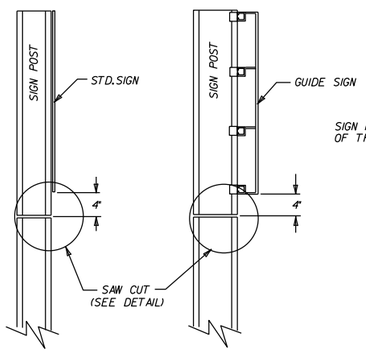

NOTE: POST SHALL BE SAW CUT AFTER GALVANIZING AND THE CUT SURFACE TREATED. AFTER PLATE IS INSTALLED AND ALL BOLTS FULLY TIGHTENED. REPAIR OF CUT SURFACES AFTER GALVANIZING SHALL BE IN ACCORDANCE WITH ASTM A123.

STANDARD SIGNS GUIDE SIGNS

FUSE PLATE DETAILS

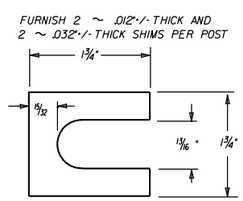

SHIM DETAIL

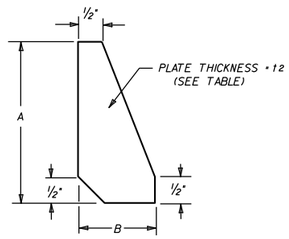

STIFFENER PLATE DETAIL

GENERAL NOTES

TIGHTEN THE HIGH STRENGTH BOLTS IN THE BASE CONNECTION ONLY TO THE TORQUE SHOWN. DO NOT OVERTIGHTEN.

BASE PLATES AND STIFFENER PLATES SHALL BE OF THE SAME MATERIAL AS THE PRIMARY SUPPORT POSTS WHICH THEY ARE WELDED.

REFER TO THE PLANS FOR FOOTING DIMENSIONS.

EACH STUB POST AND SIGN POST SHALL HAVE A PERMANENT IDENTIFYING STAMP WHICH SPECIFIES THE STEEL SECTION USED. IF THE CONTRACTOR ELECTS TO SHIP THE STUB POST SEPARATE FROM THE SIGN POST A MATCH MARK SYSTEM WILL BE REQUIRED.

STEEL SCHEDULE

FOOTING DIAMETER	#3 TIE BARS		
	DIAMETER	BAR LENGTH	POUNDS
INCHES	INCHES	FEET	
18	12	4.39	1.65
24	18	5.96	2.24
30	24	7.53	2.83
36	30	9.1	3.42

FOOTINIG DEPTH	#6 STRAIGHT BARS		
	BAR LENGTH	NUMBER REQ'D.	POUNDS
FEET	FEET		
2.50	2.00	8	24.03
3.00	2.50	8	30.04
3.50	3.00	8	36.05
4.00	3.50	8	42.06
4.50	4.00	8	48.06
5.00	4.50	8	54.07
5.50	5.00	8	60.08
6.00	5.50	8	66.09
6.50	6.00	8	72.10
7.00	6.50	8	78.10
7.50	7.00	8	84.11
8.00	7.50	8	90.12

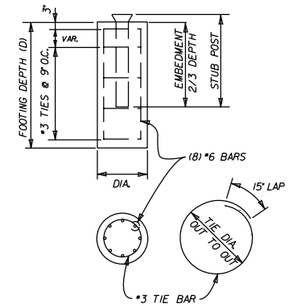

FOOTING QUANTITIES

FOOTING DEPTH	NUMBER TIE BARS REQ'D	18" DIAMETER		24" DIAMETER		30" DIAMETER		36" DIAMETER	
		CLASS S CONCRETE	REINF STEEL	CLASS S CONCRETE	REINF STEEL	CLASS S CONCRETE	REINF STEEL	CLASS S CONCRETE	REINF STEEL
FEET		CU. YD.	(GRADE 60)	CU. YD.	(GRADE 60)	CU. YD.	(GRADE 60)	CU. YD.	(GRADE 60)
2.50	4	0.16	31						
3.00	4	0.20	37						
3.50	5	0.23	44						
4.00	6	0.26	52	0.47	56				
4.50	6	0.29	58	0.52	62				
5.00	7	0.33	66	0.58	70	0.91	74		
5.50	8			0.64	78	1.00	83		
6.00	8			0.70	84	1.09	89	1.57	93
6.50	9					1.18	98	1.70	103
7.00	10					1.27	106	1.83	112
7.50	10							1.96	118
8.00	11							2.09	128

SIGN POST AND STUB POST

DATE	REVISION	FILMED
5-19-22	REVISED FUSE PLATE DETIALS' NOTE.	
9-12-13	ISSUED	

ARKANSAS STATE HIGHWAY COMMISSION

DETAIL OF BREAKAWAY SIGN SUPPORTS FOR GUIDE SIGNS

STANDARD DRAWING SHS-3

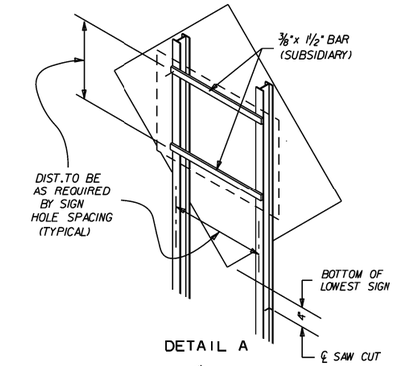

DETAIL A

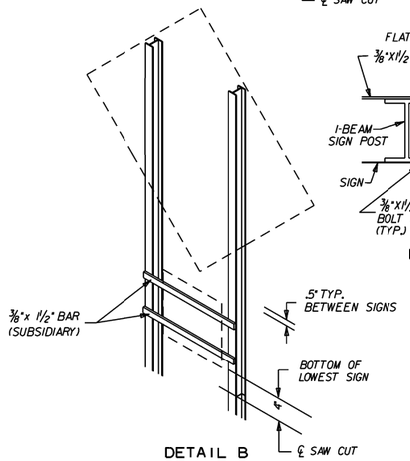

DETAIL B

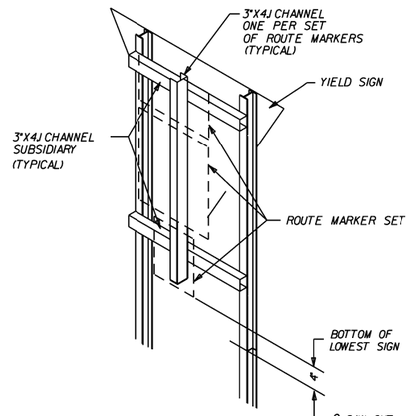

DETAIL C

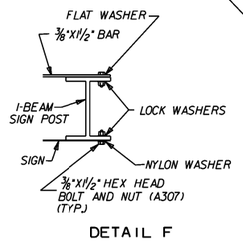

DETAIL F

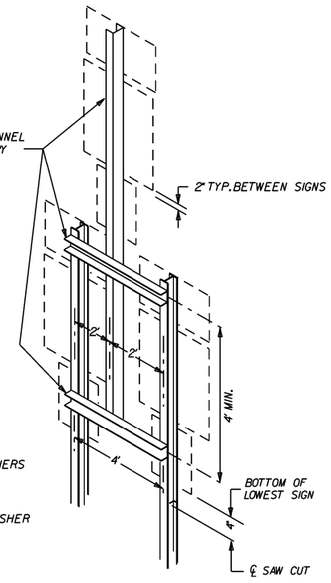

DETAIL D

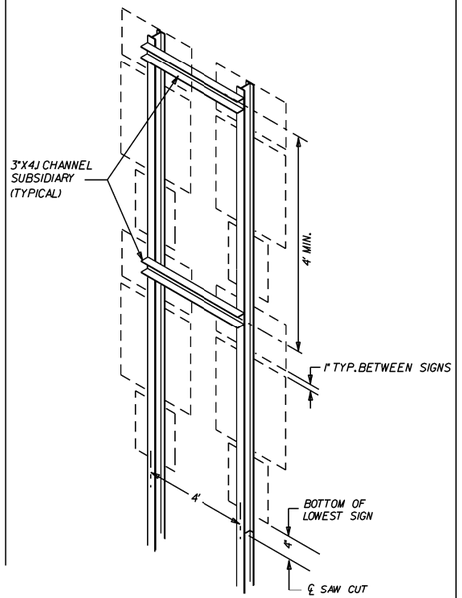

DETAIL E

NOTE

ALL ADDITIONAL MOUNTING HARDWARE, BOLTS, NUTS, CHANNELS AND BAR STRAPS REQUIRED TO MOUNT SECONDARY SIGNS WILL BE CONSIDERED TO BE SUPPLEMENTAL TO THE MAIN SIGN SUPPORT SPECIFIED. PAYMENT WILL BE CONSIDERED SUBSIDIARY TO THE MAIN SUPPORT.

THE GALVANIZED STEEL CHANNEL AND BAR SUPPORTS MAY BE ASTM A-36.

REFER TO THE P.C. RUTLEDGE FORMULA ON PAGE 58 OF THE AASHTO PUBLICATION "STANDARD SPECIFICATIONS FOR STRUCTURAL SUPPORTS FOR HIGHWAY SIGNS, LUMINAIRES, AND TRAFFIC SIGNALS.

ALL BOLT HOLES SHALL BE 1/8" DIA. UNLESS OTHERWISE SHOWN.

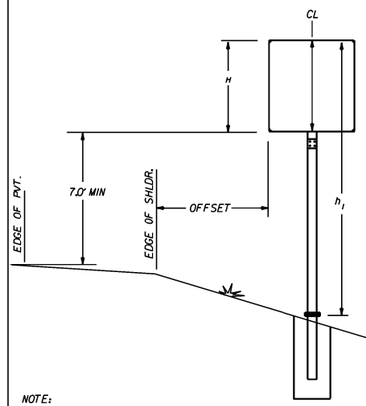

G-1

NOTE:
THE OFFSET WILL BE A MINIMUM OF 10' FROM THE EDGE OF PAVED SURFACE OR AS DIRECTED BY THE ENGINEER.

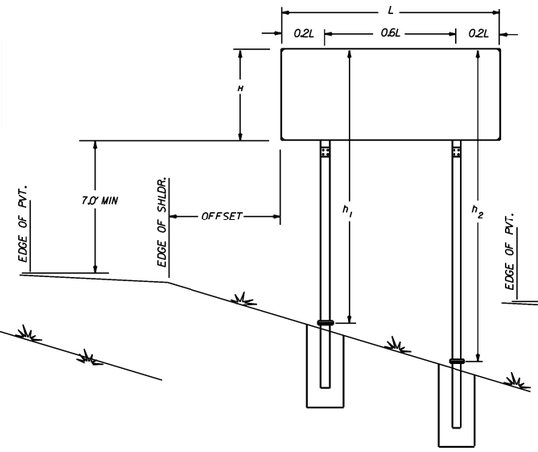

G-2

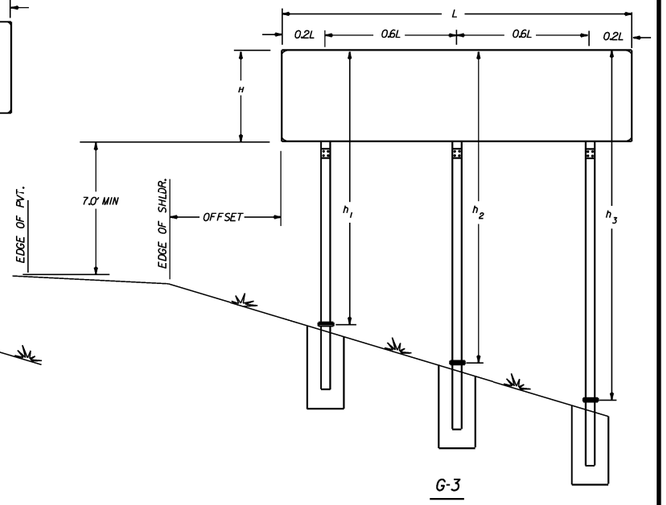

G-3

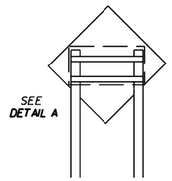

G2-1

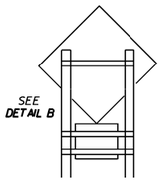

G2-2

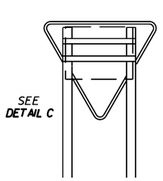

G2-3

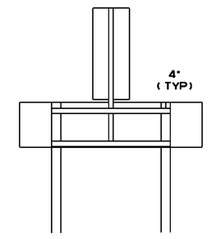

G2-4

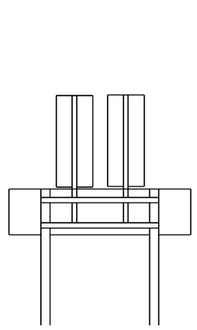

G2-5

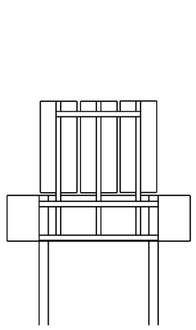

G2-6

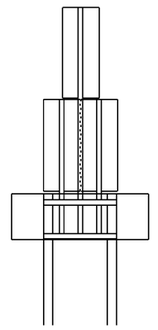

G2-7

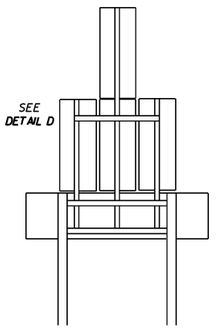

G2-8

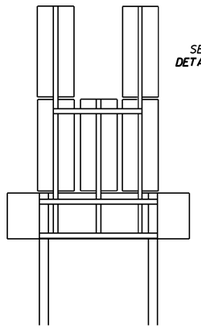

G2-9

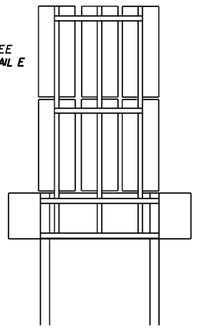

G2-10

			ARKANSAS STATE HIGHWAY COMMISSION
			DETAIL OF BREAKAWAY SIGN SUPPORTS FOR STANDARD SIGNS
9-12-13	ISSUED		STANDARD DRAWING SHS-4
DATE	REVISION	FILMED	



TYPICAL DETAIL

TYPE A

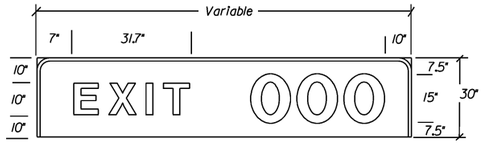

EXIT WITH 1 DIGIT 84"X30"=17.50 SF
EXIT WITH 2 DIGITS 96"X30"=20.0 SF
EXIT WITH 3 DIGITS 114"X30"=23.57 SF

TYPE B

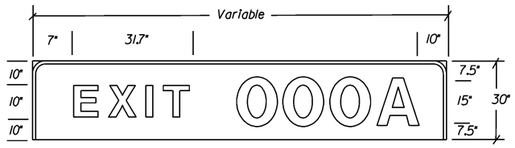

EXIT WITH 1 DIGIT PLUS "A"OR"B" 96"X30"=20.0 SF
EXIT WITH 2 DIGITS PLUS "A"OR"B" 114"X30"=23.57 SF
EXIT WITH 3 DIGITS PLUS "A"OR"B" 126"X30"=26.25 SF

TYPE C

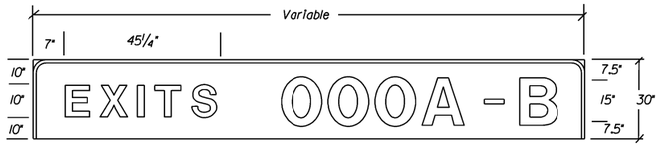

EXITS WITH 1 DIGIT PLUS "A"&"B" 132"X30"=27.50 SF
EXITS WITH 2 DIGITS PLUS "A"&"B" 150"X30"=31.25 SF
EXITS WITH 3 DIGITS PLUS "A"&"B" 168"X30"=35.00 SF

TYPE D

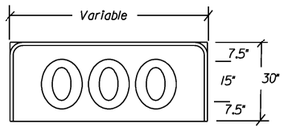

1 DIGIT 24"X30"=5.0 SF
2 DIGITS 42"X30"=8.75 SF
3 DIGITS 60"X30"=12.50 SF

TYPE E

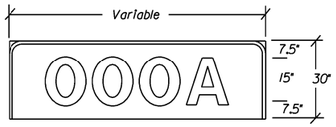

1 DIGIT PLUS "A"OR"B" 42"X30"=8.75 SF
2 DIGITS PLUS "A"OR"B" 60"X30"=12.50 SF
3 DIGITS PLUS "A"OR"B" 78"X30"=16.25 SF

EXIT PANEL DETAILS

NOTE: EXIT NUMBER PANELS SHALL HAVE WHITE LEGENDS AND BORDERS. THE BACK GROUND COLOR WILL BE AS USE SPECIFIES. SHEETING TYPE WILL BE THE SAME AS THE GUIDE SIGN WHICH THE EXIT PANEL IS ATTACHED OR AS SPECIFIED IN THE PLANS. PAYMENT FOR ALL POST CLIPS, BOLTS, AND ANGLES SHALL BE SUBSIDIARY TO THE ITEM "EXIT NUMBER PANEL".

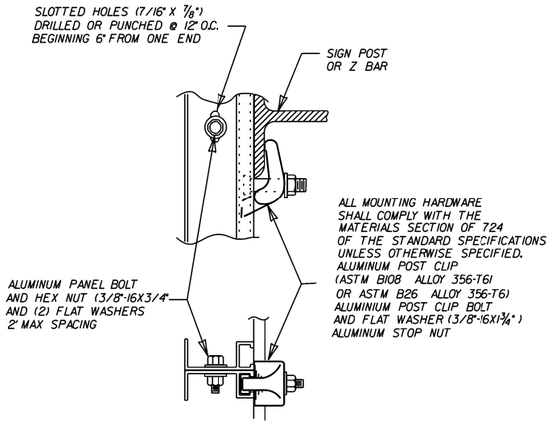

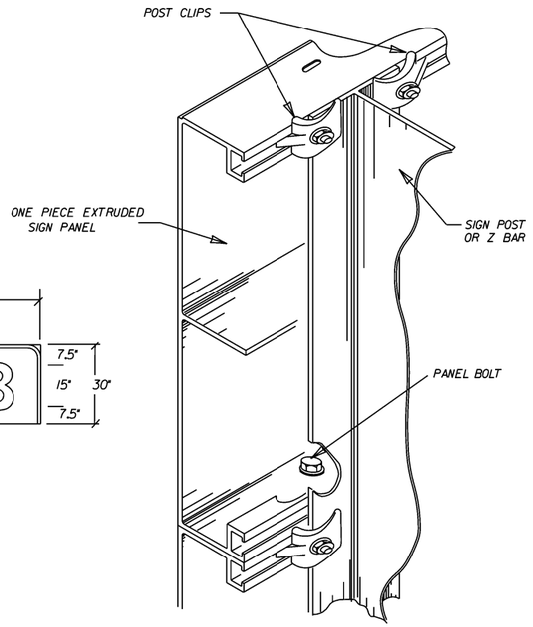

MOUNTING HARDWARE

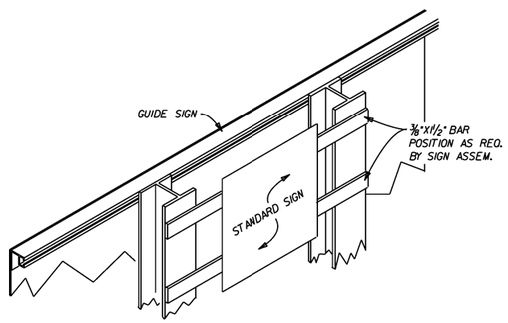

SECONDARY SIGN INSTALLATION ON BACKSIDE OF GUIDE SIGN

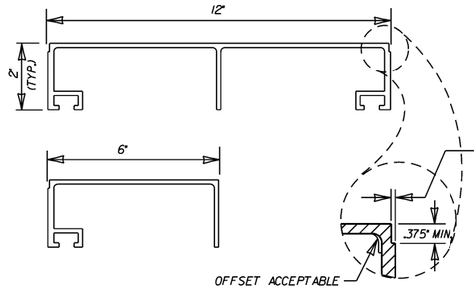

ONE PIECE EXTRUDED SIGN PANELS

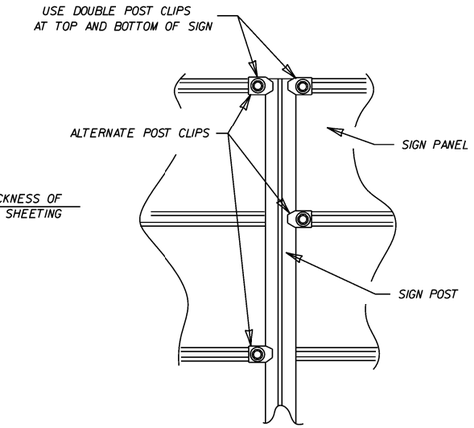

POST CLIP PLACEMENT

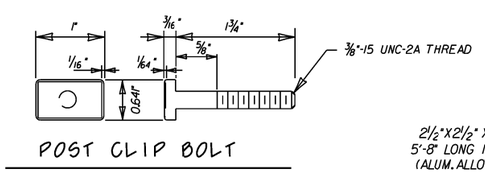

POST CLIP BOLT

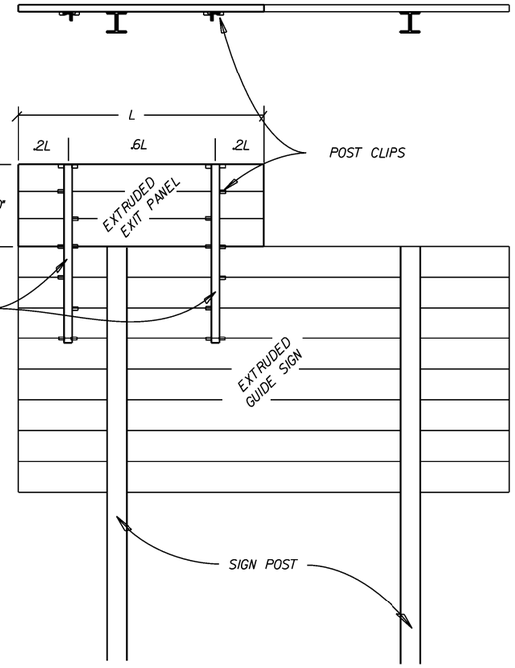

			ARKANSAS STATE HIGHWAY COMMISSION
			DETAILS OF GUIDE SIGN PANELS
9-12-13	ISSUED		STANDARD DRAWING SHS-5
DATE	REVISION	FILMED	

THE CONTRACTOR SHALL DRILL AND POP-RIVET LEGEND, SHIELDS, ARROWS, OR OTHER COPY AS SHOWN.

MOUNTING DETAILS FOR DEMOUNTABLE LEGEND ON GUIDE SIGNS

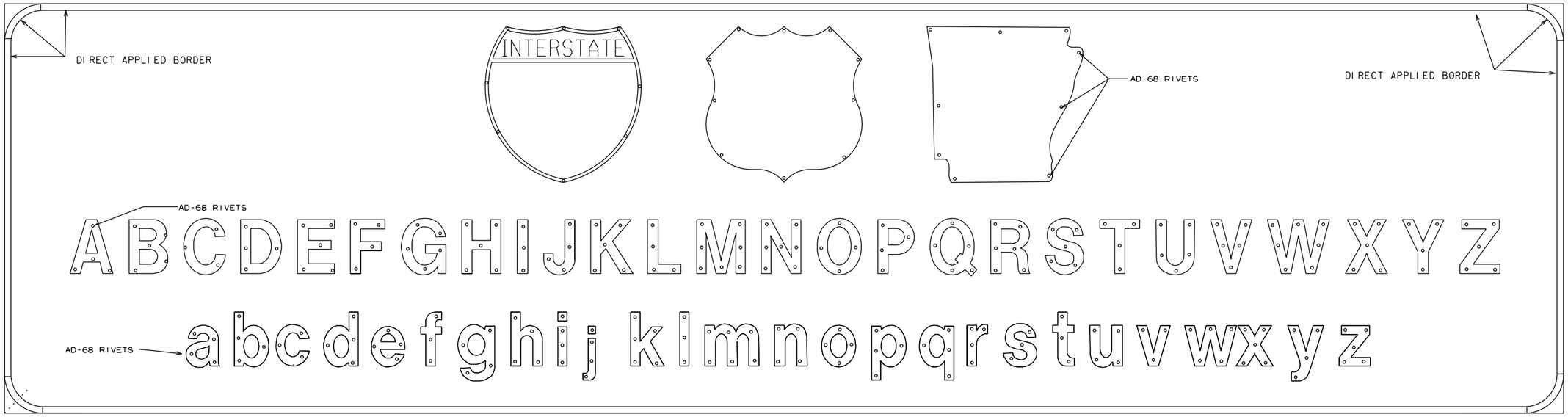

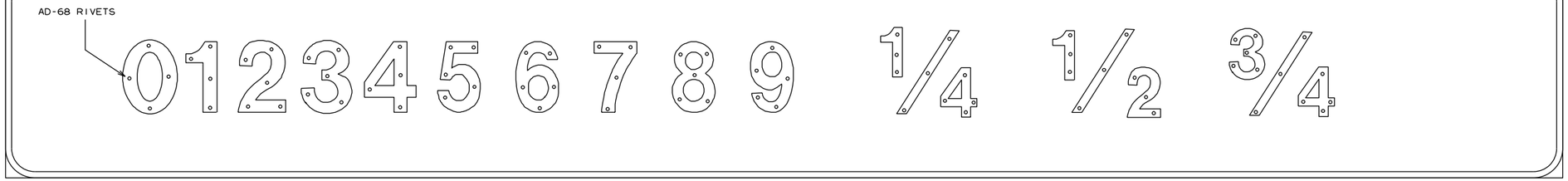

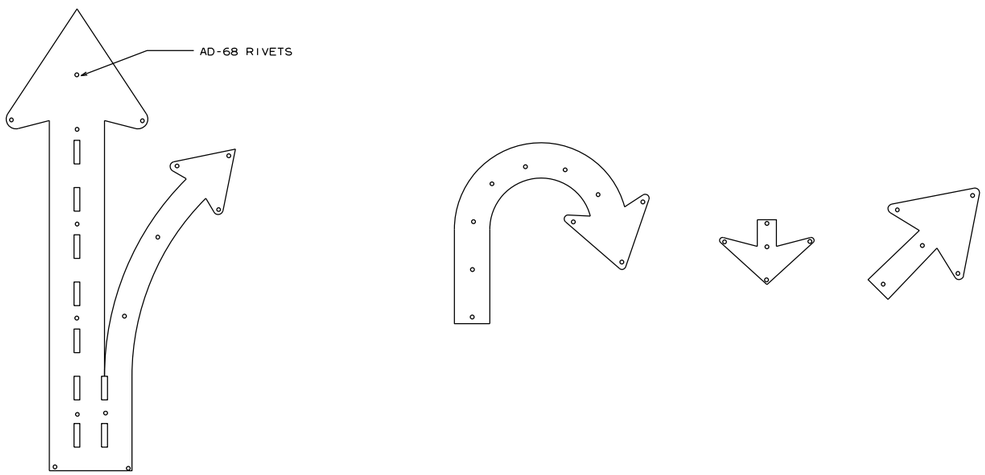

NOTES:

LEGEND ON GUIDE SIGNS ON THE MAIN LANES SHALL BE DEMOUNTABLE LEGEND.
LEGEND ON GUIDE SIGNS ON CROSS ROADS AND RAMPS SHALL BE DIRECT APPLIED.
THE DEMOUNTABLE AND DIRECT APPLIED LEGENDS SHALL BE TYPE IX SHEETING.

THE BACKGROUND ON ALL GUIDE SIGNS AND STANDARD SIGNS SHALL BE CONSTRUCTED USING TYPE III SHEETING.

TYPE IX SHEETING FOR BORDER, LEGEND, SHIELDS, ARROWS, OR OTHER COPY SHALL BE ORIENTED VERTICALLY AS PER MANUFACTURERS' DATUM MARKS, ORIENTATION MARKS, OR OTHER RECOMMENDATIONS.

SIGN LEGEND, SHIELDS, ARROWS OR OTHER COPY SHALL BE APPLIED WITH RIVETS ONLY.

NO OTHER METHOD OF APPLYING CHARACTERS IS ALLOWED.

			ARKANSAS STATE HIGHWAY COMMISSION
			MOUNTING DETAILS FOR DEMOUNTABLE LEGEND ON GUIDE SIGNS
9-12-13	ISSUED		STANDARD DRAWING SHS-6
DATE	REVISION	FILMED	

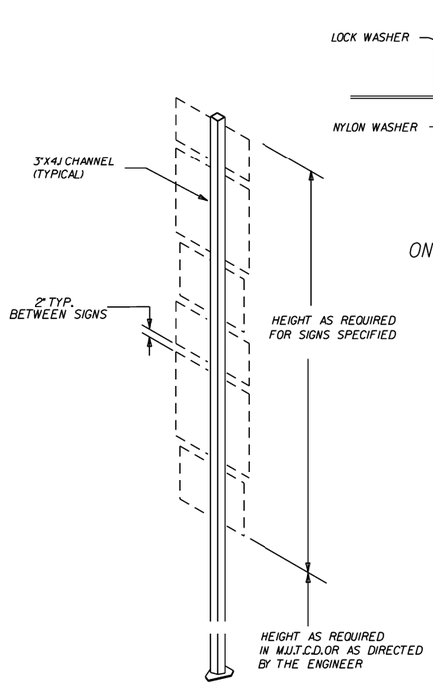

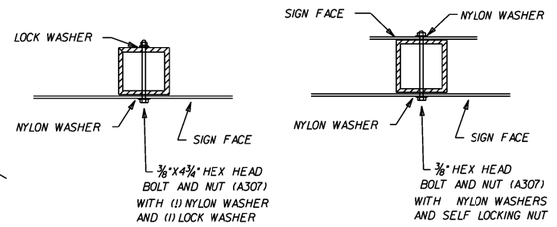

CHANNEL SHALL BE FULL LENGTH OF RECTANGULAR AND SQUARE SIGNS AND SHALL EXTEND 1 1/2" BEYOND BOLT HOLES ON DIAMOND OR IRREGULAR SHAPED SIGNS.

MOUNTING HARDWARE

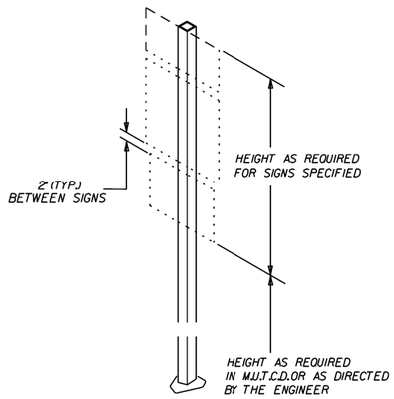

TYPE-I

BASIS OF ESTIMATE
APPROX. 100 lbs STEEL

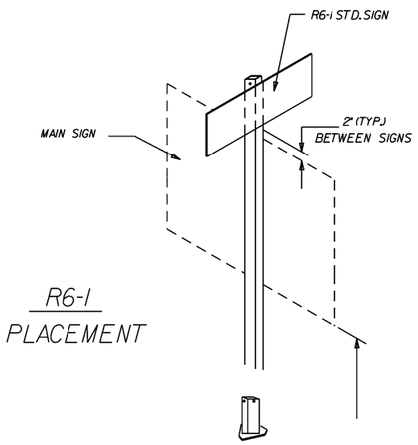

R6-1 PLACEMENT

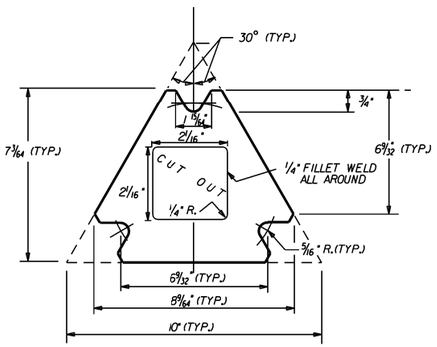

TOP PLATE

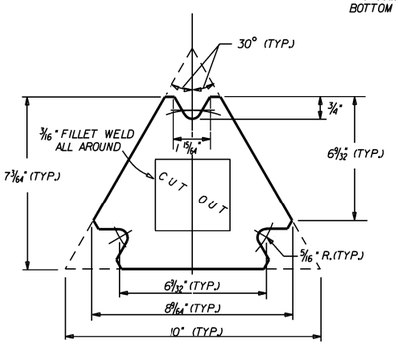

BOTTOM PLATE

GENERAL NOTES:

THE TOP PLATE OF TRIANGULAR SLIP BASES SHALL HAVE THE SAME EXTERIOR DIMENSIONS AS THE BOTTOM PLATE.

INSIDE DIAMETER OF THE SIGN POST SHALL BE CUT THROUGH THE CENTER OF THE TOP PLATE WITH THE HOLE EDGE BEVELED AS SHOWN. THE BEVEL END SHALL BE TANGENT TO THE BOLT HOLE. ANY MISALIGNMENT SHALL BE REMOVED BY GRINDING. FACE OF BEVEL SHALL BE FINISHED TO A MINIMUM SMOOTHNESS OF 1-500.

OTHER MASH COMPLIANT BREAKAWAY SIGN SUPPORTS THAT HAVE THE SAME TOP PLATE DIMENSIONS AND SUPPORT 2" X 2 1/4" SQUARE TUBE SIGN POSTS MAY BE SUBSTITUTED AS APPROVED BY THE ENGINEER.

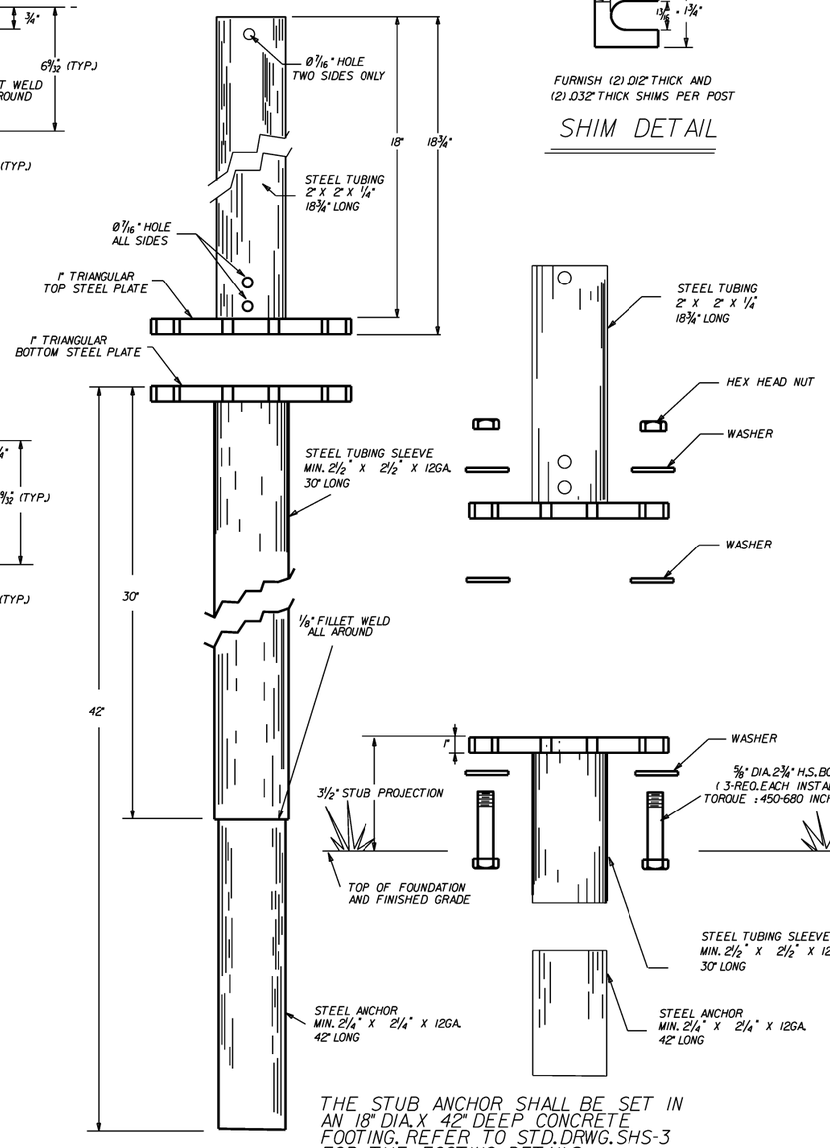

THE STUB ANCHOR SHALL BE SET IN AN 18" DIA. X 42" DEEP CONCRETE FOOTING. REFER TO STD. DRWG. SHS-3 FOR THE FOOTING DETAILS.

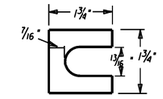

FURNISH (2) .012" THICK AND (2) .032" THICK SHIMS PER POST

SHIM DETAIL

			ARKANSAS STATE HIGHWAY COMMISSION
			DETAIL OF OMNI-DIRECTIONAL BREAKAWAY SIGN SUPPORTS
9-12-13 DATE	ISSUED REVISION	FILMED	STANDARD DRAWING SHS-7

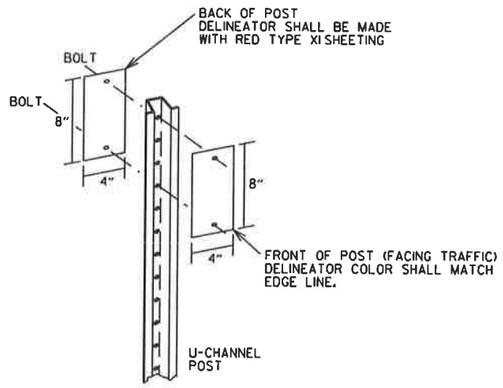

TYPE 2 DELINEATOR DETAILS

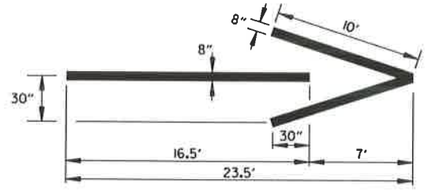

THERMOPLASTIC WRONG-WAY
PAVEMENT ARROWS

NOTE: THERMOPLASTIC WRONG-WAY PAVEMENT ARROWS TO BE PAID FOR AS THERMOPLASTIC PAVEMENT MARKING (ARROWS).

LEGEND

DELINEATOR

NOTE: WHEN UNIFORM SPACING IS INTERRUPTED BY ROADSIDE OBSTACLES, DELINEATORS ADJACENT TO THE ROADSIDE OBSTACLES MAY BE RELOCATED IN EITHER DIRECTION FOR A DISTANCE NOT EXCEEDING ONE QUARTER OF THE UNIFORM SPACING OR MAY BE ELIMINATED AS DIRECTED BY THE ENGINEER.

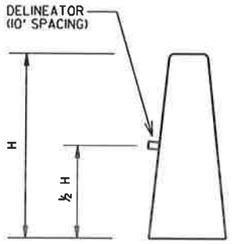

PERMANENT BARRIER WALL
DELINEATOR DETAIL

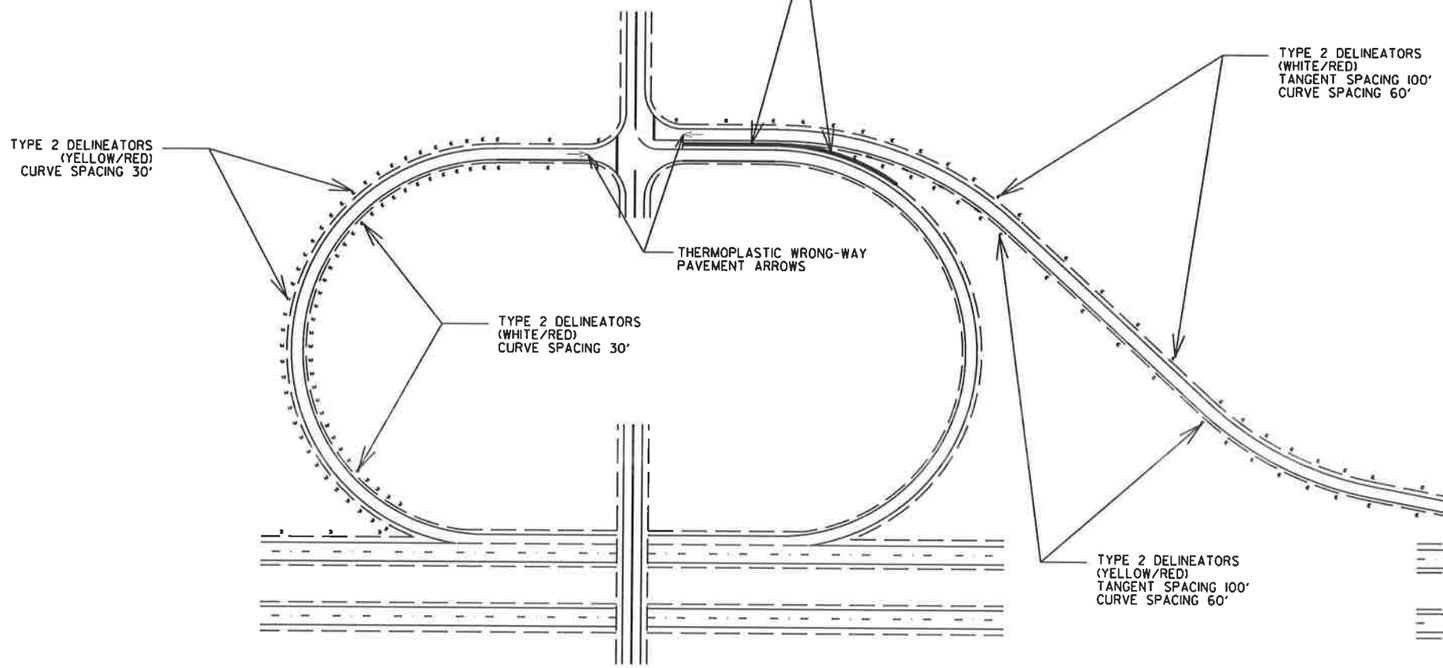

TYPICAL EXIT RAMP DELINEATOR PLACEMENT

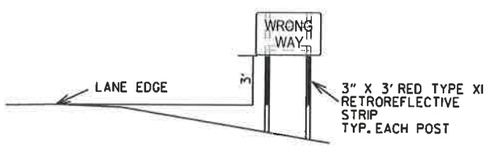

WRONG-WAY SIGN ASSEMBLY DETAILS

NOTES
1. WRONG-WAY SIGNS MAY BE MOUNTED ON THE BACK SIDE OF EXISTING SIGN SUPPORTS WHERE POSSIBLE.
2. WRONG-WAY SIGNS ARE NORMALLY GATED, BUT MAY BE OFFSET WHEN BARRIER WALLS ARE PRESENT ON THE INSIDE SHOULDER. IN SUCH CASES, THE SIGN ON THE INSIDE SHOULDER SIDE MAY BE LOCATED PAST THE END OF THE BARRIER WALL. IN RARE CASES WHERE THE BARRIER WALL EXTENDS TO OR NEAR THE MAIN LANES, BOTH SIGNS MAY BE LOCATED ON THE OUTSIDE SHOULDER SIDE OF THE RAMP, WITH APPROXIMATELY 300' SPACING BETWEEN THE SIGNS.

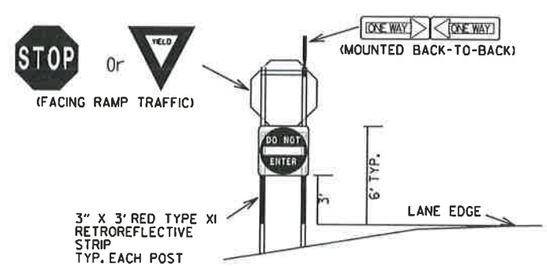

RAMP INTERSECTION SIGN ASSEMBLY DETAILS

THE DELINEATORS SHALL BE PLACED AT A 4' HEIGHT MEASURED FROM THE PAVEMENT EDGE TO THE BOTTOM OF THE DELINEATOR. DELINEATOR POSTS SHALL BE PLACED 2 TO 8 FT. OUTSIDE THE OUTER EDGE OF THE SHOULDER, OR IF APPROPRIATE, IN LINE WITH THE ROADSIDE BARRIER THAT IS 8 FT. OR LESS OUTSIDE THE OUTER EDGE OF THE SHOULDER.

DELINEATOR SPACING IN CURVES SHALL BE REDUCED TO 30' WHEN THE RAMP ADVISORY SPEED IS 30 MPH OR LESS.

IF MULTIPLE LANES EXIST AT THE RAMP TERMINAL, THE THERMOPLASTIC WRONG-WAY ARROW SHALL BE PLACED AS CLOSE TO THE RAMP TERMINAL TURNOUT AS POSSIBLE.

DATE	REVISION	FILMED
11-16-17	ADDED NOTES	
06-01-17	RE-DRAWN	
09-12-13	ISSUED AS STANDARD DRAWING	

ARKANSAS STATE HIGHWAY COMMISSION

TYPICAL EXIT RAMP SIGN AND DELINEATOR DETAILS

STANDARD DRAWING SHS-8

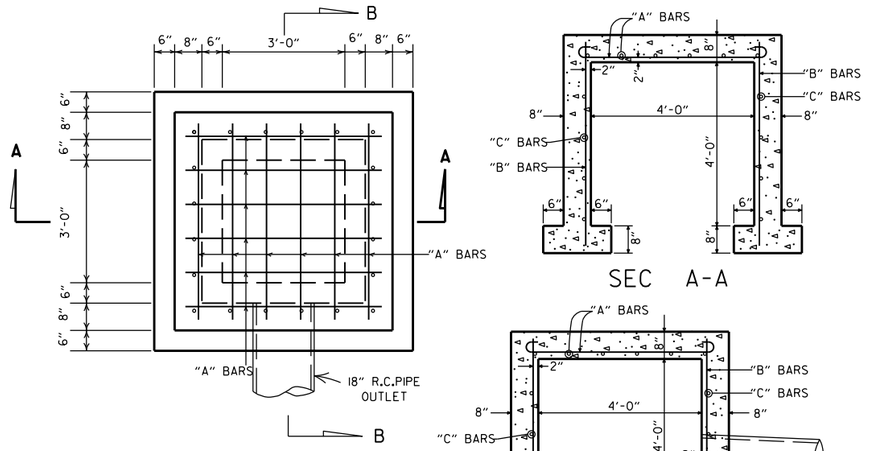

SEC A-A

SEC B-B

NOTE: MAX FILL HEIGHT ABOVE TOP OF BOX = 13'-0".

STEEL SCHEDULE

BARS	NUMBER	LENGTH	SPACING
"A"	12	6'-0"	10"
"B"	20	5'-0"	10 ½"
"C"	16	5'-0"	12"

ALL STEEL TO BE #4 BARS

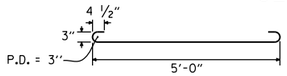

"A" BARS

QUANTITIES

CONCRETE 3.31 CU. YDS.
REINFORCING STEEL 168 LB.

GENERAL NOTE:

THE PAY ITEMS FOR REINFORCED CONCRETE SPRING BOXES SHALL BE FOR THE QUANTITIES OF CONCRETE OF THE CLASS SPECIFIED, REINFORCING STEEL, EXCAVATION FOR STRUCTURES AND 18" R.C. PIPE CULVERT.

REINFORCED CONCRETE SPRING BOX

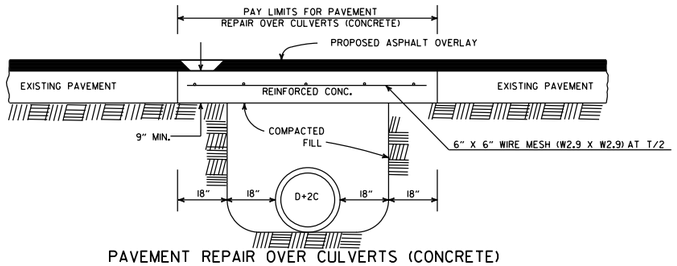

PAVEMENT REPAIR OVER CULVERTS (CONCRETE)

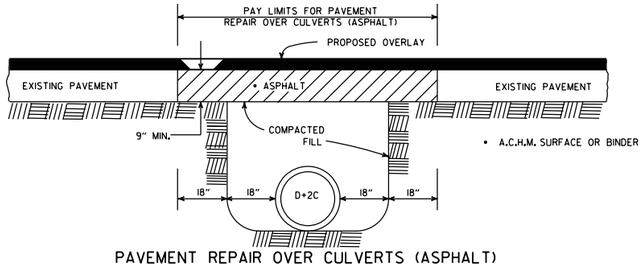

PAVEMENT REPAIR OVER CULVERTS (ASPHALT)

DETAIL SHOWING REPAIR OF EXISTING PAVEMENT AT CULVERT INSTALLATIONS

• A 2" MIN. HIGH CURB IS REQUIRED WHEN CONCRETE WALK IS ADJACENT TO THE HAND RAILING. PAYMENT FOR CURB SHALL BE CONSIDERED INCLUDED IN THE PRICE BID FOR CONCRETE WALKS.

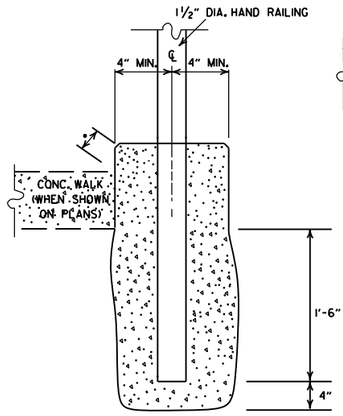

DETAIL OF HAND RAILING SET IN CONCRETE

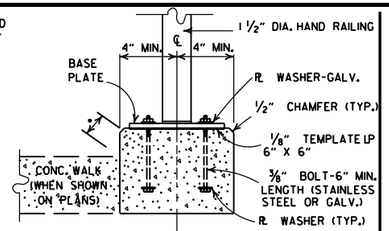

POST CONNECTION TO WALL

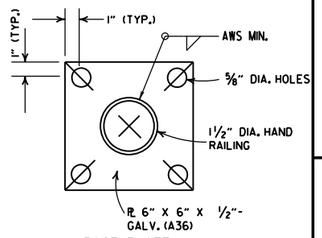

BASE PLATE

POST CONNECTION DETAILS

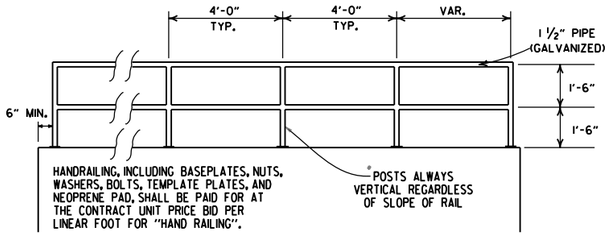

HAND RAILING SHALL CONFORM TO SECTION 633.

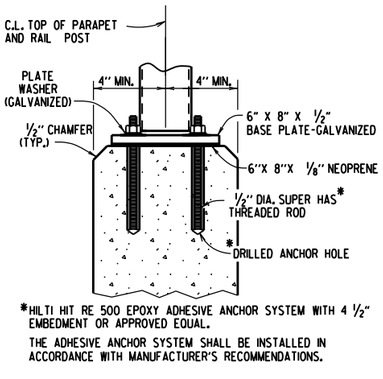

*HILTI HIT RE 500 EPOXY ADHESIVE ANCHOR SYSTEM WITH 4 ½" EMBEDMENT OR APPROVED EQUAL.

THE ADHESIVE ANCHOR SYSTEM SHALL BE INSTALLED IN ACCORDANCE WITH MANUFACTURER'S RECOMMENDATIONS.

POST CONNECTION TO WALL

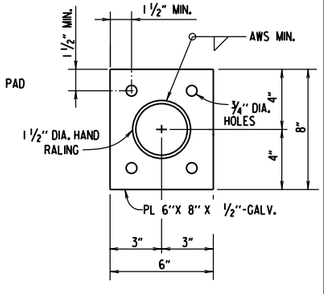

BASE PLATE

DETAILS OF ALTERNATE POST ANCHOR SYSTEM (EPOXY ADHESIVE ANCHORS)

HAND RAILING DETAILS

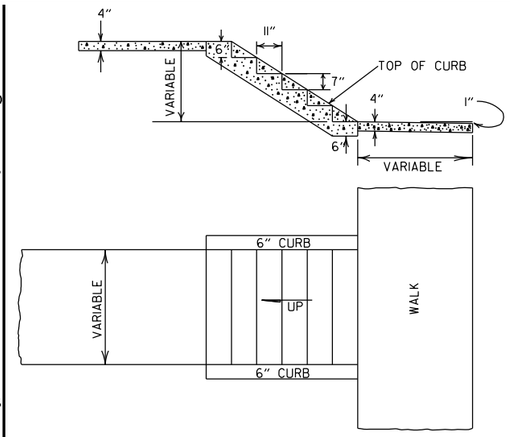

GENERAL NOTES

1. RISE AND TREAD DIMENSIONS OF STEPS MAY BE VARIED AS DIRECTED BY THE ENGINEER, HOWEVER, TREAD WIDTHS SHALL BE 11" MIN. ALL STEPS IN A FLIGHT SHALL HAVE CONSISTENT TREAD & RISER DIMENSIONS.
2. 1" TRANSVERSE EXPANSION JOINTS SHALL BE PLACED IN CONCRETE WALKS AT 45' INTERVALS.

DETAILS OF CONCRETE STEPS & WALKS

DATE	REVISION	DATE FILMED
10-25-18	REVISED DETAIL SHOWING REPAIR OF EXISTING PAVEMENT AT CULVERT INSTALLATIONS	
9-12-13	REVISED REINFORCED CONCRETE SPRING BOX	
7-26-12	REMOVED RETAINING WALL DETAILS & REVISED HAND RAILING DETAILS	
4-17-08	REV. JOINT & FOOTING STEP DETAILS	
11-29-07	REVISED RETAINING WALL DRAINAGE	
5-25-06	REVISED PVMT REPAIR OVER CULVERTS (CONC); REVISED REINFORCED CONC SPRING BOX	
10-9-03	REVISED PIPE RAILING DETAILS TO HAND RAILING DETAILS	
4-10-03	REVISED RETAINING WALL DRAWING	
8-22-02	ADDED HAND RAILING DETAIL	
11-16-01	REVISED PVMT REPAIR OVER CULVERTS (CONC); CORRECTED SPELLING IN GENERAL NOTES	
11-18-98	ADDED GENERAL NOTES TO CONCRETE STEPS & WALKS	
7-02-98	ENLARGED PIPE	
4-03-97	ADDED NOTE TO STEEL BAR SCHED.	
10-18-96	CORRECTED SPELLING	
4-26-94	ADD WEEP HOLE;REV. JOINT SPACING IN RET. WALL	
6-2-94	CHANGED CONST. TO CONTRACTION JOINT	
10-1-92	CHANGED MESH FABRIC TO WIRE MESH	10-1-92
8-15-91	DELETED HDWL MODIFICATION DETAIL	8-15-91
11-8-90	DELETED COLD MIX FROM CULV'T. REPAIR	11-8-90
11-30-89	REV. RETAINING WALL STEEL SCHEDULE	11-30-89
11-17-88	V. BARS BEHIND ARROW	665-11-17-88
7-15-88	REV. PAVEMENT REPAIR ADDED HDWL. MODS, DEL. PIPE UNDERDRAINS	649-7-15-88
11-1-84	REV. TRENCH FOR PIPE UNDERDRAIN	510-11-1-84
1-4-83	ELIMINATED CONC. CLASS & ADDED CHAMFER NOTE	682-1-4-83
3-2-81	SPELLING OF "UNDERDRAIN"	721-3-2-81
4-20-79	REV. UNDERDRAIN DET& PAVEMENT REPAIR	674-4-20-79
2-2-76	12"MIN. GRAN. MAT'L. OVER PIPE	919-2-2-76
4-10-75	REM. SPECS. FOR GRAN. MAT'L.	568-4-10-75-853
5-22-74	GRANULAR MAT'L. TO BE SB-3	567-5-22-74-740
10-2-72	REVISED AND REDRAWN	564-10-16-72

ARKANSAS STATE HIGHWAY COMMISSION

DETAILS OF SPECIAL ITEMS

STANDARD DRAWING SI - 1

R1-1



STANDARD 30"X30"
EXPRESSWAY 36"X36"
SPECIAL 48"X48"

R1-2

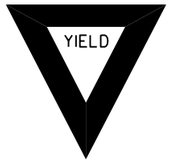

STD. 36"X36"X36"
EXPWY. 48"X48"X48"
FWY. 60"X60"X60"

R2-1



STD. 24"X30"
EXPWY. 36"X48"
FWY. 48"X60"

W3-5



STD. 36"X36"
EXPWY. 48"X48"
FWY. 48"X48"

W3-5a



STD. 36"X36"
EXPWY. 48"X48"
FWY. 48"X48"

R4-1



STD. 24"X30"
EXPWY. 36"X48"
FWY. 48"X60"

R4-2



STD. 24"X30"
EXPWY. 36"X48"
FWY. 48"X60"

R5-1



STD. 30"X30"
EXPWY. 36"X36"
SPECIAL 48"X48"

R11-2



48"X30"

R11-3A

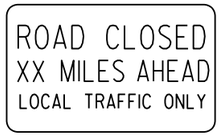

60"X30"

R11-4



60"X30"

W21-5a



STD. 36"X36"
FWY. 48"X48"

W1-1



STD. 36"X36"
FWY. 48"X48"

W1-2



STD. 36"X36"
FWY. 48"X48"

W1-3



STD. 48"X48"

W1-4



STD. 48"X48"

W1-6



STD. 48"X24"
SPECIAL 60"X30"

W1-8

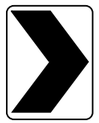

STD. 18"X24"
SPECIAL 24"X30"
EXPWY. 30"X36"
FWY. 36"X48"

W3-1



STD. 36"X36"
SPECIAL 48"X48"

W3-2



STD. 36"X36"
SPECIAL 48"X48"

W4-2

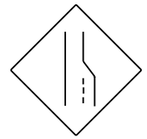

STD. 36"X36"
FWY. 48"X48"

W5-1



STD. 36"X36"
SPECIAL 48"X48"

W6-3



EXPWY. 36"X36"
SPECIAL 48"X48"

W8-7



EXPWY. 36"X36"
FWY. 48"X48"

W9-2



STD. 36"X36"
FWY. 48"X48"

W13-1



STD. 24"X24"

W20-1



STD. 48"X48"

W20-2



STD. 48"X48"

W20-3



STD. 48"X48"

W20-4



STD. 48"X48"

W20-5



STD. 48"X48"

W20-7a



STD. 36"X36"
FWY. 48"X48"

W21-2



STD. 30"X30"
SPECIAL 36"X36"

W21-5



STD. 30"X30"
SPECIAL 36"X36"

W24-1



STD. 36"X36"

W1-4b



STD. 48"X48"

R56-1



STD. 18"X18"

W8-11



STD. 36"X36"
FWY. 48"X48"

W8-9



STD. 36"X36"
FWY. 48"X48"

G20-1



60"X24"

G20-2

48"X24"

OM-3L OM-3R

12"X36"

M4-9

STD. 30"X24"
SPECIAL 48"X36"
SPECIAL 60"X48"

M4-10

48"X18"

R55-1

36"X60"

• USE 6" C LETTERS
•• USE 4" D LETTERS

ADVANCE DISTANCES
(XXXX)

500 FT	½ MILE
1000 FT	¾ MILE
1500 FT	1 MILE AHEAD

GENERAL NOTES:

1. ALL TRAFFIC CONTROL DEVICES USED ON ROAD CONSTRUCTION SHALL CONFORM TO THE MANUAL ON UNIFORM TRAFFIC CONTROL DEVICES, LATEST EDITION, AND TO THE STANDARD HIGHWAY SIGNS, LATEST EDITION, OR AS APPROVED BY THE FEDERAL HIGHWAY ADMINISTRATION.
2. TRAFFIC CONTROL DEVICES SHALL BE SET UP JUST BEFORE THE START OF CONSTRUCTION OPERATIONS AND SHALL BE PROPERLY MAINTAINED DURING THE TIME SUCH CONDITIONS EXIST. THEY SHALL REMAIN IN PLACE ONLY AS LONG AS NEEDED AND REMOVED THEREAFTER.
3. EXISTING SIGNS AND CONSTRUCTION SIGNS SHALL BE KEPT IN PROPER POSITION, AND BE CLEAN AND LEGIBLE AT ALL TIMES. SIGNS THAT DO NOT APPLY TO EXISTING CONDITIONS SHALL BE REMOVED. SIGNS THAT ARE DAMAGED, DEFACED, OR THAT ACCUMULATE DIRT DURING CONSTRUCTION SHALL BE CLEANED, REPAIRED, OR REPLACED.
- 4. SIGNS ARE USUALLY MOUNTED ON A SINGLE POST, ALTHOUGH THOSE WIDER THAN 36" OR LARGER THAN 10 SQ. FT. SHALL BE MOUNTED ON TWO POSTS OR ABOVE A TYPE III BARRICADE.
- 5. SIGN POSTS DIRECT BURIED IN SOIL SHALL BE 2 LB. MINIMUM CHANNEL POST OR 4"x4" WOOD POSTS. CHANNEL POSTS SHALL BE PAINTED GREEN. WOOD POSTS SHALL BE PAINTED WHITE. ALL POSTS SHALL BE NEATLY CONSTRUCTED, AND SHALL BE REPLUMBED, CLEANED, OR REPAIRED AS NEEDED FOR THE DURATION OF THE JOB. THERE SHALL NOT BE MORE THAN 2 POSTS IN A 7' PATH FOR WOOD OR CHANNEL POSTS. ANY CHANNEL POST SPLICE SHALL BE IN ACCORDANCE WITH STANDARD DRAWING TC-3.
6. POST MOUNTED SIGNS IN RURAL AREAS SHALL BE CONSTRUCTED WITH THE NEAR EDGE OF THE SIGN FROM 6 TO 12 FEET FROM THE PAVEMENT EDGE. SIGNS IN URBAN AREAS AND BARRICADE MOUNTED SIGNS SHALL BE MOUNTED A MINIMUM OF 2 FEET FROM THE PAVEMENT EDGE.
7. ALL POST AND BARRICADE MOUNTED SIGNS MOUNTED IN URBAN AREAS SHALL BE MOUNTED A MINIMUM DISTANCE OF 7' FROM THE BOTTOM OF THE SIGN TO THE ROADWAY SURFACE. ALL POST AND BARRICADE MOUNTED SIGNS MOUNTED IN RURAL AREAS SHALL BE MOUNTED A MINIMUM DISTANCE OF 7' FROM THE BOTTOM OF THE SIGN TO THE ROADWAY SURFACE, EXCEPT A MINIMUM OF 6' SHALL BE USED WHEN MOUNTING AN ADVISORY SIGN BELOW A WARNING SIGN. TEMPORARY SIGNS MAY BE MOUNTED ON PORTABLE SUPPORTS FOR INTERMEDIATE TERM STATIONARY WORK CONDITIONS. THE SIGNS MINIMUM MOUNTING HEIGHT SHALL BE 5'. RETROREFLECTIVE DEVICES SHALL BE USED. TEMPORARY SIGNS MAY BE MOUNTED ON PORTABLE SUPPORTS FOR SHORT-TERM, SHORT DURATION, AND MOBILE CONDITIONS. THEY SHALL BE NO LESS THAN ONE (1) FOOT ABOVE THE TRAVELED WAY. LONG-TERM STATIONARY SIGNS SHALL BE DIRECT BURIED IN SOIL, UNLESS CONDITIONS NECESSITATE THE USE OF PORTABLE SIGNS, OR AS APPROVED BY THE ENGINEER. CONCRETE PADS, CONCRETE OR ROCK BALLAST, OR OTHER SOLID MATERIALS SHALL NOT BE UTILIZED WITH PORTABLE SIGN SUPPORTS.
8. FLAGGERS SHALL USE REFLECTORIZED STOP-SLOW PADDLES. FLAGS MAY BE USED ONLY FOR EMERGENCY SITUATIONS.
9. MOST OF THE SIGNS SHOWN ARE ORIENTED TO THE RIGHT. HOWEVER, THIS DOES NOT PRECLUDE THE USE OF MIRROR IMAGES OF THESE SIGNS WHERE THE REVERSE ORIENTATION MIGHT BETTER CONVEY TO MOTORISTS THE PROPER DIRECTION OF MOVEMENT.
10. R55-1 SIGNS SHALL BE PLACED AT LEAST 1500' BUT NOT MORE THAN 1 MILE IN ADVANCE OF THE WORK ZONE. IF A SPEED LIMIT REDUCTION IS IN EFFECT, THE SIGN SHALL BE PLACED A MINIMUM OF 500' IN ADVANCE OF THE "REDUCED SPEED AHEAD" SIGN.

- NOTE: SUPPORTS FOR SIGNS, BARRICADES, AND VERTICAL PANELS THAT ARE DIFFERENT FROM THE REQUIREMENTS SHOWN IN NOTES 4 & 5, BUT MEET THE REQUIREMENTS OF MANUAL FOR ASSESSING SAFETY HARDWARE (MASH), WILL BE ACCEPTED. COMPLIANCE WITH THE REQUIREMENTS OF MANUAL FOR ASSESSING SAFETY HARDWARE (MASH) IS REQUIRED FOR ALL PROJECTS.

DATE	REVISION	FILMED
11-07-19	REVISED FOR MASH	
4-13-17	DELETED RSP-1 & ADDED W21-5a	
9-2-15	REVISED REDUCED SPEED LIMIT AHEAD SIGNS REVISED ROAD WORK NEXT XX MILES	
12-15-11	REVISED W24-1	
11-17-10	DELETED W8-9a & ADDED W8-9	
10-15-09	ADDED REFERENCE TO MASH & ADDED SIGN W24-1	
4-17-08	REVISED SIGN DESIGNATIONS	
11-18-04	REVISED NOTES	
10-9-03	REVISED NOTE 1	
11-16-01	REVISED NOTE 7	
9-28-00	REVISED NOTE	
11-18-98	ADDED NOTE	
6-26-97	REVISED NOTE 5	
4-03-97	REVISED NOTE 5	
10-18-96	ADDED CONTROLLED ACCESS HWY. SIGN & TO NOTE 7	
10-12-95	ADDED R55-1	
6-8-95	REVISED TO CORRECT SIGN ILLUSTRATIONS	6-8-95
2-2-95	REVISED PER PART VI, MUTCD SEPT. 3, 1993	
8-15-91	DRAWN AND PLACED IN USE	

ARKANSAS STATE HIGHWAY COMMISSION

STANDARD TRAFFIC CONTROLS FOR HIGHWAY CONSTRUCTION

STANDARD DRAWING TC-1

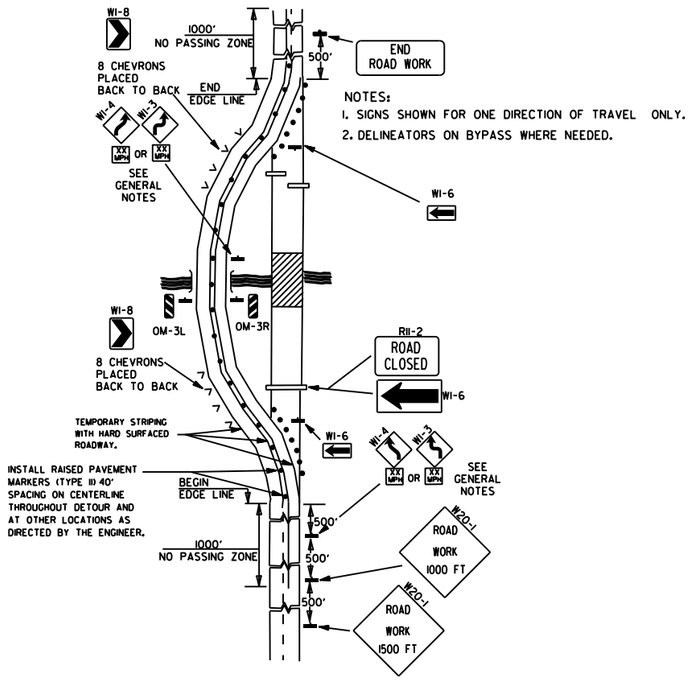

NOTES:
1. SIGNS SHOWN FOR ONE DIRECTION OF TRAVEL ONLY.
2. DELINEATORS ON BYPASS WHERE NEEDED.

(A) TYPICAL APPLICATION OF TRAFFIC CONTROL DEVICES ON A 2-LANE HIGHWAY WHERE THE ENTIRE ROADWAY IS CLOSED AND A BYPASS DETOUR IS PROVIDED.

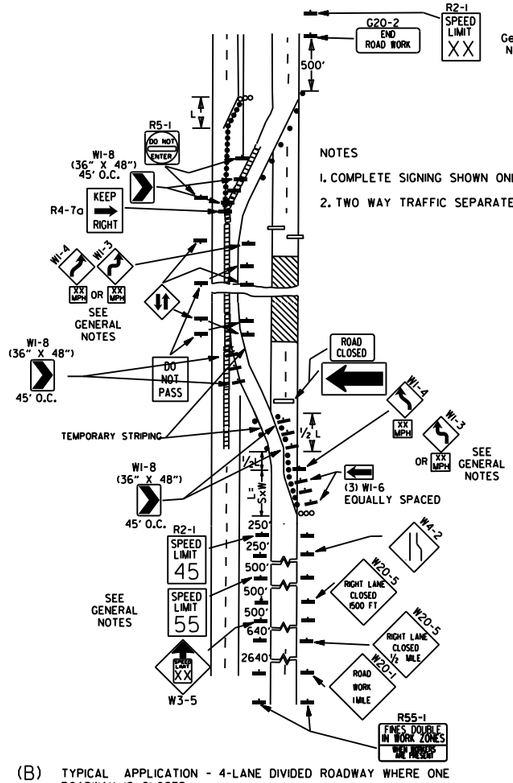

NOTES
1. COMPLETE SIGNING SHOWN ONLY IN CROSSOVER DIRECTION.
2. TWO WAY TRAFFIC SEPARATED WITH POSITIVE BARRIER.

(B) TYPICAL APPLICATION - 4-LANE DIVIDED ROADWAY WHERE ONE ROADWAY IS CLOSED.

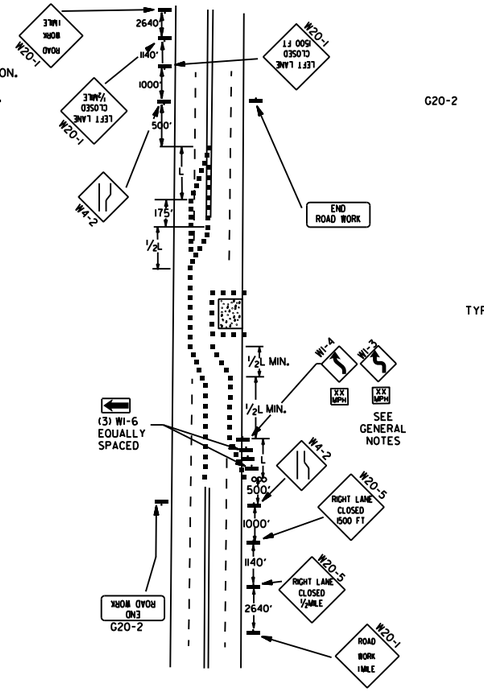

(C) TYPICAL APPLICATION - 4-LANE UNDIVIDED ROADWAY WHERE HALF OF THE ROADWAY IS CLOSED.

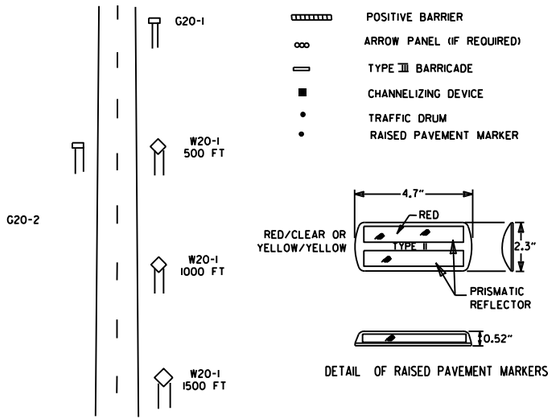

DETAIL OF RAISED PAVEMENT MARKERS

TYPICAL ADVANCE WARNING SIGN PLACEMENT

TAPER FORMULAE:

L=SXW FOR SPEEDS OF 45MPH OR MORE.

$L = \frac{WS^2}{60}$ FOR SPEEDS OF 40MPH OR LESS.

WHERE:

L= MINIMUM LENGTH OF TAPER.

S= NUMERICAL VALUE OF POSTED SPEED LIMIT PRIOR TO WORK OR 85TH PERCENTILE SPEED.

W= WIDTH OF OFFSET.

GENERAL NOTES:

1. THE MAINTENANCE DIVISION SHALL CONDUCT A BALL BANK STUDY TO DETERMINE THE ADVISORY SPEED LIMIT PRIOR TO OPENING TO TRAFFIC. THE ADVISORY SPEED WILL BE POSTED ON WI-3 OR WI-4 CURVE WARNING SIGNS. USE WI-4 WHEN SPEED IS GREATER THAN 30MPH AND WI-3 WHEN 30MPH OR LESS
2. WHEN THE EXISTING SPEED LIMIT IS 55MPH AND THE PLANS REQUIRE A SPEED LIMIT OF 45MPH, THE R2-1(55) SHALL BE OMITTED AND THE W3-5 SHALL BE INSTALLED AT THAT LOCATION. ADDITIONAL R2-145MPH SPEED LIMIT SIGNS SHALL BE INSTALLED AT A MAXIMUM OF 1MILE INTERVALS. AT THE END OF THE WORK AREA A R2-1(XX) SHALL BE INSTALLED TO MATCH ORIGINAL SPEED LIMIT.
3. WHEN THE EXISTING SPEED LIMIT IS 65MPH AND THE PLANS REQUIRE A SPEED LIMIT OF 55MPH, THE R2-1(45) SHALL BE OMITTED. ADDITIONAL R2-155MPH SPEED LIMIT SIGNS SHALL BE INSTALLED AT A MAXIMUM OF 1MILE INTERVALS. AT THE END OF THE WORK AREA A R2-1(XX) SHALL BE INSTALLED TO MATCH ORIGINAL SPEED LIMIT.
4. THE MAXIMUM SPACING BETWEEN CHANNELIZING DEVICES IN A TAPER SHOULD BE APPROXIMATELY EQUAL IN FEET TO THE SPEED LIMIT. BEYOND THE TAPER, MAXIMUM SPACING SHALL BE TWO TIMES THE SPEED LIMIT, OR AS DIRECTED BY THE ENGINEER.
5. WARNING LIGHTS AND/OR FLAGS MAY BE MOUNTED TO SIGNS OR CHANNELIZING DEVICES AT NIGHT AS NEEDED.
6. PAVEMENT MARKINGS NO LONGER APPLICABLE WHICH MIGHT CREATE CONFUSION IN THE MINDS OF VEHICLE OPERATORS SHALL BE REMOVED OR OBLITERATED AS SOON AS PRACTICABLE.
7. TRAILER MOUNTED DEVICES SUCH AS ARROW PANELS AND PORTABLE CHANGEABLE MESSAGE SIGNS SHALL BE DELINEATED BY AFFIXING CONSPICUITY MATERIAL IN A CONTINUOUS LINE ON THE FACE OF THE TRAILER. WHEN PLACED ON OR ADJACENT TO THE SHOULDER AND NOT BEHIND A POSITIVE BARRIER, THESE DEVICES SHALL BE DELINEATED BY PLACING FIVE (5) TRAFFIC DRUMS, EQUALLY SPACED ALONG THE TRAFFIC SIDE OF THE DEVICE. PAYMENT FOR TRAFFIC DRUMS SHALL BE CONSIDERED INCLUDED IN THE PRICE BID FOR VARIOUS TRAILER MOUNTED DEVICES.
8. DIMENSIONS SHOWN FOR RAISED PAVEMENT MARKERS ARE TYPICAL. THE CONTRACTOR MAY SUBSTITUTE SIMILAR MARKERS WITH THE APPROVAL OF THE ENGINEER. REQUESTING APPROVAL FOR SIMILAR MARKERS MAY BE MADE BY REFERRING TO THE ARDOT QUALIFIED PRODUCTS LIST.
9. ALL TRAILER MOUNTED DEVICES SUCH AS ARROW PANELS AND PORTABLE CHANGEABLE MESSAGE SIGNS SHALL MEET THE REQUIREMENTS OF THE MANUAL FOR ASSESSING SAFETY HARDWARE (MASH).

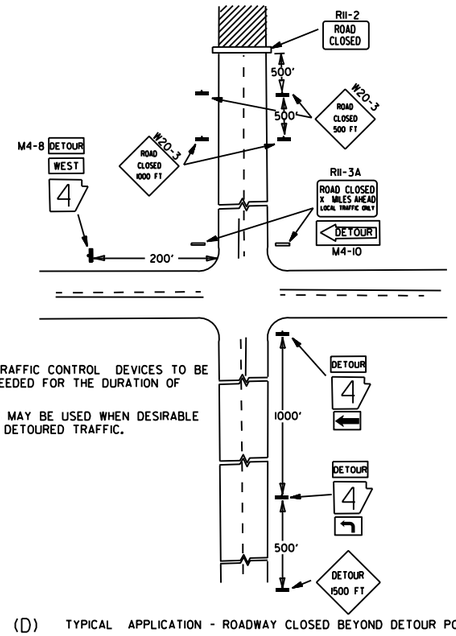

NOTES:
1. REGULATORY TRAFFIC CONTROL DEVICES TO BE MODIFIED AS NEEDED FOR THE DURATION OF THE DETOUR.
2. STREET NAMES MAY BE USED WHEN DESIRABLE FOR DIRECTING DETOURED TRAFFIC.

(D) TYPICAL APPLICATION - ROADWAY CLOSED BEYOND DETOUR POINT.

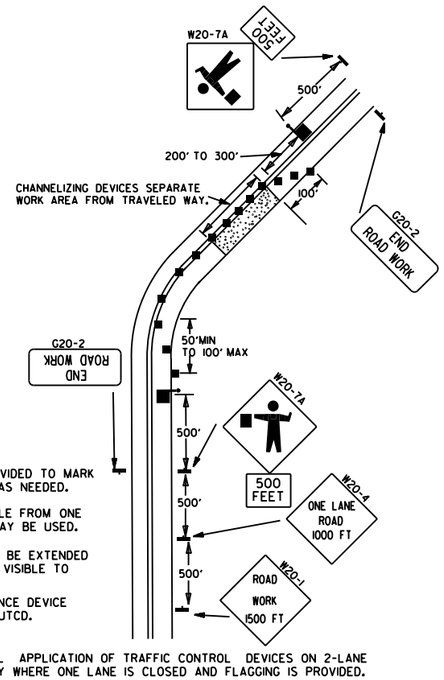

NOTES:
1. FLOOD LIGHTS SHOULD BE PROVIDED TO MARK FLAGGER STATIONS AT NIGHT AS NEEDED.
2. IF ENTIRE WORK AREA IS VISIBLE FROM ONE STATION, A SINGLE FLAGGER MAY BE USED.
3. CHANNELIZING DEVICES ARE TO BE EXTENDED TO A POINT WHERE THEY ARE VISIBLE TO APPROACHING TRAFFIC.
4. AUTOMATED FLAGGER ASSISTANCE DEVICE (AFAD) OPTIONAL. REFER TO MUTCD.

(E) TYPICAL APPLICATION OF TRAFFIC CONTROL DEVICES ON 2-LANE HIGHWAY WHERE ONE LANE IS CLOSED AND FLAGGING IS PROVIDED.

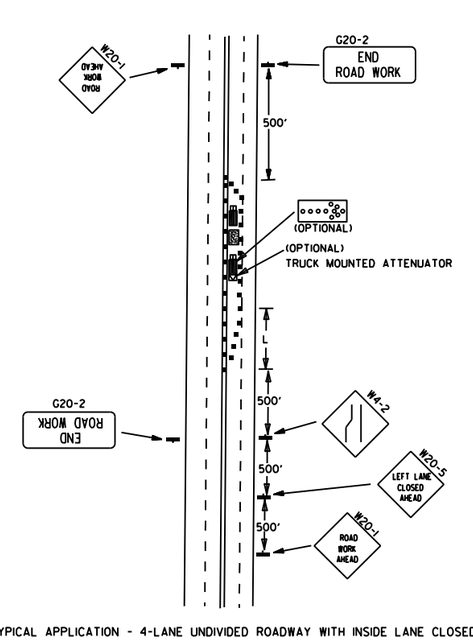

(F) TYPICAL APPLICATION - 4-LANE UNDIVIDED ROADWAY WITH INSIDE LANE CLOSED.

DATE	REVISION	FILMED
05-20-21	REVISED NOTE 7	
11-07-19	REVISED NOTE 1, ADDED NOTE 9	
9-2-15	REVISED NOTE 2, ADDED NOTE 8, REVISED DRAWING (A) & REPLACED R2-5A WITH W3-5	
9-12-13	REVISED DETAIL OF RAISED PAVEMENT MARKERS	
3-11-10	ADDED (AFAD)	
11-20-08	REVISED SIGN DESIGNATIONS	
11-18-04	ADDED GENERAL NOTE	
10-18-96	ADDED R55-1	
4-26-96	CORRECTED (a) BEHIND G20-2	
6-8-95	CORRECTED SIGN IDENT. ON W1-4A	6-8-95
2-2-95	REVISED PER PART VI, MUTCD, SEPT. 3, 1993	
8-15-91	DRAWN AND PLACED IN USE	

ARKANSAS STATE HIGHWAY COMMISSION

STANDARD TRAFFIC CONTROLS FOR HIGHWAY CONSTRUCTION

STANDARD DRAWING TC-2

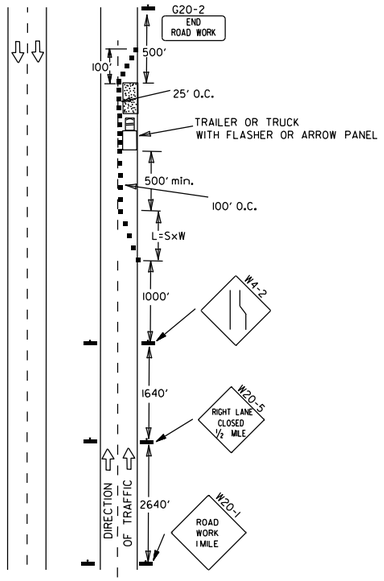

(A) TYPICAL APPLICATION - DAYTIME MAINTENANCE OPERATIONS OF SHORT DURATION ON A 4-LANE DIVIDED ROADWAY WHERE HALF OF THE ROADWAY IS CLOSED.

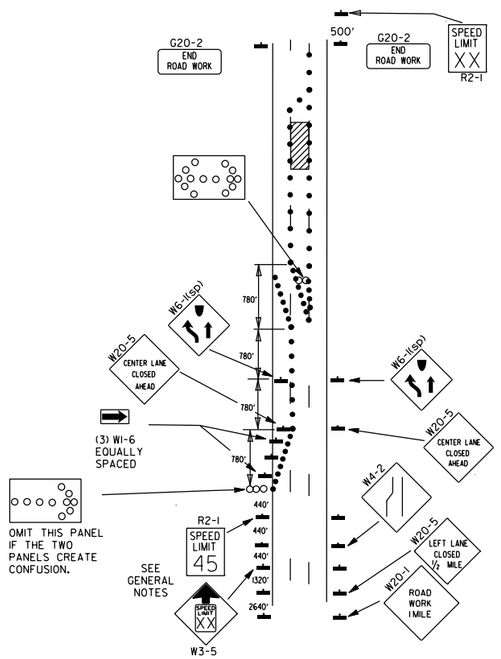

(B) TYPICAL APPLICATION - 3-LANE ONEWAY ROADWAY WHERE CENTER LANE IS CLOSED.

KEY:

ARROW PANEL (IF REQUIRED)

■ CHANNELIZING DEVICE

● TRAFFIC DRUM

GENERAL NOTES:

1. A SPEED LIMIT REDUCTION MAY BE IMPLEMENTED ONLY WHEN DESIGNATED IN THE PLAN OR WHEN RECOMMENDED BY THE ROADWAY DESIGN DIVISION.
2. WHEN THE EXISTING SPEED LIMIT IS 55MPH AND THE PLANS REQUIRE A SPEED LIMIT OF 45MPH, THE R2-1(55) SHALL BE OMITTED AND THE W3-5 SHALL BE INSTALLED AT THAT LOCATION. ADDITIONAL R2-1 45MPH SPEED LIMIT SIGNS SHALL BE INSTALLED AT A MAXIMUM OF 1MILE INTERVALS. AT THE END OF THE WORK AREA A R2-1(XX) SHALL BE INSTALLED TO MATCH ORIGINAL SPEED LIMIT.
3. WHEN THE EXISTING SPEED LIMIT IS 65MPH AND THE PLANS REQUIRE A SPEED LIMIT OF 55MPH, THE R2-1(45) SHALL BE OMITTED. ADDITIONAL R2-1 55MPH SPEED LIMIT SIGNS SHALL BE INSTALLED AT A MAXIMUM OF 1MILE INTERVALS, AT THE END OF THE WORK AREA A R2-1(XX) SHALL BE INSTALLED TO MATCH ORIGINAL SPEED LIMIT.
4. THE MAXIMUM SPACING BETWEEN CHANNELIZING DEVICES IN A TAPER SHOULD BE APPROXIMATELY EQUAL IN FEET TO THE SPEED LIMIT. BEYOND THE TAPER, MAXIMUM SPACING SHALL BE TWO TIMES THE SPEED LIMIT OR AS DIRECTED BY THE ENGINEER.
5. WARNING LIGHTS AND/OR FLAGS MAY BE MOUNTED TO SIGNS OR CHANNELIZING DEVICES AT NIGHT AS NEEDED.
6. PAVEMENT MARKINGS NO LONGER APPLICABLE WHICH MIGHT CREATE CONFUSION IN THE MINDS OF VEHICLE OPERATORS SHALL BE REMOVED OR OBLITERATED AS SOON AS PRACTICABLE.
7. THE G20-1 SIGN WILL BE REQUIRED ON JOBS OF OVER TWO MILES IN LENGTH. WHEN THE LANE CLOSURE IS NOT AT THE BEGINNING OF THE PROJECT, THE G20-1 SIGN SHALL BE ERECTED 125' IN ADVANCE OF THE JOB LIMIT. ADDITIONAL W20-1 (1 MILE) SIGNS ARE NOT REQUIRED IN ADVANCE OF LANE CLOSURES THAT BEGIN INSIDE THE PROJECT LIMITS.
8. FLAGGERS SHALL USE STOP/SLOW PADDLES FOR CONTROLLING TRAFFIC THROUGH WORK ZONES. FLAGS MAY BE USED ONLY FOR EMERGENCY SITUATIONS.
9. ALL PLASTIC DRUMS AND CONES SHALL MEET THE REQUIREMENTS OF MANUAL FOR ASSESSING SAFETY HARDWARE (MASH).
10. TRAILER MOUNTED DEVICES SUCH AS ARROW PANELS AND PORTABLE CHANGEABLE MESSAGE SIGNS SHALL BE DELINEATED BY AFFIXING CONSPICUITY MATERIAL IN A CONTINUOUS LINE ON THE FACE OF THE TRAILER. WHEN PLACED ON OR ADJACENT TO THE SHOULDER AND NOT BEHIND A POSITIVE BARRIER, THESE DEVICES SHALL BE DELINEATED BY PLACING FIVE (5) TRAFFIC DRUMS, EQUALLY SPACED ALONG THE TRAFFIC SIDE OF THE DEVICE. PAYMENT FOR TRAFFIC DRUMS SHALL BE CONSIDERED INCLUDED IN THE PRICE BID FOR VARIOUS TRAILER MOUNTED DEVICES.
11. ALL TRAILER MOUNTED DEVICES SUCH AS ARROW PANELS AND PORTABLE CHANGEABLE MESSAGE SIGNS SHALL MEET THE REQUIREMENTS OF THE MANUAL FOR ASSESSING SAFETY HARDWARE (MASH).

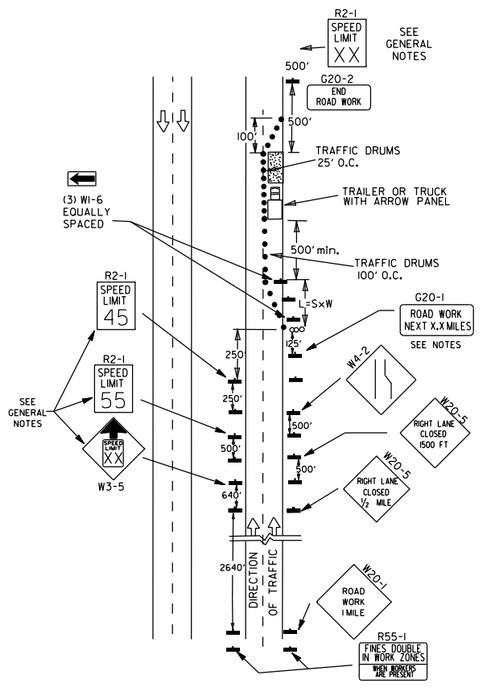

(C) TYPICAL APPLICATION - CONSTRUCTION OPERATIONS OF INTERMEDIATE TO LONG TERM DURATION ON A 4-LANE DIVIDED ROADWAY WHERE HALF OF THE ROADWAY IS CLOSED.

CHANNELIZING DEVICES

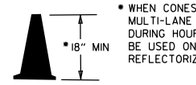

* WHEN CONES ARE USED ON FREEWAYS AND MULTI-LANE HIGHWAYS, THEY SHALL BE 28" MIN. DURING HOURS OF DARKNESS, 28" CONES SHALL BE USED ON ALL ROADWAYS, AND SHALL BE REFLECTORIZED IN ACCORDANCE WITH THE M.U.T.C.D.

CONES

PLASTIC DRUM

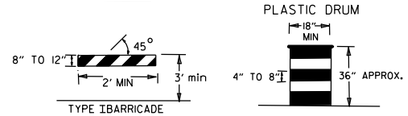

NOTE:
FOR ALL ROAD CLOSURES, THE TYPE III BARRICADES SHALL BE OF SUFFICIENT LENGTH TO EXTEND ACROSS ENTIRE ROADWAY.

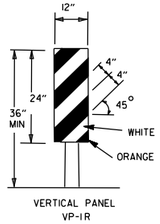

VERTICAL PANEL PLACEMENT

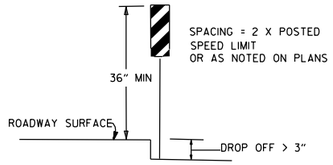

FLAG

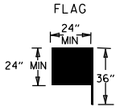

FLAG SHALL BE OF GOOD GRADE RED MATERIAL

TRAFFIC CONTROL DEVICES			
NON-INTERSTATE			
VERTICAL DIFFERENTIAL	LOCATION	TRAFFIC CONTROL	
		≤ 45 MPH	> 45 MPH
≤ 1"	CENTERLINE	W8-11	W8-11
> 1" ≤ 3"	CENTERLINE	W8-11 AND CENTERLINE LANE STRIPING	W8-11 AND CENTERLINE LANE STRIPING
> 3"	CENTERLINE	STANDARD LANE CLOSURE[6]	STANDARD LANE CLOSURE[6]
≤ 3"	EDGE OF TRAVELED LANE OR EDGE OF SHOULDER	W8-9 AND TRAFFIC DRUMS[1]	W8-9 AND TRAFFIC DRUMS[1]
> 3" ≤ 6"	EDGE OF TRAVELED LANE OR EDGE OF SHOULDER	W8-17, EDGE LINE STRIPING, AND TRAFFIC DRUMS[1]	W8-17, EDGE LINE STRIPING, AND TRAFFIC DRUMS[1]
> 6" ≤ 18"	EDGE OF TRAVELED LANE OR EDGE OF SHOULDER	W8-17, EDGE LINE STRIPING, AND TRAFFIC DRUMS[1]	W8-17, EDGE LINE STRIPING, AND TRAFFIC DRUMS[2]
> 18" ≤ 24"	EDGE OF TRAVELED LANE OR EDGE OF SHOULDER	W8-17, EDGE LINE STRIPING, AND TRAFFIC DRUMS[1]	A STABILIZED WEDGE, W8-17, EDGE LINE STRIPING AND TRAFFIC DRUMS[3]
> 24"	EDGE OF TRAVELED LANE OR EDGE OF SHOULDER	PRECAST CONCRETE BARRIER[4] & EDGE LINES	PRECAST CONCRETE BARRIER[4] & EDGE LINES

INTERSTATE		
VERTICAL DIFFERENTIAL	LOCATION	TRAFFIC CONTROL
≤ 3"	CENTERLINE	W8-11 AND LANE STRIPING
≤ 3"	EDGE OF TRAVELED LANE OR EDGE OF SHOULDER	W8-9, EDGE LINE STRIPING, AND TRAFFIC DRUMS[2]
> 3" ≤ 6"	EDGE OF TRAVELED LANE OR EDGE OF SHOULDER	W8-17, EDGE LINE STRIPING, AND TRAFFIC DRUMS[2]
> 6"	EDGE OF TRAVELED LANE OR EDGE OF SHOULDER	PRECAST CONCRETE BARRIER & EDGE LINES

INTERSTATE AND NON-INTERSTATE		
FORESLOPE	HEIGHT	TRAFFIC CONTROL
1:1	> 2 FT	PRECAST CONCRETE BARRIER
2:1	≤ 5 FT	TRAFFIC DRUMS
2:1	> 5 FT	PRECAST CONCRETE BARRIER
Flatter than 2:1	N/A	TRAFFIC DRUMS

GENERAL NOTES:

1. WHEN THE SHOULDER AREA IS USED AS PART OF THE TRAVELED LANE AND THERE IS INSUFFICIENT WIDTH TO PLACE TRAFFIC DRUMS ON THE REMAINING SHOULDER WIDTH, THEN VERTICAL PANELS SHALL BE USED.
2. WHEN THERE IS INSUFFICIENT WIDTH TO PLACE TRAFFIC DRUMS ON THE REMAINING SHOULDER WIDTH, A STABILIZED WEDGE SHALL BE USED.
3. PRECAST CONCRETE BARRIER WALL CAN BE USED IN LIEU OF A STABILIZED WEDGE, W8-17 SIGN, EDGE LINE STRIPING, AND TRAFFIC DRUMS, IF AND WHERE DIRECTED BY THE ENGINEER.
4. A STABILIZED WEDGE, W8-17 SIGN, EDGE LINE STRIPING, AND TRAFFIC DRUMS CAN BE USED IN LIEU OF PRECAST CONCRETE BARRIER WALL, IF AND WHERE DIRECTED BY THE ENGINEER.
5. W21-5, W21-5a, AND/OR W21-5b SIGNS SHALL BE USED WHERE THE ROADWAY IS UNOBSTRUCTED IF AND WHERE DIRECTED BY THE ENGINEER.
6. TIME LIMITATIONS MUST CONFORM TO SECTION 603 OF THE STANDARD SPECIFICATIONS FOR HIGHWAY CONSTRUCTION (CURRENT EDITION).

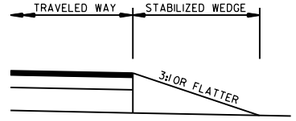

STABILIZED WEDGE

NOTE:
MATERIALS FOR THE STABILIZED WEDGE SHALL MEET THE REQUIREMENTS PROVIDED IN SECTION 603.02 OF THE STANDARD SPECIFICATIONS.

STOP SLOW PADDLE

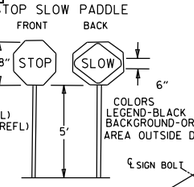

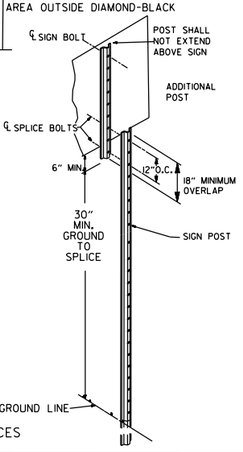

NOTES: USE SPLICES ONLY WHEN NECESSARY FOR INSTALLATION. TYPICAL INSTALLATION SHOULD HAVE NO SPLICES (SEE STD. DRAWING NO. SHS-21)

NORMAL INSTALLATIONS WILL REQUIRE 1/4" DIA. BOLTS TO MOUNT SIGNS TO POST AND 5/16" DIA. BOLTS TO ASSEMBLE THE VARIOUS POST SUPPORTS. EACH OF THESE BOLTS SHALL BE CARRIAGE BOLTS.

SIGN POSTS SHALL BE PAINTED GREEN; SIGNS SHALL NOT BE PAINTED, AND ALL SIGN POSTS SHALL BE PLUMB.

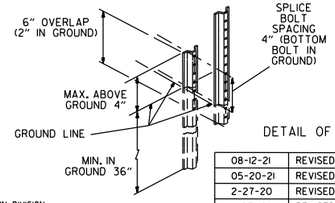

DETAIL OF SPLICES

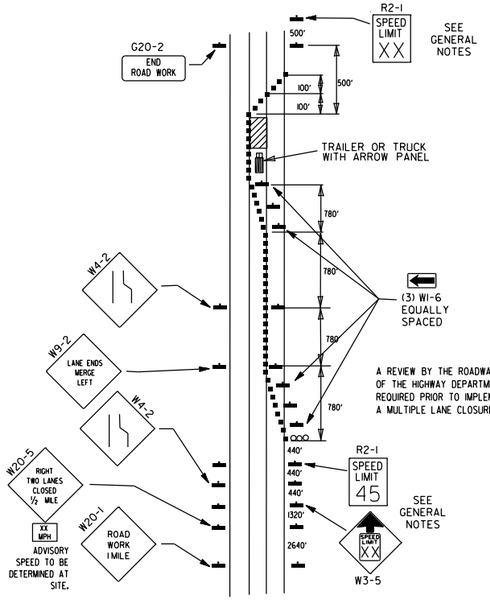

A REVIEW BY THE ROADWAY DESIGN DIVISION OF THE HIGHWAY DEPARTMENT WILL BE REQUIRED PRIOR TO IMPLEMENTING A MULTIPLE LANE CLOSURE.

(D) TYPICAL APPLICATION - CLOSING MULTIPLE LANES OF A MULTILANE HIGHWAY.

DATE	REVISION	FILMED
08-12-21	REVISED TRAFFIC CONTROL DEVICES AND NOTES	
05-20-21	REVISED NOTE 10	
2-27-20	REVISED TRAFFIC CONTROL DEVICES DETAILS	
11-07-19	REVISED NOTE 9, ADDED NOTE 11	
7-25-19	REVISED TRAFFIC CONTROL DEVICES DETAILS	
9-2-15	REVISED NOTE 2 & REPLACED R2-5A WITH W3-5	
10-15-09	ADDED REFERENCE TO MASH	
11-20-08	REVISED SIGN DESIGNATIONS	
11-18-04	ADDED NOTE	
10-1-98	ADDED NOTE	
4-03-97	ADDED (SP) TO W6-1& REVISED TRAFFIC CONTROL DEVICES NOTE	
10-18-96	ADDED R55-1	
10-12-95	MOVED UPPER SPLICE	
6-8-95	REVISED SPLICE DETAIL, TEXT	6-8-95
2-2-95	REVISED PER PART VI, MUTCD, SEPT. 3, 1993	
8-15-91	DRAWN AND PLACED IN USE	

ARKANSAS STATE HIGHWAY COMMISSION

STANDARD TRAFFIC CONTROLS FOR HIGHWAY CONSTRUCTION

STANDARD DRAWING TC-3

REINFORCING BAR TABLE PER BARRIER UNIT

MARK	LOCATION	BAR SIZE	(NO. BARS)	SKETCH
H-1	HORIZONTAL IN BARRIER TIED INSIDE V-1 BARS	#5	(6)	19'-3"
H-2	CENTERED ABOVE DRAIN SLOTS LONG. & TRANSVERSELY	#5	(6)	6'-6"
H-3	TIED ABOVE H-1 BARS TO SUPPORT H-2, TIED TO V-1	#4	(2)	1'-6"
S-1	OVER LIFT HOLES	#4	(2)	2'-5", LIFTING HOLE, 90°, 3 3/8" R
S-2	HORIZ. AROUND SLOTS BETWEEN V-1'S @ DRAIN SLOTS	#4	(2)	1 1/2" R, SLOTS, 7", 1'-6", 1" MIN. CLEAR TO BAR; 5'-1" BAR W/(4) 1 1/2" R BENDS & MIN. 1'-0" OVERLAP
V-1	VERTICAL IN BARRIER(3) EACH END & (2) AT EACH DRAIN SLOTS	#5	(16)	TOTAL LENGTH 4'-9"; 2 3/16" R; 12°; 1 1/2"; 9"; 2'-1 3/8"; 4 3/8"

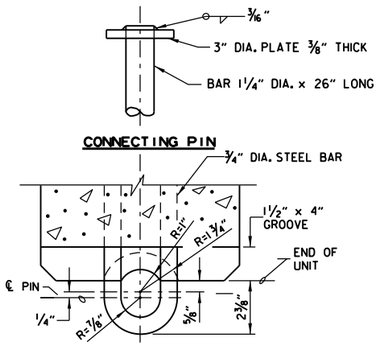

SECTION E-E

CONNECTION DETAILS

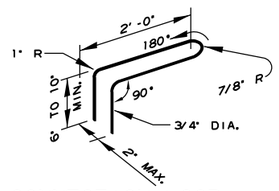

CONNECTION LOOP

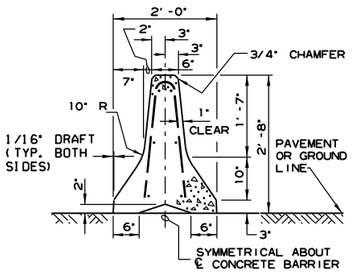

SECTION A-A

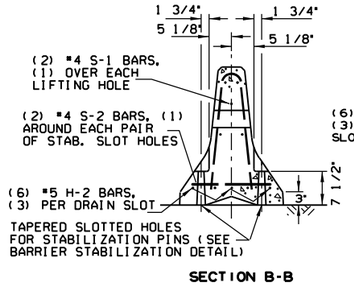

SECTION B-B

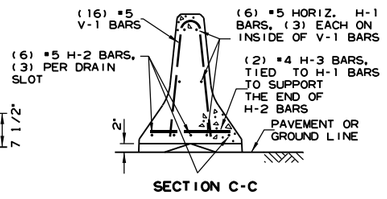

SECTION C-C

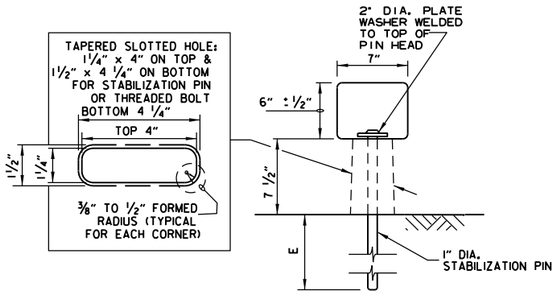

BARRIER STABILIZATION DETAIL

ROADWAY SECTION

(E) 4" - CONCRETE PAVEMENT
8" - ASPHALT PAVEMENT
12" - SHOULDER AREAS

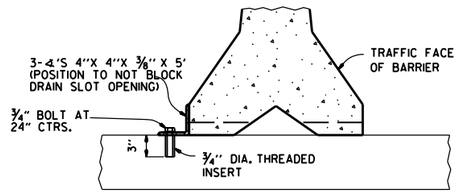

NOTE: " THREADED INSERTS SHALL BE CAST IN PLACE FOR ALL NEW BRIDGE DECKS AND DRILLED AND GROUTED FOR EXISTING BRIDGE DECKS. INSERTS SHALL HAVE A MINIMUM ULTIMATE LOAD CAPACITY OF 8000 LBS. IN TENSION. AFTER REMOVAL OF BARRIER, BOLTS, AND ANGLES, THE INSERTS SHALL BE FILLED WITH APPROVED NON-SHRINK EPOXY.

BARRIER STABILIZATION DETAIL

BRIDGE DECKS

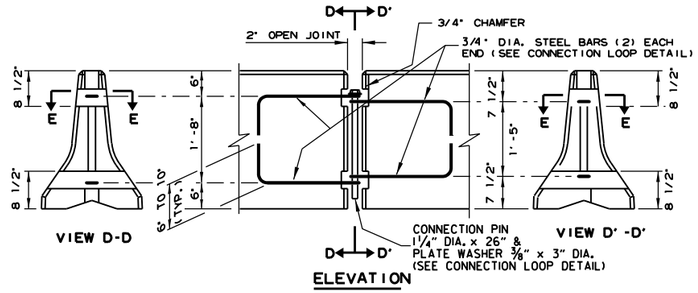

ELEVATION

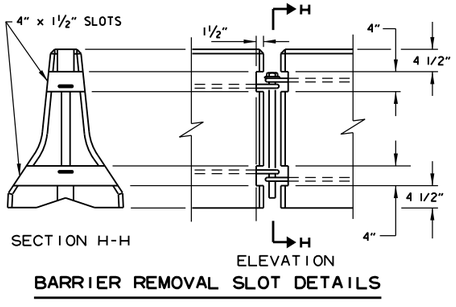

BARRIER REMOVAL SLOT DETAILS

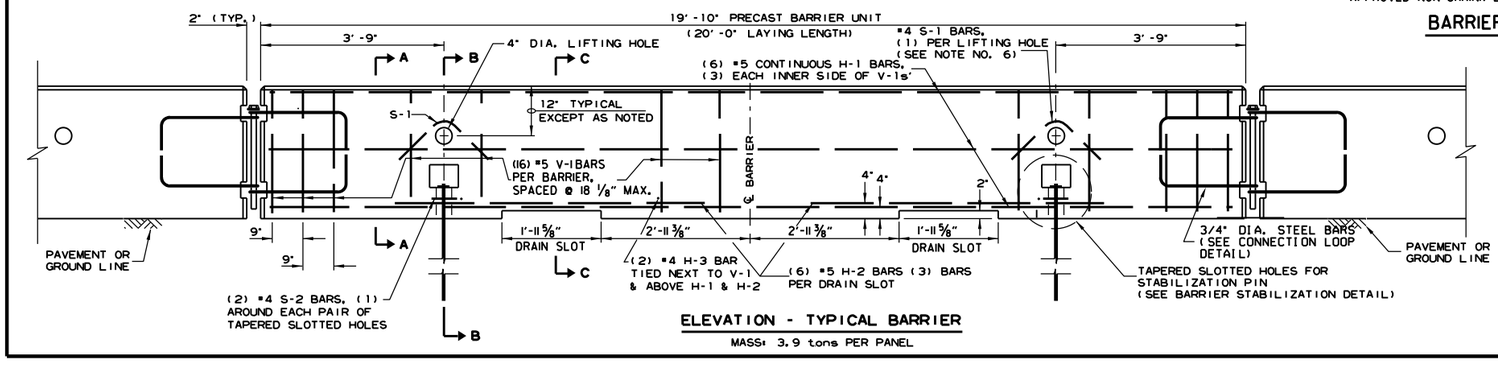

ELEVATION - TYPICAL BARRIER

MASS: 3.9 tons PER PANEL

GENERAL NOTES

(1) THE CONTRACTOR SHALL FURNISH THE PRECAST CONCRETE BARRIER UNITS AND SHALL BE RESPONSIBLE FOR THE MANUFACTURE, SHIPMENT, STORAGE, PLACEMENT AND REMOVAL. AT THE COMPLETION OF THE PROJECT, THE PRECAST UNITS WILL REMAIN THE PROPERTY OF THE CONTRACTOR.

(2) MATERIALS SHALL MEET THE FOLLOWING MINIMUM REQUIREMENTS:
CONCRETE: 2500 PSI COMPRESSIVE STRENGTH AT 28 DAYS.
REINFORCING STEEL: AASHTO M 31 OR M 53, GRADE 60
STRUCTURAL STEEL: AASHTO-M270 GRADE 36 SHALL BE USED FOR THE CONNECTION PIN, CONNECTION LOOPS, AND STABILIZATION PINS. A ONE PIECE PIN WITH A 3" ROUNDED TOP MAY BE USED IN PLACE OF THE DETAILED CONNECTION PIN.
DELINEATORS: DELINEATORS SHALL BE MOUNTED AT 10' SPACING ON TOP OF PRECAST BARRIER.

IN APPLICATIONS WHERE BARRIER WALL IS WITHIN 6 FEET OF A TRAFFIC LANE, ADDITIONAL DELINEATORS SHALL BE PLACED ON THE BARRIER AT 10' SPACING APPROXIMATELY ONE (1) FOOT FROM THE TOP OF THE BARRIER. DELINEATORS SHALL BE ON THE ARDOT QUALIFIED PRODUCTS LIST FOR CONSTRUCTION CONCRETE BARRIER MARKERS.
DELINEATOR COLOR SHALL BE IN ACCORDANCE WITH THE MANUAL ON UNIFORM TRAFFIC CONTROL DEVICES.
PAYMENT FOR DELINEATORS SHALL BE CONSIDERED INCLUDED IN THE PRICE BID PER LIN. FT. FOR "FURNISHING AND INSTALLING PRECAST CONCRETE BARRIER". THE CONTRACTOR SHALL CERTIFY TO THE ENGINEER THAT THE MATERIAL AND THE DESIGN USED IN THE PRECAST BARRIER UNITS MEETS THE REQUIREMENTS AS SHOWN ON THIS STANDARD DRAWING.

(3) OTHER PRECAST CONCRETE BARRIERS THAT HAVE BEEN CRASH TESTED AND APPROVED BY THE FEDERAL HIGHWAY ADMINISTRATION TO MEET THE REQUIREMENTS OF MANUAL FOR ASSESSING SAFETY HARDWARE (MASH) WILL BE ACCEPTED IN LIEU OF THE BARRIER SHOWN. DRAIN SLOTS SHALL BE PROVIDED AS NEEDED OR AS DIRECTED BY THE ENGINEER. THE CONTRACTOR SHALL FURNISH A CERTIFICATION OF MANUAL FOR ASSESSING SAFETY HARDWARE (MASH) COMPLIANCE FOR ANY OTHER TYPES OF PRECAST BARRIER TO BE USED. THE CERTIFICATION SHALL STATE THAT THE PRECAST CONCRETE BARRIER MEETS THE REQUIREMENTS OF MANUAL FOR ASSESSING SAFETY HARDWARE (MASH). MIXING OF SHAPES WILL NOT BE ALLOWED IN A CONTINUOUS LINE OF UNITS.

(4) DOWEL HOLES IN PAVEMENT OR BRIDGE SLABS THAT ARE TO REMAIN IN PLACE SHALL BE FILLED. HOLES IN CONCRETE PAVEMENT AND BRIDGE SLABS SHALL BE FILLED WITH AN APPROVED NON-SHRINK EPOXY GROUT. HOLES IN ASPHALT PAVEMENT SHALL BE FILLED WITH AN APPROVED ASPHALT JOINT FILLER. PAYMENT FOR DRILLING AND FILLING HOLES TO BE INCLUDED IN THE PRICE FOR VARIOUS BARRIER ITEMS.

(5) ATTACH UNITS TO ROADWAY SURFACE WITH STABILIZATION PINS AND TO DECK SLABS USING BOLTS WHEN REQUIRED.

(6) A 4" WHITE PVC SLEEVE MAY BE USED TO FORM THE LIFTING HOLE AND IF USED THE SLEEVE IS TO BE LEFT IN PLACE.

DATE	REVISION	FILMED
11-07-19	REVISED NOTE 3	
2-27-14	REVISED BARRIER STABILIZATION DETAIL	
10-15-09	ADDED REFERENCE TO WASH	
8-5-09	REV. NOTE 3 CONCERNING DRAIN SLOTS	
11-29-07	REVISED NOTE 3	
5-25-06	DELETED GENERAL NOTE 7	
11-18-04	REVISED BARRIER STABILIZATION DETAIL BRIDGE DECKS	
4-10-03	REVISED GENERAL NOTE 2	
8-22-02	ISSUED NEW DRAWING	

ARKANSAS STATE HIGHWAY COMMISSION

STANDARD TRAFFIC CONTROLS FOR HIGHWAY CONSTRUCTION - TEMPORARY PRECAST BARRIER

STANDARD DRAWING TC-4

Ⓐ 4 feet or greater preferred. If less than 4 feet, Precast Units shall be connected to slab (SEE BARRIER STABILIZATION DETAIL-BRIDGE DECKS STD. DRWG. TC-4)

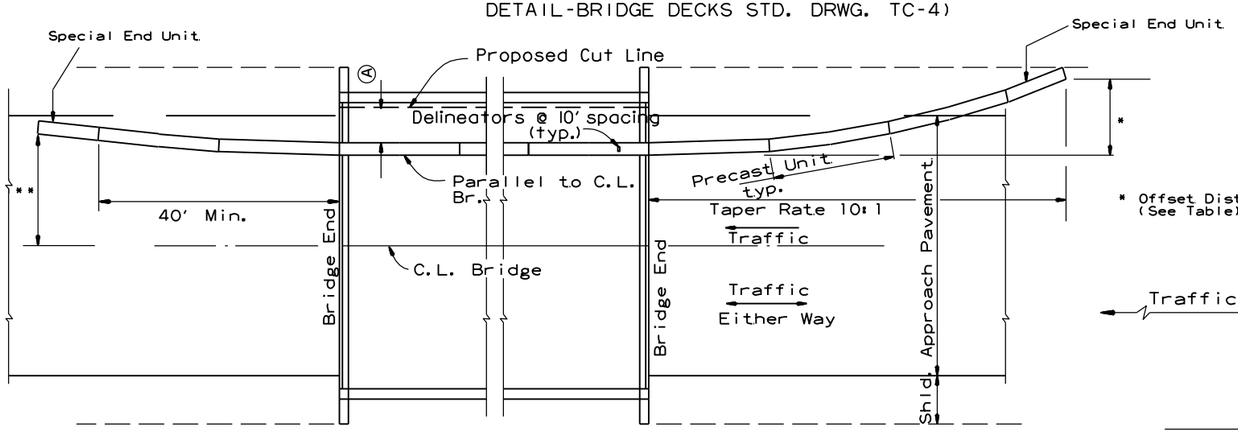

* Offset Distance (See Table)

BARRIER PLACEMENT ALONG BRIDGE WITH OFFSET

No Scale

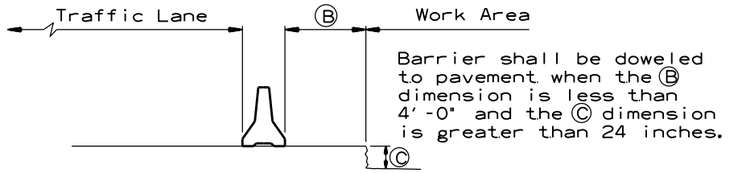

Barrier shall be doweled to pavement when the Ⓑ dimension is less than 4'-0" and the Ⓒ dimension is greater than 24 inches.

SECTION J-J

No Scale

** Offset Distance for Two Way Traffic Only

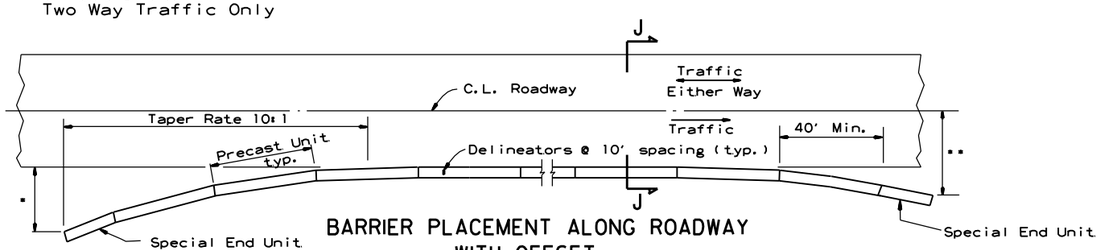

BARRIER PLACEMENT ALONG ROADWAY WITH OFFSET

No Scale

* Offset Distance (See Table)

** Offset Distance For Two Way Traffic Only

Offset Distance Table

Speed (MPH)	Offset Distance (FT.)
≤ 45	12
> 45	18

If offset distance is not attainable, then see "Barrier Placement With Attenuator" Detail shown below.

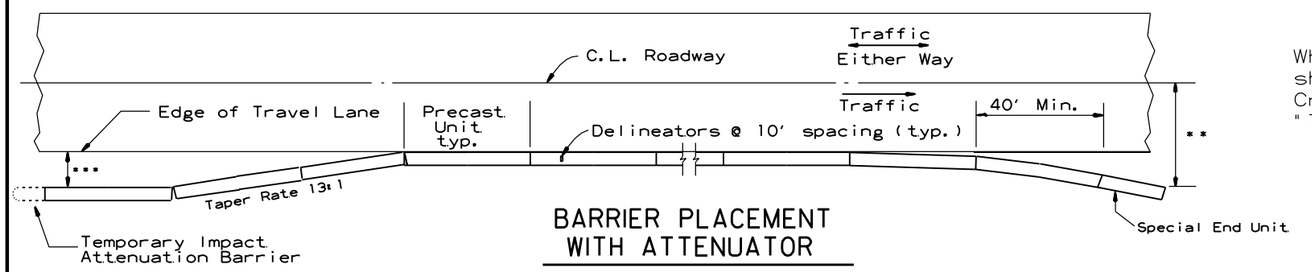

BARRIER PLACEMENT WITH ATTENUATOR

No Scale

** Offset Distance For Two Way Traffic Only

*** Min. 3'-0" From Edge of Travel Lane to Nearest Edge of Attenuator

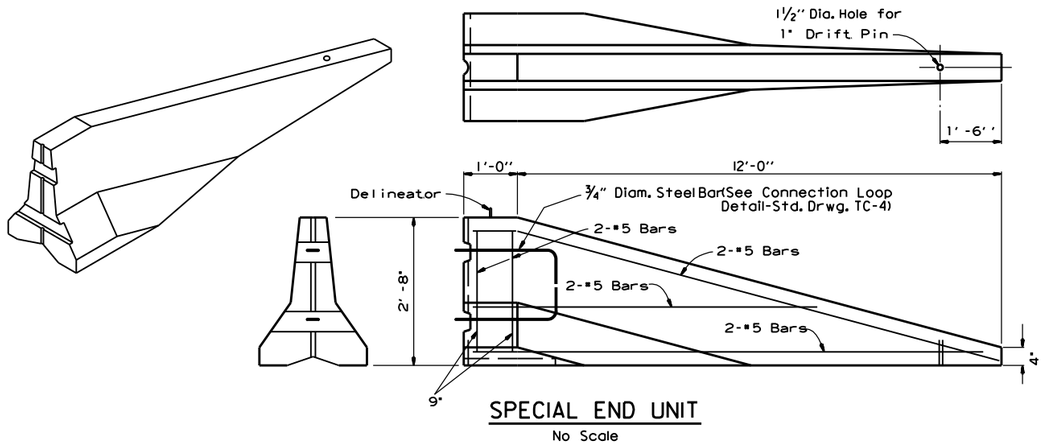

SPECIAL END UNIT

No Scale

General Notes

When shown on the Plans, the ends of the Temporary Precast Concrete Barrier shall be protected with a Manual For Assessing Safety Hardware (MASH) approved Crash Cushion. Payment for Crash Cushions shall be made under the item of "Temporary Impact Attenuation Barrier."

DATE	REVISION	FILMED
11-07-19	REVISED NOTE	
10-15-09	ADDED REFERENCE TO MASH	
5-25-06	REVISED BARRIER PLACEMENT	
8-22-02	ISSUED NEW DRAWING	

ARKANSAS STATE HIGHWAY COMMISSION

STANDARD TRAFFIC CONTROLS FOR HIGHWAY CONSTRUCTION - TEMPORARY PRECAST BARRIER

STANDARD DRAWING TC-5

GENERAL NOTES

INSTALL A MINIMUM OF 2 UPSLOPE STAKES AND 4 DOWNSLOPE STAKES AT AN ANGLE TO WEDGE WATTLE TO BOTTOM OF DITCH.

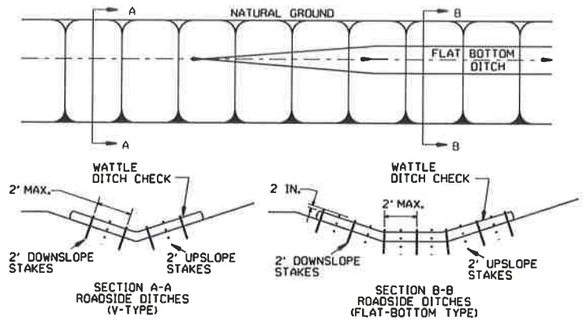

WATTLE DITCH CHECK (E-1)

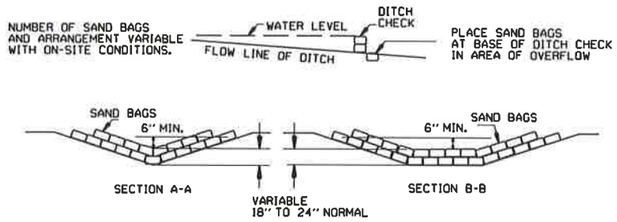

SAND BAG DITCH CHECK (E-5)

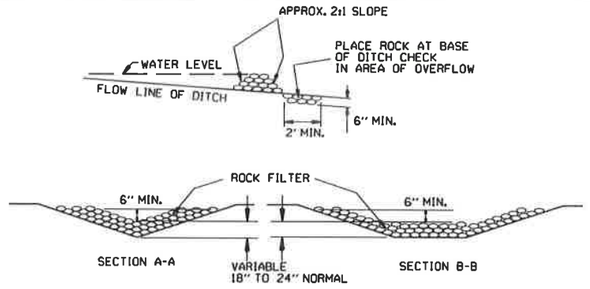

ROCK DITCH CHECK (E-6)

GENERAL NOTES

GEOTEXTILE FABRIC (TYPE 4) IN ACCORDANCE WITH SECTION 625

GEOTEXTILE FABRIC SHALL BE SPLICED TOGETHER WITH A SEWN SEAM ONLY AT A SUPPORT POST OR TWO SECTIONS OF FENCE MAY BE OVERLAPPED INSTEAD. PAYMENT OF ADDITIONAL MATERIAL FOR OVERLAP WILL NOT BE MADE.

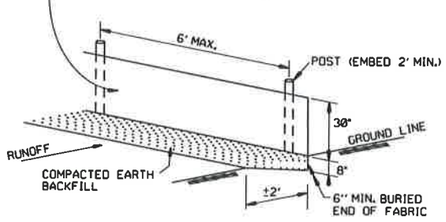

SILT FENCE (E-11)

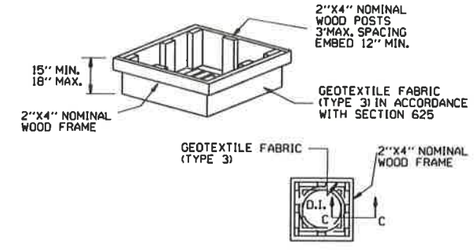

DROP INLET SILT FENCE (E-7)

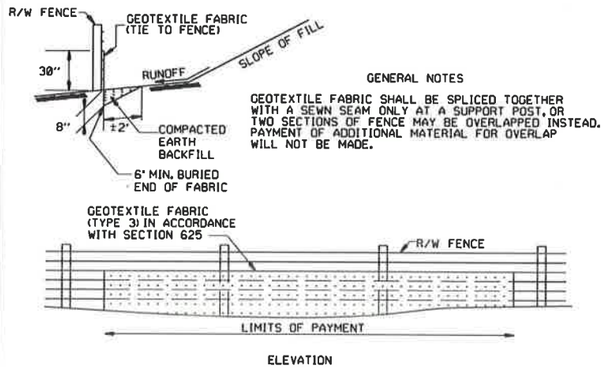

GENERAL NOTES

GEOTEXTILE FABRIC SHALL BE SPLICED TOGETHER WITH A SEWN SEAM ONLY AT A SUPPORT POST, OR TWO SECTIONS OF FENCE MAY BE OVERLAPPED INSTEAD. PAYMENT OF ADDITIONAL MATERIAL FOR OVERLAP WILL NOT BE MADE.

SILT FENCE ON R/W FENCE (E-4)

GENERAL NOTES

1. STRAW BALES SHALL BE INSTALLED SO THAT THE BINDINGS ARE ORIENTED AROUND THE SIDES RATHER THAN ALONG THE TOPS AND BOTTOMS OF THE BALES. THE BALES SHALL BE A MINIMUM OF 30 INCHES IN LENGTH.

2. NO GAPS SHALL BE LEFT BETWEEN BALES.

3. BALED STRAW FILTER BARRIERS COMPLETED AND ACCEPTED WILL BE MEASURED BY THE BALE IN PLACE AS AUTHORIZED BY THE ENGINEER AND WILL BE PAID FOR AT THE CONTRACT UNIT PRICE BID PER BALE FOR BALED STRAW DITCH CHECKS.

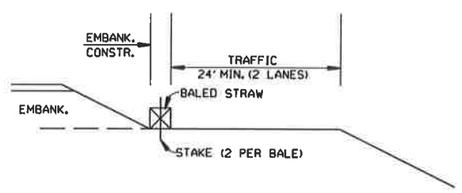

BALED STRAW FILTER BARRIER (E-2)

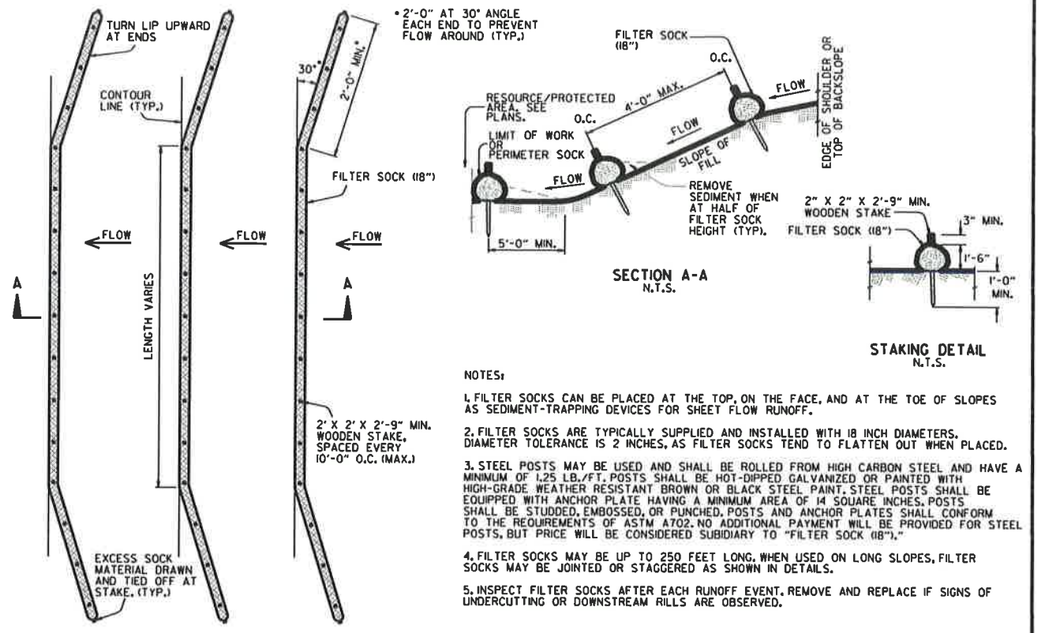

NOTES:

1. FILTER SOCKS CAN BE PLACED AT THE TOP, ON THE FACE, AND AT THE TOE OF SLOPES AS SEDIMENT-TRAPPING DEVICES FOR SHEET FLOW RUNOFF.

2. FILTER SOCKS ARE TYPICALLY SUPPLIED AND INSTALLED WITH 18 INCH DIAMETERS. DIAMETER TOLERANCE IS 2 INCHES, AS FILTER SOCKS TEND TO FLATTEN OUT WHEN PLACED.

3. STEEL POSTS MAY BE USED AND SHALL BE ROLLED FROM HIGH CARBON STEEL AND HAVE A MINIMUM OF 1.25 LB./FT. POSTS SHALL BE HOT-DIPPED GALVANIZED OR PAINTED WITH HIGH-GRADE WEATHER RESISTANT BROWN OR BLACK STEEL PAINT. STEEL POSTS SHALL BE EQUIPPED WITH ANCHOR PLATE HAVING A MINIMUM AREA OF 14 SQUARE INCHES. POSTS SHALL BE STUDDED, EMBOSSED, OR PUNCHED. POSTS AND ANCHOR PLATES SHALL CONFORM TO THE REQUIREMENTS OF ASTM A702. NO ADDITIONAL PAYMENT WILL BE PROVIDED FOR STEEL POSTS, BUT PRICE WILL BE CONSIDERED SUBIDIARY TO "FILTER SOCK (18")."

4. FILTER SOCKS MAY BE UP TO 250 FEET LONG. WHEN USED ON LONG SLOPES, FILTER SOCKS MAY BE JOINTED OR STAGGERED AS SHOWN IN DETAILS.

5. INSPECT FILTER SOCKS AFTER EACH RUNOFF EVENT. REMOVE AND REPLACE IF SIGNS OF UNDERCUTTING OR DOWNSTREAM RILLS ARE OBSERVED.

FILTER SOCK ALONG SLOPE (E-3)

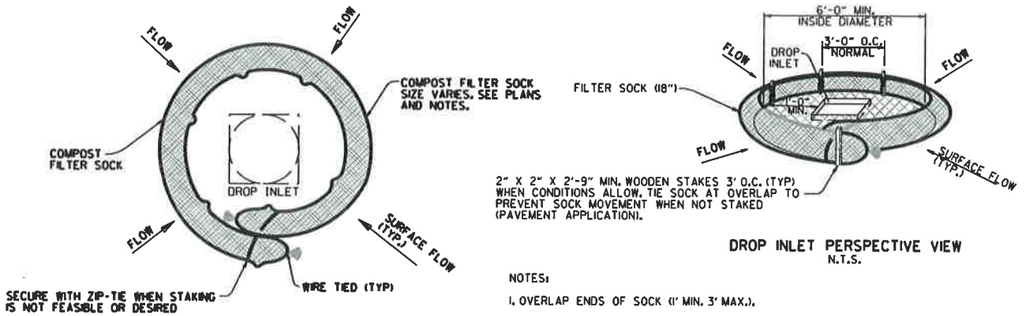

NOTES:

1. OVERLAP ENDS OF SOCK (1' MIN. 3' MAX.).

2. USE 18" DIA. SOCK IN NON-TRAFFIC AREAS OR AREAS WHERE SAFETY IS NOT A CONCERN.

COMPOST FILTER SOCK DROP INLET PROTECTION (E-13)

DATE	REVISION	FILMED
11-16-17	ADDED FILTER SOCK E-3 AND E-13	
12-15-11	DELETED BALED STRAW DITCH CHECK & ADDED WATTLE DITCH CHECK	
11-18-98	ADDED NOTES	
07-02-98	ADDED BALED STRAW FILTER BARRIER (E-2)	
07-20-95	REVISED SILT FENCE E-4 AND E-11	7-20-95
07-15-94	REV. E-4 & E-11 MIN. 13" BURIED END OF FABRIC	
06-02-94	REVISED E-1,4,7 & 11; DELETED E-2 & 3	6-2-94
04-01-93	REDRAWN	
10-01-92	REDRAWN	
08-02-76	ISSUED R.D.M.	298-7-28-76

ARKANSAS STATE HIGHWAY COMMISSION

TEMPORARY EROSION CONTROL DEVICES

STANDARD DRAWING TEC-1

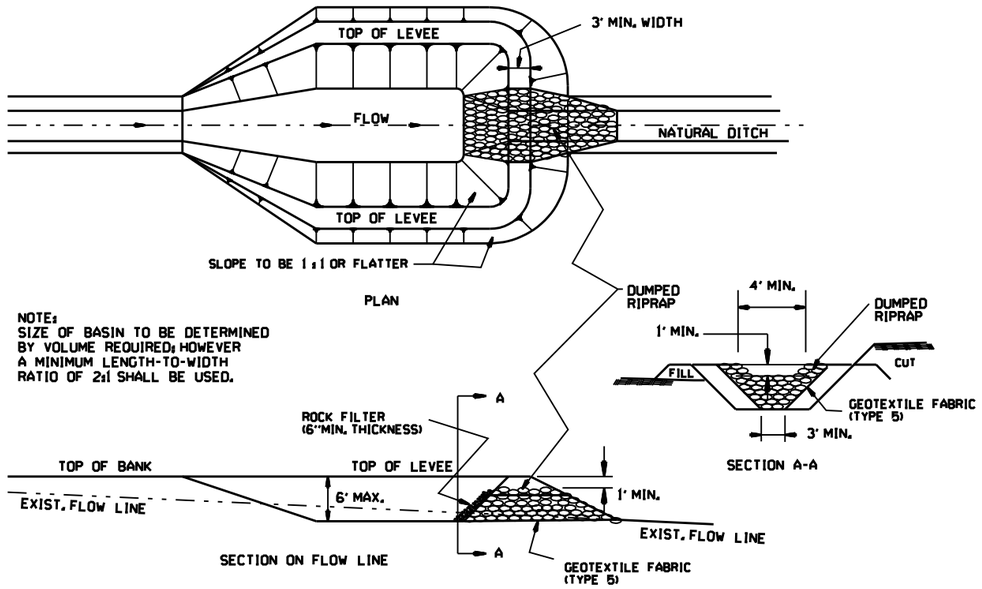

SEDIMENT BASIN WITH RIPRAP OUTLET (E-9)

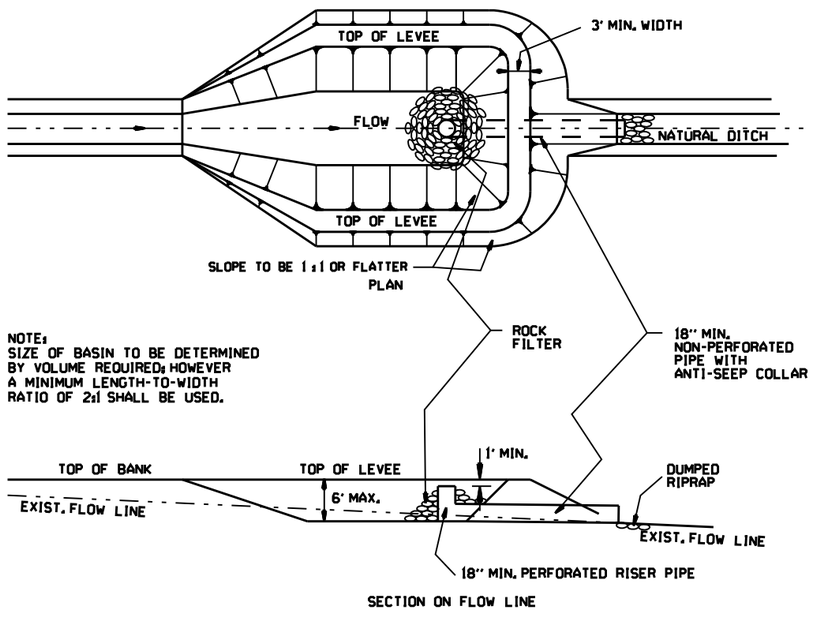

SEDIMENT BASIN WITH PIPE OUTLET (E-10)

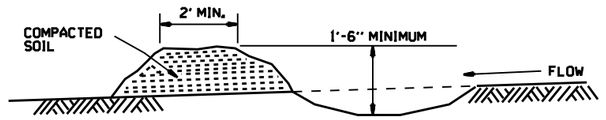

DIVERSION DITCH (E-8)

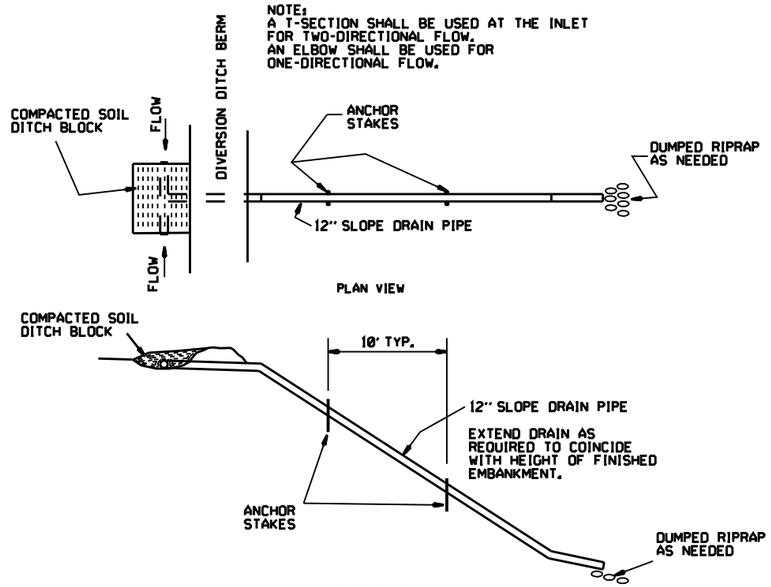

SLOPE DRAIN (E-12)

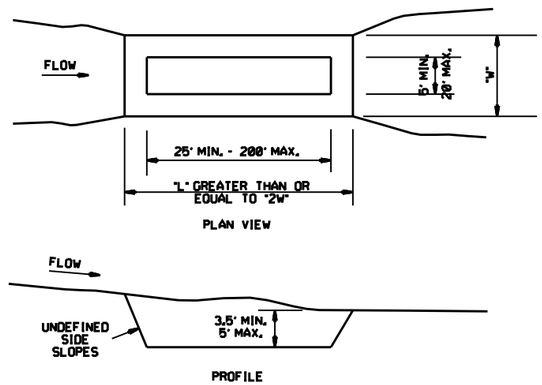

SEDIMENT BASIN (E-14)

DATE	REVISION	FILMED
6-2-94	Revised E-8 & E-12; Added E-14 & Deleted E-13	
4-1-93	ISSUED	

ARKANSAS STATE HIGHWAY COMMISSION

TEMPORARY EROSION CONTROL DEVICES

STANDARD DRAWING TEC-2

CLEARING AND GRUBBING

CONSTRUCTION SEQUENCE

1. PLACE PERIMETER CONTROLS (I.E. SILT FENCES , DIVERSION DITCHES, SEDIMENT BASINS, ETC.)
2. PERFORM CLEARING AND GRUBBING OPERATION.

EXCAVATION

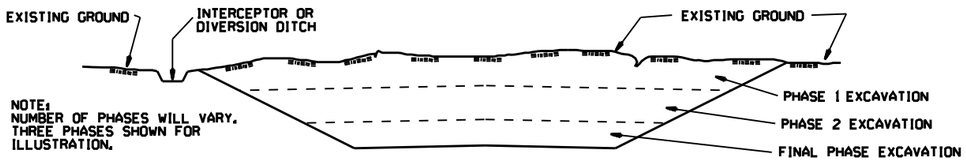

GENERAL NOTE

ALL CUT SLOPES SHALL BE DRESSED, PREPARED, SEEDED, AND MULCHED AS THE WORK PROGRESSES. SLOPES SHALL BE EXCAVATED AND STABILIZED IN EQUAL INCREMENTS NOT TO EXCEED 25 FEET, MEASURED VERTICALLY.

CONSTRUCTION SEQUENCE

1. EXCAVATE AND STABILIZE INTERCEPTOR AND/OR DIVERSION DITCHES.
2. PERFORM PHASE 1 EXCAVATION. PLACE PERMANENT OR TEMPORARY SEEDING.
3. PERFORM PHASE 2 EXCAVATION. PLACE PERMANENT OR TEMPORARY SEEDING.
4. PERFORM FINAL PHASE OF EXCAVATION. PLACE PERMANENT OR TEMPORARY SEEDING. STABILIZE DITCHES. CONSTRUCT DITCH CHECKS, DIVERSION DITCHES, SEDIMENT BASINS, OR OTHER EROSION CONTROL DEVICES AS REQUIRED.

EMBANKMENT

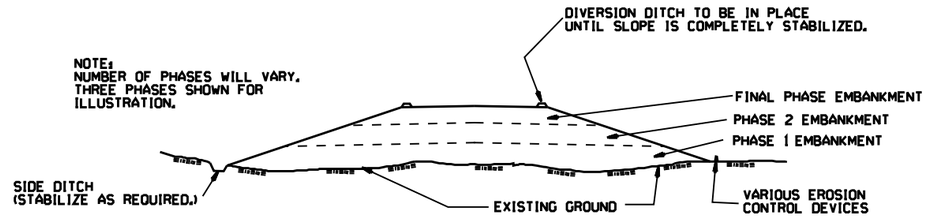

GENERAL NOTE

ALL EMBANKMENT SLOPES SHALL BE DRESSED, PREPARED, SEEDED, AND MULCHED AS THE WORK PROGRESSES. SLOPES SHALL BE CONSTRUCTED AND STABILIZED IN EQUAL INCREMENTS NOT TO EXCEED 25 FEET, MEASURED VERTICALLY.

CONSTRUCTION SEQUENCE

1. CONSTRUCT DIVERSION DITCHES, DITCH CHECKS, SEDIMENT BASINS, SILT FENCES, OR OTHER EROSION CONTROL DEVICES AS SPECIFIED.
2. PLACE PHASE 1 EMBANKMENT WITH PERMANENT OR TEMPORARY SEEDING. PROVIDE DIVERSION DITCHES AND SLOPE DRAINS IF EMBANKMENT CONSTRUCTION IS TO BE TEMPORARILY ABANDONED FOR A PERIOD OF GREATER THAN 21 DAYS.
3. PLACE PHASE 2 EMBANKMENT WITH PERMANENT OR TEMPORARY SEEDING. PROVIDE DIVERSION DITCHES AND SLOPE DRAINS IF EMBANKMENT CONSTRUCTION IS TO BE TEMPORARILY ABANDONED FOR A PERIOD OF GREATER THAN 21 DAYS.
4. PLACE FINAL PHASE OF EMBANKMENT WITH PERMANENT OR TEMPORARY SEEDING. PLACE DIVERSION DITCHES AND SLOPE DRAINS AND MAINTAIN UNTIL ENTIRE SLOPE IS STABILIZED.

DATE	REVISION	FILMED
11-03-94	CORRECTED SPELLING	
6-2-94	Drawn & Issued	6-2-94

ARKANSAS STATE HIGHWAY COMMISSION

TEMPORARY EROSION CONTROL DEVICES

STANDARD DRAWING TEC-3

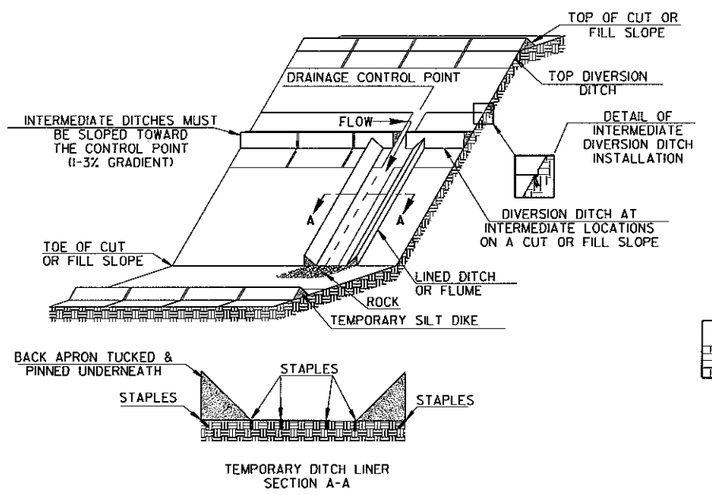

TRIANGULAR SILT DIKE INSTALLATION
FOR
DIVERSION DITCH AND/OR DITCH LINER

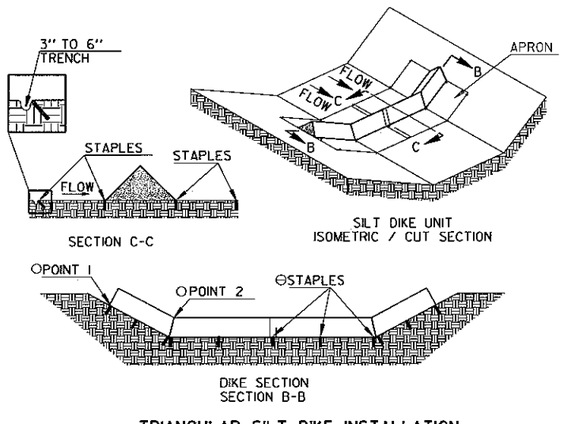

TRIANGULAR SILT DIKE INSTALLATION
FOR
ROADWAY DITCH OR DRAINAGE DITCH

○ POINT "1" MUST BE HIGHER THAN POINT "2" TO ENSURE THAT WATER FLOWS OVER THE DIKE AND NOT AROUND THE ENDS.

⊖ STAPLES SHALL BE PLACED WHERE THE UNITS OVERLAP AND IN THE CENTER OF THE UNIT AS SHOWN ON THE DIAGRAM.

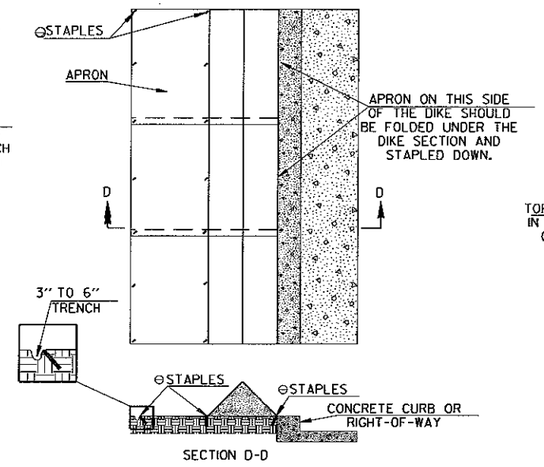

TRIANGULAR SILT DIKE INSTALLATION
FOR
CONTINUOUS BARRIER

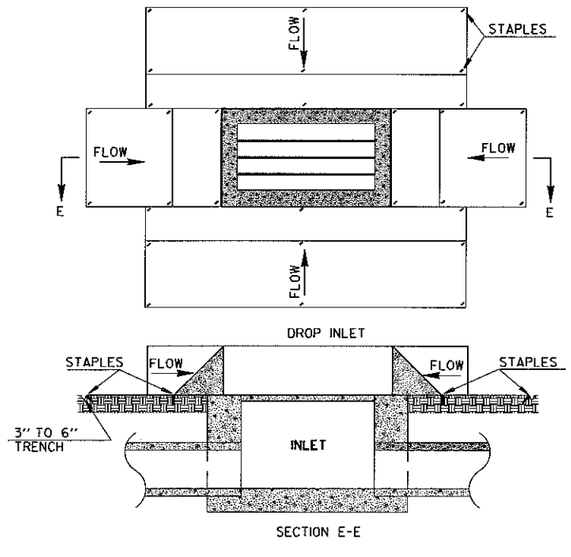

TRIANGULAR SILT DIKE INSTALLATION
FOR
DROP INLETS

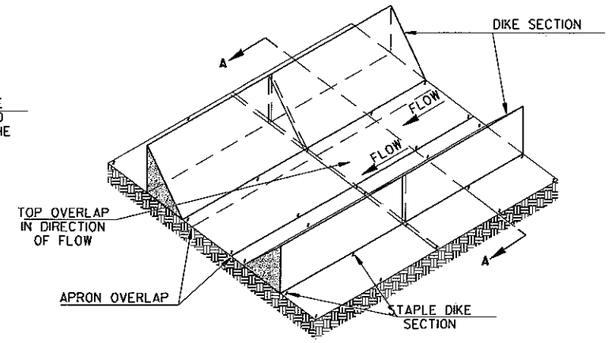

TRIANGULAR SILT DIKE INSTALLATION
FOR
TEMPORARY DITCH LINER

GENERAL NOTES

1. THIS WORK SHALL CONSIST OF FURNISHING, INSTALLING, AND MAINTAINING THE TRIANGULAR SILT DIKE. THE DIKES SHALL BE USED AS A CONTINUOUS LINE BARRIER AT THE TOE OF SLOPE OR ACROSS THE ROADWAY DITCH TO CONTAIN SEDIMENT AND MINIMIZE EROSION, OR AS DIRECTED BY THE ENGINEER. THESE DIKES SHALL BE INSTALLED AND LOCATED AS SOON AS CONSTRUCTION WILL ALLOW OR AS DIRECTED BY THE ENGINEER.

2. TRIANGULAR SILT DIKE SHALL BE TRIANGULAR SHAPED HAVING A HEIGHT OF AT LEAST 8" TO 10" IN THE CENTER WITH EQUAL SIDES AND A 16" TO 20" BASE. THE TRIANGULAR SHAPED INNER MATERIAL SHALL BE URETHANE FOAM. THE OUTER COVER SHALL BE A WOVEN GEOTEXTILE FABRIC PLACED AROUND THE INNER MATERIAL & ALLOWED TO EXTEND BEYOND BOTH SIDES OF THE TRIANGLE 24" TO 36". THIS FABRIC SHOULD BE MILDEW RESISTANT, ROT-PROOF AND RESISTANT TO HEAT AND ULTRAVIOLET RADIATION MEETING REQUIREMENTS FOR SEDIMENT CONTROL IN AASHTO M288. THE DIKES SHALL BE ATTACHED TO THE GROUND WITH WIRE STAPLES. THE STAPLES SHALL BE NO. 11 GAUGE WIRE AND BE AT LEAST 6" TO 8" LONG. STAPLES SHALL BE PLACED AS SHOWN ON THESE DETAILS.

   THE CONTRACTOR SHALL INSPECT ALL DIKES AFTER EACH RAINFALL EVENT OF AT LEAST 0.5" OR GREATER. ANY DEFICIENCIES OR DAMAGE SHALL BE REPAIRED BY THE CONTRACTOR. ACCUMULATED SILT OR DEBRIS SHALL BE REMOVED AND RELOCATED AS DIRECTED BY THE ENGINEER. IF THE DIKES ARE DAMAGED OR INADVERTENTLY MOVED DURING THE SILT REMOVAL PROCESS, THE CONTRACTOR SHALL IMMEDIATELY REPLACE AFTER DAMAGE OCCURS.

3. ACCEPTED TRIANGULAR SILT DIKE, MEASURED AS PROVIDED ABOVE, WILL BE PAID FOR AT THE CONTRACT UNIT PRICE BID FOR TRIANGULAR SILT DIKE. PRICE BID WILL INCLUDE THE COST OF FURNISHING THE DIKES, INSTALLING, MAINTAINING AND REMOVAL WHEN DIRECTED BY THE ENGINEER.

SYMBOLOGY

SYMBOL TO BE USED TO DENOTE DEVICE ON PLANS

NOTE: SILT DIKE SHOULD ONLY BE USED FOR DROP INLETS IN SUMP LOCATIONS.

DATE	REVISION	FILMED
7-26-12	REVISED GENERAL NOTE 2.	
12-15-11	ISSUED	

ARKANSAS STATE HIGHWAY COMMISSION

TEMPORARY EROSION CONTROL DEVICES

STANDARD DRAWING TEC-4

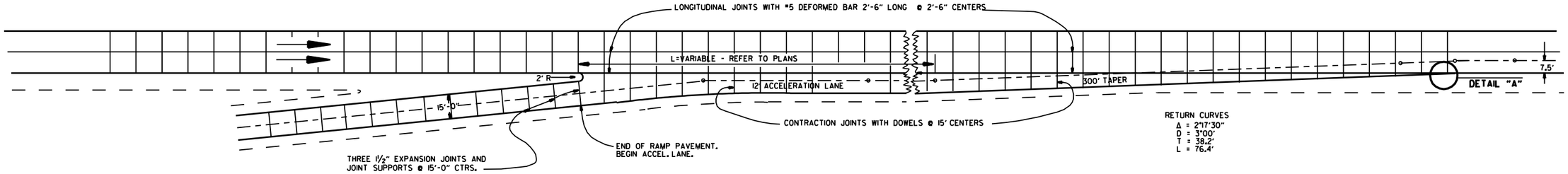

ENTRANCE RAMP

NOTE: JOINT SPACING ON THE MAIN LANES SHALL BE ADJUSTED AS NECESSARY TO CONFORM TO THESE JOINT LAYOUTS. THE MAIN LANE JOINT SPACING MAY BE REDUCED TO A 12' MINIMUM.

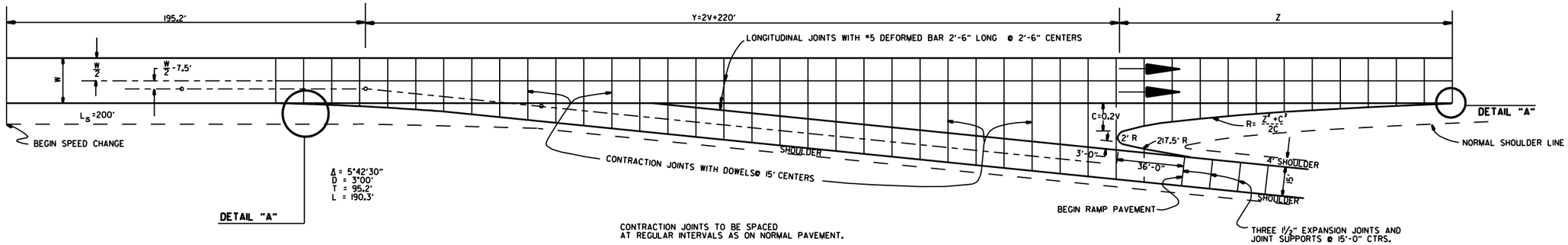

CONTRACTION JOINTS TO BE SPACED AT REGULAR INTERVALS AS ON NORMAL PAVEMENT.

EXIT RAMP

EXIT RAMP

DESIGN SPEED V	Y	NOSE OFFSET C	LENGTH NOSE TAPER Z	RETURN RADIUS R	ADDITIONAL SURFACING SQ. YDS.
40	300.0	8.0	96.0	580.0	602.43
50	320.0	10.0	120.0	725.0	687.25
60	340.0	12.0	168.0	1182.0	790.55
70	360.0	14.0	210.0	1582.0	902.27

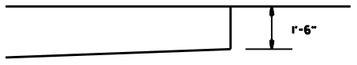

DETAIL "A"

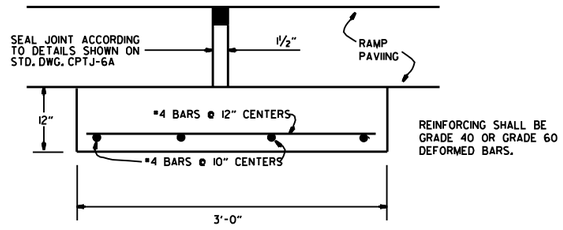

DETAIL OF EXPANSION JOINT & JOINT SUPPORT

NOTE: THE EXPANSION JOINTS SHALL BE MEASURED AND PAID FOR AS P.C.C. PAVEMENT (RAMP THICKNESS). WHEN RAMP PAVING IS ASPHALT, EXPANSION JOINT IS NOT REQUIRED.
THE JOINT SUPPORT MAY BE CONSTRUCTED WITH CLASS "A", "S", OR PAVING CONCRETE. PAYMENT FOR THE JOINT SUPPORT SHALL BE FOR THE CONTRACT UNIT PRICE BID FOR THE CLASS OF CONCRETE USED. ALL OTHER WORK AND MATERIALS REQUIRED FOR THE CONSTRUCTION OF THE JOINT SUPPORT SHALL BE INCLUDED IN THE PRICE BID FOR THE ABOVE ITEMS.

DATE	REVISION	DATE FILM'D
8-22-02	DELETED NOTE	
11-16-01	CORRECTED SPELLING ON ENTRANCE RAMP NOTE	
5-13-99	ADDED, EDITED AND DELETED NOTES	
11-03-94	ADDED NOTE RE: REINF. BARS	
10-1-92	ADDED DETAIL A & OTHER MINOR CHANGES	10-1-92
1-25-90	REVISED EXPANSION JOINT	1-25-90
7-15-88	CONFORM'D TO 1988 SPECIFICATIONS	65C-7-15-88
3-2-81	ISSUED	511-10-2-72

ARKANSAS STATE HIGHWAY COMMISSION

DETAILS OF STANDARD TURNOUT FOR ENTRANCE & EXIT RAMPS (NON-REINFORCED)

STANDARD DRAWING TR-1A

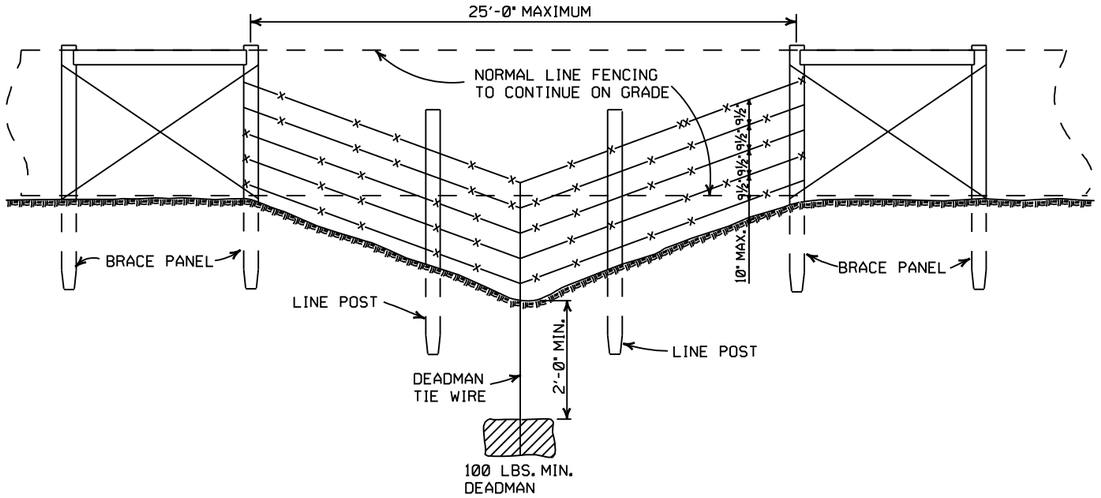

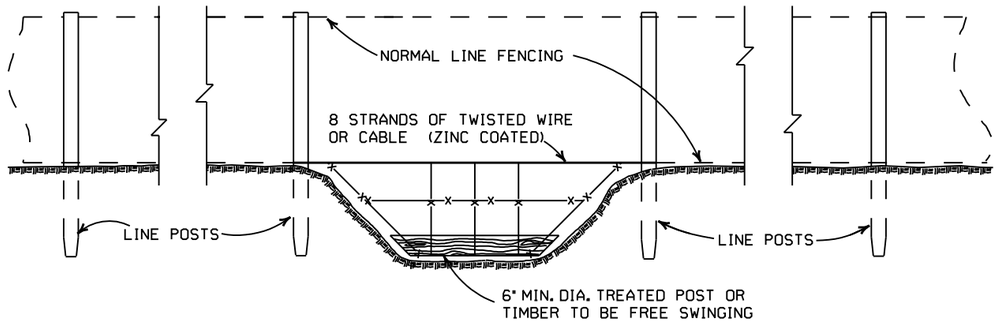

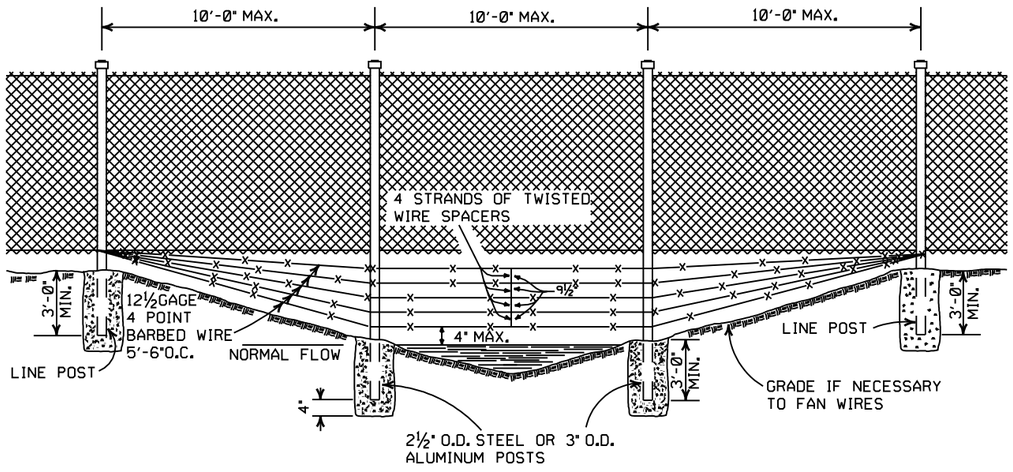

GENERAL NOTES:

THESE INSTALLATIONS TO BE USED WHERE NORMAL FENCING INSTALLATION WOULD CAUSE THE COLLECTING OF DRIFT IN THE CHANNEL OR THE DEPRESSION WILL NOT PERMIT NORMAL INSTALLATION. INSTALLATIONS WILL BE MADE ONLY WHERE DIRECTED BY THE ENGINEER.

WHEN A FENCE LINE APPROACHES A DITCH, GULLY OR DEPRESSION, THE LAST POST ON LEVEL GROUND SHALL BE PLACED CLOSE ENOUGH TO THE EDGE OF THE DROP OFF THAT THE FENCE MAY BE STRUNG TO THE POST IN THE DEPRESSION WITHOUT TOUCHING THE GROUND.

IN TERRAIN OF SUCH EXTREME IRREGULARITY THAT MINOR GRADING WILL NOT BE FEASIBLE, THE NORMAL FENCE SHALL CONTINUE ON GRADE AND THE GULLIES OR DEPRESSIONS TREATED BY AUXILIARY FENCES AS SHOWN.

PAYMENT FOR THE TYPE INSTALLATION USED WILL NOT BE MADE DIRECTLY BUT WILL BE INCLUDED IN THE CONTRACT UNIT PRICE BID FOR WIRE FENCE OR CHAIN LINK FENCE.

DATE	REVISION	FILMED
4-20-79	REVISED TOP RAIL & TENSION WIRE	696-4-20-79
10-2-72	REVISED AND REDRAWN	529-10-2-72

ARKANSAS STATE HIGHWAY COMMISSION

WIRE FENCE WATER GAPS

STANDARD DRAWING WF-2

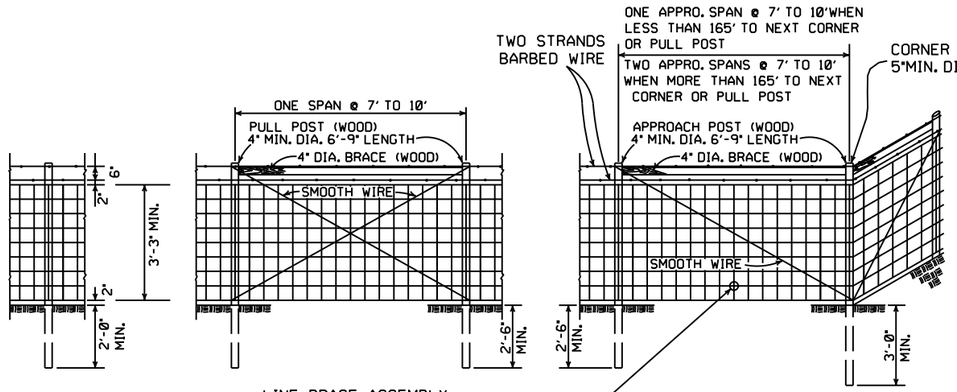

TYPE C FENCE (WOOD POSTS)

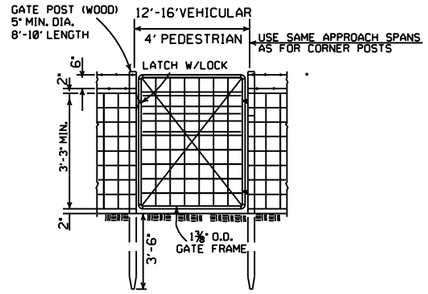

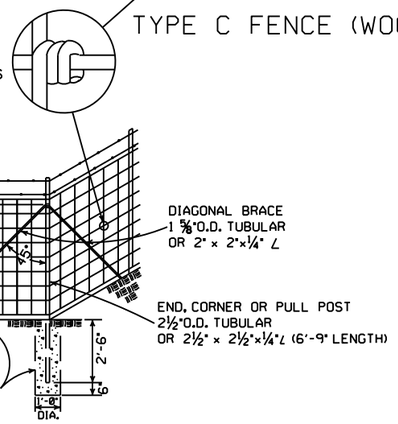

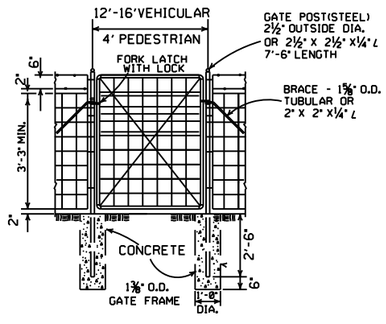

NOTE: STEEL LINE POSTS SHALL BE 6'-6" MINIMUM LENGTH.

TYPE C FENCE (STEEL POSTS)

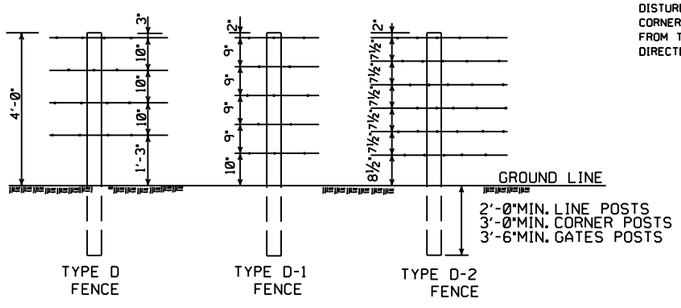

NOTE: SPACING AND SIZE (EXCEPT LENGTH) OF POSTS, APPROACH SPANS, PULL POST ASSEMBLIES, AND CORNER BRACING FOR TYPE D FENCE SHALL CONFORM TO TYPE C FENCE. USE GALVANIZED STAPLES ON WOOD POSTS AND APPROVED FASTENERS ON STEEL POSTS.

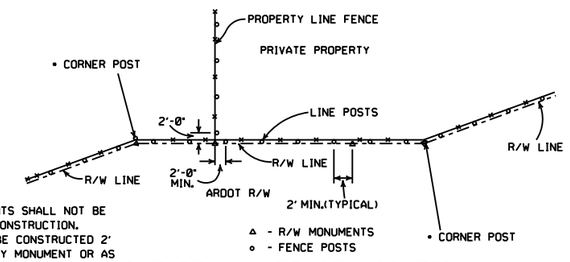

• NOTE: RIGHT-OF-WAY MONUMENTS SHALL NOT BE DISTURBED BY FENCE CONSTRUCTION. CORNER POSTS SHALL BE CONSTRUCTED 2' FROM THE RIGHT-OF-WAY MONUMENT OR AS DIRECTED BY THE ENGINEER.

RIGHT-OF-WAY FENCE LOCATION

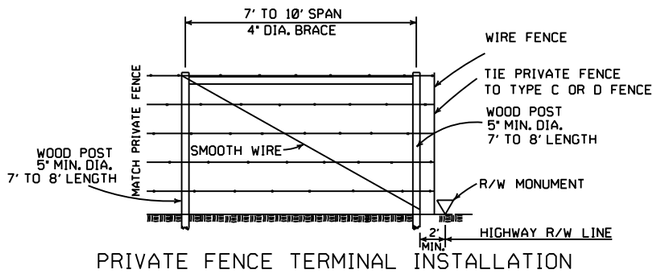

PRIVATE FENCE TERMINAL INSTALLATION

WHERE EXISTING FENCE CONSISTS OF STEEL POSTS, USE END POST ASSEMBLY AS SHOWN IN TYPE C FENCE OR OTHER END POST ASSEMBLY AS APPROVED BY THE ENGINEER.

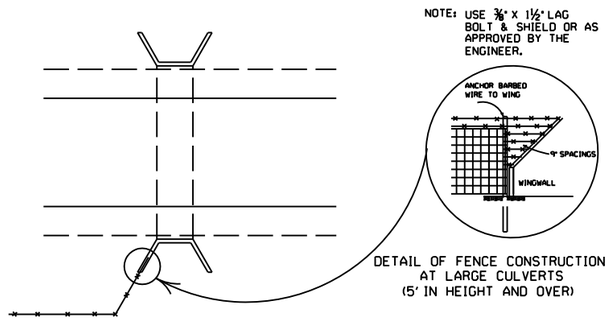

DETAIL OF FENCE CONSTRUCTION AT LARGE CULVERTS (5' IN HEIGHT AND OVER)

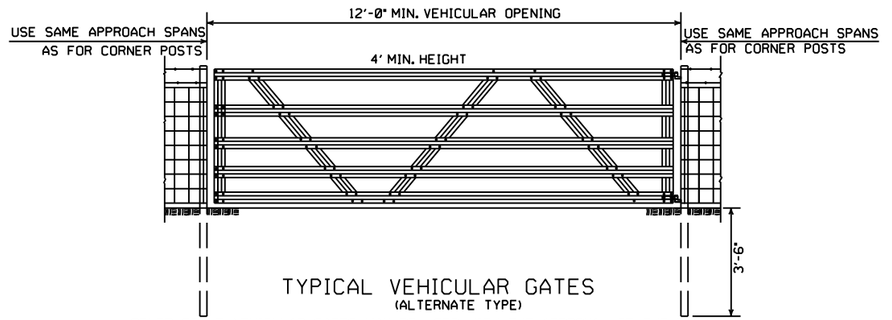

TYPICAL VEHICULAR GATES

(ALTERNATE TYPE)

OTHER STYLE VEHICULAR GATES MAY BE USED WITH THE APPROVAL OF THE ENGINEER. THE METHOD OF SECURING GATE (LATCH AND/OR LOCK)SHALL MEET THE APPROVAL OF THE ENGINEER.

GENERAL NOTES:

STEEL LINE POSTS SHALL BE PAINTED OR GALVANIZED. TUBULAR END, CORNER, PULL, OR DIAGONAL BRACES MUST CONFORM TO THE DIMENSIONS AND WEIGHTS SPECIFIED ON STANDARD DRAWING WF-3 (CHAIN LINK). APPROVED ALTERNATES ARE ACCEPTABLE.
AN ACCEPTABLE TOLERANCE IN LENGTH OF TUBULAR OR WOODEN POSTS SHALL BE - 1" TO +2".
TUBULAR POSTS MUST BE PAINTED OR GALVANIZED.

THE CONTRACTOR SHALL FURNISH AT LEAST 25% OF TIMBER LINE POSTS OF 7 FOOT LENGTHS IN ORDER TO PROVIDE SUFFICIENT SET IN SOFT GROUND OR SMALL DEPRESSIONS.

DRIVEWAY GATES, EITHER SINGLE 12' TO 16' OR DOUBLE 6' TO 8' OPENING OF THE SAME TYPE AS THE PEDESTRIAN GATE, SHALL BE INSTALLED ON THE RIGHT SIDE OF EACH THROUGH LANE ROAD AT LARGE CULVERTS OR BRIDGE CROSS FENCE, FOR USE OF MAINTENANCE EQUIPMENT. LOCATION OF GATES TO BE SHOWN ON PLANS OR AS DESIGNATED BY THE ENGINEER.

AT STREAM CROSSINGS, THE FENCE SHALL NOT BE CONSTRUCTED ACROSS LARGE STREAMS. WHERE CLEARANCE IS SUFFICIENT FROM THE TOP OF THE BANK TO THE BRIDGE STRUCTURE A CROSS CONNECTION SHALL BE CONSTRUCTED BETWEEN THE FENCE ON EACH SIDE OF THE ROAD. WHERE THE CLEARANCE IS NOT SUFFICIENT, THE FENCE SHALL BE TERMINATED WITH CROSS CONNECTIONS AND END POSTS ADJACENT TO BRIDGE ABUTMENTS OR CULVERT WINGWALLS.

SPLICE FOR BARBED WIRE BETWEEN PULL POST ASSEMBLY SHALL BE BY THE "EYE METHOD" AS DESCRIBED AS FOLLOWS: THE ENDS OF THE BARBED WIRE SHALL BE BENT TO FORM A LOOP. THE LOOPS SHALL BE CONNECTED. AFTER THE LOOPS ARE CONNECTED THE ENDS OF THE WIRE SHALL BE WRAPPED AROUND THE PROJECTING WIRES A MINIMUM OF 4 TIMES FOR EACH WIRE LOOP.

SPLICE FOR WOVEN WIRE BETWEEN PULL POST SHALL BE BY THE "WESTERN UNION METHOD" AS DESCRIBED AS FOLLOWS: THE VERTICAL WIRES FOR EACH END OF THE FENCE FABRIC SHALL BE PLACED SIDE BY SIDE AND THE PROJECTING HORIZONTAL WIRES SHALL BE WRAPPED A MINIMUM OF 4 TIMES AROUND THE HORIZONTAL WIRES OF THE FIRST WEB.

STAPLE AT LEAST TOP, BOTTOM AND ALTERNATE WIRES OF WOVEN FABRIC FOR WOOD LINE POSTS.

DATE	REVISION	FILMED
8-22-02	REVISED GENERAL NOTES	
10-18-96	REVISED AASHTO	
11-22-95	REVISED R-O-W LOCATION DETAIL	
6-2-94	REVISED BARB WIRE AND ADDED CORNER POST NOTES	6-2-94
8-5-93	REVISED R/W INSTALLATION FENCE	8-5-93
10-1-92	ADDED STAPLE NOTE	10-1-92
8-15-91	ADDED TYPE D-2 FENCE	8-15-91
11-30-89	DELETED CLASS CONCRETE	11-30-89
7-15-88	ADDED SPLICE NOTE	700-7-15-88
10-30-87	GENERAL REVISIONS	549-10-30-87
11-1-84	MAX. POST SPACING MIN. WIRE GAUGE	507-11-1-84
1-4-83	MIN. DIA. LINE POST	648-1-4-83
3-2-81	TOLERANCE FOR POST LENGTH	722-3-2-81
12-1-72	ADDED D-1 & FENCE INSTALLATION	564-12-1-72
10-2-72	REVISED AND REDRAWN	540-10-2-72

ARKANSAS STATE HIGHWAY COMMISSION

WIRE FENCE TYPE C AND D

STANDARD DRAWING WF-4